https://truckmanualshub.com/

Husqvarna®

Operator's manual

TF545P

Please read the operator's manual carefully and make sure you understand the instructions before using the machine.

English

Downloaded from www.Manualslib.com manuals search engine

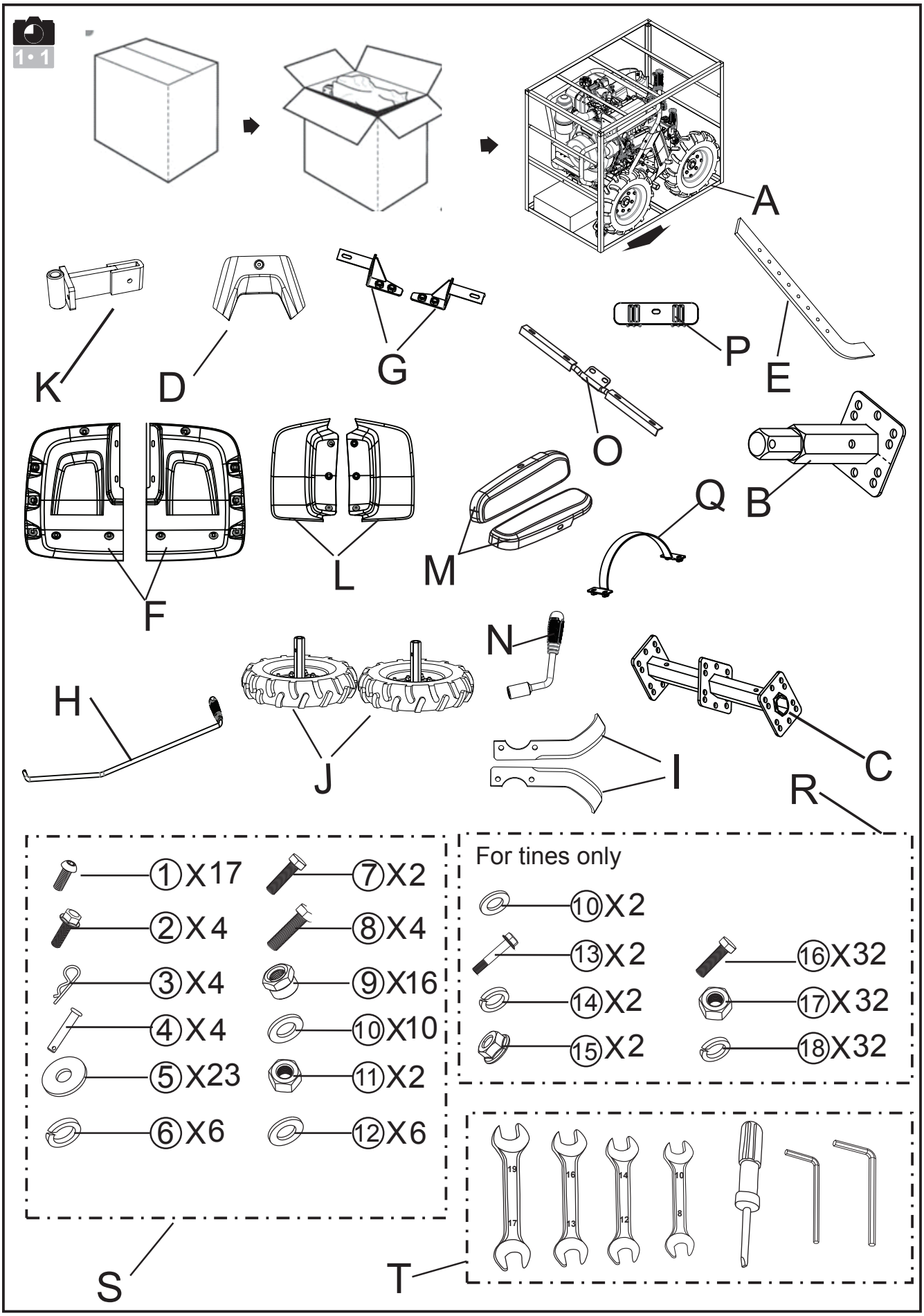

Downloaded from www.Manualslib.com manuals search engine

https://truckmanualshub.com/

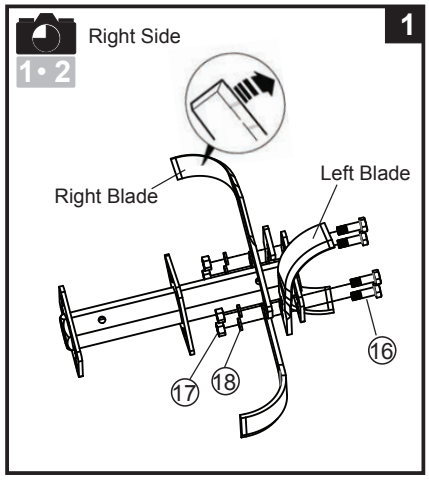

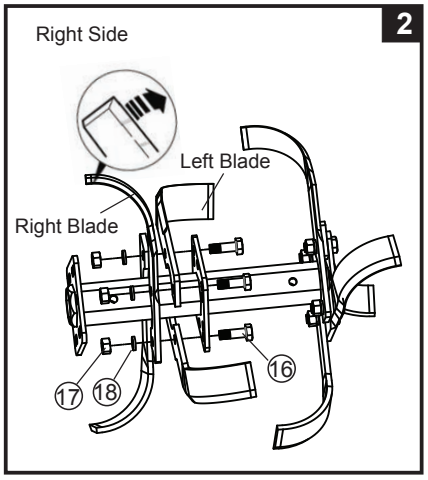

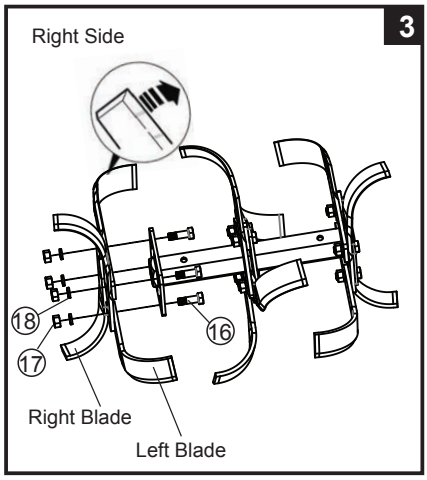

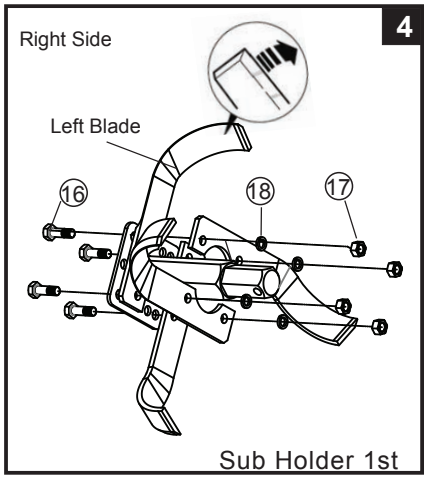

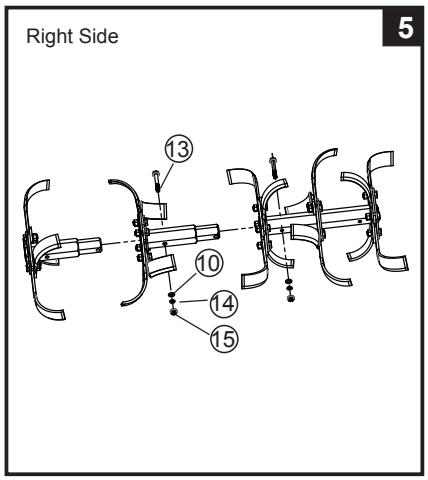

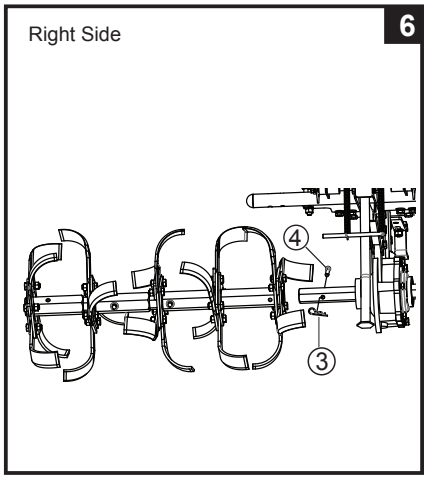

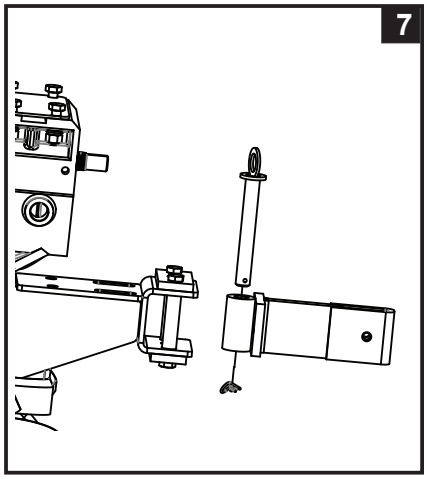

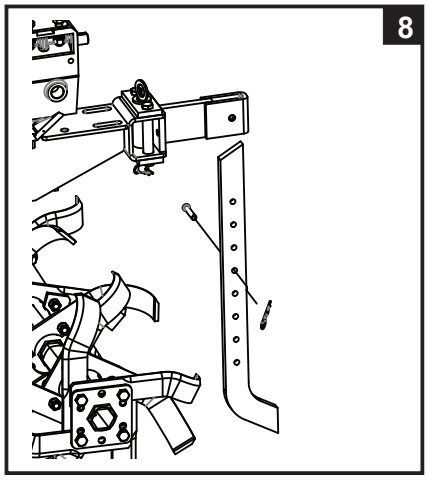

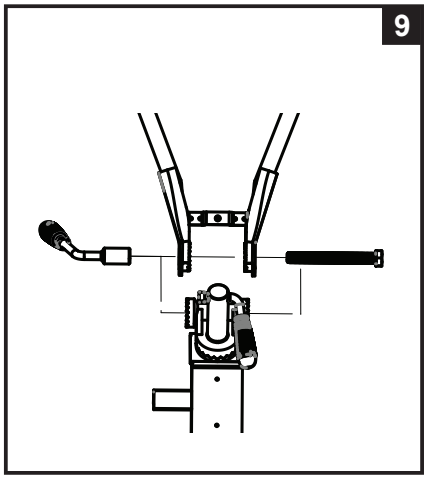

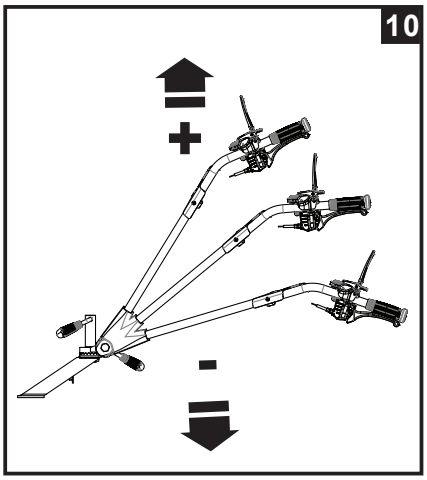

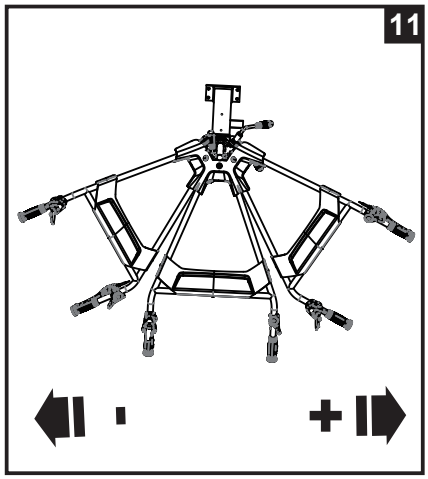

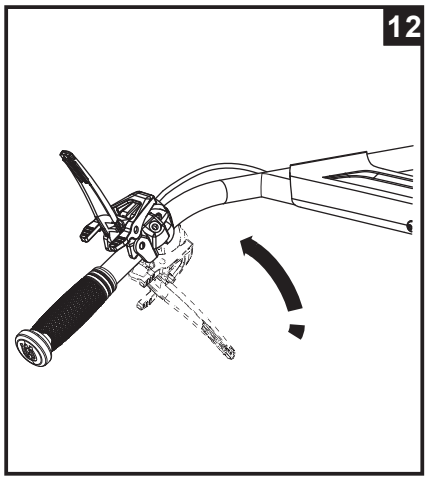

Downloaded from www.Manualslib.com manuals search engine

https://truckmanualshub.com/

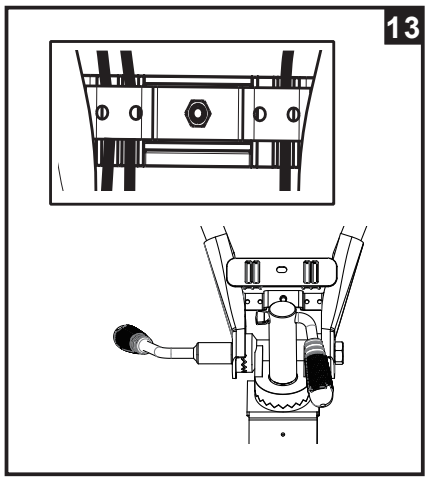

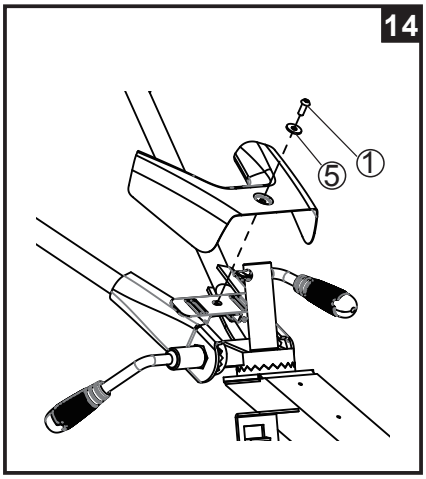

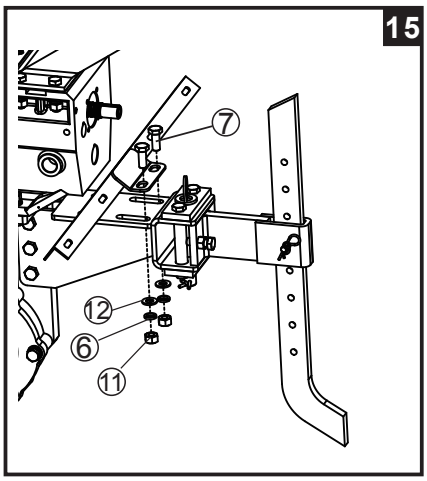

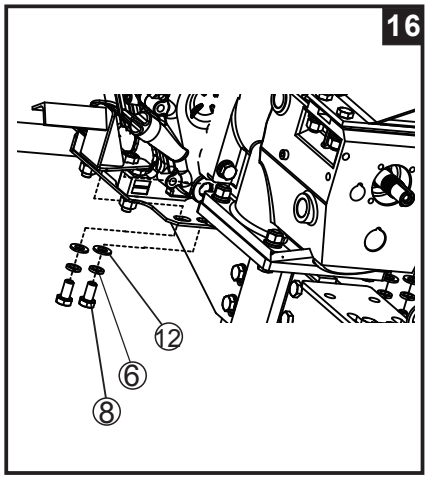

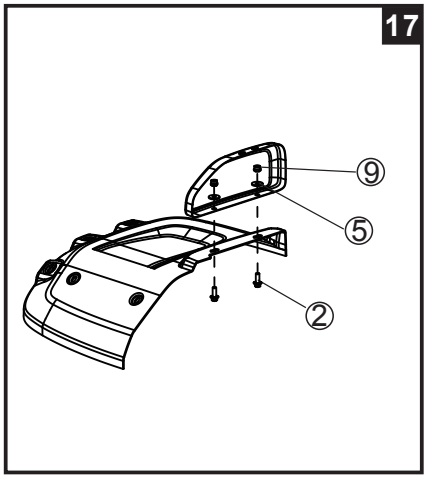

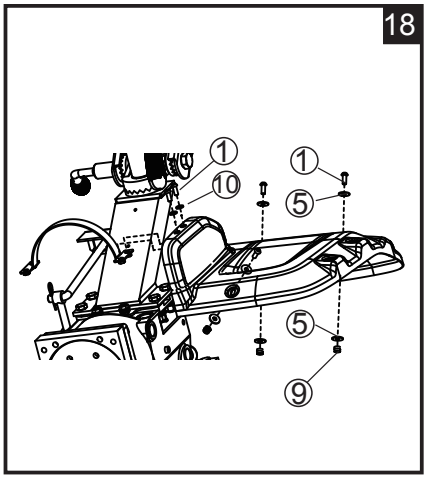

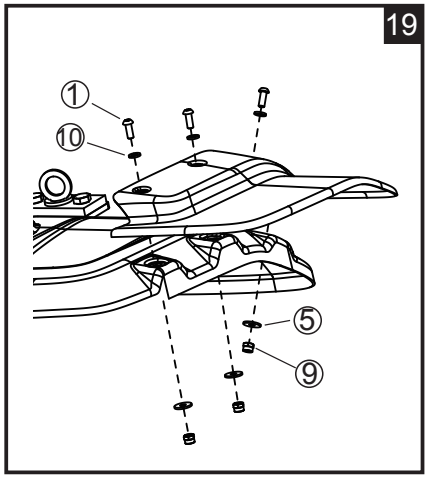

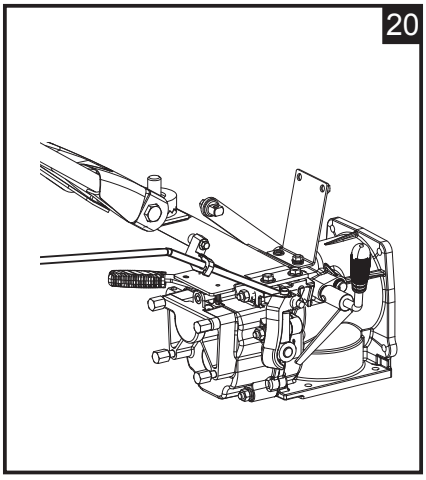

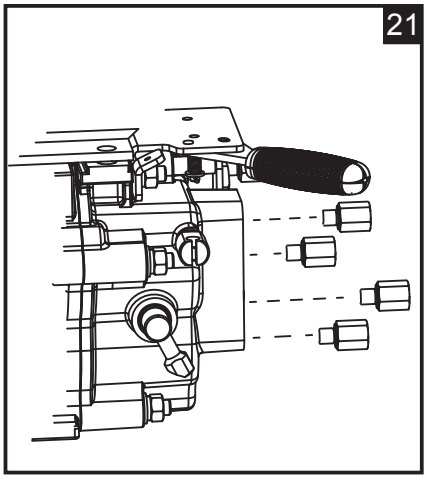

Downloaded from www.Manualslib.com manuals search engine

https://truckmanualshub.com/

1 • 3

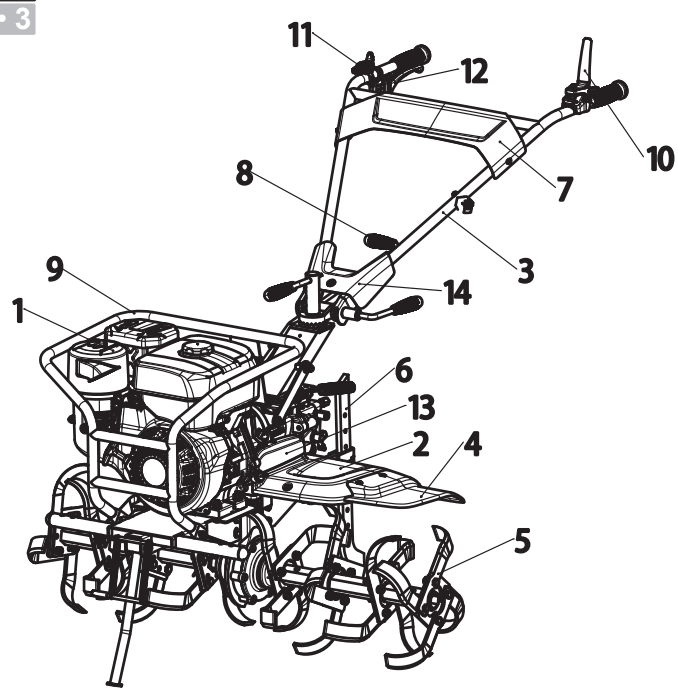

1 • 4

Husqvarna Prod. year

Serial No	
Article no.	
Model	
Tilling scope	
Tilling depth	
Gear shifting	
Engine displacement	
Engine oil quality	
Engine oil capacity	
Gear box oil quality	
Gear box oil capacity	
Nominal power	
Net weight	
Fuel (octan/cetan)	

HUSQVARNA AB
SE-561 82 HUSKVARNA
SWEDEN

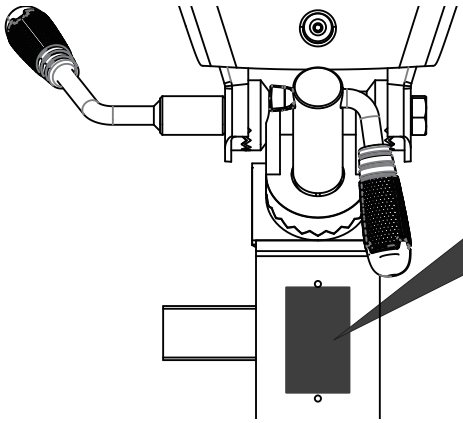

1 • 5

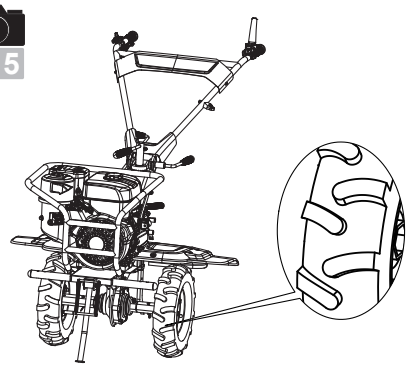

Downloaded from www.Manualslib.com manuals search engine

https://truckmanualshub.com/

2 • 1

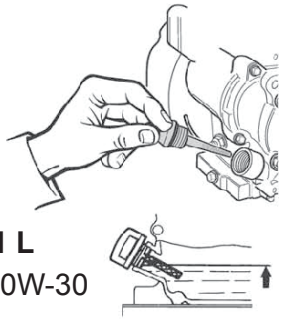

1,1 L
SAE-10W-30

2 • 2

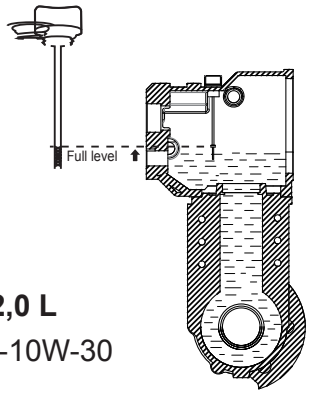

2,0 L
SAE-10W-30

2 • 3

Recommend to USE
Octane Value over 90

6,0 L

2 • 4

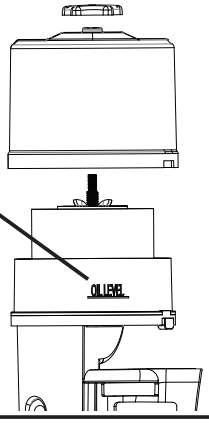

Oil Level
SAE-10W-30

2 • 5

2 • 6

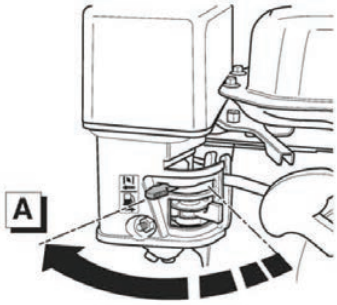

2 • 7

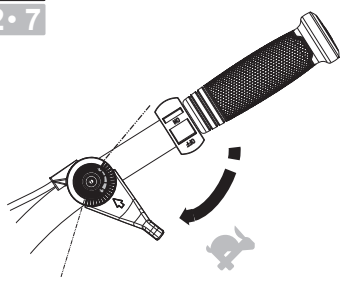

2 • 8

ON

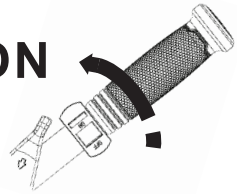

2 • 9

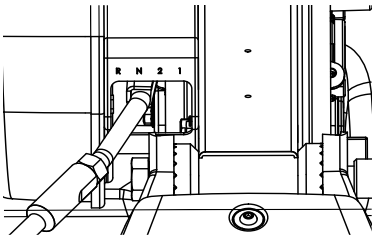

2 • 10

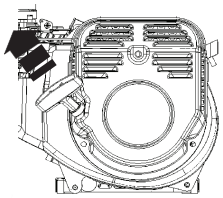

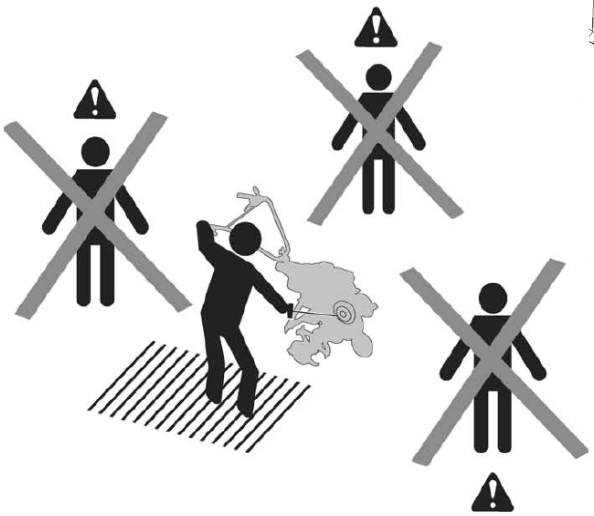

2 • 11

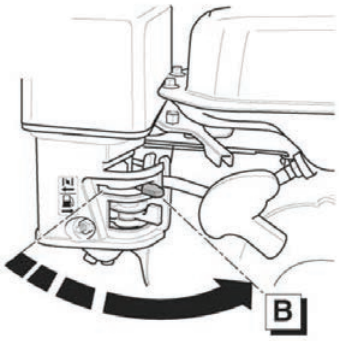

Downloaded from www.Manualslib.com manuals search engine

https://truckmanualshub.com/

3• 1

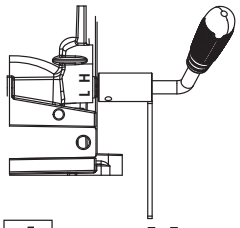

1 ➡ H

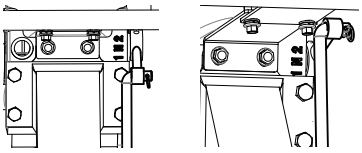

2 ➡ 1,2

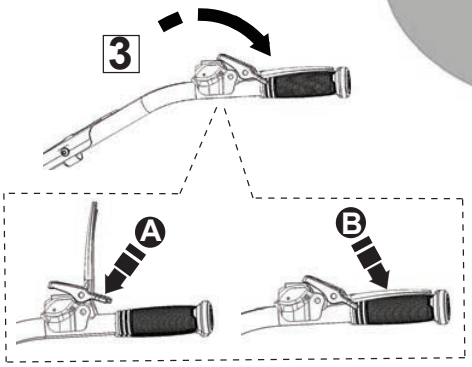

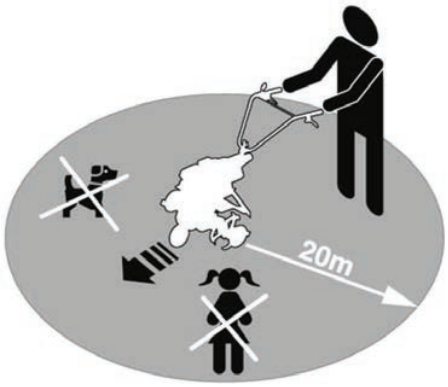

3• 2

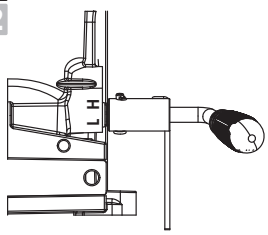

1 ➡ L

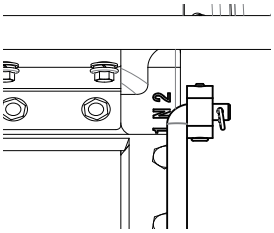

2 ➡ N

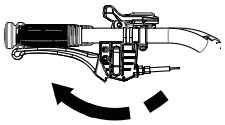

3 ➡ R

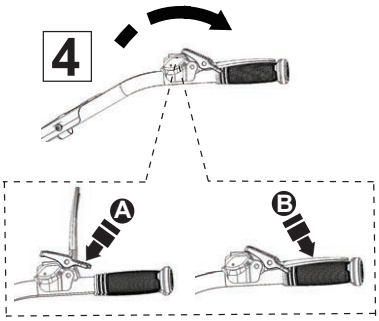

3• 3

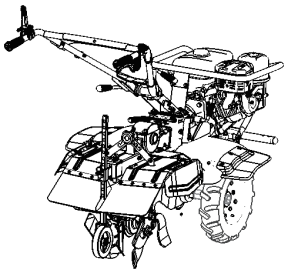

Ditcher

1 ➡ L
2 ➡ 1,2
3 ➡ A,B

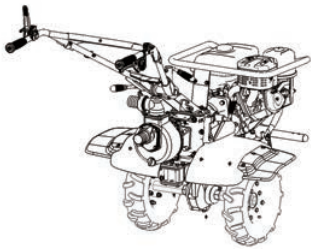

Pump

1 ➡ H
2 ➡ N
3 ➡ A,B

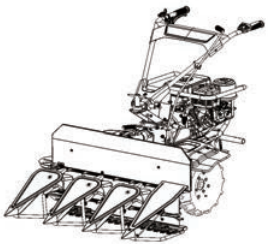

Swather

1 ➡ L
2 ➡ N
3 ➡ R
4 ➡ A,B

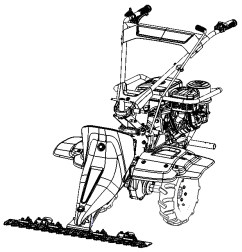

Grass cutter

1 ➡ L
2 ➡ N
3 ➡ R
4 ➡ A,B

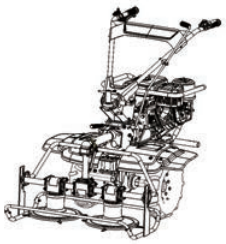

Mower

1 ➡ L
2 ➡ N
3 ➡ R
4 ➡ A,B

Downloaded from www.Manualslib.com manuals search engine

https://truckmanualshub.com/

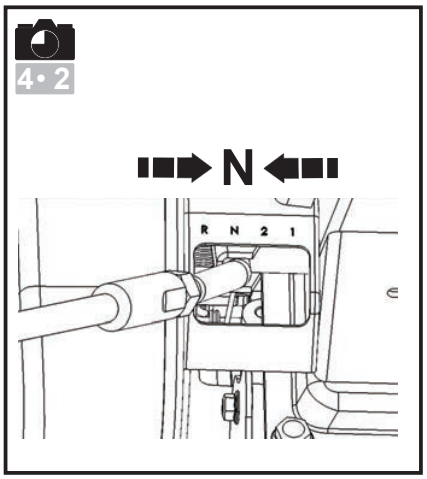

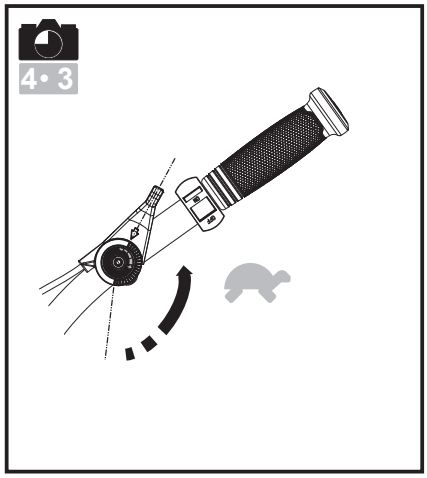

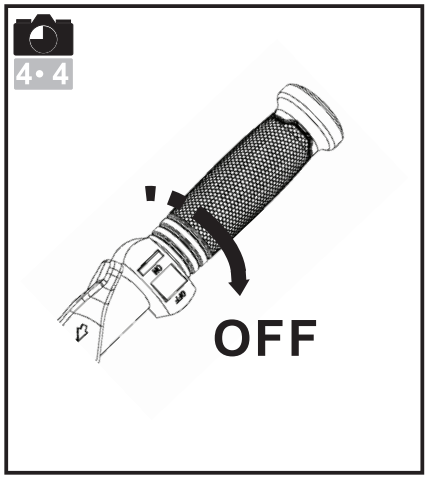

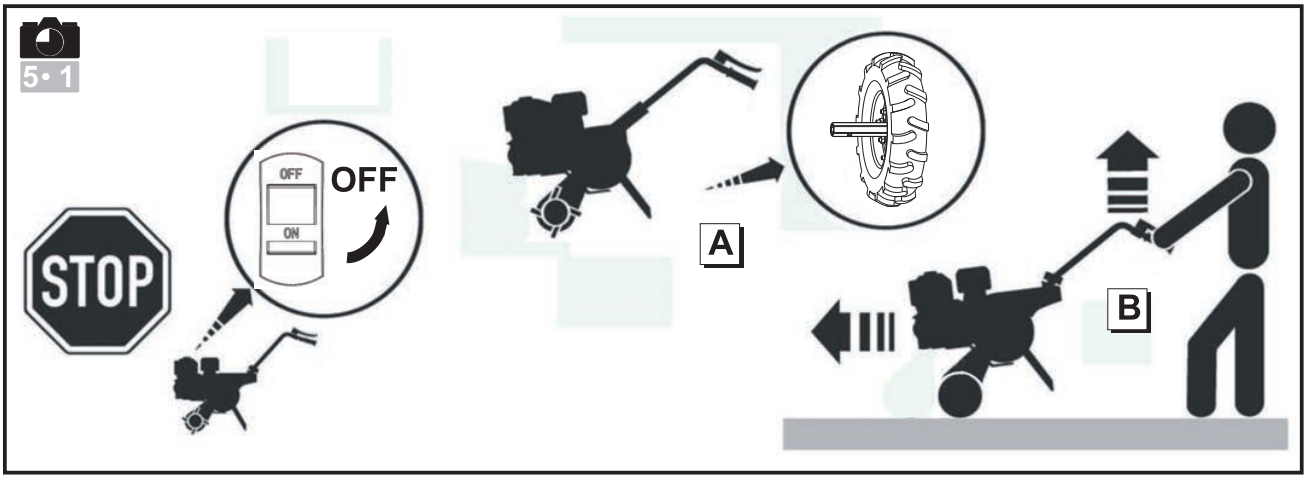

Downloaded from www.Manualslib.com manuals search engine

https://truckmanualshub.com/

SAFETY PRECAUTIONS

Pay particular care to the sections marked as follows:

DANGER: This indicates a strong likelihood of serious or even fatal injury if the instruction are not follow.

WARNING: *This indicates a risk of injury or damage to the equipment if the instructions are not followed.*

NOTE : This indicates useful information.

This symbol reminds you to take care with certain operations.

If you have any problems or questions about the tiller, please contact Husqvarna dealer.

DANGER : The machine is designed for safe and reliable service if used as instructed. Before using your machine, please make sure you have understood the contents of this manual. Otherwise you could be injured and your equipment could be damaged.

Training / Information

Familiarise yourself with the correct use and the controls before using the machine. Know how to stop the engine rapidly.

The machine must always be used according to the recommendations given in the operator manual.

Remember that the user is responsible for any accidents or dangerous actions occurring to other people or their belongings. It is users responsibility to assess the potential risks of the ground to be cleared and to take all precautions necessary to ensure it is safe, in particular on slopes and on loose, slippery or uneven ground.

Never allow children or people unfamiliar with these instructions to use the machine.There may be local laws which set a minimum age for users.

Never work when there are people. especially children, or animals within a radius of 20 meters of the machine; the operator must necessarily remain at the controls of the handles.

Do not use the machine if you have been taking medicine or other substances that might slow your reactions or make you drowsy.

Pay particular attention on hard ground, because the machine has the tendency to be much less stable than on cultivated ground.

Always wear sturdy, non-slip footwear and tight long trousers when working. Do not use the machine in bare feet or sandals. Ear protectors are recommended.

Use the machine for the purpose it is designed for tilling the ground.

Preparation

Carefully inspect the area where the machine is to be used and remove any objects that might be projected by the machine (stones, wire, glass, metal objects ...).

Before use, always inspect the machine to ensure that the tools are not worn or damaged ,replace any worn or damaged parts.

Maintain the electrical cables that stop the engine in good condition so that you can be sure to turn the engine off.

Check that no diesel or oil are leaking.

Do not use the machine without covers and guards and ensure that all the fittings are tight.

Use

Never transport people on the machine.

Take care when starting the engine, following the manufacturer's instructions and keeping your feet away from the blade(s).

Stop the engine when the machine is not in use.

When holding the machine, walk don't run.

Pay close attention when pulling the machine towards you or reversing the direction of rotation (if liked).

Keep a safe distance from the rotating blades, set by the length of the steering column.

Do not place your hands or feet near or beneath rotating parts.

The engine and the exhaust system become very hot during operating.Risk of burn injuries if touched.

If there is :
- -abnormal vibration,
- -a blockage,
- -a problem engaging or disengaging the clutch,
- -a collision with a foreign object,
- -deterioration of the engine halt cable.

Stop the engine immediately (if the engine halt cable is severed. Use the starter control as described in paragraph "start the engine" to stop the engine), let the machine cool down, unplug the spark-plug lead, inspect the machine and have the necessary repairs carried out by a Husqvarna workshop before using again.

Work only by daylight or in good artificial light.

Do not use the machine on slopes greater than 20°.

Work across slopes, not up or down them.

Make sure to keep your feet on sloping ground, change direction very carefully.

Using accessories other than those recommended may make the machine dangerous and cause damage to your machine which will not be covered by your guarantee.

Maintenance / storage

Stop the engine before cleaning, inspecting, adjusting or maintaining the machine or changing the tool(s).

Stop the engine and use thick gloves when changing the tool(s).

Keep all nuts and bolts tight to ensure safe conditions of use.

To reduce fire risk, keep the engine, the silencer and the fuel storage area free of plants. waste oil. or any other inflammable material.

If the exhaust silencer is faulty, have it replaced by a Husqvarna workshop.

Do not mend parts; replace them by the maker's own spares.

Replace the rotating blades in complete sets to keep them balanced.

For your own safety, do not alter the characteristics of your machine. Do not change the engine speed settings and do not run the engine at excess speeds. Regular maintenance is essential for safety and to maintain the level of performance.

Allow the engine to cool down before putting the machine away.

Danger ! Diesel is highly inflammable!

Store fuel in containers specially designed for it. Always fill the tank outdoors and do not smoke while doing it.

Do not unscrew the fuel cap or top up with diesel while the engine is running or still hot.

If diesel is spilt on the ground, do not try to start the engine; Carry the machine elsewhere and avoid all naked flames.

Store the machine in a dry place. Never store the machine in a building where the machine can reach a flame, spark or source of intense heat.

Replace the caps of the fuel tank and the diesel can correctly.

Limit the amount of diesel in the tank to reduce spillage.

Do not run the engine in a confined space where carbon monoxide vapour might accumulate.

Carbon monoxide can be fatal. Ensure good ventilation.

Moving, handling, transporting

Any action on the machine apart from ground digging must be performed with engine stopped.

Except when (ground digging) the machine must be moved by using the transport wheel as described in "Moving" chapter.

Handling: do not try and lift the machine. The machine's weight is indicated on the type plate at the mid of this manual. Use a method of handling adapted to the weight of the machine and to the situation to guarantee the safety.

When loading or unloading the machine to or from a trailer, use a suitable ramp. Lash the machine down correctly for safe transport.

Downloaded from www.Manualslib.com manuals search engine

https://truckmanualshub.com/

DEFINITION OF THE PICTOGRAMS

WARNING
Danger

WARNING
Keep safe distance

WARNING
Rotating tools

WARNING
Consult the Operator Manual and remove the sparkplug before performing any work.

WARNING
Read the Operator Manual

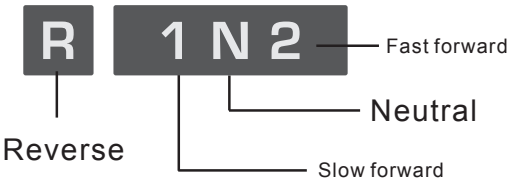

Sub-speed lever

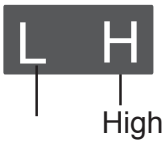

Throttle control

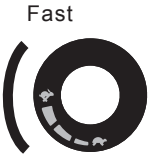

Stop switch

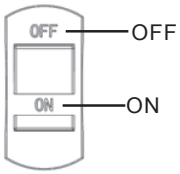

Ear protection must be used.

TECHNICAL INFORMATION

	TF545P
Tilling width, mm	1100
Tilling depth, mm	150 - 300
Engine	WM177F/P
Fuel	Petrol
Fuel tank capacity, liters	6,0
Oil tank capacity, litre	1,10
Cylinder displacement, cm^3	270
Max power hp (kW) @ rpm	8,16 (6,0) @3600
Gears	H, L, R, N, 2, 1
Oil capacity gearbox, liters	2,00
Gross weight, kg	145
Net weight, kg	130
Packaging size, mm	1030x690x850

IMPORTANT! When the service life of this product has been served and it is no longer used it should be returned to the dealer or to an applicable station for recycling.

IMPORTANT! We reserve the right to change specifications and designs without prior notice so as to implement improvements. Note that no legal claims are valid on the basis of information in this manual. Use only genuine parts for repairs. The warranty is not valid if non genuine parts are used.

Downloaded from www.Manualslib.com manuals search engine

https://truckmanualshub.com/

UNPACKING/ ASSEMBLY

Note: In the constant desire to improve the products, the manufacturer states that the whole of this manual is not contractual and reserves the right to modify the specifications of the machines without notice.

1•1 Unpacking

WARNING:
Take care not to cut the cables or scratch the machine's paint-work when cutting the edges of the case.

Ref.	Contents of the case
A	Engine Parts
B	Sub Holder 1st
C	Holder Main Comp
D	Lower Tidy Cover
E	Drag Bar
F	Tine Cover
G	Tine Cover Bracket FR.
H	Lever Shifting
I	Blades
J	Wheel
K	Connector Joint
L	Extionsion Cover
M	Side Cover
N	Locking Handle
O	Tine Cover Bracket RR.
P	Rubber Cable Holder
Q	Connecting Plate
R	Hardware Bag Tines only
S	Hardware Bag
T	Tool Bag

1•2 Assembling

WARNING:
Inappropriate assembly of this rotary tiller could cause severe injuries. Ensure that you follow all the instructions carefully.

1 2 3 4 5 6 **Fitting the tine blades.**

Illustrations only shows assembly of the tin blades on the right side.
Make sure that sharp edges face one side on both Right and Left side tines.
Note:Please pay attention to distinguish the Sub Holder 1st and Sub Holder 2nd.

7 **Fitting the connecting joint.**

8 **Fitting the drag bar.**

9 **Fitting the handle bar.**

10 11 **Adjusting the position of the handle bar.**

12 **Fitting the clutch control.**

Turn to proper side and fasten the bolt.

13 14 **Fitting the lower tidy cover.**

1.Tidy the cables,
2.Put on the rubber holder properly,
3.Put on the cover,and fasten with bolt.

15 16 **Fitting the tine cover.**

17 18 19 *Do not tighten the bolt immediately after installed. Install all 4 bolts and nuts first, then tighten one by one.*

20 **Fitting the shifting lever.**

21 **PTO assemble for accessories.**

WARNING:
After assembling the machine completely, tighten all the bolts and screws with moderation: do not overtighten.

Note: Any dismantling operation must only be performed by a Husqvarna workshop.

1•3 Description of the components

1-Engine
2-Tine cover
3- Handle
4- Extension cover
5-Blades
6-Drag bar
7-Upper tidy cover
8-Lever shifting
9-Bumper
10-Clutch control
11-Throttle control
12-Reverse control
13-Side cover
14- Lower tidy cover

1•4 Type plate

1•5 Transport wheel

Change the blades with wheels when transporting

STARTING THE MACHINE

2•1 Filling with engine oil and checking the level

2•2 Filling with gearbox oil

2•3 Topping up the petrol

Recommend to USE Octane Value over 90

2•4 Add oil to the air filter

Filling the oil to Oil Level

2•5 Open the fuel tap

2•6 Set the choke in position A

2•7 Throttle control

Put the lever to:

2•8 Set the on/off switch to ON ·

2•9 Shifting lever

*Put the lever to gear **N**.*

2•10 Pull the recoil start handle

WARNING:
When the machine starts, remain within the safety zone.

2•11 Set the choke in position B

Downloaded from www.Manualslib.com manuals search engine

https://truckmanualshub.com/

USE

3•1 — **Forward**

It is essential to let out the clutch before using reverse

Maintain a safety zone of 20 m in radius around the machine

3•2 — **Reverse**

It is essential to let out the clutch before using reverse

Maintain a safety zone of 20 m in radius around the machine

The use of reverse is dangerous.
Ensure that there are no obstacles behind you and reduce the engine revs before engaging the clutch.

3•3 — **Tiller working direction with accessories and gear control**

STOPPING

4•1 — **Stopping the rotating tools**

Release the clutch lever.

4•2 — **Putting the shifting lever to• *N*•**

4•3 — **Reduce the throttle**

Set the throttle control to:

4•4 — **Stopping the engine**

Set the on/off switch to OFF.

4•5 — **Close the fuel tap**

MAINTENANCE TABLE

Daily check

Before starting the engine, check the following points.

- There must be no loosened or broken nuts or bolts.
- 4•6 — Cleanliness of the air filter element

Do not use inflammable solvent to clean the foam air filter element.

- 2•1 2•2 2•4 — Check lub. oil level
- No leaks of petrol or lub. oil.
- 2•3 — Sufficient petrol
- Keep the machine clean.
- Environment protection.
- No abnormal vibrations or excessive noise.

After the first 20 hours or every month

- Change the lub. oil of engine and gearbox.

Every 50 hours or every 3 months

- Clean the air filter * (2 Fig. 4.6).

Every 100 hours or every 6 months

- Clean the fuel filter .
- Change the lub. oil of engine and gearbox.
- Clean the spark plug.
- Clean the spark plug cap.

Every 300 hours or once a year

- Replace the air filter *.
- Check the play in the valve * *.
- Replace the spark plug.
- Clean the fuel filter * *.
- Clean combustion chamber * *.
- Check the fuel circuit * *.

* Clean more often in condition of use where the air is dusty or laden with aerial debris.

* * Not essential except in the event of performance problems(to be conducted by a Husqvarna workshop).

Downloaded from www.Manualslib.com manuals search engine

https://truckmanualshub.com/

EC DECLARATION OF CONFORMITY

For the following machinery

Product name: Gasoline powered motor hoes
Commercial name: N/A
Function: motor hoes (without driven wheels)
Type: Gasoline
Model No.: TF545P
Serial No.:

is herewith confirmed to fulfill all the relevant provisions of

Machinery Directive (2006/42/EC)

and the following harmonized standard have been complied with

EN 709: 1997 + A4: 2009
EN 709: 1997 + A4/AC:2012

is herewith confirmed to fulfill all the relevant provisions of

Electromagnetic Compatibility Directive (2014/30/EU)

and the following harmonized standard have been complied with:

EN ISO 14982: 2009

Responsible for marking this declaration is the

Manufacture's Name	:	Husqvarna AB
Manufacturer's Address	:	SE-561 82 HUSKVARNA SWEDEN

Person responsible for compiling the technical files established within the EU

Name, Surname	:	Husqvarna AB
Address	:	SE-561 82 HUSKVARNA SWEDEN

Person responsible for making this declaration

Name, Surname	:	Claes Losdal
Position/Title	:	R&D Director
Place	:	Huskvarna
Date	:	2017-12-22

Husqvarna

(Company stamp and legal signature)

Downloaded from www.Manualslib.com manuals search engine

https://truckmanualshub.com/

www.husqvarna.com

Original instructions

1158792-26

2017-01-26

Downloaded from www.Manualslib.com manuals search engine

11-0556 Husqvarna manual A4.indd 2 2012-11-13 10:13