https://truckmanualshub.com/

LIFT 2000B

Lift 2000B is very popular for both railway and overhead line work thanks to its agility and relatively high working height. It is designed for two persons or a total weight of up to 200 kg and can be operated from the cab or working platform. Stepless platform levelling provides an excellent working platform at height. This is the most popular lift we manufacture thanks to its versatility. This lift is ideal for those you perform a lot of service work.

New LIFT 2000B

- **Certified according to the EN 280 standard, which specifies the latest design and safety requirements for mobile elevating work platforms.**
- **Complies with ISO 13849, safety-related parts of a control system.**
- **Smooth operation via 4-axis joystick in the cab.**
- **Durable and well-proven controls on the working platform.**
- **New stepless levelling provides improved working platform comfort.**

Dimensions	
Max. work height manual extension	20.1 m
Max. work height, hydraulic extension	18.1 m
Max. horizontal reach 80 kg load in working platform	approx. 13.5 m
Max. horizontal reach 200 kg load in working platform	approx. 11 m
Number of hydraulic extensions	5
Number of manual extensions	1
Slewing angle	355.5°
Slewing torque	7.5 kNm
Attachment coupling	Quick coupling for working platform and pole grab

Weight	
Weight	1,250 kg
Max. load on working platform (irrespective of height)	2 persons + equipment or max. load 200 kg

HUDDIG

https://truckmanualshub.com/

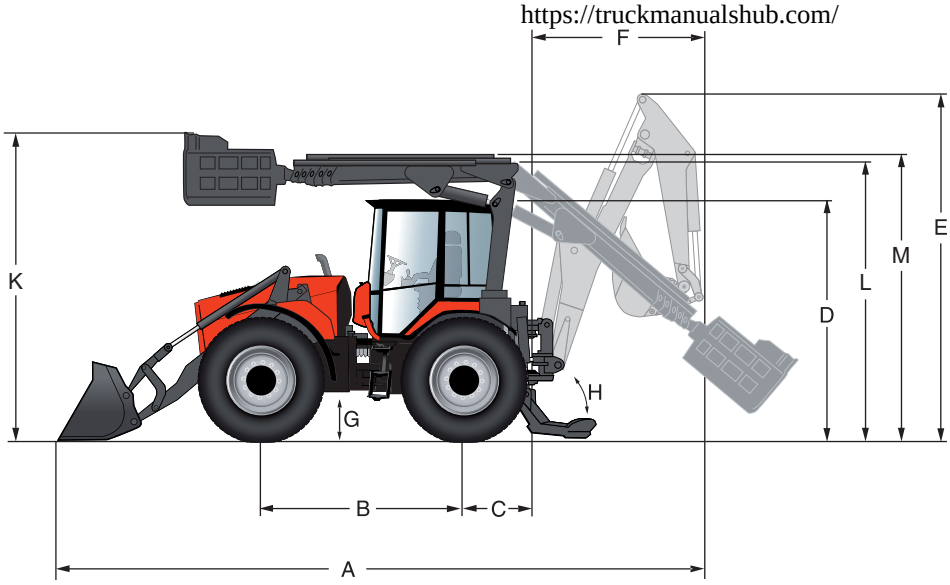

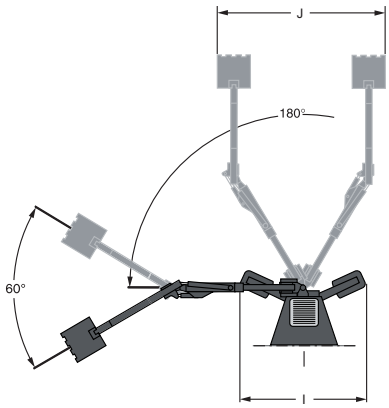

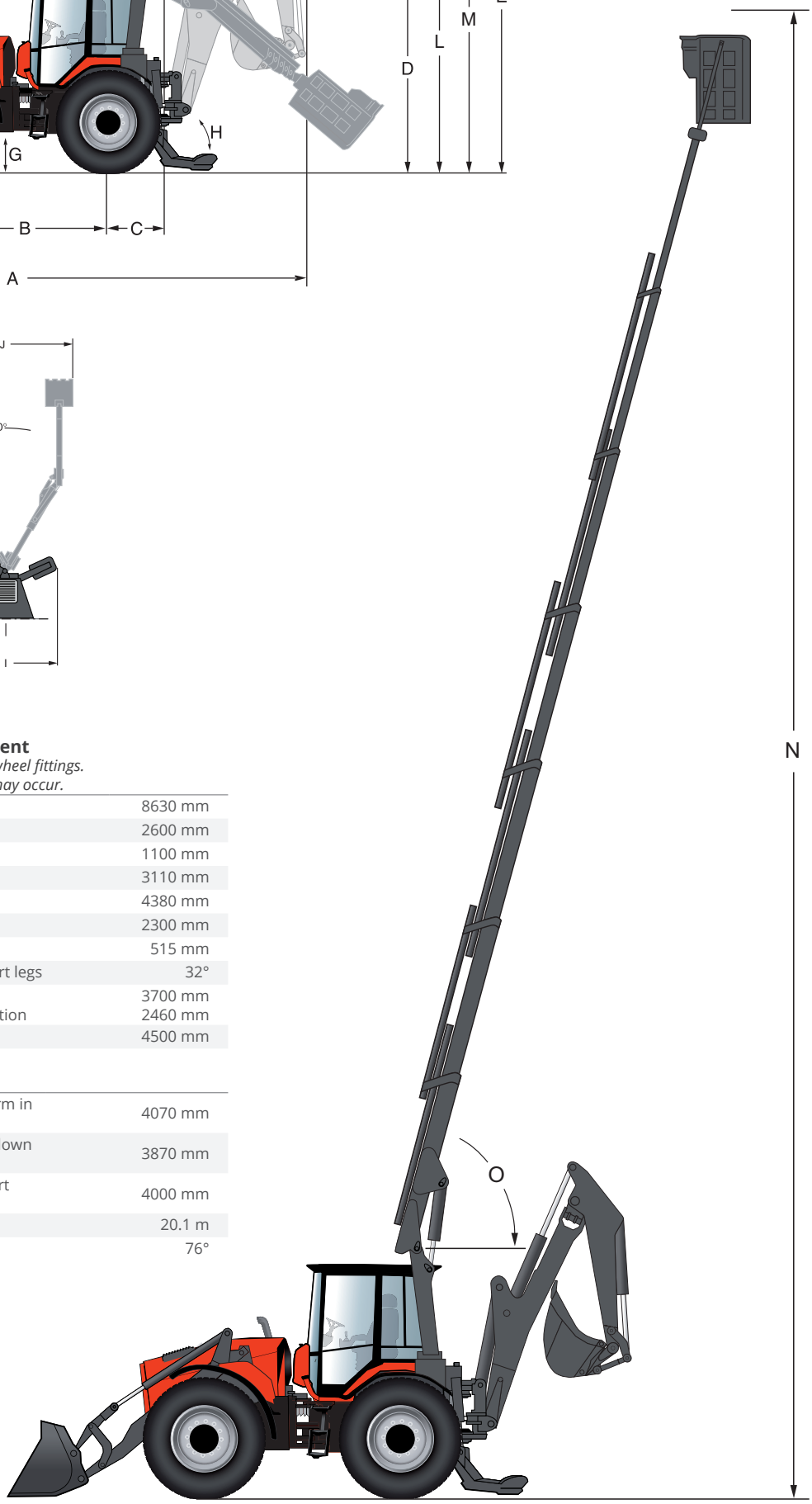

Dimensions - standard equipment
with standard buckets and 620/60x34 wheel fittings.
Theoretical measurements, variations may occur.

A	Transport length	8630 mm
B	Wheelbase	2600 mm
C	Backhoe overhang	1100 mm
D	Height above cab	3110 mm
E	Transport height, backhoe	4380 mm
F	Transport length, backhoe	2300 mm
G	Ground clearance	515 mm
H	Ground clearance angle, support legs	32°
I	Width support legs max. Width support legs parked position	3700 mm 2460 mm
J	Digging width	4500 mm

Lift

K	Height to top of working platform in transport position	4070 mm
L	Height to top of arm in folded down position	3870 mm
M	Height to top of arm in transport position	4000 mm
N	Working height	20.1 m
O	Lift angle	76°

801865EN