https://truckmanualshub.com/

Smartgen®

## HGM6100K Series

## Automatic Generator Module

# OPERATING MANUAL

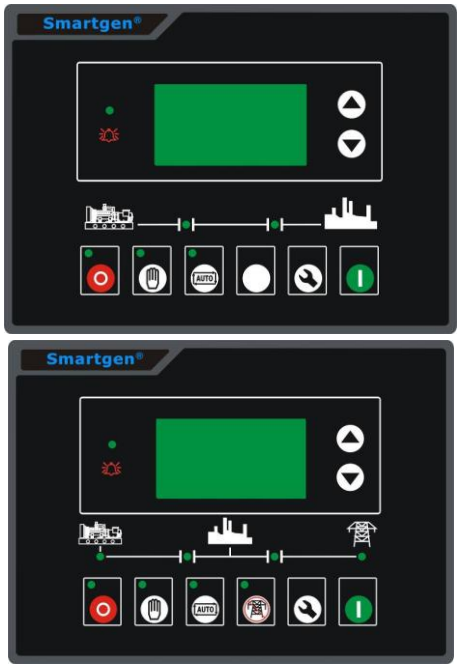


**Smartgen Electronics**

Call 1300 651 830
2098 Hume Highway, Campbellfield VIC 3061
F: 1300 854 830 E: contact@agrison.com.au
www.agrison.com.au

https://truckmanualshub.com/

Smartgen®

All rights reserved. No part of this publication may be reproduced in any material form (including photocopying or storing in any medium by electronic means or other) without the written permission of the copyright holder.
Applications for the copyright holder's written permission to reproduce any part of this publication should be addressed to Agrison at the above address.
Any reference to trademarked product names used within this publication is owned by their respective companies.
Agrison reserves the right to change the contents of this document without prior notice.

**Software Version**

| Version | Date | Note |
|---|---|---|
| 1.0 | 2009-10-10 | Original release. |
| 1.1 | 2010-04-07 | Add a typical wiring diagram and an AUX.INPUT4 (38 Pin) and an AUX.INPUT5 (39 Pin) and an Earth wire (40 Pin). |
| 1.2 | 2010-04-20 | Add a language of Spanish. Modify the panel cutout size, and the operation temperature range. |
| 1.4 | 2010-08-17 | Add a configurable output item of fuel pump control and a configurable input item of automatic inhibit start and an option (active connecting with B+ or B-) for all input port. |
| 1.5 | 2010-12-09 | Add High speed control option in output ports; Add prohibit stop when High temperature, low oil pressure in programmable parameters; Revise range of sensor curve input. |
| 1.6 | 2011-04-12 | Add Russian and five programmable output port options. |

https://truckmanualshub.com/



# CONTENT

1 SUMMARY ..... 4
2 PERFORMANCE AND CHARACTERISTICS ..... 4
3 SPECIFICATION ..... 6
4 OPERATION ..... 7
4.1 KEY FUNCTION ..... 7
4.2 AUTOMATIC OPERATION ..... 7
4.3 MANUAL OPERATION ..... 9
5 PROTECTION ..... 9
5.1 WARNING ..... 9
5.2 SHUTDOWN ALARM ..... 10
6 CONNECTING TERMINAL ..... 11
7 PARAMETER RANGE AND DEFINE ..... 14
7.1 PARAMETERS TABLE (TABLE 1) ..... 14
7.2 PROGRAMMABLE OUTPUT 1-4 TABLE (TABLE 2) ..... 19
7.3 PROGRAMMABLE DIGIT INPUT 1-5 TABLE (ALL IS VALID WHEN CONNECT GRAND (B-) (TABLE 3) ..... 21
7.4 SENSOR SELECTION (TABLE 4) ..... 22
7.5 CONDITIONS OF CRANK SUCCEED (TABLE 5) ..... 23
8 PARAMETER SETTING ..... 24
9 SENSOR SELECTION ..... 25
10 COMMISSIONING ..... 26
11 TYPICAL APPLICATION ..... 27
12 INSTALLATION ..... 29
13 FAULT FINDING ..... 30

https://truckmanualshub.com/



# 1 SUMMARY

HGM6100K series Genset controller integrating digital, intelligent and network techniques is used for automatic control system of diesel generator. It can carry out functions including automatic start/stop, data measure and alarm protective. The controller uses LCD display, optional Chinese, English, Spanish and Russian display interface with operation easy and reliable.

HGM6100K series Genset controller uses micro-processing technique which can carry out precision measure, constant value adjustment, timing and threshold setting and etc. functions. It can be widely used in all types of generator automatic control system for compact structure, advanced circuits, simple connections and high reliability, can be widely applied to various types of generating units automation system.

# 2 PERFORMANCE AND CHARACTERISTICS

■ HGM6100K controller has four types:

**HGM6110K/6110KC:** Automatic Start Module, it controls generator to start/stop by remote start signal;

**HGM6120K/6120KC:** Based on HGM6110K/6110KC and add mains AC monitoring, Mains/Generator automatic switching control functions (AMF), especially suitable for the automation system composed by Mains and Generator.

**Note1:** HGM6110KC/6120KC with RS485 interface, HGM6110K/6120K without RS485 interface.

**Note2:** And then take HGM6110KC/6120KC with text as an example to describe.

■ Using microprocessor as a core, symbol LCD with backlight display, the three languages display Chinese, English and Spanish, key touch operation;

■ Have a RS485 port with Modus communication protocol;

■ Adapt to 3phase-4wires, single phase-2wires or 2phase-3 wires (120/240V) , 50/60Hz AC power system;

■ Measure and display 3 phase voltage, 3 phase current, frequency, power etc. parameter of Mains and Gens;

| Mains | Gens |
|---|---|
| Line voltage (Uab, Ubc, and Uca) | Line voltage (Uab, Ubc, and Uca) |
| Phase voltage (Ua, Ub, and Uc) | Phase voltage (Ua, Ub, and Uc) |
| Frequency HZ | Frequency HZ |

https://truckmanualshub.com/



Load
Power Current IA, IB, IC
Active power KW
Inactive power KVar
Apparent power KVA
Power factor Cos
Accumulate total gens power kWh

- Mains have over voltage, under voltage, loss phase function; Gens have over voltage, under voltage, over frequency, under frequency, over current function;
- Precision measure and display parameters about Engine,

  Temp. (WT), °C/ °F both are display
  Oil pressure (OP), kPa/Psi/Bar all be display
  Fuel oil level (FL), % (unit)
  Speed (SPD), RPM (unit)
  Voltage of Battery (VB) V (unit)
  Voltage of Charger (VD) V (unit)
  Hour count (HC) can accumulate Max. 999999 hours.
  Starting up can accumulate Max.999999 times.
- Control protection: Automatic crank/stop of diesel engine, load transfer(ATS control) and completely faults display protection;
- With ETS, idle control, pre-heat control, raises speed control functions, and all types of them are belong to relay output;
- Parameters setting: Allow user to modify setting and store them by inside internal FLASH memory, the parameters can not be lost even with power off. All of parameters can be set not only from the front panel, but by PC via SG72 (an adaptor, USB-LINK-RS485) module; or, through RS485 port via PC;
- Most of temperature, pressure, oil level sensor can be directly used, and also user can define sensor curve by themselves;
- Multiple crank disconnection conditions can be selected.(Speed sensor, oil pressure, gens);
- Power supply range is wide(8~35)VDC, accommodating to different starting battery voltage environments;
- All parameters use digital modulation, abandoning analog modulation using conventional electronic potentiometer, more reliability and stability;
- Modular configuration design, Flame Retardant ABS plastic shell, inserted type

https://truckmanualshub.com/



connection terminals, flush type installation, compact structure, easy installation.

# 3 SPECIFICATION

| | |
|---|---|
| Operating Voltage | DC8.0V to 35.0V, Continuous |
| Power Consumption | <3W(Standby mode: ≤2W) |
| AC voltage Input Range<br>3-Phase 4 Wire<br>2-Phase 3 Wire<br>Single phase 2 Wire | <br>15V AC - 360 V AC (ph-N)<br>15V AC - 360 V AC (ph-N)<br>15V AC - 360 V AC (ph-N) |
| Frequency | 50Hz - 60 Hz |
| Magnetic AC voltage | 1.0V to 24V (effective value) |
| Magnetic AC Frequency | 10,000 Hz (max) |
| Start Relay Output | 16 Amp DC28V at supply voltage. |
| Fuel Relay Output | 16 Amp DC28V at supply voltage. |
| Auxiliary Relay Output 1 | 7 Amp DC28V |
| Auxiliary Relay Output 2 | 7A 250VAC passive |
| Auxiliary Relay Output 3 | 16A 250VAC passive |
| Auxiliary Relay Output 4 | 16A 250VAC passive |
| Overall Dimensions | 209mm x 153mm x 55mm |
| Panel cutoff | 186mm x 141mm |
| C.T. Secondary | 5A (rated ) |
| Operating Temp. Range | Temperature: (-25~70)ºC; Humidity: (20~90)% |
| Storage Condition | Temperature: (-30~+80)ºC |
| Protective Level | IP55: when waterproof rubber ring added between controller and its panel.<br>IP42: when waterproof rubber ring not have between controller and its panel. |
| Insulation Intensity | Object: among in input/output/power<br>Quote standard: IEC688-1992<br>Test way: AC1.5 kV / 1min 3mA leakage current |
| Weight | 0.71kg |

https://truckmanualshub.com/



# 4 OPERATION

## 4.1 KEY FUNCTION

| | | |
|---|---|---|
| | Stop/ Reset | Can stop generator under mode of Manual/Auto;<br>Can reset alarming under Stop;<br>To test panel indicators are OK or not, pressing this key at least 3 seconds;<br>During stopping process, press this again can stop generator immediately. |
| | Start | To start genset under Manual or Auto mode. |
| | Manual | Pressing this key will set the module into manual mode. |
| | Automatic | Pressing this key will set the module into automatic mode. |
| | Running with load | Pressing and controller is under manual testing mode.<br>Under this mode, genset will run with load automatic when gens are normal. (HGM6110KC without) |
| | Set/ Confirm | Enters into Set menu after pressing this, and can shift cursor to confirm. |
| | Page up /increase | Screen pages turning;<br>Shift cursor and increase its position no. in setting. |
| | Page down /decrease | Screen pages turning;<br>Shift cursor and decrease its position no. in setting. |

## 4.2 AUTOMATIC OPERATION

This mode is activated by pressing the . LED indicator is illuminating beside the button confirms this action.

**Sequence of Auto Start,**

a) HGM6120KC, When Mains is abnormal (over and under voltage, or miss phase), enters into mains “abnormal delay” and LCD display count down time. When mains abnormal delay is over, enter into “start delay”.

b) HGM6110KC, entries into “start delay” as soon as “Remote Start” is input valid.

c) “Count down” of start delay is displayed in LCD.

d) When start delay is over, preheat relay is outputting (if be equipped), “preheat start delay XX s” is displayed in LCD.

https://truckmanualshub.com/



e) When preheat relay is over, oil relay is outputting 1s and then start relay-output; if genset fails in starting during “cranking time”, the oil and start relays stop outputting and enters into “crank rest time” and wait for next attempt.

f) If genset fails in starting within setting attempt times, the fourth line of LED will in black and start failed alarm will be displayed on it.

g) Whatever times to start genset successfully, it will enter into “safety on time”. During this period, alarms of low oil pressure, hi-temperature, under speed, charge fail and Aux. input (been configured) are inactive. As soon as this delay is over, genset will enter into “start idle delay” (if this be configured).

h) During “start idle delay”, alarms of under speed, under frequency, under voltage are inactive. As soon as this delay is over, genset will enter into “warming up time delay” (if this be configured).

i) When “warming up time delay” is over, gens status indicator is light if gens normal. If alternator’s voltage, frequency meets to requirement of load, gens will close and relay is outputting., then genset will enter into normal running with load and gens indicator is light; if genset voltage and frequency is abnormal, controller will alarm and stop engine (gens alarming is displayed LCD).

**Sequence of Auto Stop,**

a) HGM6120KC, When Mains recovery during genset running, enters into mains voltage “normal delay” and its indicator light after Mains normal be confirmed. “Start delay” is beginning.

b) HGM6110KC, genset enters into “stop delay” as soon as “Remote Start” putting is inactive.

c) As soon as “stop delay” is over, genset enters into “High Speed cooling delay”. Mains are close and breaker is disconnected. After switch “rest time delay”, mains are close and relay is output as well as with loading. Gens’ indicator is dark while mains’ light.

d) Idle relay has power and outputs as soon as entering “stop idle relay” (If this been configured).

e) When enters “ETS relay”, ETS relay has power and outputs. Oil relay’s output is disconnected.

f) When genset enters “stop time”, automatic to decide whether generator is stopped or not.

g) When genset will enter into “over stop time” as soon as genset is stopped. If genset failed to stop and controller will alarm (“stop failed” will be displayed in LCD).

https://truckmanualshub.com/



## 4.3 MANUAL OPERATION

1) HGM6120KC, Auto starts mode is active when press and its indicator is illuminating. Press , then controller under “Manual Test Mode” and its indicator is illuminating. Under the both modes, press to start genset, and it can automatic detect start successfully and accelerate to Hi-speed running. If there is Hi-temperature, low oil level and voltage abnormal during diesel genset running, controller can protect genset to stop quickly (detail procedures please refer to No.4~9 of Auto start operation). Under “Manual Test Mode “, genset with load is decided by Mains is normal or not. If mains are normal, loading switch is never transferred; while mains are abnormal, loading switch is transferred into gens side. Under “Manual Test Mode “, after genset runs well in high speed, no matter mains is normal or not, loading switch must be transferred into gens side.

2) HGM6110KC, Auto starts mode is active when press , and its indicator is illuminating. Then press to start generator, it can automatic detect start successfully and genset automatic accelerates to Hi-speed running. If there is Hi-temperature, low oil level and voltage abnormal during diesel genset running, controller can protect genset to stop quickly (detail procedures please refer to No.4~9 of Auto start operation). After genset runs well in High speed, controller will send signal of gens close.

3) Manual stop, press can shut down the running genset (detail procedures please refer to No.3~7 of Auto stop operation).

# 5 PROTECTION

## 5.1 WARNING

When controller detects the warning signal, only alarm and not stop genset. The alarms are displayed in LCD.
Warnings as following,

| No. | Type | Description |
|---|---|---|
| 1 | Lost of speed | When controller detected the speed of genset is 0 and speed lost delay set as 0, controller will send warning alarm signal and it will be displayed in LCD |

https://truckmanualshub.com/



| No. | Type | Description |
|---|---|---|
| 2 | Gens Over Current | When controller detected the current of genset is over than threshold and over current delay set as 0, controller will send warning alarm signal and it will be displayed in LCD |
| 3 | Failed To Stop | When generator not stops after the “stop relay” is over, controller will send warning alarm signal and it will be displayed in LCD |
| 4 | Low oil level | When controller detected the oil level of genset is lower than threshold or low oil level warn input is active, controller will send warning alarm signal and it will be displayed in LCD |
| 5 | Charge Alt Fail | When controller detected the voltage of genset charger is lower than threshold, controller will send warning alarm signal and it will be displayed in LCD |
| 6 | Battery Low Voltage | When controller detected the voltage of genset battery is lower than threshold, controller will send warning alarm signal and it will be displayed in LCD |
| 7 | Battery High Voltage | When controller detected the voltage of genset battery is higher than threshold, controller will send warning alarm signal and it will be displayed in LCD |
| 8 | Low water level | When controller detected the warning of low water level input is active, controller will send warning alarm signal and it will be displayed in LCD |

## 5.2 SHUTDOWN ALARM

When controller detected shutdown alarm, it will send signal to break off and to stop.

The alarms are displayed in LCD.
Stop alarms as following,

| No. | Type | Description |
|---|---|---|
| 1 | Emergency Stop | When controller detected emergency stop signal, it will send a stop alarm signal and it will be displayed in LCD |
| 2 | High Temp alarm | When controller detected the temperature of water/cylinder is higher than set, it will send a stop alarm signal and it will be displayed in LCD |
| 3 | Lower OP alarm | When controller detected oil pressure is lower than set for alarming, it will send a stop alarm signal and it will be displayed in LCD |
| 4 | Over speed alarm | When controller detected genset speed is over than set for alarming, it will send a stop alarm signal and it will be displayed in LCD |
| 5 | Under speed | When controller detected genset speed is under than |

https://truckmanualshub.com/



| No. | Type | Description |
|---|---|---|
| | alarm | set for alarming, it will send a stop alarm signal and it will be displayed in LCD |
| 6 | Speed signal lost alarm | When controller detected genset speed is 0 or delay is not 0, it will send a stop alarm signal and it will be displayed in LCD |
| 7 | Gens over voltage | When controller detected genset voltage is over than set for alarming, it will send a stop alarm signal and it will be displayed in LCD |
| 8 | Gens under voltage | When controller detected genset voltage is under than set for alarming, it will send a stop alarm signal and it will be displayed in LCD |
| 9 | Gens over current | When controller detected genset current is over than set for alarming or delay is not 0, it will send a stop alarm signal and it will be displayed in LCD |
| 10 | Start failed alarm | During the start attempt times, if genset start failed, it will send a stop alarm signal and it will be displayed in LCD |
| 11 | Over frequency alarm | When controller detected genset frequency is over than set for alarming, it will send a stop alarm signal and it will be displayed in LCD |
| 12 | Under frequency alarm | When controller detected genset frequency is under than set for alarming, it will send a stop alarm signal and it will be displayed in LCD |
| 13 | Gens failed alarm | When controller detected genset frequency is 0, it will send a stop alarm signal and it will be displayed in LCD |
| 14 | Oil level lower alarm | When controller detected genset oil lever lower input is active, it will send a stop alarm signal and it will be displayed in LCD |
| 15 | Water level lower alarm | When controller detected genset water level lower input is active, it will send a stop alarm signal and it will be displayed in LCD |

# 6 Connecting terminal

HGM6110KC compared with HGM6120KC, is less a Mains three phase AC input terminal. The HGM6110KC and HGM6120KC backplane is as following.

https://truckmanualshub.com/



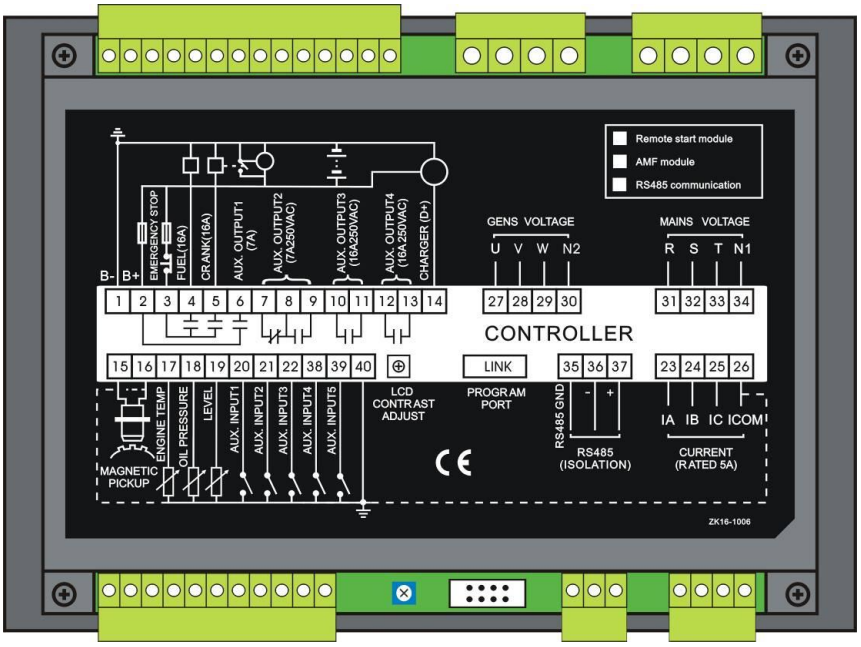


Description of terminal blocks connection

| Pin | Function | Dim | Description | |
|---|---|---|---|---|
| 1 | DC Plant Supply input (-ve) | 2.5mm | System DC negative input. (Battery Negative). | |
| 2 | DC Plant Supply input (+ve) | 2.5mm | System DC positive input. (Battery Positive). (Recommended Maximum Fuse 20A) | |
| 3 | Emergency stop input | 2.5mm | Plant Supply +ve. Also supplies fuel & start outputs. | |
| 4 | Fuel relay output | 1.5mm | Plant Supply +ve from pin 3. 16 Amp rated. | |
| 5 | Start relay output | 1.5mm | Plant supply +ve from pin 3. 16 Amp rated. | Connect to starter starting coil |
| 6 | Auxiliary relay output 1 | 1.5mm | Plant Supply +ve from pin 2. 7 Amp rated. | Reference table 2 |
| 7 | Auxiliary relay output 2 | 1.5mm | Closed output, 7 Amp rated. | |
| 8 | | | Relay common point | |
| 9 | | | Open output,7 Amp rated. | |
| 10 | Auxiliary relay output 3 | 2.5mm | Free volt contacts. 16 Amp rated | |
| 11 | | | | |
| 12 | Auxiliary relay output 4 | 2.5mm | | |
| 13 | | | | |
| 14 | Charge Gens D+ port | 1.0mm | Do not connect to ground (battery –ve) | |

https://truckmanualshub.com/



| Pin | Function | Dim | Description | |
|---|---|---|---|---|
| | input | | | |
| 15 | Magnetic pickup +ve | Connect to Magnetic Pickup device. | | |
| 16 | Magnetic pickup -ve | | | |
| 17 | Temp. sensor input | Connecting water/cylinder temperature resistance type sensor. | | Reference table 4 |
| 18 | Oil pressure input | Connect to oil pressure sensor. | | |
| 19 | Liquid level input | Connect to liquid Level sensor. | | |
| 20 | Auxiliary input 1 | 1.0mm | Switch to -ve | Reference table 3 |
| 21 | Auxiliary input 2 | 1.0mm | Switch to -ve | |
| 22 | Auxiliary input 3 | 1.0mm | Switch to -ve | |
| 23 | CT Secondary for A | 1.5mm | Connect to secondary of A monitoring CT | |
| 24 | CT Secondary for B | 1.5mm | Connect to secondary of B monitoring CT | |
| 25 | CT Secondary for C | 1.5mm | Connect to secondary of C monitoring CT | |
| 26 | CT secondary common | 1.5mm | Connect to secondary of all monitoring CT's | |
| 27 | Generator A voltage monitoring | 1.0mm | Connect to Generator A output (Recommend 2A fuse) | |
| 28 | Generator B voltage monitoring | 1.0mm | Connect to Generator B output (Recommend 2A fuse) | |
| 29 | Generator C voltage monitoring | 1.0mm | Connect to Generator C output (Recommend 2A fuse) | |
| 30 | Generator Neutral input | 1.0mm | Connect to generator neutral terminal (AC) | |
| 31 | Mains A voltage monitoring | 1.0mm | Connect to mains A output (Recommend 2A fuse) | |
| 32 | Mains B voltage monitoring | 1.0mm | Connect to mains B output (Recommend 2A fuse) | |
| 33 | Mains C voltage monitoring | 1.0mm | Connect to mains C output (Recommend 2A fuse) | |
| 34 | Mains Neutral input | 1.0mm | Connect to mains neutral terminal | |
| 35 | RS485 port common | 0.5mm | Use only 120Ω RS485 approved cable. | |
| 36 | RS485 port A(-) | 0.5mm | | |
| 37 | RS485 port B(+) | 0.5mm | | |
| 38 | Auxiliary input 4 | 1.0mm | Switch to -ve | Reference table 3 |
| 39 | Auxiliary input 5 | 1.0mm | Switch to -ve | |
| 40 | Common port | 1.0mm | Auxiliary input common port | |

**Note:** LINK interface in back is as a parameter programming interface, by PC to programmable controller via SG72 adapter.

https://truckmanualshub.com/



# 7 PARAMETER RANGE AND DEFINE

**All parameters of HGM6100K series are as following:**

## 7.1 PARAMETERS TABLE (TABLE 1)

| Num | Parameter | Range | Default | Description |
|---|---|---|---|---|
| 1 | Mains volt normal delay | (0-3600)s | 10 | Mains transient delay, suited for ATS (automatic transfer switch). |
| 2 | Mains volt abnormal delay | (0-3600)s | 5 | |
| 3 | Mains under volt | (30-360)V | 184 | When mains voltage is under than the point, mains under voltage are active. When the point is zero, mains under voltage are disabled. |
| 4 | Mains over volt | (30-360)V | 276 | When mains voltage is over than the point, mains over voltage are active. When the point is 360V, mains over voltage are disabled. |
| 5 | Transfer Switch interval | (0-99.9)s | 1.0 | It's the delay from mains is opened to generator closing or from generator is opened to mains closing. |
| 6 | Start delay | (0-3600)s | 1 | It's the delay from remote start signal is active or mains is failure, to start generator. |
| 7 | Stop delay | (0-3600)s | 1 | It's the delay from remote start signal is inactive or mains is normal, to stop generator. |

https://truckmanualshub.com/



| Num | Parameter | Range | Default | Description |
|---|---|---|---|---|
| 8 | Number of crank | (1-10)times | 3 | When engine start no success, most of cranking numbers. When reach setting crank numbers, controller send out start fail signal. |
| 9 | Preheat time | (0-300)s | 0 | |
| 10 | Crank time | (3-60)s | 8 | The starter adds the time of the electricity each time. |
| 11 | Crank rest time | (3-60)s | 10 | |
| 12 | Safe run time | (1-60)s | 10 | |
| 13 | Start idle time | (0-3600)s | 0 | |
| 14 | Warming up time | (0-3600)s | 10 | |
| 15 | Cooling time | (3-3600)s | 10 | |
| 16 | Stop idle time | (0-3600)s | 0 | |
| 17 | ETS solenoid hold | (0-120)s | 20 | It's the delay for energizing to stop. |
| 18 | Fail to stop delay | (0-120)s | 0 | |
| 19 | ATS close time | (0-10)s | 5.0 | Mains or Generator switch closing pulse width, when it is zero, output is continuous. |
| 20 | Flywheel teeth | (10-300) | 118 | |
| 21 | Gens abnormal delay | (0-20.0)s | 10.0 | |
| 22 | Gens over volt | (30-360)V | 264 | When generator voltage is over than the point, generator over voltage is active. When the point is 360V, generator over voltage is disabled. |
| 23 | Gens under volt | (30-360)V | 196 | When generator voltage is under than the point, generator under voltage is active. When the point is 30V, generator under voltage is disabled. |
| 24 | Under speed | (0-6000)RPM | 1200 | When the engine speed is under than the point and hold great than 10 seconds, generator under speed is active. |

https://truckmanualshub.com/



| Num | Parameter | Range | Default | Description |
|---|---|---|---|---|
| 25 | Over speed | (0-6000)RPM | 1710 | When the engine speed is over than the point and hold great than 2 seconds, generator over speed is active. |
| 26 | Gens under freq | (0-75.0)Hz | 45.0 | When generator freq. is low than the point, generator low frequency and hold great than 10 seconds is active. |
| 27 | Gens over freq | (0-75.0)Hz | 57.0 | When generator freq. is over than the point and hold great than 2 seconds, generator over frequency is active. |
| 28 | High temperature | (80-140)°C | 98 | When engine temperature sensor value is over than this point and remain for 2 seconds, send out shutdown alarm. When the value is 140, send out warning alarm. (It's suited for engine temperature sensor only). |
| 29 | Low oil pressure | (0-400)kPa | 103 | When engine oil pressure sensor value is under than this point and remain for 2 seconds, send out shutdown alarm. When the value is zero, send out warning alarm. (it's suited for oil pressure sensor only) |
| 30 | Low Fuel Level | (0-100)% | 10 | When fuel level sensor value is under than this point and remain for 10 seconds, send out warning alarm. |

https://truckmanualshub.com/



| Num | Parameter | Range | Default | Description |
|---|---|---|---|---|
| 31 | Lose speed delay | (0-20.0)s | 5.0 | When speed is zero and remain for the delay, send out shutdown alarm. When the delay is zero, send out warning alarm. |
| 32 | Charge fail volt | (0-30)V | 6.0 | During generator is running, when charge alternator WL/D+ voltage is under than this point and remain for 5 seconds, generator will warning alarm. |
| 33 | Battery over volt | (12-40)V | 33.0 | When generator battery voltage is over than the point and hold for 20 seconds, battery over voltage signal is active. It's a warning alarm. |
| 34 | Battery under volt | (4-30)V | 8.0 | When generator battery voltage is under than the point and hold for 20 seconds, battery under voltage signal is active. It's a warning alarm. |
| 35 | CT rate | (5-6000)/5 | 500 | Current transformer rate |
| 36 | Full load current | (5-6000)A | 500 | Mains or generator set maximum rated current. |
| 37 | Over current percentage | (50-130)% | 120 | When the load current is over than the point, the over current delay is initiated. |
| 38 | Over current delay | (0-3600)s | 1296 | When load current is over than the point and hold great than the timer, send out over current signal. When the delay is zero, over current is disabled. |
| 39 | Open Fuel Pump threshold | (0-100)% | 25 | When the fuel level lower than the set value and for 10 seconds, the output signal to open fuel pump. |

https://truckmanualshub.com/



| Num | Parameter | Range | Default | Description |
|---|---|---|---|---|
| 40 | Fuel pump off threshold | (0-100)% | 80 | When the fuel level higher than the set value and for 10 seconds, the output fuel pump off signal. |
| 41 | Digit Output1 set | (0-17) | 2 | Energized to stop |
| 42 | Digit Output 2 set | (0-17) | 3 | Idle control |
| 43 | Digit Output 3 set | (0-17) | 5 | Close gens |
| 44 | Digit Output 4 set | (0-17) | 6 | Close mains |
| 45 | Aux. input1 | (0-15) | 1 | High Temperature input |
| 46 | Aux. input1 valid | (0-1) | 0 | Factory default is: closed |
| 47 | Aux. input1 delay | (0-20.0)s | 2.0 | |
| 48 | Aux. input2 | (0-15) | 2 | Low Oil Pressure input |
| 49 | Aux. input2 valid | (0-1) | 0 | Factory default is: closed |
| 50 | Aux. input2 delay | (0-20.0)s | 2.0 | |
| 51 | Aux. input3 | (0-15) | 10 | Remote start input |
| 52 | Aux. input3 valid | (0-1) | 0 | Factory default is: closed |
| 53 | Aux. input3 delay | (0-20.0)s | 2.0 | |
| 54 | Aux. input4 | (0-15) | 11 | Low fuel level warn |
| 55 | Aux. input4 valid | (0-1) | 0 | Factory default is: closed |
| 56 | Aux. input4 delay | (0-20.0)s | 2.0 | |
| 57 | Aux. input5 | (0-15) | 12 | Low coolant level warn |
| 58 | Aux. input5 valid | (0-1) | 0 | Factory default is: closed |
| 59 | Aux. input5 delay | (0-20.0)s | 2.0 | |
| 60 | Module power on | (0-2) | 0 | 0: Stop mode<br>1: Manual mode<br>2: Auto mode |
| 61 | Module address | (1-254) | 1 | |
| 62 | Passwords set | (0-9999) | 1234 | |
| 63 | Crank success condition select | (0-5) | 2 | Setting item is given in Table 5. |
| 64 | Speed disconnect | (0-3000)RPM | 360 | When engine speed is over than this point, starter will disconnect. |

https://truckmanualshub.com/



| Num | Parameter | Range | Default | Description |
|---|---|---|---|---|
| 65 | Freq disconnect | (10-30)Hz | 14 | When generator frequency is over than this point, starter will disconnect. |
| 66 | OP disconnect | (0-400)kPa | 200 | When engine oil pressure is over than this point, starter will disconnect. |
| 67 | High temp. prohibit select | (0-1) | 0 | Default, when temperature is higher, alarm to stop. Details see **Note1**. |
| 68 | Low OP prohibit select | (0-1) | 0 | Default, when oil pressure is lower, alarm to stop. Details see **Note2**. |
| 69 | Single/3 phases input select | 0 3phase-4wire<br>1 2phase-3wire<br>2 1phase-2wire | 0 | 3phase-4wire |
| 70 | Select temp. sensor | (0-9) | 08 | SGX |
| 71 | Select press sensor | (0-9) | 08 | SGX |
| 72 | Select liquid level sensor | (0-5) | 03 | SGD |

**Note 1,** if set as higher temperature to prohibit stop, or set programmable port as higher temperature prohibits stop and this port is active, when temperature value is higher than set of higher temperature value or higher temperature alarm input is active, controller send warning signal of higher temperature only and not stop.

**Note 2,** if set as lower oil pressure to prohibit stop, or set programmable port as lower oil pressure prohibits stop and this port is active, when lower oil pressure value is lower than set of lower oil pressure value or lower oil pressure alarm input is active, controller send warning signal of higher temperature only and not stop.

## 7.2 PROGRAMMABLE OUTPUT 1-4 TABLE (TABLE 2)

| Num | Content | Description |
|---|---|---|
| 0 | Not used | Output is no use when select this |
| 1 | Common alarm | The designated programmable output relay will energize when any warning or shutdown fault circuit has been activated. |

https://truckmanualshub.com/



| Num | Content | Description |
|---|---|---|
| 2 | ETS solenoid hold | The designated programmable output relay will energize when a stop signal has been activated. The output will remain energized for pre-set timer once the engine has come to a complete stop, then de-energizes. |
| 3 | Idle control | The designated programmable output relay will energize when the idle delay is not zero. The output contact would typically be connected to the “idle/run” input control of an electronic governor. |
| 4 | Preheat control | The designated programmable output relay will energize during the preheat delay timer period and also energize until the engine receive a crank success signal. The preheat output is typically used for an engine starting aid such as glow plugs. |
| 5 | Closed Gens | Switch generator breaker on. |
| 6 | Closed Mains | Switch mains breaker on.(HGM6120KC) |
| 7 | Open ATS | Switch breaker off. The output delay is 3 seconds. |
| 8 | Raise speed | In the process of warm-up when he entered the suction, suck time for high-speed warm-up delay time. Raise speed auxiliary input effective disconnect. |
| 9 | Drop speed | Enter into stop idling process or to ETS solenoid stop (when alarm stop) sucked, and suck time to stop idling delay time. Drop speed when the auxiliary active disconnect. |
| 10 | Generator run output | Outputting when genset in normal running and disconnected after speed is lower than start successful speed value. |
| 11 | Fuel pump control | When the fuel level lower than the set threshold to open the fuel pump or input a low oil level warning enter active pull; when the fuel level over than that set off the fuel pump and the input threshold of the low oil level warning off when input is inactive open. |
| 12 | High speed control | Outputting when genset enters into "Warming Up" and disconnected after "Cooling Down" is over. |
| 13 | System in automatic mode | The controller work in automatic mode. |

https://truckmanualshub.com/



| Num | Content | Description |
|---|---|---|
| 14 | Reserved | |
| 15 | Reserved | |
| 16 | Reserved | |
| 17 | Reserved | |

## 7.3 PROGRAMMABLE DIGIT INPUT 1-5 TABLE (ALL IS VALID WHEN CONNECT GRAND (B-) (TABLE 3)

| Num | Content | Description |
|---|---|---|
| 0 | Not used | |
| 1 | High Temp. alarm input | After the end of the delay in the safe operation, if the signal is active, generator will immediately alarm shutdown. |
| 2 | Low OP alarm input | |
| 3 | Auxiliary warn input | Auxiliary warn alarm digital input. |
| 4 | Auxiliary shutdown alarm input | When power on, if active, generator will stop immediately. |
| 5 | Stop after cooled | During engine running, if the engine occur high temperature shutdown, when the input is active, the engine will first initiate cooling delay and then stop, else will stop immediately. |
| 6 | Gens closed state input | The input state of generator closed. |
| 7 | Mains closed state input | The input state of Mains closed. |
| 8 | Higher temp. stop prohibit | When it is active, prohibit stop when higher temperature. Details see **Note1.** |
| 9 | Oil pressure lower stop prohibit | When it is active, prohibit stop when oil pressure lower. Details see **Note2.** |
| 10 | Remote start input | |
| 11 | Low Fuel Level warn | |
| 12 | Low coolant level warn | |
| 13 | Low Fuel Level shutdown | |
| 14 | Low coolant level shutdown | |
| 15 | Automatic start Inhibit | This input is used to provide an over-ride function to prevent the **6100K** from starting the generator in the event of a remote start/ mains out of limits condition occurring. If this input is |

https://truckmanualshub.com/



| Num | Content | Description |
|---|---|---|
| | | active and a remote start signal/mains failure occurs the HGM6110/20K will not give a start command to the generator. If this input signal is then removed, the HGM6110/20K will operate as if a remote start/mains failure has occurred, starting and loading the generator. This function can be used to give an **'AND'** function so that a generator will only be called to start if the mains fails and another condition exists which requires the generator to run. If the 'Auto start Inhibit' signals become active once more it will be ignored until the module has returned the mains supply on load and shutdown. |

## 7.4 SENSOR SELECTION (TABLE 4)

| Num | | Content | Description |
|---|---|---|---|
| 1 | Temperature Sensor | 0 Not used<br>1 Defined Res. Type<br>2 VDO<br>3 SGH(Huanghe sensor)<br>4SGD(DongKang sensor)<br>5 CURTIS<br>6 DATCON<br>7 VOLVO-EC<br>8 SGX<br>9 Reserved | Defined input resistance range is 0~6000Ω, factory default is SGX. |
| 2 | Pressure Sensor | 0 Not used<br>1 Defined Res. Type<br>2 VDO 10Bar<br>3 SGH(Huanghe sensor)<br>4 SGD(DongKang sensor)<br>5 CURTIS<br>6 DATCON 10Bar<br>7 VOLVO-EC<br>8 SGX<br>9 Reserved | Defined input resistance range is 0~6000Ω, factory default is SGX. |
| 3 | Fuel Level Sensor | 0 Not used<br>1 Defined Res. Type<br>2 SGH<br>3 SGD<br>4 Reserved 1 | Defined curve input resistance range is 0-6000Ω, factory default is SGD. |

https://truckmanualshub.com/



| Num | | Content | Description |
|---|---|---|---|
| | | 5 Reserved 2 | |

## 7.5 CONDITIONS OF CRANK SUCCEED (TABLE 5)

| Num | Content |
|---|---|
| 0 | Magnetic pickup sensor |
| 1 | Generator |
| 2 | Magnetic pickup sensor + Generator |
| 3 | Magnetic pickup sensor + Oil pressure |
| 4 | Generator + Oil pressure |
| 5 | Generator + Magnetic pickup sensor + Oil pressure |

1) The crank disconnect condition has three kinds, the magnetic pickup sensor and the generator voltage can be used alone, the oil pressure must be used with the magnetic pickup sensor and the generator voltage, the purpose is to make the starter and the engine to disconnect as soon as possible.
2) Magnetic pickup sensor is installed in the engine block number of magnetic device testing flywheel.
3) When choosing magnetic pickup sensor, ensure engine flywheel teeth setting, otherwise may appear over speeding shutdown or loss speed shutdown.
4) If the generator is not magnetic pickup sensors, please don't choose corresponding, otherwise this will occur fail to start or loss of speed alarm and shutdown.
5) If the generator has no oil pressure sensor, please don't choose corresponding.
6) If the generator starting conditions has not be selected, the controller will not measure and display the relative parameters (This can be applied to the pump set), if not choose magnetic pickup sensor, the speed signal will come from the generating AC signal.

https://truckmanualshub.com/



# 8 PARAMETER SETTING

After controller powered on, press to enter into the parameters setting menu:

1 Set Parameters.

2 Information.

3 Set Languages.

■ Set parameters

When entering password, entering "1234" can set the item 1 to 38 in the table (parameters table [Table 1]), entering "0318" can set all items.

**NOTE:**

a. When the controller type is HGM6110KC, you will not have a table with a 1-5; the programmable output 1-4 will have no power of some mains switch output.

b. Please modify the parameters (such as crank disconnect, input and output configuration, various time, etc.) in standby mode, otherwise it might alarm shutdown or other abnormal behavior.

c. The over-voltage threshold must be greater than the under-voltage threshold; otherwise both will occur at the same time over-voltage and under-voltage situation.

d. The over-speed threshold must be greater than under-speed threshold, otherwise you will receive both the over speed and under speed.

e. As far as possible set the frequency (crank disconnect) to lower numerical, in order to quickly crank disconnect when crank success.

f. Configurable input port 1-5 cannot set for the same items, otherwise cannot appear correct function, configurable output 1-4 can be set for the same item.

g. If need to shutdown after cooling, please set any one configurable input as " stop after cooling ", then connect this input with GND.

■ Information

LCD will display the controller software version, issue date.

**Note:** Press the key will display the states of switching input 5 whether or not active.

https://truckmanualshub.com/



■ Set language

User may set display interface language as Chinese, English, Spanish and Russian.

**Note:** Press the key O will exit setting interface at any time.

# 9 SENSOR SELECTION

1. When the choice sensor, the sensor to standard curve will call. If factory set temperature sensor for SGH (120 degrees resistance-type), sensor curve for SGH (120 degrees resistance-type), 120 degrees Celsius (elected SGD type), resistively curve for temperature sensor SGD curve.
2. If use standard sensor with the curve, can differ option "item sensor curve input", after adjusting adjustment can be determined according to save.
3. When the input sensor curve, X (resistance) must be in accordance with the order of big from small, otherwise will enter errors.
4. When the sensor is choosing "nothing", the sensor curves no affection, LCD display temperature or pressure for---.
5. If there is no pressure sensor, only low pressure alarm switch, it must be alarm settings for pressure sensor "nothing", otherwise may appear oil pressure low alarm shutdown.
6. Can set up several point of forehand or several point of backmost ordinate the same. The following picture:

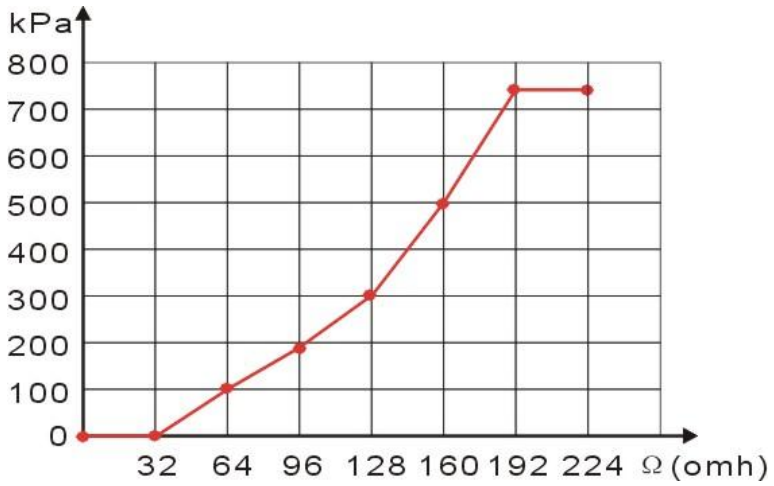

https://truckmanualshub.com/



**Common units' conversion table**

| | $1N/m^2$ (pa) | $1kgf/cm^2$ | 1bar | $(1b/in^2)$ psi |
|---|---|---|---|---|
| 1Pa | 1 | $1.02\times10^{-5}$ | $1\times10^{-5}$ | $1.45\times10^{-4}$ |
| $1kgf/cm^2$ | $9.8\times10^{4}$ | 1 | 0.98 | 14.2 |
| 1bar | $1\times10^{5}$ | 1.02 | 1 | 14.5 |
| 1psi | $6.89\times10^{3}$ | $7.03\times10^{-2}$ | $6.89\times10^{-2}$ | 1 |

# 10 COMMISSIONING

Before operation, inspections that are recommended as follows should be carried out:

a. Check and assure that all connections are correct, and that diameter of line is suitable;

b. The DC power supply of controller is equipped with fuse, and the positive supply (+Ve) and negative supply (-Ve) connected with battery are connected correctly;

c. The emergency stop input is connected with the positive supply (+Ve) of the battery through the NC terminal and fuse of emergency stop button;

d. The suitable operation should be taken to prevent the engine from crank success (such as dismantling the connection of fuel), check and assure that it is correct, then connect with battery, select manual mode, the controller will execute program;

e. Press down the starting button on the panel of controller , the engine will crank, after starts have been carried out according to setting crank numbers, the controller sends the signal that indicates crank failure; Press the Stop/Reset key to make the controller resetting;

f. Restore the measure that prevents the engine from crank success (such as restoring the connection of fuel), press down the starting button again, the engine will crank, if crank is normal, the generator will operate from idle operation (if idle has been set) to normal operation. In the meantime, observe

https://truckmanualshub.com/



the operation situation of engine and the voltage and frequency of the AC generator. If there is abnormal, stop the generator, then check connections of each part according to this handbook;

g. Select automatic state through front panel, then switch on the mains voltage, the controller switches over ATS (if it exist) to mains on load after pass through the mains normal delay, after cooling time, and then shut down to go into standby state until the mains is abnormal again;

h. After the mains is abnormal again, the Generator will automatically crank into normal operation state, and then close generator relay, control the ATS to switch transfer to generator on load. If the situation is not same as described above, check the connection of control part of the ATS according to this handbook;

i. If there are other questions, please contact the technical personnel of Smartgen immediately.

# 11 TYPICAL APPLICATION

HGM6110KC Typical wiring diagram

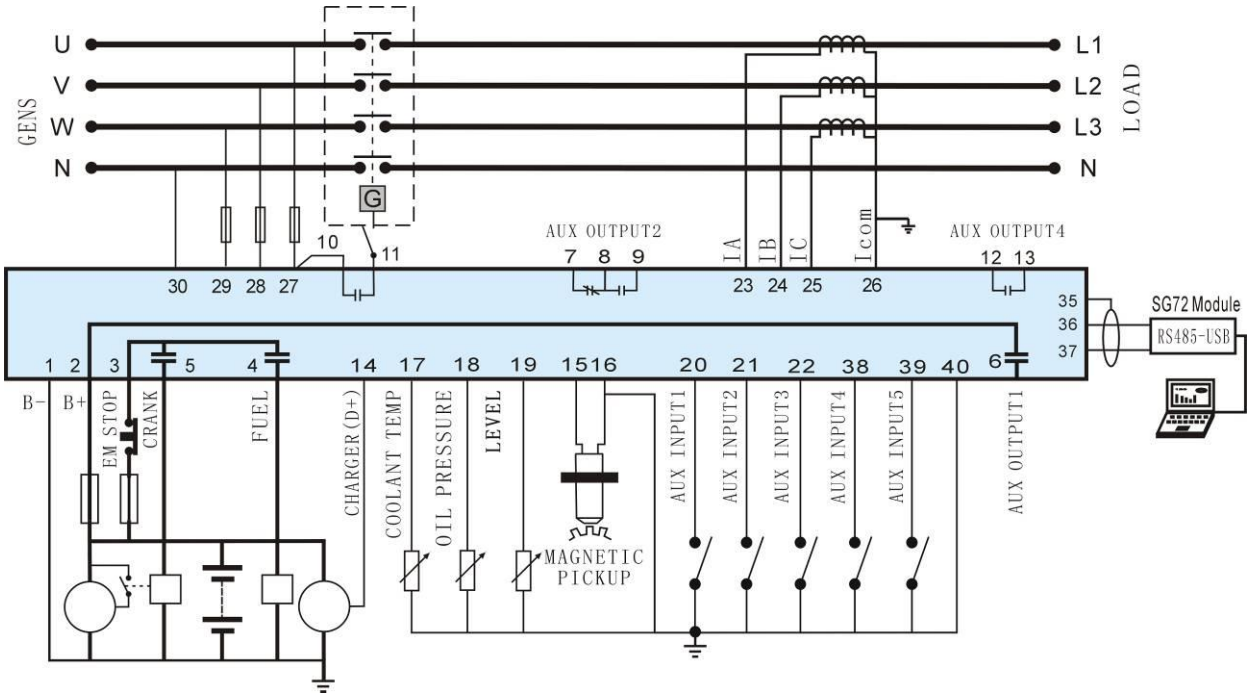

## HGM6120KC Typical wiring diagram

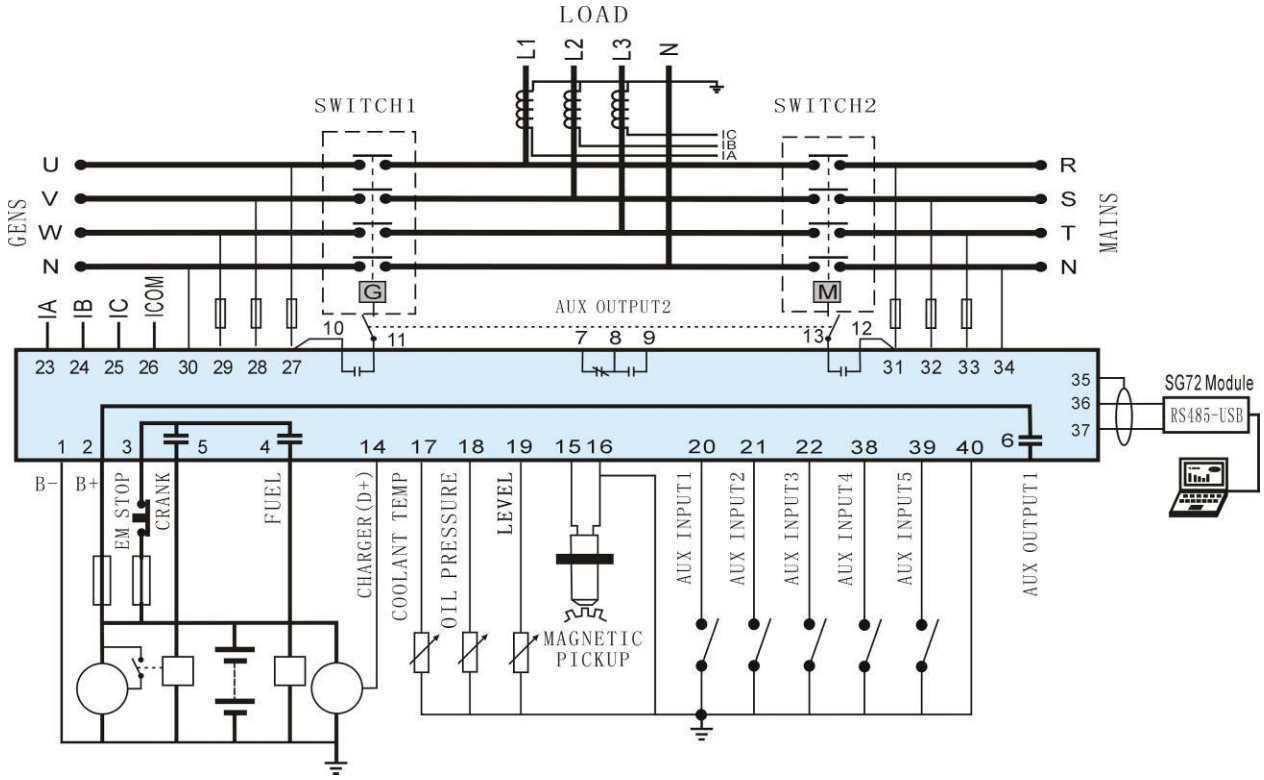


Single phase 2 wires (HGM6120KC)

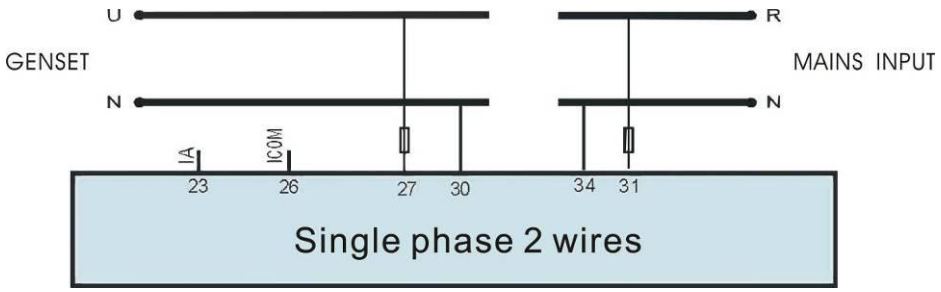


2-phase 3 wires (HGM6120KC)

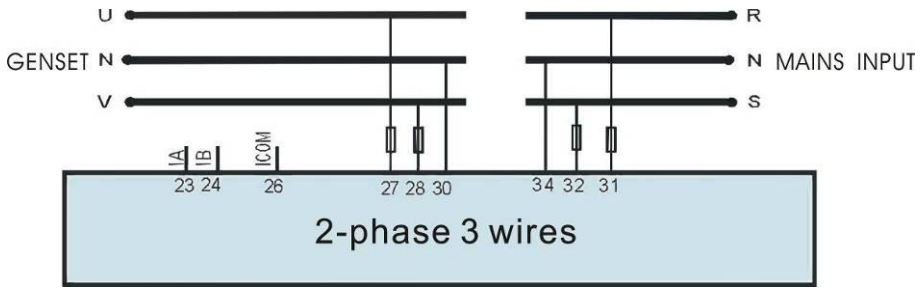


**Note:** Recommend that the output of crank and Fuel expand high capacity relay.

https://truckmanualshub.com/



# 12 INSTALLATION

The controller is designed to panel installation mode, and it is fixed by clamps when it is installed. The overall dimension and panel tapping dimension are given as follows:

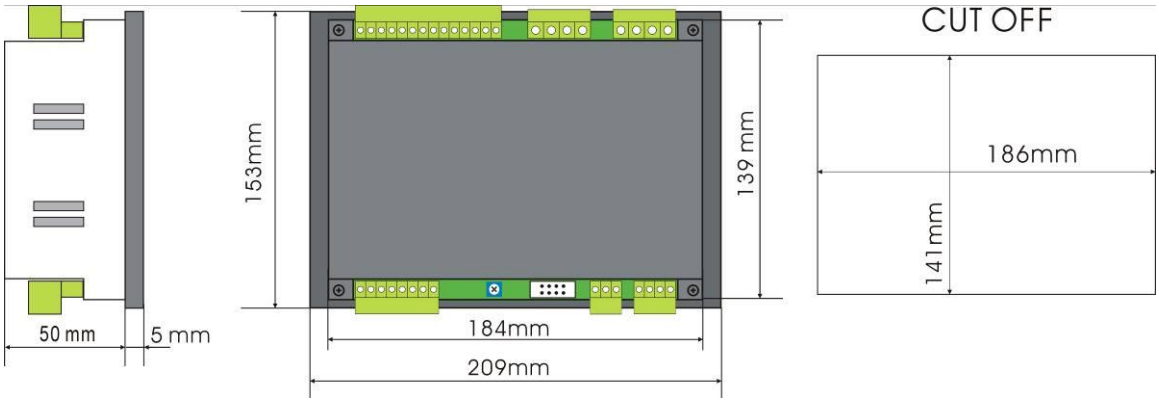


1) **Battery voltage input**

HGM6100K series controller can be applicable to (8-35)VDC battery voltage environment, battery anode must be reliable connect engine shell B + and B- controller power battery anode and cathode connections is not less than 2.5, if there was the float electrical, please put the charger output wire directly to battery is negative, and from the battery is connected to the anode separately on the power input, positive controller to prevent the normal operation of the controller battery charger interference.

2) **Speed sensor input**

Speed sensor is installed in the engine block of magnetic device testing flywheel teeth, it should be used with the controller of attachment 2 core shielding line, shielding layer on the 16th pin controller, the other end terminal, the other two are respectively in signal controller, and meet the terminals15th and 16th pin. At full speed sensor output voltage range should be in 1-24VAC (RMS), recommend voltage for 12VAC (in the rated speed). When the velocity sensor can be installed to contact the flywheel spinning sensor first, then pour out 1/3 laps, finally will lock nut on the sensor.

3) **Output and relays**

Controller for all output relay contacts output, if need to expand relays, please will expand relay coil free-wheeling diode (increased ends when extended relay coil links DC) or increase resistance and capacitance loop (when extended relay coil links AC), in order to prevent interference controller or

https://truckmanualshub.com/



other equipment.

4) **Alternating current input**

HGM6100K series controller to external input current transformer, electric current transformer side must be 5A, while the current transformers for phases and the phase of the input voltage must be correct, otherwise the current and sampling the active power may be incorrect.

**Note:** A. ICOM must connect battery anode power controllers.

B. When the load current, the transformer secondary side is strictly open circuit.

5) **Pressure test**

When the controller has been installed in the control panel, if you will, please put pressure test controller terminals all disconnected, lest high-pressured into and damaged controller.

# 13 FAULT FINDING

| Symptom | Possible Remedy |
|---|---|
| Generator inoperative | Check the battery and wiring to the unit.<br>Check the DC supply.<br>Check the DC fuse. |
| Generator shutdown | Check water/cylinder temperature whether or not too high.<br>Check AC generator voltage.<br>Check the DC fuse. |
| Emergency shutdown | If an Emergency shutdown switch is not fitted, ensure that a positive is connected to the emergency shutdown input.<br>Check emergency shutdown switch is functioning correctly.<br>Check wiring is not open circuit. |
| Low oil Pressure alarm (after crank success) | Check engine oil pressure.<br>Check oil pressure switch/sensor and wiring.<br>Check configured polarity (if applicable) is correct. |
| High Temp. alarm (after crank success) | Check engine temperature.<br>Check switch/sensor and wiring.<br>Check configured polarity (if applicable) is correct. |
| Shutdown fault operates | Check relevant switch and wiring of fault indicated on LCD display.<br>Check configuration of input. |

https://truckmanualshub.com/



| Symptom | Possible Remedy |
|---|---|
| Crank no success | Check wiring of fuel solenoid.<br>Check starting batteries.<br>Check speed sensor and its connections. Refer to engine manual. |
| Crank failure | Check wiring of fuel solenoid.<br>Check fuel.<br>Check battery supply.<br>Check battery supply is present on the Fuel output of the module.<br>Check the speed sensing signal is present on the 6100K series inputs. Refer to engine manual. |
| Unit operation but ATS | Check ATS.<br>Check the connection between the ATS and the controller. |
| RS485 communication abnormal | Check wiring.<br>Check COM ports set correctly.<br>Check the A and B RS485 line is reversed.<br>Check of RS485 conversion module.<br>Check the PC communications port is damaged.<br>Suggest that the A and B lines of the 485 network should be terminated at each end with a 120Ω resistor. |