Introduction

This manual provides information needed to operate and understand the vehicle and its components. More detailed information is contained in the *Owner's Warranty Information for North America* booklet and in the vehicle's workshop and maintenance manuals.

Custom-built Cargo vehicles are equipped with various chassis and cab components. Not all of the information contained in this manual applies to every vehicle. For details about components in your vehicle, refer to the chassis specification pages included in all new vehicles and to the vehicle specification decal, located inside the vehicle.

For your reference, keep this manual in the vehicle at all times.

IMPORTANT: Descriptions and specifications in this manual were in effect at the time of printing. Freightliner LLC reserves the right to discontinue models and to change specifications or design at any time without notice and without incurring obligation. Descriptions and specifications contained in this publication provide no warranty, expressed or implied, and are subject to revisions and editions without notice.

Environmental Concerns and Recommendations

Whenever you see instructions in this manual to discard materials, you should first attempt to reclaim and recycle them. To preserve our environment, follow appropriate environmental rules and regulations when disposing of materials.

Event Data Recorder

This vehicle is equipped with one or more devices that record specific vehicle data. The type and amount of data recorded varies depending on how the vehicle is equipped (such as the brand of engine, if an air bag is installed, or if the vehicle features a collision avoidance system, etc.).

Customer Assistance Center

Having trouble finding service? Call the Freightliner Customer Assistance Center at 1-800-385-4357 or 1-800-FTL-HELP, or the Sterling Customer Assistance Center at 1-800-785-4357 or 1-800-STL-HELP. Call night or day, weekdays or weekends for dealer referral, vehicle information, breakdown coordination, or Fleetpack assistance. Our people are knowledgeable, professional, and committed to following through to help you keep your truck moving.

4/06P
Printed in U.S.A.

https://truckmanualshub.com/

Reporting Safety Defects

If you believe that your vehicle has a defect which could cause a crash or could cause injury or death, you should immediately inform the National Highway Traffic Safety Administration (NHTSA) in addition to notifying Freightliner LLC.

If the NHTSA receives similar complaints, it may open an investigation, and if it finds that a safety defect exists in a group of vehicles, it may order a recall and remedy campaign. However, NHTSA cannot become involved in individual problems between you, your dealer, or the vehicle manufacturer.

To contact NHTSA, you may call the Vehicle Safety Hotline toll-free at 1-888-327-4236 (TTY: 1-800-424-9153); go to http://www.safercar.gov; or write to: Administrator, NHTSA, 400 Seventh Street, SW, Washington, DC 20590. You can also obtain other information about motor vehicle safety from http://www.safercar.gov.

Canadian customers who wish to report a safety-related defect to Transport Canada, Defect Investigations and Recalls, may telephone the toll-free hotline 1-800-333-0510, or contact Transport Canada by mail at: Transport Canada, ASFAD, Place de Ville Tower C, 330 Sparks Street, Ottawa, Ontario, Canada K1A 0N5.

For additional road safety information, please visit the Road Safety website at: http://www.tc.gc.ca/roadsafety/menu.htm

© 1998-2006 Freightliner LLC. All rights reserved.

No part of this publication, in whole or part, may be translated, reproduced, stored in a retrieval system, or transmitted in any form by any means, electronic, mechanical, photocopying, recording, or otherwise, without the prior written permission of Freightliner LLC. For additional information, please contact Freightliner LLC, Service Systems and Documentation, P.O. Box 3849 Portland OR 97208–3849 U.S.A. or refer to http://www.Freightliner.com, http://www.FreightlinerTrucks.com, or http://www.SterlingTrucks.com.

https://truckmanualshub.com/

Contents

Chapter		Page
	Introduction, Environmental Concerns and Recommendations, Event Data Recorder, Customer Assistance Center, Reporting Safety Defects	Foreword
1	Vehicle Identification	1.1
2	Vehicle Access and Features	2.1
3	Driver Controls and Instruments	3.1
4	Engines	4.1
5	Transmissions	5.1
6	Clutches, Rear Axles, and Steering	6.1
7	Brakes	7.1
8	Cab Appearance	8.1
9	Pretrip Inspection and Daily Maintenance	9.1
10	In an Emergency	10.1
11	Fifth Wheels	11.1
	Index	I.1

https://truckmanualshub.com/

1

Vehicle Identification

Vehicle Specification Decal 1.1
Federal Motor Vehicle Safety Standard (FMVSS) Labels 1.1
Canadian Motor Vehicle Safety Standard (CMVSS) Labels 1.2
Tire and Rim Labels 1.3
EPA Vehicle Noise Emission Control Label 1.3

Vehicle Specification Decal

The vehicle specification decal (**Fig. 1.1**) identifies the vehicle model, I.D. number, and major component models. It also lists the major assemblies and installations shown on the chassis specification sheet. A copy of the specification decal is inside the rear cover of the *Owner's Warranty Information for North America* booklet. An illustration of the decal is shown in **Fig. 1.1**.

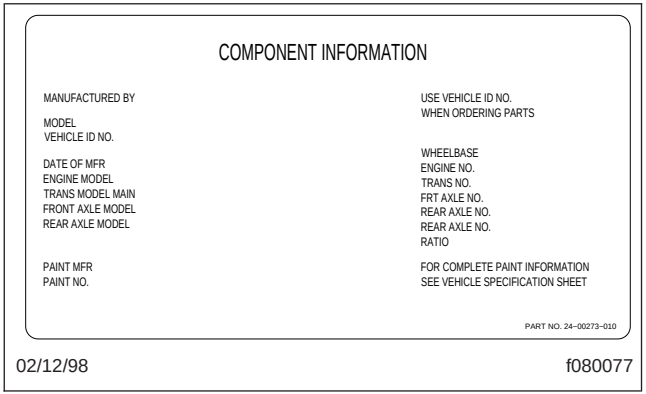

Fig. 1.1, Vehicle Specification Decal, U.S.-Built Vehicle Shown

NOTE: Labels shown in this chapter are examples only.

Federal Motor Vehicle Safety Standard (FMVSS) Labels

NOTE: Due to the variety of FMVSS certification requirements, not all of the labels shown will apply to your vehicle.

Tractors with or without fifth wheels purchased in the U.S. are certified by means of a certification label (**Fig. 1.2**) and the tire and rim labels. These labels are attached to the left rear door post.

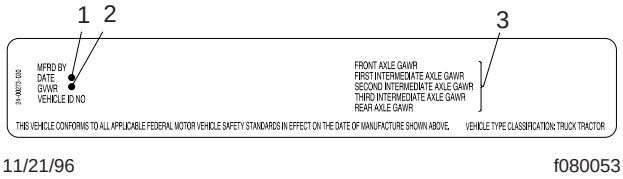

1. Date of manufacture by month and year.
2. Gross vehicle weight rating; developed by taking the sum of all the vehicle's gross axle ratings.
3. Gross axle weight ratings; developed by considering each component in an axle system, including suspension, axle, wheels, and tires. The lowest component capacity is the value used for the system.

Fig. 1.2, Certification Label, U.S.

If purchased for service in the U.S., trucks built without a cargo body have a certification label (**Fig. 1.3**) attached to the left rear door post. In addition, after completion of the vehicle, a certification label similar to that shown in **Fig. 1.2** must be attached by the final-stage manufacturer. This label will be located on the left rear door post and certifies that the vehicle conforms to all applicable FMVSS regulations in effect on the date of completion.

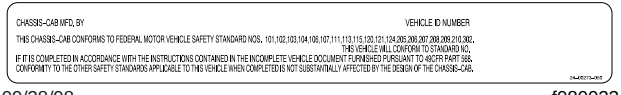

09/28/98 f080023

Fig. 1.3, Incomplete Vehicle Certification Label, U.S.

Canadian Motor Vehicle Safety Standard (CMVSS) Labels

In Canada, tractors with fifth wheels are certified by means of a "Statement of Compliance" label and the Canadian National Safety Mark (**Fig. 1.4**), which are attached to the left rear door post. In addition, tire and rim labels (**Fig. 1.5**) are also attached to the left rear door post.

If purchased for service in Canada, trucks built without a cargo body and tractors built without a fifth wheel are certified by a "Statement of Compliance" label, similar to

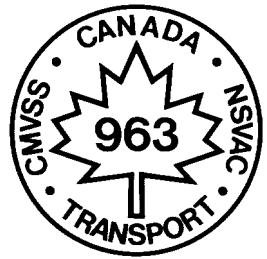

09/30/93 f080024

Fig. 1.4, Canadian National Safety Mark

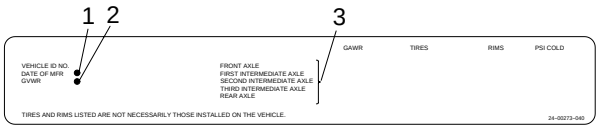

02/12/98 f080079

1. Date of manufacture by month and year.
2. Gross vehicle weight rating; developed by taking the sum of all the vehicle's gross axle ratings.
3. Gross axle weight ratings; developed by considering each component in an axle system, including suspension, axle, wheels, and tires. The lowest component capacity is the value used for the system.

Fig. 1.5, Tire and Rim Label

Fig. 1.2. This label must be attached by the final-stage manufacturer after completion of the vehicle. The label is located on the left rear door post, and certifies that the vehicle conforms to all applicable CMVSS regulations in effect on the date of completion.

Tire and Rim Labels

Tire and rim labels certify suitable tire and rim combinations that can be installed on the vehicle, for the given gross axle weight rating. Tires and rims installed on the vehicle at the time of manufacture may have a higher load capacity than that certified by the tire and rim label. If the tires and rims currently on the vehicle have a lower load capacity than that shown on the tire and rim label, then the tires and rims determine the load limitations on each of the axles.

Refer to **Fig. 1.5** for U.S. and Canadian tire and rim labels.

EPA Vehicle Noise Emission Control Label

A vehicle noise emission control label (**Fig. 1.6**) is attached to the right rear door post.

It is the owner's responsibility to maintain the vehicle so that it conforms to EPA regulations.

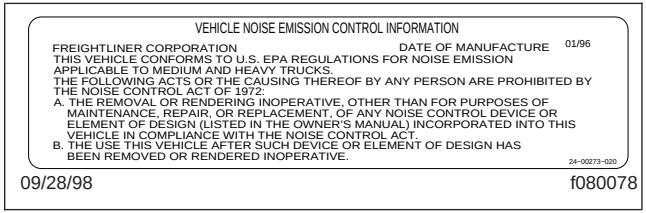
VEHICLE NOISE EMISSION CONTROL INFORMATION

FREIGHTLINER CORPORATION DATE OF MANUFACTURE 01/96

THIS VEHICLE CONFORMS TO U.S. EPA REGULATIONS FOR NOISE EMISSION APPLICABLE TO MEDIUM AND HEAVY TRUCKS.

THE FOLLOWING ACTS OR THE CAUSING THEREOF BY ANY PERSON ARE PROHIBITED BY THE NOISE CONTROL ACT OF 1972:

A. THE REMOVAL OR RENDERING INOPERATIVE, OTHER THAN FOR PURPOSES OF MAINTENANCE, REPAIR, OR REPLACEMENT, OF ANY NOISE CONTROL DEVICE OR ELEMENT OF DESIGN (LISTED IN THE OWNER'S MANUAL) INCORPORATED INTO THIS VEHICLE IN COMPLIANCE WITH THE NOISE CONTROL ACT.

B. THE USE THIS VEHICLE AFTER SUCH DEVICE OR ELEMENT OF DESIGN HAS BEEN REMOVED OR RENDERED INOPERATIVE.

24-00273-020

09/28/98 f080078

Fig. 1.6, Vehicle Noise Emission Control Label

IMPORTANT: Certain incomplete vehicles may be produced with incomplete noise control hardware. Such vehicles will not have a vehicle noise emission control information label. For such vehicles, it is the final-stage manufacturer's responsibility to complete the vehicle in conformity to U.S. EPA regulations (40 CFR Part 205) and label it for compliance.

https://truckmanualshub.com/

2

Vehicle Access and Features

Cab Door Locks and Handles 2.1
Door Windows 2.1
Cab Entry and Exit 2.2
Seats 2.5
Seat Belts and Tether Belts 2.7
Seat Belt Operation 2.8
Fuse/Relay/Circuit Breaker Identification 2.11
Cab Tilting 2.12
Front Access Panel 2.15
Back-of-Cab Grab Handle, Step, and Deck Plate 2.16

https://truckmanualshub.com/

Cab Door Locks and Handles

The same key that operates the ignition switch is used to lock and unlock the cab doors from the outside.

IMPORTANT: Each key is numbered. Record the number so that, if needed, a duplicate key can be made.

To unlock a door from outside the cab, insert the key in the lockset (**Fig. 2.1**), and turn the key counterclockwise on the driver's door and clockwise on the passenger's door. Pull out on the handle to open the door. To lock the door, turn the key clockwise on the driver's door and counterclockwise on the passenger's door. The lock cannot be operated when the door is open.

To lock the door from inside the cab, close the door, then push the lock button down. See **Fig. 2.1**.

To open the door from the inside, pull the door latch handle toward you. This will unlatch the door whether or not it was locked. To unlock the door without unlatching it, push up on the bottom of the lock button.

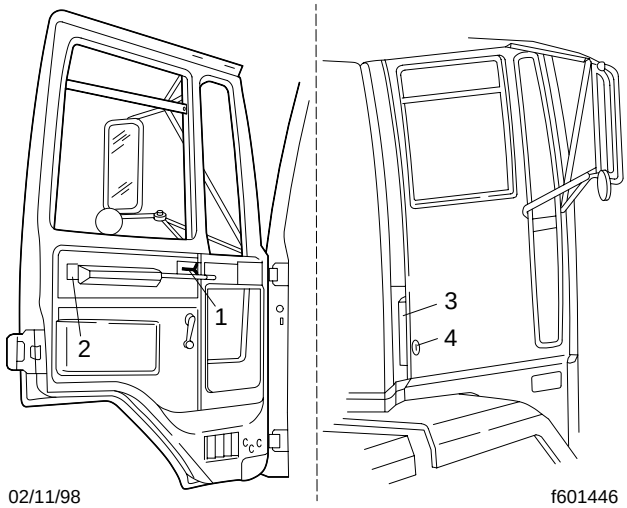

1. Door Latch Handle
2. Lock Button
3. Exterior Handle
4. Exterior Lock

Fig. 2.1, Door Handles and Locks

Door Windows

To lower the driver's side door window, turn its regulator handle clockwise; to lower the passenger's side window, turn its handle counterclockwise. See **Fig. 2.2**.

https://truckmanualshub.com/

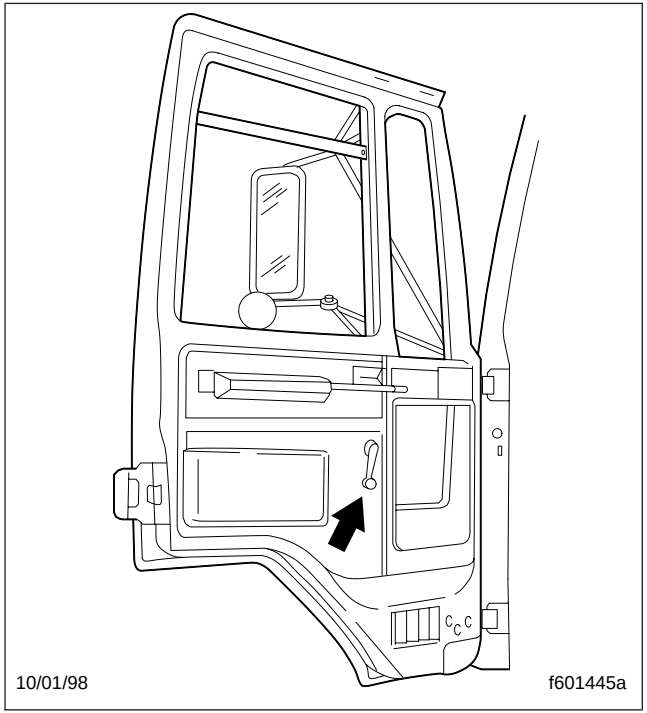

Fig. 2.2, Window Regulator Handle

Cab Entry and Exit

⚠ WARNING

Wet or dirty shoe soles greatly increase the chance of slipping or falling. If your soles are wet or dirty, be especially careful when entering or exiting the vehicle.

Always maintain three-point contact with the cab access system while entering and exiting the cab. Three-point contact means both feet and one hand, or both hands and one foot.

Driver's Side Entry and Exit

When entering or exiting the driver's side of the cab, use the grab handles and access steps as follows. See **Fig. 2.3**.

1. Open the driver's door, and place anything that you are carrying in the cab.
2. Place your left foot on the bottom step. Grasp the instrument panel grab handle with your left hand and the steering wheel with your right hand (Ref. A).
3. Place your right foot on the top step (Ref. B).
4. Bring your left foot up to the cab floor (Ref. C).

https://truckmanualshub.com/

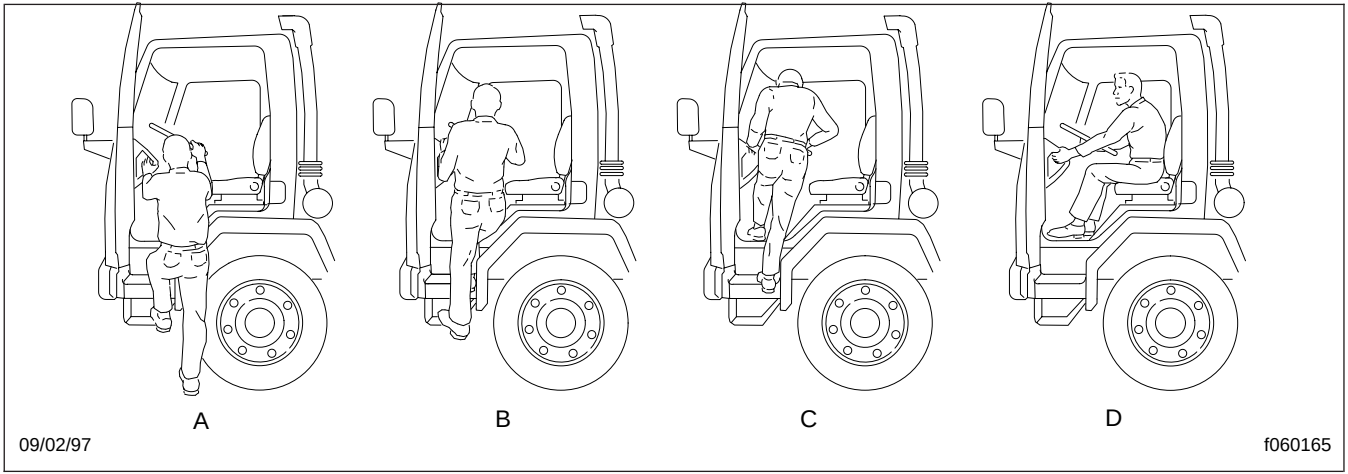

Fig. 2.3, Driver's Side Steps and Grab Handle

5. Place your right foot into the cab and seat yourself (Ref. D).
6. To exit the cab on the driver's side, grasp the instrument panel grab handle with your left hand and the steering wheel with your right hand.

IMPORTANT: Do not attempt to exit the cab while carrying any items in your hand.

7. Place your right foot on the top step.
8. Bring your left foot to the bottom step.
9. Bring your right foot down to the ground, then bring your left foot down to the ground.

Passenger's Side Entry and Exit

When entering or exiting the passenger's side of the cab, use the grab handles and access steps as follows, refer to **Fig. 2.4**.

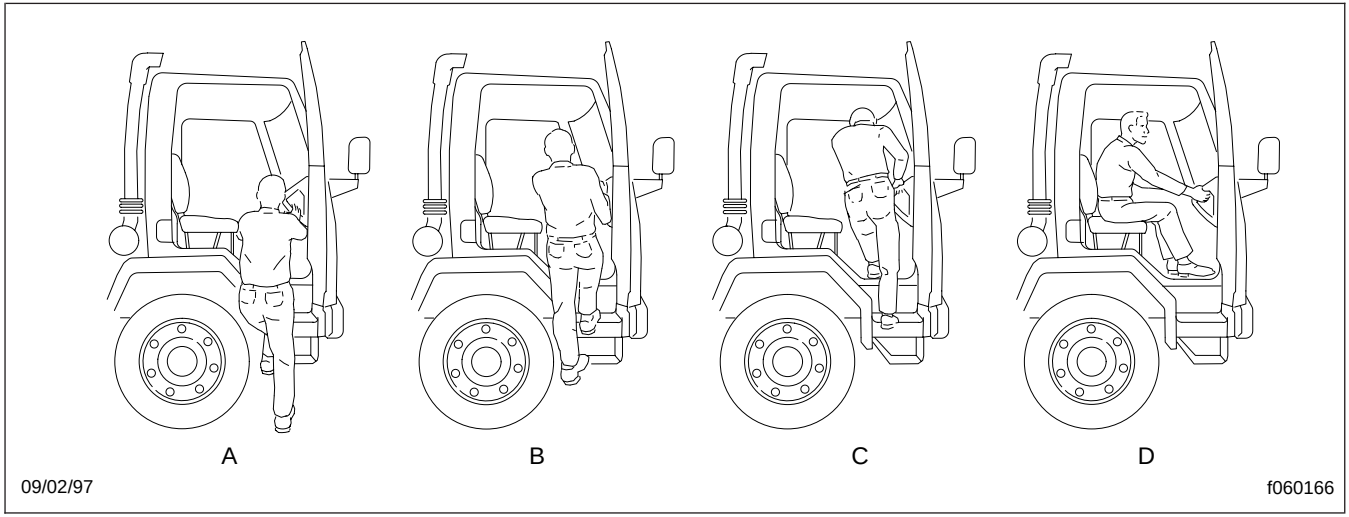

Fig. 2.4, Passenger's Side Steps and Grab Handles

1. Open the passenger's door, and place anything that you are carrying in the cab.
2. Place your left foot on the bottom step. Grasp the instrument panel upper grab handle with your left hand and the lower grab handle with your right hand (Ref. A).
3. Place your right foot on the top step (Ref. B).
4. Bring your left foot up to the cab floor (Ref. C).
5. Place your right foot into the cab and seat yourself (Ref. D).
6. To exit the cab on the driver's side, grasp the upper grab handle with your left hand and the lower grab handle with your right hand.

IMPORTANT: Do not attempt to exit the cab while carrying any items in your hand.

https://truckmanualshub.com/

7. Place your right foot on the top step.
8. Bring your left foot to the bottom step.
9. Bring your right foot down to the ground, then bring your left foot down to the ground.

Seats

IMPORTANT: When adjusting the seats, unless otherwise noted, make all adjustments while seated and before the engine is started.

WARNING

Keep hands, tools, and other objects away from the scissor points under the seats. Failure to do so could cause personal injury.

National Cush-N-Aire II Seat

Back Cushion Tilt

To tilt the back cushion, turn the knob and lean forward or backward. See **Fig. 2.5**.

Height Adjustment

To raise the seat, push the rocker switch on the side of the seat up until the seat reaches the desired height. To lower the seat, push the rocker switch down until the seat reaches the desired height.

Fore and Aft Seat Adjustment

Move the lever to the left and slide the seat forward or backward to the desired position.

Bottom Cushion Front Height

To adjust the height of the front of the bottom cushion, lift the handle, and pull forward or push back to the desired setting.

Lumbar Support

Push the rocker switch on the side of the seat up to inflate lumbar support. Push the rocker switch down to deflate lumbar support.

Back-of-Cushion Height

To adjust the height at the back of the cushion, rotate the lever to the desired setting.

Isolator, Optional

Also called a Chugger-Snubber, the isolator is locked out by moving the handle down.

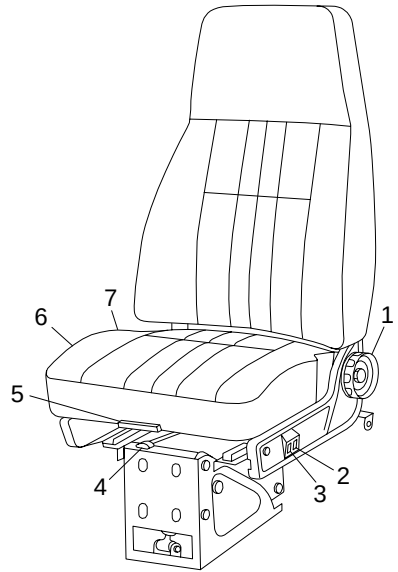

11/02/95 f910128

1. Back Cushion Tilt Knob
2. Lumbar Support Switch
3. Height Adjustment Switch
4. Fore-Aft Seat Adjustment Lever
5. Bottom Cushion Front Height Handle
6. Isolator Handle
7. Back-of-Cushion Height Adjustment Handle

Fig. 2.5, National Cush-N-Aire II Seat

Non-Suspended Driver's Seat

Fore-Aft Seat Adjustment

Move the control lever at the front of the seat to release the locking mechanism, then exert slight body pressure to move the seat forward or rearward, as desired. See **Fig. 2.6**.

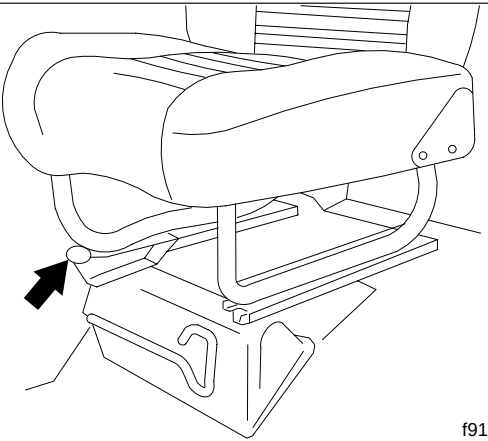

09/09/97 f910246

Fig. 2.6, Non-Suspended Driver's Seat Control Lever

Release the lever to lock the seat in place. Push the seat back and forth to ensure that it is locked in place.

https://truckmanualshub.com/

Passenger's Seat

The passenger's seat is not adjustable. See **Fig. 2.7**. Access to the storage compartment under the seat is obtained by moving the release lever and tilting the seatback forward.

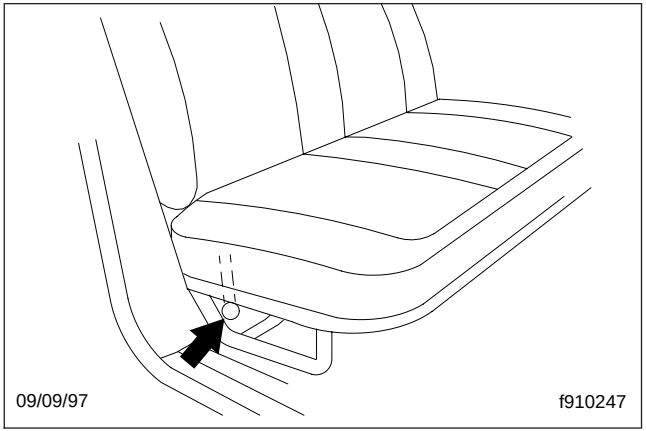

Fig. 2.7, Passenger's Seat Release Lever (typical)

Seat Belts and Tether Belts

General Information

Seat belt assemblies are designed to secure persons in the vehicle to help lessen the chance of injury or the amount of injury resulting from accidents or sudden stops. For this reason, the manufacturer urges that the driver and all passengers, regardless of age or physical condition, use seat belts when riding in the vehicle.

Seat belt assemblies in the vehicle meet Federal Motor Vehicle Safety Standard 209, "Type 1," and "Type 2" requirements. They are recommended for all persons weighing over 50 pounds (23 kg).

A child restraint system should also be provided for each child weighing 50 pounds (23 kg) or less. It should meet the requirements of Federal Motor Vehicle Safety Standard 213, "Child Restraint Systems." When providing such a restraint system, carefully read and follow all instructions pertaining to installation and usage for the child. Make certain the child remains in the restraint system at all times when the vehicle is in motion.

In addition to seat belt assemblies, tether belts are installed on suspension-type seats. Tether belts help secure the seat to the floor and are intended to restrain the seat and seat belt in case of an accident or sudden stop.

IMPORTANT: Seat belts have a finite life which may be much shorter than the life of the vehicle. Regular inspections and replacement as needed are the only assurance of adequate seat belt security over the life of the vehicle.

Seat Belt Operation

Three-Point Seat Belt with Komfort Latch

⚠ WARNING

Wear three-point seat belts only as described below. In case of an accident or sudden stop, injuries could result from misuse. Three-point seat belts are designed to be worn by one person at a time.

1. Before driving the vehicle, slowly pull the link end of the three-point seat belt out of the retractor and pull it across your lap (from outboard to inboard) far enough to engage the buckle. If the retractor locks too soon, allow the belt to retract slightly, then slowly pull it out again.
2. Fasten the three-point seat belt by pushing the link into the buckle until it latches. See **Fig. 2.8**. Give the belt a tug at the buckle. If the buckle unlatches, repeat this step. If the problem continues, replace the three-point seat belt.
3. Position the shoulder strap diagonally across your chest. If desired, engage the Komfort Latch as follows:

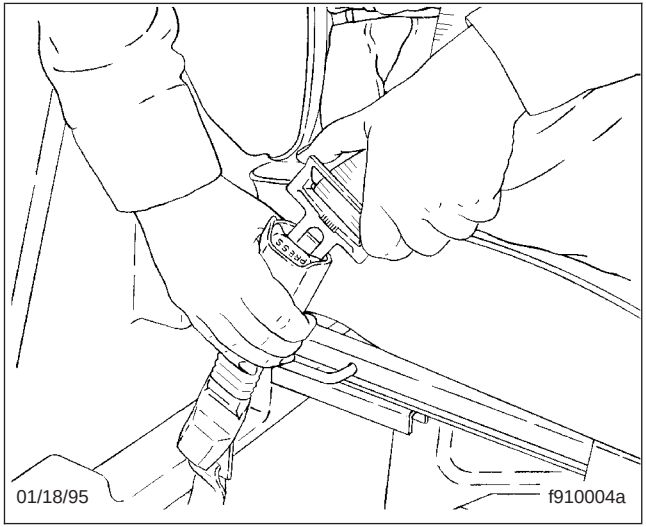

Fig. 2.8, Fastening the Three-Point Seat Belt (typical)

Pull on the shoulder strap to lessen the pressure of the strap on your shoulder and chest. Allow no more than one inch (2.5 cm) of slack between your chest and the shoulder harness. More slack can significantly reduce the seat belt's effectiveness in an accident or a sudden stop. While holding the belt slack, press the Komfort Latch lever up, clamping the belt's webbing. See **Fig. 2.9** and **Fig. 2.10**.

https://truckmanualshub.com/

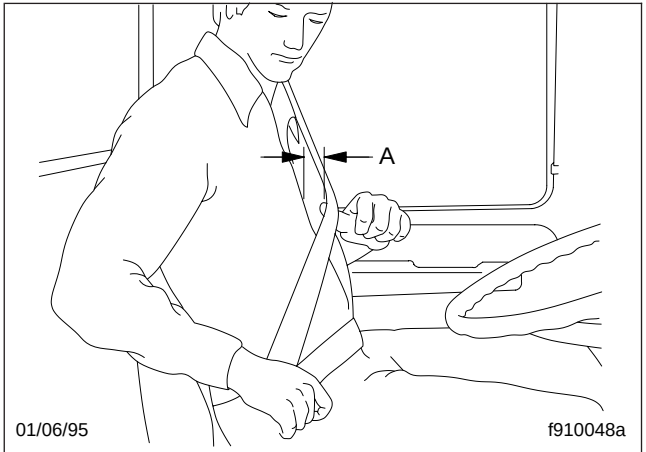

A. 1 Inch (2.5 cm) Maximum

Fig. 2.9, Adjusting Shoulder Harness Clearance

4. To unbuckle the three-point seat belt, push the button on the buckle. See **Fig. 2.11**. If the Komfort Latch was used, release it by giving the shoulder belt a quick tug. If you lean forward against the shoulder belt, the Komfort Latch will automatically release, and will need to be reset.

NOTE: The Komfort Latch does not have to be released in an emergency situation. The Komfort Latch will release by itself under rough road or other abnormal conditions. Make sure the three-point seat belt is completely retracted when it is not in use.

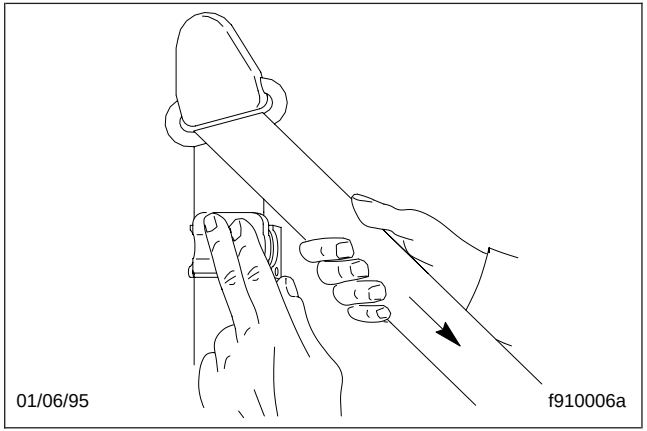

Fig. 2.10, Locking Komfort Latch

Lap Belt

⚠ WARNING

Wear lap belts only as described below. In case of an accident or sudden stop, injuries could result

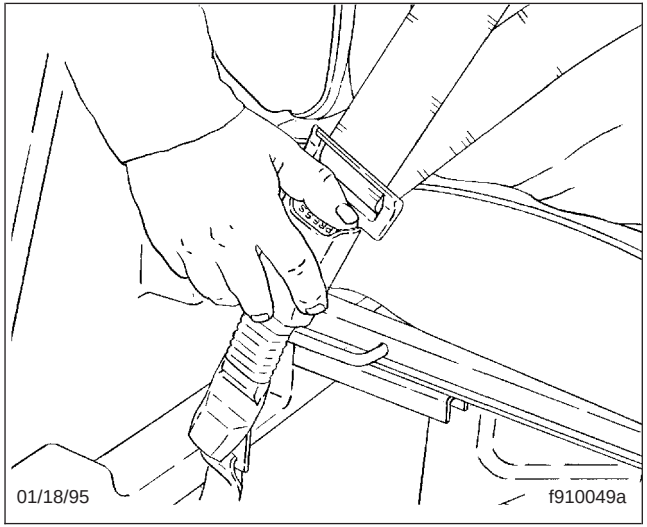

Fig. 2.11, Releasing the Three-Point Seat Belt (typical)

from misuse. Lap belts are designed to be worn by one person at a time.

1. Slowly pull the link end of the lap belt across your lap. See **Fig. 2.12**. If it is necessary to lengthen the belt, tip the link end downward and pull the link until it connects with the buckle.

2. Fasten the lap belt by pushing the link into the buckle until they latch. Make sure the belt is not twisted. Check the engagement by trying to pull the link out of the buckle. If they come apart, repeat this step. If the problem continues, replace the belt.

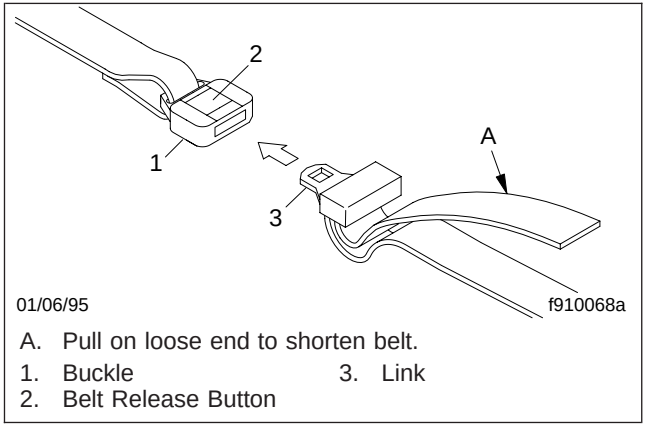

A. Pull on loose end to shorten belt.
1. Buckle
2. Belt Release Button
3. Link

Fig. 2.12, Lap Belt Adjustment

NOTE: The belt can be shortened after it is connected by pulling on the loose end until the belt is snug, but comfortable.

3. To release the belt, push the release button on the buckle and pull the link from the buckle.

https://truckmanualshub.com/

Fuse/Relay/Circuit Breaker Identification

NOTE: The fuse/relay/circuit breaker panel (**Fig. 2.13**) is located under the glove box. Depending on vehicle options, fuse/relay/circuit breaker locations may vary from those shown. Refer to **Fig. 2.13** or **Table 2.1** for the Fuse/Relay/Circuit Breaker Identification information.

Fuse/Relay/Circuit Breaker Identification			
Pos. No.	**Description**	**Part Number**	**Rating**
1	Daytime Running Lights		10A
2	Interior Lamps		10A
3	Turn Signal		25A
4	Customer Use (Battery)	—	—
5	Cigar Lighter		10A
6	Horn		10A
7	Trailer: Clearance Marker Lamps		20A
8	Not Used	—	—
9	Headlamps		15A CB*
10	Not Used	—	—
11	Warning Lamps		10A

Fuse/Relay/Circuit Breaker Identification			
Pos. No.	**Description**	**Part Number**	**Rating**
12	Stop Lamps		25A
13	Backup Lamps		10A
14	Washer Pump		10A
15	Fuel Shutoff		15A
16	Two-Speed Axle		25A
17	Wheel/Wheel and Diff Lock		10A
18	Exhaust Brake		10A
19	Customer Use (Start/Run)	—	—
20	Air Dryer		10A
21	Windshield Wipers		8.25A CB*
22	Blower Motor		10A
23	Radio		15A
24	Not Used	—	—
25	I/P Illumination Lamps		5A
26	Trailer: Tail/License Lamps		10A
27	Park and S/M Lamps		10A
28	Cab Roof Marker		10A
29	Not Used	—	—
30	Not Used	—	—
A	Fuel Shutoff		Relay
B	Exterior Lighting		Relay

Fuse/Relay/Circuit Breaker Identification			
Pos. No.	Description	Part Number	Rating
C	Brake Low Air Warning Prove-out		Relay
D	Cab Latch Warning Prove-out		Relay
E	Windshield Wiper Timer		Relay
F	Not Used	—	—
G	Marker Lamps		Relay
H	Headlamp Dimmer — Radio		Relay
I	Two-Speed Axle		Relay
J	Trans Temp Warning Prove-out		Relay
K	Not Used	—	—
L	Not Used	—	—
Customer Use Terminals			
31	Accessory/Run Non-Fused	—	—
32	Trailer Park and Marker Lamps	—	—
33	Accessory/Run Fused	—	—
34-39	Not Used	—	—
40	Accessory/Marker Lamps	—	—
41-45	Not Used	—	—
46	Trailer Lamps	—	—
47	Accessory/Run Non-Fused	—	—

Fuse/Relay/Circuit Breaker Identification			
Pos. No.	Description	Part Number	Rating
48	Battery	—	—

* Special Cycling Circuit Breakers—Replace with authorized service parts or equivalent.

Table 2.1, Fuse/Relay/Circuit Breaker Identification

Cab Tilting

WARNING

Never stand in front of the cab or under the cab when the cab is being tilted. Doing so could result in serious personal injury.

Easy access to the engine and transmission is provided by tilting the cab. The cab can be tilted 40 degrees for normal repair situations, or 50 degrees for removing larger components. Torsion bars under the cab make it easy to raise the cab by hand. A latching support arm holds the cab in the tilted positions.

https://truckmanualshub.com/

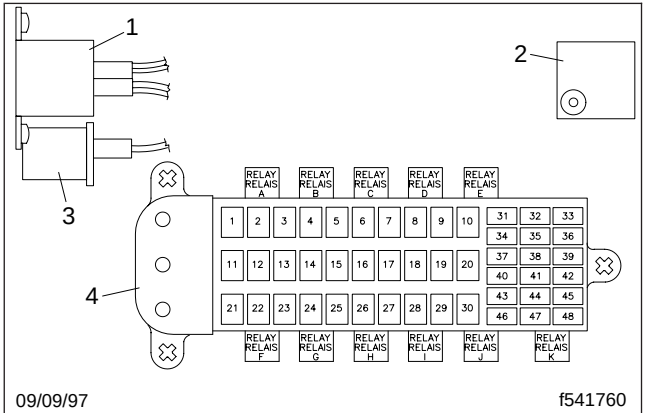

1. Signal Flasher (located at upper left of fuse panel)
2. Warning Chime (located at right side of fuse panel)
3. Warning Buzzer (located at lower left of fuse panel)
4. Fuse/Relay/Circuit Breaker Panel

Fig. 2.13, Fuse/Relay/Circuit Breaker Identification

To Tilt the Cab

WARNING

Do not release the cab until the transmission has been put into neutral, the ignition turned off, and the parking brake set. Failure to observe these precautions could result in serious personal injury.

WARNING

Do not allow loose clothing to get near moving engine parts. To do so could result in serious personal injury.

CAUTION

Ensure the shift lever will clear the floor opening when the cab is tilted to prevent damage to the shift lever.

Do not raise the cab until all loose items inside the cab are removed or fastened down and the doors are closed. If the cab is equipped with exterior air lines, be sure the air lines will be clear of the body lock.

1. Apply the parking brakes and chock the tires.
2. The handle for the cab lock control is located on the lower front face of the driver's seat (**Fig. 2.14**). Remove the handle from the housing.
3. Insert the cab lock handle in the lock control located on the passenger's side of the rear cab panel (**Fig. 2.15**). Push the safety hook knob inward, then rotate the handle counterclockwise and pull the handle outward. The handle will still be engaged.

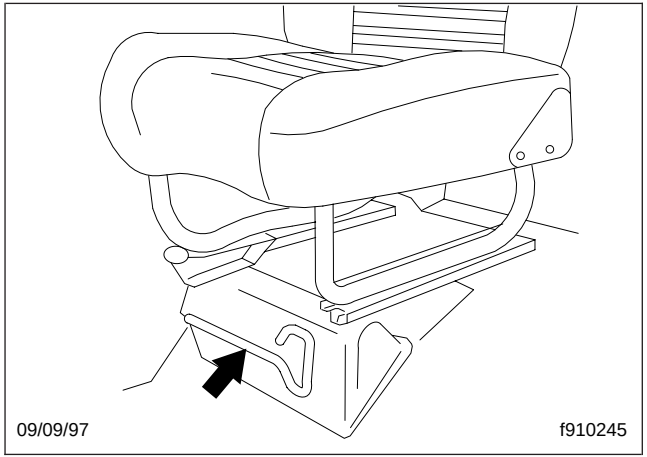

Fig. 2.14, Cab Lock Handle

4. Lift the rear part of the cab and let it tip up to the first position.

CAUTION

To avoid damage to the handle, do not put pressure on the lock handle, or use the handle to lift the cab.

5. To tilt the cab to the second position, remove the lower limiting rod triangular support bolt. Place the support bolt in the opening in the arm connection near the central pin (**Fig. 2.16**). The cab can now be pushed forward to the second position.

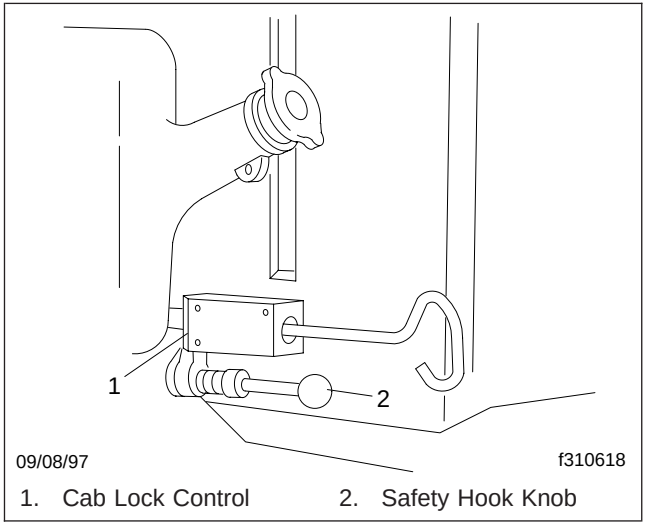

1. Cab Lock Control 2. Safety Hook Knob

Fig. 2.15, Back of Cab

To Lower the Cab

1. Make sure the lock indicator is retracted to permit correct cab locking, then push the cab back to the first tilting position.

https://truckmanualshub.com/

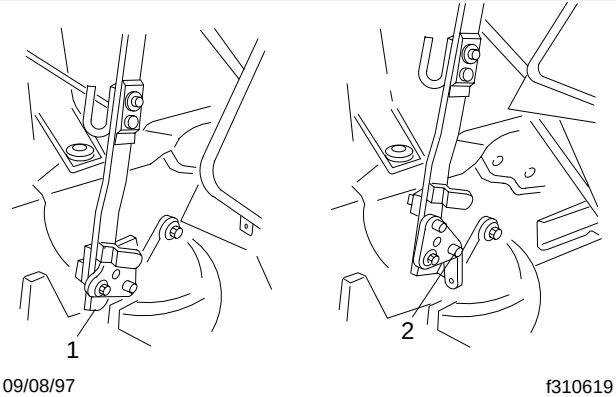

1. First Position, 40 Degree Tilt
2. Second Position, 50 Degree Tilt

Fig. 2.16, Cab Tilt Arm

2. Remove the bolt previously placed near the central pin. Return the bolt to its original position in the lower opening of the triangular support.

CAUTION

Be sure the shift lever is in neutral and the shift knob will clear the floor opening when the cab is being lowered to avoid damage to the shift lever.

3. Lift the rear part of the cab slightly, then pull downward to lower the cab completely. Remove the cab lock handle and secure it in its original position.
4. To check for proper locking of the cab, turn the ignition to the ON position. An indicator light on the instrument panel will light if the cab is not locked securely.

Front Access Panel

WARNING

The parking brake must be fully set before opening the front access panel. Failure to do so could result in serious personal injury.

If your vehicle has an automatic transmission, place the gear shift lever in N (neutral), shut the engine off, and set the parking brake. If your vehicle has a manual transmission, place the gear shift lever in R (reverse), shut the engine off, and set the parking brake.

To open the front access panel, use a coin to turn the locks located at each end of the outside surface of the panel one quarter turn counterclockwise.

After tilting the panel open, support the panel with the rod.

To close the front access panel, lift the panel slightly to release the support rod. Secure the support rod, and press the panel down until it locks.

Back-of-Cab Grab Handle, Step, and Deck Plate

When climbing onto the frame rails or deck plate, use the grab handle and step. Always maintain three-point contact with the back-of-cab access system.

A grab handle is mounted on the cab. When an optional deck plate is included, it is mounted across the top of the frame rails.

https://truckmanualshub.com/

3

Driver Controls and Instruments

Instrument and Control Panel 3.1
Controls 3.1
Warning and Indicator Lights 3.10
Instruments 3.12
Heater and Ventilation System 3.17

https://truckmanualshub.com/

Instrument and Control Panel

Figure 3.1 represents a typical dash equipped with all of the standard and many of the optional instruments and controls.

Warning and indicator light modules, located on each side of the speedometer, house all of the standard and optional warning and indicator lights. **Figure 3.2** identifies the warning and indicator lights.

Controls

Ignition Switch and Key

The ignition switch can be turned to four positions: OFF, ACCESSORY, ON, and START. See **Fig. 3.3**. The ignition switch key also locks and unlocks the cab doors.

The key can be inserted and removed only from the OFF position. The headlights (low beam only), brake lights, fog lights, dome lights, clearance lights, turn signals, hazard warning lights, parking lights, and the cigar lighter operate with the ignition switch off, regardless of whether the key is inserted.

In the ACCESSORY position, the wipers, heated mirrors, backup lamps, radio, ether start system, and all electric gauges operate.

Turn the key fully clockwise to the START position, only when starting the engine. When the engine starts, release the key. When released, the key will move to the ON position.

In the ON position, all electrical systems are operable. Warning lights and buzzer for low air pressure and low oil pressure operate until the engine is started and minimum pressures are built up.

Panel Light Control

The panel lights (see **Fig. 3.4**) are turned on by the headlight switch. The panel light control lever adjusts the brightness of the instrument panel lights. Slide the control lever up to brighten the lights, and down to dim them. Move the control lever all the way down to turn them off.

Headlight Switch and Daytime Running Lights

In the up position all of the lights are off. See **Fig. 3.5**. Turning the switch clockwise one position turns on the marker/clearance lights, taillights, parking lights, license plate light, and panel lights. Turning the switch clockwise another position turns on the headlights, marker/clearance lights, taillights, parking lights, license plate light, and panel lights.

https://truckmanualshub.com/

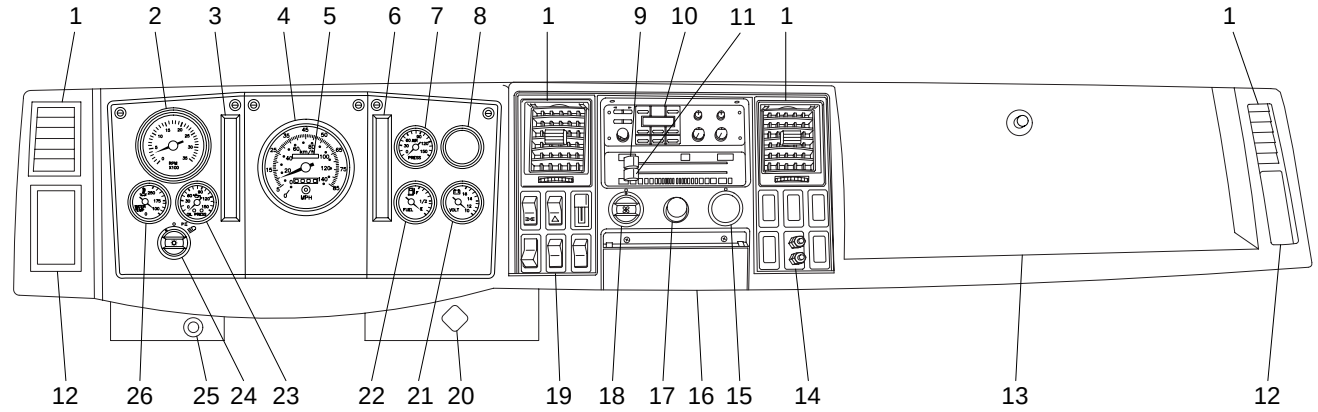

12/18/97 f610041

1. Face Level Vent
2. Tachometer
3. Warning and Indicator Light Module
4. Speedometer
5. Odometer
6. Warning and Indicator Light Module
7. Dual Air Pressure Gauge
8. Not Used
9. Heater/Ventilation Mode Selector
10. Radio (optional)
11. Temperature Control
12. Interior Grab Handle
13. Glove Compartment
14. Radio Hot Post (optional)
15. Not Used
16. Ashtray
17. Cigar Lighter
18. Fan Speed
19. Left Switch Bank
20. Parking Brake Control
21. Voltmeter
22. Fuel Gauge
23. Oil Pressure Gauge
24. Headlamp Switch
25. Hand Throttle, Vernier Type (optional)
26. Water Temperature Gauge

Fig. 3.1, Instrument and Control Panel Layout (typical)

To change the headlights from low to high beam, or high to low beam, push the control lever away from the instrument panel (**Fig. 3.6**). When the headlights are on high beam, an indicator light on the instrument panel

https://truckmanualshub.com/

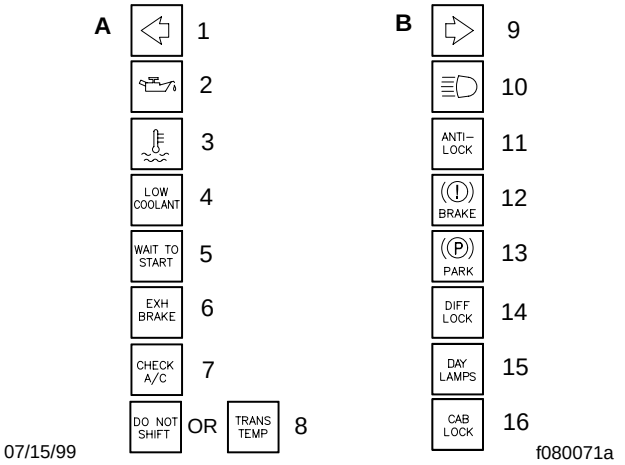

NOTE: Not all vehicles with daytime running lights are equipped with the in-dash indicator.

A. Left Side Bank	B. Right Side Bank
1. Left-Turn Indicator	9. Right-Turn Indicator
2. Low Oil Pressure	10. High Beam
3. High Coolant Temp	11. ABS
4. Low Coolant Level	12. Brake
5. Wait To Start	13. Parking Brake
6. Exhaust Brake	14. Differential Lockout
7. Check A/C	15. Daytime Running Lights
8. Do Not Shift or Trans Temp	16. Cab Lock

Fig. 3.2, Warning and Indicator Lights

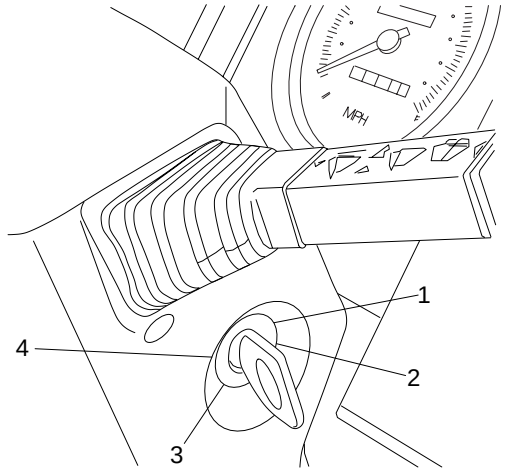

1. Accessory	3. Start
2. On	4. Off

Fig. 3.3, Ignition Switch

comes on. The ignition switch must be on for the high beams to operate.

For vehicles equipped with daytime running lamps (DRL), switching on the ignition and releasing the parking brakes automatically activates the headlight low beams at reduced voltage. Some vehicles are equipped

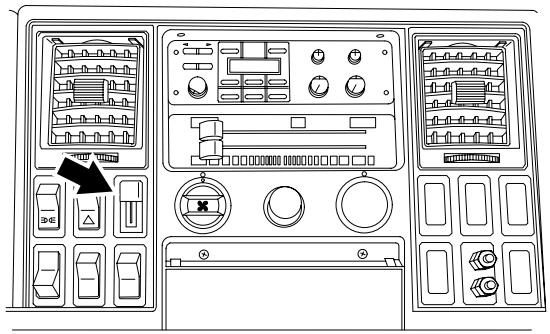

10/01/98 f601426a

Fig. 3.4, Panel Light Control Lever

with a daytime running lights in-dash indicator, which will illuminate when the daytime running lights are in operation. The daytime running lights will operate until the parking brakes are applied, then they will switch off. Turning on the regular headlights will override the daytime running lights. The vehicle cannot be driven unless either the headlights or daytime running lights are activated.

Dome Light Switch

The dome light switch is located on the dome light. In addition to the ON and OFF positions, a third intermediary position makes the dome light turn on whenever the doors are opened.

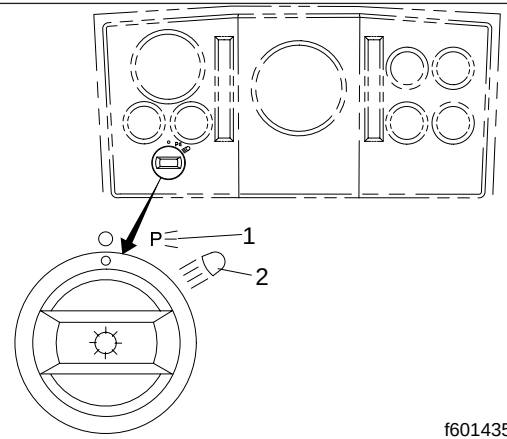

08/27/97 f601435

1. All Lights On (except headlights)
2. All Lights On (including headlights)

Fig. 3.5, Headlight Switch

Windshield Wipers

To operate the wipers at low speed, move the control lever up one position. See **Fig. 3.7**. To operate the wipers at high speed, move the control lever up two

https://truckmanualshub.com/

positions. To operate the wipers in delay mode, move the control lever down one position.

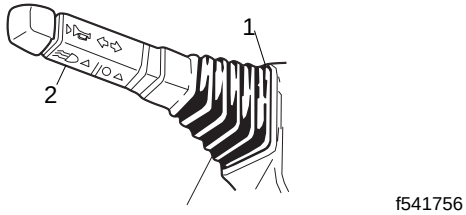

1. Steering Column
2. Control Lever

Fig. 3.6, High/Low Beam Control

Windshield Washer

Depress the button on the wiper/washer control lever to activate the windshield washer. See **Fig. 3.7**.

Interrupt Switch

A spring-loaded interrupt rocker switch operates the marker lights. See **Fig. 3.8**. With the vehicle lights on, depress and release the interrupt rocker switch to briefly turn off the marker lights.

Cummins Electronic Engine

The Cummins electronic engine has a fuel control system controlled by a microprocessor-based computer.

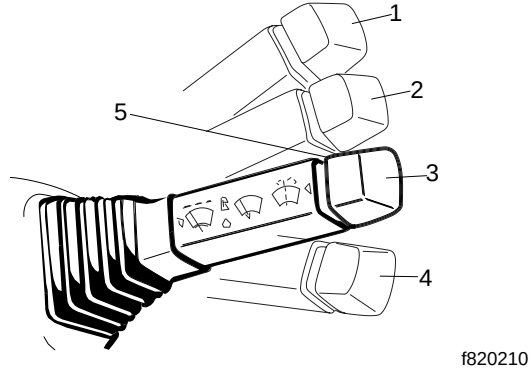

1. High Speed
2. Low Speed
3. Off
4. Delay Mode
5. Washer Button

Fig. 3.7, Windshield Wiper and Washer Control

This computer controls specific engine and vehicle speed modes of operation to maximize vehicle fuel economy and performance.

A yellow engine check light and a red engine stop light are located on the instrument panel. With the ignition switch on, both lights come on for about two seconds; then, if there is no problem with the electronic engine system, the lights will go out. Whenever there is a problem within the electronic engine system, one of the

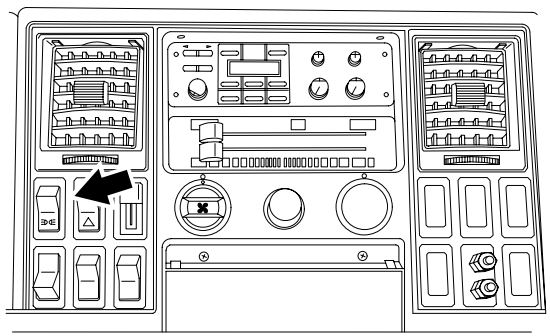

10/01/98 f601424a

Fig. 3.8, Interrupt Switch

lights will come on and stay on as long as the problem exists.

If the yellow engine check light comes on while driving, some engine features will not work, but the vehicle can still be driven. If the red engine stop light comes on while driving, and if the engine will not accelerate, pull off the road and shut down the engine. In either situation, have the problem repaired as soon as possible. See **Group 54** in the *Cargo Workshop Manual* for troubleshooting procedures.

Cruise control and PTO governor are controlled with two switches. An ON/OFF switch allows the driver to select cruise control or to drive using the foot throttle. A spring-loaded SET/RESUME switch allows the driver to select the cruise speed or to resume the cruise speed after slowing down.

The power takeoff mode of operation is also controlled with the cruise control switches, when the vehicle is stationary. The engine speed can be set in the 800 to 1600 rpm range by placing the ON/OFF switch in the ON position, then pressing the SET/RESUME switch when the desired rpm is reached. See **Chapter 4** for detailed operating instructions.

Parking Brake Control Valve Knob

A diamond-shaped knob in the control panel operates the parking brake control valve. See **Fig. 3.9**. When the knob is out, the truck's spring parking brakes are applied. When the knob is in, the parking brakes are released. Before the parking brakes can be released, air pressure in either brake system must be at least 65 psi (447 kPa).

See **Chapter 7** for instructions on the use of the parking brake valve.

https://truckmanualshub.com/

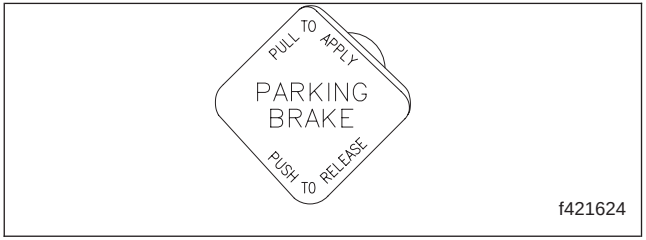

Fig. 3.9, Parking Brake Control Valve Knob

Air Suspension Dump Valve, Optional

The air suspension dump valve allows the air in the vehicle air suspension to be quickly exhausted, lowering the rear of the vehicle. This makes it easier to connect to or disconnect from a trailer. A control valve toggle switch on the dashboard exhausts and fills the air suspension. To prevent accidental activation, a safety release button on the switch must be pushed before the switch can toggle.

CAUTION

Never exhaust air from the suspension while driving. If the air is exhausted, the suspension will not absorb road shocks and could be damaged.

Cigar Lighter

Push in the lighter to heat the element. See **Fig. 3.10**. The lighter will stay in until the element is hot, then it will pop out automatically. To open the ashtray, pull the ashtray downward. To remove the ashtray, press down on the tab and pull the tray out.

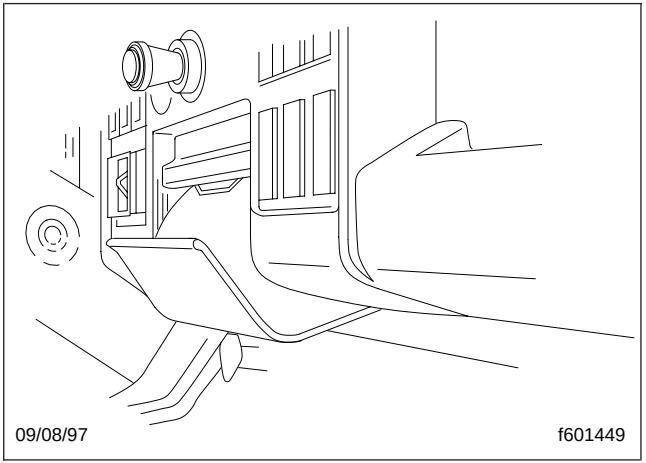

Fig. 3.10, Cigar Lighter and Ashtray

Turn Signal Switch

The turn signal lever is mounted on the steering column. See **Fig. 3.11**. Pushing the lever counterclockwise

turns on the left-turn signal lights; pushing it clockwise turns on the right-turn signal lights. When one of the signal lights is on, an indicator light flashes on the warning and indicator light panel. When the turn is completed, the signal will cancel and the lever will return to the neutral position.

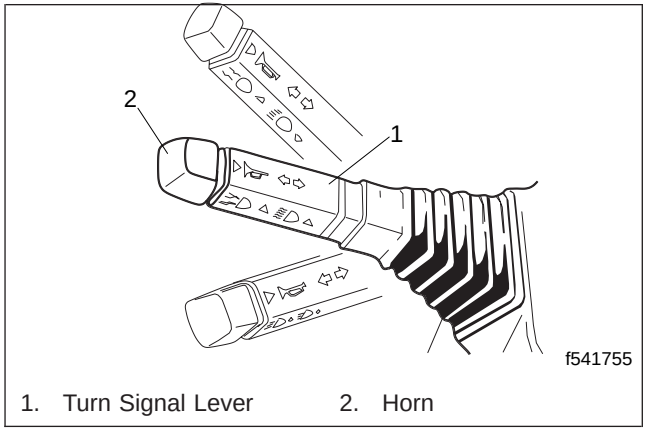

1. Turn Signal Lever 2. Horn

Fig. 3.11, Turn Signal Lever

Electric Horn

To sound the electric horn, push the button on the turn signal lever. See **Fig. 3.11**.

Air Horn, Optional

To sound the air-operated horn, pull the cable located above the driver's door.

Hazard Warning Light Switch

The hazard warning light switch (**Fig. 3.12**) is located in the left switch bank on the instrument panel. Hazard warning lights are operated by pushing the top of the switch. When the hazard warning light switch is on, all of the turn signal lights and both of the indicator lights on the control panel will flash. To cancel the warning lights, push the bottom of the switch.

Allison Automatic Transmission Controls

Allison automatic transmission MD series models are controlled by an electronic control unit (ECU). The ECU processes information from sensors, pressure switches, and the shift selector (**Fig. 3.13**) to automatically control the transmission according to programmed specifications.

Vehicles with these transmissions have a red do-not-shift light in the lens and bezel assembly. Also, there is a service light in the indicator panel on the shift selector. With the ignition switch on, both lights come on for a few seconds; then, if there is no problem with the

https://truckmanualshub.com/

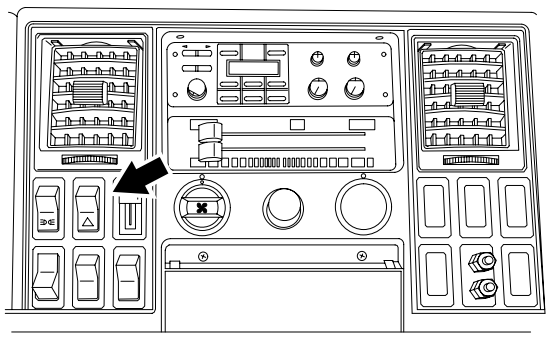

10/01/98 f601425a

Fig. 3.12, Hazard Warning Light Switch

transmission system, the lights will go out. Whenever there is a problem with the transmission system, the lights will come on and stay on as long as the problem exists.

If "service" is displayed in the indicator panel, some features may not work, but the vehicle can still be driven. If the do-not-shift light comes on while driving (accompanied by eight short beeps from the shift selector), operating limits will be placed on the transmission, such as restricting upshifts and downshifts. However, the vehicle can still be driven to reach service assistance. In either situation, have the problem repaired as soon as possible. Refer to the *Allison Transmission Service Manual* for troubleshooting procedures.

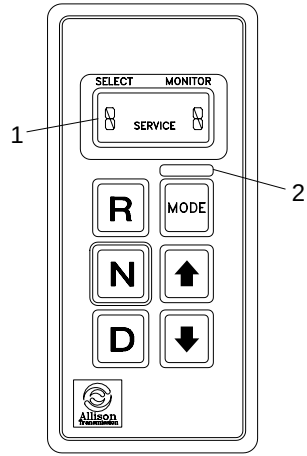

10/28/94 f600368a

1. Indicator Panel 2. Mode ID

Fig. 3.13, Shift Selector

See **Chapter 5** for complete transmission operating instructions.

Suspension Seat Adjustment Controls

All adjustment controls for a suspension seat are located on the seat base. Refer to **Chapter 2** for complete instructions.

Vernier Throttle Control, Optional

The vernier throttle control can be used to adjust engine speed when the vehicle is parked. A "quick adjust" setting of engine speed is made by depressing the button on the control knob, then pushing in or pulling out the knob. Engine speed adjustments can then be made in smaller increments by turning the control knob in either direction.

Warning and Indicator Lights

Warning and indicator light modules, located on each side of the speedometer, house all of the standard and optional warning and indicator lights. **Figure 3.14** identifies the warning and indicator lights. All of the standard and optional warning and indicator lights are located in light banks on each side of the speedometer.

Standard indicator lights include:

- The green right- and left-turn signal lights, which flash on and off whenever the outside turn signal lights are flashing.
- The blue high-beam indicator light (located above the speedometer and tachometer) which comes on when the headlights are on high beam.
- The red parking brake indicator light which comes on whenever the parking brakes are activated and the ignition is on.

Standard Warning System

Standard Warning Lights

Standard red warning lights are for alternator no-charge, and the brake system. See **Fig. 3.14**. Whenever conditions cause the brake system warning light to come on, a warning buzzer also alerts the driver.

The brake system warning light and buzzer activate whenever air pressure in the primary or secondary air reservoir falls below 64 to 76 psi (441 to 524 kPa).

Optional Warning and Indicator Lights

The water temperature warning light and buzzer activate whenever the engine coolant temperature exceeds a preset point determined by the engine manufacturer. Refer to **Table 3.1** for this temperature.

The oil pressure warning light and buzzer activate whenever the oil pressure falls below the minimum oil pressure recommended by the engine manufacturer. Refer to **Table 3.2**.

https://truckmanualshub.com/

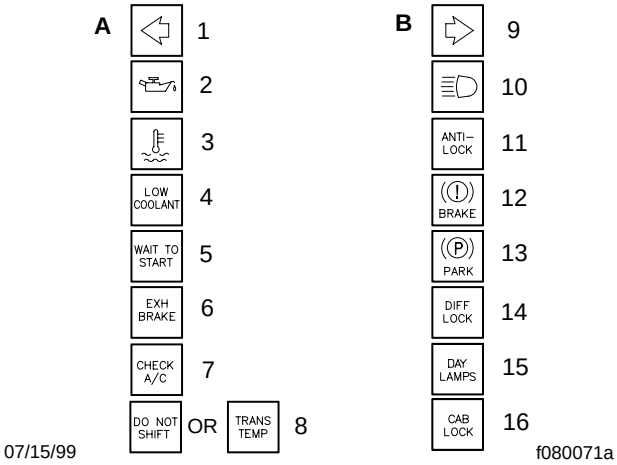

NOTE: Not all vehicles with daytime running lights are equipped with the in-dash indicator

A. Left Side Bank
1. Left-Turn Indicator
2. Low Oil Pressure
3. High Coolant Temp
4. Low Coolant Level
5. Wait To Start
6. Exhaust Brake
7. Check A/C
8. Do Not Shift or Trans Temp

B. Right Side Bank
9. Right-Turn Indicator
10. High Beam
11. ABS
12. Brake
13. Parking Brake
14. Differential Lockout
15. Daytime Running Lights
16. Cab Lock

Fig. 3.14, Warning and Indicator Lights

Maximum Water Temperature	
Engine Model	**Maximum Water Temperature: °F (°C)**
Cummins ISB	210 (99)

Table 3.1, Maximum Water Temperature

Oil Pressure*		
Engine Model	**Oil Pressure at Idle Speed: psi (kPa)**	**Oil Pressure at Rated Speed: psi (kPa)**
Cummins ISB	10 (69) min.	30 (207) min.

* Oil pressures are given with the engine at operating temperature. With the engine cold, oil pressure may be higher.

Table 3.2, Oil Pressure

Other optional warning or indicator lights may include: air intake warmer, oil level, automatic transmission oil temperature, low water, do-not-shift, air cleaner restriction, check engine, engine shutdown.

When the ignition is turned on, oil- and brake-system warnings (as equipped) activate until the engine starts and minimum pressures are exceeded. If the low-oil warning light or brake system warning light remains lit after running the engine for fifteen seconds, shut down

the engine and determine the cause. Refer to the vehicle workshop manual for repair procedures.

IMPORTANT: If the warning system does not activate when the ignition is turned on, repair the system to provide warning protection for oil pressure, coolant temperature, and the brake system.

Meritor WABCO® Antilock Braking System (ABS), Air Brake Systems

The ABS warning light comes on after the engine is started. The warning light goes out only if all of the ABS components are working properly.

IMPORTANT: If the ABS warning light does not work as described above, or comes on while driving, repair the ABS system immediately to ensure full antilock braking capability. Refer to the vehicle workshop manual for troubleshooting procedures.

Refer to the brake system operating instructions in **Chapter 7** for more instructions.

Instruments

Tachometer

A tachometer (see **Fig. 3.15**) indicates engine speed in revolutions per minute (rpm), and serves as a guide for shifting the transmission and keeping the engine in the appropriate rpm range. For low idle and rated rpm, refer to the engine identification plate.

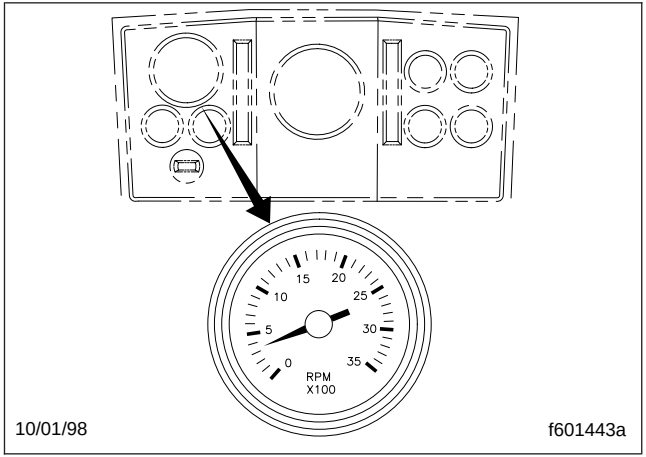

Fig. 3.15, Tachometer

The tachometer may include an engine hour meter. An engine hour meter records continuous operating hours of the engine. In cases where actual mileage does not indicate overall usage, maintenance and lubrication intervals for the engine and engine-operated equipment can be determined by operating hours.

https://truckmanualshub.com/

Speedometer

A speedometer (see **Fig. 3.16**) registers vehicle speed in both miles per hour (mph) and kilometers per hour (km/h). Standard speedometer gauges are equipped with an odometer that records total distance traveled in either kilometers or miles. The trip odometer registers distance driven and can be reset to zero by depressing the button.

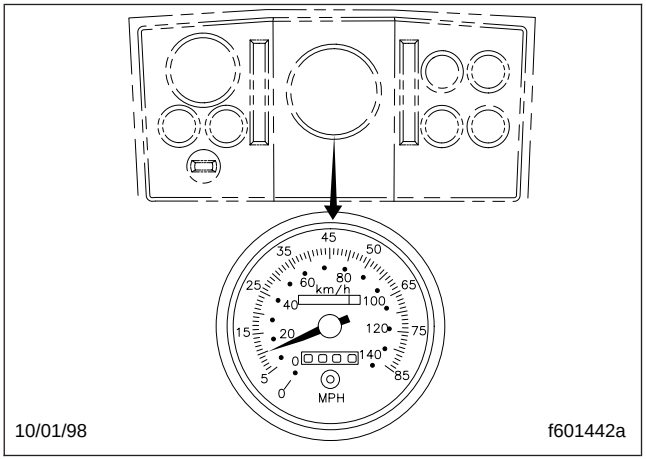

Fig. 3.16, Speedometer

Water Temperature Gauge

During normal engine operation, the water temperature gauge (see **Fig. 3.17**) should read 175 to 203°F (79 to 95°C). If the temperature remains below 160°F (71°C) or exceeds the maximum temperature shown in **Table 3.1**, inspect the cooling system to determine the cause. Refer to the vehicle workshop manual for troubleshooting and repair procedures.

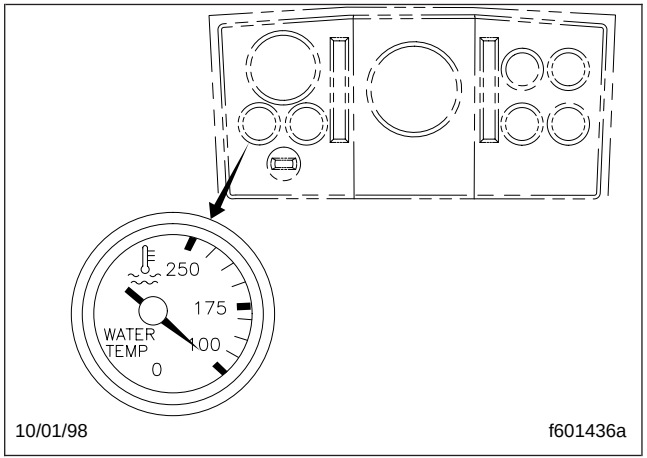

Fig. 3.17, Water Temperature Gauge

Engine Oil Pressure Gauge

The oil pressure gauge (see **Fig. 3.18**) should read as shown in **Table 3.2**.

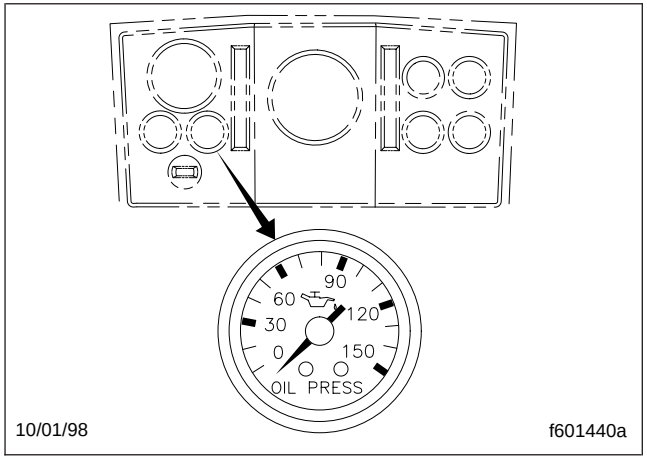

Fig. 3.18, Engine Oil Pressure Gauge

CAUTION

A sudden decrease or absence of oil pressure may indicate mechanical failure. Bring the vehicle to a safe stop and investigate the cause to prevent further damage. Do not operate the engine until the cause has been determined and corrected.

Voltmeter

The voltmeter (see **Fig. 3.19**) indicates the vehicle charging system voltage when the engine is running and the battery voltage when the engine is stopped. By monitoring the voltmeter, the driver can be aware of potential charging system problems and have them fixed before the batteries discharge enough to create starting difficulties.

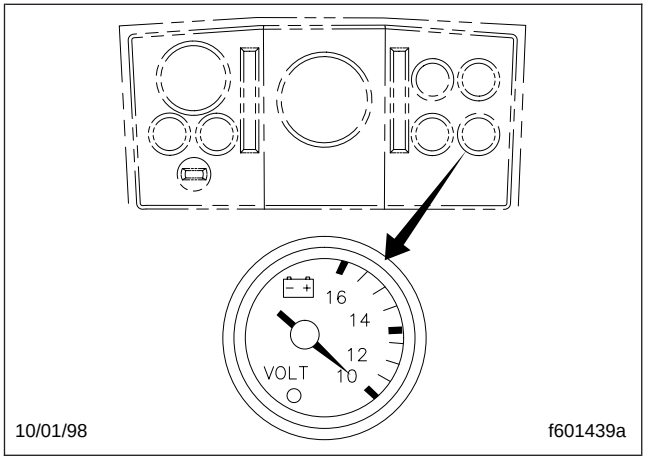

Fig. 3.19, Voltmeter

https://truckmanualshub.com/

The voltmeter will normally show approximately 13.7 to 14.1 volts when the engine is running. The voltage of a fully charged battery is 12.7 to 12.8 volts when the engine is stopped. A completely discharged battery will produce only about 12.0 volts. The voltmeter will indicate lower voltage as the vehicle is being started or when electrical devices in the vehicle are being used.

If the voltmeter shows an undercharged or overcharged condition for an extended period, have the charging system and batteries checked at a repair facility.

On a vehicle equipped with a battery isolator system, the voltmeter measures the average voltage of all the batteries when the engine is running. When the engine is stopped, the voltmeter shows only the gel cell battery voltage and does not indicate the voltage of the engine-starting batteries.

CAUTION

Gel cell batteries can be damaged if the battery voltage is allowed to drop below 12.0 volts or if the charging voltage is more than 14.1 volts. Start the engine to recharge the gel cell before the battery becomes fully discharged. If an external charger is needed, disconnect the gel cell battery and use only an external battery charger that has been approved for gel cell batteries.

Primary and Secondary Air Pressure Gauges

These air pressure gauges (see **Fig. 3.20**) register the constant pressure in the primary and secondary air systems. Normal pressure, with the engine running, is 95 to 125 psi (655 to 862 kPa) in both systems. A low-air-pressure warning light and buzzer, connected to both the primary and secondary systems, activate when air pressure in either system drops below a minimum pressure of 62 to 68 psi (427 to 469 kPa). When the engine is started, the warning light and buzzer remain on until air pressure in both systems exceeds minimum pressure. An air pressure gauge that registers pressure in both the primary and secondary systems may be installed on some vehicles.

Fuel Gauge

The fuel gauge (see **Fig. 3.21**) indicates the amount of fuel in the fuel tank(s).

Intake-Air Restriction Indicator

An intake-air restriction indicator measures the vacuum on the engine side of the air cleaner at the air cleaner outlet. If the yellow signal stays locked at or above the values shown in **Table 3.3**, after the engine is shut down, service the air cleaner, then reset the indicator by pressing the reset button.

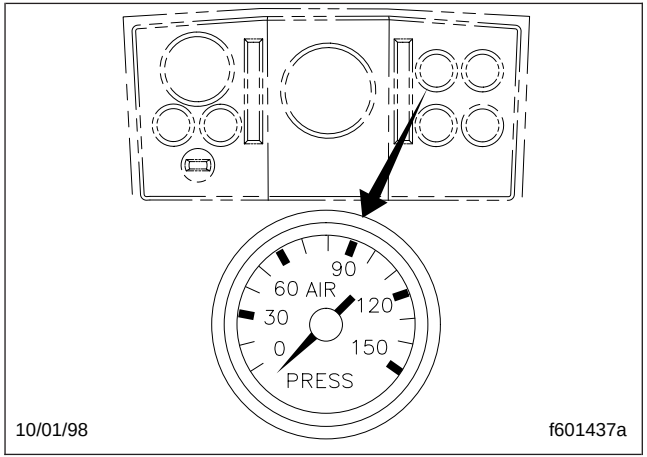

Fig. 3.20, Air Pressure Gauge

NOTE: Avoid opening the air cleaner and disturbing the seals or filter element until the yellow signal stays locked at or above the value shown in **Table 3.3**. When this occurs, the air cleaner needs replacing; however, immediate engine shutdown is not necessary.

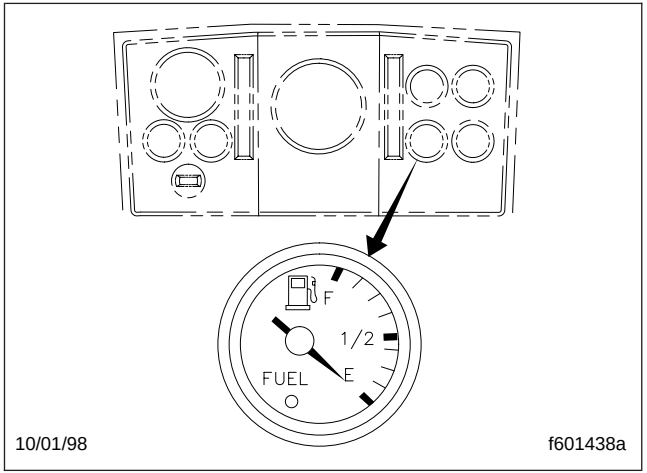

Fig. 3.21, Fuel Gauge

Intake-Air Restriction	
Engine Model*	**Service at or Above**
Cummins	25 inH_2O

* Turbocharged engines must be checked at full load and governed engine speed.

Table 3.3, Intake-Air Restriction

https://truckmanualshub.com/

Transmission Oil Temperature Gauge

With an Allison automatic transmission, the transmission oil temperature gauge reading should not exceed 250°F (121°C) during normal operation. A warning light will activate to alert the driver.

CAUTION

A sudden increase in oil temperature that is not caused by a load increase may indicate mechanical failure. Bring the vehicle to a safe stop and investigate the cause to prevent further damage. Do not operate the engine until the cause has been determined and corrected.

Heater and Ventilation System

A dash-mounted climate control panel (**Fig. 3.22**) allows you to control all of the heating, defrosting, and ventilating functions.

A temperature control lever is used to select the desired temperature. Slide the lever to the left for cool air, or to the right for warm air.

A function control lever controls the direction of warm or cool air.

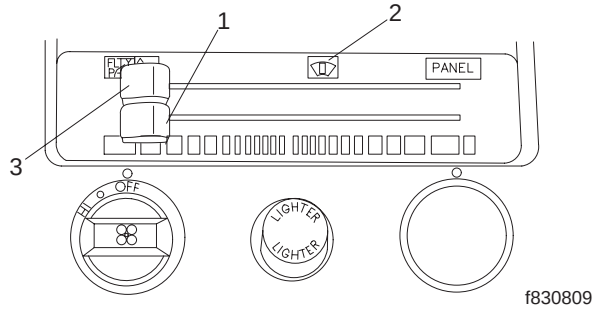

1. Temperature Control Lever
2. Defrost Position
3. Function Control Lever

Fig. 3.22, Climate Control Panel

- The Floor/Panel position directs air through the windshield, floor, side panel, and center panel (unheated) vents.
- The Defrost position directs air through the windshield and side panel vents. The center panel vents, if left open, will provide unheated air. Air flow from the side panel vents, when directed toward the door windows, will help avoid window fogging.
- The Panel position directs unheated air through the center panel vents only.

A three-speed fan switch controls the flow of air to any selected air vents.

The center air panel vents, located on each side of the heater control panel, allow unheated forced air to be directed vertically and horizontally and can be opened or closed independently by means of a built-in damper. See **Fig. 3.23**.

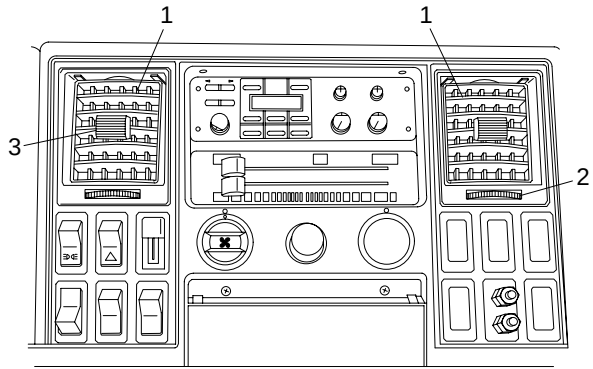

08/27/97 f601423

1. Center Air Panel Vents
2. Vertical and Volume Airflow Control
3. Horizontal Airflow Control

Fig. 3.23, Center Air Panel Vents

The side panel vents allow heated forced air to be directed vertically and horizontally.

The roof vent (see **Fig. 3.24**) can be adjusted to five different positions but is not removable. To adjust, hold the lateral bars and incline the ventilator forward, backward, or to either side. To open completely, push the ventilator upward.

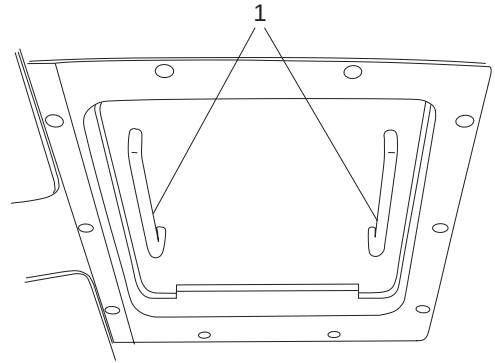

f601441

1. Roof Vent Adjustment Bars

Fig. 3.24, Roof Vent

The foot-level vents, located on each side of the front cab wall under the instrument panel, are opened or closed by moving the actuator lever on the vent. See **Fig. 3.25**.

https://truckmanualshub.com/

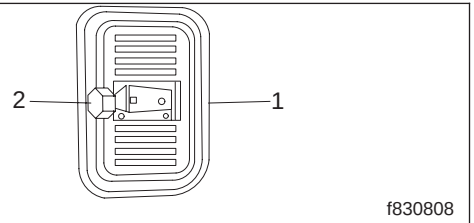

1. Foot-Level Vent
2. Open/Close Actuator Lever

Fig. 3.25, Foot-Level Vent

https://truckmanualshub.com/

4

Engines

Engine Starting 4.1
Cold Start Manifold Heater 4.3
Cold Weather Operation 4.3
Engine Break-In 4.4
Engine Operation 4.5
Engine Shutdown 4.8
High Altitude Operation 4.9
Engine Braking System, Optional 4.9

https://truckmanualshub.com/

Engine Starting

Cummins

NOTE: Before starting the engine, read **Chapter 3** in this manual for detailed information on how to read the instruments and operate the controls.

CAUTION

When starting a vehicle equipped with a manual transmission and clutch lock out switch, the clutch pedal must be fully depressed during the entire start sequence. Failure to do so can cause the pinion to release and re-engage, which could cause ring gear and starter pinion damage.

If a vehicle does not start on the first attempt, make sure that the engine has completely stopped rotating before reapplying the starter switch. Failure to do so can cause the pinion to release and re-engage, which could cause ring gear and starter pinion damage.

Moving a vehicle with the starter and/or using the starter to bump the engine for maintenance procedures is strictly prohibited. Use of these methods to bump the engine over or move the vehicle can cause the pinion to release and re-engage, which could cause ring gear and starter pinion damage.

IMPORTANT: Ring gear and starter pinion damage caused by improper starting procedures is not warrantable.

1. Before engine start-up, perform the engine pretrip inspection and daily maintenance checks in **Chapter 9** of this manual.
2. Set the parking brakes.
3. Set the throttle to idle. Hold the clutch pedal (vehicles with manual transmissions).

CAUTION

Protect the turbocharger during the start-up by not opening the throttle or accelerating the engine above 1000 rpm until normal engine idle oil pressure registers on the gauge.

4. For manual transmissions, make sure the transmission is in neutral. For automatic transmissions, make sure the transmission shift control is in Neutral or Park.

   If the outside temperature is 60°F (16°C) or higher: keep your foot off the throttle pedal during the first five seconds of cranking the engine; if the engine does not start in that time, apply full throttle while cranking.

If the outside temperature is below 60°F (16°C), fully depress the throttle, *after* engaging the starter.

5. Turn on the ignition switch.

CAUTION

Don't crank the engine for more than 30 seconds at a time during any of the following procedures. Wait two minutes after each try to allow the starter to cool. Failure to do so could cause starter damage.

WARNING

Never pour fuel or other flammable liquid into the throttle body air inlet opening in an attempt to start the vehicle. This could result in a flash fire causing serious personal injury or property damage.

6. When the engine is started, it takes a while to get the lubricating oil film reestablished between the shafts and bearings, and between the pistons and liners. Bring the engine up to operating speed gradually as it warms up and develops stable oil pressure.

   The oil pressure gauge indicates any drop in lubricating oil pressure or mechanical malfunction in the lubricating oil system. The operator should note the loss of oil pressure, and shut down the engine before damage can occur.

NOTE: Idle diesel engines about three to four minutes at 1000 rpm before operating a loaded vehicle.

Starting After Extended Shutdown or Oil Change

Do the following steps after an oil change or after the engine has been shut down for more than three days:

1. Disconnect the electrical connector from the fuel pump solenoid valve.
2. Crank the engine until oil pressure shows on the gauge.
3. Connect the electrical connector to the fuel pump solenoid valve.
4. Start the engine. After one minute, shut down the engine and check for leaks.
5. Allow five minutes for the oil to settle, then check the engine oil level and add oil if needed. Do not overfill.

https://truckmanualshub.com/

Cold Start Manifold Heater

WARNING

Do not use starting fluid on an engine equipped with a manifold heater. Using starting fluid could cause an explosion, possibly resulting in severe personal injury and engine damage.

Turn the ignition switch to the ON position. If the temperature is below 32°F (0°C), the wait-to-start indicator will come on while the manifold heater warms up. After the indicator light goes out, start the engine. Run the engine slightly above idle until oil pressure shows on the gauge. If oil pressure doesn't show on the gauge within 30 seconds of starting, turn the key to the OFF position and wait 1 minute; then repeat the starting procedure.

Cold Weather Operation

Cummins Engines

Satisfactory performance of a diesel engine operating in low ambient temperatures requires modification of the engine, surrounding equipment, operating practices, and maintenance procedures. The lower the temperatures the greater the amount of modification required, and yet, with the modifications applied, the engines must still be capable of operation in warmer climates without extensive changes.

The following information is provided to engine owners, operators, and maintenance personnel on how the modifications can be applied to get satisfactory performance from their diesel engines.

There are three basic objectives:

1. Reasonable starting characteristics followed by practical and dependable warm-up of the engine and equipment.
2. A unit or installation which is as independent as possible from external influences.
3. Modifications which maintain satisfactory operating temperatures with a minimum increase in maintenance of the equipment and accessories.

If satisfactory engine temperature is not maintained, higher maintenance cost will result, due to increased engine wear.

Special provisions to overcome low temperatures are definitely necessary, whereas a change to a warmer climate normally requires only a minimum of revision. Most of the accessories should be designed in such a way that they can be disconnected so there is little effect on the engine when they are not in use.

The two most commonly used terms associated with preparation of equipment for low temperature operation are "winterization" and "arctic specifications."

Winterization of the engine and/or components, so that starting and operating are possible in the lowest temperature to be encountered, requires:

- Adequate lubrication with low-temperature lubricating oils.
- Protection from the cold air (insulation). The metal temperature does not change, but the rate of heat dissipation is affected.
- Fuel of the proper grade for the lowest temperature.
- Using a block heater to raise the engine block and component temperatures to at least –25°F (–32°C) for starting in lower temperatures.
- Electrical equipment capable of operating in the lowest expected temperature. All switches, connections, and batteries in the electrical system should be inspected, and kept in good condition to prevent losses through poor contacts.

  Arctic specifications refer to the design of material and specifications of components necessary for satisfactory engine operation in extremely low temperatures to –64°F (–53°C). Contact the nearest Freightliner dealer or Cummins engine dealer, to obtain the special items required.

CAUTION

"Antileak" antifreezes are not recommended for use in Cummins engines. Although these antifreezes are chemically compatible with DCA water treatment, the "antileak" agents may clog the coolant filters.

IMPORTANT: Fuel heaters used on vehicles with Cummins engine systems could cause high fuel temperatures that affect engine performance and operation of the electronic engine controls. If a fuel heater is used, make sure it has thermostatic controls. If the fuel heater has a timer, set the timer to activate only for a limited period of time before the engine starts. Make sure the fuel heater is used only for starting the engine.

Engine Break-In

Cummins Engines

Cummins engines are run on a dynamometer before being shipped from the factory. In most applications, the engine can be put to work immediately, but, during the initial 100 hours or 3000 miles (4000 km) of service the

https://truckmanualshub.com/

operator has an opportunity to establish conditions for the best service life by:

1. Operating as much as possible at three-quarter load.
2. Avoiding operation at engine idle speeds or at maximum horsepower levels longer than five minutes.
3. Developing the habit of closely watching the engine instruments during operation. Let up on the throttle if the oil temperature reaches 250°F (121°C), or if the coolant temperature exceeds 190°F (88°C).
4. Checking the oil level frequently during the break-in period.

Engine Operation

Operating vehicles with diesel engines in areas where there are concentrated flammable vapors (such as diesel, gasoline, or propane fumes) can create a hazardous situation. These vapors can be drawn into the engine through the air intake, and cause engine overspeed. Be especially cautious of low-lying or closed-in areas, and always check for signs that flammable vapors may be present.

⚠ DANGER

Don't operate the engine in an area where flammable vapors such as gasoline or diesel fumes are present. Shut down the engine when in an area where flammable liquids or gases are being handled. Failure to observe these precautions could result in serious injury or death.

Cummins Engines

Cummins diesel engines have been built to comply with the requirements of the Federal (U.S.) Clean Air Act. Once an engine is placed in service, the responsibility for meeting both state and local regulations is with the owner/operator. Good operating practices, regular maintenance, and correct adjustments are factors which will help to stay within the regulations.

Proper maintenance of the engine, which is the responsibility of the owner/operator, is essential to keep the emission levels low.

The driver should be familiar with the vehicle warning system in order to bring the vehicle to a safe stop if the engine malfunctions. If the driver doesn't understand how the warning system works, an engine shutdown could occur, causing a safety hazard. See **Chapter 3** for information on the control panel for these engines.

Follow the directions in the *Cummins Operation and Maintenance Manual* and in this manual for trouble-free, economical vehicle engine operation.

1. Cummins diesel engines produce high horsepower and peak torque characteristics at low rpm. Because of this, it is not necessary to keep the engine "wound up" to deliver the required horsepower at the wheels. These characteristics may also result in less shifting, and make shifting at lower rpm (to peak torque) more practical.
2. Depending on the vehicle gearing, the posted speed limit can sometimes allow operation in either of the top two gears; however, for improved operating efficiency (fuel economy and engine life), operate in the top gear at reduced rpm, rather than in the next lower gear at the maximum rpm.
3. Cruise at partial throttle whenever road conditions and speed requirements permit. This driving technique permits operating within the most economical power range of the engine.
4. When approaching a hill, open the throttle smoothly to start the upgrade at full power, then shift down as desired, to maintain the optimum vehicle speed. The high torque of Cummins engines may permit topping some grades without shifting.
5. Cummins engines are designed to operate over a wide speed range. More frequent shifting than necessary does not allow proper utilization of this flexibility. The driver who stays in top gear and uses the wider speed range will achieve the best fuel economy.
6. The Cummins diesel engine is effective as a brake on downhill grades, but care must be used not to overspeed the engine going downhill. The governor has no control over engine speed when the engine is being pushed by the loaded vehicle.

   Never turn off the ignition switch while going downhill. With the engine still in gear, fuel pressure will build up against the shutdown valve and may prevent it from opening when the ignition key is turned on.

CAUTION

Engine overspeed (engine speed exceeds high idle, no-load rpm) can damage the engine.

7. Use a combination of brakes and gears to keep the vehicle under control at all times, and to keep the engine speed below the rated governed rpm.

Cruise Control

The cruise control is activated by the ON/OFF and SET/RESUME switches. The minimum speed at which cruise

https://truckmanualshub.com/

control can be used on Cummins engines is 30 mph (48 km/h).

WARNING

Do not activate the fifth wheel air slider control valve when the vehicle is in motion. Doing so could result in damage to the fifth wheel member, kingpin, cab, or trailer, and ultimately, to the drivetrain. A guard is positioned around the switch to prevent it from being accidentally activated.

CAUTION

Do not attempt to shift gears without using the clutch pedal when the cruise control is engaged. Failure to follow this precaution will result in a temporarily uncontrolled increase in engine speed; transmission damage and gear stripping could result.

1. To cruise at a particular speed:
   - 1.1 Flip the ON/OFF switch to ON.
   - 1.2 Hold the throttle down until the speedometer reaches the desired speed.
   - 1.3 Momentarily move the SET/RESUME switch to SET.
2. To disengage the cruise control:
   - 2.1 Depress the foot brake, trailer brake, clutch pedal, *or*
   - 2.2 Flip the ON/OFF switch to OFF.

To resume a preselected cruise speed, momentarily move the SET/RESUME switch to RESUME. Cruise will return to the last speed selected.

Cruise speed can be adjusted up or down by holding the SET/RESUME switch at SET (accelerate) or at RESUME (decelerate) until the desired speed is reached.

NOTE: The resume vehicle speed memory is not maintained if the cruise control ON/OFF switch is turned OFF, or if the ignition is shut off.

Power Takeoff (PTO) Governor

Cummins electronic engines may be equipped with a PTO governor. The PTO mode is activated by the ON/OFF and SET/RESUME switches.

1. Engage the PTO as follows:
   - 1.1 Flip the ON/OFF switch to ON.
   - 1.2 Hold the throttle pedal down until the tachometer reaches the desired engine speed.
   - 1.3 Momentarily move the SET/RESUME switch to SET.

2. To disengage the PTO:

   2.1 Depress the foot brake pedal, trailer brake, clutch pedal, *or*

   2.2 Flip the ON/OFF switch to OFF.

To resume a previously selected engine speed, momentarily move the SET/RESUME switch to RESUME.

Adjust engine speed up or down by holding the SET/RESUME switch at SET (accelerate) or at RESUME (decelerate) until the desired speed is reached.

NOTE: The resume engine speed memory is not maintained if the cruise control ON/OFF switch is turned OFF, or if the ignition is shut off.

Engine Shutdown

Cummins Engines

1. With the vehicle stopped, apply the parking brakes, and place the transmission in neutral.

2. It is important to idle an engine 3 to 4 minutes before shutting it down. This allows the lubricating oil and the water to carry heat away from the combustion chambers, bearings, shafts, etc. This is especially important with turbocharged engines.

   Bearings and seals in the turbocharger are subjected to the high heat of combustion exhaust gases. While the engine is running, this heat is carried away by oil circulation, but if the engine is stopped suddenly, the turbocharger temperature may rise as much as 115°F (46°C).

   The extreme heat may cause bearings to seize or oil seals to leak.

3. Do not idle the engine for excessively long periods.

   Long periods of idling are not good for an engine because the combustion chamber temperatures drop so low the fuel may not burn completely. This will cause carbon to clog the injector spray holes and piston rings, and may result in stuck valves.

   If the engine coolant temperature becomes too low, raw fuel will wash the lubricating oil off the cylinder walls and dilute the crankcase oil, causing all moving parts of the engine to suffer from poor lubrication.

CAUTION

Stop the engine at the first sign of malfunction. Almost all malfunctions give some warning to the operator before significant damage occurs. Many engines are saved because alert operators heed the warning signs (sudden drop in oil pressure, unusual noises, etc.) and immediately shut down the engine.

https://truckmanualshub.com/

4. If the engine is not being used, shut it down by turning the ignition key off.

High Altitude Operation

Cummins

Engines lose horsepower when operated at high altitude because the air is too thin to burn as much fuel as at sea level. This loss is about 3 percent for each 1000 feet (300 m) altitude above sea level for a naturally aspirated engine. Most turbocharged engines are rated for higher altitudes than naturally aspirated engines. An engine will have smoky exhaust at high altitudes unless a lower gear is used. The engine will not demand full fuel from the fuel system unless the engine is altitude-compensated by the use of a turbocharger. Shift gears as needed to avoid excessive exhaust smoke.

Engine Braking System, Optional

PacBrake Exhaust Brake

A PacBrake exhaust brake is available as optional equipment. An exhaust brake is an auxiliary braking system that attaches to the engine exhaust system. An exhaust brake makes the engine act as a compressor. The exhaust brake functions by partially closing off the exhaust system from the engine exhaust manifolds, creating an increase in exhaust back pressure. During vehicle deceleration, the engine must turn against the back pressure and this creates a braking effect on the driving wheels.

⚠ WARNING

Using the engine brake as a primary braking system when the service brakes are operable is dangerous. This can cause long, unpredictable stopping distances, possibly resulting in personal injury or property damage.

The exhaust brake is not felt as a normal braking force as with the service brakes, but is more of a gradual decelerating effect, as if the service brakes were lightly applied. The exhaust brake is used to aid the engine and the service brakes in slowing the vehicle, reducing service brake wear.

https://truckmanualshub.com/

5

Transmissions

Fuller Straight-Shift Models 5.1
Allison Automatic Transmissions 5.2

https://truckmanualshub.com/

Fuller Straight-Shift Models

General Information

Fuller FS-4205A/B, FS-5205A/B, and FS-6305A/B transmissions have five forward speeds and one reverse speed. See **Fig. 5.1** for the shift pattern.

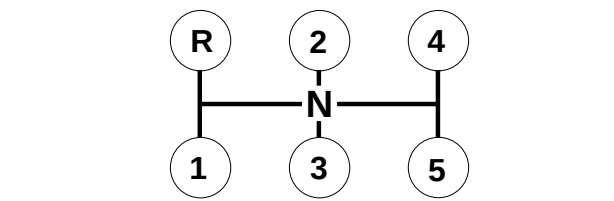

Fig. 5.1, Shift Pattern, FS-4205A/B, FS-5205A/B, and FS-6305A/B

Fuller FS-5306A, FS-6306A and FS-8206A transmissions have six forward speeds and one reverse speed. See **Fig. 5.2** for the shift pattern.

These transmissions are designed for use with on-highway, fuel economy engines, where a minimum of shifting is desired and less gear reduction is acceptable.

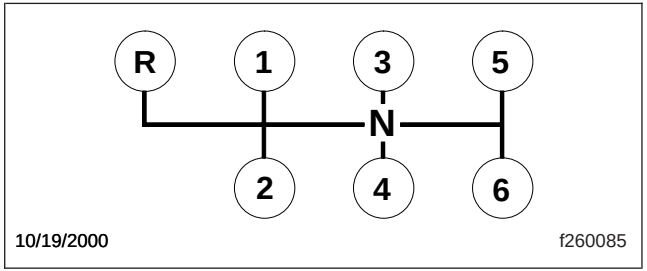

Fig. 5.2, Shift Pattern, FS-5306A, FS-6306A and FS-8206A

Operation

1. Always use 1st gear when starting to move the vehicle forward.
2. Accelerate to engine governed speed. Disengage the clutch and move the shift lever to 2nd gear. Engage the clutch and accelerate to engine governed speed.
3. Continue upshifting using the same sequence described in step 2 above. Follow the pattern on the shift lever.
4. When downshifting, shift progressively down through each successive lower gear as follows:

   When the engine speed drops to the same rpm to which it fell immediately after upshifting to that

same gear, disengage the clutch and move the shift lever to the next lower gear. Engage the clutch smoothly.

Continue downshifting, as conditions require, using the same sequence described above.

IMPORTANT: Do not rest your foot on the clutch pedal while driving. This causes partial clutch disengagement, which could cause premature clutch wear.

NOTE: With synchronized models, disengage the clutch completely when shifting gears. Double clutching is unnecessary. If the vehicle is moving when shifting, depress the clutch pedal just far enough to disengage the clutch.

Allison Automatic Transmissions

General Information

MD-series (MD-CR and MD-WR) automatic transmissions have six forward speeds and one reverse speed. See **Fig. 5.3**. These transmissions have electronic shift controls that can be programmed to allow the use of different numbers of geared speeds. For instance, the transmission can be programmed to operate as a 4-speed, 5-speed, or 6-speed unit in the "primary" shift mode. If needed, a "secondary" shift mode can be programmed to provide another shift configuration to optimize vehicle use under different operating conditions. To activate a secondary shift mode, or other special function programmed into the electronic control unit (ECU), depress the MODE button. "Mode On" is displayed in the indicator panel just above the push buttons. A label just above the MODE button identifies the special function.

NOTE: Each time a push button is depressed on the shift selector, a short beep will be heard. This indicates that the ECU has received input to change operation.

The MD-series transmission system is designed to warn the driver of transmission malfunctions. The driver of a vehicle equipped with these transmissions should know the extent of the warning system in order to safely operate the vehicle. See **Chapter 3** for information on the warning system.

Operation

CAUTION

The engine should never be operated for more than 30 seconds at full throttle with the transmission in gear and the output stalled. Prolonged operation of

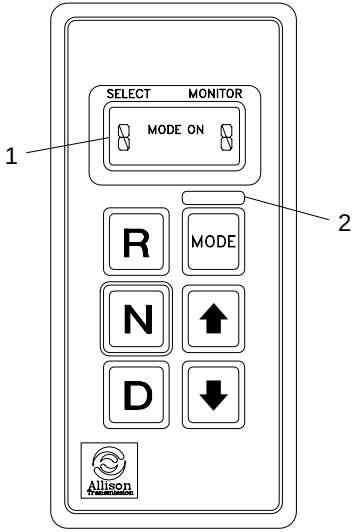

1. Indicator Panel 2. Mode ID

Fig. 5.3, Shift Selector

this type will overheat the transmission fluid and will result in severe damage to the transmission.

1. Start the engine, then check the digital display on the "push button shift selector." Under "Select" at the top of the unit, the display should always show the "primary" shift mode. Under "Monitor," the gear the transmission is in should be displayed.

⚠ WARNING

Never shift from neutral (N) to drive (D) or reverse (R) at engine speeds above idle. The vehicle will lurch forward or backward, which could cause property damage and personal injury.

2. Use reverse (R) to back the vehicle. Completely stop the vehicle before shifting from a forward gear to reverse or from reverse to forward. There is only one reverse gear.

3. Select drive (D) for all normal driving conditions. The vehicle will start out in 1st gear, and as speed increases, the transmission will upshift through each gear automatically. As the vehicle slows down, the transmission will downshift to the correct gear automatically.

   The pressure of your foot on the accelerator pedal influences the automatic shifting. When the pedal is fully depressed, the transmission will automatically upshift near the governed speed of the engine. A partially depressed position of the pedal will cause the upshifts to occur at a lower engine speed.

4. Occasionally the road, load, or traffic conditions make it desirable to restrict the automatic shifting to

a lower range. The lower the gear range, the greater the engine braking power.

Use the up or down arrow buttons on the shift selector to reach the desired gear. The "Select" indicator will display your choice, and the "Monitor" indicator will show the selected gear once it is reached.

NOTE: In the lower gear ranges, the transmission will not upshift above the highest gear selected unless the engine governed speed is exceeded.

5. Use neutral (N) and apply the parking brake when the vehicle is parked with the engine running.

CAUTION

Do not allow the vehicle to coast in neutral. This can result in severe transmission damage. Also, no engine braking is available.

https://truckmanualshub.com/

6

Clutches, Rear Axles, and Steering

Clutches 6.1
Rear Axles 6.3
Steering System 6.5

Clutches, Rear Axles, and Steering

https://mrk.manualshub.com/

Clutches

General Information

The major reason clutches wear out too soon is excessive heat. Clutches are designed to absorb and dissipate more heat than encountered in typical operation. The temperatures developed in typical operation will not break down the clutch friction surfaces. However, if a clutch is slipped excessively, or required to do the job of a fluid coupling, high temperatures develop quickly and destroy the clutch. Temperatures generated between the flywheel, driven discs, and pressure plates can be high enough to cause the metal to flow and the friction facing material to char and burn.

Slipping and excessive heat are practically nonexistent when a clutch is fully engaged. But during the moment of engagement, when the clutch is picking up the load, it generates considerable heat. An incorrectly adjusted or slipping clutch will rapidly generate sufficient heat to destroy itself.

The most important items that a driver should be aware of to ensure long service life of the clutch include: starting in the right gear, recognizing clutch malfunctions, and knowing when to adjust a clutch.

Clutch Operation

Starting the Vehicle in the Correct Gear

To drive forward, always start in first gear. After the clutch is fully engaged, the engine should be accelerated to the correct rpm for the upshift into the next higher gear.

Gear Shifting Techniques

Many drivers upshift into the next gear, or even skip-shift into a higher gear, before the vehicle has reached the correct speed. This type of shifting is almost as bad as starting off in a gear that is too high, since the engine rpm and vehicle speeds are too far apart, requiring the clutch to absorb the speed difference by generating heat. For transmission operating instructions, see **Chapter 5**.

Vehicle Overload, or Overloading the Clutch

Clutches are designed for specific vehicle applications and loads. These limitations should not be exceeded.

CAUTION

Overloading will not only result in damage to the clutch, but also to the entire powertrain.

https://truckmanualshub.com

Riding the Clutch Pedal

Riding the clutch pedal is destructive to the clutch, since partial clutch engagement permits slippage, generating excessive heat. Riding the clutch pedal will also put a constant thrust load on the release bearing, which can thin out the lubricant. Release bearing failures can be attributed to this type of misuse.

Holding the Vehicle on an Incline With a Slipping Clutch

A slipping clutch accumulates heat faster than it can be dissipated, resulting in early clutch failures. Never use the clutch as a hill holder.

Coasting With the Clutch Released (Pedal Depressed) and the Transmission in Gear

Coasting with the clutch released and the transmission in gear can cause high driven disc rpm through multiplication of ratios from the final drive and transmission.

WARNING

Do not coast with the clutch released (pedal depressed) and the transmission in gear. High driven disc rpm could cause the clutch facing to be thrown off the disc. Flying debris could cause injury to persons in the cab.

Engaging the Clutch While Coasting

Engaging the clutch while coasting can result in tremendous shock loads and possible damage to the clutch, as well as to the entire drivetrain.

Reporting Erratic Clutch Operation Promptly

Reporting erratic clutch operation as soon as possible will give maintenance personnel a chance to inspect the clutch components.

CAUTION

Operating the vehicle with incorrect clutch pedal free-travel could result in clutch damage. See Group 25 of the ***Cargo Workshop Manual*** **for free-pedal adjustment procedures and specifications.**

Clutch Adjustments

Some clutches have an internal adjustment. See the applicable section in **Group 25** of the *Cargo Workshop Manual* for clutch adjustment procedures and specifications.

CAUTION

Operating the vehicle with the clutch incorrectly adjusted could result in clutch or clutch brake failure.

https://truckmanualshub.com/

Lubrication

The release bearing should be lubricated at frequent intervals. See **Group 25** of the *Cargo Maintenance Manual* for intervals and procedures.

CAUTION

Failure to lubricate the release bearing as recommended could result in release bearing damage and damage to the clutch.

Hydraulic Clutch Fluid Reservoir Checking

Make sure that the clutch fluid reservoir is full. The reservoir is full when the fluid level is up to the "max" mark. The fluid level must always be above the "min" mark. Use only heavy-duty brake fluid, DOT 3, in the hydraulic-clutch system.

Rear Axles

Meritor Two-Speed Rear Axle

The two-speed rear axle can be used to operate the vehicle in low range when operating off-highway or when starting out with a heavy load on-highway. See **Fig. 6.1**. After the vehicle is moving on the highway, the axle can be shifted to high range.

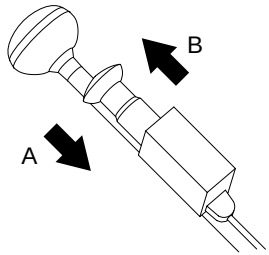

A. Push down for low speed range.
B. Pull up for high speed range.

Fig. 6.1, Range Selection Lever Operation

To shift the axle to the high range: keep the throttle pedal down, then move the range selection lever to high; release the throttle pedal until the axle shifts, then accelerate.

To shift the axle to low range: keep the throttle pedal down, then move the range selection lever to low; release and then depress the throttle pedal quickly to increase engine rpm. The axle will shift to low range.

NOTE: When parking the vehicle, put the axle in the low range with the engine running. Engage the clutch and transmission to be sure the axle has

completed the shift into the low range. Some vehicle motion is needed to ensure engagement of the axle.

Meritor Drive Axles with Main Differential Lock

The Meritor main differential lock is a driver-controlled traction device operated from the vehicle cab. See **Fig. 6.2**. A rocker switch allows the driver to lock or unlock the differential. An indicator light in the switch comes on when the differential lock is engaged.

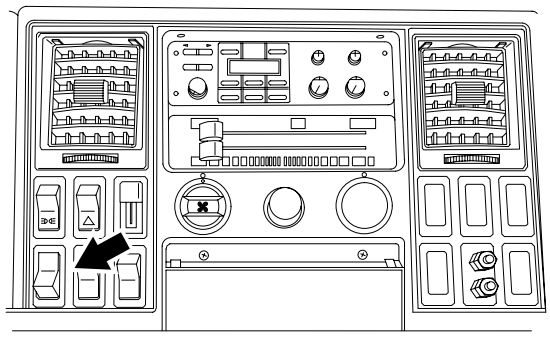

10/02/98 f601427a

Fig. 6.2, Differential Lock Switch

The main differential lock provides maximum traction under slippery conditions. When the differential lock is engaged, the clutch collar completely locks the differential case, gearing, and axle shafts together, maximizing traction of both wheels and protecting against spinout. Under normal traction conditions, do not engage the differential lock.

Operate the axle with differential action between both wheels.

Meritor Main Differential Lock Operation

To lock the main differential and obtain maximum traction under slippery conditions, depress the control switch.

⚠ WARNING

Lock the main differential only when the vehicle is standing still or moving less than 25 mph (40 km/h). Never lock the main differential when the vehicle is traveling down steep grades or when the wheels are slipping. This could damage the differential or lead to loss of vehicle control, causing personal injury and property damage.

If the vehicle is moving, maintain a constant vehicle speed while engaging the differential lock. Briefly let up

https://truckmanualshub.com/

on the accelerator to relieve torque on the gearing, allowing the differential to fully lock. The indicator light comes on when the differential is fully locked. When the differential is locked, the turning radius will increase because the vehicle understeers. See **Fig. 6.3**. Drive cautiously and do not exceed 25 mph (40 km/h).

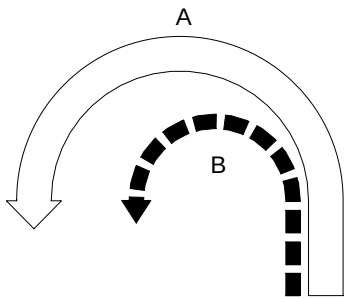

02/09/96 f350079a

A. Turning Radius When Differential is Locked (engaged)–Understeer Condition
B. Turning Radius When Differential is Unlocked (disengaged)

Fig. 6.3, Turning Radius

To unlock the main differential, depress the bottom of the control switch. Briefly let up on the accelerator to relieve torque on the gearing, allowing the differential to fully unlock.

When the differential lock disengages, the indicator light will go off.

Steering System

General Information

When there is no load on the vehicle, and the front tires are pointed straight ahead, the steering wheel spokes should be at the 4 and 8 o'clock positions, or within 10 degrees of either side. See **Fig. 6.4**. See **Group 46** of the *Cargo Workshop Manual* for steering adjustment procedures.

Power Steering System

The power steering system consists of a steering gear (which includes a manual steering mechanism, a hydraulic control valve, and a hydraulic power cylinder), hydraulic hoses, power steering pump, reservoir, and other components. The power steering pump, driven by the engine, provides the power assist for the steering system. If the engine is not running, there is no power assist.

If the power-assist feature does not work due to hydraulic fluid loss, steering pump damage, or some other cause, bring the vehicle to a safe stop. Do not drive the vehicle until the cause of the problem has been corrected.

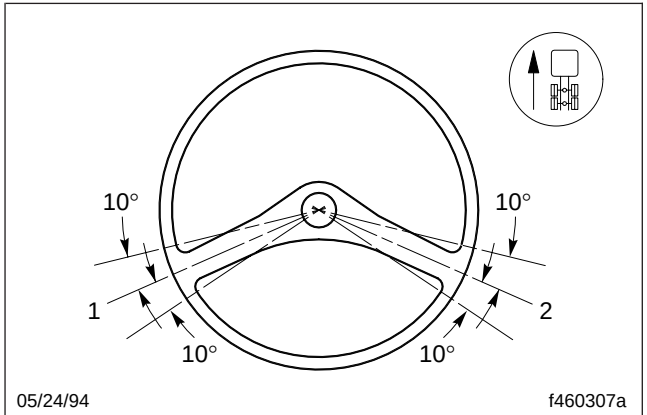

1. 8 o'Clock
2. 4 o'Clock

Fig. 6.4, Steering Wheel Centered

⚠ WARNING

Driving the vehicle without the power-assist feature of the steering system requires much greater effort, especially in sharp turns or at low speeds, which could result in an accident and possible injury.

Drivers should use the power available with a power steering system carefully. If the front tires become lodged in a deep chuckhole or rut, drive the vehicle out, instead of using the steering system to lift the tires from the hole. Also, avoid turning the tires when they are against a curb, as this places a heavy load on steering components and could damage them.

https://truckmanualshub.com/

7

Brakes

Air Brake System 7.1

https://truckmanualshub.com/

Air Brake System

General Information

A dual air brake system consists of two independent air brake systems which use a single set of brake controls. Each system has its own reservoir, plumbing, and brake chambers. The primary system operates the service brakes on the rear axle; the secondary system operates the service brakes on the front axle. Service brake signals from both systems are sent to the trailer.

WARNING

Do not operate the vehicle with the front brakes backed off or disconnected. Backing off or disconnecting the front brakes will not improve vehicle handling and may lead to loss of vehicle control resulting in property damage or personal injury.

Loss of air pressure in the primary system causes the rear service brakes to become inoperative; front brakes will continue to be operated by secondary system air pressure. In addition, trailer brakes will be operated by the secondary system.

Loss of secondary system air pressure causes the front axle brakes to become inoperative; rear service brakes and trailer brakes will be operated by the primary system.

Before driving your vehicle, allow time for the air compressor to build up a minimum of 95 psi (655 kPa) pressure in both the primary and secondary systems. Monitor the air pressure system by observing the dual system air pressure gauge and the low-air-pressure warning light and buzzer. The warning light and buzzer shut off when air pressure in both systems reaches 64 to 76 psi (441 to 524 kPa).

The warning light and buzzer come on if air pressure drops below 64 to 76 psi (441 to 524 kPa) in either system. If this happens, check the air system pressure gauges to determine which system has low air pressure. Although the vehicle's speed can be reduced using the foot brake control pedal, either the front or rear service brakes will not be operating, causing a longer stopping distance. Bring the vehicle to a safe stop, and have the air system repaired before continuing.

WARNING

Do not drive the vehicle with the parking brakes caged. If the vehicle is driven with the parking brakes caged, there would be no means of stopping the vehicle if a complete loss of air pressure occurred. This could result in serious personal injury or vehicle damage. Before caging the spring parking brakes, make the connection to a towing vehicle or chock the tires.

NOTE: Before a vehicle with insufficient system air pressure can be moved, the spring parking brakes must be released by applying an external air source at the gladhands, or by manually caging (manually releasing) the parking brake springs.

After correcting the brake system problem, uncage the spring parking brakes before resuming normal vehicle operation.

Operation

Before driving the vehicle, secure all loose items in the cab so that they will not fly forward during a full brake application. Make sure all occupants are wearing seat belts.

During normal brake stops, depress the foot brake control pedal until braking action slows down the vehicle. Increase or decrease the pressure on the pedal so that the vehicle comes to a smooth, safe stop. When the forward speed of the vehicle has decreased almost to the idling speed of the engine, push the clutch pedal in, and shift the transmission into neutral. Apply the spring parking brakes if the vehicle is to be parked.

The yellow diamond-shaped knob (**Fig. 7.1**) on the control panel actuates the parking brake valve. Pulling out the knob applies the spring parking brakes.

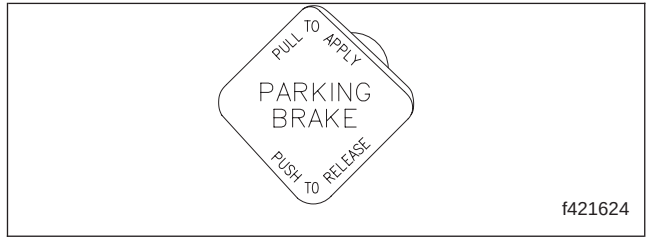

Fig. 7.1, Parking Brake Valve Knob

CAUTION

Do not use the spring parking brakes if the service brakes are hot, such as after descending a steep grade. Also, do not use the spring parking brakes during freezing temperatures if the service brakes are wet. To do so could damage the brakes if hot, or cause them to freeze during cold weather.

If the brakes are wet, drive the vehicle in low gear and lightly apply the brakes to heat and dry them. Allow hot brakes to cool before using the spring parking brakes. Always chock the tires.

If the brakes are wet, drive the vehicle in low gear and lightly apply the brakes to heat and dry them.

Allow hot brakes to cool before using the spring parking brakes. Always chock the tires.

https://truckmanualshub.com/

CAUTION

Never apply the service and spring parking brakes simultaneously. To do so transmits excessive input force to the brake components, which could damage or cause eventual failure of brake actuating components.

Meritor WABCO® Antilock Braking System (ABS), Air Brake Systems

The Meritor WABCO® Antilock Braking System (ABS) is an electronic wheel speed monitoring and control system that works with the air brake system. ABS passively monitors vehicle wheel speed at all times, but *controls* wheel speed during an emergency or reduced-traction stop. In normal braking applications, the standard air brake system is in effect.

IMPORTANT: For proper ABS system operation, do not change tire sizes. The sizes of the tires installed during production are programmed into the electronic control unit. Installing different sized tires could result in a reduced braking force, leading to longer stopping distances.

ABS includes signal-generating tone wheels and sensors located in the wheel hubs of each sensed axle. The sensors transmit vehicle wheel speed information to an electronic control unit (located behind the passenger seat). The control unit's main circuit interprets the speed sensor signals and calculates wheel speed, wheel retardation, and a vehicle reference speed. If the calculations indicate wheel lockup, the main circuit signals the appropriate solenoid control valve to reduce braking pressure. During emergency braking, the solenoid control valve alternately reduces, increases, or maintains air pressure supply in the brake chamber to prevent front and rear wheel lockup.

The electronic control unit also has a safety circuit that constantly monitors the wheel sensors, solenoid control valves, and the electrical circuitry. The ABS warning light comes on after turning on the ignition switch. The warning light goes out, if all ABS components are working properly.

If, during vehicle operation, the safety circuit senses a failure in any part of the ABS system (a sensor, solenoid control valve, wiring connection, short circuit, etc.), the ABS warning light comes on and the control circuit where the failure occurred is switched to normal braking action. The remaining control circuit will retain the ABS effect. Even if the ABS system is partially or completely inoperative, normal braking ability is maintained. An exception would be if a solenoid control valve (or combination solenoid control valve) is damaged and inoperative. As these components are an integral part of the air brake system, normal braking may be impaired or inoperative.

IMPORTANT: If any of the ABS warning lights do not work as described above, or come on while driving, repair the ABS system immediately to ensure full antilock braking capability.

During emergency or reduced-traction stops, fully depress the brake pedal until the vehicle comes to a safe stop; *do not pump*the brake pedal. With the brake pedal fully depressed, the ABS system will control all wheels to provide steering control and a reduced braking distance.

Although the ABS system improves vehicle control during emergency braking situations, the driver still has the responsibility to change driving styles depending on the existing traffic and road conditions. For example, the ABS system cannot prevent an accident if the driver is speeding or following too closely on slippery road surfaces.

Automatic Slack Adjusters

Automatic slack adjusters are required on all vehicles equipped with air brakes manufactured after October 20, 1994. Automatic slack adjusters should never be manually adjusted except during routine maintenance of the foundation brakes (e.g., replacing shoes), during slack adjuster installation or in an emergency situation.

When the brake pushrod stroke exceeds the legal brake adjustment limit on a vehicle, there is likely a mechanical problem with the foundation brake components or the adjuster is improperly installed.

Visit a repair facility as soon as possible when brakes equipped with automatic slack adjusters are determined to be out of adjustment.

⚠ WARNING

Manually adjusting an automatic slack adjuster to bring the pushrod stroke within legal limits is likely masking a mechanical problem. Adjustment is not repairing. In fact, continual adjustment of automatic slack adjusters may result in premature wear of the adjuster itself. Further, the improper adjustment of some automatic slack adjusters may cause internal damage to the adjuster, thereby preventing it from properly functioning.

https://truckmanualshub.com/

8

Cab Appearance

Cab Washing and Polishing 8.1
Care of Chromed Parts and Stainless-Steel Clad Parts 8.1
Dashboard Care 8.2
Vinyl Upholstery Cleaning 8.2
Cloth Upholstery Cleaning 8.3

https://truckmanualshub.com/

Cab Washing and Polishing

To protect the finish of your new vehicle, follow these guidelines carefully:

- During the first 30 days, rinse your vehicle frequently with water. If the vehicle is dirty, use a mild liquid soap. Do not use detergent.
- During the first 30 days, do not use anything abrasive on your vehicle. Brushes, chemicals, and cleaners may scratch the finish.
- During the first 120 days, do not wax your vehicle.

To extend the life of your vehicle's finish, follow these guidelines:

- Avoid washing your vehicle in the hot sun.
- Always use water. After the cab is completely washed, dry it with a towel or chamois.
- Do not dust painted surfaces with a dry cloth, as this will scratch the paint.
- Do not remove ice or snow from a painted surface with a scraper of any sort.
- To prevent damage to the finish, wax it regularly. Before waxing, if the finish has become dull, remove oxidized paint using a cleaner specifically designed for this purpose. Remove all road tar and tree sap before waxing. Freightliner recommends that a quality brand of cleaner or cleaner-polish and polishing wax be used.
- Do not let diesel fuel or antifreeze stand on a painted surface. If either should occur, rinse the surface off with water.
- To prevent rust, have any nicks or other damage on the finish touched up as soon as possible.
- Park your vehicle in a sheltered area whenever possible.

Care of Chromed Parts and Stainless-Steel Clad Parts

To prevent rust, keep chrome and stainless-steel clad parts clean and protected at all times. This is especially important during winter driving and in coastal areas where there is exposure to salt air.

When cleaning chrome or stainless-steel clad parts, use clean water and a soft cloth or sponge. A mild detergent may also be used.

Sponge gently, then rinse. If necessary, use a nonabrasive chrome cleaner to remove stubborn rust or other material. Do not use steel wool.

IMPORTANT: Use only nonabrasive chrome cleaners on stainless-steel clad parts. This prevents scratching and marring of the polished surface.

To help protect the chrome after cleaning, apply a coat of polishing wax to the surface. Never use wax on parts that are exposed to high heat, such as exhaust pipes.

Dashboard Care

Periodically wipe the dashboard with a water-dampened cloth. A mild detergent can be used, but avoid using strong detergents.

Vinyl Upholstery Cleaning

To prevent soiling, frequent vacuuming or light brushing to remove dust and dirt is recommended. Harsh cleaning agents can cause permanent damage to vinyl upholstery. To preserve the upholstery and prevent damage, carefully review the following sections for recommended cleaning procedures. Waxing or refinishing improves soil resistance and cleanability for all vinyls. Any hard wax, such as that used on automobiles, may be used.

Ordinary Dirt

Wash the upholstery with warm water and mild soap, such as saddle or oil soap. Apply soapy water to a large area and allow to soak for a few minutes, then rub briskly with a cloth to remove the dirt. This can be repeated several times, as necessary.

If dirt is deeply imbedded, use a soft bristle brush after applying the soap.

If dirt is extremely difficult to remove, wall-washing preparations normally found around the home can be used. Powdered cleaners, such as those used for sinks and tiles, are abrasive and must be used with caution as they can scratch the vinyl or give it a permanent dull appearance.

Chewing Gum

Harden the gum with an ice cube wrapped in a plastic bag, then scrape off with a dull knife. Any remaining traces of gum can be removed with an all-purpose light oil (peanut butter will also work) and wiped off.

Tars, Asphalts, and Creosote

Each of these items stains vinyl after prolonged contact. They should be wiped off immediately and the area carefully cleaned, using a cloth dampened with naphtha.

https://truckmanualshub.com/

Paint, Shoe Heel Marks

Paint should be removed immediately. Do not use paint remover or liquid-type brush cleaner on vinyl. An unprinted cloth, dampened with naphtha or turpentine may be used. Use care to prevent contact with parts of the upholstery that are not vinyl.

Sulfide Stains

Sulfide compounds, such as those found in eggs and some canned goods, can stain after prolonged contact with vinyl. These stains can be removed by placing a clean, unprinted piece of cloth over the spotted area and pouring a liberal amount of 6 percent hydrogen peroxide onto the cloth.

Allow the saturated cloth to remain on the spot for thirty to sixty minutes. For stubborn spots, allow the hydrogen-peroxide saturated cloth to remain on the area overnight. Use caution to prevent the solution from seeping into the seams, or it will weaken the cotton thread.

Nail Polish and Nail Polish Remover

Prolonged contact with these substances causes permanent damage to vinyl. Careful blotting immediately after contact minimizes damage. Do not spread the liquid during removal.

Shoe Polish

Most shoe polishes contain dyes which penetrate vinyl and stain it permanently. Shoe polish should be wiped off as quickly as possible using naphtha or lighter fluid. If staining occurs, try the same procedure as that under "Sulfide Stains."

Ball Point Ink

Ball point ink can sometimes be removed if rubbed immediately with a damp cloth, using water or rubbing alcohol. If this does not work, try the procedure used under "Sulfide Stains."

Miscellaneous

If stains do not respond to any of the treatments described above, it is sometimes helpful to expose the vinyl to direct sunlight for up to 30 hours. Mustard, ball point ink, certain shoe polishes, and dyes often bleach out in direct sunlight, leaving the vinyl undamaged.

Cloth Upholstery Cleaning

To prevent soiling, frequent vacuuming or light brushing to remove dust and dirt is recommended. Spot clean with a mild solvent or upholstery shampoo, or the foam from a mild detergent. When using a solvent or a dry-cleaning product, follow instructions carefully, and clean

only in a well-ventilated area. Avoid any product that contains carbon tetrachloride or other toxic materials. With either method, pretest a small area before proceeding. Use a professional upholstery cleaning service when extensive cleaning is needed.

Grease and Oil-Based Stains

Dampen a small absorbent cloth with dry-cleaning solvent or spot remover. Apply carefully to the spot from the outer edge to the center. Pat and blot with a clean, dry cloth. Repeat several times, as necessary, turning cloths so that the stain does not redeposit on the fabric.

Sugar and Water-Based Stains

Apply water-based detergent or cleaner, working in circular motions. Pat and blot as dry as possible. Repeat, if necessary, before drying thoroughly.

Chewing Gum or Wax

Harden the gum or wax with an ice cube wrapped in a plastic bag, then scrape off with a dull knife. Excess wax can be absorbed by placing a thick white blotter over the wax and heating with a warm (not hot) iron. Remove the remainder by using the same procedure under "Grease and Oil-Based Stains."

Mildew

Brush the dry fabric with a soft brush. Sponge with detergent, and blot. If the fabric is colorfast, dilute a teaspoon of bleach in one quart (one liter) of cool water. Apply with a swab, directly on the mildew stain. Dab repeatedly with clear, cool water, and blot dry.

https://truckmanualshub.com/

https://truckmanualshub.com/

9

Pretrip Inspection and Daily Maintenance

Pretrip Inspection Checklist 9.1
Pretrip Inspection and Daily Maintenance Procedures 9.3

https://truckmanuals101.com/

Pretrip Inspection Checklist

The following pretrip inspection checklist helps ensure that the vehicle components are in good working condition before each trip.

Pretrip inspections cannot be performed in a short period. In checklist form, the sequence below may seem to be overly time-consuming. However, careful pretrip inspections save time by eliminating stops later to adjust items overlooked or forgotten.

Each checklist step corresponds with detailed instructions found under "Pretrip Inspection and Daily Maintenance Procedures." If any system or component does not pass this inspection, it must be corrected before operating the vehicle. Refer to the *Cargo Workshop Manual* for repair procedures, and to the *Cargo Maintenance Manual* for lubricant recommendations, specifications, and maintenance intervals and procedures.

NOTE: Apply the parking brakes and chock the tires.

1. Drain the air brake system air reservoirs.
2. Inspect the batteries and battery cables.
3. Check the fluid level in the windshield washer reservoir.
4. Check the front hub lubricant level if equipped with oil-lubricated wheel bearings.
5. Tilt the cab. Examine the steering gear components.
6. Check the coolant level in the surge tank sight glass and check the radiator and air-to-air aftercooler cooling fins for clogging or damage. Check the radiator for coolant leaks.
7. Check the condition of the coolant hoses and heater hoses.
8. Check the condition of the drive belts.
9. Inspect the engine for fuel, oil, and coolant leaks.
10. Inspect the engine and chassis wiring.
11. Inspect the air intake system for leaks or damage. Check the intake-air restriction indicator if it is mounted on the air intake system.
12. Check the fluid level in the hydraulic clutch fluid reservoir if equipped.
13. Check the engine oil level.
14. Check the oil level in the automatic transmission if equipped.
15. Check the fuel water separator, if equipped, for contaminants.
16. Lower the cab. Close the drain valves on the air brake system air tanks.

https://truckmanualshub.com/

17. Inspect the fuel tank(s) and fuel line connections. If so equipped, be sure the fuel tank shutoff valves are open.
18. Check the fuel level in the fuel tank(s), and be sure the fuel cap vent area is clean. If so equipped, check the fuel/water separator for leaks. If needed, prime the fuel tank system.
19. If so equipped, check the transmission oil cooler for debris and for leaks.
20. If so equipped, inspect the fifth wheel and check it for adequate lubrication.
21. If so equipped, inspect the 7-way trailer cable receptacle(s) for good connections.
22. Inspect the front and rear suspension components including the springs, shocks, and suspension brackets.
23. Clean the headlights, rearview mirrors, and the outside of the windshield and all window glass. Check the condition of the windshield wiper arms and blades.
24. Clean the inside of the windshield, the gauges on the dash, and all window glass.
25. Check for excessive play at the steering wheel.
26. Adjust the driver's seat, then align the rearview mirrors.
27. Check the seat belts for secure mounting and for damage.
28. Check the cab interior for loose items and secure or remove them.
29. Turn on the ignition and start the engine. Be sure the air- and oil-pressure warning systems, if equipped, are operating. Leave the engine running.
30. Make sure the electric horn and air horn, windshield wipers and washer, heater and defroster are operating properly.
31. Check the operation of the backup alarm if so equipped.
32. Turn on the lights. Check the operation of all gauge lights and interior lights. Leave the lights on.
33. Make sure all of the lights are working, including the brake lights, high- and low-beam headlights, turn signals, clearance lights, and four-way flashers. Check the condition of the reflectors. Turn the lights off.
34. Check the outer surfaces of the cab for visible surface breaks and damage.
35. Inspect the air brake components including the brake chamber pushrods, air reservoirs, and air lines.
36. Make sure the brakes are adjusted on all axles.

https://truckmanuals.net/ com

37. Check the tire inflation pressures and inspect each tire for bulges, cracks, cuts, and penetrations.
38. Check for indications of loose wheel nuts or rim nuts and examine each rim and wheel component.
39. Check the air brake system for proper operation.
40. Test the service brakes before leaving the lot.
41. Test the parking brakes on a 20 percent grade.

Pretrip Inspection and Daily Maintenance Procedures

Whenever equipment requires adjustment, replacement, repair, addition of lubricants, or a change of lubricants, refer to the *Cargo Workshop Manual* for repair procedures and specifications, and to the *Cargo Maintenance Manual* for lubricant recommendations, specifications, and maintenance intervals and procedures.

1. *Drain the air brake system air reservoirs.*

   Air reservoirs serve as storage tanks for compressed air. They collect water condensed from the air and small amounts of oil from the air compressor. Water and oil normally enter the reservoir in the form of vapor because of the heat generated during compression.

   After the water and oil condense, they collect near the tank drain valves. Drain the resulting emulsion as follows:

⚠ WARNING

Failure to drain the air reservoirs as instructed could cause sludge formation in the air brake system. Sludge could adversely affect braking, causing loss of control, which could cause death, personal injury, or property damage.

NOTE: If the air reservoirs are not equipped with automatic drain valves, they must be drained daily. If they are equipped with automatic drain valves, they must be drained in this same manner at least once a week.

1.1 Open the wet tank valve (the drain cock or pull-chain drain located on the forward end of the supply air reservoir, which is connected directly to the air compressor). Block the valve open.

⚠ WARNING

When draining the air reservoir, do not look into the air jets or direct them toward anyone. Dirt or sludge

https://truckmanualsnet.com/

particles may be in the airstream and could cause injury.

1.2 Exhaust the remaining air and moisture from the system by opening the drain cocks on the bottoms of the remaining air reservoirs. Block the valves open.

1.3 Water and oil emulsion often form pockets which will not drain while compressed air is in the reservoirs. Because of these pockets, leave the valves blocked open during the first part of the pretrip inspection.

2. *Inspect the batteries and battery cables as follows:*

WARNING

Battery posts, terminals, and related accessories contain lead and lead compounds, chemicals known to the State of California to cause cancer and reproductive harm. To prevent possible personal injury, always wash your hands after handling battery parts and related accessories.

2.1 Be sure the battery holddown is secure. If it is loose, tighten the hold-down bolts. If it is broken, replace it.

CAUTION

Take care to keep the vent plugs tight so that the neutralizing solution does not enter any of the battery cells and damage the battery.

2.2 Remove any corrosion from the hold-down and the top of the battery. Use diluted ammonia or a soda solution to neutralize the acid present, then rinse off the ammonia or soda solution with clean water.

If the battery posts or cable terminals are corroded, disconnect the terminals from the posts. Clean them with a soda solution and a wire brush. After cleaning, connect the terminals to the battery posts, then apply a thin coat of petroleum jelly or dielectric grease to the posts and terminals to help retard corrosion.

3. *Check the fluid level in the windshield washer reservoir.* Add washer fluid as needed.

WARNING

Washer fluids may be flammable and poisonous. Do not expose washer fluid to an open flame or any

https://truckmanuals101.com/

burning material, such as a cigarette. Always comply with the washer fluid manufacturer's recommended safety precautions.

4. *Check the front hub lubricant level if equipped with oil-lubricated wheel bearings.*

   Observe the level of the wheel bearing lubricant in the hub cap at each end of the front axle and, if needed, fill the hubs to the level indicated on the hub cap. See **Group 33** of the *Cargo Maintenance Manual* for recommended lubricants.

IMPORTANT: Before removing the fill plug, always clean the hub cap and plug.

5. *Tilt the cab. Examine the steering gear components.*

   Examine the steering gear mounting bolts, pitman arm nut, and the drag link nuts for tightness. Be sure the steering driveline and the U-joints are in roadworthy condition, without cracks, breaks, looseness, or other damage. Tighten loose nuts and replace damaged parts as needed. See **Group 46** of the *Cargo Workshop Manual* for instructions.

CAUTION

Coolant must be filled to the full line of the surge tank. Low coolant could result in engine overheating, which could cause engine damage.

6. *Check the coolant level in the surge tank, check the condition of the radiator fins and the charge air cooler (as equipped).*

   If the coolant is low, check the amount of antifreeze protection. If the protection is adequate, add a 50/50 mixture of water and antifreeze. If additional protection is needed, add antifreeze only. Fill to the line on the surge tank.

   Good airflow through the radiator core and air-to-air aftercooler core is essential for proper engine cooling. The cores allow air passage, but form a particle barrier which tends to collect insects and airborne debris.

   Inspect for clogged fins. Use compressed air or water directed from the fan side of the core to backflush any material restricting airflow.

   On vehicles equipped with a charge air cooler, also inspect and clean this component. If clogged, the airflow through the radiator could be restricted.

   Bent or damaged fins should also be straightened to permit airflow across all areas of the cores.

   Repair or replace the radiator if it is leaking. See **Group 20** of the *Cargo Workshop Manual* for instructions.

NOTE: When traveling through areas of high insect concentrations, it may be necessary to clean

https://truckmanualshub.com/

the exterior of the radiator or aftercooler core as often as every 200 miles (320 km).

7. *Check the condition of the coolant hoses and heater hoses.*

   Make sure the radiator inlet and outlet coolant hoses and heater hoses are pliable and are not cracking or ballooning. Replace hoses that show signs of cracking, weakening, or ballooning. Replace all hoses, including heater hoses, at the same time. Service-type knitted or braided yarn-reinforced neoprene hose is acceptable.

   Silicone hoses, having an extended service life, can be substituted for the reinforced neoprene type. See the *Service Parts Catalog* or contact your dealer.

   Tighten hose clamps as necessary, but do not overtighten as hose life can be adversely affected.

   Be sure the hose support brackets are securely fastened. Make sure the hoses are not located near sources of wear, abrasion, or high heat.

8. *Check the condition of the drive belts.*

   Check the drive belt for signs of glazing, wear (frayed edges), damage (breaks or cracks), or oil contamination. If a belt is glazed, worn, damaged, or oil soaked, replace the belt following the instructions in **Group 01** of the *Cargo Workshop Manual*.

   NOTE: On Cummins engines, a belt tensioner automatically adjusts the fan and alternator belt to the correct tension. If the belt slips, repair or replace the tensioner. For instructions, see the *Cummins Shop Manual ISB Engines*.

9. *Inspect the engine for fuel, oil, and coolant leaks.*

   Correct any leaks found.

10. *Inspect the engine and chassis wiring.*

    Inspect the engine and chassis for loose wiring, chafed insulation, and damaged or loose hold-down clamps. Tighten loose wires or hold-down clamps. Replace damaged wiring or clamps.

11. *Check the air intake system for leaks or damage.*

    Check the intake-air restriction indicator to determine if the air cleaner filter element needs to be changed. Replace the filter element if the yellow signal stays locked at 25 inH $_2$O for Cummins engines. See **Group 09** of the *Cargo Workshop Manual* for filter element replacement instructions.

    Check the engine air intake piping from the air cleaner to the engine intake. Inspect the piping for loose connections, cracks, torn or collapsed hoses, punctures, and other damage. Tighten loose connections and replace damaged components. Make sure the piping system is airtight so that all of the intake air passes through the air cleaner.

https://truckmanualshub.com

CAUTION

Failure to maintain a sealed air intake system could allow the entry of dirt and contaminants into the engine. This could adversely affect engine performance and result in engine damage.

NOTE: After replacing the filter element, reset the restriction indicator by pressing the reset button.

12. *Check the fluid level in the clutch fluid reservoir.*

    The reservoir is full when the fluid level is up to the MAX mark. The fluid level must always be above the MIN mark. Use only heavy-duty brake fluid, DOT 3, in the hydraulic-clutch system.

13. *Check the engine oil level* (**Fig. 9.1**).

    The oil level should show between the upper and lower marks on the dipstick. Add enough oil to bring the level up to the operating range. See the engine manufacturer's operation and maintenance manual for recommended lubricants and capacities.

CAUTION

Operating the engine with the oil level below the low mark or above the high mark could result in engine damage.

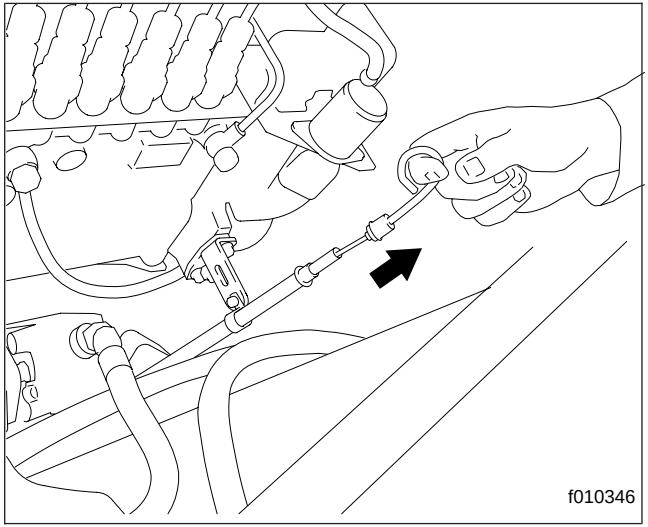

Fig. 9.1, Engine Oil Level Checking

14. *Check the oil level in the automatic transmission (if equipped).*

    NOTE: The fluid must be warm to ensure an accurate check. The fluid level rises as temperature increases.

    With the vehicle on a level surface, check the oil level in the transmission using one of the following procedures:

https://truckmanualshub.com/

Hot Check

- Operate the transmission in a drive range until normal operating temperature, 160 to 200°F (71 to 93°C), is reached.
- Park the vehicle. Shift to neutral (N) and apply the parking brake. Let the engine run at idle.
- Wipe the dipstick clean and check the fluid level. A safe operating level is any level within the HOT RUN (upper) band on the dipstick.
- If the fluid is not within this range, add or drain fluid as needed to bring the level to the top of the HOT RUN band. See **Group 26** of the *Cargo Maintenance Manual* for fluid types and capacities.

Cold Check

- A cold check may be made when the sump temperature is 60 to 104°F (15 to 40°C).
- Run the engine for at least one minute to clear the fluid system of air.
- With the engine running, wipe the dipstick clean and check the fluid level. Any level within the COLD RUN (lower) band is satisfactory for operating the vehicle. If the level is not within the COLD RUN band, add or drain fluid until it reaches the middle of the COLD RUN band.
- Perform a hot check at the first opportunity after normal operating temperature, 160 to 200°F (71 to 93°C), is reached.

15. *Check the fuel water separator, if equipped, for contaminants.*

    With the engine shut down, partially open the drain valve under the collection bowl and drain water and contaminants as needed.

16. *Lower the cab. Close the drain valves on the air brake system air tanks.*

17. *Inspect the fuel tank(s) and fuel line connection. If equipped, be sure the fuel tank shutoff valves are open.*

    Replace leaking fuel tanks. Repair or replace any lines or connections that are leaking. For procedures, see **Group 47**of the *Cargo Workshop Manual*.

    If equipped with fuel tank shutoff valves, be sure the valves are fully open.

⚠ WARNING

Never operate the engine with the fuel tank shutoff valves partly closed. This could damage the fuel

https://truckmanualshub.com

pump, causing sudden loss of engine power, possibly resulting in serious personal injury due to reduced vehicle control.

18. *Check the fuel level in the tank(s) and be sure the fuel cap vent area is clean. Check the fuel/water separator, if equipped, for leaks, and if needed, prime the fuel tank system.*

WARNING

Never fill fuel tanks to more than 95 percent of their liquid capacity. This could make them more likely to rupture from impact, possibly causing fire and resulting in serious personal injury or death by burning.

IMPORTANT: Use only low-sulfur diesel fuels. Low-sulfur diesel fuels have a maximum 0.05 percent sulfur content compared to a 0.26 to 0.30 percent sulfur content. Failure to use low-sulfur diesel fuels may void the warranty on emission components.

18.1 To keep condensation to a minimum, fill the fuel tanks at the end of each day, but not to more than 95 percent of liquid capacity. Select the proper grade of fuel as specified by the engine manufacturer.

WARNING

Do not mix gasoline or alcohol with diesel fuel. This mixture could cause an explosion. When filling fuel tanks, do not smoke or use an open flame near the fuel tanks. Combustion of diesel fuel oil or fuel vapors could result, possibly causing personal injury or property damage.

18.2 Always strain or filter fuel before filling it into the tanks. This will lengthen the life of the engine fuel filter and reduce the chances of dirt entering the engine.

18.3 Before installing the fuel cap, check the vent line for debris. Clean the area around the fuel tank cap with a rag, or if necessary, clean the cap with solvent.

CAUTION

Don’t crank the engine for more than 30 seconds at a time during any of the following procedures. Wait two minutes after each try to allow the starter to cool. Failure to do so could cause starter damage.

IMPORTANT: Before doing any of the following procedures, make sure there is an adequate amount of fuel in the tank(s). Do not fill the

https://truckmanualshub.com/

tank(s) to more than 95 percent of liquid capacity.

18.4 On vehicles equipped with a single tank, prime the fuel system, if needed. On vehicles with dual tanks, go to the next substep.

If the engine is equipped with a priming pump, do the following:

Unlock and operate the engine priming pump plunger until resistance is felt.

Push the plunger in and tighten it by hand.

Start the engine. If it does not start, more priming is needed. Once the engine has started, it may run rough. If this occurs, run the engine at low idle until it runs smoothly.

If the engine is not equipped with a priming pump, do the following:

Remove the fuel tank cap.

Loosen the fuel supply line at the fuel transfer pump.

Partially cover the fuel tank opening with your hand. Using an air hose, apply no more than 5 psi (35 kPa) air pressure to the fuel tank and look for a constant fuel flow at the loosened fuel supply line.

Remove the air hose and tighten the fuel supply line.

Start the engine. Once the engine has started, it may run rough. If this occurs, run the engine at low idle until it runs smoothly.

IMPORTANT: To prevent fuel loss or entry of air into a fuel line, make sure that all fuel line connections are tight.

18.5 On vehicles equipped with dual tanks and single suction and return lines (with crossover line), prime the fuel system if needed.

Use the same procedure provided in the previous substep for vehicles equipped with a single tank. Do the procedure on the tank equipped with the supply line.

19. *If equipped, check the transmission oil cooler for debris and for leaks.*

Remove debris and repair leaks as needed.

20. *If so equipped, inspect the fifth wheel and check it for adequate lubrication.*

WARNING

Check to be sure that the trailer is securely connected to the tractor. Failure to achieve complete

https://truckmanualshub.com

fifth wheel lockup may allow disengagement of the tractor from the trailer, possibly resulting in serious personal injury or death.

20.1 If the vehicle is a truck-trailer combination, be sure the trailer hitch is locked and the safety cable or chains are connected. Be sure air hoses and the light cable are connected.

WARNING

Check to be sure that the trailer hitch is securely connected to the truck. Failure to lock the trailer hitch and to connect safety cables or chains may allow disengagement of the truck from the trailer, possibly resulting in serious personal injury or death.

20.2 If the vehicle is a tractor-trailer combination, check that the fifth wheel lock mechanism is locked to the trailer kingpin. Refer to **Chapter 11** for instructions.

WARNING

Repair or replace any damaged fifth wheels, slides, or mountings. The use of damaged fifth wheel parts may cause the trailer to detach from the tractor, possibly resulting in serious personal injury or death.

NOTE: For adjustment and replacement instructions, refer to **Group 31** of the *Cargo Workshop Manual*.

20.3 With the trailer unhooked from the tractor, inspect the fifth wheel (daily) for the following conditions:

- Loose nuts or broken bolts on the fifth wheel assembly, slide mechanism, and mounting brackets. Replace broken bolts, and tighten loose nuts.
- Cracks or wear on the fifth wheel assembly, slide mechanism, and mounting brackets. Replace each damaged or worn component.
- Incorrect jaw locking action, and cracks or wear on the jaw locking mechanism. Replace the mechanism if cracked or worn. Repair it if the jaw locking action is incorrect.
- Gouges or wear on the fifth wheel plate. Replace the plate if damaged or worn.

https://truckmanualshub.com/

- Fatigue or cracking of welds, which must be repaired according to the manufacturer's specifications.

WARNING

Keep the fifth wheel plate lubricated to prevent binding between the tractor and trailer. A binding fifth wheel could cause erratic steering and loss of vehicle control, possibly resulting in serious personal injury or death.

20.4 Lubricate the fifth wheel top plate and other grease points at least once a week and more often in severe service.

Before connecting the fifth wheel to the trailer kingpin, always be sure that the fifth wheel plate is completely lubricated with chassis grease.

20.5 Clean all foreign material from the fifth wheel top plate. Lubricate the top plate surface, pickup ramps, and mounting bracket pivot pins using a waterproof or multipurpose chassis lubricant. Lubricate the jam mechanism on all units except the Fontaine® 5000 series fifth wheel. (Fontaine recommends that jaws and wedges remain dry to avoid accumulation of abrasive matter.)

21. If so equipped, inspect the 7-way trailer cable receptacle(s) for good connections.

Clean and grease the 7-way socket and plug regularly, especially in regions where magnesium chloride or calcium chloride are used as road de-icers. These chemicals are highly corrosive to brass and copper, the base materials for the contact pins used in the 7-way receptacles. Clean the socket and plug with a plug brush and apply a moderate amount of dielectric grease to both the socket and plug pins. See **Group 54** of the *Cargo Maintenance Manual* for an approved dielectric grease.

22. *Inspect the front and rear suspension components, including the springs, shocks, and suspension brackets.*

Check for broken spring leaves, loose U-bolts, cracks in the suspension brackets, and loose fasteners in the spring hangers and shackles. Inspect the shock absorbers for loose fasteners and leaks.

Tighten all loose fasteners and replace any component that is worn, cracked, or otherwise damaged.

WARNING

Do not replace individual leaves of a damaged front or rear suspension leaf spring assembly; replace the complete spring assembly. Visible damage,

https://truckmanualshub.com

such as cracks or breaks, to one leaf causes hidden damage to other leaves. Replacement of only the visibly damaged part(s) is no assurance that the spring is safe. If cracks or breaks exist on front spring assemblies in either of the two top leaves, a loss of vehicle control could occur. Failure to replace a damaged spring assembly could cause an accident resulting in serious personal injury or property damage.

23. *Clean the headlights, rearview mirrors, and the outside of the windshield and all window glass. Check the condition of the windshield wiper arms and blades.*

    Be sure the windshield wiper blades are tensioned against the windshield. Inspect the wiper blades for damage and deteriorated rubber. Replace the wiper arms if the wiper blades are not tensioned against the windshield. Replace damaged or deteriorated wiper blades.

WARNING

Replace wiper arms and blades when necessary to maintain good visibility. Poor visibility could interfere with the driver's ability to control the vehicle, possibly resulting in serious personal injury or death.

24. *Clean the inside of the windshield, the gauges on the dash, and all window glass.*

25. *Check the steering wheel for excessive play.*

    With the front tires straight ahead, turn the steering wheel until motion is observed at the front wheels. Align a reference mark on a ruler, then slowly turn the steering wheel in the opposite direction until motion is again detected at the wheels. Measure the lash (free play) at the rim of the steering wheel. See **Fig. 9.2**.

    Excessive lash exists if steering wheel movement exceeds 4-3/4 inches (121 mm) with a 20-inch (470-mm) steering wheel. If there is excessive lash, check the steering system for wear or incorrect adjustment of the linkage and steering gear before operating the vehicle.

26. *Adjust the driver's seat, then align the rearview mirrors.*

27. *Inspect the seat belts and tether belts if so equipped. See* **Fig. 9.3**.

WARNING

Inspect and maintain seat belts as instructed below. Worn or damaged seat belts could fail during a sudden stop or crash, possibly resulting in serious injury or death.

https://truckmanualsnet.com/

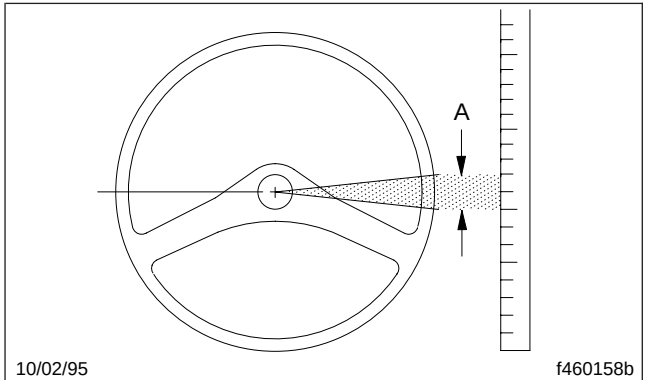

A. Lash Area

Fig. 9.2, Measuring Lash at the Steering Wheel

NOTE: When any part of a seat belt system needs replacement, the entire seat belt must be replaced, both retractor and buckle side.

27.1 Check the web for fraying, cuts, or extreme wear, especially near the buckle latch plate and the D-loop guide area.

27.2 Check the web for extreme dirt or dust and for severe fading from exposure to sunlight.

27.3 Check the buckle and latch for operation and for wear or damage.

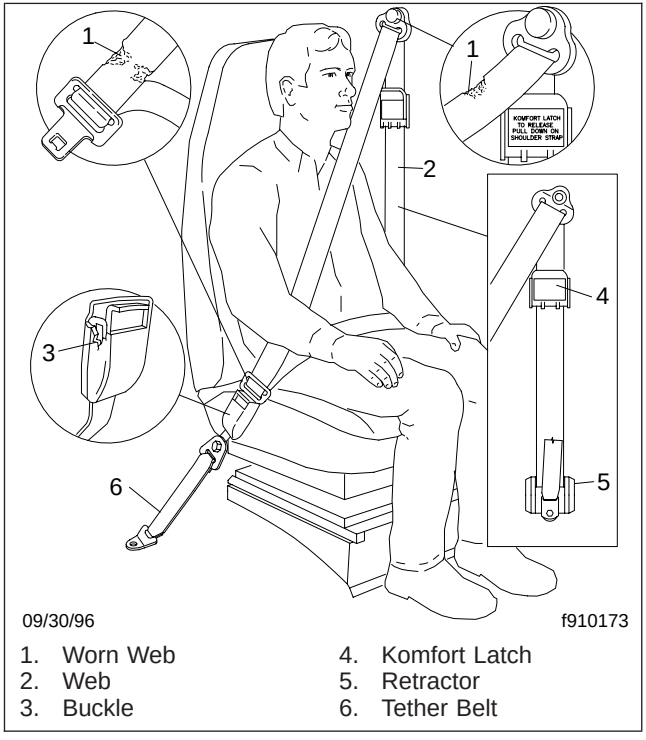

1. Worn Web
2. Web
3. Buckle
4. Komfort Latch
5. Retractor
6. Tether Belt

Fig. 9.3, Seat Belt Inspecting (typical seat)

27.4 Check the Komfort Latch for function and cracks or other damage.

https://truckmanualshub.com

27.5 Check the web retractor for function and damage.

27.6 Check the mounting bolts for tightness and tighten any that are loose.

28. *Check the cab interior for loose items and secure or remove them.*

29. *Start the engine and make sure the oil-pressure and air-pressure warning systems are working.*

When the engine is started, oil-pressure and air-pressure warnings will come on until the oil pressure rises above a preset minimum and the air pressure in both the primary and secondary air reservoir systems goes above 64 to 76 psi (441 to 524 kPa). If the air pressure in both systems is above 64 to 76 psi (441 to 524 kPa) when the engine is started, test the low pressure warning system by lowering the pressure to below this range or until the warning system comes on.

If the warning systems do not come on when the ignition is turned on, repair the systems.

WARNING

Failure to repair the engine shutdown/warning system could result in the engine shutting down suddenly, without warning, during vehicle operation. This could cause an accident leading to property damage, serious personal injury, or death.

30. *Make sure that both the electric horn and the air horn work. Then check the wiper and washer control. During cold weather, check the operation of the heater and defroster controls.*

These devices must be in good working order for safe vehicle operation. If they are not working, repair them before trip departure.

31. *Check the operation of the backup alarm if so equipped.*

32. *Check the operation of all gauge lights and interior lights.*

Turn on the headlights, dash lights, and four-way flashers and leave them on. Check the operation of the dome light.

If any of the gauge bulbs, the switch panel label bulb, the dome light bulb, or the right- and left-turn indicator bulbs are not working, replace them.

33. *Make sure all of the lights are working.*

Be sure the brake lights, taillights, side marker lights, headlights, signal lights, and clearance and identification lights are working and are clean. Test the high and low beams of the headlights.

https://truckmanualshub.com/

Replace light bulbs or sealed beam units that are not working.

Be sure all reflectors and lenses on the vehicle are in good condition and are clean. Replace any broken reflectors or lenses. Turn the lights off.

34. *Check the outer surfaces of the cab for visible surface breaks and damage.*

35. *Inspect the air brake components including the brake chamber pushrods, air reservoirs, and air lines.*

Look for worn pins on brake chamber pushrods and missing or damaged cotter pins on the brake chamber pushrod pins. Replace worn pins and install new cotter pins if necessary.

Check for rusted connections, missing snap rings, and damaged camshaft grease seals. Repair or replace damaged or missing parts. Check the air reservoir band fasteners. Make sure the outside surfaces of the reservoirs are painted to prevent corrosion damage. Inspect the reservoir surfaces for damage, such as cracks and dents. Replace corroded or damaged reservoirs with new ones. Do not repair damaged reservoirs. Old or used reservoirs are not acceptable as replacements. If a reservoir requires replacement, see **Group 42** of the *Cargo Workshop Manual* for instructions.

Inspect the air lines, as follows:

35.1 Check the clearance between the hoses, exhaust manifold, and turbocharger, or other hot spots. Excessive heat will cause the material in the hoses to deteriorate rapidly or become brittle. Provide at least six inches (150 mm) of clearance. More clearance is recommended, especially if the hose is located above the heat source.

35.2 Check for kinks, dents, or swelling of the hoses. If a hose is damaged, replace it with the same size and type.

35.3 Do not route the hose on top of anything likely to be stepped on or walked on.

35.4 Check for damage to hoses located near moving parts, such as drivelines, trailer bodies, kingpins, suspensions, and axles. If the moving parts are catching or pinching the lines, correct as needed.

35.5 Check for hose damage caused by abrasion. If a hose is abraded, replace it. Check for the cause of abrasion, such as loose or damaged hose clamps. Repair or replace the clamps as needed.

https://truckmanuals101.com/

35.6 Observe the hose cover condition, especially hoses exposed to water splash and ice. If any hose is dried out or ragged (the wire or liner is showing through the cover), replace the hose.

35.7 Inspect the front air brake lines for leaks at the fitting where they enter the air chamber.

With an assistant at the front wheels to inspect the brake lines, turn the wheels to full lock in one direction and hold the service brake pedal down. Inspect the front brake air lines closely near where they enter the air chambers.

Turn the wheels to full lock in the other direction, hold the service brake pedal down, and repeat the inspection.

If there is a leak, the hose should be replaced. See **Group 42** of the *Cargo Workshop Manual* for the hose replacement procedure.

35.8 Inspect air tubing, especially tubing made of nylon. In cold weather, nylon tubing is sensitive to damage, such as nicks or cuts. Replace nicked or cut tubing, even if it is not leaking.

35.9 Check the bend radii of all hoses. See **Fig. 9.4**. The minimum bend radius of a hose is that bend which the hose will withstand without experiencing damaging stresses or kinking. For minimum bend radius values, see **Group 42** of the *Cargo Workshop Manual*.

When a rubber hose does not meet minimum bend radius requirements, the outside may appear smooth even if the inner tube is kinked. Reroute the hose or replace it with one of adequate length if the bend radius is not within minimum specifications.

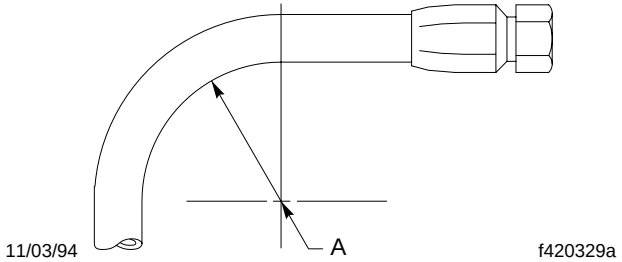

NOTE: Center of the hose bend radius should be well away from the fitting.

A. Bend Radius

Fig. 9.4, Bend Radius

https://truckmanualsnet.com/

35.10 Check straight hose installations (those hoses that do not bend along their routings). Pressure changes can cause a hose to lengthen up to two percent, or shorten up to four percent. A 100-inch (2540-mm) length of hose, for example, can contract to 96 inches (2440 mm). If the hose has no slack when it is exhausted of air, replace it with one of adequate length to avoid a possible blow-off from the fitting during vehicle operation.

35.11 Check for kinked or twisted hoses. A seven-percent twist in the hose can reduce its life by up to 90 percent. Also, a twisted hose under pressure tends to untwist. This could cause it to loosen the fitting. Reconnect hoses that are twisted.

36. *Make sure the brakes are adjusted on all axles.*

Adjust the brakes if necessary. See **Group 42** of the *Cargo Maintenance Manual* for checking and adjusting procedures.

IMPORTANT: Brake checking and adjusting is necessary for all vehicles, including trucks equipped with automatic slack adjusters.

WARNING

Do not operate the vehicle with underinflated or overinflated tires. Incorrect inflation can stress the tires and make the tires and rims more susceptible to damage, possibly leading to rim or tire failure and loss of vehicle control, resulting in serious personal injury or death.

37. *Check the tire inflation pressures, and inspect each tire for bulges, cracks, cuts, and penetrations.*

IMPORTANT: The load and cold inflation pressure must not exceed the rim or wheel manufacturer's recommendations, even though the tire may be approved for a higher load or inflation. Some rims and wheels are stamped with a maximum load and maximum cold inflation rating. If they are not stamped, consult the rim or wheel manufacturer for the correct tire inflation pressure for the vehicle load. If the load exceeds the maximum rim or wheel capacity, the load must be adjusted or reduced.

37.1 Check the inflation pressures of the tires before each trip using an accurate tire pressure gauge (**Fig. 9.5**). Tires should be checked when cool. Be sure the valve stem

https://truckmanualshub.com

caps are on every tire and that they are screwed on finger-tight. Inflate the tires to the applicable pressures, if needed.

Overinflation gives the treaded surface of the tire a convex shape (**Fig. 9.6**). This causes extreme tire wear in the middle part of the tire since this section is primarily in contact with the road.

Underinflation gives the tread surface a concave shape (**Fig. 9.6**). This causes excessive tire wear on the outer edges of the tire since they are primarily in contact with the road.

37.2 If a tire has been run flat or underinflated, check the wheel for proper lockring and side ring seating, and possible wheel, rim, or tire damage before adding air.

37.3 Moisture inside a tire can result in body ply separation or a sidewall rupture. During tire inflation, compressed air reservoirs and lines must be kept dry. Use well-maintained inline moisture traps and service them regularly.

37.4 Inspect the tires for bulges, cracks, cuts, or penetrations. A tire pressure check will assist in uncovering hidden damage. A weekly

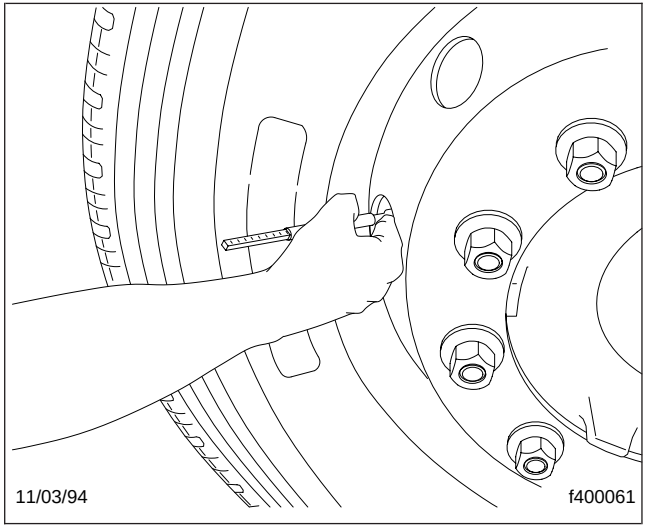

Fig. 9.5, Check Tire Pressure

pressure loss of 4 psi (28 kPa) or more in a tire may indicate damage and the tire should be inspected and repaired or replaced.

37.5 Tires should also be inspected for oil contamination. Fuel oil, gasoline, and other petroleum derivatives, if allowed to contact the tires, will soften the rubber and destroy the tire.

https://truckmanualsnet.com/

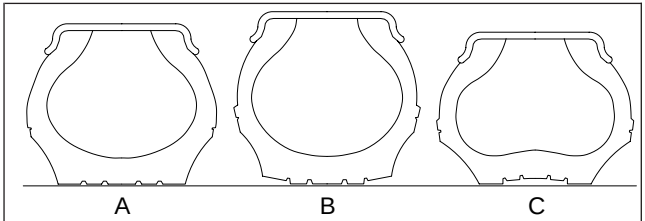

A. Tire correctly inflated.
B. Tire overinflated.
C. Tire underinflated.

Fig. 9.6, Tire Inflation

38. *Check for indications of loose wheel nuts or rim nuts and examine each wheel component.*

    Check the wheel nuts or rim nuts for indications of looseness. Remove all dirt and foreign material from the assembly. Dirt or rust streaks from the stud holes, metal buildup around stud holes or out-of-round or worn stud holes may be caused by loose wheel nuts. See **Group 40** of the *Cargo Maintenance Manual* for torque specifications and the correct tightening sequence.

    Examine the wheel assembly components (including rims, rings, flanges, studs, and nuts) for cracks or other damage.

    See **Group 33** and **Group 35** of the *Cargo Workshop Manual* for service procedures on the studs and hubs and see **Group 40** of the same manual for wheel and tire servicing. Replace broken, cracked, badly worn, bent, rusty, or sprung rings and rims. Be sure that the rim base, lockring, and side ring are matched according to size and type.

WARNING

Have any worn or damaged wheel components replaced by a qualified person using the wheel manufacturer's instructions and the wheel industry's standard safety precautions and equipment. Otherwise a vehicle or workshop accident could occur, possibly resulting in serious personal injury or death.

CAUTION

Insufficient wheel nut (rim nut) torque can cause wheel shimmy, resulting in wheel damage, stud breakage, and extreme tire tread wear. Excessive wheel nut torque can break studs, damage threads, and crack discs in the stud hole area. Use the recommended torque values and follow the proper tightening sequence.

39. *Check components of the air brake system for correct operation as follows:*

https://truckmanualshub.com

39.1 Release the parking brakes on the vehicle by pushing in the parking brake control valve knob. See **Fig. 9.7**. Check the air governor cut-in and cut-out pressures. Run the engine at fast idle. The air governor should cut out the air compressor at approximately 125 psi (862 kPa). With the engine idling, make a series of foot valve applications. The air governor should cut in the air compressor at approximately 95 psi (655 kPa). If the air governor does not cut in and out as described above, it must be adjusted to these specifications. If the air governor cannot be adjusted or repaired, replace it before operating the vehicle.

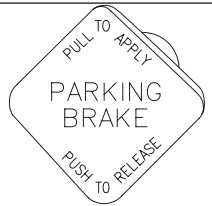

Fig. 9.7, Parking Brake Valve Knob

39.2 Check the air pressure buildup time as follows:

Release the parking brakes on the vehicle by pushing in the parking brake control valve knob. With the air system fully charged to 125 psi (862 kPa), make one full brake application and note the air pressure reading on the gauge. Continue to reduce the air pressure by moderate brake applications to a maximum of 90 psi (620 kPa), then run the engine at governed rpm. If the time required to raise the air pressure to 125 psi (862 kPa) (from the pressure noted after one brake application) is more than 30 seconds, eliminate any leaks, or replace the air compressor before operating the vehicle.

39.3 Check the air pressure reserve. With the air system fully charged to 125 psi (862 kPa), stop the engine and note the air pressure. Then make one full brake application and observe the pressure drop. If it drops more than 25 psi (172 kPa), all areas of leakage must be eliminated before operating the vehicle.

39.4 Check the air leakage in the system.

With the parking brakes applied, the transmission out of gear, and the tires chocked, charge the air system until cutoff pressure of 125 psi (862 kPa) is reached.

https://truckmanualshub.com/

With the service brakes released, shut down the engine, wait one minute and note the air pressure gauge reading. Observe the air pressure drop in psi (kPa) per minute.

Charge the air system until cutoff pressure of 125 psi (862 kPa) is reached. With the parking brakes released and the service brake applied, shut down the engine, wait one minute and note the air pressure gauge reading. Observe the air pressure drop in psi (kPa) per minute.

If leakage exceeds the limits shown in **Table 9.1**, repair all areas of leakage before driving the vehicle.

WARNING

Before operating the vehicle, be sure the spring parking brakes on the vehicle pass the above tests. Otherwise an unexpected parking brake application could occur, causing some loss of vehicle control and possibly resulting in serious personal injury.

40. *Test the service brakes before leaving the lot.*

When starting to move the vehicle and before picking up speed, test the brakes with the foot valve and parking brake valve to be sure they will bring the vehicle to a safe stop.

Maximum Allowable Service Brakes Air Leakage		
Description	**Air Leakage in psi (kPa) Per Minute**	
	Released	**Applied**
Truck or Tractor Only	2 (14)	3 (21)
Truck or Tractor w/Single Trailer	3 (21)	4 (28)
Truck or Tractor w/Two Trailers	5 (35)	6 (42)

Table 9.1, Maximum Allowable Service Brakes Air Leakage

41. *Test the parking brakes on a 20 percent grade.*

Pull the parking brake control valve knob or apply the hand brake with the vehicle on a 20 percent grade. If the parking brakes do not hold the vehicle, repair the parking brake system.

https://truckmanualshub.com/

10

In an Emergency

Hazard Warning Lights 10.1
Towing 10.1
Emergency Starting With Jumper Cables 10.3
Fire in the Cab 10.4

https://truckmanualshub.com/

Hazard Warning Lights

The hazard warning light switch (**Fig. 10.1**) is located in the left switch bank on the instrument panel. Hazard warning lights are operated by pushing the bottom of the switch. When the hazard warning light switch is on, all of the turn signal lights and both of the indicator lights on the control panel will flash. To cancel the warning lights, push the top of the switch.

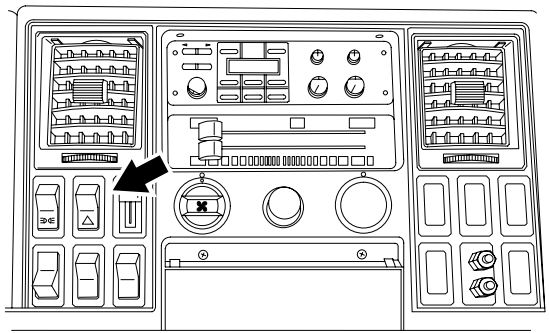

Fig. 10.1, Hazard Warning Light Switch

Towing

WARNING

Do not tow an unbraked vehicle if the combined weight of both vehicles is more than the sum of the gross axle weight ratings (GAWR) of the towing vehicle. Otherwise brake capacity will be inadequate, which could result in personal injury or death.

IMPORTANT: When it is necessary to tow the vehicle, make sure the instructions below are closely followed to prevent damage to the vehicle.

Front Towing Hookup

1. Disconnect the battery ground cable.
2. If the vehicle is to be lifted and towed, remove the drive axle shafts.

CAUTION

Failure to remove the axle shafts when towing the vehicle with the rear wheels on the ground could result in damage to the transmission and other parts.

3. Cover the ends of the hubs with metal plates or plywood cut to fit the axle opening, and drilled to fit

the axle shaft studs. This prevents lubricant from leaking out, and will keep contaminants from getting into the axle lubricant and damaging the wheel bearings.

4. Remove the bumper extension and chrome bumper, if installed.
5. Attach the towing device. Due to the many variables that exist in towing, positioning the lifting and towing device is the sole responsibility of the towing-vehicle operator, who must be familiar with standard towing industry safety measures.
6. Lift the vehicle, and secure the safety towing chains. If additional clearance is needed, remove the front wheels.
7. Connect the clearance lights, taillights, and signal lights. Connect any special towing lights required by local regulations.
8. If equipped with air brakes, connect the towing vehicle's air brake system to the vehicle being towed.

WARNING

Before releasing the parking brakes, make the connection to the towing vehicle or chock the tires on the disabled vehicle. Failure to do so could result in hazardous conditions because the vehicle could suddenly roll and injury could occur.

9. Release the parking brakes.

Rear Towing Hookup

CAUTION

Using a rear towing hookup on a vehicle equipped with a roof fairing could cause damage to the cab structure.

IMPORTANT: Because of the possibility of excessive wind force which could cause damage to the cab, do not use a rear towing hookup on any vehicle equipped with a roof fairing.

1. Place the front tires straight forward, and secure the steering wheel in this position.
2. Disconnect the battery ground cable.
3. Attach the towing device. Due to the many variables that exist in towing, positioning the lifting and towing device is the sole responsibility of the towing-vehicle operator, who must be familiar with standard towing industry safety measures.
4. Lift the vehicle, and secure the safety towing chains. If additional clearance is needed, remove the bumper extension, if equipped.

5. Connect the clearance lights, taillights, and signal lights. Also connect any special towing lights required by local regulations.

Emergency Starting With Jumper Cables

When using jumper cables, follow the instructions below.

WARNING

Batteries release explosive gas. Do not smoke when working around batteries. Put out all flames and remove all sources of sparks or intense heat in the vicinity of the battery. Do not allow the vehicles to touch each other. Do not lean over the batteries when making connections, and keep all other persons away from the batteries. Failure to follow these precautions could lead to severe personal injury as a result of an explosion or acid burns.

CAUTION

Make sure both starting systems have the same voltage outputs, and avoid making sparks. Otherwise the vehicle charging systems could be severely damaged. Also, do not attempt to charge isolated, deep-cycle batteries with jumper cables. Follow the manufacturer's instructions when charging deep-cycle batteries.

NOTE: On vehicles equipped with an optional jump-start post, attach the positive cable clamp to that post instead of to the battery.

1. Apply the parking brakes and turn off the lights and all other electrical loads.
2. Connect an end of one jumper cable to the positive terminal of the booster battery, or jump-start post if equipped, and connect the other end of the cable to the positive terminal of the discharged battery, or jump-start post if equipped. See **Fig. 10.2**.

WARNING

Do the next step exactly as instructed and do not allow the clamps of one cable to touch the clamps of the other cable. Otherwise, a spark could occur near a battery, possibly resulting in severe personal injury from explosion and acid burns.

3. Connect one end of the second jumper cable to the negative terminal of the booster battery, and connect the other end of the cable to a ground at least 12 inches (300 mm) away from the batteries of the

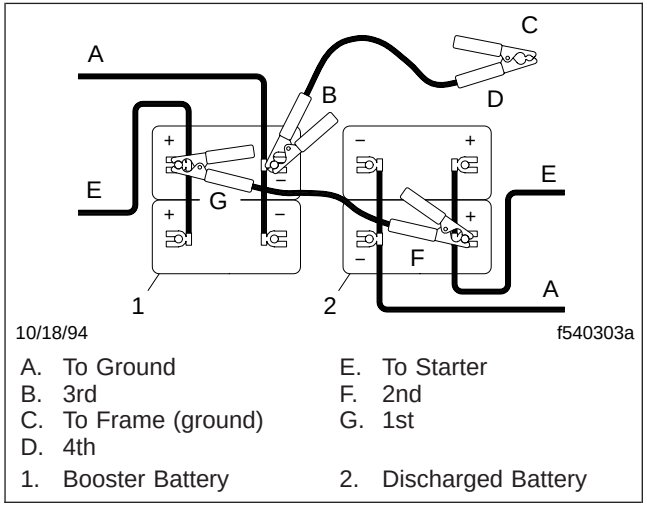

Fig. 10.2, Jumper Connections

vehicle needing the start. The vehicle frame is usually a good ground. Do *not* connect the cable to or near the discharged batteries.

4. Start the engine of the vehicle with the booster batteries, and let the engine run a few minutes to charge the batteries of the other vehicle.

5. Attempt to start the engine of the vehicle with the batteries receiving the charge. Do not operate the starter longer than 30 seconds, and wait at least two minutes between starting attempts to allow the starter to cool.

6. When the engine starts, let it idle a few minutes.

⚠ WARNING

Do the next step exactly as instructed and do not allow the clamps of one cable to touch the clamps of the other cable. Otherwise, a spark could occur near a battery, possibly resulting in severe personal injury from explosion and acid burns.

7. Disconnect the grounded cable from the frame or other nonbattery location. Then, disconnect the other end of the cable.

8. Disconnect the remaining cable from the newly charged battery, or jump-start post if equipped, first. Then, disconnect the other end.

Fire in the Cab

⚠ WARNING

Urethane foam is flammable! Do not allow any flames, sparks, or other heat sources such as cigarettes or light bulbs to contact urethane foam. Urethane foam in contact with such heat sources could cause a serious, rapid fire, which could result in

https://truckmanualshub.com/

death, severe burns, or gas poisoning, as well as damage to the vehicle.

The incidence of fire in heavy- and medium-duty trucks is rare, according to data from the National Highway Traffic Safety Administration. Federal Motor Vehicle Safety Standard #302 limits the flammability of specified materials used inside the cab, but despite this, most materials will burn. The cab of this vehicle contains urethane foam, which is of concern in this respect.

In Case of a Cab Fire

As quickly as possible, bring the vehicle to a safe stop, apply the parking brake, turn off the ignition, and get out of the vehicle.

https://truckmanualshub.com/

11

Fifth Wheels

Holland Fifth Wheels 11.1
Fontaine® Fifth Wheels 11.6

https://truckmanualshub.com/

Holland Fifth Wheels

General Information

Holland fifth wheels (**Fig. 11.1**) are bracket-mounted to the tractor frame in a position that best distributes the trailer load over the tractor axles.

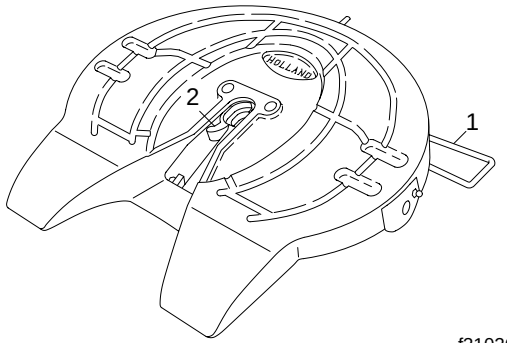

10/31/94 f310266a

1. Kingpin Lock Release Handle
2. Kingpin Lock Mechanism

Fig. 11.1, Holland Fifth Wheel

The Type "B" kingpin lock mechanism (**Fig. 11.2**) utilizes two spring-loaded lock halves. The final forward motion of the kingpin into the open lock halves forces the locks to close in a 360 degree grip around the shoulder and neck of the kingpin, positioning sliding yokes between the lock halves and tapered rib members of the fifth wheel understructure. The kingpin can be released only by manually operating the kingpin lock control handle. The adjustment nut will compensate for wear on the lock or kingpin.

The Holland Lockguard (**Fig. 11.3**) is a device that prevents a false lockup, and is used with Type "B" kingpin lock mechanisms. The Lockguard is a spring-tensioned, smooth-surfaced tongue that the kingpin passes over and depresses when entering the lock mechanism. The Lockguard will prevent the locks from engaging before the kingpin fully enters the locks. If the kingpin enters the fifth wheel incorrectly and does not depress the tongue, the locks are unable to close.

The Type "A" kingpin lock mechanism (**Fig. 11.4**) utilizes a single hinged lock and cam arm. The final forward motion of the kingpin into the open lock forces the hinged lock to pivot on a pin and close around the kingpin. The lock is held in place by a spring loaded plunger. The kingpin can be released only by manually operating the release handle. The adjustment nut will compensate for wear on the lock or kingpin.

Fifth Wheel Locking Operation

Locking the Fifth Wheel Mechanism

1. Chock the front and rear of the trailer tires to prevent the trailer from moving.

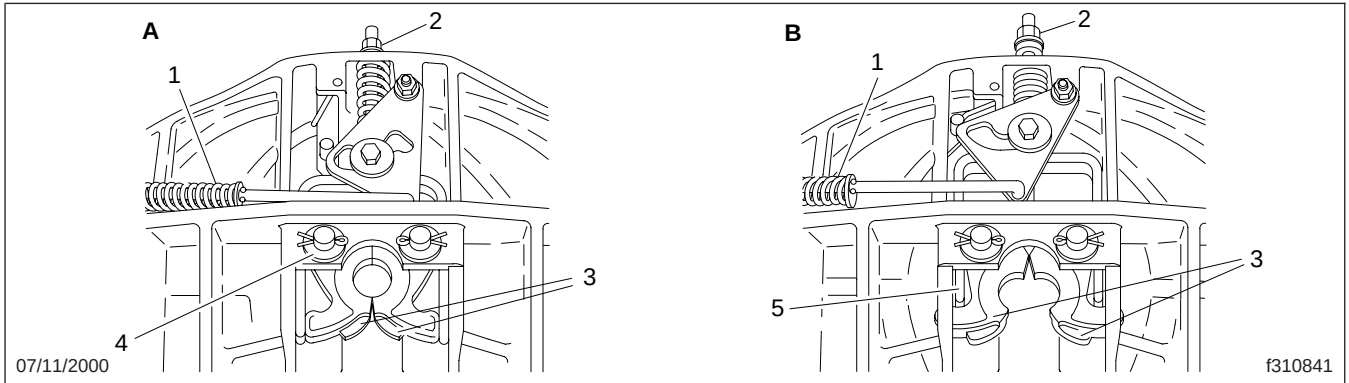

A. Closed Position, Locked
1. Release Handle and Spring
2. Adjustment Nut
3. Lock Halves
4. Lock Pivot

B. Open Position, Unlocked
5. Sliding Yoke

Fig. 11.2, Type B Kingpin Lock Mechanism (bottom view)

2. The kingpin lock mechanism must be fully open, and the fifth wheel plate must be completely lubricated with chassis grease. For lubrication instructions, refer to **Group 31** of the *Cargo Maintenance Manual*.

⚠ WARNING

Keep the fifth wheel plate lubricated to prevent binding between the tractor and trailer. A binding fifth wheel could cause erratic steering and loss of vehicle control, possibly resulting in serious personal injury or death.

3. Position the tractor so that the fifth wheel lock opening is in line (both vertically and horizontally) with the trailer kingpin. To prevent a false lockup, the kingpin should be in a position to enter the

throat of the locking mechanism. See **Fig. 11.3**. Adjust the trailer landing gear to give enough alignment height so that the fifth wheel picks up the trailer on the fifth wheel ramps.

4. With the fifth wheel lock opening aligned with the trailer kingpin, back the tractor slowly toward the trailer, making sure that the kingpin correctly enters the throat of the locking mechanism. When the trailer is picked up by the fifth wheel, stop the tractor, then resume a slow backward motion until positive lockup occurs.

5. Apply the tractor parking brakes.

6. Make a visual check for proper kingpin lockup. Release the tractor parking brakes.

   Test for kingpin lockup by pulling on the trailer against the chocks. Check for correct maximum clearance between the lock halves. If more than 1/8-inch (3.2-mm) clearance exists between the lock halves, the lock must be adjusted. Refer to **Group 31** of the *Cargo Workshop Manual* for adjustment procedures.

⚠ WARNING

Adjust the locks correctly to a maximum clearance of 1/8 inch (3 mm). Incorrect adjustment of the lock could cause the trailer to disconnect, possibly resulting in serious personal injury or death.

7. After lockup is completed, connect the tractor-to-trailer air system lines and electrical cable to the trailer. Take care to prevent dirt or foreign material from entering the air lines.

8. Charge the air brake system with air. Make sure that the air connections do not leak.

9. Retract the trailer landing gear and secure the ratchet handle.

10. Remove the chocks from the trailer tires.

11. The load distribution on the front steering axle and rear drive axle(s) will have a direct effect on the steering control of the vehicle.

    Determine the front and rear axle weights by weighing the vehicle on scales designed for this purpose.

    The maximum axle weight ratings are shown on the Federal Motor Vehicle Safety Standard (FMVSS) label or Canadian Motor Vehicle Safety Standard (CMVSS) label attached to the left rear door post of the tractor. The desired load on the axle is no less than 80 percent of the maximum axle weight rating, but in no instances should the axle load exceed the maximum axle weight rating given on the FMVSS or CMVSS label.

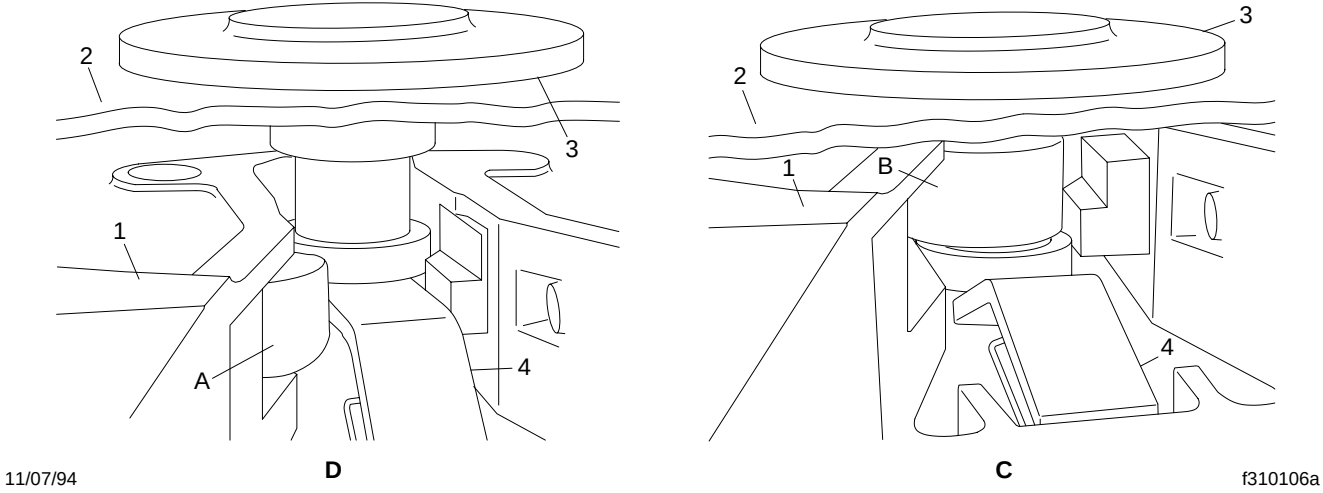

A. Locks open.
B. Locks closed.
C. Kingpin correctly entering the lock. Note how the depressed tongue allows lock halves to close completely around the neck and shoulder of the kingpin.
D. Kingpin incorrectly entering the lock. Note how the steel tongue prevents lock halves from closing, preventing false lockup.

1. Fifth Wheel Plate
2. Trailer
3. Kingpin
4. Lockguard

Fig. 11.3, Lockguard Mechanism (rear view)

https://truckmanualshub.com/

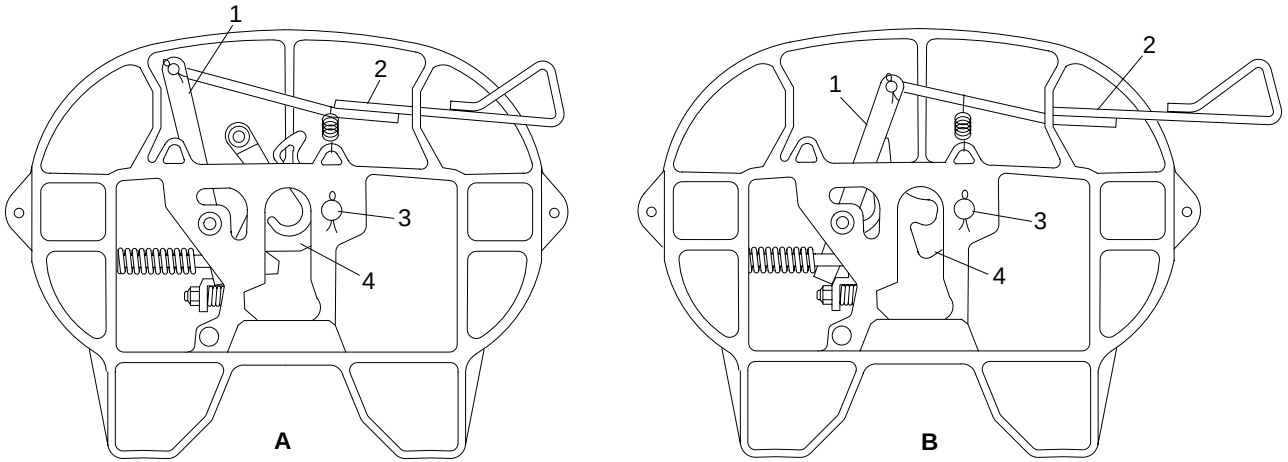

07/26/96 f310532

A. Closed Position, Locked
1. Release Arm
2. Release Handle

B. Open Position, Unlocked
3. Lock Pin
4. Hinged Lock

Fig. 11.4, Type "A" Kingpin Lock Mechanism

WARNING

Do not overload any tractor axle by improperly loading the trailer. This could cause erratic steering and loss of vehicle control, possibly resulting in serious personal injury or death.

Unlocking the Fifth Wheel Lock Mechanism

1. Apply the tractor parking brakes.

2. Pull the trailer air supply valve to cut off the air supply to the trailer.
3. Chock the front and rear of the trailer tires to prevent the trailer from moving.

WARNING

Do not use the trailer service brakes for parking; they are not designed for this purpose. If air bleeds out of the trailer air tank during parking, the vehicle could roll causing serious personal injury or property damage.

4. Lower the trailer landing gear until the weight is removed from the fifth wheel.
5. Disconnect the tractor-to-trailer air system lines and electrical cable. Plug the air lines to prevent dirt or foreign material from entering the lines.
6. Release the kingpin locking mechanism by pulling the kingpin lock control handle (**Fig. 11.1**) to the outward position.
7. Slowly drive the tractor away from the trailer.

Fontaine® Fifth Wheels

General Information

On Fontaine fifth wheels, kingpin release is accomplished by activating a manual lock control handle located on the left side (roadside) of the fifth wheel. Kingpin lockup occurs when the kingpin is forced into the jaws and the lock control handle moves to the locked position.

The fifth wheel top plate is bracket-mounted to the tractor frame in a position that best distributes the trailer load over the tractor axles.

Fifth Wheel Lock Mechanism for Trailer Kingpin

The Fontaine fifth wheel lock mechanism for the trailer kingpin consists of a spring-loaded jaw and a sliding wedge. See **Fig. 11.5**. The jaw and wedge each have a pin permanently attached. The pin on the jaw and the pin on the wedge fit into elongated notches in the lock control handle. The notches in the handle control the limit of movement for both the jaw and wedge. The notches are arranged so that the wedge is actuated first during release of the kingpin.

During lockup, the jaw is moved first with the spring-loaded wedge being allowed to slip into place against

the jaw. A timing bracket ensures that the wedge and jaw are moved at the correct time.

Placing the lock control handle in the unlocked position moves the wedge away from the jaw. This action unlocks the jaw so that it can be moved by the trailer kingpin. When the tractor is moved out from under the trailer, the kingpin moves the jaw until the kingpin is out of the mechanism. With the jaw in the unlocked position, the lock control handle will remain in the unlocked position until manually moved by the operator.

During coupling (**Fig. 11.5**), the motion of the kingpin entering the jaw will actuate the jaw and wedge. The jaw will move behind the kingpin, followed by the wedge. The purpose of the wedge is to reinforce the jaw and take up slack around the pin. Any wear on the jaw is immediately taken up by the wedge so there is no slack in the connection.

Fifth Wheel Locking Operation

Locking the Fifth Wheel Lock Mechanism

1. Chock the front and rear of the trailer tires to prevent the trailer from moving.
2. The kingpin lock mechanism must be fully open, the fifth wheel plate must be completely lubricated with chassis grease. For lubrication instructions, refer to **Group 31** of the *Cargo Maintenance Manual*.

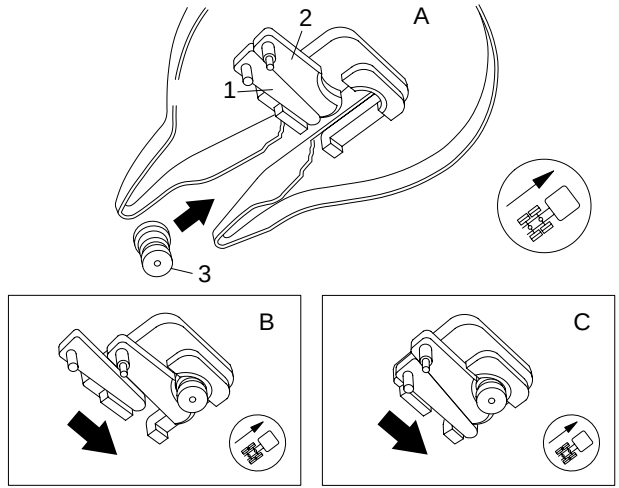

01/04/95 f310184c

NOTE: Kingpin correctly entering the lock. Note how the steel tongue allows lock halves to close completely around the neck and shoulder of the kingpin.

A. Unlocked Position
B. Locking
C. Locked

1. Wedge
2. Jaw
3. Trailer Kingpin

Fig. 11.5, Fontaine Kingpin Lock Mechanism

⚠ WARNING

Keep the fifth wheel plate lubricated to prevent binding between the tractor and trailer. A binding fifth wheel could cause erratic steering and loss of vehicle control, possibly resulting in serious personal injury or death.

3. Position the tractor so that the fifth wheel lock opening is in line (both vertically and horizontally) with the trailer kingpin. The kingpin should be in a position to enter the throat of the locking mechanism, as shown in **Fig. 11.5**. Adjust the trailer landing gear to give enough alignment height for positive kingpin lockup.
4. With the fifth wheel lock opening aligned with the trailer kingpin, back the tractor slowly toward the trailer, making sure that the kingpin enters the throat of the locking mechanism. Continue the backward motion until positive lockup occurs.
5. Apply the tractor parking brakes.
6. Make a visual and physical check for positive kingpin lockup. When lockup has occurred, the fifth wheel control handle will have moved to the locked position. Make sure that the safety latch is down over the lock control handle. See **Fig. 11.6**. This will hold the control handle in the locked position.

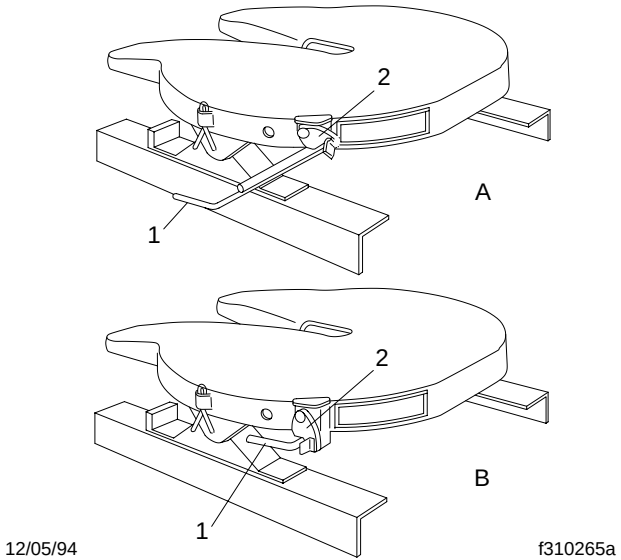

NOTE: Make sure the safety latch is down when the control handle is locked.

A. Unlocked
B. Locked
1. Lock Control Handle
2. Safety Latch

Fig. 11.6, Fontaine Fifth Wheel, Locking and Unlocking

7. Release the tractor parking brakes. Test for kingpin lockup by pulling on the trailer against the chocks.

https://truckmanualshub.com/

8. After lockup is completed, connect the tractor-to-trailer air system lines and the electrical cable to the trailer. Take care to prevent dirt or foreign material from entering the air system lines.
9. Charge the air brake system with air. Make sure that the air connections do not leak.
10. With the trailer wheels chocked and the brakes set, check for clearance between the kingpin and the fifth wheel jaws by moving the tractor forward and backward against the locked kingpin. There should be no slack between the tractor and the trailer. If slack is present, uncouple the trailer.

    For adjustment instructions, refer to the applicable manufacturer's service information.

WARNING

Eliminate slack between the trailer and the tractor. Incorrect fifth wheel adjustment could cause the trailer to disconnect, possibly resulting in serious personal injury or death.

11. Retract the trailer landing gear, and secure the ratchet handle.
12. Remove the chocks from the trailer tires.
13. The load distribution on the front steering axle and rear drive axle(s) will have a direct effect on the steering control of the vehicle.

    Determine the front and rear axle weights by weighing the vehicle on scales designed for this purpose.

    The maximum axle weight ratings are given on the Federal Motor Vehicle Safety Standard (FMVSS) label or Canadian Motor Vehicle Safety Standard (CMVSS) label attached to the left rear door post of the tractor. The desired load on the axle is no less than 80 percent of the maximum axle weight rating, but in no case should the axle load exceed the maximum axle weight rating given on the FMVSS or CMVSS label.

WARNING

Do not overload any tractor axle by improperly loading the trailer. This could cause erratic steering and loss of vehicle control, possibly resulting in serious personal injury or death.

Unlocking the Fifth Wheel Lock Mechanism

1. Apply the tractor parking brakes.
2. Pull the trailer air supply valve to cut off the air supply to the trailer.

3. Chock the front and rear of the trailer tires to prevent the trailer from moving.

WARNING

Do not use the trailer service brakes for parking; they are not designed for this purpose. If air bleeds out of the trailer air tank during parking, the vehicle could roll causing serious personal injury or property damage.

4. Lower the trailer landing gear until the weight is removed from the fifth wheel.
5. Disconnect the tractor-to-trailer air system lines and electrical cable. Plug the air lines to prevent dirt or foreign material from entering the lines.
6. Release the kingpin locking mechanism by lifting the safety latch and pulling the lock control handle to the unlocked position. See **Fig. 11.6**.
7. Slowly drive the tractor away from the trailer.

Index

https://truckmanualshub.com/

Subject	Page
A	
Air Brake System	7.1
Automatic Slack Adjusters	7.4
General Information	7.1
Meritor WABCO® Antilock Braking System (ABS), Air Brake Systems	7.3
Operation	7.2
Allison Automatic Transmissions	5.2
General Information	5.2
Operation	5.2
B	
Back-of-Cab Grab Handle, Step, and Deck Plate	2.16
C	
Cab Door Locks and Handles	2.1
Cab Entry and Exit	2.2
Driver's Side Entry and Exit	2.2
Passenger's Side Entry and Exit	2.3
Cab Tilting	2.12
To Lower the Cab	2.14
To Tilt the Cab	2.13
Cab Washing and Polishing	8.1
Canadian Motor Vehicle Safety Standard (CMVSS) Labels	1.2
Care of Chromed Parts and Stainless-Steel Clad Parts	8.1
Cloth Upholstery Cleaning	8.3
Chewing Gum or Wax	8.4
Grease and Oil-Based Stains	8.4
Mildew	8.4
Sugar and Water-Based Stains	8.4
Clutches	6.1
Clutch Adjustments	6.2
Clutch Operation	6.1
General Information	6.1
Hydraulic Clutch Fluid Reservoir Checking	6.3
Lubrication	6.3
Cold Start Manifold Heater	4.3
Cold Weather Operation	4.3
Cummins Engines	4.3
Controls	3.1
Air Horn, Optional	3.8
Air Suspension Dump Valve, Optional	3.7
Allison Automatic Transmission Controls	3.8
Cigar Lighter	3.7
Cummins Electronic Engine	3.5
Dome Light Switch	3.4
Electric Horn	3.8
Hazard Warning Light Switch	3.8
Headlight Switch and Daytime Running Lights	3.1
Ignition Switch and Key	3.1
Interrupt Switch	3.5
Panel Light Control	3.1
Parking Brake Control Valve Knob	3.6
Suspension Seat Adjustment Controls	3.10
Turn Signal Switch	3.7
Vernier Throttle Control, Optional	3.10
Windshield Washer	3.5
Windshield Wipers	3.4
D	
Dashboard Care	8.2
Door Windows	2.1
E	
Emergency Starting With Jumper Cables	10.3
Engine Braking System, Optional	4.9
PacBrake Exhaust Brake	4.9
Engine Break-In	4.4
Cummins Engines	4.4
Engine Operation	4.5

Subject	Page
Cummins Engines	4.5
Engine Shutdown	4.8
Cummins Engines	4.8
Engine Starting	4.1
Cummins	4.1
EPA Vehicle Noise Emission Control Label	1.3

F

Subject	Page
Federal Motor Vehicle Safety Standard (FMVSS) Labels	1.1
Fire in the Cab	10.4
In Case of a Cab Fire	10.5
Fontaine® Fifth Wheels	11.6
Fifth Wheel Lock Mechanism for Trailer Kingpin	11.6
Fifth Wheel Locking Operation	11.7
General Information	11.6
Front Access Panel	2.15
Fuller Straight-Shift Models	5.1
General Information	5.1
Operation	5.1
Fuse/Relay/Circuit Breaker Identification	2.11

H

Subject	Page
Hazard Warning Lights	10.1
Heater and Ventilation System	3.17
High Altitude Operation	4.9
Cummins	4.9
Holland Fifth Wheels	11.1
Fifth Wheel Locking Operation	11.1
General Information	11.1

I

Subject	Page
Instrument and Control Panel	3.1
Instruments	3.12
Engine Oil Pressure Gauge	3.14
Fuel Gauge	3.15
Intake-Air Restriction Indicator	3.15
Primary and Secondary Air Pressure Gauges	3.15
Speedometer	3.13
Tachometer	3.12
Transmission Oil Temperature Gauge	3.17
Voltmeter	3.14
Water Temperature Gauge	3.13

P

Subject	Page
Pretrip Inspection and Daily Maintenance Procedures	9.3
Pretrip Inspection Checklist	9.1

R

Subject	Page
Rear Axles	6.3
Meritor Drive Axles with Main Differential Lock	6.4
Meritor Main Differential Lock Operation	6.4
Meritor Two-Speed Rear Axle	6.3

S

Subject	Page
Seat Belt Operation	2.8
Lap Belt	2.9
Three-Point Seat Belt with Komfort Latch	2.8
Seat Belts and Tether Belts	2.7
General Information	2.7
Seats	2.5
National Cush-N-Aire II Seat	2.5
Non-Suspended Driver's Seat	2.6
Passenger's Seat	2.7
Steering System	6.5
General Information	6.5
Power Steering System	6.5

T

Subject	Page
Tire and Rim Labels	1.3
Towing	10.1

https://truckmanualshub.com/

Subject **Page**

Front Towing Hookup 10.1
Rear Towing Hookup 10.2

V

Vehicle Specification Decal 1.1
Vinyl Upholstery Cleaning 8.2
Ball Point Ink 8.3
Chewing Gum 8.2
Miscellaneous 8.3
Nail Polish and Nail Polish Remover 8.3
Ordinary Dirt 8.2
Paint, Shoe Heel Marks 8.3
Shoe Polish 8.3
Sulfide Stains 8.3
Tars, Asphalts, and Creosote 8.2

W

Warning and Indicator Lights 3.10
Meritor WABCO® Antilock Braking System (ABS), Air Brake Systems 3.12
Standard Warning System 3.10