https://truckmanualshub.com/

MODEL 336C
CAR CARRIER
OPERATOR'S MANUAL

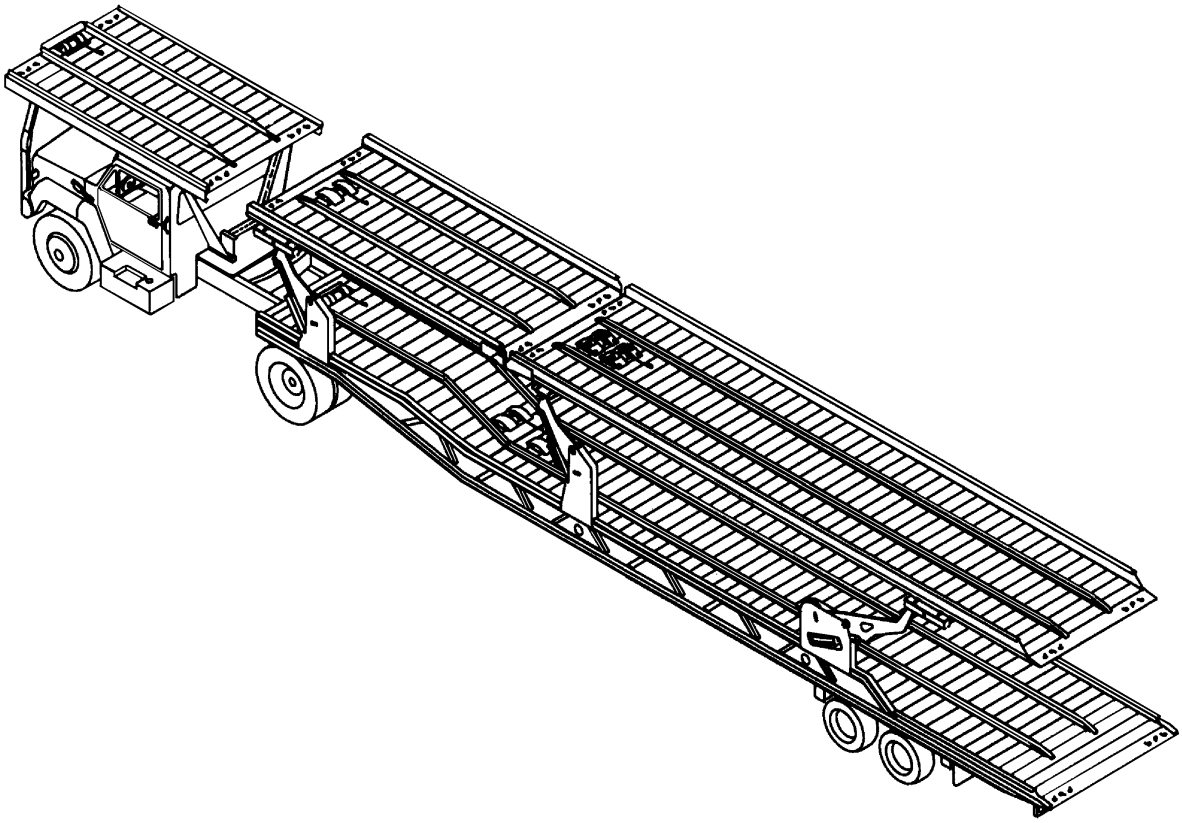

1900 NORTH STREET
MARYSVILLE, KANSAS 66508
(785) 562-5381

F-276-1299 12/99

https://truckmanualshub.com/

WARRANTY

MANUFACTURER'S GUARANTEE POLICY

LANDOLL CORPORATION WARRANTY

LANDOLL warrants each new and unused LANDOLL machine, when properly assembled, adjusted, and operated, to be free of defects in material and workmanship, in normal use and when properly serviced, for a period of twelve (12) months after date of delivery by the Dealer to the original retail purchaser. LANDOLL shall repair or replace, at its option, freight on board (f.o.b.) at its factory or designated DEALER location, any part or parts of such new and unused machine which shall have been reported in writing to LANDOLL within thirty (30) days from date of failure thereof and which LANDOLL inspection shall disclose to have been defective. Defective parts must be returned to the LANDOLL factory, freight prepaid. LANDOLL will not be liable for labor, transportation, or any other charges resulting from replacement of a defective part. This warranty is void if any part not supplied by LANDOLL is used in assembly or repair, or if the machine has been altered, abused, or neglected. LANDOLL repair parts are warranted for ninety (90) days from date of replacement or for the unexpired warranty period of the applicable LANDOLL machine, whichever period is longer. LANDOLL makes no warranty, whatsoever, as to purchased component parts and other trade accessories, except to the extent that such items are warranted by the manufacturer thereof. THIS WARRANTY IS EXCLUSIVE AND IN LIEU OF ALL OTHER WARRANTIES, WHETHER EXPRESSED, IMPLIED, OR STATUTORY (INCLUDING WARRANTIES OF MERCHANTABILITY AND FITNESS FOR PURPOSE), AND LANDOLL SHALL NOT BE LIABLE FOR SPECIAL OR CONSEQUENTIAL DAMAGES OF ANY KIND ON ACCOUNT OF ANY LANDOLL PRODUCT.

NO EMPLOYEE OR REPRESENTATIVE IS AUTHORIZED TO CHANGE THIS WARRANTY, VERBALLY OR IN WRITING, OR GRANT ANY OTHER WARRANTY.

LANDOLL CORPORATION, WHOSE POLICY IS ONE OF CONTINUOUS IMPROVEMENT, RESERVES THE RIGHT TO MAKE CHANGES WITHOUT OBLIGATION TO MODIFY PREVIOUSLY PRODUCED EQUIPMENT.

https://truckmanualshub.com/

MODEL 336C
CAR CARRIER
OPERATOR'S MANUAL

PURCHASED FROM: _____ **DATE /** ____ ____ ____

ADDRESS: _____

_____

_____

PHONE NO.: _____ **SERIAL NO.:** _____

https://truckmanualshub.com/

REPORTING SAFETY DEFECTS

If you believe that your vehicle has a defect which could cause a crash or could cause injury or death, you should immediately inform the National Highway Traffic Safety Administration (NHTSA) in addition to notifying Landoll Manufacturing.

If NHTSA receives similar complaints, it may open an investigation, and if it finds that a safety defect exists in a group of vehicles, it may order a recall and remedy campaign. However, NHTSA cannot become involved in individual problems between you, your dealer, or Landoll Manufacturing.

To contact NHTSA, you may either call the Auto Safety Hotline toll-free at 1-800-424-9393 (or 366-0123 in Washington, D.C. area) or write to: NHTSA, U.S. Department of Transportation, Washington, D.C. 20590. You can also obtain other information about motor vehicle safety from the Hotline.

In the event of a defect or problem with your LANDOLL equipment, please notify LANDOLL CORPORATION:

LANDOLL CORPORATION
SALES AND SERVICE
1900 NORTH STREET
MARYSVILLE, KANSAS 66508

OR PHONE:
1-800-HAULOLL
(1-800-428-5655)
FAX NO.: (785)562-3240
FOR REPLACEMENT PARTS:
(785)562-4650
1-800-423-4320
FAX NO.: (785) 562-4654

https://truckmanualshub.com/

TABLE OF CONTENTS

SECTION	DESCRIPTION	PAGE NO.
1	INTRODUCTION	
2	STANDARD SPECIFICATIONS	
3	OPERATING INSTRUCTIONS	
3-1	GENERAL	3-1
3-2	PRE-COUPLING OF SEMITRAILER AND TRACTOR	3-2
3-3	COUPLING OF THE TRACTOR TO THE SEMITRAILER	3-3
3-4	CONNECTING TRACTOR SERVICES TO THE SEMITRAILER	3-3
3-5	TRACTOR AND SEMITRAILER CHECK-OUT	3-4
3-6	TOWING THE SEMITRAILER	3-5
3-7	PARKING THE SEMITRAILER	3-6
3-8	UNCOUPLING TRACTOR FROM SEMITRAILER	3-6
3-9	HYDRAULIC AND AIR LOCK CONTROLS	3-7
3-10	WINCH CONTROLS	3-8
3-11	REMOTE CONTROL OPERATION	3-9
3-12	ADJUSTING ADJUSTMENT ARMS	3-10
3-13	PREPARATION FOR LOADING PROCEDURE	3-11
3-14	LOADING THE 331 OVER-THE-CAB DECK	3-13
3-15	LOADING THE UPPER DECK	3-14
3-16	LOADING THE LOWER DECK	3-15
3-17	SECURING THE LOAD	3-17
3-18	UNLOADING THE LOWER DECK	3-18
3-19	UNLOADING UPPER DECK	3-18
3-20	UNLOADING THE 331 OVER-THE-CAB DECK	3-19
3-21	REAR IMPACT GUARD SYSTEM	3-19
3-22	ANTI-LOCK BRAKE SYSTEM (ABS)	3-21
3-23	COLD WEATHER OPERATION	3-22
3-24	HOT WEATHER OPERATION	3-22
4	MAINTENANCE AND LUBRICATION	
4-1	MAINTENANCE SCHEDULE	4-1
4-2	MAINTENANCE PROCEDURES	4-4
4-3	FRAME, AND DECK	4-4
4-4	HYDRAULIC SYSTEM	4-5
4-5	ELECTRICAL SYSTEM	4-8
4-6	REMOTE CONTROL	4-8
4-7	SUSPENSION MAINTENANCE	4-9
4-8	ALIGNMENT	4-10
4-9	BRAKE SYSTEM MAINTENANCE	4-13
4-10	HUB AND DRUM MAINTENANCE	4-19
4-11	WHEEL BEARING LUBRICATION AND ADJUSTMENT	4-22
4-12	TIRE MAINTENANCE	4-23
4-13	WINCHES	4-24
4-14	AIR SYSTEM FILTER AND LUBRICATOR	4-26
5	TROUBLESHOOTING GUIDE	

https://truckmanualshub.com/

SAFETY PRECAUTIONS

THIS IS THE SAFETY ALERT SYMBOL. IT IS USED TO ALERT YOU TO POTENTIAL INJURY HAZARDS. OBEY ALL SAFETY MESSAGES THAT FOLLOW THIS SYMBOL TO AVOID POSSIBLE INJURY OR DEATH.

⚠DANGER — **DANGER INDICATES AN IMMINENTLY HAZARDOUS SITUATION WHICH, IF NOT AVOIDED, WILL RESULT IN DEATH OR SERIOUS INJURY.**

⚠WARNING — **WARNING INDICATES A POTENTIALLY HAZARDOUS SITUATION WHICH, IF NOT AVOIDED, COULD RESULT IN DEATH OR SERIOUS INJURY.**

⚠CAUTION — **CAUTION INDICATES A POTENTIALLY HAZARDOUS SITUATION WHICH, IF NOT AVOIDED, MAY RESULT IN MINOR OR MODERATE INJURY.**

CAUTION — **<u>CAUTION USED WITHOUT THE SAFETY ALERT SYMBOL</u> INDICATES A POTENTIALLY HAZARDOUS SITUATION WHICH, IF NOT AVOIDED, MAY RESULT IN PROPERTY DAMAGE.**

https://truckmanualshub.com/

INTRODUCTION 1

This manual provides operating, servicing, and maintenance instructions, with detailed parts lists for Model 336C car carrier, manufactured by Landoll Corporation, Marysville, Kansas 66508.

SECTION 1 **gives basic instructions on the use of this manual.**

SECTION 2 **gives specifications for the semitrailer, including measurements and component specifications. A Standard Bolt Torque Table is provided to give guidelines for bolt torques to be used when servicing this product.**

SECTION 3 **gives instructions for the proper operation of the equipment.**

SECTION 4 **gives general maintenance procedures, a maintenance schedule, and a lubrication schedule. Improper maintenance will void your warranty.**

IF YOU HAVE ANY QUESTIONS CONTACT:

LANDOLL CORPORATION
1900 NORTH STREET
MARYSVILLE, KANSAS 66508
or phone:
(785) 562-5381 or
(800) 428-5655
or FAX:
(785) 562-3240

SECTION 5 **is a troubleshooting guide to aid in diagnosing and solving problems with the semitrailer.**

PARTS LIST **is a separate manual showing the various assemblies, subassemblies, and systems. Refer to that manual when ordering Landoll replacement parts. Order parts from your Landoll dealer or call the Landoll Parts Distribution Center at:**

(785) 562-4650 or
(800) 423-4320 or
FAX: (785) 562-4654

WARRANTY **The Warranty Registration Card is located with the product documents. Fill it out and mail it within 15 days of purchase. The Warranty is printed inside the front cover.**

NOTE: IMPROPER ASSEMBLY, MODIFICATION, OR MAINTENANCE OF YOUR LANDOLL EQUIPMENT CAN VOID YOUR WARRANTY.

COMMENTS **Address comments or questions regarding this publication to:**

LANDOLL CORPORATION
1900 NORTH STREET
MARYSVILLE, KANSAS 66508
ATTENTION: PUBLISHING -DEPT. 55

https://truckmanualshub.com/

https://truckmanualshub.com/

STANDARD SPECIFICATIONS 2

MODEL 331 - SINGLE CAR CARRIER (OVER-THE-CAB)

DECK:

LENGTH	13'-0"
OUTSIDE WIDTH	92"
INSIDE WIDTH	84"
CAPACITY	1 CAR

WINCH:

QUANTITY	1
CAPACITY	8,000 LB.
CABLE LENGTH	65'

FRONT OVERHANG	24" TO 36"

MODEL 336C - 6 CAR CARRIER

OVERALL LENGTH:	48' OR 52'
OVERALL WIDTH:	102"
WEIGHT:	19,100-19,400 LB.

UPPER DECK:

INSIDE WIDTH	87"
DECK HEIGHT (TRANSPORT POSITION)	98" - 119"

LOWER DECK:

INSIDE WIDTH	94"
DECK HEIGHT (TRANSPORT POSITION)	34"

WINCH:

QUANTITY	6
CAPACITY	8,000 LB.
CABLE LENGTH	65'

PIN SETTING:.	15"
SWING CLEARANCE:.	75"

CAPACITY:

VEHICLES.	6
TOTAL VEHICLE WEIGHT ALLOWED	24,000 LB.
GAWR	18,160 LB.
GVWR	44,000 LB.

LOADING ANGLES:

UPPER DECK	17° TO 23°
LOWER DECK	8° TO 12°

CONTROL	MANUAL AND REMOTE HYDRAULIC

https://truckmanualshub.com/

HYDRAULIC HOOKUP:

QUICK COUPLERS	3/4"
MAXIMUM OPERATING PRESSURE**	2500 PSI
OPERATING FLOW**	17 GPM
ELECTRICAL HOOKUP:	7-WAY CONNECTOR
AIR HOOKUP:	GLAD HANDS

SPECIFIC BOLT TORQUES

AIR RIDE SUSPENSION:

EQUALIZER BEAM PIVOT BOLT:	800 FT.-LBS.
SHOCK ABSORBER MOUNTING:	150 FT.-LBS.
AIR SPRING MOUNTING: 1/2"	35 FT.-LBS.
3/4"	35 FT.-LBS.
WHEEL FASTENERS - ALL MODELS:	
OUTER SPINDLE NUTS	250-400 FT.-LBS.
PILOT WHEEL NUTS	450-500 FT.-LBS.
DISK WHEEL INNER WHEEL NUTS	450-500 FT.-LBS.
DISK WHEEL OUTER WHEEL NUTS	450-500 FT.-LBS.

*** TIRE, BRAKE, AXLE, OR WHEEL SELECTION MAY LIMIT CAPACITY.**

**** TRACTOR HYDRAULIC POWER SUPPLY MUST BE CAPABLE OF OPERATING AT THIS PRESSURE AND FLOW RATE AND BE EQUIPPED WITH A PRESSURE RELIEF VALVE SET AT THIS PRESSURE.**

https://truckmanualshub.com/

LANDOLL CORPORATION
GENERAL TORQUE SPECIFICATIONS (REV. 4/97)

THIS CHART PROVIDES TIGHTENING TORQUES FOR GENERAL PURPOSE APPLICATIONS WHEN SPECIAL TORQUES ARE NOT SPECIFIED ON PROCESS OR DRAWING.
ASSEMBLY TORQUES APPLY TO PLATED NUTS AND CAPSCREWS ASSEMBLED WITHOUT SUPPLEMENTAL LUBRICATION (AS RECEIVED CONDITION). THEY DO NOT APPLY IF SPECIAL GRAPHITE MOLY-DISULFIDE OR OTHER EXTREME PRESSURE LUBRICANTS ARE USED.
WHEN FASTENERS ARE DRY (SOLVENT CLEANED), ADD 33% TO AS RECEIVED CONDITION TORQUE.
BOLT HEAD IDENTIFICATION MARKS INDICATE GRADE AND MAY VARY FROM MANUFACTURER TO MANUFACTURER.
THICK NUTS MUST BE USED ON GRADE 8 CAPSCREWS.
USE VALUE IN [ ] IF USING PREVAILING TORQUE NUTS.

TORQUE IS SPECIFIED IN FOOT POUNDS

UNC Size	SAE Grade 2		SAE Grade 5		SAE Grade 8		UNF Size	SAE Grade 2		SAE Grade 5		SAE Grade 8	
1/4-20	4	[5]	6	[7]	9	[11]	1/4-28	5	[6]	7	[9]	10	[12]
5/16-18	8	[10]	13	[16]	18	[22]	5/16-24	9	[11]	14	[17]	20	[25]
3/8-16	15	[19]	23	[29]	35	[43]	3/8-24	17	[21]	25	[31]	35	[44]
7/16-14	24	[30]	35	[43]	55	[62]	7/16-20	27	[34]	40	[50]	60	[75]
1/2-13	35	[43]	55	[62]	80	[100]	1/2-20	40	[50]	65	[81]	90	[112]
9/16-12	55	[62]	80	[100]	110	[137]	9/16-18	60	[75]	90	[112]	130	[162]
5/8-11	75	[94]	110	[137]	170	[212]	5/8-18	85	[106]	130	[162]	180	[225]
3/4-10	130	[162]	200	[250]	280	[350]	3/4-16	150	[188]	220	[275]	320	[400]
7/8-9	125	[156]	320	[400]	460	[575]	7/8-14	140	[175]	360	[450]	500	[625]
1-8	190	[237]	408	[506]	680	[850]	1-14	210	[263]	540	[675]	760	[950]
1-1/8-7	270	[337]	600	[750]	960	[1200]	1-1/8-12	300	[375]	660	[825]	1080	[1350]
1-1/4-7	380	[475]	840	[1050]	1426	[1782]	1-1/4-12	420	[525]	920	[1150]	1500	[1875]
1-3/8-6	490	[612]	110	[1375]	1780	[2225]	1-3/8-12	560	[700]	1260	[1575]	2010	[2512]
1/1-2-6	650	[812]	1460	[1825]	2360	[2950]	1/1-2-12	730	[912]	1640	[2050]	2660	[3325]

METRIC

COARSE THREAD METRIC CLASS 10.9 FASTENERS AND CLASS 10.0 NUTS AND THROUGH HARDENED FLAT WASHERS, PHOSPHATE COATED, ROCKWELL "C" 38-45.
USE VALUE IN [ ] IF USING PREVAILING TORQUE NUTS.

Nominal Thread Diameter mm	Standard Torque				Nominal Thread Diameter mm	Standard Torque			
	Newton-Meters		Foot-Pounds			Newton-Meters		Foot-Pounds	
6	10	[14]	7	[10]	20	385	[450]	290	[335]
7	16	[22]	12	[16]	24	670	[775]	500	[625]
8	23	[32]	17	[24]	27	980	[1105]	730	[825]
10	46	[60]	34	[47]	30	1330	[1470]	990	[1090]
12	80	[101]	60	[75]	33	1790	[1950]	1340	[1450]
14	125	[155]	90	[115]	36	2325	[2515]	1730	[1870]
16	200	[240]	150	[180]	39	3010	[3210]	2240	[2380]
18	275	[330]	205	[245]					

Table 2-1 General Torque Specifications

https://truckmanualshub.com/

LANDOLL CORPORATION
HYDRAULIC FITTING TORQUE SPECIFICATIONS
37° JIC, ORS, & ORB (REV. 10/97)

THIS CHART PROVIDES TIGHTENING TORQUES FOR HYDRAULIC FITTING APPLICATIONS WHEN SPECIAL TORQUES ARE NOT SPECIFIED ON PROCESS OR DRAWING.
ASSEMBLY TORQUES APPLY TO PLATED CARBON STEEL AND STAINLESS STEEL FITTINGS ASSEMBLED WITHOUT SUPPLEMENTAL LUBRICATION (AS RECEIVED CONDITION). THEY DO NOT APPLY IF SPECIAL GRAPHITE MOLY-DISULFIDE OR OTHER EXTREME PRESSURE LUBRICANTS ARE USED.
BRASS FITTINGS AND ADAPTERS - 65% OF THE TORQUE VALUE FOR STEEL. STAINLESS STEEL, ALUMINUM AND MONEL - THREADS ARE TO BE LUBRICATED.
TORQUE IS SPECIFIED IN FOOT POUNDS

PARKER BRAND FITTINGS

Dash Size	37 Degree JIC	O-Ring (ORS)	O-Ring Boss (ORB)
-4	11-13	15-17	13-15
-5	14-16	—	21-23
-6	20-22	34-36	25-29
-8	43-47	58-62	40-44
-10	55-65	100-110	57.5-62.5
-12	80-90	134-146	75-85
-16	115-125	202-218	109-121
-20	160-180	248-272	213-237
-24	185-215	303-327	238-262
-32	250-290	—	310-340

LANDOLL CORPORATION
HYDRAULIC FITTING TORQUE SPECIFICATIONS
37° JIC, ORS & ORB (REV. 10/97)

THIS CHART PROVIDES TIGHTENING TORQUES FOR HYDRAULIC FITTING APPLICATIONS WHEN SPECIAL TORQUES ARE NOT SPECIFIED ON PROCESS OR DRAWING.
ASSEMBLY TORQUES APPLY TO PLATED CARBON STEEL AND STAINLESS STEEL FITTINGS ASSEMBLED WITHOUT SUPPLEMENTAL LUBRICATION (AS RECEIVED CONDITION). THEY DO NOT APPLY IF SPECIAL GRAPHITE MOLY-DISULFIDE OR OTHER EXTREME PRESSURE LUBRICANTS ARE USED.
BRASS FITTINGS AND ADAPTERS - 65% OF THE TORQUE VALUE FOR STEEL.
TORQUE IS SPECIFIED IN FOOT POUNDS.

AEROQUIP BRAND FITTINGS

Dash Size	37 Degree JIC	O-Ring (ORS)	O-Ring Boss (ORB)
-4	11-12	10-12	14-16
-5	15-16	—	18-20
-6	18-20	18-20	24-26
-8	38-42	32-35	50-60
-10	57-62	46-50	72-80
-12	79-87	65-70	125-135
-14	—	—	160-180
-16	108-113	92-100	200-220
-20	127-133	125-140	210-280
-24	158-167	150-165	270-360
-32	245-258	—	—

Table 2-2 Hydraulic Fitting Torque Specifications

https://truckmanualshub.com/

OPERATING INSTRUCTIONS 3

3-1 GENERAL

This section supplies information for operation of the semitrailer. It describes and locates controls and gives general operations procedures. Read all instructions, warnings, cautions, and danger notes before attempting to operate the semitrailer. Operators must have proper training before operating the semitrailer.

⚠ WARNING

DO NOT OPERATE THE SEMITRAILER WITH ANY KNOWN FAULT THAT MIGHT ENDANGER THE OCCUPANTS, NEARBY WORKERS, OTHER TRAFFIC, THE LOAD, OR THE EQUIPMENT

⚠ WARNING

DO NOT OPERATE THE SEMITRAILER UNTIL YOU HAVE READ THE OPERATOR'S MANUAL AND COMPLETELY UNDERSTAND THE PROPER USE AND FUNCTION OF ALL CONTROLS. IMPROPER USE CAN CAUSE PERSONAL INJURY, DAMAGE TO YOUR SEMITRAILER AND CARGO, AND CAUSE TIME-CONSUMING BREAKDOWNS.

3-1.1 Landing Gear

The landing gear consists of two legs with a tube telescoping within another tube. Pin drop style is installed on the semitrailer.

3-1.2 Parking Brake

The parking brakes are automatically applied by spring pressure with the air actuators of the braking system when air pressure in the emergency line drops below 70 psi. This may be done within the truck using the trailer parking/emergency valve or by disconnecting the emergency gladhand.

3-1.3 Air Brake System

The air brake system of the semitrailer is operated from the towing vehicle after coupling. The towing vehicle's air system must be coupled to the semitrailer and charged to 90 psi minimum before brakes can adequately function.

3-1.4 Anti-Lock Brakes

The Anti-Lock Brake System of the semitrailer is constant powered by the auxiliary (blue) circuit of the seven way electrical connector, with backup power from the stop lamp (red) circuit, and ground through the white wire. It is necessary that the blue circuit is hot when the tractor key switch is on. The blue circuit on the trailer may also not be used to power any additional auxiliary devices while the semitrailer is moving forward. If a fault exists in the ABS, normal braking will occur, but the wheels may lock. Service the ABS as soon as possible.

⚠ CAUTION

THE AUXILIARY (BLUE) CIRCUIT IS FOR POWERING THE SEMITRAILER ABS. THIS CIRCUIT MUST BE HOT WHEN THE TRACTOR KEY SWITCH IS ON. NO OTHER ELECTRICAL DEVICES MAY BE POWERED BY THIS CIRCUIT WHILE THE SEMITRAILER IS MOVING FORWARD.

https://truckmanualshub.com/

⚠ CAUTION

IF A FAULT EXISTS IN THE SEMI-TRAILER ABS, NORMAL BRAKING WILL OCCUR, BUT WHEELS MAY LOCK. SERVICE THE ABS AS SOON AS POSSIBLE.

3-1.5 Electrical

The only electrical operation required of the operator is interconnection of the towing vehicle electrical cable plug with the semitrailer electrical receptacle. It is necessary that the tractor blue wire is connected to the appropriate electrical source on the tractor.

3-1.6 Hydraulic

The controls can also be operated by a radio transmitter that is supplied standard. A hydraulic pump must be coupled to the trailer hydraulic system before any hydraulic controls can function. The hydraulic system is designed to operate at 2500 psi maximum pressure and and approximately 17 gpm flow capacity.

3-2 PRE-COUPLING OF SEMITRAILER AND TRACTOR

3-2.1 Slowly back the tractor up to the front end of the semitrailer so the kingpin of the semitrailer is centered between the tractor fifth wheel jaws. Stop the tractor several inches ahead of the semitrailer. Set tractor parking brake.

⚠ CAUTION

DO NOT OPERATE TRAILER HYDRAULICS UNLESS TRACTOR BRAKES ARE LOCKED.

3-2.2 The king pin plate should be the same height as, or slightly lower than, the latch area of the fifth wheel plate of the tractor. If necessary, connect the tractor hydraulic lines. Use the **TRAILER TILT CONTROL (See Figure 3-2)** to raise or lower the kingpin plate sufficiently to allow proper coupling. Drain all air and moisture from the tractor air brake system in accordance with the tractor manufacturer's instructions.

3-2.3 Connect the service and emergency air hoses of the tractor to their respective gladhand on the front of the semitrailer. The tractor's air hose couplings are then attached and locked to the appropriate gladhands; the red emergency line to the gladhand with the **"EMERGENCY"** tag, and the blue service line to the gladhand with the **"SERVICE"** tag **(See Figure 3-1)**. Chock the semitrailer wheels before activating the semitrailer air supply valve in the tractor. Set the semitrailer brakes.

3-2.4 Check the air brake operations of the semitrailer as follows:

a. Apply brakes and inspect brake action on all wheels for prompt application.

b. Release brakes. All brakes should release immediately. Air pressure should discharge quickly from the system.

c. Disconnect the emergency air line from the semitrailer gladhand. Semitrailer brakes should promptly set.

d. Re-connect the emergency air line to the semitrailer and activate the semitrailer air supply valve. The semitrailer brakes should release when the air pressure in the emergency line has built up to 90 psi and stabilized.

https://truckmanualshub.com/

3-3 COUPLING OF THE TRACTOR TO THE SEMITRAILER

⚠ DANGER

KEEP ALL PERSONNEL CLEAR OF FRONT, REAR, AND SIDES OF TRACTOR AND SEMITRAILER DURING COUPLING, COMPONENT OPERATIONS, AND UNCOUPLING. FAILURE TO STAY CLEAR CAN RESULT IN SERIOUS PERSONAL INJURY OR DEATH.

3-3.1 Verify the semitrailer wheels are chocked and brakes function properly.

3-3.2 Make sure the tractor's fifth wheel coupler is open.

CAUTION

PUSHING SEMITRAILER BACKWARDS CAN DAMAGE LANDING GEAR.

3-3.3 Slowly back the tractor so its fifth wheel contacts the front of the kingpin plate on the semitrailer and slips under it. Continue backing until the fifth wheel coupler locks onto the semitrailer kingpin.

3-3.4 Try to pull the tractor forward a few inches to verify the vehicle coupling is secure. If the tractor disconnects from the semitrailer: locate the source of the coupling failure; repair before continuing; and repeat **Steps 3-3.3 and 3-3.4.**

3-3.5 Check that the tractor couples securely to the semitrailer before setting tractor and semitrailer parking brakes.

IMPORTANT

KEEP BRAKES ENGAGED FOR REMAINDER OF COUPLING, CHECK-OUT, AND PARKING.

3-4 CONNECTING TRACTOR SERVICES TO THE SEMITRAILER

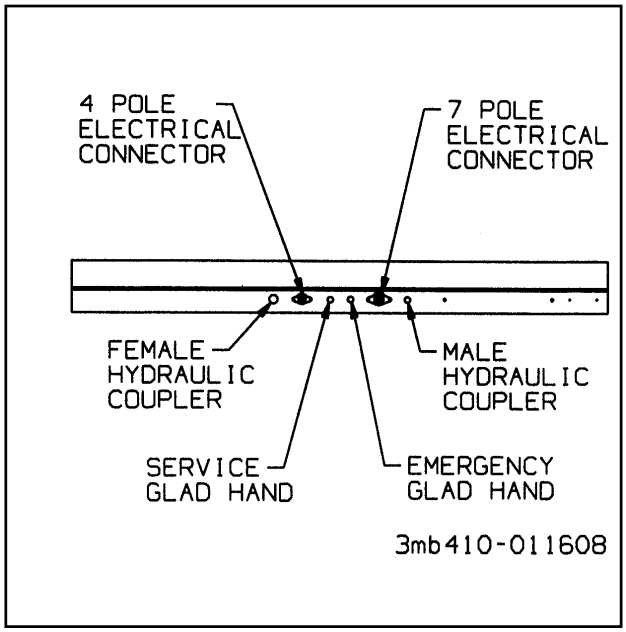

Figure 3-1 Service Hookups (Front View)

3-4.1 Connect the tractor 7-pole electrical plug to the electrical receptacle on the front of the semitrailer **(See Figure 3-1)**.

3-4.2 Connect the 4-pole electrical cable from the over-the-cab deck (331) to the semitrailer 4 pole electrical receptacle.

IMPORTANT

THE KEY ON THE PLUG AND THE KEYWAY IN THE SOCKET MUST BE PROPERLY ALIGNED BEFORE INSERTING THE PLUG INTO THE SEMITRAILER SOCKET.

3-4.3 Connect the tractor hydraulic lines to the semitrailer.

https://truckmanualshub.com/

3-5 TRACTOR AND SEMITRAILER CHECK-OUT

3-5.1 While hydraulic power is operating, raise the front end of the semitrailer with the **TRAILER TILT CONTROL (See Figure 3-2)** until weight is off the landing gear. Raise landing gear. Secure each leg with a park stand retaining pin in fully retracted position before transporting.

⚠ WARNING

FAILURE TO PROPERLY SET AND CHECK PARKING BRAKE, AND CHOCK WHEELS WHEN PARKING AND DURING STORAGE, COULD ALLOW MOVEMENT OF THE TRUCK/SEMITRAILER RIG RESULTING IN SERIOUS PERSONAL INJURY, DEATH, OR DAMAGE TO PROPERTY IN ITS PATH.

⚠ WARNING

LANDING GEAR LEGS MUST BE FULLY RETRACTED AND SECURED WITH PINS BEFORE OPERATING OR MOVING SEMITRAILER.

3-5.2 Lower the front end with the **TRAILER TILT CONTROL** until the semitrailer is fully lowered. Hold lever in the down position until hydraulic system works against the bottomed out hydraulic tilt cylinders.

3-5.3 Verify that the traveling undercarriage is completely slid back to transport position. Shut off hydraulic power.

3-5.4 Check the operation of all lights and signals on the semitrailer for proper response to switch positions (stop, right turn, left turn and clearance).

3-5.5 Check that tire inflation matches the pressure listed on the tire.

3-5.6 Check tractor/semitrailer rig for air leaks. If air leakage is found, repair the defect before transporting.

3-5.7 Check that the oil in each hub is at the proper level and free from contamination. If hubs contain water, dirt, or other foreign matter, clean them before transporting.

3-5.8 Check tractor air pressure. Pressure must not fall below 90 psi, even after activating brakes a couple of times. Set parking brake and carefully remove all wheel chocks. Set emergency brake and try pulling forward. The semitrailer wheels must not rotate. If semitrailer brakes do not apply, do not transport until defect, or defects, are repaired.

3-5.9 Check your maintenance schedule and be sure everything is up-to-date.

https://truckmanualshub.com/

3-6 TOWING THE SEMITRAILER

3-6.1 Driving the tractor with the semitrailer coupled behind requires constant attention to the overall length. Turning, passing, accelerating, braking, stopping, and back-up require special considerations. When executing steep grades or turning tight curves, the semitrailer must not be allowed to push the tractor, or jackknifing may result. Application of the semitrailer brakes to keep the semitrailer in tow will help prevent this situation. To assure control, brake before descending a hill or attempting a curve.

CAUTION

WHEN OPERATING SEMITRAILER, DO NOT BACK OVER CURB. THIS WILL CAUSE SEVERE DAMAGE TO UNDERCARRIAGE AND UNDERCARRIAGE CYLINDER.

3-6.2 Make a moving test of the semitrailer brakes at low, and medium speeds before traveling at highway speeds.

a. The Anti-Lock Brake System (ABS) warning lamp mounted at left rear side of the trailer should come on when power is supplied to the ABS by turning the tractor keyswitch on. The warning lamp should go off once the trailer exceeds 4 mph. Once the vehicle speed exceeds 4 mph, the light should remain off unless a fault occurs or the keyswitch is turned off, then on again.

b. If the warning lamp does not go off, a fault exists in the trailer ABS. If fault exists, service using the anti-lock brake system section of the troubleshooting section of this manual.

⚠ CAUTION

IF A FAULT EXISTS IN THE TRAILER ABS, NORMAL BRAKING WILL OCCUR, BUT WHEELS MAY LOCK. SERVICE THE ABS AS SOON AS POSSIBLE.

3-6.3 Monitor the air pressure gauge on the dash of the tractor. Pressure should not fall below 80 psi at any time.

3-6.4 The semitrailer wheels track to the inside of the tractor during turns. Thus, turning corners requires a wide swing to prevent “curb hopping”, and to allow the semitrailer wheels to clear any obstacle on the inside of the corner.

3-6.5 To stop, use a gradual and smooth application of brakes. If grabbing occurs, apply less pressure. Grabbing brakes are not efficient.

⚠ WARNING

ALWAYS CHECK BEHIND AND UNDER THE TRACTOR AND SEMITRAILER FOR PERSONS OR OBJECTS BEFORE MOVING. FAILURE TO CHECK CAN LEAD TO SERIOUS PERSONAL INJURY, DEATH, OR DAMAGE TO PROPERTY.

3-6.6 Backing should be done with care. Tail overhang, semitrailer length, and allowable space must be taken into consideration.

https://truckmanualshub.com/

3-7 PARKING THE SEMITRAILER

3-7.1 Position tractor/trailer rig on a level, solid surface.

3-7.2 Set the **PARKING BRAKE, not the semitrailer emergency hand brake,** and check for proper brake holding.

⚠ DANGER

FAILURE TO PROPERLY SET PARKING BRAKE, AND CHOCK WHEELS WHEN PARKING AND DURING STORAGE, COULD ALLOW MOVEMENT OF THE TRACTOR/TRAILER RESULTING IN DAMAGE TO PROPERTY, SERIOUS PERSONAL INJURY, OR DEATH.

3-7.3 Chock wheels.

3-7.4 Check for any air leaks in lines, relay valve, brake pods, or any other air system component.

⚠ WARNING

WHEN LEAVING THE SEMITRAILER UNATTENDED, POSITION ALL HYDRAULIC CONTROLS TO THE NEUTRAL OR "OFF" POSITION AND DISCONNECT THE TRACTOR HYDRAULIC HOOK-UP.

3-8 UNCOUPLING TRACTOR FROM SEMITRAILER

3-8.1 Park the semitrailer according to instructions in **Section 3-7.**

3-8.2 Do not exceed the allowable load on the landing gear. If the trailer is fully loaded, move the undercarriage forward ninety (90) inches before disconnecting the trailer from the tractor or until load is equalized, or not tail heavy.

3-8.3 If the trailer is partially loaded, move the undercarriage forward, but not enough to cause the trailer to be "tail heavy". Do not move the undercarriage after the trailer has been disconnected from the tractor.

CAUTION

THE LOAD ON THE PARK STANDS MUST NOT EXCEED 10,000 POUNDS.

3-8.4 Remove retaining pin and lower landing gear to the ground. Hydraulically raise the front end of the semitrailer until the next hole in the landing gear is available. Insert pin through both inner and outer legs of the landing gear. Hydraulically lower semitrailer onto the legs.

⚠ WARNING

SECURE EACH LEG WITH A PIN BEFORE LEAVING THE SEMITRAILER UNATTENDED.

3-8.5 Pull the tractor fifth wheel plate latch release.

3-8.6 Disconnect emergency and service air lines and attach them to the tractor gladhand holders.

3-8.7 Disconnect the 4 and 7-pole cables and the hydraulic lines from the semitrailer and store with the tractor.

3-8.8 Attempt to pull the tractor forward. If the tractor uncouples, verify that all service lines are disconnected and semitrailer wheels are chocked. If tractor does not disconnect, repeat **Step 3-8.5.**

3-8.9 Pull the tractor away from the semitrailer.

https://truckmanualshub.com/

3-9 HYDRAULIC AND AIR LOCK CONTROLS

3-9.1 For manual control operation, switch the toggle on the right end of the control panel to **"MANUAL"**. For remote control operation, switch the toggle on the right end of the control panel to **"REMOTE"** and refer to **Section 3-11** instructions. The **MANUAL LOCK CONTROLS** on the air valves must be in the lock position for remote operation of the air valves **(See Figure 3-2)**.

3-9.2 The **WINCH CONTROLS** are described in **Section 3-10**.

3-9.3 The **TRAILER TILT CONTROL** is the first tilt control on the hydraulic control panel. It has three positions.

UP In this position, the front end of the trailer is raised.

CENTER This is the neutral position.

DOWN In this position, the front end of the trailer is lowered.

3-9.4 The **DECK TILT CONTROLS** operate the three sets of arms which support the upper deck. They have three positions.

UP In this position, the arms are extended raising that part of the upper deck.

CENTER This is the neutral position.

DOWN In this position, the arms are retracted lowering that part of the upper deck.

3-9.5 The **UNDERCARRIAGE TRAVEL (AXLES) CONTROLS** slides the undercarriage forward and backward.

UP In this position, the undercarriage is moved forward.

CENTER This is the neutral position.

DOWN In this position, the undercarriage is moved back.

3-9.6 The **MANUAL LOCK CONTROLS** are the levers on the air valves next to the Hydraulic control valves. There is one for each of the deck tilt arms. They have two positions.

LOCK Turn the lever **counter-clockwise** as far as it will go. In this position the arm is locked and will not move up or down. The control must be in this position for remote operation. Activating the **REMOTE DECK TILT CONTROLS** automatically unlocks arms.

UNLOCK Turn the lever **clockwise** as far as it will go. In this position, the arm will unlock when the **DECK TILT CONTROL** is joggled. Use this position only when using **MANUAL DECK TILT CONTROLS.**

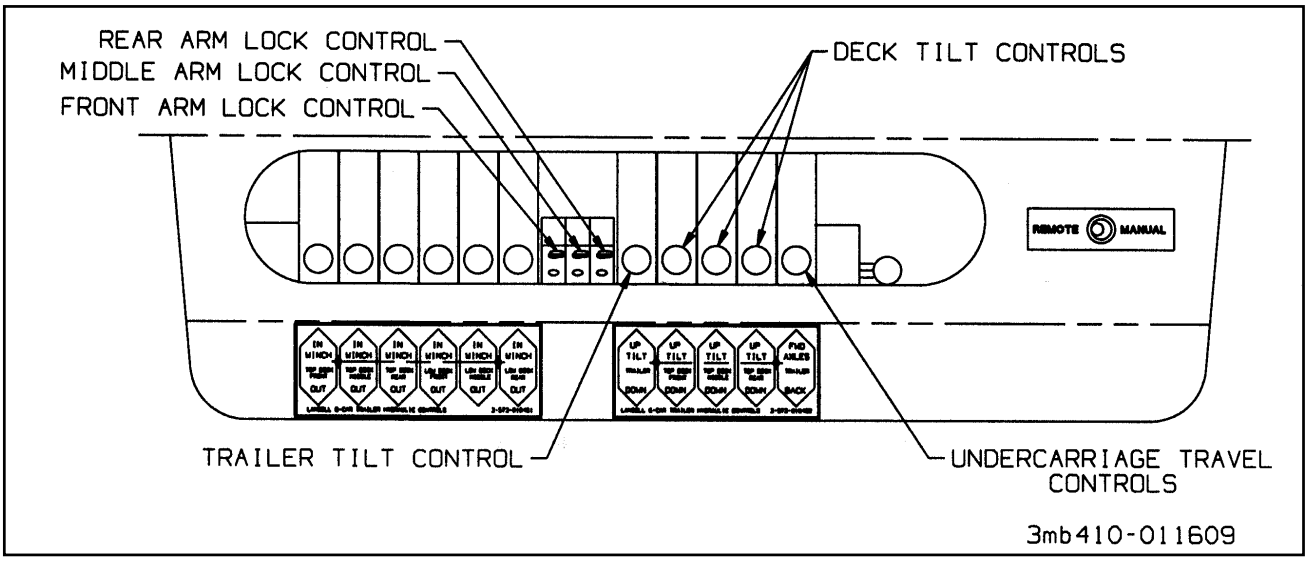

Figure 3-2 Hydraulic Control Levers

https://truckmanualshub.com/

3-10 WINCH CONTROLS

⚠ DANGER

1. THE WINCH IS NOT DESIGNED OR INTENDED TO BE USED FOR LIFTING OR MOVING PEOPLE. USING IT THIS WAY CAN CAUSE SERIOUS INJURY OR DEATH.

2. NEVER ATTEMPT TO DISENGAGE THE WINCH CABLE SPOOL WHEN THE CABLE IS UNDER TENSION. THE LOAD CAN ROLL AWAY. SERIOUS INJURY OR DEATH CAN RESULT IF PEOPLE ARE IN THE PATH OF THE ROLLING LOAD.

3. FAILURE TO LEAVE AT LEAST FIVE WINCH CABLE WRAPS ON THE WINCH CABLE SPOOL COULD ALLOW THE CABLE TO COME OFF THE SPOOL, RESULTING IN SERIOUS PERSONAL INJURY OR DEATH.

3-10.1 The **WINCH CLUTCH (See Figure 3-3)** is located on the end of the winch.

IN In this position, the clutch is engaged and the hydraulic winch controls will power spool the cable in or out.

OUT In this position, the clutch is disengaged and the winch will free-wheel. To lock in the disengaged position, pull handle all the way out and turn a quarter turn.

3-10.2 The **WINCH HYDRAULIC CONTROLS (See Figure 3-2)** are located on the hydraulic control panel or the remote control **(See Figure 3-4)** if present. It is a three position control:

IN This position will cause the winch to reel cable onto the winch spool when the winch clutch handle is engaged.

CENTER This is neutral position. This position will not operate the winch.

OUT This position will cause the winch to reel cable off of the winch spool when the winch is engaged.

3-10.3 Operating the Winch

a. Disengage the **WINCH CLUTCH** when pulling the winch cable out by hand.

b. Connect the hook to the vehicle and engage the **WINCH CLUTCH**.

3-10.4 Use the **WINCH HYDRAULIC CONTROL** to pull a vehicle onto the trailer or to let a vehicle off of the trailer.

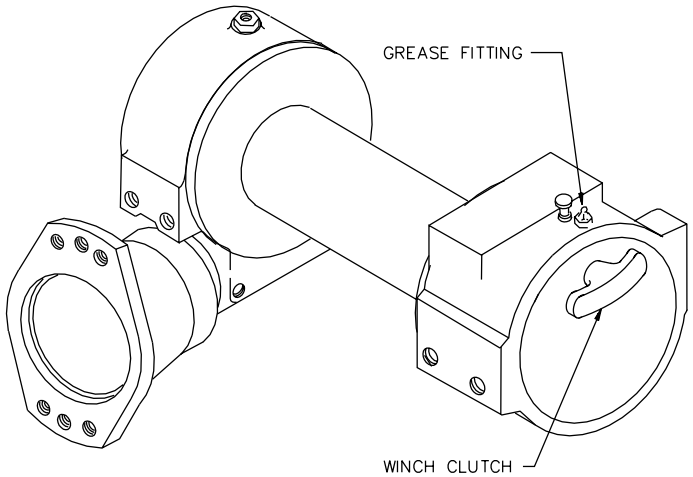

Figure 3-3 Winch Clutch

https://truckmanualshub.com/

3-11 REMOTE CONTROL OPERATION

3-11.1 The **POWER SWITCH** is located on the top of the box and must be turned on for the the remote control to operate **(See Figure 3-4)**

3-11.2 The **EMERGENCY KILL** switch is a button on the top of the box.

a. Should an emergency situation occur, the receiver may be shut down by pressing the **EMERGENCY KILL SWITCH** on the transmitter. This must be pressed while the transmitter power is in the on position.

b. To resume operation, the **POWER SWITCH** must be turned off and back on again.

3-11.3 The **DECK SELECTOR** is in the middle of the front panel.

LOWER When the deck selector is in this position, the functions listed **BELOW** this switch are operational. For the Front, Rear, and Middle Winch controls, the lower deck winches are operational.

UPPER When the deck selector is in this position, the functions listed **ABOVE** this switch are operational. For the Front, Rear, and Middle Winch controls the upper deck winches are operational.

3-11.4 The remaining switches operate like the hydraulic controls listed on **Page 3-7** and the winch controls listed on **Page 3-8.**

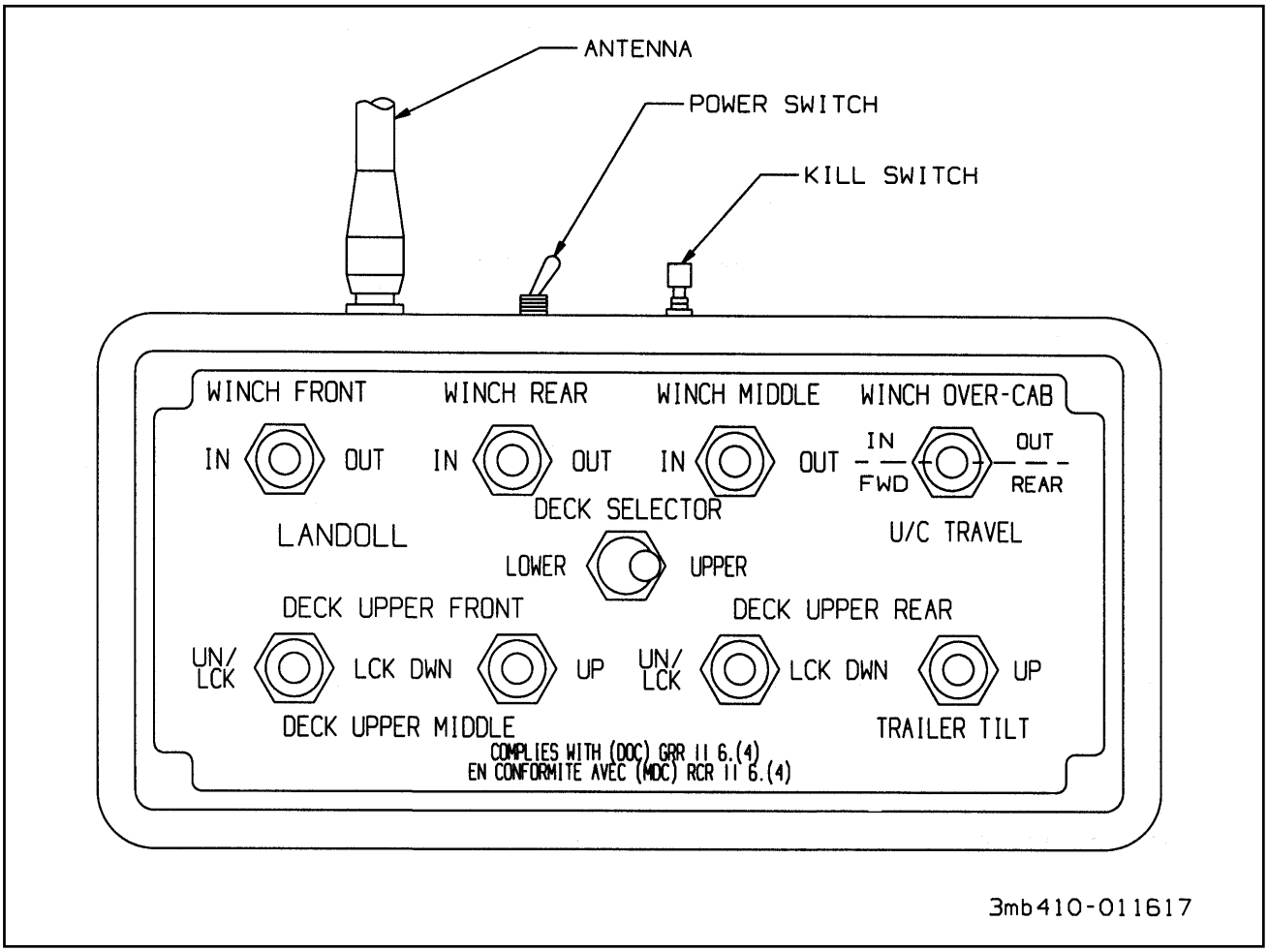

Figure 3-4 Remote Control

https://truckmanualshub.com/

3-12 ADJUSTING ADJUSTMENT ARMS

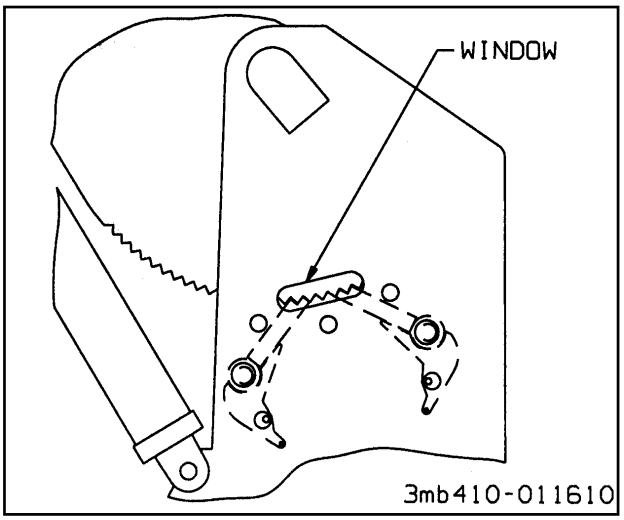

Figure 3-5 Lock Verification Window

There are three sets of adjustment arms connecting the upper deck to the lower deck. Each arm must be unlocked as it is adjusted and locked when it is in position. **(See Section 3-9 for operation of hydraulic and air lock controls.)**

3-12.1 Hold the **LOCK CONTROL** in the unlock position **(See Figure 3-2)** and joggle the **TRAILER TILT CONTROL** for that arm until it unlocks.

3-12.2 Continue to hold the **LOCK CONTROL** in the unlock position as the arm is raised or lowered.

3-12.3 When the arm reaches the desired position, release the **LOCK CONTROL** and joggle the **TRAILER TILT CONTROL** until the arm is locked in position.

3-12.4 Verify that the arm is locked by looking through the window to see if the cogs are engaged **(See Figure 3-5).**

⚠ WARNING

DO NOT PUT FINGERS OR OBJECTS INTO THE LOCK WINDOW. VISUALLY CHECK THE LOCK ONLY. USE HYDRAULIC CONTROLS TO ENGAGE COGS.

3-12.5 If the lock is not correctly engaged, joggle the **TRAILER TILT CONTROL** until cogs engage.

3-12.6 The adjusting arms are controlled by slave cylinders that can get out of time, allowing one side to be higher than the other. When one side is more then 1/4" higher than the other side, cylinders must be re-timed. Extend the cylinders all the way out, then continue to hold the valve open for 5 to 10 seconds, which forces cylinder pistons to the same extended position.

https://truckmanualshub.com/

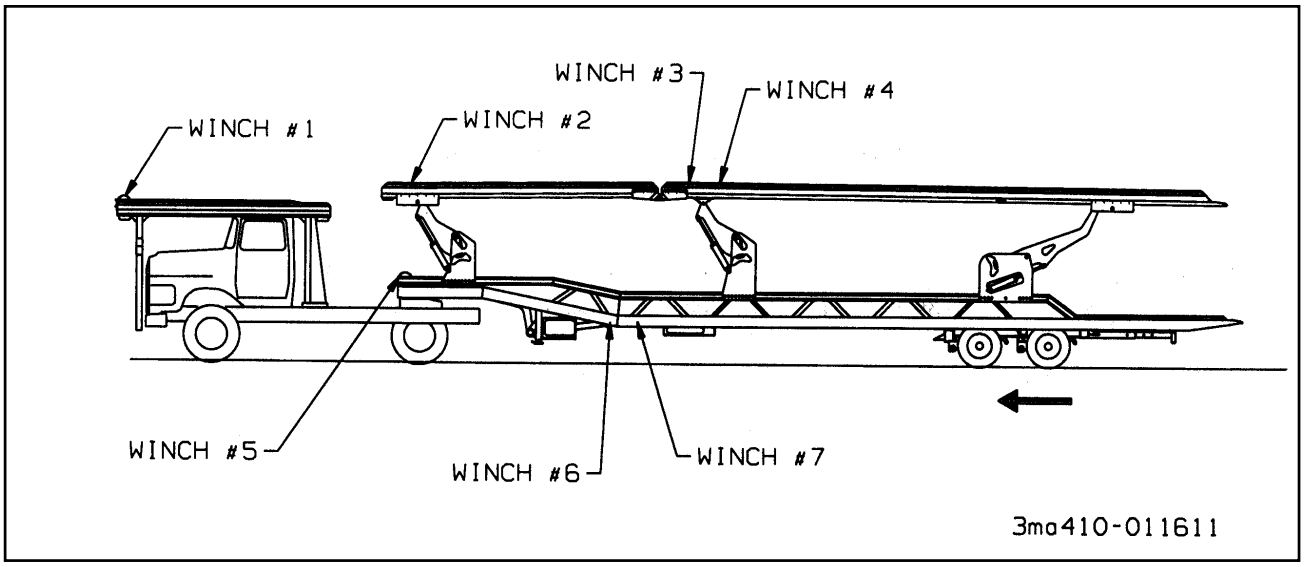

Figure 3-6 Preparation for Loading

3-13 PREPARATION FOR LOADING PROCEDURE

⚠ WARNING

1. THE SEMITRAILER MUST BE COUPLED TO A TRACTOR AND THE LANDING GEAR RAISED OFF THE GROUND BEFORE OPERATING.

2. DO NOT OPERATE TRAILER HYDRAULICS UNLESS TRACTOR BRAKES ARE LOCKED.

3. DO NOT EXCEED THE GROSS AXLE WEIGHT RATINGS FOR ANY AXLE ON YOUR VEHICLE. THE COMBINED WEIGHT OF THE TRACTOR, SEMITRAILER, AND CARGO MUST NOT EXCEED THE GROSS VEHICLE WEIGHT RATING (GVWR) OF THE TRACTOR.

3-13.1 Practice all standard industrial safety standards. Do not load any payload that will overload any component of the trailer or cause an unsafe condition.

3-13.2 Park the tractor/trailer in a straight line on a level even surface. Set the tractor brakes and release the semitrailer brakes.

3-13.3 Engage the tractor P.T.O..

CAUTION

DO NOT MOVE THE TRAILER AXLES IF THE SUSPENSION AIR BAGS ARE DEFLATED. THE TRAILER TIRES WILL HIT THE DECK.

3-13.4 Move trailer axles all the way forward.

⚠ CAUTION

A STICKING SOLENOID VALVE WILL CAUSE THE HYDRAULIC COMPONENT TO OPERATE WHEN SWITCHING THE REMOTE CONTROL ON OR WHEN RELEASING THE CONTROL SWITCH FOR THE COMPONENT. IF THIS HAPPENS, IMMEDIATELY HIT THE KILL SWITCH ON THE REMOTE, AND REPAIR OR REPLACE THE STICKING SOLENOID VALVE.

https://truckmanualshub.com/

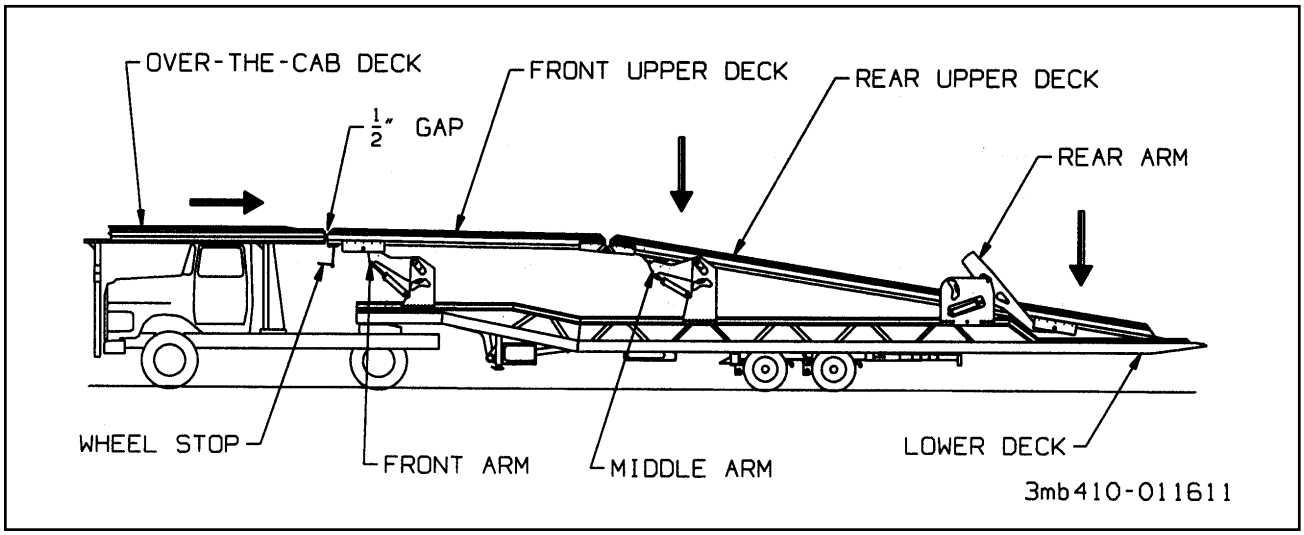

Figure 3-7 Lining Up the Over-the-Cab Deck

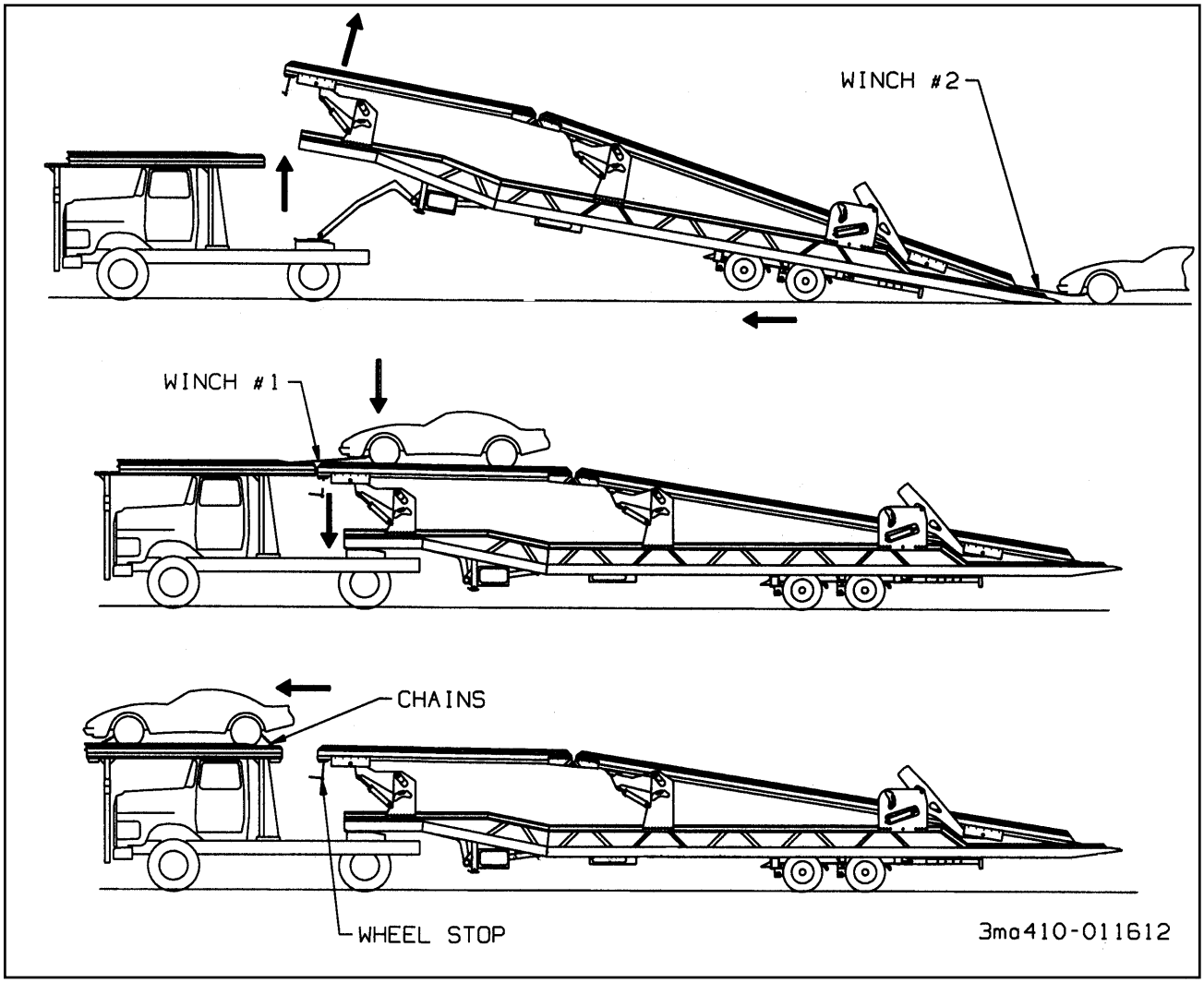

Figure 3-8 Loading the Over-the-Cab Deck

https://truckmanualshub.com/

3-14 LOADING THE 331 OVER-THE-CAB DECK

3-14.1 Unlock and lower the middle arm as far down as it will go **(See Figure 3-7)**.

3-14.2 Unlock and lower the rear arm until the back edge of the upper deck touches the lower deck.

3-14.3 Unlock and adjust the front arm so it is level with the over-the-cab deck.

3-14.4 Swing down the wheel stops on the front of the 336C upper deck.

3-14.5 Slide the over-the-cab deck back to 1/2" from the 336C upper deck.

3-14.6 Unlock and raise the front arm as high as it will go **(See Figure 3-8).**

3-14.7 Make sure the trailer axles are all the way forward. Tilt the trailer with the **TRAILER TILT CONTROL,** until the approach plate of the lower deck touches the ground **(See Figure 3-8)**.

3-14.8 Prepare the first vehicle to be winched onto the trailer. Connect winch #2 **(See Figure 3-6)** to the first vehicle and pull it to the front of the upper deck. Secure the vehicle so it will not roll forward or backward.

3-14.9 Tilt the front of the trailer back down as far as it will go.

⚠ DANGER

DO NOT ALLOW THE VEHICLE TO FREE-WHEEL FORWARD OR IT COULD RUN OFF THE FRONT OF THE OVER-THE-CAB BED RESULTING IN DAMAGE TO PROPERTY, SERIOUS PERSONAL INJURY, OR DEATH.

3-14.10 Unlock and adjust the front arm so it is level with the over-the-cab deck again.

3-14.11 Make sure the wheel stops of the over-the-cab bed are up in position to stop the vehicle.

3-14.12 Connect winch #1, from the over-the-cab deck, to the vehicle and disconnect winch #2. Prepare the vehicle to be winched onto the over-the-cab deck.

3-14.13 Pull the vehicle onto the over-the-cab deck and secure with chains as shown in **Figure 3-12 (See Section 3-17).**

3-14.14 Slide the over-the-cab deck forward all the way.

3-14.15 Raise the front wheel stop on the upper deck of the 336C trailer.

https://truckmanualshub.com/

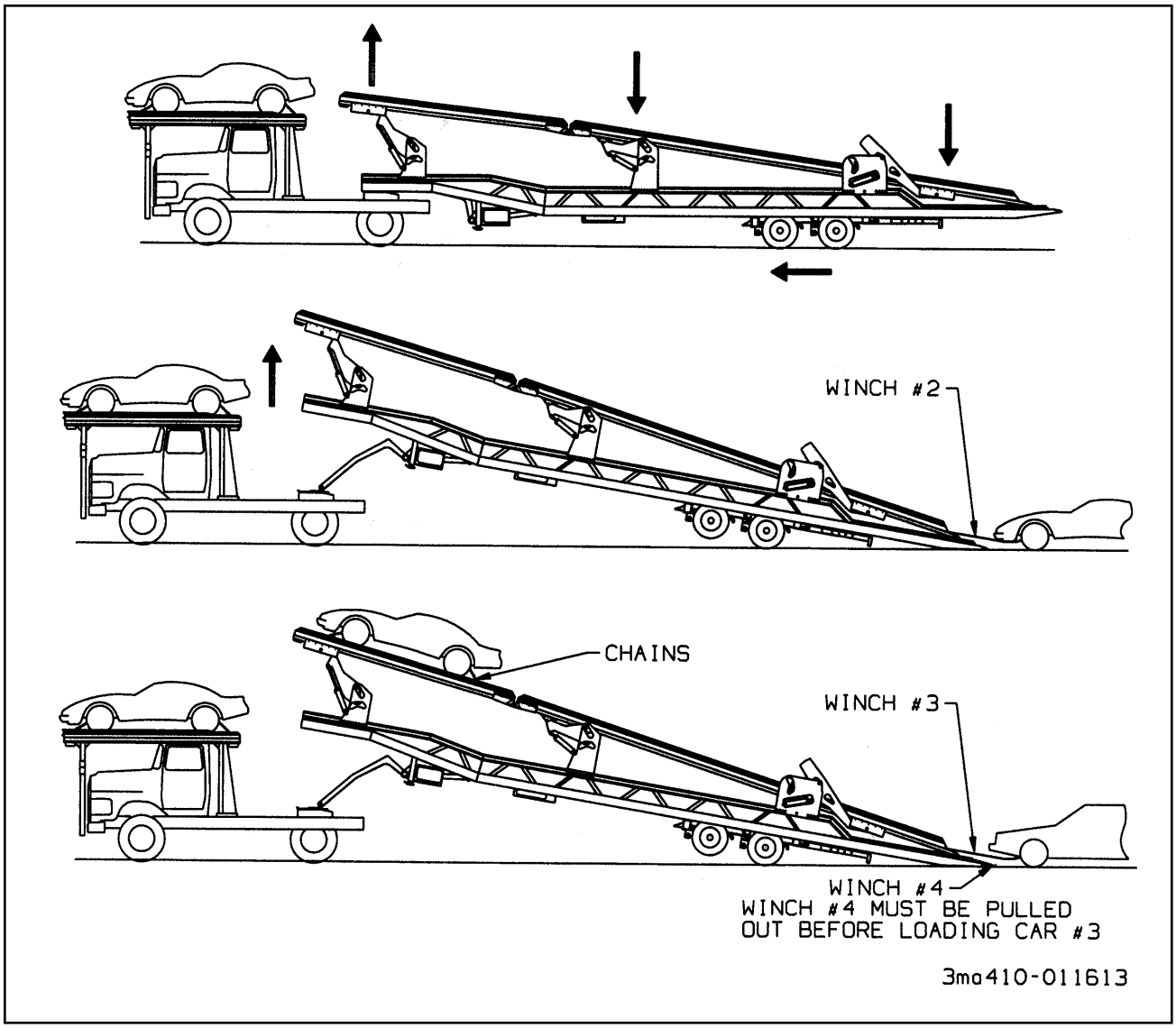

Figure 3-9 Loading the Upper Deck

3-15 LOADING THE UPPER DECK

3-15.1 Pull the trailer axles all the way forward.

3-15.2 Unlock and lower the middle arm as far down as it will go **(See Figure 3-9).**

3-15.3 Unlock and lower the rear arm until the back edge of the upper deck touches the lower deck.

3-15.4 Unlock and raise the front arm as high as it will go.

3-15.5 Make sure the trailer axles are all the way forward. Tilt the trailer with the **TRAILER TILT CONTROL** until the approach plate of the lower deck touches the ground.

3-15.6 Connect winch #2 **(See Figure 3-6)** to the vehicle and pull it to the front of the upper deck. Make sure there is adequate clearance between the over-cab vehicle and the vehicle on the trailer to allow for swing clearance. 2-1/2 feet clearance is usually required. Secure vehicle with chains **(See Section 3-17)**.

https://truckmanualshub.com/

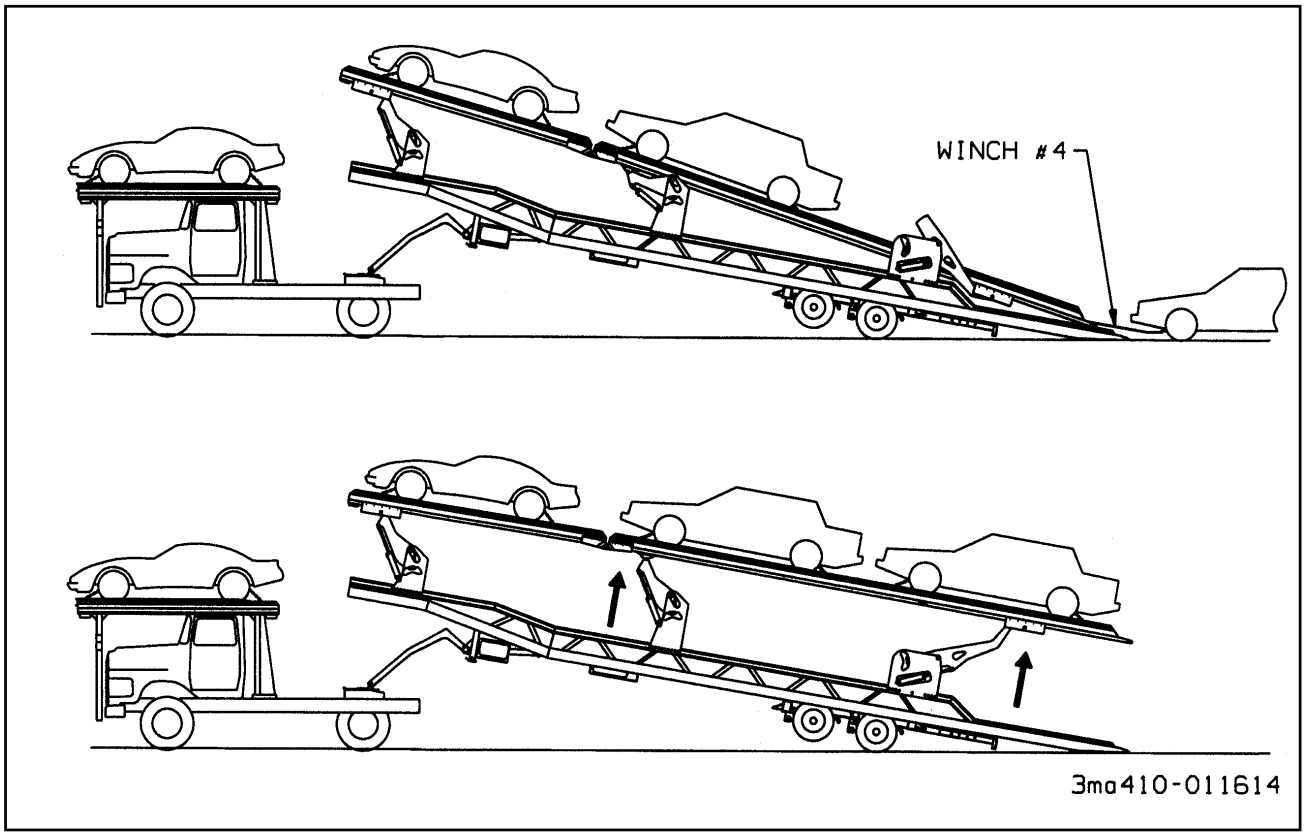

Figure 3-10 Loading the Upper Deck

3-15.7 Free-wheel the winch cable from winch #4 **(See Figure 3-6)** out until it is at the rear of the upper deck so it is accessible after loading the next vehicle.

3-15.8 Connect winch #3 **(See Figure 3-6)** to the next vehicle and pull it to the center position on the upper deck. Secure with chains **(See Section 3-17)**.

3-15.9 Connect winch #4 **(See Figure 3-6)** to the next vehicle and pull it to the rear position on the upper deck **(See Figure 3-10).** Secure with chains **(See Section 3-17)**.

3-15.10 Unlock and raise the rear arm to an adequate height to allow clearance for loading vehicles on the lower deck.

3-15.11 Unlock and raise the middle arm to an adequate height to allow clearance for loading vehicles on the lower deck.

3-15.12 Ensure that all arms are locked in position **(See Section 3-12).**

3-16 LOADING THE LOWER DECK

3-16.1 Make sure there is adequate clearance between the upper and lower deck to load vehicles on the lower deck **(See Figure 3-11).**

3-16.2 If the approach plate is not already on the ground, pull the trailer axles forward, then tilt the trailer with the **TRAILER TILT CONTROL** until the approach plate of the lower deck touches the ground**.**

https://truckmanualshub.com/

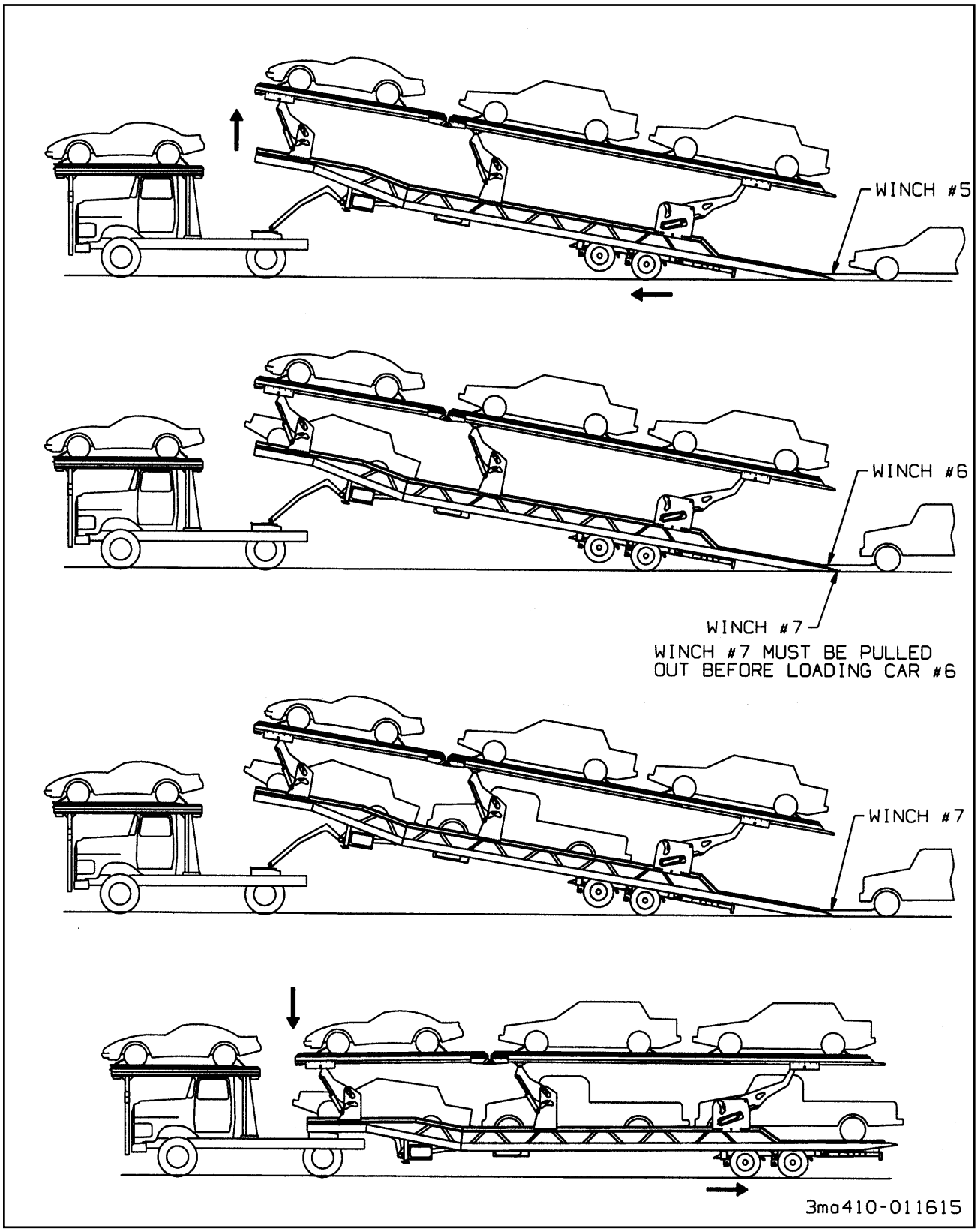

Figure 3-11 Loading the Lower Deck

https://truckmanualshub.com/

3-16.3 Connect winch #5 **(See Figure 3-6)** to the next vehicle and pull it to the front of the lower deck as far as possible without interfering with the upper deck. Secure with chains **(See Section 3-17).**

3-16.4 Free-wheel the winch cable from winch #7 **(See Figure 3-6)** out until it is at the rear of the lower deck so it is accessible after loading the next vehicle.

3-16.5 Connect winch #6 **(See Figure 3-6)** to the next vehicle and pull it to the center position on the lower deck. Secure with chains **(See Section 3-17)**.

3-16.6 Connect winch #7 **(See Figure 3-6)** to the next vehicle and pull it to the rear position on the lower deck. Secure with chains **(See Section 3-17)**.

3-16.7 Lower the front of the semitrailer. Then move the axles to the rear until the semitrailer is in transport position.

3-16.8 Lower the arms; front first, then middle, then rear; to allow a minimum clearance of 1" above the vehicles on the lower deck **(See Figure 3-11)**.

3-17 SECURING THE LOAD

3-17.1 All vehicles must be securely tied front and rear to the deck with 5/16 HI-TEST chain. Key holes are provided in the front and rear of each deck floor to anchor and D-rings are provided in the mid section of each trailer deck for anchoring **(See Figure 3-12)**.

3-17.2 The front of each vehicle must be secured to the load anchor ahead of the vehicle, and the rear of each vehicle must be secured to the anchor behind it.

3-17.3 There must not be any slack in the chains or the vehicles will be allowed to shift. A shifting load will create sufficient momentum to break HI-TEST chains. Remove chain slack by using chain boomers, or other slack adjusters designed to be used for securing loads.

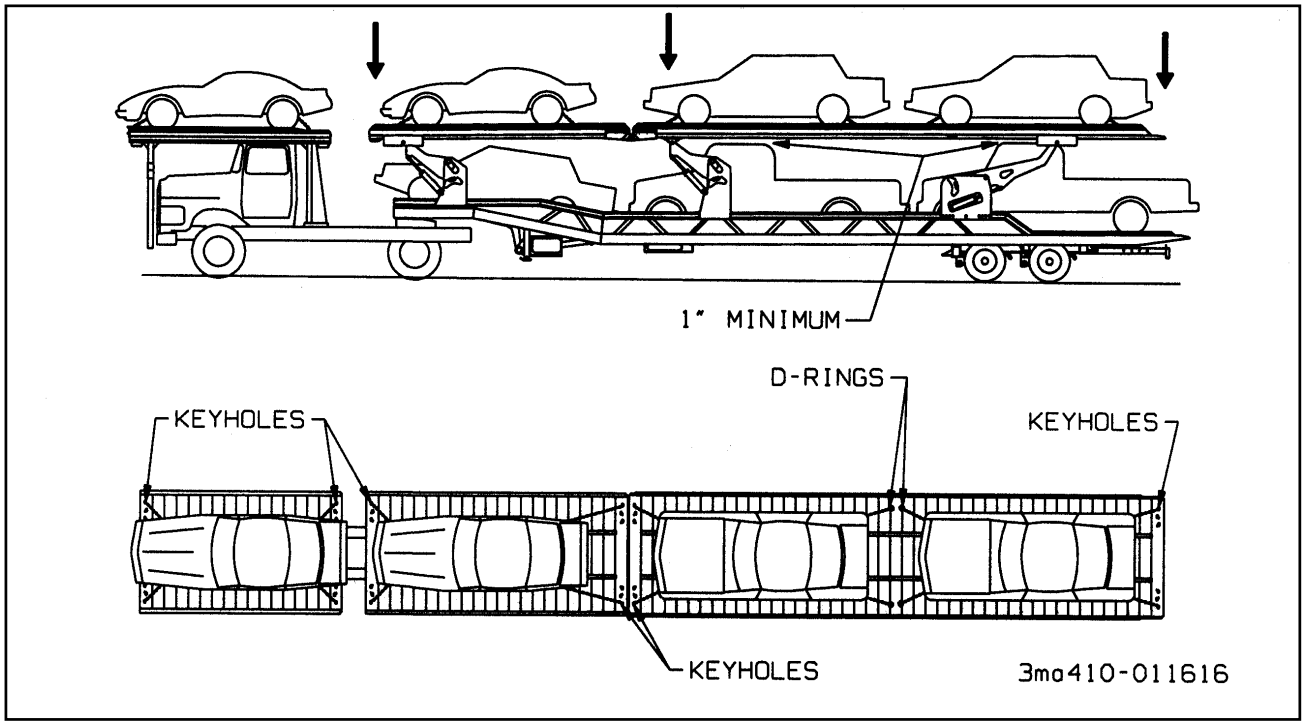

Figure 3-12 Securing the Load

https://truckmanualshub.com/

3-18 UNLOADING THE LOWER DECK

⚠ WARNING

1. THE SEMITRAILER MUST BE COUPLED TO A TRACTOR AND THE LANDING GEAR RAISED OFF THE GROUND BEFORE OPERATING.

2. DO NOT OPERATE TRAILER HYDRAULICS UNLESS TRACTOR BRAKES ARE LOCKED.

⚠ WARNING

DO NOT EXCEED THE GROSS AXLE WEIGHT RATINGS FOR ANY AXLE ON YOUR VEHICLE. THE COMBINED WEIGHT OF THE TRACTOR, SEMITRAILER, AND CARGO MUST NOT EXCEED THE GROSS VEHICLE WEIGHT RATING (GVWR) OF THE TRACTOR.

3-18.1 Insure that the winch cables are firmly attached to the vehicles and sufficient tension is on the cables so load securing chains can be safely removed.

3-18.2 Unlock and raise any of the arms necessary so that all vehicles on the lower deck will clear the upper deck while unloading.

3-18.3 Move the axles forward.

3-18.4 Tilt the trailer up until the approach plate touches the ground.

3-18.5 With load securing devices removed, reel out the winch on which the rear most vehicle is attached so that the vehicle moves back towards the rear of the semitrailer. Insure that the load is steering straight so it does not maneuver off the side of the semitrailer.

⚠ WARNING

WHEN REMOVING LOAD, INSURE THAT THE LOAD IS STEERING STRAIGHT SO IT DOES NOT MANEUVER OFF THE SIDE OF THE SEMITRAILER. FAILURE TO DO SO COULD RESULT IN DAMAGE TO EQUIPMENT, INJURY, OR DEATH.

3-18.6 After the vehicle is completely off the rear of the semitrailer disconnect the winch cable and store it on the lower deck.

3-18.7 Move the vehicle out of the way or move the semitrailer away from the vehicle. Return the semitrailer to transport position before moving it.

3-18.8 Repeat **steps 3-18.5 through 3-18.7** until the lower deck is unloaded.

3-19 UNLOADING UPPER DECK

3-19.1 Insure that the winch cables are firmly attached to the vehicles and sufficient tension is on the cables so load securing chains can be safely removed.

3-19.2 Unlock and lower the middle arm as far down as it will go.

3-19.3 Unlock and lower the rear arm until the back edge of the upper deck touches the lower deck.

3-19.4 Unlock and raise the front arm as high as it will go.

3-19.5 Follow **steps 3-18.5 through 3-18.7** for unloading the vehicles.

https://truckmanualshub.com/

3-20 UNLOADING THE 331 OVER-THE-CAB DECK

3-20.1 Lower the front of the semitrailer to the transport position.

3-20.2 Unlock and lower the middle arm as far down as it will go.

3-20.3 Unlock and lower the rear arm until the back edge of the upper deck touches the lower deck.

3-20.4 Unlock and adjust the front arm so it is level with the over-the-cab deck.

3-20.5 Put down the wheel stops on the front of the 336A upper deck.

3-20.6 Slide the over-the-cab deck back to 1/2" from the 336C upper deck.

3-20.7 Insure that the winch cables are firmly attached to the vehicles and sufficient tension is on the cables so load securing chains can be safely removed.

3-20.8 Reel out winch #1 **(See Figure 3-6)** to allow the vehicle to move off of the Over-the-cab deck and onto the trailer upper deck.

3-20.9 After the vehicle is completely on the trailer bed, secure the vehicle so winch #1 **(See Figure 3-6)** can be disconnected and winch #2 **(See Figure 3-6)** can be connected to the vehicle.

3-20.10 Secure winch #1 cable to the over-the-cab deck.

3-20.11 Slide the over-the-cab deck forward to transport position.

3-20.12 Follow the procedure for unloading the trailer upper deck.

3-20.13 Prepare trailer for transport.

3-20.14 Disengage the P.T.O. system of the tractor.

3-21 REAR IMPACT GUARD SYSTEM

Vehicle standards FMVSS No. 224, Rear Impact Protection, requires all 336 Series trailers manufactured after January 26, 1998 to be equipped with a rear impact guard certified by the manufacturer as meeting FMVSS No. 223, Rear Impact Guards. The guard, or bumper, **(See Figure 3 -13)**, meets the following requirements:

- **minimum of 4 inches vertical height**
- **extend laterally to within 4 inches of the sides of the trailers**
- **ground clearance of no more than 22 inches**
- **placed no more than 12 inches from the rear of the trailer**
- **capable to deflect 5 inches**

The standard also specifies minimum force and energy absorption requirements for the guard. A DOT decal certifies that the guard meets FMVSS No. 223 and 224 standards. The decal is placed **and must remain at all times** on the forward facing surface of the guard, 12 inches inboard of the curbside and of the guard. **See Figure 3-13** for location of decals.

Replace any component that does not allow the above minimum requirements to be met. Any hardware that holds the rear impact guard and becomes damaged or becomes loose shall be removed and replaced. The 3/4" grade 8 screws that hold the bumper energy pack shall be loctited and torqued to 280 ft-lbs.

⚠ DANGER

ALWAYS CHECK THE CONDITION OF THE REAR IMPACT GUARD SYSTEM. IF GUARD SYSTEM HAS BEEN DAMAGED, IT MUST BE REPLACED. FAILURE TO MAINTAIN GUARD SYSTEM MAY RESULT IN INJURY OR DEATH TO OTHERS.

https://truckmanualshub.com/

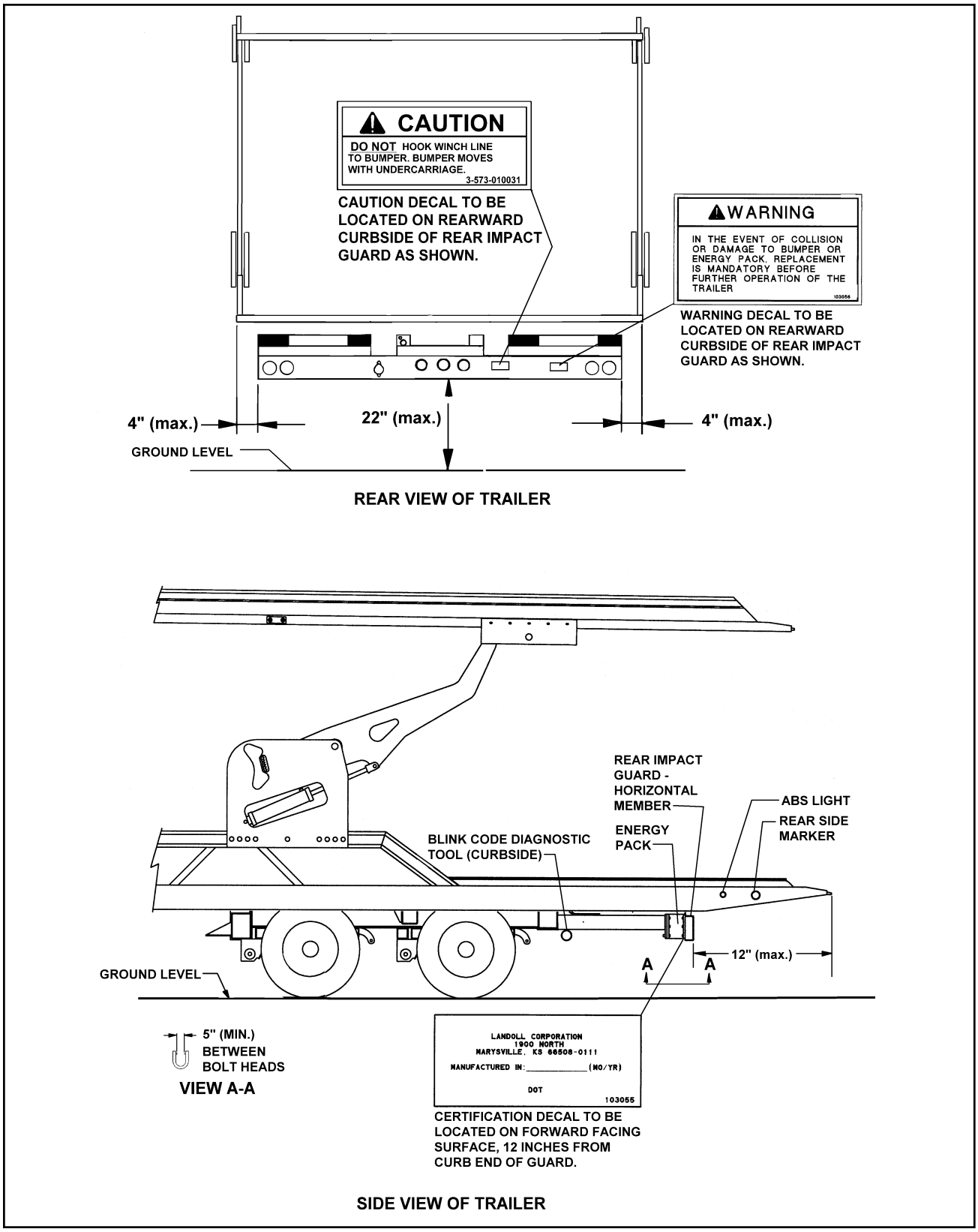

Figure 3-13 Rear Impact Guard and Antilock Brake System

https://truckmanualshub.com/

3-22 ANTI-LOCK BRAKE SYSTEM (ABS)

Vehicle standards FMVSS No. 121 anti-lock brake system requires all trailers with air brake systems to have ABS after March 1, 1998. Each trailer (including a trailer converter dolly) shall be equipped with an anti-lock brake system that controls the wheels of at least one axle of the trailer. Wheels on other axles of the trailer may be indirectly controlled by the anti-lock brake system.

NHTSA Docket 92-29; notice 11 published September 23, 1996 specifies the ABS warning light be mounted near the rear of the left side of the trailer **(See Figure 3-13).**

- **Decal or lens marking with ABS to identify the lamp**
- **The lamp must illuminate one time whenever power is supplied to the ABS. When the light remains on while power is supplied and the vehicle has been pulled faster than 4 mph, there is a malfunction of the system.**

The ABS used on the semitrailer is a commercial unit. Single axle trailers use a two wheel sensor and one valve system. The valve is an ABS relay valve with integrated electronic control unit. The wheel sensors check for wheel lock-up. The valve modulates both sides of trailer if either side starts to lock up.

Tandem axle and triple axle trailers use a four wheel sensor and two valve system. Sensors are located on the front and rear axles. Even triple axle trailers with lift axle have wheel sensors on the front and rear axles because the ECU can detect when the axle is lifted and will disregard it's reading. One of the valves is an ABS relay valve with integrated electronic control unit. The other valve is an ABS relay valve that is controlled by the electronic control unit on the first valve. The valve with the integrated electronic control unit controls the brakes on the right side of the trailer. The other valve controls the brakes on the left side of the trailer. For example, if either the front or the rear axle on the right side of the trailer begin to lock up, the valve with the integrated electronic control unit will modulate all the brakes on the right side of the trailer to prevent the lock-up.

It is important that all the wheel sensor wires go to the correct connection on the integrated electronic control unit so the valves modulate the correct brakes and so the diagnostic codes are correct.

The ABS is constant powered by the auxiliary (blue) circuit, center pin on the semitrailer seven way electrical connector. This circuit must be hot whenever the tractor key switch is on. This circuit must also not be used to power any additional devices while the semitrailer is moving forward. However, additional devices such as remote controls may be powered from the the auxiliary circuit while the semitrailer is stationary. Back up power to the ABS is supplied through the stop lamp (red) circuit, No. 4 pin on the seven way connector, and ground is supplied by the white wire, No. 1 pin.

⚠ CAUTION

THE AUXILIARY (BLUE) CIRCUIT IS FOR POWERING THE SEMITRAILER ABS. THIS CIRCUIT MUST BE HOT WHEN THE TRACTOR KEY SWITCH IS ON. NO OTHER ELECTRICAL DEVICES MAY BE POWERED BY THIS CIRCUIT WHILE THE SEMITRAILER IS MOVING FORWARD.

https://truckmanualshub.com/

Malfunction in the ABS is signaled by illumination of the ABS warning lamp located at the left rear side of the semitrailer. The warning lamp will come on and stay on while power is supplied to the ABS on a moving vehicle, if there is a fault. If a fault in the ABS exists, normal braking will still occur, but wheels may lock. The semitrailer is still operable, but the system should be serviced as soon as possible.

⚠ CAUTION

IF A FAULT EXISTS IN THE SEMI-TRAILER ABS, NORMAL BRAKING WILL OCCUR, BUT WHEELS MAY LOCK. SERVICE THE ABS AS SOON AS POSSIBLE.

The ABS is also equipped with a Blink Code Diagnostic Tool mounted at the right rear corner of the undercarriage or at the right rear of the trailer. This tool is used to identify faults that may occur in the ABS so that they may be repaired.

Refer to ABS maintenance manual supplied with semitrailer to answer basic questions for the anti-lock brake system, obtain outline procedures on how to adjust, test, remove, and install ABS components, as well as how to test for faults in the system by using “Blink Code Diagnostics”; and illustrates ABS components, wiring, and plumbing installation diagrams.

3-23 COLD WEATHER OPERATION

3-23.1 Cold weather causes lubricants to congeal, and insulation and rubber parts to become hard, which may lead to problems in bearings, electrical systems, and air systems. Moisture attracted by warm parts can condense, collect and freeze to immobilize equipment. The tractor/trailer operator must always be alert for indicators of cold weather malfunctions.

3-23.2 During any extended stop period, neither the service nor parking brake should be used as they can freeze up. Use wheel chocks to secure the vehicle from moving.

3-23.3 Check all structural fasteners, air system fittings, gaskets, seals and bearings for looseness that can develop due to contraction with cold. Do not over-tighten.

3-23.4 Check tire inflation. Tire inflation decreases when the temperature decreases.

3-23.5 Periodically check drain holes in the bottom of the storage compartments. They must be open at all times to avoid moisture entrapment.

3-24 HOT WEATHER OPERATION

3-24.1 Hot weather operation can cause expansion of parts resulting in tightening of bearings, fasteners, and moving parts. Failure of gaskets or seals can occur.

3-24.2 The semitrailer should be parked in the shade, if possible. Long exposure to the sun will shorten service life of rubber components (i.e., tires, light and hose grommets, hoses, etc.) and paint life.

3-24.3 Check tire pressure early in the day before beginning operations while the tire is cool. Put all valve stem caps back on after checking.

3-24.4 If the area is extremely humid, protect electrical terminals with ignition insulation spray. Coat paint and bare metal surfaces with an appropriate protective sealer.

https://truckmanualshub.com/

MAINTENANCE AND LUBRICATION 4

This section contains instructions necessary for proper maintenance of the semitrailer. The Model 336C car carrier semitrailer is designed for years of service with minimal maintenance. However, proper maintenance is important for durability and safe operation and is an owner/user responsibility.

⚠ DANGER

OPERATING THE TRACTOR OR SEMI-TRAILER WITH DEFECTIVE, BROKEN OR MISSING PARTS MAY RESULT IN SERIOUS INJURY OR DEATH; DAMAGE TO THE TRACTOR/TRAILER, ITS CARGO, OR PROPERTY IN ITS PATH.

4-1 MAINTENANCE SCHEDULE

Semitrailer maintenance includes periodic inspection and lubrication. **Table 4-2, Maintenance Schedule**, lists the recommended maintenance and lubrication tasks by time interval and by accumulated mileage (use whichever occurs first).

4-1.1 Inspection

a. Inspect the tractor, the semitrailer, and semitrailer parts periodically for damage or signs of pending failure. Damaged or broken parts must be repaired or replaced at once. Determine the cause of any binding or hydraulic leakage at once. Correct the problem before using the tractor or semitrailer.

b. Use the Troubleshooting Guide to check for “SYMPTOMS” and “PROBLEMS” of any semitrailer system not functioning correctly, or where wear, distortion, or breakage are found. Administer “REMEDY” according to the right-hand column of the Troubleshooting Guide.

4-1.2 Lubrication

Figure 4-1 and Table 4-1 details lubrication points and intervals, method of application, and lubricant required, and illustrates the location of each part to be lubricated. During inspections of the semitrailer, if lubricants are found to be fouled with dirt or sand, those parts should be cleaned with paint thinner, dried, and relubricated immediately. Dirt in a lubricant forms an abrasive compound that will wear parts rapidly.

⚠ WARNING

PAINT THINNER AND OTHER SOLVENTS ARE FLAMMABLE AND TOXIC TO EYES, SKIN, AND RESPIRATORY TRACT. AVOID SKIN AND EYE CONTACT. GOOD GENERAL VENTILATION IS NORMALLY ADEQUATE. KEEP AWAY FROM OPEN FLAMES OR OTHER COMBUSTIBLE ITEMS.

https://truckmanualshub.com/

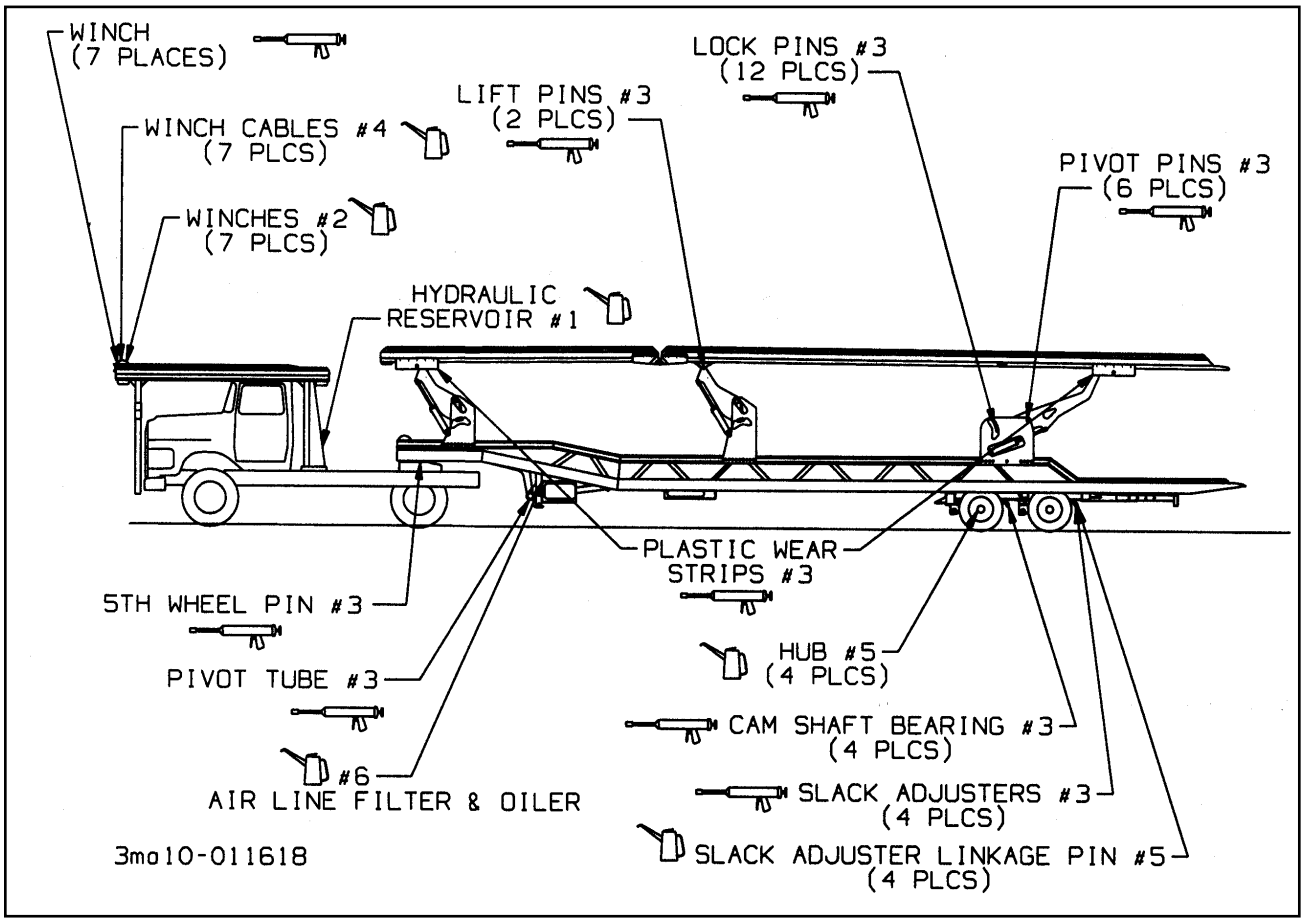

Figure 4-1 Lubrication Points

LUBE	SEASON	BRAND AND PRODUCT (WEIGHT AND/OR TYPE)			
		AMOCO	EXXON	PHILLIPS	TEXACO
1	ALL YEAR	Rycon MV	HDX Plus 10W	Magnus Oil A KV 5W-20	Rando HD-AZ
2	SUMMER	Permagear EP 460 SAE 140	Spartan 460 SAE 140	Phil Gear Lube 460 SAE 140	Meropa 460 SAE 140
	WINTER	Permagear EP 220 SAE 90	Spartan 220 SAE 90	Phil Gear Lube 220 SAE 90	Meropa 220 SAE 90
3	ALL YEAR	Lit-Multi-purpose Grease	Ronex Multi-purpose Grease	Phil Lube M.W. Grease	MarFax All Purpose
4	ALL YEAR	Industrial Oil 32	Estic 32	Condor 32 or Magnus 32	Regal Oil R&O 32
5	ALL YEAR	Gear Lube SAE 80W-90	Gear Oil GX SAE 80W-90	Superior MP Gear Oil SAE 80W-90	Multi-gear EP SAE 80W-90
6	ABOVE 0° F	Ultimate Gold 10W-30, 10W-40	SuperFlow 10W-30, 10W-40	Tropartic 10W-30, 10W-40	Havoline 10W-30, 10W-40
	BELOW 32° F	Ultimate Gold 5W-20, 5W-30	SuperFlow 5W-20, 5W-30	Tropartic 5W-20, 5W-30	Havoline 5W-20, 5W-30

Table 4-1 Lubrication Specifications

https://truckmanualshub.com/

NORMAL OPERATING SERVICE INTERVALS a								
SERVICE INTERVAL : ITEM	TIMES	1st 5 Hrs	Weekly	Monthly	6 Months	Yearly	LUBE #	NOTES
	MILES	50	500	2,000	12,000	25,000		
LIGHTS		I	I					
WIRING & CONNECTIONS		I		I				
FASTENERS		I, T		I				b
PIVOT PIN, LIFT PINS AND LOCK PINS			I	I,L			3	
PLASTIC WEAR STRIPS		I		I	C		3	g
KING PIN & PLATE		I		C, I, L			3	c
WINCH CABLE ASSEMBLIES		I		I,L			4	h
BRAKE AIR SYSTEM		I	I	I				
RELAY VALVES						I, C		
BRAKE ADJ & WEAR		I		I, T				d
SLACK ADJUSTERS		I	I		L		3	c
CAMSHAFT ASSYS		I	I			L	3	c
HUB OIL		I	I, L			R	5	c
WHEEL BEARINGS		I			I, T		5	c
TIRE INFLATION & WEAR		I	I					e
WHEEL LUG NUTS		I, T	I	I, T				f
HYDRAULIC OIL		I	I			R	1	c
HYDRAULIC FILTER		R			R			
HOSES (Inspect & Replace as needed)		I		I		I ,R		
WINCH GEAR CASE		I		I			2	c
AIR LINE FILTER		I			R			
AIR LINE LUBRICATOR		I	I			R	1	c

I – Inspect, R – Replace, T– Tighten/ Adjust Torque, L – Lubricate, C – Clean

NOTES:

a. Perform at the time shown. Shorten service intervals when operating in severe or dirty conditions.
b. See **Tables 2-1and 2-2** (General and Hydraulic Fitting Torque Charts) for correct torque.
c. See **Table 4-1** (Lube Specification Chart) for recommended lubricant.
d. Call Landoll Customer Services for procedures to replace.
e. See Serial Number Plate on the front of the semitrailer for proper inflation requirements.
f. See **Figure 4-20,** Stud Tightening Sequence.
g. Plastic wear strips are self lubricating. If chatter or squealing occurs, use dry silicone spray only.
h. Inspect prior to and after each use.

Table 4-2 Maintenance Schedule

https://truckmanualshub.com/

4-2 MAINTENANCE PROCEDURES

4-2.1 Repair Parts

Repair parts are illustrated and listed in a separate parts manual. Replacement of parts due to wear is determined by examination and measurement in the Maintenance Procedures of the section.

4-2.2 Tool and Equipment

Tools, equipment, and personnel normally found in a facility capable of making truck repairs will be adequate for maintenance of the semitrailer. No other special tools or equipment should be necessary.

4-2.3 Torque Values.

Tables 2-1 and 2-2 lists torque values for standard hardware and is intended as a guide for average applications involving typical stresses and mechanical surfaces. Values are based on the physical limitations of clean, plated, and lubricated hardware. In all cases, when an individual torque value is specified, it takes priority over values given in this table. Replace original fasteners with hardware of equal grade.

4-2.4 Cleaning

⚠ WARNING

1. PAINT THINNER AND OTHER SOLVENTS ARE FLAMMABLE AND TOXIC TO EYES, SKIN, AND RESPIRATORY TRACT. AVOID SKIN AND EYE CONTACT. GOOD GENERAL VENTILATION IS NORMALLY ADEQUATE. KEEP AWAY FROM OPEN FLAMES OR OTHER COMBUSTIBLE ITEMS.

2. DO NOT ALLOW ALUMINUM BRIGHTENER OR OTHER ACID COMPOUNDS TO CONTACT HYDRAULIC HOSES. THE HOSE COVERS ARE SUSCEPTIBLE TO ACID DETERIORATION.

a. Wash semitrailer to remove all accumulated dirt and grime. For washing aluminum use water and a mild, non-abrasive soap or detergent such as those recommended for automotive finishes; or a non-etching, non-abrasive aluminum cleaner. Use a soft cloth or sponge. Rinse with clear water and dry with a chamois or cloth to prevent spotting or streaking. Wax with a liquid or paste wax recommended for the care of automotive finishes. Wax should be applied every three to six months or more frequently if exposed to extreme weather.

b. Clean the sliding surfaces with solvent or mineral spirits every six months or more frequently if exposed to extreme dirt or weather conditions. The slide wear strips are impregnated with a special lubricant, however, additional lubrication may be required to prevent chattering or squealing. **See Lubrication Points and Specifications in Figure 4-1 and Table 4-1** .

c. After disassembling any components, thoroughly clean dirt and old lubricant from all parts. Do not use a wire brush on any bearing parts or surfaces — use a stiff bristle brush. Do not use compressed air, or spin bearing parts when cleaning. These practices can throw solvents, dirt, or metal particles into your eyes. Dry clean parts with lint free, clean, soft, absorbent, cloth or paper. Wash and dry hands.

d. Inspect seals, seal wiping surfaces, bearing caps, and bearing cones for wear, pitting, chipping, or other damage.

e. Use Troubleshooting Guide to check for "**SYMPTOMS"** AND **"PROBLEMS"** of any semitrailer system not functioning correctly, or where wear distortion, or breakage can be found. Administer **"REMEDY"** according to right-hand column of Troubleshooting Guide **(See Section 5)**.

f. Inspect seals, seal wiping surfaces, bearing caps, and bearing cones for wear, pitting, chipping, or other damage.

https://truckmanualshub.com/

4-3 FRAME AND DECK

4-3.1 Repairing Structural Defects

If any structural defect is found, the fault must be corrected before further use of the vehicle. To continue usage could endanger the semitrailer, its load, personnel, traffic, and properties. If any cracks or breaks are found, return the semitrailer to Landoll factory for repairs. Inspect the deck daily for broken or missing attachments. Replace any defective parts promptly.

4-4 HYDRAULIC SYSTEM

4-4.1 General

⚠ CAUTION

DO NOT ALLOW ALUMINUM BRIGHTENER OR OTHER ACID COMPOUNDS TO CONTACT HYDRAULIC HOSES. THE HOSE COVERS ARE SUSCEPTIBLE TO ACID DETERIORATION.

a. Check the oil level of the tractor wet kit hydraulic tank weekly, or after any leakage. **See Table 4-1** for proper hydraulic oil. Check the hydraulic oil level with hydraulic cylinders in the retracted position. Disengage the hydraulic pump.

b. Overfilling can cause hydraulic fluid overflow during operation.

4-4.2 Pressure Settings

a. All sections on the 6 spool valve are set at 2500 psi. Sections 7 and 11 on the 5 spool valve are set at 2500 psi. Sections 8, 9 and 10 have relief valves. The front ports of sections 8 and 9 should be set at 1500 psi and the rear ports at 500 psi. The front port of section 10 should be set at 2500 psi and the rear port at 500 psi. **(See Figure 4-2).**

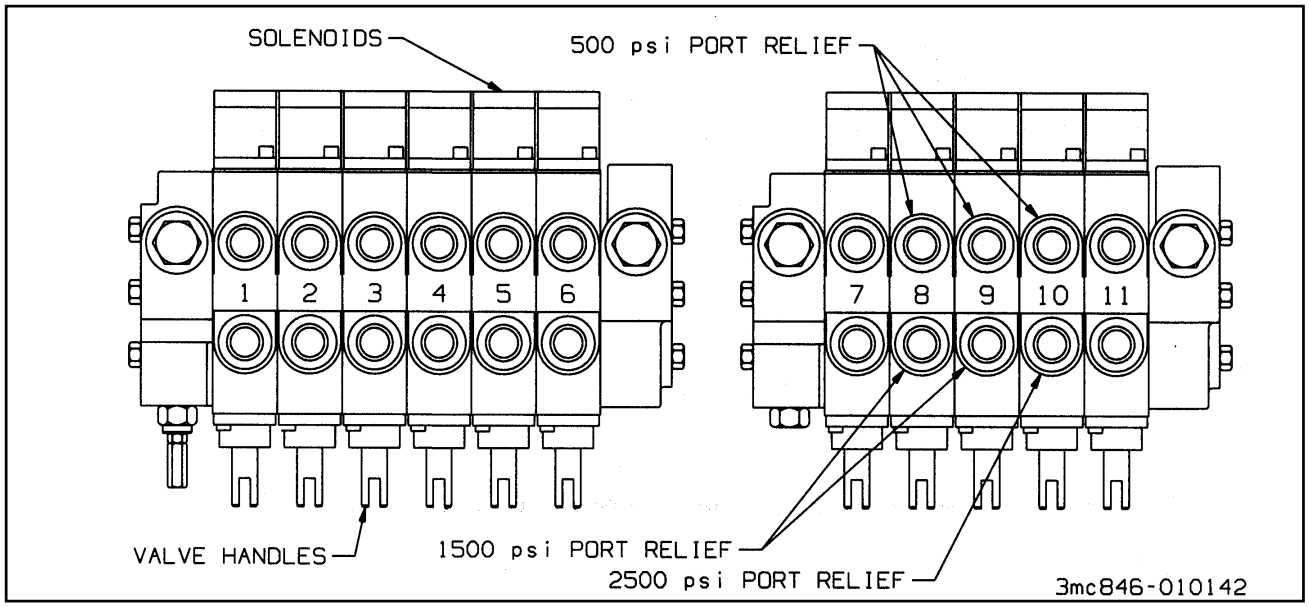

Figure 4-2 Pressure Settings for Control Valve Ports

https://truckmanualshub.com/

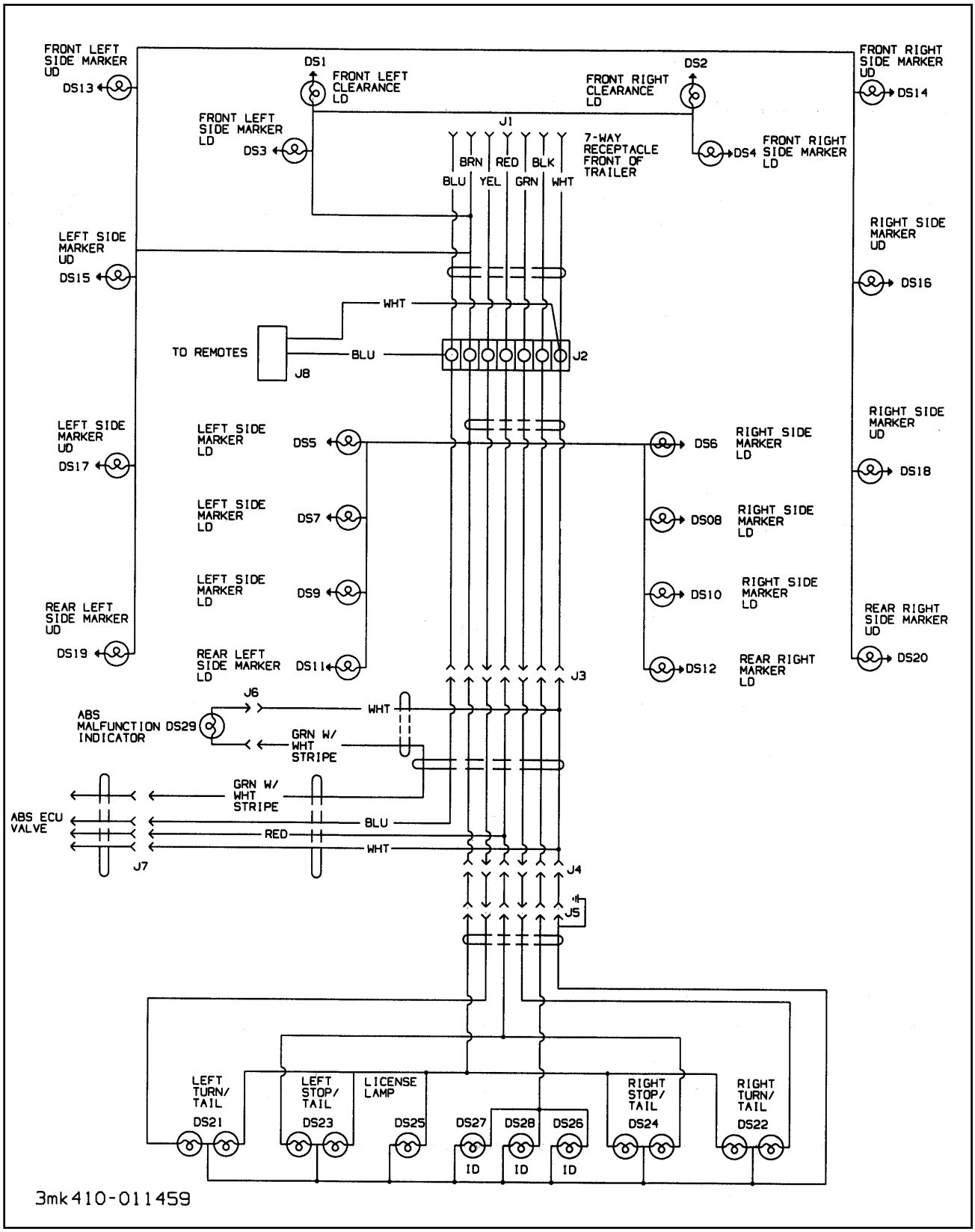

Figure 4-3 336C Wiring Diagram

https://truckmanualshub.com/

4-5 ELECTRICAL SYSTEM

4-5.1 Maintenance of the electrical system consists of inspection and minor servicing. Any wire, connection or electrical component showing signs of corrosion, wear, breakage or unraveling must be repaired or replaced.

4-5.2 Frayed or unraveling wire must have the defective section removed and replaced with wire of the same color and gauge. Seal all connections and insulate.

4-5.3 Corroded terminals must have the corrosion removed, source of corrosion neutralized and the terminals resealed, protected, and insulated.

4-5.4 Fuse or circuit breaker burn-out or blow-out usually indicates an electrical short-circuit, although a fuse can occasionally fail from vibration. Insert a second fuse or reset the breaker. If this fuse immediately burns out or the breaker trips, locate the cause of the electrical short and repair.

4-5.5 A light that repeatedly burns-out usually indicates a loose connection, poor system ground, or a malfunctioning voltage regulator. Locate the source of the problem and repair. System grounds must be grounded to bare metal surfaces. Paint, grease, wax, and other coatings act as insulators. Replacement lamps must be equivalent to the factory installed lamp.

336C WIRING PARTS LIST		336C WIRING PARTS LIST	
REF. DES.	FUNCTION	REF. DES.	FUNCTION
DS1	FRONT LEFT CLEARANCE LD, YELLOW	DS21	LEFT TURN/TAIL, RED
DS2	FRONT RIGHT CLEARANCE LD, YELLOW	DS22	RIGHT TURN/TAIL, RED
DS3	FRONT LEFT SIDE MARKER LD, YELLOW	DS23	LEFT STOP/TAIL, RED
DS4	FRONT RIGHT SIDE MARKER LD,YELLOW	DS24	RIGHT STOP/TAIL, RED
DS5	LEFT SIDE MARKER LD, YELLOW	DS25	LICENSE LAMP
DS6	RIGHT SIDE MARKER LD, YELLOW	DS26	IDENTIFICATION RIGHT, RED
DS7	LEFT SIDE MARKER LD, YELLOW	DS27	IDENTIFICATION LEFT, RED
DS8	RIGHT SIDE MARKER LD, YELLOW	DS28	IDENTIFICATION CENTER, RED
DS9	LEFT SIDE MARKER LD, YELLOW	DS29	ABS MALFUNCTION INDICATOR, YELLOW
DS10	RIGHT SIDE MARKER LD, YELLOW		
DS11	REAR LEFT SIDE MARKER LD, RED	J1	FRONT MAIN CONNECTOR
DS12	REAR RIGHT SIDE MARKER LD, RED	J2	JUNCTION BOX
DS13	FRONT LEFT SIDE MARKER UD, YELLOW	J3	LOWER DECK
DS14	FRONT RIGHT SIDE MARKER UD,YELLOW	J4	U/C CONNECTOR
DS15	LEFT SIDE MARKER UD, YELLOW	J5	BUMPER CONNECTOR
DS16	RIGHT SIDE MARKER UD, YELLOW	J6	ABS LAMP CONNECTOR
DS17	LEFT SIDE MARKER UD, YELLOW	J7	ABS ECU VALVE CONNECTOR
DS18	RIGHT SIDE MARKER UD, YELLOW	J8	REMOTE CONTROL CONNECTOR
DS19	REAR LEFT SIDE MARKER UD, RED		
DS20	REAR RIGHT SIDE MARKER UD, RED		

LD STANDS FOR LOWER DECK
UD STANDS FOR UPPER DECK

Figure 4-4 Model 336C Wiring Parts List

https://truckmanualshub.com/

4-6 REMOTE CONTROL

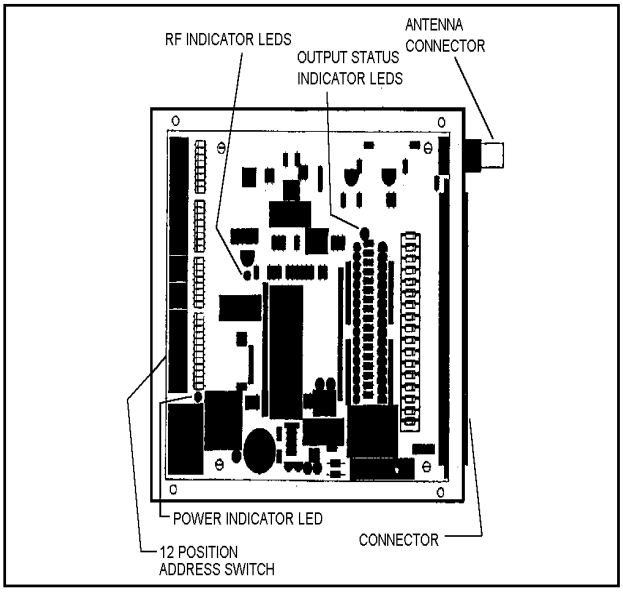

Figure 4-5 Receiver Printed Circuit Board

4-6.1 Care should be taken not to subject the transmitter to excessive abuse.

4-6.2 To remove dirt, grease, and oil, wipe with a cloth soaked with soap and water. For hard stains, a light alcohol based cleaner should be used.

4-6.3 Should moisture build up inside the transmitter housing, remove the cover and allow it to air dry. This process may be sped up using a blow dryer set on a low heat range.

4-6.4 If a unit fails completely or one or two outputs are not working, complete the following procedure:

a. Remove the cover on the receiver. **(See Figure 4-5.)**

b. With power to the receiver, the Power Indicator LED will be on. Turn transmitter power on. At this time the receivers RF Indicator LED will be on for 10 seconds and you will hear the power relay engage. To verify that the power relay is engaged and that the transmitter is transmitting, activate the emergency stop on the transmitter. This will disable the power relay and the transmitter will transmit for 10 seconds. The RF and Power Indicator LED's will be on.

c. To reset the unit, turn the transmitter power off and back on. At this time the receivers RF Indicator LED will be on for 10 seconds and you will hear the power relay engage.

d. When a function is activated on the transmitter, three LED's are turned on in the receiver: RF Indicator LED, Output Status Indicator LED, and Power Indicator LED (always on).

e. If the power relay does not engage, the address codes may not be matching. Compare the 12 position address switches in both transmitter and receiver and then repeat **steps a. and b.** If they both match and still the power relay does not engage, set all 12 of the dip switches to the off position in both the receiver and transmitter and then repeat **steps a. and b.** Call the factory for a new address code or to have the unit shipped back for repair.

https://truckmanualshub.com/

4-7 SUSPENSION MAINTENANCE

4-7.1 Air Ride Suspension

a. Physically check all nuts, bolts, and air line fittings for proper torque (see torque chart below).

AIR SUSPENSION TORQUE CHART				
Size	1-1/8"-7	1/2"-13	*3/4"-16	3/4"-10
Torque in Ft. Lbs.	800	35	35	150

* Air Spring Connections Only.

b. Check all other suspension components for any sign of damage, looseness, wear or cracks.

c. With trailer on level surface and air pressure in excess of 65 psi, all air springs should be of equal firmness. **The height control valve on right side of rear axle controls all air springs.**

4-7.2 Air Ride Height Adjustment (See Figure 4-6 for parts identification).

a. Before adjusting, the vehicle must be empty with the kingpin at operating height and have air supplied to the semitrailer.

b. Disconnect linkage at the control arms and raise control arms to the “up” position, raising the semitrailer the full extent of suspension travel.

c. Position the wood block between the axle tube and frame according to table below.

AIR SUSPENSION RIDE HEIGHT AND BLOCK		
Brake Size	Ride Height	Block Height
12-1/4" Dia.	3.5"	4-1/4"

d. Lower the semitrailer by exhausting all air from the system. Recheck the ride height.

e. Move the control arms to the “down” position (about 45°) for 10-15 seconds. Slowly return the control arms to the center position and insert locating pins into the adjusting block and bracket on the automatic height control valves **(See Figure 4-6)**.

f. Loosen the 1/4" adjusting lock nut located on the adjusting blocks, allowing the control arm to move approximately 1 inch.

g. Reconnect the linkage to the control arm lower brackets and re-tighten the 1/4" adjusting lock nut to 2-4 ft.lbs.

h. Remove the locator pins, pressurize the semitrailer air system, and raise the semitrailer. The height control valves may be used as an improvised jack by disconnecting the control arms at the lower bracket and pushing the control arms to an “up” position.

i. Remove the spacers, exhaust the system and reconnect the linkage. This allows the Automatic Height Control Valves to resume normal operation.

j. Check the air ride height. If necessary, go through the adjustment procedure again until the proper air ride height is achieved.

k. Check the air ride height periodically and adjust as needed.

https://truckmanualshub.com/

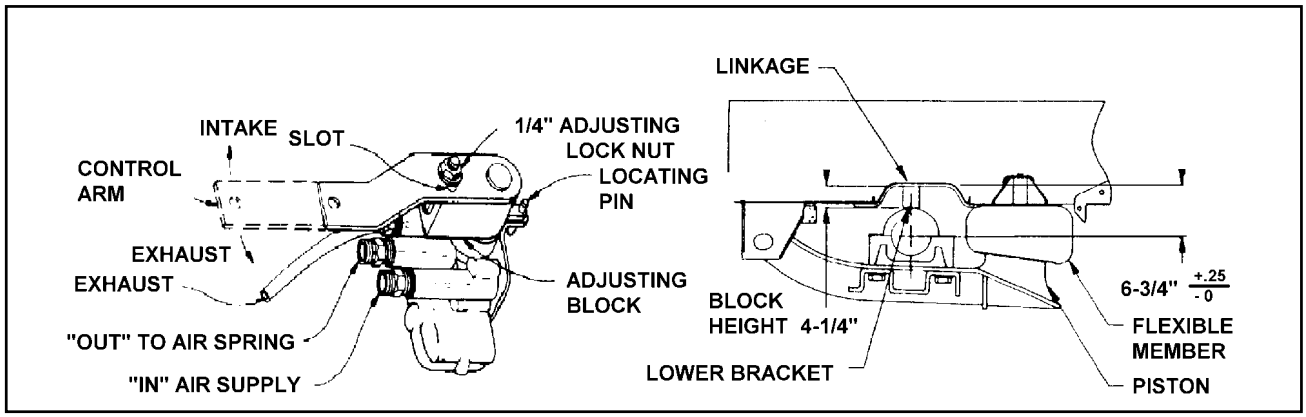

Figure 4-6 Air Ride Height Adjustment

4-8 ALIGNMENT

4-8.1 Wheel Alignment

⚠ DANGER

TO PREVENT A POTENTIALLY LIFE THREATENING ACCIDENT:

1. SUPPORT SEMITRAILER AND UNDERCARRIAGE SO TIRES ARE OFF THE GROUND.

2. SUPPORT THE SEMITRAILER AND UNDERCARRIAGE ON JACK STANDS WITH SUFFICIENT CAPACITY TO SUPPORT THE TOTAL WEIGHT OF THE SEMITRAILER AND ANY LOAD WHICH IT MAY BE CARRYING.

When semitrailer tires show signs of scuffing, feather-edging or uneven wear, examine the semitrailer for damaged suspension (frame, shocks, linkage, etc.), axle, wheel bearings and wheels. Proper wheel alignment and wheel bearing adjustment is essential for proper tire wear. The simplest form of checking wheel alignment “toe” is by running the semitrailer over a “SCUFF GAUGE”. A scuff gauge reading of 16 feet or less per mile is considered satisfactory. If a scuff gauge is not readily available, or edge wear on one side of a tire is occurring signifying positive or negative camber, alignment can be checked as follows:

a. Remove wheel, hub and bearing assemblies.

b. Place a 3-point axle gauge against the front side of the axle, and adjust each axle gauge point to the axle. (Double point end against the inner and outer wheel bearing surfaces of the spindle being checked and the other point on the inner bearing surface on the other spindle **(See Figure 4-7).**

c. Move the axle gauge and place against the back side of the axle. If either of the points of double point end fails to touch the axle surface, a bent spindle is evident. A point gap of .015" or more is considered excessive tire “toe” and the axle must be replaced **(See Figure 4-7)**.

d. Follow the same procedures as in **Section 4-8.1 b. and c.**, except place the axle gauge above and below the axle. If gauge point gap is found, the axle has positive or negative camber. The semitrailer axle has no camber from the factory. If it is found to have positive or negative camber, axle replacement is necessary **(See Figure 4-8** for examples of camber).

https://truckmanualshub.com/

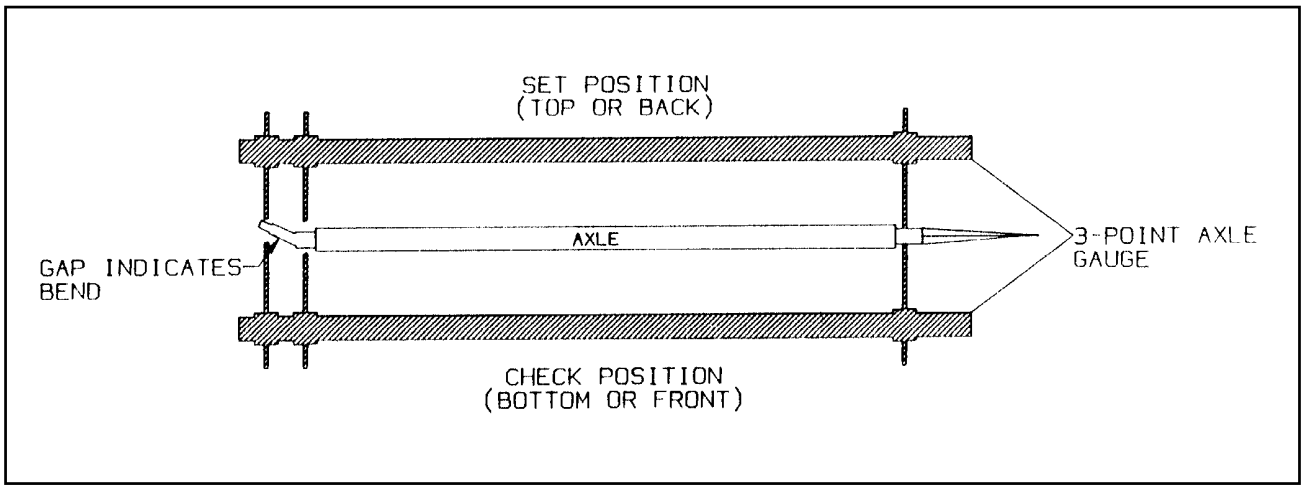

Figure 4-7 Checking Axle for Bend

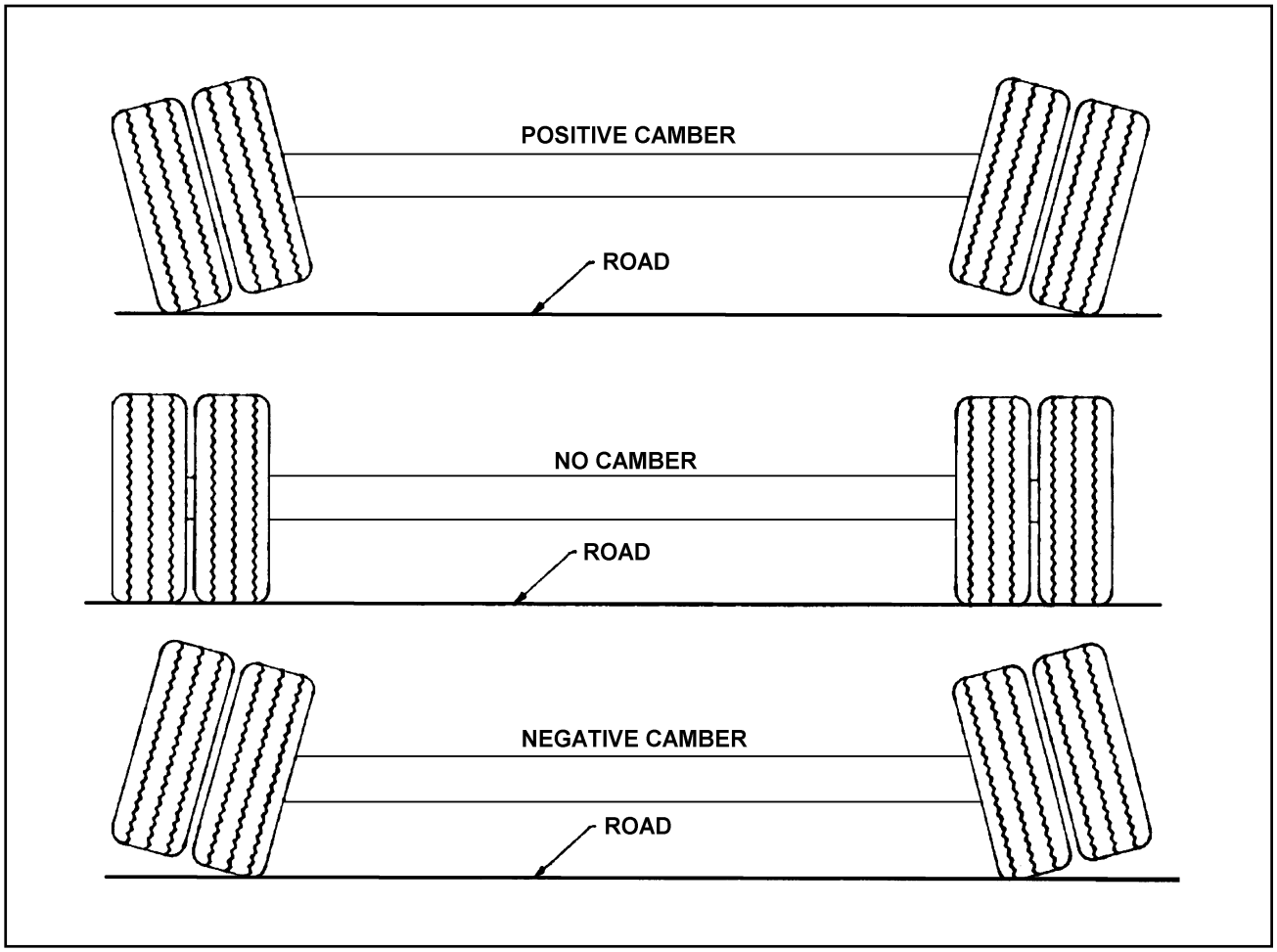

Figure 4-8 Examples of Camber

https://truckmanualshub.com/

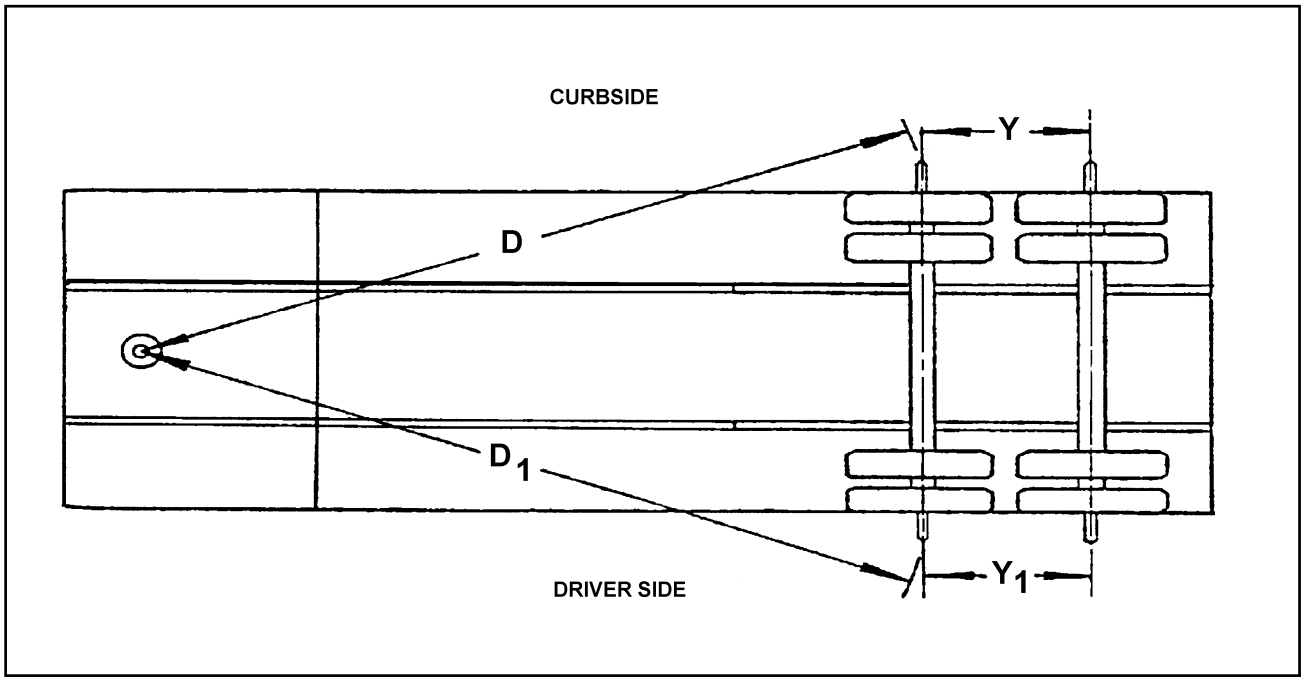

Figure 4-9 Checking Axle Alignment

4-8.2 Axle Alignment

Proper axle to king pin alignment is necessary to obtain straight tracking. If axle alignment is off, “dog-tracking” occurs. Check alignment manually or by using a semitrailer alignment machine. In either case, a thorough inspection of the complete suspension must be performed and all defects corrected before aligning.

a. Manual Alignment Procedure

1. Position semitrailer on a firm and level surface. Insure that the undercarriage is in the rear most position. Eliminate any suspension binding due to sharp turns or unusual maneuvers.
2. Detach tractor from the semitrailer and jack the semitrailer up sufficiently to permit measuring from the underside of the semitrailer.
3. Suspend a plumb bob at axle height from the center of the king pin.
4. Measure (D) from the plumb bob to the center point on one end of the axle. Record this measurement **(See Figure 4-9)**.
5. Measure (D1) to the other end of the axle in the same manner as in Step 4. Record this measurement **(See Figure 4-9)**.
6. Set D about 1/8" shorter than D1 to insure proper semitrailer tracking on slope of road.
7. Align the rear axle to the front axle. The rear axle should be parallel with the front axle, with the dimensions Y and Y1 being the same.
8. The suspensions must be in good repair with no binding or other restrictions before aligning. All defective parts of the suspension or axles must be replaced immediately.

b. Air Ride Suspension

The air ride suspension is aligned and adjusted at the factory and it should not be necessary to align the axles. If, however it does become necessary to align the axles, the procedure is as follows:

1. To align air ride suspension axles, locate the front axles equalizer beam pivot bolt in front hanger at front end of lock nut. Loosen the suspension pivot bolt lock nut. For axle alignment, forward rotate the head of the pivot head clockwise. For axle alignment rearward, rotate the bolt head counter-clockwise.

https://truckmanualshub.com/

2. Align the front axle using the method outlined in **Section 4-8.2a.**
3. After proper alignment has been obtained, tighten the suspension pivot bolt nut to the torque listed in the table in **Section 4-7.1**.
4. Align the rear axle to the front axle. Locate the rear axle equalizer beam pivot bolt in hanger at front end of driver's side rear axle equalizer beam. Loosen the suspension pivot bolt lock nut. Rotate the head of the pivot bolt. For axle alignment forward, rotate bolt head clockwise. For axle alignment rearward, rotate the bolt head counter-clockwise. The rear axle should be parallel with the front axle, with the dimensions Y and Y1 being the same.
5. Tighten the suspension pivot bolt nut to the torque listed in the table in **Section 4-7.1**.

4-9 BRAKE SYSTEM MAINTENANCE

⚠ CAUTION

USE GREAT CARE IF WHEELS OR BRAKE DRUMS MUST BE HANDLED. THEY MAY BE VERY HOT AND CAN CAUSE INJURY.

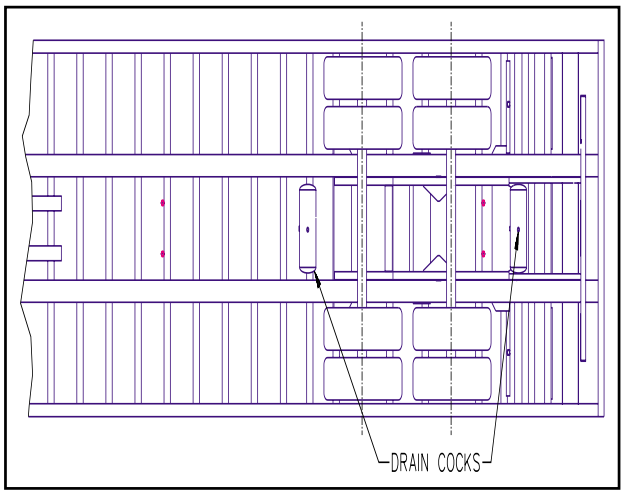

Figure 4-10 Drain Cock Locations

4-9.1 General.

a. Check air hoses for chafing, bends, kinks, or damaged fittings. Replace defective hoses.

b. Check the brake system for loose, missing, deformed, or corroded fasteners. Replace and tighten defective hardware.

c. Check brake linings for excessive wear or distortion.

d. Drain air reservoir daily. A drain cock on the bottom of each air reservoir vents the tank to drain collected water and oil. If held open, air pressure in the tanks is relieved, causing the emergency or parking brakes to be applied **(See Figure 4-10).**

4-9.2 Spring Air Brake

Check for faulty units. Check the condensation holes on the underside of the brake chambers to make sure they are open. The spring brake has two brake chambers, a service chamber and and an emergency chamber or spring chamber **(See Figure 4-10).** Service brake chambers should be disassembled and cleaned at 50,000 miles or yearly. The diaphragm and any marginal parts should be replaced. When replacing the service diaphragm, replace the corresponding parts for the other chamber on the same axle (to aid in even brake application and release). Examine yoke pin for wear and replace as necessary. The spring chamber should not be serviced. Replace entire unit (both service and spring chamber) if spring chamber becomes faulty.

https://truckmanualshub.com/

⚠ WARNING

THE SPRING BRAKE CHAMBER EMPLOYS A SPRING WITH HIGH FORCES. SERVICE SHOULD NOT BE ATTEMPTED. SERIOUS INJURY OR DEATH MAY RESULT.

4-9.3 Replacing the Spring Air Brake Unit

a. Caging the Power Spring in the Spring Chamber

1. Chock the semitrailer wheels.
2. Remove dust cap from the rear of the spring brake chamber **(See Figure 4-12)**.
3. Remove the release bolt from it's holding brackets. Insert it into the spring brake chamber until it can be rotated and hooked into place. **DO NOT USE AN IMPACT WRENCH TO CAGE THE SPRING BRAKE!**
4. Turn the nut on the release bolt until the spring brake is caged. This should be 2-1/4 to 2-1/2 inches of release bolt extension.
5. The brakes should now be released. Do not operate loaded semitrailer with brakes manually released.

b. Uncaging the Power Spring in the Spring Chamber

1. Insure the semitrailer wheels are chocked.
2. Turn the nut on the release bolt until the spring is released. Remove the release bolt and store it in its brackets.
3. Snap the dust cap back in place on the chamber.

c. Removal of Brake Unit

1. Chock all tractor and semitrailer wheels and drain the air system.
2. Mark the brake chamber for proper air line port alignment for reassembly.
3. **CAGE THE POWER SPRING** following the steps outlined in **Section 4-9.3a.**
4. Disconnect the slack adjuster from the connecting rod by removing the clevis pin **(See Figure 4-13).**
5. Mark all air service lines for proper re-installation and disconnect from the brake chamber.
6. Remove the brake chamber from the axle brackets.

d. Installation of Brake Unit

1. **CAGE THE POWER SPRING f**ollowing the steps outlined **in Section 4-9.3a.**
2. Position the inlet ports by loosening the service chamber clamp bands and rotating the center housing so the ports align with marks made during disassembly. Then re-tighten the clamp bands.
3. Remount the brake unit on the axle brackets and reconnect the air service hoses and the slack adjuster connecting rod **(See Figure 4-13).**

IMPORTANT

BE SURE THE SERVICE LINE IS ON THE SERVICE CHAMBER PORT AND THE EMERGENCY LINE IS ON THE SPRING BRAKE PORT.

e. Check for leakage by charging the air system to a minimum of 90 psi and applying soap suds to the brake chamber and connections. If a growing bubble is detected or bubbles are blown away, locate the source of the leak and repair.

f. Insure that the clamp band is properly seated and tight **before** uncaging the power spring.

g. Uncage the power spring according to **Section 4-9.3b.**

4-9.4 Tandem Relay Valve Maintenance

Every 3600 operating hours, 100,000 miles, or yearly, the Relay Emergency Valve should be disassembled, cleaned, and lubricated by a trained technician.

⚠ WARNING

REPAIR OR REPLACEMENT OF THE RELAY/EMERGENCY VALVE IS A COMPLEX OPERATION AND SHOULD BE PERFORMED BY TRAINED SERVICE PERSONNEL. CONTACT A LANDOLL AUTHORIZED SERVICE CENTER FOR SERVICING.

https://truckmanualshub.com/

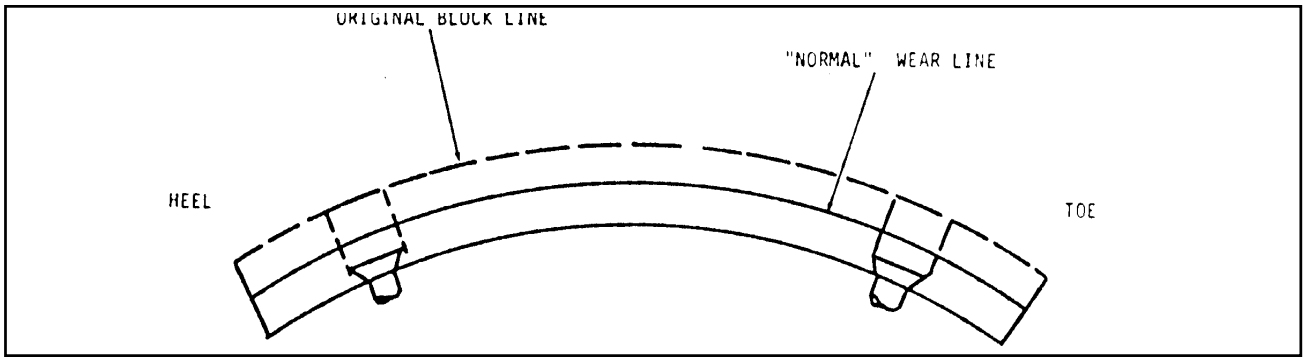

Figure 4-11 Brake Lining Wear

4-9.5 Brake Assembly Maintenance

The brake assemblies should be inspected and adjusted every 2,000 miles or monthly. Examine the brake linings visually to locate the lining showing the greatest amount of wear. The wheel and drum should be removed and the linings replaced if the thinnest portion of the lining is 3/8 in. (9.5 mm) or less. Do not allow the linings to wear thin enough that the lining rivet contacts the drum. **(See Figure 4-11)**.

⚠ WARNING

DO NOT ALLOW GREASE TO CONTACT BRAKE LININGS AS THIS COULD RESULT IN REDUCED BRAKING PERFORMANCE.

a. **Brake Adjustment**: This trailer is equipped with automatic slack adjusters which compensate for brake lining wear and keep brakes adjusted. Brakes should not be adjusted manually except when relining brakes.

b. **Disassembly for 12-1/4" X 7-1/2" Brakes (See Figure 4-12)**

1. Release brakes and back off slack adjuster.
2. Remove slack adjuster lock ring and slack adjuster.
3. Remove drum assembly **(See Figure 4-12)**.
4. Remove anchor pin retainers, washers, and bushings.
5. Remove anchor pins and brake shoes.
6. Remove brake return springs.
7. Remove camshaft lock ring, spacer washer and camshaft.
8. Remove roller pin retainers.
9. Remove roller pins and rollers from shoes.
10. Remove camshaft bushings and seals from spider.
11. After removing the shoes, completely inspect all brake components, servicing as necessary.

c. **Reassembly for 12-1/4" X 7-1/2" Brakes**

1. Install new camshaft bushing and seals into the spider.

IMPORTANT

WHEN INSTALLING CAMSHAFT SEALS, THE SEAL ON THE SLACK ADJUSTER SIDE IS INSTALLED FACING INTO SPIDER. THIS ALLOWS GREASE TO PURGE OUTSIDE THE BRAKE ASSEMBLY WHEN GREASING THE CAMSHAFT BUSHING.

2. Install cam roller assemblies onto the brake shoes.
3. Install “D” shaped camshaft washer onto the camshaft.
4. Install the camshaft into the spider. Install spacer washer and lock ring retainer on camshaft before sliding the camshaft through the camshaft support bracket. Install the slack adjuster, washer and lock ring retainer.
5. Install shoes, anchor pin bushings, anchor pins, and spacers onto spider. Install anchor lock rings.

IMPORTANT

ALWAYS USE ALL NEW SPRINGS WHEN SERVICING BRAKES.

6. Install brake return spring.
7. Connect slack adjuster to brake chamber pushrod.
8. Adjust automatic slack adjuster as outlined in Section **4-9.6 c.**

https://truckmanualshub.com/

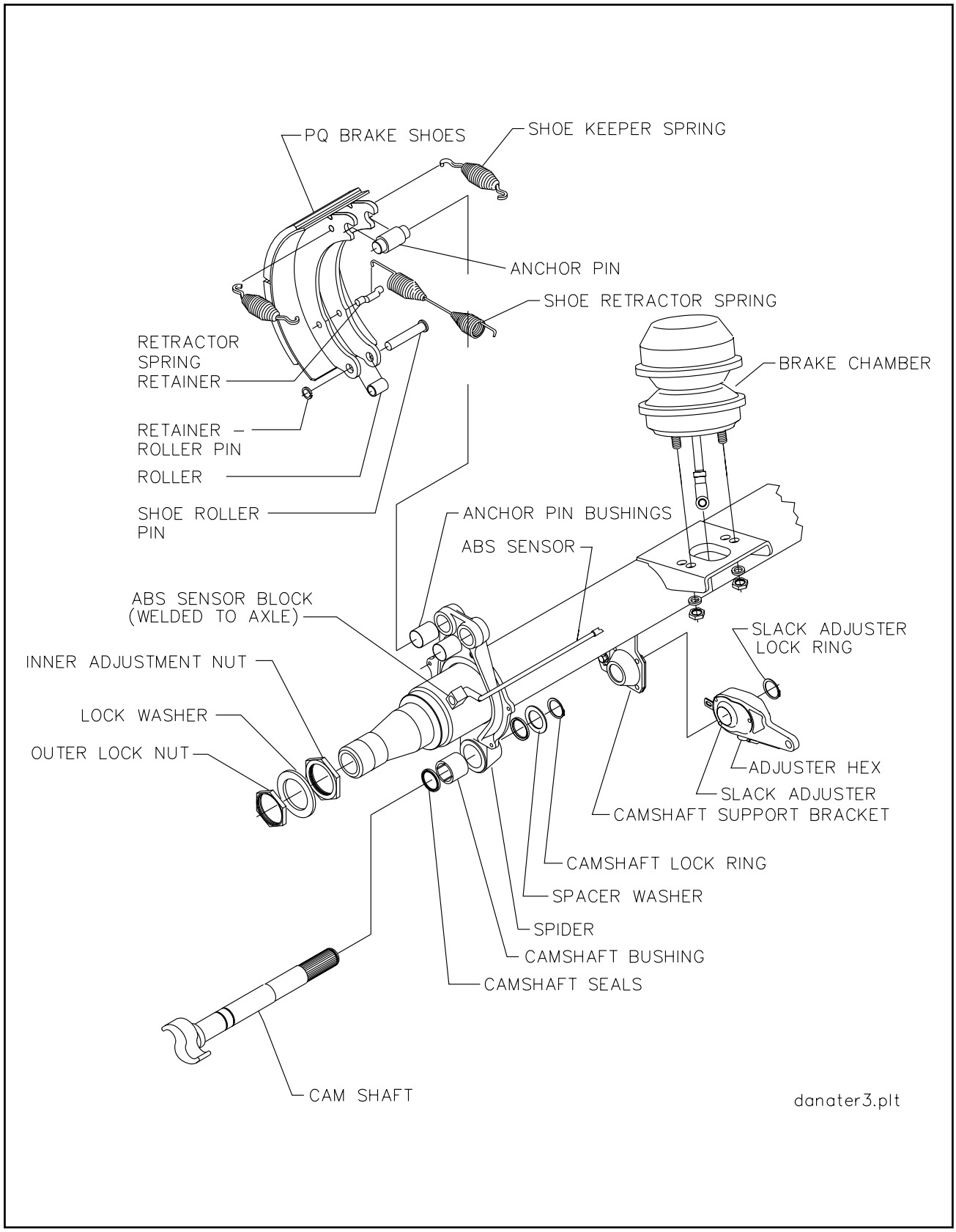

Figure 4-12 Axle and Brake Assembly

https://truckmanualshub.com/

4-9.6 Automatic Slack Adjusters

The semitrailer automatic slack adjusters provide the means for routine brake adjustment to compensate for lining wear. Inspect slack adjusters every 2,000 miles to assure correct operation.

a. Operational Check (See Figure 4-13)

1. Block wheels to prevent vehicle from rolling.
2. Check that the push rod is fully retracted, apply air to release spring brake.
3. Turn adjustment hex counterclockwise to create an excessive clearance condition. (A ratcheting sound will occur.)
4. Make a full service brake application. On release, allow sufficient time for brake to fully retract. During the brake release, observe rotation of the adjustment hex (attach a wrench on the hex to make this movement easier to see). This rotation indicates that an excessive clearance condition has been determined by the slack adjuster, and it is making an adjustment to compensate. On each subsequent brake release the amount of adjustment and push rod travel will be reduced until the desired clearance is achieved.
5. The push rod stroke should be 1 1/2" to 2" with an 80 to 90 PSI service brake application.
6. Measure the movement of the push rod from the completely released position to the applied position by marking the push rod where it exits the air chamber before and after application.
7. If the brakes have been running tight, the slack adjuster control arm location should be checked.

⚠ WARNING

IF THE ADJUSTER APPEARS NOT TO BE OPERATING, CHECK THE FOUNDATION BRAKE FOR PROPER FUNCTION AND ELIMINATE ANY BINDING. RECHECK THE AUTOMATIC SLACK ADJUSTER. IF THE ADJUSTER IS NOT FUNCTIONING, THE UNIT MUST BE REPLACED BECAUSE FAILURE OF PROPER ADJUSTMENT FUNCTION WILL RESULT IN LOSS OF BRAKES.

b. Replacing Slack Adjuster (See Figure 4-13)

⚠ CAUTION

THE INSTALLATION GUIDE MUST BE USED WHEN INSTALLING OR REINSTALLING AUTOMATIC SLACK ADJUSTER. FAILURE TO DO SO MAY CAUSE BRAKE DAMAGE OR LEAD TO BRAKE FAILURE.

1. Chock wheels to prevent vehicle from rolling. Release spring and service brake. Air chamber push rod must be fully released.
2. To maintain a fully released parking brake, a minimum of 80 psi reservoir pressure must be maintained. If air pressure is not available the spring brake must be manually caged.
3. Remove the existing slack adjuster and clevis - **DO NOT REMOVE EXISTING JAM NUT.**
4. Install the new clevis (with 1/2" pin) onto the push rod up to the jam nut -**DO NOT TIGHTEN JAM NUT.**

https://truckmanualshub.com/

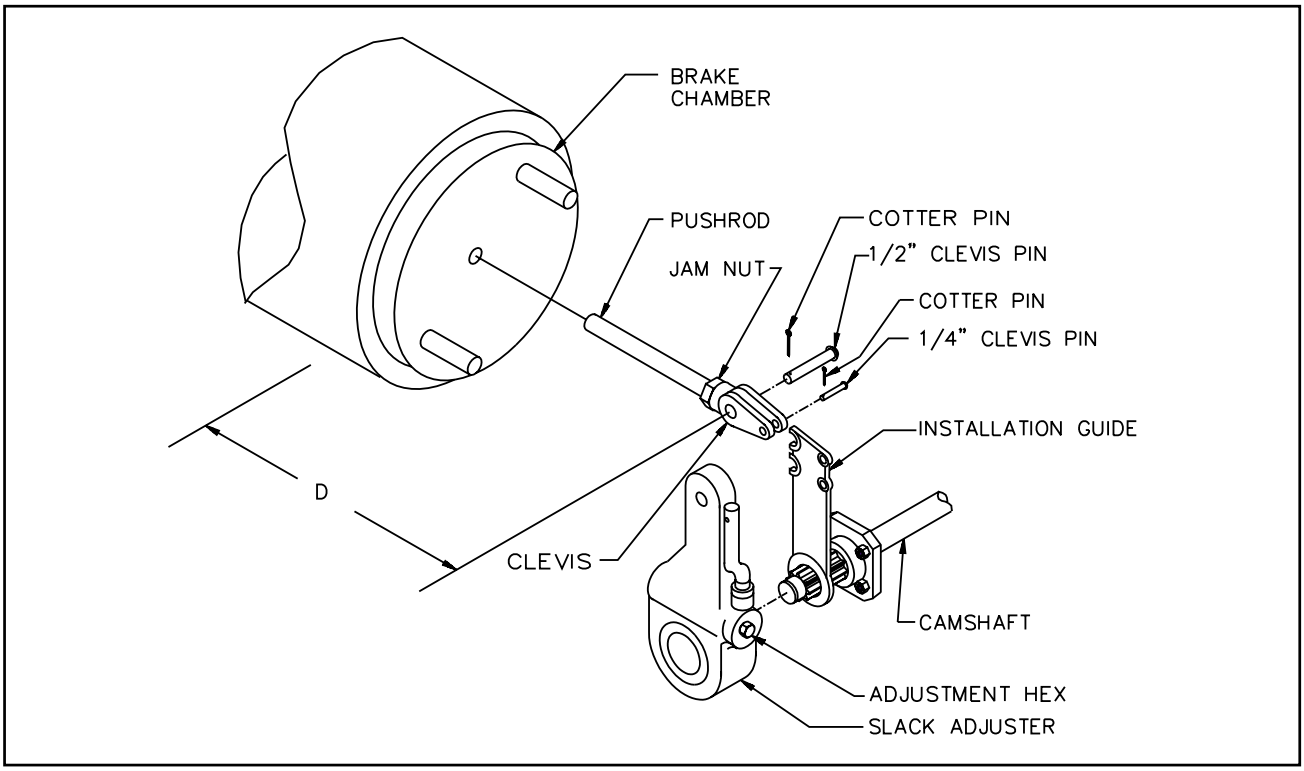

Figure 4-13 Slack Adjuster

5. Fit the installation guide over the s-cam splines so the 1/2" pin slots face the air chamber.
6. Swing the guide into the clevis until the appropriate slot totally engages 1/2" pin.
7. Observe the guide pointer arrow:
   If the guide pointer is **ABOVE** the clevis, rotate clevis CCW for alignment.
   If the guide pointer is **BELOW** the clevis, rotate clevis CW for alignment.
8. Reposition clevis until the guide pointer aligns with the clevis pointer.
9. Verify by engaging 1/4" pin through the clevis and guide.
10. Tighten jam nut to 50 ft.-lbs. torque min.
11. Remove the guide from S-cam shaft.
12. If the push rod threads extend through the clevis more than 1/16", remove clevis and cut rod to length.
13. If the push rod is not fully engaged in clevis body, install a new push rod - cut to length.
14. Install the slack adjuster on the S-cam shaft.
15. Rotate the manual adjuster shaft CW until the slack adjuster arm holes align with the clevis. Install 1/2" and 1/4" pins and cotter pins.

c. Adjusting Slack Adjuster

1. Rotate the manual adjuster CW until brake shoes contact drum.
2. Back off manual adjuster 1/2 turn. (CCW)
3. Manually uncage the spring brake.
4. Build up vehicle air pressure.
5. Fully apply and release the brakes several times to check for adequate clearance to all adjacent components.
6. Measure the distance (D) from air chamber to 1/2" pin **(See Figure 4-13)**. Apply brakes with 80-90 psi air pressure and remeasure distance (D) to 1/2" pins **(See Figure 4-13).**
7. The stroke (difference of these two measurements) must be less than 2 inches.

https://truckmanualshub.com/

4-10 HUB AND DRUM MAINTENANCE

4-10.1 Clean and inspect the brake drums whenever relining the brakes. To be suitable for further service, the brake drum should pass the following checks.

a. The brake surface should be free of scoring, excessive heat checks and cracks.

b. The brake surface diameter should be within the maximum diameter cast or stamped on the drum.

c. The mounting holes and pilot must be round and true.

d. The mounting surface must be clean and flat.

⚠ WARNING

FAILURE TO REPLACE FAULTY BRAKE DRUMS WILL RESULT IN AN UNRELIABLE BRAKING SYSTEM, AND MAY LEAD TO AN ACCIDENT.

4-10.2 It may be necessary to turn or resurface the braking surface to remove small heat checks or other surface defects resulting from normal use.

a. The maximum diameter cast into the back plate portion of the brake drum is the maximum diameter or discard diameter to which the brake drum may be turned or worn and still be usable. If any portion of the brake surface exceeds the maximum diameter it must be discarded. The maximum is .120 over the nominal new diameter unless stated otherwise on the casting. The maximum diameter cast into the brake drum supersedes all published information.

b. When resurfacing a drum, allow at least 0.040 inches under the maximum diameter for additional wear.

⚠ WARNING

TURNING A BRAKE DRUM BEYOND 0.040 INCHES UNDER THE MAXIMUM DIAMETER WILL RESULT IN A WEAKER BRAKE DRUM AND MAY RESULT IN AN ACCIDENT.

4-10.3 Replacement of the brake drum is required if any of the following conditions exist:

a. The brake drum is cracked.

b. The brake surface is heat checked, grooved or worn beyond the rebore limit or the maximum diameter.

c. The back plate is cracked.

d. The bolt holes are elongated.

e. The brake drum has been severely overheated.

f. The brake drum is out-of-round.

⚠ CAUTION

REPLACE BRAKE DRUMS IN PAIRS TO ACHIEVE THE SAME BRAKING POWER ON BOTH WHEELS AND MAINTAIN AN EVEN BRAKING LOAD ON THE AXLE. FAILURE TO DO THIS MAY SIGNIFICANTLY REDUCE THE PERFORMANCE, SERVICE LIFE, AND/OR SAFETY OF YOUR VEHICLE.

https://truckmanualshub.com/

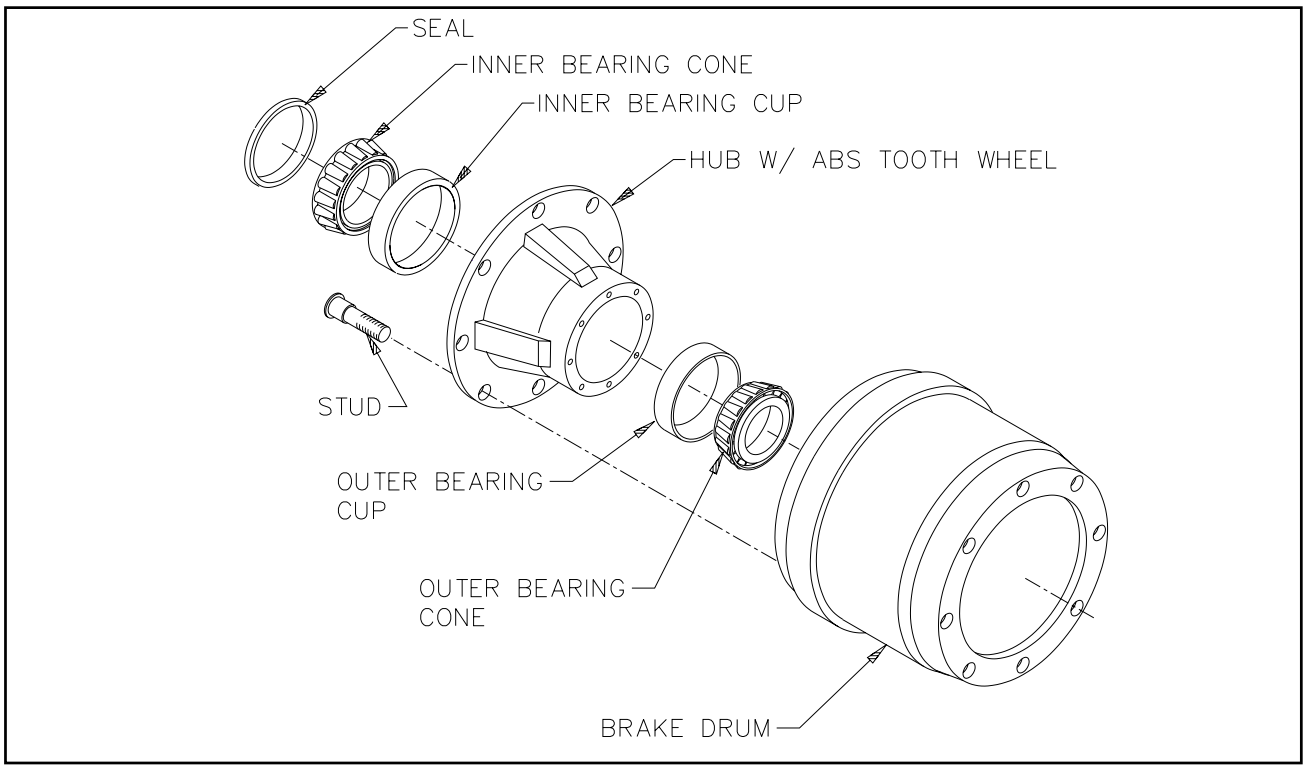

Figure 4-14 Outboard Mount Hub and Drum

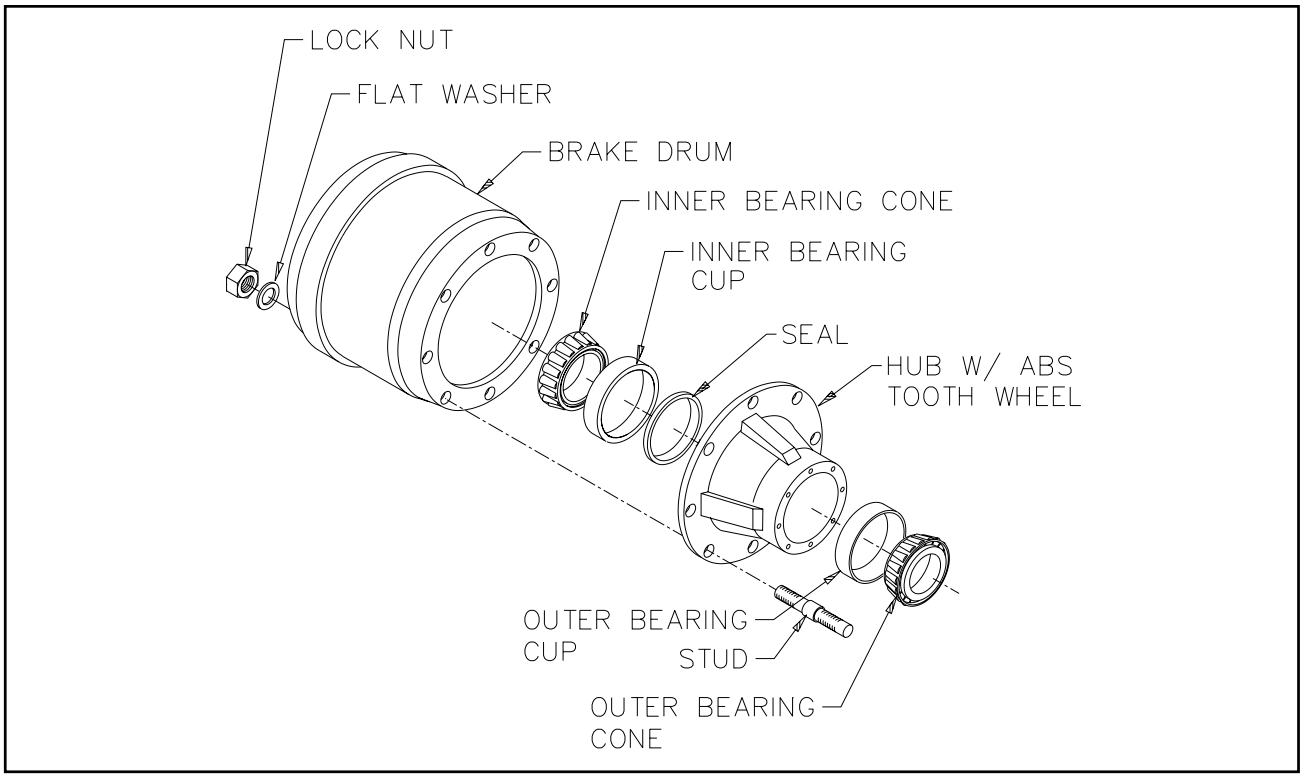

Figure 4-15 Inboard Mount Hub and Drum

https://truckmanualshub.com/

4-10.4 Replace the hub and drum as follows **(See Figure 4-14 and 4-15):**

a. For outboard mount hub and drum remove the brake drum **(See Figure 4-14)**. It may be necessary to release the slack adjuster. For inboard mount, **(See Figure 4-15)** remove drum after hub.

b. Remove hub cap and catch lubricant in a pan.

c. Remove outer spindle nut, spindle locking washer, inner spindle nut, and bearing. Remove hub from axle.

d. Using an appropriate driver, remove inner bearing cone, and seal.

e. Using an appropriate driver, remove bearing cups from hub.

f. Check that the hub cavity is clean. If the hub is to be reused, clean it thoroughly.

g. Insert bearing cups into the hub.

h. Install the drum to the hub or wheel unless the drum is outboard mount.

i. Clean the mounting surfaces with a good grade commercial cleaner and soft rag. Dry all component parts with a clean, absorbent cloth or paper. Lubricant will not adhere to surfaces wet with solvent.

j. For hub and drum, make sure the drum seats flat against the hub flange and mates properly with the hub pilot. There should be no interference between the brake drum pilot chamfer and the corner radius on the hub.

k. Install inner bearing, cone, and seal.

IMPORTANT

DO NOT MIX NEW CUPS WITH OLD CONES OR NEW CONES WITH OLD CUPS.

l. If studs are marked “R” or “L”, right hand (R) hubs should be installed on the curbside of the vehicle, left hand (L) hubs should be installed on the driver side.

⚠ DANGER

FAILURE TO USE THE CORRECT STUD ON THE CORRECT SIDE MAY CAUSE LOOSENING OF THE HUB STUDS DURING OPERATION, RESULTING IN LOSS OF A WHEEL.

m. Place the hub or wheel over the axle spindle being careful to align the hub bore with the axle. Do not damage the seal. Support the hub assembly until the outer bearing cone and spindle nut are installed, to avoid damaging the seal.

n. Install the outer bearing cone and inner spindle nut, tightening the nut until it is snug against the outer bearing cone. Remove the hub support allowing the hub to rest on the bearings.

o. Install and adjust bearings **(See Wheel Bearing Lubrication and Adjustment).**

p. Install the hub cap with the proper gasket. Tighten the cap screws of the hub cap to 15 to 20 ft-lbs. of torque.

q. Remove the filler plug and fill the hub cavity to the recommended level with a gear type oil.

r. For Outboard Mounted Brake Drum **(See Figure 4-14)** place the drum over the hub and brake shoes being careful not to damage the threads on the studs. Make sure the drum seats flat against the hub flange and mates properly with the hub pilot. There should be no interference between the brake drum pilot chamfer and the corner radius on the hub. If interference exists, the hub will not be able to function properly.

https://truckmanualshub.com/

4-11 WHEEL BEARING LUBRICATION AND ADJUSTMENT

With semitrailer sitting level, the oil level must be checked daily and maintained between the **"ADD"** and **"FULL"** lines on the hub cap window. Check for cracked windows, missing filler plugs, and oil leaks. Add hub oil through the **"POP-IN"** filler plug located in the center of the hub windows. Re-install the **"POP-IN"** plugs after filling each hub. Adjust wheel bearings and change oil every 50,000 miles or with each brake lining replacement, which ever occurs first.

4-11.1 Adjustment

a. With a drain pan under the hub cap, remove the hub cap assembly allowing oil to drain.

b. Lift the wheel off of the ground.

c. Adjust slack adjuster to eliminate brake drag during tire/wheel rotation.

d. Remove outer lock nut and inner nut and lock washer.

e. Tighten the inner adjustment nut to a minimum of 75 ft.-lbs., while rotating wheel to insure proper seating of the bearings and cups in the wheel hub.

f. Loosen the inner adjustment nut so that the wheel will turn freely.

g. Retighten the inner adjustment nut to 50 ft.-lbs. while rotating the wheel, to properly position the bearings for the final adjustment.

h. Loosen the inner adjustment nut 1/3 turn.

i. Install the spindle nut lock washer so that the dowel on the inner nut will align with a hole in the lock washer and the washer tang fits in the spindle keyway.

j. Install the outer lock nut and tighten to 250-300 ft.-lbs. End-play of .001" to .010" must be present in the adjusted wheel bearing assembly.

⚠ DANGER

FAILURE TO TORQUE THE OUTER LOCK NUT PROPERLY COULD CAUSE THE WHEEL TO COME OFF DURING VEHICLE OPERATION RESULTING IN PROPERTY DAMAGE OR LOSS OF LIFE.

k. Install the hub cap with a new gasket and fill with oil to the full mark. Use 90 weight gear oil.

l. Adjust brakes according to **Section 4-9.5a.**

m. Check hub oil level after the wheel has set level in one position for a few minutes to allow the oil to work into the bearings.

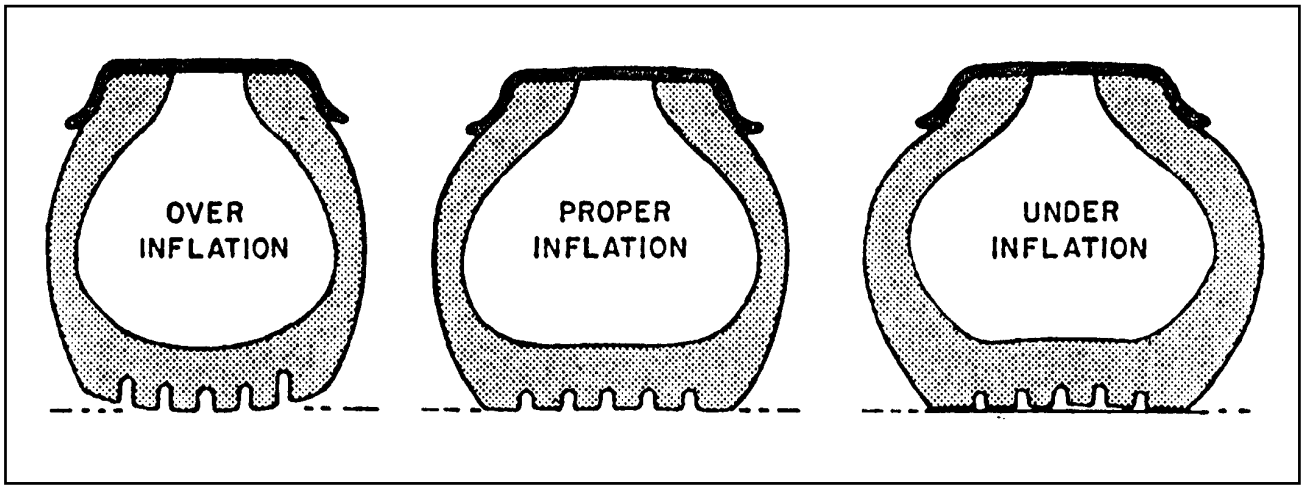

Fig. 4-16 Tire Inflation Examples

https://truckmanualshub.com/

4-12 TIRE MAINTENANCE

4-12.1 Tire Inflation. Tire inflation will cause tire to ground contact characteristics as shown in **Figure 4-16**. Tire inflation should be checked daily while the tire is cold, and during road stops. Checking the tire pressures while tires are hot will give a faulty increased pressure reading. Adjusting tire air pressure to the specified amount while tires are hot will produce improper tire to road contact and thus abnormal wear. Do not exceed cold inflation pressure listed on the semitrailer VIN plate located on the front of the semitrailer. Exceeding cold inflation pressure will result in damaged tire bodies, rims, and wheels. Replace all valve stem caps when pressure checking/adjusting has been completed. remove any foreign objects from between duals.

4-12.2 Tire Matching. Both tires on the same spindle must be the same size in order to properly distribute the load and braking forces between them. The tire must be mounted on a rim and properly inflated before measuring. If there is an allowable difference in size the smaller tire should be mounted to the inside position of the duals.

a. Tape Measuring Method: Measure around each tire on the tread surface. A maximum difference of 3/4" is allowed between the two mating tires of a dual **(See Figure 4-17).**

b. Straight Edge or String Method: (This method can not be used if tire and wheel assemblies are not mounted on the axle.) Jack semitrailer up until the wheels are off of the ground. Hold a straight edge against the tires of both ends of an axle. A gap at one tire indicates a smaller tire. A maximum of 1/8" gap is allowed **(See Figure 4-18)**.

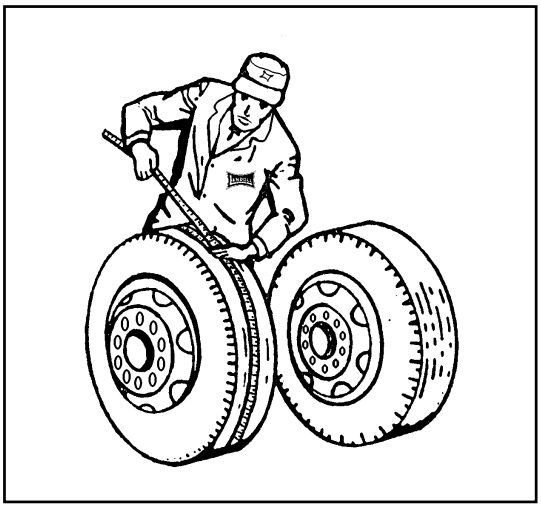

Fig. 4-17 Measuring Tape Method

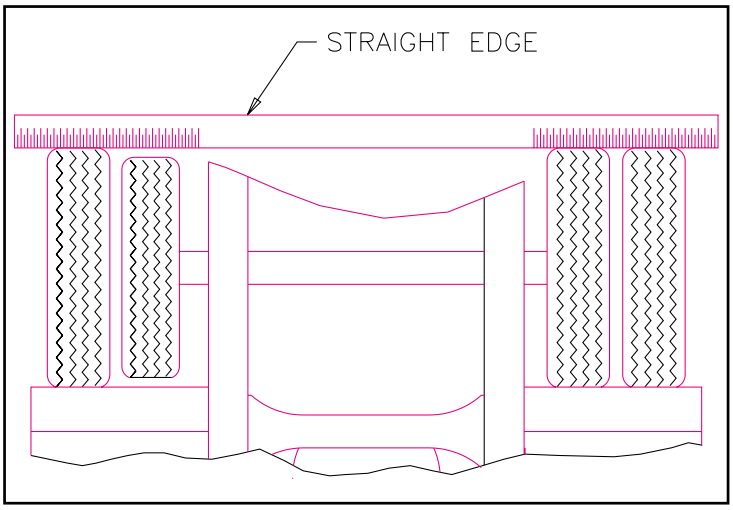

Fig. 4-18 Straight Edge Method

https://truckmanualshub.com/

4-12.3 Mounting Tire and Wheel

a. Make sure that all mounting surfaces are clean and free of rust, dirt or paint. A wire brush may be used to clean these surfaces.

b. Position the inner disc wheel over the studs, being careful not to damage the stud threads. Make sure that the disc wheel is flat against the mounting surface and that there is clearance between the disc wheel taper and brake drum **(See Figure 4-19).**

c. Install the inner capnuts on the studs and tighten to fifty foot-pounds using the sequence illustrated in **Figure 4-20**. Make certain that the left-handed threads are installed on the driver side of the vehicle and the right-handed threads are installed on the curbside of the vehicle.

d. Tighten the inner capnuts to full torque of 450 to 500 foot-pounds using the sequence shown in **Figure 4-20**.

e. Position the outer disc wheel over the capnuts being careful not to damage the inner capnut threads. Be sure the valve stems for both the inner and outer tire are accessible.

f. Install the outer capnuts and tighten to 50 foot-pounds using the sequence in **Figure 4-20.** Then tighten to full torque of 450 to 500 foot-pounds using the same sequence**.**

g. Torque will drop after the first 50 to 100 miles of operation. Check the capnuts for proper torque after this interval and retighten them. Loosen the outer capnuts and retighten the inner and outer capnuts per **steps d. to f.**

⚠ WARNING

USE A TORQUE WRENCH TO ASSURE PROPER TORQUE. INSUFFICIENT TORQUE CAN CAUSE STUD BREAKAGE AND DAMAGE WHEEL PILOTS. OVERTORQUE CAN OVERSTRESS THE STUDS AND STRIP THE THREADS.

4-13 WINCHES

⚠ WARNING

INSPECT THE WINCH CABLE BEFORE AND AFTER EVERY USAGE. IF FRAYED WIRES, NICKS, KINKS, WORN SPOTS, BREAKS OR ANY OTHER SIGN OF DETERIORATION OR DAMAGE IS FOUND, IMMEDIATE REPLACEMENT IS MANDATORY BEFORE FURTHER USAGE.

If the semitrailer is going to be out in the weather for any length of time, it is advisable to oil the winch cable to prevent untimely rusting and deterioration of the cable.

Inspect the winch mechanism thoroughly each week to insure safe, efficient operation.

⚠ WARNING

DO NOT HANDLE THE WINCH CABLE WHEN THE WINCH IS IN THE ENGAGE POSITION. HANDS OR CLOTHING COULD GET CAUGHT IN THE CABLE AND BE PULLED INTO THE SPOOL CAUSING SERIOUS PERSONAL INJURY.

https://truckmanualshub.com/

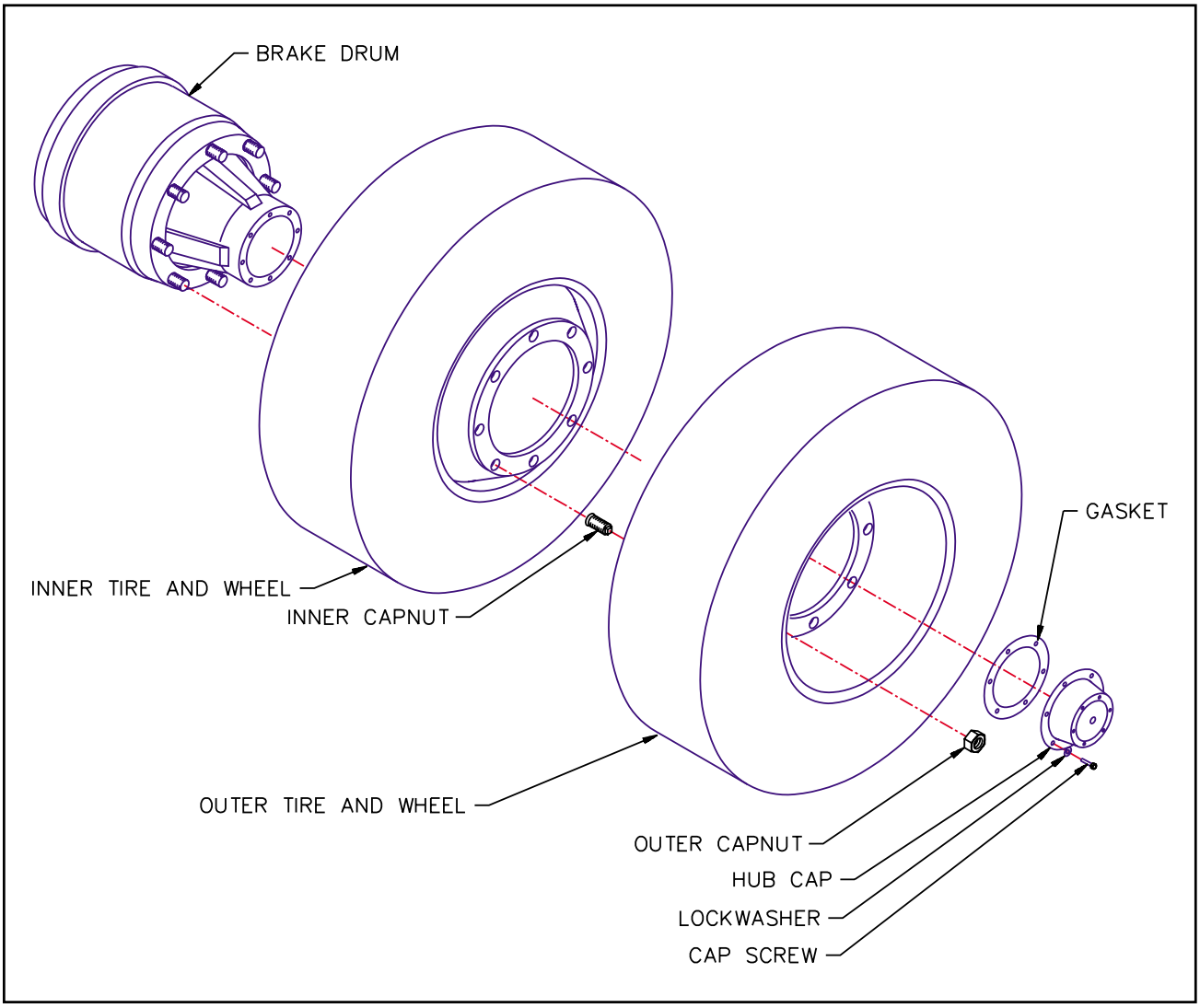

Figure 4-19 Mounting Tires and Wheels

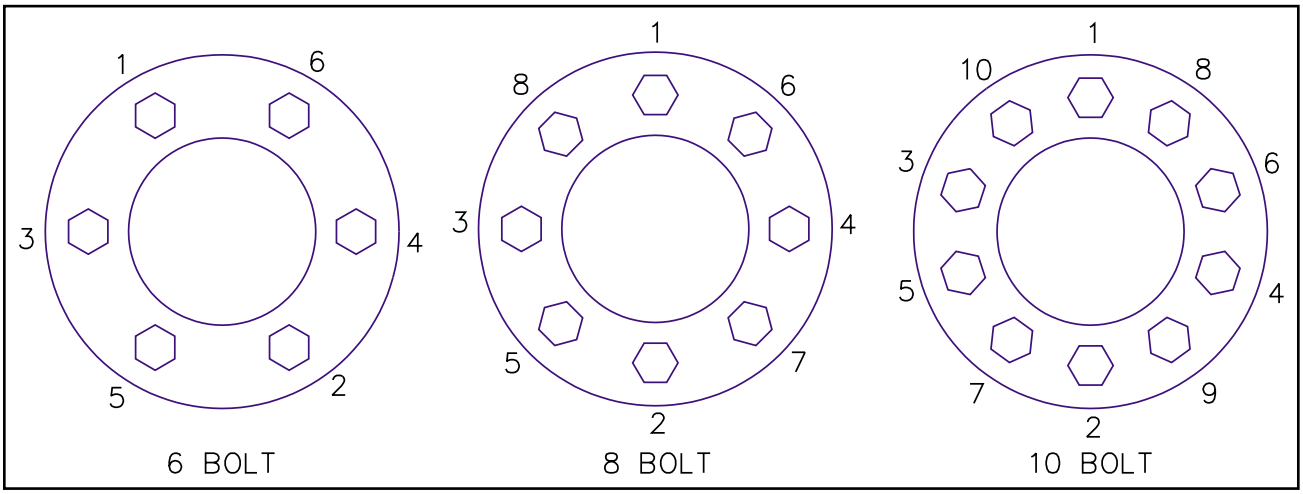

Figure 4-20 Stud Tightening Sequence

https://truckmanualshub.com/

4-14 AIR SYSTEM FILTER AND LUBRICATOR

⚠ WARNING

CERTAIN COMPRESSOR OILS, CHEMICALS, HOUSEHOLD CLEANERS, SOLVENTS, PAINTS, AND FUMES WILL ATTACK PLASTIC BOWLS AND CAN CAUSE BOWL FAILURE. DO NOT USE NEAR THESE MATERIALS. IMMEDIATELY REPLACE ANY CRAZED, CRACKED, DAMAGED, OR DETERIORATED PLASTIC BOWL WITH A NEW PLASTIC BOWL AND METAL BOWL GUARD.

4-14.1 Cleaning the Air System Filter

a. Drain the bowl at least once per work shift.

b. Remove and clean the filter periodically by tapping on a hard surface.

c. If necessary remove dirt from the inside of the bowl by wiping it with a clean, dry cloth. This requires the air pressure in the line to be completely exhausted and the bowl to be removed form the body.

d. Do not attempt to clean the bowl with a solvent.

4-14.2 Lubrication

a. Under average service conditions, the lubricator bowl should be kept filled above the level of the bottom of the siphon tube with a petroleum based oil. Preference of oil is an SAE-5 or SAE-10 motor oil or hydraulic oil.

b. In colder weather, or under more severe service conditions, an automobile automatic transmission fluid should provide better performance.

c. In damp, below freezing conditions, freezing water in the air lines can cause air system problems. Lubricating oil should be replaced with Kil-Frost, available through parts dealers.

d. The unit may be filled (or cleaned) under pressure by first removing the fill plug, then removing the bowl.

e. Do not replace the fill plug until the bowl and guard are in position and the clamp ring is locked into place.

IMPORTANT

DO NOT USE A SYNTHETIC BASED OIL.

4-14.3 Cleaning the Lubricator

a. Dirty oil contaminants can collect on the siphon tube inlet filter. Clean it by tapping it on a hard surface.

b. If the oil delivery rate drops, the lubricator should be cleaned. Remove the variable orifice and clean its air passage with a small wire. Check the bore that the screw fits into for contaminants and clean, if needed. Be sure that the passageway from the sight dome cavity into the variable orifice post is open. Remove the oil flow adjusting screw and clean the needle and seat in the body. Inspect and clean the passage from the needle seat down into the adapter.

c. Drain and clean the lubricator bowl whenever contaminants collect over 1/4" deep in the bottom of the bowl. The bowl may be removed with the air system pressurized. It should be wiped clean with a clean, dry cloth.

d. Do not attempt to clean the bowl with a solvent.

4-14.4 Oil Rate Delivery Adjustment

a. The rate of oil delivery from the lubricator should be set at one drop for each three (3) complete cycles(open and close) of the air valve.

b. The rate of oil delivery is controlled by turning the adjusting screw counterclockwise (ccw), for increased flow, and clockwise (cw) for decreased flow.

c. To gain access to the drip rate adjusting screw, the tamper resistant cap must be removed.

https://truckmanualshub.com/

TROUBLESHOOTING GUIDE

Troubleshooting should be performed by a trained technician. Landoll Corporation is not responsible for equipment that is improperly maintained. Contact an authorized Landoll Service center or the Landoll factory for servicing.

5-1 HYDRAULIC SYSTEM

Most hydraulic system failures start as a gradual or sudden loss of pressure or flow with a resulting loss of cylinder or motor power. Any one of the system s components may be at fault. For maintenance procedures, **see Section 4-4.**

SYMPTOM	PROBLEM: REMEDY
TRAILER TILT:	
TRAILER LOCKED IN TILTED POSITION	**Restrictor valve plugged:** Raise the trailer slightly (to dislodge particle), then lower the trailer slowly. Clean hydraulic system
SYSTEM INOPERATIVE	**Not enough oil in system:** Fill and check for leaks. **Wrong oil in system:** Change oil, *see specifications*. **Filter dirty or clogged:** Drain oil and replace filter. **Oil lines dirty or collapsed:** Clean or replace as necessary. **Air leaks in pump suction line:** Repair or replace as necessary. **Worn or dirty pump:** Clean, repair or replace. Check for contaminated oil. Drain and flush. **Badly worn parts:** Examine for internal leakage. Replace faulty parts. Check for cause of wear. **Leakage:** Check all parts, and relief valve for proper settings. **Excessive load:** Check unit specifications for load limits. **Slipping or broken pump drive:** Repair or replace couplings. Hydraulic supply hooked up backwards. **Worn or dirty hydraulic spool valve:** Clean, repair or replace. Check for contaminated oil. Drain and flush. **Worn or malfunctioning dump valve:** Clean, repair or replace.
SYSTEM OPERATES ERRATICALLY	**Air in the system:** Check suction side of system for leaks. Repair leaks. **Cold oil:** Allow ample warm-up time. Use proper weight oil for operating temperature. **Dirty or damaged parts:** Clean or repair as needed. **Restriction in filters or lines:** Clean and/or replace filter or lines.

https://truckmanualshub.com/

SYMPTOM	PROBLEM: REMEDY
SYSTEM OPERATES TOO SLOW	**Oil viscosity too high, or "cold oil":** Allow oil to warm up before operating. **Low pump drive speed:** Check *Pump Owner s Manual* for engine speed (RPM s) and pump specifications. **Low oil level:** Check reservoir and add oil as needed. **Air in system:** Check suction side for leaks. repair leaks. **Badly worn pump, valves, cylinders, etc.:** Repair or replace faulty part(s) as needed. Restrictions in lines or filter: Replace filter and flush lines. **Improper adjustments:** Check ports, relief valves, etc., adjust as needed. **Oil leaks:** Tighten fittings. Replace seals, gaskets and damaged lines.
SYSTEM OPERATES TOO FAST	**Engine running too fast:** Reduce engine speed. **Call Factory or see Landoll Dealer.**
OVERHEATING OF OIL IN SYSTEM	**Incorrect, low, dirty oil:** Use recommended oil. Fill reservoir with clean oil. Replace filter. **Engine running too fast:** Reduce engine speed. **Excessive internal leakage:** Repair or replace part(s) as needed. **Restriction in filters or lines:** Replace filter or flush lines. **Insufficient heat radiation:** Clean dirt and mud from reservoir, hydraulic lines and parts. **Malfunctioning part(s):** Repair or replace.
OIL FOAMY	**Oil is low:** Add or replace oil. **Wrong oil type:** Replace oil. **Water in oil:** Replace oil. **Air leaks:** Check suction line and component seals for suction leaks. Replace defective parts.
NOISY PUMP	**Oil is low:** Add or replace oil. **Wrong oil type:** Replace oil. **Foamy oil:** Add or replace oil. **Suction line plugged:** Clean out obstruction or replace line. Flush system, replace filter. **Pump damaged:** Repair or replace.
LEAKY PUMP	**Damaged or worn shaft seal:** Replace seal and/or shaft. Check for misalignment. **Loose or broken parts:** Tighten or replace.
CYLINDERS MOVE WITH CONTROL VALVE IN NEUTRAL POSITION	**Leaking cylinder seals or fittings:** Replace worn seals or fittings. **Control valve not centering when released:** Check linkage for binding, repair or replace as needed. **Valve damaged:** Repair or replace.

https://truckmanualshub.com/

SYMPTOM	PROBLEM: REMEDY
CONTROL VALVE LEAKS	**Seals damaged or worn:** Replace.
CYLINDER LEAKS	**Seals damaged or worn:** Replace. **Rod damaged:** Replace. **Barrel damaged:** Replace.
CYLINDERS DO NOT FUNCTION, OR CREEP WITH PTO DISENGAGE.	**Leaking fittings or cylinder seals:** Tighten loose fittings, replace seals. Replace worn seals or fittings.

5-2 ELECTRICAL

Most electrical system problems show up as a burned out light or fuse, or inoperative electrical component. Wiring, grounds or components may be at fault. Locate the symptom in this section that best identifies your electrical problem. Check out each possible problem under that symptom. If the problem cannot be located, see an automotive electrical specialist. For maintenance procedures, **see Section 4-5.**

SYMPTOM	PROBLEM: REMEDY
NO LIGHTS	Fuse blown on tractor: Replace fuse. **Loose connection at plug-in:** Tighten connection. **Broken or corroded wires:** Replace wire. **Ground wire loose:** Clean and tighten ground.
LIGHTS FLICKERING	**Wires shorted or loose:** Locate, insulate, replace, or tighten.
LIGHTS DIM	**Voltage difference between trailer & tractor:** Tractor supply wire or circuit components are too low a capacity. - Enlarge wire or component. Match bulbs with tractor voltage.
LIGHTS BRIGHT & BURN OUT	**Ground wire disconnected:** Connect ground wire. **Voltage difference between trailer & tractor:** Tractor supply wire or circuit components are too low a capacity. - Enlarge wire or component. Match bulbs with tractor voltage.
FUSE BLOW-OUT OR CIRCUIT BREAKER TRIPPING	**Vibration:** Locate source of vibration and repair. **Short circuit:** Replace fuse and try all accessories. If fuse blows right away, locate short and repair.
LAMP BULB BURN OUT	**Vibration:** Locate source of vibration and repair. **Short circuit:** Replace fuse and try all accessories. If fuse blows right away, locate short and repair. **Loose connection:** Check lamp sockets and ground connections. **Intermittent short:** Locate short and repair. **Improper voltage:** Check voltage regulator output.

https://truckmanualshub.com/

5-3 TIRES - WHEELS - SUSPENSION

Most tire, wheel, and suspension related problems are due to excessive loads, extreme conditions, and improper maintenance. Tire, wheel, and suspension problems can be easily detected and solved by checking the following guide. For maintenance procedures, **see Sections 4-7, 4-8, and 4-12.**

SYMPTOM	PROBLEM: REMEDY
VIBRATIONS WHILE DRIVING	**Improper tire inflation:** Inflate to proper pressure. **Tires cupped or have flat spots:** Replace tires. **Wheels bent or loose:** Replace or tighten. **Tires incorrectly mounted:** Remount. **Mud in wheels:** Clean wheels. **Tire(s) out of balance:** Balance tires. **Brakes dragging:** Locate cause and repair. **Object(s) stuck between duals:** Remove object(s).
RAPID TIRE WEAR/DETERIORATION:	
CENTER TREAD WEAR	**Over inflation:** Deflate to correct inflation.
SHOULDER TREAD WEAR - BOTH SHOULDERS	**Under inflation:** Increase inflation to correct psi. Check axle alignment. **Overload:** Do not load above rated tire capacity.
SHOULDER TREAD WEAR - ONE SHOULDER	**Axle damage:** Straighten or replace axle. **Axles not parallel:** Check axle alignment.
OVERALL TREAD WEAR	**Overloading:** Check tire load rating. **High speeds:** Adjust speed according to road and load conditions. **Incorrect dual matching:** Properly match dual tires.
TIRE FLAT SPOTS	**Quick stops:** Adjust braking practices. **Grabbing brakes:** Adjust brakes properly. **Worn or loose wheel bearings:** Adjust or replace as needed. **Out of balance wheels and tire:** Balance wheels and tires.
UNEVEN WEAR	**Suspension bushings worn:** Replace bushings. **Worn or loose wheel bearings:** Adjust or replace as needed. **Out of balance wheels and tires:** Balance wheels and tires.
RIM FAILURE*:	
CRACKING	**Overinflated tires:** Deflate tire to proper psi. **High speeds:** Adjust speed according to road and load conditions. **High speed cornering:** Adjust cornering practices. **Over loading:** Check rim load rating.

***In all instances of rim failure, replace the rim immediately!**

https://truckmanualshub.com/

SYMPTOM	PROBLEM: REMEDY
BENDING OR WARPING	**Curb-hopping or potholes:** Adjust turning practices and speed according to road conditions. **Improper tightening sequence:** Follow proper tightening sequence.
BROKEN STUDS*	**Over-tightening:** Use correct torque and tightening sequence when mounting.

***Replace broken studs before using the semitrailer!**

TRAILER TRACKING PROBLEMS:

TRACKS TO ONE SIDE	**Axle alignment:** Re-align axle.
TRACKS TO EITHER SIDE	**Broken or bent springs or equalizer bushings:** Replace worn parts. **Axles not parallel:** Adjust axle spacing to be parallel.

5-4 BRAKES

For maintenance procedures, **see Section 4-9**.

SYMPTOM	PROBLEM: REMEDY
NO BRAKES OR BRAKES ARE INTERMITTENT	**Brake air system improperly connected:** Reconnect gladhands properly. **Relay/Emergency valve plugged:** Clean valve. **Defective tractor protection valve:** Repair or replace. **Restricted tubing or hose line:** Locate and eliminate restriction. **Broken line:** Locate break and repair. **Tractor air system failure:** Troubleshoot tractor air system and repair.
SINGLE BRAKE DRAGGING OR LOCKED	**Broken internal brake component:** Locate and replace broken part. **Flat spot on cam roller or cam shaft:** Replace and lubricate. **Improper adjustment:** Adjust slack adjusters. **Spider bushing or cam bracket bushing binding:** Lubricate or replace bushing. **Improper lubrication:** Lubricate per Figure 4-1. **Worn brake shoe bushing:** Replace bushing. **Brake drum distortion:** Replace drum. **Broken brake chamber spring:** Replace spring. **Brake chamber pushrod binding:** Realign brake chamber bracket. **Air brake line loose or broken:** Tighten or repair.

https://truckmanualshub.com/

SYMPTOM	PROBLEM: REMEDY
UNEVEN BRAKES	*See "SINGLE BRAKE DRAGGING OR LOCKED"* **Restriction in hose:** Locate restriction and remove. **Worn brake linings:** Reline brakes. **Grease on linings:** Reline brakes. **Broken slack adjuster:** Replace slack adjuster. **Call Factory or see qualified Trailer/Brake Technician**. **Leaking brake chamber diaphragm:** Replace diaphragm.
BRAKES APPLY TOO SLOWLY	**Brakes need adjusting or lubrication:** Adjust or lubricate as needed. **Low air pressure in brake system (below 90 psi):** Check tractor air system. **Restricted tubing or hose:** Locate restriction and remove. **Worn or broken relay valve:** Replace. **Call Factory or see qualified Trailer/Brake Technician**.
BRAKES RELEASE TOO SLOWLY	**Brakes need adjusting or lubrication:** Adjust or lubricate as needed. **Brake rigging binding:** Align brakes or replace bent parts. **Exhaust port of relay valve restricted or plugged:** Replace valve.
ALL BRAKES DO NOT RELEASE	**Air system improperly connected to tractor:** Tighten or adjust connections. **Brake valve on tractor is applied:** Release brake. **Relay emergency valve in emergency position:** Check line pressure and check valve. **Restricted tubing or line:** Locate restriction and remove. **Tractor protection valve failure:** Troubleshoot tractor air system. **Parking brakes locked:** Troubleshoot air system. **Moisture in air system:** Check air system.
INSUFFICIENT BRAKES	**Brakes need adjusting:** Adjust brakes. **Cams need lubricating:** Lubricate cams. **Brakes need relining:** Reline brakes. **Low air pressure:** Troubleshoot air system. **Relay emergency valve failure:** Replace. **Brakes overheated:** Stop and allow brakes to cool, locate cause of overheating.

https://truckmanualshub.com/

SYMPTOM	PROBLEM: REMEDY
BRAKES GRABBING	**Grease on brake linings:** Reline brakes. **Brake rigging binds:** Align brakes or replace bent parts. **Brake valve on tractor failed or worn:** Replace valve. **Relay emergency valve failed or worn:** Replace valve.
EXCESSIVE LEAKAGE WITH BRAKES RE-LEASED	**Relay emergency valve leaking:** Replace valve. **Leaking tube or hose:** Replace part(s).
EXCESSIVE LEAKAGE WITH BRAKES APPLIED	**Relay emergency valve leaking:** Replace valve. **Leaking brake chamber diaphragm:** Replace brake chamber. **Call Factory or see qualified Trailer/Brake Technician** **Leaking tubing or hose:** Replace part(s).
EXCESSIVE LEAKAGE WITH EMERGENCY SYSTEM ONLY APPLIED - NO LEAKAGE WITH NORMAL BRAKING	**Relay emergency valve failure:** Replace valve.
EXCESSIVE WATER PRESENT IN BRAKE SYSTEM	**Reservoir not drained often enough:** Drain res-ervoir daily.
EXCESSIVE OIL PRESENT IN BRAKE SYSTEM	**Compressor on tractor passing excessive oil:** Refer to *Tractor Repair manual.*
BRAKE WILL NOT APPLY PROPERLY	**Flat spot on cam roller or camshaft:** Replace and lubricate.
BRAKES WILL NOT APPLY WHEN EMERGENCY LINE IS DISCONNECTED	**Initial air pressure too low:** Allow air system to build up to minimum 90 psi and stabilize. **Relay valve failure:** Replace valve. **Air line leak:** Locate leak and repair. **Brake chamber leak:** Replace brake chamber.
ABS WARNING LIGHT STAYS ON	**Refer to Rockwell WABCO maintenance man-ual no. 33, lastest revision, for system function and use of blink code diagnostics.**

https://truckmanualshub.com/

5-5 BRAKE DRUMS

For maintenance procedures, **see Section 4-10.**

SYMPTOM	PROBLEM: REMEDY
EXCESSIVE LOSS OF BRAKES OR FADING	**Overheated brake drums:** Check for defective or misadjusted brake linings, distorted or over-machined drums. Also check for operating conditions or loads that create severe or excessive brake applications.
BRAKES PULL TO EITHER SIDE	**Drums of different diameters:** Replace with drums of same diameter. **Foreign matter in drums:** Clean drums out.
ROUGH OR NOISY BRAKING ACTION	**Worn drums:** Pull drums and inspect for any of the following; Heat spotted drums, grease spotting, blue drums, scored drums, excessive wear at rivet holes or edges, polished drums, out of round drums, unbalanced drums, worn/damaged brake components, foreign matter in drums. Correct situation or replace worn part(s).
VIBRATION IN RIDE	**Worn or out-of-round drums:** Replace drums. **Out-of-balance drums:** Balance drums.

5-6 WINCH

SYMPTOM	PROBLEM: REMEDY
POWER SPOOL DOES NOT DISENGAGE	**Load on cable:** Properly secure trailer load as required and reel out cable to remove load. **Tension on winch gears:** When reeling winch, momentarily rotate reel in opposite direction to relieve tension on winch gears. Disengage winch..

https://truckmanualshub.com/

5-7 REMOTE CONTROL

For maintenance procedures, **see Section 4-6.**

SYMPTOM	PROBLEM: REMEDY
INTERMITTENT MOVEMENT OCCURS WHEN ACTIVATING A FUNCTION	**9 volt battery is dead:** Replace battery. **Antenna obstructed:** Remove any vertical metal obstructions within two feet of the antenna. **Excess antenna cable is coiled**: Rearrange antenna cable to avoid coils. **Short a wire connection on receiver antenna cable connector**: Be certain there is nothing touching the bare portion of wires at the antenna connection.
UNIT DOES NOT FUNCTION	**Fuse is blown:** Check the fuse and replace. Maximum 12 to 15 amp fuse in the receiver. If fuses are blowing, there is another problem with the unit. **Wire is shorting:** Look for dead shorts in wiring and connections or run a new cable from the outputs of the receiver to the solenoids direct and then try the unit. **Solenoids on spool valve malfunctioning:** Check solenoids on valve for proper valve switching. NOTE: Since the solenoid valves are hydraulically pilot operated, hydraulic pressure must be coming to the hydraulic valve before the solenoids can operate the valve. **Improper grounds:** Check diodes in ground circuit for failure. Replace diode if required. Check ground wires for tight connections.
UNIT FAILS COMPLETELY OR ONE OR TWO OUTPUTS ARE NOT WORKING.	**Power relay does not engage:** See procedure for resetting address code on **page 4-8.**
ONE FUNCTION DOES NOT OPERATE	**The orange connector pin does not match the Output Status Indicator LED:** There should be 12 or 24 volts DC to that output, depending on the power supplied form the vehicle. If power is to the output, then the wiring and hydraulic system should be checked. **Appropriate Output Status Indicator LED is turned on and there is no power to the orange connector pin:** Consult the factory.

https://truckmanualshub.com/

NOTES: