https://truckmanualshub.com/

WACKER NEUSON

5200016123	1.3
1113	

Track Excavator

ET18/20/24

This Operator's Manual includes
the AEM Safety Manual

AEM MEMBER

OPERATOR'S MANUAL

5 2 0 0 0 1 6 1 2 3

https://truckmanualshub.com/

OM/Service booklet	Language	Order no.	Spare parts list	Language	Order no.
Operator's Manual	us	5200016123	ET18 (E12-02)	de/en/fr	1000279963
Service Booklet	de	1000146850	ET18 (E12-02)	de/it/es	1000279982
	en	1000148392	ET20 (E12-03)	de/en/fr	1000281454
	fr	1000148394	ET20 (E12-03)	de/it/es	1000281455
	it	1000148395	ET24 (E12-04)	de/en/fr	1000281027
--			ET24 (E12-04)	de/it/es	1000281028

Legend	
Original Operator‘s Manual	-
Translation of original Operator‘s Manual	x
Edition	1.3
Date	11/2013
Document	OM ET18/20/24 us

Copyright 2013 Wacker Neuson Baumaschinen GmbH, Hörsching
Printed in Michigan, USA
All rights reserved, in particular the globally applicable copyright, right of reproduction and right of distribution.

No part of this publication may be reproduced, translated or used in any form or by any means – graphic, electronic or mechanical including photocopying, recording, taping or information storage or retrieval systems – without prior permission in writing from the manufacturer.

No reproduction or translation of this publication, in whole or part, without the written consent of Wacker Neuson Linz GmbH.

Violations of legal regulations, in particular of the copyright protection, will be subject to civil and criminal prosecution.

Wacker Neuson Linz GmbH keep abreast of the latest technical developments and constantly improve their products. For this reason, we may from time to time need to make changes to diagrams and descriptions in this documentation which do not reflect products which have already been delivered and which will not be implemented on these machines.

Technical data, dimensions and weights are given as an indication only. Responsibility for errors or omissions not accepted. Non-metric weights and measurements are approximate.

The cover features the machine with possible optional equipment.

Wacker Neuson Linz GmbH
Flughafenstraße 7
A-4063 Hörsching

Document: OM ET18/20/24 us
Order no.: 5200016123
Edition: 1.3

https://truckmanualshub.com/

Table of Contents

EC declaration of conformity (Yanmar 3TNV76-SNSE12) EG-1
Declaration of conformity without CE mark on the type label – except USA and Canada (Yanmar 3TNV76-SNSE12)EG-2

1 Foreword
1.1 Operator's Manual 1-1
1.2 Warranty and liability 1-5

2 Safety Information
2.1 Safety Symbols Found in this Manual 2-1
2.2 Warranty 2-2
2.3 Designated Use 2-2
2.4 Preparing to use the machine 2-3
2.5 Operator and Technician Qualifications and Basic Responsibilities 2-6
2.6 Safety instructions Regarding Operation 2-6
2.7 Applications with Lifting Gear 2-9
2.8 Attachments 2-10
2.9 Transport and Towing 2-11
2.10 Safety Guidelines for Maintenance 2-11
2.11 Safety Guidelines while using Internal Combustion Engines 2-16

3 Introduction
3.1 Machine overview 3-1
3.2 Brief description of the machine 3-2
3.3 Notices and regulations on use 3-4
3.4 Labels 3-8

4 Putting into operation
4.1 Cab/control stand 4-1
4.2 Control element overview 4-29
4.3 Indicator lights and warning lights (overview) 4-34
4.4 Preparatory work 4-37
4.5 Starting and stopping the engine 4-41

5 Operation
5.1 Steering system 5-1
5.2 Accelerator actuation 5-1
5.3 Brakes 5-2
5.4 Travel operation 5-3
5.5 Differential lock 5-8
5.6 Lights/signalling system 5-8
5.7 Wiper/wash system (option) 5-10
5.8 Heating, ventilation and air conditioning system 5-11
5.9 Work hydraulics 5-12
5.10 Attachments 5-40
5.11 Work operation 5-44
5.12 Emergency lowering 5-49
5.13 Additional equipment/options 5-50
5.14 Decommissioning and putting the machine back into operation 5-57
5.15 Final decommissioning of machine 5-59

6 Transport
6.1 Towing the machine 6-1
6.2 Loading the machine 6-3
6.3 Transporting the machine 6-6

https://truckmanualshub.com/

7 Maintenance
7.1 Important information on maintenance 7-1
7.2 Maintenance overview 7-2
7.3 Fluids and lubricants 7-10
7.4 Maintenance accesses 7-14
7.5 Cleaning and maintenance on or with the machine 7-20
7.6 Lubrication work 7-23
7.7 Fuel system 7-26
7.8 Engine lubrication system 7-32
7.9 Cooling system 7-34
7.10 Air filter 7-37
7.11 V-belt 7-40
7.12 Hydraulic system 7-41
7.13 Electrical system 7-45
7.14 Heating, ventilation and air conditioning system 7-47
7.15 Washer system 7-48
7.16 Brake system 7-48
7.17 Tires/tracks 7-49
7.18 Maintenance of attachments 7-52
7.19 Maintenance of options 7-52

8 Troubleshooting
8.1 Diesel engine malfunctions 8-1
8.2 Malfunctions of the traveling drive 8-1
8.3 Malfunctions of the hydraulic system 8-1
8.4 Malfunctions of the electrical system 8-1
8.5 Troubleshooting the air conditioning 8-1
8.6 Malfunctions of attachments 8-2

9 Specifications
9.1 Models and trade names 9-1
9.2 Engine 9-1
9.3 Traveling drive/axles 9-3
9.4 Brakes 9-3
9.5 Tracks 9-3
9.6 Steering system 9-3
9.7 Work hydraulics 9-3
9.8 Electrical system 9-5
9.9 Tightening torques 9-7
9.10 Coolant 9-8
9.11 Noise emissions 9-8
9.12 Vibration 9-9
9.13 Weight 9-12
9.14 Payload/stability 9-14

Index
Index S-1

https://truckmanualshub.com/

EC declaration of conformity (Yanmar 3TNV76-SNSE12)

EC Declaration of Conformity
According to Machine Directive 2006/42/EC, appendix II A

Manufacturer
Wacker Neuson Linz GmbH
Flughafenstr. 7
A-4063 Hörsching

Product

Machine designation:	Hydraulic excavator
Machine model:	ET 18, ET 20, ET 24
Serial no.:	_____
Output (kW):	13.4 kW
Measured sound power level:	92.8 dB (A)
Guaranteed sound power level:	93 dB (A)

Conformity assessment procedure
Notified body according to Directive 2006/42/EC, appendix XI:
DGUV Test
Prüf- und Zertifizierungsstelle
Fachbereich Bauwesen
Landsberger Str. 309
D-80687 Munich
Distinguishing EU number 0515

Notified body according to Directive 2000/14/EC, appendix VI:
TÜV SÜD Industrie Service GmbH
Westendstr. 199
D-80686 Munich

Directives and standards
We hereby declare that this product corresponds to the relevant regulations and requirements of the following Directives and standards:
2006/42/EC, 2004/108/EC, 2002/44/EC, 2005/88/EC, 2000/14/EC;
DIN EN ISO 12100:2010, DIN EN 474-1:2006+A1:2009, DIN EN 474-5:2012,
DIN EN 13510:2010, DIN EN ISO 3744:2010, DIN EN ISO 3449:2008

Hörsching,	Responsible for documentation	Technical director
Place, date		

https://truckmanualshub.com/

Declaration of conformity without CE mark on the type label – except USA and Canada (Yanmar 3TNV76-SNSE12)

Declaration of conformity

Manufacturer
Wacker Neuson Linz GmbH
Flughafenstr. 7
A-4063 Hörsching

Product

Machine designation:	Hydraulic excavator
Machine model:	ET 18, ET 20, ET 24
Serial no.:	_____
Output (kW):	13.4 kW
Measured sound power level:	92.8 dB (A)
Guaranteed sound power level:	93 dB (A)

Directives and standards

We hereby declare that this product corresponds to the relevant regulations and requirements of the following Directives and standards:

2006/42/EC, 2004/108/EC, 2002/44/EC, 2005/88/EC, 2000/14/EC;

DIN EN ISO 12100:2010, DIN EN 474-1:2006+A1:2009 (except 7.3), DIN EN 474-5:2012,

DIN EN 13510:2010, DIN EN ISO 3744:2010, DIN EN ISO 3449:2008

Hörsching,	Responsible for documentation	Technical director
Place, date		

https://truckmanualshub.com/

1 Foreword

1.1 Operator’s Manual

Notices on this Operator’s Manual

This Operator’s Manual is stored in the compartment under the seat if the machine is equipped with a canopy. If the machine is equipped with a cab, this Operator’s Manual is stored behind the seat. A document box on the headliner is available as an option for the cab version.

This Operator’s Manual contains important information on how to work safely, correctly and economically with the machine. Therefore, it aims not only at new personnel, but it also serves as a reference for experienced personnel.

Furthermore, the reliability and the service life of the machine will be increased by following the instructions in the Operator’s Manual. This is why the Operator’s Manual must always be kept at hand in the machine.

The operator must carefully read and understand the Operator’s Manual before starting up, servicing or repairing the machine.

This Operator’s Manual will help to familiarize yourself more easily with the machine, thereby enabling you to use it more safely and efficiently.

This Operator’s Manual does not include special superstructures.

This Operator’s Manual will help to familiarize yourself more easily with the machine, thereby enabling you to use it more safely and efficiently.

Please contact your dealer if you require more information on the machine or the Operator’s Manual.

https://truckmanualshub.com/

Explanation of symbols and abbreviations

Explanation of symbols

- Identifies a list
  - Identifies a subdivision of a list
  - ➥ Description of a result

1. Identifies an activity
   Follow the order of the activity!
2. Continuation of an activity
   Follow the order of the activity!

A Identifies an alphabetical list

B Continuation of an alphabetical list

Cross reference formats: see page *1-1* (page)

Cross reference formats: **7** (pos. no. or table no.)

Cross reference formats: *Fig. 5* (fig. no. 1)

Cross references: *– see chapter “5 Operation” on page 5-1* (see chapter)

Cross references: *– see “Operation” on page 5-1* (-see text)

Information

Identifies an instruction that, when followed, provides for a more efficient and economical use of the machine.

Environment

Failure to observe the instructions identified by this symbol can result in damage to the environment.

https://truckmanualshub.com/

Abbreviations

AUX	=	Auxiliary hydraulic circuit
B	=	Width
NE	=	Nominal width
ROPS	=	Roll Over Protective Structure
FOPS	=	Falling Objects Protective Structure
TOPS	=	Tip Over Protective Structure
FGPS	=	Front Guard Protective Structure
PS	=	Stabilizer blade
LS	=	Stick
VDS	=	Vertical Digging System
HSWS	=	Hydraulic quickhitch, Easy Lock
s/h	=	Service hours
Pos.	=	Position
Fig.	=	Figure
e.g.	=	for example
approx.	=	approximately
	=	
max.	=	maximum
min.	=	minimum

https://truckmanualshub.com/

Conversion table

The rounded imperial values are indicated in brackets, for example 1060 cm^3 (64.7 in^3).

Volume unit	
1 cm^3	(0.061 in^3)
1 m^3	(35.31 ft^3)
1 ml	(0.034 US fl.oz.)
1 l	(0.26 gal)
1 l/min	(0.26 gal/min)
Unit of length	
1 mm	(0.039 in)
1 m	(3.28 ft)
Weight	
1 kg	(2.2 lbs)
1 g	(0.035 oz)
Pressure	
1 bar	(14.5 psi)
1 kg/cm^2	(14.22 lbs/in^2)
Force/output	
1 kN	(224.81 lbf)
1 kW	(1.34 hp)
1 PS	(0.986 hp)
Torque	
1 Nm	(0.74 ft.lbs)
Speed	
1 kph	(0.62 mph)
Acceleration	
1 m/s^2	(3.28 ft/s^2)

https://truckmanualshub.com/

1.2 Warranty and liability

Exemption from warranty and liability

Warranty

Warranty claims can be made only if the conditions of warranty have been observed. They are included in the General Conditions of Sales and Delivery for new machines and spare parts sold by the dealers of Wacker Neuson Linz GmbH. Furthermore, all instructions in this Operator's Manual must be observed.

Have the maintenance on or with the machine, delivery inspection and the entries in the service booklet performed by a Wacker Neuson service center, otherwise warranty claims will not be acknowledged.

Liability

- Modifying Wacker Neuson products and fitting them with additional equipment and attachments that are not included in our delivery program requires Wacker Neuson's written authorization, otherwise warranty and product liability for possible damage caused by these modifications shall not be applicable.
- The safety of the machine can be negatively affected by performing machine modifications without proper authority and by using spare parts, equipment, attachments and optional equipment that have not been checked and released by Wacker Neuson GmbH. Warranty and product liability for possible damage caused by these modifications shall not be applicable.
- Wacker Neuson Linz GmbH shall not be liable for personal injury and/ or damage to property caused by failure to observe the safety instructions and the Operator's Manual, and by the negligence of the duty to exercise due care when:
  - handling
  - operating
  - servicing and performing maintenance on or with the machine and
  - repairing the machine. This is also applicable in those cases in which special attention has not been drawn to the duty to exercise due care, in the safety instructions as well as in the Operator's and maintenance manuals.
  - Read and understand the Operator's Manual before starting up, servicing or repairing the machine. Observe all safety instructions.

https://truckmanualshub.com/

Notes:

https://truckmanualshub.com/

2 Safety Information

2.1 Safety Symbols Found in this Manual

This is the safety alert symbol. It is used to alert you to potential personal hazards.

- Obey all safety messages that follow this symbol.

DANGER

DANGER indicates a hazardous situation which, if not avoided, will result in death or serious injury.

Consequences in case of non-observance.

► Obey all safety messages that follow this symbol to avoid injury or death.

WARNING

WARNING indicates a hazardous situation which, if not avoided, could result in death or serious injury.

Consequences in case of non-observance.

► Obey all safety messages that follow this symbol to avoid possible injury or death

CAUTION

CAUTION indicates a hazardous situation which, if not avoided, could result in minor or moderate injury.

Consequences in case of non-observance

► Obey all safety messages that follow this symbol to avoid possible minor or moderate injury.

Notice

NOTICE indicates a situation which, if not avoided, could result in property damage.

Note: Contains additional information important to a procedure.

https://truckmanualshub.com/

Information

Information identifies an instruction that, when followed, provides for a more efficient and economical use of the machine**.**

Environment

Failure to observe the instructions identified by this symbol can result in damage to the environment. The environment is in danger if environmentally hazardous material, such as waste oil, is not subject to proper use or disposal.

2.2 Warranty

Warranty claims must be submitted to your Wacker Neuson dealer only.

2.3 Designated Use

1. In accordance with its designated use, the machine may be used ONLY for moving earth, gravel, coarse gravel or ballast and rubble. It may also be used for working with the attachments approved in the “Fields of Application” chapter.
2. No other applications are designated for the use of the machine. Wacker Neuson will not be liable for damage resulting from use other than mentioned above. The operator alone will bear the risk.
3. “Designated use” also includes observing the instructions set forth in this Operator’s Manual and observing the maintenance schedule.
4. Machine safety can be negatively affected by performing machine modifications without proper authority and by using spare parts, equipment,
   attachments and optional equipment which have not been checked and released by Wacker Neuson. Wacker Neuson will not be liable for damage resulting from unapproved parts or unauthorized modifications.
5. Wacker Neuson shall not be liable for personal injury and/or damage to property caused by failure to observe the safety instructions on labels and in this Operator’s Manual, and by the negligence of the duty to exercise due care when:

- transporting the machine
- operating the machine
- servicing the machine and performing maintenance on or with the machine
- repairing the machine

This is also applicable when special attention has not been drawn to the duty to exercise due care.

1. Read and understand this Operator’s Manual before starting, moving, operating, servicing or repairing the machine. Observe all safety instructions.
2. The machine shall NOT be used for transport jobs on public roads!

https://truckmanualshub.com/

2.4 Preparing to use the machine

Conditions for use

- The machine has been designed and built in accordance with state-of-the-art standards and recognized safety regulations. Nevertheless, its use can constitute a risk to the operator or to third parties, or cause damage to the machine and to other material property.
- Read and follow this Operator's Manual and other manuals that accompany the machine.
- The machine must only be used in accordance with its designated use and the instructions set forth in this Operator's Manual.
- The machine must only be used by qualified operators who are fully aware of the risks involved in operating the machine.
- Do not start, move or operate a damaged or malfunctioning machine. Any mechanical dysfunctions, especially those affecting the safety of the machine, must be repaired immediately. Only qualified technicians shall determine how to move a damaged or malfunctioning machine to a safe place for diagnoses and repair.
- The operator/machine owner commits himself to operate and keep the machine in serviceable condition and, if necessary or required by law, to require the operating or servicing persons to wear protective clothing and safety equipment

Operator training and knowledge

- Always keep this Operator's Manual and other manuals that accompany the machine in their storage compartment provided in the operator station on the machine. Immediately replace an incomplete or illegible Operator's Manual.
- All persons working on or with the machine must read and understand the safety information in this Manual before beginning work. This applies especially to persons working only occasionally on the machine, such as performing set-up or maintenance tasks.
- Follow, and instruct the operator in, legal and other mandatory regulations relevant to accident prevention and environmental protection.These may include handling hazardous substances, issuing and/or wearing personal protective equipment, or obeying traffic regulations.
- The operator/machine owner must regularly ensure that all persons entrusted with operation or maintenance of the machine are working in compliance with this Operator's Manual and are aware of the risks and safety factors of the machine.

Preparing for use

- Before starting up the machine, ALWAYS inspect the machine to make sure that it is ready for safe work and travel operation.
- Wear close-fitting work clothes that do not hinder movement. Tie back long hair and remove all jewelry (including rings).

https://truckmanualshub.com/

Modifications and spare parts

- NEVER make any modifications, additions or conversions to the machine and its superstructures (for example, cab, etc.), or the machine's attachments, without the approval of Wacker Neuson! Such modifications may affect safety and/or machine performance. This also applies to the installation and adjustment of safety devices and valves, as well as to welding work on load-bearing elements.
- Spare parts must comply with the technical requirements specified by Wacker Neuson. Contact your Wacker Neuson dealer for assistance.
- The operator/machine owner commits himself to operate and keep the machine in perfect condition, and, if necessary or required by law, to require the operating or servicing persons to wear protective clothing etc.
- In the event of safety-relevant modifications or changes on the machine or of its behavior, stop the machine immediately and report the malfunction to the competent authority/person.
- Safety-relevant damage or malfunctions of the machine must be rectified immediately.

Applications with lifting gear

Lifting gear applications are procedures involving raising, transporting and lowering loads with the help of slings and load-securing devices (e.g. ropes, chains).

No applications with lifting gear under any circumstances!

Machines with a maximum authorized lifting capacity of over 1000 kg (2,205 lbs.) or an overturning moment of over 40,000 Nm (29,500 ft.lbs.) may be used for lifting gear applications if the following conditions are fulfilled:

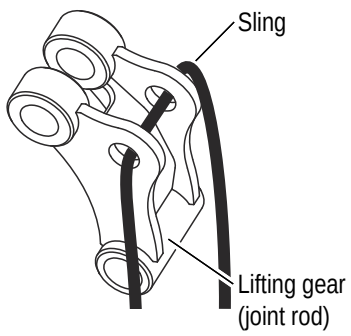

Abb. 1: Lifting gear – joint rod

- Acoustic and optical warning device
  – see chapter 3.20 Safe load indicator (option) on page 3-72
- Load holding control valve *– see chapter 3.17 "Load holding control valve" safety feature (option)* on page 3-65
- Proper equipment for slinging and securing the load must be available (joint rod enabling loads to be picked up, Powertilt unit with load hook).
- The lift capacity table must be observed *– see chapter 6 Specifications* on page 6-1.
  - Get informed on and follow the legal regulations of your country.

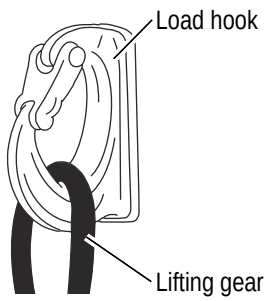

Abb. 2: Load hook

Instructions on fastening loads

- The help of an accompanying person is necessary for securing and detaching the load.
- The load must be secured so as to prevent it from falling or slipping.
- Fasten the lifting gear so that it is not possible to unhook the sling unintentionally.
- Position the lifting gear ensuring the sling is not deflected by other parts.
- Do not use any lifting gear and slings that are damaged or not sufficiently dimensioned.
- The lifting gear must be designed to withstand the loads that can arise in the different positions of the work equipment or parts of the boom. Lateral loads and diagonal tensile forces must also be taken into account.

https://truckmanualshub.com/

- The lifting gear must be checked regularly by a technician, at least once a year.
- Replace damaged lifting gear immediately.
- Fasten lifting gear and slings avoiding danger (rotating parts, crushing or shearing) for the person securing the load. Furthermore, neither must the work equipment be affected by the lifting gear, nor must the functions of the lifting gear be affected by external influences (e.g. dirt that cannot be removed by simple means).
- Do not place slings over sharp edges.
- Always wear protective gloves and a hard hat when working with lifting gear and slings.
- The persons attaching or securing loads may approach the boom from the side only, and only after the machine operator has given his permission. The machine operator may give his permission only after the machine is at a standstill and the work attachment no longer moves!

General instructions

- Staying under suspended loads, in the danger zone or under the machine's attachment is prohibited.
- The machine operator and the person attaching or securing the load must have visual contact.
- Persons guiding the load or securing it must stay in visual contact with the machine operator! Should this not be possible, ask another person to guide.
- The machine operator must guide the load the nearest possible to the ground and avoid any oscillating or swinging movements!
- Perform machine travel with a raised load only if the path of the machine is level!
- The machine operator must not raise loads over persons.
- The machine operator may not leave his seat as long as the load is raised.

https://truckmanualshub.com/

2.5 Operator and Technician Qualifications and Basic Responsibilities

Operator/machine owner responsibility

- Only allow trained and experienced individuals to travel, maintain, or repair the machine. NEVER let unauthorized or underaged persons operate with the machine.
- Clearly and unequivocally define the individual responsibilities of the operator and technician for operation, maintenance, and repair.
- Define the machine operator’s responsibilities on the job site and for observing traffic rules. Give the operator the authority to refuse instructions by third parties that are contrary to safety.
- Do not allow persons to be trained or instructed by anyone other than an experienced person. Also, NEVER allow persons taking part in a general training course to work on or with the machine without being supervised by an experienced person.
- Before working on or with the machine, remove jewelery, such as rings, wristwatches, bracelets etc., and tie back long hair and do not wear loose-fitting garments, such as unbuttoned or unzipped jackets, ties or scarves.
- Injury can result from being caught up in the machinery or from rings catching on moving parts!

Repair person qualifications

- Work on the electric system and equipment, on the undercarriage and the steering and brake systems can be performed only by skilled individuals who have been specially trained for such work.
- Work on the hydraulic system of the machine must be performed only by a technician with special knowledge and experience in hydraulic equipment.

2.6 Safety instructions Regarding Operation

Preparing for use

- The machine must only be used in technically perfect condition in accordance with its designated use and the instructions set forth in the Operator's Manual, and only by safety-conscious persons who are fully aware of the risks involved in operating the machine. Any functional disorders, especially those affecting the safety of the machine, must therefore be rectified immediately!
- Before starting up the machine, inspect the machine for safety in work and road operation!
- In addition to the Operator's Manual, observe and instruct the operator in all other generally applicable legal and other mandatory regulations relevant to accident prevention and environmental protection.
- These compulsory regulations may also deal with handling hazardous substances, issuing and/or wearing personal protective equipment, or traffic regulations.
- With regard to specific operational features, e.g. those relevant to job organization, work sequences or the persons entrusted with the work, supplement the Operator's Manual by corresponding instructions, including those relevant to supervising and reporting duties.

https://truckmanualshub.com/

- Careful and prudent working is the best way to avoid accidents!Keep the machine clean. This reduces fire hazard (such as from combustible materials like rags), and reduces the injury hazard or operational accidents that can be caused by dirt build-up on the travel pedals or foot rests and steps.
- Observe all safety, warning, and informational signs and labels on the machine.
- Start and operate the machine from the seat only.
- The operator must sit in the seat, fasten and adjust the seat belt before putting the machine into operation.
- Always adjust the seat position before starting work. Do not change the seat position during machine travel or machine operation.
- Make sure that all safety devices are properly installed and functional before starting work.
- Before putting the machine/attachment into operation (startup/moving), make sure that no one in the immediate vicinity will be at risk.

Starting and stopping

- Perform starting and stopping procedures according to this Operator's Manual.
- Observe all indicator lights.
- Do not use starting fluid (for example, ether) especially in those cases in which a heater plug (intake air pre-heating) is used at the same time.
- Make sure the control levers, the signaling and the light systems are functional before operating the machine, and also before restarting after an interruption of work.
- Fold up the control lever base before releasing the seat belt in order to avoid unintentional operation.

Work area awareness

- Familiarize yourself with the surroundings and circumstances of the work site before beginning work. Be aware of:
  - obstacles in the working and traveling area
  - the soil bearing capacity
  - any necessary barriers separating the work site from public roads
- Always keep at a safe distance from the edges of building pits and slopes.
- Look out for the following when working in buildings or in enclosed areas:
  - height of the ceiling/clearances
  - width of entrances
  - maximum load of ceilings and floors
  - sufficient room ventilation — carbon monoxide poisoning hazard.
- Observe the danger zone. See “Danger zone awareness”.
- Use the rearview mirror to stay aware of work area obstacles and personnel.
- Always switch on the work lights in conditions of poor visibility and after dark. However, make sure that users of public roads will not be temporarily blinded by the work lights.
- Provide additional lighting of the work area if the lights of the machine are not sufficient for performing work safely.

https://truckmanualshub.com/

Danger zone awareness

- The danger zone is the area in which persons are in danger due to the movements of the machine, work equipment, additional equipment, or material.
- The danger zone also includes the area affected by falling material, equipment or construction debris. The danger zone must be extended by 0.5 m (20 inches) in the immediate vicinity of buildings, scaffolds, or other elements of construction.
- Seal off the danger zone if it is not possible to keep a safe distance. Stop work immediately if persons do not leave the danger zone in spite of warnings!

Operating the machine

- Never operate the machine if you are standing on the ground.
- Operate the machine ONLY when you are seated and you have fastened your seat belt. Stop the engine before releasing the seat belt.
- During operation on slopes, travel or work uphill or downhill. If traveling across a slope cannot be avoided, bear in mind the tilting limit of the machine. Always keep the attachments/work equipment close to the ground. This also applies to traveling downhill. When traveling or working across a slope, the load must be on the uphill side of the machine.
- On sloping terrain, adapt your travel speed to the prevailing ground conditions.
- Never get on or off during machine operation or travel, and do not jump off the machine.
- The travel control levers require practice before an operator becomes familiar with the control response. Therefore, adjust the travel speed to your abilities and the surroundings.
- When traveling across a slope with the telescopic undercarriage extended, position the boom facing down the slope, and the bucket about 10–20 cm (4–8’’) above the ground. This will help to minimize the possibility of personal injuries and equipment damage caused by a hydraulic hose/connector failure in the telescopic undercarriage actuation system. The weight of the machine will cause the undercarriage to retract to the narrow configuration if hydraulic system pressure decreases due to lost fluid.
- Install a front guard when working in areas with a risk of objects falling from the front (e.g. demolition work).
- On sloping terrain always adapt your travel speed to the prevailing ground conditions! Never change to lower gear on a slope but always before reaching it!

Carrying passengers

- Do not transport people on the machine or in the attachment.
- Never install a man basket or a working platform to the machine.

Mechanical integrity

- Take the necessary precautions to make sure the machine is used only when in a safe and serviceable state.
- Operate the machine ONLY if all protective and safety-oriented devices (ROPS, removable safety devices, soundproofing elements, mufflers, etc.) are in place and fully functional.

https://truckmanualshub.com/

- Check the machine before entering the cab to operate the machine for visible damage and defects. Report any changes, including changes in the machine's function and response, to your supervisor immediately!
- If the machine is functioning unpredictably, stop the machine immediately, lock it, and report the malfunction to a qualified tecnician or supervisor. Safety-relevant damage or malfunctions of the machine must be rectified immediately.

Traveling

- When traveling on or in public areas, observe all applicable regulations. Make sure beforehand that the machine is in compliance with these regulations.
- Installed work lights must NOT be used for travel.
- When crossing underpasses, gates, bridges and tunnels, or when passing under overhead lines, make sure the clearance height and width are sufficient to avoid contact.
- Empty the bucket before traveling on public roads.

2.7 Applications with Lifting Gear

General information

- Craning applications are procedures involving raising, transporting and lowering loads with the help of slings and load-securing devices (for example, ropes and tracks). In doing so, the help of persons is necessary for securing and detaching the load. This applies, for example, to lifting and lowering pipes, shaft rings or containers.
- The excavator may be used for applications with lifting gear ONLY if the prescribed safety devices are in place and functional.

Safety criteria

- When used for craning applications, the machine must meet the following criteria:
  - Proper equipment for slinging and securing the load
  - Proper lift capacity per tables in this Operator's Manual
- In addition, a safe load indicator is required for machines bearing loads of over 1000 kg (2,205 lbs.) or an overturning moment of over 40000 Nm (29,477 ft.lbs.).

Conditions for safe operation

- Secure the load to prevent it from falling or slipping. Install an OSHA-approved load hook after removing the bucket or other approved attachment to provide a secure attachment point for the lifting sling, track, or cable.
- Have loads fastened, and crane operators instructed, by a qualified person competent in raning operation and standard hand signals. The person giving instructions to the operator must be within sight of the operator during load attachment and load disconnection.
- The load shall be kept as close to the surface as practical to accomplish the craning operation. The operator shall gently move the controls and machine to avoid swing or oscillating motion of the load. A tether line is recommended to dampen the tendency of the load to swing or oscillate during the craning operation.

https://truckmanualshub.com/

- Machine travel with a raised load must be done very carefully on a level surface moving very slowly to avoid sudden motion that can cause swinging or oscillating motion of the load.
- The person(s) attaching the load to the excavator shall approach only if the operator is in visual contact with them. No one shall approach the machine or attempt to attach the load until the excavator has stopped and the operator has signaled for the attachment.

2.8 Attachments

General information regarding attachments

- Prior to traveling remove all attachments which cannot be secured in compliance with the legal regulations of your country.
- The machine operating characteristics including steering vary with different option attachments and counter weights. The operator shall be familiar with the variations and act accordingly.
- Use only approved attachments and connecting hardware.
- Attach and remove attachments carefully to avoid damage and potential injury.
- Attach and remove attachments carefully to avoid damage and potential injury.
- Confirm that the attachment has been properly and securely attached to the machine according to the instructions. Before using the attachment, the operator shall confirm that the attachment performs correctly in response to control actuation.
- Do not attach the attachment with the engine running and the machine moving.
- Before putting the machine/attachment into operation (startup/moving), make sure that no one in the immediate vicinity will be at risk.
- Before leaving the seat, always secure the machine against unintentional movement and unauthorized use. Lower the attachments to the ground.
- Mount the attachments only if the engine and the drive have been stopped.
- Especially when traveling or operating machines equipped with a quickhitch for the attachments, make sure the attachment is securely locked in the quickhitch. The lock pin must be visible on either side of the bores on the attachment. Check before starting work.

Installation notes

- Couple and uncouple hydraulic hoses/lines (hydraulic quick couplers) only if the engine is stopped and the controls actuated to release the hydraulic pressure remaining in the circuit. Follow the operating instructions for releasing the pressure.
- Operate the machine only if all protective devices for the attachments have been installed and are functional, and if all brake, light and hydraulic connections have been connected.
- If an optional attachment is installed, make sure that all lights and associated indicator lights are installed and functional.
- The lock pin of the quick hitch attachment shall be visible at each end of the pin to confirm that the attachment is securely locked in place. The operator shall perform a check operation to confirm the latching integrity before operating at a production pace.

https://truckmanualshub.com/

- Prior to fitting attachments to the stick (the mobile extension of the boom), secure the control lever of the hydraulic control unit against unintentional movement. Raise the left arm rest to avoid unintentional activation for the ISO/SAE operating mode. Avoid actuating the right hand control if the alternative control mode is selected.

2.9 Transport and Towing

Towing

The machine must be towed, loaded and transported according to the procedures described within this Operator's Manual.

Transporting

- The transporting vehicle must have sufficient load capacity and platform size to safely transport the machine. Refer to section 6 of this manual to determine the physical characteristics of the machine before loading and transporting.
- Use OSHA-approved straps, chains or cables to securely fastened the machine to the surface of the transport.
- Use the tie down points provided on the load surface of the transport.
- Attach the tie down devices to the excavator at the designated tie down points.
- Confirm that the excavator tie down procedures will prevent sideways, forward, rearward and upward motion of the excavator in the event the transport vehicle is involved in an incident or sudden avoidance maneuver.

2.10 Safety Guidelines for Maintenance

General maintenance notes

- Adhere to prescribed intervals or those specified in this Operator's Manual for routine checks/inspections and maintenance on or with the machine.
- For inspection and maintenance on or with the machine, ensure that all tools and service center equipment are capable of performing the tasks prescribed. Do not use malfunctioning or broken tools. Use certified measuring devices that are routinely calibrated for accuracy (torque wrench, pressure gauge, ammeter, etc.).
- Replace hydraulic hoses within stipulated and appropriate intervals even if no safety-relevant defects have been detected.
- Recycle scrapped parts and drained fluids according to environmental and hazardous material requirements. To avoid fire and health hazards, dispose of soiled shop towels by approved methods.
- Always tighten any screws, electrical connections, or hose connections that may have been loosened during maintenance.
- Upon completion of the maintenance and repair work, immediately refit and check any safety devices removed for set-up or maintenance purposes.

Personal safety measures

- Brief the technician and the operator before beginning maintenance or repair work. Appoint someone to supervise the activities.
- Always work in groups of two when diagnosing a machine problem requiring the engine to be running. Both persons must be trained on the machine—one person must be seated on the seat and maintain visual contact with the other person.

https://truckmanualshub.com/

- Observe the specific safety instructions in the Maintenance section of this Operator's Manual.
- Always keep a safe distance from all rotating and moving parts, for example, fan blades, V-belt drives, PTO shaft drives, fans, etc.
- Before starting work on the machine, always ensure safe blocking/ support.
- Apply special care when working on the fuel system due to the increased fire hazard.
- Engine and muffler system become very hot during operation and require cool-down time after machine is shut off. Avoid contact with hot parts. Wait for the machine to cool before touching components.
- Retainer pins can fly out or splinter when struck with force. Avoid striking the pins during operation, repair, or maintenance.
- Do not use starting fluid (for example, ether), especially in those cases in which a heater plug (intake air pre-heating) is used at the same time.
-

Preparing for maintenance and repair work

- Prior to performing repair and maintenance on or with the machine, always attach a warning label such as "Repair work—do not start machine!" to the control elements as a precautionary measure.
- Observe the startup and shutdown procedures set forth in this Operator's Manual. This applies to any work concerning the operation, conversion or adjustment of the machine and its safety-oriented devices, or any work related to inspection and maintenance.
- Prior to performing assembly work on the machine, stabilize the area under repair and use proper lifting and support devices to change parts weighing more than
  9 kg (20 lbs.).
- Perform maintenance on or with the machine ONLY if:
  - the machine is positioned on firm and level ground
  - secured against unintentional movement
  - all hydraulically movable attachments and working equipment have been lowered to the ground
  - if the engine is stopped
  - if the starting key has been removed
  - the pressure accumulator is discharged
- Perform maintenance on or with the machine beneath a raised machine, attachments or additional equipment ONLY if a safe and secure support has been provided. The use of hydraulic cylinders or jacks as the sole method of support does NOT sufficiently secure raised machines or equipment/attachments!

Performing maintenance and repairs

- Observe the adjustment, maintenance and inspection activities and intervals set forth in this Operator's Manual, including information on the replacement of parts and partial equipment. These activities must be performed only by qualified personnel.
- Disconnect the negative battery terminal when working on the electrical system.
- Do not allow the machine to be serviced, repaired, or test-driven by unauthorized personnel.
- If maintenance with the engine running cannot be avoided, lower the stabilizer blade and raise the control lever base.

https://truckmanualshub.com/

- Wear a safety harness when performing elevated maintenance on or with the machine. Keep all handles, steps, handrails, platforms, landings, and ladders free from dirt, snow and ice.
- Always use specially designed or otherwise safety-oriented ladders and working platforms to perform overhead assembly work. NEVER use machine parts or attachments/superstructures as a climbing aid!
- Do not use the work equipment as lifting platforms for persons.
- In accordance with this Operator's Manual and instructions for the respective assembly, release the pressure in all system sections and pressure lines (hydraulic system) before performing any maintenance on or with the machine.
- Prior to performing assembly work on the machine, make sure no movable parts will roll away or start moving.
- To avoid accident hazard, parts and large assemblies being moved for replacement purposes must be carefully attached and secured to lifting gear.
- Use only suitable lifting gear and suspension systems in a technically perfect state with adequate load-bearing capacity! Stay clear of suspended loads!
- Clean the machine, especially connections and threaded unions, of any traces of oil, fuel or preservatives before performed maintenance/ repair work!
- Do not use aggressive detergents!
- Use lint-free cleaning rags!
- Before cleaning the machine with water, steam jet (high-pressure cleaner) or detergents, cover or tape up all openings which – for safety and functional reasons – must be protected against water, steam or detergent penetration. Special care must be taken with the electrical system.
- After cleaning, remove all covers and tapes applied for that purpose!
- After cleaning, examine all fuel, lubricant and hydraulic oil lines for leaks, chafe marks and damage!
- Rectify all defects without delay!
- Always tighten any screw connections that have been loosened during maintenance and repair!
- Any safety devices removed for set-up, maintenance or repair purposes must be refitted and checked immediately upon completion of the maintenance and repair work
- Make sure all consumables and replaced parts are disposed of safely and with minimum environmental impact!

Special Hazards

Battery

- In case of a frozen battery or of an insufficient electrolyte level, do not try starting the machine with battery jumper cables. The battery can burst or explode.
- Batteries contain caustic sulphuric acid. When handling the battery, observe the specific safety instructions and regulations relative to accident prevention.
- A volatile oxyhydrogen mixture forms in batteries during normal operation and especially when charging. Always wear gloves and eye protection when working with batteries.

https://truckmanualshub.com/

- Starting the machine with a battery jumper cable can be hazardous if performed improperly. Observe the safety instructions regarding the battery.
- Before taking up work on machine parts hazardous for life and limb (bruising, cutting), always ensure safe blocking/support of these areas
- Perform maintenance and repair work beneath a raised machine, attachments or additional equipment only if a safe and secure support has been provided for (the sole use of hydraulic cylinders, jacks etc. does not sufficiently secure raised machines or equipment/attachments)
- Avoid contact with hot parts, such as the engine block or the exhaust system during the operation of the machine and for some time afterwards – burn hazard!
- Retainer pins can fly out or splinter when struck with force – personal injury hazard.
- Do not use starting fuel! This especially applies to those cases in which a heater plug (intake-air preheating) is used at the same time – explosion hazard.
- Apply special care when working on the fuel system – increased fire hazard.

Tracks

- Repair work on the tracks must be performed only by trained technical staff or by a Wacker Neuson service center.
- Malfunctioning tracks reduce the machine's operational safety. Therefore, check the tracks regularly for cracks, cuts or other damage.
- Check track tension at regular intervals.

Electric energy

- Use only original fuses with the specified current rating.
- In case of electrical system malfunctions, stop the machine immediately, disconnect the battery (by using the battery master switch), and perform troubleshooting procedures.
- When operating the machine, maintain a safe distance from overhead electric lines! If work must be performed close to overhead lines, the equipment and attachments must be kept well away from them.
- If the machine comes into contact with a live wire:
- Immediately travel the machine out of the danger zone.
- Warn others against approaching and touching the machine.
- Do not leave the machine until the line that has been touched or damaged has been safely de-energized!
- Make sure that work on the electric system is performed only by a technician with appropriate training, in accordance with applicable electrical engineering codes.
- Inspect and check the electrical equipment of the machine at regular intervals. Defects such as loose connections or scorched cables must be repaired immediately.
- Observe the operating voltage of the machine/attachments. The voltages must be compatible (12 volts) and confirm that an appropriate fuse or circuit breaker is incorporated in the system to prevent damage from malfunction or short circuit.
- Always remove the grounding strap from the battery when working on the electric system.

https://truckmanualshub.com/

Hydraulics

- Check all lines, hoses, and threaded couplers and fittings regularly for leaks and obvious damage. Repair any damage and leaks immediately. Splashed oil can cause injury and fire!
- In accordance with the Operator's Manual/instructions for the respective assembly, release the pressure in all system sections and pressure lines (hydraulic system) to be opened before perform any implementing/repair work!
- Hydraulic and compressed-air lines must be laid and fitted properly. Make sure no connections are interchanged. The fittings, lengths and quality of the hoses must comply with the technical requirements

Noise

- Close all doors and windows if practical.
- Wear ear protection. This is especially important when performing hammer operations or working in enclosed areas.

MSDS

- When handling oil, grease, and other chemical substances such as battery electrolyte or hydraulic fluid, observe the product-related safety regulations (Material Safety Data Sheet (MSDS).

Gas, dust, steam, smoke

- Operate the machine only on adequately ventilated premises! Before starting internal combustion engines or operating fuel-operated heating systems on enclosed premises, make sure there is sufficient ventilation!
- Observe the regulations in force at the respective site!
- Perform welding, flame-cutting and grinding work on the machine only if this has been expressly authorized. There can be a explosion and fire hazard, for example!
- Before performing welding, flame-cutting and grinding work, clean the machine and its surroundings from dust and other flammable substances, and make sure the premises are adequately ventilated – explosion hazard.

https://truckmanualshub.com/

2.11 Safety Guidelines while using Internal Combustion Engines

WARNING

Internal combustion engines present special hazards during operation and fueling.

Failure to follow the warnings and safety guidelines could result in severe injury or death.

► Read and follow the warning instructions in the engine owner's manual and the safety guidelines below.

Running the engine

When running the engine:

- Keep the area around muffler pipe free of flammable materials.
- Check the fuel lines and the fuel tank for leaks and cracks before starting the engine. Do not run the machine if fuel leaks are present or the fuel lines are loose.

When running the engine:

- Engine exhaust CAN KILL YOU IN MINUTES. Engine exhaust contains carbon monoxide. This is a poison you cannot see or smell. Never run the machine indoors or in an enclosed area such as a deep trench unless adequate ventilation, through such items as muffler fans or hoses, is provided.
- Do not smoke while operating the machine.
- Do not run the engine near open flames.
- Do not touch the engine or muffler while the engine is running or immediately after it has been turned off.
- Do not operate a machine when its fuel cap is loose or missing.
- Do not remove the radiator cap when the engine is running or hot. The radiator fluid is hot and under pressure, and may cause severe burns!

Fueling the engine

When fueling the engine:

- Clean up any spilled fuel immediately.
- Refill the fuel tank in a well-ventilated area.
- Replace the fuel tank cap after refueling.

When fueling the engine:

- Do not smoke.
- Do not refuel a hot or running engine.
- Do not refuel the engine near an open flame.

https://truckmanualshub.com/

3 Introduction

3.1 Machine overview

Position	Designation
1.	Working light on boom
2.	Roof lights (option)
3.	Lifting eye
4.	Rotating beacon (option)
5.	Door arrester
6.	Engine cover
7.	Fuel tank filler inlet
8.	Side cover
9.	Exhaust pipe
10.	Eye hook for tying down the machine
11.	Stabilizer blade
12.	Travel gear
13.	Handle
14.	Auxiliary hydraulics
15.	Door handle and lock

Fig. 3: Machine overview

https://truckmanualshub.com/

Overview of model designations and trade names

Machine model/machine designation	Trade name
E12-02	ET18
E12-03	ET20
E12-04	ET24

3.2 Brief description of the machine

The machine model ET18/ET 20/ET24 is a self-propelled work machine.

Get informed on and follow the legal regulations of your country.

This machine is a versatile and powerful helper for moving earth, gravel and debris on construction sites and elsewhere. A wide range of attachments accounts for the numerous applications of the machine, among others hammer and grab applications. When using these attachments, observe the legal regulations of your country and equip the machine with all the safety equipment required. See chapter 1.4 *Fields of application and use of attachments on page 3-5* for further applications.

The main components of the machine are:

- Travel gear
  - Travel gear
  - Stabilizer blade
  - Live ring
- Upper carriage
  - Cab
  - Water-cooled diesel engine
  - Hydraulic and electrical components
- Boom

Information

The machine can be equipped with the “Telematic” feature (for transmitting operating data, location, etc. via satellite)!

Traveling drive

The diesel engine permanently drives a twin axial variable displacement pump whose oil flow is sent to the control valve. Depending on actuation, each pump supplies a hydraulic motor or the work hydraulics with oil.

Work hydraulics

The twin axial variable displacement pump supplies the work hydraulics for the main components with oil. This pump is output-controlled and supplies the oil quantity depending on the output required. This machine is also equipped with a gear pump flanged onto the variable displacement pump. Depending on engine speed, this pump supplies oil for the swivel unit, the stabilizer blade and travel gear extension/retraction (option).

Shock cartridges (option)

The auxiliary hydraulics are equipped with Schock cartridges to compensate pressure peaks in the hydraulic system.

Cooling system

Coolant temperature is monitored with the indicator light on the machine’s instrument panel.

https://truckmanualshub.com/

Cab/canopy

The cab/canopy have been specially designed for protection in case of an accident.

- ROPS/TOPS tested canopy (open version).
- ROPS/TOPS tested cab (closed version/option).
- Protective FOPS structure (option) for cab/canopy; protective structure against falling objects.
- Front Guard with integrated FOPS (option) for cab/canopy; protective structure against objects from the front (for example pipes, tree trunks etc.) and falling objects.
- Shatter protection (option) for canopy; protective structure against fragments flying around from the front.

Definition of FOPS/Front Guard levels

Level I:

Protection against small falling objects (FOPS) or small objects penetrating into the cab from the front (Front Guard), such as bricks, small pieces of concrete, tools, for machines that are used for repairing roads, landscaping work and for working on other construction sites, for example.

Level II:

Protection against heavy falling objects (FOPS) or heavy objects penetrating into the cab from the front (Front Guard), such as trees, pieces of rock, for machines that are used for clearance work, demolition work and forestry work.

https://truckmanualshub.com/

3.3 Notices and regulations on use

Designated use

- The machine is intended for:
  - moving earth, gravel or rubble, for hammer operation as well as for
  - working only with the attachments mentioned in chapter *Fields of application and use of attachments on page 3-5*.
  - Every other use is regarded as not designated for the use of the machine. Wacker Neuson will not be liable for damage resulting from use other than mentioned above. The operator/machine owner alone will bear the risk.
    Designated use also includes observing the instructions set forth in the Operator's Manual and observing the maintenance and service conditions.
- The machine may not be used for transport jobs on public roads.
- In applications with lifting gear, the machine is used according to its designated use only if the mandatory devices are installed and functional!
- The quickhitch is only used for locking an attachment.
- Hammer operation is only allowed in specified areas.

https://truckmanualshub.com/

Fields of application and use of attachments

Notice

In order to avoid damage to the machine, only the attachments listed below have been certified for installation on the machine.

► Contact a Wacker Neuson service center if you wish to use other attachments.

Using attachments of other manufacturers, or attachments which have been released for other machine types, can reduce the machine's output and stability considerably, and can also cause damage to the machine and injuries to the operator or the personnel.

Always compare the weight of the attachment and its maximum payload with the indications in the lift capacity/stability table. Never exceed the maximum payload stated in the lift capacity/stability table.

Information

Please refer to the Operator's and maintenance manual of the attachment manufacturer for using and performing maintenance on attachments such as hammers, grabs, hydraulic quickhitch, etc.

Description of attachment	Weight	Capacity	Machine	Remarks
Easy Lock quickhitch	19 kg (42 lbs)	--	ET18	Required for operation of the Wacker Neuson quickhitch system.
		--	ET 20	
		--	ET 24	
Powertilt with Easy Lock	55 kg (121 lbs)	--	ET 18	
		--	ET 20	
		--	ET 24	
Backhoe bucket 250 mm (10 in)	30 kg (66 lbs)	0.023 m^3 (0.81 ft^3)	ET 18	
Backhoe bucket 250 mm (10 in)	31 kg (68 lbs)	0.023 m^3 (0.81 ft^3)	ET 18	Easy Lock quickhitch
Backhoe bucket 250 mm (10 in)	34 kg (75 lbs)	0.030 m^3 (1.06 ft^3)	ET 20	Easy Lock quickhitch

https://truckmanualshub.com/

Description of attachment	Weight	Capacity	Machine	Remarks
Backhoe bucket 300 mm (12 in)	32 kg (71 lbs)	0.027 m^3 (0.95 ft^3)	ET 18	
	34 kg (75 lbs)	0.028 m^3 (0.99 ft^3)	ET 18	Easy Lock quickhitch
	42 kg (93 lbs)	0.037m^3 (1.31 ft^3)	ET 20	
	37 kg (82 lbs)	0.036 m^3 (1.27 ft^3)	ET 20	Easy Lock quickhitch
	40.3 kg (89 lbs)	0.043 m^3 (1.52 ft^3)	ET 24	
	43 kg (95 lbs)	0.042 m^3 (1.48 ft^3)	ET 24	Easy Lock quickhitch
Backhoe bucket 400 mm (16 in) **Standard bucket**	37 kg (82 lbs)	0.035 m^3 (1.24 ft^3)	ET 18	
	39 kg (86 lbs)	0.037 m^3 (1.31 ft^3)	ET 18	Easy Lock quickhitch
	46 kg (101 lbs)	0.051 m^3 (1.80 ft^3)	ET 20	
	44 kg (97 lbs)	0.048 m^3 (1.70 ft^3)	ET 20	Easy Lock quickhitch
	48 kg (106 lbs)	0.059 m^3 (2.08 ft^3)	ET 24	
	50 kg (110 lbs)	0.056 m^3 (1.98 ft^3)	ET 24	Easy Lock quickhitch
Backhoe bucket 500 mm (20 in)	43 kg (95 lbs)	0.044 m^3 (1.55 ft^3)	ET 18	
	47 kg (104 lbs)	0.046 m^3 (1.62 ft^3)	ET 18	Easy Lock quickhitch
	56 kg (123 lbs)	0.064 m^3 (2.26 ft^3)	ET 20	
	52 kg (115 lbs)	0.060 m^3 (2.12 ft^3)	ET 20	Easy Lock quickhitch
	54.3 kg (120 lbs)	0.075 m^3 (2.65 ft^3)	ET 24	
	60 kg (132 lbs)	0.070 m^3 (2.47 ft^3)	ET 24	Easy Lock quickhitch

https://truckmanualshub.com/

Description of attachment	Weight	Capacity	Machine	Remarks
Backhoe bucket 600 mm (24 in)	63 kg (139 lbs)	0.053 m^3 (1.87 ft^3)	ET 18	
	53 kg (117 lbs)	0.055 m^3 (1.94 ft^3)	ET 18	Easy Lock quickhitch
	61 kg (134 lbs)	0.077 m^3 (2.72 ft^3)	ET 20	
	59 kg (130 lbs)	0.072 m^3 (2.54 ft^3)	ET 20	Easy Lock quickhitch
	63 kg (139 lbs)	0.091 m^3 (3.21 ft^3)	ET 24	
	67 kg (148 lbs)	0.084 m^3 (2.97 ft^3)	ET 24	Easy Lock quickhitch
Backhoe bucket 700 mm (28 in)	71 kg (157 lbs)	0.107 m^3 (3.78 ft^3)	ET 24	
Ditch cleaning bucket 850 mm (33 in)	63 kg (139 lbs)	0.065 m^3 (2.30 ft^3)	ET 18	Easy Lock quickhitch
			ET 20	
			ET 24	
Ditch cleaning bucket 1000 mm (39 in)	65.4 kg (144 lbs)	0.082 m^3 (2.90 ft^3)	ET 18	
			ET 20	
			ET 24	
	72 kg (159 lbs)	0.078 m^3 (2.75 ft^3)	ET 18	Easy Lock quickhitch
			ET 20	
			ET 24	
Ditch cleaning bucket 1200 mm (47 in)	75 kg (165 lbs)	0.098 m^3 (3.46 ft^3)	ET 24	
	84 kg (185 lbs)	0.094 m^3 (3.32 ft^3)	ET 18	Easy Lock quickhitch
			ET 20	
			ET 24	
Offset bucket 850 mm (33 in)	86 kg (190 lbs)	0.054 m^3 (1.91 ft^3)	ET 18	Easy Lock quickhitch
	103 kg (227 lbs)	0.062 m^3 (2.19 ft^3)	ET 20	Easy Lock quickhitch
			ET 24	
Offset bucket 1000 mm (39 in)	93 kg (205 lbs)	0.063 m^3 (2.22 ft^3)	ET 18	Easy Lock quickhitch
	110 kg (243 lbs)	0.073 m^3 (2.58 ft^3)	ET 20	Easy Lock quickhitch
			ET 24	
Offset bucket 1200 mm (47 in)	121 kg (267 lbs)	0.088 m^3 (3.11 ft^3)	ET 20	Easy Lock quickhitch
			ET 24	
Hydraulic hammer NE 8	66 kg (146 lbs)	--	ET 18	Easy Lock quickhitch
Hydraulic hammer NE 12	110 kg (243 lbs)	--	ET 20	Easy Lock quickhitch
			ET 24	
Hydraulic hammer NE 16	150 kg (331 lbs)	--	ET 24	Easy Lock quickhitch

https://truckmanualshub.com/

3.4 Labels

WARNING

Accident hazard! Replace missing or damaged labels immediately.

Can result in severe injury or death.

- ► Check warning and information labels regularly whether they are missing or damaged.
- ► Never remove warning and information labels.

Type labels

Fig. 4: Position of type label

Serial number

The serial number is stamped on the machine chassis. It is also located on the type label.

Fig. 5: Type label

Type label

The type label is located at the front left on the upper carriage.

Description of attachment	HYDRAULIC EXCAVATOR
Fahrzeug Seriennummer/serial no./no. de série	Machine serial number
Fahrzeug Modell/model/modèle:	Machine designation
Leistung/performance:	Engine output
Typ/version:	Machine type
Betriebsgewicht/operating weight/poids en charge:	Operating weight
Transportgewicht/ transport weight/ poids en transport:	Transport weight
G. Gew./GWR/PTAC:	Gross weight rating (admissible)
Max. Nutzlast/max. payload/max. charge utile:	Maximum payload
Zul. Achslast vorne/front GAWR/PNBE AV:	Front gross axle weight rating
Zul. Achslast hinten/rear GAWR/PNBE AR:	Rear gross axle weight rating
EWG Nr./CEE no.:	EEC check number
Baujahr/model year/année fabr.:	Year of construction

https://truckmanualshub.com/

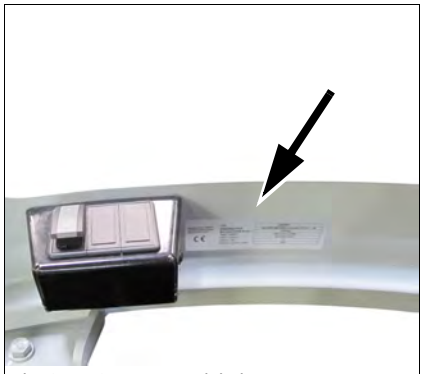

Fig. 6: Canopy type label

Cab number (canopy)

The type label is located behind the seat.

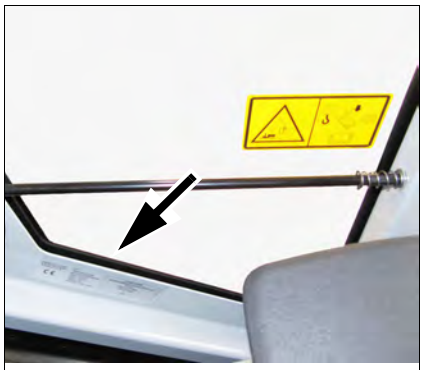

Fig. 7: Cab type label

Cab number (cab)

The type label is located under the left-hand window.

Fig. 8: Diesel engine type label

Engine number

The type label is located on the valve cover (engine).

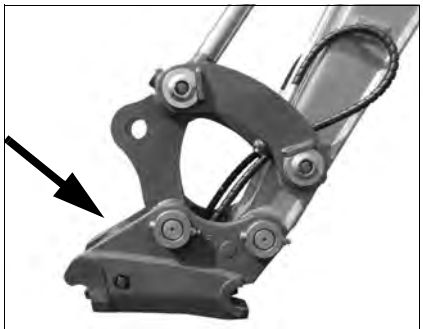

Fig. 9: Hydraulic quickhitch type label

Hydraulic quickhitch

The serial number is located on the type label.

The type label is located on the front side of the hydraulic quickhitch fork.

https://truckmanualshub.com/

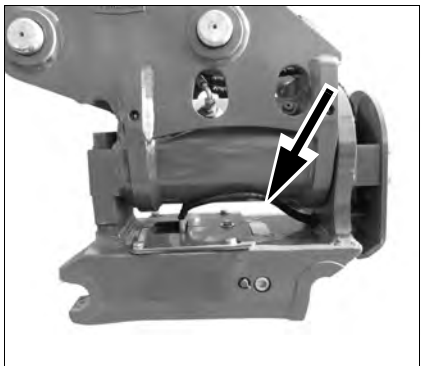

Fig. 10: Powertilt type label

Powertilt with hydraulic quickhitch

The serial number of the Powertilt is stamped in the housing near the hydraulic connections.

The serial number of the hydraulic quickhitch is located on the type label.

The type label is located on the rear side of the hydraulic quickhitch fork.

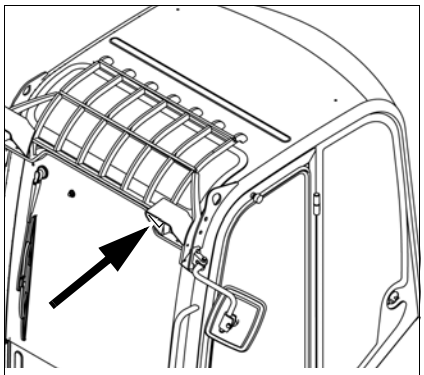

Fig. 11: FOPS type label

FOPS type label

The type label is located at the upper left of the chassis.

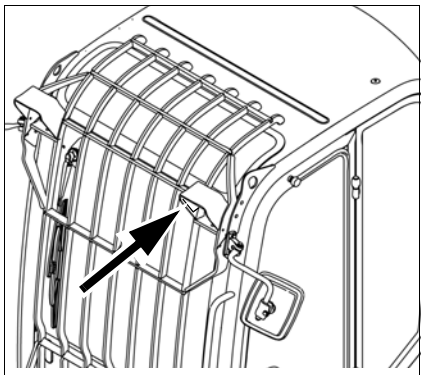

Fig. 12: Front Guard type label

Front Guard type label

The type label is located at the upper left of the chassis.

https://truckmanualshub.com/

Warning labels

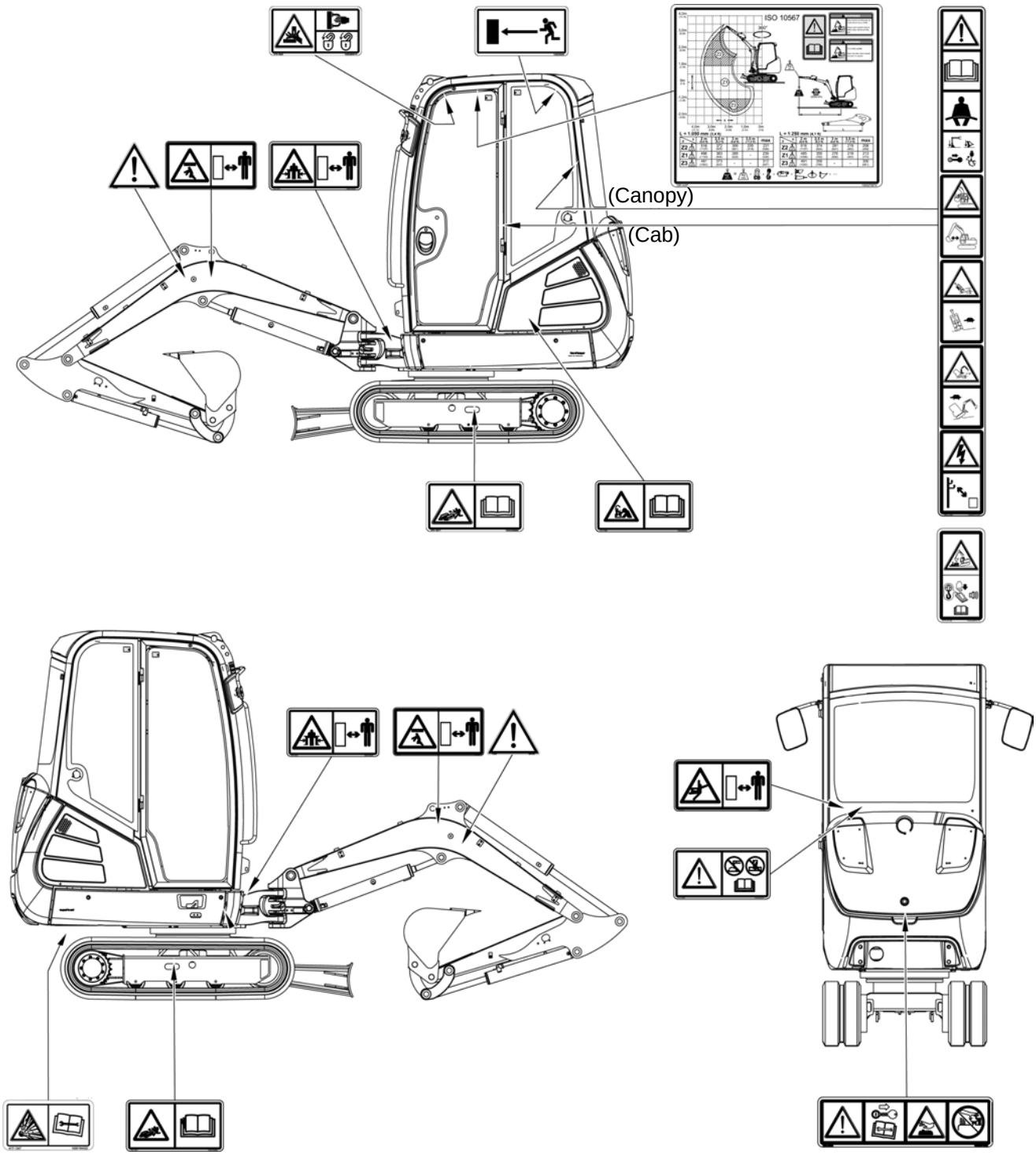

Fig. 13: Warning labels

https://truckmanualshub.com/

The following states signs and symbols that do not contain explanatory text and that are not explained in the following chapters.

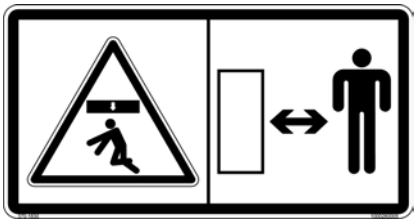

Fig. 14: Danger zone

Meaning

Severe or fatal injury hazard.

Stay clear of suspended loads and/or of the danger zone of the machine during operation.

Position

On the boom on the left and right.

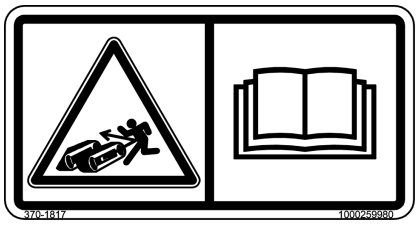

Fig. 15: Track tensioner

Meaning

Potential high pressure grease discharge from the track tension adjustment fitting.

Read the Operator's Manual before working with the track tensioner.

Position

On the travel gear near the lubrication system.

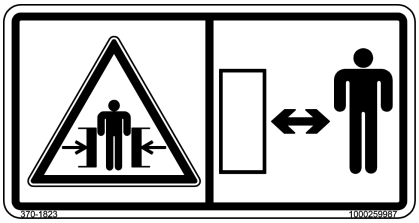

Fig. 16: Articulation

Meaning

Crushing hazard.

Stay clear of the machine's danger zone during operation.

Position

At the front of the chassis near the swiveling console.

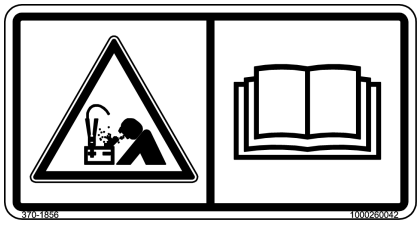

Fig. 17: Battery

Meaning

Explosion hazard due to wrong connection of battery jumper cables.

Position

Inside the engine compartment behind the left-hand side cover.

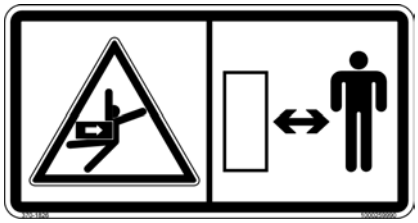

Fig. 18: Slewing range

Meaning

Crushing hazard.

Stay clear of the machine's slewing range during operation.

Position

At the rear of the cab on the left in traveling direction.

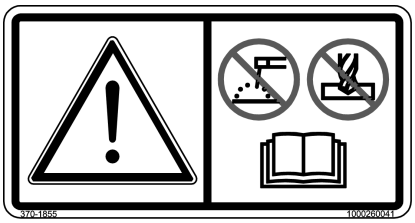

Fig. 19: Cab

Meaning

Modifications to the structure (welding, driling, for example), retrofitting and incorrect repairs affect the protective effect of the cab/canopy and can cause serious injuries and even death.

Position

At the rear of the cab on the left in traveling direction.

https://truckmanualshub.com/

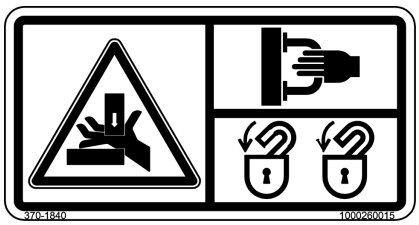

Fig. 20: Front window

Meaning

Hand crushing hazard.

1. Always use the handles to open and close the front window.
2. Always lock the front window with both locks.

Position

On the front window.

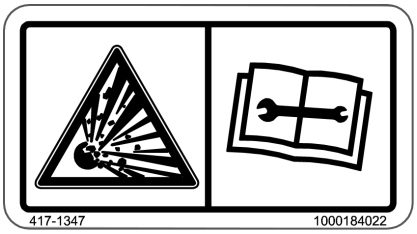

Fig. 21: Pressure accumulator

Meaning

Accumulator is under high pressure. Always read the Operator's Manual before performing maintenance or repairs.

Position

Under the rear part of the machine, on the right (in traveling direction) behind the engine oil sump.

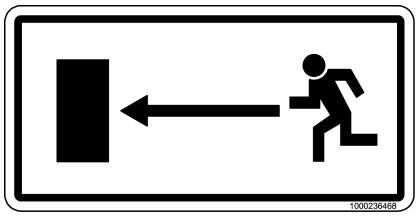

Fig. 22: Emergency exit

Meaning (option)

This label indicates the emergency exit on machines equipped with the Front Guard option.

Position

On the upper edge of the rear window in the cab.

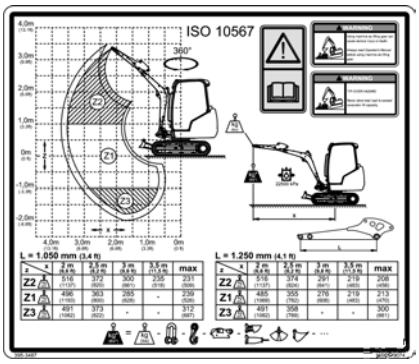

Fig. 23: Stability

Meaning (option)

If the specified load/stability is exceeded, there is a hazard of serious crushing causing serious injuries and even death.

Possible serious damage to the machine.

Position

On the headliner.

https://truckmanualshub.com/

Fig. 24: B/C pillar

Meaning

Read the Operator's Manual before starting the machine.

Always fasten the seat belt during operation.

When leaving the machine

Crushing hazard.

Crushing hazard.

Keep a safe distance from the boom.

Possible serious damage to the machine.

When traveling on slopes, pay attention to the maximum gradient angle and maximum lateral angle of inclination.

Do not use high speed.

Possible serious damage to the machine.

Fatal injury hazard due to electric shock.

When working with the machine, maintain a safe distance from overhead electric lines.

Position

Canopy: on the C pillar on the left in traveling direction.

Cab: on the B pillar on the left in traveling direction.

Fig. 25: Overload

Meaning (option)

Always switch on the safe load indicator during lifting (gear) applications. Failure to observe this can cause the machine to tip over, which in turn can cause serious injuries and even death.

Read and understand the Operator's Manual.

Position

Canopy: on the C pillar on the left in traveling direction.

Cab: on the B pillar on the left in traveling direction.

https://truckmanualshub.com/

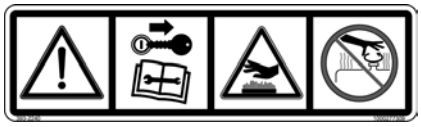

Fig. 26: Engine cover

Meaning

Read the Operator's Manual before starting the machine.

Injury hazard due to rotating parts.

- Open the engine cover only at engine standstill.

Burn hazard due to hot engine parts.

Position

On the engine cover.

Fig. 27: Burn hazard

Meaning

Burn hazard due to hot parts on the boom (lines, plug-and-socket connections, screw connections, hydraulic cylinders, couplings, etc.).

Position

On the boom on the left and right.

https://truckmanualshub.com/

Labels

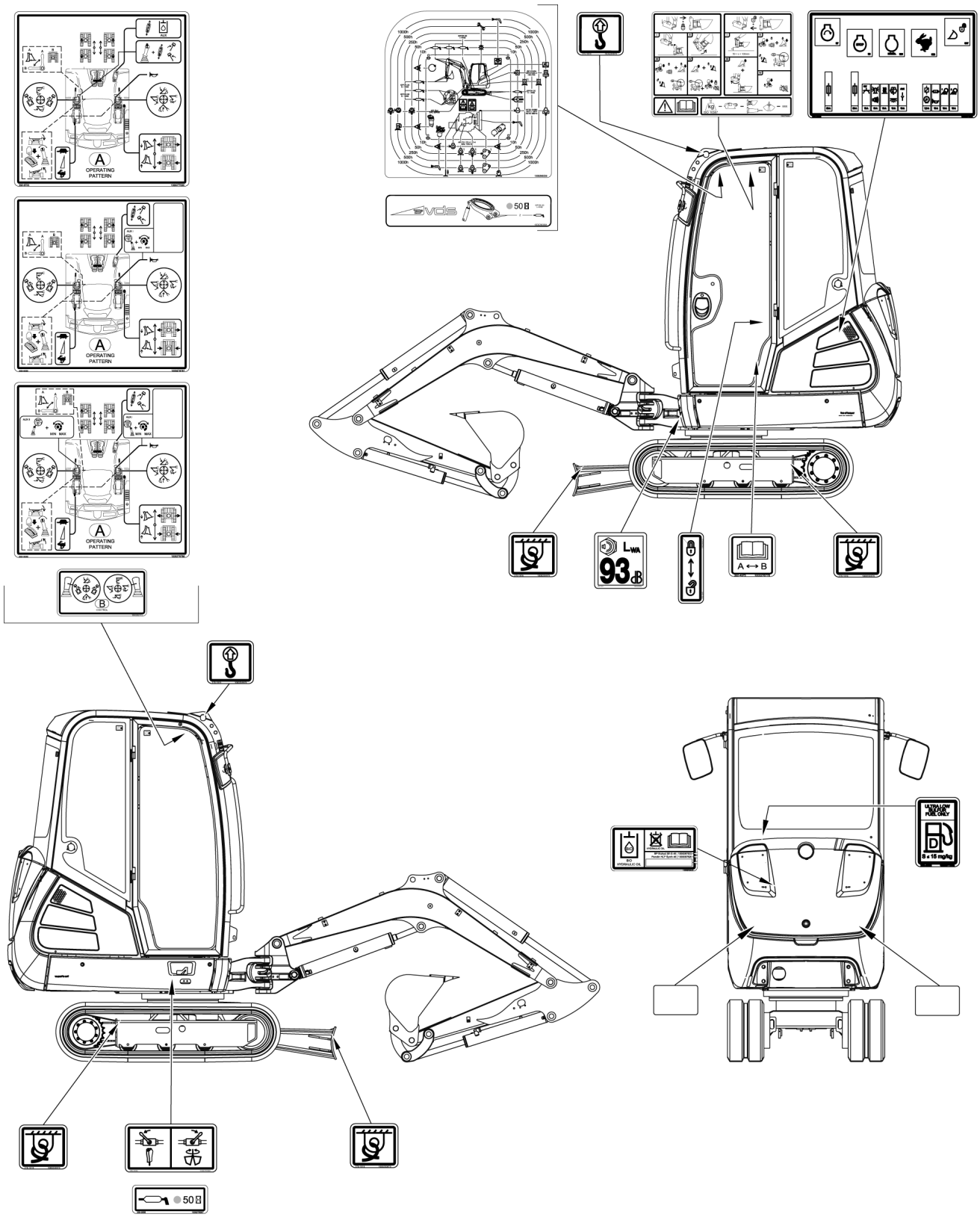

Fig. 28: Labels

https://truckmanualshub.com/

Fig. 29: Diesel

Meaning

Only use diesel fuel with a sulphur content below 15 mg/kg.

Position

Next to the fuel tank filler inlet.

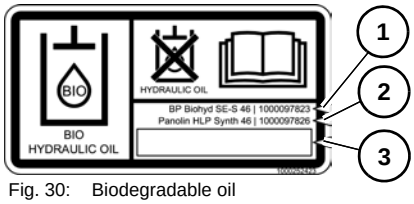

Fig. 30: Biodegradable oil

Meaning (option)

The tank contains biodegradable hydraulic oil.

This label is notched on the side depending on the biodegradable hydraulic oil used.

1. BP Biohyd SE-S 46
2. Panolin HLP Synth 46
3. Other biodegradable hydraulic oil

Position

Next to the filler inlet of the hydraulic oil reservoir.

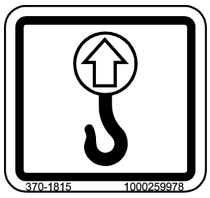

Fig. 31: Raise

Meaning

Indicates the lifting points of the machine.

Position

At the upper left and right of the cab roof.

Fig. 32: Tying down

Meaning (option)

Indicates the tie-down points for tying down the machine.

Position

- On (outside) left and right of travel gear.
- On (inside) left and right of travel gear.
- On the stabilizer blade on the left and right.

Fig. 33: Sound power level

Meaning

Indication of sound power level produced by the machine.

L_{Wa} = sound power level.

Position

At the front on the chassis.

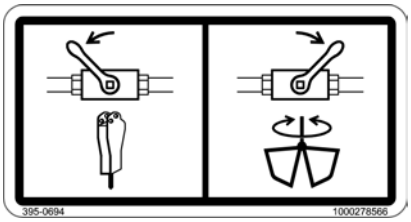

Fig. 34: Hammer operation

Meaning

Changeover between hammer and dual-circuit function.

Position

On the upper carriage on the right in traveling direction.

https://truckmanualshub.com/

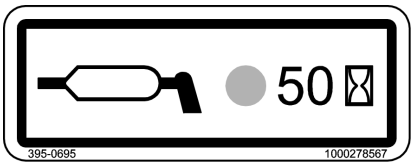

Fig. 35: Lubrication point

Meaning

Indicates the interval at a which lubrication point must be lubricated.

Lubrication points/grease nipples marked green mean: lubrication every 50 hours or once a week.

Lubrication points/grease nipples marked blue mean: lubrication every 10 hours or daily.

Position

On the upper carriage on the right in traveling direction.

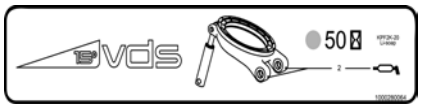

Fig. 36: VDS maintenance plan

Meaning (option)

Indicates the lubrication points of the VDS tilt console.

Position

Upper part of front window.

Fig. 37: Reflector

Meaning

Reflector at the rear.

Position

On either side of the machine at the rear.

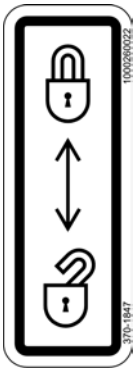

Fig. 38: Lock

Meaning

This label indicates the position in which the control levers are locked.

Position

Canopy: on the left and right-hand control lever bases.

Cab: on the left-hand control lever base (standard) and on the right-hand control lever base (option).

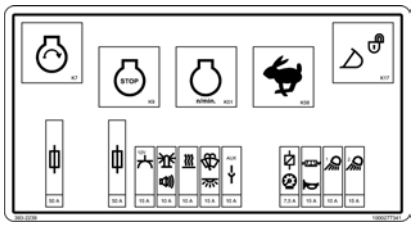

Fig. 39: Fuse box

Meaning

Fuses and relays.

Position

Behind the left-hand side cover, outside on the cover.

https://truckmanualshub.com/

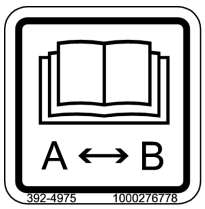

Fig. 40: ISO/SAE changeover

Meaning (option)

Check before starting the machine the operating pattern that has been chosen. Label shows the lever position in which the ISO or SAE controls are selected.

Wiring diagram	Controls	
A	ISO controls (Europe)	Operating Pattern A
B	SAE controls (US)	Operating Pattern B

Position

At the left under the seat.

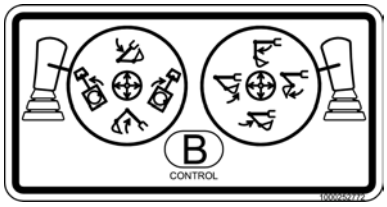

Fig. 41: SAE function label

Meaning (option)

Indicates the control operations that do not comply with the ISO standard if the SAE controls are selected.

Position

On the roof window on right-hand side in traveling direction.

https://truckmanualshub.com/

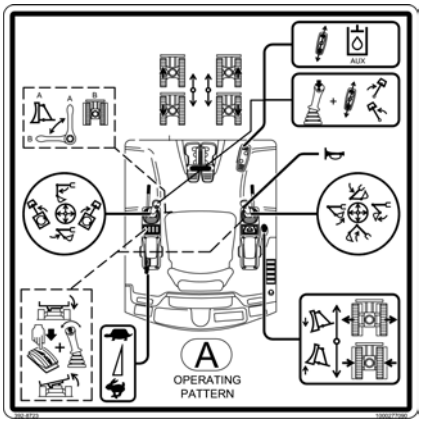

Fig. 42: Function ET 18/ET 20 standard

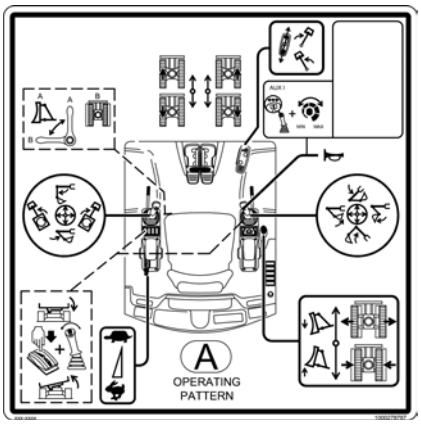

Fig. 43: Function ET 18/ET 20 auxiliary hydraulics/proportional controls

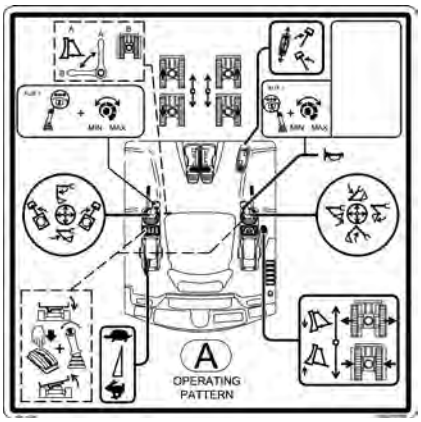

Fig. 44: Function ET 18/ET 20 Powertilt/3rd control circuit

Meaning (ET 18/ET 20)

This label describes the functions of the pedals and control levers (Operating Pattern A – ISO controls (Europe) and Operating Pattern A).

Check before starting the machine the operating pattern that has been chosen.

– see “ISO/SAE changeover” on page 3-19

Position

On the roof window on right-hand side in traveling direction.

https://truckmanualshub.com/

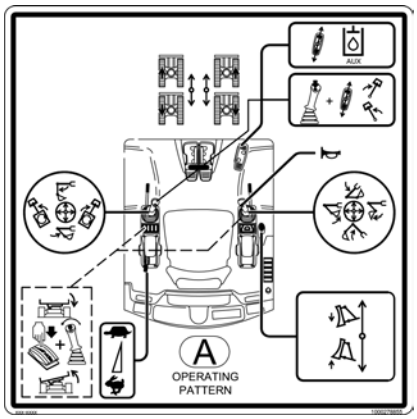

Fig. 45: Function ET 24 standard

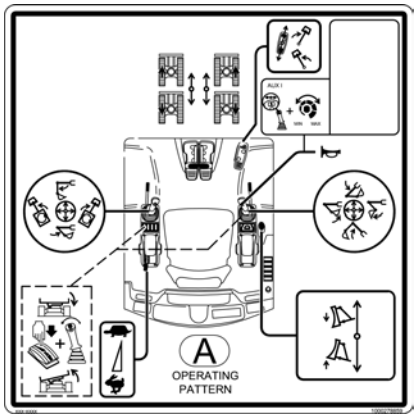

Fig. 46: Function ET 24 auxiliary hydraulics/ proportional controls

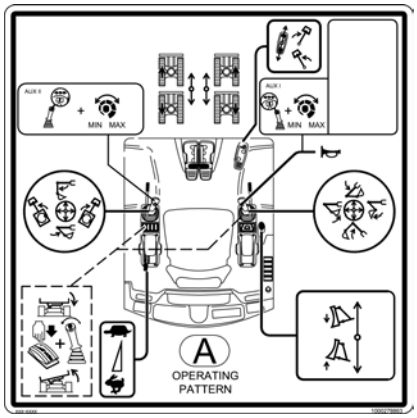

Fig. 47: Function ET 24 Powertilt/3rd control circuit

Meaning (ET 24)

This label describes the functions of the pedals and control levers (Operating Pattern A – ISO controls (Europe) and Operating Pattern A).

Check before starting the machine the operating pattern that has been chosen.

– see “ISO/SAE changeover” on page 3-19

Position

On the roof window on right-hand side in traveling direction.

https://truckmanualshub.com/

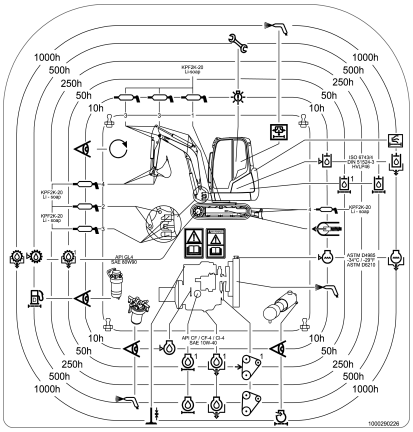

Fig. 48: Maintenance plan

Meaning

Indication of maintenance intervals.

Position

On the roof window on right-hand side in traveling direction.

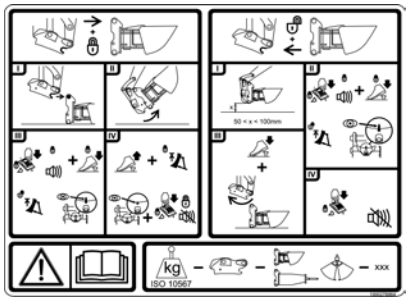

Fig. 49: Hydraulic quickhitch

Meaning

This label describes the functions of the hydraulic quickhitch.

Position

Canopy: inside on the roof.

Cab: at the upper edge of the rear window.

https://truckmanualshub.com/

4 Putting into operation

4.1 Cab/control stand

Safety instructions regarding entry and exit

CAUTION

Accident hazard when entering or exiting!

Entering or exiting incorrectly can cause injuries.

► Keep the mandatory climbing aids clean.

► Use the mandatory climbing aids **A** for entering and exiting.

► Face the machine as you enter and leave it.

► Have damaged climbing aids replaced.

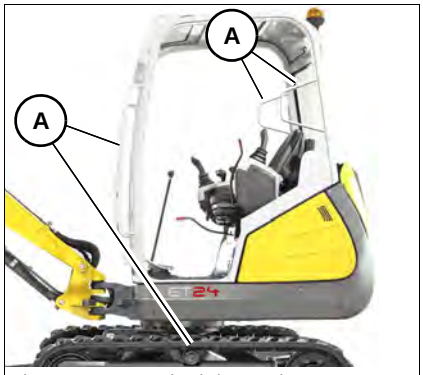

Fig. 50: Entry and exit (canopy)

Entry and exit (canopy)

Stop the machine (see chapter “Operation, stopping the machine”).

If the machine is equipped with a canopy, it can be accessed from either side.

Information

Entry and exit via the tracks is only possible if the travel gear is telescopically extended (telescopic travel gear only for ET18 and ET20).

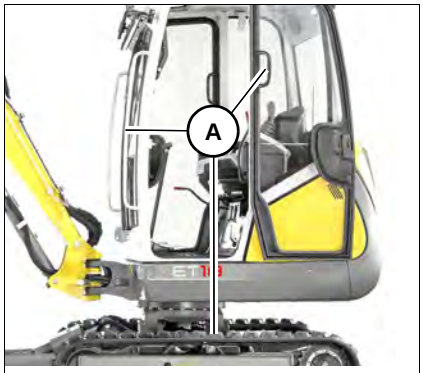

Fig. 51: Entry and exit on left-hand side of cab

Cab entry and exit

Stop the machine (see chapter “Operation, stopping the machine”).

Information

When entering or leaving the cab on the left-hand side, the door must be locked in the arrester.

Information

Entry and exit via the tracks is only possible if the travel gear is telescopically extended (telescopic travel gear only for ET18 and ET20).

https://truckmanualshub.com/

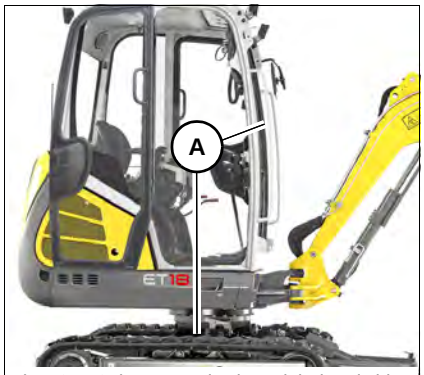

Fig. 52: Cab entry and exit on right-hand side (option)

Information

Do not use the bar on the door when entering or exiting the cab on the right-hand side.

Locking and unlocking the door

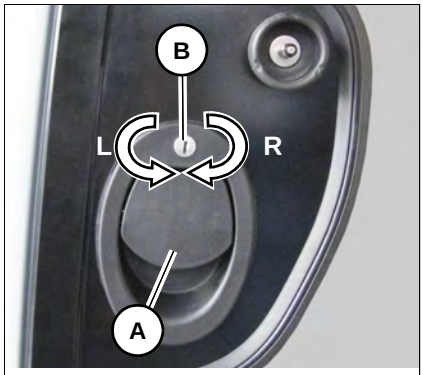

Fig. 53: Outside door opener and lock

Opening the door from the outside:

Pull handle **A** outward.

Locking the door:

1. Turn the key in door lock **B** to the right (R).
2. The door is locked.

Unlocking the door:

1. Turn the key in door lock **B** to the left (L).
2. The door is unlocked.

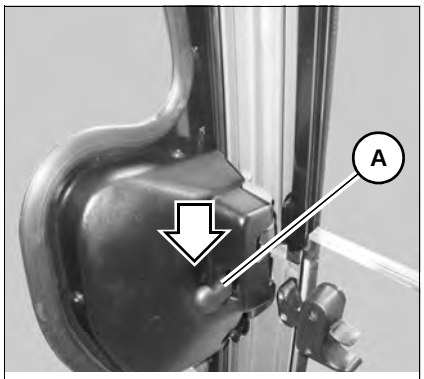

Fig. 54: Inside door opener

Opening the door from the inside:

Press lever **A** on the door lock downward.

Securing an open door

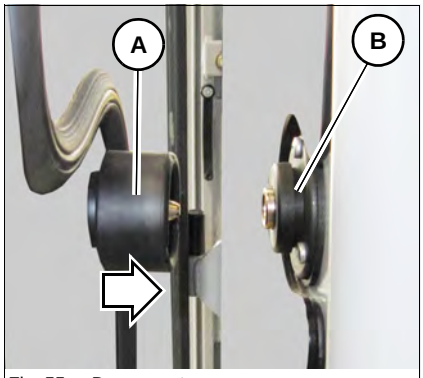

Fig. 55: Door arrester

Press bracket **A** against arrester **B** until it engages with an audible click (only possible on the left).

https://truckmanualshub.com/

Releasing the door arrester

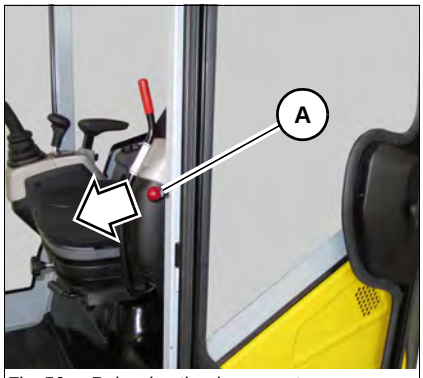

Fig. 56: Releasing the door arrester

Pull button **A** to release the door out of the arrester.

Opening the door to a gap

Notice

The door can be damaged.

► Bear in mind the larger width of the machine if the door is opened to a gap.

► Close the doors when traveling through passages.

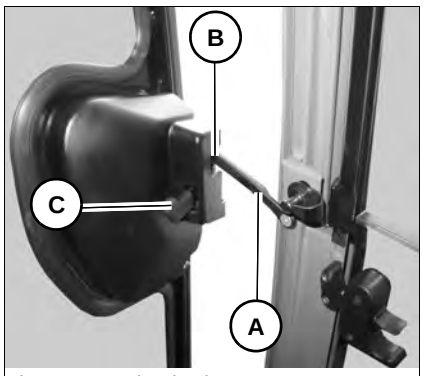

Fig. 57: Opening the door to a gap

1. Raise door opener **A**.
2. Open the door until it engages in door lock **B**.
3. Let door opener **A** engage in door lock **B**.

Unlocking (from inside):

Press lever **C** inside on the door lock downward.

Unlocking (from outside):

Press the handle.

https://truckmanualshub.com/

Opening/closing the front window

CAUTION

Crushing hazard when opening and closing the front window!

Injury hazard due to crushing of parts of body.

- ► Stay clear (extremities, clothing) of the window channel.
- ► Open and close the front window with both handles.
- ► Let the front window engage in the locks as you open and close it.
- ► Fold up the control lever base before opening or closing the front window, in order to avoid any unintentional actuation of the pedals and travel levers.
- ► Take care not to hit the front window with your head as you open and close it.

Opening the front window

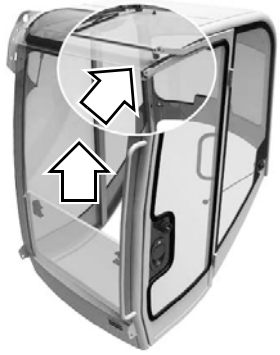

Fig. 58: Front window

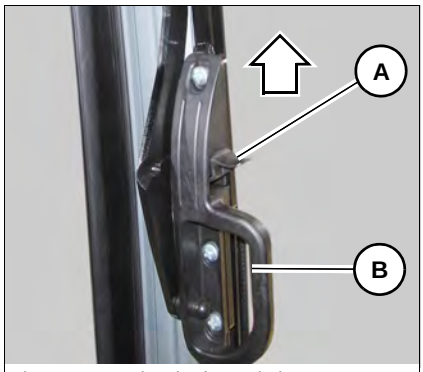

Fig. 59: Opening the front window

1. Keep levers **A** pressed on the left and right, and pull the front window upward with both handles **B**.

https://truckmanualshub.com/

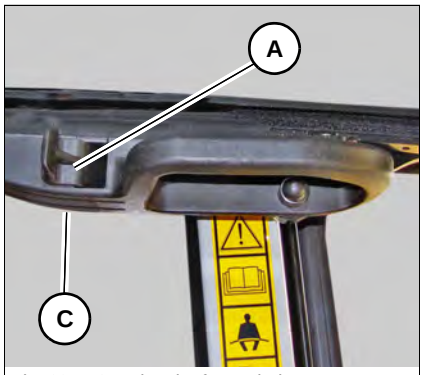

Fig. 60: Opening the front window

2. Release levers **A** and let them engage in both locks **C**.

Closing the front window

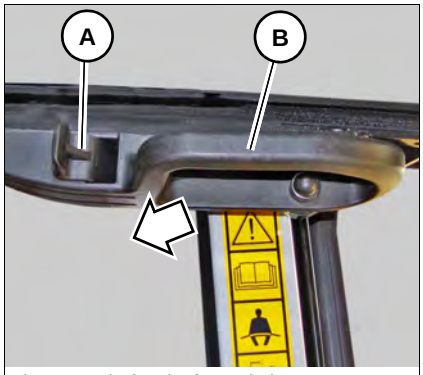

Fig. 61: Closing the front window

1. Press levers **A** on the left and right, and pull the front window downward with both handles **B**.

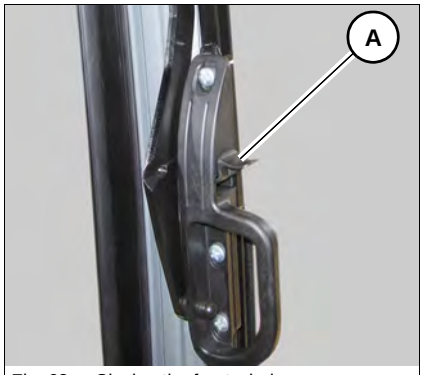

Fig. 62: Closing the front window

2. Press levers **A** on either side and engage them in the lock.

https://truckmanualshub.com/

Opening the lower front window

Fig. 63: Lower front window

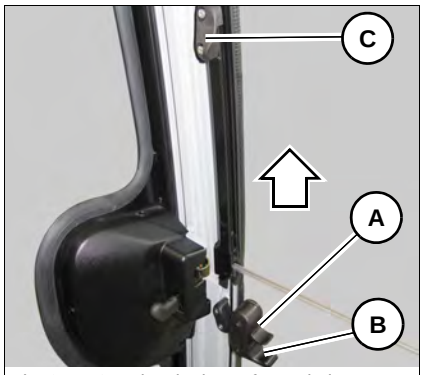

Fig. 64: Opening the lower front window

1. Press levers **A** on the left and right, and pull the front window upward with both handles **B**.
2. Let levers **A** engage in both locks **C**.

Closing the lower front window

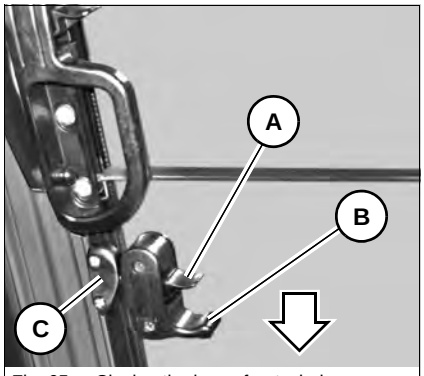

Fig. 65: Closing the lower front window

1. Keep levers **A** pressed on the left and right, and pull the lower front window downward with handles **B**.
2. Release levers **A** and let them engage in both locks **C**.

https://truckmanualshub.com/

Opening the whole front window

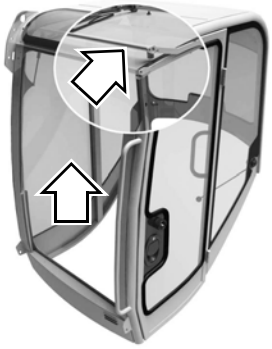

Fig. 66: Whole front window

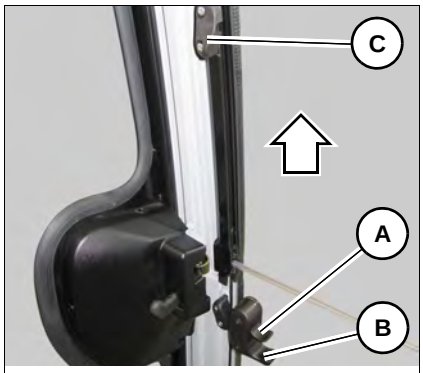

Fig. 67: Opening the whole front window

1. Press levers **A** on the left and right, and pull the lower front window upward with both handles **B**.
2. Let levers **A** engage in both locks **C**.

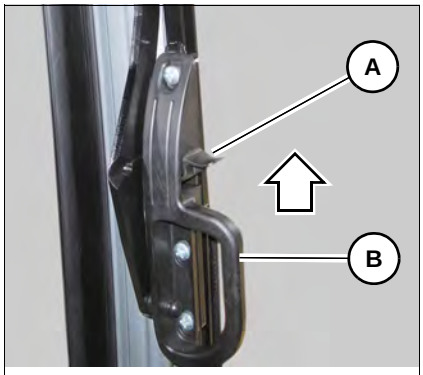

Fig. 68: Opening the whole front window

3. Keep levers **A** pressed on the left and right, and pull the entire front window upward with both handles **B**.

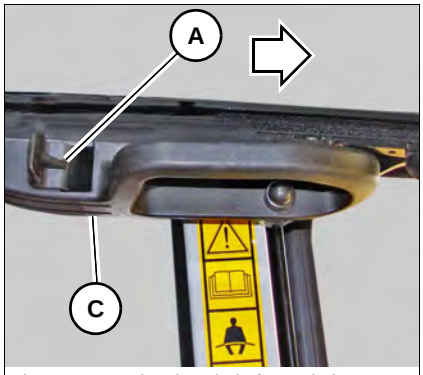

Fig. 69: Opening the whole front window

4. Release levers **A** and let them engage in both locks **C**.

https://truckmanualshub.com/

Closing the whole front window

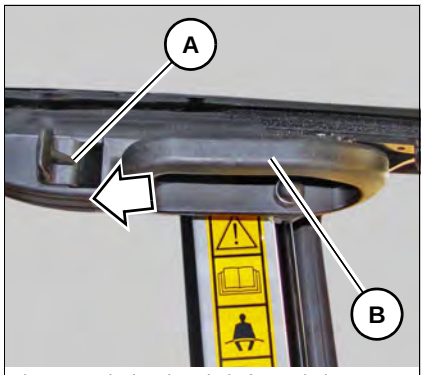

Fig. 70: Closing the whole front window

1. Press levers **A** on the left and right, and pull the front window downward with both handles **B**.

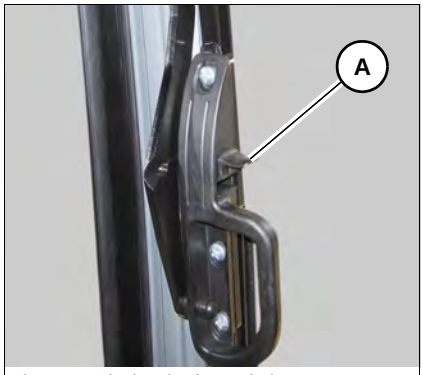

Fig. 71: Closing the front window

2. Press levers **B** on either side and let them engage on either side.

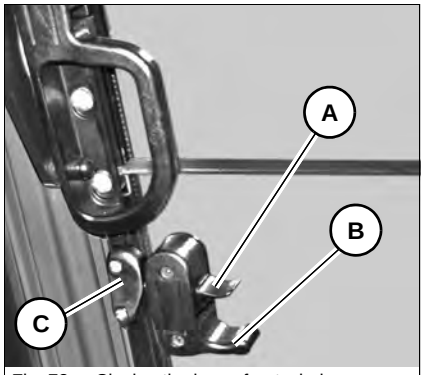

Fig. 72: Closing the lower front window

3. Keep levers **A** pressed on the left and right, and pull the lower front window downward with handles **B**.
4. Release levers **A** and let them engage in both locks **C**.

https://truckmanualshub.com/

Opening the front window to a gap (ventilation position)

Fig. 73: Opening the front window to a gap

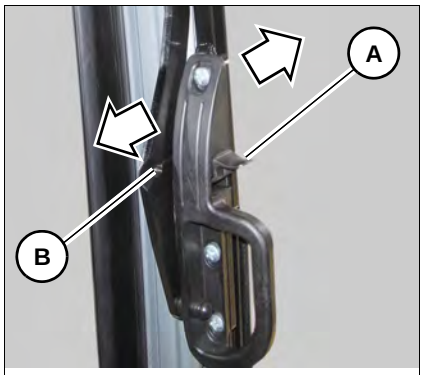

Fig. 74: Opening the front window to a gap

Open

1. Press levers **A** on either side and pull the front window to the inside.
2. Release levers **A** and let them engage in both locks **B**.

Close

1. Press levers **A** on either side.
2. Press the front window forward and let it engage.

https://truckmanualshub.com/

Opening/closing the side window

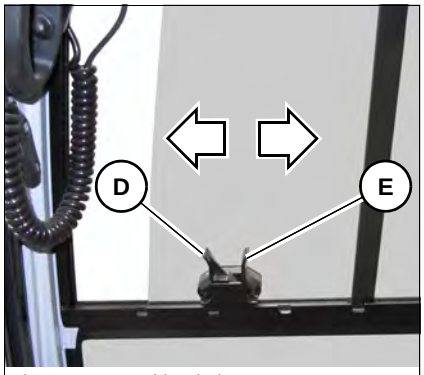

Fig. 75: Front side window

Open

Press lever **D** and let the window engage in the required recess.

Close

Press lever **D** and close with handle **E**.

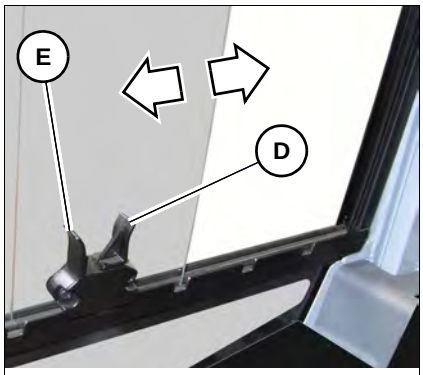

Fig. 76: Rear side window

Open

Press lever **D** and let the window engage in the required recess.

Close

Press lever **D** and close with handle **E**.

https://truckmanualshub.com/

Emergency exit

WARNING

Injury hazard during emergency exit!

Can result in severe injury or death.

- ► Stop the engine.
- ► Only use the windows for exiting the cab if the access (cab door) is obstructed or if it cannot be opened.
- ► If possible, ask for help.

The front window can be used to exit the cab in an emergency.

Emergency exit on machines equipped with protective Front Guard structures (option)

CAUTION

Injury hazard due to glass splinters!

Can cause injuries.

- ► Protect face and hands sufficiently.
- ► Remove all glass splinters before leaving the cab.

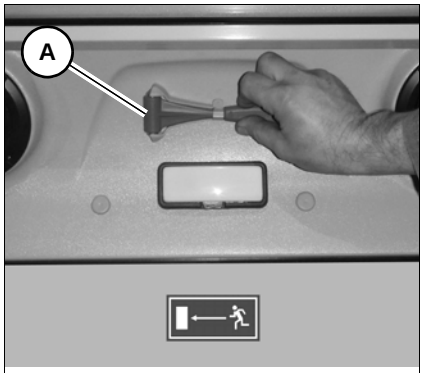

Fig. 77: Emergency hammer on rear window

The rear window can be used as an emergency exit if the door is blocked.

The rear window is broken with emergency hammer **A** fastened over the rear window.

https://truckmanualshub.com/

Seat adjustment

WARNING

Accident hazard due to distraction when adjusting the seat!

Can result in severe injury or death.

► Adjust the seat only when the machine is at a standstill.

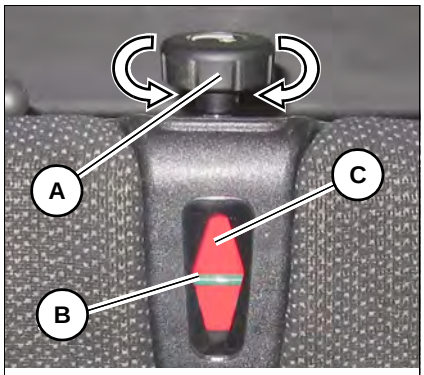

Fig. 78: Weight adjustment

Weight adjustment

1. Sit down on the seat.
2. Adjust the weight with regulator **A** so that the green bar **B** is in the middle of indicator **C**.
   ➥ This ensures optimum ride comfort.

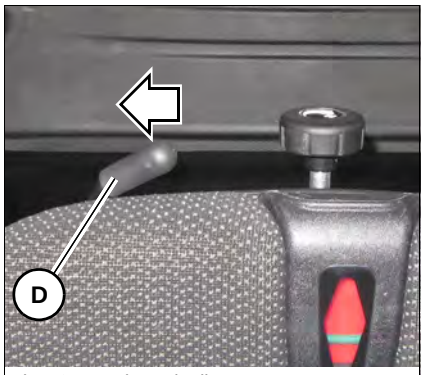

Fig. 79: Horizontal adjustment

Horizontal adjustment

1. Sit down on the seat.
2. Move and hold lever **D** as far as it will go in the direction of the arrow.
3. Move and engage the seat in the required position.
4. Return lever **D** to the initial position.

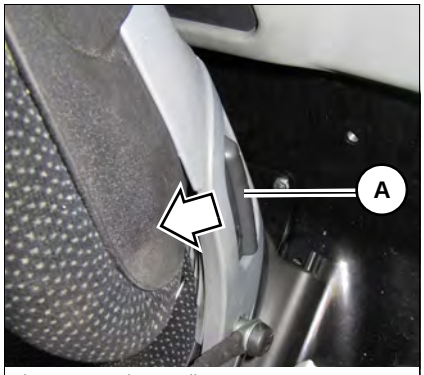

Fig. 80: Backrest adjustment

Backrest adjustment

1. Sit down on the seat.
2. Press lever **A** in the direction of the arrow and move the backrest to the required position.
3. Release the lever again.

https://truckmanualshub.com/

Seat belt adjustment

DANGER

Personal injury hazard! Do not travel or operate with the seat belt unbuckled.

Causes severe injury or death.

- ► Fasten and adjust your seat belt before starting machine travel or operating the machine.
- ► Do not twist the seat belt when you fasten it.
- ► Firmly fasten your seat belt over your hips and not over your stomach.
- ► Do not place the seat belt over hard, edged or fragile items (tools, for example).
- ► Seat belt buckle must not be obstructed by foreign bodies (paper or similar); otherwise the buckle latch cannot lock into place.
- ► The seat belt must be replaced by a Wacker Neuson service center after an accident, and the bearing capacity of the fastening points and seat fixtures must be checked.
- ► Check the seat belts at regular intervals. Have damaged parts immediately replaced by a Wacker Neuson service center.

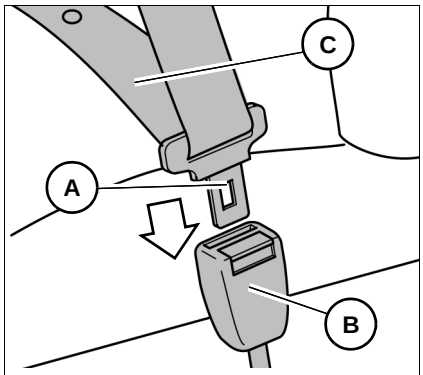

Fig. 81: Fastening the seat belt

Fastening the seat belt

1. Insert buckle latch **A** into seat belt buckle **B** with an audible click.
2. Tighten seat belt **C** by pulling at its end.

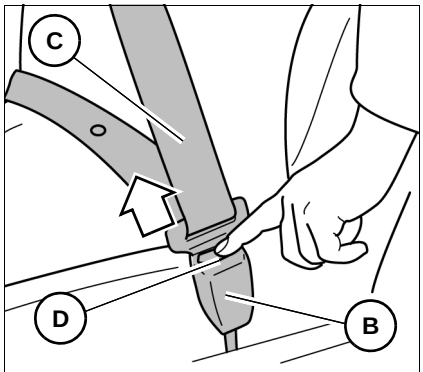

Fig. 82: Unfastening the seat belt

Unfastening the seat belt

1. Press the red pushbutton switch **D** on seat belt buckle **B** until the buckle latch comes out.
2. Place seat belt **C** aside.

https://truckmanualshub.com/

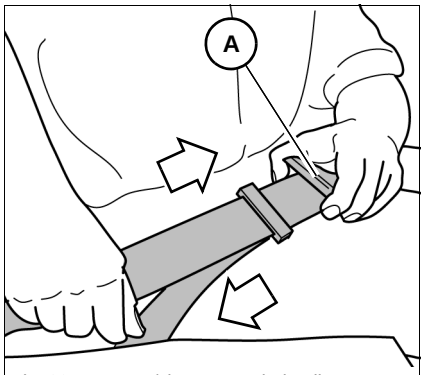

Fig. 83: Longer/shorter seat belt adjustment

Longer/shorter seat belt adjustment

Longer seat belt adjustment

Hold buckle latch **A** at a right angle to the seat belt and pull the seat belt to the required length.

Shorter seat belt adjustment

Pull the free end of the seat belt and shorten it to the required length.

https://truckmanualshub.com/

Adjusting the retracting seat belt (option)

DANGER

Personal injury hazard! Do not travel or operate with the seat belt unbuckled.

Causes severe injury or death.

- ► Fasten and adjust your seat belt before starting machine travel or operating the machine.
- ► Do not twist the seat belt when you fasten it.
- ► Firmly fasten your seat belt over your hips and not over your stomach.
- ► Do not place the seat belt over hard, edged or fragile items (tools, for example).
- ► Seat belt buckle must not be obstructed by foreign bodies (paper or similar); otherwise the buckle latch cannot lock into place.
- ► The seat belt must be replaced by a Wacker Neuson service center after an accident, and the bearing capacity of the fastening points and seat fixtures must be checked.
- ► Check the seat belts at regular intervals. Have damaged parts immediately replaced by a Wacker Neuson service center.

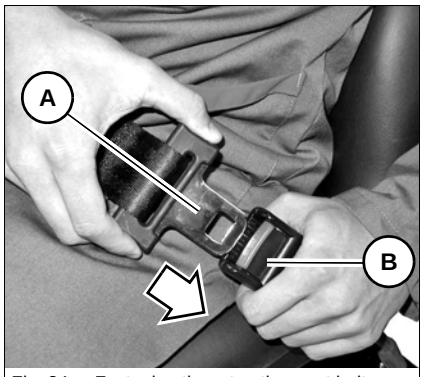

Fig. 84: Fastening the retracting seat belt

Fastening the retracting seat belt

Insert buckle latch **A** into seat belt buckle **B** with an audible click.

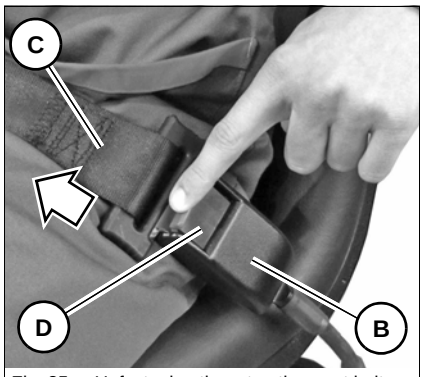

Fig. 85: Unfastening the retracting seat belt

Unfastening the retracting seat belt

1. Press the red pushbutton switch **D** on seat belt buckle **B** until the buckle latch comes out.

Seat belt **C** is automatically retracted.

https://truckmanualshub.com/

Adjusting the rearview mirrors (option)

WARNING

Injury hazard to persons in the danger zone!

Persons in the danger zone are possibly not seen and can be injuried when reversing the machine.

► Adjust the existing visual aids (rearview mirrors, for example) correctly.

► Interrupt machine operation immediately if persons enter the danger zone.

WARNING

Accident hazard due to restricted field of vision on the job site!

Accidents resulting in severe injuries or death can be caused by a restricted field of vision.

► Interrupt machine operataion immediately if persons enter the danger zone.

► Take appropriate measures if necessary (camera, mirrors, guide, for example).

► Additional equipment or attachments must not be installed if they impair visibility.

WARNING

Accident hazard due to incorrect adjustment of visual aids!

Incorrectly adjusted visual aids can result in severe injury or death.

► Adjust the visual aids before putting the machine into operation.

► Immediately replace damaged or broken visual aids.

► Curved mirrors enlarge, reduce or distort the field of view. Bear this in mind when adjusting and using such mirrors.

Before using the machine, before starting machine operation or when changing operators, ensure that all visual aids (mirrors, for example) work correctly, that they are clean and adjusted in accordance with the instructions in this Operator’s Manual. The operator must observe the local regulations.

- Use safety-oriented ladders and work platforms for adjustment work on the machine.
- Never use machine parts or attachments/superstructures as a climbing aid.

https://truckmanualshub.com/

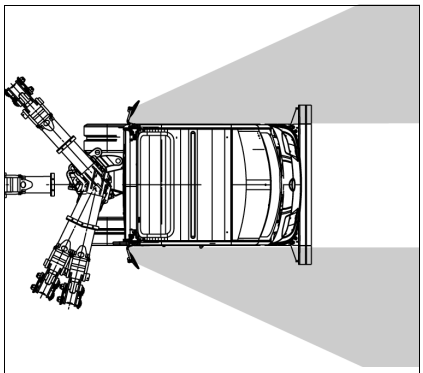

Fig. 86: Adjusting the outside rearview mirrors

Adjusting the mirrors

Adjust the mirrors in order to:

- Ensure sufficient visibility from the seat onto the travel area and job site.
- Ensure maximum visibility to the rear.
- Ensure visibility of the rear left edge of the machine in the left-hand mirror.
- Ensure visibility of the rear right edge of the machine in the right-hand mirror.

Information

Set the machine to travel position before adjusting the mirrors – *see "Travel position" on page 5-3*.

Information

We recommend having the mirrors adjusted by a second person.

Information

Do not make any changes or modifications that impair visibility. Otherwise the machine does not meet the requirements for conformity and licensing.

https://truckmanualshub.com/

Control lever base

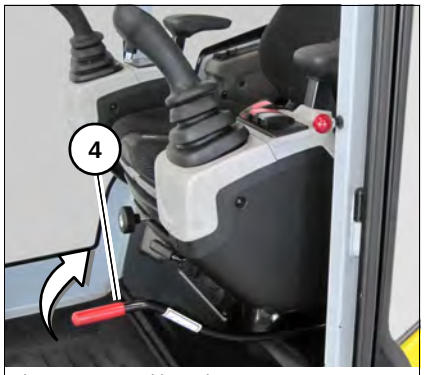

Fig. 87: Control lever base

Raise the left-hand control lever base **4** after stopping the engine.

Left-hand control lever base raised:

- All hydraulic functions are locked.
- The upper carriage is secured against rotation. (The swivel unit brake is enabled.)
- The engine will not start unless the control lever base is raised.

Left-hand control lever base lowered:

- All hydraulic functions are active.
- The upper carriage can be rotated.
- The engine cannot be started.

Functional check of control lever base

Perform a functional check of the control lever base every time before you start the machine.

1. Start the machine.
2. Travel on open terrain.
3. Secure the danger zone.
4. Stop the machine.
5. Raise the left-hand control lever base.
6. Move all control levers and pedals in all directions.
   ➥ The selected elements must not move.
   ➥ The machine may be put into operation.
7. The selected elements move:
   ➥ Stop operation immediately.
   ➥ Contact a Wacker Neuson service center and have the malfunction rectified.

If the machine is equipped with a canopy (standard), raiseable control lever bases are installed on either side.

If the machine is equipped with a cab, a raiseable control lever base is installed on the left-hand side. If the machine is equipped with an optional second door, a raiseable control lever base is also installed on the right-hand side.

https://truckmanualshub.com/

Fire extinguisher

Fig. 88: Fire extinguisher on C pillar

A fire extinguisher is not available, neither as standard nor optional equipment.

A fire extinguisher according to DIN-EN 3 must be installed by a Wacker Neuson service center.

A bracket for the fire extinguisher must be fastened on the left-hand C pillar for the cab or canopy.

Information

Ensure the firm and safe mounting of the fire extinguisher. Check the fire extinguisher at regular intervals, also ensure that it is safely installed. Observe the manufacturer's indications.

Armrest

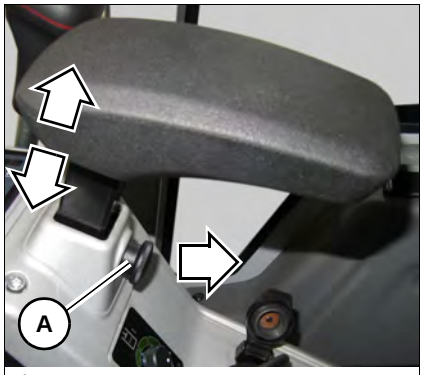

Fig. 89: Armrest

1. Hold the armrest, and loosen and pull out button **A**.
2. Move the armrest to the required position.
3. Let button **A** lock into place and tighten it.

https://truckmanualshub.com/

Protective structures

Protective structures are additional elements that protect the operator against hazard. These elements can be installed later on or as standard equipment.

DANGER

Accident hazard due to modified cab and protective structures!

Causes severe injury or death.

- ► No drilling, cutting or grinding.
- ► Do not install any brackets.
- ► No welding, straightening or bending.
- ► Replace the complete protective structure if it is damaged, deformed or cracked.
- ► Contact a Wacker Neuson service center in case of doubt.
- ► Retrofit and repair work may only be performed by a Wacker Neuson service center.

Information

Machine operation is only allowed with a correctly installed and intact cab or correctly installed and intact canopy.

For additional protection, only use correctly installed and intact Wacker Neuson protective structures that have been released for the machine.

Information

Only a Wacker Neuson service center may install the protective structures for the first time.

Responsibility for machine equipped with protective structures

The decision regarding the necessary protective structures (type and level I or II) must be made by the machine owner and depends on the specific operating situation.

The machine owner must observe the national regulations and he must inform the operator on the protective structure to be used in a specific operating situation.

https://truckmanualshub.com/

Protective FOPS structure/small screen – level I (option)

DANGER

Crushing hazard! Falling objects.

Causes severe injury or death.

- ► Install a protective FOPS structure in areas with risk of falling objects.
- ► Machine operation is prohibited without a protective FOPS structure.

Information

The protective FOPS structure corresponds to level I according to ISO 3449:1992

- ► The machine owner must ensure that the hazard situation is evaluated and that the national regulations are observed.
- ► The machine owner ensure that only work is performed that does not require any higher protection.
- ► Accidents cannot be fully avoided despite equipping a machine with protective structures.

Fig. 90: Protective FOPS structure/small screen – level I (symbolic representation)

Assembly (grey screen)

1. Stop and park the machine. Stop the engine. See “Preparing lubrication”.
2. Remove all lights and mirrors (option).
3. A minimum 2 persons are required for installing/removing.

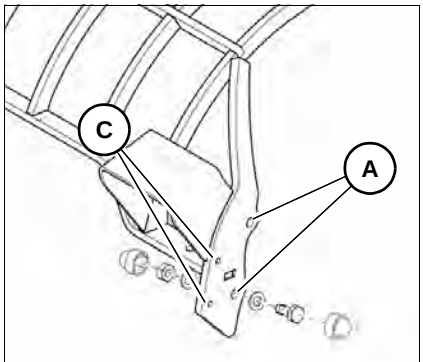

Fig. 91: Small/grey FOPS (assembly)

4. Mounting point for protective structure: **A**

https://truckmanualshub.com/

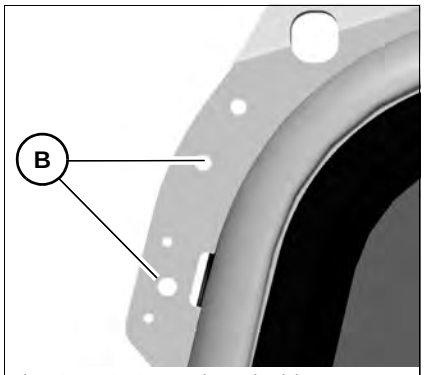

Fig. 92: FOPS mounting point (above on machine)

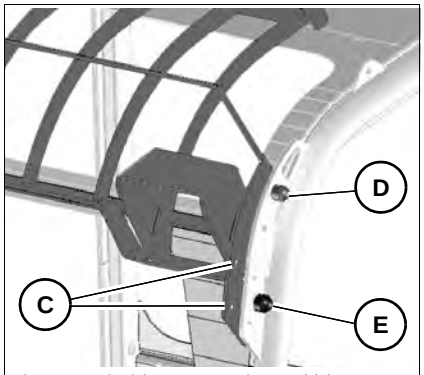

Fig. 93: Black/grey FOPS (assembly)

5. Mounting point for cab/canopy: **B**
6. Tighten screws **D** (M12/10.9) and lock nuts on the left and right to 110 Nm (87 ft.lbs).
7. Install the mirrors in both positions **C**.

Assembly (black screen)

1. Stop and park the machine. Stop the engine. See “Preparing lubrication”.
2. Remove all lights and mirrors (option).
3. A minimum 2 persons are required for installing/removing.
4. Mounting point for cab/canopy: **B**
5. Tighten screws **D** (M10/8.8) and lock nuts on the left and right to 45 Nm (33 ft.lbs).
6. Tighten screws **E** (M12/8.8) and lock nuts on the left and right to 87 Nm (64 ft.lbs).
7. Install the mirrors in both positions **C**.

https://truckmanualshub.com/

Protective Front Guard structure with integrated FOPS/level I respectively (option)

DANGER

Piercing/penetration hazard by objects from the front or above!

Causes severe injury or death.

- ► A protective Front Guard structure with integrated FOPS must be installed in areas with hazard from the front (for example pipes, tree trunks etc.) and of falling objects.
- ► Machine operation is prohibited without a protective Front Guard structure with an integrated FOPS.

Information

The protective FOPS structure corresponds to level I according to ISO 3449:1998

- ► The machine owner must ensure that the hazard situation is evaluated and that the national regulations are observed.
- ► The machine owner must ensure that only work is performed that does not require any higher protection.
- ► Accidents cannot be fully avoided despite equipping a machine with protective structures.

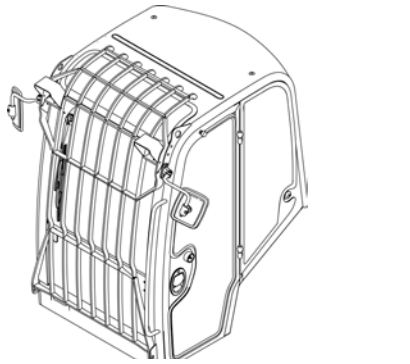

Fig. 94: Front Guard with integrated FOPS (symbolic representation)

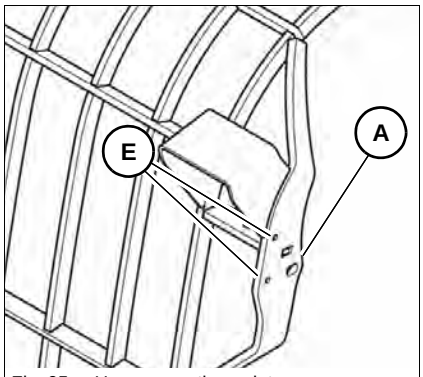

Fig. 95: Upper mounting point

Assembly

1. Stop and park the machine. Stop the engine. See “Preparing lubrication”.
2. Remove all mirrors (option).
3. A minimum 2 persons are required for installing/removing.
4. Install the lock nuts and screws on either side.
5. Mounting point for protective structure: **A** (upper)**/C** (lower).

https://truckmanualshub.com/

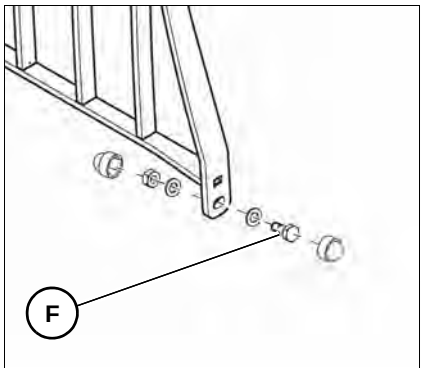

Fig. 96: Lower mounting point

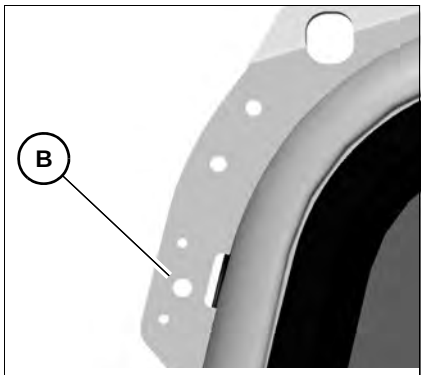

Fig. 97: Upper mounting point on machine

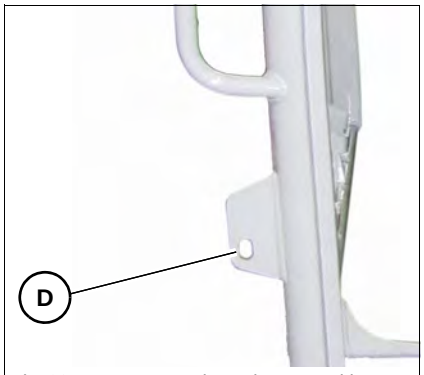

Fig. 98: Lower mounting point on machine

6. Mounting point for cab/canopy: **B** (upper)**/D** (lower)
7. Tighten screws **F** (M12/10.9) and lock nuts on the left and right to 110 Nm (87 ft.lbs).
8. Install the mirrors in both positions **E**.

https://truckmanualshub.com/

Shatter protection (option)

DANGER

Piercing/penetration hazard by objects from the front!

Causes severe injury or death.

► A shatter protection must be installed on a canopy version if an attachment (a hammer, for example) causes fragments to fly around. This shatter protection takes over the function of a front window.

► Pay attention to the restricted work range (see fig. 99/100)

► Machine operation is prohibited without a shatter protection.

WARNING

Accident hazard in conditions of restricted visibility due to rain, snowfall, dust etc.

Can cause severe injury or death.

► Stop machine operation immediately.

Notice

Only a Wacker Neuson service center may install the shatter protection for the first time.

Notice

Do not use brushes, steel wool or other abrasive cleaners for cleaning the polycarbonate disc. Do not wipe dust in a dry state.

Information

The shatter protection (canopy option) protects the operator against fragments from the front.

► The machine owner must ensure that the hazard situation is evaluated and that the national regulations are observed.

► The machine owner must ensure that only work is performed that does not require any higher protection.

► Accidents cannot be fully avoided despite equipping a machine with protective structures.

The shatter protection cannot be combined with a protective Front Guard structure.

https://truckmanualshub.com/

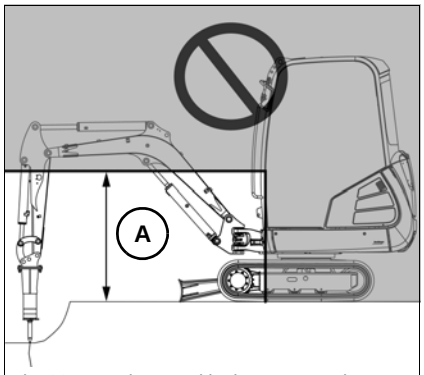

Fig. 99: Work area with shatter protection

Work area

Height of work area **A**: 120 cm (47 in).

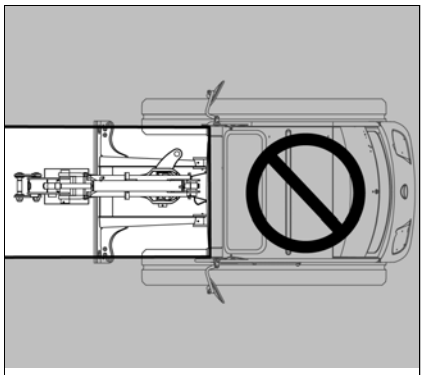

Fig. 100: Work area with shatter protection (top view)

Figures 99 and 100 refer to machine operation with a Wacker Neuson hydraulic hammer.

Information

Machine operation with another attachment can modify the height of the work area.

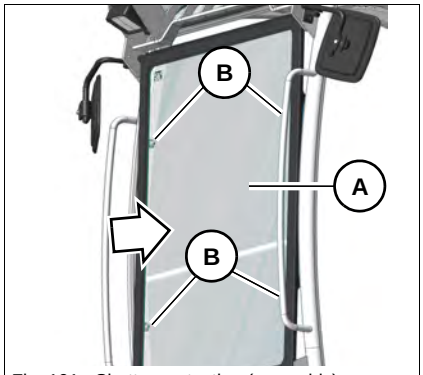

Fig. 101: Shatter protection (assembly)

Installing/removing the shatter protection

1. A minimum 2 persons are required for installing/removing.
2. Stop and park the machine. Stop the engine. See “Preparing lubrication”.
3. Install/remove shatter protection **A** from the front and fasten/remove it at the fastening points **B** with the fastening material supplied.

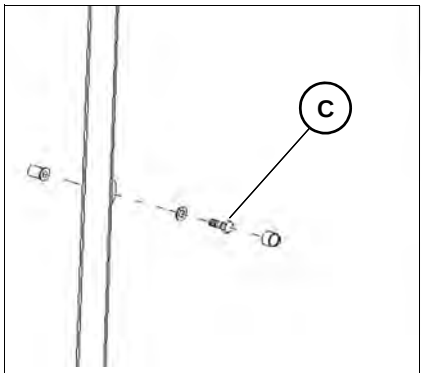

Fig. 102: Shatter protection (assembly)

4. Tighten screws **C** at fastening points **B** to 25 Nm (18 ft.lbs).

https://truckmanualshub.com/

Document storage bin

Fig. 103: Canopy

Canopy

The compartment under the seat is used for storing the Operator's Manual.

A document box on the headliner is available as an option.

Fig. 104: Cab (option)

Cab (option)

The compartment behind the seat is used for storing the Operator's Manual.

A document box behind the seat is available as an option.

https://truckmanualshub.com/

Socket

Fig. 105: Position of socket

A 12 V socket is located at the front left of the machine chassis.

Swiveling console limit (option)

Fig. 106: Swiveling console limit

Limits the left-hand limit stop of the swiveling console for attachments with a max. width of 800 mm (31 in) and prevents the attachment from damaging the cab.

Notice

The limit stop can only be used for attachments with a max. width of 800 mm (31 in).

https://truckmanualshub.com/

4.2 Control element overview

This chapter describes the controls, and contains information on the function and handling of the indicator lights and controls in the cab.

The pages stated in the table refer to the description of the controls.

https://truckmanualshub.com/

Cab

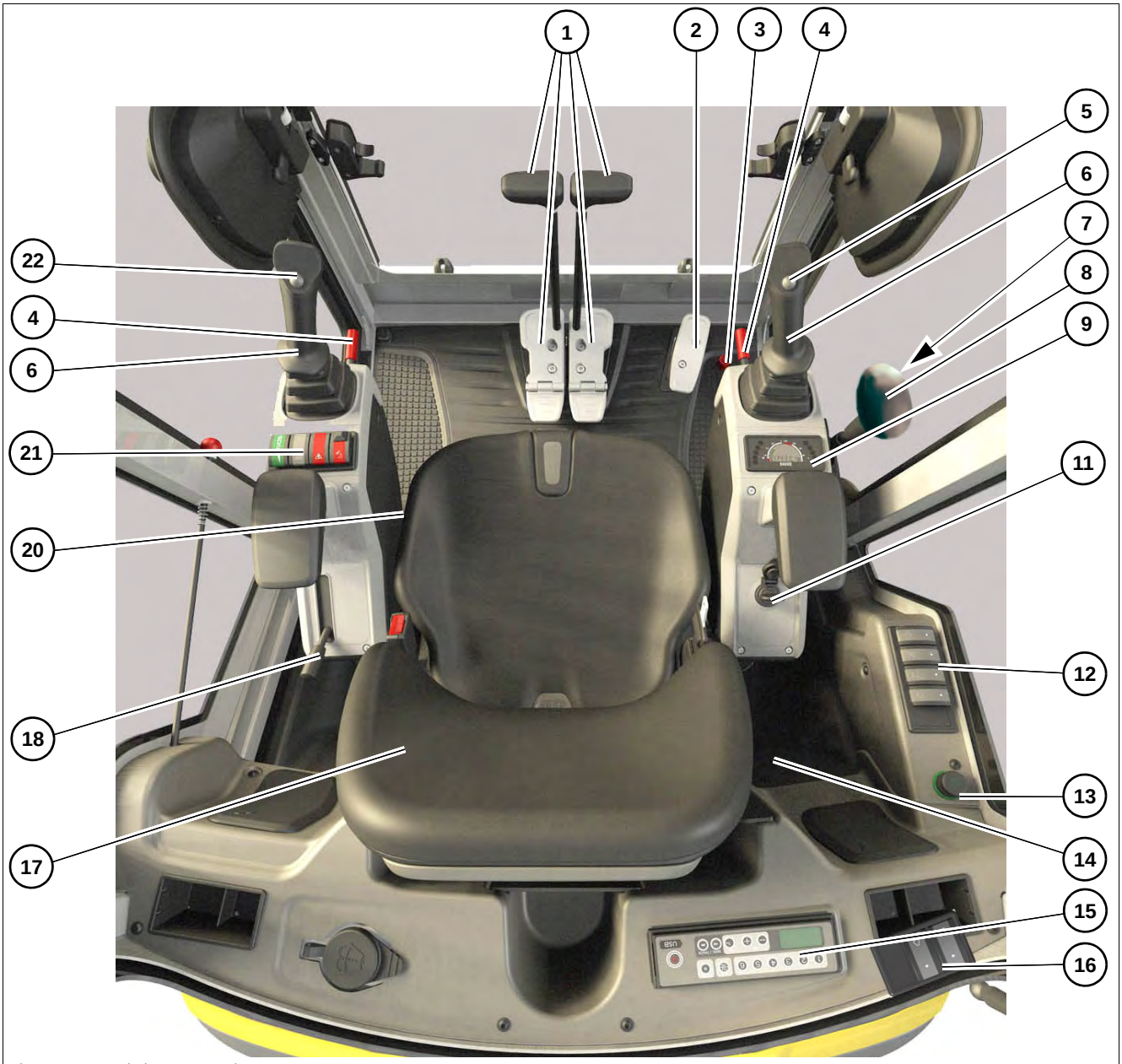

Fig. 107: Control element overview

Fig. 107: Control element overview – proportional controls

https://truckmanualshub.com/

Designation	See page
1. Travel pedals/travel levers	5-14
2. Boom swivel/auxiliary hydraulics pedal (AUX I)	5-29, 5-27
3. Foot-operated pushbutton switch for hydraulic quickhitch (option)	5-35
4. Control lever base	4-18
5. Horn	5-9
6. Control levers	5-12
7. Travel speed changeover	5-1
8. Stabilizer blade/travel gear extension/retraction (option)	5-17, 5-20
9. Display element	4-34
10.Oil flow AUX I rotary switch (proportional controls)	5-22
11.Starter	4-41
12.Right-hand switch panel (cab)	4-32
13.12 Vpower outlet (cab)	--
14.Temperature controller (cab)	5-11
15.Radio (option)	--
16.Switch panel (canopy)	4-32
17.Seat	4-12
18.Throttle	5-1
19.Oil flow AUX II rotary switch (proportional controls)	5-22
20.Changeover for stabilizer blade/travel gear extension/retraction	5-17, 5-20
21.Switch panel on left-hand control lever base	4-32
22.Boom swivel/auxiliary hydraulics pedal changeover (AUX I)	--
23.Powertilt (AUX II) or 3rd control circuit (AUX II) operation (option)	5-33, 5-32
24.Auxiliary hydraulics (AUX I) operation (option) (proportional controls)	5-28
25.Boom swivel pedal (proportional controls)	5-29

https://truckmanualshub.com/

Display element and switches

Maximum assignment shown

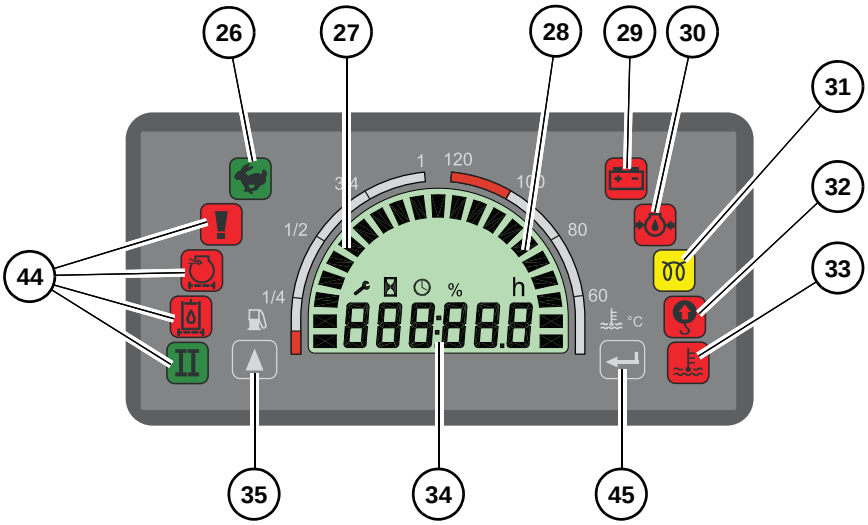

Switch panel on left-hand control lever base

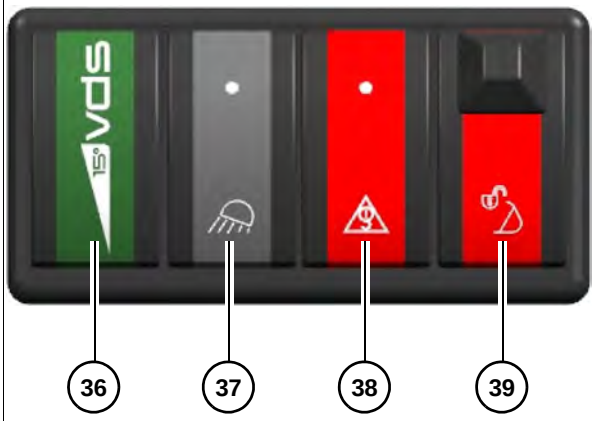

Right-hand switch panel (cab)

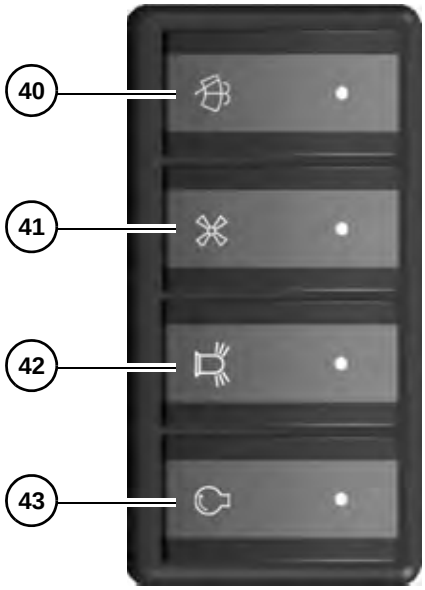

Switch panel (canopy)

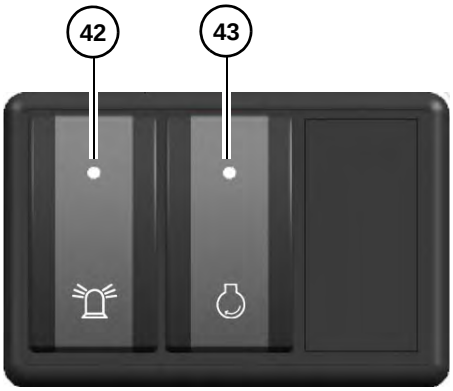

Fig. 108: Display element and switches

https://truckmanualshub.com/

Designation	See page
26. High speed (2nd speed)	5-1
27. Fuel level indicator	4-36
28. Coolant temperature	4-36
29. Charge indicator light	4-35
30. Engine oil pressure	4-35
31. Preheating	4-35
32. Safe load indicator light	4-35
33. Engine temperature	4-35
34. Hour meter/maintenance meter	4-36
35. Hour meter/maintenance meter changeover	4-35
36. Tilting the upper carriage (Vertical Digging System) (option)	5-54
37. Working lights	5-8
38. Safe load indicator (option)	5-50
39. Hydraulic quickhitch (option)	5-35
40. Wiper/wash system (cab)	5-10
41. Ventilation/heating (cab)	5-11
42. Rotating beacon (option)	5-9
43. Automatic engine speed setting (option)	5-2
44. Not assigned	--
45. For Wacker Neuson service centers	--

https://truckmanualshub.com/

4.3 Indicator lights and warning lights (overview)

Display element

The display element provides information on problems

and defects. After switching on the starter, the indicator lights are checked during the first 2 seconds. During this time the current reading of the maintenance meter is displayed. Then the service hours are automatically displayed.

https://truckmanualshub.com/

Symbol	Designation
	High speed (2nd speed) Illuminates with high speed enabled.
	Charge indicator light This indicator light illuminates if the electrical system has a malfunction. The battery is no longer or insufficiently charged. **Note:** This indicator light also illuminates if the starting key is turned to position 2. The indicator light goes out after the engine is started. Increase engine speed if the indicator light illuminates. The electrical system works if the indicator light of the electrical system goes out within one minute.
	Engine oil pressure The indicator light illuminates and the buzzer sounds. • Stop the engine immediately and check the oil level. • If the engine oil level is correct, contact a Wacker Neuson service center. **Note:** The indicator light illuminates when the starter is turned on and goes out as soon as the engine runs. At low temperatures, the indicator light can illuminate for more than 10 seconds after the engine is started.
	Preheating The indicator light illuminates if the starting key is in position 2. The indicator light goes out after 4 seconds and the engine can be started. (A glow plug preheats the air in the combustion chamber of the engine when the key is in this position.) Contact a Wacker Neuson service center if the indicator light does not go out.
	Safe load indicator light The safe load indicator gives the operator optical and acoustic warnings when the values of the stability table are reached or exceeded. • Reduce reach or the lift load until both the acoustic signal and the indicator light in the display element go out.
	Engine temperature If the coolant temperature segment reaches the red range, the indicator light illuminates and the buzzer sounds. Stop and let the engine cool down before starting it again.
	Changeover between hour meter and maintenance counter

https://truckmanualshub.com/

Symbol	Designation
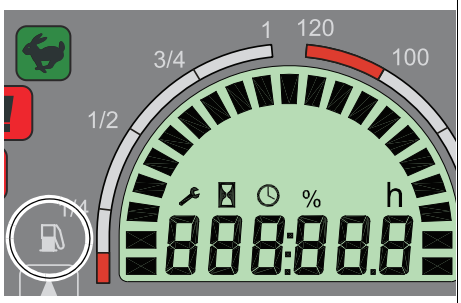	**Fuel level indicator** Indicates the remaining amount of fuel in the tank. Refuel immediately if the segments reach the red range.
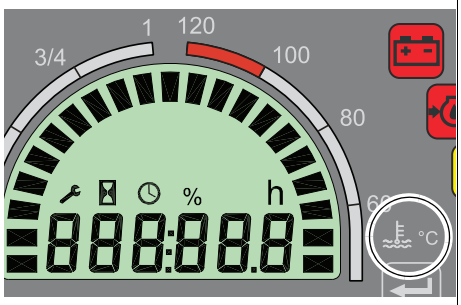	**Coolant temperature** Indicates the current coolant temperature of the engine. The indicator light illuminates if the segments reach the red range. • Stop the engine immediately. • Let the engine cool down and check the coolant level.
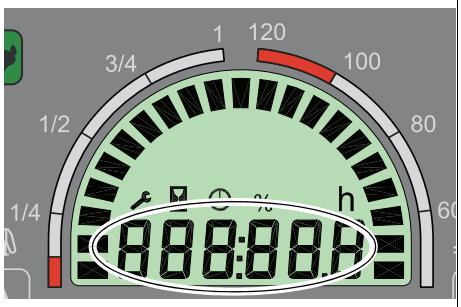	**Hour meter/maintenance meter** Counts the engine service hours with the engine running. **Hour meter** The counter runs as soon as the charge indicator light goes out. The hour meter is used for specifying the maintenance intervals. **Maintenance meter** The maintenance meter starts at 500.0 hours. It counts down to 0.0 hours. A wrench symbol flashes as soon as the maintenance meter reaches this value. The meter keeps on counting down (−0.1 hours, −0.2 hours, etc.).

https://truckmanualshub.com/

4.4 Preparatory work

Information before putting the machine into operation

Before putting the machine into operation, perform a visual check to ensure that:

- there are no leaks,
- no parts are damaged or loose,
- there are neither persons nor objects,
- or other sources of hazard around the machine.

Before putting the machine into operation, the operator must familiarize himself with the position of the controls and instruments.

The machine may only be operated from the seat and with the seat belt fastened.

Before the operator puts the machine into operation for the first time, we recommend first trying out the machine on open ground without any obstacles.

When using the machine, check the surroundings constantly in order to identify potential hazards in time.

Before using the machine, before starting machine operation or when changing operators, ensure that all visual aids (mirrors, for example) work correctly, that they are clean and adjusted in accordance with the instructions in this Operator's Manual. The operator must observe the local regulations.

Perform a functional check of the control lever base.

Perform a functional check of the safe load indicator (option).

Do not make any changes or modifications that impair visibility. Otherwise the machine does not meet the requirements for conformity and licensing.

Also observe the safety instructions in chapter **"Safety 2.4"**.

Requirements and notices for the operating personnel

Read, understand and follow this Operator's Manual and all other Operator's Manuals supplied with the machine.

The machine may only be put into service by authorized personnel that has been instructed. See chapter "Safety 2.3".

The operator must know and bear in mind the requirements and risks on the job site.

Perform daily maintenance according to the Lubrication and maintenance plan (see chapter "Maintenance 7.2")

Face the machine as you enter and leave it.

Keep the footholds and the handles clean to ensure a safe hold at all times. Immediately remove dirt, such as oil, grease, dirt, snow or ice.

Always use the mandatory climbing aids when entering and exiting the machine.

Never get on a moving machine and never jump off the machine.

https://truckmanualshub.com/

Check lists

The checklists below are intended to assist you in checking and monitoring the machine before, during and after operation. These checklists cannot claim to be exhaustive.

If the answer to one of the following questions is NO, first rectify the cause of the fault (or have it rectified) before starting or continuing machine operation.

The checking and monitoring work listed below is described in greater detail in the following chapters.

Start-up checklist

Check and observe the following points before putting the machine into operation or starting the engine:

No.	Question	Page	✔
1.	Enough fuel in the tank?	*7-26*	
2.	Water in water separator and fuel filter checked and drained if necessary?	*7-29* *7-30*	
3.	Correct engine oil level?	*7-32*	
4.	Coolant level OK?	*7-34*	
5.	Correct oil level in the hydraulic oil reservoir?	*7-42*	
6.	Water level in washer tank OK?	*7-48*	
7.	Lubrication points greased?	*7-6*	
8.	Tracks checked for cracks, cuts etc.?	--	
9.	Light system, signalling, warning and indicator lights operational?	--	
10.	Windows, mirrors, lights, steps, all pedals and control levers clean?	--	
11.	All control levers and pedals in neutral position?	--	
12.	Control lever base raised?	*4-18*	
13.	Attachment safely locked?	*5-35* *5-43*	
14.	Tank cover closed? Engine cover locked?	*7-26* *7-14*	
15.	Especially after cleaning, maintenance or repair work: Rags, tools and other loose objects removed?	--	
16.	Seating position adjusted correctly?	*4-12*	
17.	Are all mirrors functional and adjusted correctly?	*4-16*	
18.	Seat belt fastened?	*4-13*	
19.	Before putting the machine into operation, ensure that nobody is in the danger zone.	--	

https://truckmanualshub.com/

Operation checklist

After starting the engine and during operation, check and observe the following points:

No.	Question	Page	✔
1.	Anyone in the danger zone of the machine?	--	
2.	Indicator light for engine oil pressure and alternator charge function gone out?	*4-34*	
3.	Coolant temperature of engine in normal range?	*4-36*	
4.	Do the pedals and control levers work correctly?	*5-12*	
5.	Performed functional check of control lever base?	*4-18*	
6.	Telescopic travel gear extended?	*5-20*	

Parking checklist

Check and observe the following points when parking the machine:

No.	Question	Page	✔
1.	Attachment lowered to the ground?	*5-37* *5-41*	
2.	Stabilizer blade lowered to the ground?	*5-17*	
3.	Control lever base raised?	*4-18*	
4.	Cab locked, especially if the machine cannot be supervised?	*4-2*	
When parking on public roads:			
5.	Machine adequately secured? Machine additionally secured with chocks under the tracks to prevent it from rolling away?	*5-7*	
When parking on slopes:			
6.	Machine additionally secured with chocks under the tracks to prevent it from rolling away?	*5-7*	

https://truckmanualshub.com/

Putting the machine into operation for the first time and running-in period

Before putting the machine into operation for the first time, check it visually for exterior damage due to transport, and check whether the equipment supplied with the machine is complete.

- Check the fluid levels according to chapter “Maintenance”.

Each machine is correctly adjusted and checked before it is delivered.

Handle the machine carefully during its first 50 operating hours.

- Do not load a cold engine.
- Warm up the machine at low engine speed and little load, do not warm it up at a standstill.
- Do not change engine speed abruptly.
- Avoid using the machine under heavy loads and/or at high speeds.
- Avoid abrupt acceleration, braking and changing traveling direction.
- Do not run the engine at high speed for extended periods.
- Strictly observe the maintenance plans and perform (or have performed) the specified maintenance on or with the machine – *see chapter “7.2 Maintenance overview” on page 7-2*.

Traveling on public roads

Information

The machine is not certified for travel on public roads.

https://truckmanualshub.com/

4.5 Starting and stopping the engine

Preparations for starting the engine

Set the throttle to the medium position if the engine is cold.

The starter cannot be actuated if the engine is already running (start repeat interlock).

Do not run the starter for more than 10 seconds.

Wait about 1 minute so the battery can recover and the starter does not overheat before trying again.

Information

Ensure that there is sufficient ventilation before operating the machine in small and enclosed areas.

Information

All controls must be within easy reach. You must be able to move the travel levers to their limit positions.

Starter

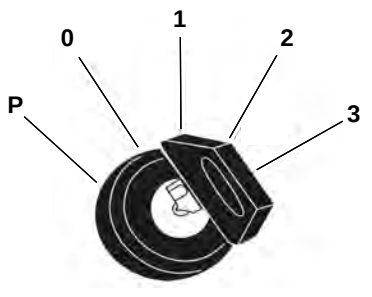

Fig. 109: Starter

Position	Function	
P	Park position	Not assigned
0	Stop position	Insert or remove the starting key
1	Travel position	All functions are operational
2	Preheats the engine	Preheater active
3	Starts the engine	Starter is actuated

https://truckmanualshub.com/

Starting the engine

Notice

In order to avoid damage to the starter:

► Do not start the engine again immediately after stopping it.

► Wait at least 10 seconds after stopping the engine.

Notice

Actuating the preheating system too long can damage the preheater.

► Never preheat the engine more than 3 – 5 seconds.

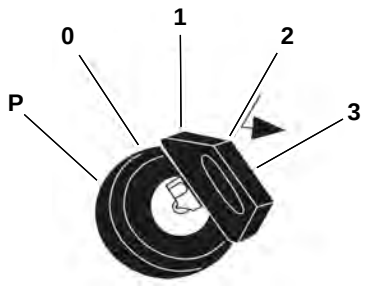

Fig. 110: Starter

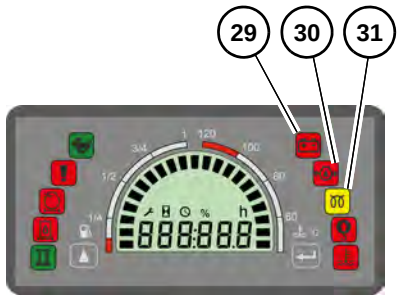

Fig. 111: Display element

1. Insert the starting key.
2. Turn the starting key to position **1**.
3. All indicator lights illuminate for 2 seconds.

➥ Replace malfunctioning indicator lights immediately.

4. Turn and hold the starting key in position **2** until indicator light **31** (preheating) goes out.

➥ Indicator light **29** (charge indicator light) illuminates.

➥ Indicator light **30** (engine oil pressure) illuminates.

5. Turn and hold the starting key in position **3** until the engine starts.

➥ All indicator lights go out.

➥ If the engine does not start after 10 seconds:

   ➥ Interrupt the start procedure and repeat it after about 1 minute.

   ➥ If the engine still does not start after the second try: contact a Wacker Neuson service center for error analysis.

6. As soon as the engine runs:
7. Release the starting key as soon as the engine runs.

Information

The engine will not start unless the left-hand control lever is raised.

Letting the engine warm up

After the engine has started, allow it to warm up at slightly increased idling speed until it reaches its operating temperature of 82 °C (180 °F) (coolant).

Warm up the machine at low engine speed and little load, do not warm it up at a standstill.

During the warm-up phase, check for unusual noise, wastegas color, leaks, malfunctions or damage. In case of malfunctions, damage or leaks, park and secure the machine, and find out the cause for the damage and have it repaired.

https://truckmanualshub.com/

Jump-starting the engine

WARNING

Explosion hazard in case of incorrect handling of the battery!

Can result in severe injury or death.

- ► Never jump start the engine if the battery is frozen. Dispose of a frozen battery.
- ► In order to avoid electrical short-circuit or overvoltage, the battery jumper cable connected on the positive terminals of the batteries must never be brought into contact with electrically conductive vehicle parts.
- ► The vehicles must not touch each other during the starting aid.
- ► The external power source must deliver 12 V; higher voltages will damage the electrical system of both vehicles.
- ► Use only authorized battery jumper cables which conform to the safety requirements and which are in perfect condition.
- ► Route the battery jumper cables so they cannot catch on rotating components in the engine compartment.
- ► Do not lean over the battery.
- ► Keep starter sources away from the battery.

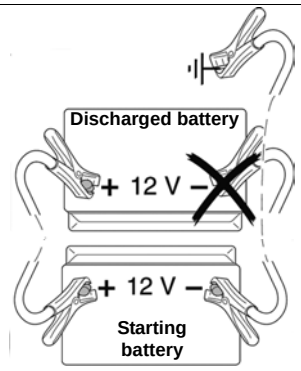

Fig. 112: Overview

1. Travel the jump-starting vehicle close enough to the machine so that the battery jumper cables can reach to connect both batteries.
2. Let the engine of the jump-starting vehicle run.
3. First connect one end of the red battery jumper cable (**+**) to the positive terminal of the discharged battery, then connect the other end to the positive terminal of the starting battery.
4. Connect one end of the black battery jumper cable (**–**) to the negative terminal of the starting battery.
5. Connect the other end of the black battery jumper cable (**–**) onto a solid metal component fimly screwed on the engine block or onto the engine block itself.
   ➥ Do not connect it to the negative terminal of the discharged battery, as otherwise explosive gas emerging from the battery can ignite if sparks are formed.
6. Start the engine of the machine with the discharged battery.

Once the engine has started:

- With the engine running, disconnect both battery jumper cables in the reverse order.

Information

In order to avoid sparking, first disconnect the battery jumper cable on the negative terminal, then the battery jumper cable on the positive terminal.

https://truckmanualshub.com/

Low-load operation

Notice

The running performance of the engine can be negatively affected if it runs at idling speed or high speed and at less than 20 % of the load.

► Run the engine in regular operation at loads of over 20 %.

Possible consequences of low-load operation are:

- Increased lube oil consumption.
- Lube oil in exhaust system, and therefore engine contamination.
- Blue smoke in exhaust gas.

Stopping the engine

Notice

Engine damage by stopping the engine after full load.

► In order to stabilize the temperature, let the engine run at idling speed with no load for at least 5 minutes, and then switch it off.

Turn the starting key to “**0**” and remove it.

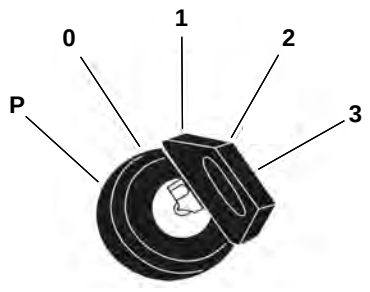

Fig. 113: Starter

https://truckmanualshub.com/

5 Operation

5.1 Steering system

See “Travel levers and travel pedals”

5.2 Accelerator actuation

Manual throttle

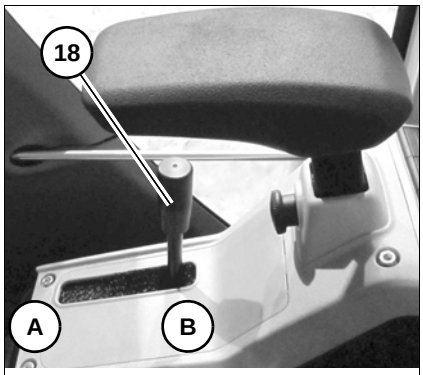

Fig. 114: Manual throttle

Speed can be set continuously with throttle **18**.

- Position **A**: maximum engine speed
- Position **B**: idling speed

High speed

The machine has two travel speeds that can be selected with the stabilizer-blade lever **26**.

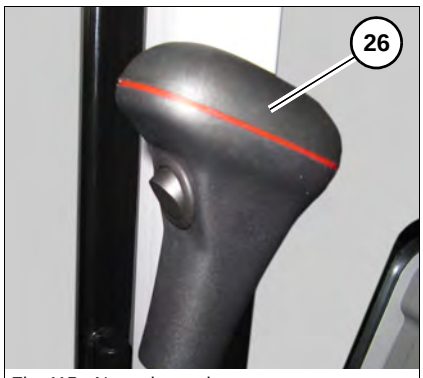

Fig. 115: Normal speed

Normal speed:

Check the selected speed on the display element. The high-speed symbol does not illuminate.

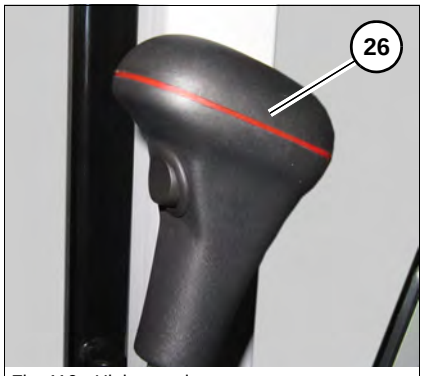

Fig. 116: High speed

High speed:

Check the selected speed on the display element. The high-speed symbol illuminates.

Information

Reduced tractive power in high speed can affect machine handling when turning.

https://truckmanualshub.com/

Automatic engine speed setting (option)

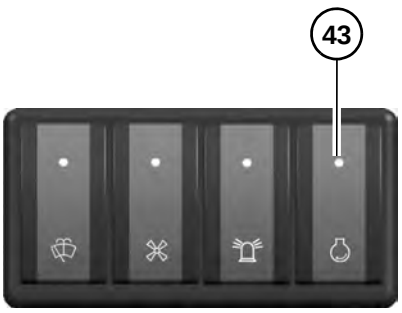

Fig. 117: Automatic engine speed setting

The switch is located on the right-hand switch panel.

Diesel engine speed is automatically reduced to idling after 5 seconds if no hydraulic functions are performed and if the automatic engine speed setting is enabled.

As soon as a hydraulic function is performed with the control levers/travel levers, diesel engine speed is automatically increased again to the engine speed adjusted with the throttle.

Position	Function	
ON	Press switch **43** down	Automatic engine speed setting is enabled, the indicator light in switch **43** illuminates
OFF	Press switch **43** up	Automatic engine speed setting is disabled, the indicator light in switch **43** goes out

5.3 Brakes

Hydraulic brake

Releasing the travel levers/travel pedals brakes the machine.

When traveling downhill, the automatic hydraulic brake valves prevent the machine from traveling faster than the admissible travel speed.

Information

Reduce travel speed with the travel levers/travel pedals, and *not* with the engine speed control of the diesel engine.

Mechanical brake

The stabilizer blade is used as a parking brake. Press the stabilizer blade against the ground.

https://truckmanualshub.com/

5.4 Travel operation

Travel position

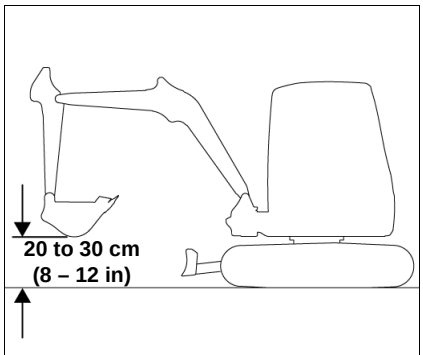

Fig. 118: Travel position

- Position the machine as shown.
- Position the boom at the center and raise it about 20 to 30 mm (8 – 12 in) off the ground.

Information

During machine travel, raise the stabilizer blade sufficiently high off the ground to avoid ground contact on rough terrain.

Traveling and stopping

Starting machine travel

After starting the engine:

- Indicator lights **29** (charge indicator light) and **30** (engine oil pressure) go out.
- Slowly actuate the travel lever.

➥ Machine moves off.

Information

The machine will not start machine travel unless the control lever bases are folded down.

Stopping

The travel levers automatically return to their initial positions as soon as they are released. This creates sufficient hydraulic braking effect.

When traveling downhill, the automatic hydraulic brake valves prevent the machine from traveling faster than the admissible travel speed.

Information

Use the travel levers to reduce the travel speed as required.

Operating temperature range

The following operating conditions must be fulfilled in order to ensure optimal output and a long service life of the machine.

Do not operate the machine at ambient temperatures above +45 °C (+104 °F) or below −15 °C (−5 °F).

https://truckmanualshub.com/

Traveling on slopes

WARNING

Accident hazard due to tipping over or slipping of the machine on slopes!

Can result in severe injury or death.

► Travel on slopes only on firm and level ground.

► Travel on slopes only with the telescopic travel gear extended (normal operation).

► Never exceed the stability limits of the machine (maximum gradient angle 15°, maximum lateral angle of inclination 10°).

► Raise the boom 20 – 30 cm (8 – 12 in) off the ground and position it straight ahead at the center of the machine. In an emergency, lower the boom immediately to increase stability.

► Do not actuate high speed when traveling uphill or downhill.

► Do not travel downhill in reverse travel speed.

► Do not turn or swivel the upper carriage and the boom when traveling downhill or uphill with a full attachment.

► Traveling diagonally on slopes is prohibited.

Stones and the humidity in the upper layer of the ground can drastically affect machine traction and stability.

The machine can slip sideways on gravel or loose, rocky soil. The stability of the machine can be reduced on rough terrain.

Newly filled or muddy ground can give away under the weight of the machine, or the tracks can dig into the ground and increase the angle of the machine (maximum gradient angle and maximum lateral angle of inclination).

If the engine dies as you travel on a slope, immediately put the control levers to neutral position and start the engine again.

Observe under all circumstances when traveling uphill and downhill:

- Keep the travel levers near the neutral position.
- Perform slow and smooth travel movements.
- Avoid jerking the control levers.
- Reduce the engine speed.

The machine can slip even on gentle slopes if it travels across grass, leaves, humid metal surfaces, frozen ground or ice.

https://truckmanualshub.com/

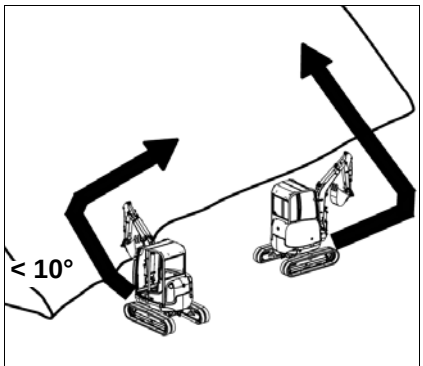

Fig. 119: Traveling on slopes

Preparations for traveling on slopes

Always travel straight ahead on slopes.

When changing position, do not exceed a maximum gradient angle of 15° and a maximum lateral angle of inclination of 10°.

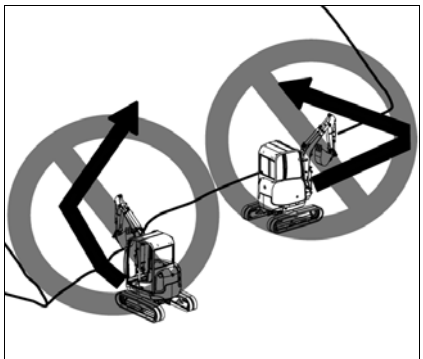

Fig. 120: Traveling diagonally on slopes

Information

Traveling diagonally on slopes is prohibited.

Change position on level ground and then travel straight-ahead onto the slope.

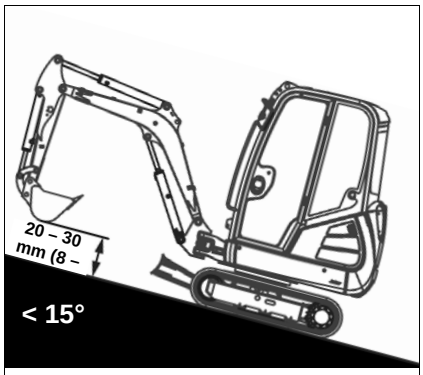

Fig. 121: Traveling uphill

Traveling uphill

When traveling uphill, the front window of the cab must face uphill.

Set the stabilizer blade uphill.

Raise the boom about 20 – 30 cm (8 – 12 in) off the ground and position it straight ahead at the center of the machine.

Do not exceed a maximum gradient angle of 15°.

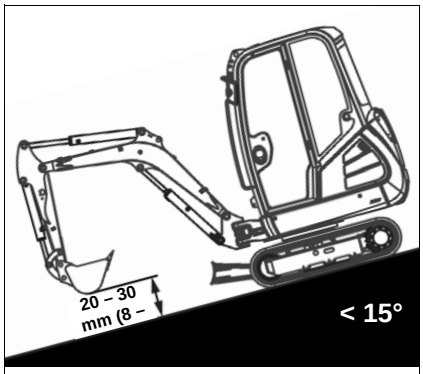

Fig. 122: Traveling downhill

Traveling downhill

When traveling downhill, the front window of the cab must face downhill.

Set the stabilizer blade downhill.

Raise the boom about 20 – 30 cm (8 – 12 in) off the ground and position it straight ahead at the center of the machine.

Do not exceed a maximum sloping angle of 15°.

https://truckmanualshub.com/

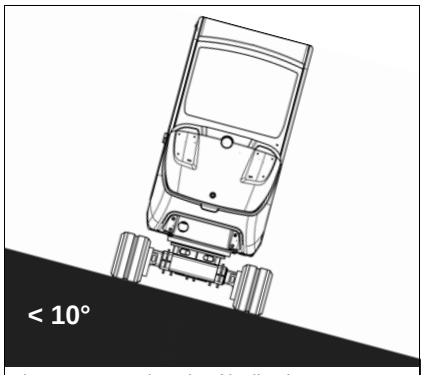

Fig. 123: Lateral angle of inclination

Lateral angle of inclination

Do not exceed a maximum lateral angle of inclination of 10°.

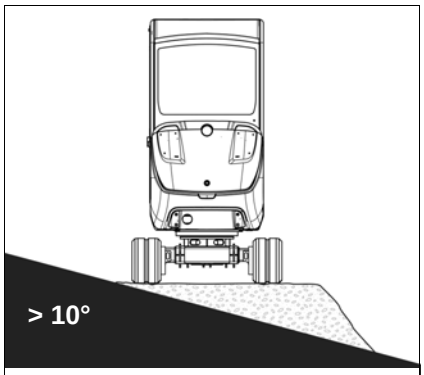

Fig. 124: Platform

On lateral inclinations over 10°, pile up material to create a level surface that can be used as a platform for the machine.

https://truckmanualshub.com/

Parking the machine

WARNING

Accident hazard if the machine tips over or rolls away after parking it!

Can result in severe injury or death.

► Lower the boom and the stabilizer blade to the ground.

► Secure the machine accordingly (chocks, for example).

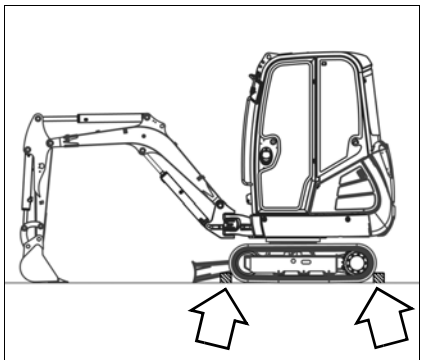

Fig. 125: Parking the machine

1. Place the machine on firm, level and horizontal ground.
2. Position the boom straight ahead at the center of the machine.
3. Lower the boom and the stabilizer blade to the ground.
4. Stop the engine.
5. Operate the control lever repeatedly to release the pressure in the hydraulic system.
6. Remove the starting key and carry it with you.
7. Raise the control lever base.
8. Close the windows and the doors.
9. Close and lock all covers and doors.
10. Secure the tracks accordingly (chocks, blocks, for example) as shown in *Fig. 125*.

Information

Fill up the tank with the correct fuel type at the end of each working day to prevent the formation of condensation water in the fuel tank. Do not fill the tank completey so the fuel can expand.

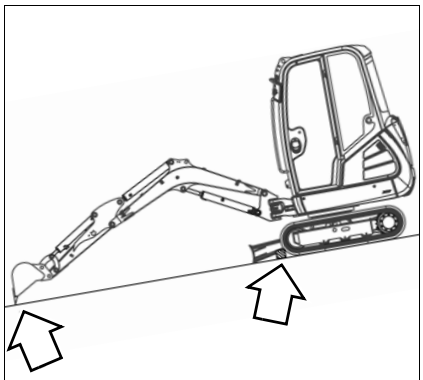

Fig. 126: Parking the machine on slopes

Parking the machine on slopes

If parking the machine on a slope cannot be avoided, observe the following in addition:

- Position the boom on the downhill side of the machine and firmly press the attachment into the ground.
- Press the stabilizer blade against the ground.
- Secure the tracks accordingly (chocks, blocks, for example) as shown in *Fig. 126*.

https://truckmanualshub.com/

5.5 Differential lock

No

5.6 Lights/signalling system

Working lights

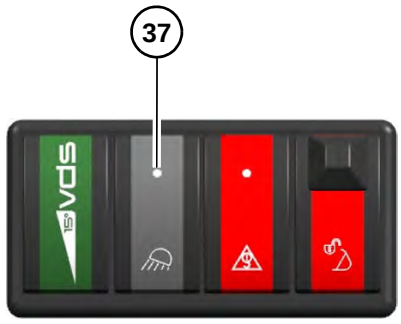

Fig. 127: Working light switch

The switch is located on the left-hand control lever base.

WARNING

Accident hazard! Motorists can be blinded by bright lights on the job site.

Can result in severe injury or death.

► Switch on the working lights in the work area on public roads only if motorists are not expected to be blinded.

Position	Function	
ON	Press switch **37** down	Working lights switched on, the indicator light in switch **37** illuminates
OFF	Press switch **37** up	Working lights switched off, the indicator light in switch **37** goes out

Information

Switch on the working lights (option) in poor light conditions. If illumination still is not sufficient, use external lights. If this is still not enough to illuminate the work area sufficiently, stop work and only resume it when sufficient illumination is present.

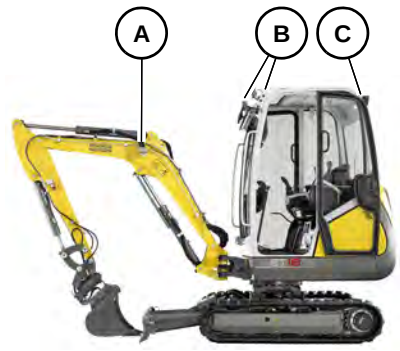

Fig. 128: Working lights

Position	Designation
A	Working light (standard)
B	Front working lights (option)
B and C	Front and rear working lights (option)

https://truckmanualshub.com/

Interior light

Fig. 129: Interior light

Switched on:

Press the switch to the left.

Switched off:

Press the switch to the center position or to the right.

Horn

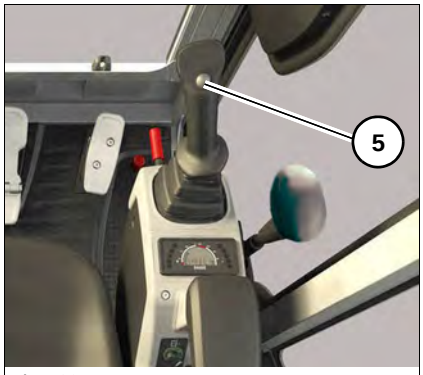

Fig. 130: Horn

Press button **5** on the right-hand control lever to actuate the horn.

Rotating beacon (option)

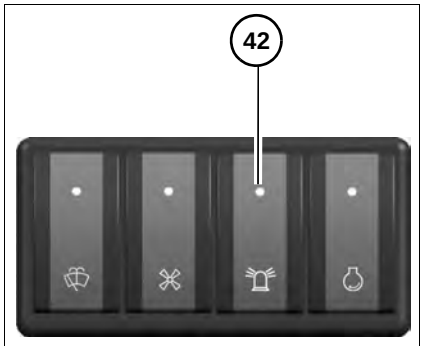

Fig. 131: Rotating beacon

The switch is located on the right-hand switch panel.

Position	Function	
ON	Press switch **42** down	Rotating beacon switched on, the indicator light in switch **42** illuminates
OFF	Press switch **42** up	Rotating beacon switched off, the indicator light in switch **42** goes out

Information

Observe the legal regulations of your country for operating the rotating beacon.

https://truckmanualshub.com/

Traveling signal (option)

A traveling signal sounds as soon as at least one of the tracks moves.

DANGER

Accident hazard when traveling forward/backward.

Crushing hazard causing death or severe injury.

- ► Do not allow anyone to stay in the danger zone.
- ► Do not rely on the travel signal under any circumstances.
- ► If the traveling signal does not sound, stop machine operation immediately and get in touch with a Wacker Neuson service center (observe the relevant national regulations).

5.7 Wiper/wash system (option)

Front wiper

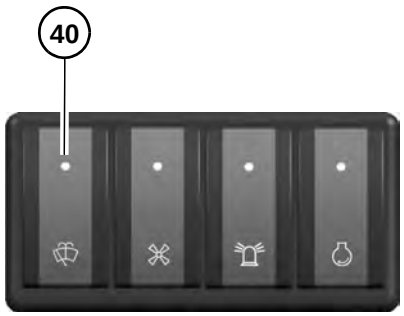

Fig. 132: Wiper/wash system switch

The switch is located on the right-hand switch panel.

Position	Function	
OFF	Press switch **40** up	Wiper returns to base position
1st position	Press switch **40** down to the 1st position	Wiper in operation

Notice

Damage to wiper if the front window is raised.

- ► Do not actuate the wipers if the front window is raised.

Washer system

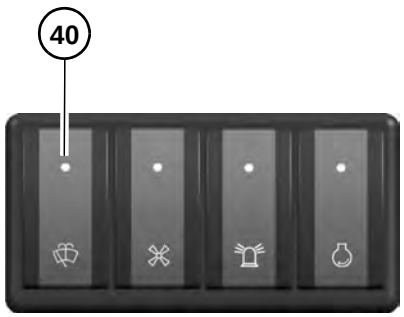

Fig. 133: Wiper/wash system switch

Position	Function	
2nd position	Press switch **40** down to the 2nd position	Pump sprays washer water on the window

Notice

Damage to electric pump if the tank is empty.

- ► Do not actuate the washer system if the tank is empty.

https://truckmanualshub.com/

5.8 Heating, ventilation and air conditioning system

Ventilation/heating (option)

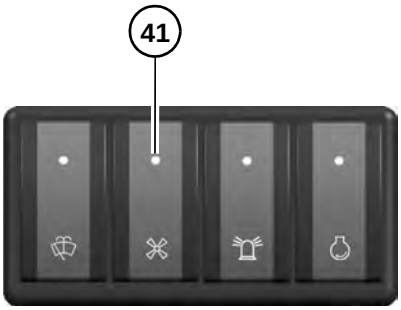

Fig. 134: Ventilation/heating

The switch is located on the right-hand switch panel.

Position	Function	
1st position	Press switch **41** down one step	Low fan speed
2nd position	Press switch **41** down two steps	High fan speed
OFF	Press switch **41** all the way up	Fan is switched off

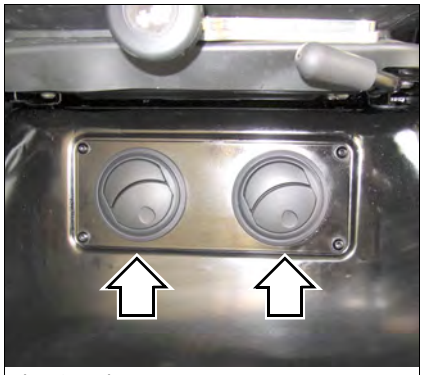

Fig. 135: Air vents

Adjust the nozzles so that the required temperature can be reached.

Air the cab from time to time.

Information

If the windows are fogged or iced up, adjust the nozzles to the front and open them completely.

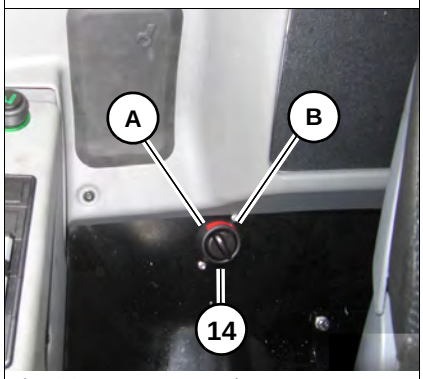

Fig. 136: Temperature setting

Temperature setting

The temperature controller is located at the right behind the seat.

Cooling

Turn temperature controller **14** toward **B**.

Heating

Turn temperature controller **14** toward **A**.

https://truckmanualshub.com/

5.9 Work hydraulics

Overview of pedals and control levers (Operating Pattern A)

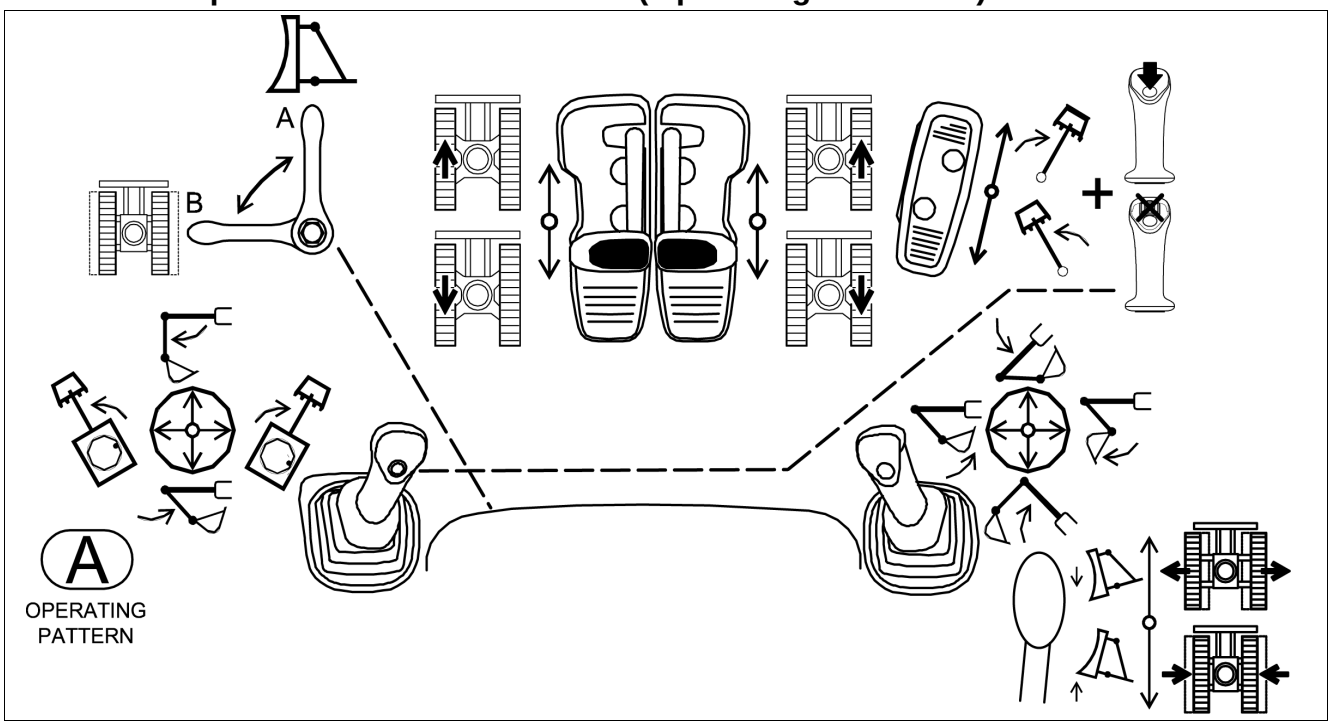

Symbol	Designation	Symbol	Designation
	Left-hand track (forward)		Right-hand track (forward)
	Left-hand track (reverse)		Right-hand track (reverse)
	Extend stick		Swivel upper carriage to the right
	Retract stick		Swivel upper carriage to the left
	Swivel boom to the right		Swivel boom to the left
	Lower boom		Dump out bucket
	Raise boom		Dump in bucket
	Lower stabilizer blade		Raise stabilizer blade
	Extend telescopic travel gear		Retract telescopic travel gear
	Telescopic travel gear/stabilizer blade changeover		ISO controls (Europe)

https://truckmanualshub.com/

Overview of pedals and control levers (Operating Pattern B)

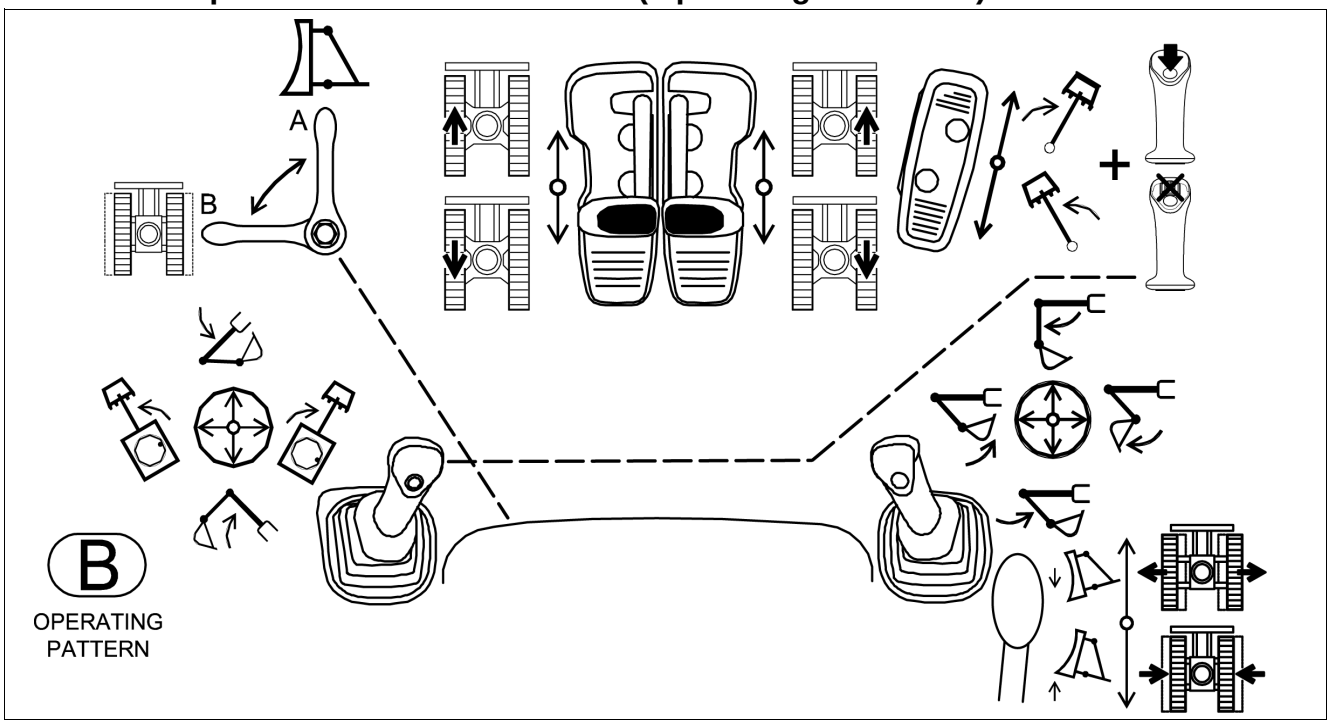

Symbol	Designation	Symbol	Designation
	Left-hand track (forward)		Right-hand track (forward)
	Left-hand track (reverse)		Right-hand track (reverse)
	Extend stick		Swivel upper carriage to the right
	Retract stick		Swivel upper carriage to the left
	Swivel boom to the right		Swivel boom to the left
	Lower boom		Dump out bucket
	Raise boom		Dump in bucket
	Lower stabilizer blade		Raise stabilizer blade
	Extend telescopic travel gear		Retract telescopic travel gear
	Telescopic travel gear/stabilizer blade changeover	B OPERATING PATTERN	SAE controls (US)

https://truckmanualshub.com/

Travel levers/travel pedals

CAUTION

Accident hazard! The machine moves in the opposite direction if the upper carriage is rotated by 180° and the travel levers/travel pedals are actuated.

Injury hazard due to operating error of machine.

► Slowly and carefully actuate the pedals and control levers.

Notice

In order to avoid excessive track abrasion:

► Ensure that both tracks move as you change direction.

The stabilizer blade side is the front side.

Raise the standard bucket/attchment and the stabilizer blade.

Both the travel levers and the travel pedals can be used for traveling.

The travel speed depends on the position of the travel levers or travel pedals.

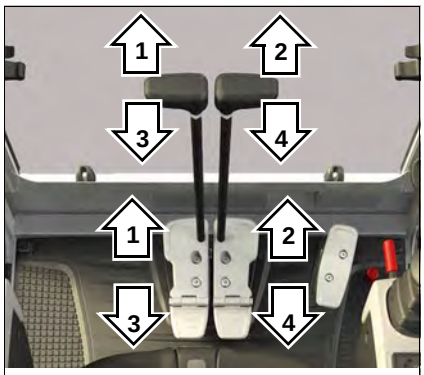

Fig. 137: Travel pedals/travel levers

Position	Function	
1 2	Move forward Move forward	Machine moves forward
3 4	Move backward Move backward	Machine moves backward
3 2	Move backward Move forward	Machine turns to the left
1 4	Move forward Move backward	Machine turns to the right

The rear part of the travel pedals can be folded forward to save space.

https://truckmanualshub.com/

Rotating the upper carriage

WARNING

Accident hazard! Upper carriage can rotate a little bit farther.

Can result in severe injury or death.

- ► Until the hydraulic fluid reaches operating temperature, the upper carriage can rotate farther than expected after the control is placed in the neutral position.
- ► If the machine is equipped with an extra weight (option), the upper carriage projects beyond the tracks when it is rotated.
- ► Ensure that there are no obstacles in the immediate area before rotating the upper carriage.
- ► Fast actuation of the control lever rotates the upper carriage fast, slow actuation of the control lever rotates the upper carriage slowly.
- ► If the upper carriage needs to be rotated on a slope, let the engine run at idling speed and actuate the control lever very slowly. Proceed with extreme care and avoid abrupt movements if the bucket is full.

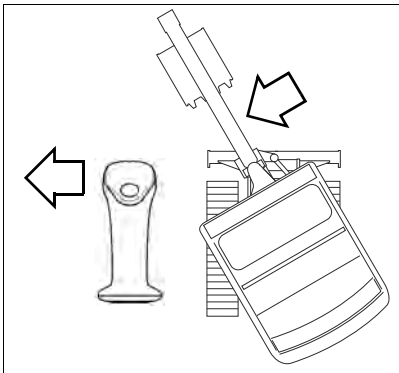

Fig. 138: Rotating the upper carriage to the left

Rotating the upper carriage to the left

Push the left-hand control lever to the left.

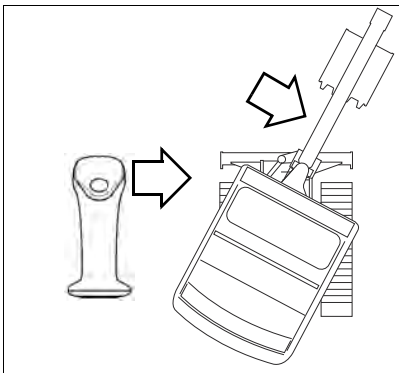

Fig. 139: Rotating the upper carriage to the right

Rotating the upper carriage to the right

Push the left-hand control lever to the right.

Swivel unit brake

The swivel unit brake is enabled if:

- the control lever base is raised.
- Starter is turned to position **0** or the engine is stopped.

This secures the upper carriage against rotation.

https://truckmanualshub.com/

Hydraulic swivel unit brake:

The upper carriage's rotation is sufficiently braked by moving the left-hand control lever back to initial position. Moving the control lever in the opposite direction (counteraction) brakes the upper carriage with maximum hydraulic output.

Mechanical swivel unit brake:

A multidisc brake integrated in the rotation drive has an additional mechanical brake effect. The brake is used to brake the swivel unit. The upper carriage can be stopped in any position.

ISO/SAE controls (option)

WARNING

Accident hazard due to modified control lever operation!

Can result in severe injury or death.

► Ensure that you know which control mode has been selected before starting machine operation.

► Always secure the wing nut on the changeover lever of the directional valve.

Notice

No traveling or operating the machine if the wing nut is malfunctioning.

► Contact a Wacker Neuson service center and replace the malfunctioning wing nut.

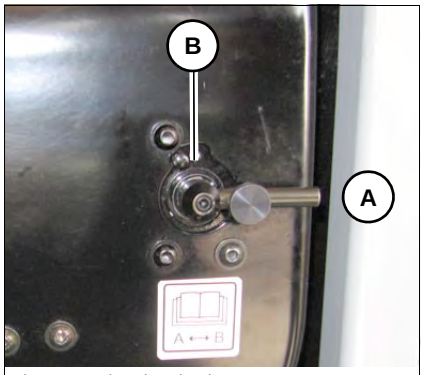

Fig. 140: Directional valve

The directional valve is located at the left under the seat.

The directional valve can be switched between Operating Pattern A (ISO controls) and Operating Pattern B (SAE controls).

The function label for the controls is affixed on the roof window.

Wiring diagram	Controls	
A	ISO controls	Operating Pattern A
B	SAE controls	Operating Pattern B

https://truckmanualshub.com/

Stabilizer blade

WARNING

Accident hazard due to unintentional actuation!

Can result in severe injury or death.

- ► Raise the control lever base.
- ► Lower the stabilizer blade to the ground once machine operation is over.
- ► Ensure that no one is in the danger zone.

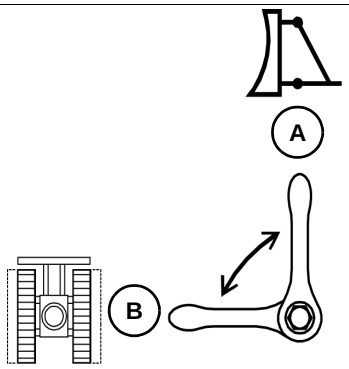

Fig. 141: Stabilizer blade/telescopic travel gear

The lever is located at the left under the seat.

1. Set the lever to position **A**.

Position	Function
A	The stabilizer blade is actuated with the control lever.
B	The telescopic travel gear is actuated with the control lever.

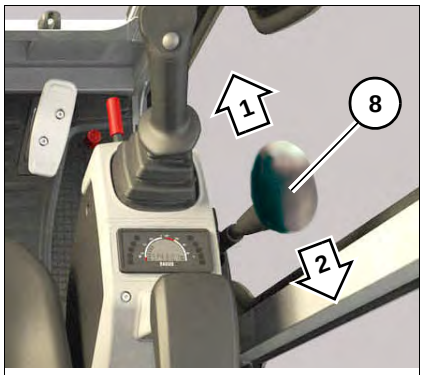

Fig. 142: Stabilizer blade

2. The stabilizer blade is controlled via lever **8**.

Position	Function
1	Lowers the stabilizer blade.
2	Raises the stabilizer blade.

Information

Lowering the stabilizer blade too deeply into the ground can create a high resistance.

- ► Slightly raise the stabilizer blade.
- ► The clearance between the stabilizer blade and the ground should be about 1 cm (0.39").
- ► Raise the stabilizer blade before starting machine travel.

Information

The stabilizer blade is also used as a parking brake.

- ► Press the stabilizer blade against the ground.

https://truckmanualshub.com/

Information

Only perform machine operation with an extended telescopic travel gear (option). Lower the stabilizer blade and turn out the extensions (option).

Changing the width of the stabilizer blade (option)

Notice

Possible machine damage when traveling through door frames, etc.

► Pay attention to the width of the stabilizer blade and of the telescopic travel gear when traveling through passages.

► Adjust the stabilizer blade and the telescopic travel gear to the same widths when operating the machine.

Reducing the width of the stabilizer blade

1. Raise the stabilizer blade to about 1 – 2 cm (about 0.39 – 0.79 in).
2. Pull out pins **A** on either side.

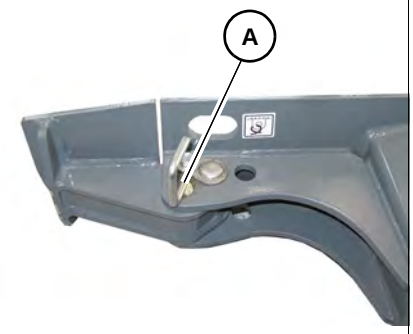

Fig. 143: Changing the width of the stabilizer blade

3. Turn in the stabilizer blade extensions **B** on either side.
4. Insert pins **A** on either side.

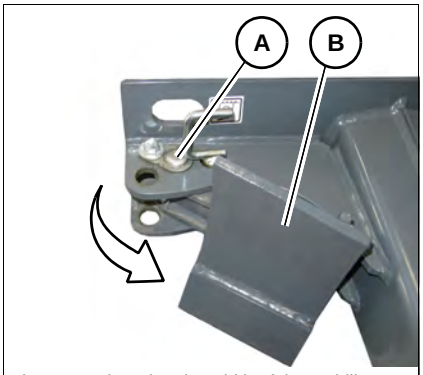

Fig. 144: Changing the width of the stabilizer blade

https://truckmanualshub.com/

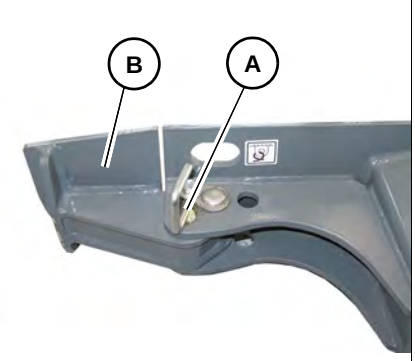

Fig. 145: Changing the width of the stabilizer blade

Increasing the width of the stabilizer blade

1. Raise the stabilizer blade to about 1 – 2 cm (about 0.39 – 0.79 in).
2. Pull out pins **A** on either side.
3. Turn out the stabilizer blade extensions **B** on either side.
4. Insert pins **A** on either side.

https://truckmanualshub.com/

Telescopic travel gear (option)

WARNING

Crushing hazard due to tipping over of the machine.

Can result in severe injury or death.

- ► Only perform machine operation with an extended telescopic travel gear.
- ► Traveling with a retracted telescopic travel gear is only allowed for traveling very short distances. Pay attention to the reduced stability.
- ► Retract or extend the telescopic travel gear completely.
- ► Raise the boom about 20 – 30 cm (8 – 12 in) off the ground and position it straight ahead at the center of the machine. In an emergency, lower the boom immediately to increase stability.
  This prevents the machine from tipping over in case of a hose rupture on the telescopic hydraulic cylinder. A hose rupture versmight cause the travel gear to retract and reduce stability.

WARNING

Crushing hazard when retracting the telescopic travel gear!

Can result in severe injury or death.

- ► Do not allow anyone to stay in the danger zone.

Notice

In order to avoid damage to the machine when traveling through door frames etc.:

- ► Pay attention to the width of the stabilizer blade and of the telescopic travel gear when traveling through passages.
- ► Adjust the stabilizer blade and the telescopic travel gear to the same widths when operating the machine.

https://truckmanualshub.com/

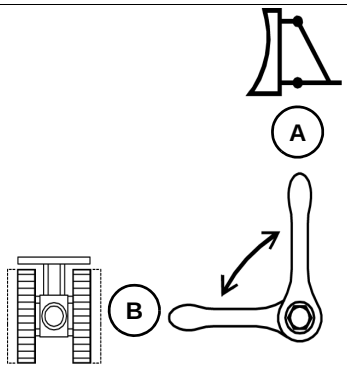

Fig. 146: Stabilizer blade/telescopic travel gear

The lever is located at the left under the seat.

1. Set the lever to position **B**.

Position	Function
A	The stabilizer blade is actuated with the control lever.
B	The telescopic travel gear is actuated with the control lever.

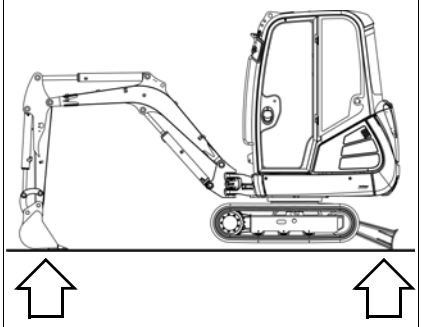

Fig. 147: Raising the machine

2. Raise the machine evenly and horizontally by means of the boom and the stabilizer blade.

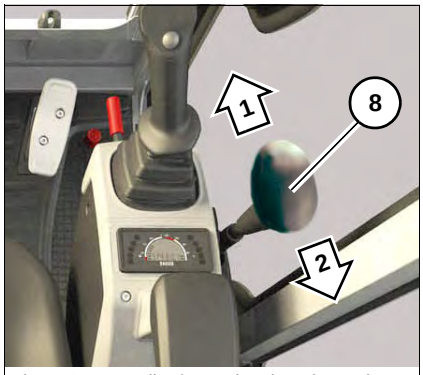

Fig. 148: Extending/retracting the telescopic travel gear

3. The telescopic travel gear is controlled via lever **8**.

Position	Function	
1	Push lever **8** forward	The travel gear is extended (wide track).
2	Pull lever **8** backward	The travel gear is retracted (narrow track).

Information

Only perform machine operation with an extended telescopic travel gear (option). Lower the stabilizer blade and turn out the extensions (option).

https://truckmanualshub.com/

Proportional controls (option)

The proportional controls make it possible to adjust the movement speed of the attachment. Moving the control lever slowly causes the attachment to move slowly.

This control mode offers proportional operation of the auxiliary hydraulics depending on the position of slide switch **A** on the control lever.

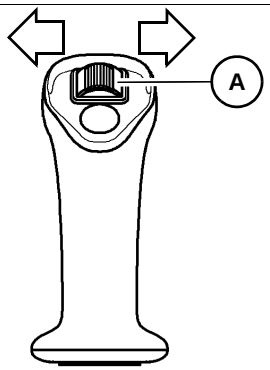

Fig. 149: Control lever for proportional controls

If precision machine operation (for example with an offset bucket) does not require the full oil flow of the auxiliary hydraulics (AUX I and AUX II), turn the rotary switch to the left (MIN).

If the full oil flow is required, turn the rotary switch to the right (MAX).

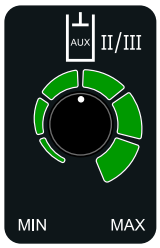

Fig. 150: Rotary switch on left-hand control lever base

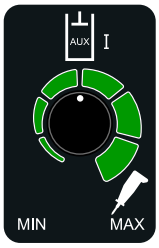

Fig. 151: Rotary switch on right-hand control lever base

https://truckmanualshub.com/

Hammer operation (option)

Information regarding hammer operation

Use the canopy version only with a shatter protection during hammer operation.

– see chapter " Shatter protection (option)" on page 4-25

WARNING

Piercing/penetration hazard due to flying objects!

Causes severe injury or death.

- ► During operation, all persons must stay clear of the work area of the machine.
- ► Do not place the machine directly underneath the workplace during demolition, otherwise debris can fall onto the machine or the building can collapse.
- ► All windows and doors must be closed if the machine is equipped with a cab (option).

WARNING

Accident hazard due to tipping over of the machine!

Can cause severe injury or death.

- ► During operation, all persons must stay clear of the work area of the machine.
- ► Do not perform any demolition work under the machine. This could cause the machine to tip over.
- ► The machine can lose its balance and tip over if a hammer or other heavy attachment is used. Proceed as follows to perform machine operation both on level ground and on slopes:
- ► Never turn, lower or set down the attachment abruptly.
- ► Do not extend or retract the boom abruptly.
- ► Do not use the impact force of the attachment to perform demolition work. Broken or falling debris can cause injuries, damage to property or damage to the equipment.
- ► Machine travel is prohibited during hammer operation.

https://truckmanualshub.com/

Notice

If several sizes of hydraulic hammers are available for the machine when using the Powertilt unit:

► Always use the smallest possible hydraulic hammer.

► Contact your dealer for information on the correct equipment.

Hammer operation

Notice

In order to avoid damage to the machine and the hydraulic hammer, observe the following during machine operation with a hammer:

► See the Operator's Manual of the hydraulic hammer.

► Never use the hammer horizontally or upward.

► Do not use the hammer to raise loads.

► Do not hit the hammer against rocks, concrete, etc.

► Do not raise the machine with the boom.

► Working with the hydraulic cylinders and/or the boom fully extended is prohibited.

► Do not swivel the Powertilt unit beyond 30° during hammer operation, otherwise the load on the boom increases enormously.

► Stop machine operation immediately if a hydraulic hose moves back and forth in an unusual manner. The pressure accumulator could be malfunctioning. Contact a Wacker Neuson service center and have the malfunction rectified immediately.

https://truckmanualshub.com/

Hammer pedal – AUX I (option)

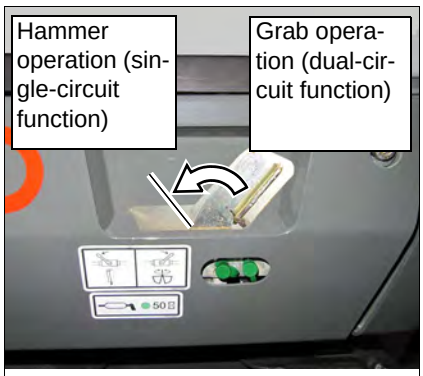

Fig. 152: Ball-type cock

1. Switch over to hammer operation. The ball-type cock is located on the right in traveling direction on the upper carriage.

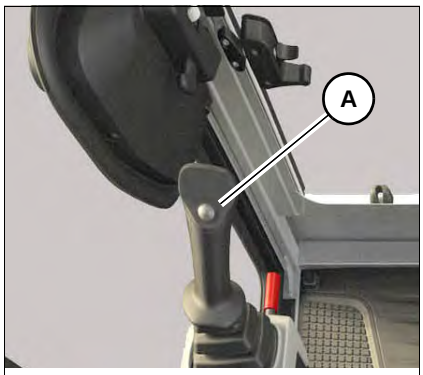

Fig. 153: Changeover of boom swivel

2. The auxiliary hydraulics is enabled when the machine is started.
   ➥ Pressing button **A** changes over to boom swivel.

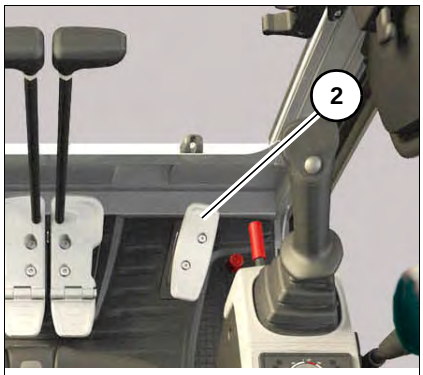

Fig. 154: Boom swivel/auxiliary hydraulics pedal

Switching on hammer operation:

Press pedal **2** backward.

Switching off hammer operation:

Release pedal **2**.

https://truckmanualshub.com/

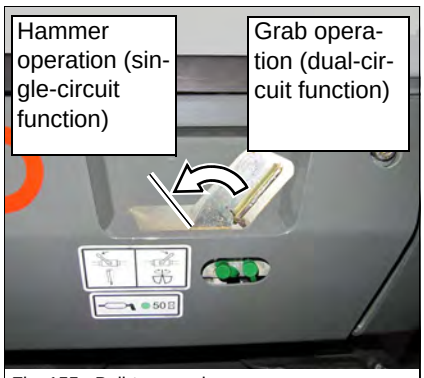

Fig. 155: Ball-type cock

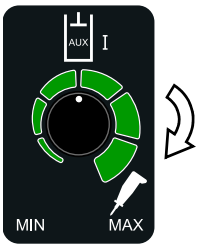

Fig. 156: Setting the oil flow

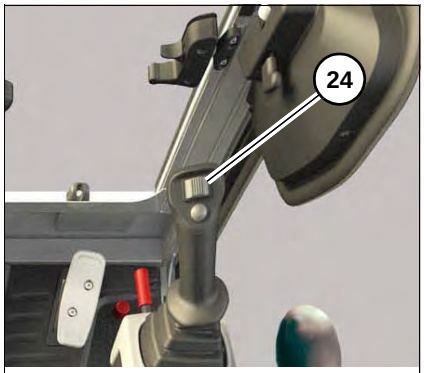

Fig. 157: Switching on hammer operation

Proportionally controlled hammer pedal – AUX I (option)

1. Switch over to hammer operation. The ball-type cock is located on the right in traveling direction on the upper carriage.

Information

Set the full oil flow (MAX) with the rotary switch on the right-hand control lever base.

Switching on hammer operation:

Push slide switch **24** on the right-hand control lever to the left.

Switching off hammer operation:

Release slide switch **24**.

https://truckmanualshub.com/

Additional control circuit – AUX I (option)

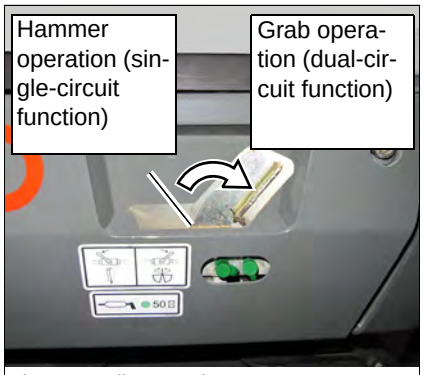

Fig. 158: Ball-type cock

1. Changeover to the dual-circuit function. The ball-type cock is located on the right in traveling direction on the upper carriage.

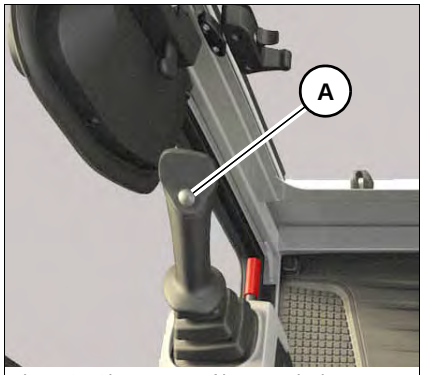

Fig. 159: Changeover of boom swivel

2. The auxiliary hydraulics is enabled when the machine is started.
   ➥ Pressing button **A** changes over to boom swivel.

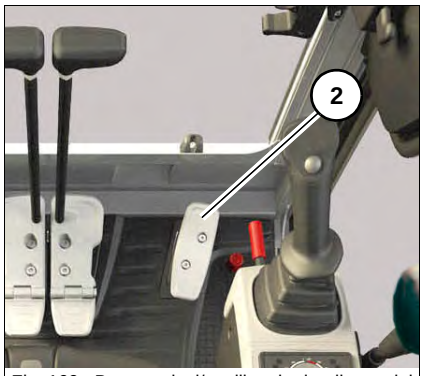

Fig. 160: Boom swivel/auxiliary hydraulics pedal

Operating the additional control circuit

Oil flow to right-hand line:

Press pedal **2** forward.

Oil flow to left-hand line:

Press pedal **2** backward.

https://truckmanualshub.com/

Proportionally controlled additional control circuit – AUX I (option)

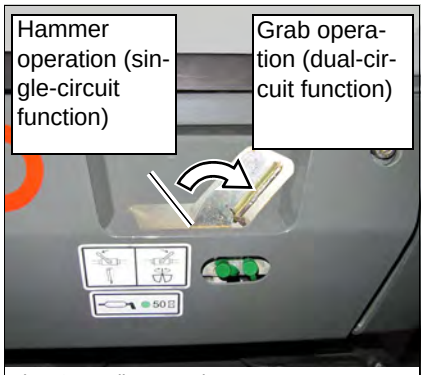

Fig. 161: Ball-type cock

1. Changeover to the dual-circuit function. The ball-type cock is located on the right in traveling direction on the upper carriage.

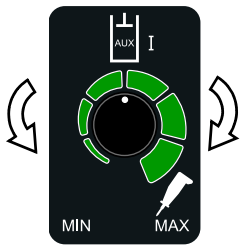

Fig. 162: Setting the oil flow

2. Turn the rotary switch on the left-hand control lever base to the required position.

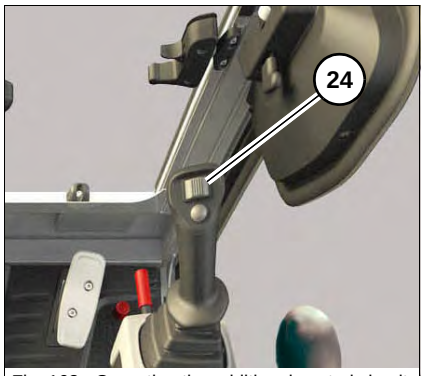

Fig. 163: Operating the additional control circuit

Operating the additional control circuit

Oil flow to left-hand line:

Push slide switch **24** on the left-hand control lever to the left.

Oil flow to right-hand line:

Push slide switch **24** on the left-hand control lever to the right.

https://truckmanualshub.com/

Swiveling the boom

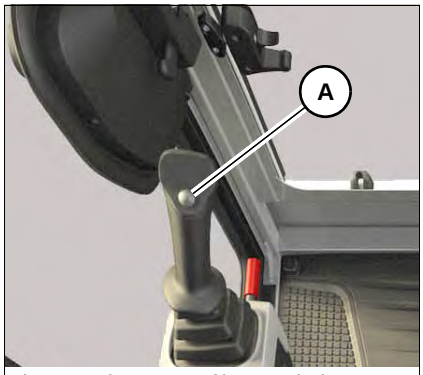

Fig. 164: Changeover of boom swivel

Press and hold button **A** on the left-hand control lever base.

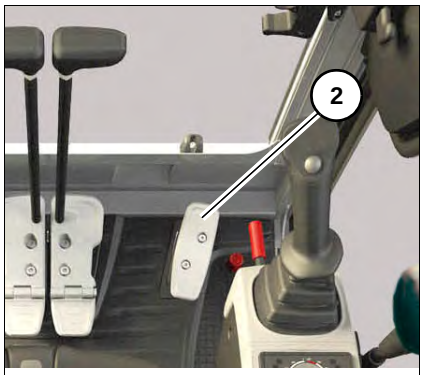

Fig. 165: Boom swivel/auxiliary hydraulics pedal

Swiveling the boom to the right:

Press pedal **2** forward.

Swiveling the boom to the left:

Press pedal **2** backward.

Swiveling the boom (proportionally controlled)

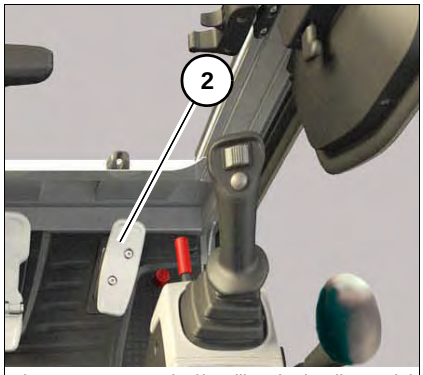

Fig. 166: Boom swivel/auxiliary hydraulics pedal

Swiveling the boom to the right:

Press pedal **2** forward.

Swiveling the boom to the left:

Press pedal **2** backward.

https://truckmanualshub.com/

Lifting gear applications

DANGER

Crushing hazard due to tipping over of machine.

Causes severe crushing or injury resulting in death.

- ► Observe chapter **Safety/Safety instructions regarding lifting gear applications**.
- ► The authorized lift capacity specified in the stability table must never be exceeded.
- ► If a bucket or attachment (hammer, etc.) is installed, the weight of the attachment must be subtracted from the lift capacity specified in the table.
- ► Use the machine for lifting gear applications only if the mandatory lifting gear (load hook, for example) and safety equipment (optical and acoustic warning devices (safe load indicator), stability table, hydraulic hose burst valve, for example) is installed, functional and enabled.
- ► Functional check of safe load indicator (see chapter “Safe load indicator”).
- ► Do not tilt the upper carriage (Vertical Digging System option).
- ► The telescopic travel gear must be extended (option).

Notice

If the specified lift capacity is exceeded, possible damage to property due to tipping over of the machine.

- ► The authorized lift capacity specified in the stability table must never be exceeded.

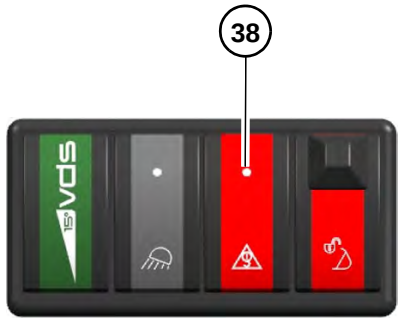

Fig. 167: Safe load indicator

In lifting gear applications, always switch on switch **38** for the safe load indicator.

As soon as indicator light **32** illuminates and the warning sounds:

- Reduce the load until the indicator light goes out and the warning no longer sounds.

Suitable equipment for fastening and securing loads must be available.

https://truckmanualshub.com/

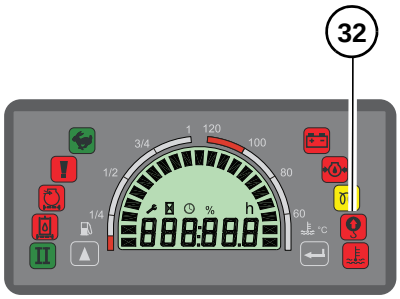

Fig. 168: Safe load indicator light

– see chapter “ Safe load indicator (option)” on page 5-50

https://truckmanualshub.com/

Additional control circuits

3rd control circuit – AUX II (option)

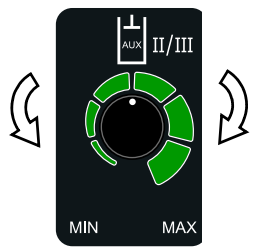

Fig. 169: Setting the oil flow

Turn the rotary switch on the left-hand control lever base to the required position.

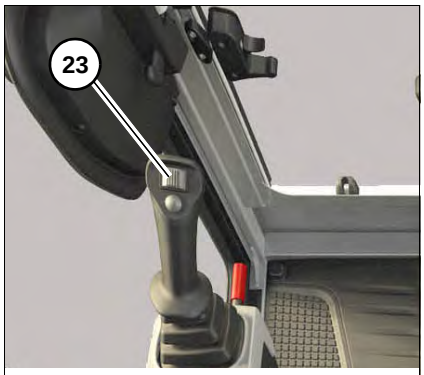

Fig. 170: Operating the additional control circuit

Operating the additional control circuit

Oil flow to left-hand line:

Push slide switch **23** on the left-hand control lever to the left.

Oil flow to right-hand line:

Push slide switch **23** on the left-hand control lever to the right.

https://truckmanualshub.com/

Powertilt – AUX II (option)

WARNING

Crushing hazard due to rotating movements of the Powertilt unit!

Can result in severe injury or death.

► Do not allow anyone to stay in the danger zone.

Information

For more information, see **Easy Lock/Powertilt with Easy Lock** Operator's Manual.

Information

The Powertilt unit may only be installed and removed by a Wacker Neuson service center!

Adjust the required oil flow with the rotary switch on the left-hand control lever base.

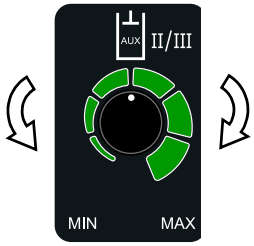

Fig. 171: Setting the oil flow

Actuating the Powertilt unit

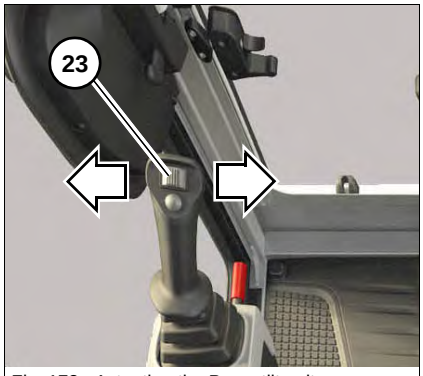

Fig. 172: Actuating the Powertilt unit

https://truckmanualshub.com/

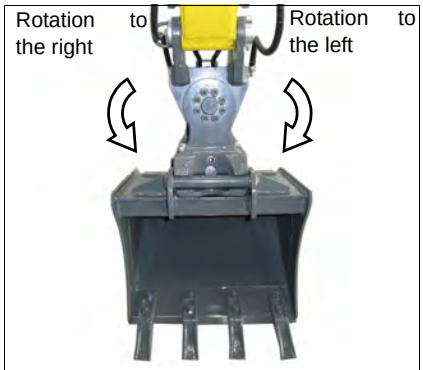

Fig. 173: Rotating the Powertilt unit

Rotating the Powertilt unit to the left:

Push slide switch **23** on the left-hand control lever to the left.

Rotating the Powertilt unit to the right:

Push slide switch **23** on the left-hand control lever to the right.

https://truckmanualshub.com/

Hydraulic quickhitch – Easy Lock (option)

- Before putting this feature into operation, specific training must be performed by authorized technical personnel and must be understood by the operator.
- For safety reasons, the quickhitch must be operated with two control elements. This avoids opening the quickhitch unintentionally during work operation.
- For system-specific reasons, the hydraulic quickhitch opens and closes with the functions “Stabilizer blade”, “Rotate upper carriage” and “3rd control circuit (option)”.
- For safety reasons, only use the function “Raise stabilizer blade” to open or close.
- There must be no dirt on the claws before hitching.
- For more information, see **Easy Lock/Powertilt with Easy Lock** Operator’s Manual.

WARNING

Accident hazard when hitching attachments!

Can result in severe injury or death.

► Do not allow anyone to stay in the danger zone.

► Do not use a damaged attachment.

► After hitching the attachment or before starting machine operation, ensure that the lock is correctly connected with the mount.

► The check pin **K** must be fully retracted. Otherwise repeat the lock cycle until check pin **K** is retracted.

► Ensure correct locking with a short and rapid succession of stick and bucket movements as close as possible to the ground.

Picking up an attachment

1. Actuate switch **39**.
   ➥ The buzzer sounds.
   ➥ The hydraulic quickhitch is enabled and can be operated.

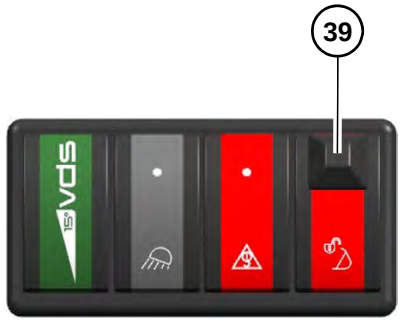

Fig. 174: Easy Lock switch

https://truckmanualshub.com/

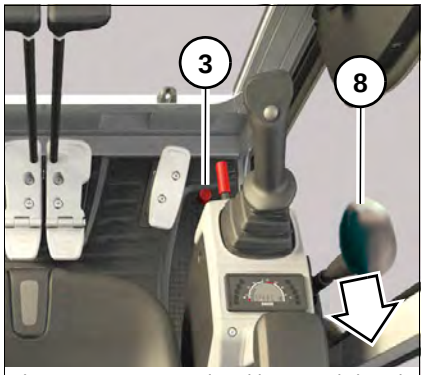

Fig. 175: Foot-operated pushbutton switch and stabilizer-blade lever

2. Press and hold foot-operated pushbutton switch **3**.
3. Pull and hold stabilizer-blade lever **8** as far as it will go.
   ➥ The quickhitch opens.

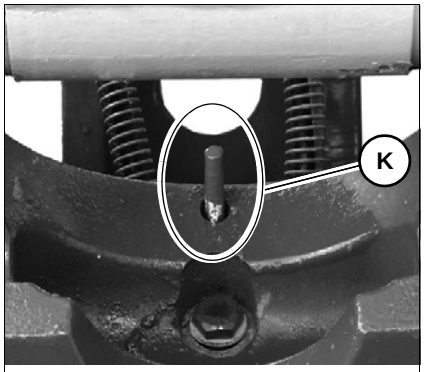

Fig. 176: Extended check pin

   ➥ The quickhitch is fully open if check pin **K** (red) is extended.
4. The stabilizer-blade lever can be released once the quickhitch is open.

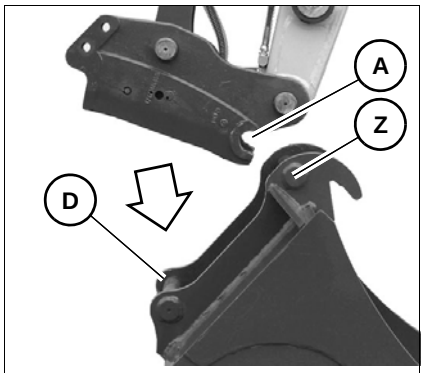

Fig. 177: Quickhitch

5. Hitch claws **A** (on the side of the machine) into pins **Z** of the attachment mount.
6. Extend the bucket hydraulic cylinder so that the second pin **D** of the attachment touches the quickhitch.
7. Check whether the attachment touches the quickhitch with the second pin **D**.

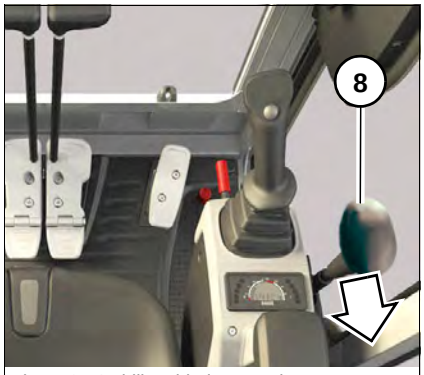

Fig. 178: Stabilizer blade operation

8. Release foot-operated pushbutton switch **3**.
9. Pull and hold stabilizer-blade lever **8** as far as it will go.
   ➥ The quickhitch closes.
10. Release stabilizer-blade lever **8**.
11. Switch off switch **39**.
    ➥ The buzzer is silent.

https://truckmanualshub.com/

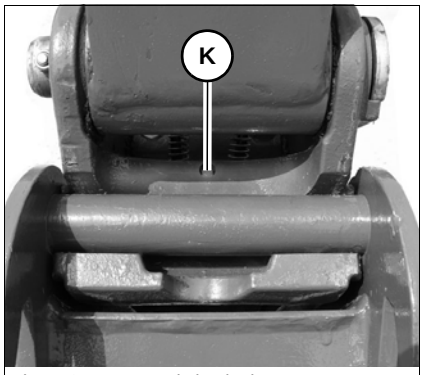

Fig. 179: Retracted check pin

➥ The check pin **K** must be fully retracted.

Setting down an attachment

WARNING

Crushing hazard due to uncontrolled movements of the attachment!

Can result in severe injury or death.

► Do not allow anyone to stay in the danger zone.

► Lower the attachment to level and firm ground ensuring stability.

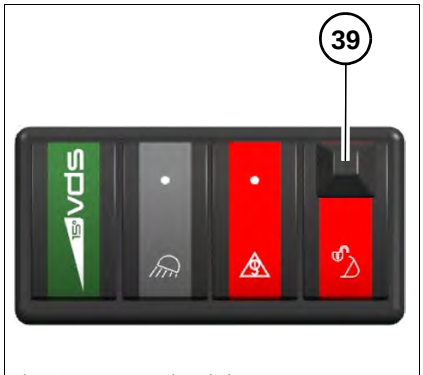

Fig. 180: Easy Lock switch

1. Lower the attachment to about 5 – 10 cm (2 – 4 in) above the ground.
2. Actuate switch **39**.
   ➥ The buzzer sounds.

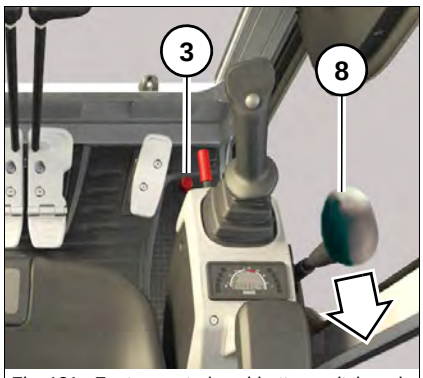

Fig. 181: Foot-operated pushbutton switch and stabilizer-blade lever

3. Press and hold foot-operated pushbutton switch **3**.
4. Pull and hold stabilizer-blade lever **8** as far as it will go.
   ➥ The quickhitch opens and unhitches the attachment.

https://truckmanualshub.com/

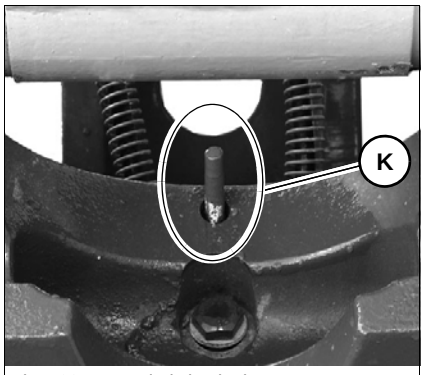

Fig. 182: Extended check pin

➥ The quickhitch is fully open if check pin **K** (red) is extended.

5. Release the stabilizer-blade lever.

Fig. 183: Quickhitch

6. Retract the bucket hydraulic cylinder.
7. Set down the attachment.
8. Raise the boom.
9. Release foot-operated pushbutton switch **3**.
10. Pull and hold stabilizer-blade lever **8** as far as it will go.
    ➥ The quickhitch closes.
11. Release the stabilizer-blade lever.
12. Switch off switch **39**.
    ➥ The buzzer is silent.

Grab control circuit (option)

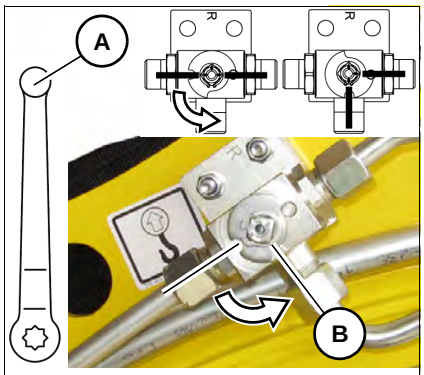

Fig. 184: Right-hand side grab operation

Right-hand side grab operation:

1. Fit lever **A** onto the ball-type cock.
2. Set the ball-type cock to position **B**.
   ➥ The 90° notch indicates that grab operation is set.
3. Remove the lever after the changeover.

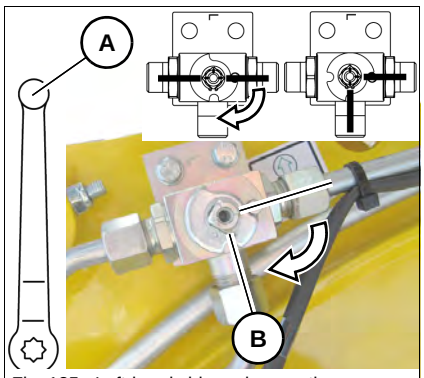

Fig. 185: Left-hand side grab operation

Left-hand side grab operation:

1. Fit lever **A** onto the ball-type cock.
2. Set the ball-type cock to position **B**.
   ➥ The 90° notch indicates that grab operation is set.
3. Remove the lever after the changeover.

https://truckmanualshub.com/

Connecting and disconnecting hydraulic couplings

1. Stop and park the machine. See “Preparing lubrication”.
2. Position the boom straight ahead at the center of the machine.
3. Lower the stabilizer blade to the ground.
4. Turn the starting key to position **1**.
5. Move the control lever or the pedal of the hydraulic circuit in all directions repeatedly.
6. Remove the starting key and carry it with you.

➥ The grab hose couplings can now be coupled and uncoupled from the couplings.

Hydraulic connections

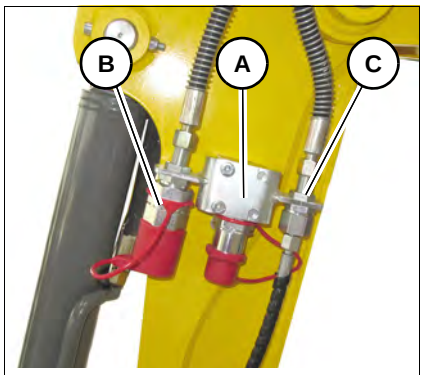

Fig. 186: Left-hand ports

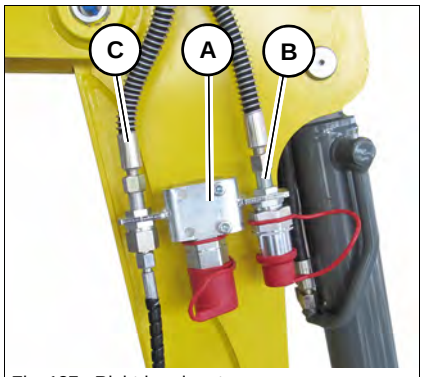

Fig. 187: Right-hand ports

Port	Stick (left/right)
A	Auxiliary hydraulics
B	Grab control circuit (option)
C	3rd control circuit or Powertilt (option)

Information

Follow the instructions in the Operator’s Manual of the attachment manufacturer for connecting the hydraulics to the attachment.

https://truckmanualshub.com/

5.10 Attachments

Picking up

WARNING

Injury hazard! Fluid escaping under high pressure can damage the skin and eyes!

Can result in severe injury or death.

- ► Do not allow anyone to stay in the danger zone.
- ► Before connecting or removing hydraulic lines from the attachment, ensure that the work hydraulics is not under pressure.
- ► Release the pressure in the work hydraulics.

WARNING

Injury hazard when hitching attachments!

Can result in severe injury or death.

- ► Always wear protective equipment when installing the connecting pins of the attachment.
- ► Ensure that no one is in the danger zone.
- ► Only use attachments that are in perfect condition.
- ► After hitching the attachment or before starting machine operation, ensure that the lock is correctly connected with the mount.
- ► Align the fastening bores in the bucket with a mandrel. This makes it easier to slide the pin into the bore connecting the attachment with the stick.
- ► Do not correct an incorrect alignment with the connecting pin and a hammer. Fragments can chip off the pin if it is struck with a hammer.
- ► Remove the connecting pins from the bucket only if it is in a stabile position and if it cannot be moved when removing the connecting pins. Do not stand on the closed rear side of the bucket as you remove it. Do not place your foot underneath the bucket.
- ► Remove the bucket only if it is firmly positioned on the ground or on a solid base. Do not remove the connecting pins if the bucket is raised. The bucket can cause serious injuries if it falls.
- ► Do not align the connecting bores with your fingers. In order to avoid possible injury, keep your fingers and hands away from the connections as you align the connecting bores.

https://truckmanualshub.com/

Setting down

WARNING

Crushing hazard due to uncontrolled movements of the attachment!

Can result in severe injury or death.

► Ensure that no one is in the danger zone.

► Lower the attachment to level and firm ground ensuring stability.

Re-equipping the attachments is described below for a bucket. If you are fitting or removing attachments with their own hydraulic functions – offset bucket, for example – you must follow the special information given in the Operator's Manual of the attachment.

Also refer to the Operator's Manual for the procedure to follow for fitting an attachment onto an Easy Lock quickhitch.

Information

The hydraulic system of the machine is still pressurized even when the engine is not running. Due to the residual pressure, the hydraulic quick couplers can be removed but not installed back on again.

► Release the pressure in the work hydraulics.

https://truckmanualshub.com/

Releasing the pressure in the work hydraulics

Releasing pressure

1. Stop the machine on firm, level and horizontal ground.
2. Lower the attachment completely to the ground.
3. Lower the stabilizer blade to the ground.
4. Stop the engine.
5. Turn the starter key to position **1**.
6. Move the control lever or the pedal of the hydraulic circuit in all directions repeatedly.
   - ➥ The pressure in the system sections that have been actuated is released. This can be seen by the brief movement the hoses make as the pressure is released.
   - ➥ Uncouple the attachment immediately after the pressure has been released, otherwise pressure can be created again!

Pressure release with proportional controls (option)

1. Stop the machine on firm, level and horizontal ground.
2. Lower the attachment completely to the ground.
3. Lower the stabilizer blade to the ground.
4. Stop the engine.
5. Turn the rotary switch for the oil flow to MAX.
6. Turn the starter key to position **1**.
   - ➥ Release the load only after you have switched on starter and waited 2 seconds.
7. Release the pressure on the auxiliary hydraulics or the 3rd control circuit by pressing the rocker switch connected with the left or right-hand control lever to the left and right.
   - ➥ The pressure in the system sections that have been actuated is released. This can be seen by the brief movement the hoses make as the pressure is actually released.
   - ➥ Uncouple the attachment immediately after the pressure has been released, otherwise pressure can be created again!

https://truckmanualshub.com/

Retrofitting a bucket

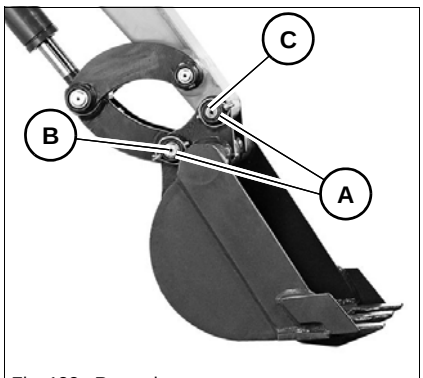

Fig. 188: Removing

Removing

1. Lower the bucket to level ground with the flat side facing downward.
2. Stop and park the machine. Stop the engine. See “Preparing lubrication”.
3. Remove linch pins **A**.
4. First remove pin **B**, and then pin **C**. Carefully expel pins that are stuck with a hammer and a brass punch.

If pin **C** is stuck:

1. Start the engine.
2. Slighty raise and lower the boom to take the load off the pin.
3. Stop and park the machine. Stop the engine. See “Preparing lubrication”.
4. Raise the control lever base.
5. Remove the starting key and carry it with you.

Information

Place the bucket only with minimum pressure on the ground as you remove the pins. The higher the pressure on the ground, the higher the resistance and the more difficult it is to remove the pins.

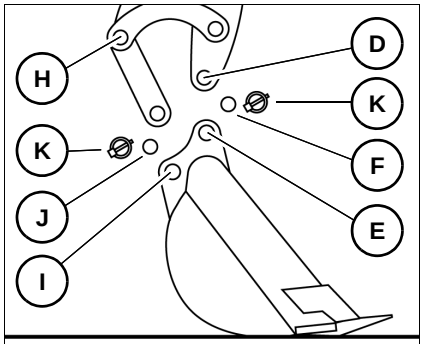

Fig. 189: Assembly

Assembly

1. Install a bucket only if it is positioned on level ground with the flat side facing downward.
2. Stop and park the machine. Stop the engine. See “Preparing lubrication”.
3. Apply grease to the pins and joints before inserting the pins.
4. Start the engine.
5. Straighten the stick so that bores **D** and **E** are flush.
6. Stop the engine. Raise the control lever base.
7. Insert pin **F**.
8. Actuate the stick hydraulic cylinder until bores **H** and **I** are flush.
9. Stop the engine. Raise the control lever base.
10. Insert pin **J**.

Install linch pins **K**.

https://truckmanualshub.com/

5.11 Work operation

Inadmissible work procedures

Fig. 190: Working with swivel force

Working with swivel force

- Do not use the swivel force of the upper carriage to tear down walls or to create level surfaces.
- Never ram the attachment into the ground when swiveling the upper carriage.
  ➥ This can damage the machine or the attachment.

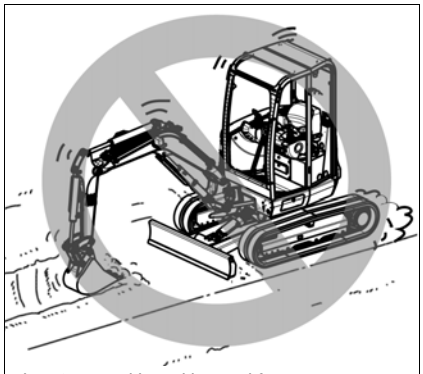

Fig. 191: Working with travel force

Working with travel force

- Never ram the attachment into the ground to dig when traveling.
  ➥ This can damage the machine or the attachment.

Fig. 192: Retracting the attachment

Retracting the attachment

- When retracting the attachment, ensure that it does not touch the stabilizer blade.

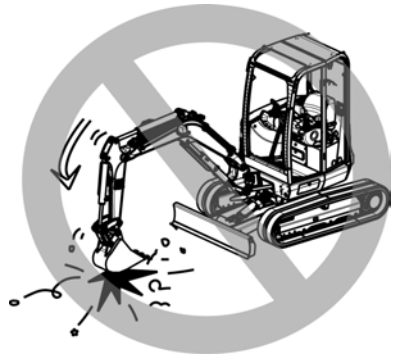

Fig. 193: Working with the falling force

Avoid impact during operation to avoid damage to the excavator bucket and machine components.

- Do not suddenly drop the bucket to increase penetration, break material, or compact material.
  ➥ Working this way can greatly reduce the machine's service life.

https://truckmanualshub.com/

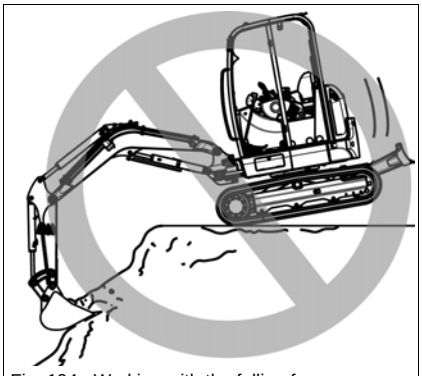

Fig. 194: Working with the falling force

Avoid tipping the machine and then releasing the boom hydraulics to break up material or compact the work.

- Never use the dead weight of the machine for work.
- Use only the hydraulic force of the hydraulic cylinders.

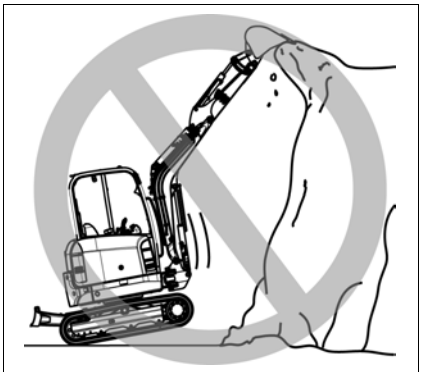

Fig. 195: Working with the falling force

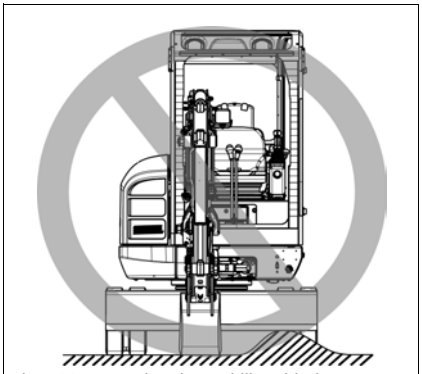

Fig. 196: Lowering the stabilizer blade

Fully lowering the stabilizer blade

- Apply the full weight of the machine over the entire width of the stabilizer blade when using it for stabilization.

Protecting the stabilizer blade against shocks

- The stabilizer blade or stabilizer blade hydraulic cylinder can be damaged when hitting it against rocks etc.

Fig. 197: Working on slopes

Working on slopes

- When performing deep excavations with the stabilizer blade at the front, ensure that the boom hydraulic cylinder and the attachment do not touch the stabilizer blade.
- Position the stabilizer blade at the rear if possible.

https://truckmanualshub.com/

General notices regarding work operation

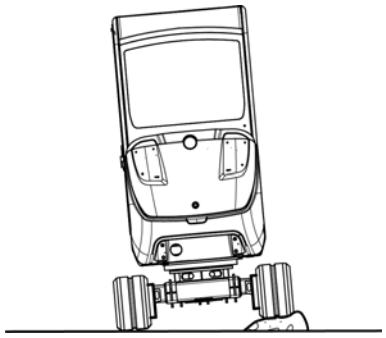

Fig. 198: Travel operation

Travel operation

Traveling over obstacles (rocks, tree stumps etc.) can put a heavy load on the travel gear and cause damage. Avoid traveling over obstacles if possible.

If it cannot be avoided, lower the boom to ground level and travel over the obstacle at low speed at the middle of the running gear.

Travel operation in high speed

Travel slowly on rough terrain and avoid starting machine travel and stopping abruptly as well as changing direction suddenly.

The stabilizer blade must be at the front when traveling in high speed.

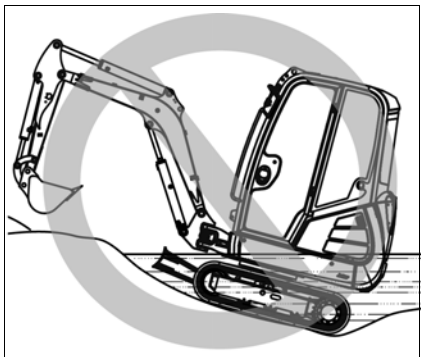

Fig. 199: Traveling out of water

Operation in water

Do not immerse the rear end of the machine in water. Bear this in mind in particular when leaving water, in order not to damage the machine.

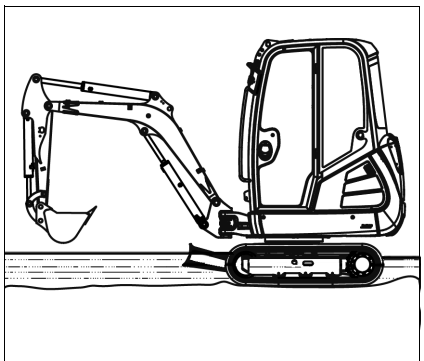

Fig. 200: Traveling in water

Water must not reach any farther than the upper edge of the tensioning wheel.

Lubricate lubrication points again that were immersed in water for a longer time in order to expel the old grease.

Never immerse the live ring or the upper carriage in water.

https://truckmanualshub.com/

Working with the standard bucket

The following section describes work operations with the machine equipped with the standard bucket (backhoe bucket 400 mm/16 in). The standard bucket is mainly used for earth-moving applications, namely for digging, loosening, picking up and loading loose or solid material.

The standard position the stabilizer blade is on the excavation side of the machine.

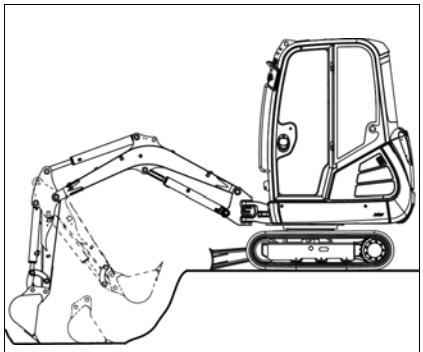

Fig. 201: Bucket position when digging

Bucket position when digging

Perform long, level excavation movements with the stick and the bucket. The maximum excavation force is achieved at an angle of 80 to 120° between the boom and the stick.

1. Penetrate into the ground with the bucket.
2. Lower the stick and at the same time, position the bucket so that the flat lower side of the bucket is parallel with the ground.
3. Move the stick toward the machine and dump in the bucket at the same time.

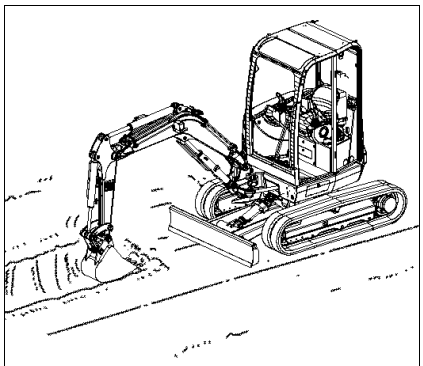

Fig. 202: Excavating

Working alongside trenches

- For more efficient work:
  - Install a suitable bucket.
  - Position the tracks parallel to the trench.
- When digging wide trenches, dig the side sections first and then the middle section.

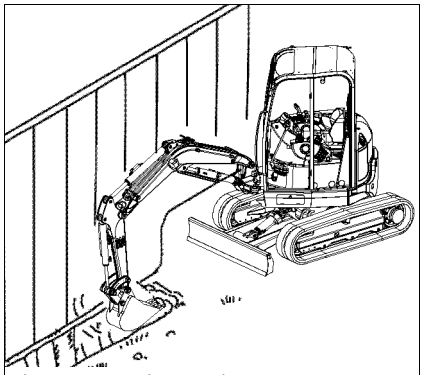

Fig. 203: Lateral excavation

- The machine can be used in tight spaces for excavating laterally.
  - To do this: rotate the upper carriage and swivel the boom at the same time.

https://truckmanualshub.com/

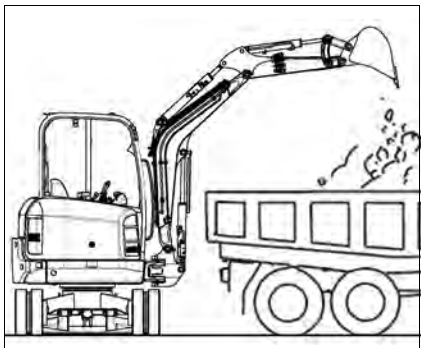

Fig. 204: Loading material

Loading material

- Loading material on trucks is easier and more efficient if:
  - The machine is positioned at the rear end of the truck.
  - The loading platform of the truck is loaded by starting at the rear end.
  - Work is performed with the smallest possible swivel angle.

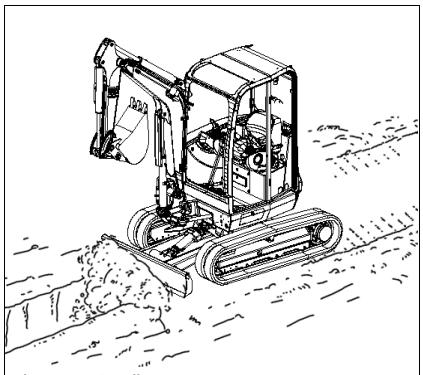

Fig. 205: Grading

Grading

- Use the stabilizer blade to:
  - Fill in trenches.
  - Grade surfaces.

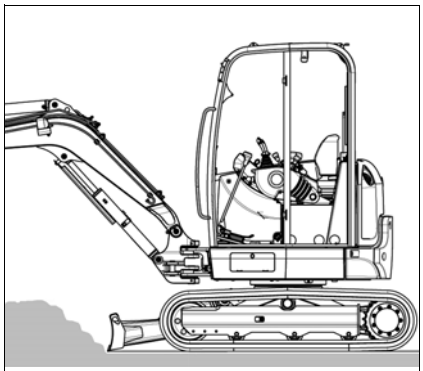

Fig. 206: Grading

- Lower the stabilizer blade to the ground for grading work.
- Set the depth of the layer you want to remove with the stabilizer-blade lever.
  ➥ The machine must not be raised by lowering the stabilizer blade.

The clearance between the stabilizer blade and the ground should be about 1 cm (0.4 in).

https://truckmanualshub.com/

5.12 Emergency lowering

DANGER

Crushing hazard during boom lowering!

Causes severe crushing or injury resulting in death.

► Do not allow anyone to stay in the danger zone.

Information

Lower the boom immediately after stopping the engine.

A load retaining valve prevents the boom from lowering. Observe the following during emergency lowering:

1. Turn the starting key to position 1.
2. Lower the control lever base.
3. Actuate the corresponding control lever until the boom is completely lowered.
4. Return the control lever to neutral.

https://truckmanualshub.com/

5.13 Additional equipment/options

Safe load indicator (option)

The safe load indicator gives the operator optical and acoustic warnings when the values of the stability table are exceeded.

DANGER

Crushing hazard due to tipping over of the machine!

A tipping machine can cause severe injury or death.

► Reduce reach or the lift load until both the acoustic signal and the indicator light in the display element go out.

► Pay attention to the stability table.

WARNING

Accident hazard due to switched-off or malfunctioning safe load indicator!

A tipping machine can cause severe injury or death.

► Switch on the safe load indicator during lifting gear applications.

Functional check of the pressure switch of the safe load indicator

Always perform a functional check of the safe load indicator before performing lifting gear applications.

1. Start the machine.
2. Travel on open terrain.
3. Secure the danger zone.
4. Stop the machine.
5. Switch on the safe load indicator.
6. Raise the boom as far as it will go and hold the control lever in this position.
   ➥ The acoustic signal must sound and the indicator light must illuminate.
   ➥ The machine may be used for lifting gear applications.
7. The acoustic signal does not sound, or the indicator light does not illuminate.
   ➥ The machine may *not* be used for lifting gear applications.
   ➥ Contact a Wacker Neuson service center and have the malfunction rectified.

Perform a functional check of the control lever base.

– see chapter “ Functional check of control lever base” on page 4-18

https://truckmanualshub.com/

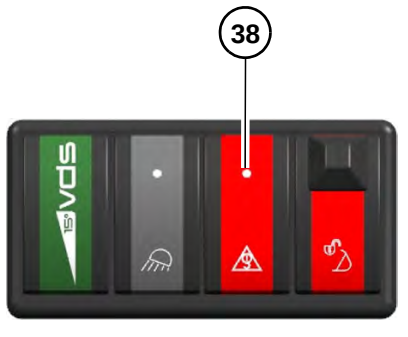

Fig. 207: Safe load indicator

Switching on the safe load indicator

The safe load indicator switch is located on the left-hand control lever base.

1.Press switch **38** on the instrument panel down.

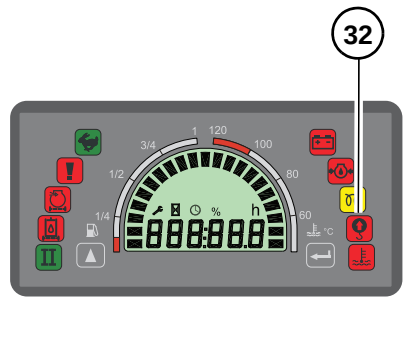

Fig. 208: Safe load indicator light

➥ Indicator light **32** in the display element is used for monitoring.

➥ As soon as the admissible values are exceeded, indicator light **32** illuminates and an acoustic signal sounds.

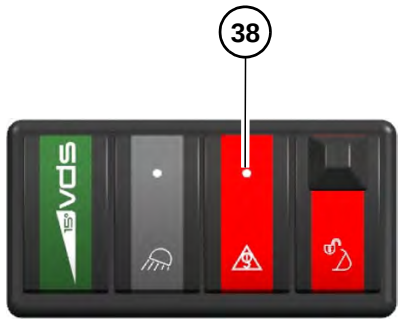

Fig. 209: Safe load indicator

Switching off the safe load indicator

1. Press switch **38** on the instrument panel forward.

https://truckmanualshub.com/

Hydraulic hose burst valve

CAUTION

Burn hazard due to hot hydraulic oil!

Hot hydraulic oil can burn the skin.

► Move the control levers to neutral position if a hydraulic hose bursts.

Stabilizer blade hydraulic cylinder

If a hydraulic hose bursts on the stabilizer blade hydraulic cylinder, the standard hydraulic hose burst valve keeps the blade in its position.

Hydraulic hose burst valve “Basic” (option)

The boom and stick are equipped with a hydraulic hose burst valve that keeps them in the last position if a hydraulic hose bursts.

The hydraulic hose burst valve is adjusted and sealed at the factory.

Warranty is void if the seal is removed or if the hydraulic hose burst valve is tampered with.

Hydraulic hose burst valve “Advanced” (option)

The boom and stick are equipped with a hydraulic hose burst valve, and the stabilizer blade with a counterbalance valve that keep them in the last position if a hydraulic hose bursts.

The hydraulic hose burst valve (boom and stick) is adjusted and sealed at the factory.

Warranty is void if the seal is removed or if the hydraulic hose burst valve is tampered with.

Proceed as follows after a damage:

1. Stop the machine immediately.
2. Stop the engine.
3. Perform emergency lowering if possible *– see chapter “5.12 Emergency lowering” on page 5-49*.
4. Raise the control lever base.
5. Stop the engine.
6. Remove the starting key and lock the cab.
7. Secure the machine and the attachment.
8. Contact a Wacker Neuson service center and have the malfunction rectified.

Environment

Use a suitable container to collect engine/machine fluids as they flow out and dispose of them in an environmentally friendly manner.

https://truckmanualshub.com/

Travel interlock

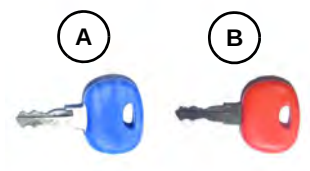

Fig. 210: Travel interlock key

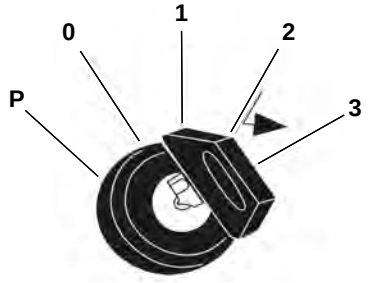

Fig. 211: Starting with the travel interlock

A = operator's key (blue key)

For starting the machine. Scope of delivery includes 2 keys.

B = master key (red key)

Information

Store the master key in a safe place. It is only used for coding new keys.
All coded keys are deleted if the key remains in position 1 for more than 20 seconds.

The machine can be started without performing any further settings.

Coding a new key

1. Insert master key **B** in the starter.
2. Turn the starting key to position **1** for a maximum 5 seconds.
3. Turn the starting key to position **0** and remove master key **B**.
4. Now insert the new key or the key requiring coding in the starter and turn it to position **1** within 15 seconds.
5. This action registers the key.

The procedure is automatically cancelled if no key requiring coding is detected by the system within 15 seconds. Several keys requiring coding can be inserted one after another in the starter. Each key must then remain at least 1 second in position **1**. Coding can be performed for a maximum 10 keys.

Deleting coded keys

Deleting coded keys is necessary whenever a coded key is lost.

1. Insert master key **B** in the starter.
2. Turn the starting key to position **1** for a minimum 20 seconds.
3. All coded keys are deleted after 20 seconds, and all existing keys can be re-coded.

The master key code is not deleted during deletion.

https://truckmanualshub.com/

Tilting the upper carriage (Vertical Digging System) (option)

DANGER

Crushing hazard due to tipping over of the machine!

Severe crushing hazard causing death or severe injury.

- ► On a slope, position the machine so that the upper carriage is tilted toward the slope.
- ► Tilt the machine only on firm ground.
- ► Perform smooth and slow movements with the machine.
- ► Tilt the machine only if it is at a standstill and if the attachment is empty.
- ► Never turn, lower, or set down the attachments abruptly.
- ► Do not extend or retract the boom abruptly.
- ► Do not exceed a maximum lateral angle of inclination of 10°.
- ► Do not exceed a maximum sloping angle of 15°.

WARNING

Crushing hazard. Due to tilting the machine in the immediate vicinity of walls or parts of buildings.

Severe crushing hazard that can cause death or severe injury.

- ► Ensure that no parts of the body protrude outside the machine.
- ► All persons must stay clear of the hazard zone when tilting the machine.
- ► Neither access nor leave the machine when it is tilted.

https://truckmanualshub.com/

Notice

Crushing hazard due to tipping over of the machine. Damage to machine due to open doors and covers.

- ► Perform smooth and slow movements with the machine.
- ► All doors and covers must be closed when tilting the machine.
- ► Tilt the machine only on firm ground.
- ► Tilt the machine only if it is at a standstill and if the attachment is empty.
- ► Never turn, lower, or set down the attachments abruptly.
- ► Do not extend or retract the boom abruptly.
- ► Do not exceed a maximum lateral angle of inclination of 10°.
- ► Do not exceed a maximum gradient angle of 15°. Do not exceed a maximum sloping angle of 15°.
- ► On a slope, position the machine so that the upper carriage is tilted toward the slope.

Notice

Walls and parts of building touched by machine.

- ► During machine operation in the immediate vicinity of a wall or parts of a building, ensure that the upper carriage does not touch anything when it is tilted.

Tilting the upper carriage hydraulically and steplessly by up to 15° allows you to compensate slopes of up to 27 %.

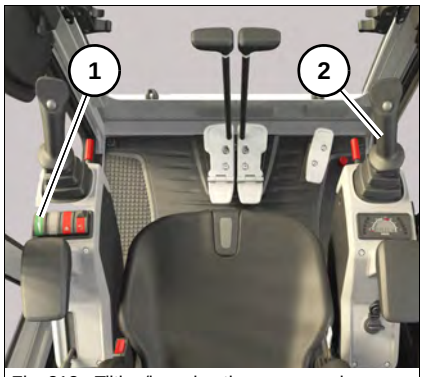

Fig. 212: Tilting/lowering the upper carriage

Lowering the upper carriage:

1. Press and hold switch **1** backward.
2. Press the right-hand control lever **2** to the right.
   ➥ The upper carriage is lowered.
3. If the required tilt angle is reached, return control lever **2** to the neutral position and release button **1**.

Tilting the upper carriage:

1. Press and hold switch **1** backward.
2. Press the right-hand control lever **2** to the left.
   ➥ The upper carriage is tilted.
3. If the required tilt angle is reached, return control lever **2** to the neutral position and release button **1**.

https://truckmanualshub.com/

Shovel bucket operation

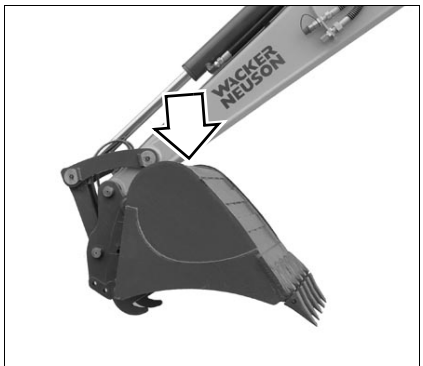

Fig. 213: Damage during shovel bucket operation

With some restrictions, Wacker Neuson backhoe buckets can also be used for shovel bucket operation.

Notice

Do not tilt the bucket fully back in shovel bucket operation, otherwise the bucket base can touch and damage the stick.

Trailer operation

The machine is not certified for trailer operation!

https://truckmanualshub.com/

5.14 Decommissioning and putting the machine back into operation

The specified measures refer to decommissioning and putting the machine back into operation after more than 30 days.

Decommissioning the machine temporarily

Store the machine indoors if possible.

If the machine has to be stored outdoors, place it on a wooden base (if possible) and cover it with a watertight tarp to protect it against humidity.

1. Park the machine *– see "Parking the machine" on page 5-7*.
2. Clean the engine with a high-pressure cleaner in a suitable place *– see chapter "7.5 Cleaning and maintenance on or with the machine" on page 7-20*.
3. Check the machine for leaks and loose nuts, screws and connections.
4. Carefully clean and dry the entire machine.
5. Spray an anticorrosion agent onto bare metal parts of the machine (piston rods of hydraulic cylinders, for example).
6. Apply grease to all lubrication points.
7. Fill the fuel tank completely.
8. Check the hydraulic oil and coolant levels, and add hydraulic oil and coolant if necessary.
9. Change engine oil.
10. Remove the battery and store it in a safe place. Charge the battery and perform battery maintenance at regular intervals.
11. Set the fuel cock to **OFF**.
12. Close the air-intake openings of the air filter system and exhaust pipe.

https://truckmanualshub.com/

Putting the machine back into operation

Information

If the machine was decommissioned over a longer period of time without performing the steps specified above, contact a Wacker Neuson service center before putting the machine back into operation.

1. Remove anticorrosion agents from bare metal parts.
2. Charge, install and connect the battery.
3. Open the air-intake openings of the air filter system and exhaust pipe.
4. Check the condition of the air filter elements and replace the elements if necessary.
5. Check the dust valve.
6. Switch on the fuel filter (turn it to ON).
7. Turn the starting key to position **1** for 2 minutes to supply the engine with fuel.
8. Check the machine for leaks.
9. Lubricate the machine according to the lubrication plan.
10. Check all engine/machine fluids in the units or tanks, and add fluids if necessary.
11. If the machine was out of service for over 6 months, change the oil in the gearbox, engine, hydraulic oil reservoir and other units.
12. Replace the hydraulic oil filters (return and breather filters) if the machine was out of service for over 6 months.
13. Remove and keep the starting key and fuse **F1** in a safe place.
14. Insert the starting key and make the engine turn 15 seconds.
15. Wait 15 seconds.
16. Make the engine turn another 15 seconds.
17. Remove the starting key and put fuse **F1** back in.
18. Start the engine.
19. Let the engine run at idling speed at least 15 minutes without load.
20. Check the oil levels in all units and add oil if necessary.
21. Check the machine for leaks.
22. Avoid operation at maximum engine speed or load for more than an hour.

Start the machine and ensure that each function and all warning systems work correctly before putting the machine back into operation.

https://truckmanualshub.com/

5.15 Final decommissioning of machine

Disposal

All fluids, lubricants, material, etc., used on the machine are subject to specific regulations regarding collection and disposal. Dispose of different materials and consumables separately and in an environmentally friendly manner.

Disposal may only be performed by a Wacker Neuson service center. Observe the corresponding national guidelines regarding disposal.

Environment

Avoid damage to the environment. Do not allow the oil and oily wastes to get into the ground or stretches of water and dispose of them in an environmentally friendly manner.

If the machine is no longer used according to its designated use, ensure that it is decommissioned or put out of operation and disposed of according to applicable regulations.

- Observe all applicable safety regulations during machine disposal.
- Machine disposal must be performed in accordance with state-of-the-art standards that apply at the time of disposal.

https://truckmanualshub.com/

Notes:

https://truckmanualshub.com/

6 Transport

6.1 Towing the machine

Information regarding towing

WARNING

Accident hazard due to incorrect towing!

Can result in severe injury or death.

- ► The machine may only be towed using suitable towing equipment (towing bar or cable) in connection with suitable towing facilities, such as a towing coupling, hooks and eyes.
- ► Start machine travel and tow away slowly.
- ► Ensure that no one is between the vehicles during towing.
- ► Have a recovery service or a Wacker Neuson service center tow the machine away if necessary.
- ► See chapter “Safety, section 2.8”.
- ► Ensure that no one is near the towing bar or cable. The lateral safety distance is equal to 1.5 times the length of the towing equipment.

Notice

Only tow the machine if absolutely necessary.

- ► Tow away the machine only if the engine is running and if the drive is functional. A malfunctioning machine must be loaded with a crane.
- ► If necessary, contact a Wacker Neuson service center for towing the machine away.
- ► Fasten the towing equipment only on the towing eye hook provided for this.
- ► The maximum admissible load of the towing eye hook is equal to 1.5 times the maximum weight of the machine.
- ► A tractor vehicle of the same weight level must be used as a minimum.
  In addition, the tractor vehicle must be equipped with a safe brake system and sufficient tractive power.

Information

Use only OSHA-approved lifting devices.

Use edge protectors to avoid damage both to the machine and the OSHA-approved lifting devices.

https://truckmanualshub.com/

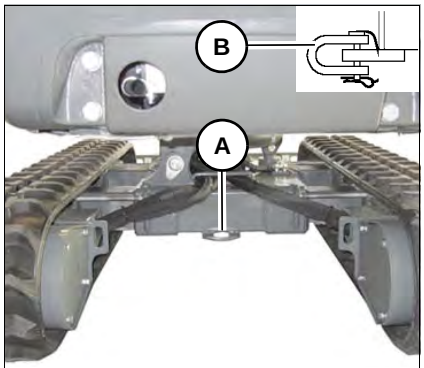

Fig. 214: Towing gear

1. Ensure that the machine can be towed safely.
2. Use towing eye hook **A** of the machine for towing.
3. Use towing eye hook **A** only for towing.
4. Secure shackle **B** with the shackle pin and a lock pin.
5. Install towing equipment of adequate size on the shackle.
6. Start machine travel and tow away slowly.
7. Tow away the machine only until it can travel on its own.

Information

The manufacturer's warranty shall not apply to accidents or damage caused by towing the machine.

Using towing eye hook **A** to pull other machines or to tow equipment is prohibited.

https://truckmanualshub.com/

6.2 Loading the machine

Information regarding loading

WARNING

Accident hazard due to incorrect loading!

Incorrect loading can result in accidents and severe injury or death.

► Ensure that no one is in the danger zone.

► Read the transport weight off the type label. Add the weight of subsequently installed equipment to the weight of the machine.

Notice

Engine damage due to incorrect engine oil level.

► The oil level must be visible at the MAX mark.

Traveling onto transport vehicles

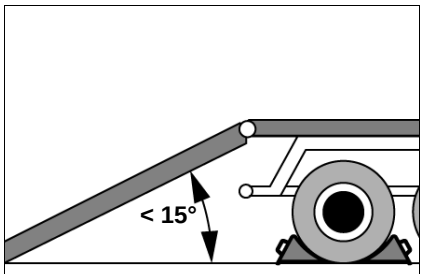

Fig. 215: Access ramps

Preparatory work

1. Secure the transport vehicle with chocks to prevent it from rolling.
2. Position the ramps at the smallest possible angle. Ensure that the grade does not exceed 15° (27 %).
3. Use access ramps with an antiskid surface only.
4. Ensure that the loading area is clear and access to it is not obstructed – due to superstructures, for example.

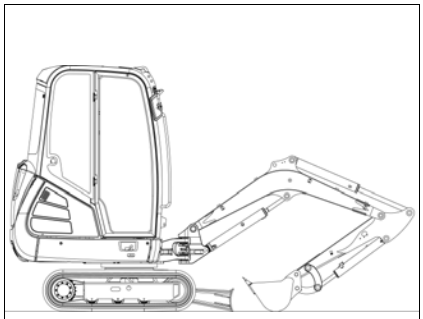

Fig. 216: Transport position

Traveling onto transport vehicles

1. Remove the shatter protection if the machine is transported on an open platform.
2. Start the engine of the machine.
3. Raise the attachment and the stabilizer blade to avoid touching the ramps.
4. Carefully travel the machine onto the middle of the transport vehicle.
5. Move the machine to transport position.
6. Stop the engine.
7. Raise the control lever base.
8. Remove the starting key and carry it with you.
9. Leave the cab, close and lock all doors, windows and covers.
10. Secure and tie down the machine.

https://truckmanualshub.com/

Lifting the machine

WARNING

Accident hazard due to incorrect loading!

Incorrect loading can result in accidents and severe injury or death.

► There must be no one in the machine or in the danger zone when the machine is raised.

► Read the transport weight off the type label. Add the weight of subsequently installed equipment to the weight of the machine.

Notice

Engine damage due to incorrect engine oil level.

► The oil level must be visible at the MAX mark.

Information

Use OSHA-rated and approved lifting devices capable lifting the excavator, attachments, options and accumulated debris. Refer to the general weight guidelines in the specification section of this manual.

Do not attempt to lift the excavator with any type of crane including wheel loaders unless the crane operator is qualified to lift loads in craning operations. The crane operator shall be knowledgable of OSHA 1910 craning regulations.

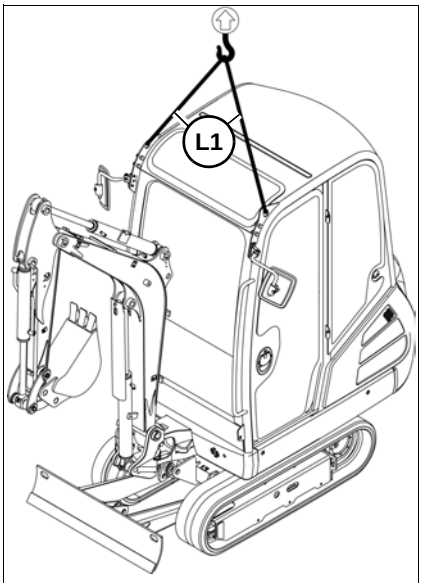

Fig. 217: Craning operation

1. Fit an empty standard bucket and lock it safely.
2. Remove all dirt from the machine.
3. Place the machine on firm, level and horizontal ground.
4. Curl the standard bucket and lower it to transport position.
5. Fully raise the boom.
6. Pull the stick toward the machine.
7. Raise the stabilizer blade.
8. Position the boom straight ahead at the center of the machine.
9. Stop the engine.
10. Operate the control lever repeatedly to release the pressure in the hydraulic system.
11. Raise the control lever base.
12. Remove the starting key and carry it with you.
13. Remove all loose objects from inside the machine.
14. Leave the cab, close and lock all doors, windows and covers.
15. Install suitable slings at the points provided for lifting the machine.
16. Slowly raise the machine until there is no more contact with the ground.

https://truckmanualshub.com/

17. Wait until the machine does not swing any more.
18. If the balance and the condition and position of the slings is correct, slowly raise the machine to the required height and load it.

Mandatory length L1 of slings:

Length	Dimension
L1	Minimum 1300 mm (51 in)

https://truckmanualshub.com/

6.3 Transporting the machine

Information regarding transport

The swivel unit brake is enabled if:

- the control lever base is raised.
- the starter is turned to position **0** or the engine is stopped.

This secures the upper carriage against rotation.

Tying down

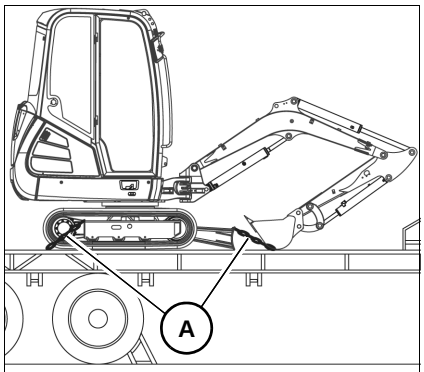

Fig. 218: Tying down the machine

1. Ensure that the authorized maximum height is not exceeded.
2. Secure the machine at the tie-down points.
3. Position the boom straight ahead at the center of the machine.
4. Lower the boom and the stabilizer blade.
5. Firmly fasten the machine on the loading area with tie-down points **A** with slings of adequate size (observe the legal regulations).
6. Before transporting the machine through heavy rain:
   close the outlet of the exhaust pipe with a simple cap or suitable adhesive tape.
7. Ensure that the operator of the transport vehicle knows the overall height, width and weight of his transport vehicle (including the machine to transport) before starting machine travel, and the legal transport regulations of the countries where transport is taking place.

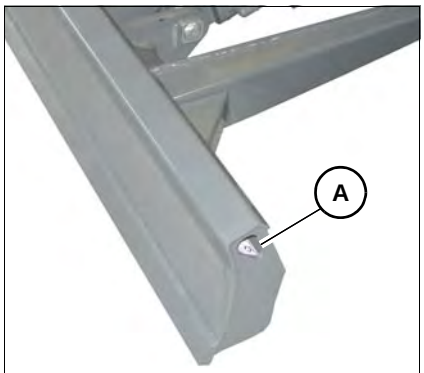

Fig. 219: Tie-down points on either side of stabilizer blade

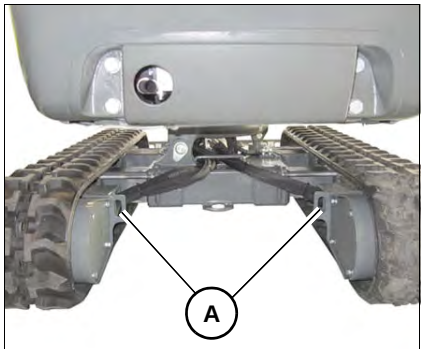

Fig. 220: Tie-down points inside the travel gear

https://truckmanualshub.com/

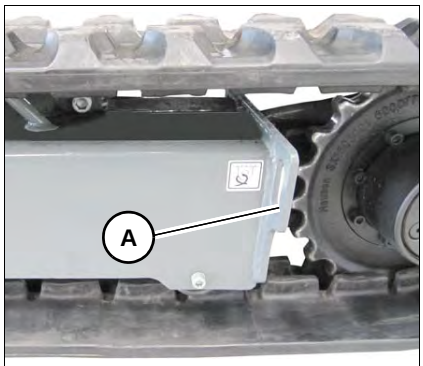

Fig. 221: Tie-down points on either side outside on the travel gear

https://truckmanualshub.com/

https://truckmanualshub.com/

7 Maintenance

7.1 Important information on maintenance

Responsibilities and prerequisites

The working order and the service life of machines are heavily dependent on maintenance.

Daily and weekly service and maintenance on or with the machine must be performed by specifically trained personnel.

Have the maintenance on or with the machine, delivery inspection and the entries in the service booklet performed by a Wacker Neuson service center, otherwise warranty claims will not be acknowledged.

It is therefore in the interest of the machine owner to perform the mandatory maintenance on or with the machine.

This is necessary to ensure optimal functioning. Immediately repair or replace parts that are already damaged or not working properly before they are due for replacement.

Repair or replacement of safety-relevant parts may only be performed by a Wacker Neuson service center.

Repair or replacement of safety-relevant parts may only be performed by a Wacker Neuson service center.

The manufacturer shall not be liable for damage to the machine or personal injury caused by failure to observe the specific notices and descriptions

Important safety instructions on maintenance on or with the machine

- Follow all safety instructions given in this Operator's Manual.
- Follow the instructions given in chapter **Safety, safety instructions on maintenance** and **qualification of the operating and maintenance personnel** in this Operator's Manual.
- Follow the maintenance and safety instructions given in the Operator's Manuals of the attachments.
- In order to avoid injury hazard, do not perform work on a hot and running engine.
- Wear protective gloves and clothing.
- Follow the danger indications and safety instructions when performing maintenance on or with the machine.
- Use a suitable container to collect engine/machine fluids as they flow out and dispose of them in an environmentally friendly manner.
- Attach a warning label to the control elements (for example **"Machine being serviced, do not start"**).
- Stop the machine (see Preparing lubrication).

https://truckmanualshub.com/

7.2 Maintenance overview

Maintenance plan

Daily maintenance (operator)	
Inspection work (Check the following engine/machine fluids, check the oil levels after a test run and add oil if necessary)	Page
Check the engine/machine fluids (engine oil, engine coolant, hydraulic oil)	*7-32*, *7-34*, *7-42*
Check the radiator and hydraulic oil cooler for dirt, clean them if necessary	*7-36*
Lubricate the machine according to the lubrication plan	*7-6*
Check the dirt indicator on the air filter [1]	*7-37*
Check the water separator and fuel filter: drain water if necessary (see sight glass)	*7-29*, *7-30*
Check the track tension and retighten if necessary	*7-49*, *7-50*
Check the engine air intake	*7-39*
Check pin lock	--
Check line fixtures	--
Check indicator lights for correct function	*4-34*
Check the hydraulic couplings for dirt	--
Check the screw connections of the protective structures (cab, for example) for tightness	--
Option	
Adjust the mirrors correctly, clean them and check them for damage, check the fastening screws and tighten them if necessary	*4-16*
Leakage check	
Check for tightness, leaks and chafing: pipes, flexible lines and screw connections of the following assemblies and components. Repair if necessary	Page
Engine and hydraulic system	--
Traveling drive	--
Cooling systems, heating and hoses (visual check)	--
Option	
Hydraulic quickhitch (Easy Lock) and Powertilt (hoses, valve)	--
Visual check	
Correct function; deformations, damage, surface cracks, wear and corrosion	Page
Check the exhaust system for damage	--
Check the insulating mats in the engine compartment for damage	--
Check the cab and protective structures for damage (front guard, FOPS, for example)	--
Check the tracks for cracks and cuts	--
Check the travel gear for damage (track rollers, insert rolling bearings, for example)	--
Check the piston rods of the hydraulic cylinders for damage	--
Check the seat belt for damage	--
Option	

https://truckmanualshub.com/

Daily maintenance (operator)	
Check the load hook, joint rod, lifting eyes	7-52
Check the hydraulic quickhitch (Easy Lock) for damage	--
Check Powertilt for damage	--
Weekly maintenance (every 50 service hours) (operator)	Page
Lubricate the machine according to the lubrication plan	7-6
Clean the lights/light system, signalling system, acoustic warning system	--
Check V-belt condition and tension	7-40, 7-41
Check the fresh-air filter (clean or replace it if necessary) [2]	
Option	
Actuate Powertilt swivel device in final position for 1 minute [3]	--
All steps for previous maintenance intervals	--

1. Air filter replacement according to the dirt indicator, every 1000 s/h or once a year at the latest. (Replace after 50 s/h when in extensive use in environments with acidic air, such as acid production facilities, steel and aluminium mills, chemical plants and other nonferrous-metal plants, independently of the dirt indicator)
2. When in extensive use in dusty environment. Replace the filter if it shows signs of cracks, damage or clogging.
3. Rinse the system to remove dirt. Repeat the procedure in the opposite flow direction.

Information

Check the antifreeze at temperatures below 4 °C (39 °F).

https://truckmanualshub.com/

Once at 50 service hours (Wacker Neuson service center)	
Engine oil replacement (Yanmar 3TNV76-SNSE12/3TNV80F-SSNS1)	--
Engine oil filter replacement (Yanmar 3TNV76-SNSE12/3TNV80F-SSNS1)	--
Hydraulic oil filter insert replacement	--
Drive gearbox oil replacement	--
Check screws for tightness	--
Check labels and Operator's Manual for completeness and condition	--
All steps for maintenance once a day and once a week	*7-2*

Every 250 (500, 750, 1000 etc.) service hours (Wacker Neuson service center)	
Engine oil replacement (Yanmar 3TNV80F-SNNS1)	--
Engine oil filter replacement (Yanmar 3TNV80F-SNNS1)	--

Every 500 (1000, 1500, 2000 etc.) service hours (Wacker Neuson service center)	
Engine oil replacement (Yanmar 3TNV76-SNSE12)	--
Engine oil filter replacement (Yanmar 3TNV76-SNSE12)	--
Fuel filter replacement	--
Clean the water separator (prefilter element)	--
Hydraulic oil filter insert replacement	--
Replace the V-belt	--
Drain the condensation water from the hydraulic oil reservoir	--
Check the drive gearbox oil	--
Remove dust from dust valve	--
Drain the condensation water (fuel tank)	--
Pressure check of primary pressure limiting valves	--
Check bearing play of tread rollers, track carrier rollers, front idlers	--
Check the battery condition (charge condition, terminals etc.)	--
Check the electric cables and connectors (cable and earth connections etc.)	--
Check screws for tightness	--
Resetting the maintenance meter	--
Check the fresh-air filter (clean or replace it if necessary) [1]	
All steps for maintenance once a day and once a week	*7-2*
Option	
Check Powertilt for axial play (must not be over 0.38 mm/0.015 in)	--

1. When in extensive use in dusty environment, after 1000 s/h at the latest

https://truckmanualshub.com/

Every 1000 (2000, 3000, 4000 etc.) service hours or once a year (Wacker Neuson service center)	
Hydraulic oil replacement	--
Replacement of hydraulic oil reservoir breather filter	--
Drive gearbox oil replacement	--
Replacement of air filter elements [1]	--
Check the pilot control filter for dirt, clean it if necessary	--
Check valve clearance, adjust if necessary	--
Clean the fresh-air filter (replace it if necessary)	--
All steps for maintenance once a day and once a week (and all steps for maintenance at 500 service hours)	*7-2*, *7-4*
Option	
Wear of load hook and joint rod (check at least once a year)	--

1. Air filter replacement according to the dirt indicator, every 1000 s/h or once a year at the latest. (Replace after 50 s/h when in extensive use in environments with acidic air, such as acid production facilities, steel and aluminium mills, chemical plants and other nonferrous-metal plants, independently of the dirt indicator)

Every 1500 (3000, 4500, etc.) service hours (Wacker Neuson service center)	
Check the injection nozzles and clean and test them if necessary	--
All steps for maintenance once a day and once a week (and all steps for maintenance at 500 service hours)	

Every 2000 (4000, 6000 etc.) service hours or every 2 years (Wacker Neuson service center)	
Coolant replacement	--
Check the bladder type accumulator	--
All steps for maintenance once a day and once a week (and all steps for maintenance at 500 and 1000 service hours)	*7-2*, *7-4*, *7-5*, *7-5*
Option	
Have fire extinguisher checked	--

Information

Maintenance with the note **Wacker Neuson service center** must only be performed by the trained and qualified personnel of a **Wacker Neuson service center**.

Information

The maintenance meter starts at 500.0 hours. It counts down to 0.0 hours. A wrench symbol flashes as soon as the maintenance meter reaches this value.

https://truckmanualshub.com/

Lubrication plan

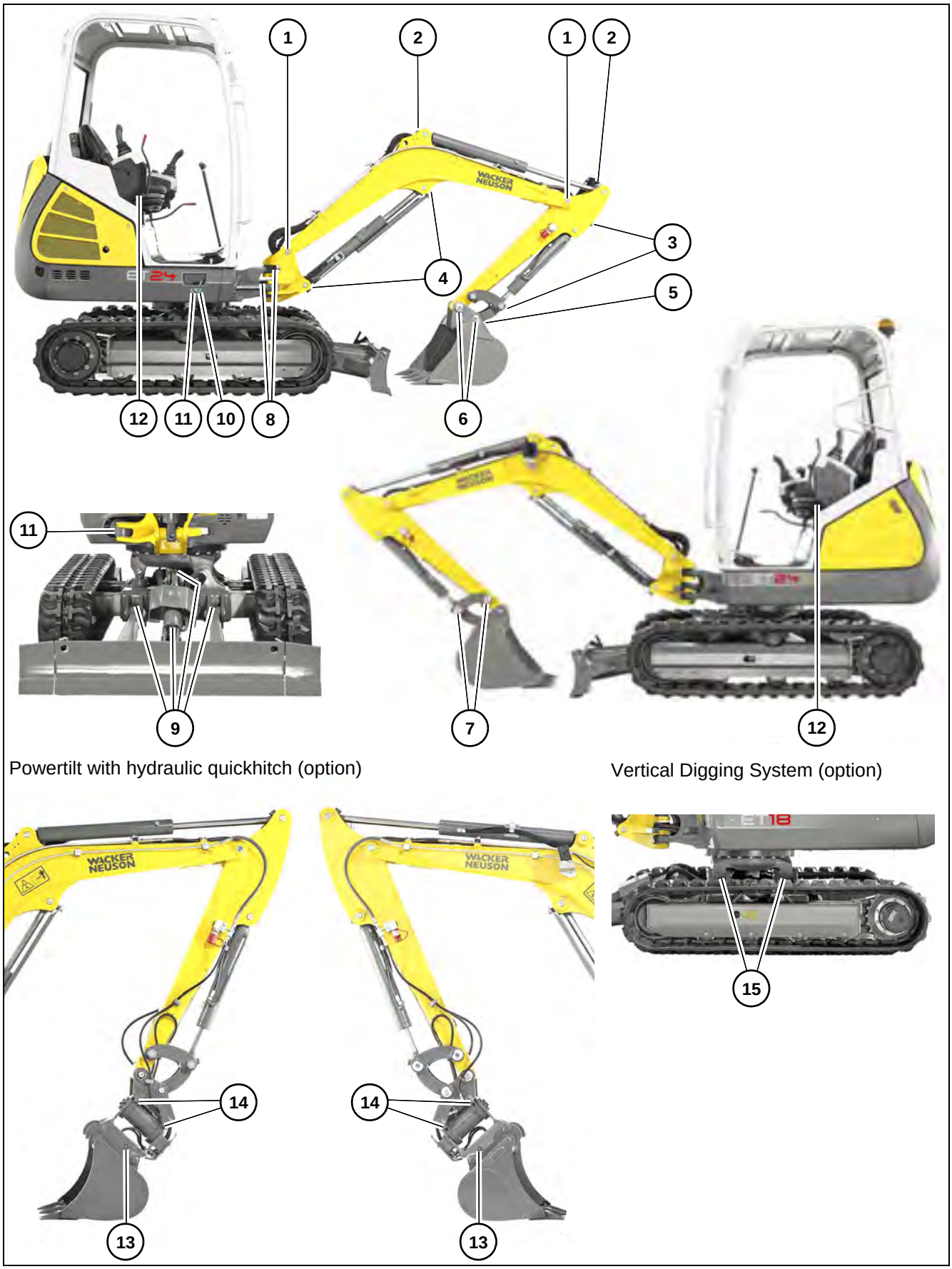

Powertilt with hydraulic quickhitch (option)

Vertical Digging System (option)

https://truckmanualshub.com/

Position	Lubrication point	Interval	Quantity
1.	Boom	Daily	2
2.	Stick hydraulic cylinder	Daily	2
3.	Bucket hydraulic cylinder	Daily	2
4.	Boom hydraulic cylinder	Daily	2
5.	Joint rod	Daily	1
6.	Bucket pin	Daily	2
7.	Joint rod pin	Daily	2
8.	Swiveling console	Daily	2
9.	Stabilizer blade	Every week	4
10.	Live ring (ball bearing)	Every week	1
11.	Slewing hydraulic cylinder	Daily	2
12.	Control lever base Control lever base (two-door cab option)	Every week	3 (6)
13.	Hydraulic quickhitch (option)	Daily	2
	Claw	Every week	--
14.	Powertilt (option)	Daily	4
15.	Vertical Digging System (VDS) (option)	Every week	2
16.	Door hinge (cab option) Door hinge (two-door cab option)	Every week	2 4
17.	Pin, lock notch and lock (cab option)	Every week	4
18.	Front window rail (cab option)	Every week	2

Green means: lubrication every 50 hours or once a week.

Blue means: lubrication every 10 hours or daily.

https://truckmanualshub.com/

Maintenance label

Some maintenance on or with the machine may only be performed by a Wacker Neuson service center (see maintenance plan).

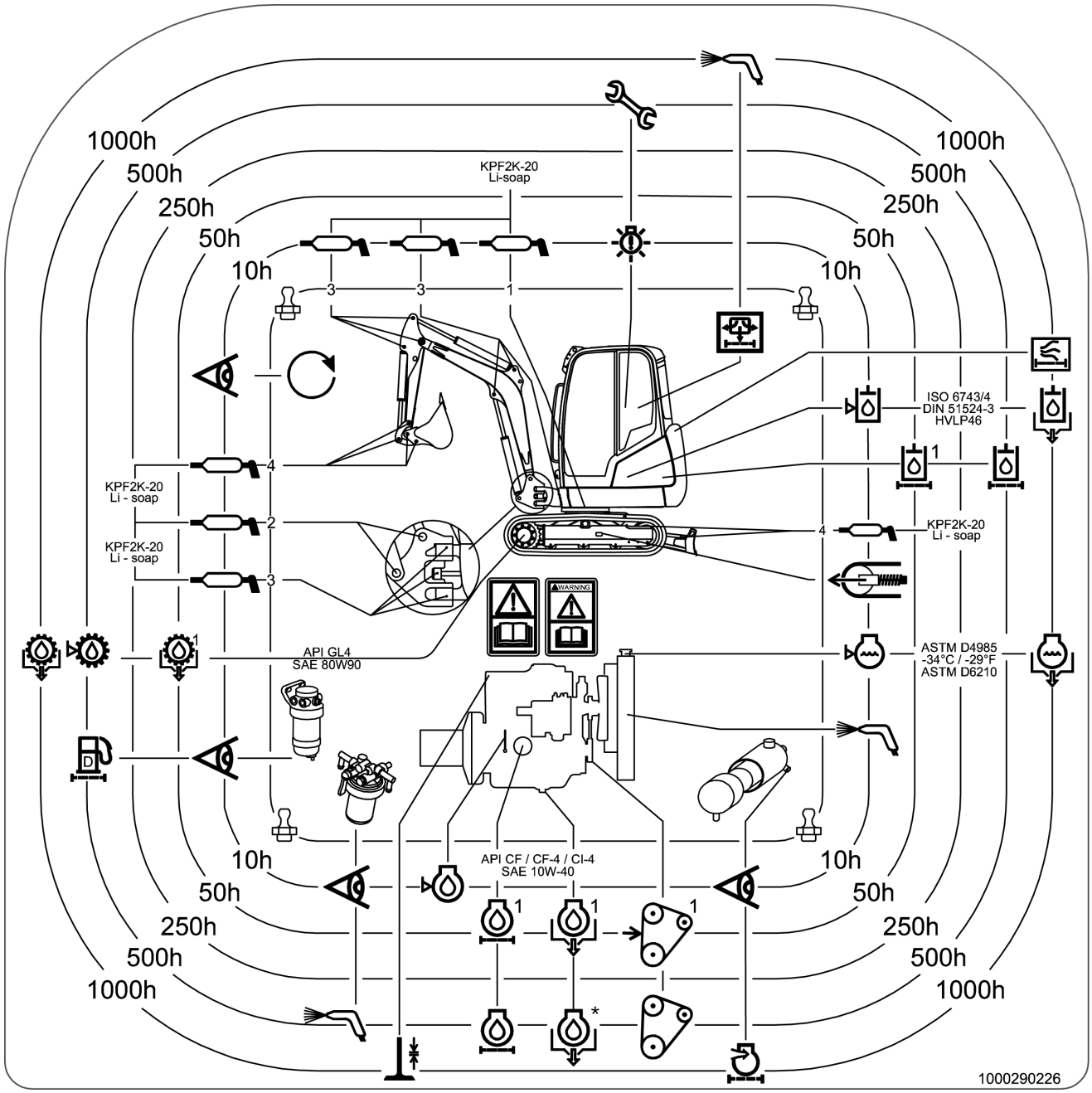

*Engine oil replacement interval Yanmar 3TNV80F-SSNS1:

Fig. 222: Maintenance label overview

https://truckmanualshub.com/

Explanation of symbols on the maintenance label

Symbol	Assembly	Explanation
	General	Visual check
	General	Visual check of machine
	General	Lubrication points
	General	Clean the radiator fins, water separator and fresh-air filter of the heating
	Fuel system	Replacing the fuel filter
	Radiator	Check the coolant
	Radiator	Draining coolant
	Engine	Check the engine oil level
	Engine	Change the engine oil
	Engine	Replace the engine oil filter
	Engine	Check the V-belt tension
	Engine	Replacing the V-belt
	Engine	Replacing the air filter element
	Engine	Checking valve clearance
	Traveling drive	Check the gearbox oil of the drive
	Traveling drive	Replace the gearbox oil of the drive
	Travel gear	Checking track tension
	Hydraulic system	Check the oil level of the hydraulic system
	Hydraulic system	Change the hydraulic oil
	Hydraulic system	Replace the hydraulic oil filter insert
	Hydraulic system	Replace the breather filter of the hydraulic oil reservoir
	Cab	Clean the fresh-air filter
	Cab	Indicator lights are being checked
	Cab	Resetting the maintenance meter

https://truckmanualshub.com/

7.3 Fluids and lubricants

Fluids and lubricants

Unit	Engine/machine fluid	Specification	Season/temperature	Capacities [1]
Diesel engine	Engine oil [2]	SAE10W-40	−15 °C (−5 °F) +45 °C (+104 °F)	About 3.5 l (0.9 gal)
Hydraulic oil reservoir	Hydraulic oil	HVLP 46 [3]	Year-round[4]	19.1 l (5 gal)
	Biodegradable oil[5]	Panolin HLP Synth 46		
		BP BIOHYD SE-S 46		
Grease	Roller and friction bearings	KPF 2 K-20 [6] ISO-L-X-BCEB 2 [7]	Year-round	As required
	Open transmissions live ring: ball bearing			
	Live ring teeth			
	Grease nipples			
Battery terminals	Acid-proof grease [8]	FINA Marson L2	Year-round	As required
Fuel [9]	Diesel fuel [10]	ASTM D975-94: 1D, 2D (USA)	Summer or winter diesel depending on outside temperatures	24.2 l (6.4 gal)
		EN 590 (EU)		
		ISO 8217 DMX (International)		
		BS 2869-A1, A2 (GB)		
		JIS K2204 (Japan)		
		KSM-2610 (Korea)		
		GB252 (China)		
	Biodegradable diesel fuel	EN 14214		
		ASTM D-6751		
Engine cooling system	Coolant	Soft water and antifreeze SF D12 Plus (ASTM D4985)	Year-round	3.5 l (0.9 gal)
Control lever base	Adhesive fluid grease	Förch S401	Year-round	As required
Washer system	Cleaning agent	Water and antifreeze	Year-round	1.22 l (0.3 gal)

1. The capacities indicated are approximate values; the oil level check alone is relevant for the correct oil level. Capacities indicated are no system fills
2. According to DIN 51511 (API CF, CF-4, CI-4; ACEA E3, E4, E5; JASO DH-1)
3. According to DIN 51524 section 3, ISO-VG 46.
4. Depending on local conditions – *see "Oil types for diesel engine (depending on temperature)" on page 7-11*.
5. Biodegradable hydraulic oil based on saturated synthetic esters with an iodine value of < 10, according to DIN 51524, section 3, HVLP, HEES.
6. KPF 2 K-20 according to DIN 51502 lithium-saponified grease.
7. ISO-L-X-BCEB 2 according to DIN ISO 6743-9, lithium-saponified grease.
8. Standard acid-proof grease NGLI category 2.
9. Sulphur content below 0.05 %, cetane number over 45
10. In countries where level 3A/Tier IV exhaust emission regulations apply provisionally, use diesel fuels with a sulphur content of < 15 ppm.

https://truckmanualshub.com/

Oil types for diesel engine (depending on temperature)

Engine oil grade	Ambient temperature (°C)													
	°C	-20	-15	-10	-5	0	5	10	15	20	25	30	35	40
API CF, CF-4, CI-4; ACEA E3, E4, E5; JASO DH-1	SAE 10W													
	SAE 20W													
	SAE 10W-40													
	SAE 15W-40													
	SAE 20													
	SAE 30													
	SAE 40													
	°F	-4	5	14	23	32	41	50	59	68	77	86	95	104

Additional oil change and filter replacement (hydraulic system)

Notice

An additional oil change and filter replacement can be required depending on how the machine is used. Failure to observe these replacement intervals can cause damage to hydraulic components.

► Observe the following intervals.

Application		Hydraulic oil	Hydraulic oil filter insert
Normal operation		Every 1000 s/h	Replace the first time after 50 s/h, then every 500 s/h
Percentage of hammer operation	20 %	Every 800 s/h	300 s/h
	40 %	Every 400 s/h	
	60 %	Every 300 s/h	100 s/h
	Over 80 %	Every 200 s/h	

https://truckmanualshub.com/

Oil types for hydraulic system (depending on temperature)

Hydraulics oil grade	Ambient temperature (°C)														
	°C	-20	-15	-10	-5	0	5	10	15	20	25	30	35	40	50
HVLP 46 [1]	ISO VG32														
	ISO VG46														
	ISO VG68														
	°F	-4	5	14	23	32	41	50	59	68	77	86	95	104	122

1. According to DIN 51524 section 3, ISO-VG 46.

https://truckmanualshub.com/

Information regarding operation with biodegradable oil

- Use only the biodegradable oils that have been tested and approved by Wacker Neuson. Contact a Wacker Neuson dealer for the use of other products that have not been recommended. In addition, ask the oil supplier for a written declaration of guarantee. This guarantee is applicable to damage occurring on the hydraulic components that can be proved to be due to the hydraulic oil.
- Use only biodegradable oil of the same type for adding oil. In order to avoid misunderstandings, a label providing clear information is located on the hydraulic oil reservoir (next to the filler inlet) regarding the type of oil currently used. Replace missing labels.
  The joint use of two different biodegradable oils can affect the quality of one of the oil types. Therefore, ensure that the remaining amount of initial hydraulic oil in the hydraulic system does not exceed 8 % when changing biodegradable oil (manufacturer indications).
- Do not add mineral oil – the content of mineral oil should not exceed 2 % in order to avoid foaming problems and to ensure biological degradability.
- When running the machine with biodegradable oil, the same oil and filter replacement intervals are valid as for mineral oil.
- Always have the condensation water in the hydraulic oil reservoir drained by a Wacker Neuson service center before the cold season. The water content may not exceed 0.1 % by weight.
- The instructions in this Operator's Manual concerning environmental protection are also valid for the use of biodegradable oil.
- If additional hydraulic attachments are installed or operated, use the same type of biodegradable oil for these attachments to avoid mixtures in the hydraulic system.
- A subsequent change from mineral oil to biodegradable oil must be performed by a Wacker Neuson service center.

https://truckmanualshub.com/

7.4 Maintenance accesses

Engine cover

WARNING

Burn hazard due to hot engine parts!

Can result in severe injury or death.

► Stop the engine and allow it to cool down at least 10 minutes.

WARNING

Injury hazard due to rotating parts!

Rotating parts can result in severe injury or death.

► Open the engine cover only at engine standstill.

CAUTION

Injury hazard due to open engine cover!

Can cause injuries.

► Take care not to knock your head on the open engine cover.

Fig. 223: Engine cover lock

Opening:

1. Stop and park the machine. Stop the engine. See “Preparing lubrication”.
2. Open the engine cover by pressing button **A**.

The engine cover is supported by a gas strut.

Closing:

Firmly press down the engine cover.

Locking and unlocking:

The engine cover is locked with the starting key.

Turn the starting key in lock **A** to the right **R**.

➥ Engine cover locked.

Turn the starting key in lock **A** to the left **L**.

➥ Engine cover unlocked.

https://truckmanualshub.com/

Left-hand cover

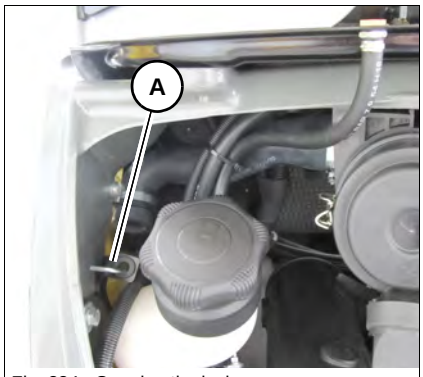

Fig. 224: Opening the lock

Opening:

1. Stop and park the machine. Stop the engine. See “Preparing lubrication”.
2. Open the engine cover.
3. Pull out lock **A**.

➥ The side cover is folded sideways.

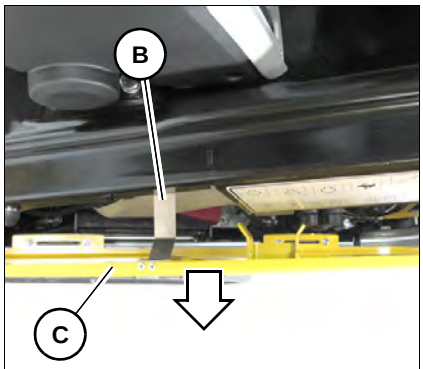

Fig. 225: Unlocking the bow clip

4. To unlock bow clip **B**, press and hold it downward.
5. Push side cover **C** forward.

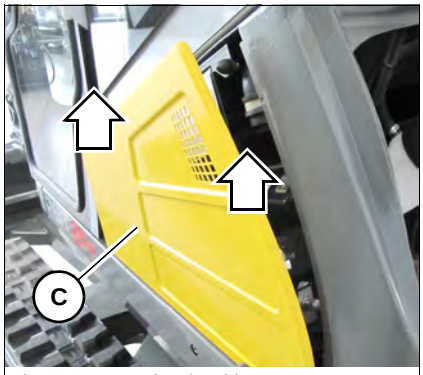

Fig. 226: Removing the side cover

6. Remove side cover **C**.

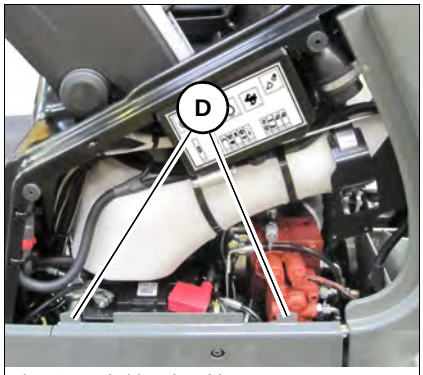

Fig. 227: Hitching the side cover

Closing:

1. Hitch side cover **C** into both shackles **D**.

https://truckmanualshub.com/

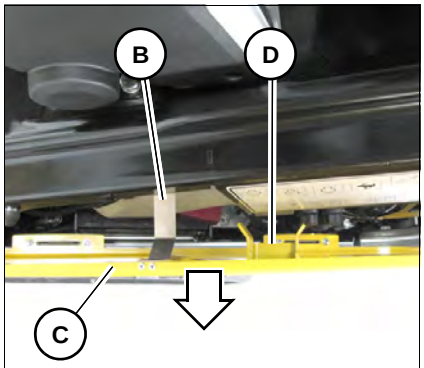

Fig. 228: Hitching the side cover

2. Press bow clip **B** downward and hitch it.
3. Position lock **D** opposite notch **B**.
4. Press side cover **C** toward the machine with both hands until it engages with an audible click.
5. Close the engine cover.

Right-hand cover

Fig. 229: Opening the right-hand cover

Opening:

1. Stop and park the machine. Stop the engine. See “Preparing lubrication”.
2. Unscrew both screws **A**.
3. Fold down the side cover.
4. Remove the side cover.

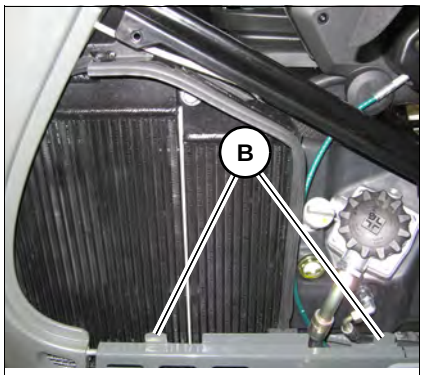

Fig. 230: Right-hand cover

Closing:

1. Hitch the side cover on the lower side into both shackles **B**.
2. Fold up the side cover.
3. Tighten both screws **A**.

Fuse box

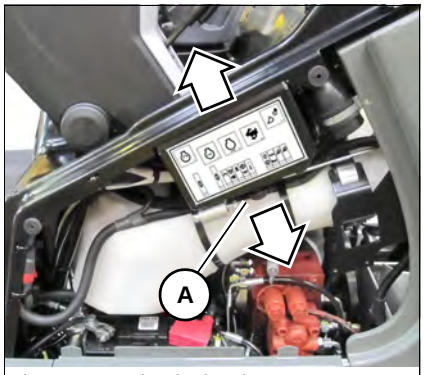

Fig. 231: Opening the fuse box

Opening:

1. Stop and park the machine. Stop the engine. See “Preparing lubrication”.
2. Open the left-hand cover.
3. Loosen screws **A** and lower the cover.

Closing:

1. Install the cover and tighten screws **A**.
2. Close the side cover.

https://truckmanualshub.com/

Removing/installing the cab/canopy

DANGER

Accident hazard when traveling without cab/canopy!

Causes severe injury or death.

- ► Traveling with a removed cab/canopy is only allowed for traveling very short distances.
- ► Fastening the seat belt is prohibited.
- ► Do not perform machine operation without a cab/canopy.
- ► Obtain the approval of the competent national authority.
- ► Machine travel is only allowed on level ground.
- ► Avoid tipping movements of the machine under all circumstances.
- ► Traveling in areas involving a risk of falling objects is prohibited.

Notice

Check for damage as you raise the machine.

- ► Slowly raise the cab.
- ► Wait until the machine does not swing any more.
- ► The lifting gear must not chafe or touch glass surfaces.

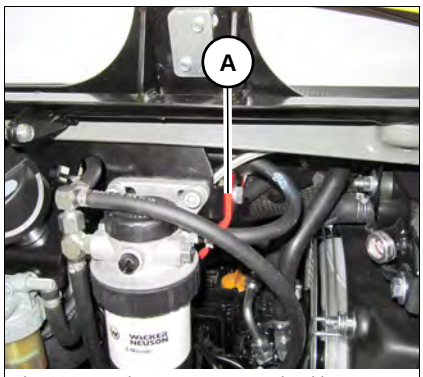

Fig. 232: Engine compartment shackle

1. Stop and park the machine. Stop the engine. See “Preparing lubrication”.
2. Open the engine cover.
3. Remove shackle **A** in the engine compartment.

https://truckmanualshub.com/

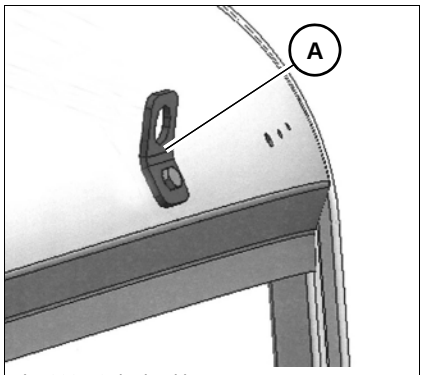

Fig. 233: Cab shackle

4. Remove the rear roof lights (option).
5. Install shackle **A** and tighten the screw to 45 Nm (33.2 ft.lbs).

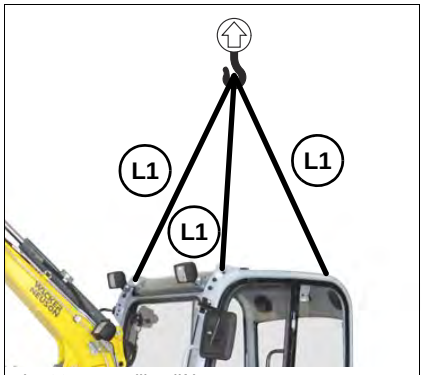

Fig. 234: Installing lifting gear

6. Install the lifting gear at the points on the cab provided for lifting the machine. The required length **L1** is 1000 mm (39.4 in).
7. Apply tension to the cab with the lifting gear.

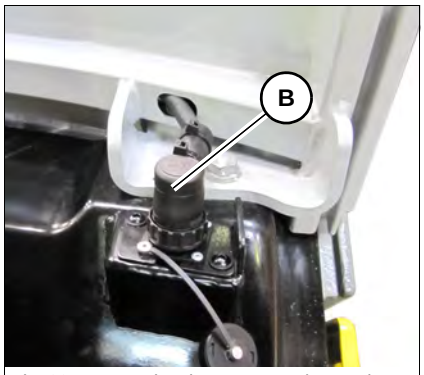

Fig. 235: Removing the connector (canopy)

8. **Canopy:** Remove the electric connector **B**. The connector is located at the left behind the seat.
   Install the protective cap to protect the connector.

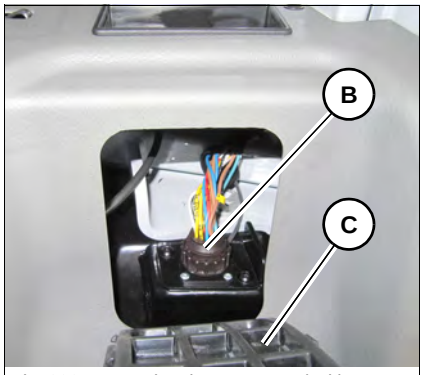

Fig. 236: Removing the connector (cab)

9. **Cab (option):** Fold cover **C** forward. Remove the electric connector **B**. The connector is located at the left behind the seat.
   Install the protective cap to protect the connector.

https://truckmanualshub.com/

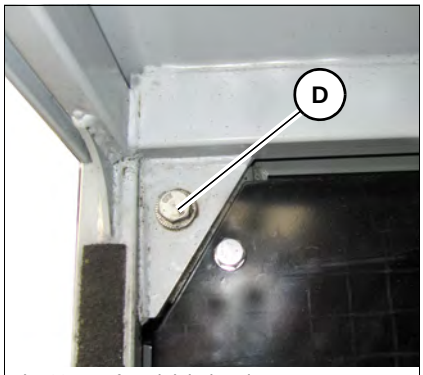

Fig. 237: Left and right-hand screws

10. Raise the floor mat on either side.
11. Remove screws **D** on either side in the leg-room area.

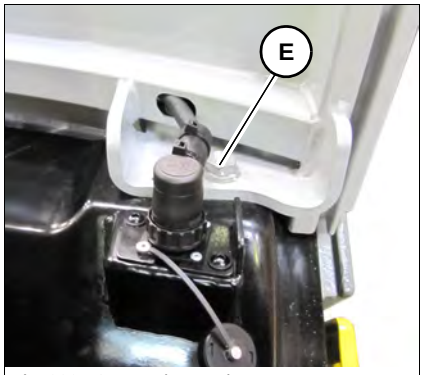

Fig. 238: Screws (canopy)

12. **Canopy:** Remove screws **E** on either side.

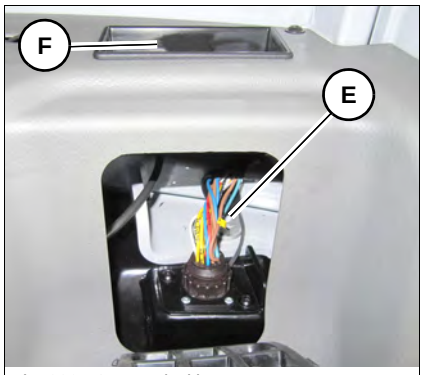

Fig. 239: Screws (cab)

13. **Cab (option):** Remove screws **E** on either side.
14. Raise the cab as follows:
    - Raise the control lever base.
    - Remove the starting key and carry it with you.
    - Close the doors, windows and all covers.
    - Remove all loose objects from inside the machine.
    - Leave the cab.
    - Close and lock all covers.
15. Set down the cab safely and ensure that it cannot tip over.
16. Install the cab in the reverse order.
17. Tighten screws **D** and **E** to 110 Nm (81 ft.lbs). The washers and securing elements can be used again.

Information

Cover **F** can be removed for better access.

https://truckmanualshub.com/

7.5 Cleaning and maintenance on or with the machine

Information regarding cleaning and maintenance on or with the machine

Cleaning the machine is divided into 3 separate areas:

- Inside the cab.
- Exterior of the machine.
- Engine compartment.

The wrong choice of cleaning equipment and agents can impair the operating safety of the machine on the one hand, and on the other undermine the health of the persons in charge of cleaning the machine. Follow the information below:

Cleaning with washing solvents

- Ensure adequate room ventilation.
- Wear suitable protective clothing.
- Do not use flammable liquids, such as gas or diesel.

Cleaning with compressed air

- Work carefully.
- Wear safety glasses and protective clothing.
- Do not aim the compressed air at the skin or at other people.
- Do not use compressed air for cleaning your clothing.

Cleaning with a high-pressure cleaner or steam jet

- Cover electric parts.
- Do not directly expose electrical components and damping material to the jet.
- Cover the vent filter on the hydraulic oil reservoir and the filler caps for fuel, hydraulic oil etc.
- Protect the following components from moisture:
  - Electrical components such as the alternator etc.
  - Control devices and seals.
  - Air intake filters etc.

Cleaning with volatile and easily flammable anticorrosion agents and sprays:

- Ensure adequate room ventilation.
- Do not use unprotected lights or open flames.
- Do not smoke.

Environment

In order to avoid damage to the environment, clean the machine only in wash bays and places provided to this effect.

https://truckmanualshub.com/

Use of solvents

Notice

Do not clean rubber and electrical parts with solvents.

► Do not use solvents, benzine or other aggressive chemicals.

Cleaning inside the cab

Notice

Never use high-pressure cleaners, steam jets or high-pressure water to clean inside the cab.

► Water under high pressure can penetrate into the electrical system and cause short circuits, and damage seals and disable the controls.

We recommend using the following aids to clean the cab:

- Broom
- Vacuum cleaner
- Damp cloth
- Brush
- Water with mild soap solution

Cleaning outside the machine

We recommend using the following aids to clean the machine:

- High-pressure cleaner
- Steam jet

Cleaning the engine compartment

WARNING

Burn hazard due to hot engine parts!

Can result in severe injury or death.

► Stop the engine and allow it to cool down at least 10 minutes.

WARNING

Injury hazard due to rotating parts!

Rotating parts can result in severe injury or death.

► Open the engine cover only at engine standstill.

https://truckmanualshub.com/

Notice

When cleaning the engine with a water or steam jet, the humidity penetrating the electronics causes it to fail and leads to engine damage!

► The engine must be cold.

► Do not point the water jet directly at any of the electric sensors such as temperature and oil pressure switches or control valves.

► Protect all electric parts, such as the alternator, connectors, relays etc. from humidity.

► If water contacts electrical components, dry them with compressed air and apply contact spray to them.

Clean the engine compartment as follows:

1. Park the machine in a wash bay or place.
2. Stop the engine. See “Preparing lubrication”.
3. Clean the machine.

Cleaning the seat belt

Always keep the seat belt clean, as coarse dirt can impair the proper functioning of the seat belt buckle.

Clean the seat belt (which remains fitted in the machine) with a mild soap solution only. Do not use chemical agents as they can destroy the fabric!

Cleaning the shatter protection

Clean the window only with water and a mild soap solution.

Do not use aggressive detergents!

Do not use brushes, steel wool or similar abrasive means. Never wipe dust in a dry state.

Screw connections and attachments

All screw connections must be checked regularly for tightness.

- Engine fastening screws
- Fastening screws on the hydraulic system
- Line, bucket teeth and pin fastenings on the attachment

Retighten loose connections immediately, and have them immediately replaced by a Wacker Neuson service center if necessary.

https://truckmanualshub.com/

7.6 Lubrication work

Preparing lubrication

Fig. 240: Parking the machine

1. Stop the machine on firm, level and horizontal ground.
2. Position the boom straight ahead at the center of the machine.
3. Lower the boom and the stabilizer blade to the ground.
4. Stop the engine.
5. Operate the control lever repeatedly to release the pressure in the hydraulic system.
6. Raise the control lever base.
7. Remove the starting key and carry it with you.
8. Remove all loose objects from inside the machine.
9. Close the windows and the doors.
10. Close and lock all covers and doors.
11. Attach a warning label to the control elements (for example “Machine being serviced, do not start”).
12. Wait at least 10 minutes after stopping the engine!

https://truckmanualshub.com/

Live ring (ball bearing)

DANGER

Crushing hazard. Do not tilt or rotate the upper carriage during lubrication!

Severe crushing hazard causing death or severe injury!

► Park the machine as shown in *Fig. 240*.

► Do not rotate the upper carriage.

► Do not tilt the upper carriage if the machine is equipped with the Vertical Digging System option.

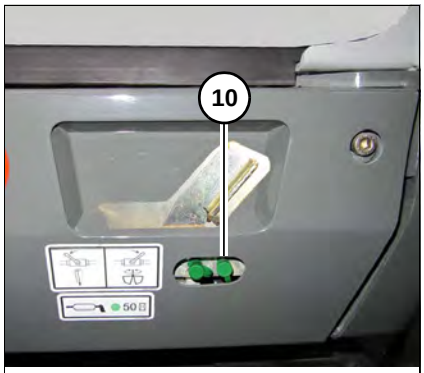

Fig. 241: Lubrication point of ball bearing race

1. Place the machine on firm, level and horizontal ground.
2. Lower the boom and the stabilizer blade to the ground.
3. Stop the engine, remove the starting key and carry it with you.
4. Raise the control lever base.
5. Apply grease to lubrication point **10** with one stroke of the grease gun.

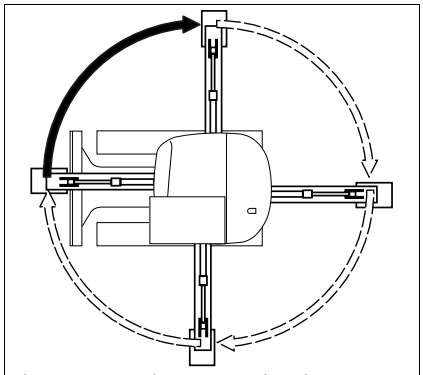

Fig. 242: Rotate the upper carriage by 90° at a time

6. Start the engine, raise the boom and the stabilizer blade.
7. Rotate the upper carriage by 90°.
8. Repeat steps 2 – 7 three times until the upper carriage is back in its initial position.
9. Rotate the upper carriage several times by 360°.

Information

Keep the lubrication points clean and remove ejected grease.

https://truckmanualshub.com/

Control lever base

CAUTION

Crushing hazard in the area of the moving parts of the control lever base!

Injury hazard due to crushing of parts of body!

► Keep extremities and clothing clear of the window channel.

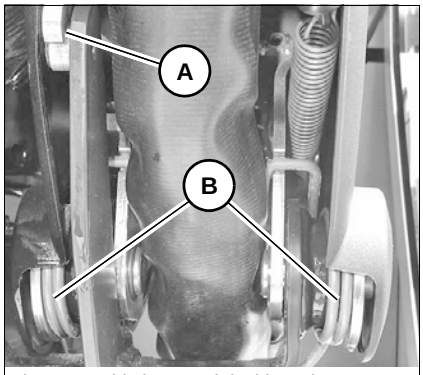

Fig. 243: Guide lever and double spring

1. Stop and park the machine. Stop the engine. See “Preparing lubrication”.
2. Raise the control lever base.
3. Spray fluid grease onto guide lever **A**.
4. Spray fluid grease on both sides of the double spring **B**.
5. Raise and lower the control lever base several times.

Information

Keep the lubrication points clean and remove ejected grease.

https://truckmanualshub.com/

7.7 Fuel system

Information regarding the fuel system

Information

Fill up the tank with the correct fuel type at the end of each working day to prevent the formation of condensation water in the fuel tank. Do not fill the tank completey so the fuel can expand.

Information

Do not run the fuel tank completely dry. Otherwise, air is drawn into the fuel system. This requires bleeding the fuel system.

Diesel fuel specification

Notice

Use only the diesel fuels indicated.

- ► If other fuels are used, warranty rights shall not apply in case of diesel engine damage.
- ► Do not use diesel fuel with additives.

– see “Fluids and lubricants” on page 7-10

Refueling

WARNING

Explosion hazard when handling fuel!

Can result in severe burns or death.

- ► Never perform work on the fuel system in the vicinity of open flames or sparks.
- ► Do not smoke.
- ► Keep the maintenance area clean.
- ► Do not refuel in closed rooms.

https://truckmanualshub.com/

WARNING

Fire hazard when handling fuel!

Can result in severe burns or death.

► Never perform work on the fuel system in the vicinity of open flames or sparks.

► Do not smoke.

► Keep the maintenance area clean.

► Do not refuel in closed rooms.

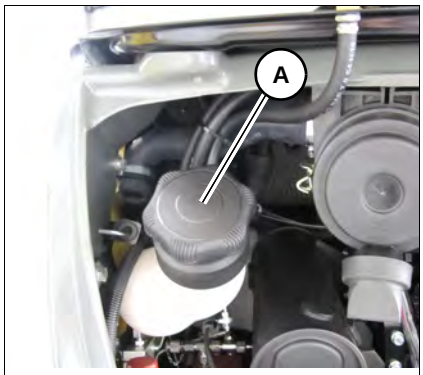

Fig. 244: Refueling

Filler inlet **A** of the fuel tank is located in the engine compartment.

1. Stop and park the machine. Stop the engine. See “Preparing lubrication”.
2. Open the engine cover.
3. Remove the filler cap.
4. Refuel.
5. Close the filler cap.
6. Close and lock the engine cover.

Notice

Do not refuel with cans in order to avoid dirt in the fuel.

Stationary fuel pumps

If possible, refuel only from stationary fuel pumps. Fuel from barrels or cans is usually dirty.

Even the smallest particles of dirt can cause increased engine wear, malfunctions in the fuel system and reduced effectiveness of the fuel filters.

Refueling from barrels

- If refueling from barrels cannot be avoided, note the following points:
- Barrels must neither be rolled nor tilted before refueling
- Protect the suction pipe opening of the barrel pump with a fine-mesh screen
- Immerse the suction pipe opening down to a max. 15 cm (5.85 in) above the floor of the barrel
- Only fill the tank using refueling aids (funnels or filler pipes) with integral microfilter
- Keep all refueling containers clean at all times

https://truckmanualshub.com/

Bleeding the fuel system

Bleed the fuel system in the following cases:

- After removing and fitting the fuel filter, prefilter or the fuel lines back on again
- After running the fuel tank empty
- If the machine is put into operation after having been decommissioned for more than 30 days.

Bleed the fuel system as follows:

1. Raise the control lever base.
2. Remove the starting key.
3. Fill up and close the fuel tank.
4. Turn the starting key to the first position.
5. Wait about 5 minutes while the fuel system bleeds itself automatically.
6. Start the engine.

If the engine runs smoothly for a while and then stops, or if it does not run smoothly:

1. Stop the engine.
2. Raise the control lever base.
3. Remove the starting key and carry it with you.
4. Bleed the fuel system again as described above.
5. Check for leaks after starting the engine.
6. Have a Wacker Neuson service center perform a check if necessary.

https://truckmanualshub.com/

Checking the water separator

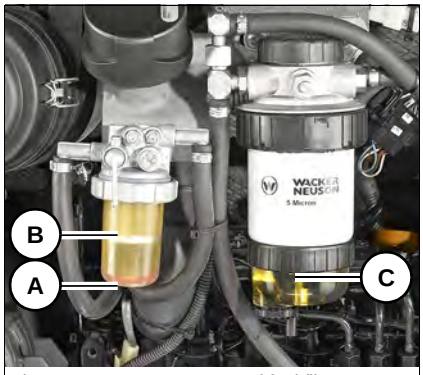

Fig. 245: Water separator and fuel filter

Water separator

Empty the water separator if the red indicator ring **A** rises to position **B**.

Fuel filter

Empty the fuel filter if the fuel/water mixture rises to position **C**.

Emptying the water separator

WARNING

Explosion hazard when handling fuel!

Can result in severe burns or death.

- ► Bleed the fuel system only if the engine is cold.
- ► Wear protective equipment.
- ► Never perform work on the fuel system in the vicinity of open flames or sparks.
- ► Do not smoke.
- ► Keep the maintenance area clean.

WARNING

Fire hazard when handling fuel!

Can result in severe burns or death.

- ► Bleed the fuel system only if the engine is cold.
- ► Wear protective equipment.
- ► Never perform work on the fuel system in the vicinity of open flames or sparks.
- ► Do not smoke.
- ► Keep the maintenance area clean.

Information

The fuel system can be bled automatically even if the engine is at operating temperature
– see chapter " Bleeding the fuel system" on page 7-28.

https://truckmanualshub.com/

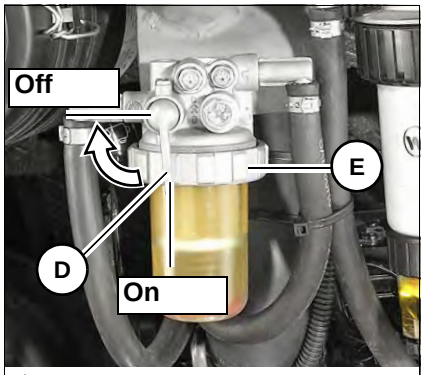

Fig. 246: Water separator

1. Stop and park the machine. Stop the engine. See “Preparing lubrication”.
2. Prepare a suitable container for collecting the fuel/water mixture.
3. Open the engine cover.
4. Turn ball-type cock **D** to the **OFF** mark.
   ➥ Fuel supply is interrupted.
5. Unscrew threaded ring **E**.
6. Collect the fuel/water mixture in a suitable container.
7. Screw threaded ring **E** back on again.
   ➥ The indicator ring is at the base of the water separator.
8. Turn ball-type cock **D** to the **ON** mark.
   ➥ Fuel supply is open.
9. Close and lock the engine cover.

Information

Use a suitable container to collect engine/machine fluids as they flow out and dispose of them in an environmentally friendly manner.

Emptying the fuel filter

WARNING

Explosion hazard when handling fuel!

Can result in severe burns or death.

► Bleed the fuel system only if the engine is cold.
► Wear protective equipment.
► Never perform work on the fuel system in the vicinity of open flames or sparks.
► Do not smoke.
► Keep the maintenance area clean.

WARNING

Fire hazard when handling fuel!

Can result in severe burns or death.

► Bleed the fuel system only if the engine is cold.
► Wear protective equipment.
► Never perform work on the fuel system in the vicinity of open flames or sparks.
► Do not smoke.
► Keep the maintenance area clean.

https://truckmanualshub.com/

Information

The fuel system can be bled automatically even if the engine is at operating temperature
– see chapter “ Bleeding the fuel system” on page 7-28.

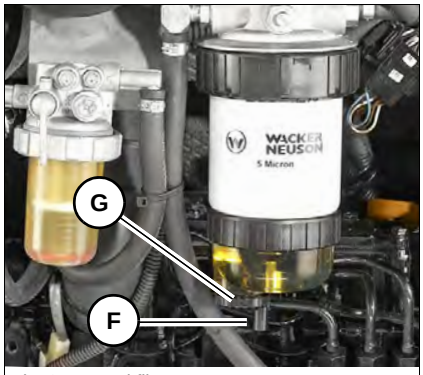

Fig. 247: Fuel filter

1. Stop and park the machine. Stop the engine. See “Preparing lubrication”.
2. Open the engine cover.
3. Connect a drain hose to port **F**. Place the hose into a container on the ground.
4. Open screw **G**.
5. Collect the fuel/water mixture in a suitable container.
6. Close screw **G**.
7. Remove the hose.
8. Close and lock the engine cover.

Information

Use a suitable container to collect engine/machine fluids as they flow out and dispose of them in an environmentally friendly manner.

https://truckmanualshub.com/

7.8 Engine lubrication system

Information regarding the engine lubrication system

Information

Check the oil level once a day. We recommend checking it before starting the engine. After stopping a warm engine, wait at least 5 minutes before checking.

Notice

In order to avoid engine damage, use the oil quantity and grade specified in the fluids and lubricants table.

► The oil level must be between the MAX and MIN marks.

► Use only the specified engine oil (refill with the same engine oil).

► Have the oil changed only by a Wacker Neuson service center.

Notice

In order to avoid engine damage, add the engine oil slowly so it can go down without entering the intake system.

Checking the engine oil level

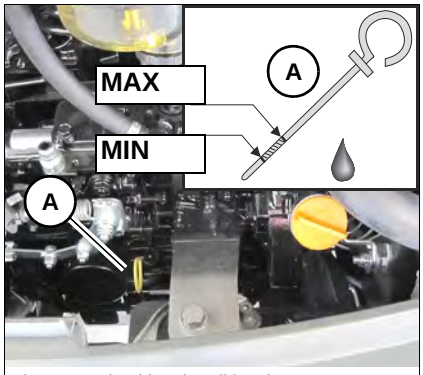

Fig. 248: Checking the oil level

1. Stop and park the machine. Stop the engine. See “Preparing lubrication”.
2. Open the engine cover.
3. Clean the area around the oil dipstick with a lint-free cloth.
4. Pull out oil dipstick **A**.
5. Wipe it with a lint-free cloth.
6. Push it back in as far as possible.
7. Withdraw it and read off the oil level.
   ➥ The oil level must be between the MAX and MIN marks.
   ➥ Add engine oil if necessary.
8. Close and lock the engine cover.

https://truckmanualshub.com/

Adding engine oil

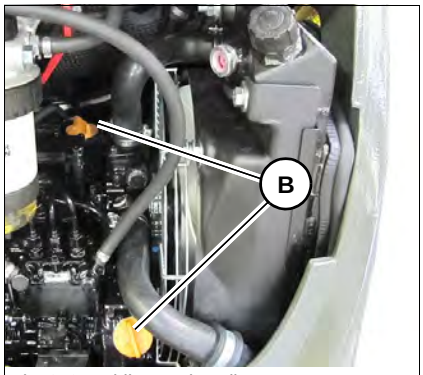

Fig. 249: Adding engine oil

1. Stop and park the machine. Stop the engine. See “Preparing lubrication”.
2. Open the engine cover.
3. Clean the area around the oil filler cap with a lint-free cloth.
4. Open filler cap **B**.
5. Raise oil dipstick **A** slightly to allow any trapped air to escape.
6. Add engine oil.
7. Wait about 3 minutes until all the oil has run into the oil sump.
8. Check the oil level.
9. Add oil if necessary and check the oil level again.
10. Close filler cap **B**.
11. Push oil dipstick **A** back in as far as possible.
12. Close and lock the engine cover.

Information

Use a suitable container to collect engine/machine fluids as they flow out and dispose of them in an environmentally friendly manner.

https://truckmanualshub.com/

7.9 Cooling system

Information regarding the cooling system

The oil/water radiator is located behind the right-hand cover, on the right side of the engine. It cools the diesel engine, and the hydraulic oil of the travel and work hydraulics.

Notice

In order to avoid damage to the engine and radiator.

► Observe the fluids and lubricants table, and the coolant compound table.

► Check the coolant level once a day.

Checking the coolant level

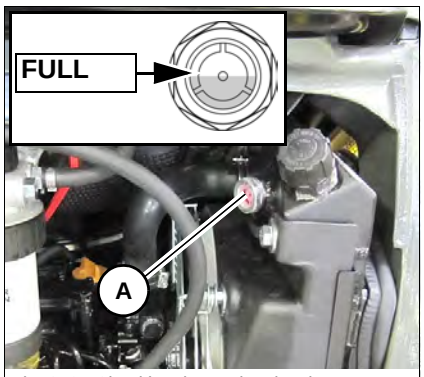

Fig. 250: Checking the coolant level

1. Stop and park the machine. Stop the engine. See “Preparing lubrication”.
2. Open the engine cover.
3. Check the coolant level on sight glass **A**.
4. If the coolant level is below the **FULL** mark:
   ➥ Add coolant.
5. Close and lock the engine cover.

Information

Check the coolant level once a day.
We recommend checking it before starting the engine.
Observe the coolant compound table.

https://truckmanualshub.com/

Adding coolant

WARNING

Burn hazard! The engine coolant is under pressure at high temperature!

Causes severe injury or death.

► Wear protective gloves and eye protection.

► Stop the engine and allow it to cool down at least 10 minutes.

► Carefully open the radiator cap.

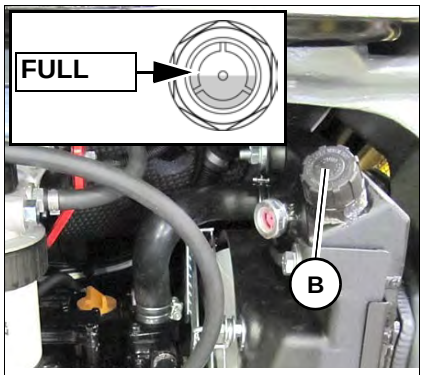

Fig. 251: Checking the coolant level

1. Stop and park the machine. Stop the engine. See “Preparing lubrication”.
2. Open the engine cover.
3. Release overpressure in the radiator. Carefully unscrew filler cap **B** and release the pressure.
4. Open filler cap **B**.
5. Add coolant up to the **FULL** mark.
6. Close filler cap **B**.
7. Start the engine and let it warm up for about 5 – 10 minutes.
8. Stop the engine.
9. Remove the starting key and carry it with you.
10. Let the engine cool down.
11. Check the coolant level again.
12. If necessary, add coolant and repeat the procedure until the coolant level remains constant.
13. Close and lock the engine cover.

Environment

Dispose of used coolant through approved methods for recycling.

https://truckmanualshub.com/

Cleaning the radiator

CAUTION

Burn hazard when performing maintenance on the radiator!

Can cause injuries.

► Stop the engine and allow it to cool down at least 10 minutes.

► Wear protective gloves and eye protection.

Notice

Dirt on the radiator fins reduces the radiator's heat dissipation capacity and can cause damage to the diesel engine and the hydraulic system!

► Check and if necessary clean the radiator once a day.

► In dusty or dirty work conditions, clean more frequently than indicated in the maintenance plans.

Notice

In order to ensure the radiator's optimal cooling capacity, do not damage the radiator fins as you clean them with a compressed-air gun!

► Maintain a sufficient distance from the radiator to avoid damage to the radiator fins.

► Use oil-free compressed air (2 bar/29 psi max.) to clean.

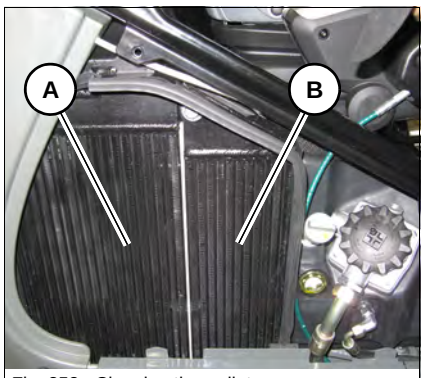

Fig. 252: Cleaning the radiator

Water radiator **A** and hydraulic oil radiator **B** are located behind the right-hand cover.

1. Stop and park the machine. Stop the engine. See "Preparing lubrication".
2. Remove the right-hand cover.
3. Remove dust and other foreign bodies from the fins with compressed air.
4. Install the side cover.

https://truckmanualshub.com/

7.10 Air filter

Information regarding the air filter

- Store filters in their original packaging and in a dry place.
- Check air filter attachments, air intake hoses and the air filter element for damage, and immediately repair or replace them if necessary.
- Check the screws at the induction manifold and the clamps for tightness.

Dirt indicator

Notice

In order to avoid damage to the diesel engine, bear in mind the following:

► Replace the air filter elements as soon as the red mark on the dirt indicator is displayed.

► Do not clean air filter elements, replace them.

► Do not use any damaged air filter elements.

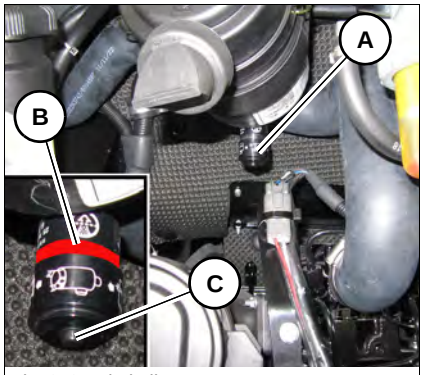

Fig. 253: Dirt indicator

Replace the air filter elements as soon as the red mark **B** is on the dirt indicator **A** is displayed.

- After replacing the air filter elements, press button **C** to reset the red mark **B**.

https://truckmanualshub.com/

Replacing the air filter

Notice

Air filter elements degrade prematurely when in service in acidic air for longer periods of time.

► This risk is present, for example, in acid production facilities, steel and aluminium mills, chemical plants and other nonferrous-metal plants.

► Replace the air filter elements according to the dirt indicator, every 1000 s/h or once a year at the latest.

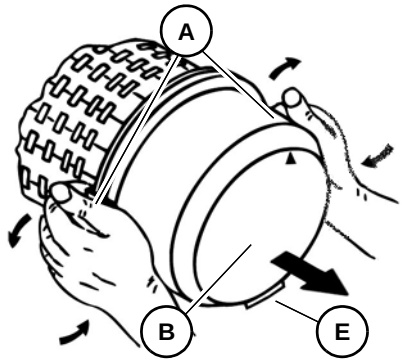

Fig. 254: Lower housing section

1. Stop and park the machine. Stop the engine. See “Preparing lubrication”.
2. Remove the starting key and carry it with you.
3. Open the engine cover.
4. Remove dirt and dust from the air filter housing and the area around it.
5. Fold bow clips **A** on lower housing section **B** to the outside.
6. Remove the lower housing section **B**.

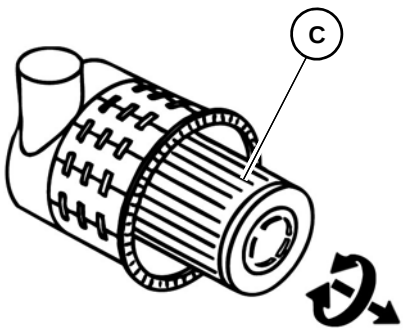

Fig. 255: Outside filter

7. Carefully remove outside filter **C** with slightly turning movements.
8. Ensure that all dirt (dust) inside the upper and lower housing sections, including the dust valve, has been removed.
9. Clean the parts with a clean lint-free cloth, do not use compressed air.

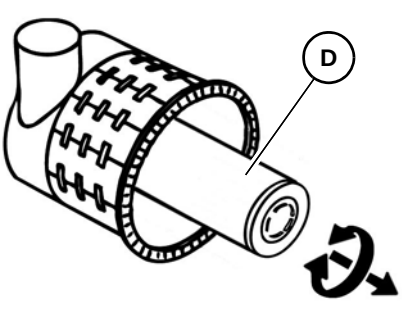

Fig. 256: Inside filter

10. Carefully remove inside filter **D** with slightly turning movements.
11. Check the new inside filter **D** and outside filter **C** for damage and carefully insert them in the housing section.
12. Position the lower housing section **B**.
13. Close bow clips **A**.
14. Press button **C** to reset the red mark **B**.
15. Close and lock the engine cover.

Information

Ensure that dust valve **E** shows downward once it is installed.

https://truckmanualshub.com/

Checking the air intake

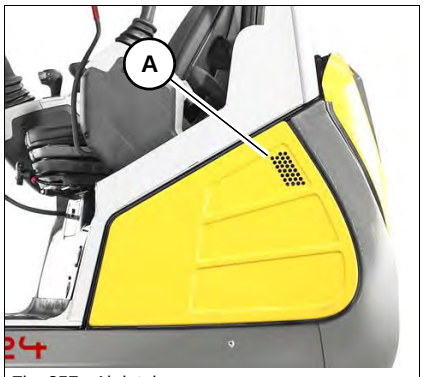

Fig. 257: Air intake

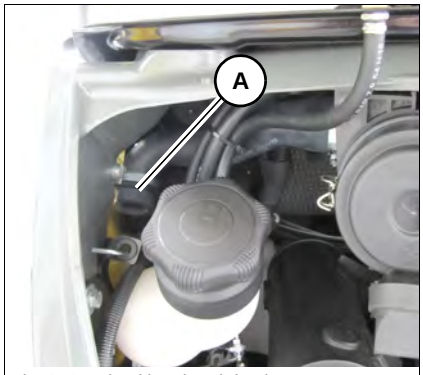

Fig. 258: Checking the air intake

Notice

In order to avoid engine damage when crossing fords:

► Always keep the opening of the engine air intake **A** above the water.

► Check once a day for cleanliness before putting the machine into operation.

1. Stop and park the machine. Stop the engine. See “Preparing lubrication”.
2. Remove the starting key and carry it with you.
3. Open the engine cover.
4. Check and, if necessary, clean air intake **A**.
5. Close and lock the engine cover.

https://truckmanualshub.com/

7.11 V-belt

Checking V-belt condition and tension

WARNING

Injury hazard due to rotating parts!

Rotating parts can result in severe injury or death.

► Stop the engine before opening the engine cover.

► Only check the V-belt when the engine is stopped.

Notice

Possible damage to property in case of a malfunctioning V-belt.

► Do not start the engine.

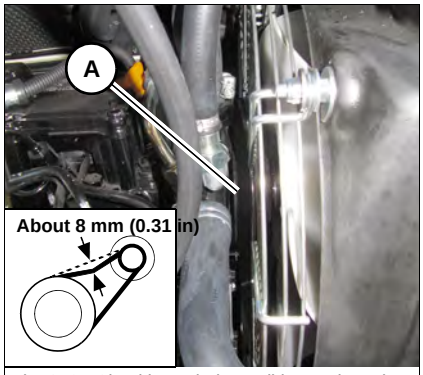

Fig. 259: Checking V-belt condition and tension

1. Place the machine on firm, level and horizontal ground.
2. Stop the engine. See “Preparing lubrication”.
3. Remove the starting key and carry it with you.
4. Let the engine cool down.
5. Open the engine cover.
6. Carefully check V-belt **A** for damage, cracks or cuts.
7. If the V-belt is damaged (cracks, wear, ruptures, etc.):
   ➥ Have the V-belt replaced by a Wacker Neuson service center.
   ➥ Replace the V-belt if it touches the base of the V-belt groove or if the pulleys are damaged.
8. Press with your thumb about 100 N (22.5 lbf) to check the deflection of the V-belt between the crankshaft disc and the fan wheel.
9. A new V-belt should have a deflection of 6 to 8 mm (0.24 to 0.31 in), a used V-belt (after about 5 minutes running time) should have a deflection of 7 to 9 mm (0.27 to 0.35 in).
10. If V-belt tension is not correct:
    ➥ Have the V-belt replaced or retightened by a Wacker Neuson service center.
11. Close and lock the engine cover.

https://truckmanualshub.com/

7.12 Hydraulic system

Information regarding the hydraulic system

WARNING

Burn hazard when performing maintenance on or with the machine on a hot engine and hydraulic system.

Can result in severe injury or death.

► Wait at least 10 minutes after stopping the engine.

► Wear protective equipment.

WARNING

Injury hazard! Fluid escaping under high pressure can damage the skin and eyes. Removing the filler cap can cause oil to escape.

Can result in severe injury or death.

► Do not operate the machine with leaking or damaged hydraulic system components.

► Open the breather filter carefully to slowly release the pressure inside the tank.

► Wear protective equipment.

► Wear safety glasses to protect the eyes. If oil contacts the eye flush immediately with clean water and seek medical treatment.

Notice

In order to avoid damage to the hydraulic system:

► Use hydraulic oil and grade according to fluids and lubricants table.

► Always add hydraulic oil using the filling screen.

► Check the hydraulic oil level once a day.

► If the hydraulic oil in the sight glass is cloudy, this indicates that water or air has penetrated the hydraulic system. Contact a Wacker Neuson service center.

► If the hydraulic system is filled with biodegradable oil, then use only biodegradable oil of the same type for filling up – observe the sticker on the hydraulic oil reservoir.

► Contact a Wacker Neuson service center if the filter of the hydraulic system is dirty.

https://truckmanualshub.com/

Checking the hydraulic oil level

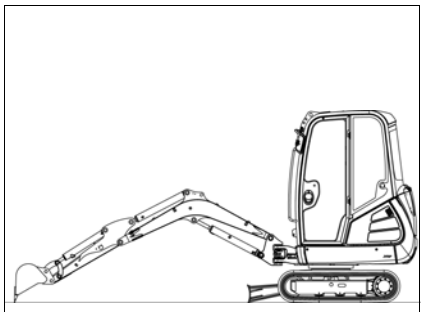

Fig. 260: Parking the machine

1. Place the machine on firm, level and horizontal ground.
2. Position the boom straight ahead at the center of the machine (see figure).
3. Lower the boom and the stabilizer blade to the ground.
4. Stop the engine.
5. Operate the control lever repeatedly to release the pressure in the hydraulic system.
6. Remove the starting key and carry it with you.

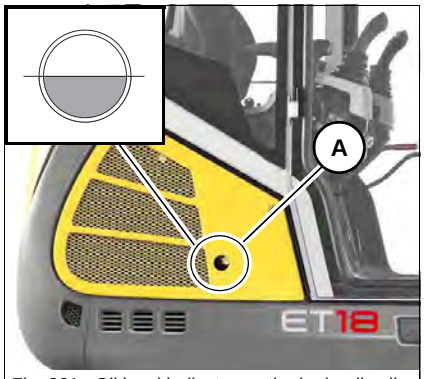

Fig. 261: Oil level indicator on the hydraulic oil reservoir (symbolic representation)

7. Sight glass **A** is located on the right-hand side of the machine.
8. Check the oil level on sight glass **A**.
   ➥ On a warm engine, the oil level must be about at the middle of the sight glass.

Add hydraulic oil if the oil level is lower.

Adding hydraulic oil

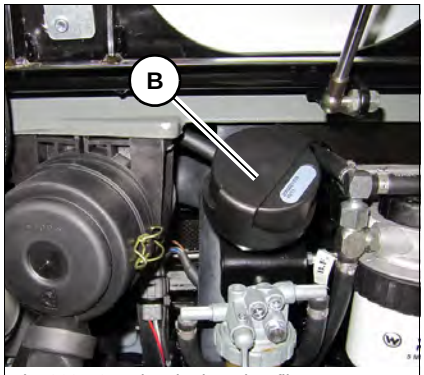

Fig. 262: Opening the breather filter

9. Remove the right-hand cover
   – see “Right-hand cover” on page 7-16.
10. Open breather filter **B** carefully to release the pressure.
11. Open filler cap **C** slowly.
12. Add hydraulic oil up to the corresponding mark.
13. Check the hydraulic oil level on sight glass **A**.
14. Add if necessary and check again.
15. Close filler cap **C** of the hydraulic tank hand tight.

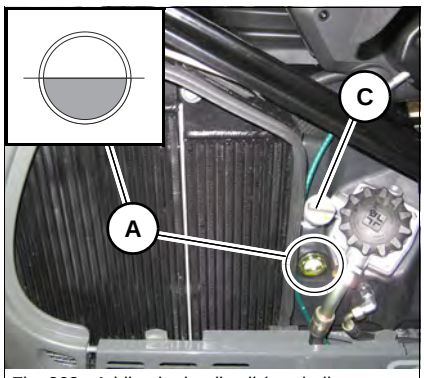

Fig. 263: Adding hydraulic oil (symbolic representation)

16. Tighten breather filter **B** by hand.
17. Install the right-hand side cover.

Environment

Use a suitable container to collect engine/machine fluids as they flow out and dispose of them in an environmentally friendly manner.

https://truckmanualshub.com/

Checking the hydraulic system for leaks

Notice

Leaks and damaged pressure lines must be immediately repaired or replaced by a Wacker Neuson service center. This not only increases the operating safety of the machine but also helps to protect the environment.

► Leaks and damaged pressure lines must be immediately repaired or replaced by a Wacker Neuson service center.

► Have hydraulic hoses replaced every 6 years from the date of manufacture, even if they do not seem to be damaged.

- Do not operate the machine with leaking or damaged hydraulic system components.
- Use a piece of cardboard to diagnose the source of hydraulic leaks.
- Retighten leaking screwed fittings and hose connections only when the system is not under pressure. Release the pressure before working on pressurized lines.
- Never weld or solder damaged or leaking pressure lines and screw connections, but have damaged parts replaced.
- Wear protective equipment.
- Never search for leaks with your bare hands, but wear protective gloves.

https://truckmanualshub.com/

Checking the condition and age of hydraulic hoses

Notice

Leaks and damaged pressure lines must be immediately repaired or replaced by a Wacker Neuson service center. This not only increases the operating safety of the machine but also helps to protect the environment.

► Leaks and damaged pressure lines must be immediately repaired or replaced by a Wacker Neuson service center.

► Have hydraulic hoses replaced every 6 years from the date of manufacture, even if they do not seem to be damaged.

In this respect, we recommend that you observe all the relevant safety regulations for hydraulic lines, as well as the safety regulations regarding accident prevention and occupational health and safety in your country. Also observe DIN 20 066, part 5.

The article number is marked on the clamping section, and the date of manufacture is indicated on the hose of each hose connection.

Have a line replaced if one of the following problems is detected:

- Damaged or leaky hydraulic seals.
- Worn or torn shells or uncovered reinforcement branches.
- Expanded shells in several positions.
- Entangled or crushed movable parts.
- Foreign bodies jammed or stuck in protective layers.

https://truckmanualshub.com/

7.13 Electrical system

Information regarding the electrical system

Maintenance and repair work on the electrical system may be performed only by trained technical personnel and/or Wacker Neuson service centers.

- Malfunctioning components of the electrical system must always be replaced by a Wacker Neuson service center.
- Light bulbs and fuses may be replaced by the operator.

Alternator

- Start the engine only if the battery is connected.
- When connecting the battery, ensure that the poles (+/−) are not inverted.
- Always disconnect the battery before connecting a quick battery charger.
- Have malfunctioning charge indicator lights immediately replaced.

WARNING

Explosion hazard when working on the electrical system!

Can result in severe injury or death.

► Wear protective gloves and eye protection.

► Do not smoke and never work with an open flame or sparks near open battery cells.

► Do not attempt to jump-start the machine if the battery is frozen or if the acid level is low. The battery can rupture or explode. Replace the battery immediately.

► Always disconnect the negative terminal (–) from the battery before starting repair work on the electrical system.

Information

Use only 12 V power sources. Higher voltages will damage the electrical components.

When connecting the battery leads, ensure that the poles +/− are not inverted, otherwise sensitive electrical components will be damaged.

Do not interrupt voltage-carrying circuits at the battery terminals because of of sparking hazard.

Never place tools or other conductive articles on the battery – short circuit hazard.

Environment

Dispose of used batteries properly and in an environmentally friendly manner.

https://truckmanualshub.com/

Fuses and relays

- Blown fuses indicate overloading or short circuits. Have the electrical system checked by a Wacker Neuson service center.
- Only use fuses with the specified load capacity (amperage).

– see chapter “ Relays” on page 9-5

– see chapter “ Fuses” on page 9-5

Battery condition

May only be performed by a Wacker Neuson service center.

Charging the battery

May only be performed by a Wacker Neuson service center.

Replacing the battery

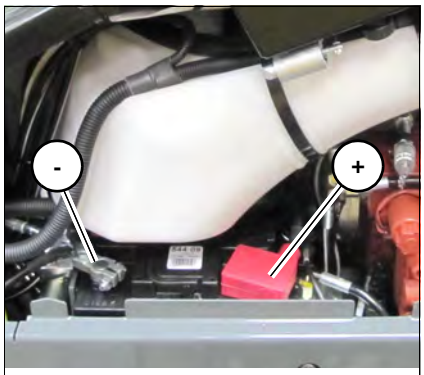

Fig. 264: Replacing the battery

The battery is located under the left-hand cover.

The battery is “maintenance-free”. However have the battery checked at regular intervals to ensure that the electrolyte level is between the MIN and MAX marks.

Checking the battery requires it to be removed and must be performed by a Wacker Neuson service center.

Always follow the specific battery safety instructions.

Notice

In order to avoid damage to the engine electronics, do not disconnect the battery while the engine is running.

https://truckmanualshub.com/

7.14 Heating, ventilation and air conditioning system

Checking/replacing the fresh-air filter

The fresh-air filter is located under the seat. Check it every 50 service hours if it is used in a dusty environment and clean it with compressed air or a mild soap solution if necessary.

Replace the fresh-air filter if it shows signs of cracks or damage, or if no more air flows through it (clogging).

CAUTION

Injury hazard due to penetration of compressed air!

Can cause injuries.

► Wear protective gloves and eye protection.

► Do not aim the compressed air at the skin or at other people.

► Do not use compressed air for cleaning your clothing.

Notice

The filter can be damaged by incorrect handling.

► Do not use a damaged filter.

► Ensure cleanliness when replacing the filter.

► Do not brush the filter.

► Only clean the filter with oil-free compressed air with a max. 2 bar (29 psi).

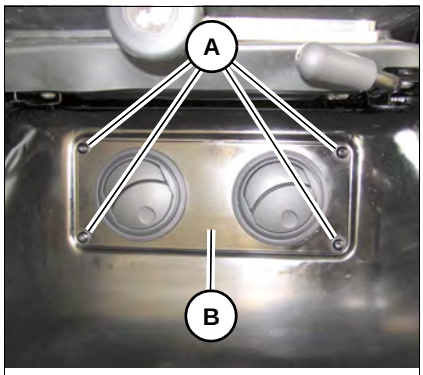

Fig. 265: Checking the fresh-air filter

1. Stop and park the machine. Stop the engine. See “Preparing lubrication”.
2. Remove screws **A** with a suitable tool and remove cover **B**.
3. Check the filter.
   ➥ If the filter is damaged or clogged: replace the filter.
   ➥ If the filter is dirty: clean the filter.

https://truckmanualshub.com/

Fig. 266: Install the fresh-air filter

4. Install the filter.
5. Tighten cover **B**

7.15 Washer system

Information regarding the washer system

Only use glass cleaner (with antifreeze if necessary) for refilling.

Checking the fluid level and adding fluid

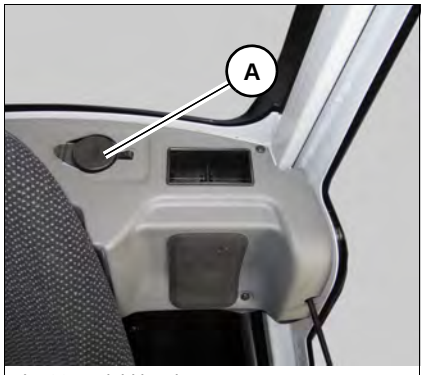

Fig. 267: Fluid level

The tank filler inlet is located in the cab.

1. Stop and park the machine. Stop the engine. See “Preparing lubrication”.
2. Check the fluid level in tank **A** and add fluid if necessary.Axles/ traveling drive.

Have maintenance only performed by a Wacker Neuson service center.

7.16 Brake system

Have maintenance only performed by a Wacker Neuson service center.

https://truckmanualshub.com/

7.17 Tires/tracks

Information regarding the tracks

Track wear can vary according to work and ground conditions.

Checking track tension

DANGER

Crushing hazard when working under the machine!

Causes severe crushing or injury resulting in death.

► Ensure that no one is in the danger zone.

► Support the machine so as to allow the tracks to sag freely.

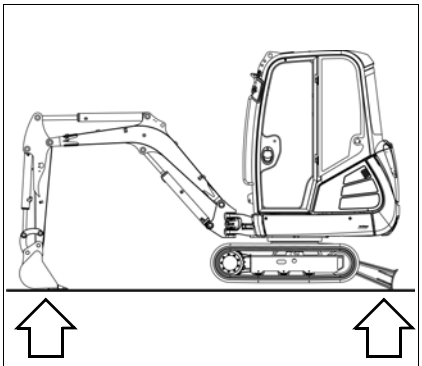

Fig. 268: Raising the machine

1. Place the machine on firm, level and horizontal ground.
2. Raise the machine evenly and horizontally by means of the boom and the stabilizer blade.

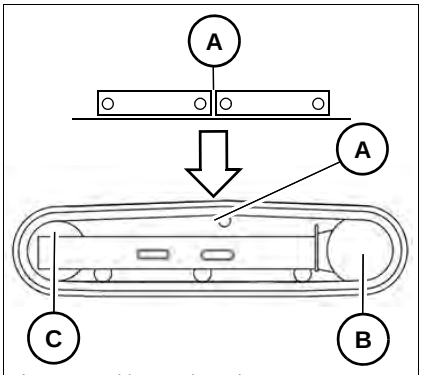

Fig. 269: Rubber track mark

3. Place the tracks so that mark **A** is in the middle between drive pinion **B** and track tension roller **C**.
4. Stop the engine.
5. Raise the control lever base.
6. Remove the starting key and carry it with you.

https://truckmanualshub.com/

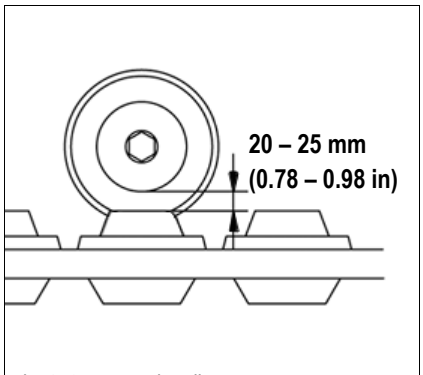

Fig. 270: Measuring distance

Correcting track tension

7. Adjust the correct track tension if the play between the track roller and the track is not 20 – 25 mm (0.8 – 1 in).

DANGER

Projectile hazard! High grease pressure in the hydraulic cylinder.

Causes severe injury or death!

- ► Open the lubricating valve only very carefully and do not unscrew it more than a revolution.
- ► Keep your face away from the lubricating valve connection.
- ► Contact a Wacker Neuson service center if this does not reduce track tension.
- ► Release grease only as described below. (Observe the safety instructions!)

Notice

Excessive tension of the tracks causes severe damage to the hydraulic cylinder and the track.

- ► Tighten the tracks only up to the mandatory measuring distance.

https://truckmanualshub.com/

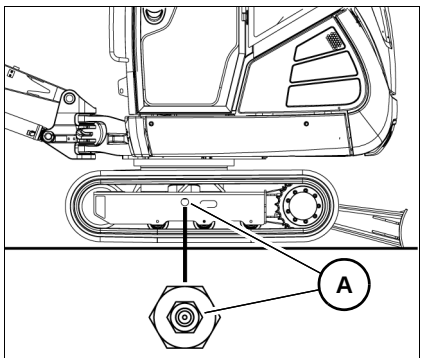

Fig. 271: Tightening the tracks

Tightening the tracks

1. Place the machine on firm, level and horizontal ground.
2. Raise the machine evenly and horizontally by means of the boom and the stabilizer blade.
3. Stop the engine.
4. Operate the control lever repeatedly to release the pressure in the hydraulic system.
5. Pump grease with a grease gun through lubricating valve **A**.
6. Check the tension is correct by:
   - starting the engine,
   - letting it run at idling speed without any load
   - slowly moving the machine forward and reverse and switching it off again.
7. Check the track tension again.
   ➥ If it is not correct:
8. Adjust again.
9. Should the tracks still be slack after pumping more grease, replace the tracks or the seals in the hydraulic cylinders. Contact a Wacker Neuson service center in this case.

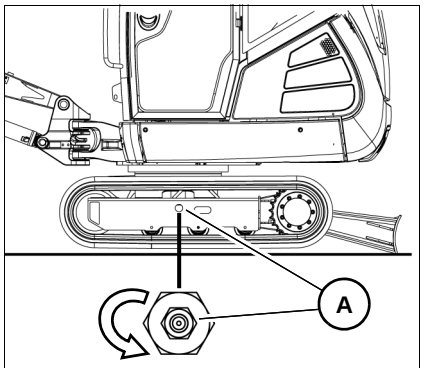

Fig. 272: Releasing grease

Reducing tension

1. Place a suitable container underneath to collect the grease.
2. Slowly turn lubricating valve **A** one revolution counterclockwise to release the grease.
   ➥ The grease flows out of the groove of the lubricating valve.
3. Retighten the lubricating valve **A**.
4. Check the tension is correct by:
   - Lowering the machine to the ground, starting the engine, letting it run at idling speed without any load and slowly moving the machine forward and reverse and switching it off again. Raise the machine again by means of the boom and the stabilizer blade.
5. Check the track tension again.
   ➥ If it is not correct:
6. Adjust again.

Environment

Use a suitable container to collect engine/machine fluids as they flow out and dispose of them in an environmentally friendly manner.

https://truckmanualshub.com/

7.18 Maintenance of attachments

Information regarding maintenance of attachments

Correct maintenance and service is absolutely necessary for smooth and continuous operation, and for an increased service life of the attachments. Please observe the lubrication and maintenance instructions in the Operator's Manuals of the attachments.

7.19 Maintenance of options

Joint rod (lifting eye) and load hook

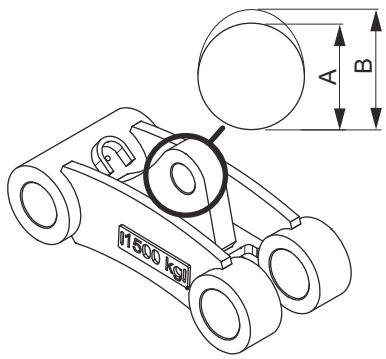

Fig. 273: Lifting eye joint rod (symbolic representation)

Wear of joint rod (lifting eye)

Immediately replace lifting eyes with inadmissible wear (beyond max. tolerance, for example), damage, deformations, surface cracks and corrosion.

The nominal size must not be worn more than 5 % (max. tolerance). Measurement can be performed with the accuracy of a slide gauge.

Welding is prohibited!

Joint rod (lifting eye)	Nominal size A	Max. tolerance B
ET18 – ET24	32 mm (1 1/4 in)	33.6 mm (1 3/8 in)

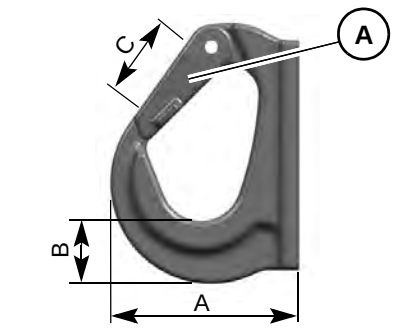

Fig. 274: Powertilt load hook (symbolic representation)

Load hook wear

Have load hooks (Powertilt, Powertilt for Easylock) with inadmissible wear (beyond the tolerance, for example), damage, deformations, surface cracks and corrosion immediately replaced by a Wacker Neuson service center.

The nominal size must not be worn more than 10 % (max. tolerance). Measurement can be performed with the accuracy of a slide gauge.

Welding is prohibited!

If the spring mechanism of snap link **C** does not automatically close any more, stop machine operation with the load hook and have the error repaired by a Wacker Neuson service center.

Load hook	Nominal size A	Max. tolerance A	Nominal size B	Max. tolerance B	Nominal size C	Max. tolerance C
ET18 – 24 (PTS-4.5)	86 mm (3 3/8 in)	94.6 mm (3 3/4 in)	30 mm (1 1/8 in)	27 mm (1 in)	33 mm (1 1/4 in)	36.3 mm (1 3/8 in)

https://truckmanualshub.com/

Notes:

https://truckmanualshub.com/

https://truckmanualshub.com/

8 Troubleshooting

Notice

Contact a Wacker Neuson dealer or customer service in case of malfunctions or signs that are not listed in the following tables or that persist after maintenance on or with the machine has been performed correctly.

8.1 Diesel engine malfunctions

Malfunction/sign	Possible cause	Remedy	See
Engine does not start or is not easy to start	Empty fuel tank	Refueling	*7-26*
	Malfunctioning or discharged battery	Replace the battery	*7-46*
	Malfunctioning fuse	Check the fuse	*9-5*
Engine starts, but does not run smoothly or faultless	Air in fuel system		*7-28*
Engine overheats	Engine oil level too low	Add engine oil	*7-33*
	Dirty air filter	Replace the air filter	*7-38*
	Dirty radiator fins	Clean the radiator	*7-36*
	Coolant level too low	Add coolant	*7-35*
Engine does not have enough output	Dirty air filter	Replace the air filter	*7-38*
Insufficient or no engine oil pressure	Engine oil level too low	Add engine oil	*7-33*
Black engine smoke	Dirty air filter	Replace the air filter	*7-38*

8.2 Malfunctions of the traveling drive

No malfunctions specified.

8.3 Malfunctions of the hydraulic system

Malfunction/sign	Possible cause	Remedy	See
Upper carriage is difficult to rotate, or does not rotate at all	Insufficient lubrication	Lubrication	*7-24*
Machine does not work, or with reduced output	Hydraulic oil level too low	Add hydraulic oil	*7-42*
The display element emits a continuous buzzing sound	Malfunctioning pressure switch of safe load indicator	Have the error repaired by a Wacker Neuson service center.	--

8.4 Malfunctions of the electrical system

No malfunctions specified.

8.5 Troubleshooting the air conditioning

No malfunctions specified.

https://truckmanualshub.com/

8.6 Malfunctions of attachments

Powertilt unit

Malfunction/sign	Possible cause	Remedy	See
Powertilt does not maintain its position	Internal release valve activated	Repeat the work operation with less load. If this problem persists, contact a Wacker Neuson dealer or a Wacker Neuson service center	--
Lateral movement of the bucket	A little play due to necessary spacing between teeth is normal	--	--

https://truckmanualshub.com/

9 Specifications

9.1 Models and trade names

Machine model/machine designation	Trade name
E12-02	ET18
E12-03	ET20
E12-04	ET24

9.2 Engine

Engine	ET18	ET20	ET24
Product	Yanmar diesel engine		
Type	3TNV76-SNSE12		
Design	Water-cooled 4 stroke diesel engine		
Number of cylinders	3		
Displacement	1116 cm^3 (68.1 in^3)		
Nominal bore and stroke	76 x 82 mm (2.9 x 3.2 in)		
Output	13.4 kW/2200 rpm (18 hp/2200 rpm)		
Max. torque	65.6 Nm/1600 rpm (48.4 ft.lbs/1600 rpm)		
Max. engine speed without load	2375 +/− 50 rpm		
Idling speed	1300 +/− 25 rpm		
Fuel injection system	Indirect injection		
Starting aid	Glow plug (preheating time 4 seconds)		
Fuel tank	24 l (6.3 gal)		
Exhaust values according to	EPA – Tier IV final (up to 2012)		

https://truckmanualshub.com/

Engine	ET18	ET20	ET24
Product	Yanmar diesel engine		
Type	3TNV80F-SSNS1		
Design	Water-cooled 4 stroke diesel engine		
Number of cylinders	3		
Displacement	1266 cm^3 (77.3 in^3)		
Nominal bore and stroke	80 x 84 mm (3.1 x 3.3 in)		
Output	12.8 kW/2200 rpm (17.2 hp/2200 rpm)		
Max. torque	65.8 Nm/1600 rpm (48.5 ft.lbs./1600 rpm)		
Max. engine speed without load	2375 +/− 50 rpm		
Idling speed	1300 +/− 25 rpm		
Fuel injection system	Indirect injection		
Starting aid	Glow plug (preheating time 4 seconds)		
Fuel tank	24 l (6.3 gal)		
Exhaust values according to	EPA – Tier IV final (from 2012)		

Information

The machine has about 17 % less output at altitudes over 800 m (2625 ft) above see level. However, this does not affect excavator operation (Yanmar 3TNV80F-SSNS1).

https://truckmanualshub.com/

9.3 Traveling drive/axles

Traveling drive	ET18	ET20	ET24
Version	Axial-piston motor with planetary drive		

9.4 Brakes

See travel lever

9.5 Tracks

Rubber tracks	ET18	ET20	ET24
Track width	230 mm (9 in)	250 mm (10 in)	
Number of tread rollers	3	4	3

9.6 Steering system

See travel lever

9.7 Work hydraulics

Work hydraulics	ET18	ET20
Pump	Double variable displacement + twin gear pump 10 + 10 + 8 + 2.7 cm³ (0.60 + 0.60 + 0.49 + 0.16 in³)	
Flow rate	23.8 (P1) + 23.8 (P2) + 19 (P3) + 6.4 (P4) l/min at 2375 rpm (6.3 + 6.3 + 5 + 1.7 gal/min at 2375 rpm)	
Number/type of pumps	4	
Oil flows of variable displacement pumps (P1 + P2)	23.8 l/min (6.3 gal/min)	
Oil flow of gear pump 1 (P3) (3rd control circuit or Powertilt)	19 l/min (5 gal/min)	
Oil flow of gear pump 2 (P4)	6.4 l/min (1.7 gal/min)	
Operating pressure for work and travel hydraulics	200 bar (2900 psi)	
Swivel unit operating pressure	125 bar (1813 psi)	150 bar (2176 psi)
Upper carriage rotation speed	10 rpm	
Hydraulic tank capacity	19 l (5 gal)	
Hydraulic oil quantity (system fill)	34 l (9 gal)	

https://truckmanualshub.com/

Work hydraulics	ET 24
Pump	Double variable displacement + twin gear pump 11 + 11 + 8.2 + 2.7 cm³ (0.67 + 0.67 + 0.50 + 0.16 in^3)
Flow rate	26.1 (P1) + 26.1 (P2) + 19.4 (P3) + 6.4 (P4) l/min at 2375 rpm (6.9 + 6.9 + 5.1 + 1.7 gal/min at 2375 rpm)
Number/type of pumps	4
Oil flows of variable displacement pumps (P1 + P2)	26.1 l/min (6.9 gal/min)
Oil flow of gear pump 1 (P3) (3rd control circuit or Powertilt)	19.4 l/min (5.1 gal/min)
Oil flow of gear pump 2 (P4)	6.4 l/min (1.7 gal/min)
Operating pressure for work and travel hydraulics	240 bar (3481 psi)
Swivel unit operating pressure	150 bar (2176 psi)
Upper carriage rotation speed	10 rpm
Hydraulic tank capacity	19 l (5 gal)
Hydraulic oil quantity (system fill)	34 l (9 gal)

Speed

	ET 18	ET 20	ET 24
2 travel speeds	3/5.3 kph (1.9/3.3 mph)	2.1/4.1 kph (1.3/2.6 mph)	2.5/4 kph (1.6/2.5 mph)

https://truckmanualshub.com/

9.8 Electrical system

Electrical components

	ET 18/ET 20/ET 24
Alternator	12 V 55 A
Starter	12 V 1.1 kW (1.5 hp)
Battery	12 V 44 Ah

Fuses

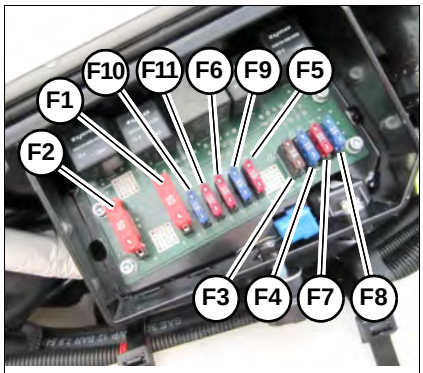

Fig. 275: Fuses

The fuses are located behind the left-hand cover.

Fuses	Rated current (A)	ET 18/ET 20/ET 24
F1	50 A	Starter, cutoff solenoid, socket
F2	50 A	Starter, air-pressure sensor/output adaptation (Yanmar 3TNV80F-SNNS1)
F3	7.5 A	Display, cutoff solenoid
F4	15 A	Valves, horn, high speed, hydraulic quickhitch, upper carriage tilting, automatic engine speed setting
F5	10 A	Proportional auxiliary hydraulics (AUX I) Proportional 3rd control circuit (AUX II)
F6	10 A	Heating, overload, traveling signal
F7	10 A	Lights
F8	15 A	Lights
F9	15 A	Wiper, radio, interior light
F10	15 A	Socket, 12 Vpower outlet
F11	10 A	Rotating beacon, radio

Relays

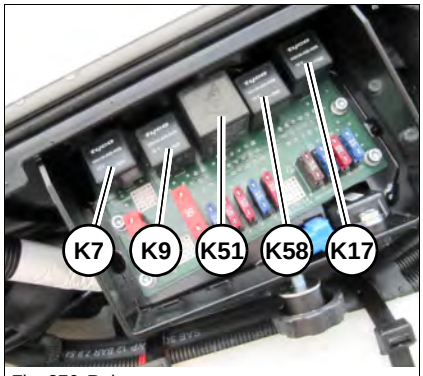

Fig. 276: Relays

The relays are located behind the left-hand cover.

Relays	ET 18/ET 20/ET 24
K7	Starting relay
K9	Cutoff solenoid
K51	Idling speed
K58	High speed (2nd travel speed)
K17	Hydraulic quickhitch

https://truckmanualshub.com/

Bulbs

	ET 18	ET 20	ET 24
Working lights/roof lights	Halogen lamp 12 V 55 W H3		
Interior light	Festoon lamp 10x38 12 V/5 W		
Rotating beacon	Halogen lamp 12 V-55 W H1		

Powertilt (option)

	ET 18	ET 20	ET 24
Model size	4.5		
Piston stroke	240 cm³ (14.6 in³)		
Required oil flow	2 – 4 l/min (0.5 – 1 gal/min)		
Ports	1/8 in		
Slewing range	180°		
Weight	35 kg (77.2 lbs)		
Drive torque – at 210 bar (3045 psi)	930 Nm (685 ft.lbs.)		
Holding torque – at 225 bar (3263 psi)	2470 Nm (1,820 ft.lbs.)		
Minimum hose/pipe size Connecting hose size	6 mm (0.23 in) 6 mm (0.23 in)		

https://truckmanualshub.com/

9.9 Tightening torques

General tightening torques

Property class	8.8	10.9	12.9	8.8	10.9
Screw dimen-sions	Screws according to DIN 912, DIN 931, DIN 933 etc.			Screws according to DIN 7984	
	Nm (ft.lbs.)	Nm (ft.lbs.)	Nm (ft.lbs.)	Nm (ft.lbs.)	Nm (ft.lbs.)
M5	5.5 (4)	8 (6)	10 (7)	5 (4)	7 (5)
M6	10 (7)	14 (10)	17 (13)	8.5 (6)	12 (9)
M8	25 (18)	35 (26)	42 (31)	20 (15)	30 (22)
M10	45 (33)	65 (48)	80 (59)	40 (30)	59 (44)
M12	87 (64)	110 (81)	147 (108)	69 (51)	100 (74)
M14	135 (100)	180 (133)	230 (170)	110 (81)	160 (118)
M16	210 (155)	275 (203)	350 (258)	170 (125)	250 (184)
M18	280 (207)	410 (302)	480 (354)	245 (181)	345 (254)
M20	410 (302)	570 (420)	690 (509)	340 (251)	490 (361)
M22	550 (406)	780 (575)	930 (686)	460 (339)	660 (487)
M24	710 (524)	1000 (738)	1190 (878)	590 (435)	840 (620)
M27	1040 (767)	1480 (1092)	1770 (1305)	870 (642)	1250 (922)
M30	1420 (1047)	2010 (1482)	2400 (1770)	1200 (885)	1700 (1254)

Tightening torques/fine-pitch thread					
Property class	8.8	10.9	12.9	8.8	10.9
Screw dimen-sions	Screws according to DIN 912, DIN 931, DIN 933 etc.			Screws according to DIN 7984	
	Nm (ft.lbs.)	Nm (ft.lbs.)	Nm (ft.lbs.)	Nm (ft.lbs.)	Nm (ft.lbs.)
M8X1.0	25 (18)	37 (28)	43 (32)	22 (16)	32 (24)
M10X1.0	50 (37)	75 (55)	88 (65)	43 (32)	65 (48)
M10X1.25	49 (36)	71 (52)	83 (61)	42 (31)	62 (46)
M12X1.25	87 (64)	130 (96)	150 (111)	75 (55)	110 (81)
M12X1.5	83 (61)	125 (92)	145 (107)	72 (53)	105 (77)
M14X1.5	135 (100)	200 (148)	235 (173)	120 (89)	175 (129)
M16X1.5	210 (155)	310 (229)	360 (266)	180 (133)	265 (195)
M18X1.5	315 (232)	450 (332)	530 (391)	270 (199)	385 (284)
M20X1.5	440 (325)	630 (465)	730 (538)	375 (277)	530 (391)
M22X1.5	590 (435)	840 (620)	980 (723)	500 (369)	710 (524)
M24X2.0	740 (546)	1070 (789)	1250 (922)	630 (465)	900 (664)
M27X2.0	1100 (811)	1550 (1143)	1800 (1328)	920 (679)	1300 (959)
M30X2.0	1500 (1106)	2150 (1586)	2500 (1844)	1300 (959)	1850 (1364)

https://truckmanualshub.com/

9.10 Coolant

Compound table

Outside temperature[1]	Water	Coolant[2]
Up to °C (°F)	% by volume	% by volume
−37 (−34.6)	50	50

1. Use the 1:1 concentration for warm outside temperatures, too, to ensure protection against corrosion, cavitation and deposits.
2. Do not mix the coolant with other coolants.

9.11 Noise emissions

	ET 18	ET 20	ET 24
	(Yanmar 3TNV76-SNSE12)		
Measured sound power level LwA [1]	92.8 dB (A)	92.8 dB (A)	92.8 dB (A)
Guaranteed sound power level LwA [1]	93 dB (A)	93 dB (A)	93 dB (A)
Uncertainty factor KpA [2]	0.8	0.8	0.8
Operator-perceived sound pressure level LpA [3]	75.8 dB (A)	75.8 dB (A)	75.8 dB (A)

1. According to ISO 6395 (EC Directives 2000/14/EC and 2005/88/EC)
2. According to EN ISO 4871 (EC Directives 2000/14/EC and 2005/88/EC)
3. According to ISO 6394 (EC Directives 84/532/EEC, 89/514/EEC, 95/27/EEC)

Information

Measurements performed on asphalted surface.

https://truckmanualshub.com/

9.12 Vibration

Vibration	
Effective acceleration value for the upper extremities of the body (hand-arm vibration)	< Trigger value < 2.5 m/s^2
Effective acceleration value for the body (whole-body vibration)	< 0.5 m/s^2

Vibration values indicated in m/s^2.

Directive 2002/44/EC of European Parliament and Coucil on minimum health and safety requirements regarding exposure of workers to risks arising from physical agents (vibration).

Indications on hand-arm vibration

Hand-arm vibration is less than 2.5 m/s^2 during correct machine operation.

Indications on whole-body vibration

Whole-body vibration is less than 0.5 m/s^2 during correct machine operation.

Uncertainty of measurement K has been taken into account for the specified values.

The degree of vibration is influenced by various parameters.

Some of them are listed below:

- Operator: training, behavior, working method and strain.
- Work site: organization, preparation, surroundings, weather conditions and material.
- Machine: version, seat quality, quality of suspension system, attachments and condition of attachments.

Precise indications on the vibration degrees cannot be made for the machine.

Determination of vibration level for the three vibration axes.

- Under typical operating conditions, use the average vibration values measured.
- In order to obtain the estimated vibration value for an experienced operator on level ground, subtract the factors from the average vibration value.
- In case of an aggressive working method or difficult terrain, add the environmental factors to the average vibration level in order to obtain the estimated vibration level.

Note:

For further vibration indications, refer to the indications in ISO/TR 25398 Mechanical Vibrations – Directive on Estimation of whole-body vibration when traveling earth moving machines. This publication uses measuring values of international institutes, organizations and manufacturers. It contains information on whole-body vibration for operators in earth moving machines. For more information on the vibration values of the machine, refer to Directive 2002/44/EC of European Parliament and Coucil on minimum health and safety requirements regarding exposure of workers to risks arising from physical agents (vibration).

It explains the values for vertical vibration under heavy operating conditions.

https://truckmanualshub.com/

Directives on reduction of vibration values in earth moving machines:

- Perform correct adjustments and maintenance on or with the machine.
- Avoid jerky movements during machine operation.
- Keep slopes in a perfect condition.

Whole-body vibration can be reduced with the following guidelines:

- Use a machine and equipment of correct type and size.
- Follow the manufacturer's recommendations for maintenance.
  - Tire pressure.
  - Brake and steering systems.
  - Control elements, hydraulic system and linkage.
- Keep the work area in good condition:
  - Remove large rocks or obstacles.
  - Fill up ditches and holes.
  - Provide a machine and enough time to keep the work area in good condition.
- Use a seat according to the ISO 7096 requirements. Keep the seat in good condition and adjust it correctly:
  - Adjust the seat and suspension to the operator's weight and size.
  - Check and maintain the seat adjustment and suspension.
- Perform the following activities smoothly without any jerks:
  - Steering
  - Braking
  - Acceleration
  - Shifting gears
- Move the attachments smoothly without any jerks.
- Adapt your speed and the itinerary to minimize vibration:
  - Travel around obstacles and uneven ground.
  - Reduce your speed when traveling across rough terrain.
- Reduce vibration to a minimum during long work cycles or when traveling over long distances:
  - Use a machine with a suspension system (seat, for example).
  - Enable the hydraulic oscillation damping if the machine is equipped with tracks.
  - If the machine is not equipped with hydraulic oscillation damping, reduce your speed to avoid bumps and jolts.
  - Load the machine on a truck or trailer to move between job sites.
- Other risk factors can affect travel comfort negatively. The following measures can improve travel comfort:
  - Adjust the seat and the control elements to a relaxed body posture.
  - Adjust the rearview mirrors to ensure optimal visibility so you can adopt an upright seating position.
  - Provide breaks to avoid sitting for long periods.
  - Do not jump off the cab.
  - Picking up and raising loads repeatedly must be limited to a minimum.

Reference:

The vibration values and calculations are based on the indications made in ISO/TR 25398 Mechanical Vibrations – Guidelines for assessment of exposure to whole-body vibration when operating earth moving machines.

https://truckmanualshub.com/

The harmonized data comply with measurements made by international institutes, organizations and manufacturers. This publication offers information on the calculation of whole-body vibrations for operators of earth moving machines. This method is based on vibration measurements under real operating conditions for all machines. Read the original guidelines. This chapter summarizes part of the legal regulations. However, its aim is not to replace the original references. Other parts of this document are based on information of the United Kingdom Health and Safety Executive.

For more information on vibration, refer to Directive 2002/44/EC of European Parliament and Coucil on minimum health and safety requirements regarding exposure of workers to risks arising from physical agents (vibration).

Your Wacker Neuson dealer provides information on other machine functions reducing vibration and on safe operation.

https://truckmanualshub.com/

9.13 Weight

Machine weight

Weight		ET 18	ET 20	ET 24
Transport weight[1]	Canopy	1582 kg (3488 lbs)	-	2057 kg (4535 lbs)
	Canopy telescopic travel gear	1707 kg (3763 lbs)	1862 kg (4105 lbs)	-
	Canopy VDS	1817 kg (4006 lbs)	1941 kg (4279 lbs)	2166 kg (4775 lbs)
	Cab	1689 kg (3724 lbs)	-	2164 kg (4771 lbs)
	Cab telescopic travel gear	1814 kg (3999 lbs)	1969 kg (4341 lbs)	-
	Cab VDS	1924 kg (4242 lbs)	2047 kg (4513 lbs)	2273 kg (5011 lbs)
Operating weight[2]	Canopy	1725 kg (3803 lbs)	-	2200 kg (4850 lbs)
	Canopy telescopic travel gear	1850 kg (4079 lbs)	2005 kg (4420 lbs)	-
	Canopy VDS	1960 kg (4321 lbs)	2083 kg (4592 lbs)	2309 kg (5090 lbs)
	Cab	1831 kg (4037 lbs)	-	2307 kg (5086 lbs)
	Cab telescopic travel gear	1956 kg (4312 lbs)	2112 kg (4656 lbs)	-
	Cab VDS	2067 kg (4557 lbs)	2190 kg (4828 lbs)	2416 kg (5326 lbs)

1. Transport weight: basic machine + 10 % fuel capacity.
2. Service weight: basic machine + full fuel tank + backhoe bucket (400 mm/16 in) + operator (75 kg/165 lbs).

Information

The actual machine weight depends on the selected options and must be read off the type label.
Add the weight of all subsequently installed equipment to the weight of the machine.
Weight indications can vary by +/− 2 %.

Weight of attachments

– see “Fields of application and use of attachments” on page 3-5

Standard bucket backhoe bucket 400 mm (16 in)

https://truckmanualshub.com/

Excavator forces

According to ISO 6015

	ET 18	ET 20	ET 24
Max. tearout force (short stick)	11.2 kN (2518 lbf)	12.5 kN (2810 lbf)	15 kN (3372 lbf)
Max. tearout force (long stick)	9.8 kN (2203 lbf)	11.1 kN (2495 lbf)	13.3 kN (2990 lbf)
Max. breakout force at bucket tooth	18.8 kN (4226 lbf)		21.8 kN (4901 lbf)

Ground clearance/ground pressure

	ET18	ET18 telescopic travel gear	ET18 VDS/telescopic travel gear
Ground clearance	210 mm (8 1/4 in)	170 mm (6 3/4 in)	170 mm (6 3/4 in)
Ground pressure	0.31 kg/cm² (4.4 lbs/in²)	0.30 kg/cm² (4.3 lbs/in²)	0.32 kg/cm² (4.6 lbs/in²)
Upper carriage swivel speed	10 rpm		

	ET20 telescopic travel gear	ET 20 VDS/telescopic travel gear
Ground clearance	170 mm (6 3/4 in)	160 mm (6 1/4 in)
Ground pressure	0.28 kg/cm² (4 lbs/in²)	0.29 kg/cm² 4.1 lbs/in²)
Upper carriage swivel speed	10 rpm	

	ET24	ET24 VDS
Ground clearance	295 mm (11 5/8 in)	280 mm (11 in)
Ground pressure Canopy/standard travel gear	0.29 kg/cm² 4.1 lbs/in²)	0.30 kg/cm² (4.3 lbs/in²)
Upper carriage swivel speed	10 rpm	

https://truckmanualshub.com/

9.14 Payload/stability

Safety instructions – lift capacity table

The values of the lift capacity table apply to normal operation (for example excavating, etc.) (The values of the stability table apply to lifting gear applications).

DANGER

Crushing hazard due to tipping over of the machine.

Causes severe crushing or injury resulting in death.

- ► The authorized lift capacity specified in the table must never be exceeded (the smallest value applies).
- ► Get informed on the lift capacity of the attachment before using it.
- ► If a bucket or attachment (hammer, etc.) is installed, the dead weight and the contents of the bucket must be subtracted from the lift capacity specified in the table. Load density must also be taken into account.

Notice

If the specified lift capacity is exceeded, possible damage to property due to tipping over of the machine.

- ► The authorized lift capacity specified in the table must never be exceeded (the smallest value applies).

Information

The indications are only approximate values. Attachments, uneven ground and soft or bad ground conditions affect lift capacity. The operator must take these influences into account.

https://truckmanualshub.com/

Legend

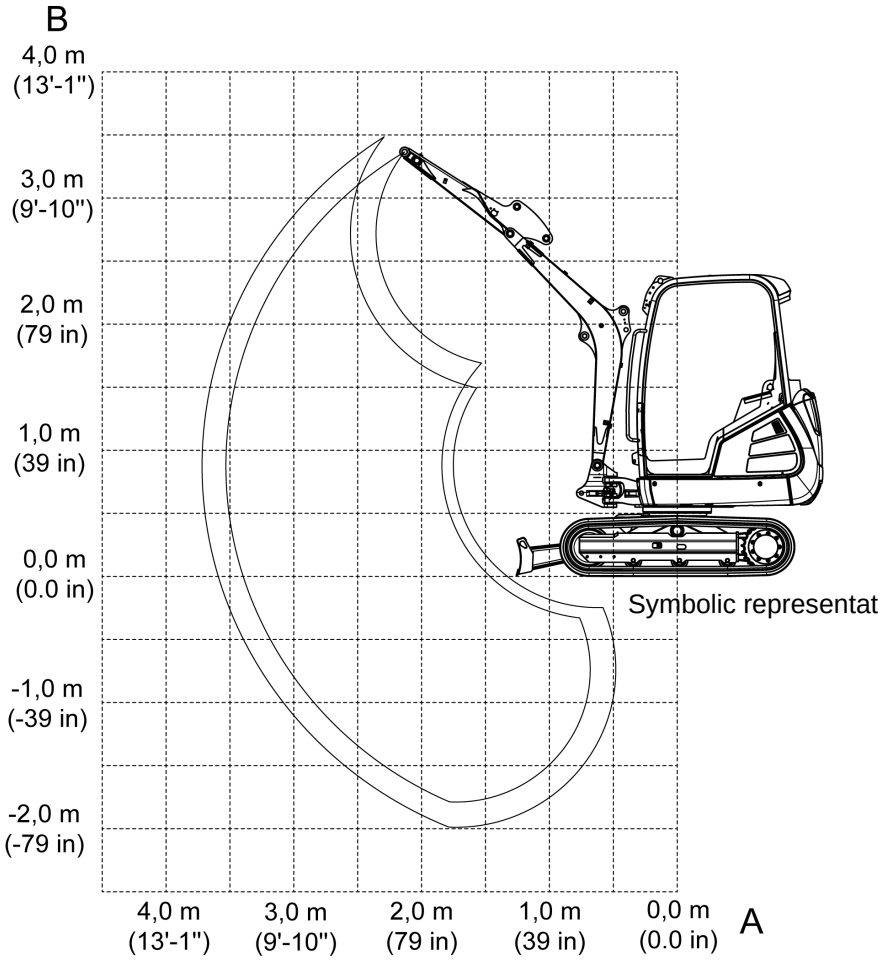

Designation	Explanation
A	Reach from live ring center
B	Load hook height
max	Authorized lift capacity with horizontal boom
	With the stabilizer blade in traveling direction
	With or without the stabilizer blade, 90° to traveling direction
	Lowered stabilizer blade
	Raised stabilizer blade
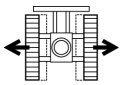	Telescopic travel gear extended

https://truckmanualshub.com/

All table values are specified in kg (lbs) under the following conditions:

- Upper carriage not tilted.
- Machine placed on firm, level and horizontal ground.
- No bucket or other attachment (hammer etc.) installed.

The machine's lift capacity is restricted by the hydraulic output and the hydraulic system's stabilizing features.

Neither 75 % of the static tilt load nor 87 % of the hydraulic lift capacity is exceeded.

Calculation basis: according to ISO 10567.

Setting pressure on boom hydraulic cylinder:

ET 18/20: 20000 kPa (2900 psi)

ET 24: 24000 kPa (3480 psi)

The lift capacity applies to machines under the following conditions:

- Lubricants and engine/machine fluids at the mandatory levels.
- Full fuel tank.
- Cab or canopy.
- Machine at operating temperature.
- Operator weight 75 kg (165 lbs).

https://truckmanualshub.com/

Lift capacity table ET 18

Cab and standard travel gear (short stick)

A / B	max			3.0 m (9'-10")			2.5 m (98 in)			2.0 m (79 in)			1.5 m (59 in)		
2.5 m (98 in)	382 (842)	290 (639)	249 (549)	-	-	-	366 (807)	318 (701)	274 (604)	-	-	-	-	-	-
2.0 m (79 in)	384 (847)	239 (527)	203 (448)	-	-	-	371 (818)	316 (697)	271 (597)	-	-	-	-	-	-
1.0 m (39 in)	402 (886)	201 (443)	169 (373)	423 (933)	228 (503)	193 (425)	492 (1085)	295 (605)	251 (553)	641 (1413)	399 (880)	340 (750)	-	-	-
0.0 m (0.0 in)	430 (948)	204 (450)	171 (377)	466 (1027)	219 (483)	183 (403)	591 (1303)	277 (611)	233 (514)	814 (1795)	370 (816)	312 (688)	1257 (2771)	550 (1213)	463 (1021)
−1.0 m (−39 in)	461 (1016)	263 (580)	222 (489)	-	-	-	507 (1118)	279 (615)	234 (516)	702 (1548)	372 (820)	314 (692)	1004 (2213)	559 (1232)	473 (1043)
−1.5 m (−59 in)	460 (1014)	378 (833)	321 (708)	-	-	-	-	-	-	475 (1047)	386 (851)	327 (721)	705 (1554)	575 (1268)	488 (1076)

Cab and standard travel gear (long stick)

A / B	max			3.0 m (9'-10")			2.5 m (98 in)			2.0 m (79 in)			1.5 m (59 in)		
2.5 m (98 in)	341 (752)	252 (556)	215 (474)	-	-	-	304 (670)	304 (670)	276 (609)	-	-	-	-	-	-
2.0 m (79 in)	346 (763)	213 (470)	180 (397)	335 (739)	237 (523)	201 (443)	318 (701)	316 (697)	272 (600)	-	-	-	-	-	-
1.0 m (39 in)	365 (805)	181 (399)	151 (333)	392 (864)	225 (496)	190 (419)	448 (988)	294 (648)	249 (549)	567 (1250)	401 (884)	343 (756)	-	-	-
0.0 m (0.0 in)	393 (866)	183 (403)	152 (335)	454 (1001)	213 (470)	178 (392)	573 (1263)	272 (600)	228 (503)	793 (1748)	364 (803)	306 (675)	1271 (2802)	539 (1188)	453 (999)
−1.0 m (−39 in)	426 (939)	227 (500)	189 (417)	-	-	-	541 (1193)	268 (591)	224 (494)	740 (1631)	361 (796)	303 (668)	1089 (2401)	544 (1199)	457 (1008)
−1.5 m (−59 in)	440 (970)	299 (659)	252 (556)	-	-	-	-	-	-	586 (1292)	370 (816)	312 (688)	851 (1876)	557 (1228)	470 (1036)

https://truckmanualshub.com/

Cab and telescopic travel gear (short stick)

A / B	max			3.0 m (9'-10")			2.5 m (98 in)			2.0 m (79 in)			1.5 m (59 in)		
2.5 m (98 in)	382 (842)	382 (842)	313 (690)	-	-	-	366 (807)	366 (807)	344 (758)	-	-	-	-	-	-
2.0 m (79 in)	384 (847)	352 (776)	258 (569)	-	-	-	371 (818)	371 (818)	341 (752)	-	-	-	-	-	-
1.0 m (39 in)	402 (886)	299 (659)	217 (478)	423 (933)	340 (750)	247 (545)	492 (1085)	440 (970)	320 (706)	641 (1413)	607 (1338)	435 (959)	-	-	-
0.0 m (0.0 in)	430 (948)	306 (675)	221 (487)	466 (1027)	330 (728)	237 (522)	591 (1303)	421 (928)	302 (666)	814 (1795)	575 (1268)	406 (895)	1257 (2771)	894 (1971)	611 (1347)
−1.0 m (−39 in)	461 (1016)	398 (877)	286 (631)	-	-	-	507 (1118)	423 (933)	303 (668)	702 (1548)	577 (1272)	408 (899)	1004 (2213)	905 (1995)	621 (1369)
−1.5 m (−59 in)	460 (1014)	460 (1014)	413 (911)	-	-	-	-	-	-	475 (1047)	475 (1047)	422 (930)	705 (1554)	705 (1554)	637 (1404)

Cab and telescopic travel gear (long stick)

A / B	max			3.0 m (9'-10")			2.5 m (98 in)			2.0 m (79 in)			1.5 m (59 in)		
2.5 m (98 in)	341 (752)	341 (752)	273 (602)	-	-	-	304 (670)	304 (670)	304 (670)	-	-	-	-	-	-
2.0 m (79 in)	346 (763)	316 (697)	230 (507)	335 (739)	335 (739)	256 (564)	318 (701)	318 (701)	318 (701)	-	-	-	-	-	-
1.0 m (39 in)	365 (805)	273 (602)	196 (432)	392 (864)	337 (743)	244 (538)	448 (988)	439 (968)	319 (703)	567 (1250)	567 (1250)	438 (966)	-	-	-
0.0 m (0.0 in)	393 (866)	277 (611)	198 (437)	454 (1001)	324 (714)	232 (511)	573 (1263)	416 (917)	296 (653)	793 (1748)	569 (1254)	400 (882)	1271 (2802)	883 (1947)	600 (1323)
−1.0 m (−39 in)	426 (939)	345 (761)	247 (545)	-	-	-	541 (1193)	412 (908)	293 (646)	740 (1631)	566 (1248)	397 (876)	1089 (2401)	889 (1960)	606 (1336)
−1.5 m (−59 in)	440 (970)	440 (970)	326 (719)	-	-	-	-	-	-	586 (1292)	575 (1268)	406 (895)	851 (1876)	851 (1876)	619 (1365)

https://truckmanualshub.com/

Cab, telescopic travel gear and VDS (short stick)

A / B				3.0 m (9'-10")			2.5 m (98 in)			2.0 m (79 in)			1.5 m (59 in)		
	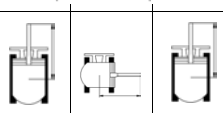														
2.5 m (98 in)	381 (840)	381 (840)	282 (622)	-	-	-	362 (798)	362 (798)	328 (723)	-	-	-	-	-	-
2.0 m (79 in)	385 (849)	377 (831)	236 (520)	383 (844)	383 (844)	241 (531)	379 (836)	379 (836)	324 (714)	-	-	-	-	-	-
1.0 m (39 in)	405 (893)	329 (725)	202 (445)	430 (948)	374 (825)	231 (509)	507 (1118)	483 (1065)	301 (664)	673 (1484)	663 (1462)	414 (913)	-	-	-
0.0 m (0.0 in)	434 (957)	344 (758)	209 (461)	465 (1025)	365 (805)	222 (489)	594 (1310)	465 (1025)	284 (626)	816 (1799)	636 (1402)	387 (853)	1243 (2740)	993 (2189)	598 (1318)
−1.0 m (−39 in)	464 (1023)	464 (1023)	286 (631)	-	-	-	472 (1041)	470 (1036)	289 (637)	671 (1479)	641 (1413)	392 (864)	956 (2108)	956 (2108)	611 (1347)
−1.5 m (−59 in)	451 (994)	451 (994)	451 (994)	-	-	-	-	-	-	-	-	-	607 (1338)	607 (1338)	607 (1338)

Cab, telescopic travel gear and VDS (long stick)

A / B	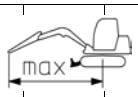			3.0 m (9'-10")			2.5 m (98 in)			2.0 m (79 in)			1.5 m (59 in)		
	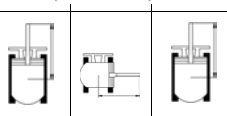														
2.5 m (98 in)	341 (752)	341 (752)	246 (542)	-	-	-	303 (668)	303 (668)	303 (668)	-	-	-	-	-	-
2.0 m (79 in)	347 (765)	340 (750)	210 (463)	337 (743)	337 (743)	241 (531)	327 (721)	327 (721)	325 (717)	-	-	-	-	-	-
1.0 m (39 in)	367 (809)	301 (664)	182 (401)	400 (882)	371 (818)	228 (503)	466 (1027)	466 (1027)	300 (661)	603 (1329)	603 (1329)	416 (917)	-	-	-
0.0 m (0.0 in)	396 (873)	311 (686)	186 (410)	457 (1008)	359 (791)	216 (476)	579 (1276)	460 (1014)	278 (613)	800 (1764)	629 (1387)	380 (838)	1268 (2795)	981 (2163)	586 (1292)
−1.0 m (−39 in)	430 (948)	400 (882)	242 (534)	-	-	-	522 (1151)	459 (1012)	277 (611)	718 (1583)	629 (1387)	380 (838)	1050 (2315)	990 (2183)	595 (1312)
−1.5 m (−59 in)	441 (972)	441 (972)	341 (752)	-	-	-	-	-	-	531 (1171)	531 (1171)	392 (864)	779 (1717)	779 (1717)	611 (1347)

https://truckmanualshub.com/

Canopy and standard travel gear (short stick)

A / B	max			3.0 m (9'-10")			2.5 m (98 in)			2.0 m (79 in)			1.5 m (59 in)		
2.5 m (98 in)	382 (842)	268 (591)	227 (500)	-	-	-	366 (807)	294 (648)	251 (553)	-	-	-	-	-	-
2.0 m (79 in)	384 (847)	220 (485)	184 (406)	-	-	-	371 (818)	292 (644)	248 (547)	-	-	-	-	-	-
1.0 m (39 in)	402 (886)	183 (403)	152 (335)	423 (933)	209 (461)	174 (384)	492 (1085)	271 (597)	227 (500)	641 (1413)	368 (811)	310 (683)	-	-	-
0.0 m (0.0 in)	430 (948)	186 (410)	153 (337)	466 (1027)	200 (441)	165 (364)	591 (1303)	253 (558)	210 (463)	814 (1795)	339 (747)	281 (619)	1257 (2771)	504 (1111)	419 (924)
−1.0 m (−39 in)	461 (1016)	241 (531)	200 (441)	-	-	-	507 (1118)	255 (562)	211 (465)	702 (1548)	341 (752)	283 (624)	1004 (2213)	514 (1133)	428 (944)
−1.5 m (−59 in)	460 (1014)	347 (765)	291 (642)	-	-	-	-	-	-	475 (1047)	354 (780)	296 (653)	705 (1554)	529 (1166)	444 (979)

Canopy and standard travel gear (long stick)

A / B	max			3.0 m (9'-10")			2.5 m (98 in)			2.0 m (79 in)			1.5 m (59 in)		
2.5 m (98 in)	341 (752)	232 (511)	196 (432)	-	-	-	304 (670)	297 (655)	253 (558)	-	-	-	-	-	-
2.0 m (79 in)	346 (763)	195 (430)	163 (359)	335 (739)	218 (481)	183 (403)	318 (701)	293 (646)	249 (549)	-	-	-	-	-	-
1.0 m (39 in)	365 (805)	165 (364)	135 (298)	392 (864)	206 (454)	171 (377)	448 (988)	270 (595)	226 (498)	567 (1250)	370 (816)	312 (688)	-	-	-
0.0 m (0.0 in)	393 (866)	166 (366)	135 (298)	454 (1001)	194 (428)	159 (351)	573 (1263)	248 (547)	204 (450)	793 (1748)	333 (734)	275 (606)	1271 (2802)	494 (1089)	408 (899)
−1.0 m (−39 in)	426 (939)	206 (454)	169 (373)	-	-	-	541 (1193)	245 (540)	201 (443)	740 (1631)	330 (728)	272 (600)	1089 (2401)	498 (1098)	413 (911)
−1.5 m (−59 in)	440 (970)	274 (604)	227 (500)	-	-	-	-	-	-	586 (1292)	339 (747)	281 (619)	851 (1876)	511 (1127)	425 (937)

https://truckmanualshub.com/

Canopy and telescopic travel gear (short stick)

A / B	max			3.0 m (9'-10")			2.5 m (98 in)			2.0 m (79 in)			1.5 m (59 in)		
2.5 m (98 in)	382 (842)	382 (842)	289 (637)	-	-	-	366 (807)	366 (807)	317 (699)	-	-	-	-	-	-
2.0 m (79 in)	384 (847)	326 (719)	237 (522)	-	-	-	371 (818)	371 (818)	315 (694)	-	-	-	-	-	-
1.0 m (39 in)	402 (886)	276 (608)	198 (437)	423 (933)	314 (692)	226 (498)	492 (1085)	408 (899)	294 (648)	641 (1413)	563 (1241)	400 (882)	-	-	-
0.0 m (0.0 in)	430 (948)	282 (622)	201 (443)	466 (1027)	304 (670)	216 (476)	591 (1303)	389 (858)	275 (606)	814 (1795)	531 (1171)	371 (818)	1257 (2771)	827 (1823)	559 (1232)
−1.0 m (−39 in)	461 (1016)	368 (811)	261 (575)	-	-	-	507 (1118)	390 (860)	277 (611)	702 (1548)	533 (1175)	373 (822)	1004 (2213)	838 (1847)	569 (1254)
−1.5 m (−59 in)	460 (1014)	460 (1014)	379 (836)	-	-	-	-	-	-	475 (1047)	475 (1047)	387 (853)	705 (1554)	705 (1554)	586 (1292)

Canopy and telescopic travel gear (long stick)

A / B	max			3.0 m (9'-10")			2.5 m (98 in)			2.0 m (79 in)			1.5 m (59 in)		
2.5 m (98 in)	341 (752)	341 (752)	251 (553)	-	-	-	304 (670)	304 (670)	304 (670)	-	-	-	-	-	-
2.0 m (79 in)	346 (763)	292 (644)	211 (465)	335 (739)	324 (714)	235 (518)	318 (701)	318 (701)	316 (697)	-	-	-	-	-	-
1.0 m (39 in)	365 (805)	251 (553)	179 (395)	392 (864)	311 (686)	223 (492)	448 (988)	407 (897)	292 (644)	567 (1250)	566 (1248)	403 (888)	-	-	-
0.0 m (0.0 in)	393 (866)	255 (562)	180 (397)	454 (1001)	298 (657)	210 (463)	573 (1263)	383 (844)	270 (595)	793 (1748)	525 (1157)	365 (805)	1271 (2802)	816 (1799)	549 (1210)
−1.0 m (−39 in)	426 (939)	318 (701)	224 (494)	-	-	-	541 (1193)	380 (838)	267 (589)	740 (1631)	522 (1151)	362 (798)	1089 (2401)	822 (1812)	554 (1221)
−1.5 m (−59 in)	440 (970)	422 (930)	298 (657)	-	-	-	-	-	-	586 (1292)	532 (1173)	371 (818)	851 (1877)	837 (1845)	567 (1250)

https://truckmanualshub.com/

Canopy, telescopic travel gear and VDS (short stick)

A / B	max			3.0 m (9'-10")			2.5 m (98 in)			2.0 m (79 in)			1.5 m (59 in)		
2.5 m (98 in)	381 (840)	381 (840)	256 (564)	-	-	-	362 (798)	362 (798)	298 (657)	-	-	-	-	-	-
2.0 m (79 in)	385 (849)	351 (774)	212 (467)	383 (844)	358 (789)	217 (478)	379 (836)	379 (836)	294 (648)	-	-	-	-	-	-
1.0 m (39 in)	405 (893)	306 (675)	180 (397)	430 (948)	348 (767)	207 (456)	507 (1118)	450 (992)	271 (597)	673 (1484)	619 (1365)	374 (825)	-	-	-
0.0 m (0.0 in)	434 (957)	319 (703)	186 (410)	465 (1025)	339 (747)	198 (437)	594 (1310)	433 (955)	254 (560)	816 (1799)	591 (1303)	347 (765)	1243 (2740)	924 (2037)	537 (1184)
−1.0 m (−39 in)	464 (1023)	433 (955)	256 (564)	-	-	-	472 (1041)	437 (963)	259 (571)	671 (1479)	597 (1316)	352 (776)	956 (2108)	938 (2068)	550 (1213)
−1.5 m (−59 in)	451 (994)	451 (994)	415 (915)	-	-	-	-	-	-	-	-	-	607 (1338)	607 (1338)	571 (1259)

Canopy, telescopic travel gear and VDS (long stick)

A / B	max			3.0 m (9'-10")			2.5 m (98 in)			2.0 m (79 in)			1.5 m (59 in)		
2.5 m (98 in)	341 (752)	341 (752)	222 (489)	-	-	-	303 (668)	303 (668)	301 (664)	-	-	-	-	-	-
2.0 m (79 in)	347 (765)	316 (697)	189 (417)	337 (743)	337 (743)	217 (478)	327 (721)	327 (721)	295 (650)	-	-	-	-	-	-
1.0 m (39 in)	367 (809)	279 (615)	161 (355)	400 (882)	345 (761)	204 (450)	466 (1027)	449 (990)	270 (595)	603 (1329)	603 (1329)	376 (829)	-	-	-
0.0 m (0.0 in)	396 (873)	289 (637)	165 (364)	457 (1008)	333 (734)	192 (423)	579 (1276)	427 (941)	248 (547)	800 (1764)	585 (1290)	340 (750)	1268 (2795)	912 (2011)	525 (1157)
−1.0 m (−39 in)	430 (948)	372 (820)	216 (476)	-	-	-	522 (1151)	426 (939)	247 (545)	718 (1583)	585 (1290)	340 (750)	1050 (2315)	921 (2030)	534 (1177)
−1.5 m (−59 in)	441 (972)	441 (972)	306 (675)	-	-	-	-	-	-	531 (1171)	531 (1171)	352 (776)	779 (1717)	779 (1717)	551 (1215)

https://truckmanualshub.com/

Lift capacity tables ET 20

Cab and telescopic travel gear (short stick)

A / B	max			3.5 m (11'-6")			3.0 m (9'-10")			2.5 m (98 in)			2.0 m (79 in)		
2.5 m (98 in)	382 (842)	355 (783)	322 (710)	- -	- -	- -	385 (849)	349 (769)	316 (697)	355 (783)	355 (783)	355 (783)	- -	- -	- -
2.0 m (79 in)	383 (845)	304 (670)	275 (606)	- -	- -	- -	378 (833)	348 (768)	316 (696)	384 (847)	384 (847)	384 (847)	- -	- -	- -
1.0 m (39 in)	397 (876)	263 (580)	237 (523)	399 (880)	266 (586)	240 (529)	445 (981)	333 (734)	301 (663)	532 (1173)	432 (952)	389 (858)	722 (1592)	593 (1308)	531 (1171)
0.0 m (0.0 in)	420 (925)	267 (589)	241 (531)	- -	- -	- -	501 (1105)	319 (703)	287 (632)	639 (1409)	408 (900)	366 (807)	887 (1956)	557 (1228)	496 (1094)
−1.0 m (−39 in)	443 (976)	332 (732)	299 (659)	- -	- -	- -	- -	- -	- -	578 (1274)	407 (897)	364 (802)	778 (1715)	558 (1231)	497 (1097)
−1.5 m (−59 in)	442 (975)	435 (960)	391 (642)	- -	- -	- -	- -	- -	- -	- -	- -	- -	608 (1340)	569 (1255)	508 (1120)

Cab and telescopic travel gear (long stick)

A / B	max			3.5 m (11'-6")			3.0 m (9'-10")			2.5 m (98 in)			2.0 m (79 in)		
2.5 m (98 in)	341 (752)	313 (690)	283 (624)	- -	- -	- -	326 (719)	326 (719)	317 (699)	- -	- -	- -	- -	- -	- -
2.0 m (79 in)	345 (761)	272 (600)	246 (542)	- -	- -	- -	334 (736)	334 (736)	314 (692)	330 (728)	330 (728)	330 (728)	- -	- -	- -
1.0 m (39 in)	360 (794)	238 (525)	214 (472)	370 (816)	260 (573)	234 (516)	411 (906)	328 (723)	296 (653)	485 (1069)	429 (946)	386 (851)	639 (1409)	595 (1312)	533 (1175)
0.0 m (0.0 in)	382 (842)	240 (529)	215 (474)	400 (882)	251 (553)	225 (496)	484 (1067)	311 (686)	279 (615)	616 (1358)	400 (882)	358 (789)	863 (1903)	548 (1208)	487 (1074)
−1.0 m (−39 in)	407 (897)	289 (637)	260 (573)	- -	- -	- -	451 (994)	308 (679)	276 (608)	596 (1254)	394 (869)	352 (776)	808 (1781)	543 (1197)	482 (1063)
−1.5 m (−59 in)	416 (917)	360 (794)	323 (712)	- -	- -	- -	- -	- -	- -	492 (1085)	401 (885)	359 (791)	679 (1497)	552 (1217)	491 (1082)

https://truckmanualshub.com/

Cab, telescopic travel gear and VDS (short stick)

A / B	max			3.5 m (11'-6")			3.0 m (9'-10")			2.5 m (98 in)			2.0 m (79 in)		
2.5 m (98 in)	380 (838)	351 (774)	274 (604)	-	-	-	378 (833)	358 (789)	280 (617)	356 (785)	356 (785)	356 (785)	-	-	-
2.0 m (79 in)	383 (844)	305 (672)	235 (518)	-	-	-	380 (838)	356 (785)	278 (613)	394 (869)	394 (869)	374 (825)	-	-	-
1.0 m (39 in)	399 (880)	269 (593)	204 (450)	401 (884)	272 (600)	207 (456)	452 (996)	341 (752)	262 (578)	548 (1208)	442 (974)	343 (756)	754 (1662)	605 (1334)	474 (1045)
0.0 m (0.0 in)	422 (930)	278 (613)	210 (463)	-	-	-	502 (1107)	328 (723)	249 (549)	643 (1418)	420 (926)	322 (710)	889 (1;960)	574 (1265)	443 (977)
−1.0 m (−39 in)	445 (981)	355 (783)	271 (597)	-	-	-	-	-	-	561 (1237)	421 (928)	323 (712)	758 (1671)	578 (1274)	447 (985)
−1.5 m (−59 in)	446 (983)	446 (983)	446 (983)	-	-	-	-	-	-	-	-	-	386 (851)	386 (851)	386 (851)

Cab, telescopic travel gear and VDS (long stick)

A / B	max			3.5 m (11'-6")			3.0 m (9'-10")			2.5 m (98 in)			2.0 m (79 in)		
2.5 m (98 in)	341 (752)	312 (688)	240 (529)	-	-	-	325 (717)	325 (717)	280 (617)	-	-	-	-	-	-
2.0 m (79 in)	346 (763)	274 (604)	209 (461)	-	-	-	338 (745)	338 (745)	276 (608)	341 (752)	341 (752)	341 (752)	-	-	-
1.0 m (39 in)	362 (798)	244 (538)	183 (403)	375 (827)	268 (591)	202 (445)	420 (926)	337 (743)	258 (569)	502 (1107)	439 (968)	341 (752)	675 (1488)	608 (1340)	477 (1052)
0.0 m (0.0 in)	385 (849)	250 (551)	187 (412)	400 (882)	259 (571)	194 (428)	336 (741)	321 (708)	242 (534)	475 (1047)	412 (908)	314 (692)	872 (1922)	565 (1246)	433 (955)
−1.0 m (−39 in)	411 (906)	309 (681)	233 (514)	-	-	-	437 (963)	320 (705)	241 (531)	586 (1292)	409 (902)	310 (683)	794 (1750)	563 (1241)	432 (952)
−1.5 m (−59 in)	419 (924)	396 (873)	302 (666)	-	-	-	-	-	-	443 (977)	418 (922)	319 (703)	648 (1429)	574 (1265)	442 (974)

https://truckmanualshub.com/

Canopy and telescopic travel gear (short stick)

A / B	max			3.5 m (11'-6")			3.0 m (9'-10")			2.5 m (98 in)			2.0 m (79 in)		
2.5 m (98 in)	382 (842)	329 (725)	298 (657)	- -	- -	- -	385 (849)	323 (712)	292 (644)	355 (783)	355 (783)	355 (783)	- -	- -	- -
2.0 m (79 in)	383 (844)	281 (620)	254 (560)	- -	- -	- -	378 (833)	323 (714)	292 (644)	384 (847)	384 (847)	384 (847)	- -	- -	- -
1.0 m (39 in)	397 (875)	242 (534)	218 (481)	399 (880)	244 (538)	220 (485)	445 (981)	307 (677)	277 (611)	532 (1173)	400 (882)	359 (791)	722 (1592)	549 (1210)	491 (1082)
0.0 m (0.0 in)	420 (926)	245 (486)	220 (485)	- -	- -	- -	501 (1105)	293 (646)	263 (580)	639 (1409)	376 (829)	336 (741)	887 (1956)	513 (1131)	456 (1005)
−1.0 m (−39 in)	443 (977)	305 (672)	274 (604)	- -	- -	- -	- -	- -	- -	578 (1274)	374 (825)	335 (739)	778 (1715)	515 (1135)	458 (1010)
−1.5 m (−59 in)	442 (974)	402 (886)	360 (794)	- -	- -	- -	- -	- -	- -	- -	- -	- -	608 (1340)	526 (1160)	468 (1032)

Canopy and telescopic travel gear (long stick)

A / B	max			3.5 m (11'-6")			3.0 m (9'-10")			2.5 m (98 in)			2.0 m (79 in)		
2.5 m (98 in)	341 (752)	289 (637)	261 (575)	- -	- -	- -	326 (719)	324 (714)	293 (646)	- -	- -	- -	- -	- -	- -
2.0 m (79 in)	345 (761)	250 (551)	226 (498)	- -	- -	- -	334 (736)	321 (708)	290 (639)	330 (728)	330 (728)	330 (728)	- -	- -	- -
1.0 m (39 in)	360 (794)	218 (481)	195 (430)	370 (816)	239 (527)	215 (474)	411 (906)	303 (668)	272 (600)	485 (1069)	397 (875)	357 (787)	639 (1409)	552 (1217)	493 (1087)
0.0 m (0.0 in)	382 (842)	220 (485)	196 (432)	400 (882)	230 (507)	206 (454)	484 (1067)	285 (628)	255 (562)	616 (1358)	368 (811)	328 (723)	863 (1903)	504 (1111)	447 (985)
−1.0 m (−39 in)	407 (897)	265 (584)	237 (523)	- -	- -	- -	451 (994)	283 (624)	253 (558)	596 (1314)	362 (798)	322 (710)	808 (1781)	500 (1102)	443 (977)
−1.5 m (−59 in)	416 (917)	331 (730)	296 (653)	- -	- -	- -	- -	- -	- -	492 (1085)	369 (814)	329 (725)	679 (1497)	508 (1120)	451 (994)

https://truckmanualshub.com/

Canopy, telescopic travel gear and VDS (short stick)

A / B	max			3.5 m (11'-6")			3.0 m (9'-10")			2.5 m (98 in)			2.0 m (79 in)		
2.5 m (98 in)	380 (838)	326 (719)	248 (547)	-	-	-	378 (833)	332 (732)	253 (558)	356 (785)	356 (785)	349 (769)	-	-	-
2.0 m (79 in)	383 (844)	282 (622)	212 (467)	-	-	-	380 (838)	331 (730)	251 (553)	394 (869)	394 (869)	341 (752)	-	-	-
1.0 m (39 in)	399 (880)	248 (547)	182 (401)	401 (884)	251 (553)	185 (408)	452 (996)	315 (694)	236 (520)	548 (1208)	409 (902)	310 (683)	754 (1662)	562 (1239)	429 (946)
0.0 m (0.0 in)	422 (930)	256 (564)	187 (412)	-	-	-	502 (1107)	302 (666)	223 (492)	643 (1418)	388 (855)	288 (635)	889 (1960)	531 (1171)	398 (877)
−1.0 m (−39 in)	445 (981)	328 (723)	243 (536)	-	-	-	-	-	-	561 (1237)	389 (858)	289 (637)	758 (1671)	535 (1179)	402 (886)
−1.5 m (−59 in)	446 (983)	446 (983)	446 (983)	-	-	-	-	-	-	-	-	-	386 (851)	386 (851)	386 (851)

Canopy, telescopic travel gear and VDS (long stick)

A / B	max			3.5 m (11'-6")			3.0 m (9'-10")			2.5 m (98 in)			2.0 m (79 in)		
2.5 m (98 in)	341 (752)	288 (635)	216 (477)	-	-	-	325 (717)	325 (717)	254 (560)	-	-	-	-	-	-
2.0 m (79 in)	346 (763)	253 (558)	187 (412)	-	-	-	338 (745)	329 (725)	250 (551)	341 (752)	341 752()	341 (752)	-	-	-
1.0 m (39 in)	362 (798)	224 (494)	162 (357)	375 (827)	246 (542)	180 (397)	420 (926)	311 (686)	232 (511)	502 (1107)	407 (897)	308 (679)	675 (1488)	564 (1243)	432 (952)
0.0 m (0.0 in)	385 (849)	230 (507)	165 (364)	400 (882)	238 (525)	172 (379)	336 (741)	295 (650)	216 (476)	475 (1047)	380 (838)	281 (619)	872 (1922)	521 (1149)	388 (855)
−1.0 m (−39 in)	411 (906)	284 (626)	207 (456)	-	-	-	437 (963)	294 (648)	215 (474)	586 (1292)	377 (831)	277 (611)	794 (1750)	520 (1146)	387 (853)
−1.5 m (−59 in)	419 (924)	365 (805)	271 (597)	-	-	-	-	-	-	443 (977)	385 (849)	286 (631)	648 (1429)	530 (1168)	397 (875)

https://truckmanualshub.com/

Lift capacity table ET 24

Cab and standard travel gear (short stick)

A / B	max			3.5 m (11'-6")			3.0 m (9'-10")			2.5 m (98 in)			2.0 m (79 in)		
2.5 m (98 in)	552 (1217)	440 (970)	356 (785)	-	-	-	547 (1206)	449 (990)	364 (802)	513 (1131)	513 (1131)	500 (1102)	-	-	-
2.0 m (79 in)	557 (1228)	383 (844)	306 (675)	-	-	-	552 (1217)	447 (985)	362 (798)	569 (1254)	569 (1254)	490 (1080)	-	-	-
1.0 m (39 in)	580 (1279)	339 (747)	267 (589)	584 (1287)	343 (756)	271 (597)	657 (1448)	429 (946)	344 (758)	794 (1750)	558 (1230)	454 (1001)	1088 (2399)	770 (1698)	638 (1407)
0.0 m (0.0 in)	615 (1356)	351 (774)	276 (608)	-	-	-	730 (1609)	415 (915)	329 (725)	932 (2055)	533 (1175)	428 (944)	1285 (2833)	735 (1620)	600 (1323)
−1.0 m (−39 in)	649 (1431)	450 (992)	358 (789)	-	-	-	-	-	-	815 (1797)	534 (1177)	429 (946)	1098 (2421)	739 (1629)	605 (1334)
−1.5 m (−59 in)	646 (1424)	618 (1362)	504 (1111)	-	-	-	-	-	-	-	-	-	819 (1806)	754 (1662)	621 (1369)

Cab and standard travel gear (long stick)

A / B	max			3.5 m (11'-6")			3.0 m (9'-10")			2.5 m (98 in)			2.0 m (79 in)		
2.5 m (98 in)	499 (1100)	392 (864)	314 (692)	-	-	-	533 (1175)	439 (968)	354 (780)	-	-	-	-	-	-
2.0 m (79 in)	507 (1118)	346 (763)	274 (604)	-	-	-	536 (1182)	437 (963)	352 (776)	541 (1193)	541 (1193)	482 (1063)	-	-	-
1.0 m (39 in)	532 (1173)	309 (681)	241 (531)	572 (1261)	332 (732)	260 (573)	627 (1382)	422 (930)	336 (741)	794 (1750)	534 (1177)	429 (946)	980 (2161)	775 (1709)	643 (1418)
0.0 m (0.0 in)	566 (1248)	318 (701)	247 (545)	574 (1265)	327 (721)	255 (562)	714 (1574)	406 (895)	320 (705)	910 (2006)	526 (1160)	421 (928)	1272 (2804)	727 (1603)	593 (1307)
−1.0 m (−39 in)	605 (1334)	393 (866)	309 (681)	-	-	-	618 (1362)	406 (895)	320 (705)	855 (1885)	521 (1149)	416 (917)	1147 (2529)	727 (1603)	592 (1305)
−1.5 m (−59 in)	618 (1362)	504 (1111)	404 (891)	-	-	-	-	-	-	664 (1464)	531 (1171)	427 (941)	943 (2079)	737 (1625)	603 (1329)

https://truckmanualshub.com/

Cab, standard travel gear and VDS (short stick)

A / B	max			3.5 m (11'-6")			3.0 m (9'-10")			2.5 m (98 in)			2.0 m (79 in)		
2.5 m (98 in)	552 (1217)	430 (948)	344 (758)	-	-	-	547 (1206)	440 (970)	352 (776)	513 (1131)	513 (1131)	484 (1067)	-	-	-
2.0 m (79 in)	557 (1228)	374 (825)	295 (650)	-	-	-	552 (1217)	438 (966)	350 (772)	569 (1254)	569 (1254)	474 (1045)	-	-	-
1.0 m (39 in)	580 (1279)	331 (730)	257 (567)	584 (1287)	335 (739)	261 (575)	657 (1448)	420 (926)	332 (732)	794 (1750)	546 (1204)	438 (966)	1088 (2399)	754 (1662)	617 (1360)
0.0 m (0.0 in)	615 (1356)	343 (756)	265 (584)	-	-	-	730 (1609)	405 (893)	316 (697)	932 (2055)	521 (1149)	412 (908)	1285 (2833)	718 (1583)	579 (1276)
−1.0 m (−39 in)	649 (1431)	439 (968)	345 (761)	-	-	-	-	-	-	815 (1797)	522 (1151)	413 (911)	1098 (2421)	723 (1594)	584 (1287)
−1.5 m (−59 in)	646 (1424)	605 (1334)	486 (1071)	-	-	-	-	-	-	-	-	-	819 (1806)	738 (1627)	600 (1323)

Cab, standard travel gear and VDS (long stick)

A / B	max			3.5 m (11'-6")			3.0 m (9'-10")			2.5 m (98 in)			2.0 m (79 in)		
2.5 m (98 in)	499 (1100)	383 (844)	303 (668)	-	-	-	533 (1175)	429 (946)	342 (754)	-	-	-	-	-	-
2.0 m (79 in)	507 (1118)	338 (745)	264 (582)	-	-	-	536 (1182)	428 (944)	340 (750)	541 (1193)	541 (1193)	466 (1027)	-	-	-
1.0 m (39 in)	532 (1173)	302 (666)	232 (511)	572 (1261)	324 (714)	250 (551)	627 (1382)	412 (908)	324 (714)	794 (1750)	522 (1151)	414 (913)	980 (2161)	758 (1671)	622 (1371)
0.0 m (0.0 in)	566 (1248)	310 (683)	238 (525)	574 (1265)	319 (703)	244 (538)	714 (1574)	396 (873)	308 (679)	910 (2006)	514 (1133)	405 (893)	1272 (2804)	711 (1567)	572 (1261)
−1.0 m (−39 in)	605 (1334)	384 (847)	298 (657)	-	-	-	618 (1362)	397 (875)	308 (679)	855 (1885)	509 (1122)	401 (884)	1147 (2529)	710 (1565)	571 (1259)
−1.5 m (−59 in)	618 (1362)	493 (1087)	389 (858)	-	-	-	-	-	-	664 (1464)	519 (1144)	411 (906)	943 (2079)	720 (1587)	582 (1283)

https://truckmanualshub.com/

Canopy and standard travel gear (short stick)

A / B	max			3.5 m (11'-6")			3.0 m (9'-10")			2.5 m (98 in)			2.0 m (79 in)		
2.5 m (98 in)	552 (1217)	412 (908)	352 (776)	-	-	-	547 (1206)	421 (928)	333 (734)	513 (1131)	513 (1131)	460 (1014)	-	-	-
2.0 m (79 in)	557 (1228)	358 (789)	278 (613)	-	-	-	552 (1217)	419 (924)	331 (730)	569 (1254)	557 (1228)	450 (992)	-	-	-
1.0 m (39 in)	580 (1279)	316 (697)	241 (531)	584 (1287)	320 (705)	245 (540)	657 (1448)	401 (884)	312 (688)	794 (1750)	522 (1151)	413 (911)	1088 (2399)	722 (1592)	583 (1285)
0.0 m (0.0 in)	615 (1356)	327 (721)	249 (549)	-	-	-	730 (1609)	387 (853)	297 (655)	932 (2055)	498 (1098)	388 (855)	1285 (2833)	686 (1512)	545 (1202)
−1.0 m (−39 in)	649 (1431)	420 (926)	325 (717)	-	-	-	-	-	-	815 (1797)	499 (1100)	389 (858)	1098 (2421)	691 (1523)	550 (1213)
−1.5 m (−59 in)	646 (1424)	579 (1276)	458 (1010)	-	-	-	-	-	-	-	-	-	819 (1806)	706 (1556)	566 (1248)

Canopy and standard travel gear (long stick)

A / B	max			3.5 m (11'-6")			3.0 m (9'-10")			2.5 m (98 in)			2.0 m (79 in)		
2.5 m (98 in)	499 (1100)	367 (809)	286 (631)	-	-	-	533 (1175)	411 (906)	323 (712)	-	-	-	-	-	-
2.0 m (79 in)	507 (1118)	323 (712)	248 (547)	-	-	-	536 (1182)	409 (902)	321 (708)	541 (1193)	541 (1193)	442 (974)	-	-	-
1.0 m (39 in)	532 (1173)	288 (635)	217 (478)	572 (1261)	309 (681)	234 (516)	627 (1382)	394 (869)	305 (672)	794 (1750)	498 (1098)	389 (858)	980 (2161)	726 (1601)	588 (1296)
0.0 m (0.0 in)	566 (1248)	296 (653)	222 (489)	574 (1265)	304 (670)	229 (505)	714 (1574)	378 (833)	289 (637)	910 (2006)	490 (1080)	381 (840)	1272 (2804)	679 (1497)	538 (1186)
−1.0 m (−39 in)	605 (1334)	366 (807)	279 (615)	-	-	-	618 (1362)	378 (833)	289 (637)	855 (1885)	486 (1071)	376 (829)	1147 (2529)	678 (1495)	537 (1184)
−1.5 m (−59 in)	618 (1362)	470 (1036)	366 (807)	-	-	-	-	-	-	664 (1464)	496 (1093)	386 (851)	943 (2079)	689 (1519)	548 (1208)

https://truckmanualshub.com/

Canopy, standard travel gear and VDS (short stick)

A / B	max			3.5 m (11'-6")			3.0 m (9'-10")			2.5 m (98 in)			2.0 m (79 in)		
2.5 m (98 in)	552 (1217)	403 (888)	313 (690)	-	-	-	547 (1206)	412 (908)	321 (708)	513 (1131)	513 (1131)	444 (979)	-	-	-
2.0 m (79 in)	557 (1228)	349 (769)	267 (589)	-	-	-	552 (1217)	410 (904)	318 (701)	569 (1254)	545 (1202)	434 (957)	-	-	-
1.0 m (39 in)	580 (1279)	308 (679)	231 (509)	584 (1287)	312 (688)	235 (518)	657 (1448)	392 (864)	300 (661)	794 (1750)	510 (1124)	398 (877)	1088 (2399)	706 (1556)	561 (1237)
0.0 m (0.0 in)	615 (1356)	319 (703)	239 (527)	-	-	-	730 (1609)	377 (831)	285 (628)	932 (2055)	486 (1071)	372 (820)	1285 (2833)	670 (1477)	523 (1153)
−1.0 m (−39 in)	649 (1431)	409 (902)	312 (688)	-	-	-	-	-	-	815 (1797)	487 (1074)	373 (822)	1098 (2421)	674 (1486)	528 (1164)
−1.5 m (−59 in)	646 (1424)	565 (1246)	441 (972)	-	-	-	-	-	-	-	-	-	819 (1806)	690 (1521)	544 (1199)

Canopy, standard travel gear and VDS (long stick)

A / B	max			3.5 m (11'-6")			3.0 m (9'-10")			2.5 m (98 in)			2.0 m (79 in)		
2.5 m (98 in)	499 (1100)	358 (789)	275 (606)	-	-	-	533 (1175)	401 (884)	310 (683)	-	-	-	-	-	-
2.0 m (79 in)	507 (1118)	315 (694)	238 (525)	-	-	-	536 (1182)	400 (882)	308 (679)	541 (1193)	537 (1184)	426 (939)	-	-	-
1.0 m (39 in)	532 (1173)	280 (617)	208 (459)	572 (1261)	301 (664)	224 (494)	627 (1382)	384 (847)	293 (646)	794 (1750)	486 (1071)	374 (825)	980 (2161)	710 (1565)	566 (1248)
0.0 m (0.0 in)	566 (1248)	288 (635)	213 (470)	574 (1265)	296 (653)	219 (483)	714 (1574)	368 (811)	276 (608)	910 (2006)	478 (1054)	365 (805)	1272 (2804)	663 (1462)	516 (1138)
−1.0 m (−39 in)	605 (1334)	357 (787)	267 (589)	-	-	-	618 (1362)	369 (814)	277 (611)	855 (1885)	474 (1045)	361 (796)	1147 (2529)	662 (1459)	516 (1138)
−1.5 m (−59 in)	618 (1362)	459 (1012)	351 (774)	-	-	-	-	-	-	664 (1464)	484 (1067)	371 (818)	943 (2079)	672 (1482)	526 (1160)

https://truckmanualshub.com/

Lift capacity tables VDS (upper carriage tilted)

Boom uphill (15° slope)

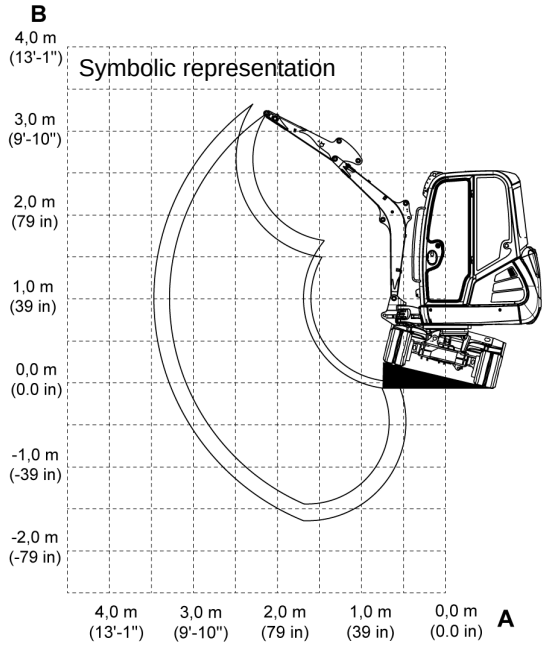

Boom downhill (15° slope)

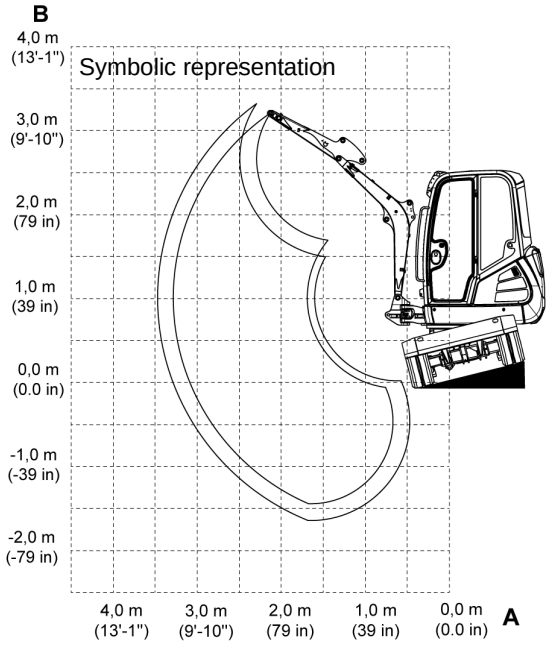

Designation	Explanation
A	Reach from live ring center
B	Load hook height
max	Authorized lift capacity with horizontal boom
	Without the stabilizer blade, 90° to traveling direction
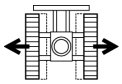	Telescopic travel gear extended

https://truckmanualshub.com/

ET18 – VDS, cab, boom uphill

			3.0 m (9'-10")		2.5 m (98 in)		2.0 m (79 in)		1.5 m (59 in)	
	Short stick	Long stick	Short stick	Long stick	Short stick	Long stick	Short stick	Long stick	Short stick	Long stick
A / B										
2.5 m (98 in)	382 (841)	343 (756)	-	336 (741)	361 (796)	306 (675)	-	-	-	-
2.0 m (79 in)	357 (787)	323 (712)	377 (831)	343 (756)	394 (867)	344 (758)	-	-	-	-
1.0 m (39 in)	322 (710)	394 (868)	365 (805)	362 (798)	471 (1038)	469 (1034)	644 (1420)	645 (1422)	-	-
0.0 m (0.0 in)	347 (765)	313 (690)	358 (789)	351 (774)	456 (1005)	450 (992)	623 (1374)	616 (1358)	974 (2147)	961 (2119)
−1.0 m (−39 in)	466 (1027)	427 (941)	-	-	-	453 (999)	608 (1340)	620 (1366)	866 (1909)	975 (2150)
−1.5 m (−59 in)	-	437 (963)	-	-	-	-	-	-	-	634 (1398)

ET18 – VDS, cab, boom downhill

			3.0 m (9'-10")		2.5 m (98 in)		2.0 m (79 in)		1.5 m (59 in)	
	Short stick	Long stick	Short stick	Long stick	Short stick	Long stick	Short stick	Long stick	Short stick	Long stick
A / B										
2.5 m (98 in)	297 (655)	264 (582)	-	275 (606)	361 (796)	306 (675)	-	-	-	-
2.0 m (79 in)	258 (569)	232 (512)	273 (602)	272 (600)	360 (794)	344 (758)	-	-	-	-
1.0 m (39 in)	231 (509)	209 (460)	262 (578)	258 (569)	337 (743)	334 (736)	455 (1003)	456 (1056)	-	-
0.0 m (0.0 in)	247 (545)	221 (487)	255 (562)	248 (547)	323 (712)	316 (697)	435 (959)	428 (944)	661 (1457)	648 (1428)
−1.0 m (−39 in)	361 (796)	302 (666)	-	-	-	320 (706)	445 (981)	432 (952)	678 (1495)	661 (1457)
−1.5 m (−59 in)	-	437 (963)	-	-	-	-	-	-	-	634 (1398)

https://truckmanualshub.com/

ET18 – VDS, canopy, boom uphill

	max		3.0 m (9'-10")		2.5 m (98 in)		2.0 m (79 in)		1.5 m (59 in)	
	Short stick	Long stick	Short stick	Long stick	Short stick	Long stick	Short stick	Long stick	Short stick	Long stick
A / B										
2.5 m (98 in)	382 (841)	339 (747)	-	336 (741)	361 (796)	306 (675)	-	-	-	-
2.0 m (79 in)	332 (732)	300 (661)	351 (774)	343 (756)	394 (869)	344 (758)	-	-	-	-
1.0 m (39 in)	299 (690)	372 (820)	339 (747)	336 (741)	438 (966)	436 (961)	600 (1323)	601 (1325)	-	-
0.0 m (0.0 in)	322 (710)	290 (639)	332 (732)	325 (718)	423 (933)	417 (919)	579 (1277)	572 (1261)	906 (1997)	893 (1969)
−1.0 m (−39 in)	466 (1027)	396 (873)	-	-	-	421 (928)	589 (1299)	576 (1270)	866 (1909)	907 (2000)
−1.5 m (−59 in)	-	437 (963)	-	-	-	-	-	-	-	634 (1398)

ET18 – VDS, canopy, boom downhill

	max		3.0 m (9'-10")		2.5 m (98 in)		2.0 m (79 in)		1.5 m (59 in)	
	Short stick	Long stick	Short stick	Long stick	Short stick	Long stick	Short stick	Long stick	Short stick	Long stick
A / B										
2.5 m (98 in)	274 (604)	243 (536)	-	253 (558)	340 (750)	306 (675)	-	-	-	-
2.0 m (79 in)	237 (523)	213 (470)	251 (553)	250 (551)	333 (734)	333 (734)	-	-	-	-
1.0 m (39 in)	211 (465)	191 (421)	240 (529)	237 (522)	309 (681)	307 (677)	419 (924)	420 (926)	-	-
0.0 m (0.0 in)	226 (498)	202 (445)	233 (514)	226 (498)	296 (653)	289 (637)	399 (880)	392 (864)	608 (1340)	595 (1312)
−1.0 m (−39 in)	332 (732)	277 (611)	-	-	-	293 (646)	409 (902)	396 (873)	624 (1376)	608 (1340)
−1.5 m (−59 in)	-	435 (959)	-	-	-	-	-	-	-	628 (1385)

https://truckmanualshub.com/

ET20 – VDS, cab, boom uphill

	max		3.5 m (11'-6")		3.0 m (9'-10")		2.5 m (98 in)		2.0 m (79 in)	
	Short stick	Long stick	Short stick	Long stick	Short stick	Long stick	Short stick	Long stick	Short stick	Long stick
A / B										
2.5 m (98 in)	328 (723)	293 (646)	-	-	354 (780)	326 (719)	364 (803)	310 (683)	-	-
2.0 m (79 in)	291 (642)	263 580)	-	271 (598)	350 (772)	348 (767)	415 (915)	362 (798)	467 (1030)	-
1.0 m (39 in)	264 (582)	239 (527)	267 (589)	262 (578)	334 (736)	329 (725)	431 (950)	427 (941)	588 (1296)	588 (1296)
0.0 m (0.0 in)	280 (617)	251 (553)	-	255 (562)	323 (712)	315 (695)	413 (911)	404 (891)	565 (1246)	554 (1221)
−1.0 m (−39 in)	379 (836)	325 (717)	-	-	-	-	418 (922)	405 (893)	573 (1263)	557 (1128)
−1.5 m (−59 in)	427 (941)	417 (919)	-	-	-	-	-	-	438 (966)	570 (1257)

ET20 – VDS, cab, boom downhill

	max		3.5 m (11'-6")		3.0 m (9'-10")		2.5 m (98 in)		2.0 m (79 in)	
	Short stick	Long stick	Short stick	Long stick	Short stick	Long stick	Short stick	Long stick	Short stick	Long stick
A / B										
2.5 m (98 in)	261 (575)	232 (512)	-	-	282 (622)	282 (622)	364 (803)	310 (683)	-	-
2.0 m (79 in)	231 (509)	207 (456)	-	214 (471)	278 (613)	276 (609)	368 (811)	362 (798)	467 (1030)	-
1.0 m (39 in)	208 (459)	187 (412)	210 (463)	205 (452)	263 (560)	258 (569)	338 (745)	334 (736)	455 (1003)	454 (1001)
0.0 m (0.0 in)	220 (485)	195 (430)	-	198 (437)	252 (556)	244 (538)	321 (708)	312 (688)	433 (955)	423 (933)
−1.0 m (−39 in)	297 (655)	253 (558)	-	-	-	-	326 (719)	313 (690)	441 (972)	426 (939)
−1.5 m (−59 in)	427 (941)	345 (761)	-	-	-	-	-	-	438 (966)	439 (968)

https://truckmanualshub.com/

ET20 – VDS, canopy, boom uphill

	max		3.5 m (11'-6")		3.0 m (9'-10")		2.5 m (98 in)		2.0 m (79 in)	
	Short stick	Long stick	Short stick	Long stick	Short stick	Long stick	Short stick	Long stick	Short stick	Long stick
A / B										
2.5 m (98 in)	304 (670)	271 (598)	-	-	328 (723)	326 (719)	364 (803)	310 (683)	-	-
2.0 m (79 in)	269 (593)	242 (534)	-	250 (551)	324 (714)	322 (710)	415 (915)	362 (798)	467 (1030)	-
1.0 m (39 in)	243 (536)	219 (483)	246 (542)	241 (531)	308 (679)	303 (668)	398 (877)	395 (871)	544 (1199)	545 (1202)
0.0 m (0.0 in)	258 (569)	231 (509)	-	234 (516)	297 (655)	289 (637)	381 (840)	372 (820)	521 (1148)	511 (1127)
−1.0 m (−39 in)	350 (772)	299 (659)	-	-	-	-	386 (851)	373 (822)	530 (1169)	514 (1133)
−1.5 m (−59 in)	427 (941)	410 (904)	-	-	-	-	-	-	438 (966)	528 (1164)

ET20 – VDS, canopy, boom downhill

	max		3.5 m (11'-6")		3.0 m (9'-10")		2.5 m (98 in)		2.0 m (79 in)	
	Short stick	Long stick	Short stick	Long stick	Short stick	Long stick	Short stick	Long stick	Short stick	Long stick
A / B										
2.5 m (98 in)	241 (531)	213 (470)	-	-	261 (575)	260 (573)	351 (774)	310 (683)	-	-
2.0 m (79 in)	212 (467)	189 (417)	-	196 (432)	257 (567)	255 (562)	341 (752)	341 (752)	467 (1029)	-
1.0 m (39 in)	190 (419)	170 (375)	193 (426)	187 (412)	241 (531)	237 (523)	311 (686)	308 (679)	419 (924)	419 (924)
0.0 m (0.0 in)	201 (443)	178 (392)	-	180 (397)	231 (509)	223 (492)	294 (648)	286 (631)	398 (877)	387 (853)
−1.0 m (−39 in)	273 (602)	231 (509)	-	-	-	-	299 (659)	286 (631)	406 (895)	390 (860)
−1.5 m (−59 in)	414 (913)	317 (699)	-	-	-	-	-	-	423 (933)	403 (889)

https://truckmanualshub.com/

ET24 – VDS, cab, boom uphill

	max		3.5 m (11'-6")		3.0 m (9'-10")		2.5 m (98 in)		2.0 m (79 in)	
	Short stick	Long stick	Short stick	Long stick	Short stick	Long stick	Short stick	Long stick	Short stick	Long stick
A / B										
2.5 m (98 in)	410 (904)	368 (811)	-	-	453 (999)	453 (999)	535 (1180)	459 (1012)	-	-
2.0 m (79 in)	368 (811)	335 (739)	-	350 (772)	447 (986)	446 (983)	588 (1296)	546 (1203)	713 (1572)	-
1.0 m (39 in)	341 (752)	311 (686)	344 (758)	339 (747)	428 (944)	424 (940)	553 (1219)	550 (1213)	758 (1671)	759 (1673)
0.0 m (0.0 in)	368 (811)	332 (732)	-	332 (732)	417 (919)	409 (902)	535 (1180)	526 (1160)	736 (1623)	725 (1598)
−1.0 m (−39 in)	518 (1142)	442 (974)	-	-	-	-	544 (1199)	529 (1166)	748 (1649)	732 (1614)
−1.5 m (−59 in)	609 (1343)	614 (1354)	-	-	-	-	-	-	485 (1069)	750 (1654)

ET24 – VDS, cab, boom downhill

	max		3.5 m (11'-6")		3.0 m (9'-10")		2.5 m (98 in)		2.0 m (79 in)	
	Short stick	Long stick	Short stick	Long stick	Short stick	Long stick	Short stick	Long stick	Short stick	Long stick
A / B										
2.5 m (98 in)	309 (681)	276 (609)	-	-	343 (756)	342 (753)	457 (1008)	459 (1012)	-	-
2.0 m (79 in)	276 (609)	249 (549)	-	261 (575)	337 (743)	335 (739)	444 (979)	445 (981)	622 (1460)	-
1.0 m (39 in)	253 (558)	229 (505)	256 (564)	250 (551)	319 (703)	314 (692)	410 (904)	407 (897)	556 (1226)	556 (1226)
0.0 m (0.0 in)	273 (602)	243 (536)	-	244 (538)	308 (679)	300 (661)	393 (866)	384 (847)	535 (1179)	524 (1155)
−1.0 m (−39 in)	384 (847)	325 (717)	-	-	-	-	402 (886)	387 (853)	546 (1204)	530 (1169)
−1.5 m (−59 in)	609 (1343)	468 (1032)	-	-	-	-	-	-	485 (1069)	547 (1206)

https://truckmanualshub.com/

ET24 – VDS, canopy, boom uphill

	max		3.5 m (11'-6")		3.0 m (9'-10")		2.5 m (98 in)		2.0 m (79 in)	
	Short stick	Long stick	Short stick	Long stick	Short stick	Long stick	Short stick	Long stick	Short stick	Long stick
A / B										
2.5 m (98 in)	384 (847)	345 (761)	-	-	426 (939)	426 (939)	535 (1180)	459 (1011)	-	-
2.0 m (79 in)	345 (761)	313 (690)	-	327 (721)	420 (926)	418 (922)	554 (1221)	546 (1204)	713 (1572)	-
1.0 m (39 in)	318 (701)	290 (639)	322 (710)	317 (699)	401 (884)	397 (875)	518 (1142)	515 (1135)	711 (1568)	712 (1570)
0.0 m (0.0 in)	344 (758)	309 (681)	-	310 (683)	390 (860)	382 (842)	500 (1102)	491 (1083)	689 (1519)	678 (1495)
−1.0 m (−39 in)	486 (1072)	413 (911)	-	-	-	-	509 (1122)	495 (1091)	701 (1545)	685 (1510)
−1.5 m (−59 in)	609 (1343)	596 (1314)	-	-	-	-	-	-	485 (1069)	703 (1550)

ET24 – VDS, canopy, boom downhill

	max		3.5 m (11'-6")		3.0 m (9'-10")		2.5 m (98 in)		2.0 m (79 in)	
	Short stick	Long stick	Short stick	Long stick	Short stick	Long stick	Short stick	Long stick	Short stick	Long stick
A / B										
2.5 m (98 in)	287 (633)	255 (562)	-	-	319 (703)	319 (703)	428 (944)	429 (946)	-	-
2.0 m (79 in)	256 (564)	230 (507)	-	241 (531)	314 (692)	312 (688)	415 (915)	416 (917)	583 (1285)	-
1.0 m (39 in)	233 (514)	210 (463)	236 (520)	231 (509)	295 (650)	291 (642)	381 (840)	378 (833)	516 (1138)	516 (1138)
0.0 m (0.0 in)	252 (556)	224 (494)	-	224 (494)	285 (628)	276 (609)	363 (800)	355 (783)	496 (1094)	485 (1069)
−1.0 m (−39 in)	356 (785)	300 (661)	-	-	-	-	372 (820)	358 (789)	507 (1118)	491 (1083)
−1.5 m (−59 in)	597 (1316)	434 (957)	-	-	-	-	-	-	485 (1069)	508 (1120)

https://truckmanualshub.com/

Safety instructions – stability table

The values of the stability table apply to lifting gear applications.

DANGER

Crushing hazard due to tipping over of the machine.

Causes severe crushing or injury resulting in death.

- ► The authorized lift capacity specified in the stability table must never be exceeded.
- ► Get informed on the lift capacity of the attachment before using it.
- ► If an attachment with load hook or joint rod is installed, the weight of the attachment must be subtracted from the lift capacity specified in the table.
- ► Use the machine for lifting gear applications only if the mandatory lifting gear (load hook, for example) and safety equipment (optical and acoustic warning devices (safe load indicator), stability table, hose burst valve, for example) is installed, functional and enabled.
- ► Do not tilt the upper carriage (Vertical Digging System option).
- ► Do not retract the telescopic travel gear (option).
- ► Observe chapter **Safety/Safety instructions regarding lifting gear applications**.

Notice

If the specified lift capacity is exceeded, possible damage to property due to tipping over of the machine.

- ► The authorized lift capacity specified in the stability table must never be exceeded.

Information

The indications are only approximate values. Attachments, uneven ground and soft or bad ground conditions affect lift capacity. The operator must take these influences into account.

https://truckmanualshub.com/

Legend

Designation	Explanation
X	Reach from live ring center
Z	Load hook height in the respective range
max	Authorized lift capacity with horizontal boom
L	Stick short/long

Authorized lift capacity applies to entire slewing range of 360°.

All table indications in kg (lbs) and horizontal position on firm and level ground without bucket or exchangeable attachment.

The machine's lift capacity is restricted by the settings of the pressure limiting valves and the hydraulic system's stabilizing features.

Neither 75 % of the static tilt load nor 87 % of the hydraulic lift capacity is exceeded.

Calculation basis: according to ISO 10567. Setting pressure on boom hydraulic cylinder 22500 kPa (3263 psi).

Lift capacities apply to machines under the following conditions:

- Lubricants and engine/machine fluids at the mandatory levels
- Full fuel tank
- Cab or canopy
- Machine at operating temperature
- Operator weight 75 kg (165 lbs)

https://truckmanualshub.com/

Stability tables ET 18

Cab/canopy and standard travel gear

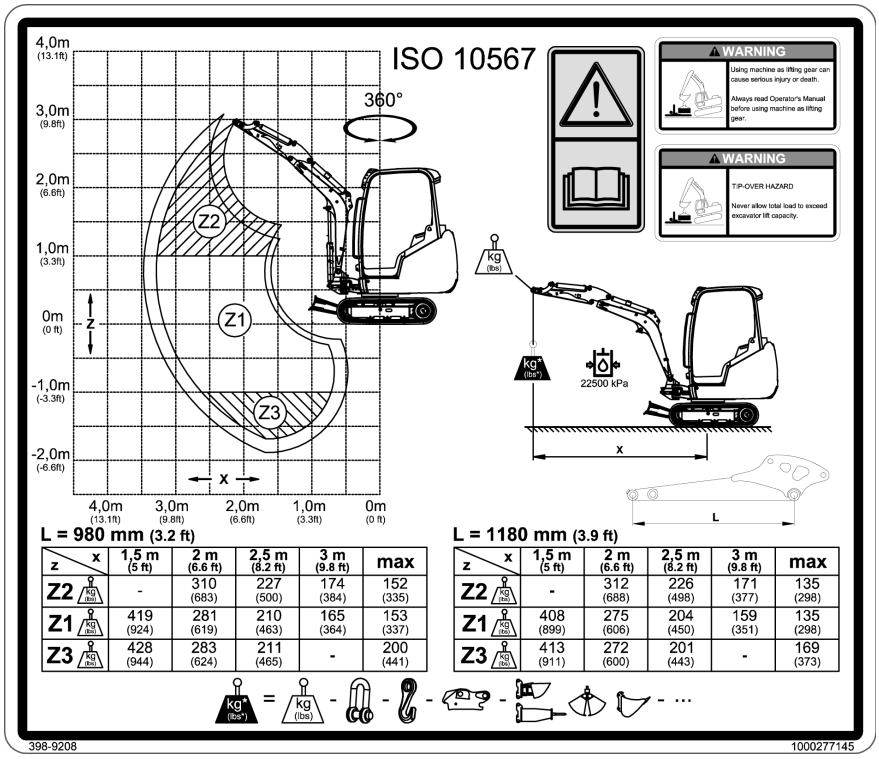

L = 980 mm (3.2 ft)

z \ x	1,5 m (5 ft)	2 m (6.6 ft)	2,5 m (8.2 ft)	3 m (9.8 ft)	max
Z2 kg (lbs)	-	310 (683)	227 (500)	174 (384)	152 (335)
Z1 kg (lbs)	419 (924)	281 (619)	210 (463)	165 (364)	153 (337)
Z3 kg (lbs)	428 (944)	283 (624)	211 (465)	-	200 (441)

L = 1180 mm (3.9 ft)

z \ x	1,5 m (5 ft)	2 m (6.6 ft)	2,5 m (8.2 ft)	3 m (9.8 ft)	max
Z2 kg (lbs)	-	312 (688)	226 (498)	171 (377)	135 (298)
Z1 kg (lbs)	408 (899)	275 (606)	204 (450)	159 (351)	135 (298)
Z3 kg (lbs)	413 (911)	272 (600)	201 (443)	-	169 (373)

kg* (lbs*) = kg (lbs) - - - - ...

Cab/canopy and telescopic travel gear

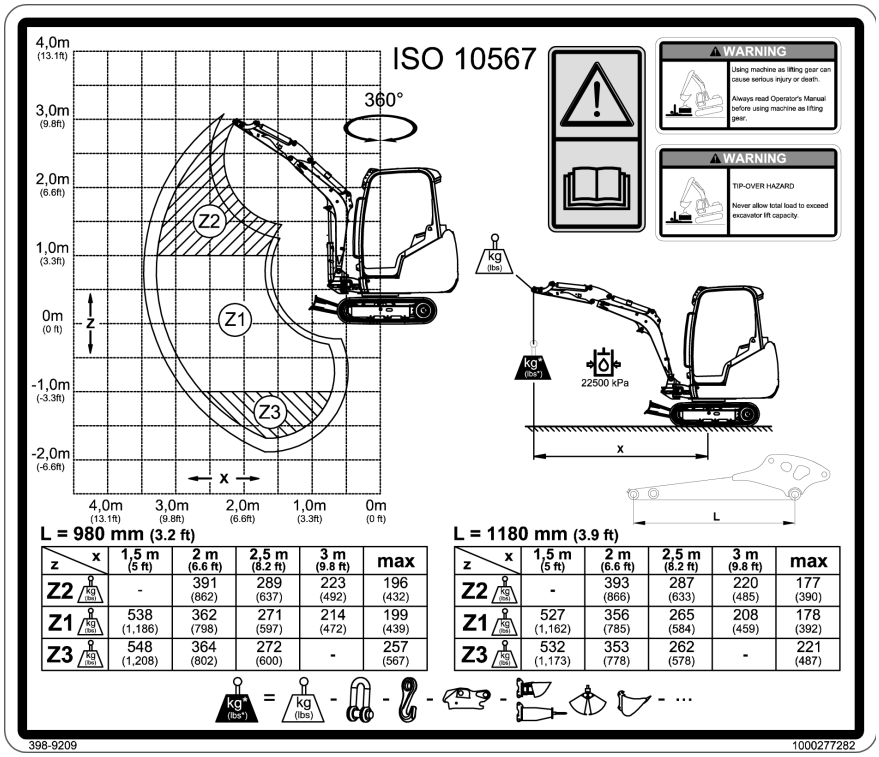

L = 980 mm (3.2 ft)

z \ x	1,5 m (5 ft)	2 m (6.6 ft)	2,5 m (8.2 ft)	3 m (9.8 ft)	max
Z2 kg (lbs)	-	391 (862)	289 (637)	223 (492)	196 (432)
Z1 kg (lbs)	538 (1,186)	362 (798)	271 (597)	214 (472)	199 (439)
Z3 kg (lbs)	548 (1,208)	364 (802)	272 (600)	-	257 (567)

L = 1180 mm (3.9 ft)

z \ x	1,5 m (5 ft)	2 m (6.6 ft)	2,5 m (8.2 ft)	3 m (9.8 ft)	max
Z2 kg (lbs)	-	393 (866)	287 (633)	220 (485)	177 (390)
Z1 kg (lbs)	527 (1,162)	356 (785)	265 (584)	208 (459)	178 (392)
Z3 kg (lbs)	532 (1,173)	353 (778)	262 (578)	-	221 (487)

kg* (lbs*) = kg (lbs) - - - - ...

https://truckmanualshub.com/

Cab/canopy, telescopic travel gear and VDS

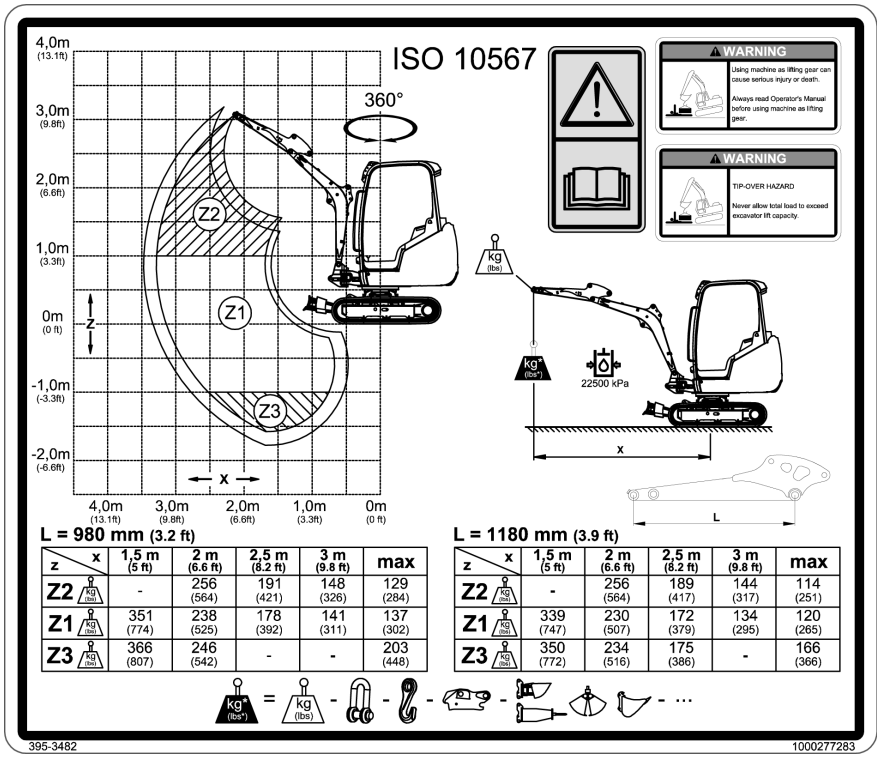

L = 980 mm (3.2 ft)

z \ x	1,5 m (5 ft)	2 m (6.6 ft)	2,5 m (8.2 ft)	3 m (9.8 ft)	max
Z2	-	256 (564)	191 (421)	148 (326)	129 (284)
Z1	351 (774)	238 (525)	178 (392)	141 (311)	137 (302)
Z3	366 (807)	246 (542)	-	-	203 (448)

L = 1180 mm (3.9 ft)

z \ x	1,5 m (5 ft)	2 m (6.6 ft)	2,5 m (8.2 ft)	3 m (9.8 ft)	max
Z2	-	256 (564)	189 (417)	144 (317)	114 (251)
Z1	339 (747)	230 (507)	172 (379)	134 (295)	120 (265)
Z3	350 (772)	234 (516)	175 (386)	-	166 (366)

Stability tables ET 20

Cab/canopy and telescopic travel gear

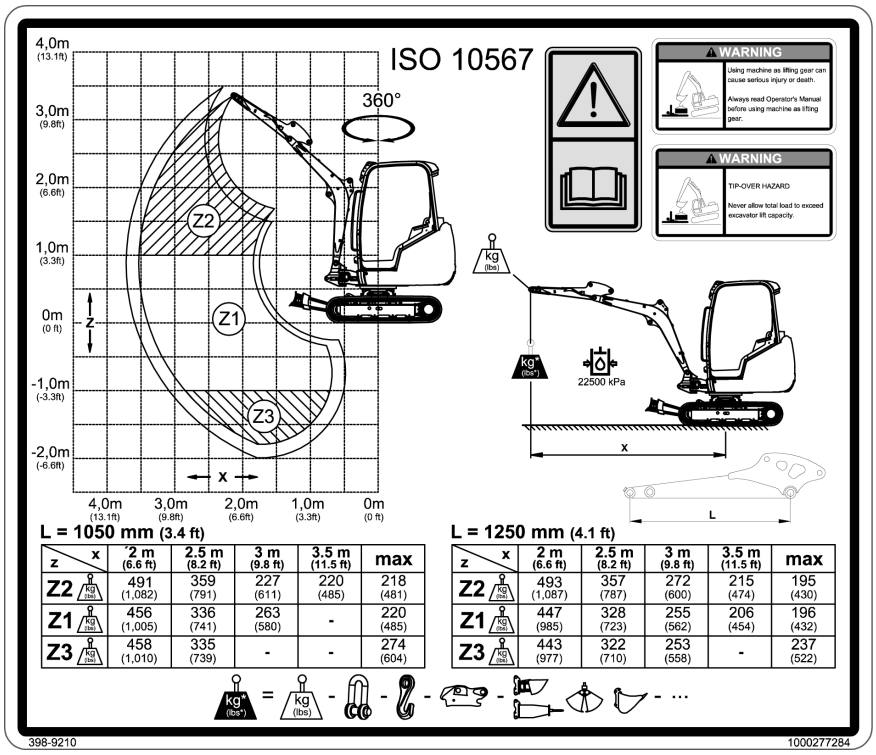

L = 1050 mm (3.4 ft)

z \ x	´2 m (6.6 ft)	2.5 m (8.2 ft)	3 m (9.8 ft)	3.5 m (11.5 ft)	max
Z2	491 (1,082)	359 (791)	227 (611)	220 (485)	218 (481)
Z1	456 (1,005)	336 (741)	263 (580)	-	220 (485)
Z3	458 (1,010)	335 (739)	-	-	274 (604)

L = 1250 mm (4.1 ft)

z \ x	2 m (6.6 ft)	2.5 m (8.2 ft)	3 m (9.8 ft)	3.5 m (11.5 ft)	max
Z2	493 (1,087)	357 (787)	272 (600)	215 (474)	195 (430)
Z1	447 (985)	328 (723)	255 (562)	206 (454)	196 (432)
Z3	443 (977)	322 (710)	253 (558)	-	237 (522)

https://truckmanualshub.com/

Cab/canopy, telescopic travel gear and VDS

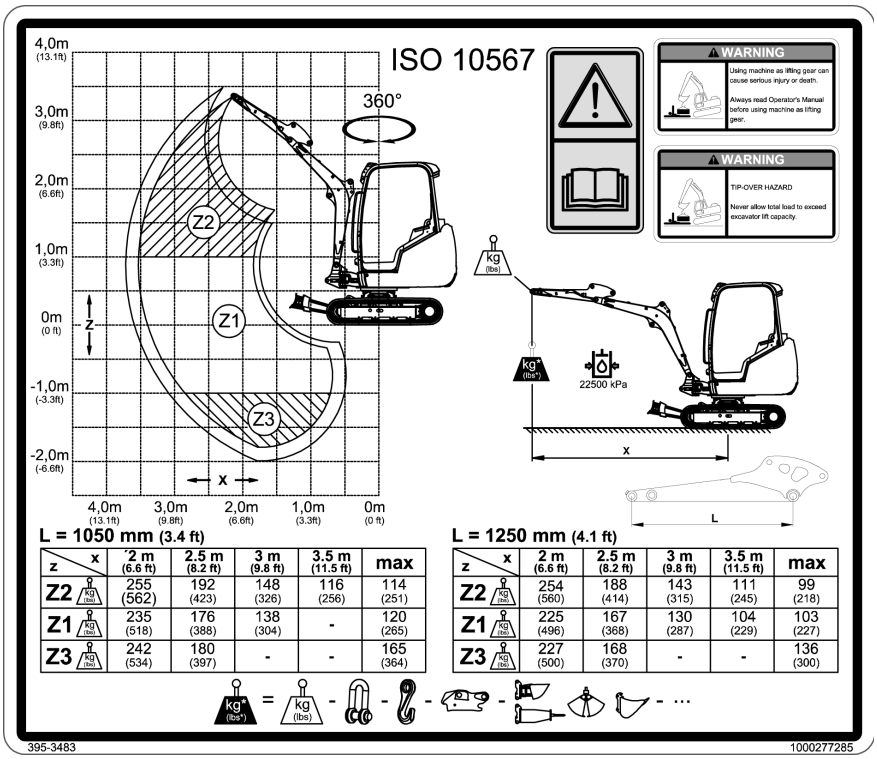

L = 1050 mm (3.4 ft)

z \ x	2 m (6.6 ft)	2.5 m (8.2 ft)	3 m (9.8 ft)	3.5 m (11.5 ft)	max
Z2	255 (562)	192 (423)	148 (326)	116 (256)	114 (251)
Z1	235 (518)	176 (388)	138 (304)	-	120 (265)
Z3	242 (534)	180 (397)	-	-	165 (364)

L = 1250 mm (4.1 ft)

z \ x	2 m (6.6 ft)	2.5 m (8.2 ft)	3 m (9.8 ft)	3.5 m (11.5 ft)	max
Z2	254 (560)	188 (414)	143 (315)	111 (245)	99 (218)
Z1	225 (496)	167 (368)	130 (287)	104 (229)	103 (227)
Z3	227 (500)	168 (370)	-	-	136 (300)

Stability tables ET 24

Cab/canopy and standard travel gear

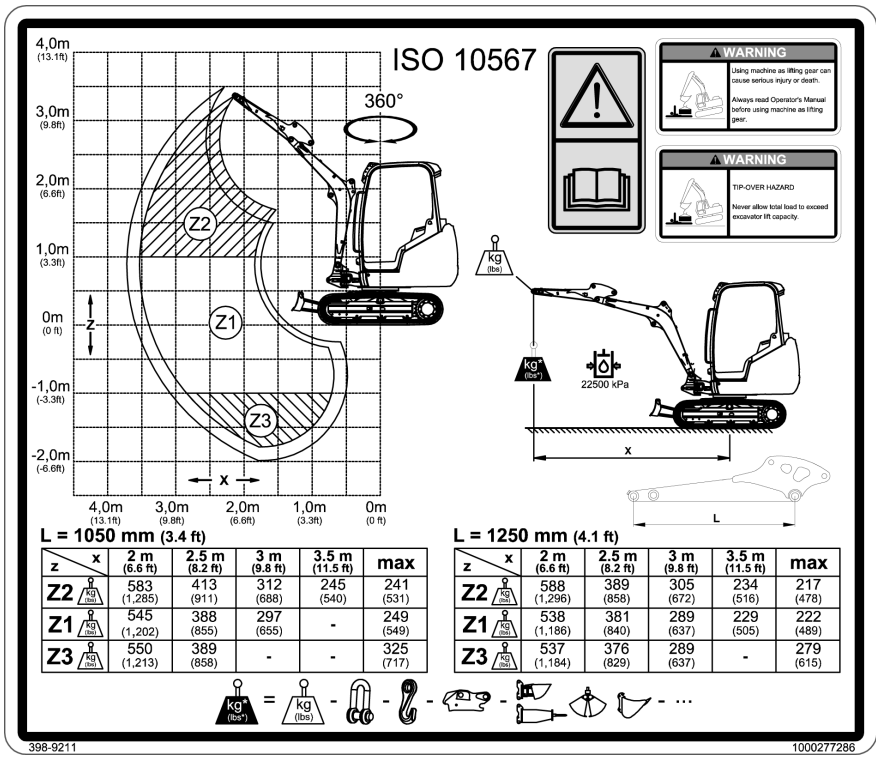

L = 1050 mm (3.4 ft)

z \ x	2 m (6.6 ft)	2.5 m (8.2 ft)	3 m (9.8 ft)	3.5 m (11.5 ft)	max
Z2	583 (1,285)	413 (911)	312 (688)	245 (540)	241 (531)
Z1	545 (1,202)	388 (855)	297 (655)	-	249 (549)
Z3	550 (1,213)	389 (858)	-	-	325 (717)

L = 1250 mm (4.1 ft)

z \ x	2 m (6.6 ft)	2.5 m (8.2 ft)	3 m (9.8 ft)	3.5 m (11.5 ft)	max
Z2	588 (1,296)	389 (858)	305 (672)	234 (516)	217 (478)
Z1	538 (1,186)	381 (840)	289 (637)	229 (505)	222 (489)
Z3	537 (1,184)	376 (829)	289 (637)	-	279 (615)

https://truckmanualshub.com/

Cab/canopy, standard travel gear and VDS

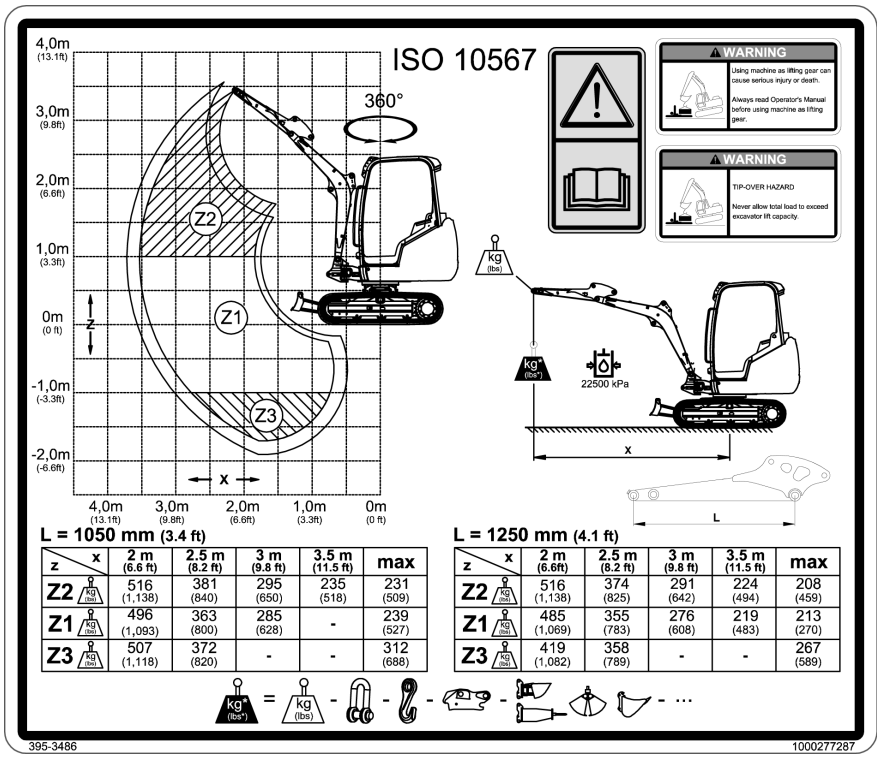

L = 1050 mm (3.4 ft)

z \ x	2 m (6.6 ft)	2.5 m (8.2 ft)	3 m (9.8 ft)	3.5 m (11.5 ft)	max
Z2 kg (lbs)	516 (1,138)	381 (840)	295 (650)	235 (518)	231 (509)
Z1 kg (lbs)	496 (1,093)	363 (800)	285 (628)	-	239 (527)
Z3 kg (lbs)	507 (1,118)	372 (820)	-	-	312 (688)

L = 1250 mm (4.1 ft)

z \ x	2 m (6.6ft)	2.5 m (8.2 ft)	3 m (9.8 ft)	3.5 m (11.5 ft)	max
Z2 kg (lbs)	516 (1,138)	374 (825)	291 (642)	224 (494)	208 (459)
Z1 kg (lbs)	485 (1,069)	355 (783)	276 (608)	219 (483)	213 (270)
Z3 kg (lbs)	419 (1,082)	358 (789)	-	-	267 (589)

kg* (lbs*) = kg (lbs) - ...

https://truckmanualshub.com/

Dimensions

Overview ET18, ET20, ET24

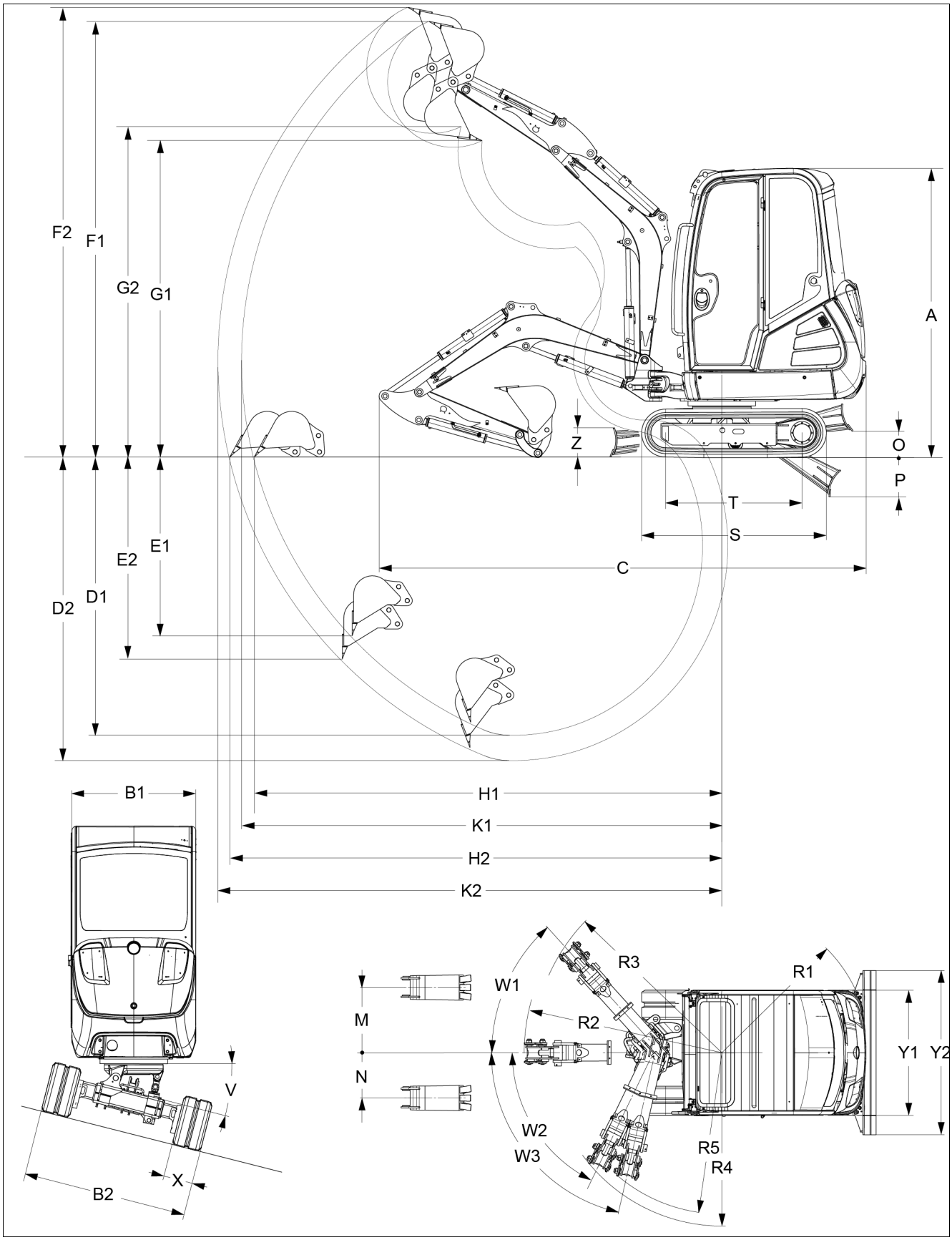

https://truckmanualshub.com/

	ET18	Standard / telescopic travel gear	Telescopic travel gear + VDS
A	Height	2290 mm (7'-6")	2390 mm (7'-10")
B1	Upper carriage width	990 mm (39 in)	
B2	Width with retracted travel gear	990 mm (39 in)	
B2	Width with extended travel gear (telescopic travel gear only)	1300 mm (51 in)	
C	Transport length	3855 mm (12'-8")	3800 mm (12'-6")
D1	Max. digging depth (short stick)	2200 mm (86 in)	2100 mm (83 in)
D2	Max. digging depth (long stick)	2400 mm (94 in)	2300 mm (91 in)
E1	Max. vertical digging depth (short stick)	1420 mm (56 in)	1320 mm (52 in)
E2	Max. vertical digging depth (long stick)	1610 mm (63 in)	1500 mm (59 in)
F1	Max. digging height (short stick)	3450 mm (11'-4")	3550 mm (11'-8")
F2	Max. digging height (long stick)	3560 mm (11'-8")	3660 mm (12'-0")
G1	Max. dump height (short stick)	2500 mm (98 in)	2610 mm (8'-7")
G2	Max. dump height (long stick)	2620 mm (8'-7")	2720 mm (8'-11")
H1	Max. reach at ground level (short stick)	3700 mm (12'-2")	3670 mm (12'-0")
H2	Max. reach at ground level (long stick)	3900 mm (12'-10")	3870 mm (12'-8")
K1	Max. digging radius (short stick)	3800 mm (12'-6")	
K2	Max. digging radius (long stick)	4000 mm (13'-1")	
M	Max. boom displacement to bucket center (right-hand side)	520 mm (20 in)	
N	Max. boom displacement to bucket center (left-hand side)	360 mm (14 in)	
O	Max. lift height of stabilizer blade over ground (short)	200 mm (8 in)	270 mm (11 in)
O	Max. lift height of stabilizer blade over ground (long)	300 mm (12 in)	360 mm (14 in)
P	Max. scraping depth of stabilizer blade below ground surface (short)	320 mm (13 in)	260 mm (10 in)
P	Max. scraping depth of stabilizer blade below ground surface (long)	380 mm (15 in)	310 mm (12 in)
R1	Min. tail end slewing radius	1160 mm (46 in)	
R2	Boom swivel radius (center)	1580 mm (62 in)	
R3	Boom swivel radius (right)	1500 mm (59 in)	
R4	Boom swivel radius (left) limit	1380 mm (54 in)	
R5	Max. boom swivel radius (left)	1280 mm (50 in)	
S	Total running gear length (standard travel gear)	1460 mm (57 in)	-
S	Total running gear length (telescopic travel gear)	1605 mm (63 in)	
T	Running gear length (Turas front idler) (standard travel gear)	1080 mm (42 in)	-
T	Running gear length (Turas front idler) (telescopic travel gear)	1225 mm (48 in)	
V	VDS tilt angle	-	0 – 15°
W1	Max. tilting angle of boom to the right	48°	
W2	Max. tilting angle of boom to the left-hand limit	64°	
W3	Max. tilting angle of boom to the left	77°	
X	Track width	230 mm (9 in)	
Y1	Stabilizer blade width	990 mm (39 in)	
Y2	Stabilizer blade width with extension (only telescopic travel gear)	1300 mm (51 in)	
Z	Stabilizer blade height	230 mm (9 in)	

https://truckmanualshub.com/

	ET20	Telescopic travel gear	Telescopic travel gear + VDS
A	Height	2295 mm (7'-6")	2385 mm (7'-10")
B1	Upper carriage width	990 mm (39 in)	
B2	Width with retracted travel gear	990 mm (39 in)	
B2	Width with extended travel gear	1300 mm (51 in)	
C	Transport length	4050 mm (13'-4")	4030 mm (12'-3")
D1	Max. digging depth (short stick)	2490 mm (98 in)	2400 mm (94 in)
D2	Max. digging depth (long stick)	2690 mm (8'-10")	2600 mm (8'-6")
E1	Max. vertical digging depth (short stick)	1670 mm (66 in)	1570 mm (62 in)
E2	Max. vertical digging depth (long stick)	1850 mm (73 in)	1760 mm (69 in)
F1	Max. digging height (short stick)	3840 mm (12'-7")	3930 mm (12'-11")
F2	Max. digging height (long stick)	3960 mm (13'-0")	4050 mm (13'-3")
G1	Max. dump height (short stick)	2720 mm (8'-11")	2810 mm (9'-3")
G2	Max. dump height (long stick)	2840 mm (9'-4")	2930 mm (9'-7")
H1	Max. reach at ground level (short stick)	4030 mm (13'-3")	4000 mm (13'-1")
H2	Max. reach at ground level (long stick)	4230 mm (13'-11")	4200 mm (13'-9")
K1	Max. digging radius (short stick)	4130 mm (13'-7")	
K2	Max. digging radius (long stick)	4330 mm (14'-2")	
M	Max. boom displacement to bucket center (right-hand side)	520 mm (20 in)	
N	Max. boom displacement to bucket center (left-hand side)	360 mm (14 in)	
O	Max. lift height of stabilizer blade over ground (short)	220 mm (9 in)	270 mm (11 in)
O	Max. lift height of stabilizer blade over ground (long)	300 mm (12 in)	360 mm (14 in)
P	Max. scraping depth of stabilizer blade below ground surface (short)	300 mm (12 in)	260 mm (10 in)
P	Max. scraping depth of stabilizer blade below ground surface (long)	360 mm (14 in)	320 mm (13 in)
R1	Min. tail end slewing radius	1160 mm (46 in)	
R2	Boom swivel radius (center)	1660 mm (65 in)	
R3	Boom swivel radius (right)	1580 mm (62 in)	
R4	Boom swivel radius (left) limit	1450 mm (57 in)	
R5	Max. boom swivel radius (left)	1350 mm (53 in)	
S	Total running gear length	1710 mm (67 in)	
T	Running gear length (Turas front idler)	1325 mm (52 in)	
V	VDS tilt angle	-	0 – 15°
W1	Max. tilting angle of boom to the right	48°	
W2	Max. tilting angle of boom to the left-hand limit	64°	
W3	Max. tilting angle of boom to the left	77°	
X	Track width	250 mm (10 in)	
Y1	Stabilizer blade width	990 mm (39 in)	
Y2	Stabilizer blade width with extension (only telescopic travel gear)	1300 mm (51 in)	
Z	Stabilizer blade height	230 mm (9 in)	

https://truckmanualshub.com/

	ET24	Standard	VDS
A	Height	2390 mm (7'-10")	2470 mm (8'-1")
B1	Upper carriage width	990 mm (39 in)	
B2	Travel gear width	1400 mm (55 in)	
C	Transport length	4030 mm (13'-3")	3980 mm (13'-1")
D1	Max. digging depth (short stick)	2500 mm (98 in)	2420 mm (95 in)
D2	Max. digging depth (long stick)	2700 mm (8'-10")	2620 mm (8'-7")
E1	Max. vertical digging depth (short stick)	1660 mm (65 in)	1580 mm (62 in)
E2	Max. vertical digging depth (long stick)	1850 mm (73 in)	1770 mm (70 in)
F1	Max. digging height (short stick)	3960 mm (13'-0")	4040 mm (13'-3")
F2	Max. digging height (long stick)	4080 mm (13'-5")	4160 mm (13'-8")
G1	Max. dump height (short stick)	2750 mm (9'-0")	2830 mm (9'-3")
G2	Max. dump height (long stick)	2870 mm (9'-5")	2950 mm (9'-8")
H1	Max. reach at ground level (short stick)	4025 mm (13'-2")	4000 mm (13'-1")
H2	Max. reach at ground level (long stick)	4220 mm (13'-10")	4190 mm (13'-9")
K1	Max. digging radius (short stick)	4150 mm (13'-7")	
K2	Max. digging radius (long stick)	4340 mm (14'-3")	
M	Max. boom displacement to bucket center (right-hand side)	520 mm (20 in)	
N	Max. boom displacement to bucket center (left-hand side)	360 mm (14 in)	
O	Max. lift height of stabilizer blade over ground	300 mm (12 in)	350 mm (14 in)
P	Max. scraping depth of stabilizer blade below ground surface	340 mm (13 in)	320 mm (13 in)
R1	Min. tail end slewing radius	1160 mm (46 in)	
R2	Boom swivel radius (center)	1660 mm (65 in)	
R3	Boom swivel radius (right)	1580 mm (62 in)	
R4	Boom swivel radius (left) limit	1450 mm (57 in)	
R5	Max. boom swivel radius (left)	1350 mm (53 in)	
S	Total running gear length	1840 mm (72 in)	
T	Running gear length (Turas front idler)	1385 mm (55 in)	
V	VDS tilt angle	-	0 – 15°
W1	Max. tilting angle of boom to the right	48°	
W2	Max. tilting angle of boom to the left-hand limit	64°	
W3	Max. tilting angle of boom to the left	77°	
X	Track width	250 mm (10 in)	
Y1	Stabilizer blade width	1400 mm (55 in)	
Y2	Stabilizer blade width with extension (only telescopic travel gear)	-	
Z	Stabilizer blade height	300 mm (12 in)	

https://truckmanualshub.com/

Notes:

https://truckmanualshub.com/

Index

Numerisch

3rd control circuit – AUX II 5-32

A

Abbreviations 1-3
Accelerator actuation 5-14
Adding coolant 7-35
Adding engine oil 7-33
Adding fluid 7-48
Adding hydraulic oil 7-42
Additional control circuit – AUX I 5-27
Additional control circuits 5-32
Air conditioning 7-47
Air filter 7-37
Air intake 7-39
Armrest 4-19
Attachments 5-40
  Picking up 5-40
  Setting down 5-41
Automatic engine speed setting 5-2
Axles 7-48

B

Backrest adjustment of seat 4-12
Ball bearing race 7-24
Battery 7-46
Bleeding the fuel system 7-28
Brake system 7-48
Brakes 5-2, 9-3
Brief description of the machine 3-2
Bucket position when digging 5-47
Bulbs 9-6

C

Cab 4-1, 4-18, 4-30
Cab number 3-9
Cab number (canopy) 3-9
Changing the width of the stabilizer blade 5-18
Charge indicator light 4-35
Check lists 4-38
Checking hydraulic hoses 7-44
Checking the coolant level 7-34
Checking the engine oil level 7-32
Checking the fluid level 7-48
Checking the hydraulic oil level 7-42
Checking the hydraulic system for leaks 7-43
Checking the water separator 7-29
Checking track tension 7-49
Checking V-belt condition 7-40
Checking V-belt tension 7-41
Cleaning and maintenance work on or with the machine 7-20
Cleaning inside the cab 7-21
Cleaning outside the machine 7-21
Cleaning the engine compartment 7-21
Cleaning the radiator 7-36
Cleaning the seat belt 7-22
Cleaning the shatter protection 7-22
Control element overview 5-10
Control lever base 4-18, 7-25
Conversion table 1-4
Coolant compound table 9-8
Coolant temperature 4-36
Cooling system 7-34
Correcting track tension 7-50
Craning operation 6-4

D

Declaration of conformity without CE mark EG-2
Decommissioning the machine temporarily 5-57
Designated use 3-4
Diesel engine malfunctions 8-1
Diesel fuel specification 7-26
Differential lock 5-8
Dimensions 9-44
Dirt indicator 7-37
Display element 4-32, 4-34
Disposal 5-59

E

Easy Lock 5-35
EC Declaration of Conformity EG-1
Electrical components 9-5
Electrical system 7-45
Emergency exit 4-11
Emergency lowering 5-49
Emptying the fuel filter 7-30
Emptying the water separator 7-29
Engine data 9-1
Engine lubrication system 7-32
Engine number 3-9
Engine oil pressure 4-35
Engine temperature 4-35
Entry and exit 4-1
Excavator forces 9-13
Explanation of symbols 1-2
Extending/retracting the telescopic travel gear 5-20

https://truckmanualshub.com/

F

Fields of application and use of attachments 3-5
Final decommissioning of machine 5-59
Fire extinguisher 4-19
Fluids and lubricants 7-10
FOPS type label 3-10
Foreword 1-1
Front Guard 4-23
Front Guard emergency exit 4-11
Front Guard type label 3-10
Front wiper 5-10
Fuel level indicator 4-36
Fuel system 7-26
Fuse box 7-16
Fuses 9-5
Fuses and relays 7-46

G

Grab control circuit 5-38
Gradient angle 5-5
Grading 5-48
Ground clearance 9-13
Ground pressure 9-13

H

Hammer operation 5-24
Hammer pedal 5-23
Hammer pedal – AUX I 5-25
Heating 5-11, 7-47
High speed 5-1
High speed (2nd speed) 4-35
Horizontal seat adjustment 4-12
Horn 5-9
Hour meter/maintenance meter 4-36
Hydraulic brake 5-2
Hydraulic connections 5-39
Hydraulic hose burst valve 5-52
Hydraulic quickhitch 5-35
  Hitching an attachment 5-35
  Setting down an attachment 5-37
Hydraulic swivel unit brake 5-16
Hydraulic system 7-41

I

Ignition lock 4-41
Inadmissible work procedures 5-44
Increasing the width of the stabilizer blade 5-19
Indicator lights and warning lights (overview) 4-34
Installing/removing the shatter protection 4-26
Interior light 5-9
Introduction 3-1

J

Joint rod and load hook 7-52
Jump-starting the engine 4-43

L

Labels 3-8, 3-16
Lateral angle of inclination 5-6
Left-hand cover 7-15
Letting the engine warm up 4-42
Lift capacity table 9-14
Lifting gear applications 5-30, 5-57
Lights 5-8
Loading material 5-48
Loading the machine 6-3
Loading vehicles 5-48
Locking/unlocking the left-hand door 4-37
Low-load operation 4-44
Lubrication 7-23
Lubrication plan 7-6

M

Machine overview 3-1
Machine weight 9-12
Maintenance
  Air filter 7-39
Maintenance (responsibilities and prerequisites) ... 7-1
Maintenance accesses 7-14
Maintenance label 7-8
Maintenance of attachments 7-52
Maintenance of the electrical system 7-45
Maintenance plan 7-2
Malfunctions of the hydraulic system 8-1
Manual throttle 5-1
Mechanical brake 5-2
Mechanical stop brake 5-16
Model designations and trade names 3-2
Models and trade names 9-1

N

Noise emissions 9-8
Notices and regulations on use 3-4
Notices before putting into operation 4-37
Notices on this Operator's Manual 1-1
Notices regarding operation with biodegradable oil 7-13

O

Oil types (overview) 7-11
Opening the door to a gap 4-3
Opening the engine cover 7-14
Opening the front window to a gap 4-9
Opening the lower front window 4-6
Opening the whole front window 4-7
Opening/closing the front window 4-4
Opening/closing the side window 4-10
Operating Pattern A/B 5-16
Operation 5-1
Operation checklist 4-39
Operation in water 5-46
Options 5-50

https://truckmanualshub.com/

P

Parking checklist 4-39
Parking the machine 5-7
Parking the machine on slopes 5-7
Payload/lift capacity 9-14
Pedals and control levers ISO 5-12
Pedals and control levers SAE 5-13
Powertilt 9-6
Powertilt – AUX II 5-33
Powertilt type label 3-10
Preheating 4-35
Preparations for starting the engine 4-41
Preparatory work for putting into operation 4-37
Preparing lubrication 7-23
Pressure release (proportional controls) 5-42
Proportional controls 5-49
Proportionally controlled additional control circuit – AUX I 5-28
Proportionally controlled hammer pedal – AUX I . 5-26
Protective FOPS screen 4-21
Protective structures 4-20
Putting into operation 4-1
Putting the machine back into operation 5-58
Putting the machine into operation for the first time and running-in period 4-40

R

Rearview mirrors 4-16
Reducing the width of the stabilizer blade 5-18
Reducing track tension 7-51
Refuelling 7-26
Relays 9-5
Releasing the door arrester 4-3
Releasing the pressure in the work hydraulics 5-42
Removing/installing the cab/canopy 7-17
Replacing the air filter 7-38
Requirements for the operating personnel 4-37
Retracting belt 4-13
Retracting lap belt 4-15
Retrofitting a bucket 5-43
Right-hand cover 7-16
Rotating beacon 5-9
Rotating the upper carriage 5-15

S

SAE/ISO controls 5-16
Safe load indicator 5-50
Safe load indicator light 4-35
Screw connections and attachments 7-22
Seat 4-12
Seat belt 4-13
Securing an open door 4-2
Serial number 3-8
Shatter protection 4-25
Shovel bucket operation 5-56
Socket 4-28
Specifications 9-1
Speed 9-4
Speed control 5-3
Stability table 9-38
Stabilizer blade 5-17
Standard bucket 3-6, 9-12
Starter 4-41
Starting and stopping the engine 4-41
Starting the engine 4-42
Start-up checklist 4-38
Steering system 5-1, 9-3
Stopping the engine 4-44
Switch 4-32
Switching off the safe load indicator 5-51
Switching on the safe load indicator 5-51
Swivel unit brake 5-15
Swiveling console limit 4-27
Swiveling the boom 5-29
Swiveling the boom (proportionally controlled) 5-29

T

Tightening the tracks 7-51
Tightening torques 9-7
Tilting the upper carriage 5-54
Towing 6-1
Tracks 7-49, 9-3
Transport 6-1
Transporting the machine 6-6
Travel interlock 5-53
Travel lever/travel pedal 5-14
Travel levers 5-1
Travel operation 5-3
Travel position 5-3
Traveling and stopping 5-3
Traveling drive 7-48
Traveling drive/axles 9-3
Traveling on public roads 4-40
Traveling on slopes 5-4
Traveling signal 5-10
Troubleshooting 8-1
Troubleshooting on the Powertilt unit 8-2
Tying down 6-6
Type label 3-8
Type label (hydraulic quickhitch) 3-9
Type labels 3-8

https://truckmanualshub.com/

U

Use of solvents 7-21

V

V-belt 7-40
Ventilation 5-11, 7-47
Vertical Digging System 5-54
Vibration 9-9

W

Warning labels 3-11
Warranty and liability 1-5
Washer system 5-10, 7-48
Weight adjustment of seat 4-12
Weight of attachments 9-12
Wiper/wash system 5-10
Work area shatter protection 4-26
Work hydraulics 5-12, 9-3
Work operation 5-44
Work position of machine 5-47
Working alongside trenches 5-47, 5-48
Working lights 5-8
Working on slopes 5-45
Working with a lowered stabilizer blade 5-48

https://truckmanualshub.com/

COMPACT EXCAVATOR

www.aem.org

SAFETY MANUAL

FOR OPERATING AND MAINTENANCE PERSONNEL

Contents

Acknowledgment 2
Foreword 3
Safety Alerts 4
One-Call First 5
A Word To The User/Operator 6
Follow A Safety Program 7
Prepare For Safe Operation 13
Start Safely 22
Operate Safely 26
Shut Down Safely 39
Load And Unload The Machine Safely 40
Perform Maintenance Safely 41
Final Word To The User 51

Acknowledgment

We wish to acknowledge the contributions of the members of AEM's Compact Loader/Compact Excavator Council to the preparation of this Safety Manual.

NOTICE OF COPYRIGHT PROTECTION

Copyright, 2010, by the Association of Equipment Manufacturers. All rights reserved. This work may not be reproduced or disseminated in whole or in part by any means without the prior written permission of the Association of Equipment Manufacturers.

Copyright 2002-2010© AEM (Association of Equipment Manufacturers)
Revised 05/03, 09/10

https://truckmanualshub.com/

Foreword

This safety manual is intended to point out some of the basic safety situations that may be encountered during the normal operation and maintenance of the machine and to suggest possible ways of dealing with these conditions. This manual is **NOT** a substitute for the compact excavator manufacturer's operator manual(s).

Additional precautions may be necessary, or some instructions may not apply, depending on equipment, attachments and conditions at the worksite or in the service area. The manufacturer has no direct control over equipment application, operation, inspection or maintenance. Therefore, it is **YOUR** responsibility to use safe work practices in these areas.

The information provided in this manual supplements the specific information about the machine that is contained in the manufacturer's manual(s). Other information that may affect the safe operation of the machine may be contained on safety signs or in insurance requirements, employer's safety and training programs, safety codes, local, state/provincial and federal laws, rules and regulations.

IMPORTANT! Before you operate the compact excavator, make sure you have the manufacturer's manual(s) for this machine and all attachments. If the manufacturer's manuals are missing, obtain replacement manuals from your employer, equipment dealer or directly from the manufacturer. Keep this safety manual and the manufacturer's manuals with the machine at all times. Read and understand all manuals.

Safety videos and other training resources are available from some manufacturers. Operators are encouraged to periodically review the safety video.

Safety Alerts

Symbol

This Safety Alert Symbol means: **"ATTENTION! STAY ALERT! YOUR SAFETY IS INVOLVED!"**

The Safety Alert Symbol identifies important safety messages on equipment, safety signs, in manuals or elsewhere. When you see this symbol, be alert to the possibility of death or personal injury. Carefully read the message that follows and inform other operators. Follow instructions in the safety message.

Signal Words

Signal words are distinctive words that will typically be found on safety signs on the compact excavator and other worksite equipment. These words may also be found in this manual and the manufacturer's manuals. These words are intended to alert the operator to a hazard and the degree of severity of the hazard.

DANGER — **DANGER** indicates a hazardous situation which, if not avoided, will result in death or serious injury.

WARNING — **WARNING** indicates a hazardous situation which, if not avoided, could result in death or serious injury.

CAUTION — **CAUTION** indicates a hazardous situation which, if not avoided, could result in minor or moderate injury.

NOTICE — **NOTICE** indicates a property damage message.

https://truckmanualshub.com/

One-Call First

Call Before You Dig
Dial 811 (USA only)

888-258-0808
(USA and Canada)

Call

Before starting any digging project, contact the local One-Call service by dialing 811 (USA only) to have underground utilities located. A One-Call referral number, **1-888-258-0808**, is also available for both USA and Canada.

One-Call will notify participating utility companies that you intend to dig. You must also call utility companies that do not participate in the One-Call service.

Always inspect the jobsite for evidence of unmarked utilities and contact others if necessary.

Plan The Work

Be aware of the lead time for marking the work area. This time may vary from state to state and county to county. If you do not locate utilities, you may have an accident or suffer injuries, cause service interruptions, damage the environment or experience job delays.

Dig

Most utilities mark their underground facilities using American Public Works Association (APWA) underground color codes. Verify marks before digging.

In the United States, OSHA Standard 29 CFR 1926.651 requires that the estimated location of underground utilities be determined before beginning an excavation. When actual excavation approaches an estimated utility location, the exact location of the underground installation must be determined by a safe, acceptable and dependable method. Other OSHA regulations may also apply to the jobsite.

A Word To The User/Operator

It is **YOUR** responsibility to read and understand the safety manual and the manufacturer's manuals before operating this machine. This safety manual takes you step by step through the working day.

Graphics have been provided to help you understand the text.

IMPORTANT: This manual covers safe practices for Compact Excavators. If the machine is equipped with special attachments, read the manufacturer's operator and safety manuals pertaining to those attachments before using them.

Read And Understand All Safety Signs

Remember that **YOU** are the key to safety. Good safety practices not only protect you but also protect the people around you. Study this manual and the manufacturer's manuals for the specific machine. Make them a working part of your safety program. Keep in mind that this safety manual is written only for compact excavators.

Contact the manufacturer of the equipment to answer any questions about safe operation that remain after studying the manufacturer's manual(s) and this safety manual.

Practice all other usual and customary safe working precautions and remember:

SAFE OPERATION IS UP TO YOU!

YOU CAN PREVENT DEATH OR SERIOUS INJURY CAUSED BY UNSAFE WORK PRACTICES!

https://truckmanualshub.com/

Follow A Safety Program

Be Alert!

Know where to get assistance. Know where to find and how to use a first aid kit and fire extinguisher/fire suppression system.

Be Aware!

Take advantage of training programs offered.

Be Careful!

Human error is caused by many factors: carelessness, fatigue, overload, preoccupation, unfamiliarity of the operator with the machine or attachment, drugs, and alcohol to name a few. You can prevent death or serious injury caused by unsafe work practices.

For your safety and the safety of others, encourage fellow workers to act safely.

For Safe Operation

You must be a qualified and authorized operator for safe operation of this machine. You must clearly understand the written instructions supplied by the manufacturer, be trained—including actual operation of the compact excavator—and know the safety rules and regulations for the worksite. It is a good safety practice to point out and explain safety signs and practices and ensure others understand the importance of following these instructions.

WARNING! Drugs and alcohol affect an operator's alertness and coordination and the operator's ability to safely operate the equipment. **Never operate the compact excavator while impaired by use of alcohol or drugs. Never knowingly allow the operation of this machine when operator alertness or coordination is impaired.** An operator taking prescription or over-the-counter medication must consult a medical professional regarding any side effects of the medication that would hinder the ability to safely operate this equipment.

Follow A Safety Program

Protect Yourself

Wear personal protective clothing and Personal Protective Equipment (PPE) issued to you or called for by job conditions.

You may need:
— Hard hat
— Safety boots with non-slip soles
— Safety glasses, goggles or face shield
— Heavy-duty gloves
— Hearing protection
— Reflective or high-visibility clothing
— Wet weather gear
— Respirator or filter mask

Wear whatever is needed to protect yourself—do not take chances.

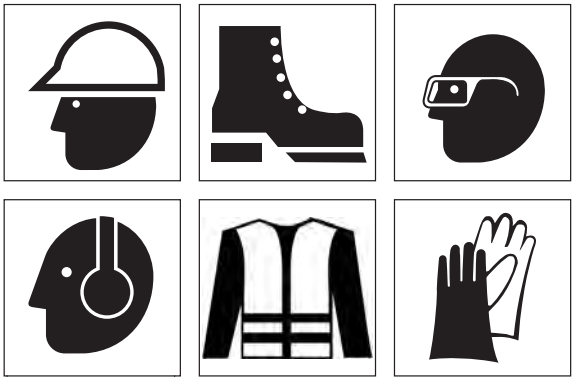

WARNING! Prevent death or serious injury from entanglement. **Do not wear loose clothing or accessories. Restrain long hair. Stay away from all rotating components when the engine is running.** Contact, wrapping or entanglement with rotating or moving parts could result in death or serious injury.

https://truckmanualshub.com/

Follow A Safety Program

Know The Rules

Most employers have rules governing operation and maintenance of equipment. Before you start work at a new location, check with your supervisor or the safety coordinator. Ask about the rules you will be expected to obey.

The Occupational Safety and Health Administration (OSHA) enforces federal laws within the United States that apply to the safe operation, application and maintenance of equipment on a worksite. It is the employer's responsibility to comply with these laws. A federal representative may periodically inspect a worksite to see that these laws are being followed.

There may also be local, state/provincial, federal laws or international regulations that apply to this equipment and its use, along with specific worksite or employer rules. It is important that you know and comply with all applicable laws and rules, including those requiring operator training and certification.

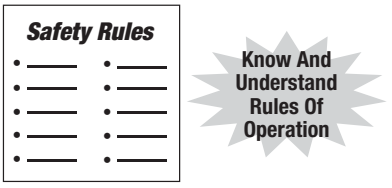

Follow A Safety Program

Some Rules You Must Work By

— Know the limitations and operating characteristics of the compact excavator. Do not overload it.
— Always wear the seat belt, if equipped. If the compact excavator is equipped with a foldable TOPS/ROPS, do not fasten the seat belt when the TOPS/ROPS is in the down position.
— Always have all shields and guards properly installed before operating the machine.
— Inspect the machine and all attachments before each use as specified by the manufacturer and your employer. Ensure the attachment is properly installed. (See page 17, **Quick-coupling Device Safety**.)
— Only use parts and attachments that are approved by the original equipment manufacturer.
— Never modify or remove any part of the equipment (except for service—then make sure it is replaced).
— Read and understand all safety signs installed on the machine.
— Know the location of other personnel and machines and make sure they are a safe distance from the machine.
— Know the worksite. Be aware of possible hazards that you may encounter.

Know Machine Limitations And Operating Characteristics

Inspect The Machine Before Each Workday

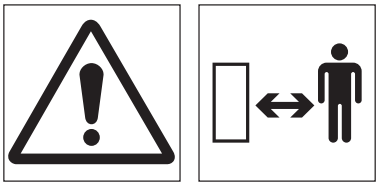

Be Aware Of Worksite Hazards, Keep Bystanders Away

https://truckmanualshub.com/

Follow A Safety Program

— Always look in the direction of machine or boom movement. Drive facing the travel direction whenever possible.
— Make sure you understand the rules covering traffic at the worksite. Know what all signs, flags and markings mean.
— Understand hand, flag, horn, whistle, siren and bell signals, if used at the worksite.
— Know when to use lights, turn signals, flashers and horns, if equipped.
— Do not allow riders.
— Keep hands and feet on controls when operating.
— Never lift or swing a load or attachment over anyone.
— Whenever you leave the machine, lower the excavator blade, bucket or other attachments to the ground. Stop the engine. Cycle the hydraulic controls, including auxiliary hydraulic control, to relieve trapped pressure. Engage control lock if equipped, and remove the ignition key. (See page 39, **Machine Shutdown**.)
— When transporting the compact excavator on a trailer, follow the manufacturer's instructions for loading, tying down and unloading the compact excavator.

Understand Worksite Signals

No Riders

Never Lift Or Swing A Load Or Attachment Over Anyone

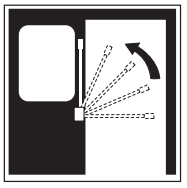

Engage Control Lock

Follow A Safety Program

Know The Equipment

Read and understand the DANGER, WARNING, CAUTION and NOTICE safety signs and other informational signs found on the compact excavator and in the manufacturer's operator manual. Ask your supervisor to explain any information you do not understand. Failure to obey safety instructions could result in death or serious injury.

Make sure all the manufacturer's protective structures, guards, shields, screens and panels are in good repair, in place and securely fastened. Damaged, missing or weakened safety components can create a hazardous situation for you as the operator. **Never** remove or modify any safety components on the compact excavator. The excavator can be operated temporarily with a foldable TOPS/ROPS lowered for access through height-restricted openings. Do not fasten the seat belt when the TOPS/ROPS is in the down position.

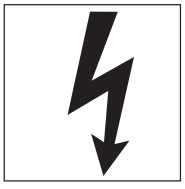

Read And Understand All Safety Signs

Know the following about this compact excavator and all attachments.
— Function, purpose and use of controls
— The functions of all gauges, lights, dials, switches
— Slope and uneven terrain capabilities and proper operation – never operate on a slope with a foldable TOPS/ROPS in the down position.
— Braking and steering characteristics
— Turning radius and clearances
— How to quickly stop equipment in an emergency

Read And Understand Manuals Before Operating

https://truckmanualshub.com/

Prepare For Safe Operation

Check And Use All Available Protective And Safety Devices

Keep all protective devices in place and tightly fastened. Make certain all guards, screens and panels, manufacturer's operator manuals, and safety signs are installed on the machine and legible as supplied by the manufacturer. See that each item is securely in place and in operating condition.

The machine may be equipped with:

— A seat belt or other type of restraint
— Control locking device
— Safety signs
— Access and egress system (i.e., grab handles, handrails) and protective covers
— Travel alarm and back-up alarm
— Falling object guard structure (FOGS), falling object protective structure (FOPS), roll-over protective structure (ROPS)/tip-over protective structure (TOPS)
— Guards
— Special enclosures or accessories required for task or worksite conditions
— Operator protective structure (OPS) – side, front and rear shields, screens and doors
— Warning lights and devices
— Alternate exits
— Mirrors
— Fire extinguisher
— First aid kit
— Windshield wipers and washers
— Window defroster
— Operating lights
— Horn

Know which devices are required for protection during your specific operation and use them. The excavator can be operated temporarily with the TOPS/ROPS lowered for access through height restricted openings. Do not fasten the seat belt when the TOPS/ROPS is in the down position.

WARNING! NEVER remove or modify safety equipment. Operating a machine without a protective structure (TOPS/ROPS, FOGS/FOPS or OPS) could result in death or serious injury. (See page 44, **Protective Structure Safety**.)

Prepare For Safe Operation

Check The Machine

Before you begin the workday, inspect the machine and have all systems in good operational condition. Do not operate the machine until all problems are corrected.

— Perform daily and periodic service procedures as instructed by the equipment manufacturer.
— Check that no safety switches or interlocks have been bypassed and that no warning tags have been placed on the machine.
— Check that safety signs, special instructions, lift capacity charts and operator manuals are legible and in the proper location.
— Check condition and operation of the seat belt and its mounts, if equipped.
— Make sure that the foldable TOPS/ROPS, if equipped, is properly secured in the raised position.
— Check condition and operation of the attachment quick-coupling device, if equipped. Perform daily cleaning and maintenance following the manufacturer's instructions. (See page 17, **Quick-coupling Device Safety**.)
— Inspect steps, guardrails, platforms and handholds for damage or loose parts.

https://truckmanualshub.com/

Prepare For Safe Operation

— Check the fuel and hydraulic systems. Have leaks repaired and fill to proper level.
— Check all exposed hydraulic components for leaks, routing problems or damage. Report worn or damaged components.

WARNING! Diesel fuel and hydraulic fluid under pressure can penetrate the skin or eyes and cause serious injury, blindness or death. Fluid leaks under pressure may not be visible. **Use a piece of cardboard or wood to find leaks, not your hand. Wear a face shield or safety goggles for eye protection.** If fluid is injected into the skin, it must be removed within a few hours by medical personnel familiar with this type of injury. (See page 46, **Hydraulic System Hazards**.)

— Check the cooling system.

WARNING! Prevent possible injury from explosive release of hot fluids. **Allow the radiator to cool before checking the fluid level**. (See page 45, **Cooling System Hazards.**)

— Keep radiators and coolers clean and free of oil, grease, dirt, debris and moisture.
— Make sure all doors, guards and covers are in place and secured properly.

Wear Eye Protection

High Pressure Fluid Can Inject Into The Body

Do Not Loosen Cap Until Cool

Check The Radiator And Engine

Prepare For Safe Operation

Check The Machine (continued)

— Check the tracks for broken or damaged pins, bushings, and other parts.
— Check the tracks for proper tension adjustment according to manufacturer's instructions.
— Check the tracks for damage or wear. Replace badly worn or damaged tracks.
— Check the slew/swing brake for proper operation.
— Inspect working and other lights for proper operation.
— Inspect boom, arm and attachment for wear and damage.
— Make sure fire extinguishers are fully charged and in good working order.

Check Attachment And Coupler Installation

When changing buckets or installing attachments, follow the manufacturer's instructions for proper maintenance and coupling. Make sure all connectors are securely fastened. Tighten all bolts, nuts and screws to torques recommended.

Check the attachment coupler and the attachment for wear and hydraulic leaks before coupling the attachment.

Before operating, ensure that quick-coupler pins or wedges are fully engaged and visibly locked to the attachment.

WARNING! Avoid possible crushing injury. **Failure to properly secure the attachment to the machine coupler can allow the attachment to come off and could result in death or serious injury.** (See page 17, **Quick-coupling Device Safety**.)

https://truckmanualshub.com/

Prepare For Safe Operation

Quick-coupling Device Safety

Before using a quick-coupling device you must know and understand proper installation, maintenance and operation.

WARNING! Failure to read and follow manufacturer's instructions for the correct operation and maintenance of the quick-coupler can allow the attachment to come off and cause death or serious injury.

Protect yourself from injury:
- Install and maintain equipment, attachments and their operating systems according to manufacturers' instructions.
- Securely latch attachments before work begins.
- Follow the manufacturer's instructions for using positive locks on quick-coupling equipment.
- Make frequent visual inspections of quick-coupling systems—especially after changing attachments.
- Always check for interference limits of the coupler or tool with the carrier before operating.

Do not operate the machine if:
- there exists an incompatibility among components.
- there are broken, damaged or badly worn components.
- the lock/secure feature of the quick-coupler is impaired.
- the engaging lever or device is not fully engaged in a lock/secure condition.

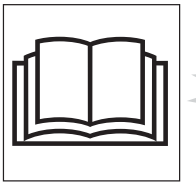

Read And Understand Manuals Before Operating

WARNING! A quick-coupler that is not properly locked/secured could result in death or serious injury. **Perform all steps to lock/secure the device.** The steps to confirm that the device is properly locked/secured may include any or all of the following:
- Manually installing a locking pin, actuating a lever or other device.
- Movement of the attached work tool to confirm its engaged lock/secure condition.
- A visual check of the components as instructed by the quick-coupler manufacturer.

WARNING! A quick-coupler that is disengaged when the attachment is in an unstable position could result in death or serious injury. **Place the attachment in a stable position, as instructed by the manufacturer, whenever coupling or uncoupling the attachment.**

Prepare For Safe Operation

Clean Up

Clean windshields, mirrors and all lights. Use water and a clean cloth. Know and follow the manufacturer's recommendations for using cleaning agents other than clean water on polycarbonate glazing.

Clean out the operator's area. Steps and handholds must be clean and functional. Oil, grass, leaves, needles, snow, ice or mud in these areas can cause you to slip and fall.

Clean your boots before getting on the machine.

Clean out trash and debris buildup promptly, especially in the engine compartment, the battery box, around exhaust components, under the machine and around rotating components.

Remove all loose personal items or other objects from the operator's compartment. Secure these items in a fixed tool box or remove them from the machine. Do not store any flammable material such as ether/cold-start fluid or oily rags in the operator's compartment.

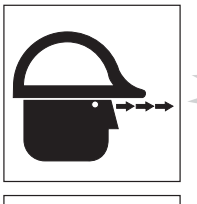

Maintain Vision – Clean Up

Avoid Falls – Clean Slippery Surfaces

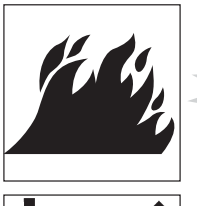

Avoid Fire – Clean Out Debris

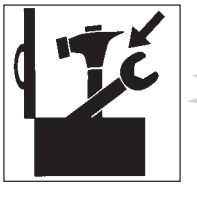

Put Away Tools And Loose Items

https://truckmanualshub.com/

Prepare For Safe Operation

Check The Work Area

Know—beforehand—as much about the worksite as possible. Locate all ground workers near the worksite and make sure clothing worn is easily seen. Be aware of weather conditions that can affect visibility, ground stability and traction.

Check for:
— Location of steep slopes, slide areas, drop-offs and overhangs
— Adequate traction on slopes
— Traffic locations and movement
— Thick dust, smoke and fog
— Soil conditions—look for signs of instability such as cracks or settlement
— Standing water and marshy areas
— Rocks and stumps
— Holes, obstructions, mud or ice
— Location of open trenches
— Exact location of any buried and/or overhead electrical, gas, telephone, water, sewer or other utility lines

Have the utility company mark, shut off or relocate the utility before you begin working.

Know the location and work plan for other machines on the worksite.

Correct unsafe conditions. Avoid operating in problem areas that cannot be corrected.

When operating the machine inside a building, know what clearances you will encounter—overhead, doorway, aisles, etc. Also, know the weight limitations of floors and ramps. Make sure there is sufficient ventilation for inside operation.

Walk Around The Worksite

Be Seen – Wear Visible Clothing

Prepare For Safe Operation

Check The Work Area (continued)

Know the exact location of electrical, telephone, gas or other utility lines. (See page 5, **One-Call First**.)

DANGER! Death or serious injury will result from touching or being near a machine that is in contact with or near an energized electrical source. **Never approach power lines with any part of the machine or load unless all local, state/provincial and federal (OSHA) required safety precautions have been taken.** Use extreme caution because high voltage sources can arc without contact.

When working near power lines, you must assume all lines are energized.

Maintain a safe distance from all utilities.
(See page 31, **Utilities—Overhead And Underground**.)

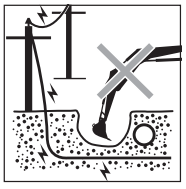

Locate All Utilities, Maintain A Safe Distance

Use Caution When Fueling

IMPORTANT! Always use approved fuel containers and dispensing equipment.

Fuels are flammable, so observe these practices to reduce the possibility of a serious accident.
— Shut off engine and ignition during refueling.
— Always ground the fuel nozzle against the filler neck to avoid sparks.
— Keep sparks and open flames away from fuel.
— Do not use a cell phone or two-way radio while fueling or handling fuel—they could cause sparks.
— Do not smoke while refueling or when handling fuel containers.
— Do not overfill the tank or spill fuel. Clean up spilled fuel immediately.

https://truckmanualshub.com/

Prepare For Safe Operation

Mount And Dismount Properly

When you enter or leave the machine:

— Maintain a three-point contact with the machine. Three-point contact is defined as maintaining contact with at least one hand and two feet, or two hands and one foot, at all times.
— Face the machine when either mounting or dismounting.
— Use handholds, handrails, ladders or steps (as provided).
— The upperstructure and undercarriage must be oriented to align the access system.
— Never use control levers as handholds.
— Never step on foot controls when entering or leaving.
— Clean your boots and wipe your hands before mounting or dismounting.
— Never jump on or off the machine.
— Never attempt to mount or dismount a moving machine.
— Never mount or dismount while carrying tools or objects that prevent three-point contact.

Maintain Three-Point Contact – Face Machine

Do Not Jump Off Machine

Do Not Use Controls As Handholds

Start Safely

Look Out For Others

Before starting, walk completely around the machine operating area. Make sure no one is under it, on it or close to it. Do not start the engine until everyone is clear of the operating area.

Starting The Engine

Do not start the engine or move any of the controls if there is a “DO NOT OPERATE” or similar warning tag attached to the start switch or controls. Check with your supervisor.

WARNING! Start the engine only from the operator’s seat. Never attempt to start the engine by shorting across starter terminals or reaching for the key from outside the cab. This could result in the machine moving suddenly and unexpectedly and cause death or serious injury.

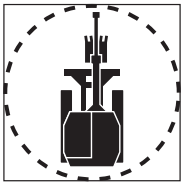

Walk-Around Inspection

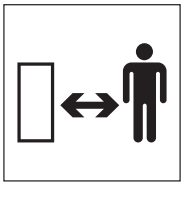

Keep Bystanders Away

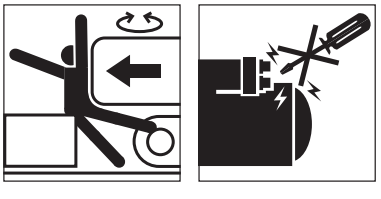

Start Only From Operator’s Position

https://truckmanualshub.com/

Start Safely

Know the exact starting procedures for this machine. See the manufacturer's manual(s) for starting procedures.

— Clear the area of all persons.
— Sit in the operator's seat and adjust the seat so you can operate all the controls properly.
— Familiarize yourself with warning devices, gauges and operating controls.
— Close or secure the cab door, if equipped.
— Fasten the seat belt, if equipped. If the compact excavator is equipped with a foldable TOPS/ROPS, do not fasten the seat belt when the TOPS/ROPS is in the down position.
— Put all controls, including those for auxiliary equipment, in the neutral/park position.
— Activate controls by releasing the control lock, if equipped.
— Start the engine following the instructions in the manufacturer's manual(s).

If it is necessary to run the engine or operate the machine within an enclosed area, be sure there is adequate ventilation.

WARNING! Never operate any type of engine without proper ventilation—exhaust fumes can kill.

Know Starting Procedure, Read Manual

Fasten Seat Belt, Use TOPS/ROPS

Ventilate Work Area

Start Safely

Starting Aids

Do not use ether/cold-start fluid if the engine is equipped with glow plugs or intake manifold preheater.

Ether/cold-start fluid is HIGHLY FLAMMABLE. Before using it, always read the instructions on the ether/cold-start fluid container and the instructions in the manufacturer's manual(s). **Do not** carry loose cans of starting fluid on the machine while operating.

If booster cables are used, follow the instructions in the manufacturer's manual(s). The operator must be in the operator's seat when boost-starting the engine so that the machine will be under control when the engine starts. Boost-starting is a two-person operation. A battery explosion or a run-away machine could result from improper starting procedures.

Never boost-start a frozen battery. (See page 48, **Avoid Battery Explosion**.)

After Starting The Engine

Observe gauges, instruments, and warning lights to ensure that they are functioning and their readings are within the operating range.

With the control levers or joysticks in neutral, test engine speed control.

Run An Operating Check

Do not use a machine that is not in proper operating condition. It is the **operator's responsibility** to check the condition of all systems, and to run the check in a safe area.

WARNING! Do not allow anyone to stand within the operating work radius of the machine and load. Contact with moving parts of the compact excavator or load can cause death or serious injury.

Keep Bystanders Away

https://truckmanualshub.com/

Start Safely

Test All Controls

Follow the manufacturer's recommended warm-up procedures and bring all machine systems to operating temperature.

Machines come equipped with various control configurations, patterns and operating modes. Some have selectable or configurable controls that allow operation to suit personal preferences or specific applications. Make sure that you know which control pattern has been selected and understand how the machine will operate.

Make sure the engine is operating correctly. Operate each machine control to check all functions.

Check for possible interference between the attachment and the cab and operate appropriately.

Make sure the attachment quick-coupling device (if equipped) is operating properly, fully engaged and visibly locked. (See page 17, **Quick-coupling Device Safety**.)

Check the blade location before traveling. When the blade is in the rear, operate the steering levers in the opposite direction as when the blade is in the front. See the machine manufacturer's manual.

Operate the control(s) to ensure correct operation in forward, neutral and reverse.

Test steering—right and left—while moving slowly.

WARNING! Prevent possible injury from loss of control. **Know and understand the selected control pattern and operating mode before operating. Be certain you can control speed, direction, braking and boom motion before operating the machine.**

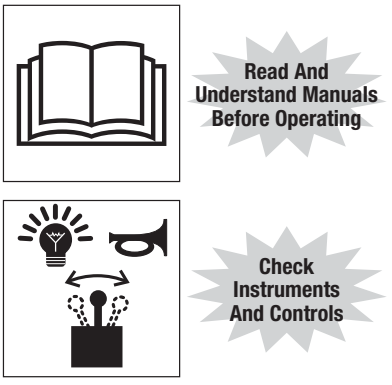

Operate Safely

Remember

- Stay in the operator's seat, with the seat belt fastened, if equipped. If the compact excavator is equipped with a foldable TOPS/ROPS, do not fasten the seat belt when the TOPS/ROPS is in the down position.
- Understand the machine's limitations. Be in control of the machine at all times.
- Assure yourself that the work area is clear of all bystanders and other machines. Stop the machine immediately if anyone approaches.
- If a failure that causes loss of control occurs, stop all machine motion as quickly as possible. Shut the machine down and remove the key. Correct or report the problem immediately.

Remember The Other Person

WARNING! Never allow an untrained or unqualified person to operate this machine. Handled improperly, this machine could cause death or serious injury.

Do not allow anyone within the operating work radius of the compact excavator.

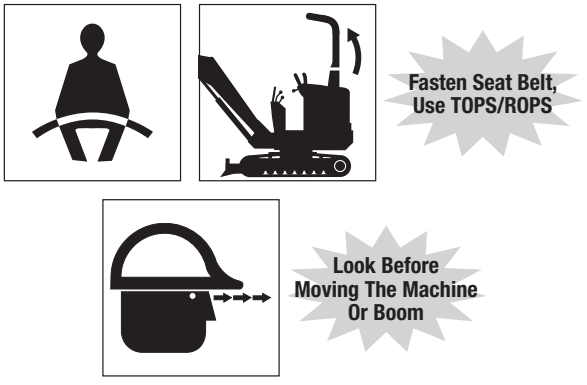

Never use a bucket or other attachment as a work platform or personnel carrier.

WARNING! Prevent possible injury from fall or runover. The compact excavator is a one-person machine. **NEVER PERMIT RIDERS.**

Always look around before you travel or move the boom. Look in the direction of machine movement.

Awareness on your part can prevent accidents.

https://truckmanualshub.com/

Operate Safely

Traveling On The Worksite

Know and understand the worksite traffic flow patterns and obey signalmen, road signs and flagmen.

Check blade location before traveling. When blade is positioned to the rear, operate the steering levers in the opposite direction as when the blade is in the front.

The retractable track frame, if equipped, should be extended for traveling on the worksite. The track frame can be retracted to access narrow areas. Read and know manufacturer's instructions before operation.

Know the maximum height and width of the machine. Do not obstruct your vision when traveling. Always look in the direction of travel. Drive facing the travel direction when possible.

Operate the controls smoothly and slowly. Rapid and jerky movement of the controls can cause loss of both machine stability and control of the load.

When moving the machine, watch that enough clearance is available on both sides and above the boom and cab. Be especially careful to allow extra clearance on uneven ground.

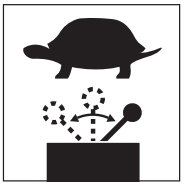

Operate Controls Smoothly And Slowly

Know Weight Limits

Check for hazards or obstructions before entering an underpass or other area with restricted clearance. Check height and side clearances.

WARNING! Avoid possible injury. The weight of the machine may cause the ground, dock, ramp or floor to give way, causing loss of control, fall or tipover. **Know weight limits and stay clear of the edges of excavations and drop-offs.** Failure to know and observe weight limits and use caution could result in death or serious injury.

Operate Safely

Traveling On The Worksite (continued)

Make sure all surfaces will support the weight of the machine.

Do not cross ditches, creeks or wet draws without an adequate fill or bridge crossing.

Match travel speed to the traffic, weather and ground conditions. Take it slow and easy when traveling. Travel cautiously over rough or slippery ground and on slopes. Reduce speed when travelling over a rise.

Always give the right of way to loaded machines. Maintain a safe distance from other machines.

If you encounter a blind corner, stop and then proceed with caution.

Avoid traveling over obstacles (logs, tree stumps, rough terrain, ditches, curbs, railroad tracks) whenever possible. If you must cross an obstacle, do so slowly and with caution.

Avoid steep slopes or unstable surfaces. If it is necessary to travel on a slope, follow manufacturer's specific instructions. When on a slope, keep the boom centered and attachment as low and as close to the machine as possible. Proceed with extreme caution. Do not drive **ACROSS** a steep slope under any circumstances. Drive straight up and down a slope.

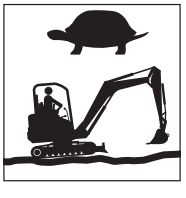

Travel Slowly Over Rough, Hazardous Terrain

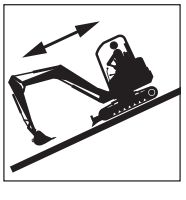

Drive Straight Up And Down – NOT ACROSS – Steep Slopes

Avoid turning on a slope. If it is necessary, use extreme caution and make the turn **WIDE and SLOW** with the boom centered and attachment as low and as close to the machine as possible.

Avoid sudden movement of the travel controls.

https://truckmanualshub.com/

Operate Safely

Safety Precautions

Never reach into the compact excavator and attempt to operate the controls from outside the cab.

Before starting to excavate, set up safety barriers to the sides and rear area of the swing pattern to prevent anyone from walking into the working area.

Read and know manufacturer's instructions before operation.

Make sure you are aware of personnel or machines that may be hidden in blind spots on the worksite, such as piles or stacks of material.

Make sure the machine has sufficient clearance from other machines or material on the worksite to prevent contact during machine or attachment movement.

WARNING! Prevent death or serious injury. **Never lift, move or swing a load over any person or any machine cab.**

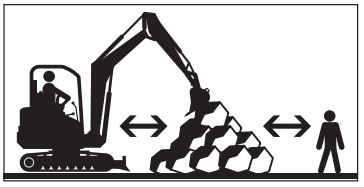

Check Clearance, Look Out For Others

Do Not Lift Or Swing A Load Or Attachment Over Anyone

Know and use the hand signals required for particular jobs. Know who has the responsibility for signaling. Take signals from one person only.

Do not operate during storms with high winds or lightning strikes. Do not mount or dismount during a period of lightning strikes. If you are on the machine, stay on it. Warn others to stay clear of the machine in case of a lightning strike.

Operate Safely

Load Lifting

Consult the rated lift capacity chart. Do not overload this machine. Know the exact lifting capacity of the machine as equipped. Make sure you have and know how to use a current lift capacity chart for the machine. Changing conditions such as slopes, wind, ice, mud, soft ground, type of load or the weight of attachments will affect the capacity and operating characteristics of the machine.

Consult your lift chart. Lifting and handling loads over the end of the machine, rather than over either side, will improve the lifting performance of the machine.

The retractable track frame, if equipped, should be fully extended for increased lifting performance.

Attach loads only to the manufacturer's designated lifting points, if equipped.

If equipped, keep blade lowered for increased lifting performance. If ground is soft, place pads or timbers under the blade.

Operate the controls smoothly and slowly. Rapid and jerky movement of the controls can cause loss of both machine stability and control of the load.

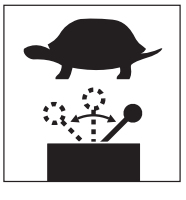

Operate Controls Smoothly And Slowly

When lifting, be sure the load is properly balanced. Move slowly so the load does not sway or swing around. Use a tag line for control.

If tracks or blade leave the ground, slowly lower the load to return the machine to the ground. Do not drop the load suddenly, because this can lead to loss of control.

Do not exceed rated lift capacity. Excessive load can cause tipping or loss of control.

Carry the load/attachment low and as close to the machine as possible. You must allow for movement in all directions. Be careful to maintain clearance of the attachment and load from the cab.

Keep all guards in place and windows closed or locked open. Keep cab doors closed or otherwise secured, if equipped.

Never leave the operator's seat with a load suspended. (See page 39, **Machine Shutdown.**)

https://truckmanualshub.com/

Operate Safely

Utilities – Overhead And Underground

DANGER! Electrocution or serious injury will result from CONTACTING or APPROACHING power lines or apparatus. Maintain Minimum Approach Distance. (See chart.)

DANGER! Death or serious injury will result from touching or being near a machine that is in contact with or near an energized electrical source. **Never approach power lines with any part of the machine or load unless all local, state/provincial and federal (OSHA) required safety precautions have been taken.** Use extreme caution because high voltage sources can arc without contact.

REQUIRED CLEARANCE FOR OPERATION NEAR HIGH VOLTAGE POWER LINES

Normal Voltage, kV (Phase to Phase)	Minimum Approach Distance [Note (1)] ft	(m)
to 50	10	(3.0)
Over 50 to 200	15	(4.6)
Over 200 to 350	20	(6.1)
Over 350 to 500	25	(7.6)
Over 500 to 750	35	(10.7)
Over 750 to 1,000	45	(13.7)

NOTE: (1) Environmental conditions such as fog, smoke or precipitation may require increased clearances.

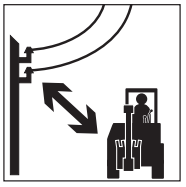

Maintain Minimum Approach Distance

Stay Clear Of Energized Equipment

Check overhead clearances. If possible, have power to the lines de-energized and visibly grounded. If not possible, request a signal person for guidance to maintain at least the Minimum Approach Distance. (See chart.)

If the machine or load contacts an energized line, stay in the machine and attempt to break contact. Warn others to stay away from the machine. If machine catches fire and you are forced to leave, jump clear of the machine with both feet together and hop or shuffle away. **DO NOT** touch machine and ground at the same time.

Operate Safely

Locate All Underground Utilities

Confirm that One-Call has been contacted. Confirm that any utilities not subscribing to One-Call have been contacted. Confirm that the site has been marked or cleared. (See page 5, **One-Call First**.)

Obtain all information pertaining to the locate request, including the One-Call confirmation code or ticket number. If the facility owner has provided a locate sketch, obtain a copy. Review any engineering drawings provided by utilities. This information should be retained.

Personally verify One-Call utility marks. There are variations from state to state.

Take a copy of the locate sketch to the job site. Confirm all of the locates. Review the site for signs of unmarked utilities. These signs may include pedestals, pole risers, meters, trench lines, manhole covers, sewer drain outlets, etc. Review not only the immediate area, but also the perimeter of the area for utility markers.

Additionally, the area should be swept by an experienced operator using a device to locate utilities and large metal objects.

Any inconsistencies with line locations or any inaccurate locates must be resolved.

When excavating near underground services, expose the service by hand-digging or by using soft excavation, such as vacuum excavation, if permitted by local utilities.

When gas lines are present on the site, do not smoke or do anything to cause a spark in the vicinity of a gas line.

Make plans to restrict working area access—with cones and tape, barriers, warning signs, fences, etc.—until the job is complete.

Make certain that you are in compliance with all local, state/provincial, national and other requirements and regulations, including those regarding open excavations, or “potholes.”

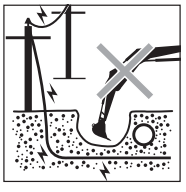

Locate All Utilities, Maintain A Safe Distance

https://truckmanualshub.com/

Operate Safely

Trenching Safety Precautions

Follow the worksite plan for proper construction of the trench. Check with your supervisor if you are unsure of correct trench construction or if operating conditions change.

Stay alert to changes in soil conditions. Trench collapse is hazardous to all workers in the area and could cause the machine to slide into the trench.

Keep heavy loads and equipment as far from the trench as possible.

Keep spoil and stored materials such as pipe at least two feet from the edge of the trench.

Keep personnel away from the equipment and attachments.

Never swing a load or attachment over anyone.

Do not undercut the machine.

WARNING! Do not dig under the machine or blade. A resulting cave-in could cause death or serious injury.

WARNING! Avoid possible death or serious injury from trench wall collapse. **Before backfilling, see the manufacturer's manual for any specific instructions. Do not get too close to the edge of the cut.** The weight of the machine plus the fill could cause the trench wall to collapse.

Keep Personnel Away From Equipment And Attachments

Operate Safely

Slope And Uneven Terrain Operation

Compact excavator stability and load capacity are greatly reduced on slopes. Ensure the operation can be done safely. Prevent overturns and maintain stability control:

— Use machines equipped with TOPS/ROPS and a seat belt. Make sure folding TOPS/ROPS is raised and locked in place—always use the seat belt.
— The retractable track frame, if equipped, should be extended for operating on slopes or uneven terrain. Read and know manufacturer's instructions before operation.
— Review the manufacturer's manual for specific instructions and limitations, including those for proper operation of alternate/emergency exits.
— Avoid extremely steep slope operation.
— Keep machine movements slow and smooth.
— Level the working area and machine as much as possible.
— Avoid working with the tracks across a slope. This will reduce stability and increase the tendency of the machine to slide. Position the machine with the tracks running up and down the slope—blade downhill and lowered.
— Avoid slippery ground conditions.

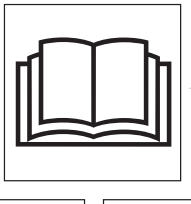

Always Check Manuals For Specific Instructions

Fasten Seat Belt, Use TOPS/ROPS

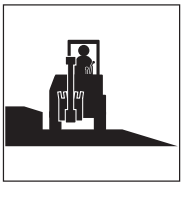

Level The Work Area If Possible

https://truckmanualshub.com/

Operate Safely

— Travel straight up and down the slope with the attachment low and close to the machine. Do not move the boom while travelling.
— Avoid swinging to the downhill side of a slope. Always keep the boom and attachment as low and close to the machine as possible.

If the machine begins to tip, roll or slide, stay in the machine with the seat belt securely fastened. Lower the attachment immediately. Hold on firmly and brace your feet on the floor. Lean away from the point of impact.

When operating the compact excavator on a slope, swing to the uphill side to dump load, if possible. If downhill dumping is necessary, swing only as far as required to dump the bucket. Use extreme caution. Always drop spoil a sufficient distance from a trench to prevent cave-ins.

If possible, avoid working with the tracks across a slope.

Before moving the machine, raise the blade sufficiently to clear the ground, and then drive the machine forward or backward as required. Lower the blade to level the machine.

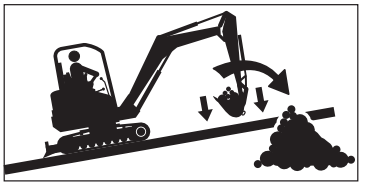

Swing Load Uphill When On A Slope

Operate Safely

Hazardous Conditions

When working in hazardous areas, be extremely alert.

Always consult the manufacturer's operator manual for specific instructions.

Extreme caution is required when working near the edge of an excavation. Keep the machine a safe distance away from the edge. Avoid undercutting.

WARNING! Never undercut a high bank. The edges could collapse or a slide could occur, resulting in death or serious injury.

Work the jobsite in a manner that avoids creating overhangs or the need to be on top of banks or slopes. Never operate the machine close to the edge of an overhang or stockpile.

Extreme caution should be used when working along the top of banks and slopes. Keep as far back from the edge as possible. Level the area if possible. Keep the machine tracks perpendicular to the edge so that if part of the edge collapses, the machine can be moved back.

Immediately move the machine back at any indication the edge may be unstable.

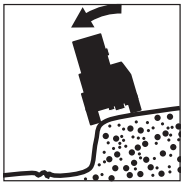

Use Caution – Stay Safely Away From Bank Or Excavation Edge

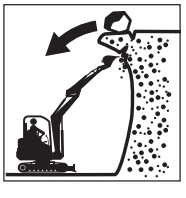

Never Undercut A High Bank

Operate Perpendicular To Banks – Stay Back From The Edge

https://truckmanualshub.com/

Operate Safely

WARNING! Do not dig under the machine. A cave-in could result and the machine could fall into the excavation, resulting in death or serious injury.

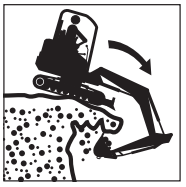

Use Caution Near Excavation Edge – Do Not Undercut Machine

Avoid Silica Dust

Cutting or drilling concrete or rock containing quartz may result in exposure to silica dust. **Do not exceed Permissible Exposure Limits (PEL) to silica dust as determined by OSHA or other worksite rules and regulations.** Use a respirator, water spray or other means to control dust. Silica dust can cause lung disease and is known to cause cancer.

Avoid Silica Dust

Operation In Flammable/Explosive Atmosphere

WARNING! Avoid possible death or serious injury. **Never operate an excavator in these areas. Use of these excavators in explosive atmospheres can result in fires and explosions, causing death or serious injury.**

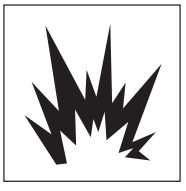

Do Not Operate In Explosive/Flammable Atmosphere

.

Operate Safely

Towing

Many compact excavators may not be towed. Refer to the manufacturer's manual(s) for specific towing instructions.

Never straddle a tow line or stand near a tow line under tension.

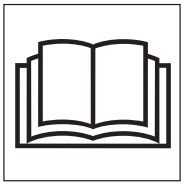

Consult Manufacturer's Manual Before Towing

Parking

Park the machine in a designated area out of traffic, preferably on level ground. (See page 39, **Machine Shutdown**.)

If freezing conditions are expected, the tracks should be first cleared of mud and dirt and the machine parked on planks or suitable debris.

Public roads are not suitable for parking. If the machine is disabled or you must park on a public road, barricade and mark the machine according to local and worksite regulations.

https://truckmanualshub.com/

Shut Down Safely

Machine Shutdown

Properly shutting down a compact excavator can help prevent accidents when the machine is left unattended. Shut down the excavator following the specific procedures in the manufacturer's operator manual.

A typical list includes:
— Stop the machine.
— Make sure the area around the machine is clear of personnel.
— Slew the machine to align the upperstructure with the undercarriage, if possible.
— Return controls to neutral, including the auxiliary hydraulic controls.
— Lower the attachment and blade to the ground with slight down-pressure.
— Idle engine for a short cool-down period.
— Stop the engine.
— Cycle all hydraulic controls to relieve system pressure.
— Engage the control locking device, if equipped.
— Remove ignition key.
— Block the tracks if on a slope or incline.
— Check for and clean out trash build-up, especially in the engine compartment, battery box, around exhaust components, in confined spaces, under the machine and around rotating components.

Safe Dismounting

Never dismount from moving equipment. Observe proper shutdown practices before dismounting. Check for slippery steps and handholds.

Dismount carefully using three-point contact facing the machine. (See page 21, **Mount And Dismount Properly**.)

Lower Attachment

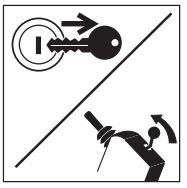

Shut Off Engine, Remove Key, Engage Control Lock

Load And Unload The Machine Safely

Loading And Unloading For Transport

All machines are not loaded in the same way, and the procedures given in the manufacturer's manual(s) should always be followed.

Some precautions apply to all machines:
— Keep bystanders away.
— Wear the seat belt, if equipped.
— If the compact excavator is equipped with a foldable TOPS/ROPS, make sure it is properly secured in the raised position.
— Place transport vehicle on a firm, level surface.
— Block or support the rear of the trailer.
— Secure the parking brake and block transport vehicle so it cannot move.
— Use ramps with slip-resistant surfaces, adequate size and strength, low angle (15 degrees or less) and proper height.
— Keep trailer bed and ramps clear of mud, oil, ice, snow, leaves and other debris.
— Position the attachment to the front of the machine.
— Drive forward up the ramps, raising the blade high enough for clearance.
— Cover or remove any SMV (Slow-Moving Vehicle) emblem.
— Secure the cab door, attachment and accessories in the transport position.
— Engage upperstructure slew lock, if equipped.
— Chain and block the excavator securely for transport. Refer to the manufacturer's operator manual for tie-down procedures.

Measure the transport height and width of the loaded machine to avoid overhead and width obstructions. Make sure clearance flags, all lights and warning signs are in place and visible.

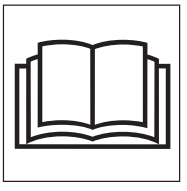

Read Operator Manual

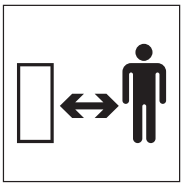

Keep Bystanders Away

https://truckmanualshub.com/

Perform Maintenance Safely

Maintain Equipment

Be sure to maintain equipment according to manufacturer's instructions. Regularly check the operation of the protective and safety devices.

Do not perform any work on the compact excavator unless you are authorized and qualified to do so.

If you have been authorized to maintain the equipment, **read the operator, maintenance and service manuals.** Study the instructions, check the lubrication charts and examine all the instruction messages on the machine. Maintenance can be dangerous unless performed properly. Be sure you have the necessary skill, information, tools and equipment to do the job correctly.

If adjustments must be made with the engine running, always work as a 2-person team with one person sitting in the operator's seat while the other works on the machine.

IMPORTANT! Do not modify equipment or add components not approved by the manufacturer. Use parts, lubricants and service techniques recommended by the manufacturer.

Protect Yourself

Wear personal protective clothing and Personal Protective Equipment (PPE) issued to you or called for by job conditions.

You may need:
— Hard hat
— Safety boots with non-slip soles
— Safety glasses, goggles or face shield
— Apron and heavy-duty gloves
— Hearing protection
— Welding helmet or goggles
— Respirator or filter mask

Wear whatever is needed to protect yourself—do not take chances.

Perform Maintenance Safely

WARNING! Prevent death or serious injury from entanglement. **Do not wear loose clothing or accessories. Restrain long hair. Stay away from all rotating components when the engine is running.** Contact with or entanglement in rotating or moving parts could result in death or serious injury.

Wear a rubber apron and rubber gloves when working with corrosives. Wear gloves and safety shoes when handling wooden blocks, wire rope or sharp-edged metal.

Always use safety glasses, goggles or a face shield. They provide eye protection from fluids under pressure, during grinding and while servicing batteries. Protection is also needed from flying debris, liquids and loose material produced by equipment, tools and pressurized air/water/oil/fuel.

Wear a face shield when you disassemble spring-loaded components or work with battery acids. Wear a welding helmet or goggles with a shaded filter when you weld or cut with a torch.

Do not sand, grind, flame-cut, braze or weld without an approved respirator or appropriate ventilation. If welding is required on the machine, refer to the manufacturer's manuals or consult the equipment dealer for proper procedures. Make sure all flammable material is cleared from the area.

Keep pockets free of all objects that could fall out and drop into machinery.

Handle tools and heavy parts sensibly, with regard for yourself and other persons. Lower items—do not drop them.

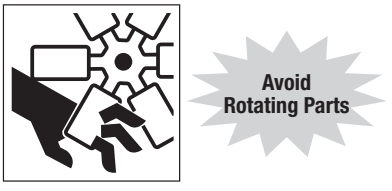

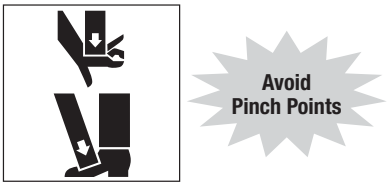

https://truckmanualshub.com/

Perform Maintenance Safely

Prepare The Work Area

— Position the compact excavator in a level area out of the way of other working equipment.
— Make sure there is adequate light, ventilation and clearance.
— Remove oil, grease, ice and snow or water to eliminate any slippery surfaces.
— Clean around the machine and work area to minimize contamination. Clean up oil or fuel spills promptly and dispose of the material properly.

Prepare The Machine

— Attach a “DO NOT OPERATE” warning tag to the control levers and remove the ignition key if the machine should not be started.
— Block the tracks.
— Release all hydraulic, water and air pressure. Lower, lock or block all hydraulically supported components.

WARNING! Disconnecting or loosening any hydraulic component or a part failure can cause unsupported equipment to drop. **Do not go under or near raised equipment unless supported by a manufacturer-approved support device(s).** Death or serious injury could result from falling equipment.

— Remove only guards or covers that provide access to the area being serviced. Replace all guards and covers when work is complete.

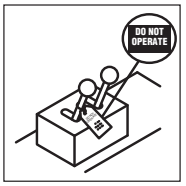

Use Warning Tags

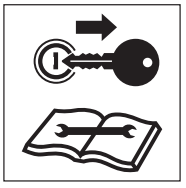

Remove Key And Read Maintenance Manual

Use Approved Support Device

Perform Maintenance Safely

Use Approved Ventilation

If it is necessary to run an engine in an enclosed area, remove the exhaust fumes from the area with an exhaust pipe extension.

WARNING! Prevent possible injury. **Never work on machinery with the engine running unless instructed by the manufacturer’s manuals for specific service.**

WARNING! Never operate any type of engine without approved ventilation—EXHAUST FUMES CAN KILL.

Ventilate Work Area

Use Jacks And Hoists Carefully

If you must work beneath raised equipment, use solid wood blocks, jack-stands or other rigid and stable supports. Never use concrete blocks. When using jacks or hoists, always be sure they are adequately supported and of adequate capacity.

Make sure the hoists or jacks you use are in good repair. Never use jacks with cracked, bent or twisted parts. Never use frayed, twisted or pinched cables. Never use bent, worn or distorted hooks.

Protective Structure Safety

Do not remove or modify a protective structure (TOPS/ROPS, FOGS/FOPS OPS) except for service. Reinstall with manufacturer-approved fasteners before further machine operation.

Replace a damaged protective structure. Refer to the manufacturer’s manual for specific instructions and inspection requirements.

https://truckmanualshub.com/

Perform Maintenance Safely

Common Maintenance Safety Practices

Fuel Hazards

IMPORTANT! Always use approved fuel containers and dispensing equipment.

Fuels are flammable, so observe these practices to reduce the possibility of a serious accident.
— Shut off engine and ignition before refueling.
— Always ground the fuel nozzle against the filler neck to avoid sparks.
— Keep sparks and open flames away from fuel.
— Do not use a cell phone or two-way radio while fueling or handling fuel—they could cause sparks.
— Do not smoke while refueling or when handling fuel containers.
— Do not cut or weld on or near fuel lines, tanks or containers.
— Do not overfill the tank or spill fuel. Clean up spilled fuel immediately.

Always use a nonflammable solvent when you clean parts. Do not use gasoline, diesel fuel or other flammable fluids.

Store all flammable fluids and materials away from work areas in suitable containers, per local regulations.

Cooling System Hazards

Liquid cooling systems build up pressure as the liquid gets hot, so **use extreme caution** before removing the radiator or tank cap. Be sure to:
— Stop the engine and wait for the system to cool.
— Wear protective clothing and safety glasses.
— Turn the radiator or tank cap slowly to the first stop to allow the pressure to escape before removing the cap completely.

Do Not Loosen Cap Until Cool

Perform Maintenance Safely

Hydraulic System Hazards

The hydraulic system is under pressure whenever the engine is running and may hold pressure even after the engine is shut off. Cycle all hydraulic controls, including auxiliary controls, after the engine is shut down to relieve trapped pressure in the lines.

During inspection of the hydraulic system:
— Wait for fluid to cool before disconnecting the lines. Hot hydraulic fluid can cause SEVERE BURNS.
— **Do not** use your hand to check for leaks.
— Wear appropriate eye protection. Hydraulic fluid can cause permanent eye injury.

WARNING! Diesel fuel and hydraulic fluid under pressure can penetrate the skin or eyes and cause serious injury, blindness or death. Fluid leaks under pressure may not be visible. **Use a piece of cardboard or wood to find leaks, not your hand. Wear a face shield or safety goggles for eye protection.** If fluid is injected into the skin, it must be removed within a few hours by medical personnel familiar with this type of injury.

When venting or filling the hydraulic system, loosen the filler cap slowly and remove it gradually.

Never reset any relief valve in the hydraulic system to a pressure higher than recommended by the manufacturer.

Follow manufacturer's instructions when taking oil samples.

Do not permit an open flame around the hydraulic system.

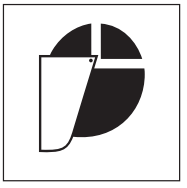

Wear Eye Protection

High Pressure Fluid Can Inject Into The Body

Do Not Exceed Factory Pressure Settings

https://truckmanualshub.com/

Perform Maintenance Safely

Electrical System Hazards

Before working on the electrical system, disconnect the battery cable(s).
— Remove the battery negative (-) cable(s) first.
— When reconnecting the battery, connect the battery negative (-) cable(s) last.

Battery electrolyte contains acid, which is a POISON and can cause SEVERE CHEMICAL BURNS.

Avoid Injury

— Wear a face shield to prevent electrolyte contact with your eyes.
— Wear chemical-resistant gloves and clothing to keep electrolyte off your skin and regular clothing.

WARNING! Electrolyte will damage eyes or skin on contact. **Always wear a face shield to avoid getting electrolyte in eyes.** If electrolyte contacts eyes, flush immediately with clean water and get medical attention. **Wear rubber gloves and protective clothing to keep electrolyte off skin.** If electrolyte contacts exposed skin or clothing, wash off immediately with clean water.

If electrolyte is ingested, seek MEDICAL ATTENTION IMMEDIATELY. NEVER give fluids that would induce vomiting.

Perform Maintenance Safely

Avoid Battery Explosion

WARNING! Avoid possible death or serious injury from explosion. Lead-acid batteries produce extremely explosive gases, especially when being charged. **Keep arcs, sparks, flames and lighted tobacco away.**
— **Do not** smoke near batteries.
— Check battery cables for worn or damaged insulation.
— Keep arcs, sparks and open flames away from batteries.
— Provide adequate ventilation.

Never check the battery by placing a metal object across the battery posts; the resulting spark could cause an explosion.

WARNING! Avoid possible death or serious injury from battery explosion. **Do not charge a battery or boost-start the engine if the battery is frozen. Warm to 60°F (15.5°C) or the battery may explode.**

Safety rules during battery boost-starting:
— Follow the instructions for proper “battery boost-starting” as specified in the manufacturer’s manual.
— Be sure the machines are not touching.
— Observe the polarity of the batteries and connections.
— Make the final cable connection to the engine or the ground point farthest from the battery and away from fuel lines. Never make the final connection at the starter or dead battery—sparks may ignite the explosive gases present at the battery.
— When disconnecting cables after boost-starting, remove the cables in reverse order of connection (i.e., final connection first).

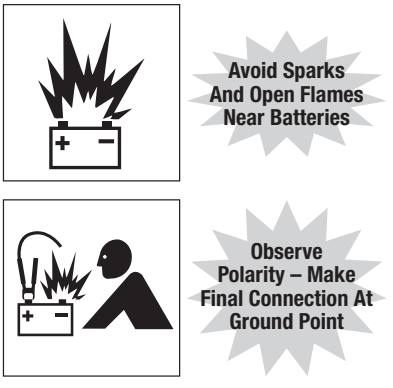

https://truckmanualshub.com/

Perform Maintenance Safely

Track Maintenance And Adjustment

Check the tracks daily because the stability of the compact excavator can be dramatically affected by damage to tracks.

Check for:
— Damage or wear
— Correct tension according to manufacturer's instructions
— Proper lubrication of track rollers and idlers—refer to the manufacturer's manuals.

Track tension is important for good performance, reducing excessive track wear and preventing the tracks from coming off. Track and roller wear varies with working conditions and soil conditions. Special tools and procedures may be needed to check or adjust track tension. Follow manufacturer's specific service procedure(s) when removing and installing tracks.

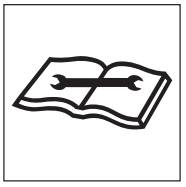

Follow Maintenance Instructions

Check For Track Damage

WARNING! Track tensioning systems have compressed springs or pressurized fluid (oil or grease). Improperly releasing track tension forces can result in death or serious injury. **Always follow the manufacturer's warnings and instructions for track adjustment and other maintenance and servicing procedures.**

WARNING! Avoid possible death or serious injury. **Never strike or pound on track tension springs.** They may be under very high compression and could shatter explosively.

Perform Maintenance Safely

Complete Service And Repairs Before Machine Is Released

Tighten all bolts, fittings and connections to torques specified by the manufacturer.

Clean or replace all damaged, missing or painted-over signs, plates and decals that cannot be read.

Inspect and install all guards, covers and shields after servicing. Replace or repair any damaged parts. Refill and recharge pressure systems only with manufacturer-approved or recommended fluids.

Check readiness of fire extinguishers, if so equipped. Do not paint over or otherwise interfere with fire detectors or fire extinguisher access points.

Follow the instructions in the manufacturer's manual(s) for proper service of any fire suppression equipment on the machine.

Air conditioning service is limited to approved service personnel. Refer to the manufacturer's manual(s).

Verify Service Work When Completed

Start the engine and check for leaks. (See page 46, **Hydraulic System Hazards**.) Operate all controls to make sure the machine is functioning properly. Test the machine if necessary. After testing, shut down and check the work you performed. Are there any missing cotter pins, washers, locknuts, etc.? Recheck all fluid levels before releasing the compact excavator for operation.

All parts should be inspected during repair and replaced if worn, cracked or damaged. Excessively worn or damaged parts can fail and cause death or injury.

https://truckmanualshub.com/

Final Word To The User

You have just finished reading the AEM Compact Excavator Safety Manual. It is impossible for this manual to cover every safety situation you may encounter on a daily basis. Knowledge of these safety precautions and your application to the basic rules of safety will help to build good judgment in all situations. Our objective is to help you develop, establish and maintain good safety habits to make operating a Compact Excavator easier and safer for you.

This manual is another in a series on the safe operation of machinery published by AEM.
Many pictorials in this safety manual can be found and downloaded at http://pictorials.aem.org.
For additional publications visit our website at www.safetymaterials.org.

AEM
ASSOCIATION OF
EQUIPMENT MANUFACTURERS

e-mail safetymaterials@aem.org
www.aem.org

FORM CE-1009
Printed in U.S.A.

https://truckmanualshub.com/

Wacker Neuson Linz GmbH keep abreast of the latest technical developments and constantly improve their products. For this reason, we may from time to time need to make changes to diagrams and descriptions in this documentation which do not reflect products which have already been delivered and which will not be implemented on these machines.

Technical data, dimensions and weights are given as an indication only. Responsibility for errors or omissions not accepted.

No reproduction or translation of this publication, in whole or part, without the written consent of Wacker Neuson Linz GmbH.

All rights under the provision of the Copyright Act are reserved.

Wacker Neuson Linz GmbH

Flughafenstr. 7

A-4063 Hörsching

Austria

https://truckmanualshub.com/

Important: For spare parts information, please see your Wacker Neuson Dealer, or visit the Wacker Neuson website at http://www.wackerneuson.com/.

Wichtig! Informationen über Ersatzteile erhalten Sie von Ihrem Wacker Neuson Händler oder besuchen Sie die Wacker Neuson Website unter http://www.wackerneuson.com/.

Important : Pour des informations sur les pièces détachées, merci de consulter votre distributeur Wacker Neuson, ou de visiter le site Internet de Wacker Neuson sur http://www.wackerneuson.com/.

Importante : Para saber más sobre las piezas de repuesto, póngase en contacto con su distribuidor de Wacker Neuson o acceda al sitio web de Wacker Neuson en http://www.wackerneuson.com/.

Importante : Per informazioni sui pezzi di ricambio, contattare il rivenditore Wacker Neuson o visitare il sito di Wacker Neuson all'indirizzo www.wackerneuson.com.

Viktigt : För information om reservdelar, kontakta din Wacker Neuson-leverantör eller besök Wacker Neusons webbplats på http://www.wackerneuson.com/.

Tärkeää : Pyydä varaosatietoja Wacker Neusonin jälleenmyyjältä tai vieraile Wacker Neusonin web-sivustolla osoitteessa http://www.wackerneuson.com/

Viktig : For informasjon om reservedeler, vennligst kontakt din Wacker Neuson-forhandler, eller besøk Wacker Neusons nettside på http://www.wackerneuson.com/.

Vigtigt : Hvis du ønsker oplysninger om reservedele, bedes du kontakte din Wacker Neuson forhandler eller besøg Wacker Neuson websiden på http://www.wackerneuson.com/.

Belangrijk! Neem contact op met uw Wacker Neuson dealer of bezoek de website van Wacker Neuson op http://www.wackerneuson.com/ voor meer informatie over reserveonderdelen.

Importante : Para obter informações sobre as peças sobresselentes, consulte o seu fornecedor da Wacker Neuson ou aceda ao site Web da Wacker Neuson em http://www.wackerneuson.com

Ważne : W celu uzyskania informacji na temat części zamiennych skontaktuj się z przedstawicielem firmy Wacker Neuson lub skorzystaj z witryny internetowej http://wackerneuson.com/.

Důležité upozornění! Pro informace o náhradních dílech, prosím, kontaktujte svého Wacker Neuson dealera, nebo navštivte webové stránky http://www.wackerneuson.com/.

FONTOS: A pótalkatrészekre vonatkozó információkért kérjük, forduljon Wacker Neuson kereskedőjéhez vagy látogasson el a Wacker Neuson weboldalára a következő címen: http://www.wackerneuson.com/.

Важно! Для ознакомления с информацией о запасных частях, пожалуйста, обратитесь к местному торговому представителю компании Wacker Neuson или посетите веб-сайт http://www.wackerneuson.com/.

Σημαντικό : Για πληροφορίες σχετικά με τα ανταλλακτικά, μιλήστε με τον αντιπρόσωπό σας της Wacker Neuson, ή επισκεφθείτε τον ιστότοπο http://www.wackerneuson.com/.

Važno : Za rezervne dijelove obratite se svom Wacker Neuson prodavaču ili posjetite mrežne stranice tvrtke Wacker Neuson: http://www.wackerneuson.com/.

Önemli : Yedek parça bilgileri için Wacker Neuson Bayinize bakın veya Wacker Neuson web sitesini ziyaret edin. http://www.wackerneuson.com/

重要 交換部品の情報については、ワッカーノイソンディーラーにお問い合わせ頂くか、ワッカーノイソンウェブサイト http://www.wackerneuson.com/ をご覧ください。

重要 有关备件信息，请咨询您的威克诺森经销商或访问威克诺森网站：http://www.wackerneuson.com/。

Important : Pentru informaţii referitoare la piesele de schimb, vă rugăm să vă adresaţi distribuitorului Wacker Neuson sau să vizitaţi site-ul web Wacker Neuson la adresa http://www.wackerneuson.com/.

Важно : За информация относно резервни части, моля, обърнете се към местния дилър на Wacker Neuson или посетете уебсайта на Wacker Neuson на адрес http://www.wackerneuson.com/.

Wacker Neuson Produktion GmbH & Co. KG, Preußenstraße 41, D-80809 München,
Tel.: +49-(0)89-3 54 02-0 Fax: +49 - (0)89-3 54 02-390
Wacker Neuson Production Americas LLC, N92W15000 Anthony Ave., Menomonee Falls, WI. 53051
Tel.: (262) 255-0500 Fax: (262) 255-0550 Tel.: (800) 770-0957
Wacker Neuson Limited - Room 1701–03 & 1717–20, 17/F. Tower 1, Grand Century Place, 193 Prince Edward Road West, Mongkok, Kowloon, Hongkong. Tel: (852) 3605 5360, Fax: (852) 2758 0032