https://truckmanualshub.com/

Part No.509002110002
Rev: A
Nov. 2020

Maintenance Manual

GTTZ10EJ/ML10EJ/ML340EJ

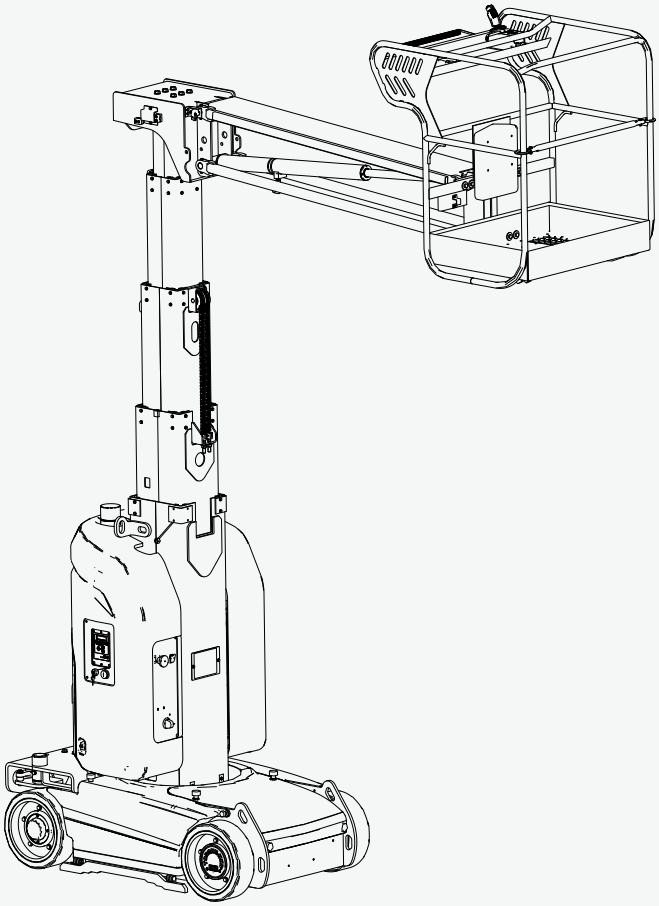

CE ANSI EAC GB

SINOBOOM

https://truckmanualshub.com/

https://truckmanualshub.com/

⚠ WARNING

Operating, servicing and maintaining this vehicle or equipment can expose you to chemicals including engine exhaust, carbon monoxide, phthalates, and lead, which are known to the State of California to cause cancer and birth defects or other reproductive harm. To minimize exposure, avoid breathing exhaust, do not idle the engine except as necessary, service your vehicle or equipment in a well-ventilated area and wear gloves or wash your hands frequently when servicing. For more information go to: www.P65warnings.ca.gov.

https://truckmanualshub.com/

Manual revision history：

REV	DATE	DESCRIPTION	REMARK
A	Nov, 2020	Original issue	

Please contact us:

Website : www.sinoboom.com

E-mail : sales@sinoboom.com

Sales Tel : 0086-0731-87116222

Service Tel : 0086-0731-87116333

Address : No.128, East Jinzhou Avenue, Ningxiang High-tech Industrial Park, Changsha, Hunan, China

Zip Code : 410600

Copyright © Hunan Sinoboom Intelligent Equipment Co., Ltd. All Rights Reserved

The final interpretation right of this manual belongs to Hunan Sinoboom Intelligent Equipment Co., Ltd.

https://truckmanualshub.com/

APPLICATION

Use the following table to identify the specific serial number for models included in this manual. Check the model of your machine before consulting the manual, and then use the correct manual according to the serial number of the model. See the nameplate on your machine to identify the model and serial number (See***Decals/Nameplates Inspection***of the *Operation Manual* for details.)

Model	Trade Identification		Serial No.
	Metric	Imperial	
GTTZ10EJ	ML10EJ	ML340EJ	From 0900200110 to present

NOTE:

- Product model is applied in product nameplate for distinction of products of different main parameters.
- Product trade identification is applied in marketing and machine decals for distinction of products of different main parameters, and can be classified as metric type and imperial type: The metric type of trade identification is applicable to machines for countries/regions using metric system or as specially required by customers; The imperial type of trade identification is applicable to the machines for countries/regions using imperial system or as specially required by customers.

https://truckmanualshub.com/

This Page Intentionally Left Blank

https://truckmanualshub.com/

STATEMENTS

Hunan Sinoboom Intelligent Equipment Co., Ltd. (Hereinafter referred to as Sinoboom) will upload the latest product manual information to the website www. sinoboom. com as soon as possible. However, due to continuous product improvement, the information in this manual is subject to change without prior notice.

This manual covers the basic parts information of one or more products. Therefore, please use this manual according to your needs. If you find problems in the manual or have suggestions for improvement, feel free to share your feedback with Sinoboom, and we will address these issues as soon as possible.

Feel free to consult and download the *Operation Manual*, *Maintenance Manual* and *Parts Manual* of the products you need online at www.sinoboom.com.

Hunan Sinoboom Intelligent Equipment Co., Ltd. retains the right of final interpretation of the manual.

https://truckmanualshub.com/

This Page Intentionally Left Blank

https://truckmanualshub.com/

TABLE OF CONTENTS

Introduction iii

1 Safety 1-1

Safety Definitions 1-1
Reporting Accidents..... 1-1
Electrocution Hazards..... 1-1
Tipping Hazards and Rated Load 1-2
Work Environment Hazards..... 1-4
Unsafe Operation Hazards..... 1-5
Fall Hazards..... 1-6
Collision Hazards 1-7
Crush Hazards 1-8
Explosion and Fire Hazards..... 1-8
Damaged Machine Hazards 1-8
Bodily Injury Hazards 1-9
Battery Hazards..... 1-9
Hydraulic Systems Hazard.....1-10
Welding and Polishing Requirements 1-10
Lockout after Each Use 1-11

2 Specifications 2-1

Machine Specifications 2-1
DC Drive Motor & Reducer..... 2-3
Major Component Weights..... 2-4
Function Speed 2-5
Power System Specifications 2-5
Hydraulic Hose and Fitting Specifications 2-6
Hydraulic Hose Torque 2-6
Hydraulic Fitting Torque 2-7
Hydraulic Hose and Fitting Torque Procedure 2-9
Fastener Torque Specifications 2-9

3 System Descriptions..... 3-1

Power System..... 3-1
Hydraulic System 3-1
Electrical System..... 3-1
Machine Control..... 3-1
Safety Measures 3-1

4 Service and Guidelines..... 4-1

Machine Preparation, Inspection and Maintenance 4-1
General 4-1
Preparation, inspection and maintenance..... 4-1
Qualified Sinoboom equipment mechanic 4-1
Pre-operation inspection..... 4-1
Pre-delivery inspection and frequent inspection 4-1
Annual machine inspection 4-1
Preventive maintenance..... 4-2
Maintenance and Servicing Precautions 4-2
General 4-2
Safety and workmanship 4-2
Cleanliness 4-2
Component removal and installation 4-3
Component disassembly and assembly 4-3
Pressure-fit parts 4-3
Bearings 4-3
Gaskets..... 4-3
Bolt usage and torque application .. 4-3
Hydraulic lines and electrical wiring 4-3
Hydraulic system 4-3
Lubrication..... 4-4
Battery 4-4
Application of Insulating Silicone Grease to Electrical Connections 4-4

5 Maintenance 5-1

https://truckmanualshub.com/

Maintenance Schedule 5-1
Conducting a Pre-delivery Inspection . 5-4
Maintenance Inspection Report 5-5
Chassis and Slewing Components 5-8
Tires and Rims 5-8
Drive Motor & Reducer 5-9
Wheel Support 5-10
Steer Cylinder 5-13
Slewing Unit 5-14
Mast Components 5-15
Retract Cable 5-15
Chains 5-16
Connection between Mast Sections 1,2 and Brackets 5-19
Mast wear pads 5-20
Functions and Controls 5-21
Ground Controls 5-21
Platform Controls 5-22
Emergency Lowering 5-24
Mast emergency lowering 5-24
Jib boom emergency lowering 5-25
Brake System 5-26
Brake Release Function 5-26
Drive Speed 5-27
Pothole Protection 5-28
Tilt Protection 5-29
Weighing System 5-30
Hydraulic and Electrical Systems 5-30
Hand Pump 5-30
Hydraulic Cylinder 5-31
Hydraulic Hose 5-32
Hydraulic Filter 5-33
Hydraulic Oil 5-34
Battery 5-35
Electric cable 5-41
Overall Machine Parts 5-41
Manuals and Decals 5-41
Structural Parts 5-41
Pins and Composite Bearings 5-42

6 Troubleshooting and Schematics 6-1
Troubleshooting 6-1
Hydraulic Schematic 6-4
Electrical Schematic 6-5

Appendix 1: Prepare the Work Record Before Delivery A-1

Appendix 2 : Maintenance Inspection Report A-3

https://truckmanualshub.com/

INTRODUCTION

Thank you for choosing and using the machinery of Hunan Sinoboom Intelligent Equipment Co., Ltd. Always read, understand and become familiar with the operation requirements of the machine and its associated safety procedures before operating, maintaining and repairing the machine. Operating the machine without becoming familiar with its specific operation requirements and safety procedures poses serious risks. Operators who follow safety rules and operate the machine carefully and effectively will prevent personal injury, property loss and accidents.

Use this machine only to transport tools to work locations and for performing tasks on the work platform. Operators must be competent and must obtain training to carefully use the machine and follow safety procedures. Only trained and authorized personnel may operate the machine.

This manual guides the operator and authorized personnel in maintaining the machine. The operator is responsible for reading, understanding and implementing the maintenance and safety procedures in this manual and for following the manufacturer's instructions before beginning any work. Read, understand and follow all safety rules and operating instructions. The operator must also consider the machine's uses and limitations and the conditions at the jobsite before using this machine. Strictly following all safety requirements in this manual is critical.

Consider this manual a part of the machine, along with *Operation Manual* and *Parts Manual*, and always keep the manuals with the machine. The owner or administrator of the machine shall offer all manuals and other necessary information provided by the machine manufacturer regarding the daily inspection and maintenance to each of the renters. If the machine is sold, the owner or administrator must pass along the manuals and other necessary information to the purchaser. The owner or administrator of the machine shall also provide the manufacturer's maintenance information to the person responsible for maintaining the machine.

If you have any questions, contact Hunan Sinoboom Intelligent Equipment Co., Ltd..

https://truckmanualshub.com/

This Page Intentionally Left Blank

https://truckmanualshub.com/

1 SAFETY

Read, understand and comply with the safety rules and regulations of your workplace and your government.

Before using the machine, obtain proper training on safe machine operation and make sure you can safely control and operate the machine.

Understand that as the operator you have the responsibility and right to shut down the machine in case of failure with the machine or other emergency at your workplace.

NOTICE

People suffering from heart disease, hypertension, epilepsy and other diseases and people who fear heights must never operate or use this machine. Also, people who have alcohol or drugs in their system, or experience excessive fatigue or depression, are prohibited from operating or using this machine.

SAFETY DEFINITIONS

This safety alert symbol appears with most safety statements. It means attention, become alert, your safety is involved! Please read and abide by the message that follows the safety alert symbol.

⚠ DANGER

Indicates a hazardous situation that, if not avoided, *will* result in death or serious injury.

⚠ WARNING

Indicates a hazardous situation that, if not avoided, *could* result in death or serious injury.

⚠ CAUTION

Indicates a hazardous situation that, if not avoided, *could* result in minor or moderate injury.

NOTICE

Indicates a situation that can cause damage to the engine, personal property and/or the environment, or cause the equipment to operate improperly.

NOTE: Indicates a procedure, practice or condition that should be followed in order for the engine or component to function in the manner intended.

REPORTING ACCIDENTS

In case of any accident involving the machinery of , notify Immediately, even if no personal injury or property damage occurs during the accident. Contact by telephone and provide all necessary details. Failure to notify the manufacturer within 48 hours of the incident involving the machinery of may void the product's warranty.

NOTICE

Thoroughly inspect the machine and all its functions after any accident, being sure to test first from the ground controller and then from the platform controller. Ensure the machine's lifting height does not exceed 3 m(9.8 ft) until all damage has been repaired and all controllers operate properly.

ELECTROCUTION HAZARDS

NOTE: This machine is not insulated and does not have an electric shock protection function.

All operators and managers shall comply with national or local regulations regarding the minimum safe distance of live conductors above the ground. In the absence of such requirements, operators and managers should follow the minimum safety distance requirements in ***Table 1-1 , page 1-2***.

https://truckmanualshub.com/

⚠ WARNING

ELECTRICAL SHOCK HAZARDS

- **Always maintain a safe distance from power lines and electrical equipment in accordance with applicable government regulations and see *Table 1-1 , page 1-2*.**
- **Consider platform and boom movement, wire swinging or drooping, beware of strong winds or gusts, and do not operate the machine when there is lightning or heavy rain.**
- **If the machine comes into contact with live wires, keep away from the machine. Personnel on the ground or on the platform must not touch or operate the machine until the power is switched off.**
- **Do not use the machine as a ground wire during welding and polishing operations.**

Table 1-1

Voltage (Phase to Phase, kV)	Minimum safe distance (m/ft)
0-50	3.05 (10)
50-200	4.60 (15)
200-350	6.10 (20)
350 -500	7.62 (25)
500 -750	10.67 (35)
750 -1000	13.725 (45)

TIPPING HAZARDS AND RATED LOAD

Maximum rated load bearing capacity of the platform:200kg (440lb)

⚠ WARNING

TIPPING HAZARDS

- **Personnel, equipment and materials on the platform must not exceed the maximum load capacity.**
- **Only raise or extend the mast when the machine is on solid, level ground.**
- **Select only the low speed when driving the machine on a slope.**
- **Do not use the tilt alarm as a level indicator. The tilt alarm on the platform will sound only if the machine is heavily tilted.**
- **Carefully lower the platform and move the machine to a firm level surface. Do not rotate the turntable while the lowering the mast. Any unauthorized modification of the level or limit switches is strictly forbidden.**
- **Do not drive faster than 0.6 km/h (0.37 mph) when the platform is raised.**
- **When the platform is raised, the machine cannot travel on uneven terrain, unstable surfaces or in other dangerous conditions.**
- **Do not operate the machine during strong winds or gusts, and do not increase the surface area of the platform or load. Increasing the area exposed to the wind will reduce the stability of the machine.**
- **When the machine is on rough ground, with gravel or other uneven surfaces, or near holes and steep slopes, maintain a minimum distance of 0.6m (2ft) and reduce the speed.**
- **When on the platform do not push and pull objects outside of it. The maximum lateral force allowed is:400 N (90 lbf).**
- **Tow the machine only from the tiedown/lifting points on the chassis.**
- **Never use the mast or platorm to stablize or support any objects outside of the machine.**

https://truckmanualshub.com/

⚠ WARNING

TIPPING HAZARDS

- **Do not change any machine parts that may affect safety and stability.**
- **Do not replace key parts that affect machine stability with different weights or specifications.**
- **Do not modify or change moving aerial platforms without the manufacturer's prior written permission.**
- **On the platform, do not attach an additional device for placing tools or other materials to the guardrail. This will increase the platform weight, surface area and load.**
- **Do not place on, or fasten any overhanging load to any part of this machine.**
- **Do not place ladders or scaffolding on the platform or any parts of the machine.**
- **Do not use the machine on a moving or active surface or on a vehicle. Ensure all tires are in good condition, the slotted nuts tightened and the cotter pins complete.**
- **Do not use a battery that weighs less than the original one(30kg[66 lb], and do not remove or modify the counterweight or other parts of the battery box. The battery not only provides power, it also serves as a counterweight. The battery is vital to maintaining the stability of the machine.**
- **Do not use the platform or mast/ boom to push other machines or objects.**
- **Do not let the platform or mast/ boom touch the nearby structures.**
- **Do not tie off the platform with rope or other binding materials to the nearby structures.**
- **Do not put a load outside the platform.**
- **When the platform is caught or stuck or when other objects in the vicinity impede its normal movement, do not use the**

⚠ WARNING

TIPPING HAZARDS

platform controller to lower the platform. If you intend to lower the platform with a ground controller, you must operate it only after all personnel have left the platform.

https://truckmanualshub.com/

WORK ENVIRONMENT HAZARDS

⚠ WARNING

UNSAFE JOBSITE HAZARDS

- **Do not operate the machine on surfaces, edges or potholes that cannot bear the weight of the machine. Raise or extend the boom only when the machine is on firm, flat ground.**
- **Never travel on uneven terrain or unstable surfaces or in other dangerous conditions when raising the platform.**
- **When the machine is on rough ground, with gravel or other uneven surfaces, or near holes and steep slopes, maintain a minimum distance of 0.6m(2ft) and reduce the speed.**
- **Do not use the tilt alarm as a horizontal indicator. The tilt alarm on the platform will sound only when the machine is heavily tilted. If the tilt alarm sounds:**
  - **Carefully lower the platform and move the machine to firm level surface. Do not rotate the turntable while lowering the mast. Do not modify the level or limit switches.**
- **Do not drive the machine exceeding 0.6 km/h (0.37 mph) with platform raised.**
- **If the machine can be used outdoors, never operate it during strong winds or gusts. Do not lift the platform when the wind speed exceeds 12.5 m/s (18 mph). If the wind speed exceeds 12.5 m/s (18 mph) after the platform is lifted, fold the platform and do not continue to operate the machine.**
- **Do not drive or lift the machine on slopes, steps or vaulted surfaces that exceed the maximum gradeability of the machine.**
- **Do not raise the platform when the machine is on the slope greater than 3°.**

Before or during machine operation, check the possible hazards on the jobsite and beware of the restrictions within the environment, including flammable and explosive gas/dust.

Table 1-2

BEAUFORT NUMBER	METERS/ SECOND	MILE/ HOUR	DESCRIPTI-ON	GROUND CONDITION
0	0 ~ 0.2	0 ~ 0.5	Calm	Calm. Smoke rises vertically.
1	0.3 ~ 1.5	1 ~ 3	Light air	Wind motion visible in smoke.
2	1.6 ~ 3.3	4 ~ 7	Light breeze	Wind felt on exposed skin. Leaves rustle.
3	3.4 ~ 5.4	8 ~ 12	Gentle breeze	Leaves and smaller twigs in constant motion.
4	5.5 ~ 7.9	13 ~ 18	Moderate breeze	Dust and loose paper rise. Small branches begin to move.
5	8.0 ~ 10.7	19 ~ 24	Fresh breeze	Smaller trees sway.
6	10.8 ~ 13.8	25 ~ 31	Strong breeze	Large branches in motion. Flags waving near horizontal. Umbrella use becomes difficult.
7	13.9 ~ 17.1	32 ~ 38	Near gale/ moderate gale	Whole trees in motion. Effort needed to walk against the wind.

https://truckmanualshub.com/

BEAUFORT NUMBER	METERS/ SECOND	MILE/ HOUR	DESCRIPTI-ON	GROUND CONDITION
8	17.2 ~ 20.7	39 ~ 46	Fresh gale	Twigs broken from trees. Cars veer on road.
9	20.8 ~ 24.4	47 ~ 54	Strong gale	Light structure damage.

NOTICE

Maximum gradeability is suitable for machines with platform retracted.

Gradeability means the maximum allowable tilt angle of the machine when it is on solid ground and the platform is only capable of carrying one person. As the weight of the machine's platform increases, the machine's climbing capacity reduces.

Maximum gradeability :

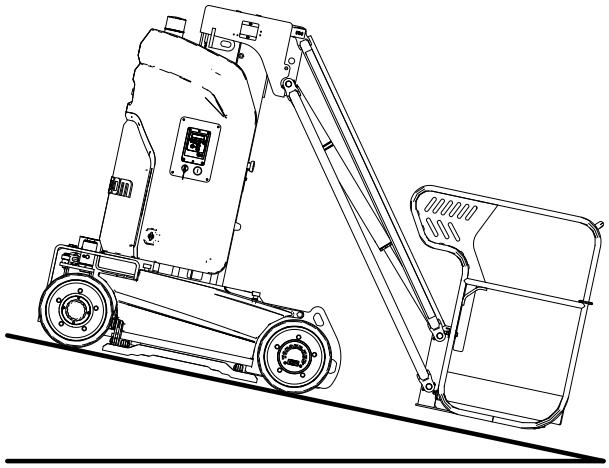

Slope rating: 25%/14°

UNSAFE OPERATION HAZARDS

The machine must be operated in strict compliance with the requirements as contained in this manual and the maintenance manual, as well as the applicable industry or local regulations, whichever is more stringent.

https://truckmanualshub.com/

⚠ WARNING

UNSAFE OPERATION HAZARDS

- **Do not push any object outside the platform. The maximum side force allowed is 400N (90 lbf) for indoor use and 200N (45 lbf) for outdoor use.**

- **Tow the machine only from the tiedown/lifting points on the chassis.**
- **Never use the mast/boom or platform to stablize or support any objects outside of the machine.**
- **Do not modify any component that may affect the machine safety and stability.**
- **Do not replace key parts that affect machine stability with the ones of different weights or specifications.**

- **Do not change or modify moving aerial platforms without the manufacturer's written permission.**
- **On the platform, do not attach an additional device for placing tools or other materials to the guardrail. This will increase the platform weight, surface area and load.**

- **Do not put ladders or scaffolding on the platform or any part of this machine.**
- **Do not use the machine on any mobile or movable surface or vehicle. Ensure all tires are in good condition, the slotted nuts tightened and the cotter pins complete.**
- **Do not use a battery that weighs less than the original one (30kg[66 lb]), and do not remove or modify the counterweight or other parts inside the battery box. The battery not only provides power, it also serves as a counterweight. The battery is vital to maintaining the stability of the machine.**
- **Do not place or attach any suspended load onto any part of the machine.**

⚠ WARNING

UNSAFE OPERATION HAZARDS

- **Do not use the machine as a crane.**
- **Do not use the platform or boom to push the machine or other objects.**
- **Do not allow the platform or mast/boom to touch structures.**
- **Do not use rope or other binding materials to tie the platform or mast/boom onto nearby structures.**
- **Do not put the load outside the platform.**
- **When the platform is caught or stuck or when other objects in the vicinity impede its normal movement, do not use the platform controller to lower the platform. If you intend to lower the platform with a ground controller, you must operate it only after all personnel have left the platform.**
- **When one or more of the machine's tires are off the ground, evacuate all personnel before attempting to stabilize the equipment. Use a crane, forklift or other suitable equipment to stabilize the machine.**

FALL HAZARDS

The machine must be operated in strict compliance with the requirements as contained in this manual and the maintenance manual, as well as the applicable industry or local regulations, whichever is more stringent.

https://truckmanualshub.com/

⚠ WARNING

FALL HAZARDS

- **Each person on the platform must wear harnesses or use safety equipment consistent with government regulations. Fasten the cable to the fixed point of the platform. Never fasten the cable of more than one person to a fixed point on the platform.**

- **Do not sit, stand or crawl on the guardrails. When on the platform always remain standing on the platform floor.**

- **Do not enter or exit the platform through the mast/boom.**
- **Keep the platform floor free of obstacles.**
- **Do not allow mud, oil stains, grease or other slippery substances reside on the footwear or platform floor.**
- **Do not enter or exit the platform unless the machine is fully in stowed position.**
- **Close the platform entry door before operating the machine.**
- **Do not operate the machine if the handrails are not properly installed and the platform entry door is not closed.**

COLLISION HAZARDS

At a minimum, operators must operate and maintain the machine as stated in this manual and in the *Maintenance Manual* in addition to following more stringent industry regulations and workplace rules.

⚠ WARNING

COLLISION HAZARDS

- **Pay attention to the field of sight and the presence of blind spots when moving or operating the machine.**
- **The non-staff must maintain a minimum of 2m (6.6ft) distance from the machine while it is travelling or swinging.**

- **When the work platform of a moving machine is approx2m (6.6ft) away from the obstructions, use the boom lift function (rather than the drive function) to get close to the obstructions.**
- **Switch to the low speed gear before parking the machine that drives at high speed.**

- **Do not use the high speed gear when the machine is driving reverse or in restricted or enclosed work area.**
- **Check the work area to avoid ground and overhead obstructions or other possible risks.**

- **Be sure to exercise caution when using the platform and ground controls. Color-marked directional arrows show the function of travel, lift and steering.**
- **Users must comply with user, workplace and government rules regarding the use of personal protective equipment (hard hats, safety belts and gloves, etc.).**
- **Place the machine on level ground or in a secured position before releasing the brakes.**
- **Only lower the platform when there are no people or obstructions in the area beneath it.**
- **When the machine is conducting aerial work, warn the staff/non-staff not to work, stand or walk under the raised boom or platform.**
- **Limit the speed of travel according to ground conditions, crowding, gradients, the presence**

https://truckmanualshub.com/

⚠ WARNING

COLLISION HAZARDS

and location of personnel and any other factors that may cause collisions.

- **Do not operate the machine on any crane or overhead traveling device unless the crane control is locked or precautions have been taken to prevent any potential collision.**
- **Never operate a machine dangerously or for fun.**

CRUSH HAZARDS

A potential crush hazard exists during movement of the machine. Always keep body parts and clothing a safe distance from the machine during machine operation.

⚠ WARNING

CRUSH HAZARDS

- **Do not place your hands and arms where they may become crushed or trapped.**
- **Do not work under the platform or the boom when the boom is not protected by a crane.**
- **Maintain good judgment and planning when using the controller on the ground to operate the machine. Maintain proper distance between operator, machine and fixed object.**

EXPLOSION AND FIRE HAZARDS

⚠ WARNING

EXPLOSION AND FIRE HAZARDS

Do not use the machine or charge the battery in hazardous or potentially flammable or explosive atmospheres.

DAMAGED MACHINE HAZARDS

NOTICE

To avoid machine damage, follow all operation and maintenance requirements in this manual and the Maintenance Manual.

⚠ WARNING

UNSAFE OPERATION HAZARDS

- **Do not use the machine if it is damaged or not in proper operating condition.**
- **Thoroughly inspect and test for all functions of the machine before use. Immediately mark and stop damaged or faulty machines.**
- **Ensure that all maintenance operations have been performed in accordance with this manual and the corresponding *Maintenance Manual*.**
- **Make sure all labels are in place and are legible.**
- **Ensure that the *Operation Manual* and *Maintenance Manual* are sound, easy to read and stored in the storage compartment on the platform.**

https://truckmanualshub.com/

BODILY INJURY HAZARDS

Always follow all operation and maintenance requirements in this manual and the Maintenance Manual.

⚠ WARNING

BODILY INJURY HAZARDS

- **Do not operate the machine when there are oil spills/leaks. Oil spills or leaks in hydraulic fluids may penetrate and burn the skin.**

NOTE: The operator must perform the maintenance during the pre-operation inspection. Only trained service personnel can open the covers to repair the machine.

BATTERY HAZARDS

⚠ WARNING

FIRE AND EXPLOSION HAZARD

- **Batteries contain sulfuric acid and generate explosive mixtures of hydrogen and oxygen gases. Keep any device that may cause sparks or flames (including cigarettes/smoking materials) away from the battery to prevent explosion.**
- **Do not touch the battery terminals or cable clips with tools that may cause sparks.**
- **Avoid charging the battery in direct sunlight.**

⚠ WARNING

BATTERY HAZARD

- **Be sure to read and follow the rocomendations given by the battery manufacturor regarding how to correctly use and maintain the battery.**
- **Always wear protective glasses or goggles and protective clothing when working with batteries. Remove all rings, watches and other accessories.**

⚠ WARNING

CHEMICAL BURN HAZARD

Avoid spilling or contacting battery acid with unprotected skin. Seek medical attention immediately if battery acid contacts skin.

https://truckmanualshub.com/

⚠ WARNING

BATTERY HAZARD

- **Only the properly trained personnel authorized by the workplace are allowed to remove the battery from the machine.**
- **Before replacing the battery, be sure to identify the appropriate number of personnel and the lifting method.**
- **During the assembling or disassembling process, never use the battery in a forciable manner, and never allow the battery to fall off.**
- **Never directly short-circuit the battery outputs with electrical cords.**
- **Should the battery acid spill out, use bicarbonate (baking soda) mixed with water to neutralize the acid.**
- **Never store the battery in water or humid atomosphere.**
- **Daily check the battery cable for damage, and replace any damaged parts before operating the machine.**
- **Do not expose the battery or charger to water/rain during charging.**

NOTICE

After charging the battery, be sure that:

- *The battery cable connections are free of corrosion.*
- *The battery hold-down and cable connections are secured.*

Adding terminal protection and anti-corrosion sealants will help reduce corrosion of the battery terminals and cables.

HYDRAULIC SYSTEMS HAZARD

⚠ WARNING

BURN AND HIGH PRESSURE HAZARD

- **Hydraulic systems are hot. DO NOT TOUCH! Serious personal injury may result from hot hydraulic fluid.**
- **When work on the hydraulic system is completed, thoroughly clean any spilled oil from the machine. Do not spill any hydraulic fluid on the ground. Clean any hydraulic fluid from your skin as soon as soon as you have completed performing maintenance and repairs. Dispose of used fluid as required by law.**
- **Never inspect for hydraulic leaks with bare hands or other exposed body parts. As a minimum, wear leather gloves and use cardboard or wood to inspect for leaks. If leaks are present, relieve pressure to allow system to cool prior to servicing. If injured by escaping hydraulic fluid, contact a physician immediately. Serious complications may arise if not treated immediately.**

WELDING AND POLISHING REQUIREMENTS

Before welding, grinding and polishing operations, always ensure you read and understand all operation and maintenance requirements in this manual and the *Maintenance Manual*.

https://truckmanualshub.com/

⚠ WARNING

WELDING HAZARDS

- **Comply with the welder manufacturer's recommendations for procedures concerning proper use of the welder.**
- **Welding leads or cables may only be connected after turning off the power unit.**
- **Carry out welding operations only after the welding cable has been correctly connected.**
- **Do not use the machine as a ground wire during welding operation.**
- **At all times, make sure that the power tools are completely stored in the working platform. Do not hang the power tools on the railing of the working platform or the work area outside the working platform, or hang the power tools directly by the wire.**

Before performing welding, grinding and polishing work, welders must seek permission of the responsible department at the workplace.

LOCKOUT AFTER EACH USE

1. Choose a safe parking location that is on sturdy, level ground and that is free of obstructions and heavy traffic.
2. Lower the mast to stowed position.
3. Push in the emergency stop button at ground controls to the OFF position.
4. Push in the emergency stop button at platform controls to the OFF position.
5. Turn the key switch at the ground controls to OFF position and remove the key to avoid unauthorized operation of the machine.
6. Turn off the power disconnect switch.
7. Charge the battery.

NOTICE

After using the machine, the power disconnect switch must be turned off.

https://truckmanualshub.com/

This Page Intentionally Left Blank

https://truckmanualshub.com/

2 SPECIFICATIONS

MACHINE SPECIFICATIONS

Table 2-1 GTTZ10EJ Specifications

MEASURE	ML10EJ (METRIC)	ML340EJ (IMPERIAL)
DIMENSIONAL PARAMETERS		
Max platform height	8.3 m	27ft 3in
Max working height	10.3 m	33ft 9.5in
Max horizontal reach	3.3 m	10ft 10in
Overall length(stowed)	2.97 m	9ft 9in
Overall width(stowed)	0.99 m	3ft 3in
Overall height (stowed)	1.99 m	6ft 6in
Wheelbase	1.2 m	3ft 11in
Axle track	0.81 m	2ft 8in
Ground clearance (pothole guard stowed)	0.06 m	2.36in
Ground clearance (pothole guard deployed)	0.02 m	0.79in
Tire size (diameter×width / type)	406×127mm / solid	16×5in / solid
Platform dimension (L×W×H)	0.99m×0.7m×1.1m	39×27.5×43in
PERFORMANCE PARAMETERS		
Platform rated capacity	200 kg	440 lb
Platform max occupancy (indoor use)	2 persons	
Platform max occupancy (outdoor use)	1 person	
Drive speed (stowed)	0 ~ 4 km / h	0 ~ 2.5 mph
Drive speed (raised)	0 ~ 0.6 km / h	0 ~ 0.37 mph
Platform lift time (no load)	32 ~ 36 s	
Platform lower time (no load)	32 ~ 37 s	
Gradeability	25%	
Max allowable inclination	3° (front-to-back) / 3° (side-to-side)	
Turning radius (inside)	0 m	0 ft
Turning radius (outside)	1.55 m	5ft 1in

https://truckmanualshub.com/

MEASURE	ML10EJ (METRIC)	ML340EJ (IMPERIAL)
Turntable tailswing	0 m	0 ft
Turntable slewing angle / continuity	345° / incontinuous	
Drive mode (drive×steer)	2WD×2WS	
Max allowable side force (indoor / outdoor)	400N (indoor) / 200N (outdoor)	90N (indoor) / 45N (outdoor)
Max operating noise level	72 dB	
POWER PARAMETERS		
Hydraulic tank capacity	8 L	1.8 gal (imperial) / 2.1 gal (US)
Hydraulic system capacity (including hydraulic tank)	13 L	2.9 gal (imperial) / 3.4 gal (US)
Hydraulic system pressure	15 MPa	2175 psi
Battery (number×voltage, capacity)	4×6V, 240Ah	
System voltage	24VDC	
Control voltage	24VDC	
FLOOR LOADING INFORMATION		
Max tire load	1200 kg	2646 lb
Pressure against ground	1180 KPa	171 Psi
ENVIRONMENT REQUIREMENT		
Max allowable wind speed (indoor/ outdoor)	0 m / s (indoor) / 12.5 m / s (outdoor)	0 mph (indoor) / 28 mph (outdoor)
Max allowable altitude	1000 m	3281 ft
Allowable ambient temperature (lead-acid battery)	-10℃ ~ 40℃	14℉ ~ 104℉
Allowable ambient temperature (-lithium battery)	-20℃ ~ 40℃	-4℉ ~ 104℉
Max allowable RH	90%	
Storage environment	Stored at -20℃ to 50℃(-4℉ to 122℉) in a well-ventilated environment with 90% relative humidity (20℃ [68℉]), and away from rain, sun, corrosive gas,inflammables and explosives.	
WEIGHT		
Gross weight (no load)	2678 kg	5904 lb

Note :
a) The working height adds 2m(6ft7in) of human height to platform height.
b) In different areas, hydraulic oil, engine oil, coolant, fuel and lubrication should be added in accordance with the environmental temperature.
c) In cold weather, auxiliary devices are needed to start the machine.

https://truckmanualshub.com/

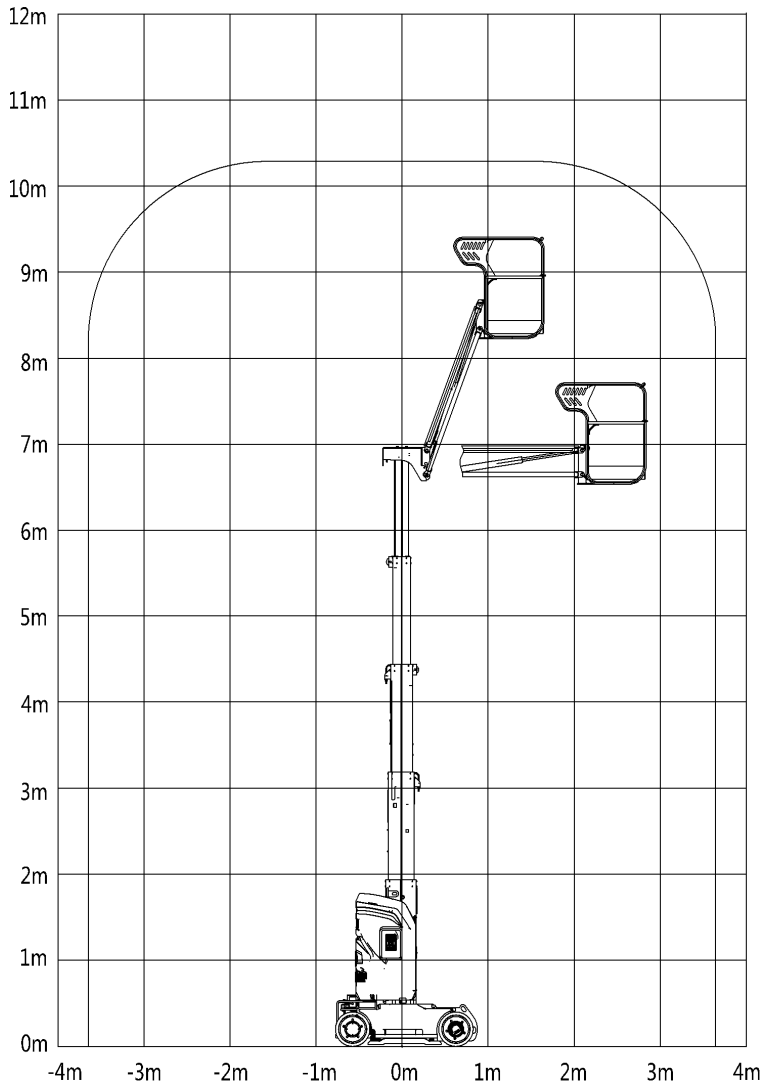

Figure 2-1 Chart of motion

DC DRIVE MOTOR & REDUCER

Table 2-2

		60min	2min
DC drive motor	Output speed (RPM)	1444	677
	Output torque (Nm/ft-lb)	5.3 / 3.9	17.1 / 12.6
	Voltage (V)	24	24
	Current (A)	50	120
	Excitation (V)	/	/
	Excitation (A)	25	35
Wheel reducer	Speed ratio	45.13:1	

https://truckmanualshub.com/

	Output speed (RMP)	32	15
	Output torque (Nm/ft-lb)	176 / 130	569 / 420
Brake torque (Nm/ft-lb)		20	

MAJOR COMPONENT WEIGHTS

WARNING

UNSAFE OPERATION HAZARD

- **Do not move heavy components without machanical assistance.**
- **Do not place heavy component upon instable surface.**

Table 2-3

Component	Metric (kg)	Imperial (lb)
Chassis assembly	973	2145
Pothole cylinder	3	7
Steer cylinder	11	24
Wheel support	13	29
Tire assembly	32	71
DC drive motor & reducer	41	90
Counterweight (at chassis)	114	251
Slewing gear	35	77
Turntable assembly	114	251
Slewing motor	7	15
Mast assembly	471	1038
Lift cylinder	36	79
Mast section 1	84	185
Mast section 2	72	159
Mast section 3	57	126
Mast section 4	43	95
Base section	130	287
Turntable cover, L.H.	11	24
Turntable cover, R.H.	12	26
Counterweight (at turntable cover)	746	1645

https://truckmanualshub.com/

Component	Metric (kg)	Imperial (lb)
Power unit	26	57
Battery (single cell)	30	66
Jib boom	160	353
Jib boom cylinder	30	66
Work platform	28	62

FUNCTION SPEED

Table 2-4

ITEM	GTTZ10EJ
Mast up	32 ~ 36s
Mast down	32 ~ 37s
Turntable rotate (345°)	65 ~ 70s
Jib boom up	25 ~ 30s
Jib boom down	44 ~ 52s
Drive speed-stowed (30m)	18 ~ 24s
Drive speed-raised (30m)	175 ~ 185s

a) The function speed depends on the start and end point of the movement rather than the controls/ switches.
b) The test results of drive speed vary with tires of different specifications.
c) The speed tests of the mast and jib boom should be conducted from the ground controls, The test results will differ if tested from the platoform controls; The tests of turntable rotate and drive speed should be conducted from the platform controls..
d) All the tests should be conducted with the hydraulic oil temperature higher than 25℃. If the hydraulic oil temerature is too low, the test results will be affected.

Test requirements:

Mast up：Raise the mast from the lowest point to the highest, test twice.

Mast down：Lower the mast from the highest point to the lowest, test twice.

Turntable rotate：Rotate the turntable from the leftmost to the rightmost and from the rightmost to the leftmost, test twice respectively.

Jib boom up：With the platform kept level, raise the jib boom from the lowest point to the highest, test twice.

Jib boom down：With the platform kept level, lower the jib boom from the highest point to the lowest, test twice.

Drive：With the machine on a level surface, deflect the drive control joystick to the maximum stroke to drive forward and backward for 30m, test twice respectively.

POWER SYSTEM SPECIFICATIONS

Table 2-5

ITEM	SPECIFICATION
Hydraulic Oil	
Normal temperature region (0℃~40℃ [32℉~104℉])	L-HM46
Cold temperature region (-25℃~25℃ [-13℉~77℉])	L-HV32

https://truckmanualshub.com/

ITEM	SPECIFICATION
High temperature region (> 40℃ [104℉])	L-HM68
Extremely cold temperature region (< -30℃ [-22℉])	Special program to be determined
Hydraulic Pump	
Type	Gear pump
Displacement	3.7 cc/r
Function manifold	
System relief valve pressure	15 MPa (2175 Psi)
Slewing motor relief valve pressure	5 MPa (725 Psi)
Pothole reducing valve pressure	5 MPa (725 Psi)
Return Filter	
Return filter bypass pressure	0.25 MPa (1015 Psi)

NOTICE

The factory-filled hydraulic oil can be selected to suit the customer's demand. Do not intermix different types of hydraulic oil.

HYDRAULIC HOSE AND FITTING SPECIFICATIONS

HYDRAULIC HOSE TORQUE

Hydraulic hoses must be torqued to the following specifications.

Table 2-6 Hydraulic Hose Torque

METRIC THREAD	L (LIGHT-DUTY)	S (HEAVY-DUTY)
M12 × 1.5	19 ± 1 Nm (14 ± 1 ft-lb)	
M14 × 1.5	26 ± 2 Nm (19 ± 2 ft-lb)	
M16 × 1.5	40 ± 3 Nm (30 ± 2 ft-lb)	
M18 × 1.5	50 ± 4 Nm (37 ± 3 ft-lb)	
M20 × 1.5	-	60 ± 4 Nm (44 ± 3 ft-lb)
M22 × 1.5	70 ± 5 Nm (52 ± 4 ft-lb)	-
M24× 1.5	-	85 ± 6 Nm (63 ± 4 ft-lb)
M26 × 1.5	90 ± 6 Nm (66 ± 4 ft-lb)	-
M30 × 2	120 ± 8 Nm (89 ± 6 ft-lb)	140 ± 10 Nm (103 ± 7 ft-lb)
M36 × 2	150 ± 12 Nm (111 ± 9 ft-lb)	180 ± 12 Nm (133 ± 9 ft-lb)

https://truckmanualshub.com/

METRIC THREAD	L (LIGHT-DUTY)	S (HEAVY-DUTY)
M42 × 2	-	260 ± 16 Nm (192 ± 12 ft-lb)
M45 × 2	240 ± 15 Nm (177 ± 11 ft-lb)	-
M52 × 2	250 ± 16 Nm (184 ± 12 ft-lb)	280 ± 18 Nm(207 ± 13 ft-lb)

HYDRAULIC FITTING TORQUE

Hydraulic fittings with metric thread must be torqued to the following specifications.

Table 2-7 Hydraulic Fitting Torque – Metric

THREAD SIZE	INSTALLED INTO ALUMINUM	INSTALLED INTO STEEL	
	ED, O-RING + CIRCLIP	ED, O-RING + CIRCLIP	O-RING
L (LIGHT-DUTY)			
M10×1	18 ± 1 Nm(13 ± 1 ft-lb)	20 ± 2 Nm (15 ± 2 ft-lb)	18 ± 1 Nm (13 ± 1 ft-lb)
M12×1.5	30 ± 2 Nm (22 ± 2 ft-lb)	35 ± 2 Nm (26 ± 2 ft-lb)	30 ± 2 Nm (22 ± 2 ft-lb)
M14×1.5	42 ± 3 Nm (31 ± 2 ft-lb)	48 ± 4 Nm (35 ± 3 ft-lb)	35 ± 2 Nm (26 ± 2 ft-lb)
M16×1.5	55 ± 4 Nm (41 ± 3 ft-lb)	60 ± 4 Nm (44 ± 3 ft-lb)	40 ± 3 Nm (30 ± 3 ft-lb)
M18×1.5	75 ± 5 Nm (55 ± 4 ft-lb)	75 ± 5 Nm (55 ± 4 ft-lb)	45 ± 3 Nm (33 ± 4 ft-lb)
M22×1.5	90 ± 6 Nm (66 ± 4 ft-lb)	130 ± 8 Nm (96 ± 6 ft-lb)	60 ± 4 Nm(44 ± 3 ft-lb)
M27×2	120 ± 8 Nm (89 ± 6 ft-lb)	185 ± 12 Nm (136 ± 9 ft-lb)	100 ± 7 Nm (74 ± 5 ft-lb)
M30×2	140 ± 8 Nm (103 ± 6 ft-lb)	245 ± 15 Nm (181 ± 11 ft-lb)	135 ± 8 Nm (100 ± 6 ft-lb)
M33×2	180 ± 10 Nm (133 ± 7 ft-lb)	320 ± 20 Nm (236 ± 15 ft-lb)	160 ± 10 Nm(118 ± 7 ft-lb)
M42×2	240 ± 15 Nm (177 ± 11 ft-lb)	450 ± 25 Nm (332 ± 18 ft-lb)	210 ± 13 Nm (155 ± 10 ft-lb)
M48×2	280 ± 20 Nm (207 ± 15 ft-lb)	540 ± 30 Nm (398 ± 22 ft-lb)	260 ± 15 Nm (192 ± 11 ft-lb)
S (HEAVY-DUTY)			
M12×1.5	33 ± 2 Nm (24 ± 2 ft-lb)	43 ± 3 Nm (32 ± 2 ft-lb)	35 ± 2 Nm (26 ± 2 ft-lb)
M14×1.5	42 ± 3 Nm (31 ± 2 ft-lb)	50 ± 4 Nm (37 ± 3 ft-lb)	45 ± 3 Nm (33 ± 2 ft-lb)
M16×1.5	55 ± 4 Nm (41 ± 3 ft-lb)	75 ± 5 Nm (55 ± 4 ft-lb)	55 ± 4 Nm (41 ± 3 ft-lb)
M18×1.5	75 ± 5 Nm (55 ± 4 ft-lb)	95 ± 6 Nm (70 ± 4 ft-lb)	70 ± 5 Nm (52 ± 4 ft-lb)
M22×1.5	90 ± 6 Nm (66 ± 4 ft-lb)	140 ± 8 Nm(103 ± 6 ft-lb)	100 ± 10 Nm (74 ± 7 ft-lb)
M27×2	120 ± 8 Nm (89 ± 6 ft-lb)	185 ± 12 Nm (136 ± 9 ft-lb)	160 ± 10 Nm (118 ± 7 ft-lb)
M30×2	140 ± 8 Nm (103 ± 6 ft-lb)	245 ± 15 Nm (181 ± 11 ft-lb)	210 ± 13 Nm (155 ± 10 ft-lb)
M33×2	180 ± 10 Nm (133 ± 7 ft-lb)	320 ± 20 Nm (236 ± 15 ft-lb)	260 ± 15 Nm (192 ± 11 ft-lb)
M42×2	240 ± 15 Nm (177 ± 11 ft-lb)	450 ± 25 Nm (332 ± 18 ft-lb)	330 ± 20 Nm (243 ± 15 ft-lb)
M48×2	280 ± 20 Nm (207 ± 15 ft-lb)	540 ± 30 Nm (398 ± 22 ft-lb)	420 ± 25 Nm (310 ± 18 ft-lb)

https://truckmanualshub.com/

Hydraulic fittings with inch thread (British Standard Pipe [BSP]) must be torqued to the following specifications.

Table 2-8 Hydraulic Fitting Torque – British Standard Pipe (BSP)

THREAD SIZE	INSTALLED INTO ALUMINUM	INSTALLED INTO STEEL	
	ED, O-RING + CIRCLIP	ED, O-RING + CIRCLIP	O-RING
L (LIGHT-DUTY)			
G1/8A	20 ± 1 Nm (15 ± 1 ft-lb)	20 ± 1 Nm (15 ± 1 ft-lb)	-
G1/4A	35 ± 2 Nm (26 ± 2 ft-lb)	40 ± 2 Nm (30 ± 2 ft-lb)	-
G3/8A	50 ± 3 Nm (37 ± 2 ft-lb)	75 ± 5 Nm (55 ± 2 ft-lb)	-
G1/2A	75 ± 5 Nm (55 ± 2 ft-lb)	95 ± 6 Nm (70 ± 4 ft-lb)	-
G3/4A	120 ± 8 Nm (89 ± 6 ft-lb)	185 ± 12 Nm (136 ± 9 ft-lb)	-
G1A	180 ± 10 Nm (133 ± 7 ft-lb)	320 ± 20 Nm (236 ± 15 ft-lb)	-
G1-1/4A	240 ± 15 Nm (177 ± 11 ft-lb)	450 ± 25 Nm (332 ± 18 ft-lb)	-
G1-1/2A	280 ± 20 Nm (207 ± 15 ft-lb)	540 ± 30 Nm (398 ± 22 ft-lb)	-
S (HEAVY-DUTY)			
G1/4A	40 ± 3 Nm (30 ± 2 ft-lb)	43 ± 3 Nm (32 ± 2 ft-lb)	-
G3/8A	55 ± 3 Nm (41 ± 2 ft-lb)	85 ± 5 Nm (63 ± 4 ft-lb)	-
G1/2A	80 ± 5 Nm (59 ± 4 ft-lb)	120 ± 8 Nm (89 ± 6 ft-lb)	-
G3/4A	120 ± 8 Nm (89 ± 6 ft-lb)	185 ± 12 Nm (136 ± 9 ft-lb)	-
G1A	180 ± 10 Nm (133 ± 7 ft-lb)	320 ± 20 Nm (236 ± 15 ft-lb)	-
G1-1/4A	240 ± 15 Nm (177 ± 11 ft-lb)	450 ± 25 Nm (332 ± 18 ft-lb)	-
G1-1/2A	280 ± 20 Nm (207 ± 15 ft-lb)	540 ± 30 Nm (398 ± 22 ft-lb)	-

Hydraulic fittings with Unified Thread Standard (UNC/UNF) must be torqued to the following specifications.

Table 2-9 Hydraulic Fitting Torque – Unified Thread Standard (UNC/UNF)

THREAD SIZE	INSTALLED INTO ALUMINUM	INSTALLED INTO STEEL
	O-RING	O-RING
L (LIGHT-DUTY)		
7/16-20	21 ± 2 Nm (15 ± 2 ft-lb)	21 ± 2 Nm (15 ± 2 ft-lb)
9/16-18	34 ± 2 Nm (25 ± 2 ft-lb)	35 ± 2 Nm (26 ± 2 ft-lb)
11/16-12	40 ± 3 Nm (30 ± 2 ft-lb)	50 ± 4 Nm (37 ± 3 ft-lb)
3/4-16	50 ± 3 Nm (37 ± 2 ft-lb)	65 ± 4 Nm (48 ± 3 ft-lb)
7/8-14	75 ± 5 Nm (55 ± 4 ft-lb)	110 ± 8 Nm (81 ± 6 ft-lb)
1-1/16-12	110 ± 8 Nm (81 ± 6 ft-lb)	140 ± 10 Nm (103 ± 7 ft-lb)

https://truckmanualshub.com/

THREAD SIZE	INSTALLED INTO ALUMINUM	INSTALLED INTO STEEL
	O-RING	O-RING
1-5/16-12	160 ± 10 Nm (118 ± 7 ft-lb)	210 ± 15 Nm (155 ± 11 ft-lb)
S (HEAVY-DUTY)		
7/16-20	21 ± 2 Nm (15 ± 2 ft-lb)	23 ± 2 Nm (17 ± 2 ft-lb)
9/16-18	34 ± 2 Nm (25 ± 2 ft-lb)	40 ± 3 Nm (30 ± 2 ft-lb)
11/16-12	40 ± 3 Nm (30 ± 2 ft-lb)	65 ± 4 Nm (48 ± 3 ft-lb)
3/4-16	50 ± 3 Nm (37 ± 2 ft-lb)	80 ± 6 Nm (59 ± 4 ft-lb)
7/8-14	75 ± 5 Nm(55 ± 4 ft-lb)	125 ± 10 Nm (92 ± 7 ft-lb)
1-1/16-12	110 ± 8 Nm (81 ± 6 ft-lb)	185 ± 15 Nm (136 ± 11 ft-lb)
1-5/16-12	160 ± 10 Nm (118 ± 7 ft-lb)	280 ± 20 Nm (207 ± 15 ft-lb)

HYDRAULIC HOSE AND FITTING TORQUE PROCEDURE

The hydraulic hose and fitting must be torqued to the following requirements when they are installed.

1. Replace the O-ring if damaged. The O-ring cannot be reused if the fitting or hose end has been tightened beyond finger tight.
2. Lubricate the O-ring before installation.
3. Properly seat the O-ring.
4. Position the tube and nut squarely on the fitting. Then tighten the nut as required.
5. Tighten the nut or fitting to the torque specified in the appropriate table.
6. Operate all machine functions and inspect the hose, fittings and related components to confirm there are no leaks.

FASTENER TORQUE SPECIFICATIONS

Unless special torque requirements are stated in this manual or other instructions, torque metric bolts to the values listed in the table bellow.

Table 2-10 Fastener Torque Specifications – Metric

NOMINAL DIAMETER (MM)	PITCH (MM)	CLASS 8.8	CLASS 10.9	CLASS 12.9
5	0.8	7 Nm (5 ft-lb)	9 Nm (7 ft-lb)	10 Nm (7 ft-lb)
6	1	12 Nm (9 ft-lb)	15 Nm (11 ft-lb)	18 Nm (13 ft-lb)
8	1.25	30 Nm (22 ft-lb)	35 Nm (26 ft-lb)	42 Nm (31 ft-lb)
	1	30 Nm (22 ft-lb)	37 Nm (27 ft-lb)	45 Nm (33 ft-lb)
10	1.5	55 Nm (41 ft-lb)	75 Nm (55 ft-lb)	85 Nm (63 ft-lb)
	1.25	56 Nm (41 ft-lb)	77 Nm (57 ft-lb)	87 Nm (64 ft-lb)
	1	60 Nm (44 ft-lb)	80 Nm (59 ft-lb)	92 Nm (68 ft-lb)
12	1.75	95 Nm (70 ft-lb)	125 Nm (92 ft-lb)	150 Nm (111 ft-lb)

https://truckmanualshub.com/

NOMINAL DIAMETER (MM)	PITCH (MM)	CLASS 8.8	CLASS 10.9	CLASS 12.9
	1.5	100 Nm (74 ft-lb)	130 Nm (96 ft-lb)	155 Nm (114 ft-lb)
	1.25	105 Nm (77 ft-lb)	135 Nm (100 ft-lb)	160 Nm (118 ft-lb)
14	2	150 Nm (110 ft-lb)	200 Nm (148 ft-lb)	230 Nm (170 ft-lb)
	1.5	165 Nm (122 ft-lb)	210 Nm (155 ft-lb)	250 Nm (184 ft-lb)
16	2	230 Nm (170 ft-lb)	300 Nm (221 ft-lb)	360 Nm (266 ft-lb)
	1.5	250 Nm (184 ft-lb)	320 Nm (236 ft-lb)	380 Nm (280 ft-lb)
18	2.5	320 Nm (236 ft-lb)	420 Nm (310 ft-lb)	500 Nm (369 ft-lb)
	1.5	360 Nm (266 ft-lb)	470 Nm (345 ft-lb)	550 Nm (406 ft-lb)
20	2.5	450 Nm (332 ft-lb)	600 Nm (443 ft-lb)	700 Nm (516 ft-lb)
	1.5	500 Nm (369 ft-lb)	650 Nm(479 ft-lb)	770 Nm (568 ft-lb)
22	2.5	600 Nm (443 ft-lb)	800 Nm (590 ft-lb)	980 Nm (723 ft-lb)
	2	650 Nm (479 ft-lb)	850 Nm (627 ft-lb)	1050 Nm (774 ft-lb)
24	3	750 Nm (553 ft-lb)	1050 Nm (774 ft-lb)	1250 Nm (923 ft-lb)
	2	800 Nm (590 ft-lb)	1100 Nm (811 ft-lb)	1300 Nm (959 ft-lb)
27	3	1150 Nm (848 ft-lb)	1500 Nm (1106 ft-lb)	1800 Nm (1327 ft-lb)
30	3.5	1500 Nm (1106 ft-lb)	2000 Nm (1475 ft-lb)	2400 Nm (1770 ft-lb)

Unless special torque requirements are listed in this manual or other instructions, torque Unified Thread Standard bolts (label: UNC) to the values listed in the table bellow.

Table 2-11 Bolt Torque Specifications Unified – Thread Standard (UNC)

NOMINAL DIAMETER (IN)	OPPOSITE NUT SIZE (S)	CLASS 5	CLASS 8
1/4-20	7/16"	10 Nm (7 ft-lb)	14 Nm (10 ft-lb)
5/16-18	1/2"	21 Nm (15 ft-lb)	29 Nm (21 ft-lb)
3/8-16	9/16"	37 Nm (27 ft-lb)	51 Nm (38 ft-lb)
7/16-14	5/8"	60 Nm (44 ft-lb)	82 Nm (60 ft-lb)
1/2-13	3/4"	90 Nm (66 ft-lb)	130 Nm (96 ft-lb)
9/16-12	13/16"	130 Nm (96 ft-lb)	180 Nm (133 ft-lb)
5/8-11	15/16"	178 Nm (131 ft-lb)	250 Nm (184 ft-lb)
3/4-10	1-1/8"	315 Nm (232 ft-lb)	445 Nm (328 ft-lb)
7/8-9	-	509 Nm (375 ft-lb)	715 Nm (527 ft-lb)

Unless special torque requirements are listed in this manual or other instructions, torque Unified Thread Standard bolts (label: UNF) to the values listed in the table bellow.

https://truckmanualshub.com/

Table 2-12 Bolt Torque Specifications – Thread Standard (UNF)

NOMINAL DIAMETER (IN)	OPPOSITE NUT SIZE (S)	CLASS 5	CLASS 8
1/4-28	7/16"	11.5 Nm (8 ft-lb)	16 Nm (11 ft-lb)
5/16-24	1/2"	23 Nm (17 ft-lb)	32 Nm (24 ft-lb)
3/8-24	9/16"	41 Nm (30 ft-lb)	58 Nm (43 ft-lb)
7/16-20	5/8"	65 Nm (48 ft-lb)	92 Nm (68 ft-lb)
1/2-20	3/4"	100 Nm (74 ft-lb)	145 Nm (107 ft-lb)
9/16-18	13/16"	145 Nm (107 ft-lb)	200 Nm (148 ft-lb)
5/8-18	15/16"	200 Nm (148 ft-lb)	280 Nm (207 ft-lb)
3/4-16	1-1/8"	350 Nm (258 ft-lb)	495 Nm (365 ft-lb)
7/8-14	-	560 Nm (413 ft-lb)	780 Nm (575 ft-lb)

https://truckmanualshub.com/

This Page Intentionally Left Blank

https://truckmanualshub.com/

3 SYSTEM DESCRIPTIONS

POWER SYSTEM

The machine is powered by four 6V batteries in series connection to drive a 24V DC motor, whose output shaft is splined to a gear pump to provide power for the hydraulic system.

HYDRAULIC SYSTEM

The hydraulic system can be divided into sections as follows :

- Wheel steer function
- Turntable rotate function
- Mast up/down function
- Jib boom up/down function
- Pothole protective plate extend and retract function

When the motor operates, the hydraulic pump diverts the pressure oil to the boom function manifold, on which is intalled with directional valves for completing various functions. Relief valve is fitted on the function manifold to avoid system overload.

ELECTRICAL SYSTEM

The system adopts four 6V batteries in series connection to power the hydraulic pump-connected DC motor and the wheel motor & reducer for controlling the mast/boom and drive functions. The battery can be charged by an external power source.

MACHINE CONTROL

The machine functions are controlled by two controllers, one installed on the left side of turntable to control the mast/boom and turntable functions, the other on the platform to control the machine drive, mast/boom and turntable functions. The controller communicates signals through a high-speed data bus.

SAFETY MEASURES

A wide range of sensors and limit switches are used to provide signals for the controller.

- Level sensor (3°)measures the chassis inclination in X and Y directions. When the inclination exceeds 3°, the mast raised height will be restricted, and the display will give a tilt alarm (LL).For details, see ***Tilt Protection, page 5-29***.
- Level sensor (7°)measures the chassis inclination in X and Y directions. When the inclination exceeds 7°, the drive speed will be restricted, and the display will give a tilt alarm (LL).For details, see ***Tilt Protection, page 5-29***.
- The angle sensors at the wheel supports measure the steering angle of the wheels.
- The angle sensor at the jib boom measures the up-and-down angle of the jib boom.
- The angle sensor and pressure sensor at the jib boom measure the platform load. When the platform load exceeds the rated load, the buzzer will sound continously, and the display will give an overload alarm (OL), the mast and jib boom up/down functions will be restricted. For details, see ***Weighing System, page 5-30***.
- The pothole guard limit switch measures whether the pothole protective plate extends in place.
- The mast upper limit switch measures whether the mast raises in place.
- The mast lower limit switch measures whether the mast lowers in place.
- The steel cable proximity switch measures whether the steel cable becomes damaged.

https://truckmanualshub.com/

This Page Intentionally Left Blank

https://truckmanualshub.com/

4 SERVICE AND GUIDELINES

MACHINE PREPARATION, INSPECTION AND MAINTENANCE

GENERAL

This section provides safety and necessary information for the machine operators. For maximum service life and safe operation, ensure that all necessary inspections and maintenance have been completed before placing the machine into service.

Machine positions

Operating/raised position：

The machine comes in operating/raised position when the mast raises so that the lower limit switch becomes disengaged.

Stowed position：

The machine comes in stowed position when the mast is fully lowered.

PREPARATION, INSPECTION AND MAINTENANCE

It is important to establish and conform to a comprehensive inspection and preventive maintenance program. This mamual outlines the scheduled machine inspections and maintenance recommended by Hunan Sinoboom Intelligent Co., Ltd., Consult your national, regional or local regulations for aerial work platforms. The frequency of inspections and maintenance must be increased as environment, severity and frequency of usage requires.

QUALIFIED SINOBOOM EQUIPMENT MECHANIC

Qualified Sinoboom equipment mechanic is a person recognized by Sinoboom as one who, by possession of a recognized degree, certificate, training, has successfully demonstrated the ability and proficiency to service, repair and maintain the subject Sinoboom product model.

PRE-OPERATION INSPECTION

Prior to daily use or work shift of operators, the user or operator shoud perform a pre-operation inspection. Refer to the *Operation Manual* for the complete procedure for the pre-operation inspection. The *Operation Manual* must be entirely read and understood before performing the pre-operation inspection.

PRE-DELIVERY INSPECTION AND FREQUENT INSPECTION

The pre=delivery inspection shall be performed by qualified Sinoboom equipment mechanic. The pre-delivery inspection and the frequent inspection are performed in the same manner, but at different times. The pre-delivery inspection shall be performed before each sale, lease or rental delivery. The frequent inspection shall be accomplished for each machine in service for 3 months or 150 hours (whichever comes first); out of service for a period of more than 3 months; or when purchased used. The frequency of this inspection must be increased as environment, severity and frequency of usage requires.

Reference the *Prepare the Work Record before Delivery* and *Maintenance Inspection Report* for items requiring inspection. Reference the *Inspection Procedures* in appropriate areas of this manual to perform the inspection and maintenance procedures.

ANNUAL MACHINE INSPECTION

The annual machine inspection must be performed on an annual basis, no later than 13 months from the date of the prior annual machine inspection. Hunan Sinoboom Intelligent Equipment Co.,Ltd. recommends this task be performed by a factory-trained service technician, a person recognized by Sinoboom as one who, by possession of a recognized degree, certificate, training, has successfully demonstrated the ability and proficiency to service, repair and maintain the subject Sinoboom product model.

Reference the *Maintenance Inspection Report* for items requiring inspection. Reference the *Inspection Procedures* in appropriate areas of this manual to perform the inspection and maintenance procedures.

For the purpose of receiving the safety-related bulletins, it is important that Hunan Sinoboom Intelligent Equipment Co., Ltd. has updated ownership information for each machine. When performing each

https://truckmanualshub.com/

annual machine inspection, notify Hunan Sinoboom Intelligent Equipment Co., Ltd. of the current machine ownership information.

PREVENTIVE MAINTENANCE

The preventive maintenance must be performed by a qualified Sinoboom equipment mechanic.

Reference the *Maintenance Inspection Report* and *Maintenance Schedule* in this manual for the inspecton items and intervals. Reference the *Inspection Procedures* in appropriate areas of this manual to perform the inspection and maintenance procedures.

Table 4-1

Type	Frequency	Primary Responsibility	Service Qualification	Reference
Pre-operation Inspection	Prior to use each day; or at cach operator change.	User or operator	User or operator	Operation Manual
Pre-delivery Inspection	Prior to each sale, lease or rental delivery.	Owner, dealer or user	Qualified Sinoboom mechanic	Maintenance Manual, Pre-delivery Preparation Form, and Maintenance Inspection Report
Frequent Inspection	In service for 3 months or 150 hours, whichever comes first; or out of service for a period of more than 3 months; or purchased used.	Owner, dealer or user	Qualified Sinoboom mechanic	Maintenance Manual and Maintenance Inspection Report
Annual Machine Inspection	Annually, no later than 13 months from the date of the prior annual inspection.	Owner, dealer or user	Factory-trained service technician	Maintenance Manual, Pre-delivery Preparation Form, and Maintenance Inspection Report
Preventive Maintenance	At inervals as specified in the Maintenance Manual.	Owner, dealer or user	Qualified Sinoboom mechanic	Maintenance Manual, Maintenance Inspection Report, and Maintenance Schedule

MAINTENANCE AND SERVICING PRECAUTIONS

GENERAL

This section assists you in the use and application of the maintenance and servicing procedures contained in this manual.

SAFETY AND WORKMANSHIP

Your safety, and that of others, is the first consideration when engaging in the maintanance of equipment. Never attempt to move heavy parts without the aid of a mechanical device. Do not allow heavy objects to rest in an unstable position. When raising a portion of the equipment, ensure that adequate support is provided.

CLEANLINESS

1. The most important single item in preserving the service life of a machine is to keep dirt and foreign materials out of the vital components. Precautions have been taken to safeguard against this. Shields, covers, seals and filters are provided to keep air, fuel and oil supplies clean; however, these items must be maintained on a scheduled basis to function properly.
2. When air, fuel or oil lines are disconnected, clean the adjacent areas as well as the openings and fittings. As soon as a component or line is

https://truckmanualshub.com/

disconnected, cap or cover all openings to prevent entry of foreign matter.

3. Clean and inspect all parts during servicing and maintenance, and assure that all passages and openings are unobstructed. Cover all parts to keep them clean. Be sure all parts are clean before they are installed. New parts should remain in their containers until they are ready to be used.

COMPONENT REMOVAL AND INSTALLATION

1. Use adjustable lifting devices, whenever possible, if mechanical assistance is required. All slings (-chains, cables, etc.) should be parallel to each other and as near perpendicular as possible to top of part being lifted.
2. Should it be necessary to remove a component on an angle, keep in mind that the capacity of an eyebolt or similar bracket lessens, as the angle between the supporting structure and the component becomes less than 90 degrees.
3. If a part resists removal, check to see whether all nuts, bolts, cables, brackets, wiring, etc, have been removed and that no adjacent parts are interfacing.

COMPONENT DISASSEMBLY AND ASSEMBLY

When disassembling or reassembling a component, complete the procedural steps in sequence. Do not partially disassemble or assemble one part, then start on another. Always recheck your work to assure that nothing has been overlooked. Do not make any adjustments, other than those recommended, without obtaining proper approval.

PRESSURE-FIT PARTS

When assembling pressure-fit part, use a molybdenum disulfide base compound or equivalent to lubricate the mating surface.

BEARINGS

1. When a bearing is removed, cover it to keep out dirt and abrasives. Clean bearings in nonflammable cleaning solvent and allow to drip dry. Compressed air can be used but do not spin the bearing.
2. Discard bearings if the races and balls (or rollers) are pitted, scored, or burned.
3. If bearing is found to be serviceable, apply a light coat of oil and wrap it in clean (waxed) paper. Do not unwrap reusable or new bearings until they are ready to install.
4. Lubricate new or used serviceable bearings before installation. When pressing a bearing into a retainer or bore, apply pressure to the outer race. If the bearing is to be installed on a shaft, apply pressure to the inner race.

GASKETS

Check that holes in gaskets align with openings in the mating parts. If it becomes necessary to hand-fabrictae a gasket, use gasket material or stock of equivalent material and thickness. Be sure to cut holes in the right location, as blank gaskets can cause serious system damage.

BOLT USAGE AND TORQUE APPLICATION

NOTICE

Self-locking fasteners, such as nylon insert and thread deforming locknuts, are not intended to be reinstalled after removal.

1. Always use new replacement hardware when installing locking fasteners. Use bolts of proper length. A bolt which is too long will bottom before the head is tight against its related part. If a bolt is too short, there will not be enough thread area to engage and hold the part properly. When replacing parts, use only those having the same specifications of the original, or one which is equivalent.
2. Unless specific torque requirements are given within the text, standard torque values should be used on heat-treated bolts, studs, and steel nuts, in accordance with recommended shop practices. (See ***Fastener Torque Specifications, page 2-9***)

HYDRAULIC LINES AND ELECTRICAL WIRING

Clearly mark or tag hydraulic lines and electrical wiring, as well as as their receptacles, when disconnecting or removing them from the unit. This will assure that they are correctly reinstalled.

HYDRAULIC SYSTEM

1. The primary enermy of a hydraulic system is contamination. Contaminants enter the system by various means, e.g., using inadequate hydraulic oil, allowing moisture, grease, filings, sealing

https://truckmanualshub.com/

components, sand, etc., to enter when performing maintenance.

2. Keep the system clean. If evidence of metal or rubber particles are found in the hydraulic system, drain and flush the entire system.
3. Disassemble or reassemble parts on clean work surface. Clean all metal parts with non-flammable cleaning solvent. Lubricate components, as required, to aid assembly.

LUBRICATION

Service applicable components with the amount, type, and grade of lubricant recommended in this manual, at the specified intervals. When recommended lubricants are not available, consult your local supplier for an equivalent that meets or exceeds the specifications listed.

BATTERY

Clean battery, using a non-metallic brush and a solution of baking soda and water. Rinse with clean water. After cleaning, thoroughly dry battery and coat terminals with an anti-corrosion compound.

APPLICATION OF INSULATING SILICONE GREASE TO ELECTRICAL CONNECTIONS

Insulating silicone grease should be applied to all electrical connections for the purpose of：

- Avoiding oxidization of the mechanical joints between the male pins and femaile pins.
- Avoiding electrical failure due to low conductivity between the pins in humid environment.

The following procedure should be observed to apply the insulating silicone grease to the electrical connections. The procedure applies to all plugged connections outside of the power distribution box. The silicone grease is not suitable for the connectors with enclosed outer surface.

1. Prior to the machine assembling, apply silicone grease around the male pins and female pins inside the connectors to prevent oxidization. An injector may be used for the convenience of operation.

NOTICE

The oxidization exceeding a certain period will increase the resistance of the connector and eventually lead to electrical failure.

2. Silicone grease should be applied to each electrical cord that is exposed at the outside of the connector to prevent short circuit. Besides, the joint between the male and female connectors should also been applied with silicone grease. Other joints that may allow entry of water into the connectors, like the area around the anti-pull buckle, should be properly sealed as well.

NOTICE

Since the electrical conductivity of cleaning solvent is superior to that of water, it is mostly likely that this will occur when using pressure cleaning method to clean the machine.

3. Silicone grease should be applied to each contact of the connectors for battery case and charger.

NOTICE

The setting type sealant can be used to avoid short circuit and keep the connections tidy, but it will make the future removal of pins more difficult.

https://truckmanualshub.com/

5 MAINTENANCE

This section provides detailed procedures for regular maintenance inspections.

⚠ WARNING

UNSAFE OPERATION HAZARD

Failure to follow the proper maintenance may result in death, serious injury or damage to the machine.

Follow these general rules:

- Professionally trained, qualified personnel must conduct routine maintenance inspections on this machine.
- Daily routine maintenance inspections must occur during normal operation of the machine. Maintenance inspectors must carry out inspection and maintenance according to the repair & inspection report listed in and must complete the repair & inspection report.
- Regular maintenance inspections must occur by operators and at quarterly, biannual and annual intervals by qualified, trained personnel. Qualified, trained personnel must check and maintain the machine according to the repair & inspection report listed in and must complete the repair & inspection report.
- Immediately remove a damaged or malfunctioning machine, mark it and stop using it.
- Repair any damaged or malfunctioning machine before operating it.
- Keep all machine inspection records for at least 10 years or until the machine is no longer in use or as required by machine owner/company/custodian.
- Conduct a quarterly inspection on machines that have been out of service for a period lasting longer than three months.
- While maintaining the machine, replace any parts on the machine using the same parts or the same parts of the original machine.
- Unless otherwise specified, perform all maintenance procedures according to the following terms and conditions:
  - Park the machine on flat, level, firm ground.
  - Keep the machine in the stowed position.
  - Ensure the key switch of the ground controller is in the OFF position and remove the key to prevent unauthorized use of the machine.
  - Place the red emergency stop button on the platform control box and ground controller in the OFF position to avoid accidental start-up of the operating system.
  - Disconnect main power switch.
  - Disconnect all DC power from the machine.
  - Lock all wheels to prevent movement of the machine.
  - Before releasing or removing the hydraulic components, release the hydraulic oil pressure in the hydraulic pipeline.

MAINTENANCE SCHEDULE

There are a number of factors which can affect the design life including but not limited to, severity of operating conditions/routine maintenance. Dependent on the frequency of use and severity of the operating environment, planned inspections shall be carried out at a frequency to enable the aerial work platform to be kept in a safe and satisfactory condition. Maintenance operations must be carried out by a SINOBOOM-approved qualified technician, and the maintenance operations performed must be recorded in the maintenance inspection report.

The table below is the Maintenance Schedule recommended by SINOBOOM. The harsher the operating environment, the more frequent the inspection will be.

https://truckmanualshub.com/

Table 5-1

MAINTENANCE SCHEDULE						
Components	Intervals					
	Daily	Every 500h or 6 months	Every 1000h or annually	Every 2000h or bi-annually	Every 5000h or 5 years	Every 10000h or 10 years
Chassis and turntable components						
Tires and rims	1, 2	9				8
Wheel reducer & motor	1, 2	9				
Wheel support	1, 2	6				
Steer cylinder	1, 2, 3					
Slewing bearing	1, 2	6, 9				
Slewing motor	1, 2, 3	6				
Mast/boom components						
Steel cable	1, 2, 13				8	
Chain	1, 2	6	11, 13			8
Mast sections	1, 2		9, 11			
Wear pads			1, 2, 11			
Platform components						
Platform	1, 2					
Guardrail	1, 2					
Landyard anchorage points	2					
Functions and controls						
Platform controls	1, 2, 10					
Ground controls	1, 2, 10					
Emergency stop buttons	2, 10					
Power disconnect switch	2, 10					
Horn	10					
Brake	10					
Brake release		10				
Drive speed		10				
Emergency lowering		10				
Pothole guard limit switch	10					
Boom upper limit switch	10					

https://truckmanualshub.com/

MAINTENANCE SCHEDULE

Components	Intervals					
	Daily	Every 500h or 6 months	Every 1000h or annually	Every 2000h or bi-annually	Every 5000h or 5 years	Every 10000h or 10 years
Boom lower limit switch	10					
Level sensor	10					
Angle sensors (-wheel support and jib boom)		10				
Load sensing system		10				
Hydraulic and electrical components						
Hydraulic oil	4			8		
Hydraulic tank	1, 2, 3, 4			7		
Hydraulic cylinders	1, 2, 3	10				14
Hand pump	1, 2, 3		10			
Hydraulic filters	1, 2, 3	8				
Hydraulic hoses & fittings	1, 2, 3					
Power unit	1, 2, 3					
Electrical wiring	1, 2					
Battery	1, 2, 5					
Overall machine components						
Structural parts	1, 2					14
Welds	2					14
Pins and retaining pins	1, 2					8
Wear pads and shims		2, 6				8
Bearings		2, 6				8
Housing and covers	1, 2					
Operation/ maintenance/parts manuals	12					
Decals and nameplate	12					

https://truckmanualshub.com/

MAINTENANCE SCHEDULE						
Components	Intervals					
	Daily	Every 500h or 6 months	Every 1000h or annually	Every 2000h or bi-annually	Every 5000h or 5 years	Every 10000h or 10 years
Safety belt & helmet	12					

1–Check for proper installation
2–Check for damages, cracks, deformation or wear, etc.
3–Check for leaks
4–Check oil level
5–Check battery level
6–Lubricate
7–Drain, clean and refill
8–Replace
9–Tighten
10–Check by testing
11–Check by testing
12–Verify
13–Check tensioning
14–Overall check (disassembly may be required)

CONDUCTING A PRE-DELIVERY INSPECTION

When the machine owner/company changes, in addition to conducting a pre-delivery inspection, the corresponding inspection shall be carried out according to the maintenance schedule requirement and repair & inspection report. When conducting a pre-delivery inspection, comply with the following requirements:

1. It is the responsibility of the machine owner/company to perform a pre-delivery inspection.
2. Follow this procedure each time before delivery. Performing a pre-delivery inspection could reveal potential problems with the machine before you begin putting the machine into service.
3. Never use a damaged or malfunctioning machine. Tag the machine and do not use it.
4. Only professionally trained, qualified personnel may repair the machine and must follow the procedures as stated in *operation manual* and *maintenance manual*.
5. A competent operator must conduct daily maintenance on this machine as stated in *operation manual* and *maintenance manual*.

Before delivering the machine, complete the following record using these instructions:

1. Prepare the machine before delivery, which includes performing a pre-delivery inspection, following maintenance procedures and performing functional inspections.
2. Use the following table to note the results. After each section is complete, mark the appropriate box.
3. Record the inspection results. If any inspection results are "NO", the machine must be stopped and re-inspected after repair is completed and marked in the box marked "inspection".

Table 5-2

PREPARE THE WORK RECORD BEFORE DELIVERY			
Model			
Serial No.			
Inspection Item	**YES/Machine is in Good Condition**	**NO/Machine Has Damage or Malfunction**	**REPAIRED/Machine Has Been Repaired**
Pre-operational Inspection			
Maintenance Procedure			

https://truckmanualshub.com/

PREPARE THE WORK RECORD BEFORE DELIVERY			
Functional Inspection			
Machine Buyer/ Renter			
Inspector Signature			
Inspector Title			
Inspector Company			

MAINTENANCE INSPECTION REPORT

1. The maintenance Inspection Report includes check items for each type of inspection.
2. Duplicate the Maintenance Inspection Report for each inspection. Store the completed tables for 10 years or until the machine is no longer in use or as required by machine owner/company/custodian.
3. Use the following table to note the results. After each section is complete, mark the appropriate box.
4. If any inspection results are "NO", the machine must be stopped and re-inspected after repair is completed and check in the box marked "-REPAIRED". Select the appropriate inspection procedure based on the inspection type.

Table 5-3

MAINTENANCE INSPECTION REPORT				
Model				
Serial No.				
Daily/pre-operation	**YES/Machine is in Good Condition**	**NO/Machine Has Damage or Malfunction**	**REPAIRED/ Machine Has Been Repaired**	**Problem Description**
Mast/boom components				
Inspect retract cable				
Electrical and hydraulic systems				
Inspect hydraulic oil level				
Inspect battery level				
Functions and controls				
Inspect ground controls				
Inspect platform controls				
Inspect emergency lowering				
Inspect drive speed				
Inspect pothole protection				
Inpsect tilt protection				
Inpsect brake system				

https://truckmanualshub.com/

MAINTENANCE INSPECTION REPORT

Inpsect load sensing system				
Overall machine components				
Inspect visually the overall machine components				
Inspect manuals and decals				
Inspect safety belt and helmet				
After 30 days or 50h of operation	**YES/Machine is in Good Condition**	**NO/Machine Has Damage or Malfunction**	**REPAIRED/ Machine Has Been Repaired**	**Problem Description**
Chassis and turntable components				
Inspect tires, rims and fasteners				
Electrical and hydraulic systems				
Inspect hydraulic filter elements				
Every 6 months or 500h of operation	**YES/Machine is in Good Condition**	**NO/Machine Has Damage or Malfunction**	**REPAIRED/ Machine Has Been Repaired**	**Problem Description**
Chassis and turntable components				
Lubricate steer system (-wheel support)				
Lubricate slewing bearing				
Inspect tires, rims and fasteners				
Inspect slewing bearing bolts				
Mast/boom components				
Lubricate chains				
Electrical and hydraulic systems				
Inspect hydraulic cylinder drift				
Inspect hydraulic hoses				
Inpsect hand pump				
Functions and controls				
Inspect brake release				

https://truckmanualshub.com/

MAINTENANCE INSPECTION REPORT

Inspect emergency lowering				
Annually or every 1000h of operation	**YES/Machine is in Good Condition**	**NO/Machine Has Damage or Malfunction**	**REPAIRED/ Machine Has Been Repaired**	**Problem Description**
Chassis and turntable components				
Inspect tires, rims and fasteners				
Mast/boom components				
Inspect boom wear pads				
Inspect chain tensioning				
Inspect mast sections 1 and 2 tightly secured to the brackets				
Electrical and hydraulic systems				
Inspect the battery				
Replace hydraulic filter elements				
Bi-annually or every 2000h of operation	**YES/Machine is in Good Condition**	**NO/Machine Has Damage or Malfunction**	**REPAIRED/ Machine Has Been Repaired**	**Problem Description**
Electrical and hydraulic systems				
Replace hydaulic oil				
Every 5 years or 5000h of operation	**YES/Machine is in Good Condition**	**NO/Machine Has Damage or Malfunction**	**REPAIRED/ Machine Has Been Repaired**	**Problem Description**
Mast/boom components				
Replace retract cable				
Every 10 years or 105000h of operation	**YES/Machine is in Good Condition**	**NO/Machine Has Damage or Malfunction**	**REPAIRED/ Machine Has Been Repaired**	**Problem Description**
Overall machine components				
Insect the overall machine components				
User				

https://truckmanualshub.com/

MAINTENANCE INSPECTION REPORT	
Inspector signature	
Inspector date	
Inspector title	
Inspector company	

CHASSIS AND SLEWING COMPONENTS

Tires and Rims

1. Preparation

⚠ WARNING

UNSAFE OPERATION HAZARD

- **Cordon off the area before maintenance is performed.**
- **The machine must be in stowed position throughout the maintenance.**
- **Be sure to wear goggles, protective clothing and gloves.**
- **The disassembly, if needed, must be performed by qualified trained personnel with power supply completely off.**

2. Inspection

Inspecting the tires and rims

- Severe cracks, bruises, deformation or other damages.
- A smooth, even cut through the cord plies which exceeds 7.5cm (3in) in total length.
- Any tears or rips (ragged edges) in the cord plies which exceeds 2.5cm (1in) in any direction.
- Any punctures which exceeds 2.5cm (1in) in diameter.
- Excessive swelling of tires.
- Any Wear of tire contact surface which exceeds 25%.

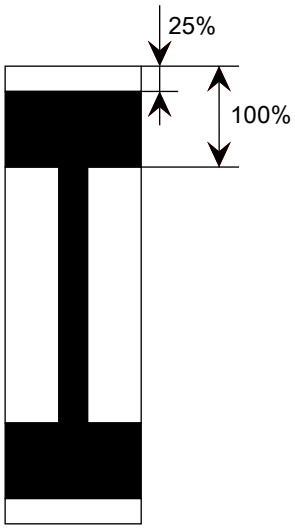

Figure 5-1

If any condition above occurs, the tires must be replaced.

Inspecting the tire fasteners

Inspect the wheel bolts are tightened to specifications (130Nm[96ft-lb]).

3. Replacing the tires

https://truckmanualshub.com/

⚠ WARNING

UNSAFE OPERATION HAZARD

- **The tires and rims installed on each product model have been designed for stability requirements. Size changes such as rim width, center piece location, diameter, etc., without written factory recommendations, may result in an unsafe condition regarding stability.**
- **Use the wheel nuts that suit the rim bolts. The wheel nuts must be installed and maintained at the proper torque to prevent loose wheels, broken studs and possible dangerous separation of wheels from the axle, Be sure to only use the nuts matched to the cone angle of the wheel.**
- **Tighten the lug nuts to the proper torque to prevent wheels from coming loose, Use a torque wrench to tighten the fasteners. If you do not have a torque wrench, tighten the fasteners with a socket wrench, then immediately have a service garage or dealer tighten the lug muts to the proper torque. Over-tightening will result in breaking the studs or permanently deforming the mounting stud holes in the wheels.**

Hunan Sinoboom Intelligent Equipment Co., Ltd. recommends the replacement tires be of the same size, ply rating and brand as the original tires. For the part number of a specific machine model, please reference the Part Manual.If the replacement tires are not asHunan Sinoboom Intelligent Equipment Co., Ltd. recommends, the following requirememts of tires should be met：

- Ply rating/rated load and dimension equal or greater than original.
- Tire tread contact width equal or greater than original.
- Wheel diameter, width and offset dimensions equal to the original.
- Approved for the application by the tire manufacturer (including intended purposes, maximum drive speed and maximum tire load, etc.).
- Due to size variations between different tire brands, both tires on the same axle should be the same.

1. Disconnect the main power supply.
2. Disconnect all power inputs to the machine (such as the battery charger).
3. Using a jack, raise the chassis to an appropriate height to make the tires off the ground.
4. Remove the wheel bolts.
5. Remove the tires.
6. Align the mounting holes on the new tires with those on the chassis.
7. Fit the washer face with the mounting surface, apply the threadlocker Loctite 272 to the bolts, and install and tighten in sequence as shown in the Figure below.

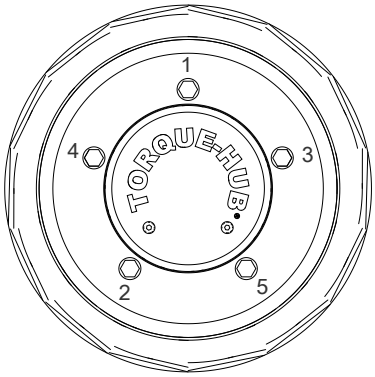

Figure 5-2

8. The tightening of the nuts should be done in stages. Following the recommended sequence, tighten nuts per wheel torque as listed in the table below.

Table 5-4

1st Stage	2nd Stage	3rd Stage
40Nm (30ft-lb)	100Nm (74ft-lb)	130Nm (96ft-lb)

9. After all tires are installed, remove the jack.

NOTICE

Wheel nuts should be torqued prior to first use of machine and after each wheel removal. Check torque every 6 months or 250 hours of operation.

Drive Motor & Reducer

1. Preparation

https://truckmanualshub.com/

⚠ WARNING

UNSAFE OPERATION HAZARD

- **Cordon off the test area before the maintenance is performed.**
- **Be sure to wear goggles, protective clothing and gloves.**
- **The machine must be positioned on a level, firm surface clear of obstructions.**
- **The disassembly, if needed, must be performed by qualified trained personnel with power supply completely off.**

⚠ WARNING

BURN AND EJECTION HAZARDS

Before removing the hydraulic hoses, cool down the hydraulic oil to room temperature, and slowly loosen the hose to release the pressure.

2. Removal

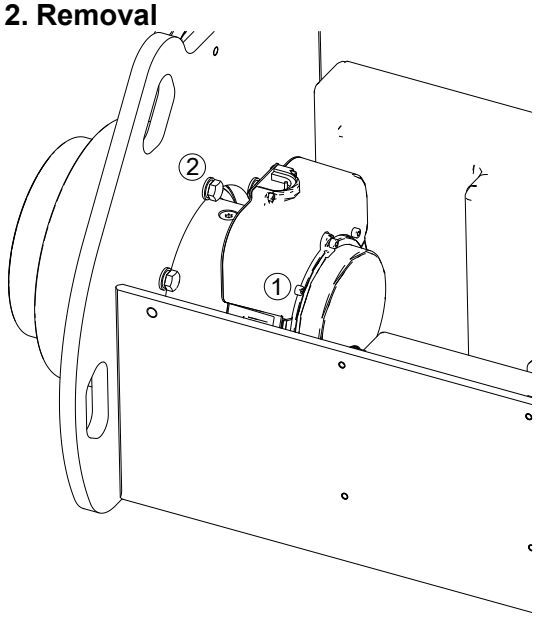

1. Disconnect the main power supply.
2. Disconnect all power inputs to the machine (such as the battery charger).
3. Locate the drive motor & reducer assembly.
4. Disconnect all cables, connectors and hoses to the motor.
5. Place a jack of sufficient capacity under the chassis on the side for removal, raise the jack to make the wheels off the ground.
6. Using a suitable lifting device, remove the wheels. For details, see ***Tires and Rims, page 5-8***.
7. Remove the covers of chassis.
8. Remove the bolt #1 on the housing of drive motor & reducer assembly.
9. Attach the lifting straps of a suitable crane to the drive motor & reducer assembly, be sure that the drive motor & reducer assembly will not fall with fasteners removed.
10. Remove the bolt #2 connecting the drive motor & reducer assembly to the chassis.
11. Lift the drive motor & reducer assembly clear of the machine.

3. Installation

1. Align the mounting holes on the drive motor & reducer assembly with those on the chassis.
2. Fit the washer face with the mounting surface, apply the threadlocker Loctite 272 to the bolts, and install and tighten. The recommended torque value is 130Nm (96ft-lb).
3. Install the reducer housing.
4. Install the tires. For details, please see ***Tires and Rims, page 5-8***
5. Re-connect the cables, connectors and hoses to the drive motor & reducer assembly.
6. Remove the jack.

4. Check

1. Start the machine.
2. Drive the machine forward and reverse at high speed to check for malfunctions.

Wheel Support

1. Preparation

https://truckmanualshub.com/

⚠ WARNING

UNSAFE OPERATION HAZARD

- **Cordon off the test area before the maintenance is performed.**
- **Be sure to wear goggles, protective clothing and gloves.**
- **The machine must be positioned on a level, firm surface clear of obstructions.**
- **The disassembly, if needed, must be performed by qualified trained personnel with power supply completely off.**

⚠ WARNING

BURN AND EJECTION HAZARDS

Before removing the hydraulic hoses, cool down the hydraulic oil to room temperature, and slowly loosen the hose to release the pressure.

2. Removal

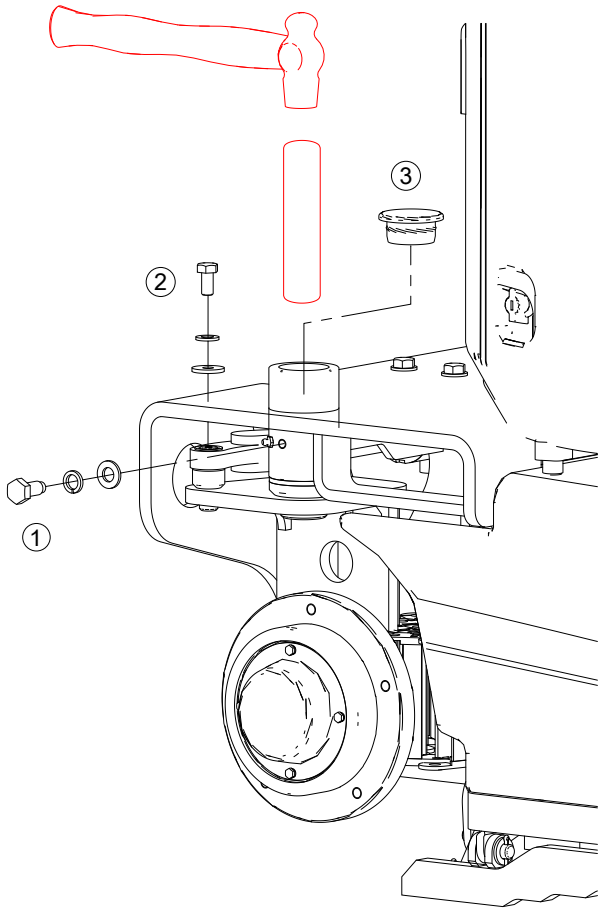

Figure 5-3

1. Disconnect the main power supply.
2. Disconnect all power inputs to the machine (such as the battery charger).
3. Place a jack of sufficient capacity under the chassis on the side for removal, raise the jack to make the wheels off the ground.
4. Using a suitable lifting device, remove the wheels. For details, see ***Tires and Rims, page 5-8***.
5. Attach the lifting straps of a suitable crane to the wheel support, be sure that the wheel support will not fall with fasteners removed.
6. Remove the fastening bolts and shims at the position #1 as indicated.
7. Remove the fastening bolts and shims at the position #2 as indicated.
8. Remove the plug at the position #3 as indicated.
9. Using brass drift and mallet, tap the wheel support out.

https://truckmanualshub.com/

⚠ WARNING

MOVING OBJECT HAZARD

Be sure to wear goggles while tapping the brass drift with a mallet.

10. Lift the wheel support clear of the machine.

3. Lubrication

Lubrication before removal

1. Remove the grease fitting at the wheel support.

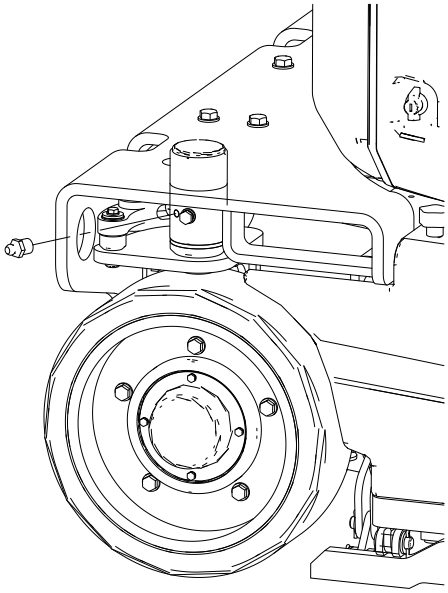

Figure 5-4

2. Add the lubricant WD-40. Operating from the ground using the platform controls, fully steer the wheel support to the left and right, repeat twice.

3. Install the grease fitting.

Lubrication after removal

1. After removing the wheel support assembly, remove the self-lubricating bearings.

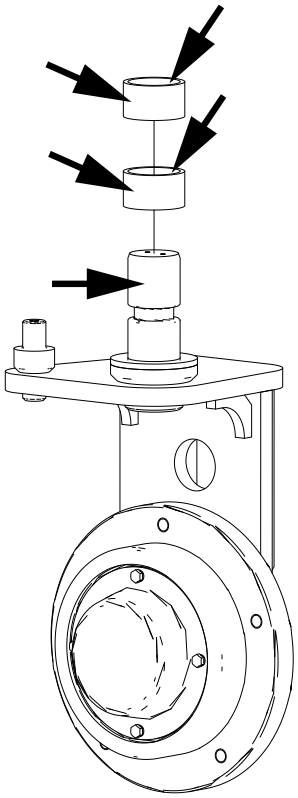

Figure 5-5

2. Spray the lubricant WD-40 onto the outer face of the self-lubricating bushing, and then apply a proper amount of lithium-based grease to the pivot pin of the wheel support and the inner face of the self-lubricating bushing.

4. Installation

https://truckmanualshub.com/

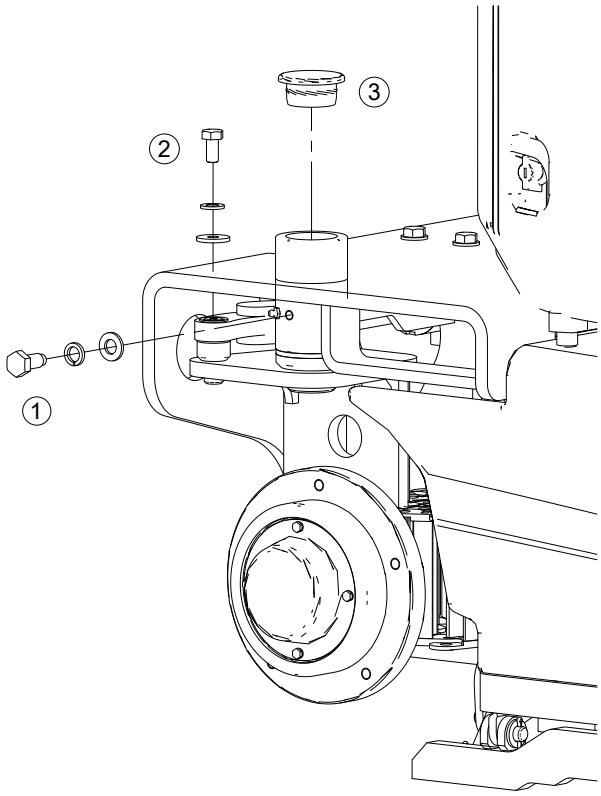

Figure 5-6

1. Attach the lifting straps of a suitable crane to the wheel support,and position the wheel support to align the pivot pin on the wheel support with the mounting hole on the chassis.
2. Install the pivot pin of wheel support into the mounting hole of chassis.
3. Install the bolt and washer at the position #1 as indicated.
4. Install the bolt and washer at the position #2 as indicated.
5. Install the plug at the position #3 as indicated.
6. Install the tires. For details, please see ***Tires and Rims, page 5-8***
7. Remove the jack.

5. Check

1. Start the machine.
2. Drive the machine steering left and right to check for malfunctions.

Steer Cylinder

1. Preparation

⚠ WARNING

UNSAFE OPERATION HAZARD

- **Cordon off the test area before the maintenance is performed.**
- **Be sure to wear goggles, protective clothing and gloves.**
- **The machine must be positioned on a level, firm surface clear of obstructions.**
- **The disassembly, if needed, must be performed by qualified trained personnel with power supply completely off.**

⚠ WARNING

BURN AND EJECTION HAZARDS

Before removing the hydraulic hoses, cool down the hydraulic oil to room temperature, and slowly loosen the hose to release the pressure.

2. Removal

1. Disconnect the main power supply.
2. Disconnect all power inputs to the machine (such as the battery charger).
3. Place a jack of sufficient capacity under the steer end of chassis on both sides, raise the jack to make the wheels off the ground. Be noted that the raised heights on both sides should be consistent.
4. Using a suitable lifting device, remove the wheels and supports. For details, see ***Tires and Rims, page 5-8*** and ***Wheel Support, page 5-10***

https://truckmanualshub.com/

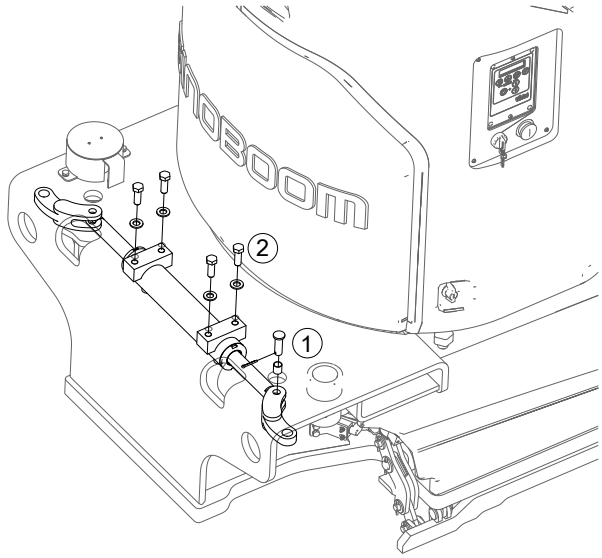

Figure 5-7

5. Remove the cotter pin and pivot pin securing the steer cylinder to the steer linkage.
6. Remove the steer linkage.
7. Using a suitable tool to support the steer cylinder and avoid the fall of cylinder with fasteners removed.
8. Remove the bolts and washers securing the steer cylinder to the chassis.
9. Using extreme caution, remove the steer cylinder.

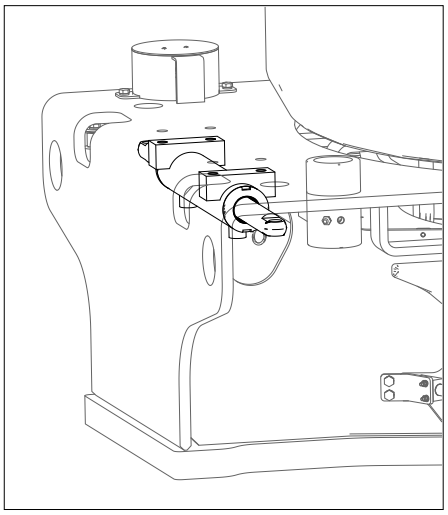

Figure 5-8

3. Installation

1. Align the mounting holes on the steer cylinder with those on the chassis.
2. Install the bolts and torque to 130Nm (96ft-lb).
3. Align the mounting holes on the steer linkage with those on the steer cylinder.
4. Install the bearings, pivot pins and cotter pins.

> **NOTICE**
>
> *The cotter pins must be replaced with new ones and must not be reused.*

5. Install the wheels and supports. For details, see ***Tires and Rims, page 5-8*** and ***Wheel Support, page 5-10***
6. Remove the jack.

4. Check

1. Start the machine.
2. Drive the machine steering left and right to check for leakage or other malfunctions.

Slewing Unit

1. Preparation

> **⚠ WARNING**
>
> **UNSAFE OPERATION HAZARD**
>
>
>
>
>
> - **Cordon off the test area before the maintenance is performed.**
> - **Be sure to wear goggles, protective clothing and gloves.**
> - **The machine must be positioned on a level, firm surface clear of obstructions.**
> - **The disassembly, if needed, must be performed by qualified trained personnel with power supply completely off.**

2. Lubrication

1. Remove the chassis cover.
2. Using a cloth, wipe off the stains and grease remains attached to the slewing gear and motor.
3. Brush a large amount of lithium-based grease onto the slewing gear and motor to ensure all gears are properly lubricated.
4. Install the chassis cover.

3. Visual inspection

- All bolts installed in place.
- Screws properly tightened, tighten or replace if necessary.

https://truckmanualshub.com/

- Wear of slewing gear tooth.
- Abnormal noises in turntable rotation.
- Abrupt stop in turntable rotation.
- Missing tooth of slewing gear.
- Excessive metal particles in grease
- Abnormal clearance in the slewing gear.

4. Tightening

For the sake of absolute safety, be sure to check that the slewing gear is properly tightened.

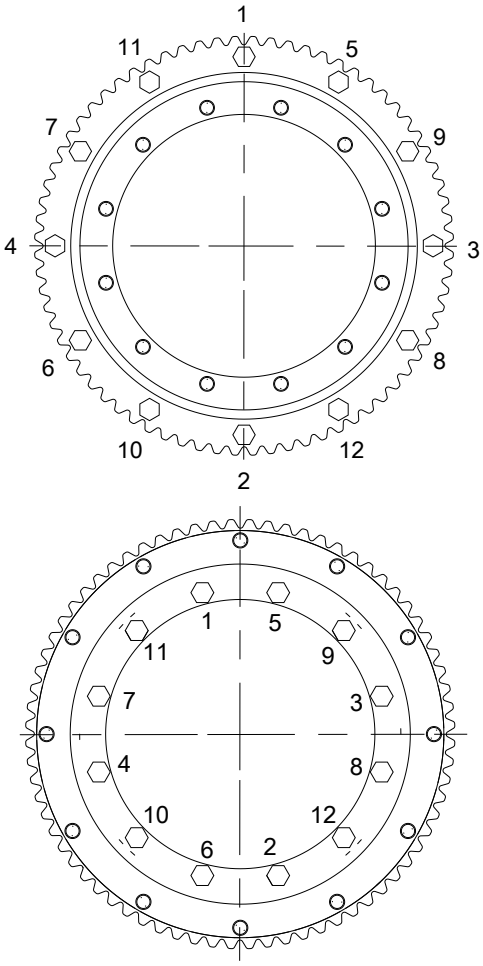

Figure 5-9

Tighten in sequence as indicated. The tightening torque is 260Nm (192ft-lb).

MAST COMPONENTS

Retract Cable

1. Preparation

⚠ WARNING

UNSAFE OPERATION HAZARD

- **Cordon off the test area before the maintenance is performed.**
- **Be sure to wear goggles, protective clothing and gloves.**
- **The machine must be positioned on a level, firm surface clear of obstructions.**
- **The disassembly, if needed, must be performed by qualified trained personnel with power supply completely off.**

2. Regular check

1. Start the machine from the ground.
2. Raise the mast to full height.
3. Check：
   - Steel cable becoming worn, torn, corroded or kinked.
   - Pollutants on steel cable, clean immediately.
   - Strands of steel cable kept in parallel.
   - Check the steel cable tension by deflecting the cable by hand. A properly tensioned steel cable should have no or little movement.

3. Steel cable tensioning adjustment

Hunan Sinoboom Intelligent Equipment Co., Ltd. requires the spring projecting height of the steel cable be checked once a week.

1. Operating from the ground, raise the mast section 1 by 100mm±20mm (3.937in±0.787in), and then turn off the machine.
2. Measure the spring projecting height of steel cable.

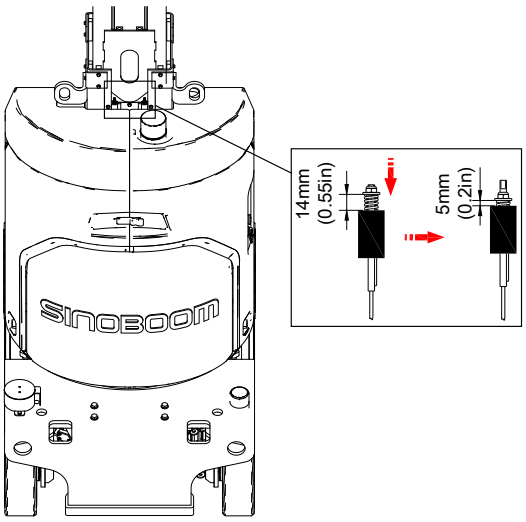

https://truckmanualshub.com/

Figure 5-10

3. When the spring projecting height exceeds 14mm, using a wrench tighten alternately the nuts to make it less than 5mm.

NOTICE

Using a suitable tool, hold the end of retract cable to prevent it from rotating.

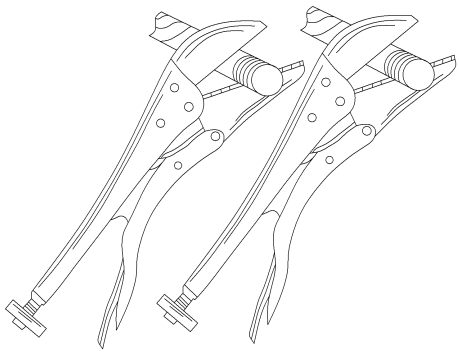

Figure 5-11

4. Start the machine from the ground.
5. Fully raise and lower the mast, perform twice.
6. Check the synchronization of the symmetric motion and whether abnormal noises sound.

4. Replacement criteria

- The machine has ever been overloaded or suffered from a serious impact.
- Cables with 6 total broken wires in one cable lay.
- Cables with 3 broken wires in one strand in one cable lay.
- Cables with one valley break.
- The steel cable with diameter less than 6mm should be replaced every 5 years, and the one greater than 6mm every 7 years.

The steel cable is made of high-carbon steel and has been specially treated.The used steel cable must be handed over to the specially intended enterprises for recycling.

Chains

1. Preparation

WARNING

UNSAFE OPERATION HAZARD

- **Cordon off the test area before the maintenance is performed.**
- **Be sure to wear goggles, protective clothing and gloves.**
- **The machine must be positioned on a level, firm surface clear of obstructions.**
- **The disassembly, if needed, must be performed by qualified trained personnel with power supply completely off.**

2. Visual inspection

- Ensure the chains are clean and safe.
- Ensure the chains and track are free of debris.
- Inspect the chain components for excessive wear, break or corrosion.

3. Lubrication

Be sure that the chains are sufficiently lubricated. The lubricating frequency is determined by the operating environment and conditions. If exposed in corrosive fluids, the chain must be cleaned and lubricated.

1. Raise the mast to full height.
2. Using a high-pressure gun or a piece of cloth, clean the solid particles and unitended grease off the chain surface.
3. Spray lubricant WD-40 onto each part of the chain, and ensure each part (chains, pins, roller bearings, and pin mounting holes) is properly lubricated.
4. Lower the mast to stowed position.

4. Chain tensioning adjustment

https://truckmanualshub.com/

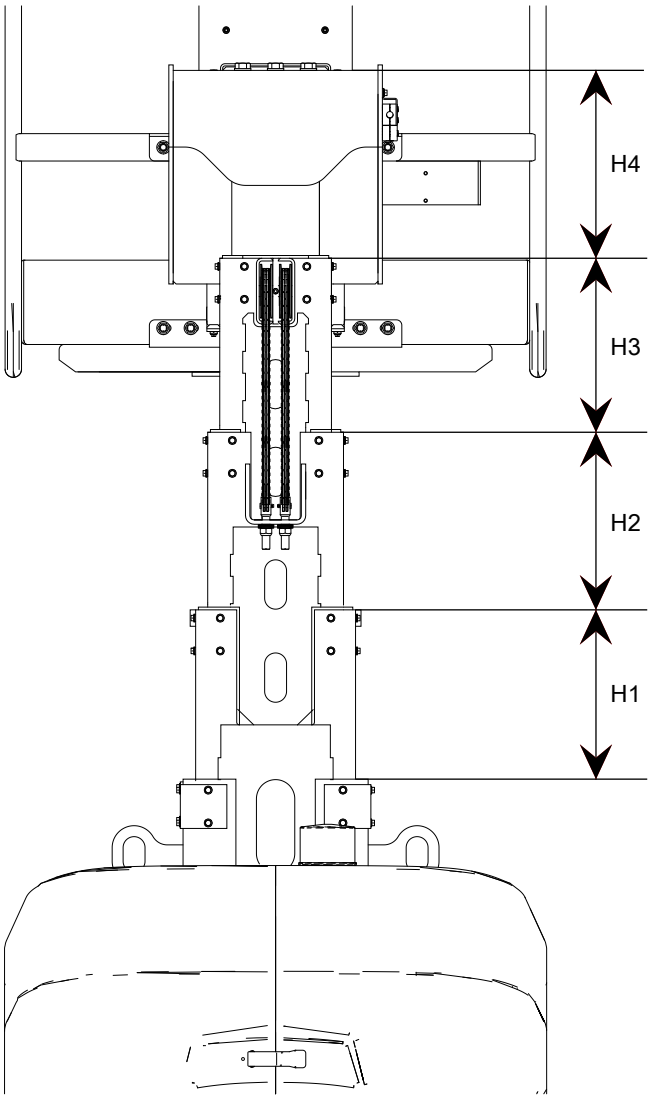

Figure 5-12

1. Operating from the ground, raise the mast section 1 by 300mm±2mm (11.811in±0.079in), and then turn off the machine.
2. Measure the projecting heights of mast sections 2, 3 and 4, which should be：
   - H2=300mm±2mm (11.811in±0.079in)
   - H3=300mm±2mm (11.811in±0.079in)
   - H4=306mm±2mm (12.047in±0.079in)
3. If out of specifications above, the chain tensioning should be adjusted (ensure the retract cable has been tightened before adjustment).
4. Adjust the chain tension of each mast section to meet the projecting height specifications above.
   - Adjust the chain tension of mast section 1 to enable H2=300mm±2mm (11.811in±0.079in)：alternately tighten or loosen the nuts as shown.

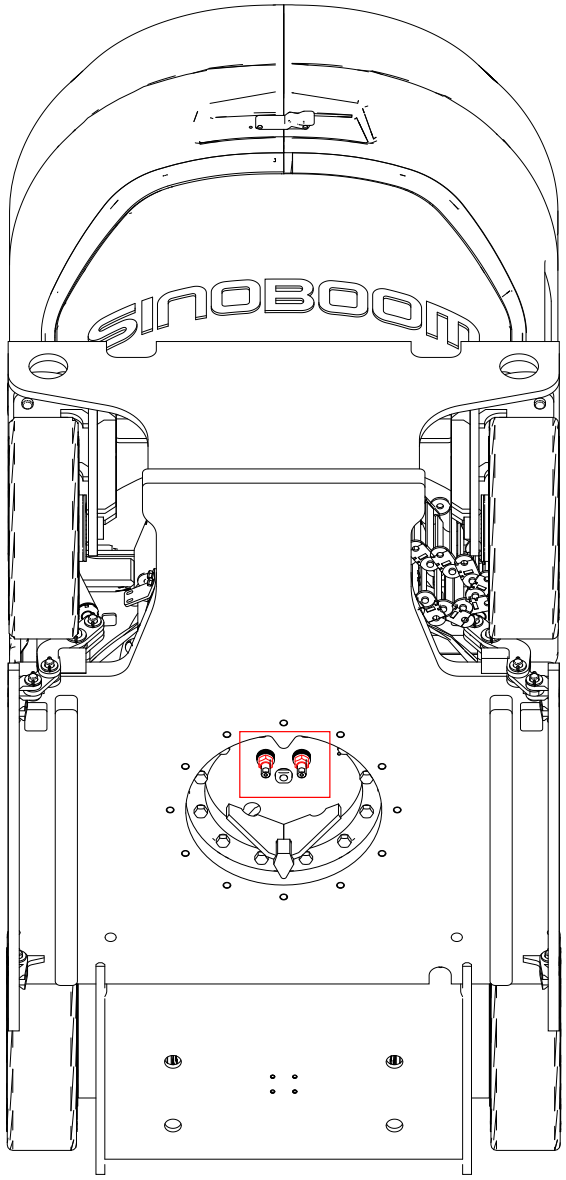

Figure 5-13

- Adjust the chain tension of mast section 2 to enable H3=300mm±2mm (11.811in±0.079in)：alternately tighten or loosen the nuts as shown.

https://truckmanualshub.com/

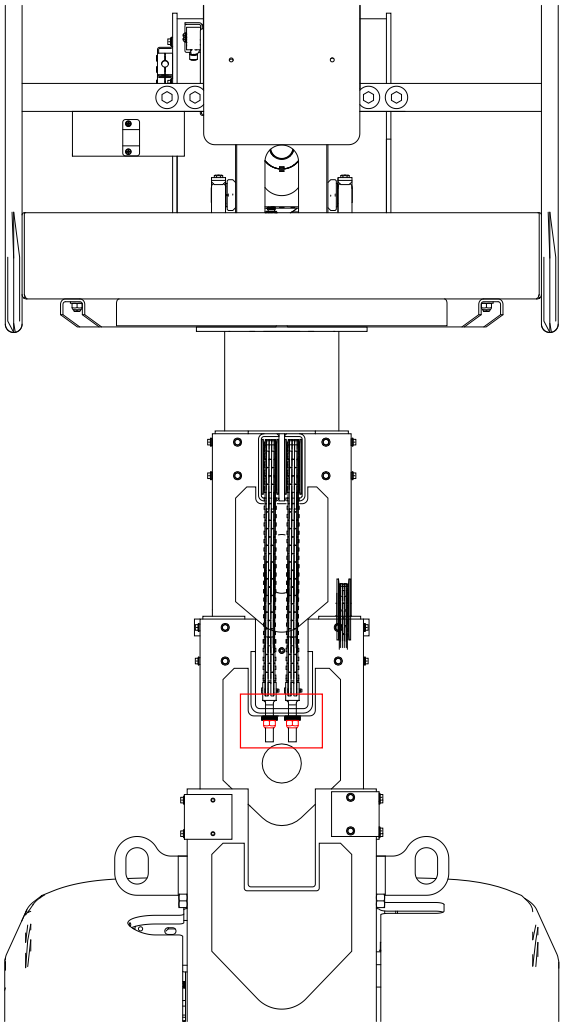

Figure 5-14

- Adjust the chain tension of mast section 3to enable H4=306mm±2mm (12.047in±0.079in) : alternately tighten or loosen the nuts as shown.

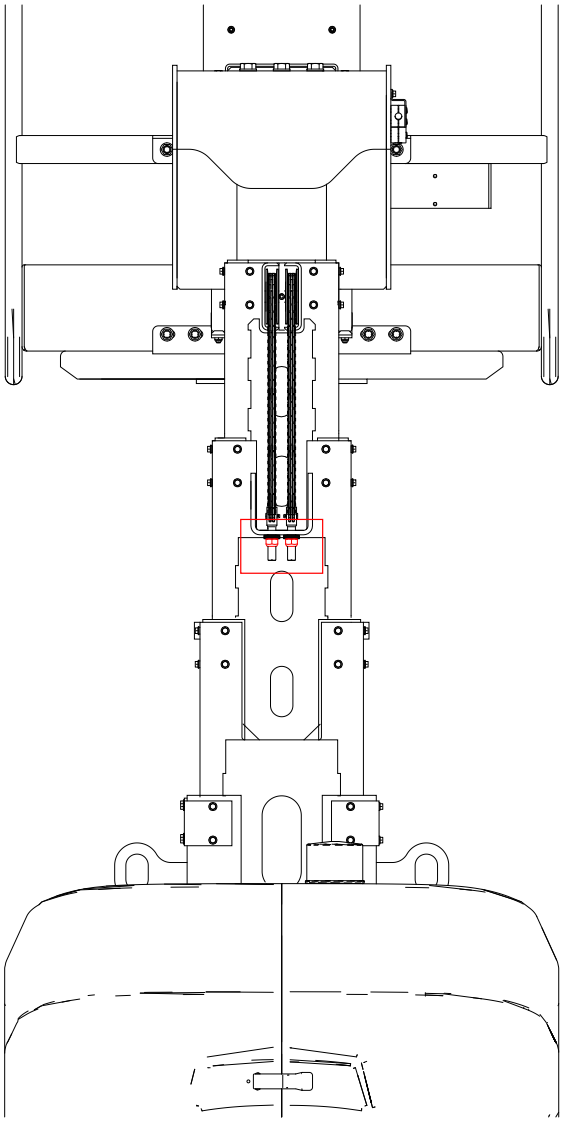

Figure 5-15

5. Start the machine from the ground.
6. Fully raise and lower the mast, perform twice.
7. Check the synchronization of the symmetric motion and whether abnormal noises sound.

5. Replacement criteria

Replace the chain if any of the following conditions occur :

- The wear elongation rate of the 12–link chain is 2% more than the original, i.e., L1 > L+2%L.

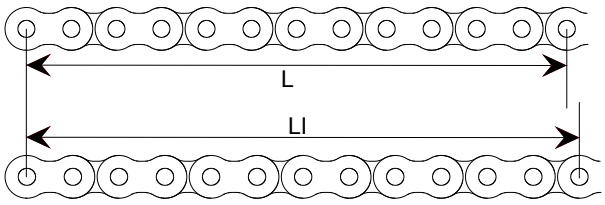

https://truckmanualshub.com/

Figure 5-16

- The wear in the height of link section is 2% more than the original, i.e., H1 < H–2%H.

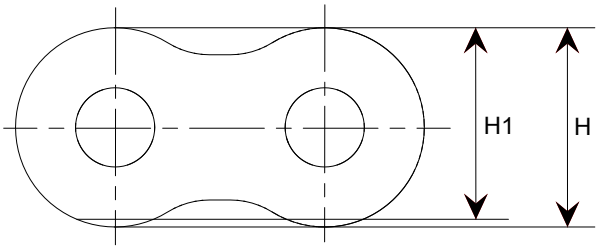

Figure 5-17

- The chain becomes ineffective.
- The chain is cracked or torn apart.

The steel cable is made of hardened steel and has been specially treated.The used chain must be handed over to the specially intended enterprises for recycling.

Connection between Mast Sections 1,2 and Brackets

1. Preparation

⚠ WARNING

UNSAFE OPERATION HAZARD

- **Cordon off the test area before the maintenance is performed.**
- **Be sure to wear goggles, protective clothing and gloves.**
- **The machine must be positioned on a level, firm surface clear of obstructions.**
- **The disassembly, if needed, must be performed by qualified trained personnel with power supply completely off.**

2. Inspecting the mast section 1 properly secured to the lift cylinder

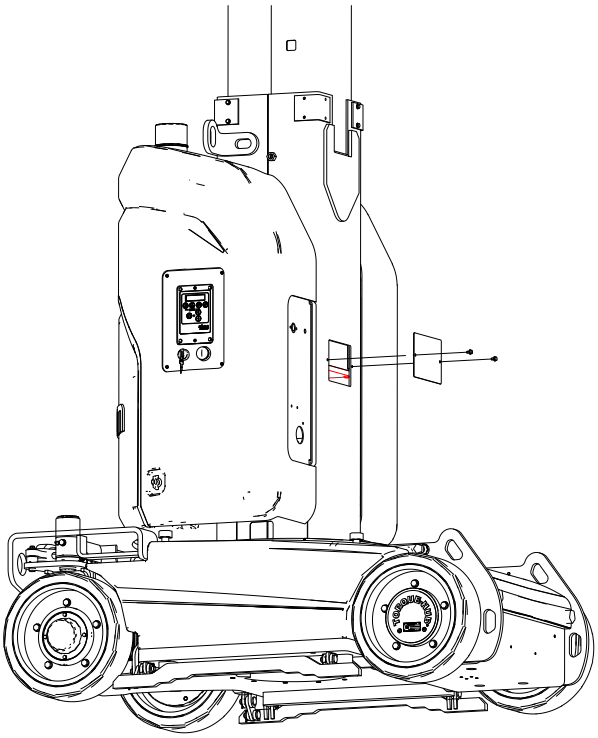

Figure 5-18

1. Start the machine from the ground.
2. Raise the mast approx. 5m (16ft 4in).
3. Remove the cover plate on the back of base section.

⚠ WARNING

CRUSH HAZARD

Do not reach your hand and arm inside the mast.

4. Check the clearance between the mast section 1 and lift cylinder bracket, ensure no clearance exists, i.e., J=0.

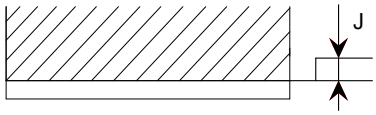

Figure 5-19

5. Be sure that the mounting bolts are securely tightened, with all the bolt heads in parallel with, and not 1.5mm (0.059in) higher than, the underside of the bracket.

https://truckmanualshub.com/

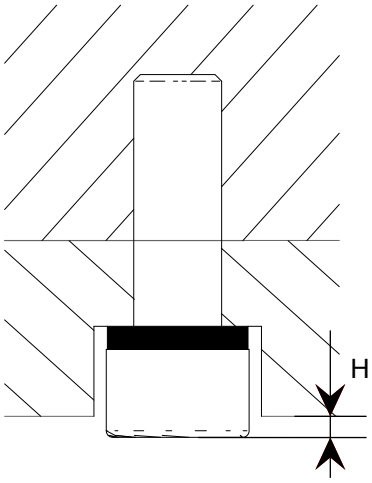

Figure 5-20

3. Inspecting the mast section 2 properly secured to the bracket

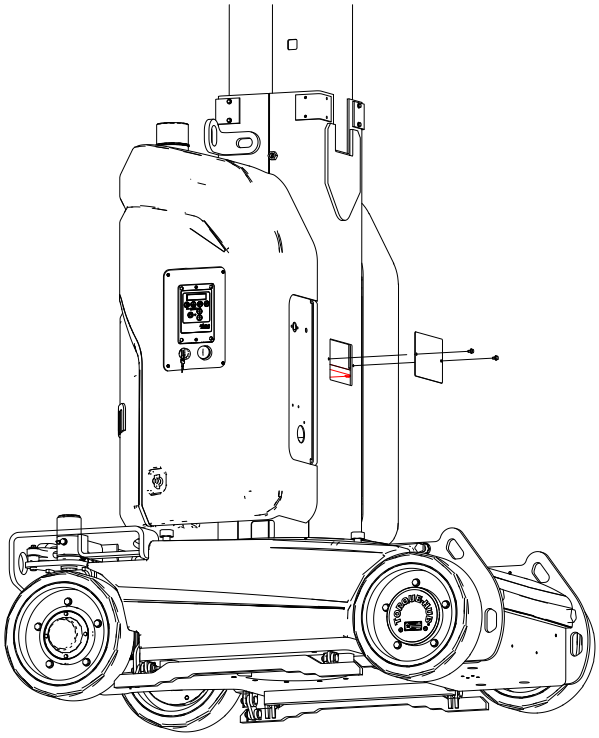

Figure 5-21

1. Start the machine from the ground.
2. Raise the mast approx. 5m (16ft 4in).
3. Remove the cover plate on the front side of mast section 1.

WARNING

CRUSH HAZARD

Do not reach your hand and arm inside the mast.

4. Check the clearance between the mast section 2 and the bracket, ensure no clearance exists, i.e., J= 0.

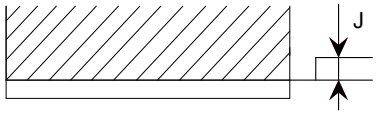

Figure 5-22

5. Be sure that the mounting bolts are securely tightened, with all the bolt heads on the same level with, and not 1.5mm (0.059in) higher than, the underside of the bracket.

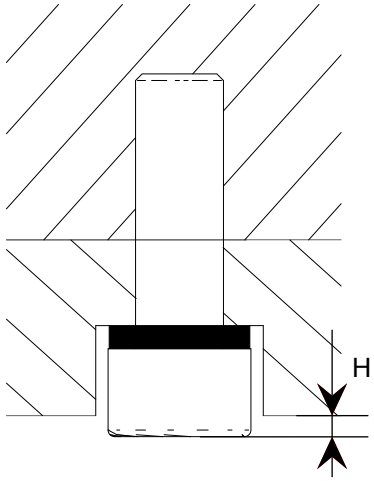

Figure 5-23

Mast wear pads

1. Preparation

https://truckmanualshub.com/

⚠ WARNING

UNSAFE OPERATION HAZARD

- **Cordon off the test area before the maintenance is performed.**
- **Be sure to wear goggles, protective clothing and gloves.**
- **The machine must be positioned on a level, firm surface clear of obstructions.**
- **The disassembly, if needed, must be performed by qualified trained personnel with power supply completely off.**

2. Inpsection

Regularly inspecting the height of mast wear pads is critical to safe machine operation. The wear pad develops a friction pair with the mast surface, improper wear pad clearance or thickness may cause component damage or unsafe conditions.

1. Insepct the clearnace between wear pads and each mast section, ensure the clearance is within the range of 0.5mm-1.5mm (0.0197in–0.059in), i.e., L2–L1=0.5mm-1.5mm (0.0197in–0.059in), L4–L3= 0.5mm-1.5mm (0.0197in–0.059in).

Figure 5-24

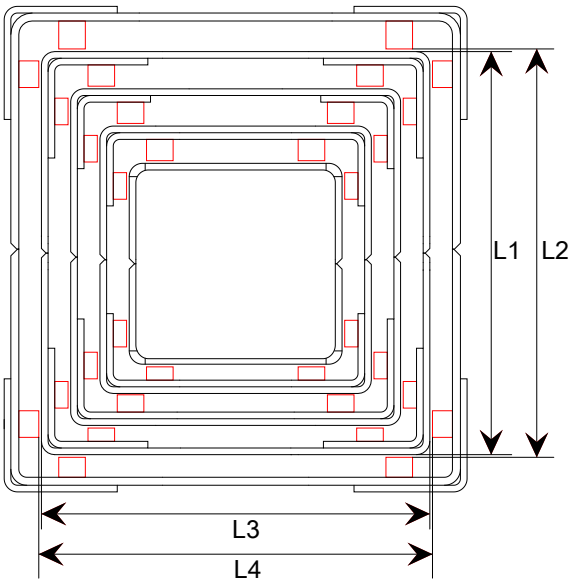

2. Inspect the wear pad height, ensure the wear degree will not exceed 1mm (0.0394in), i.e., H≤1mm (0.0394in)

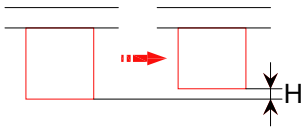

Figure 5-25

FUNCTIONS AND CONTROLS

Ground Controls

1. Preparation

⚠ WARNING

UNSAFE OPERATION HAZARD

- **Corden off the area before testing.**
- **Before testing, Position the machine on a level, firm surface clear of obstructions.**

2. Testing the functions of ground controls

https://truckmanualshub.com/

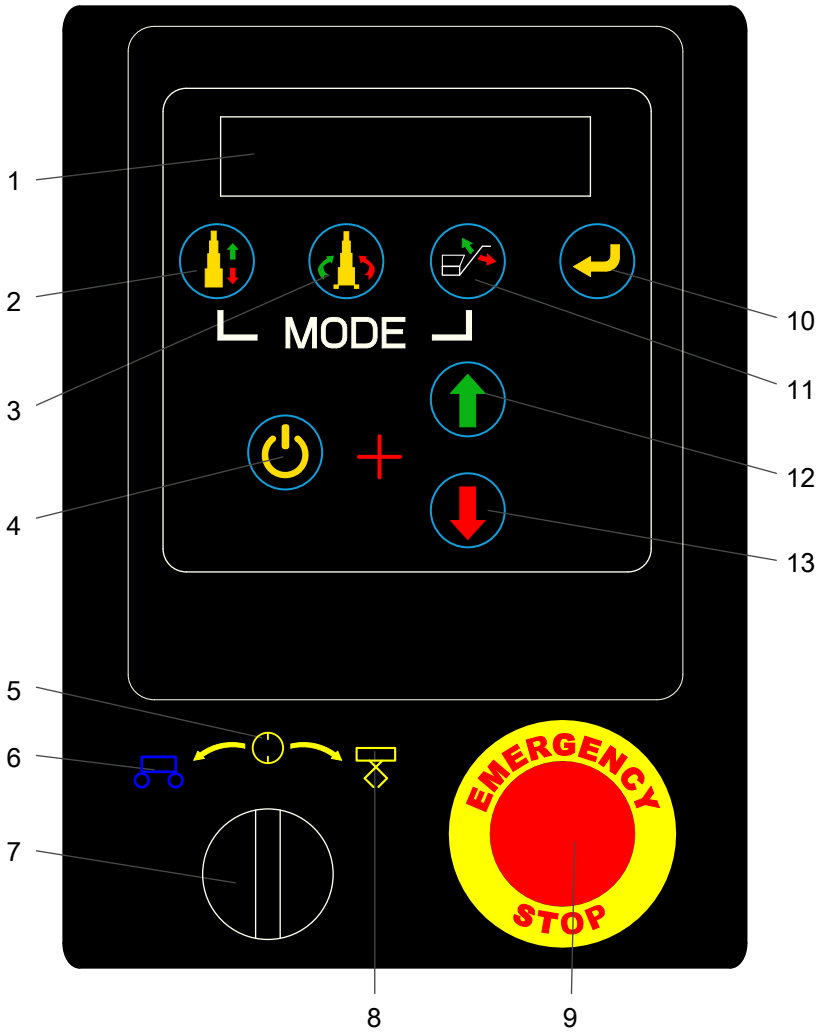

Figure 5-26 Ground controls

Table 5-5

1. Display	**6.** Ground control position	**11.** Jib boom up/down function button
2. Mast up/down function button	**7.** Key switch (ground/platform control select switch)	**12.** Up/rotate left control button
3. Turntable rotate function button	**8.** Platform control position	**13.** Down/rotate right control button
4. Enable switch	**9.** Emergency stop button	
5. OFF position	**10.** Key for display menu	

For the details about testing the functions of ground controls, please see *Ground Controls* in the *Pre-operation Function Test* section of Operation Manual.

⚠ WARNING

UNSAFE OPERATION HAZARD

- **Corden off the area before testing.**
- **Before testing, Position the machine on a level, firm surface clear of obstructions.**

Platform Controls

1. Preparation

https://truckmanualshub.com/

2. Testing the functions of platform controls

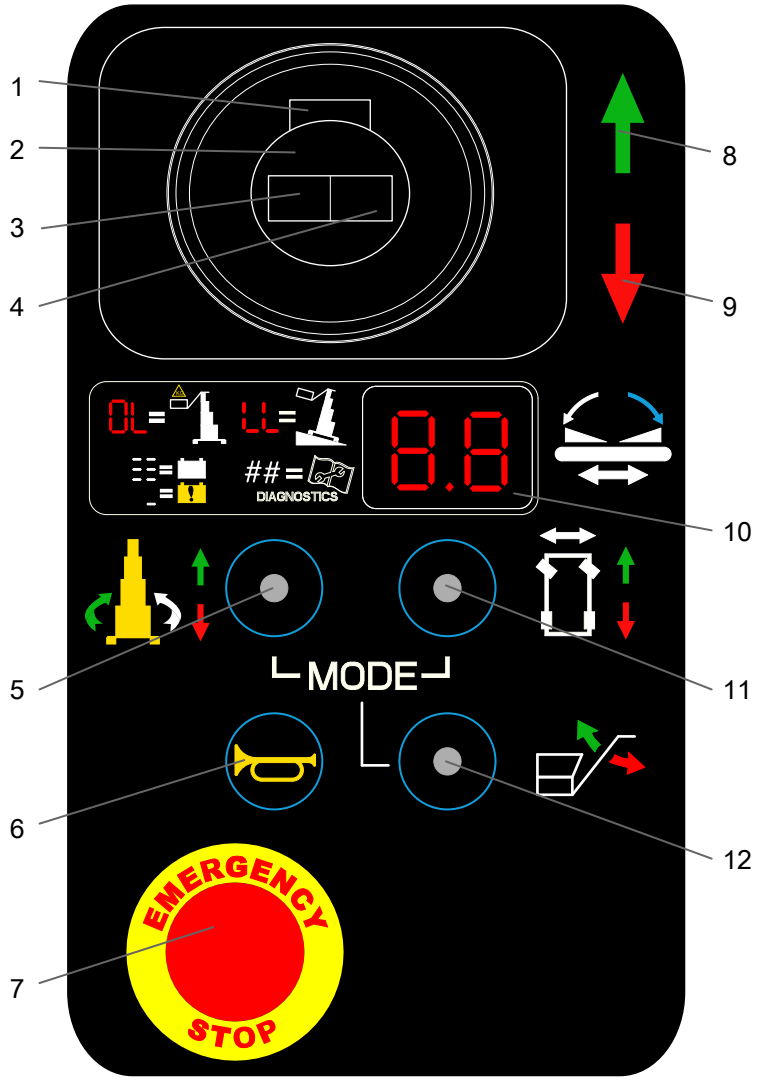

Figure 5-27 Platform controls

Table 5-6

1. Enable button	**5.** Mast lift/turntable rotate function button	**9.** Drive reverse/lower direction arrow
2. Joystick	**6.** Horn button	**10.** Display
3. Rocker switch for turntable rotate left/wheel steer left functions	**7.** Emergency stop button	**11.** Drive function button
4. Rocker switch for turntable rotate right/wheel steer right functions	**8.** Drive forward/lift direction arrow	**12.** Jib boom lift function button

https://truckmanualshub.com/

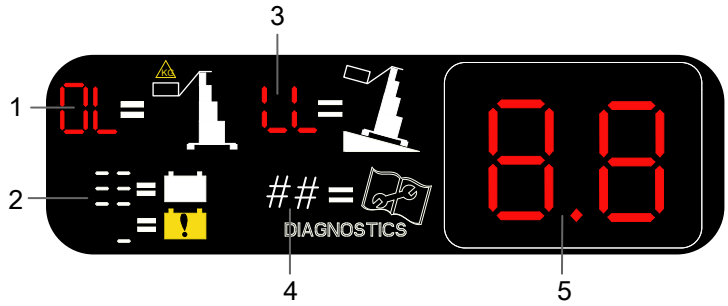

Figure 5-28 Platform controls display

Table 5-7

1. Overload symbol (OL)	**3.** Tilt symbol (LL)	**5.** Alarm display
2.Battery level symbol	**4.** Fault code	

For the details about testing the functions of platform controls, please see *Platform Controls* in the *Pre-operation Function Test* section of Operation Manual.

Emergency Lowering

1. Preparation

⚠ WARNING

UNSAFE OPERATION HAZARD

- **Corden off the area before testing.**
- **Before testing, Position the machine on a level, firm surface clear of obstructions.**
- **The test should be performed from the ground using the ground controls.**

2. Testing

⚠ WARNING

COLLISION HAZARD

Be sure no person is under the jib boom before lowering the mast and jib boom.

MAST EMERGENCY LOWERING

1. Start the machine from the ground controls.
2. Push the mast up/down function button.
3. Simultaneously press and hold the enable button and the up/rotate left control button to raise the mast to full height.
4. Pull out the handle of the mast lift control valve.

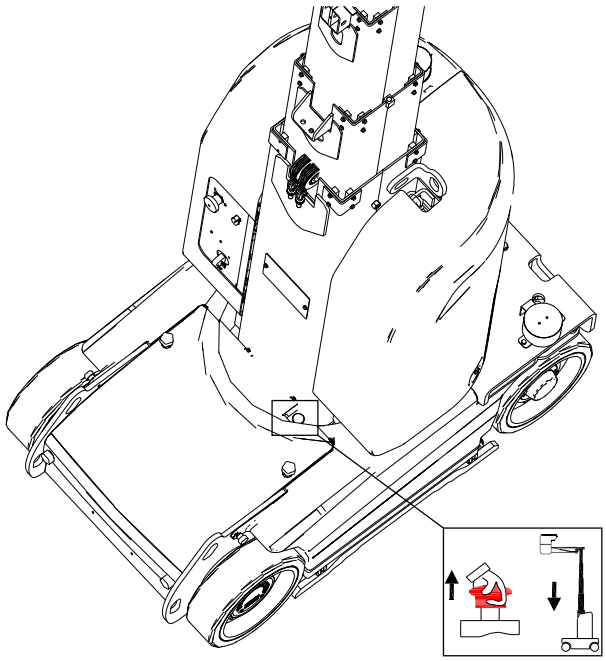

Figure 5-29

5. The mast should lower in place.
1. Start the machine from the ground controls.
2. Push the mast up/down function button.
3. Simultaneously press and hold the enable button and the up/rotate left control button to raise the mast to full height.

https://truckmanualshub.com/

4. Pull out the handle of the mast lift control valve.

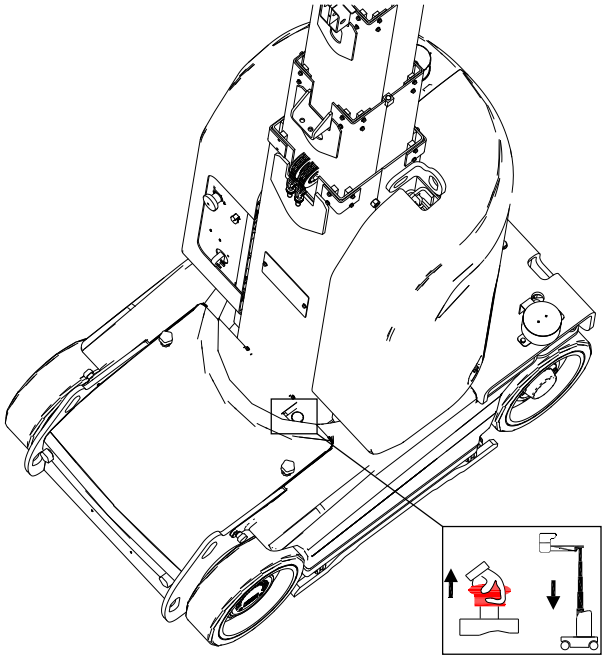

Figure 5-30

5. The mast should lower in place.

JIB BOOM EMERGENCY LOWERING

1. Start the machine from the ground controls.
2. Push the jib boom up/down function button.
3. Simultaneously press and hold the enable button and the up/rotate left control button to raise the jib boom to full height.
4. Using a suitable screwdriver, insert it into the jib boom lift control valve as indicated in the figure below.

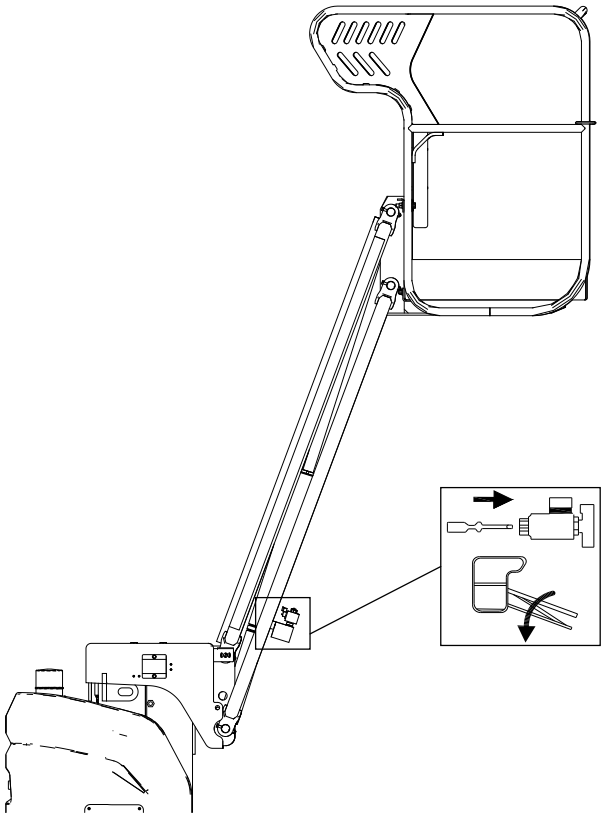

Figure 5-31

5. The jib boom should lower in place.

1. Start the machine from the ground controls.
2. Push the jib boom up/down function button.
3. Simultaneously press and hold the enable button and the up/rotate left control button to raise the jib boom to full height.
4. Using a suitable screwdriver, insert it into the jib boom lift control valve as indicated in the figure below.

https://truckmanualshub.com/

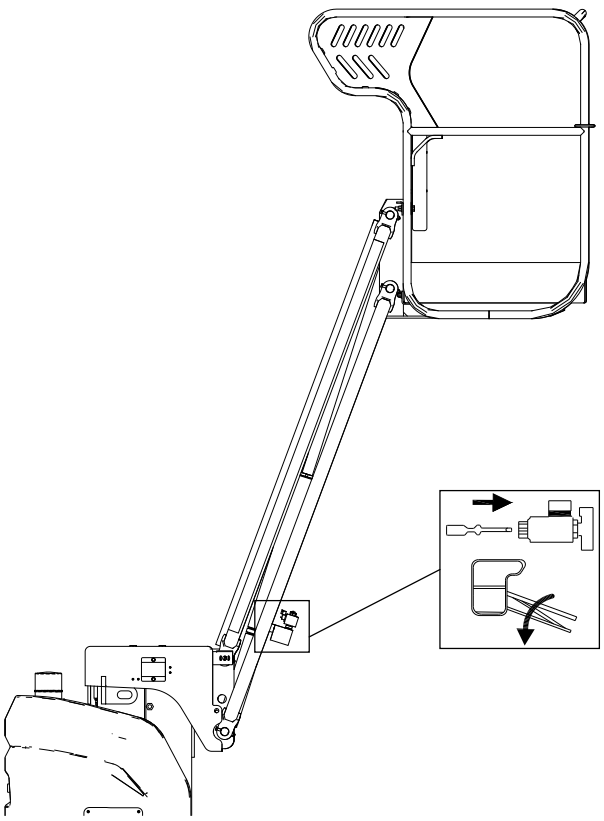

Figure 5-32

5. The jib boom should lower in place.

Brake System

1. Preparation

⚠ WARNING

UNSAFE OPERATION HAZARD

- **Corden off the area before testing.**
- **Before testing, Position the machine on a level, firm surface clear of obstructions.**
- **Perform the test from the ground using the platform controls.**
- **If the drive brake sounds abnormally, immediately stop operating the machine.**

2. Testing

Stowed position

1. Draw a line on the ground as a reference.
2. Start the machine.
3. Push the drive function button, then press and hold the enable button on the joystick and slowly deflect the joystick to full stroke.
4. When the max drive speed is achieved with the machine front wheels just reaching the reference line, quickly release the joystick.
5. Measure the braking distance of the machine.

   Result：Braking distance≤0.35m (1ft 2in).
6. If the braking distance exceeds the value range, immediately tag and remove the machine from service.

Operating position

1. Draw a line on the ground as a reference.
2. Start the machine.
3. Push the drive function button, then press and hold the enable button on the joystick and slowly deflect forward the joystick to full stroke.
4. When the max drive speed is achieved with the machine front wheels just reaching the reference line, quickly release the joystick.
5. Measure the braking distance of the machine.

   Result：Braking distance≤0.05m (2in).
6. If the braking distance exceeds the value range, immediately tag and remove the machine from service.

Brake Release Function

1. Preparation

⚠ WARNING

UNSAFE OPERATION HAZARD

- **Corden off the area before testing.**
- **Before testing, Position the machine on a level, firm surface clear of obstructions.**
- **The test should be performed from the ground using the ground controls.**
- **Unless in case of emergency situations, malfunctions, power loss or during loading/unloading, do not tow/drag the machine.**
- **Before releasing the drive brake, be sure the machine is on a level surface or safely choked.**

2. Testing the brake release function

https://truckmanualshub.com/

Method 1 :

1. Choke wheels securely to prevent motion of the machine.
2. Be sure the path is clear of obstructions, and the power disconnect switch in off position.
3. Move upward the the brake release switch.

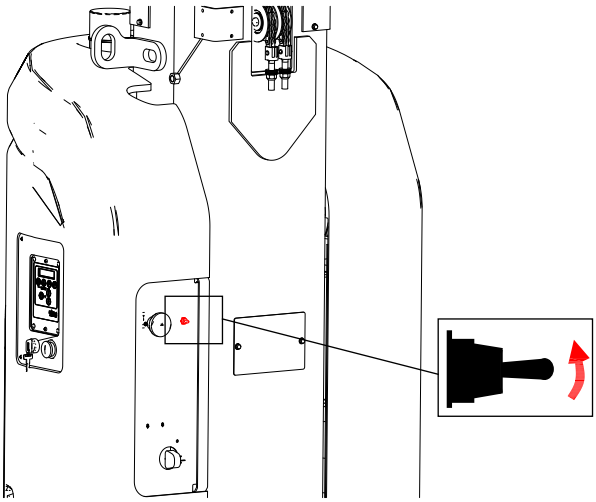

Figure 5-33

4. When a beef sounds, it indicates the brake is released and the machine is all set for the towing/dragging.
5. After the towing/dragging is complete, position the machine on a firm level surface.
6. Choke wheels securely to prevent motion of the machine.
7. Move again the brake release switch, or push in the emergency stop button, or turn the key switch to off position, to engage the brake.
8. Remove the chokes as desired.

Method 2 :

1. Choke wheels securely to prevent motion of the machine.
2. Be sure the path is clear of obstructions, and the power disconnect switch in off position.
3. Remove the both end cap bolts and brake cover from the wheel reducer.

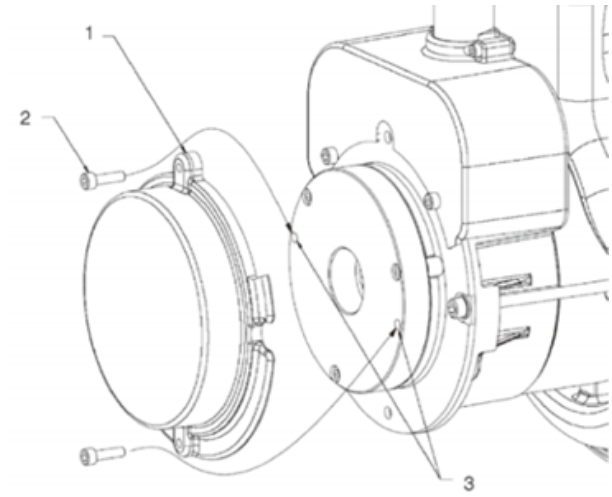

Figure 5-34

Table 5-8

No.	Description
1	Brake cover
2	End cap bolt
3	Disengage hole

4. Insert the end cap bolts into the both disengage holes on the brake housing.
5. Tighten the bolts to disengage the brake from the drive motor.
6. Repeat the procedure above to the other wheel reducer. After the both brakes are disengaged from the drive motors, the machine is all set for the towing/dragging.
7. After the towing/dragging is complete, position the machine on a firm level surface.
8. Choke the wheels to prevent the machine from rolling.
9. Remove the end cap bolts from the disengage holes, and install the brake cover and end cap bolts.
10. Remove the chokes as desired.

Drive Speed

1. Preparation

https://truckmanualshub.com/

⚠ WARNING

UNSAFE OPERATION HAZARD

- **Corden off the area before testing.**
- **Before testing, Position the machine on a level, firm surface clear of obstructions.**

2. Testing

1. Draw two lines on the ground as reference, with the spacing of the two lines being 30m (98ft 5in)
2. Start the machine in stowed position.
3. Push the drive function button, then press and hold the enable button on the joystick and slowly deflect forward the joystick to the full stroke.
4. When the max drive speed is achieved and the front wheels reach the first line, start the time counting.
5. When the front wheels reach the second line, stop the time counting, and slowly bring the machine to a stop.
6. The time counted should be 27s.
7. If the time counted is less than 27s, immediately stop the testing and tag the machine, otherwise, go on to the next step.
8. Raise the mast approx. 1m (3ft 3in).
9. Push the drive function button, then press and hold the enable button on the joystick and slowly deflect forward the joystick to the full stroke.
10. When the max drive speed is achieved and the front wheels reach the first line, start the time counting.
11. When the front wheels reach the second line, stop the time counting, and slowly bring the machine to a stop.
12. The time counted should be 180s.
13. If the time counted is less than 180s, immediately stop the testing and tag the machine.

Pothole Protection

1. Preparation

⚠ WARNING

UNSAFE OPERATION HAZARD

- **Corden off the area before testing.**
- **Before testing, Position the machine on a level, firm surface clear of obstructions.**
- **Perform the test from the ground using the platform controls.**

2. Testing

1. Start the machine.
2. Push the mast lift/turntable rotate function button.
3. Press and hold the enable button on the joystick, and slowly deflect forward the joystick to raise the mast approx. 0.5m (1ft 8in).
4. The pothole protective plates on both sides should fully extend.
5. Apply hand force to push the protective plate, the plate should not flip.
6. Press and hold the enable button on the joystick, and slowly deflect backward the joystick to lower the mast.
7. The pothole protective plates on both sides should retract.
8. Place a wooden block under the protive plate. The wooden block measures 50mm×100mm×50mm (2in×4in×2in).
9. Press and hold the enable button on the joystick, and slowly deflect forward the joystick to raise the mast approx.1m (3ft 3in).
10. The buzzer should sound continuously, the displays of platform and ground controls indicate “18”, and the mast is not prevented from raising.
11. Push the drive function button.
12. Press and hold the enable button on the joystick, and slowly deflect forward or backward the joystick.
13. The machine should not drive forward or reverse.
14. Press and hold the enable button on the joystick, and press on the left or right of the rocker switch on top of the joystick.
15. The machine should not steer left or right.
16. Push the mast lift/turntable rotate function button.
17. Press and hold the enable button on the joystick, and slowly deflect backward the joystick to lower the mast.

https://truckmanualshub.com/

Tilt Protection

1. Preparation

⚠ WARNING

UNSAFE OPERATION HAZARD

- **Corden off the area before testing.**
- **Before testing, Position the machine on a level, firm surface clear of obstructions.**
- **Perform the test from the ground using the platform controls.**
- **Perform the test with the machine in stowed position.**

2. Testing

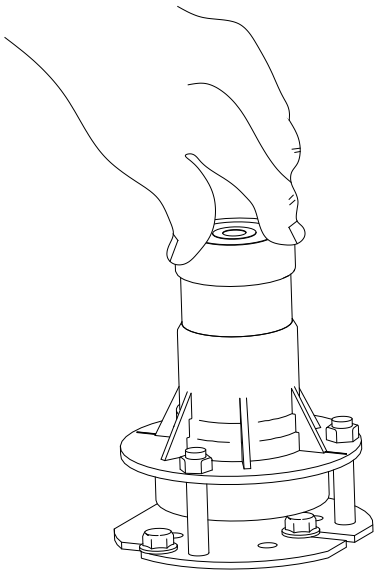

Figure 5-35

Testing the 3°level switch

1. Start the machine.
2. With the machine in stowed position, move the level switch in X (side-to-side) or Y (fornt-to-back) direction by 3°or more, the alarm should not sound.
3. Raise the mast until the lower limit switch disengages, the display will indicate “LL”(tilt alarm), and the mast lift and drive funcions should be restricted.
4. Lower the platform to the stowed position, the tilt alarm should not sound, and the function restriction should be lifted.
5. Place two wooden blocks under the two wheels on the front or rear end of the machine. The wooden block dimesion (L×W×H)is 150×100×63mm (5.9×3.9×2.5in). With the machine in stowed position, drive the machine on the blocks, the alarm should not sound.
6. Drive the machine off the blocks, and remove the blocks.
7. Raise the mast until the lower limit switch disengages, the display will indicate “LL”(tilt alarm), and the mast lift and drive funcions should be restricted.
8. Lower the platform to the stowed position, the tilt alarm should not sound, and the function restriction should be lifted.
9. Drive the machine off the blocks, and remove the blocks.
10. Place two wooden blocks under the two wheels on the left or right side of the machine. The wooden block dimesion (L×W×H)is 150×100×43mm (5.9×3.9×1.7in). With the machine in stowed position, drive the machine on the blocks, the alarm should not sound.
11. Raise the mast until the lower limit switch disengages, the display will indicate “LL”(tilt alarm), and the mast lift and drive funcions should be restricted.
12. Lower the platform to the stowed position, the tilt alarm should not sound, and the function restriction should be lifted.
13. Drive the machine off the blocks, and remove the blocks.

Testing the 7°level switch

1. Start the machine.
2. With the machine in stowed position, drive the machine on a slope exceeding 7°, the red indicator light of the level sensor should come on, and the drive speed should be reduced to the low speed mode (0.6km/h[0.37mph]).

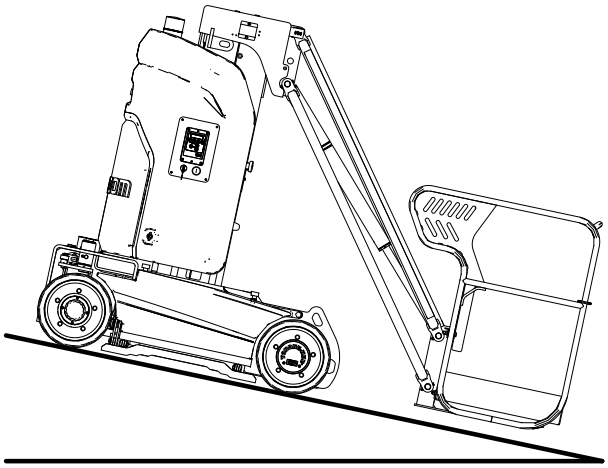

Figure 5-36

https://truckmanualshub.com/

3. Drive the off the slope.

Weighing System

1. Preparation

⚠ WARNING

UNSAFE OPERATION HAZARD

- **Corden off the area before testing.**
- **Before testing, Position the machine on a level, firm surface clear of obstructions.**
- **Perform the test from the ground using the platform controls.**
- **Before the testing, Fully raise the mast and jib boom, perform twice to get the roller and track sufficiently lubricated.**

2. Testing

Before the testing, fully raise and lower the mast and jib boom for twice to ensure the wear pads and tracks are properly lubricated.

1. Fully lower the mast, and gradually apply loads to the platform.
2. When the loads on the platform do not exceed 200kg (440 lb), the mast can be raised to the full height.
3. When the loads on the platform exceed 240kg (529 lb), the overload alarm should sound, the display should indicate“OL”, and the mast and jib boom lift functions should be restricted.
4. Remove the excessive loads from the platform, the machine functions should be resumed.

HYDRAULIC AND ELECTRICAL SYSTEMS

Hand Pump

1. Preparation

⚠ WARNING

UNSAFE OPERATION HAZARD

- **Cordon off the test area before the maintenance is performed.**
- **Be sure to wear goggles, protective clothing and gloves.**
- **The machine must be positioned on a level, firm surface clear of obstructions.**
- **The disassembly, if needed, must be performed by qualified trained personnel with power supply completely off.**

2. Inspecting hand pump function

Mast up/down

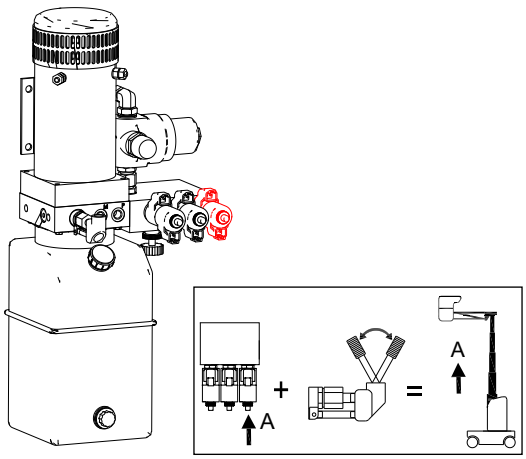

Figure 5-37

1. Open the right turntable cover, and locate the handle of hand pump.
2. Insert the handle into the hole of hand pump as indicated.
3. While pressing the button on the end of mast lift valve, pump the handle up and down, the mast should raise.

Turntable rotate

https://truckmanualshub.com/

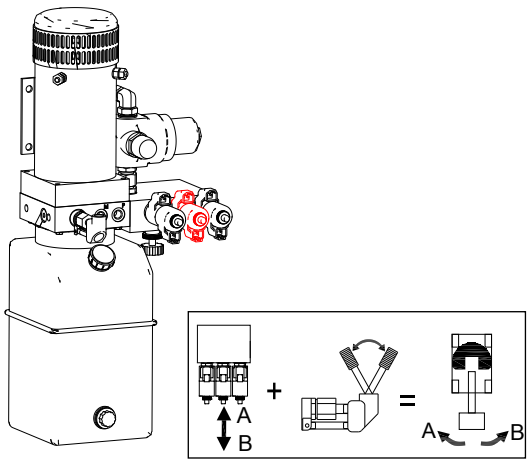

Figure 5-38

1. Open the right turntable cover, and locate the handle of hand pump.
2. Insert the handle into the hole of hand pump as indicated.
3. While pressing the button on the end of turntable rotate valve, pump the handle up and down, the turntable should rotate clockwise.
4. Pull out the ring on the end of the turntatble rotate valve, and pump the handle up and down, the turntable should rotate counterclockwise.

Steer

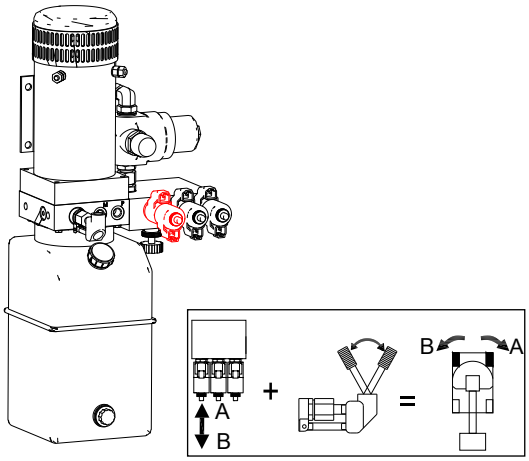

Figure 5-39

1. Open the right turntable cover, and locate the handle of hand pump.
2. Insert the handle into the hole of hand pump as indicated.
3. While pressing the ring of the button on the end of steer valve, pump the handle up and down, the machine should steer right.
4. Pull out the ring of steer valve, and pump the handle up and down,the machine should steer left.

Hydraulic Cylinder

1. Preparation

⚠ WARNING

UNSAFE OPERATION HAZARD

- **Cordon off the test area before the maintenance is performed.**
- **Be sure to wear goggles, protective clothing and gloves.**
- **The machine must be positioned on a level, firm surface clear of obstructions.**
- **The disassembly, if needed, must be performed by qualified trained personnel with power supply completely off.**
- **Never clean the cylinder using high-pressure cleaner, otherwise the cylinder components may get damaged, and the water entering the guide or seals of the cylinder may cause corrosion, contamination or seize-up.**

⚠ WARNING

BURN AND BURST HAZARD

Before removing the hydraulic hoses and cylinder, allow the hydraulic oil to cool down to room temperature, and then slowly loosen each component to release the pressure.

2. Visual inspection

Inspect the hydraulic cylinder every 250h or 6 months for：

- Leakage
- Deformation, damage and cracks
- Rust and shock
- Foreign objects on cylinder surfaces
- Missing or loose parts (bolts, nuts, fitting, hoses, etc.)

https://truckmanualshub.com/

3. Storage

For the cylinder to function properly and avoid corrosion during long periods of storage (indoors or outdoors), the following requirements are to be observed:

- Keep the machine in stowed position before storage, and ensure the tires have been calibrated for alignment.
- Perform twice a week to fully raise and lower the mast and jib boom and steer left and right the wheels to lubricate the cylinders.

4. Function tests

For the hydraulic cylinders to function properly and operate safely, the function test should be performed every 250h or 6 months. The maintenance freqeuncy may be appropriately adjusted under the following conditions：

- Abnormal noises discovered by visual inspection
- Abnormal noises in cylinder operation
- Machine storage period exceeding 6 months
- Storage environment and special application conditions (highly humid or saulty environments)

NOTICE

The tests should be performed under the same conditions and temperatures.

1. Apply rated load to the the platform.
2. Raise the mast to full height. Measure the mast lift cylinder drift 10min later using a calibrated dial gauge.
3. Raise the jib boom to full height. Measure the jib boom lift cylinder drift 10min later using a calibrated dial gauge.
4. Steer the wheels to the leftmost (or rightmost). Measure the steer cylinder drift 10min later using a calibrated dial gauge.
5. If the drift exceeds the values listed in the table below, replace the cylinder.

Table 5-9

Cylinders	Max allowable drift after 10min	Max allowable drift after 60min
Mast lift cylinder	1.1mm (0.0433in)	6.6mm (0.26in)
Jib boom lift cylinder	1mm (0.039in)	6mm (0.236in)
Steer cylinder	1.5mm (0.059in)	9mm (0.354in)

Note：The above values are given on the condition that the cylinder leaks at a rate of 6 drippings per minute. For the hydraulic oil possessing the physical property of hot expansion and cold retraction, the tested drift values may have a variation of 7/10000.

5. Complete check

The cylinder should go through a complete check every 5000h or 10 years. Completely disassembly the cylinder and check all welding joints. All cylinders should be disassembled and pass the non-destructive testing.

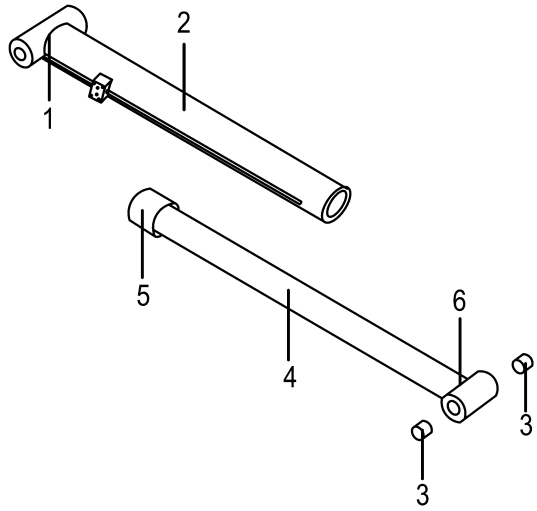

Figure 5-40

1. Cylinder barrel welding joint	**4.** Piston rod
2. Cylinder barrel	**5.** Piston
3. Bearing	**6.** Piston rod welding joint

Check the above spots for：

- Deformation or noticeable damages
- Cracks, welding breaks, oxidation or paint peel-off.

Hydraulic Hose

1. Preparation

https://truckmanualshub.com/

⚠ WARNING

UNSAFE OPERATION HAZARD

- **Cordon off the test area before the maintenance is performed.**
- **Be sure to wear goggles, protective clothing and gloves.**
- **The machine must be positioned on a level, firm surface clear of obstructions.**
- **The disassembly, if needed, must be performed by qualified trained personnel with power supply completely off.**

2. Inspection

- Inspect the hose fittings for leakage.
- Inspect the hoses are properly tightened.
- Inspect the hose outer surface for rips or cracks.
- Inspect the hose sleeves for damage.
- Inspect the hoses for chemical corrosion.

Should any abnormity be discovered, observe the following procedures to replace the associated parts.

3. Removing the hydraulic hose

⚠ WARNING

BURN AND BURST HAZARD

Before removing the hydraulic hoses and cylinder, allow the hydraulic oil to cool down to room temperature, and then slowly loosen each component to release the pressure.

⚠ WARNING

UNSAFE OPERATION HAZARD

- **Before removing the hydraulic hoses from the cylinder, place a block under the cylinder for support.**
- **Identify the hydraulic circuit before removing the hydraulic hoses.**

Note :

- Tag the hydraulic hoses and connections for the ease of re-installation.
- Collect the hydraulic oil spills in a suitable container to avoid environmental polution.

After removing the hydraulic hoses :

1. Timely cap the hydraulic hoses and elements to prevent contamination to the hydraulic system.
2. Inspect the cleanliness of hydraulic elements and hoses (free of rubber, plastic and metal scraps).
3. If needed, drain and flush the hydraulic piping (-including hyraulic tank).

4. Re-installing the hydraulic hoses

Note :

- Refer to the position tags or markings for re-installation
- Tighten the hydraulic hoses according to the torque specifications. See ***Fastener Torque Specifications, page 2-9***.

After re-installing and tightening the hydraulic hoses :

1. Start the machine from the ground.
2. Properly move the hoses to drain the hydraulic system.
3. Inspect for hydraulic leaks.
4. Check the hydraulic oil level in the tank.
5. Check the pressure.

Hydraulic Filter

1. Preparation

⚠ WARNING

UNSAFE OPERATION HAZARD

- **Cordon off the test area before the maintenance is performed.**
- **Perform the procedures with the machine in stowed position.**
- **Be sure to wear goggles, protective clothing and gloves.**
- **The disassembly, if needed, must be performed by qualified trained personnel with power supply completely off.**

https://truckmanualshub.com/

⚠ WARNING

HIGH TEMPERATURE HAZARD

Before inspecting or replacing the hydraulic elements, allow the hydraulic oil cool down to room temperature.

2. Replacing the hydraulic element

⚠ WARNING

HIGH PRESSURE HAZARD

Slowly release each component to dissipate the pressure. Hot hydraulic oil may penetrate the skin. Please seek medical attention immediately if hurt.

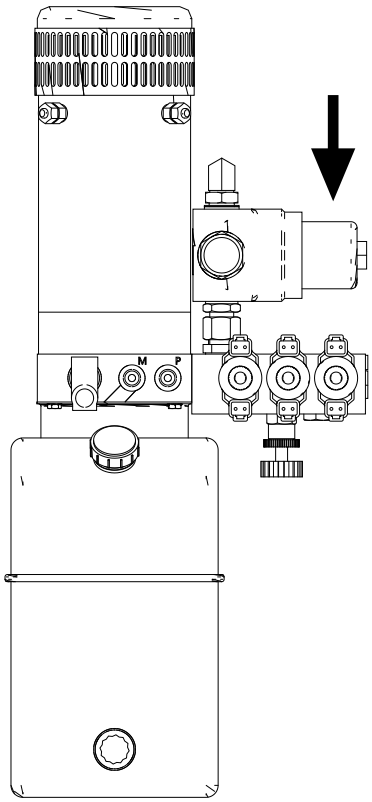

Figure 5-41

1. Open the right turntable cover, and locate the hydraulic filter.
2. Disconnect and cap the hoses between hydraulic tank and filter.
3. Using a wrench, clamp the hex nut at the bottom of the main filter, turn counterclockwise to remove the filter element.
4. Clean the inner surface of the filter head.
5. Install the new filter element to the filter head.
6. Wipe off the oil spills during the replacement procedures.

Hydraulic Oil

1. Preparation

⚠ WARNING

UNSAFE OPERATION HAZARD

- **Cordon off the test area before the maintenance is performed.**
- **Perform the procedures with the machine in stowed position.**
- **Be sure to wear goggles, protective clothing and gloves.**
- **The disassembly, if needed, must be performed by qualified trained personnel with power supply completely off.**

⚠ WARNING

HIGH TEMPERATURE HAZARD

Allow the hydraulic oil to cool down to room temperature before oil inspection, fill or change.

2. Visual inspection

Prior to each use, inspect the hydraulic oil level to ensure safe operation of the machine.

Ensuring appropriate hydraulic oil level is vital to proper operation of the machine. If too high, the oil will spill out from the oil tank during machine operation, if too low, the oil pump will suction air and damage hydraulic components. Performing daily inspection of the hydraulic oil level will help you determine if a problem exists in the hydraulic system.

1. Open the right turntable cover to visually insepct the hydraulic level, the hydraulic oil level should be within the marking range of oil level indicator.

https://truckmanualshub.com/

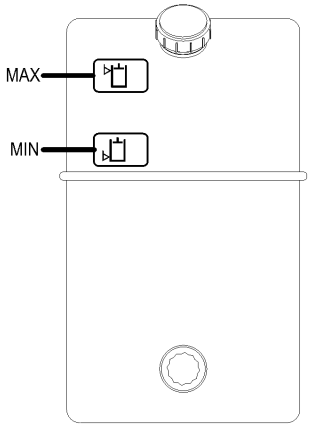

Figure 5-42

2. Ensure the hydraulic tank body and its connections are free of leaks.
3. Add oil as needed. Never overfill the tank.

Table 5-10

CUSTOMER REQUIREMENTS	HYDRAULIC OIL MARK
Normal-temperature region 0°C to 40°C (32°F to 104°F)	L-HM46
Cold region -25°C to 25°C (-13°F to 77°F)	L-HV32
High-temperature region greater than 40°C (104°F)	L-HM68
Extremely cold region less than -30°C (-22°F)	Special programmes need to be identified.

NOTICE

Different hydraulic oils can be added according to customer requirements upon factory delivery, but cannot be mixed.

3. Replacing the hydraulic oil

WARNING

HIGH PRESSURE HAZARD

Slowly release each component to dissipate the pressure. Hot hydraulic oil may penetrate the skin. Please seek medical attention immediately if hurt.

For the good performance of hydraulic system and safe machine operation, the hydraulic oil should be replaced every 1000h or 2 years. The maintenance freqeuncy may be appropriately adjusted under the following conditions：

- After major repair or severely defective
- Machine storage period exceeding 6 months
- Plastic or metal scraps are discovered in hydraulic filter element

1. Open the right turntable cover.
2. Remove the drain plug of the hydraulic tank, drain all the oil into a suitable container, and re-install the plug. For the hydraulic tank capacity, see ***Machine Specifications, page 2-1***

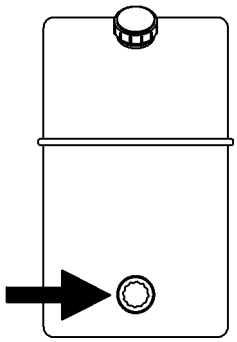

Figure 5-43

3. Remove the retaining bolts and clamps from the hydraulic tank, and remove the hydraulic tank.
4. Using a mild solvent, clean the inside of the tank and let it dry up.
5. Install the hydraulic tank onto the machine.
6. Install the drain plug.
7. Open the filler cap, add new oil, do not overfill.

Battery

1. Preparation

WARNING

UNSAFE OPERATION HAZARD

- **Cordon off the test area before the maintenance is performed.**
- **The machine must be positioned on a level, firm surface clear of obstructions.**
- **The disassembly, if needed, must be performed by qualified trained personnel with power supply completely off.**

https://truckmanualshub.com/

⚠ WARNING

BATTERY HAZARD

- **Always read and comply with the battery manufacturer's recommendations for procedures concerning proper battery use and maintenance.**
- **Batteries contain sulfuric acid and generate explosive mixtures of hydrogen and oxygen gases. Keep any device that may cause sparks or flames away from the battery to prevent explosion.**
- **Always wear protective glasses or goggles and protective clothing when working with batteries. You must follow the battery manufacturer's instructions on safety, maintenance and installation procedures.**
- **The battery terminals and related assessories contain lead, please wash hands after treatment.**

⚠ WARNING

ELECTROCUTION HAZARD

Contact with live circuits may result in death or severe injury. Remove all rings, watches and otehr jewelry.

⚠ WARNING

BODILY INJURY HAZARD

- **The battery contains acid, which should be prevented from leaking or contact.**
- **In case of battery acid leakage, use baking soda and water to neutralize the acid.**
- **he battery terminals and related assessories contain lead, please wash hands after treatment.**
- **If the acid comes in contact with the skins or eyes, rinse with plenty of clear water, and seek medical attention immediately.**

Tools required：

- Protective goggles and gloves
- Wrench with rubber handle

Figure 5-44

- Baking soda
- Terminal protector (i.e., petroleum jelly and anti-corrosion spray, etc.)
- Voltmeter (for flooded/wet battery, colloid and AGM battery)
- Distilled or purified water (deionized water and reverse osmosis water, etc.)
- Discharge tester (if required)
- Specific gravity hydrometer (for flooded/wet battery)

2. Visual inspection

Open the turntable covers on both sides of the machine to check：

- The battery cables tightly wired
- battery cables free of corrosion
- The battery positive or negative terminals free of breaks
- The battery free of deformation

3. Inspecting the battery level

1. Pull out the emergency stop buttons at ground and platform controls to the ON position.
2. Turn the key switch at ground controls to Platoform.
3. The battery level is indicated on the display of plaform controls.

https://truckmanualshub.com/

Table 5-11

PLATFORM POWER DISPLAY	POWER RATIO	DESCRIPTION
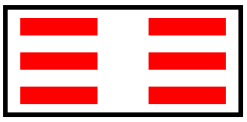	90-100%	The battery has been fully charged.
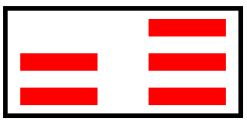	70%	The battery is at 70% of its capacity.
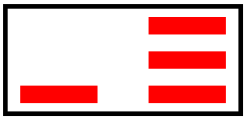	50%	The battery is at 50% of its capacity.
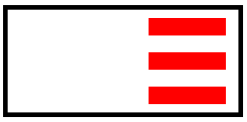	30%	The battery is at 30% of its capacity.
	20%	The battery level is at 20%, which is low. The battery requires recharging.
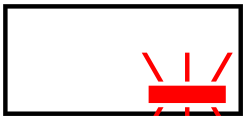	10%	The battery level is at 10%, which is very low. The machine will become slow. The battery requires recharging.

NOTICE

The battery must be charged at the power ratio of approx. 20%. Do not use the battery until fully depleted.

4. Removing the battery

https://truckmanualshub.com/

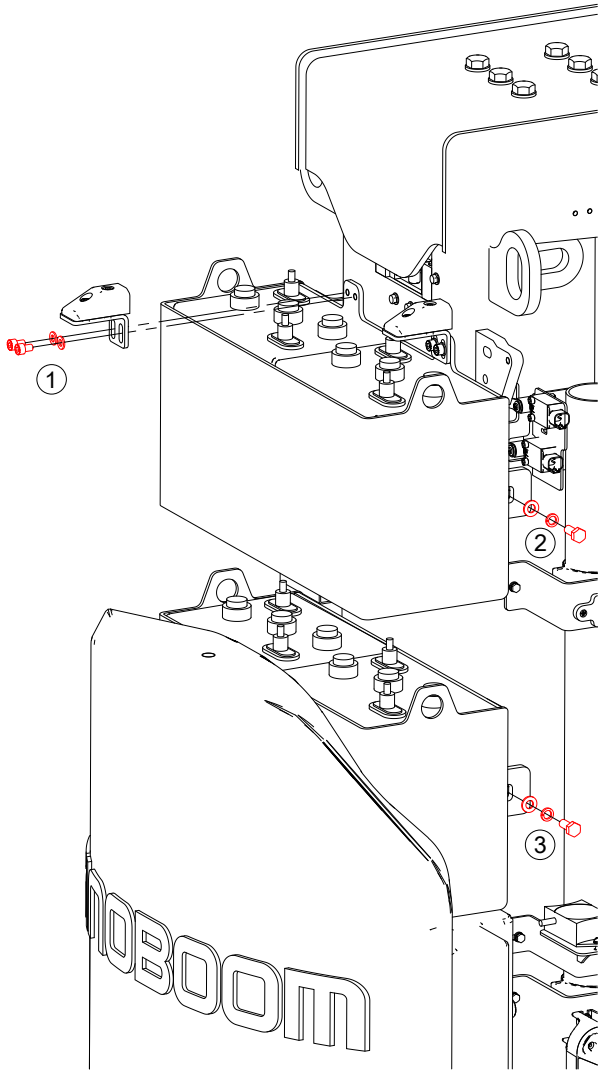

Figure 5-45

1. Disconnect the main power switch.
2. Disconnect all power inputs to the machine (such as battery charger).
3. Open the turntable covers on both sides, disconnect all cables connected to the battery.
4. Attach the straps of a crane to the upper battery box.
5. Remove the bolt and washer #1 from the battery box bracket.
6. Remove the bolt and washer #2 from the battery box.
7. Using the crane, lift the upper battery box clear of the machine.
8. Attach the straps of the crane to the lower battery box.
9. Remove the bolt and washer #3 from the lower battery box.
10. Using the crane, lift the lower battery box clear of the machine.

5. Connecting the battery

- The battery cable provides connection among and between battery, equipment and charging system. Connect the battery, the charging system and the equipment with a flexible cable. An improper connection could lead to poor performance, battery damage or cause a fire.
- The tightening torque of cable fixation nut shall be executed according to the following table:

Table 5-12

Nut specifications	Torque
M8	9 ~ 11 Nm (80 ~ 97 ft-lb)
M10	18 ~ 23 Nm (160 ~ 204 ft-lb)

- Be sure the battery cable connectors are properly tightened to the battery terminal. Battery cable connectors that are too tight or loose could damage the terminal or cause a fire.
- Battery terminals could become corroded if not kept clean and dry. To prevent corrosion, apply a thin layer of petroleum jelly or use a terminal protector.

6. Charging the battery

Proper charging is essential for maximizing the battery performance. Insufficient or excessive charging may shorten the service life of the battery significantly. Details about proper charging are as follows:

- Do not use a charger of external source.
- Charge the battery at the AC input voltage as indicated on the decal.
- Charge the battery only in a well-ventilated place.
- Avoid charging the battery when the temperature is above 49°C (120°F).
- Be sure that the battery is properly connected berore charging.
- Plug the charger only to a grounded AC circuit.
- Charge the battery in due time after each use.

The battery charging process is as shown in the Figures below :

https://truckmanualshub.com/

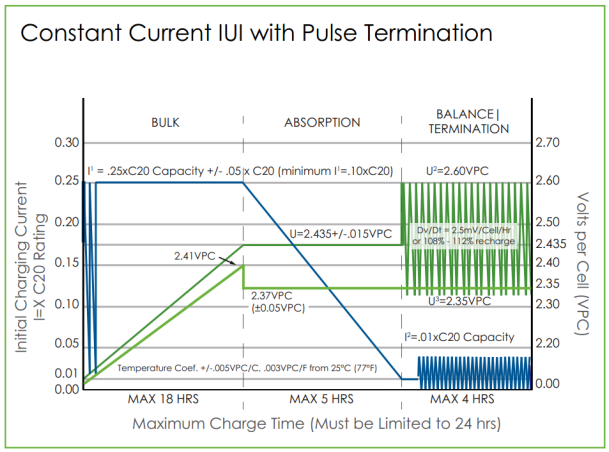

Figure 5-46

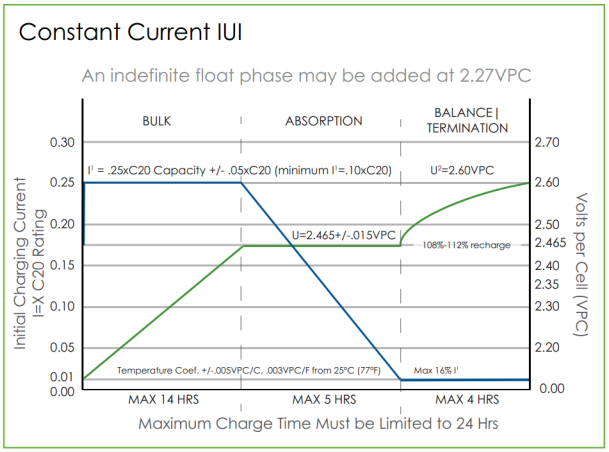

Figure 5-47

7. Maintaining the battery (no need to be peformed for maintenance-free battery)

Cleaning

1. Clean the top, terminals and connections of the battery with a cloth or brush and mixed solution of baking soda and water. Do not let the cleaning solution enter the battery.
2. Clean the top, terminals and connections with water and wipe them dry with a cloth. Apply a thin layer of petroleum jelly to the terminals or use terminal protector.
3. Keep the area around the battery clean and dry.

Adding Distilled Water

- If necessary, add distilled water into the battery. The frequency of adding water depends on the battery applications and working temperature. Inspect the battery every few weeks to determine if water needs to be added. Generally, frequent battery use requires frequent additions of water.
- Fully charge the battery before filling it with distilled water. Only add distilled water into the discharged or partially charged battery if the plate electrode is exposed; in this case, fill it with distilled water to the level just above the plate. Then, charge the battery as follows:
  1. Clean the vent caps before removing them to prevent dirt and debris from entering the battery.
  2. Inspect the electrolyte level. If the level is highe than the plate, add water. If the level is lower than the plate, add distilled water or deionized water.
  3. For a standard battery, add water until the level is 3 mm (0.12 in) below the plastic cover inside the vent hole.
  4. After filling the battery with water, install the vent caps on the battery.

8. Equalizing the battery (no need to be peformed for maintenance-free battery)

Equalization is the deliberate process of overcharging the flooded/wet battery after it has been fully charged. Equalize the battery only when the specific gravity of battery is low (less than 1.25) or the scope (0.030) of the specific gravity is wide after the battery is fully charged. Do not equalize other batteries. The conditions for equalizing a battery are as follows:

- Verify whether the battery is flooded/wet battery.
- Inspect the electrolyte level height to ensure that the positive and negative electrode plates have not been flooded before charging.
- Before charging, confirm that all the vent caps have been fixed on the battery properly.
- Set the charger to equalization mode.
- The battery will bleed air in the equalization process (forming bubbles).
- Measure the specific gravity every hour; stop charging in equalization mode when the specific gravity does not increase.

9. Storing the battery

- Charge the battery before storage.
- Store the battery in a shady, cool and dry place that is free of the influence of the weather. (5–25°C[41–77°F]).
- Disconnect the power-off plug to prevent potential parasitic loading, which may cause electrical leakage of the battery.
- The battery will self-discharge gradually during storage. Monitor the specific gravity or the voltage every 4 ~ 6 weeks. The comparison of the charging state with specific gravity and open-circuit voltage is shown in the following table.

https://truckmanualshub.com/

Table 5-13

Percentage Charging (%)	Specific Gravity	Open-Circuit Voltage (V)		
		Battery Cell	6V	12V
100	1.277	2.122	6.37	12.73
90	1.258	2.103	6.31	12.62
80	1.238	2.083	6.25	12.50
70	1.217	2.062	6.19	12.37
60	1.195	2.040	6.12	12.24
50	1.172	2.017	6.05	12.10
40	1.148	1.993	5.98	11.96
30	1.124	1.969	5.91	11.81
20	1.098	1.943	5.83	11.66
10	1.073	1.918	5.75	11.51

- Recharge the battery in quick mode when the battery level is 70% or lower.
- Recharge the battery before use after removing it from storage.
- Storage in hot environments (above 32°C [90°F]): During storage, do not expose the battery directly to the heat source. The self-discharge process will accelerate in warmer temperatures. If storing the battery in hot temperatures or during hot weathe monitor the specific gravity or the voltage more frequently (about every 2 - 4 weeks).
- Storage in cold environments (below 0°C [32°F]): During storage, do not store the battery in a place with an estimated temperature reaching the freezing point; if the battery has not been fully charged, it may freeze in cold temperatures. If storing the battery in cold temperatures or during cold weather, **fully charge** the battery. This point is very important.

10. Battery troubleshooting (no need to be peformed for maintenance-free battery)

The following battery testing procedures serve only as a guideline to determine whether a change of battery is needed.

On-charge voltage test

1. Disconnect and reconnect the DC plug to restart the charger.
2. Record the current in the last half an hour (if possible) and measure the voltage of the battery rack when charging.
3. At the end of charging, check if the current is lower than 5A and the voltage of the battery rack is higher than the following values:

   56V for 48V system; 28V for 24V system; 14V for 12V system or 7V for 6V system; if so, proceed to the next step. Otherwise, inspect whether the output of the charger is correct and recharge the battery as required. If the voltage of the battery rack is still very low, a problem may exist with the battery.
4. Measure the voltage of each individual battery when the battery is in the charging state. If the voltage of any battery is lower than the following values, a problem could exist with the battery:

   7V for 6V battery, the voltage difference between the battery and any other batteries in the battery rack is larger than 0.5V; 14V for 12V battery, the voltage difference between the battery and any other batteries in the battery rack is larger than 1.0V.

Specific gravity test

1. Fill and drain the specific gravity hydrometer 2 ~ 3 times. Then, obtain a sample from the battery.
2. Measure the specific gravity of all battery cells.
3. When the temperature is above 27°C (80°F), add 0.004 to correct the reading of the specific gravity every 5°C (40°F) higher. When the temperature is below 27°C (80°F), deduct 0.004 to correct the reading of the specific gravity every 5°C (40°F) lower.
4. If the specific gravity of each battery in the battery rack is lower than 1.250, the battery rack may not be sufficiently charged. Recharge the battery rack.
5. If the specific gravity difference between any battery in the battery rack is over 0.050, equalize this battery rack.
6. The battery in the battery rack may have a problem if the difference still exists.

https://truckmanualshub.com/

Open-Circuit Voltage Test (Rarely Used)

1. To obtain an accurate voltage reading, do not use the battery for at least 6 hours, but, it is best not to use the battery for 24 hours.
2. Measure the voltage of each individual battery.
3. Equalize the battery rack if the voltage of any battery is 0.3V higher than that of other batteries in the battery rack.
4. Re-measure the voltage of each individual battery.
5. The battery may have a problem if the voltage of any battery is 0.3V higher than that of other batteries in the battery rack.

There are other battery tests to evaluate battery performance, such as discharge test, which is no longer to be detailed here.

Electric cable

1. Preparation

⚠ WARNING

UNSAFE OPERATION HAZARD

- **Cordon off the test area before the maintenance is performed.**
- **The machine must be positioned on a level, firm surface clear of obstructions.**
- **The disassembly, if needed, must be performed by qualified trained personnel with power supply completely off.**

⚠ WARNING

ELECTROCUTION HAZARD

- **Before inspecting the electric cables, be sure to disconnect the battery and the and the battery charger from the AC outlet. Contact with live electric cable may result in death or severe injury.**
- **Remove all rings, watches and other jewelry.**
- **Be sure to wear goggles, protective clothing and gloves (insulated).**

1. Inspection

1. Inpsect the electric cables of the following areas for damage or corrosion：
   - Power unit harness
   - Mast harness
   - Terminal box at the ground controls
   - Terminal box at the platform controls
   - Battery harness
   - Charger harness
2. Inspect each flexible connection for loosening, and ensure the sensor wiring free of damage.

OVERALL MACHINE PARTS

Manuals and Decals

- See the *Decals/Nameplates Inspection* section in *Operation Manual*and use the decal list and chart to determine where each decal is located. Ensure all decals are legible and free of damage, otherwise timely replace.
- Ensure the *Operation Manual*and*Maintenance Manual*are intactly stored in the manual storage container.Inspect each sheet of the manuals to ensure legibility and integrity of the contents.

NOTICE

If the decal or manual needs to be changed, please contact Hunan Sinoboom Intelligent Equipment Co., Ltd.

Structural Parts

1. Preparation

https://truckmanualshub.com/

⚠ WARNING

UNSAFE OPERATION HAZARD

- **Cordon off the test area before the maintenance is performed.**
- **Be sure to wear goggles, protective clothing and gloves.**
- **The machine must be positioned on a level, firm surface clear of obstructions.**
- **The disassembly, if needed, must be performed by qualified trained personnel with power supply completely off.**

2. Routine inspection

Make a visual inspection of the disassembly-free parts：

- The sliding parts and hinged points free of dirts
- No deformation and visible damages
- No cracks, broken welds or oxidation
- No excessive clearance in sliding parts and hinged points
- Locking device not demaged
- Bolts and other fasteners properly in place and tightened
- Lanyard attachment points in good condition and free of damage.

If abnormal, a complete check may be required to determine whether the parts are satisfactory.

3. Complete check

Hunan Sinoboom Intelligent Equipment Co., Ltd. requires the structural parts be check thoroughly every 5000h or 10 years. The parts may be disassembled, if needed, to check the integrity of the welds.

The check items focus mainly on the weldments of chassis, turntable, mast and jib boom.

If any crack is discovered, prior to installation, clean the parts and perform a penetration test to ensure the part integrity. During the installing process, please check each fastener is properly tightened. If needed, refer to the parts manual and the Section ***Fastener Torque Specifications, page 2-9***in this manual.

NOTICE

Some fasteners, such as cotter pins and slewing bearing bolts, which are not intended for reuse, must be replaced with new ones.

Pins and Composite Bearings

1. Preparation

⚠ WARNING

UNSAFE OPERATION HAZARD

- **Cordon off the test area before the maintenance is performed.**
- **Be sure to wear goggles, protective clothing and gloves.**
- **The disassembly, if needed, must be performed by qualified trained personnel with power supply completely off.**

2. Inspection

Pre-operation inspection (disassembly not required for visual inspection)：

- Excessive inclination at pin connections
- Abnormal noises at pin connections while operating
- Deformed or broken pins/cotter pins
- Severely worn or oxidized pins/cotter pins

If any of the above conditions occur, disassemble for further inspection or directly replace if needed.

250h or 6 months inspection (with no damage to the bushings or bearings, some particular parts may be disassebled for further insepction)：

- Worn or ripped fibers on the bushing surface
- Deformed, broken or severely oxidized bushing or bearing
- Deformed, broken or severely oxidized pins
- Bearings displaced or rotating into the bearing housing
- Scraps getting into the bushing or bearing
- Piece-off, peel-off, dent or abrasion on the pin surface

If any of the above conditions occur, replace the defective parts.

3. Replacing

If any of the above conditions occur, the associated parts must be replaced. Hunan Sinoboom Intelligent Eequipment Co.,Ltd. requires the bearing and bushing be replaced every 10 years.

When re-installing, be noted that：

- Blow the dirts and debris off the bearing housing. The bearing and its housing should be free of any foreign objects.

https://truckmanualshub.com/

- Use a detergent to clean the grease and lubricant off the bearings and pins. The composite bearing is dry connected, free of lubrication.
- During the installation and operation, inspect the pins for spurs, cuts, or bruises which may damage the bearing.

https://truckmanualshub.com/

This Page Intentionally Left Blank

https://truckmanualshub.com/

6 TROUBLESHOOTING AND SCHEMATICS

TROUBLESHOOTING

In case of machine failure, please first check：

- The hydraulic tank has sufficient oil
- The battery is properly charged
- The emergency stop buttons at the ground or platform controls pulled out to the ON position
- The ground or platform controls is selected
- Relays properly connected
- Fuse condition

If the above inspection finds no problem, please refer to the troubleshooting table below. If the failure persists, please contact Hunan Sinoboom Intelligent Equipment Co., Ltd.

Table 6-1 Troubleshooting

Fault Code	Description	Function Restricted	Check
01	System initializing fault	All functions restricted	System initializing error: the ECU may be defective, replace the ECU.
02	System communication fault	All functions restricted	ECU system communication fault: check the wiring of signal lines and other lines. If the fault persists, replace the PCU or ECU.
03	Invalid setting	All functions restricted	Setup error：set up correctly.
04	Calibration failure	All functions restricted	Calibration failure：re-calibrate or check the angle sensor and presssure sensor
09	GPS communication fault	All functions restricted	GPS communication fault：check the wiring of signal lines and other lines. If the fault persists, replace the GPS module or ECU.
10	CAN Open communication fault	All functions restricted	Motor controller fault：check the motor controller.
12	Ground up/down switch fault	Ground controls restricted	Up/down toggle switch fault：ensure no objects press against the toggle switch at ground controls or ECU keys, check the toggle switch wiring. If the fault persists, replace the ECU.
18	Pothole protection fault	Lift and drive functions restricted	Pothole protection error：check whether the pothole protection is deployed; check the pothole limit switches and wiring;check the pothole protection harness and lower limit switch.
31	Pressure sensor fault	All functions restricted	Pressure sensor error：check the sensor and wiring, and ensure the correct sensor option is used.
32	Angle sensor	All functions restricted	Angle sensor error：check the angle sensor and wiring, and ensure the correct sensor option is used.
35	Cable break sensor fault	All functions restricted	Broken steel cable fault：check whether the steel cable becomes defective

https://truckmanualshub.com/

Fault Code	Description	Function Restricted	Check
36	Low battery charge alarm	Drive speed restricted	Low battery charge alarm：the battery charge is running low, please charge the battery.
37	Battery fully depleted	All functions restricted	Battery depleted：the battery is switched into the sleep mode, move the joystick or press the keys on ECU to exit the sleep mode
38	Pothole protective plate retract valve fault	All functions restricted	Pothole protective plate retract valve fault：check the coil wiring, if correctly wired, check whether the coil is open or short circuited.
39	Pothole protective plate extend valve fault	All functions restricted	Pothole protective plate extend valve fault：check the coil wiring, if correctly wired, check whether the coil is open or short circuited.
42	Steer left button fault	Alarm allowed only	Steer left button pressed before startup： the button on joystick may be pressed, otherwise replace the joystick or PCU.
43	Steer right button fault	Alarm allowed only	Steer right button pressed before startup： the button on joystick may be pressed, otherwise replace the joystick or PCU.
46	Enable button fault	Platform operation restricted	Enable button pressed before starup：check whether the enable button is pressed, and check the neutral setting, if no problem, replace the joystick or PCU.
47	Joystick not returned to neutral	Drive speed restricted	Joystick not returned to neutral：ensure the joystick is returned to the neutral (vertical) position, and check the neutral setting, if no problem, replace the joystick or PCU.
52	Turntable rotate right valve fault	Lift and drive functions restricted	Turntable rotate right valve fault：check the coil wiring, if correctly wired, check whether the coil is open or short circuited.
53	Turntable rotate left valve fault	Lift and drive functions restricted	Turntable rotate left valve fault：check the coil wiring, if correctly wired, check whether the coil is open or short circuited.
54	Mast up valve fault	Lift and drive functions restricted	Mast up valve fault：check the coil wiring, if correctly wired, check whether the coil is open or short circuited.
55	Mast down valve fault	Lift and drive functions restricted	Mast down valve fault：check the coil wiring, if correctly wired, check whether the coil is open or short circuited.
56	Front wheel steer right valve fault	Lift and drive functions restricted	Front wheel steer right valve fault：check the coil wiring, if correctly wired, check whether the coil is open or short circuited.
57	Front wheel steer left valve fault	Lift and drive functions restricted	Front wheel steer left valve fault：check the coil wiring, if correctly wired, check whether the coil is open or short circuited.
58	Jib up valve fault	Lift and drive functions restricted	Jib up valve fault：check the coil wiring, if correctly wired, check whether the coil is open or short circuited.

https://truckmanualshub.com/

Fault Code	Description	Function Restricted	Check
59	Jib down valve fault	Lift and drive functions restricted	Jib down valve fault：check the coil wiring, if correctly wired, check whether the coil is open or short circuited.
68	Battery undervoltage fault	All functions restricted	Check the battery and immediately charge
80	Platform load exceeding 80%	Alarm allowed only	Platform load exceeding 80% alarm：the platform load is getting near to the limit, consider not increasing the load.
90	Platform load exceeding 90%	Alarm allowed only	Platform load exceeding 90% alarm：the platform load is getting near to the limit, consider not increasing the load.
99	Platform load exceeding 99%	Alarm allowed only	Platform load exceeding 80% alarm：the platform load has reached the limit, do not increase any load.
OL	Platform overload	All functions restricted	Platform overload error: immediately remove the excessive load
LL	Machine off-level fault	Lift and drive functions restricted	Machine off-level fault: if the machine is off level, try to level it up. Otherwise check the sensor and wiring.

https://truckmanualshub.com/

HYDRAULIC SCHEMATIC

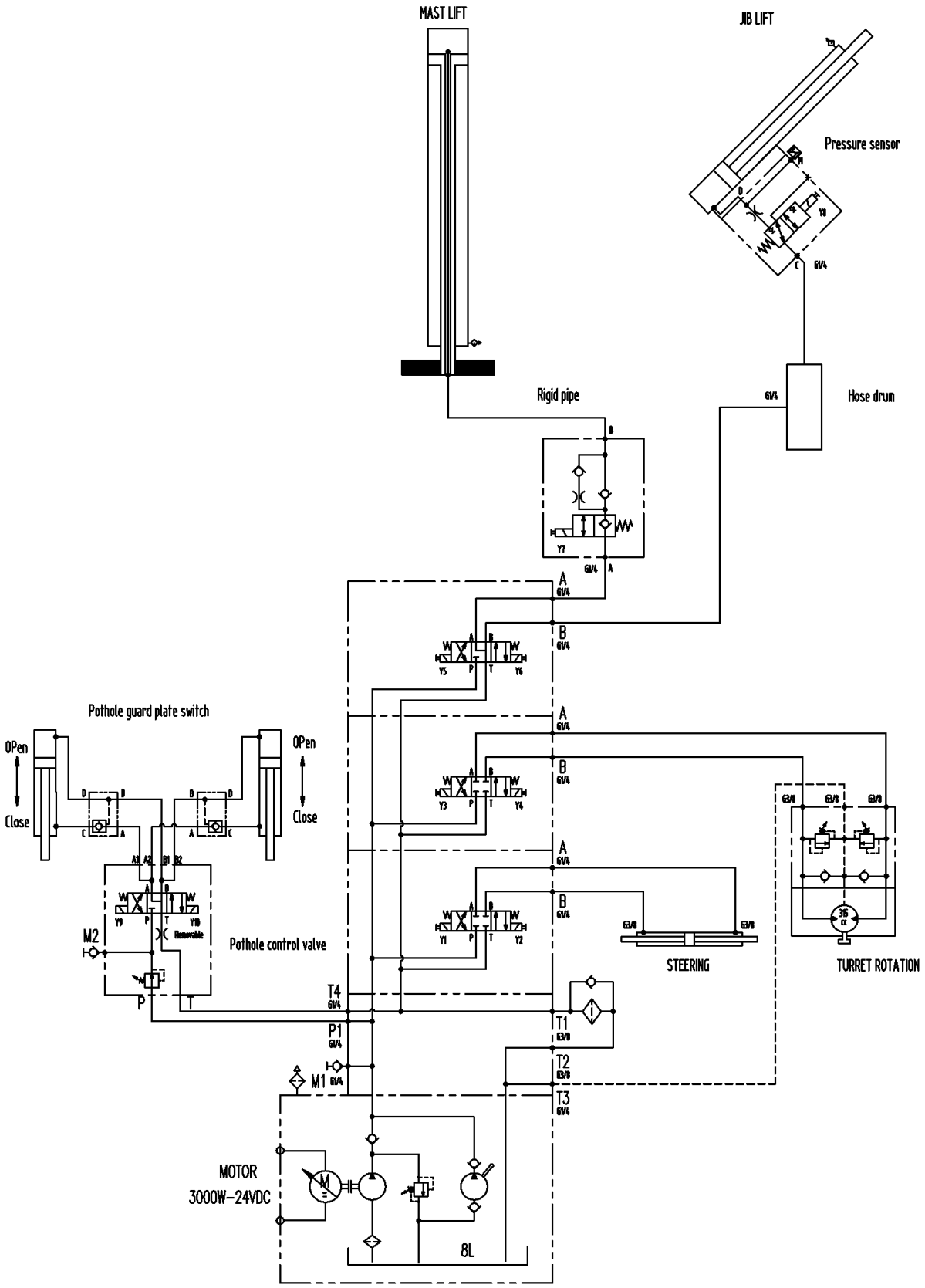

Figure 6-1

https://truckmanualshub.com/

ELECTRICAL SCHEMATIC

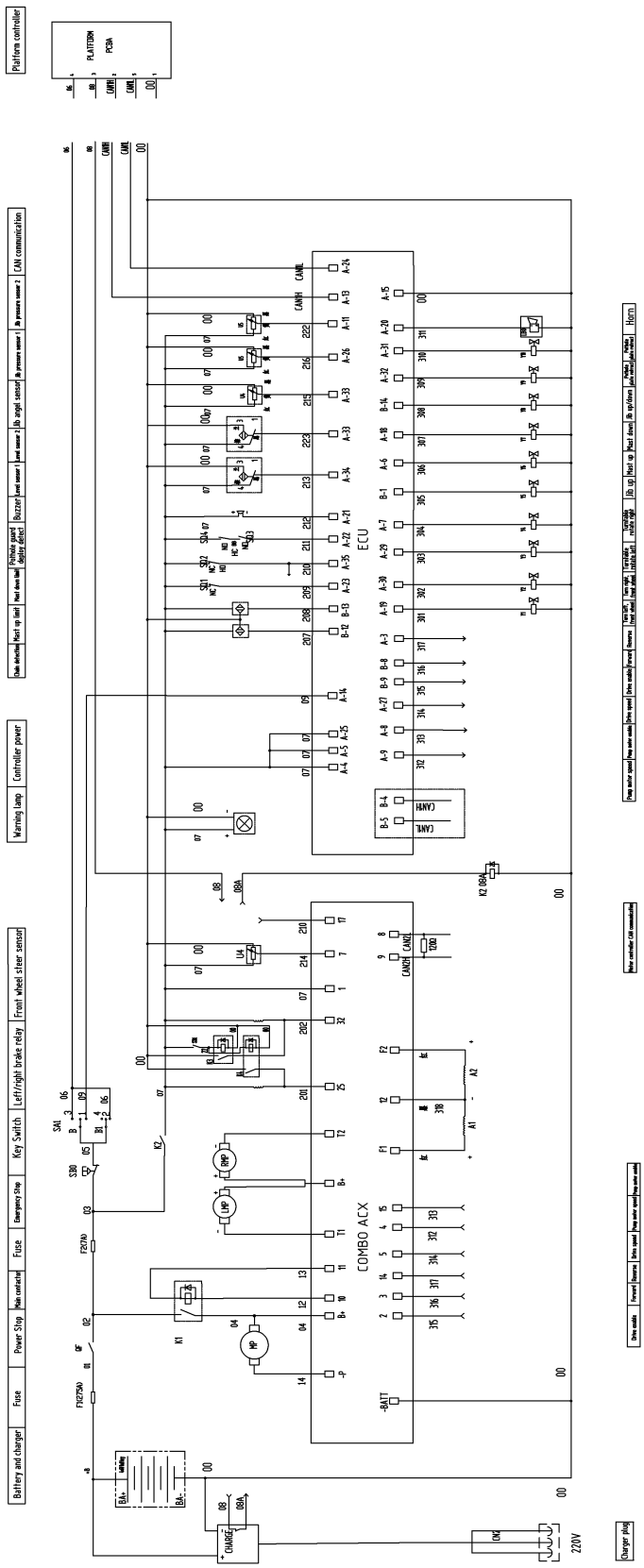

Figure 6-2

https://truckmanualshub.com/

This Page Intentionally Left Blank

https://truckmanualshub.com/

APPENDIX 1: PREPARE THE WORK RECORD BEFORE DELIVERY

PREPARE THE WORK RECORD BEFORE DELIVERY			
Model			
Serial No.			
Inspection Item	**YES/Machine is in Good Condition**	**NO/Machine Has Damage or Malfunction**	**REPAIRED/Machine Has Been Repaired**
Pre-operational Inspection			
Maintenance Procedure			
Functional Inspection			
Machine Buyer/ Renter			
Inspector Signature			
Inspector Title			
Inspector Company			

NOTE:

1. Prepare the machine before delivery, which includes performing a pre-delivery inspection, following maintenance procedures and performing functional inspections.
2. Use the table to record the results. After each section is complete, mark the appropriate box.
3. Record the inspection results. If any inspection results are "NO", the machine must be stopped and re-inspected after repair is completed and marked in the box marked "inspection".

https://truckmanualshub.com/

This Page Intentionally Left Blank

https://truckmanualshub.com/

APPENDIX 2 : MAINTENANCE INSPECTION REPORT

MAINTENANCE INSPECTION REPORT				
Model				
Serial No.				
Daily/pre-operation	**YES/Machine is in Good Condition**	**NO/Machine Has Damage or Malfunction**	**REPAIRED/ Machine Has Been Repaired**	**Problem Description**
Mast/boom components				
Inspect retract cable				
Electrical and hydraulic systems				
Inspect hydraulic oil level				
Inspect battery level				
Functions and controls				
Inspect ground controls				
Inspect platform controls				
Inspect emergency lowering				
Inspect drive speed				
Inspect pothole protection				
Inpsect tilt protection				
Inpsect brake system				
Inpsect load sensing system				
Overall machine components				
Inspect visually the overall machine components				
Inspect manuals and decals				
Inspect safety belt and helmet				
After 30 days or 50h of operation	**YES/Machine is in Good Condition**	**NO/Machine Has Damage or Malfunction**	**REPAIRED/ Machine Has Been Repaired**	**Problem Description**
Chassis and turntable components				

https://truckmanualshub.com/

MAINTENANCE INSPECTION REPORT

Inspect tires, rims and fasteners				
Electrical and hydraulic systems				
Inspect hydraulic filter elements				
Every 6 months or 500h of operation	**YES/Machine is in Good Condition**	**NO/Machine Has Damage or Malfunction**	**REPAIRED/ Machine Has Been Repaired**	**Problem Description**
Chassis and turntable components				
Lubricate steer system (-wheel support)				
Lubricate slewing bearing				
Inspect tires, rims and fasteners				
Inspect slewing bearing bolts				
Mast/boom components				
Lubricate chains				
Electrical and hydraulic systems				
Inspect hydraulic cylinder drift				
Inspect hydraulic hoses				
Inpsect hand pump				
Functions and controls				
Inspect brake release				
Inspect emergency lowering				
Annually or every 1000h of operation	**YES/Machine is in Good Condition**	**NO/Machine Has Damage or Malfunction**	**REPAIRED/ Machine Has Been Repaired**	**Problem Description**
Chassis and turntable components				
Inspect tires, rims and fasteners				
Mast/boom components				
Inspect boom wear pads				
Inspect chain tensioning				

https://truckmanualshub.com/

MAINTENANCE INSPECTION REPORT

Inspect mast sections 1 and 2 tightly secured to the brackets				
Electrical and hydraulic systems				
Inspect the battery				
Replace hydraulic filter elements				
Bi-annually or every 2000h of operation	**YES/Machine is in Good Condition**	**NO/Machine Has Damage or Malfunction**	**REPAIRED/ Machine Has Been Repaired**	**Problem Description**
Electrical and hydraulic systems				
Replace hydaulic oil				
Every 5 years or 5000h of operation	**YES/Machine is in Good Condition**	**NO/Machine Has Damage or Malfunction**	**REPAIRED/ Machine Has Been Repaired**	**Problem Description**
Mast/boom components				
Replace retract cable				
Every 10 years or 105000h of operation	**YES/Machine is in Good Condition**	**NO/Machine Has Damage or Malfunction**	**REPAIRED/ Machine Has Been Repaired**	**Problem Description**
Overall machine components				
Insect the overall machine components				
User				
Inspector signature				
Inspector date				
Inspector title				
Inspector company				

https://truckmanualshub.com/

Always for Better Access Solutions

Hunan Sinoboom Intelligent Equipment Co., Ltd.

No.128, East Jinzhou Avenue, Ningxiang High-tech Industrial Park, Changsha, Hunan, China

0086-0731-87116222 (Sales) & 0086-0731-87116333 (Service)
sales@sinoboom.com
www.sinoboom.com

North American Subsidiary

Sinoboom North American LLC

310 Mason Creek Drive
unit #100
Katy, TX 77450, US
Tel: (281) 729–5425
E-mail: info@sinoboom.us

Europe Subsidiary

Sinoboom B.V.

Nikkelstraat 26, NL-2984 AM Ridderkerk,
The Netherlands
Tel: +31 180 225 666
E-mail: info@sinoboom.eu

Korea Subsidiary

Sinoboom Korea Co., Ltd.

95, Docheong-ro, Yeongtong-gu, Suwon-si, Gyeonggi-do, Republic of Korea
Tel: 010–8310–8026
E-mail: ka1@sinoboom.com

Australia Subsidiary

Sinoboom Intelligent Equipment Pty Ltd.

50/358 Clarendon St, South Melbourne
VIC 3205, Australia
E-mail: au@sinoboom.com

Singapore Subsidiary

Star Access Solutions Pte. Ltd.

112 Robinson Road #03-01 Robinson 112
Singapore 068902