https://truckmanualshub.com/

Genie®
A TEREX BRAND

Maintenance Manual - Booms

S Booms

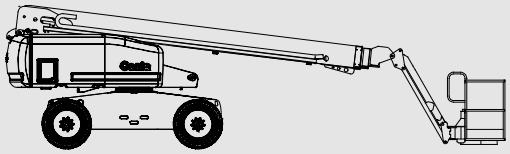

Z Booms

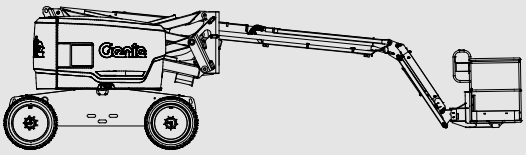

Refer to the inside cover for a list of models included in this manual.

This manual includes detailed procedures for each maintenance inspection.

For Repair procedures, Fault Codes, Electrical and Hydraulic Schematics, refer to the appropriate Service and Repair Manual for your machine.

Part No. 1268489
Rev B1
April 2016

Downloaded from www.Manualslib.com manuals search engine

https://truckmanualshub.com/

Introduction

Important

Read, understand and obey the safety rules and operating instructions in the appropriate Operator's Manual on your machine before attempting any maintenance procedure.

This manual provides detailed scheduled maintenance information for the machine owner and user.

Basic mechanical, hydraulic and electrical skills are required to perform most procedures. However, several procedures require specialized skills, tools, lifting equipment and a suitable workshop. In these instances, we strongly recommend that maintenance be performed at an authorized Genie dealer service center.

Compliance

Machine Classification

Group B/Type 3 as defined by ISO 16368

Machine Design Life

Unrestricted with proper operation, inspection and scheduled maintenance.

Technical Publications

Genie has endeavored to deliver the highest degree of accuracy possible. However, continuous improvement of our products is a Genie policy. Therefore, product specifications are subject to change without notice.

Readers are encouraged to notify Genie of errors and send in suggestions for improvement. All communications will be carefully considered for future printings of this and all other manuals.

Contact Us:

Internet: www.genielift.com
E-mail: awp.techpub@terex.com

Copyright © 2015 by Terex Corporation

1268489 Rev B, March 2016

First Edition, Second Printing

Genie is a registered trademark of Terex South Dakota, Inc. in the U.S.A. and many other countries.

"S" and “Z” are trademarks of Terex South Dakota, Inc.

Downloaded from www.Manualslib.com manuals search engine

https://truckmanualshub.com/

Introduction

Models included in this manual

Use the following chart to identify the specific serial number for models included in this manual.

Models	Serial number
S-40 / S-45	from S4015-20505
S-60 / S-65 (all models)	from S6013-26296 from S6014D-101
S-80 / S-85	from S80/85/80X15-12264
S-100 / S-105	from S10015D-1001 from S10515D-1012
S-120 / S-125	from S12015D-1012 from S12515D-984
S-100HD / S-120HD	from S100HD14D-200 from S120HD14D-201
SX-150	from SX15015-100
SX-180	from SX18014-100
Z-30/20N (RJ)	from Z30N14-15222
Z-33/18	from Z331815M-101
Z-34/22 DC	from Z3414-9686
Z-34/22 N	from Z34N14-10984
Z-34/22 IC	from Z3406-4800
Z-34/22 BE	from Z3414-9686
Z-40/23N RJ	from Z40N13-1902
Z-45/25(J) DC	from Z452513A-48153 from Z452513B-3078 from Z452513D-101
Z-45/25(J) IC	from Z452513A-47001 from Z452514B-3301
Z-45/25(J) BE	from Z452513A-48153
Z-51/30J	from Z513014B-1201
Z-60/37 DC / Z-60/37 FE	from Z6016N-101
Z-62/40	from Z6215A-101
Z-80/60	from Z8013-4592
Z-135/70	from Z13505-101 to Z13513-2000
ZX-135/70	from ZX13514-2533 (includes 2463, 2469, 2531)

Identifying the Correct Procedure for your Model

Unless otherwise noted, each procedure will apply to all models. Procedures that only apply to specific models or options will include the information in the procedure title.

Examples of procedures that apply to specific models:

- Test the Engine Idle Select - **Engine Models**
- Test the Turntable Level Sensor - **Z-80/60**
- **ALC1000 Models**, include the following models: S-100, S-100HD, S-105, S-120, S-120HD, S-125, SX-150, SX-180, Z-80/60, Z-135/70 and ZX-135/70.

Examples of procedures that apply to all models:

- Test the Drive Speed – Stowed Position
- Inspect the Tires, Wheels and Lug Nut Torque

Find additional Manuals for your Model

Go to http://www.genielift.com

Use the links to locate Service Manuals, Maintenance Manuals, Service and Repair Manuals, Parts Manuals and Operator's Manuals.

Downloaded from www.Manualslib.com manuals search engine

https://truckmanualshub.com/

Introduction

Revision History

Revision	Date	Section	Procedure / Description
A	9/2015		Initial Release
A1	10/2015	Quarterly	Q-27 Test the Primary Angle Sensor
A2	11/2015	Specifications	Hydraulic and Drive Hub Capacities
A3	11/2015	Introduction	Updated Z-80/60 serial number for models included
A4	12/2015	Quarterly	Q-17 Inspect the Calibration Decal
A5	1/2016	Specifications	Performance Spec. Z62
B	3/2016		Add Z-60 DC/FE
		Specifications	Add Kubota D1105-E4B, GM .998L, GM 3.0L. Update Deutz D2.9 L4 and Perkins 404F enigine rpm's.
B1	4/2016	Quarterly	Q-7 Check the Generator Belts, Pulleys and voltage - Bi-Energy Models
		Annual	A-3 Inspect for Turntable Bearing Wear

Reference Examples:	
Section – Specifications	**Electronic Version** Click on any content or procedure in the Table of Contents to view the update.
Section – Maintenance, (procedure)	

Downloaded from www.Manualslib.com manuals search engine

https://truckmanualshub.com/

Revision History (continued)

Revision	Date	Section	Procedure / Description
Reference Examples:			
Section – Specifications			**Electronic Version** Click on any content or procedure in the Table of Contents to view the update.
Section – Maintenance, (procedure)			

Downloaded from www.Manualslib.com manuals search engine

https://truckmanualshub.com/

Safety Rules

Danger

Failure to obey the instructions and safety rules in this manual and the appropriate Operator's Manual on your machine will result in death or serious injury.

Many of the hazards identified in the operator's manual are also safety hazards when maintenance and repair procedures are performed.

Do Not Perform Maintenance Unless:

☑ You are trained and qualified to perform maintenance on this machine.

☑ You read, understand and obey:

- manufacturer's instructions and safety rules
- employer's safety rules and worksite regulations
- applicable governmental regulations

☑ You have the appropriate tools, lifting equipment and a suitable workshop.

Downloaded from www.Manualslib.com manuals search engine

https://truckmanualshub.com/

Safety Rules

Personal Safety

Any person working on or around a machine must be aware of all known safety hazards. Personal safety and the continued safe operation of the machine should be your top priority.

Read each procedure thoroughly. This manual and the decals on the machine, use signal words to identify the following:

Safety alert symbol—used to alert personnel to potential personal injury hazards. Obey all safety messages that follow this symbol to avoid possible injury or death.

DANGER Indicates a imminently hazardous situation which, if not avoided, will result in death or serious injury.

WARNING Indicates a potentially hazardous situation which, if not avoided, could result in death or serious injury.

CAUTION Indicates a potentially hazardous situation which, if not avoided, may cause minor or moderate injury.

NOTICE Indicates a potentially hazardous situation which, if not avoided, may result in property damage.

Be sure to wear protective eye wear and other protective clothing if the situation warrants it.

Be aware of potential crushing hazards such as moving parts, free swinging or unsecured components when lifting or placing loads. Always wear approved steel-toed shoes.

Workplace Safety

Any person working on or around a machine must be aware of all known safety hazards. Personal safety and the continued safe operation of the machine should be your top priority.

Be sure to keep sparks, flames and lighted tobacco away from flammable and combustible materials like battery gases and engine fuels. Always have an approved fire extinguisher within easy reach.

Be sure that all tools and working areas are properly maintained and ready for use. Keep work surfaces clean and free of debris that could get into machine components and cause damage.

Be sure any forklift, overhead crane or other lifting or supporting device is fully capable of supporting and stabilizing the weight to be lifted. Use only chains or straps that are in good condition and of ample capacity.

Be sure that fasteners intended for one time use (i.e., cotter pins and self-locking nuts) are not reused. These components may fail if they are used a second time.

Be sure to properly dispose of old oil or other fluids. Use an approved container. Please be environmentally safe.

Be sure that your workshop or work area is properly ventilated and well lit.

Downloaded from www.Manualslib.com manuals search engine

https://truckmanualshub.com/

Table of Contents

Introduction

Introduction ii
Important Information ii
Models included in this manual iii
Identifying the Correct Procedure for your Model iii
Find additional Manuals for your Model iii
Revision History iv

Section 1

Safety Rules vi
General Safety Rules vi

Section 2

Performance Specifications 1
Function Speeds - S-100, S-105 and S-100HD 1
Function Speeds - S-120, S-125 and S-120HD 2
Function Speeds - All Other Models 3
Drive Speeds 7

Torque Specifications 9
Tires and Wheels 9
TRAX Torque Specifications 10

Engine Specifications 11
Engine Operator and Maintenance Manuals 11
Deutz Engine Models 12
Perkins Engine Models 13
Ford Engine Models 14
Kubota Engine Models 15
GM Engine Models 16
Continental Engine Models 16
Cummins Engine Models 17

Hydraulic Specifications 18
Hydraulic Relief Valves 18
Hydraulic and Drive Hub Fluid Capacities 20
Hydraulic Oil Specifications 23
Hydraulic Hose and Fitting Torque Specifications 26
Torque Procedure 27

Downloaded from www.Manualslib.com manuals search engine

https://truckmanualshub.com/

Table of Contents

Section 3 **Maintenance Procedures** **29**

Introduction 29

Maintenance Schedule 31

Pre-Delivery Preparation Report 32

Scheduled Maintenance Inspection Report - Booms 33

Programmed Maintenance Inspection Report - Booms 34

Commissioning Procedures **35**

C-1 Perform 50 Hour Service 35

C-2 Perform Engine Maintenance – 50 Hours 35

C-3 Perform 150 Hour Service 36

Quarterly Maintenance Procedures **37**

Q-1 Check for Open Bulletins and Owner Registration 37

Q-2 Battery inspection 38

Q-3 Inspect the Electrical Wiring 40

Q-4 Inspect the Electrical Contactor - DC / Bi-Energy Models 41

Q-5 Check the Exhaust System 42

Q-6 Inspect the Tires, Wheels and Lug Nut Torque 42

Q-7 Check the Generator Belts and Pulleys, Bi-Energy Models 43

Q-8 Check the Oscillate Directional Valve Linkage (if equipped) 44

Q-9 Visual Inspection of the Hydraulic Oil 45

Q-10 Inspect the Hydraulic Filters 46

Q-11 Check and Adjust the Engine RPM 47

Q-12 Test the Ground Control Override 52

Q-13 Test the Alarm Package (if equipped) 52

Q-14 Test the Emergency Power System 53

Q-15 Test the Engine Idle Select - Engine Models 54

Q-16 Test the Fuel Select Operation - Gasoline/LPG Models 55

Downloaded from www.Manualslib.com manuals search engine

https://truckmanualshub.com/

Table of Contents

Q-17 Inspect the Calibration Decal - ALC1000 Models 56
Q-18 Test the Recovery Mode System - ALC-1000 Models 57
Q-19 Test the Platform Self-leveling 59
Q-20 Confirm the Proper Brake Configuration 59
Q-21 Test the Drive Brakes 60
Q-22 Test the Drive Speed – Stowed Position 60
Q-23 Test the Drive Speed - Raised or Extended Position 61
Q-24 Test the Drive Speed – Raised and Extended, ALC1000 Models 62
Q-25 Test the Turntable Level Sensor - Z-135/70, ZX135/70, SX-150 and SX-180 63
Q-26 Test the Secondary Boom Angle Sensor - Z-135/70 and ZX135/70 65
Q-27 Test the Primary Boom Angle Sensor - Z-135/70 and ZX135/70 67
Q-28 Test the Primary Boom Angle Sensor - SX-150 and SX-180 70
Q-29 Test the Safety Envelope Limit Switches - Z-135/70, ZX135/70, SX-150 and SX-180 Models 72
Q-30 Test the Primary Boom Angle Sensor - Z-80/60 76
Q-31 Test the Safety Envelope and Circuits - Z-80/60 77
Q-32 Check the Safety Envelope Limit Switches and Angle Sensor - S-60X, S-60XC and S-80X 79
Q-33 Test the Safety Envelope and Circuits - S-100, S-105, S-120 and S-125 81
Q-34 Test the Aircraft Protection System (if equipped) 87
Q-35 Test the Operator Protection Alarm (if equipped) 89

Downloaded from www.Manualslib.com manuals search engine

https://truckmanualshub.com/

Table of Contents

Annual Maintenance Procedures.....90
A-1 Grease the Turntable Rotation Bearing and Rotate Gear.....90
A-2 Check the Turntable Rotation Bearing Bolts.....91
A-3 Inspect for Turntable Bearing Wear.....92
A-4 Check the Extendable Axle - S-100, S-105, S-120 and S-125.....93
A-5 Perform Maintenance- Jib Rotate Bearing.....94
A-6 Test the Bypass/Recovery Key Switch - ALC1000 Models.....95
A-7 Grease the Platform Overload Mechanism (if equipped).....98
A-8 Test the Platform Overload System - All Models, Except ALC1000 and S-60HC Models.....98
A-9 Test the Platform Overload System - ALC1000 Models.....100
A-10 Test the Platform Load Sense System - S-60 HC.....102
A-11 Inspect the Boom Extend/Retract Cables - S-60 and S-80 Models.....103
A-12 Inspect the Boom Extend/Retract Cables - S-100, S-105, S-120 and S-125 Models.....104
A-13 Inspect the Boom Extend and Retract Cables - SX-150 and SX-180 Models.....106
A-14 Check the Drive Hub Oil Level and Fastener Torque.....107

Programmed Maintenance Procedures.....110
P0-1 Check the Track Tension and Fastener Torque, TRAX Models - S-60, S-65 and Z-62 Models.....110
P0-2 Check the Track Tension and Fastener Torque, TRAX Models - S-40 and S-45 Models.....111
P0-3 Grease the Extendable Axles - S-100, S-105, S-120 and S-125.....113
P0-4 Continental Engine Maintenance – Under 1000 Hours.....114
P0-5 Cummins Engine Maintenance – Under 1000 Hours.....115
P0-6 Deutz Engine Maintenance – Under 1000 Hours.....116
P0-7 Ford Engine Maintenance – Under 1000 Hours.....117
P0-8 Kubota Engine Maintenance – Under 1000 Hours.....118
P0-9 Perkins Engine Maintenance – Under 1000 Hours.....119
P0-10 GM .998L Engine Maintenance – Under 1000 Hours.....120
P0-11 GM 3.0L Engine Maintenance – Under 1000 Hours.....121

Downloaded from www.Manualslib.com manuals search engine

https://truckmanualshub.com/

Table of Contents

P1-1 Perform Engine Maintenance – 1000 Hours 122
P1-2 Replace the Drive Hub Oil 123
P2-1 Perform Engine Maintenance – 2000 Hours 126
P2-2 Test or Replace the Hydraulic Oil 128
P2-3 Replace the Hydraulic Filters 129
P2-4 Check the Free-wheel Configuration 131
P2-5 Check the Boom Wear Pads 133
P2-6 Check the Extendable Axle Wear Pads - S-100, S-105, S-120, S-125, S-100HD and S-120HD 136
P2-7 Check the Turntable Rotation Gear Backlash 136
P2-8 Grease the Steer Axle Wheel Bearings, All 2WD Models (except S-60 / S-65, Z-60 DC/FE and Z-62) 137
P2-9 Grease the Steer Axle Wheel Bearings, 2WD Models - S-60 / S-65, Z-60 DC/FE and Z-62 139
P3-1 Perform Engine Maintenance – 3000 Hours 140
P4-1 Perform Engine Maintenance – 4000 Hours 141
P5-1 Perform Engine Maintenance – 5000 Hours 142
P6-1 Perform Engine Maintenance – 6000 Hours 142
P12-1 Perform Engine Maintenance – 12000 Hours 143
P12-2 Replace the Boom Extend/Retract Cables - S-100HD and S-120HD 143
P12-3 Replace the Boom Extend/Retract Cables - S-60 Models, S-80 Models, S-100, S-105, S-120, S-125, SX-150 and SX-180 144

Downloaded from www.Manualslib.com manuals search engine

https://truckmanualshub.com/

Function Speeds - S-100, S-105 and S-100HD Models

Note: Function speeds are maximum from platform controls with maximum rated load in platform.

Primary boom up/down, (retracted)	80 - 88 seconds
Primary boom up/down, extended to >4 ft / >1.2 m (time from fully stowed to the fully raised position)	100 - 100 seconds
Primary boom up/down, extended to >80 ft / >24.4 m (time from 53° envelope limit to the fully raised position)	50 - 55 seconds
Primary boom extend, fully raised position (0 to 100 ft / 0 to 30.5 m)	120 - 140 seconds
Primary boom retract, fully raised position (100 to 0 ft / 30.5 to 0 m)	120 - 140 seconds
Jib boom up/down, (S-105 models)	28 - 32 seconds
Turntable rotate, 360° boom horizontal and fully retracted	170 - 190 seconds
Turntable rotate, boom horizontal and extended >0 ft / >0 m	63 - 70 seconds drive enable to drive enable
Turntable rotate, boom fully raised and extended >80 ft / >24.4 m	109 - 120 seconds drive enable to drive enable
Platform rotate	18 - 22 seconds
Platform level (10° range of motion)	ANSI/CSA 3 - 5 seconds AS/CE 20 - 22 seconds

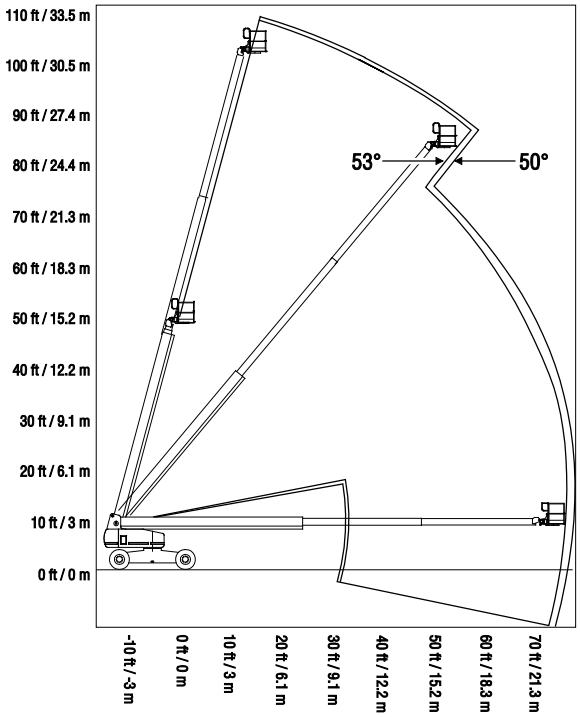

Downloaded from www.Manualslib.com manuals search engine

https://truckmanualshub.com/

Performance Specifications

Function Speeds - S-120, S-125 and S-120HD Models

Note: Function speeds are maximum from platform controls with maximum rated load in platform.

Primary boom up/down, (retracted)	80 - 88 seconds
Primary boom up/down, extended to >4 ft / >1.2 m (time from fully stowed to the fully raised position)	100 - 100 seconds
Primary boom up/down, extended to >80 ft / >24.4 m (time from 53° envelope limit to the fully raised position)	50 - 55 seconds
Primary boom up/down, extended to >100 ft / 30.5 m (time from 68° envelope limit to the fully raised position)	24 - 28 seconds
Primary boom extend, fully raised position (0 to 100 ft / 0 to 30.5 m)	170 - 190 seconds
Primary boom retract, fully raised position (100 to 0 ft / 30.5 to 0 m)	170 - 190 seconds
Jib boom up/down, (S-125 models)	28 - 32 seconds
Turntable rotate, 360° boom horizontal and fully retracted	170 - 190 seconds
Turntable rotate, boom horizontal and extended >0 ft / >0 m	63 - 70 seconds drive enable to drive enable
Turntable rotate, boom fully raised and extended >80 ft / >24.4 m	109 - 120 seconds drive enable to drive enable
Platform rotate	18 - 22 seconds
Platform level (10° range of motion)	ANSI/CSA 3 - 5 seconds AS/CE 20 - 22 seconds

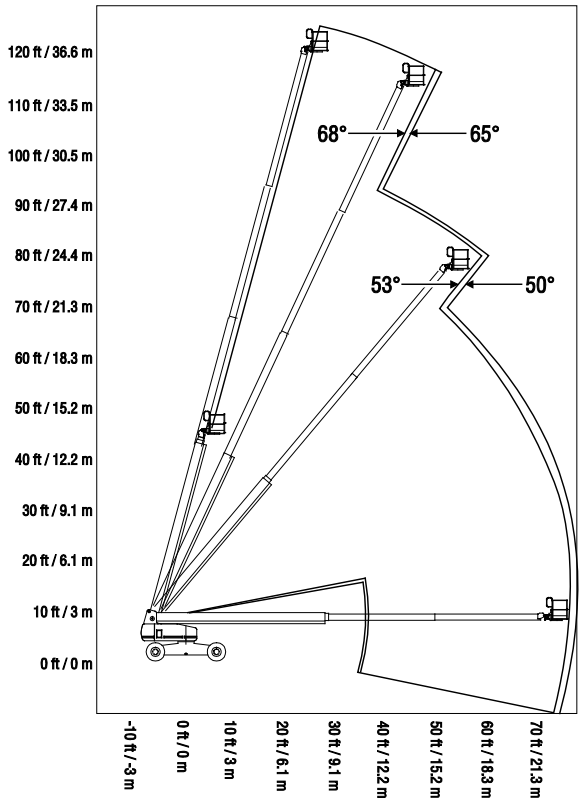

Downloaded from www.Manualslib.com manuals search engine

https://truckmanualshub.com/

Function Speeds - All Other Models

Note: Function speeds are maximum from platform controls with maximum rated load in platform.

Function	S-40, S-45 (includes TRAX models)	S-60, S-65, S-60HC, S-60X, S-60XC (includes TRAX models)	S-80, S-85, S-80X (ANSI/CSA models)	S-80, S-85 (AS/CE models)
Primary boom up	50 - 60 seconds	60 - 70 seconds	57 - 65 seconds	75 - 83 seconds
Primary boom down	50 - 60 seconds	60 - 70 seconds	61 - 69 seconds	75 - 83 seconds
Primary boom extend	30 - 60 seconds	58 - 66 seconds	59 - 67 seconds	59 - 67 seconds
Primary boom retract	15 - 35 seconds	53 - 62 seconds	57 - 65 seconds	57 - 65 seconds
Jib boom up	35 - 45 seconds (S-45)	60 - 70 seconds (S-65)	25 - 35 seconds (S-85)	25 - 35 seconds (S-85)
Jib boom down	20 - 30 seconds (S-45)	40 - 50 seconds (S-65)	15 - 25 seconds (S-85)	15 - 25 seconds (S-85)
Turntable rotate stowed	70 - 100 seconds	78 - 86 seconds	90 - 103 seconds	90 - 103 seconds
Turntable rotate extended	120 - 140 seconds	125 - 165 seconds	210 - 250 seconds	210 - 250 seconds
Platform rotate	6 - 10 seconds	8 - 12 seconds	8 - 12 seconds	8 - 12 seconds
Platform level (10° range of motion)	ANSI/CSA 3 - 5 seconds AS/CE 20 - 22 seconds			

Function	Z-30N, Z-30N RJ	Z-34 BE	Z-34N, Z-34 (DC models)	Z-33
Primary boom up	14 - 22 seconds	14 - 22 seconds	16 - 22 seconds	36 - 40 seconds (retracted) 48 - 52 second (extended)
Primary boom down	12 - 20 seconds	12 - 20 seconds	13 - 20 seconds	46 - 50 seconds (retracted) 55 - 59 seconds (extended)
Primary boom extend	15 - 19 seconds	12 - 18 seconds	11 - 15 seconds	18 - 20 seconds
Primary boom retract	10 - 14 seconds	12 - 18 seconds	13 - 17 seconds	18 - 20 seconds
Secondary boom up	11 - 18 seconds	11 - 18 seconds	15 - 22 seconds	20 - 24 seconds
Secondary boom down	7 - 15 seconds	7 - 15 seconds	11 - 18 seconds	20 - 24 seconds
Jib boom up	19 - 23 seconds	23 - 29 seconds	20 - 24 seconds	X
Jib boom down	17 - 21 seconds	20 - 26 seconds	18 - 22 seconds	X
Jib boom rotate	13 - 17 seconds (Z-30N RJ)	X	X	X
Turntable rotate	62 - 72 seconds	62 - 72 seconds	62 - 72 seconds	62 - 65 seconds
Platform rotate	5 - 11 seconds	5 - 11 seconds	5 - 11 seconds	X
Platform level (10° range of motion)	ANSI/CSA 3 - 5 seconds AS/CE 20 - 22 seconds			10 - 12 seconds

Downloaded from www.Manualslib.com manuals search engine

https://truckmanualshub.com/

Performance Specifications

Note: Function speeds are maximum from platform controls with maximum rated load in platform.

Function	Z-34 IC	Z-40N, Z-40N RJ	Z-45/25, Z-45/25J (DC, BE models)	Z-45/25, Z-45/25J (IC models)
Primary boom up	15 - 21 seconds	26 - 30 seconds	32 - 40 seconds	24 - 28 seconds
Primary boom down	13 - 19 seconds	26 - 30 seconds	26 - 30 seconds	24 - 28 seconds
Primary boom extend	24 - 30 seconds	18 - 22 seconds	14 - 18 seconds	18 - 22 seconds
Primary boom retract	14 - 20 seconds	18 - 22 seconds	17 - 21 seconds	18 - 22 seconds
Secondary boom up	15 - 21 seconds	32 - 36 seconds	38 - 46 seconds	24 - 28 seconds
Secondary boom down	11 - 17 seconds	32 - 36 seconds	38 - 46 seconds	24 - 28 seconds
Jib boom up	24 - 30 seconds	16 - 20 seconds	32 - 40 seconds (Z45J)	45 - 55 seconds
Jib boom down	15 - 21 seconds	16 - 20 seconds	26 - 30 seconds (Z45J)	25 - 35 seconds
Jib boom rotate	X	16 - 20 seconds (Z40N RJ)	X	X
Turntable rotate	62 - 72 seconds	62 - 68 seconds	95 - 125 seconds	62 - 68 seconds
Platform rotate	5 - 11 seconds	10 - 14 seconds	6 - 10 seconds	6 - 10 seconds
Platform level (10° range of motion)	ANSI/CSA 3 - 5 seconds AS/CE 20 - 22 seconds			

Function	Z-51	Z-60 (DC / FE)	Z-62 (includes TRAX models)	Z-80
Primary boom up	36 - 40 seconds	60 - 70 seconds	60 - 65 seconds	60 - 70 seconds (retracted) 80 - 96 seconds (extended)
Primary boom down	36 - 40 seconds	60 - 70 seconds	65 - 70 seconds	75 - 85 seconds (retracted) 80 - 96 seconds (extended)
Primary boom extend	18 - 22 seconds	41 - 49 seconds	40 - 50 seconds	48 - 52 seconds
Primary boom retract	18 - 22 seconds	31 - 39 seconds	45 - 50 seconds	38 - 52 seconds
Secondary boom up	36 - 40 seconds	31 - 39 seconds	40 - 45 seconds	38 - 48 seconds
Secondary boom down	36 - 40 seconds	31 - 39 seconds	45 - 50 seconds	38 - 48 seconds
Jib boom up	45 - 55 seconds	13 - 17 seconds	68 - 73 seconds	23 - 33 seconds
Jib boom down	25 - 35 seconds	13 - 17 seconds	77 - 82 seconds	21 - 31 seconds
Turntable rotate	82 - 88 seconds	39 - 43 seconds (stowed) 62 - 83 seconds (extended)	120 - 125 seconds (stowed) 240 - 245 seconds (extended)	114 - 126 seconds (retracted) 200 - 240 seconds (extended)
Platform rotate	6 - 10 seconds	10 - 14 seconds	12 - 17 seconds	10 - 14 seconds
Platform level (10° range of motion)	ANSI/CSA 3 - 5 seconds AS/CE 20 - 22 seconds			

Downloaded from www.Manualslib.com manuals search engine

https://truckmanualshub.com/

Performance Specifications

Note: Function speeds are maximum from platform controls with maximum rated load in platform.

Function	Z-135	ZX-135
Primary boom up/down	88 - 105 seconds	110 - 125 seconds
Primary boom extend/retract	38 - 42 seconds	35 - 48 seconds
Secondary boom up/down	80 - 95 seconds	80 - 95 seconds
Secondary boom extend/retract	88 - 98 seconds	88 - 98 seconds
Jib boom up/down	38 - 43 seconds	38 - 43 seconds
Jib boom extend/retract	27 - 38 seconds	27 - 38 seconds
Turntable rotate stowed	88 - 92 seconds	88 - 92 seconds
Turntable rotate (jib or primary boom extended)	160 - 180 seconds	160 - 180 seconds
Turntable rotate (jib and primary boom extended)	280 - 350 seconds	280 - 350 seconds
Platform rotate	20 - 25 seconds	20 - 25 seconds
Platform level (10° range of motion)	ANSI/CSA 3 - 5 seconds AS/CE 20 - 22 seconds	

Downloaded from www.Manualslib.com manuals search engine

https://truckmanualshub.com/

Performance Specifications

Note: Function speeds are maximum from platform controls with maximum rated load in platform.

Function	SX-150	SX-180
Primary boom up/down, (stowed)	80 - 88 seconds 82°	80 - 88 seconds 82°
Primary boom up/down, string pot = 76 in / 193 cm	100 - 110 seconds 82°	100 - 110 seconds 82°
Primary boom up/down, string pot = 158 in / 401 cm	45 - 50 seconds 20°	45 - 50 seconds 20°
Primary boom up/down, string pot = 238 in / 605 cm	71 - 80 seconds 20°	71 - 80 seconds 20°
Primary boom up/down, string pot = 370 in / 940 cm	26 - 31 seconds 5°	26 - 31 seconds 5°
Primary boom up/down, string pot = 596 in / 1514 cm	X	34 - 39 seconds 5°
Primary boom extend, 0 - 100 in / 254 cm	30 - 33 seconds	30 - 33 seconds
Primary boom retract, 100 in / 254 cm - 0	30 - 33 seconds	30 - 33 seconds
Jib boom up/down	58 - 62 seconds	58 - 62 seconds
Jib boom rotate	28 - 32 seconds	28 - 32 seconds
Turntable rotate, drive enable to drive enable (80°) (stowed)	38 - 42 seconds	38 - 42 seconds
Turntable rotate, drive enable to drive enable (80°) string pot = 36 in / 91.4 cm)	63 - 70 seconds	63 - 70 seconds
Turntable rotate, drive enable to drive enable (80°) string pot = 76 in / 193 cm (above 75 ft / 22.8 m)	109 - 120 seconds	109 - 120 seconds
Turntable rotate, drive enable to drive enable (80°) string pot = 258 in / 655 cm (above 125 ft / 38.1 m)	155 - 175 seconds	155 - 175 seconds
Platform rotate	20 - 24 seconds	20 - 24 seconds
Platform level (10° range of motion)	ANSI/CSA 3 - 5 seconds AS/CE 20 - 22 seconds	

Downloaded from www.Manualslib.com manuals search engine

https://truckmanualshub.com/

Drive Speeds

Function	S-40, S-45 (includes TRAX models)	S-60, S-65, S-60HC, S-60X, S-60XC (includes TRAX models)	S-80, S-85, S-80X	S-100, S-105, S-120, S-125, S-100HD, S-120HD
2WD models, Stowed position	5.2 - 5.9 seconds 40 ft / 12.2 m	6.1 - 7.8 seconds 40 ft / 12.2 m	7.9 - 8.5 seconds 40 ft / 12.2 m	X
4WD models, Stowed position	5.2 - 5.9 seconds 40 ft / 12.2 m	8 - 10.5 sec 40 ft / 12.2 m	8 - 10.5 seconds 40 ft / 12.2 m	8.8 - 9.3 seconds 40 ft / 12.2 m
High flotation tires, Stowed position	X	X	11 - 13 seconds 40 ft / 12.2 m	X
2WD or 4WD, Raised or extended	40 - 45 seconds 40 ft / 12.2 m	40 - 45 seconds 40 ft / 12.2 m	40 - 45 seconds 40 ft / 12.2 m	40 - 45 seconds 40 ft / 12.2 m
2WD or 4WD, Raised and extended	X	X	X	72.4 - 81.3 seconds 40 ft / 12.2 m
TRAX models, Stowed position	9 - 11 seconds 40 ft / 12.2 m	10.7 - 13.6 seconds 40 ft / 12.2 m	X	X
TRAX models, Raised or extended	40 - 45 seconds 40 ft / 12.2 m	55 - 62 seconds 40 ft / 12.2 m	X	X
Braking distance, high range on paved surface	3 - 4 ft 0.9 - 1.2 m	3 - 6 ft 0.9 - 1.8 m	3 - 6 ft 0.9 - 1.8 m	4 - 6 ft 1.2 - 1.8 m

Function	SX-150, SX-180	Z-30N, Z30N RJ	Z-33	Z-34N, Z34DC, Z-34BE
2WD models, Stowed position	X	6 - 8 seconds 40 ft / 12.2 m	8.5 - 10.5 seconds 40 ft / 12.2 m	6 - 8 seconds 40 ft / 12.2 m
4WD models, Stowed position	9.8 - 11.8 seconds 40 ft / 12.2 m	X	X	X
2WD or 4WD, Raised or extended	68 - 75.5 seconds 40 ft / 12.2 m	42 - 48 sec 40 ft / 12.2 m	50 - 55 seconds 40 ft / 12.2 m	42 - 48 seconds 40 ft / 12.2 m
2WD or 4WD, Raised and extended	275.5 - 293.3 seconds 40 ft / 12.2 m	X	190 - 195 seconds 40 ft / 12.2 m	X
Braking distance, high range on paved surface	4 - 6 ft 1.2 - 1.8 m	2 - 4 ft 0.6 - 1.2 m	5 - 7 ft 1.5 - 2 m	2 - 4 ft 0.6 - 1.2 m

Downloaded from www.Manualslib.com manuals search engine

https://truckmanualshub.com/

Performance Specifications

Function	Z-43 IC	Z-40N, Z-40N RJ	Z-45/25, Z-45/25J (DC and BE models)	Z-45/25 IC, Z-45/25J IC, Z-51
2WD models, Stowed position	8.5 - 10.5 seconds 40 ft / 12.2 m	**(ANSI / CSA)** 6.1 - 7.1 seconds 40 ft / 12.2 m **(AS / CE)** 7.3 - 8.3 seconds 40 ft / 12.2 m	8 - 10 seconds 40 ft / 12.2 m	6 - 6.8 seconds 40 ft / 12.2 m
4WD models, Stowed position	8.5 - 10.5 seconds 40 ft / 12.2 m	X	X	6 - 6.8 seconds 40 ft / 12.2 m
High flotation tires, Stowed position	8.5 - 10.5 seconds 40 ft / 12.2 m	X	X	6 - 6.8 seconds 40 ft / 12.2 m
2WD or 4WD, Raised or extended	40 - 45 seconds 40 ft / 12.2 m	40 - 45 seconds 40 ft / 12.2 m	42 - 48 seconds 40 ft / 12.2 m	42 - 48 seconds 40 ft / 12.2 m
Braking distance, high range on paved surface	3 - 4 ft 0.9 - 1.2 m	5 - 7 ft 1.5 - 2 m	5 - 7 ft 1.5 - 2 m	3 - 6 ft 0.9 - 1.8 m

Function	Z-60 (DC / FE)	Z-62 (includes TRAX models)	Z-80	Z-135, ZX-135
2WD models, Stowed position	13.6 - 14.5 seconds 40 ft / 12.2 m	6.1 - 7.8 seconds 40 ft / 12.2 m	X	X
4WD models, Stowed position	13.6 - 14.5 seconds 40 ft / 12.2 m	8 - 10.5 seconds 40 ft / 12.2 m	8.7 - 9.3 seconds 40 ft / 12.2 m	8.9 - 9.6 seconds 40 ft / 12.2 m
High flotation tires, Stowed position	X	8 - 10.5 seconds 40 ft / 12.2 m	13.6 - 14.5 seconds 40 ft / 12.2 m	X
2WD or 4WD, Raised or extended	40 - 45 seconds 40 ft / 12.2 m (raised only)	40 - 45 seconds 40 ft / 12.2 m	RT Tires 40 - 45 seconds 40 ft / 12.2 m High flotation tires, 62 - 70 seconds 40 ft / 12.2 m	40 - 45 seconds 40 ft / 12.2 m
2WD or 4WD, Raised and extended	X	X	X	66 - 70 seconds 40 ft / 12.2 m Primary and secondary raised, and primary or jib extended
TRAX models, Stowed position	X	10.7 - 13.6 seconds 40 ft / 12.2 m	X	X
TRAX models, Raised or extended	X	55 - 62 seconds 40 ft / 12.2 m	X	X
Braking distance, high range on paved surface	X	3 - 6 ft 0.9 - 1.8 m	4 - 6 ft 1.2 - 1.8 m	4 - 6 ft 1.2 - 1.8 m

Downloaded from www.Manualslib.com manuals search engine

https://truckmanualshub.com/

Tires and Wheels

Torque values are listed as lubricated unless otherwise noted. Lug nuts must be coated with a mineral based lubricant when removed and replaced on the machine.

Model	Lug nut torque	Tire pressure rough terrain	Tire pressure high flotation	Tire pressure industrial
S-40 and S-45 (includes TRAX models)	170 ft-lbs 230 Nm	45 psi / 3.1 bar	38 psi / 2.6 bar	X
S-60, S-65, S-60HC, S-60X and S-60XC (includes TRAX models)	180 ft-lbs 244 Nm	70 psi / 4.8 bar	60 psi / 4.1 bar	X
S-80, S-85 and S-80X	320 ft-lbs 434 Nm	X	70 psi / 4.8 bar	X
S-100, S-100HD, S-105, S-120, S-120HD and S-125	320 ft-lbs 434 Nm	X	X	X
SX-150 and SX-180	320 ft-lbs 434 Nm	X	X	X
Z-30N and Z-30N RJ	95 ft-lbs 129 Nm	X	X	X
Z-33	94 ft-lbs 127 Nm	X	X	X
Z-34N, Z-34DC and Z-34BE	95 ft-lbs 129 Nm	X	X	100 psi / 6.9 bar (Z-34DC / BE)
Z-34 IC	95 ft-lbs 129 Nm	45 psi / 3.1 bar	44 psi / 3.0 bar	100 psi / 6.9 bar
Z-40N and Z-40N RJ	94 ft-lbs 127 Nm	X	X	X
Z-45/25 and Z-45/25J (DC and BE models)	94 ft-lbs 127 Nm	X	X	X
Z-45/25 IC, Z-45/25J IC and Z-51	94 ft-lbs 127 Nm	60 psi / 4.1 bar	38 psi / 2.6 bar	X
Z-62 (includes TRAX models)	180 ft-lbs 244 Nm	70 psi / 4.8 bar	60 psi / 4.1 bar	X
Z-80	320 ft-lbs 434 Nm	X	X	X
Z-135	420 ft-lbs 569 Nm	X	X	X
ZX-135 to serial number ZX13515-2584	420 ft-lbs 569 Nm	X	X	X
ZX-135 (dry torque) from serial number ZX13515-2585	320 ft-lbs 434 Nm	X	X	X

Downloaded from www.Manualslib.com manuals search engine

https://truckmanualshub.com/

Torque Specifications

TRAX Torque Specifications

Sprocket to hub adapter fasteners	
3/4 -10 nuts, GR 8, dry	317 ft-lbs 430 Nm
3/4 -10 nuts, GR 8, lubricated	281 ft-lbs 381 Nm
1/2-13 FHS screws, dry	80 ft-lbs 108 Nm
1/2 -13 screws, lubricated	60 ft-lbs 81 Nm
Hub adapter to drive hub fasteners	
S-60, S-65 and Z-62	
Lug nut torque, dry	240 ft-lbs 325 Nm
Lug nut torque, lubricated	180 ft-lbs 244 Nm
S-40 and S-45	
Lug nut torque, dry	230 ft-lbs 312 Nm
Lug nut torque, lubricated	170 ft-lbs 230 Nm
Sprocket bearing hub fasteners	
1-14 bolts, GR 8, dry	650 ft-lbs 881 Nm
1-14 bolts, GR 8, lubricated	488 ft-lbs 662 Nm
Idler and bogey wheel fasteners	
3/4-10 bolts, GR 8, dry	375 ft=lbs 508 Nm
3/4-10 bolts, GR 8, lubricated	281 ft-lbs 381 Nm

Downloaded from www.Manualslib.com manuals search engine

https://truckmanualshub.com/

Engine Operator and Maintenance Manuals

Deutz D2011L03i and TD2011L04i	
Genie part number	139320
Deutz D 2.9 L4 and TD 2.9 L4	
Genie part number	1251561
Perkins 403D-11	
Genie part number	131661
Perkins 403F-11	
Genie part number	1262169
Perkins 404D-22	
Genie part number	94890
Perkins 404F-22 and 404F-22T	
Genie part number	1251562
Perkins 804D-33	
Genie part number	111332
Perkins 854F-E34T	
Genie part number	1263971
Perkins 1104D-44T	
Genie part number	107526
Ford DSG-423	
Genie part number	119488
Diagnostic Manual	
Genie part number	119494
Ford MSG-425	
Genie part number	215322
Diagnostic Manual	
Genie part number	162067
Kubota D1105-E3B	
Genie part number	229761
Kubota D1105-E4B	
Genie part number	1273089
Kubota WG-972	
Genie part number	227584
Kubota Z482-E	
Genie part number	139420
Continental TME27	
Genie part number	111901
Cummins B3.3T	
Genie part number	139324
GM .998L	
Genie part number	Not available until May 2016
GM 3.0L	
Genie part number	1273154

Downloaded from www.Manualslib.com manuals search engine

https://truckmanualshub.com/

Engine Specifications

Deutz Engine Models

D2011 L03i	
Low idle	1500 rpm 313 Hz
High idle	2500 rpm 521.7 Hz
Oil capacity (including filter)	9.5 quarts 9 liters
Fan belt deflection	3/8 to 1/2 inch 9 to 12 mm

TD2011 L04i	
Low idle (Z-80)	1500 rpm 450 Hz
Low idle (all other models)	1300 rpm 390 Hz
High idle (SX-150 and SX-180)	2450 rpm 735 Hz
High idle (all other models)	2350 rpm 705 Hz
Oil capacity (including filter)	12.8 quarts 12.1 liters
Fan belt deflection	3/8 to 1/2 inch 9 to 12 mm

D 2.9 L4	
Low idle (standby)	1000 rpm 1000 Hz
Low idle (with function enable)	1500 rpm 1500 Hz
High idle	2500 rpm 2500 Hz
Oil capacity (including filter)	9.4 quarts 9 liters
Engine coolant	Ethylene Glycol
Engine coolant capacity	10 quarts 9.4 liters
Fan belt deflection	3/8 to 1/2 inch 9 to 12 mm

TD 2.9 L4	
Low idle (standby) (SX-150, SX-180, Z-135, ZX-135) (S-100/105/120/125/100HD/120HD)	1000 rpm 1000 Hz
Low idle (with function enable) (SX-150, SX-180, Z-135, ZX-135) (S-100/105/120/125/100HD/120HD)	1500 rpm 1500 Hz
Low idle (all other models)	1000 rpm 1000 Hz
High idle	2500 rpm 2500 Hz
Oil capacity (including filter)	9.4 quarts 9 liters
Engine coolant	Ethylene Glycol
Engine coolant capacity	11.1 quarts 10.5 liters
Fan belt deflection	3/8 to 1/2 inch 9 to 12 mm

Unit ships with 15W-40. Extreme operating temperatures may require the use of alternative engine oils. For oil requirements, refer to the Engine Operator Manual for your engine.

Downloaded from www.Manualslib.com manuals search engine

https://truckmanualshub.com/

Engine Specifications

Perkins Engine Models

403D-11	
Low idle	1500 rpm 150 Hz
High idle	2800 rpm 280 Hz
Oil capacity (including filter)	4.3 quarts 4.1 liters
Engine coolant capacity	3.3 quarts 3.1 liters
Fan belt deflection	5/16 inch 8 mm

403F-11	
Low idle	1500 rpm 150 Hz
High idle	2800 rpm 280 Hz
Oil capacity (including filter)	4.6 quarts 4.4 liters
Engine coolant capacity	3.3 quarts 3.1 liters
Fan belt deflection	3/16 inch 5 mm

404D-22	
Low idle (Z-45/25 and Z-45/25 J)	1500 rpm 265 Hz
Low idle (all other models)	1300 rpm 229.7 Hz
High idle	2500 rpm 441.7 Hz
Oil capacity (including filter)	9.4 to 11.2 quarts 8.9 to 10.6 liters
Engine coolant capacity	13.3 quarts 12.6 liters
Fan belt deflection	3/8 to 1/2 inch 9 to 12 mm

404F-22	
Low idle (standby)	1000 rpm 500 Hz
Low idle (with function enable)	1500 rpm 750 Hz
High idle	2500 rpm 1250 Hz
Oil capacity (including filter)	9.4 to 11.2 quarts 8.9 to 10.6 liters
Engine coolant	Ethylene Glycol
Engine coolant capacity	13.3 quarts 12.6 liters
Fan belt deflection	3/8 to 1/2 inch 9 to 12 mm

404F-22T	
Low idle	1300 rpm 650 Hz
High idle	2300 rpm 1150 Hz
Oil capacity (including filter)	9.4 to 11.2 quarts 8.9 to 10.6 liters
Engine coolant	Ethylene Glycol
Engine coolant capacity	13.3 quarts 12.6 liters
Fan belt deflection	3/8 to 1/2 inch 9 to 12 mm

804D-33	
Low idle (with generator)	1400 rpm 284.7 Hz
Low idle (without generator)	1650 rpm 335.5 Hz
High idle	2300 rpm 467.7 Hz
Oil capacity (including filter)	10.6 quarts 10 liters
Engine coolant capacity	12.5 quarts 11.8 liters
Fan belt deflection	3/8 to 1/2 inch 9 to 12 mm

Downloaded from www.Manualslib.com manuals search engine

https://truckmanualshub.com/

Engine Specifications

854F-E34T	
Low idle (standby) (SX-150, SX-180, Z-135, ZX-135) (S-100/105/120/125/100HD/120HD)	1000 rpm 500 Hz
Low idle (with function enable) (SX-150, SX-180, Z-135, ZX-135) (S-100/105/120/125/100HD/120HD)	1500 rpm 750 Hz
High idle	2500 rpm 1250 Hz
Oil capacity (including filter)	7.7 quarts 7.3 liters
Engine coolant	Ethylene Glycol
Engine coolant capacity	16.5 quarts 15.6 liters
Fan belt deflection	3/8 to 1/2 inch 9 to 12 mm

1104D-44T	
Low idle	1300 rpm 314.2 Hz
High idle (SX-150 and SX-180)	2450 rpm 592 Hz
High idle (all other models)	2350 rpm 568 Hz
Oil capacity (including filter)	10.4 quarts 13 liters
Engine coolant capacity	14 quarts 9.8 liters
Fan belt deflection	3/8 to 1/2 inch 9 to 12 mm

Unit ships with 15W-40. Extreme operating temperatures may require the use of alternative engine oils. For oil requirements, refer to the Engine Operator Manual for your engine.

Ford Engine Models

DSG-423	
Low idle	1600 rpm 53.3 Hz
High idle	2500 rpm 83.3 Hz
Oil capacity (including filter)	4 quarts 3.8 liters
Engine coolant capacity	10 quarts 9.5 liters
Spark plug gap	0.049 to 0.053 inches 1.25 to 1.35 mm
Fan belt deflection	3/8 to 1/2 inch 9 to 12 mm

MSG-425	
Low idle	1500 rpm 50 Hz
High idle	2500 rpm 83.3 Hz
Oil capacity (including filter)	6.7 quarts 6.4 liters
Engine coolant capacity	10 quarts 9.5 liters
Spark plug gap	0.049 to 0.053 inches 1.25 to 1.35 mm
Fan belt deflection	3/8 to 1/2 inch 9 to 12 mm

Unit ships with 15W-40. Extreme operating temperatures may require the use of alternative engine oils. For oil requirements, refer to the Engine Operator Manual for your engine.

Downloaded from www.Manualslib.com manuals search engine

https://truckmanualshub.com/

Engine Specifications

Kubota Engine Models

D1105-E3B	
Low idle	1250 rpm 208.3 Hz
High idle	3000 rpm 500 Hz
Oil capacity (including filter)	5.4 quarts 5.1 liters
Engine coolant capacity	3.3 quarts 3.1 liters
Fan belt deflection	5/16 inch 8 mm

D1105-E4B	
Low idle (Z-34 IC)	1250 rpm 208.3 Hz
Low idle (GS-69 RT)	1500 rpm 250 Hz
Low idle (Z-60 FE)	2150 rpm 358.3 Hz
High idle	3000 rpm 500 Hz
Oil capacity (including filter)	5.4 quarts 5.1 liters
Engine coolant capacity	3.3 quarts 3.1 liters
Fan belt deflection	5/16 inch 8 mm

WG-972	
Low idle	1600 rpm 266.7 Hz
High idle	3000 rpm 500 Hz
Oil capacity (including filter)	3 quarts 2.8 liters
Engine coolant capacity	0.61 quarts 2.36 liters
Spark plug gap	0.024 to 0.028 inches 0.6 to 0.7 mm
Fan belt deflection	5/16 inch 8 mm

Z482-E	
Low idle	2000 rpm 333.3 Hz
High idle	3000 rpm 500 Hz
Oil capacity (including filter)	2.64 quarts 2.5 liters
Engine coolant capacity	3 quarts 2.8 liters
Fan belt deflection	5/16 inch 8 mm

Unit ships with 15W-40. Extreme operating temperatures may require the use of alternative engine oils. For oil requirements, refer to the Engine Operator Manual for your engine.

Downloaded from www.Manualslib.com manuals search engine

https://truckmanualshub.com/

Engine Specifications

GM Engine Models

.998L	
Low idle	1100 rpm 36.6 Hz
High idle	3000 rpm 100 Hz
Oil capacity (including filter)	3.2 quarts 3.0 liters
Engine coolant capacity	5 quarts 4.7 liters
Spark plug gap	0.039 to 0.047 inches 1.0 to 1.2 mm

3.0L	
Low idle (standby)	1000 rpm 33.3 Hz
Low idle (with function enable)	1500 rpm 50 Hz
High idle	2500 rpm 83.3 Hz
Oil capacity (including filter)	5 quarts 4.7 liters
Engine coolant capacity	12 quarts 11.4 liters
Spark plug gap	0.035 inches .89 mm

Unit ships with 15W-40. Extreme operating temperatures may require the use of alternative engine oils. For oil requirements, refer to the Engine Operator Manual for your engine.

Continental Engine Models

TME27	
Low idle	1600 rpm 53.3 Hz
High idle	2500 rpm 83.3 Hz
Oil capacity (including filter)	7 quarts 6.6 liters
Engine coolant capacity	10.7 quarts 10.1 liters
Spark plug gap	0.032 inches 0.8 mm
Fan belt deflection	1/2 inch 12 mm

Unit ships with 15W-40. Extreme operating temperatures may require the use of alternative engine oils. For oil requirements, refer to the Engine Operator Manual for your engine.

Downloaded from www.Manualslib.com manuals search engine

https://truckmanualshub.com/

Cummins Engine Models

B3.3T	
Low idle	1300 rpm 229.7 Hz
High idle	2350 rpm 415 Hz
Oil capacity (including filter)	9 quarts 8.5 liters
Engine coolant capacity	9.1 quarts 10.1 liters
Fan belt deflection	3/8 to1/2 inch 9 to12 mm

Unit ships with 15W-40. Extreme operating temperatures may require the use of alternative engine oils. For oil requirements, refer to the Engine Operator Manual for your engine.

Downloaded from www.Manualslib.com manuals search engine

https://truckmanualshub.com/

Hydraulic Specifications

Hydraulic Relief Valve Pressure

Function Manifold Relief Valve Pressure / Bar

Model	System relief	Primary boom down	Secondary boom down	Secondary boom up	Primary boom extend	Secondary boom extend	Turntable rotate	Proportional relief	Platform level
S-40 (includes TRAX models)	2600 psi 179 bar	2200 psi 152 bar	X	X	1950 psi 134 bar	X	X	X	X
S-45 (includes TRAX models)	2900 psi 200 bar	2200 psi 152 bar	X	X	1950 psi 134 bar	X	X	X	X
S-60, S-65, S-60HC, S-60X and S-60XC (includes TRAX models)	3000 psi 207 bar	X	X	X	X	X	X	X	X
S-80, S-85 and S-80X	3200 psi 221 bar	2400 psi 165 bar	X	X	2400 psi 165 bar	X	X	X	X
S-100, S-100HD, S-105, S-120, S-120HD and S-125	2600 psi 179.3 bar	X	X	X	X	X	X	X	3000 psi 207 bar
SX-150 and SX-180	3200 psi 221 bar	X	X	X	2500 psi 172 bar	X	X	X	X
Z-30N and Z-30N RJ	3000 psi 207 bar	1600 psi 110 bar	1600 psi 110 bar	X	1800 psi 124 bar	X	1100 psi 76 bar	X	X
Z-33	X	1885 psi 130 bar	1885 psi 130 bar	X	X	X	X	50 - 3000 psi 3.4 - 207 bar	X
Z-34N and Z-34 DC	3200 psi 221 bar	1600 psi 110 bar	1600 psi 110 bar	X	1800 psi 124 bar	X	1100 psi 76 bar	X	X
Z-34 BE	3200 psi 221 bar	1400 psi 96.5 bar	1600 psi 110 bar	X	1800 psi 124 bar	X	1100 psi 76 bar	X	X
Z-34 IC	3200 psi 221 bar	1600 psi 110 bar	1600 psi 110 bar	X	X	X	X	X	X
Z-40N and Z-40N RJ	X	2100 psi 145 bar	X	X	X	X	1800 psi 124 bar	50 - 3000 psi 3.4 - 207 bar	2500 psi 172 bar

Downloaded from www.Manualslib.com manuals search engine

https://truckmanualshub.com/

Hydraulic Specifications

Model	System relief	Primary boom down	Secondary boom down	Secondary boom up	Primary boom extend	Secondary boom extend	Turntable rotate	Proportional relief	Platform level
Z-45/25 and Z-45/25J (DC and BE models)	3200 psi 221 bar	X	2100 psi 145 bar	X	X	X	X	X	X
Z-45/25 IC and Z-45/25J IC	3200 psi 221 bar	X	2100 psi 145 bar	X	X	X	X	X	2500 psi 172 bar
Z-51	3200 psi 221 bar	X	2100 psi 145 bar	X	X	X	X	X	2500 psi 172 bar
Z-60 (DC / FE)	X	X	X	X	1250 psi 86 bar	X	X	50 - 3000 psi 3.4 - 207 bar	2800 psi 193 bar
Z-62 (includes TRAX models)	3000 psi 207 bar	X	X	X	X	X	X	X	2800 psi 193 bar
Z-80	3200 psi 221 bar	1300 psi 89.6 bar	2500 psi 172 bar	2500 psi 172 bar	1300 psi 89.6 bar	2600 psi 179 bar	X	X	3000 psi 207 bar
Z-135 and ZX-135	3100 psi 213.7 bar	X	X	X	2600 psi 179 bar	X	X	X	X

Downloaded from www.Manualslib.com manuals search engine

https://truckmanualshub.com/

Hydraulic Specifications

Traction and Steer/Axle Manifolds, and Oscillate Relief Valve Pressure / Bar			
Model	**Hot oil relief**	**Oscillate relief**	**Axle extend**
S-40 and S-45 (includes TRAX models)	280 psi 19.3 bar	950 psi 66 bar	X
S-60, S-65, S-60HC, S-60X and S-60XC (includes TRAX models)	280 psi 19.3 bar	800 psi 55 bar	X
S-80, S-85 and S-80X	280 psi 19.3 bar	950 psi 66 bar	X
S-100, S-100HD, S-105, S-120, S-120HD and S-125	280 psi 19.3 bar	X	1800 psi 124 bar
SX-150 and SX-180	250 psi 17.2 bar	X	2400 psi 165 bar
Z-34 IC	2WD - 170 psi 11.7 bar 4WD - 150 psi 10.3 bar	X	X
Z-45/25 IC, Z-45/25J IC and Z-51	250 psi 17.2 bar	X	X
Z-60 (DC / FE)	X	400 psi 28 bar	X
Z-62 (includes TRAX models)	280 psi 19.3 bar	800 psi 55 bar	X
Z-80	280 psi 19.3 bar	800 psi 55 bar	X
Z-135 and ZX-135	250 psi 17.2 bar	X	2400 psi 165 bar

Downloaded from www.Manualslib.com manuals search engine

https://truckmanualshub.com/

Hydraulic and Drive Hub Fluid Capacities

Drive hub oil type: SAE 90 multipurpose hypoid gear oil API service classification GL5

Model	2WD Drive hub	4WD Drive hub	Turntable rotation drive hub	Hydraulic tank	Hydraulic system (including tank)
S-40 and S-45 (includes TRAX models)	20 fl oz 591 cc	20 fl oz 591 cc	8 fl oz 237 cc	45 gallons 170 liters	55 gallons 208 liters
S-60, S-65, S-60HC, S-60X and S-60XC (includes TRAX models)	20 fl oz 591 cc	20 fl oz 591 cc	43 fl oz 1262 cc	45 gallons 170 liters	55 gallons 208 liters
S-80, S-85 and S-80X	23 fl oz 680 cc	30.5 fl oz 902 cc	43 fl oz 1262 cc	40 gallons 151 liters	50 gallons 189 liters
S-100, S-105, S-120, S-125, S-100HD and S-120HD	X	47 fl oz 1390 cc	93 fl oz 2750 cc	55 gallons 208 liters	80 gallons 303 liters
SX-150	X	67 fl oz 1981 cc	43 fl oz 1262 cc	110 gallons 416 liters	175 gallons 662 liters
SX-180	X	67 fl oz 1981 cc	43 fl oz 1262 cc	110 gallons 416 liters	225 gallons 852 liters
Z-30N and Z-30N RJ	24.5 fl oz 725 cc	X	X	4 gallons 15 liters	6 gallons 23 liters
Z-33	23 fl oz 680 cc	X	X	6 gallons 23 liters	8 gallons 30 liters
Z-34N and Z-34DC	24.5 fl oz 725 cc	X	X	4 gallons 15 liters	6 gallons 23 liters
Z-34BE	17.5 fl oz 518 cc	X	X	4 gallons 15 liters	6 gallons 23 liters
Z-34 IC	17 fl oz 503 cc	17 fl oz 503 cc	X	19 gallons 72 liters	22 gallons 83 liters
Z-40N and Z-40N RJ	23 fl oz 680 cc	X	5 fl oz 148 cc	8 gallons 30 liters	11 gallons 41 liters

Downloaded from www.Manualslib.com manuals search engine

https://truckmanualshub.com/

Hydraulic Specifications

Hydraulic and Drive Hub Fluid Capacities, continued

Model	2WD Drive hub	4WD Drive hub	Turntable rotation drive hub	Hydraulic tank	Hydraulic system (including tank)
Z-45/25 and Z-45/25J (DC and BE models)	**EW1 type** 17 fl oz 503 cc **W1 type** 23 fl oz 680 cc	X	5 fl oz 148 cc	8 gallons 30 liters	11 gallons 41 liters
Z-45/25 IC and Z-45/25J IC	24 fl oz 710 cc	24 fl oz 710 cc	5 fl oz 148 cc	22 gallons 83 liters	28 gallons 106 liters
Z-51	X	**steer end** 17 fl oz 503 cc **non-steer end** 42 fl oz 1242 cc	5 fl oz 148 cc	22 gallons 83 liters	28 gallons 106 liters
Z-60 (DC / FE)	24 fl oz 710 cc	24 fl oz 710 cc	43 fl oz 1262 cc	18 gallons 68 liters	21 gallons 80 liters
Z-62 (includes TRAX models)	20 fl oz 591 cc	20 fl oz 591 cc	43 fl oz 1262 cc	35 gallons 132 liters	45 gallons 170 liters
Z-80	X	30.5 fl oz 902 cc	40 fl oz 1183 cc	45 gallons 170 liters	80 gallons 208 liters
Z-135 and ZX-135	X	47 fl oz 1390 cc	40 fl oz 1183 cc	65 gallons 246 liters	123 gallons 465 liters

Downloaded from www.Manualslib.com manuals search engine

https://truckmanualshub.com/

Hydraulic Oil Specifications

Hydraulic Fluid Specifications	
Genie specifications require hydraulic oils which are designed to give maximum protection to hydraulic systems, have the ability to perform over a wide temperature range, and the viscosity index should exceed 140. They should provide excellent antiwear, oxidation prevention, corrosion inhibition, seal conditioning, and foam and aeration suppression properties.	
Cleanliness level, minimum	ISO 15/13
Water content, maximum	250 ppm
Recommended Hydraulic Fluid	
Hydraulic oil type	Chevron Rando HD Premium
Viscosity grade	32
Viscosity index	200
Optional Hydraulic Fluids	
Mineral based	Shell Tellus S2 V 32 Shell Tellus S2 V 46 Shell Tellus S4 VX 32 Shell Shell Donax TG (Dexron III) Chevron 5606A
Biodegradable	Petro Canada Environ MV 46
Fire resistant	UCON Hydrolube HP-5046

Note: Genie specifications require additional equipment and special installation instructions for the approved optional fluids. Consult Genie Product Support before use.

NOTICE Optional fluids may not have the same hydraulic lifespan and may result in component damage.

Note: Extended machine operation can cause the hydraulic fluid temperature to increase beyond it's maximum allowable range. If the hydraulic fluid temperature consistently exceeds 200°F / 90°C an optional oil cooler may be required.

NOTICE Do not top off with incompatible hydraulic fluids. Hydraulic fluids may be incompatible due to the differences in base additive chemistry. When incompatible fluids are mixed, insoluble materials may form and deposit in the hydraulic system, plugging hydraulic lines, filters, control valves and may result in component damage.

Note: Do not operate the machine when the ambient air temperature is consistently above 120°F / 49°C.

Hydraulic Fluid Temperature Range

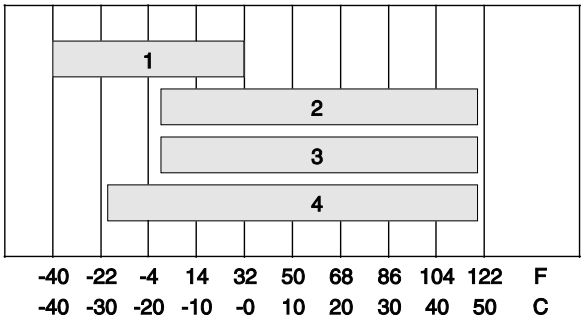

Ambient air temperature

1 Chevron hydraulic oil 5606A
2 Petro-Canada Environ MV 46
3 UCON Hydrolube HP-5046D
4 Chevron Rando HD premium oil MV

Downloaded from www.Manualslib.com manuals search engine

https://truckmanualshub.com/

Hydraulic Specifications

Chevron Rando HD Premium Oil MV Fluid Properties

ISO Grade	32
Viscosity index	200
Kinematic Viscosity cSt @ 200°F / 100°C cSt @ 104°F / 40°C	 7.5 33.5
Brookfield Viscosity cP @ -4°F / -20°C cP @ -22°F / -30°C	 1040 3310
Flash point	375°F / 190°C
Pour point	-58°F / -50°C
Maximum continuous operating temperature	171°F / 77°C

Note: A hydraulic oil heating system is recommended when the ambient temperature is consistently below 0°F / -18°C.

Note: Do not operate the machine when the ambient temperature is below -20°F / -29°C with Rando HD Premium MV.

Chevron 5606A Hydraulic Oil Fluid Properties

ISO Grade	15
Viscosity index	300
Kinematic Viscosity cSt @ 200°F / 100°C cSt @ 104°F / 40°C cSt @ -40°F / -40°C	 5.5 15.0 510
Flash point	180°F / 82°C
Pour point	-81°F / -63°C
Maximum continuous operating temperature	124°F / 51°C

Note: Use of Chevron 5606A hydraulic fluid, or equivalent, is required when ambient temperatures are consistently below 0°F / -17°C unless an oil heating system is used.

NOTICE Continued use of Chevron 5606A hydraulic fluid, or equivalent, when ambient temperatures are consistently above 32°F / 0°C may result in component damage

Downloaded from www.Manualslib.com manuals search engine

https://truckmanualshub.com/

Petro-Canada Environ MV 46 Fluid Properties

ISO Grade	46
Viscosity index	154
Kinematic Viscosity cSt @ 200°F / 100°C cSt @ 104°F / 40°C	 8.0 44.4
Flash point	482°F / 250°C
Pour point	-49°F / -45°C
Maximum continuous operating temperature	180°F / 82°C

Shell Tellus S4 VX Fluid Properties

ISO Grade	32
Viscosity index	300
Kinematic Viscosity cSt @ 200°F / 100°C cSt @ 104°F / 40°C	 9 33.8
Brookfield Viscosity cSt @ -4°F / -20°C cSt @ -13°F / -25°C cSt @ -40°F / -40°C	 481 702.4 2624
Flash point	>100
Pour point	-76°F / -60°C
Maximum continuous operating temperature	103°F / 75°C

UCON Hydrolube HP-5046 Fluid Properties

ISO Grade	46
Viscosity index	192
Kinematic Viscosity cSt @ 149°F / 65°C cSt @ 104°F / 40°C cSt @ 0°F / -18°C	 22 46 1300
Flash point	None
Pour point	-81°F / -63°C
Maximum continuous operating temperature	189°F / 87°C

Downloaded from www.Manualslib.com manuals search engine

https://truckmanualshub.com/

Hydraulic Specifications

Hydraulic Hose and Fitting Torque Specifications

Your machine is equipped with Parker Seal-Lok™ ORFS or 37° JIC fittings and hose ends. Genie specifications require that fittings and hose ends be torqued to specification when they are removed and installed or when new hoses or fittings are installed.

Seal-Lok™ Fittings

(hose end - ORFS)

SAE Dash Size	Torque
-4	10 ft-lbs / 13.6 Nm
-6	30 ft-lbs / 40.7 Nm
-8	40 ft-lbs / 54.2 Nm
-10	60 ft-lbs / 81.3 Nm
-12	85 ft-lbs / 115 Nm
-16	110 ft-lbs / 150 Nm
-20	140 ft-lbs / 190 Nm
-24	180 ft-lbs / 245 Nm

JIC 37° Fittings

(swivel nut or hose connection)

SAE Dash Size	Thread Size	Flats
-4	7/16-20	2
-6	9/16-18	1 ¼
-8	3/4-16	1
-10	7/8-14	1
-12	1 1/16-12	1
-16	1 5/16-12	1
-20	1 5/8-12	1
-24	1 7/8-12	1

SAE O-ring Boss Port

(tube fitting - installed into Aluminum)
(all types)

SAE Dash Size	Torque
-4	14 ft-lbs / 19 Nm
-6	23 ft-lbs / 31.2 Nm
-8	36 ft-lbs / 54.2 Nm
-10	62 ft-lbs / 84 Nm
-12	84 ft-lbs / 114 Nm
-16	125 ft-lbs / 169.5 Nm
-20	151 ft-lbs / 204.7 Nm
-24	184 ft-lbs / 249.5 Nm

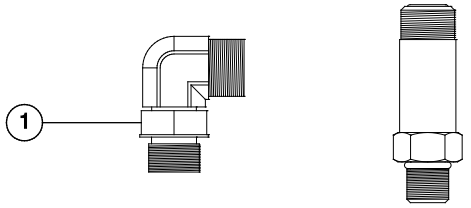

Adjustable Fitting

Non-adjustable fitting

1 jam nut

SAE O-ring Boss Port

(tube fitting - installed into Steel)

SAE Dash Size		Torque
-4	ORFS / 37° (Adj) ORFS (Non-adj) 37° (Non-adj)	15 ft-lbs / 20.3 Nm 26 ft-lbs / 35.3 Nm 22 ft-lbs / 30 Nm
-6	ORFS (Adj / Non-adj) 37° (Adj / Non-adj)	35 ft-lbs / 47.5 Nm 29 ft-lbs / 39.3 Nm
-8	ORFS (Adj / Non-adj) 37° (Adj / Non-adj)	60 ft-lbs / 81.3 Nm 52 ft-lbs / 70.5 Nm
-10	ORFS (Adj / Non-adj) 37° (Adj / Non-adj)	100 ft-lbs / 135.6 Nm 85 ft-lbs / 115.3 Nm
-12	(All types)	135 ft-lbs / 183 Nm
-16	(All types)	200 ft-lbs / 271.2 Nm
-20	(All types)	250 ft-lbs / 339 Nm
-24	(All types)	305 ft-lbs / 413.5 Nm

Downloaded from www.Manualslib.com manuals search engine

https://truckmanualshub.com/

Torque Procedure

Seal-Lok™ fittings

1 Replace the O-ring. The O-ring must be replaced anytime the seal has been broken. The O-ring cannot be re-used if the fitting or hose end has been tightened beyond finger tight.

Note: The O-ring in Parker Seal Lok™ fittings and hose end are custom-size O-rings. They are not standard size O-rings. They are available in the O-ring field service kit (Genie part number 49612).

2 Lubricate the O-ring before installation.

3 Be sure the O-ring face seal is seated and retained properly.

4 Position the tube and nut squarely on the face seal end of the fitting, and tighten the nut finger tight.

5 Tighten the nut or fitting to the appropriate torque. Refer to the appropriate torque chart in this section.

6 Operate all machine functions and inspect the hose, fittings and related components to confirm there are no leaks.

JIC 37° fittings

1 Align the tube flare (hex nut) against the nose of the fitting body (body hex fitting) and tighten the hex nut to the body hex fitting to hand tight, approximately 30 in-lbs / 3.4 Nm.

2 Using a permanent ink marker, make a reference mark on one the flats of the hex nut and continue the mark onto the body of the hex fitting. Refer to Illustration 1.

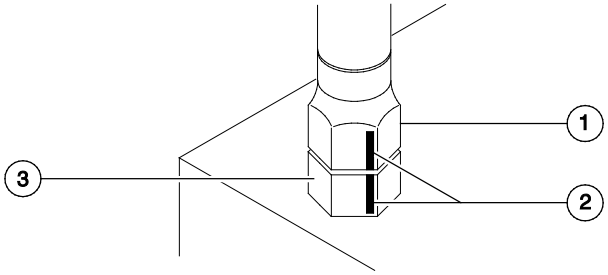

Illustration 1

1 hex nut
2 reference mark
3 body hex fitting

Downloaded from www.Manualslib.com manuals search engine

https://truckmanualshub.com/

Hydraulic Specifications

3 Working clockwise on the body hex fitting, make a second mark with a permanent ink marker to indicate the proper tightening position. Refer to Illustration 2.

Note: Use the JIC 37° Fitting table in this section to determine the correct number of flats, for the proper tightening position.

Note: The marks indicate the correct tightening positions have been determined. Use the second mark on the body hex fitting to properly tighten the joint after it has been loosened.

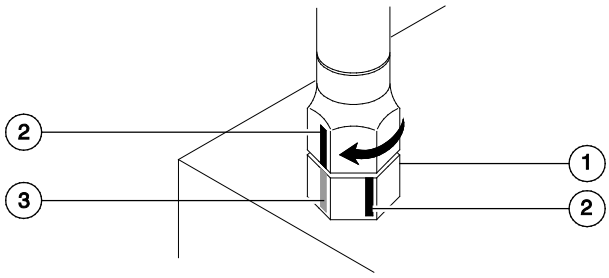

Illustration 2

1 body hex fitting
2 reference mark
3 second mark

4 Tighten the hex nut until the mark on the hex nut is aligned with the second mark on the body hex fitting.

5 Operate all machine functions and inspect the hose, fittings and related components to confirm there are no leaks.

Downloaded from www.Manualslib.com manuals search engine

https://truckmanualshub.com/

Maintenance Procedures

Observe and Obey:

☑ Maintenance inspections shall be completed by a person trained and qualified on the maintenance of this machine.

☑ Scheduled maintenance inspections shall be completed as specified on the *Maintenance inspection Reports*. The frequency and extent of periodic examinations and tests may also depend on national regulations.

⚠WARNING Failure to perform each procedure as presented and scheduled may cause death, serious injury or substantial damage.

☑ Immediately tag and remove from service a damaged or malfunctioning machine.

☑ Repair any machine damage or malfunction before operating the machine.

☑ Use only Genie approved replacement parts.

☑ Machines that have been out of service for a period longer than 3 months must complete the quarterly inspection.

Machine Configuration:

☑ Unless otherwise specified, perform each procedure with the machine in the following configuration:

- Machine parked on a firm, level surface
- Key switch in the off position with the key removed
- The red Emergency Stop button in the off position at both the ground and platform controls
- Wheels chocked
- All external AC power supply disconnected from the machine
- Machine in the stowed position
- Turntable secured with the turntable rotation lock

Downloaded from www.Manualslib.com manuals search engine

https://truckmanualshub.com/

Maintenance Procedures

About This Section

This section contains detailed procedures for each scheduled maintenance inspection.

Each procedure includes a description, safety warnings and step-by-step instructions.

Symbols Legend

Safety alert symbol—used to alert personnel to potential personal injury hazards. Obey all safety messages that follow this symbol to avoid possible injury or death.

DANGER Indicates a imminently hazardous situation which, if not avoided, will result in death or serious injury.

WARNING Indicates a potentially hazardous situation which, if not avoided, could result in death or serious injury.

CAUTION Indicates a potentially hazardous situation which, if not avoided, may cause minor or moderate injury.

NOTICE Indicates a potentially hazardous situation which, if not avoided, may result in property damage.

⊙ Indicates that a specific result is expected after performing a series of steps.

⊠ Indicates that an incorrect result has occurred after performing a series of steps.

Maintenance Symbols Legend

Note: The following symbols have been used in this manual to help communicate the intent of the instructions. When one or more of the symbols appear at the beginning of a maintenance procedure, it conveys the meaning below.

Indicates that tools will be required to perform this procedure.

Indicates that new parts will be required to perform this procedure.

Indicates that dealer service will be required to perform this procedure.

Indicates that a cold motor/pump or engine will be required to perform this procedure.

Indicates that a warm engine will be required to perform this procedure.

Downloaded from www.Manualslib.com manuals search engine

https://truckmanualshub.com/

Maintenance Procedures

Maintenance Schedule

The maintenance procedures have been divided into subsections that include: Commissioning, Quarterly, Annually and Programmed maintenance intervals. The maintenance inspection report has been divided into general areas of the machine that include: Drive Chassis, Booms and Platform, Functions and Controls, Engine and Turntable.

Failure to perform these procedures may result in poor performance, component damage and unsafe operating conditions. They are essential to safe operation, machine performance and service life.

Commissioning: A series of required one time maintenance procedures to be performed at 50 and 150 hour intervals.

Quarterly and Annually: A series of maintenance procedures to be performed quarterly or annually.

Programmed: A series of maintenance procedures to be performed during a Pre-Delivery Preparation or based on machine operating hours.

Maintenance Inspection Report

The maintenance inspection report contains checklists for each type of scheduled inspection.

Make copies of the *Maintenance Inspection Report* to use for each inspection. Maintain completed forms for a minimum of 4 years or in compliance with your employer, jobsite and governmental regulations and requirements.

Instruction Examples

Commissioning Example:

Commissioning	1 50	1 150
2 Engine - all models 3 PO-1	4	4

Quarterly and Annually Example:

6 Drive Chassis 1 Intervals	Q	A
2 Inspect the tires, wheels and Lug Nut Torque 3 Q-4	4	5 Ø

Programmed Example (under 1000 HRS):

Programmed Maintenance - Under 1000 HRS	Status	Enter Hours
2 Check Track Tension/Fastener Torque 3 P0-1	4	7 50
2 Engines - Deutz Under 1000 HRS 3 P0-2	4	7

Programmed Example:

Programmed Maintenance	1 Hours are in thousands					
All models	1	2	3	4	6	12
2 Engine - all models, 1000 hrs 3 P1-1	4	Ø	Ø	Ø	Ø	Ø

Instructions Legend

Use the following detailed descriptions to identify the intended use of the maintenance inspection reports.

1	Specific Interval: blank box is the interval to be completed and the ∅ marks the interval as not required.
2	The description of the procedure or checklist to be completed.
3	The procedure number or checklist to be completed.
4	Check box to indicate status of inspection.
5	Specific interval is not required for this procedure.
6	General area of the machine to complete the procedure.
7	If this box has a designated time interval: this is the specific time interval to complete the procedure or checklist. If this box is empty: the maintenance checklist will include multiple time intervals, use this box to write in the specific interval for the inspection completed.

Downloaded from www.Manualslib.com manuals search engine

https://truckmanualshub.com/

Pre-Delivery Preparation Report

Fundamentals

It is the responsibility of the owner or dealer to perform the Pre-delivery Preparation.

The Pre-delivery Preparation is performed prior to each delivery. The inspection is designed to discover if anything is apparently wrong with a machine before it is put into service.

A damaged or modified machine must never be used. If damage or any variation from factory delivered condition is discovered, the machine must be tagged and removed from service.

Repairs to the machine may only be made by a qualified service technician, according to the manufacturer's specifications.

Scheduled maintenance inspections shall be performed by qualified service technicians, according to the manufacturer's specifications and the requirements listed in the responsibilities manual.

Instructions

Use the operator's manual on your machine.

The Pre-delivery Preparation consists of completing the Pre-operation Inspection, the Maintenance items and the Function Tests.

Use this form to record the results. Place a check in the appropriate box after each part is completed. Follow the instructions in the operator's manual.

If any inspection receives an N, remove the machine from service, repair and re-inspect it. After repair, place a check in the R box.

Legend

Y = yes, acceptable
N = no, remove from service
R = repaired

Comments

Pre-delivery Preparation	Y	N	R
Pre-operation inspection completed			
Maintenance items completed			
Function tests completed			

Model

Serial number

Date

Machine owner

Inspected by (print)

Inspector signature

Inspector title

Inspector company

Genie
A TEREX BRAND

Terex South Dakota, Inc USA
500 Oak Wood Road
PO Box 1150
Watertown, SD 57201-6150
(605) 882-4000

Genie UK
The Maltings, Wharf Road
Grantham, Lincolnshire
NG31- 6BH England
(44) 1476-584333

Downloaded from www.Manualslib.com manuals search engine

https://truckmanualshub.com/

Scheduled Maintenance Inspection Report - booms

Model	Hour meter	Date
Serial number	Inspector company	Machine owner
Inspected by (print)	Inspector signature	

Inspection Type Q = quarterly or frequent inspections A = annual inspections	**Legend** Y = yes, acceptable N = no, remove from service R = repaired ∅ = not applicable	Make copies of this report to use for each inspection. Select the appropriate procedures for the type of inspection(s) to perform.

If any inspection receives an "N," tag and remove the machine from service, repair and re-inspect it. After repair, place a "R" in the box.

Drive Chassis	**Intervals**	**Q**	**A**
Inspect the Tires, Wheels and Lug Nut Torque	Q-6		
Check the Oscillate Valve Linkage (if equipped)	Q-8		
Confirm the Proper Brake Configuration	Q-20		
Extendable Axle Wear Pads (if equipped)	A-4	∅	
Check Drive Hub Oil Level and Fastener Torque	A-14	∅	
Turntable Mechanicals and Hydraulics	**Intervals**	**Q**	**A**
Visual Inspection of the Hydraulic Oil	Q-9		
Inspect the Hydraulic Filters	Q-10		
Grease the Turntable Rotation Bearing	A-1	∅	
Check Turntable Bearing Bolts	A-2	∅	
Inspect for Turntable Bearing Wear	A-3	∅	
Electrical	**Intervals**	**Q**	**A**
Inspect Electrical Contactors - DC / Bi-Energy Models	Q-4		
Battery Inspection	Q-2		
Inspect the Electrical Wiring	Q-3		
Engine	**Intervals**	**Q**	**A**
Check the Exhaust System	Q-5		
Check Generator Belts/Pulleys - Bi-Energy Models	Q-7		
Check and Adjust Engine RPM	Q-11		
Boom(s) and Platform	**Intervals**	**Q**	**A**
Jib Rotate Bearing (if equipped)	A-5	∅	
Grease the Platform Overload Mechanism	A-7	∅	
Test Platform Overload - All Models, Except ALC1000 and S-60HC Models	A-8	∅	
Test Platform Overload - (ALC1000 models)	A-9	∅	
Test Platform Overload - (S-60 HC models)	A-10	∅	
Inspect Boom Cables - All S-60, S-80 Models	A-11	∅	
Inspect Boom Cables - S-100 to S-125 Models	A-12	∅	
Inspect Boom Cables - SX-150 and SX-180	A-13	∅	

Functions and Controls	**Intervals**	**Q**	**A**
Check for Open Bulletins and Owner Registration	Q-1		
Test the Ground Control Override	Q-12		
Test Alarm Package (If Equipped)	Q-13		
Test the Emergency Power System	Q-14		
Test the Engine Idle Select Operation	Q-15		
Test Fuel Select Operation - Gas/LPG Models	Q-16		
Inspect the Calibration Decal - ALC1000 Models	Q-17		
Test the Recovery System - ALC-1000 Models	Q-18		
Test the Platform Self-leveling	Q-19		
Test the Drive Brakes	Q-21		
Test Drive Speed – Stowed Position	Q-22		
Test Drive Speed – Raised or Extended Position	Q-23		
Test the Drive Speed – Raised and Extended Position - ALC1000 Models	Q-24		
Test the Turntable Level Sensor - Z-135/70, ZX135/70, SX-150 and SX-180	Q-25		
Test the Secondary Boom Angle Sensor - Z-135/70 and ZX135/70	Q-26		
Test the Primary Boom Angle Sensor - Z-135/70 and ZX135/70	Q-27		
Test the Primary Boom Angle Sensor - SX-150 and SX-180	Q-28		
Test the Safety Envelope Limit Switches - Z-135/70, ZX135/70, SX-150 and SX-180	Q-29		
Test the Primary Boom Angle Sensor - Z-80/60	Q-30		
Test the Safety Envelope and Circuits - Z-80/60	Q-31		
Check the Safety Envelope Limit Switches and Angle Sensor - S-60X, S-60XC and S-80	Q-32		
Test the Safety Envelope and Circuits - S-100, S-105, S-120 and S-125	Q-33		
Test the Aircraft Protection System (if equipped)	Q-34		
Test the Operator Protection Alarm (if equipped)	Q-35		
Test the Bypass/Recovery Key Switch	A-6	∅	

Downloaded from www.Manualslib.com manuals search engine

https://truckmanualshub.com/

Programmed Maintenance Inspection Report - Booms

Model	Hour meter	Date
Serial number	Inspector company	Machine owner
Inspected by (print)	Inspector signature	

Programmed maintenance will be completed based on machine hours. This program includes the onetime or commissioning procedures for new products. The onetime procedures will be completed at 50 or 150 hours.	**Legend** Y = yes, acceptable N = no, remove from service R = repaired ∅ = not applicable	Make copies of this report to use for each inspection. Select the appropriate procedures for the type of inspection(s) to perform.

If any inspection receives an "N," tag and remove the machine from service, repair and re-inspect it. After repair, place a "R" in the box.

Commissioning		50	150
50 Hour Service - all models	C-1		∅
Engines - Ford/Kubota Models	C-2		∅
150 Hour Service	C-3	∅	

Programmed Maintenance - Under 1000 HRS		Status	Enter Hours
Check the Track Tension and Fastener Torque - S-60, S-65 and Z-62 Models	P0-1		50
Check the Track Tension and Fastener Torque - S-40 and S-45 Models	P0-2		50
Grease the Extendable Axles - (if equipped)	P0-3		50
Engines - Continental Under 1000 HRS	P0-4		
Engines - Cummins Under 1000 HRS	P0-5		
Engines - Deutz Under 1000 HRS	P0-6		
Engines - Ford Under 1000 HRS	P0-7		
Engines - Kubota Under 1000 HRS	P0-8		
Engines - Perkins Under 1000 HRS	P0-9		
Engines - GM .998L Under 1000 HRS	P0-10		
Engines - GM 3.0L Under 1000 HRS	P0-11		

Programmed Maintenance		Hours are in thousands					
All models	**Perform every:**	**1**	**2**	**3**	**4**	**6**	**12**
Engines - all models, 1000 Hours	P1-1		∅	∅	∅	∅	∅
Replace the Drive Hub Oil	P1-2		∅	∅	∅	∅	∅
Engines - all models, 2000 Hours	P2-1	∅		∅	∅	∅	∅
Test or Replace the Hydraulic Oil	P2-2	∅		∅	∅	∅	∅
Replace the Hydraulic Filters	P2-3	∅		∅	∅	∅	∅
Check the Free-wheel Configuration	P2-4	∅		∅	∅	∅	∅
Check the Boom Wear Pads	P2-5	∅		∅	∅	∅	∅
Check the Extendable Axle Wear Pads	P2-6	∅		∅	∅	∅	∅
Check Turntable Gear Backlash - ALC1000 Models	P2-7	∅		∅	∅	∅	∅
Grease Steer Axle Wheel Bearings 2WD Models (except Z-62/S-60/S-65)	P2-8	∅		∅	∅	∅	∅
Grease Steer Axle Wheel Bearings, 2WD Models - Z-62 / S-60 / S-65	P2-9	∅		∅	∅	∅	∅
Engines - all models, 3000 Hours	P3-1	∅	∅		∅	∅	∅
Engines - all models, 4000 Hours	P4-1	∅	∅	∅		∅	∅
Engines - all models, 6000 Hours	P6-1	∅	∅	∅	∅		∅
Engines - all models, 12000 Hours	P12-1	∅	∅	∅	∅	∅	
Replace Boom cables - S-100HD and S-120HD	P12-2	Replace every 7 years					
Replace Boom cables - S-60 Models, S-80 Models, S-100, S-105, S-120, S-125, SX-150, SX-180	P12-3	Replace every 10 years					

Downloaded from www.Manualslib.com manuals search engine

https://truckmanualshub.com/

C-1
Perform 50 Hour Service

The 50 hour maintenance procedure is a one time sequence of procedures to be performed after the first 50 hours of usage. After this interval, refer to the maintenance inspection report for continued scheduled maintenance.

1 Perform the following maintenance procedures:

All Models:

Q-6 Inspect the Tires, Wheels and Lug Nut Torque

A-1 Grease the Turntable Rotation Bearing and Rotate Gear

A-2 Check the Turntable Rotation Bearing Bolts

A-5 Check the Jib Rotator Fastener Torque (SX-150 and SX-180 models)

P1-2 Replace the Drive Hub Oil

P2-3 Replace the Hydraulic Filters

C-2
Perform Engine Maintenance - 50 Hours

The 50 hour maintenance procedure is a one time sequence of procedures to be performed after the first 50 hours of usage. After this interval, refer to the maintenance inspection report for continued scheduled maintenance.

Ford Models

- Oil, coolant, fuel, exhaust and vacuum hoses - check for leaks, damage or deterioration
- Electrical wiring - check for chafing or damage

Kubota Models

- Engine oil - replace
- Oil filter - replace

GM .998L

- Cylinder head bolts – torque (40.5 ft-lbs / 55 Nm)
- Valve clearance – check/adjust

Required maintenance procedures and additional engine information are available in the manufacturer's manuals. Refer to Specifications, *Engine Operator and Maintenance Manuals*.

Downloaded from www.Manualslib.com manuals search engine

https://truckmanualshub.com/

Commissioning Procedures

C-3
Perform 150 Hour Service

The 150 hour maintenance procedure is a one time sequence of procedures to be performed after the first 150 hours of usage. After this interval, refer to the maintenance tables for continued scheduled maintenance.

1 Perform the following maintenance procedures:

Q-9 Visual Inspection of the Hydraulic Oil

Q-10 Inspect the Hydraulic Filters

Downloaded from www.Manualslib.com manuals search engine

https://truckmanualshub.com/

Q-1
Check for Open Bulletins and Owner Registration

Genie specifications require that this procedure be performed quarterly.

Completing required bulletins is essential to safe machine operation. An important way to ensure your machine has no open bulletins is to frequently check the serial number of your Genie machine against our bulletin database. Using the links below you can view any open bulletins for your machine(s) that require mandatory and immediate work to be completed.

Note: If you are unable to access this information on our websites, please contact your local Genie representative using the contact information provided on the back cover of this manual.

1 Locate the serial number plate or label on your machine and document your Genie machine serial number (exactly as its displayed on the serial plate or label).

2 Confirm that Genie has the current machine owner information on file by contacting our warranty department at 1-800-536-1800 or use the link included in this procedure to download and complete a New Owner Registration Form.

3 Using the link provided, check for current bulletins for your machine(s).

Machines purchased in Australia:

Go to Australia Bulletins (http://genielift.com.au/contact)

1 Contact any one of the Genie Service centers around Australia to arrange for factory trained technicians to attend to your equipment needs.

Machines purchased in ASIA, North America and Latin America:

Go to ASIA, North America and Latin America Bulletins (https://www.gogenielift.com/)

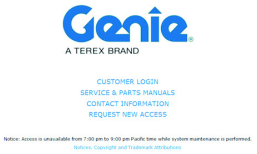

1 Select "Customer Login" to login or select "Request New Access" to create a new account.

2 At the homepage, select "Unit Configuration" and enter your machine serial number.

3 Press the "Lookup" button to view your machine configuration and to check for open bulletins.

4 Complete all required bulletins shown for your specific machine serial number.

Machines purchased in Europe, Middle East, Africa, and Russia:

Go to EMEAR Bulletins (http://www.genielift.co.uk/en/sales-and-support/bulletin-campaigns/index.htm)

1 Enter your machine serial number and press search to check for open bulletins.

2 Complete all required bulletins shown for your specific machine serial number.

Downloaded from www.Manualslib.com manuals search engine

https://truckmanualshub.com/

Quarterly Maintenance Procedures

Q-2
Battery Inspection

Genie specifications require that this procedure be performed quarterly.

Proper battery condition is essential to good engine and machine performance and operational safety. Improper fluid levels or damaged cables and connections can result in engine and component damage and hazardous conditions.

WARNING Electrocution/burn hazard. Contact with electrically charged circuits could result in death or serious injury. Remove all rings, watches and other jewelry.

WARNING Bodily injury hazard. Batteries contain acid. Avoid spilling or contacting battery acid. Neutralize battery acid spills with baking soda and water.

Note: Fully charge the batteries and allow the batteries to rest 24 hours before performing this procedure to allow the battery cells to equalize.

1 Open the side covers.

2 Be sure that the battery cable connections are free of corrosion.

Note: Adding terminal protectors and a corrosion preventative sealant will help eliminate corrosion on the battery terminals and cables.

3 Be sure that the battery retainers and cable connections are tight.

4 Be sure that the battery separator wire connections are tight (if equipped).

Models without maintenance-free or sealed batteries:

5 Put on protective clothing and eye wear.

6 Remove the battery vent caps and check the specific gravity of each battery cell with a hydrometer. Note the results.

7 Check the ambient air temperature and adjust the specific gravity reading for each cell as follows:

- Add 0.004 to the reading of each cell for every 10° F / 5.5° C above 80° F / 26.7° C.
- Subtract 0.004 from the reading of each cell for every 10° F / 5.5° C below 80° F / 26.7° C.

⊙ Result: All battery cells display an adjusted specific gravity of 1.277 or higher. The battery is fully charged. Proceed to step 11.

⊠ Result: One or more battery cells display a specific gravity of 1.276 or below. Proceed to step 8.

8 Perform an equalizing charge OR fully charge the battery(s) and allow the battery(s) to rest at least 6 hours.

9 Remove the battery vent caps and check the specific gravity of each battery cell with a hydrometer. Note the results.

Downloaded from www.Manualslib.com manuals search engine

https://truckmanualshub.com/

10 Check the ambient air temperature and adjust the specific gravity reading for each cell as follows:

- Add 0.004 to the reading of each cell for every 10° F / 5.5° C above 80° F / 26.7° C.
- Subtract 0.004 from the reading of each cell for every 10° F / 5.5° C below 80° F / 26.7° C.

⊙ Result: All battery cells display a specific gravity of 1.277 or greater. The battery is fully charged. Proceed to step 11.

⊠ Result: One or more battery cells display a specific gravity from 1.218 to 1.269. The battery is still usable, but at a lower performance. The battery will need to be recharged more often. Proceed to step 11.

⊠ Result: One or more battery cells display a specific gravity from 1.217 to 1.173. The battery is approaching the end of its life. Proceed to step 11.

⊠ Result: The difference in specific gravity readings between cells is greater than 0.1 OR the specific gravity of one or more cells is less than 1.177. Replace the battery.

11 Check the battery acid level. If needed, replenish with distilled water to 1/8 inch / 3 mm below the bottom of the battery fill tube. Do not overfill.

12 Install the vent caps and neutralize any electrolyte that may have spilled.

Downloaded from www.Manualslib.com manuals search engine

https://truckmanualshub.com/

Quarterly Maintenance Procedures

Q-3
Inspect the Electrical Wiring

Genie specifications require that this procedure be performed quarterly.

Maintaining electrical wiring in good condition is essential to safe operation and good machine performance. Failure to find and replace burnt, chafed, corroded or pinched wires could result in unsafe operating conditions and may cause component damage.

WARNING Electrocution/burn hazard. Contact with electrically charged circuits could result in death or serious injury. Remove all rings, watches and other jewelry.

1 Inspect the following areas for burnt, chafed, corroded pinched and loose wires:

Note: Inspection areas will vary by model.

- Engine wiring harness
- Engine relay block
- Hydraulic manifold wiring
- All wire harness connectors to ground control box
- Inside of the ground control box
- Turntable area
- Cable tracks
- Cables on the primary, secondary and jib booms
- Jib boom/platform rotate manifold
- Inside of the platform control box
- All wire harness connectors to platform control box
- Battery compartment
- Battery separator
- Battery charger
- Contactor
- Motor controller
- Electric motor
- Pump motor
- Limit switches
- Rotary sensors

2 Inspect for a lite, even coating of dielectric grease on all harness connections.

Note: Do not apply excessive amounts of dielectric grease to harness connectors, pins or sockets.

Note: Do not apply dielectric grease to a engine ECU/ECM or engine harness connectors.

Downloaded from www.Manualslib.com manuals search engine

https://truckmanualshub.com/

Q-4
Inspect the Electrical Contactor - DC / Bi-Energy Models

Genie specifications require that this procedure be performed quarterly.

Maintaining the electrical contactor in good condition is essential to safe machine performance. Failure to locate a worn or damaged contactor could result in unsafe operating conditions and may cause component damage.

Z-30N, Z-33, Z-34, Z-40 and Z-45 models:

1 Remove the drive chassis cover from the non-steer end of the machine and locate the electrical contactor(s).

2 Locate the electrical contactor mounted on the fuse bracket.

3 Visually inspect the contact points of the contactor for the following items:

- Excessive burns
- Excessive arcs
- Excessive pitting

WARNING Electrocution/burn hazard. Contact with electrically charged circuits could result in death or serious injury. Remove all rings, watches and other jewelry.

Note: Replace the contactor if any damage is found.

Z-60 DC / FE models:

1 Open the turntable cover and remove the fuse box cover.

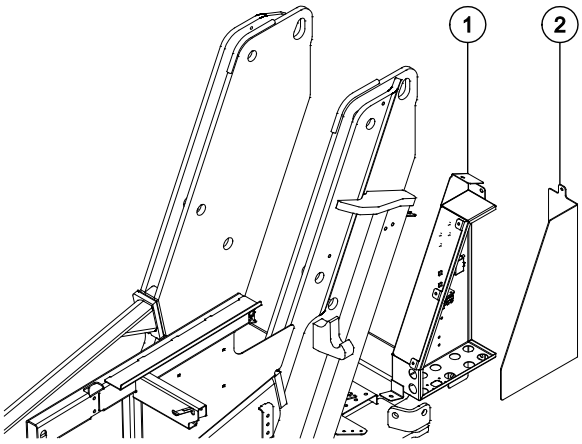

1 fuse box
2 fuse box cover

2 Visually inspect the contact points of the contactor for the following items:

- Excessive burns
- Excessive arcs
- Excessive pitting

WARNING Electrocution/burn hazard. Contact with electrically charged circuits could result in death or serious injury. Remove all rings, watches and other jewelry.

Note: Replace the contactor if any damage is found.

Downloaded from www.Manualslib.com manuals search engine

https://truckmanualshub.com/

Quarterly Maintenance Procedures

Q-5
Check the Exhaust System

Genie specifications require that this procedure be performed quarterly.

Maintaining the exhaust system is essential to good engine performance and service life. Operating the engine with a damaged or leaking exhaust system can cause component damage and unsafe operating conditions.

⚠WARNING Bodily injury hazard. Do not inspect while the engine is running. Remove the key to secure from operation.

⚠CAUTION Burn hazard. Beware of hot engine components. Contact with hot engine components may result in severe burns.

1 Be sure that all nuts and bolts are tight.

2 Inspect all welds for cracks.

3 Inspect for exhaust leaks; i.e., carbon buildup around seams and joints.

Q-6
Inspect the Tires, Wheels and Lug Nut Torque

Genie specifications require that this procedure be performed quarterly.

Maintaining the tires and wheels, including proper wheel fastener torque, is essential to safe operation and good performance. Tire and/or wheel failure could result in a machine tip-over. Component damage may also result if problems are not discovered and repaired in a timely fashion.

⚠WARNING Bodily injury hazard. An over-inflated tire can explode and could cause death or serious injury.

⚠WARNING Tip-over hazard. Do not use temporary flat tire repair products.

Note: The tires on some machines are foam-filled or solid rubber and do not need air added to them.

1 Check all tire treads and sidewalls for cuts, cracks, punctures and unusual wear.

2 Check each wheel for damage, bends and cracked welds.

3 Check each lug nut for proper torque. Refer to Specifications, *Tire and Wheel Specifications*.

4 Check the pressure in each air-filled tire.

Downloaded from www.Manualslib.com manuals search engine

https://truckmanualshub.com/

Q-7
Check the Generator Belts, Pulleys and voltage - Bi-Energy Models

Genie specifications require that this procedure be performed quarterly.

Maintaining the generator belts and the pulleys is essential to good generator performance and service life. The generator will not operate properly with loose or defective belts and continued use may cause component damage.

⚠WARNING Bodily injury hazard. Do not inspect while the engine is running. Remove the key to secure from operation.

⚠CAUTION Bodily injury hazard. Beware of hot engine components. Contact with hot engine components may cause severe burns.

Note: Charging the batteries with the engine does not fully charge the batteries. Periodically, use the AC battery charger to fully charge the batteries.

1 Be sure that all fasteners and cables on the generator are tight.

2 Remove the engine flywheel cover mounting fasteners, then remove the cover.

3 Be sure that the pulley mounting fasteners are tight and that the pulleys show no signs of damage or unusual wear.

4 Check to be sure the engine pulley and the generator pulley are aligned within specification using a straightedge.

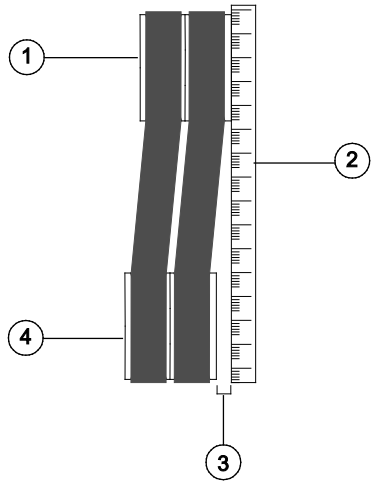

1 engine pulley
2 straightedge
3 maximum pulley offset
4 generator pulley

Note: If alignment does not meet specification, Refer to Repair Procedure in the appropriate Service and Repair Manual for your machine, *How to Install the Engine Drive Pulley* to adjust the pulley alignment.

Pulley alignment, maximum offset	0.0625 inch 1.58 mm

5 Inspect the generator belts for:

- Cracking
- Glazing
- Separation
- Breaks

6 Replace both belts if any damage is found.

Downloaded from www.Manualslib.com manuals search engine

https://truckmanualshub.com/

Quarterly Maintenance Procedures

7 Check the generator belts for proper tension. If the belt deflection is not within specification, Refer to Repair Procedure in the appropriate Service and Repair Manual for your machine, *How to Adjust the Generator Belts*.

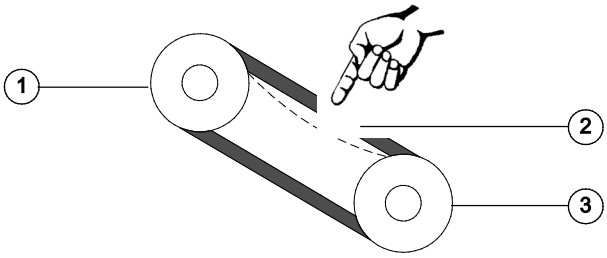

1 engine pulley
2 generator belts
3 generator pulley

Belt deflection, maximum allowable	1/4 inch 6.5 mm

8 Check the torque of the pulley retaining nut on the generator.

Generator pulley retaining nut torque	80-90 ft-lbs 108-122 Nm
Engine pulley retaining bolts	108 in-lbs 12.2 Nm

9 Connect the positive lead of a multi meter to the positive post on the back of the alternator. Connect the negative lead to the negative post. Set the meter to DC voltage.

10 Start the engine from the ground controls.

⊙ Result: The voltage does not exceed 54V DC.

Note: To adjust the voltage regulator, Refer to Repair Procedure in the appropriate Service and Repair Manual for your machine, *How to Adjust the Generator Voltage Regulator.*

Q-8
Check the Oscillate Directional Valve Linkage (if equipped)

Genie specifications require that this procedure be performed quarterly.

Note: Perform this test only on models equipped with an oscillating axle.

Proper axle oscillation is essential to safe machine operation. If the oscillate directional valve linkage is not operating correctly, the stability of the machine is compromised and it may tip over.

1 Remove the drive chassis cover and the axle covers from the non-steer end of the drive chassis.

2 Locate the oscillate directional valve inside of the non-steer axle and inspect the linkage for the following:

- Lock nut is tight against yoke
- Yoke clevis pins are installed
- Cotter pins are installed through clevis pins
- Linkage is properly attached to directional valve

Downloaded from www.Manualslib.com manuals search engine

https://truckmanualshub.com/

Q-9
Visual Inspection of the Hydraulic Oil

Genie specifications require that this procedure be performed quarterly.

Replacement or testing of the hydraulic oil is essential for good machine performance and service life. Dirty oil and a clogged suction strainer may cause the machine to perform poorly and continued use may cause component damage. Extremely dirty conditions may require oil changes to be performed more often. For hydraulic oil specifications, Refer to Specifications, *Hydraulic Specifications*.

Note: Before replacing the hydraulic oil, the oil may be tested by an oil distributor for specific levels of contamination to verify that changing the oil is necessary. Replace the oil when it fails the test. Refer to Maintenance Procedure, *Test or Replace the Hydraulic Oil*.

1 Collect a sample of hydraulic oil and place in a clear container. Visually inspect the hydraulic oil for the following:

- Color: oil should be a clear, light-honey colored
- Appearance, oil should be clear and not cloudy or visibly distorts the view through the sight glass or container
- Contains no particles, foreign objects, or other contamination
- The hydraulic oil can be inspected by smell (can smell “hot” but not “burnt”) or rubbing between fingers (should feel viscous and free of any rough feel due to particles)

⊙ If the hydraulic oil passes all of the above inspections, continue the scheduled maintenance intervals.

⊠ If the hydraulic oil fails any of the above inspections, the hydraulic oil must be tested by an oil distributor or replaced.

Note: If the hydraulic oil was not replaced at or before the 2000 hour maintenance interval, the oil must be tested every quarter by an oil distributor until the oil fails the test and is replaced. After the oil has been replaced, continue the scheduled quarterly maintenance inspection.

Note: When replacing the hydraulic oil, it is recommended that all hydraulic filters be replaced at the same time.

Downloaded from www.Manualslib.com manuals search engine

https://truckmanualshub.com/

Quarterly Maintenance Procedures

Q-10
Inspect the Hydraulic Filters

Genie specifications require that this procedure be performed quarterly.

Maintaining the hydraulic filter in good condition is essential to good system performance and safe machine operation. The filter condition indicator will show when the hydraulic flow is bypassing a clogged filter. If the filter is not frequently checked and replaced, impurities will remain in the hydraulic system and cause component damage.

Note: There are four types of hydraulic filters: tank return filter, medium pressure filter, high pressure filter and drive motor case drain filter. The quantity and type of filter(s) may vary by model.

Models with Filter Condition Indicator:

1 Start the engine from the ground controls.

2 Set the engine idle to high rpm (rabbit symbol).

3 Visually inspect the filter condition indicator.

⊙ Result: The filter condition indicator is operating in the green area.

⊠ Result: The filter condition indicator is operating in the red area. This indicates that the hydraulic filter is being bypassed and the filter should be replaced. Refer to Maintenance Procedure, *Replace the Hydraulic Filters.*

Models without Filter Condition Indicator:

Note: Models without a filter condition indicator cannot be inspected. At the required maintenance interval, replace the filters.

Hydraulic Tank Cap (if equipped):

1 Remove the breather cap from the hydraulic tank.

2 Check for proper venting.

⊙ Result: Air passes through the breather cap. Proceed to step 4.

⊠ Result: If air does not pass through the cap, clean or replace the cap. Proceed to step 3.

Note: When checking for positive tank cap venting, air should pass freely through the cap.

3 Using a mild solvent, carefully wash the cap venting system. Dry using low pressure compressed air. Repeat this procedure beginning with step 2.

4 Install the breather cap onto the hydraulic tank.

Downloaded from www.Manualslib.com manuals search engine

https://truckmanualshub.com/

Q-11
Check and Adjust the Engine RPM

Engine specifications require that this procedure be performed quarterly.

Maintaining the engine rpm at the proper setting for both low and high idle is essential to good engine performance and service life. The machine will not operate properly if the rpm is incorrect and continued use may cause component damage.

Note: These procedures do not apply to the following engine models. The engine RPM is controlled by the ECM and can only be adjusted by re-programming the ECM. If RPM or service is required, please contact Genie Product Support.

Continental Models: TME27

Ford Models: DSG-423 • MSG-425

Deutz Models: D 2.9 L4 • TD 2.9 L4

Perkins Models: 403F-11 • 404F-22 • 404F-22T • 854F-34T

Note: Some procedures may require two people.

Note: For engine RPM information refer to *Specifications, Engine Specifications* for your engine model.

Models with ALC-1000 operating system:

Note: Use the following chart to identify the description of each LCD screen control button used in this procedure.

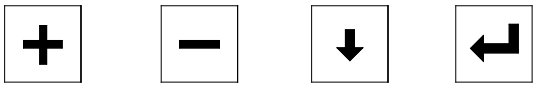

Plus Minus Previous Enter

1 Start the engine from the ground controls.

2 Press the **enter** or **previous** button on the LCD screen until engine rpm is displayed.

⊙ Result: Low idle rpm is correct. Continue with step 3.

⊠ Result: Low idle rpm is not correct. Follow the low rpm idle procedure for your engine model.

3 Press and hold the function enable/high speed button. Note the engine rpm on the display.

⊙ Result: High idle rpm is correct.

⊠ Result: High idle rpm is not correct. Follow the high rpm idle procedure for your engine model.

All other models:

1 Connect a tachometer to the engine. Start the engine from the ground controls and check the rpm.

⊙ Result: Low idle rpm is correct. Continue with step 2.

⊠ Result: Low idle rpm is not correct. Follow the low rpm idle procedure for your engine model.

2 Move the function enable toggle switch to the high idle (rabbit symbol) position and check the rpm.

⊙ Result: High idle rpm is correct.

⊠ Result: High idle rpm is not correct. Follow the high rpm idle procedure for your engine model.

Downloaded from www.Manualslib.com manuals search engine

https://truckmanualshub.com/

Quarterly Maintenance Procedures

Kubota WG-972:

Low rpm idle adjustment:

1 Loosen the core clamp screw so the cable moves freely.

2 Hold the throttle lever against the low idle adjustment screw.

3 Turn the adjustment screw clockwise to increase low rpm or counterclockwise to decrease low rpm.

4 While holding the throttle lever against the low idle adjustment screw, tighten the core clamp screw.

High rpm idle adjustment:

1 Loosen the lock nut on the high idle adjustment nut.

2 Turn the high idle adjustment nut clockwise to increase the high rpm or counterclockwise to decrease high rpm.

3 Tighten the lock nut.

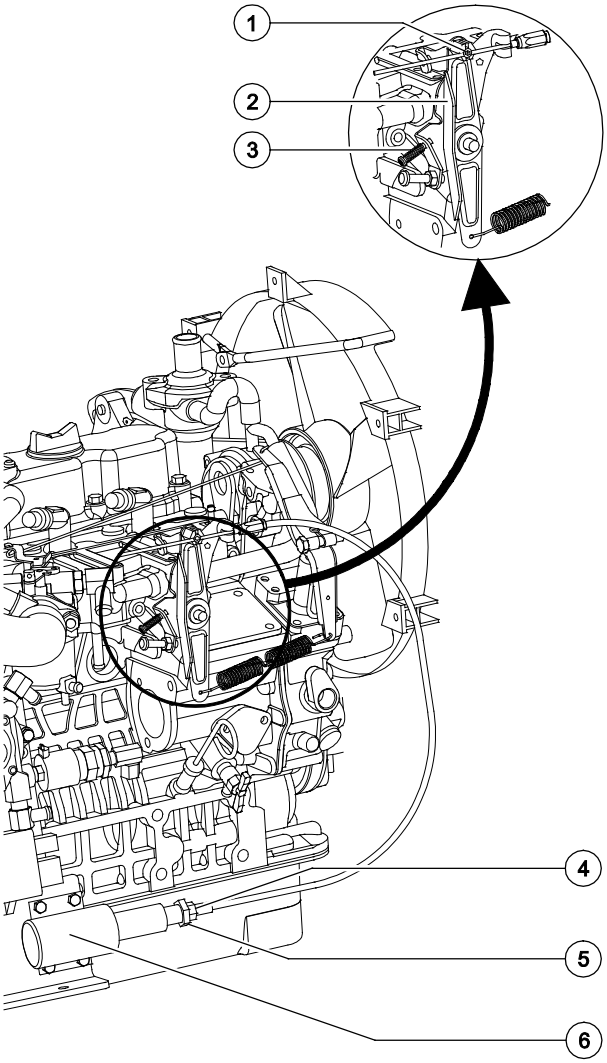

1 core clamp screw
2 throttle lever
3 low idle adjustment screw
4 lock nut
5 high idle adjustment nut
6 high idle solenoid

Downloaded from www.Manualslib.com manuals search engine

https://truckmanualshub.com/

Quarterly Maintenance Procedures

All other engine models:

Low rpm idle adjustment:

1 Loosen the lock nut on the low idle adjustment screw.

2 Turn the adjustment screw clockwise to increase low rpm or counterclockwise to decrease low rpm.

3 Tighten the lock nut.

High rpm idle adjustment:

1 Loosen the lock nut on the high idle adjustment nut.

2 Turn the high idle adjustment nut counterclockwise to increase the rpm or clockwise to decrease the rpm.

3 Tighten the lock nut.

Kubota D1105-E3B, D1105-E4B

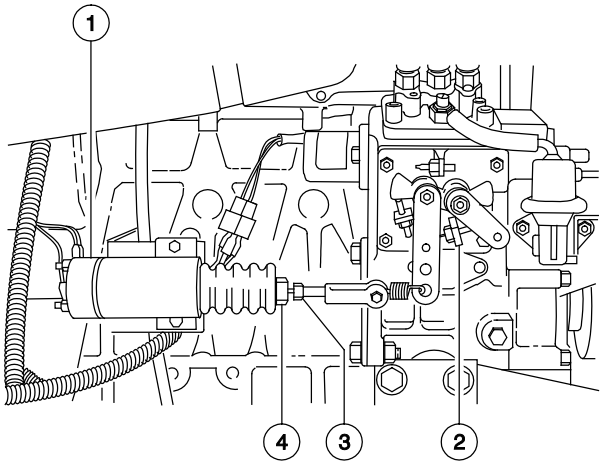

1 high idle solenoid
2 low idle adjustment screw
3 lock nut
4 high idle adjustment nut

Kubota Z482-E

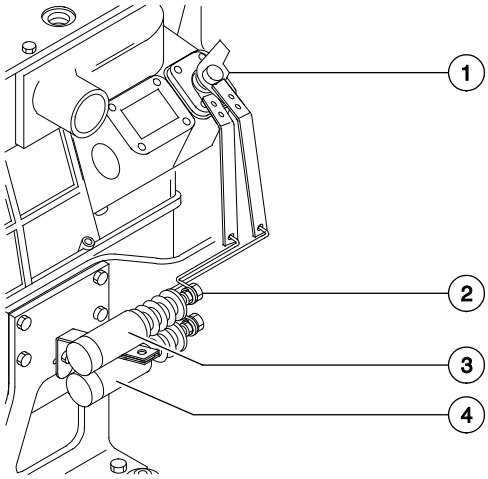

1 low idle adjustment screw (not shown)
2 high idle adjustment nut
3 high idle solenoid
4 fuel shut off solenoid

Deutz D2011L03i

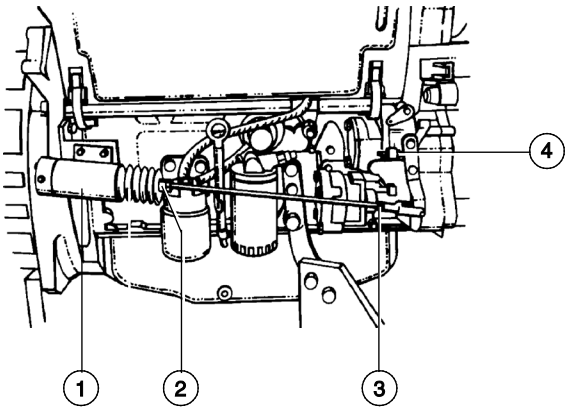

1 high idle solenoid
2 high idle adjustment nut
3 lock nut
4 low idle adjustment screw

Downloaded from www.Manualslib.com manuals search engine

https://truckmanualshub.com/

Quarterly Maintenance Procedures

Deutz TD2011L04i

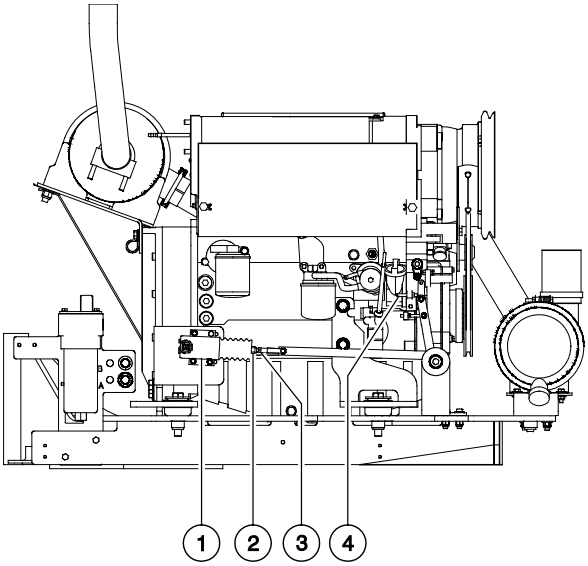

1 high idle solenoid
2 high idle adjustment nut
3 lock nut
4 low idle adjustment screw

Perkins 403D-11

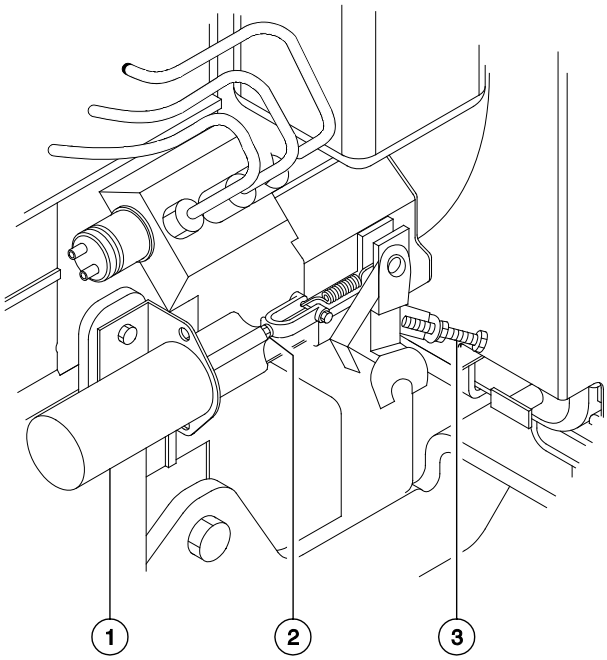

1 high idle solenoid
2 high idle adjustment nut
3 low idle adjustment screw

Downloaded from www.Manualslib.com manuals search engine

https://truckmanualshub.com/

Quarterly Maintenance Procedures

Perkins 404D-22

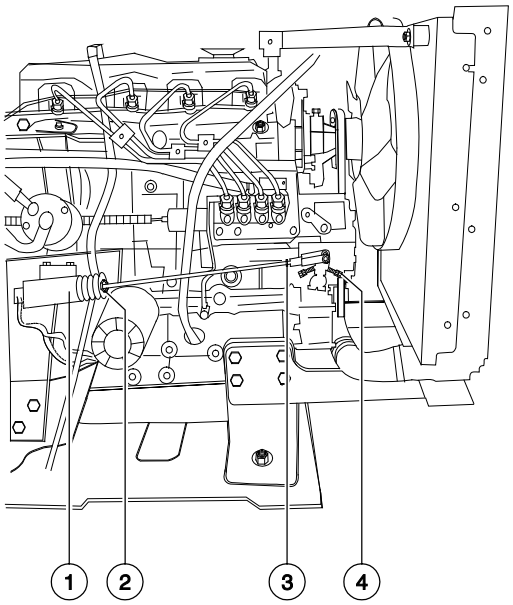

1 high idle solenoid
2 high idle adjustment nut
3 lock nut
4 low idle adjustment screw

Perkins 804D-33

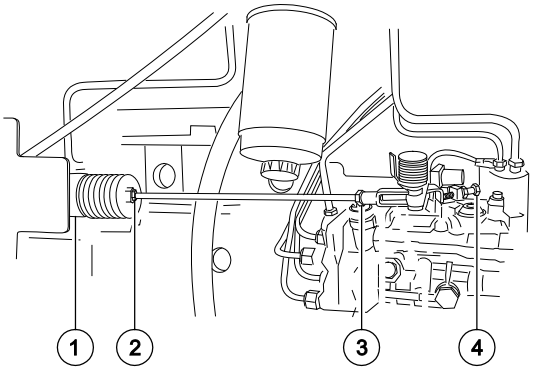

1 high idle solenoid
2 high idle adjustment nut
3 lock nut
4 low idle adjustment screw

Perkins 1104D-44T

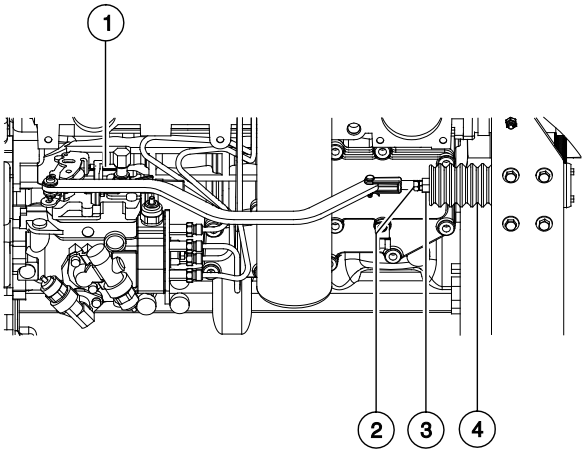

1 low idle adjustment screw
2 lock nut
3 high idle adjustment screw
4 high idle solenoid

Cummins B3.3T

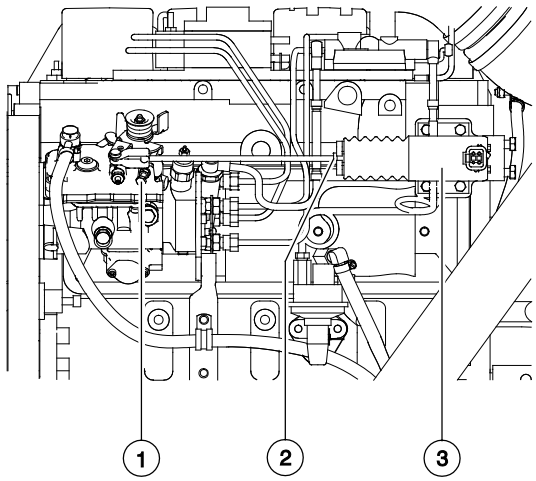

1 low idle adjustment screw
2 high idle adjustment nut
3 high idle solenoid

Downloaded from www.Manualslib.com manuals search engine

https://truckmanualshub.com/

Quarterly Maintenance Procedures

Q-12
Test the Ground Control Override

Genie specifications require that this procedure be performed quarterly.

A properly functioning ground control override is essential to safe machine operation. The ground control override function is intended to allow ground personnel to operate the machine from the ground controls whether or not the Emergency Stop button on the platform controls is in the on or off position. This function is particularly useful if the operator at the platform controls cannot return the boom to the stowed position.

1 Push in the platform red Emergency Stop button to the off position.

2 Turn the key switch to ground controls.

3 Pull out the red Emergency Stop button to the on position at the ground controls.

4 From the ground controls, operate each boom function through a partial cycle.

⦿ Result: All boom functions should operate.

5 From the platform, activate the foot switch and operate each boom function.

⦿ Result: No boom functions operate.

6 Pull out the red Emergency stop button to the on position at the platform controls.

7 Activate the foot switch and operate each boom function.

⦿ Result: No boom functions operate.

Q-13
Test the Alarm Package (if equipped)

Genie specifications require that this procedure be performed quarterly.

The alarm package includes:

- Travel alarm
- Descent alarm
- Flashing beacon

Alarms and a beacon are installed to alert operators and ground personnel of machine proximity and motion. The alarm package is installed on the turntable covers.

Note: The alarms and beacon will operate with the engine running or not running.

1 Turn the key switch to ground control and pull out the red Emergency Stop button to the on position at both ground and platform controls.

Z-80/60, S-100, S-105, S-120, S-125, S-100HD, S-120HD, SX-150, SX-180, Z-135/70 and ZX-135/70 Models:

⦿ Result: The alarm should sound twice. The flashing beacon should be on and flashing.

All remaining models:

⦿ Result: The flashing beacon should be on and flashing.

Downloaded from www.Manualslib.com manuals search engine

https://truckmanualshub.com/

All Models:

2 Activate the boom down function, hold for a moment and then release it.

⊙ Result: The descent alarm should sound when the down function is activated.

Complete this step for each boom that applies: Primary, Secondary and Jib Booms.

3 Turn the key switch to platform controls.

⊙ Result: The flashing beacon should be on and flashing.

4 Press down the foot switch. Activate the boom down function, hold for a moment and then release it.

⊙ Result: The descent alarm should sound when the down function is activated.

Complete this step for each boom that applies: Primary, Secondary and Jib Booms.

5 Press down the foot switch. Move the drive control handle off center, hold for a moment and then release it. Move the drive control handle off center in the opposite direction, hold for a moment and then release it.

⊙ Result: The travel alarm should sound when the drive control handle is moved off center in either direction.

Q-14
Test the Emergency Power System (excludes ALC-1000 Models)

Genie specifications require that this procedure be performed quarterly.

Testing the emergency power system regularly is essential to safe machine operation if the primary power source fails.

1 Turn the key switch to ground control and pull out the red Emergency Stop button to the on position at both the ground and platform controls.

2 At the ground controls, break the security tie and lift the emergency power switch cover (if equipped).

3 Simultaneously hold the emergency power switch on and operate each boom function through a partial cycle.

⊙ Result: All boom functions operate.

4 Close the emergency power switch cover and secure the cover with a security tie (if equipped).

5 Turn the key switch to platform controls.

6 At the platform controls, break the security tie and lift the emergency power switch cover (if equipped).

7 Press down on the foot switch and simultaneously hold the emergency power switch on and operate each boom function through a partial cycle.

⊙ Result: All boom functions operate.

8 Close the emergency power switch cover and secure the cover with a security tie (if equipped).

Downloaded from www.Manualslib.com manuals search engine

https://truckmanualshub.com/

Quarterly Maintenance Procedures

Q-15
Test the Engine Idle Select Operation - Engine Models

Genie specifications require that this procedure be performed quarterly.

A properly operating engine idle select function is essential to good engine performance and safe machine operation. There are two settings.

Low idle (turtle symbol) allows the operator to control individual boom functions. Drive functions will operate at low idle on most models, but at reduced performance.

High idle (rabbit symbol) should be used for normal machine operation.

S-100, S-105, S-120, S-125, S-100HD, S-120HD, SX-150, SX-180, Z-80/60, Z-135/70 and ZX-135/70 Models:

1 Turn the key switch to ground controls.

2 Pull out the red Emergency Stop button to the on position at both the ground and platform controls.

3 Start the engine from the ground controls.

4 Push and release the rpm select button until high rpm is selected (rabbit symbol).

⊙ Result: The engine should change to high idle.

5 Push and release the rpm select button until low rpm is selected (turtle symbol).

⊙ Result: The engine should return to low idle.

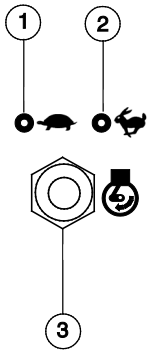

1 low idle indicator light
2 foot switch activated high idle indicator light
3 engine rpm select button

6 Turn the key switch to platform controls.

7 Push the engine rpm select switch until low idle (turtle symbol) is selected.

⊙ Result: The engine should remain at low idle.

8 Press down the foot switch.

⊙ Result: The engine should remain at low idle.

9 Push the engine idle select switch until high idle (rabbit symbol) is selected.

⊙ Result: The engine should change to high idle.

Downloaded from www.Manualslib.com manuals search engine

https://truckmanualshub.com/

All other models:

1 Pull out the red Emergency Stop button to the on position at both the ground and platform controls.

2 Start the engine from the ground controls.

3 Move the rpm select toggle switch to the high idle (rabbit symbol) position and activate function enable.

⊙ Result: The engine should change to high idle.

4 Release function enable.

⊙ Result: The engine should return to low idle.

5 Turn the key switch to platform controls.

6 Move the engine idle select switch to foot switch activated high idle (rabbit and foot switch symbol).

⊙ Result: The engine should not change to high idle.

7 Press down the foot switch.

⊙ Result: The engine should change to high idle.

8 Move the engine rpm select switch to foot switch activated low idle (turtle symbol).

⊙ Result: The engine should change to low idle.

Q-16
Test the Fuel Select Operation - Gasoline/LPG Models

Genie specifications require that this procedure be performed quarterly.

The ability to select and switch between gasoline and LPG fuels as needed is essential to safe machine operation. A fuel selection can be made when the engine is running or not. Switching malfunctions and/or the failure of the engine to start and run properly in both fuel modes and through all idle speeds can indicate fuel system problems that could develop into a hazardous situation.

Note: Perform this test after checking the gasoline and LPG fuel levels, and warming the engine to normal operating temperature.

1 At the platform controls, move the fuel select switch to gasoline and then move the engine idle control switch to foot switch activated high idle (rabbit and foot switch symbol).

2 Start the engine from the platform controls and allow it to run at low idle.

3 Press down the foot switch to allow the engine to run at high idle.

⊙ Result: The engine should start promptly and operate smoothly in low and high idle.

4 Release the foot switch and shut the engine off by pushing in the red Emergency Stop button in to the off position.

Downloaded from www.Manualslib.com manuals search engine

https://truckmanualshub.com/

Quarterly Maintenance Procedures

5 Move the fuel select switch to LPG.

6 Restart the engine and allow it to run at low idle.

7 Press down the foot switch to allow the engine to run at high idle.

⊙ Result: The engine should start promptly and operate smoothly in low and high idle.

Note: The engine may hesitate momentarily and then continue to run on the selected fuel if the fuel source is switched while the engine is running.

Q-17
Inspect the Calibration Decal - SX-150, SX-180, Z-135/70 and ZX-135/70 Models

Genie specifications require that this procedure be performed quarterly.

Maintaining the safety decal in good condition is mandatory for safe machine operation. Decals alert operators and personnel to the many possible hazards associated with using this machine. They also provide users with operation and maintenance information. An illegible decal will fail to alert personnel of a procedure or hazard and could result in unsafe operating conditions.

1 Turn the key switch to the off position and push in the red Emergency Stop button to the off position at the ground controls.

2 Open the turntable cover on the ground controls side of the machine.

3 Open the ground control box.

4 Verify the ground control panel is equipped with the required calibration decal.

⊙ Result: The control box is equipped with the required decal and is legible and in good condition.

⊠ Result: The control box is not equipped with the required decal, or is illegible or in poor condition. Remove the machine from service until the decal is replaced.

Note: Contact your authorized Genie distributor or Genie if a replacement is required.

Downloaded from www.Manualslib.com manuals search engine

https://truckmanualshub.com/

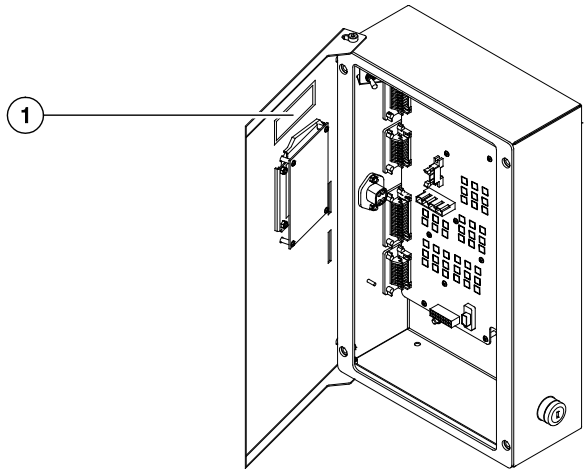

1 calibration decal

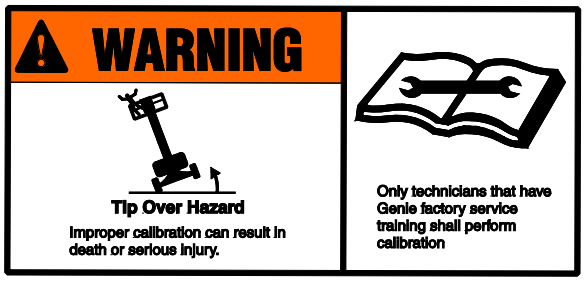

ANSI and CSA

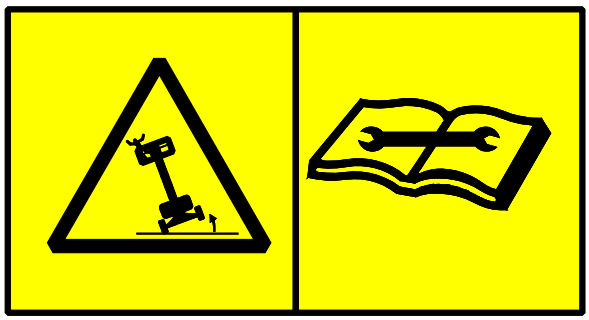

CE and AUS

Q-18
Test the Recovery System - ALC-1000 Models

Genie specifications require that this procedure be performed quarterly.

A properly functioning recovery system is essential to safe machine operation. The Recovery mode allows the platform to be lowered in the event the operator in the platform is unable to lower the platform using the platform controls, system failure or emergency situations.

This maintenance procedure applies to the following models: **S-100, S-105, S-120, S-125, S-100HD, S-120HD, SX-150, SX-180, Z-80/60, Z-135/70 and ZX-135/70.**

Note: Perform this procedure with the machine on a firm, level surface with the axles extended.

Note: Perform this procedure with all weight, tools, equipment and personnel removed from the platform.

Note: If any boom safety limit switches are faulty, the primary boom will only retract and not lower.

Downloaded from www.Manualslib.com manuals search engine

https://truckmanualshub.com/

Quarterly Maintenance Procedures

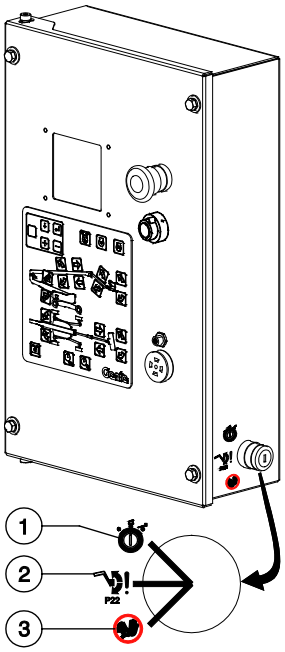

1 Run
2 Bypass
3 Recovery

1 Turn the key switch to the ground control and pull out the red Emergency Stop button to the on position. Start the engine.

Z-80, Z-135 and ZX-135 models:

2 Fully raise the secondary boom then extend it approximately 4 ft / 1.2 m.

All models:

3 Raise the primary boom approximately 15° then extend it approximately 4 ft / 1.2 m.

4 Turn the key switch to the off position to turn off the engine. Turn the key switch back to ground controls.

Note: If this procedure is performed with the main key switch in the off position an active latched safety fault will be set and will have to be cleared.

5 Remove the key from the main key switch and insert the key into the bypass/recovery key switch.

Note: The bypass/recovery key switch is located on the front panel in the lower right corner on Z-80 before serial number Z8013-3911 and Z-135 before serial number Z13512-1712.

6 Turn and hold the bypass/recovery key switch to the recovery position. The switch must be held in the recovery position.

⊙ Result: The emergency power unit will turn on and the boom will begin the following recovery sequence.

SX-150, SX-180, S-100/105/120/125, S-100/120HD:

- The primary boom will retract
- The primary boom will lower

Z-135 and ZX-135:

- The primary boom will retract
- The secondary boom will retract
- The primary boom will lower

Note: It is not necessary to fully lower the primary boom.

Z-80/60:

- The primary boom will retract
- The primary boom will lower
- The secondary boom will retract

7 Turn the bypass/recovery key switch to the run position.

8 Remove the key from the bypass/recovery key switch and insert the key into the main key switch.

9 Start the engine and return the boom to the stowed position.

Downloaded from www.Manualslib.com manuals search engine

https://truckmanualshub.com/

Q-19
Test the Platform Self-leveling

Genie specifications require that this procedure be performed quarterly.

ALC-1000 Models:

Automatic platform self-leveling throughout the full cycle of primary boom raising and lowering is essential for safe machine operation. The platform is maintained level by the communication between the platform level sensor and the turntable level sensor. If the platform becomes out of level, the computer at the platform controls will open the appropriate solenoid valve(s) at the platform manifold to maintain a level platform.

All other models:

Automatic platform self-leveling throughout the full cycle of boom raising and lowering is essential for safe machine operation. The platform is maintained at level by the platform leveling slave cylinder which operates in a closed loop hydraulic circuit with the master cylinder located at the base of the boom. A platform self-leveling failure creates an unsafe working condition for platform and ground personnel.

1 At the ground controls, lower the boom to the stowed position.

2 Activate function enable and adjust the platform to a level position.

3 Raise and lower the primary boom through a full cycle.

⊙ Result: The platform should remain level at all times to within ±5 degrees.

Q-20
Confirm the Proper Brake Configuration

Genie specifications require that this procedure be performed quarterly.

Proper brake configuration is essential to safe operation and good machine performance. Hydrostatic brakes, hydraulically and electrically released, spring-applied individual wheel brakes can appear to operate normally when they are actually not fully operational.

1 Locate the drive hub disconnect cap.

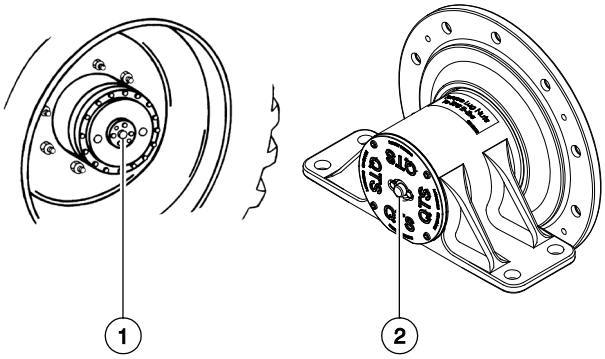

1 models with tires
2 models with TRAX

2 Check each drive hub disconnect cap to be sure it is in the engaged position.

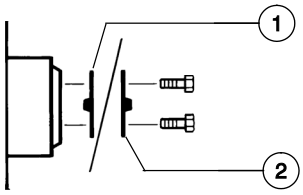

1 brake disengaged position
2 brake engaged position

Downloaded from www.Manualslib.com manuals search engine

https://truckmanualshub.com/

Quarterly Maintenance Procedures

Q-21
Test the Drive Brakes

Genie specifications require that this procedure be performed quarterly.

Proper brake action is essential to safe machine operation. The drive brake function should operate smoothly, free of hesitation, jerking and unusual noise. Hydraulically and electrically released, spring applied individual wheel brakes can appear to operate normally when they are actually not fully operational.

WARNING Collision hazard. Be sure that the machine is not in free-wheel or partial free-wheel configuration. Refer to maintenance procedure, *Confirm the Proper Brake Configuration*.

Note: Select a test area that is firm, level and free of obstructions.

1 Mark a test line on the ground for reference.

2 Choose a point on the machine (i.e., contact patch of a tire) as a visual reference for use when crossing the test line.

3 Bring the machine to top drive speed before reaching the test line. Release the drive joystick when your reference point on the machine crosses the test line.

4 Measure the distance between the test line and your machine reference point. Refer to Specifications, *Performance Specifications*.

Note: The brakes must be able to hold the machine on any slope it is able to climb.

Q-22
Test the Drive Speed – Stowed Position

Genie specifications require that this procedure be performed quarterly.

Proper drive function is essential to safe machine operation. The drive function should respond quickly and smoothly to operator control. Drive performance should also be free of hesitation, jerking and unusual noise over the entire proportionally controlled speed range.

Note: Perform this procedure with the machine on a firm, level surface that is free of obstructions.

Note: Perform this procedure with the machine in the stowed position.

1 Create start and finish lines by marking two lines on the ground 40 feet / 12.2 m apart.

2 Choose a point on the machine (i.e., contact patch of a tire) as a visual reference for use when crossing the start and finish lines.

3 Bring the machine to top drive speed before reaching the start line. Begin timing when your reference point on the machine crosses the start line.

4 Continue at full speed and note the time when the machine reference point crosses the finish line. Refer to Specifications, *Drive Speed Specifications*.

Downloaded from www.Manualslib.com manuals search engine

https://truckmanualshub.com/

Q-23
Test the Drive Speed – Raised or Extended Position

Genie specifications require that this procedure be performed quarterly.

Proper drive function is essential to safe machine operation. The drive function should respond quickly and smoothly to operator control. Drive performance should also be free of hesitation, jerking and unusual noise over the entire proportionally controlled speed range.Note: Select a test area that is firm, level and free of obstructions.

1 Create start and finish lines by marking two lines on the ground 40 feet / 12.2 m apart.

2 Press down the foot switch and raise the primary boom greater than 10 degrees above horizontal.

3 Choose a point on the machine (i.e., contact patch of a tire) as a visual reference for use when crossing the start and finish lines.

4 Bring the machine to top drive speed before reaching the start line. Begin timing when your reference point on the machine crosses the start line.

5 Continue at full speed and note the time when the machine reference point crosses the finish line. Refer to Specifications, *Drive Speed Specifications*.

6 Lower the boom to the stowed position and extend the primary boom 4 feet / 1.2 m.

7 Choose a point on the machine (i.e., contact patch of a tire) as a visual reference for use when crossing the start and finish lines.

8 Bring the machine to top drive speed before reaching the start line. Begin timing when your reference point on the machine crosses the start line.

9 Continue at full speed and note the time when the machine reference point crosses the finish line. Refer to Specifications, *Drive Speed Specifications*.

Downloaded from www.Manualslib.com manuals search engine

https://truckmanualshub.com/

Quarterly Maintenance Procedures

Q-24
Test the Drive Speed – Raised and Extended Position, ALC1000 Models

Genie specifications require that this procedure be performed quarterly.

Proper drive function is essential to safe machine operation. The drive function should respond quickly and smoothly to operator control. Drive performance should also be free of hesitation, jerking and unusual noise over the entire proportionally controlled speed range.

Note: Perform this procedure with the machine on a firm, level surface that is free of obstructions.

This maintenance procedure applies to the following models: **S-100, S-105, S-120, S-125, S-100HD, S-120HD, SX-150, SX-180, Z-80/60, Z-135/70 and ZX-135/70.**

S-100, S-105, S-120, S-125, S-100HD and S-120HD

1 Create start and finish lines by marking two lines on the ground 40 feet / 12.2 m apart.

2 Raise the boom to a horizontal position.

3 Extend the primary boom until the envelope alarm and LED are activated.

4 Choose a point on the machine (i.e., contact patch of a tire) as a visual reference for use when crossing the start and finish lines.

5 Bring the machine to top drive speed before reaching the start line. Begin timing when your reference point on the machine crosses the start line.

6 Continue at full speed and note the time when the machine reference point crosses the finish line. Refer to Specifications, *Drive Speed Specifications*.

SX-150 and SX-180

Note: This procedure will require 2 people to perform.

1 Create start and finish lines by marking two lines on the ground 40 feet / 12.2 m apart.

2 Access the MACHINE STATUS menu on the ground control box and scroll down until LENGTH SENSOR EXTENSION is displayed.

3 Raise and extend the primary boom until the displays reads at least 258 in / 656 cm. The boom will be extended approximately 120 ft / 36.6 m.

4 Choose a point on the machine (i.e., contact patch of a tire) as a visual reference for use when crossing the start and finish lines.

5 Bring the machine to top drive speed before reaching the start line. Begin timing when your reference point on the machine crosses the start line.

6 Continue at full speed and note the time when the machine reference point crosses the finish line. Refer to Specifications, *Drive Speed Specifications*.

Downloaded from www.Manualslib.com manuals search engine

https://truckmanualshub.com/

Z-80/60, Z-135/70 and ZX-135/70

1 Create start and finish lines by marking two lines on the ground 40 feet / 12.2 m apart.

2 Press down the foot switch and raise the primary boom greater than 10 degrees and the secondary boom greater than 20 degrees.

3 **Z-80/60:** Extend the primary boom 12 inches / 0.3 m.

Z-135/70 and ZX-135/70: Extend the primary boom 12 inches / 0.3 m and the jib boom 12 inches / 0.3 m.

4 Choose a point on the machine (i.e., contact patch of a tire) as a visual reference for use when crossing the start and finish lines.

5 Bring the machine to top drive speed before reaching the start line. Begin timing when your reference point on the machine crosses the start line.

6 Continue at full speed and note the time when the machine reference point crosses the finish line. Refer to Specifications, *Drive Speed Specifications*.

Q-25
Test the Turntable Level Sensor - Z-135/70, ZX-135/70, SX-150 and SX-180

Genie specifications require that this procedure be performed quarterly.

A properly functioning level sensor (SCON) is essential to safe machine operation. The ECM at the ground controls (TCON) monitors the position and angle of the machine using the signal from the level sensor. The level sensor signal is used to control the maximum working height of the primary and secondary booms.

Note: A digital level will be required to perform this procedure.

Note: A kit is available through Genie Product Support (Genie part number 58351). This kit includes a digital level with a magnetic base and cable harnesses.

Note: A properly calibrated digital level is essential to proper machine calibration. Refer to the manufactures calibration information.

Note: Use the following chart to identify the description of each LCD screen control button used in this procedure.

Plus Minus Previous Enter

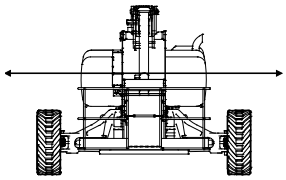

X axis (ZX-135/70 shown)

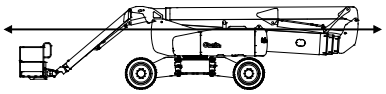

Y axis (ZX-135/70 shown)

Downloaded from www.Manualslib.com manuals search engine

https://truckmanualshub.com/

Quarterly Maintenance Procedures

Note: Perform this procedure with the booms in the fully stowed position and the axles fully extended.

1 Place the machine on a firm surface that has a side slope greater than 2° (6.5 inches / 16.5 cm) but less than 5° (16 inches / 40.6 cm).

2 Place a digital level that has been calibrated to gravity on the X axis of the turntable.

Note: Illustrations are shown from the platform end of the machine.

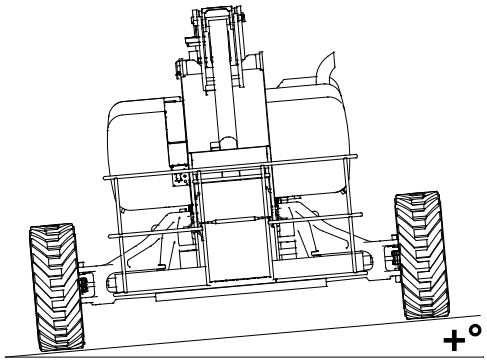

positive degree side slope (ZX-135/70 shown)

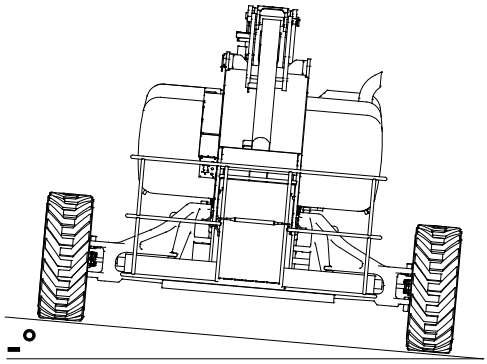

negative degree side slope (ZX-135/70 shown)

3 Turn the key switch to ground control and pull out the red Emergency Stop button to the on position at both ground and platform controls.

4 Press the **enter** or **previous** button on the LCD screen until TURNTABLE LEVEL SENSOR X-DIRECTION is displayed.

⊙ Result: The reading at the display and digital level is within ± 1° of each other.

⊠ Result: The reading at the display and digital level is greater than ± 1° of each other. The level sensor must be calibrated. Refer to Repair Procedure in the appropriate Service and Repair Manual for your machine, *How to Calibrate the Level Sensor*.

⚠ DANGER Tip-over hazard. If the X axis is not within ± 1°, failure to properly calibrate the level sensor could cause the machine to tip over resulting in death or serious injury. Refer to Repair Procedure in the appropriate Service and Repair Manual for your machine, *How to Calibrate the Level Sensor*.

5 Place the machine on a firm surface that has an uphill or downhill slope greater than 2° (6.5 inches / 16.5 cm) but less than 5° (16 inches / 40.6 cm).

6 Press the **enter** or **previous** button on the LCD screen until TURNTABLE LEVEL SENSOR Y-DIRECTION is displayed.

Downloaded from www.Manualslib.com manuals search engine

https://truckmanualshub.com/

7 Place a digital level that has been calibrated to gravity on the Y axis of the turntable.

⊙ Result: The reading at the display and digital level is within ± 1° of each other.

⊠ Result: The reading at the display and digital level is greater than ± 1° of each other. The level sensor must be calibrated. Refer to Repair Procedure in the appropriate Service and Repair Manual for your machine, *How to Calibrate the Level Sensor*.

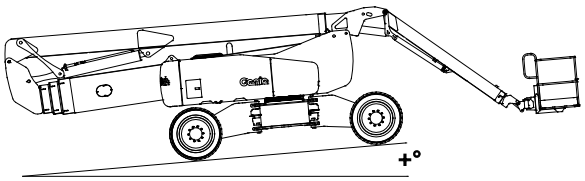

positive degree downhill slope (ZX-135/70 shown)

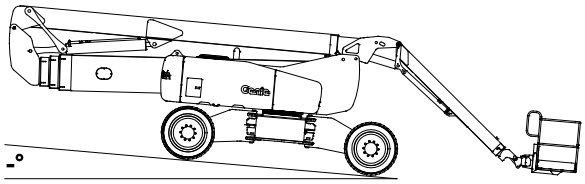

negative degree uphill slope (ZX-135/70 shown)

⚠ DANGER Tip-over hazard. If the Y axis is not within ± 1°, failure to calibrate the level sensor could cause the machine to tip over resulting in death or serious injury. Refer to Repair Procedure in the appropriate Service and Repair Manual for your machine, *How to Calibrate the Level Sensor*.

Q-26
Test the Secondary Boom Angle Sensor - Z-135/70 and ZX135/70

Genie specifications require that this procedure be performed quarterly.

A properly functioning secondary boom angle sensor is essential to safe machine operation. The ECM at the ground controls (TCON) monitors the position and angle of the secondary boom using the signal from the secondary boom angle sensor. The secondary boom angle sensor signal is used to control the ramping of the secondary boom.

Note:The turntable level sensor must be tested before starting this procedure. Refer to Maintenance Procedure, *Test the Turntable Level Sensor*.

Note: A digital level will be required to perform this procedure.

Note: A kit is available through Genie Product Support (Genie part number 58351). This kit includes a digital level with a magnetic base and cable harnesses.

Note: A properly calibrated digital level is essential to proper machine calibration. Refer to the manufactures calibration information.

Note: Use the following chart to identify the description of each LCD screen control button used in this procedure.

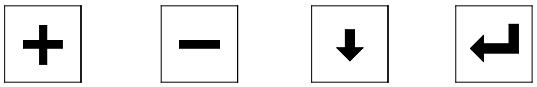

Plus Minus Previous Enter

1 Turn the key switch to ground control and pull out the red Emergency Stop button to the on position at both ground and platform controls.

2 Start the engine from the ground controls.

Downloaded from www.Manualslib.com manuals search engine

https://truckmanualshub.com/

Quarterly Maintenance Procedures

3 Press the **plus** and **minus** buttons at the same time on the LCD screen to enter the MACHINE STATUS screen. Press the **enter** or **previous** button until SECONDARY BOOM ANGLE is displayed.

4 Raise the secondary boom until it is fully elevated and it just starts to extend. Do not continue to extend the boom.

5 Zero a digital level to the Y axis of the turntable. Refer to Maintenance Procedure, *Test the Turntable Level Sensor*.

6 Place the digital level on top of the secondary boom close to the pivot end of the secondary boom.

⊙ Result: The reading at the display and digital level is equal to or greater than 75.5°.

⊠ Result: The reading at the display and digital level is less than 75.5°. The secondary boom angle sensor must be calibrated. Refer to Repair Procedure in the appropriate Service and Repair Manual for your machine, *How to Calibrate the Secondary Boom Angle Sensor*.

⚠ DANGER Tip-over hazard. If the boom is not equal to or greater than 75.5°, immediately lower the secondary boom. Failure to lower the boom could cause the machine to tip over resulting in death or serious injury. Refer to Repair Procedure in the appropriate Service and Repair Manual for your machine, *How to Calibrate the Secondary Boom Angle Sensor*.

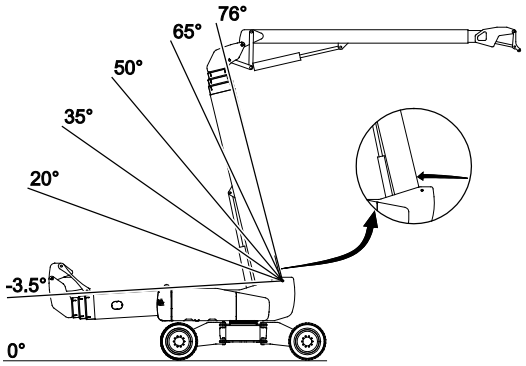

7 Lower the secondary boom to 65°.

⊙ Result: The reading at the display and digital level is within ± 2° of each other and of 65°.

⊠ Result: The reading at the display and digital level is greater than ± 2° of each other and of 65°. The secondary boom angle sensor must be calibrated. Refer to Repair Procedure in the appropriate Service and Repair Manual for your machine, *How to Calibrate the Secondary Boom Angle Sensor*.

8 Lower the secondary boom to 50°.

⊙ Result: The reading at the display and digital level is within ± 2° of each other and of 50°.

⊠ Result: The reading at the display and digital level is greater than ± 2° of each other and of 50°. The secondary boom angle sensor must be calibrated. Refer to Repair Procedure in the appropriate Service and Repair Manual for your machine, *How to Calibrate the Secondary Boom Angle Sensor*.

9 Lower the secondary boom to 35°.

⊙ Result: The reading at the display and digital level is within ± 2° of each other and of 35°.

⊠ Result: The reading at the display and digital level is greater than ± 2° of each other and of 35°. The secondary boom angle sensor must be calibrated. Refer to Repair Procedure in the appropriate Service and Repair Manual for your machine, *How to Calibrate the Secondary Boom Angle Sensor*.

Downloaded from www.Manualslib.com manuals search engine

https://truckmanualshub.com/

10 Lower the secondary boom to 20°.

⊙ Result: The reading at the display and digital level is within ± 2° of each other and of 20°.

⊠ Result: The reading at the display and digital level is greater than ± 2° of each other and of 20°. The secondary boom angle sensor must be calibrated. Refer to Repair Procedure in the appropriate Service and Repair Manual for your machine, *How to Calibrate the Secondary Boom Angle Sensor*.

11 Fully lower the secondary boom until it stops at approximately -3.5°.

⊙ Result: The reading at the display and digital level is within ± 2° of each other and of -3.5°.

⊠ Result: The reading at the display and digital level is greater than ± 2° of each other and of -3.5°. The secondary boom angle sensor must be calibrated. Refer to Repair Procedure in the appropriate Service and Repair Manual for your machine, *How to Calibrate the Secondary Boom Angle Sensor*.

Q-27
Test the Primary Boom Angle Sensor - Z-135/70 and ZX135/70

Genie specifications require that this procedure be performed quarterly.

A properly functioning primary boom angle sensor is essential to safe machine operation. The ECM at the ground controls (TCON) monitors the position and angle of the primary boom using the signal from the primary boom angle sensor. The primary boom angle sensor signal is used to control the ramping of the primary boom, limiting the speed of the primary boom to 2.3 feet / 0.7 meters per second.

Note:The turntable level sensor and secondary boom angle sensor must be tested before starting this procedure. Refer to Maintenance Procedures, *Test the Turntable Level Sensor* and *Test the Secondary Boom Angle Sensor*.

Note: A digital level will be required to perform this procedure.

Note: A kit is available through Genie Product Support (Genie part number 58351). This kit includes a digital level with a magnetic base and cable harnesses.

Note: A properly calibrated digital level is essential to proper machine calibration. Refer to the manufactures calibration information.

Downloaded from www.Manualslib.com manuals search engine

https://truckmanualshub.com/

Quarterly Maintenance Procedures

Note: Use the following chart to identify the description of each LCD screen control button used in this procedure.

Plus Minus Previous Enter

Note: Perform this procedure with the machine on a firm, level surface with the booms in the fully stowed position and the axles fully extended.

1 Turn the key switch to ground control and pull out the red Emergency Stop button to the on position at both ground and platform controls.

2 Start the engine from the ground controls.

3 Press the **enter** or **previous** button on the LCD screen until PRIMARY BOOM ANGLE TO GRAVITY DEGREES is displayed.

4 Place a digital level that has been calibrated to gravity on top of the primary boom.

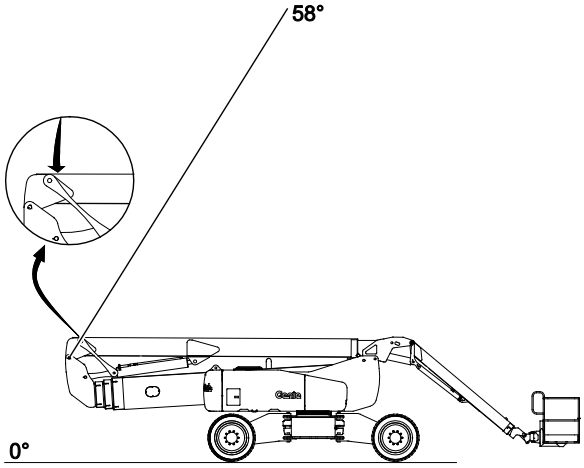

5 Raise the primary boom while watching the display screen.

6 Continue to raise the primary boom until it stops at approximately 58°.

⊙ Result: The reading at the display and digital level is within ± 2° of each other and of 58°.

⊠ Result: The reading at the display and digital level is greater than ± 2° of each other and of 58°. The primary boom angle sensor must be calibrated. Refer to Repair Procedure in the appropriate Service and Repair Manual for your machine, *How to Calibrate the Primary Boom Angle Sensor*.

DANGER Tip-over hazard. If the boom is not within ± 2° of 58°, immediately lower the primary boom. Failure to lower the boom could cause the machine to tip over resulting in death or serious injury. Refer to Repair Procedure in the appropriate Service and Repair Manual for your machine, *How to Calibrate the Primary Boom Angle Sensor*.

7 Fully raise the secondary boom. The boom is fully raised when the cylinder is fully extended and the boom stops moving.

Downloaded from www.Manualslib.com manuals search engine

https://truckmanualshub.com/

Quarterly Maintenance Procedures

8 Lower the primary boom to -50°.

⊙ Result: The reading at the display and digital level is within ± 2° of each other and of -50°.

⊠ Result: The reading at the display and digital level is greater than ± 2° of each other and of -50°. The primary boom angle sensor must be calibrated. Refer to Repair Procedure in the appropriate Service and Repair Manual for your machine, *How to Calibrate the Primary Boom Angle Sensor*.

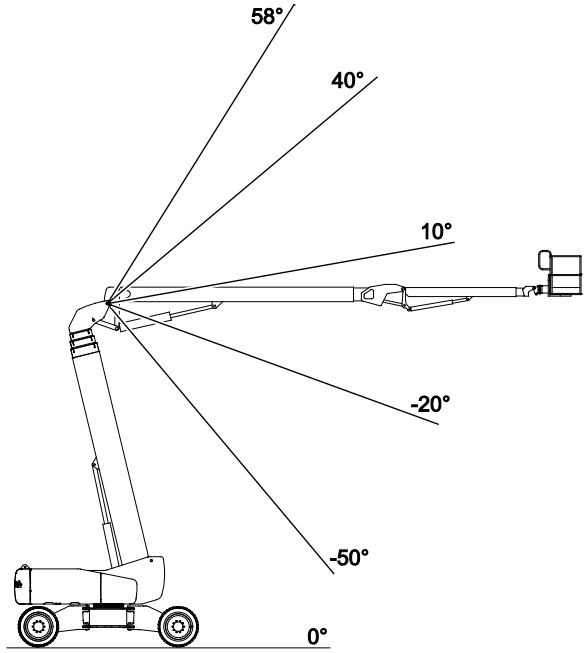

9 Raise the primary boom to -20°.

⊙ Result: The reading at the display and digital level is within ± 2° of each other and of -20°.

⊠ Result: The reading at the display and digital level is greater than ± 2° of each other and of -20°. The primary boom angle sensor must be calibrated. Refer to Repair Procedure in the appropriate Service and Repair Manual for your machine, *How to Calibrate the Primary Boom Angle Sensor*.

10 Raise the primary boom to 10°.

⊙ Result: The reading at the display and digital level is within ± 2° of each other and of 10°.

⊠ Result: The reading at the display and digital level is greater than ± 2° of each other and of 10°. The primary boom angle sensor must be calibrated. Refer to Repair Procedure in the appropriate Service and Repair Manual for your machine, *How to Calibrate the Primary Boom Angle Sensor*.

11 Raise the primary boom to 40°.

⊙ Result: The reading at the display and digital level is within ± 2° of each other and of 40°.

⊠ Result: The reading at the display and digital level is greater than ± 2° of each other and of 40°. The primary boom angle sensor must be calibrated. Refer to Repair Procedure in the appropriate Service and Repair Manual for your machine, *How to Calibrate the Primary Boom Angle Sensor*.

12 Fully raise the primary boom until it stops at approximately 58°.

⊙ Result: The reading at the display and digital level is within ± 2° of each other and of 58°.

⊠ Result: The reading at the display and digital level is greater than ± 2° of each other and of 58°. The primary boom angle sensor must be calibrated. Refer to Repair Procedure in the appropriate Service and Repair Manual for your machine, *How to Calibrate the Primary Boom Angle Sensor*.

Downloaded from www.Manualslib.com manuals search engine

https://truckmanualshub.com/

Quarterly Maintenance Procedures

Q-28
Test the Primary Boom Angle Sensor - SX-150 and SX-180

Genie specifications require that this procedure be performed quarterly.

A properly functioning primary boom angle sensor is essential to safe machine operation. The ECM at the ground controls (TCON) monitors the position and angle of the primary boom using the signal from the primary boom angle sensor. The primary boom angle sensor signal is used to control the ramping of the primary boom, limiting the speed of the primary boom to 2.3 feet / 0.7 meters per second.

Note: The turntable level sensor must be tested before starting this procedure. Refer to Maintenance Procedures, *Test the Turntable Level Sensor*.

Note: A digital level will be required to perform this procedure.

Note: A kit is available through Genie Product Support (Genie part number 58351). This kit includes a digital level with a magnetic base and cable harnesses.

Note: A properly calibrated digital level is essential to proper machine calibration. Refer to the manufactures calibration information.

Note: Use the following chart to identify the description of each LCD screen control button used in this procedure.

Plus Minus Previous Enter

Note: Perform this procedure with the machine on a firm, level surface with the booms in the fully stowed position and the axles fully extended.

1 Turn the key switch to ground control and pull out the red Emergency Stop button to the on position at both ground and platform controls.

2 Start the engine from the ground controls.

3 Press the **enter** or **previous** button on the LCD screen until PRIMARY BOOM ANGLE TO GRAVITY DEGREES is displayed.

4 Place a digital level that has been calibrated to gravity on top of the primary boom.

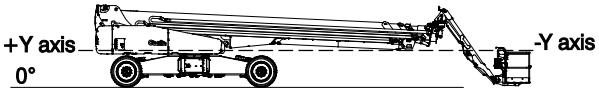

5 Raise the primary boom while watching the display screen.

6 Continue to raise the primary boom until it stops at approximately 80°.

⊙ Result: The reading at the display and digital level is within ± 2° of each other and of 80°.

⊠ Result: The reading at the display and digital level is greater than ± 2° of each other and of 80°. The primary boom angle sensor must be calibrated. Refer to Repair Procedure in the appropriate Service and Repair Manual for your machine, *How to Calibrate the Primary Boom Angle Sensor*.

DANGER Tip-over hazard. If the boom is not within ± 2° of 80°, immediately lower the primary boom. Failure to lower the boom could cause the machine to tip over resulting in death or serious injury. Refer to Repair Procedure in the appropriate Service and Repair Manual for your machine, *How to Calibrate the Primary Boom Angle Sensor*.

Downloaded from www.Manualslib.com manuals search engine

https://truckmanualshub.com/

Quarterly Maintenance Procedures

7 Lower the primary boom to 66°.

⊙ Result: The reading at the display and digital level is within ± 2° of each other and of 66°.

⊠ Result: The reading at the display and digital level is greater than ± 2° of each other and of 66°. The primary boom angle sensor must be calibrated. Refer to Repair Procedure in the appropriate Service and Repair Manual for your machine, *How to Calibrate the Primary Boom Angle Sensor*.

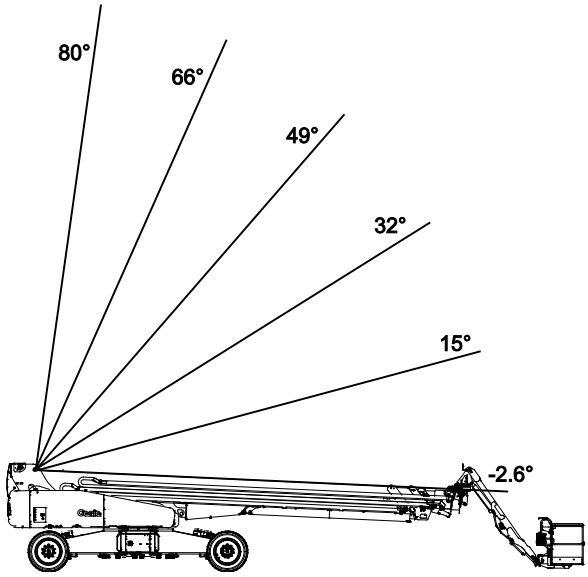

8 Lower the primary boom to 49°.

⊙ Result: The reading at the display and digital level is within ± 2° of each other and of 49°.

⊠ Result: The reading at the display and digital level is greater than ± 2° of each other and of 49°. The primary boom angle sensor must be calibrated. Refer to Repair Procedure in the appropriate Service and Repair Manual for your machine, *How to Calibrate the Primary Boom Angle Sensor*.

9 Lower the primary boom to 32°.

⊙ Result: The reading at the display and digital level is within ± 2° of each other and of 32°.

⊠ Result: The reading at the display and digital level is greater than ± 2° of each other and of 32°. The primary boom angle sensor must be calibrated. Refer to Repair Procedure in the appropriate Service and Repair Manual for your machine, *How to Calibrate the Primary Boom Angle Sensor*.

10 Lower the primary boom to 15°.

⊙ Result: The reading at the display and digital level is within ± 2° of each other and of 15°.

⊠ Result: The reading at the display and digital level is greater than ± 2° of each other and of 15°. The primary boom angle sensor must be calibrated. Refer to Repair Procedure in the appropriate Service and Repair Manual for your machine, *How to Calibrate the Primary Boom Angle Sensor*.

11 Fully lower the primary boom until it stops at approximately -2.6°.

⊙ Result: The reading at the display and digital level is within ± 2° of each other and of -2.6°.

⊠ Result: The reading at the display and digital level is greater than ± 2° of each other and of -2.6°. The primary boom angle sensor must be calibrated. Refer to Repair Procedure in the appropriate Service and Repair Manual for your machine, *How to Calibrate the Primary Boom Angle Sensor*.

Downloaded from www.Manualslib.com manuals search engine

https://truckmanualshub.com/

Quarterly Maintenance Procedures

Q-29
Test the Safety Envelope Limit Switches, Z-135/70, ZX-135/70, SX-150 and SX-180 Models

Genie specifications require that this procedure be performed quarterly.

Testing the machine envelope safety limit switches is critical to safe machine operation. If the boom is allowed to operate when a safety switch is not functioning correctly, the machine stability could be compromised and may tip over.

Note: Perform this procedure with the boom in the stowed position.

Note: Perform this procedure with the axles extended.

Note: Two people will be required to perform this procedure.

Note: Use the following chart to identify the description of each LCD screen control button used in this procedure.

Plus Minus Previous Enter

Z-135/70 and ZX-135/70 Models:

Secondary Boom #1 Retracted Safety Limit Switch, LSS1RS

1 Working at the platform end of the turntable, support and secure the lower turntable riser end cover to a suitable lifting device.

2 Remove the lower cover retaining fasteners and remove the lower cover from turntable.

WARNING Crushing hazard. The turntable riser lower cover could become unbalanced and fall when removed from the turntable if not properly supported and secured to the lifting device.

3 Support and secure the upper turntable riser end cover to a suitable lifting device.

4 Remove the upper cover retaining fasteners and remove the upper cover from turntable.

WARNING Crushing hazard. The turntable riser upper cover could become unbalanced and fall when removed from the turntable if not properly supported and secured to the lifting device.

5 Locate the secondary boom #1 retracted safety limit switch (LSS1RS) inside the secondary boom tube.

Note: The secondary boom #1 retracted safety limit switch (LSS1RS) is attached to the number 1 boom tube and can easily be identified by the blue and red tie wraps attached to the limit switch cable.

6 Start the engine from the ground controls.

7 Fully raise the secondary boom. Do not extend the boom. Turn the machine off.

8 Locate and disconnect the Deutsch connector to LSS1RS.

9 Connect the leads from a multimeter with continuity checking capability to pins 1 and 2 at the Deutsch connector of the limit switch cable.

Downloaded from www.Manualslib.com manuals search engine

https://truckmanualshub.com/

⊙ Result: The limit switch should not have continuity.

⊠ Result: The limit switch does have continuity. The limit switch is faulty and needs to be replaced.

10 Remove the multimeter leads and connect the Deutsch connector to the limit switch.

11 Start the engine from the ground controls.

12 Extend the secondary boom while visually inspecting the roller arm of the limit switch. Continue to extend the boom until the limit switch arm is released by the limit switch ramp bracket.

⊙ Result: The roller arm of the limit switch remains centered with the limit switch ramp bracket through the entire length of travel.

⊠ Result: The roller arm of the limit switch does not remain centered with the limit switch ramp bracket through the entire length of travel. Adjust or replace the limit switch ramp bracket to ensure the limit switch roller arm remains centered with the limit switch ramp bracket through the entire length of travel.

⊠ Result: The roller arm of the limit switch is damaged. Replace the limit switch roller arm or limit switch.

Note: The limit switch ramp bracket is attached to the number 4 boom tube.

13 Locate and disconnect the Deutsch connector to LSS1RS.

⊙ Result: The alarm should sound.

⊙ Result: The LCD screen should display the message SEC BOOM RETRACTED SAFETY SWITCH DISCONNECTED FAULT.

⊠ Result: The alarm doesn't sound and the LCD screen doesn't display a Fault message. The limit switch is faulty and needs to be replaced.

Note: A P30 Power Fault and a P11 Power Fault will also display as a result of this test.

14 Re-connect the Deutsch connector to LSS1RS.

⊙ Result: The LCD screen displays SEC LSS1RS FAULT.

⊠ Result: The LCD screen doesn't display the Fault message. The limit switch is faulty and needs to be replaced.

15 Turn the engine off.

16 With the key switch off, press and hold the **enter** button and turn the key switch to the on position. Release the **enter** button after five seconds and press the **(minus)(minus)(previous)(previous)** buttons in that order.

17 Press the **previous** button until clear all safety switch faults appears.

18 Select YES, then press the **enter** button.

19 Press the **previous** button until EXIT appears.

20 Select YES, then press the **enter** button.

21 Install the secondary boom end covers.

Downloaded from www.Manualslib.com manuals search engine

https://truckmanualshub.com/

Quarterly Maintenance Procedures

Z-135/70, ZX-135/70, SX-150 and SX-180 Models

Turntable Rotate Safety Limit Switch, LST1S

1 Locate the turntable rotate safety limit switch (LST1S) at the center of the turntable.

Note: The turntable rotate safety limit switch (LST1S) is located between the two operational turntable rotate limit switches. It can easily be identified by the orange and red tie wraps attached to the limit switch cable.

2 Locate and disconnect the deutsch connector to LST1S.

3 Connect the leads from a multimeter with continuity checking capability to pins 1 and 2 at the Deutsch connector of the limit switch cable.

⊙ Result: The limit switch should have continuity.

⊠ Result: The limit switch does not have continuity. The limit switch is faulty and needs to be replaced.

4 Remove the multimeter leads and connect the Deutsch connector to the limit switch.

5 Start the engine and rotate the turntable more than 15°. Turn the engine off

6 Locate and disconnect the Deutsch connector to LST1S.

7 Connect the leads from a multimeter with continuity checking capability to pins 1 and 2 at the Deutsch connector of the limit switch cable.

⊙ Result: The limit switch should not have continuity.

⊠ Result: The limit switch does have continuity. The limit switch is faulty and needs to be replaced OR the mounting position of the limit switch needs to be adjusted until it activates when the turntable is rotated more than 15°.

8 Remove the multimeter leads and connect the Deutsch connector to LST1S.

Downloaded from www.Manualslib.com manuals search engine

https://truckmanualshub.com/

Z-135/70, ZX-135/70, SX-150 and SX-180 Models

Axle Extended Safety Limit Switches, LSFA1ES and LSRA1ES

1 Start the engine from the ground controls and lower the boom to the stowed position.

2 Turn the key switch to platform controls.

3 From the platform controls, drive the machine in either direction and fully retract the axles. Turn the machine off.

4 Choose an axle extend safety limit switch to test.

5 Locate and disconnect the deutsch connector to the axle extend limit switch.

6 Connect the leads from a multimeter with continuity checking capability to pins 1 and 2 at the Deutsch connector of the limit switch cable.

⊙ Result: The limit switch should not have continuity.

⊠ Result: The limit switch does have continuity. The limit switch is faulty and needs to be replaced.

7 Remove the multimeter leads and connect the Deutsch connector to the limit switch.

8 Repeat steps 5 through 7 for the other axle extend safety limit switch.

9 Start the engine from the platform controls and fully extend the axles. Turn the machine off.

10 Choose an axle extend safety limit switch to test.

11 Locate and disconnect the Deutsch connector to the axle extend limit switch.

12 Connect the leads from a multimeter with continuity checking capability to pins 1 and 2 at the Deutsch connector of the limit switch cable.

⊙ Result: The limit switch should have continuity.

⊠ Result: The limit switch does not have continuity. The limit switch is faulty and needs to be replaced.

13 Remove the multimeter leads and connect the Deutsch connector to the limit switch.

14 Repeat steps 11 through 13 for the other axle extend safety limit switch.

Downloaded from www.Manualslib.com manuals search engine

https://truckmanualshub.com/

Quarterly Maintenance Procedures

Q-30
Test the Primary Boom Angle Sensor - Z-80/60

Genie specifications require that this procedure be performed quarterly.

A properly functioning primary boom angle sensor (PBAS) is essential to safe machine operation. The primary boom angle sensor is used to limit the angle of the primary boom relative to the angle of the secondary boom and gravity. The ECM at the ground controls (TCON) monitors the position and angle of the primary boom using the signal from PBAS. The PBAS signal is used to control the ramping of the primary boom as well as velocity control, limiting the speed of the primary boom to 1.3 feet / 0.4 meters per second.

Note: Perform this procedure with the machine on a firm, level surface.

Note: Use the following chart to identify the description of each LCD screen control button used in this procedure.

Plus Minus Previous Enter

1 Turn the key switch to ground control and pull out the red Emergency Stop button to the on position at both ground and platform controls.

2 Press the **enter** or **previous** button on the LCD screen until primary boom angle is displayed.

3 Start the engine from the ground controls.

4 Raise the primary boom. The display will begin showing a boom angle of 40°.

5 Continue raising the primary boom until the display shows 65°.

⊙ Result: The primary boom stops.

Result: The primary boom does not stop. Immediately release the function enable button and lower the boom. Calibrate the angle sensor. Refer to Repair Procedure in the appropriate Service and Repair Manual for your machine, *How to Calibrate the Primary Boom Angle Sensor*.

DANGER Tip-over hazard. If the boom does not stop at 65°, immediately release the function enable button and lower the primary boom. Failure to lower the boom could cause the machine to tip over resulting in death or serious injury.

Downloaded from www.Manualslib.com manuals search engine

https://truckmanualshub.com/

Q-31
Test the Safety Envelope and Circuits - Z-80/60

Genie specifications require that this procedure be performed quarterly.

Testing the machine safety envelope is critical to safe machine operation. If the boom is allowed to operate when a safety switch is not functioning correctly, the machine stability is compromised and may tip over. For limit switch and angle sensor information, Refer to appropriate Service and Repair Manual for your machine.

Note: Use the following chart to identify the description of each LCD screen control button used in this procedure.

Plus Minus Previous Enter

Secondary Boom #1 Angle Safety Limit Switch, LSS2AS

1 Turn the key switch to ground control and pull out the red Emergency Stop button to the on position at both ground and platform controls.

2 Start the engine from the ground controls.

3 Press the **(plus)(minus)** buttons on the LCD screen to activate status mode.

4 Press the **enter** or **previous** button on the LCD screen until secondary boom length is displayed.

5 Fully raise the secondary boom and extend the secondary boom approximately 2 feet / 61 cm.

6 Remove the fasteners from the turntable riser cover at the platform end of the secondary boom. Remove the cover.

7 Locate the Deutsch connectors from the secondary safety retract switch (LSS1RS) near the chassis at the platform end of the secondary boom. The connection will be marked with yellow zip ties on the wire assembly. Disconnect the connectors.

8 Locate the Deutsch connectors from the secondary boom #1 retract operational limit switch (LSS1RO) at the end of the secondary boom.The connection will be marked with red zip ties on the wire assembly. Disconnect the connectors.

9 Install a wire jumper between pin 1 and pin 2 of the Deutsch connector on the wire harness removed in step 8.

10 Install a second wire jumper between pin 3 and pin 4 of the Deutsch connector on the wire harness.

⊙ Result: The display should show = 0FT.

11 Press and hold the high speed function enable button and lower the secondary boom.

⊙ Result: The secondary boom should lower to 60° and the engine should stop.

⊠ Result: If the engine does not stop at 60° and the secondary boom continues to lower, the secondary boom #2 angle safety limit switch (LSS2AS) is out of adjustment or the wiring circuit is faulty and will need to be replaced or repaired. Immediately remove the machine from service until repairs are made.

DANGER Bodily injury hazard. If the secondary boom lowers to less than 60° without stopping the engine, stop immediately and raise the secondary boom above 60°. Failure to raise the secondary boom could result in death or serious injury.

Downloaded from www.Manualslib.com manuals search engine

https://truckmanualshub.com/

Quarterly Maintenance Procedures

12 Remove the key from the main key switch, insert it into the bypass/recovery key switch, turn the key to Bypass mode and raise the secondary boom above 60° using emergency power.

13 Remove the wire jumpers installed in steps 9 and 10 and connect the wire harness to LSS1RO removed in step 8.

14 Fully raise the secondary boom and extend the secondary boom approximately 1 foot / 30.5 cm.

15 Turn the bypass/recovery key switch back to run, return the key to the main key switch and start the engine from the ground controls.

16 Re-connect the Deutsch connector from the secondary safety retract switch (LSS1RS) removed in step 7.

Secondary Boom #1 Retracted Safety Limit Switch, LSS1RS

17 Press the **(plus)(minus)** buttons on the LCD screen to activate status mode.

18 Press the **enter** or **previous** button on the LCD screen until secondary boom length is displayed.

19 Raise the secondary boom until the display shows >=35 DEGREES.

20 Locate the Deutsch connectors from the secondary boom #2 angle safety limit switch (LSS2AS) on the inside of the turntable riser. The connection will be marked with purple zip ties on the wire assembly. Disconnect the connectors.

21 Locate the Deutsch connectors from the secondary boom #2 angle operational limit switch (LSS2AO) on the inside of the turntable riser. The connection will be marked with green zip ties on the wire assembly. Disconnect the connectors.

22 Install a wire jumper between pins 1 and 2 of the Deutsch connector on the wire harness removed in step 21.

⊙ Result: The display should show at 65 DEGREES.

23 Press and hold the low speed function enable button and extend the secondary boom.

⊙ Result: The secondary boom should extend no more than 12 inches / 30.5 cm and stop. The engine should stop and the display will show P9B SAFETY FAULT and P11 SAFETY FAULT.

⊠ Result: If the engine does not stop and the secondary boom continues to extend, the secondary boom #1 retracted safety limit switch (LSS1RS) is out of adjustment or the wiring circuit is faulty and will need to be replaced or repaired.

⚠ DANGER Bodily injury hazard. If the secondary boom continues to extend without stopping the engine, stop immediately and retract the secondary boom. Failure to retract the secondary boom could result in death or serious injury.

24 Remove the wire jumpers installed in step 22 and connect the wire harness to LSS2AO.

25 Re-connect the Deutsch connector from the secondary boom #2 angle safety limit switch (LSS2AS) removed in step 20.

Downloaded from www.Manualslib.com manuals search engine

https://truckmanualshub.com/

Q-32
Check the Safety Envelope Limit Switches and Angle Sensor - S-60X, S-60XC and S-80X

Genie specifications require that this procedure be performed quarterly.

Testing the safety envelope system regularly is essential to safe machine operation. Continued use of an improperly operating safety envelope could result in the system not restricting the range of motion. Machine stability could be compromised resulting in the machine tipping over.

Note: Perform this procedure with the machine on a firm, level surface with all weight, tools and equipment removed from the platform.

Note: Start this procedure with the boom fully retracted and in the stowed position.

Ground controls:

1 Turn the key switch to ground control and pull out the red Emergency Stop button to the on position.

2 Start the engine from the ground controls.

3 Turn and hold the function enable switch to the restricted maximum platform capacity and raise the primary boom until it is fully elevated.

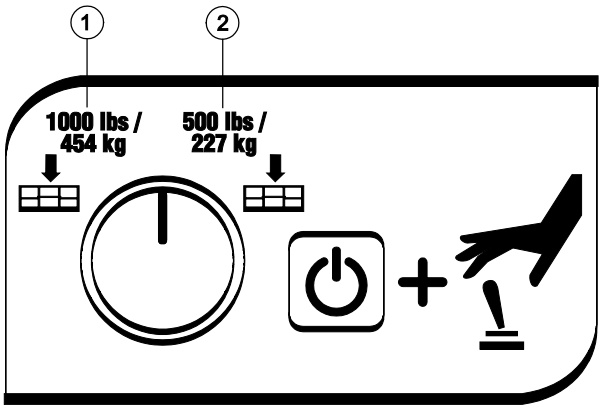

1 restricted maximum platform capacity
2 unrestricted maximum platform capacity

4 Extend the primary boom until it is fully extended.

5 Lower the primary boom until it stops.

⊙ Result: The boom will automatically stop after 10 degrees.

⊠ Result: The primary boom does not stop after 10 degrees. Check limit switches LST3O and LST3S.

6 Turn the key switch to the off position and push in the red Emergency Stop button to the off position at the ground controls.

Note: The following step can be done using a measuring tape or a digital protractor (Genie part number 58377).

Downloaded from www.Manualslib.com manuals search engine

https://truckmanualshub.com/

Quarterly Maintenance Procedures

7 **Measuring Tape:**

S-60X and S-60XC Models:

Measure the distance between the center of the pivot pins as shown. The distance should be 171 inches / 434 cm ± 2.0 inch / 5 cm.

S-80X Models:

Measure the distance between the center of the pivot pins as shown. The distance should be 201.75 inches / 512 cm ± 2.0 inch / 5 cm.

Digital Protractor:

Place the digital protractor on the turntable chassis and reset the protractor to 0°. Place the protractor on top of the primary boom. The protractor should display 58° ± 2°.

⊠ Result: The primary boom angle is not within specifications. Consult Genie Product Support.

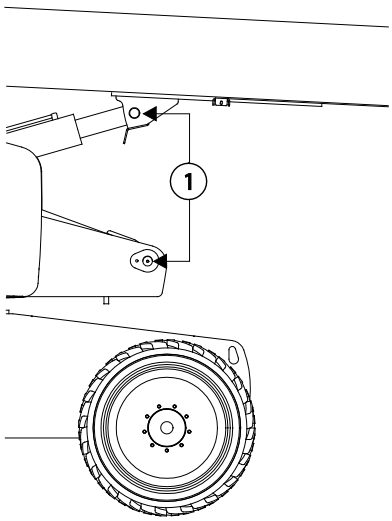

1 Measure between the centers of these pivot pins

Platform controls:

Note: Start this procedure with the boom fully retracted and in the stowed position.

1 Pull out the red Emergency Stop button to the on position and start the engine.

2 Select the restricted maximum platform capacity with the toggle switch.

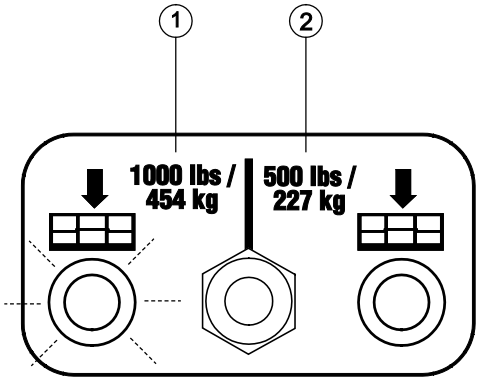

1 restricted maximum platform capacity
2 unrestricted maximum platform capacity

3 Raise the primary boom until it is fully elevated.

4 Extend the primary boom until it is fully extended.

5 Lower the primary boom until it stops.

⊙ Result: The boom will automatically stop after 10 degrees and the unrestricted platform capacity light will flash.

⊠ Result: The primary boom does not stop after 10 degrees. Calibrate the boom angle sensor. Refer to Repair Procedure in the appropriate Service and Repair Manual for your machine, *How to Calibrate the Boom angle Sensor.*

Downloaded from www.Manualslib.com manuals search engine

https://truckmanualshub.com/

6 Move the primary boom down joystick off center and retract the primary boom until the unrestricted platform capacity light stops flashing.

⊙ Result: Primary boom down should return to normal operation.

7 Lower the primary boom 5 feet / 1.5 m and activate primary boom extend.

⊙ Result: Primary boom extend will stop and the unrestricted platform capacity light will start flashing.

8 Activate primary boom extend and raise the primary boom until the unrestricted platform capacity light stops flashing.

⊙ Result: Primary boom extend should return to normal operation.

9 Return the machine to the fully stowed position.

Q-33
Test the Safety Envelope and Circuits - S-100, S-105, S-120, S-125, S-100HD and S-120HD

Genie specifications require that this procedure be performed quarterly.

Testing the machine safety envelope is critical to safe machine operation. If the boom is allowed to operate when a safety switch is not functioning correctly, the machine stability is compromised and may tip over.

Note: Use the following chart to identify the description of each LCD screen control button used in this procedure.

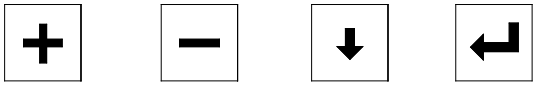

Plus Minus Previous Enter

1 Start the engine from the ground controls.

2 Raise the boom to approximately 60°.

S-100, S-105 and S-100HD Models: Proceed to step 28.

101 feet / 30.8 m Length Safety Switch, LSB2RS:

3 Extend the boom to more than 80 feet / 24.4 m.

4 Push in the red Emergency Stop button to the off position.

5 Plug in the LSB2RS test jumper between the lower limit switch and the function manifold (J2 and J4 connectors on the ground control box).

6 Pull out the red Emergency Stop button to the on position and start the engine.

Downloaded from www.Manualslib.com manuals search engine

https://truckmanualshub.com/

Quarterly Maintenance Procedures

7 Disconnect the 68° proximity switch LSB14AO and install a wire jumper between pin 3 and pin 4 of the Deutsch connector.

⊙ Result: The display will show ">68 deg" at the ground controls.

8 Activate the function enable/high RPM button and extend the boom to 101 feet / 30.8 m.

⊙ Result: The engine should stop and the boom extend function should be disabled.

⊠ Result: If the engine does not stop and the boom continues to extend, the LSB2RS switch is out of adjustment or the wiring circuit is faulty and will need to be replaced or repaired.

⚠WARNING Bodily injury hazard. If the boom extends to more than 101 feet / 30.8 m without stopping the engine, stop immediately and retract the boom until the boom is extended to less than 100 feet / 30.5 m. Failure to retract the boom could result in death or serious injury.

9 Using emergency power, retract the boom until the boom is extended to approximately 95 feet / 29 m.

10 Remove the wire jumper installed in step 7 and connect the Deutsch connector to LSB14AO.

11 Push in the red Emergency Stop button to the off position.

12 Remove the LSB2RS test jumper between the lower limit switch and the function manifold (J2 and J4 connectors on the ground control box).

13 Pull out the red Emergency Stop button to the on position and start the engine.

65° Angle Safety Switch, LSB9AS:

14 Raise the boom to the maximum angle.

15 Fully extend the boom.

16 Disconnect the 68° proximity switch LSB14AO and install a wire jumper between pin 3 and pin 4 of the Deutsch connector.

17 Activate the function enable/high RPM button and lower the boom to 65°.

⊙ Result: The engine should stop and the boom down function should be disabled.

⊠ Result: If the engine does not stop and the boom continues to lower to less than 65°, the LSB9AS switch is out of adjustment or the wiring is faulty and will need to be replaced or repaired.

⚠WARNING Bodily injury hazard. If the boom lowers to less than 65° without stopping the engine, stop immediately and raise the boom until the boom is elevated to greater than 68°. Failure to raise the boom could result in death or serious injury.

18 Measure the angle of the boom.

⊙ Result: The angle of the boom should be greater than 65°.

19 Using emergency power, raise the boom until the boom angle is greater than 68°.

20 Remove the wire jumper installed in step 16 and connect the Deutsch connector to LSB14AO.

Downloaded from www.Manualslib.com manuals search engine

https://truckmanualshub.com/

21 With the key switch off, press and hold the **enter** button and turn the key switch to the on position. Release the **enter** button after five seconds and press the **(minus)(minus)(previous)(previous)** buttons.

22 Press the **previous** button until clear all safety switch faults appears.

23 Select YES, then press the **enter** button.

24 Press the **previous** button until exit appears.

25 Select YES, then press the **enter** button.

26 Start the engine.

50° Angle Safety Switch, LSB8AS:

27 Lower the boom to approximately 60°.

28 Extend the boom to approximately 95 feet / 28.96 m.

29 Disconnect the 53° proximity switch LSB13AO and install a wire jumper between pin 3 and pin 4 of the Deutsch connector.

30 Activate the function enable/high RPM button and lower the boom to 50°.

⊙ Result: The engine should stop and the boom down function should be disabled.

⊠ Result: If the engine does not stop and the boom continues to lower to less than 50°, the LSB8AS switch is out of adjustment or the wiring circuit is faulty and will need to be replaced or repaired.

⚠WARNING Bodily injury hazard. If the boom lowers to less than 50° without stopping the engine, stop immediately and raise the boom until the boom is elevated to greater than 53°. Failure to raise the boom could result in death or serious injury.

31 Measure the angle of the boom.

⊙ Result: the angle of the boom should be greater than 50°.

32 Using emergency power, raise the boom until the boom angle is greater than 53°.

33 Remove the wire jumper installed in step 29 and connect the Deutsch connector to LSB13AO.

34 With the key switch off, press and hold the **enter** button and turn the key switch to the on position. Release the **enter** button after five seconds and press the **(minus)(minus)(previous)(previous)** buttons.

35 Press the **previous** button until clear all safety switch faults appears.

36 Select YES, then press the **enter** button.

37 Press the **previous** button until exit appears.

38 Select YES, then press the **enter** button.

39 Restart the engine, retract the boom so it is extended less than 75 feet / 22.9 m and then lower the boom sufficient to gain access to LSB3EO.

Note: LSB3EO is located on top of boom tube number 2 at the platform end of the machine.

Downloaded from www.Manualslib.com manuals search engine

https://truckmanualshub.com/

Quarterly Maintenance Procedures

76 feet / 23.2 m Length Safety Switch, LSB4ES:

40 Disconnect the 75 feet / 22.9 m safety switch LSB3EO.

41 Start the engine and activate the function enable/high RPM button and extend the boom to 76 feet / 23.2 m.

⊙ Result: The engine should stop and the boom extend function should be disabled.

⊠ Result: If the engine does not stop and the boom continues to extend, the LSB4ES switch is out of adjustment or the wiring circuit is faulty and will need to be replaced or repaired.

⚠WARNING Bodily injury hazard. If the boom extends to more than 76 feet/ 23.2 m without stopping the engine, stop immediately and retract the boom until the boom is extended to less than 75 feet / 22.9 m. Failure to retract the boom could result in death or serious injury.

42 Using emergency power, retract the boom until the boom is extended to less than 75 feet / 22.9 m.

43 Re-connect the harness plug to LSB3EO.

44 With the key switch off, press and hold the **enter** button and turn the key switch to the on position. Release the **enter** button after five seconds and press the **(minus)(minus)(previous)(previous)** buttons.

45 Press the **previous** button until clear all safety switch faults appears.

46 Select YES, then press the **enter** button.

47 Press the **previous** button until exit appears.

48 Select YES, then press the **enter** button.

Cable Break Safety Switch, LSB6S:

49 Start the engine and activate the function enable/high RPM button and retract the boom until the boom is extended to less than 2 feet / 0.6 m.

50 Remove the boom end cover from the pivot end of the boom.

51 Remove the arm from the cable break limit switch LSB6S.

Note: LSB6S is located at the end of the boom tubes at the pivot end of the boom.

52 Place the arm removed in step 51 back on the LSB6S switch 180° opposite its original position. Rotate the head of the switch 45° clockwise and activate the function enable/high RPM button and attempt to extend the boom.

⊙ Result: The boom extend function should be disabled.

⊠ Result: If the boom extends, the LSB6S switch or wiring circuit is faulty and will need to be replaced or repaired.

⚠WARNING Bodily injury hazard. If the boom extends at all, stop immediately and retract the boom until the boom is extended to less than 2 feet / 0.6 m. Failure to retract the boom could result in death or serious injury.

53 Activate the function enable/high RPM button and attempt to retract the boom.

⊙ Result: The boom retract function should be enabled.

⊙ Result: If the boom does not retract, the LSB6S switch or wiring circuit is faulty and will need to replaced or repaired.

Downloaded from www.Manualslib.com manuals search engine

https://truckmanualshub.com/

54 Allow the switch to return to its neutral position, then rotate the head of the switch 45° counter clockwise and activate the function enable/high RPM button and attempt to extend the boom.

⊙ Result: The boom extend function should be disabled.

⊠ Result: If the boom extends, the LSB6S switch or wiring circuit is faulty and will need to be replaced or repaired.

⚠WARNING Bodily injury hazard. If the boom extends at all, stop immediately and retract the boom until the boom is extended to less than 2 feet (0.6 m). Failure to retract the boom could result in death or serious injury.

55 Reinstall the arm onto LSB6S in its original position.

Axle Extend Safety Switch, LSAX1ES and LSAX2ES and

3 feet / 0.9 m Safety Switch, LSB3RS and

11° Angle Safety Switch, LSB7DS:

56 Fully retract and lower the boom to the stowed position.

57 Retract both axles approximately 1 foot / 0.3 m.

58 Remove the access cover from each axle.

59 Disconnect the square-end axle extend safety switch LSAX1ES and install a wire jumper between pin 3 and pin 4 of the deutsch connector.

60 Place a metal washer over the target area of the axle extend proximity switch LSAX1EO and place a metal washer over the target area of the axle extend proximity switch LSAX2EO to close the contacts.

⊙ Result: The axle extend indicator light at the ground and platform controls should be illuminated.

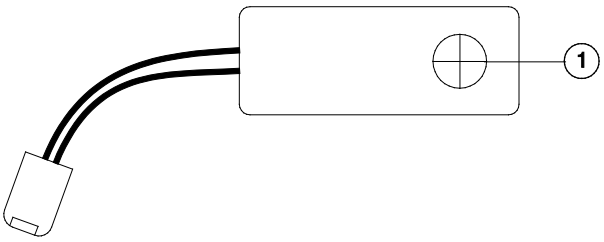

Proximity switch

1 target area

61 Activate the function enable/high RPM button and attempt to extend the boom.

⊙ Result: The boom should not extend to more than 3 feet / 0.9 m.

⊠ Result: If the boom extends to more than 3 feet / 0.9 m, the LSAX1ES or LSAX2ES switch are out of adjustment or the wiring circuit is faulty and will need to be replaced or repaired.

⚠WARNING Bodily injury hazard. If the boom extends to more than 3 feet/ 0.9 m, stop immediately and retract the boom until the boom is extended to less than 2 feet/ 0.6 m. Failure to retract the boom could result in death or serious injury.

Downloaded from www.Manualslib.com manuals search engine

https://truckmanualshub.com/

Quarterly Maintenance Procedures

62 Activate the function enable/high RPM button and attempt to raise the boom.

⊙ Result: The boom should not raise to more than 11°.

⊠ Result: If the boom continues to raise, the LSAX1ES or LSAX2ES switch are out of adjustment or the wiring circuit is faulty and will need to be replaced or repaired.

⚠WARNING Bodily injury hazard. If the boom raises to more than 11°, stop immediately and lower the boom until the boom is less than 11°. See Repair Section. Failure to retract the boom could result in death or serious injury.

63 Remove the wire jumper installed in step 59 and connect the Deutsch connector to LSAX1ES.

64 Disconnect the circle-end axle extend safety switch LSAX2ES and install a wire jumper between pin 3 and pin 4 of the Deutsch connector.

65 Activate the function enable/high RPM button and attempt to extend the boom.

⊙ Result: The boom should not extend to more than 3 feet / 0.9 m.

⊠ Result: If the boom extends to more than 3 feet / 0.9 m, the LSAX1ES or LSAX2ES switch are out of adjustment or the wiring circuit is faulty and will need to be replaced or repaired.

⚠WARNING Bodily injury hazard. If the boom extends to more than 3 feet/ 0.9 m, stop immediately and retract the boom until the boom is extended to less than 2 feet/ 0.6 m. Failure to retract the boom could result in death or serious injury.

66 Activate the function enable/high RPM button and attempt to raise the boom.

⊙ Result: The boom should not raise to more than 11°.

⊠ Result: If the boom continues to raise, the LSAX1ES or LSAX2ES switch are out of adjustment or the wiring circuit is faulty and will need to be replaced or repaired.

⚠WARNING Bodily injury hazard. If the boom raises to more than 11°, stop immediately and lower the boom until the boom is less than 11°. Failure to lower the boom could result in death or serious injury.

67 Remove the wire lumper installed in step 64 and connect the Deutsch connector to LSAX2ES.

Downloaded from www.Manualslib.com manuals search engine

https://truckmanualshub.com/

Q-34
Test the Aircraft Protection System (if equipped)

Genie specifications require that this procedure be performed quarterly.

Testing the machine aircraft protection system is critical to safe machine operation. If the boom is allowed to operate when the proximity switch is not functioning correctly it could result in machine and property damage.

Note: Start this procedure with the machine in the fully stowed position.

1 Turn the key switch to platform control and pull out the red Emergency Stop button to the on position at both the ground and platform controls.

Engine powered models:

2 Start the engine from the platform controls.

All Models:

3 Move the yellow bumper at the bottom of the platform 4 inches / 10 cm in any direction.

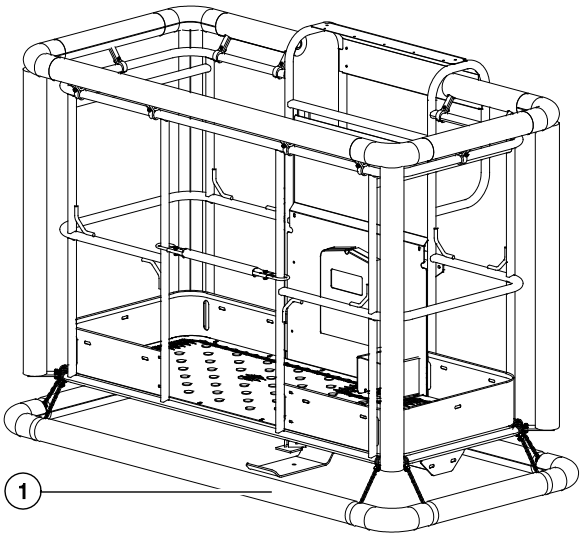

1 yellow bumper

4 Activate each function control handle or toggle switch.

⊙ Result: All boom, drive and steer functions operate.

5 Extend the primary boom approximately 3 ft / 1 m.

6 Move the yellow bumper at the bottom of the platform 4 inches / 10 cm in any direction.

7 Activate each function control handle or toggle switch.

⊙ Result: No boom, drive or steer functions operate.

Downloaded from www.Manualslib.com manuals search engine

https://truckmanualshub.com/

Quarterly Maintenance Procedures

8 Activate and hold the aircraft protection override switch.

9 Activate each function control handle or toggle switch.

⊙ Result: All boom, drive and steer functions operate.

10 Fully retract the primary boom.

11 Raise the primary boom to 5° above horizontal.

12 Move the yellow bumper at the bottom of the platform 4 inches / 10 cm in any direction.

13 Activate each function control handle or toggle switch.

⊙ Result: No boom, drive or steer functions operate.

14 Activate and hold the aircraft protection override switch.

15 Activate each function control handle or toggle switch.

⊙ Result: All boom, drive and steer functions operate.

16 Lower the primary boom to the stowed position.

Articulated (Z) Booms:

17 Raise the secondary boom approximately 3 ft / 1 m.

18 Move the yellow bumper at the bottom of the platform 4 inches / 10 cm in any direction.

19 Activate each function control handle or toggle switch.

⊙ Result: No boom, drive or steer functions operate.

20 Activate and hold the aircraft protection override switch.

21 Activate each function control handle or toggle switch.

⊙ Result: All boom, drive and steer functions operate.

22 Lower the secondary boom to the stowed position.

Downloaded from www.Manualslib.com manuals search engine

https://truckmanualshub.com/

Q-35
Test the Operator Protection Alarm (if equipped)

Genie specifications require that this procedure be performed quarterly.

Testing the operator protection alarm (OPA) is important for proper operation.

1 Turn the key switch to platform control and pull out the red Emergency Stop button to the on position at both the ground and platform controls.

Engine powered models:

2 Start the engine from the platform controls.

All Models:

3 Do not activate the foot switch. Press down on the operator protection activation strip.

⊙ Result: There is no audible alarm or flashing beacon. The engine does not shut down (engine models).

4 Activate the foot switch. Press down on the operator protection activation bar for longer than 0.4 seconds and release.

⊙ Result: An intermittent audible alarm will sound and the beacon will flash. Boom functions are disabled and the engine will shut down (engine models). After 10 seconds a continuous audible alarm will sound.

5 Press the reset button.

⊙ Result: The audible alarm and flashing beacon turn off. Engine can be started (engine models). Boom functions operate.

Downloaded from www.Manualslib.com manuals search engine

https://truckmanualshub.com/

Annual Maintenance Procedures

A-1
Grease the Turntable Rotation Bearing and Rotate Gear

Genie specifications require that this procedure be performed annually.

Perform this procedure more often if dusty conditions exist and when operating the machine in high temperature environments.

Frequent application of lubrication to the turntable bearing and rotate gear is essential to good machine performance and service life. Continued use of an improperly greased bearing and gear will result in component damage.

1 Locate the grease fitting for the turntable rotate bearing.

2 Pump grease into the turntable rotation bearing. Rotate the turntable in increments of 4 to 5 inches / 10 to 13 cm at a time and repeat this step until the entire bearing has been greased.

3 **Models with Drive Gear:** Apply grease to each tooth of the drive gear, located under the turntable.

Models with Worm Drive Gear: Grease each tooth on the outside of the turntable rotation bearing.

Models with Worm Drive Gear:

1 Locate the 2 grease fittings on top of the worm drive housing.

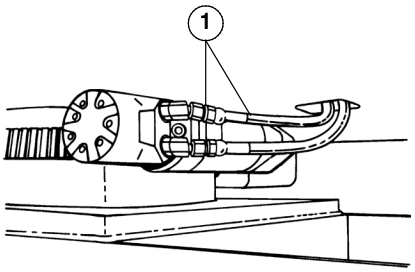

1 grease fittings

2 Pump grease into the gear until you see it coming out of the side of the gear housing.

Grease Specification
Chevron Ultra-duty grease, EP NLGI 1 (lithium based) or equivalent

Downloaded from www.Manualslib.com manuals search engine

https://truckmanualshub.com/

A-2
Check the Turntable Rotation Bearing Bolts

Genie specifications require that this procedure be performed annually.

Maintaining proper torque on the turntable bearing bolts is essential to safe machine operation. Improper bolt torque could result in an unsafe operating condition and component damage

Note: Access to the upper and lower turntable bearing bolts will vary depending on model.

1 **S Booms and Z-45/25 (J) IC, DC, Bi-Energy:** Raise the (primary) boom and place a safety chock on the lift cylinder rod. Carefully lower the boom onto the lift cylinder safety chock OR support the boom assembly with a suitable lifting device.

All other Z Booms: Raise the secondary boom and place a safety chock on the lift cylinder rods. Carefully lower the boom onto the lift cylinder safety chock OR support the boom assembly with a suitable lifting device.

WARNING Crushing hazard. Keep hands away from the cylinder and all moving parts when lowering the boom.

Note: The lift cylinder safety chock is available through Genie Parts Department.

2 Turn the key switch to the off position.

3 Using a star pattern, confirm that each turntable mounting bolt is torqued in sequence to specification.

4 Raise the boom and remove the safety chock OR lifting device.

5 Lower the boom to the stowed position.

6 Using a star pattern, confirm that each lower bearing mounting bolt is torqued in sequence to specification.

Z-60 DC/FE and Z-62	160 ft-lbs 217 Nm
Z-135 and ZX-135 (5/8-11 SHC)	180 ft-lbs 244 Nm
Z-135 and ZX-135 (3/4-10 SHC)	320 ft-lbs 434 Nm
S-40, S-45 (includes TRAX models)	160 ft-lbs 217 Nm
S-60, S-65, S-60X, S-60XC (includes TRAX models) (to serial number S6015A-29677)	180 ft-lbs 244 Nm
S-60 S-65, S-60X, S-60XC (includes TRAX models) (from serial number S6015A-29678)	160 ft-lbs 217 Nm
SX-150 and SX-180	455 ft-lbs 617 Nm
All other models	180 ft-lbs 244 Nm

Downloaded from www.Manualslib.com manuals search engine

https://truckmanualshub.com/

Annual Maintenance Procedures

A-3
Inspect for Turntable Bearing Wear

Genie specifications require that this procedure be performed annually.

Periodic inspection of turntable bearing wear is essential to safe machine operation, good machine performance and service life. Continued use of a worn turntable bearing could create an unsafe operating condition, resulting in death or serious injury and component damage.

Note: Perform this procedure with the machine on a firm, level surface with the boom in the stowed position.

1 Grease the turntable bearing. Refer to Maintenance Procedure, *Grease the Turntable Bearing and Rotate Gear*.

2 Torque the turntable bearing bolts to specification. Refer to Maintenance Procedure, *Check the Turntable Rotation Bearing Bolts*.

3 **S-Booms:** Using the ground controls, raise the boom to full height. Do not extend the boom.

Z-Booms: Using the ground controls, raise the primary and secondary booms to full height. Do not extend the primary boom.

Z-80/60, Z-135/70 and ZX-135/70: Using the ground controls, fully raise, but do not extend, the primary boom and jib. The secondary riser should remain in its stowed position.

4 Place a dial indicator between the drive chassis and the turntable at a point that is directly under, or inline with, the boom and no more than 1 inch / 2.5 cm from the bearing.

Note: To obtain an accurate measurement, place the dial indicator no more than 1 inch / 2.5 cm from the turntable rotation bearing.

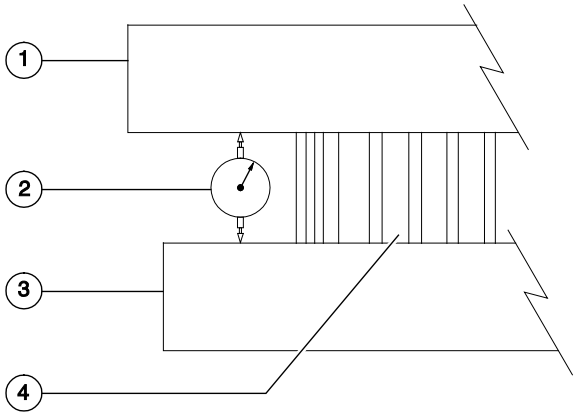

1 turntable
2 dial indicator
3 drive chassis
4 turntable rotation bearing

5 Adjust the dial indicator needle to the "zero" position.

6 **S-Booms:** Lower the boom to a horizontal position and fully extend the boom.

Z-Booms: Lower the secondary boom to the stowed position and lower the primary boom to a horizontal position. Fully extend the primary boom.

Z-80/60, Z-135/70 and ZX-135/70: Raise the secondary riser, but do not extend it. Move the primary boom and jib to horizontal and fully extend.

Downloaded from www.Manualslib.com manuals search engine

https://truckmanualshub.com/

7 Note the reading on the dial indicator.

⊙ Result: The measurement is less than specification. The bearing is good.

⊠ Result: The measurement is more than specification. The bearing is worn and needs to be replaced.

Models	Measurement
S-40 (all), S-60 (all), SX150, SX180, Z-60 DC/FE, Z-62/40	0.063 inch 1.6 mm
Z-30/20N, Z-34/22 (all), Z-40/23, Z-45/25 (all), Z-51/30	0.055 inch 1.4 mm
Z-33/18	0.043 inch 1.1 mm
S-80 (all), S-100, S-100HD, S-105, S-120, S-120HD, S-125, Z-80, Z-135/70, ZX-135/70	0.118 inch 3.0 mm

8 Move the boom(s) to the positions indicated in step 3. Visually inspect the dial indicator to be sure the needle returns to the "zero" position.

9 Remove the dial indicator and rotate the turntable 90°.

10 Repeat steps 4 through 9 until the rotation bearing has been checked in at least four equally spaced areas 90° apart.

11 Lower the boom(s) to the stowed position and turn the machine off.

12 Remove the dial indicator from the machine.

A-4
Check the Extendable Axle - S-100, S-100HD, S-105, S-120, S-120HD and S-125

Genie specifications require that this procedure be performed annually.

Maintaining the axle wear pads in good condition is essential to safe machine operation. Wear pads are placed on axle tube surfaces to provide a low friction, replaceable wear pad between moving parts. Improperly shimmed wear pads or continued use of worn out wear pads may result in component damage and unsafe operating conditions.

1 Start the engine from the platform controls and extend the axles.

2 Measure each axle wear pad.

3 Replace any wear pad if it is less than specification. If a wear pad is not less than specification, shim as necessary to obtain minimum clearance and no drag.

4 Extend and retract the axles through the entire range of motion to check for tight spots that may cause binding or scraping of the axle tubes.

Note: Always maintain squareness between the outer and inner axle tubes.

Wear pad specifications	Minimum
Extendable axle wear pad	0.4375 inch 11.11 mm

Downloaded from www.Manualslib.com manuals search engine

https://truckmanualshub.com/

Annual Maintenance Procedures

A-5
Perform Maintenance – Jib Rotate Bearing - SX-150 and SX-180

Jib rotate bearing specifications require that these procedures be performed annually.

Periodic inspection of jib bearing wear is essential to safe machine operation, good machine performance and service life. Continued use of a worn jib bearing could create an unsafe operating condition, resulting in death or serious injury and component damage.

Note: Perform this procedure with the boom fully retracted and in the stowed position and with the machine on a firm, level surface.

Check the Jib Rotator Fastener torque

1 Using a star pattern, confirm that each jib rotator outer mounting bolt is torqued in sequence to specification.

2 Repeat the procedure for the inner mounting bolts.

Jib boom rotate bearing bolts	200 ft-lbs 271 Nm

Grease the Jib Rotator

3 While rotating the jib, pump grease into each bearing lubricating grease fitting until fresh grease is visible at the outer seal.

4 While rotating the jib, pump grease into the worm gear grease fitting until fresh grease is visible at one sealing lip or bearing cap.

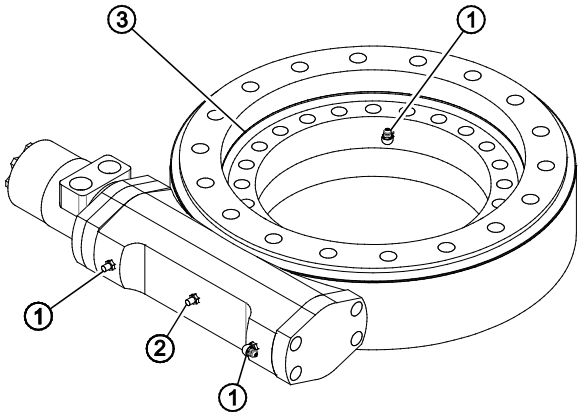

Illustration 1

1 bearing lubrication fitting
2 worm gear lubrication fitting
3 sealing lip

Jib Rotator Bearing Wear

5 Place a 750 lb / 340 kg weight in the platform and raise the jib until it is horizontal and parallel with the boom.

6 Place the dial indicator on the side of the rotator bearing housing and measure the bearing as shown in illustration 2.

7 Using a forklift, raise the platform and jib components so there is no weight on the rotator bearing.

8 Adjust the dial indicator needle to the "zero" position..

9 Lower the forklift, allowing the platform and jib assembly to settle.

Downloaded from www.Manualslib.com manuals search engine

https://truckmanualshub.com/

10 Note the reading on the dial indicator.

⊙ Result: The measurement is less than 0.063 inch / 1.6 mm. The bearing is good.

⊠ Result: The measurement is more than 0.063 inch / 1.6 mm. The bearing is worn and needs to be replaced.

11 Lower the platform and remove the weight.

12 Remove the dial indicator from the machine.

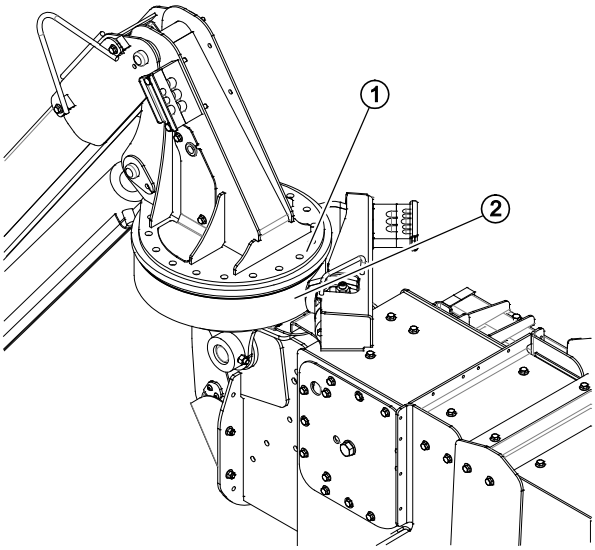

Illustration 2

1 measuring surface
2 dial indicator mounting surface

Downloaded from www.Manualslib.com manuals search engine

https://truckmanualshub.com/

Annual Maintenance Procedures

A-6
Test the Key Switches - ALC1000 Models

Genie specifications require that this procedure be performed annually.

Proper key switch action and response is essential to safe machine operation. Failure of either key switch to function properly could cause a hazardous operating situation.

This maintenance procedure applies to the following models: **S-100, S-100HD, S-105, S-120, S-120HD, S-125, SX-150, SX-180, Z-80/60, Z-135/70 and ZX-135/70.**

There are two key switches on the machine - the Main key switch and the Bypass/Recovery key switch.

The Main key switch controls machine operation from the ground or platform controls.

When the Bypass/Recovery key switch is turned to the bypass position, the primary boom can be elevated with the axles retracted (if equipped with retractable axles). This feature of the machine is especially helpful for storage purposes or when loading the machine for transport.

When the Bypass/Recovery key switch is turned and held to the recovery position, the emergency power unit turns on and starts a sequence to lower the platform. This feature of the machine is especially helpful if the operator in the platform cannot lower the boom, if the platform controls become inoperative or for returning the machine to a safe position when the safety switches have been tripped.

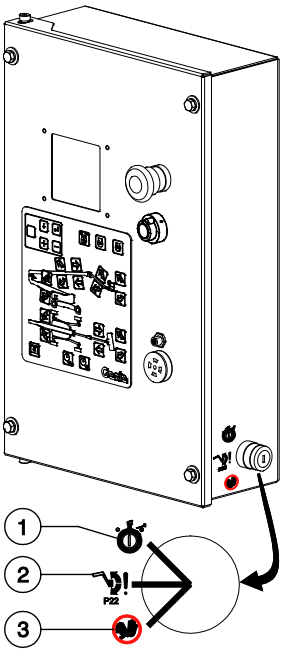

1 Run
2 Bypass
3 Recovery

Downloaded from www.Manualslib.com manuals search engine

https://truckmanualshub.com/

Annual Maintenance Procedures

Note: Perform this procedure on a firm, level surface with the machine in the stowed position.

1 Open the ground controls side turntable side cover.

2 Pull out the red Emergency Stop button to the on position at both the ground and platform controls.

3 At the ground controls, turn the bypass/recovery key switch to the run position.

4 Turn the main key switch to ground control, start the engine and then turn the key switch to platform control.

5 Check any machine function from the ground controls.

⊙ Result: The machine functions should not operate.

6 Turn the main key switch to ground control.

7 Check any machine function from the platform controls.

⊙ Result: The machine functions should not operate.

8 Turn the main key switch to the off position.

⊙ Result: The engine should stop and no functions should operate.

9 Turn the main key switch to ground control and start the engine.

10 Remove the key from the main key switch. Insert the key into the bypass/recovery key switch and turn it to the bypass position.

Note: The main key switch must remain in the ground control position.

11 Raise the primary boom 3 ft / 1 m.

⊙ Result: The primary boom should raise.

12 Remove the key from the bypass/recovery key switch and insert the key into the main key switch.

13 Turn the main key switch to the off position.

14 Remove the key from the main key switch and insert the key into the bypass/recovery key switch.

15 Turn and hold the bypass/recovery key switch to the recovery position. The switch must be held in the recovery position.

⊙ Result: The primary boom lowers to the stowed position.

16 Turn the bypass/recovery key switch to the run position.

17 Remove the key from the bypass/recovery key switch and insert the key into the main key switch.

18 Close the turntable side cover.

Downloaded from www.Manualslib.com manuals search engine

https://truckmanualshub.com/

Annual Maintenance Procedures

A-7
Grease the Platform Overload Mechanism (if equipped)

Genie specifications require that this procedure be performed annually.

Perform this procedure more often if dusty conditions exist.

Application of lubrication to the platform overload mechanism is essential to safe machine operation. Continued use of an improperly greased platform overload mechanism could result in the system not sensing an overloaded platform condition and will result in component damage.

1 Locate the grease fittings on each pivot pin of the platform overload assembly.

2 Thoroughly pump grease into each grease fitting.

Grease Specification
Chevron Ultra-duty grease, EP NLGI 1 (lithium based) or equivalent

A-8
Test the Platform Overload System - All Models, Except ALC1000 and S-60HC Models

Genie specifications require that this procedure be performed annually OR when the machine fails to lift the maximum rated load.

Testing the platform overload system regularly is essential to safe machine operation. Continued use of an improperly operating platform overload system could result in the system not sensing an overloaded platform condition. Machine stability could be compromised resulting in the machine tipping over.

This maintenance procedure applies to the following models: **S-40, S-45, S-60, S-65, S-80, S-85, Z-45/25 (J), Z-51/30J, Z-30/20N (RJ), Z-34/22, Z-34/22 (N), Z-34/22 IC, Z-40/23N (RJ), Z-45/25 (J) DC, Z-45/25 (J) Bi-Energy, Z-60 DC/FE, Z-62/40 and models equipped with the 340 kg capacity option**

Note: Perform this procedure with the boom fully retracted and in the stowed position and with the machine on a firm, level surface.

1 Remove all weight, tools, accessories and equipment from the platform.

Note: Failure to remove all weight, tools and accessories from the platform will result in an inaccurate test.

Downloaded from www.Manualslib.com manuals search engine

https://truckmanualshub.com/

2 **Engine Models:** Turn the key switch to ground control and pull out the red Emergency Stop button to the on position at both the ground and platform controls. Start the engine from the ground controls and level the platform. Do not turn the engine off.

DC Models: Turn the key switch to ground controls and pull out the red Emergency Stop button to the on position at both the ground and platform controls. Level the platform.

3 Determine the maximum platform capacity. Refer to the machine serial plate.

4 Using a suitable lifting device, place a test weight equal to that of the available capacity in one of the locations shown. Refer to Illustration 1.

⊙ Result: The platform overload indicator lights should be off at both the ground and platform controls, the alarm should not sound and the engine should continue to run.

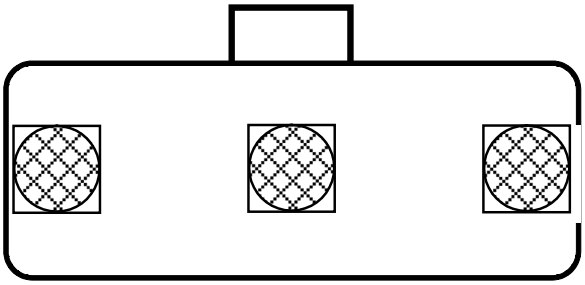

illustration 1

5 Carefully move the test weights to each remaining location on the platform. Refer to Illustration 1.

⊙ **Engine Models:** Result: The platform overload indicator lights should be off at both the ground and platform controls, the alarm should not sound and the engine should continue to run.

⊙ **DC Models:** Result: The platform overload indicator lights should be off at both the ground and platform controls and the alarm should not sound.

6 Add additional weight to the platform that is equal to, but does not exceed 15% of the maximum rated load. Secure the additional weight. Refer to the machine serial plate.

⊙ **Engine Models:** Result: The platform overload indicator lights should be flashing at both the ground and platform controls, the alarm should sound and the engine should turn off.

⊙ **DC Models:** Result: The platform overload indicator lights should be flashing at both the ground and platform controls and the alarm should sound.

Note: There may be a 2 second delay before the overload indicator lights flash and the alarm sounds.

7 Carefully move the test weights to each remaining location on the platform. Refer to Illustration 1.

⊙ **Engine Models:** Result: The platform overload indicator lights should be flashing at both the ground and platform controls, the alarm should sound and the engine should not start and run.

⊙ **DC Models:** Result: The platform overload indicator lights should be flashing at both the ground and platform controls and the alarm should sound.

Note: There may be a 2 second delay before the overload indicator lights flash and the alarm sounds.

Downloaded from www.Manualslib.com manuals search engine

https://truckmanualshub.com/

Annual Maintenance Procedures

8 Using emergency power, test all machine functions from the ground controls.

⊙ Result: All ground control functions should operate normally.

9 Using emergency power, test all machine functions from the platform controls.

⊙ Result: All platform control functions should operate normally.

10 Using a suitable lifting device, lift the additional test weight from the platform.

⊙ Result: The platform overload indicator lights should turn off at both the ground and platform controls and the alarm should not sound.

Note: There may be an 2 second delay before the overload indicator lights and alarm turn off.

11 **Engine Models:** Start the engine and test all machine functions from the ground controls.

DC Models: Test all machine functions from the ground controls.

⊙ Result: All ground control functions should operate normally.

12 Using a suitable lifting device, remove all test weights from the platform.

A-9
Test the Platform Overload System - ALC1000 Models

Genie specifications require that this procedure be performed annually OR when the machine fails to lift the maximum rated load.

Testing the platform overload system regularly is essential to safe machine operation. Continued use of an improperly operating platform overload system could result in the system not sensing an overloaded platform condition. Machine stability could be compromised resulting in the machine tipping over.

This maintenance procedure applies to the following models: **S-100, S-105, S-120, S-125, S-100HD, S-120HD, SX-150, SX-180, Z-80/60, Z-135/70 and ZX-135/70.**

Note: Perform this procedure with the boom fully retracted and in the stowed position and with the machine on a firm, level surface.

1 Remove all weight, tools, accessories and equipment from the platform.

Note: Failure to remove all weight, tools and accessories from the platform will result in an inaccurate test.

2 Turn the key switch to ground control and pull out the red Emergency Stop button to the on position at both the ground and platform controls. Start the engine from the ground controls and level the platform. Do not turn the engine off.

3 Determine the maximum platform capacity. Refer to the machine serial plate.

Downloaded from www.Manualslib.com manuals search engine

https://truckmanualshub.com/

4 Using a suitable lifting device, place a test weight equal to that of the available capacity in one of the locations shown. Refer to Illustration 1.

⊙ Result: The platform overload indicator light should be off at platform controls and there should be no error message displayed at the ground control LCD screen. The alarm should not sound and the engine should continue to run.

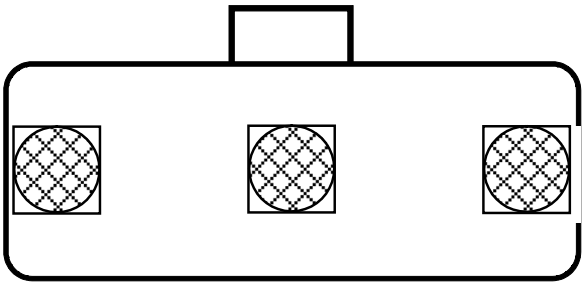

illustration 1

5 Carefully move the test weights to each remaining location on the platform. Refer to Illustration 1.

⊙ Result: The platform overload indicator light should be off at platform controls and there should be no error message displayed at the ground control LCD screen. The alarm should not sound and the engine should continue to run.

6 Add additional weight to the platform that is equal to, but does not exceed 15% of the maximum rated load. Secure the additional weight. Refer to the machine serial plate.

⊙ Result: The platform overload indicator light is on at the platform and PLATFORM OVERLOAD is displayed at the ground control LCD screen. The alarm is sounding and the engine should not start and run.

Note: There may be a 2 second delay before the overload indicator lights flash and the alarm sounds.

7 Carefully move the test weights to each remaining location on the platform. Refer to Illustration 1.

⊙ Result: The platform overload indicator light is on at the platform and PLATFORM OVERLOAD is displayed at the ground control LCD screen. The alarm is sounding and the engine should not start and run.

Note: There may be a 2 second delay before the overload indicator lights flash and the alarm sounds.

8 Using emergency power, test all machine functions from the ground controls.

⊙ Result: All ground control functions should not operate.

Note: Z-135 models before serial number 471 and with software revision 1.00 will not function using the auxiliary pump.

Note: Z-80 and Z-135 models, all functions should operate except for primary boom extend.

9 Using a suitable lifting device, lift the additional test weight from the platform.

⊙ Result: The platform overload indicator light should turn off at platform controls, there should be no error message displayed at the ground control LCD screen and the alarm should not sound.

Note: There may be an 2 second delay before the overload indicator lights and alarm turn off.

10 Start the engine and test all machine functions from the ground controls.

⊙ Result: All ground control functions should operate normally.

11 Using a suitable lifting device, remove all test weights from the platform.

Downloaded from www.Manualslib.com manuals search engine

https://truckmanualshub.com/

Annual Maintenance Procedures

A-10
Test the Platform Load Sense System - S-60 HC

Genie specifications require that this procedure be performed annually OR when the machine fails to lift the maximum rated load.

Testing the platform overload system regularly is essential to safe machine operation. Continued use of an improperly operating platform overload system could result in the system not sensing an overloaded platform condition. Machine stability could be compromised resulting in the machine tipping over.

Note: Be sure that no load sense system faults exist prior to performing this procedure.

Note: On a properly functioning machine, the LEDs on both control modules, located next to the ground control box, should be off.

1 Remove all weight, tools, accessories and equipment from the platform.

Note: Failure to remove all weight, tools and accessories from the platform will result in an inaccurate test.

2 Turn the key switch to ground control and pull out the red Emergency Stop button to the on position at both ground and platform controls.

3 Start the engine from the ground controls.

4 Using a suitable lifting device, place an appropriate test weight equal to 340.2 kg on to the center of the platform floor.

⊙ Result: The amber restricted range of motion LED at the platform controls should come on and the engine should continue to run.

5 Using a suitable lifting device, place an additional appropriate test weight equal to 227.2 to 231.3 kg on to the center of the platform floor. The total weight in the platform must equal 567.4 to 571.5 kg.

⊙ Result: The alarm should sound and the engine should turn off. The platform overload indicator light should be on at both the ground and platform controls.

6 Using a suitable lifting device, remove all test weights from the platform.

7 Push in the ground controls red Emergency Stop button to the off position, then pull the red Emergency Stop button out to the on position to reset the control system.

Downloaded from www.Manualslib.com manuals search engine

https://truckmanualshub.com/

A-11
Inspect the Boom Extend/Retract Cables - S-60 and S-80 Models

Genie specifications require that this procedure be performed annually.

The boom extend/retract cables are responsible for the extension and retraction of the boom tubes. Inspecting for foreign objects, damage and/or improper adjustment of the boom extend/retract cables and related components on a regular basis is essential to good machine performance and safe machine operation. The boom extend and retract functions should operate smoothly and be free of hesitation, jerking and unusual noise.

This maintenance procedure applies to the following models: **S-60, S-65, S-60 TRAX, S-65 TRAX, S-60 HC, S-60X, S-60XC, S-80, S-85, S-80X**

1 Raise the boom to horizontal and fully extend the boom.

2 After the boom is fully extended, lower the boom until the platform is at chest height. Turn the machine off.

3 **S-60, S-65, S-60X, S-60XC, S-60 TRAX and S-65 TRAX, S-80, S-85, S-80X:** Remove the boom end cover retaining fasteners and remove the cover.

S-60 HC: Remove the boom end cover from the pivot end of the boom while guiding the small cable from the string potentiometer out of the slot of the cover. Rest the cover and string potentiometer on the counterweight.

NOTICE Component damage hazard. The cable from the string potentiometer can become damaged if it is kinked or pinched.

4 Remove the retaining fasteners from the access covers located on the side of the boom at the platform end of the machine. Remove the covers.

5 Visually inspect the cables and components through both inspection holes for the following:

- Frayed or broken wire strands
- Kinks in the cables
- Corrosion
- Paint or foreign materials on the cable
- Split or cracked cable ends
- Cables are on all pulleys
- Extend cable break limit switch arm is centered in the pivot plate
- Cables have equal tension
- Cables at end of adjustment range
- No broken or damaged pulleys
- No unusual or excessive pulley wear
- All fasteners in place and secure
- **S-60 HC:** String potentiometer cable break limit switch arm is securely attached to end of cable

Note: A flashlight and inspection mirror may be necessary to thoroughly inspect the above items.

Note: A pulley groove gauge should be used to check the condition of the pulleys.

Downloaded from www.Manualslib.com manuals search engine

https://truckmanualshub.com/

Annual Maintenance Procedures

6 **S-60, S-65, S-60X, S-60XC, S-60 TRAX and S-65 TRAX, S-80, S-85, S-80X:** Install the cover at the pivot end of the boom.

S-60 HC: Install the boom end cover at the pivot end of the boom while guiding the small cable from the string potentiometer into the slot of the cover.

NOTICE Component damage hazard. The cable from the string potentiometer can become damaged if it is kinked or pinched.

Note: Be sure the cable from the string potentiometer is correctly routed around the small pulley before installing the boom end cover.

7 Install the access panels on the sides of the boom.

8 Start the engine from the ground controls and fully retract and lower the boom to the stowed position.

9 Turn the key switch to platform controls.

10 Extend the boom approximately 2 feet / 0.6 m.

11 Retract the boom. While retracting the boom, visually inspect the number 2 and number 3 boom tubes.

⊙ Result: The number 2 boom tube should not move more than 1/2 inch / 13 mm before the number 3 boom tube begins to retract.

Note: If the number 2 boom tube moves more than 1/2 inch / 13 mm before the number 3 boom tube begins to retract, the boom extend/retract cables need to be adjusted. Refer to Repair Procedure in the appropriate Service and Repair Manual for your machine, *How to Adjust the Boom Extend/Retract Cables.*

A-12
Inspect the Boom Extend/Retract Cables - S-100, S-105, S-120, S-125, S-100HD and S-120HD Models

Genie specifications require that this procedure be performed annually.

The boom extend/retract cables are responsible for the extension and retraction of the number 3 boom tube on the S-100, S-105 and S-100HD, and the numbers 2 and 3 boom tubes on the S-120, S-125 and S-120HD. Inspecting for foreign objects, damage and/or improper adjustment of the boom extend/retract cables on a regular basis is essential to good machine performance and safe machine operation. The boom extend and retract functions should operate smoothly and be free of hesitation, jerking and unusual noise.

Note: Perform this procedure with the boom in the stowed position.

Note: Perform this procedure with the engine off.

1 Remove the boom end cover from the pivot end of the boom.

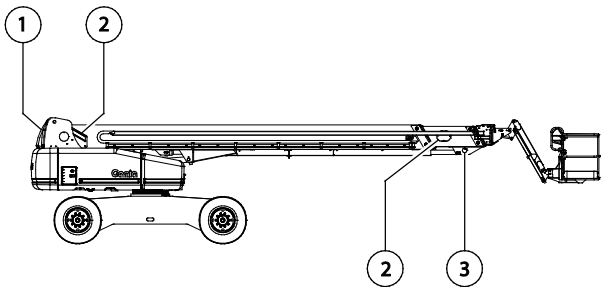

1 boom end cover
2 side access covers
3 cable ends (located underneath the boom)

Downloaded from www.Manualslib.com manuals search engine

https://truckmanualshub.com/

2 Remove the retaining fasteners from the access covers located on the side of the boom at the platform end of the machine. Remove the covers.

3 Visually inspect the cables and components through both inspection holes for the following:

- Frayed or broken wire strands
- Kinks or crushed cables
- Corrosion
- Paint or foreign materials on the cable
- Split or cracked cable ends
- Cables are on all pulleys
- Cables have equal tension
- Cables at end of adjustment range
- No broken or damaged pulleys
- No unusual or excessive pulley wear
- All fasteners in place and secure

Note: A flashlight and inspection mirror may be necessary to thoroughly inspect the above items

Note: A pulley groove gauge should be used to check the condition of the pulleys.

4 Replace the cables if any damage is found.

5 At the pivot end of the boom, visually inspect for the following:

- The red locking bracket is securely installed over the cable adjustment bolts.

6 Install the plastic cover at the pivot end of the boom and access panels on the sides of the boom.

7 Start the engine from the platform controls.

8 Extend the boom approximately 2 feet / 0.6 m.

9 Retract the boom. While retracting the boom, visually inspect the number 2 and number 3 boom tubes.

⊙ Result: The number 2 boom tube should not move more than 1/2 inch / 13 mm before the number 3 boom tube begins to retract.

Note: If the number 2 boom tube moves more than 1/2 inch / 13 mm before the number 3 boom tube begins to retract, the boom extend/retract cables need to be adjusted. Refer to Repair Procedure in the appropriate Service and Repair Manual for your machine, *How to Adjust the Boom Extend/Retract Cables.*

Downloaded from www.Manualslib.com manuals search engine

https://truckmanualshub.com/

Annual Maintenance Procedures

A-13
Inspect the Boom Extend/Retract Cables - SX-150 and SX-180 Models

Genie specifications require that this procedure be performed annually.

Failure to maintain proper adjustment of the cables could result in unsafe operating conditions and may cause component damage. The boom extend and retract functions should operate smoothly and be free of hesitation, jerking and unusual noise.

Note: Properly adjusted extend/retract cables will maintain a relationship of the gap between boom tubes #2 and #3 and boom tubes #3 and #4.

1 Start the engine from the ground controls.

2 Fully raise the boom then extend the boom approximately 15 ft / 4.6 m.

3 Fully retract the boom and lower to the horizontal position.

4 Stop the engine.

5 Measure the distance between boom tubes #1 and #2, measuring from the points identified as (11) and (12) in the illustration. This is dimension "A".

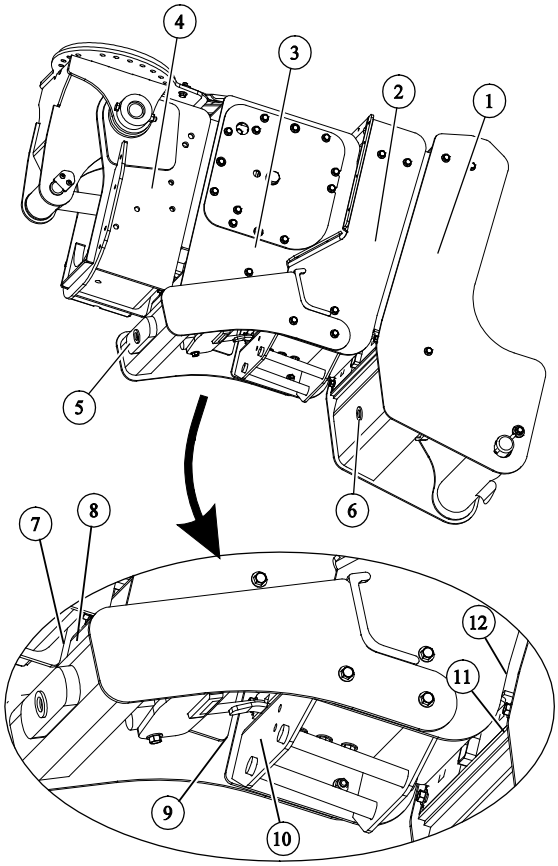

1 Boom tube #1
2 Boom tube #2
3 Boom tube #3
4 Boom tube #4
5 Boom #4 retract bolt
6 Boom #3 retract bolt
7 Boom #4 measuring edge
8 Boom #3 measuring surface
9 Boom #3 measuring edge
10 Boom #2 measuring surface
11 Boom #1 measuring edge
12 Boom #2 measuring edge

Downloaded from www.Manualslib.com manuals search engine

https://truckmanualshub.com/

6 Measure the distance between boom tubes #2 and #3 using points (9) and (10) in the illustration. The gap should be 1 in / 2.6 cm to 1.5 in /3.9 cm greater than dimension "A"

Note: As an example, if the dimension "A" is 1.25 in / 3.2 cm, then the gap between boom tubes #2 and #3 should be between 2.25 in / 5.7 cm and 2.75 in / 7.1 cm.

⊙ Result: The distance between boom tubes #2 and #3 is 1 in / 2.6 cm to 1.5 in /3.9 cm greater than dimension A. The boom tube is in tolerance. Proceed to step 8.

⊠ Result: The distance between boom tubes #2 and #3 is less then 1 in / 2.6 cm or more than 1.5 in / 3.8 cm greater than dimension "A".

7 The boom tubes need to be adjusted. Refer to Repair Procedure in the appropriate Service and Repair Manual for your machine, *How to Adjust the Boom Extend/Retract Cables*.

8 Measure the distance between boom tubes #3 and #4 using points 7 and 8 as shown in the illustration.

⊙ Result: The distance between boom tubes #3 and #4 is 1 in / 2.6 cm to 1.5 in / 3.9 cm greater than dimension A. The boom tube is in tolerance. Return the boom to service.

⊠ Result: The distance between boom tubes #3 and #4 is less then 1 in / 2.6 cm or more than 1.5 in / 3.8 cm greater than dimension "A".

9 The boom tubes need to be adjusted. Refer to Repair Procedure in the appropriate Service and Repair Manual for your machine, *How to Adjust the Boom Extend/Retract Cables*.

A-14
Check the Drive Hub Oil Level and Fastener Torque

Genie specifications require that this procedure be performed quarterly.

Failure to maintain proper drive hub oil levels may cause the machine to perform poorly and continued use may cause component damage.

Models with tires:

1 Drive the machine to rotate the hub until the plugs are located one on top and the other at 90 degrees.

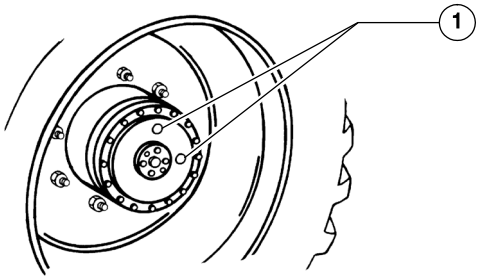

1 drive hub plugs

2 Remove the plug located at 90 degrees and check the oil level.

⊙ Result: The oil level should be even with the bottom of the plug hole.

3 If necessary, remove the top plug and add oil until the oil level is even with the bottom of the side plug hole.

4 Install the plug(s) into the drive hub.

5 Check the torque of the drive hub mounting bolts. Refer to Specifications, *Machine Torque Specifications*.

6 Repeat this procedure for each drive hub.

Downloaded from www.Manualslib.com manuals search engine

https://truckmanualshub.com/

Annual Maintenance Procedures

Models with TRAX:

1 Select the drive hub to be serviced. Loosen and remove as many sprocket retaining fasteners as possible from the hub adapter.

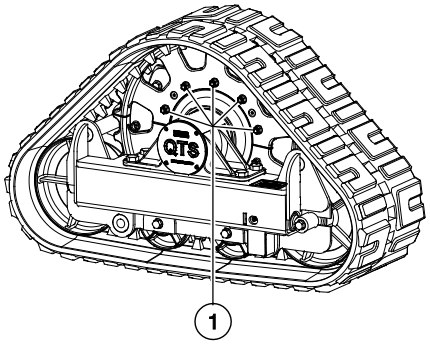

1 sprocket retaining fasteners

2 Drive the machine in either direction just enough to access the remaining fasteners. Do not remove the the retaining fasteners.

3 Chock the tracks at the opposite end of the machine to prevent the machine from rolling.

4 Center a lifting jack of ample capacity (20,000 lbs / 10,000 kg) under the drive chassis between the tracks.

5 Lift the machine until the tracks are off the ground and place jack stands under the drive chassis for support.

6 Attach a lifting strap from an overhead crane (2000 lbs / 1000 kg) to the center-point of the track assembly, above the sprocket.

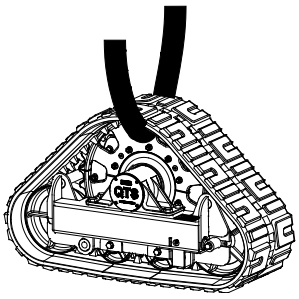

7 Remove the remaining sprocket retaining fasteners from the hub adapter.

8 Carefully remove the track assembly from the drive hub and set aside.

⚠ CAUTION Crushing hazard. The track assembly could become unbalanced and fall when removed from the machine if not properly supported by the overhead crane.

9 Locate the hub disconnect pin in the center of the drive hub. Manually depress the pin and rotate the drive hub until the plugs are one on top and the other at 90 degrees.

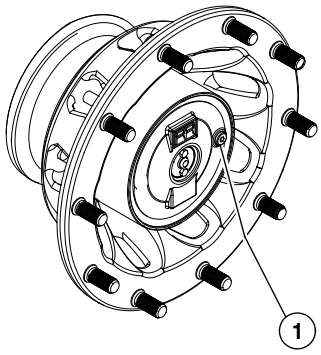

1 drive hub plugs

Downloaded from www.Manualslib.com manuals search engine

https://truckmanualshub.com/

10 Remove the plug located at 90 degrees and check the oil level.

⊙ Result: The oil level should be even with the bottom of the plug hole.

11 If necessary, remove the top plug and add oil until the oil level is even with the bottom of the side plug hole.

12 Install the plug(s) into the drive hub.

13 Check the torque of the drive hub mounting bolts. Refer to Specifications, *Machine Torque Specifications*.

14 Attach a lifting strap from an overhead crane to the center-point of the track assembly, above the sprocket.

15 Install the track assembly onto the drive hub adapter while guiding the hub adapter studs into the sprocket of the track assembly. Install as many sprocket retaining fasteners as possible to the hub adapter and torque to specification. Refer to Specifications, *TRAX Torque Specifications*.

16 Raise the machine, remove the jack stands lower the machine.

17 Drive the machine in either direction just until the remaining sprocket retaining fasteners can be installed onto the drive hub adapter. Turn the machine off.

18 Install the remaining sprocket retaining fasteners to the drive hub adapter and torque to specification. Refer to Specification, *TRAX Torque Specifications*.

19 Repeat this procedure for each drive hub.

Turntable rotate drive hub:

1 Remove the plug located on the side of the hub and check the oil level and check the oil level.

⊙ Result: The oil level should be even with the bottom of the side hole.

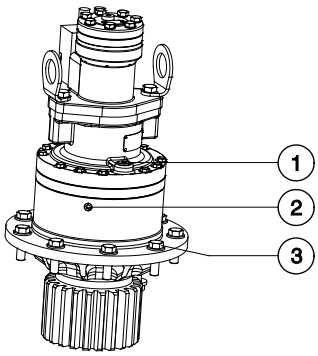

1 fill plug
2 drain plug
3 mounting fasteners

2 If necessary, remove the fill plug and add oil until the oil level is even with the bottom of the drain plug.

3 Apply pipe thread sealant to the plug (s), and install the plug (s) in the drive hub.

4 Check the torque of the turntable drive hub mounting fasteners.

Torque specifications	
S-40 (all models)	170 ft-lbs 230 Nm
S-60 (all models), S-80 (all models), S-100, S-105, S-120, S-125, S-100HD, S-120HD, Z-45/25 (all models), Z-51, Z-60 DC/FE, Z-62, Z-80, Z-135, ZX-135	80 ft-lbs 108 Nm
SX-150, SX-180	Dry - 95 ft-lbs 129 Nm

Downloaded from www.Manualslib.com manuals search engine

https://truckmanualshub.com/

Programmed Maintenance Procedures

P0-1
Check the Track Tension and Fastener Torque, TRAX Models - S-60, S-65 and Z-62 Models

Manufacturer specifications require that this procedure be performed every 50 hours.

Maintaining proper track tension and properly torqued fasteners is essential to good machine performance and service life. The machine will not operate properly with a track that is incorrectly tensioned. Continued use of a machine with incorrectly tensioned tracks may cause component damage.

1 Thoroughly clean the track assembly of any dirt, rocks, clay, etc.

2 Chock the tracks at one end of the machine to prevent the machine from rolling.

3 Center a lifting jack of ample capacity (20,000 lbs / 10,000 kg) under the drive chassis between the tracks at the other end of the machine.

4 Lift the machine until the tracks are off the ground and then place jack stands under the drive chassis for support.

5 Visually inspect the section of track under the bogey wheels.

⊙ Result: There should be less than 1 inch / 2.5 cm of gap between the bogey wheels and the inside surface of the track. Proceed to step 12.

⊠ Result: There is 1 inch / 2.5 cm or more of gap between the bogey wheels and the inside surface of the track. Proceed to step 6.

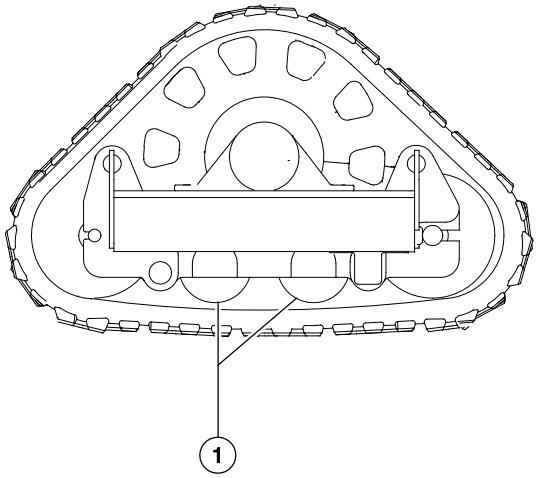

1 bogey wheels

6 Locate the grease plug on the track tension cylinder. Loosen the plug, but do not remove it.

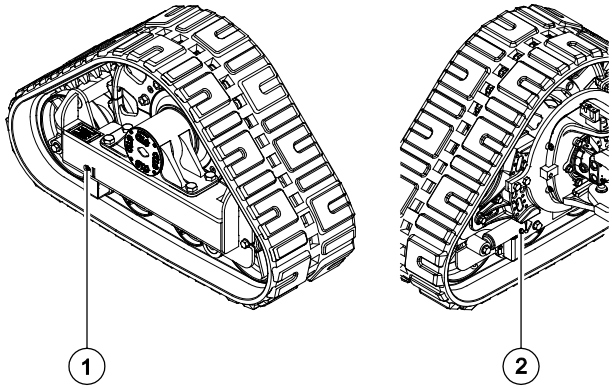

1 grease zerk
2 grease plug

Downloaded from www.Manualslib.com manuals search engine

https://truckmanualshub.com/

7 Locate the grease zerk fitting on the other side of the track tension cylinder.

8 Pump grease into the grease zerk fitting of the tension cylinder until grease, free from air, comes out of the grease plug. Securely tighten the grease plug. Do not overtighten.

9 Continue to pump grease into the grease zerk fitting just until the idler wheel moves. Check the track tension.

10 If necessary, continue to pump grease into the cylinder until the track has proper tension.

NOTICE Component damage hazard. Do not over tighten the track. Over tightening the track will cause the machine to lose power during operation.

Note: If the track becomes too tight, loosen the grease plug on the cylinder to remove grease and loosen the track.

11 Clean up any grease that may have spilled.

12 Check the torque of the track assembly fasteners. Refer to Specifications, *TRAX Torque Specifications*.

13 Raise the machine, remove the jack stands and lower the machine.

14 Repeat this procedure for each track assembly.

Grease Specification
Chevron Ultra-duty grease, EP NLGI 1 (lithium based) or equivalent

P0-2
Check the Track Tension and Fastener Torque, TRAX Models - S-40 and S-45 Models

Manufacturer specifications require that this procedure be performed every 50 hours.

Maintaining proper track tension and properly torqued fasteners is essential to good machine performance and service life. The machine will not operate properly with a track that is incorrectly tensioned. Continued use of a machine with incorrectly tensioned tracks may cause component damage.

1 Thoroughly clean the track assembly of any dirt, rocks, clay, etc.

2 Chock the tracks at one end of the machine to prevent the machine from rolling.

3 Center a lifting jack of ample capacity (20,000 lbs / 10,000 kg) under the drive chassis between the tracks at the other end of the machine.

4 Lift the machine until the tracks are off the ground and then place jack stands under the drive chassis for support.

Downloaded from www.Manualslib.com manuals search engine

https://truckmanualshub.com/

Programmed Maintenance Procedures

5 Visually inspect the section of track under the bogey wheels.

⊙ Result: There should be less than 1 inch / 2.5 cm of gap between the bogey wheels and the inside surface of the track. Proceed to step 7.

⊠ Result: There is 1 inch / 2.5 cm or more of gap between the bogey wheels and the inside surface of the track. Proceed to step 6.

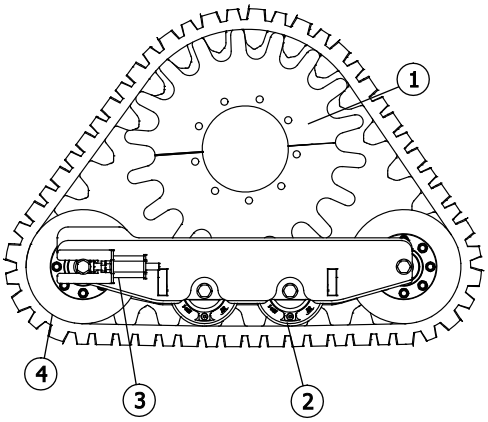

1 half sprocket
2 bogey wheels
3 tensioner assembly
4 idler wheel

6 Loosen the tensioner jam nut and idler axle bolts on both sides of the tensioner wheel and tighten the tensioner nut until there is between 0.75 - 1 inch / 1.9 - 2.5 cm of gap between the bogey wheels and the inside surface of the track.

NOTICE Component damage hazard. Do not over tighten the track. Over tightening the track will cause the machine to lose power during operation.

7 Tighten the jam nut.

8 Check the torque of the track assembly fasteners. Refer to Specifications, *TRAX Torque Specifications*.

9 Raise the machine, remove the jack stands and lower the machine.

10 Repeat this procedure for each track assembly.

Downloaded from www.Manualslib.com manuals search engine

https://truckmanualshub.com/

P0-3
Grease the Extendable Axles - S-100, S-105, S-120, S-125, S100HD and S-120HD

Manufacturer specifications require that this procedure be performed every 50 hours.

Lubricating the front and rear axles helps to ensure the smooth operation of the axles over the lifetime of the product. Two fittings on each axle are provided to apply grease the top and bottom sliding wear pads.

1 Locate the grease fittings on the extendable axles covers.

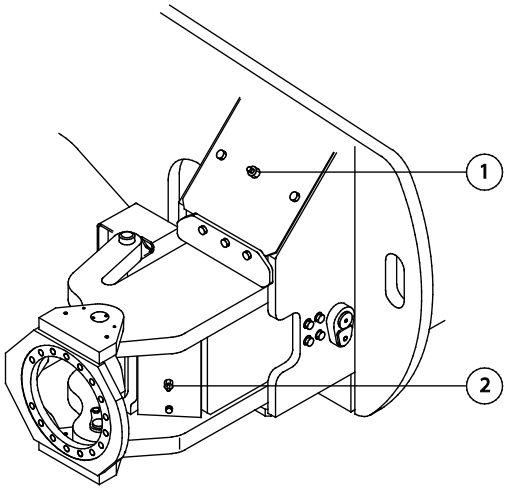

1 Top wear pad grease fitting
2 Side wear pad grease fitting

2 Thoroughly pump grease into each grease fitting. When grease is pumped into each fitting, a hose directs this lubrication to the top or bottom wear pad.

3 Cycle the extending axles in and out.

Note: Genie recommends that the extending axles be cycled in and out at least once a week.

Downloaded from www.Manualslib.com manuals search engine

https://truckmanualshub.com/

Programmed Maintenance Procedures

P0-4
Continental Engine Maintenance – Under 1000 Hours

Additional engine maintenance is required. Refer to the *Programmed Maintenance Inspection Report* for the specific intervals that apply.

Required maintenance procedures and additional engine information are available in the manufacturer's manuals. Refer to Specifications, *Engine Operator and Maintenance Manuals*.

Continental TME27		**Hour Intervals**				
Procedure	**∅ = Not required**	**Daily**	**50**	**100**	**250**	**500**
Visual inspection of engine			∅	∅	∅	∅
Oil level - check			∅	∅	∅	∅
Air cleaner - check			∅	∅	∅	∅
PCV system - check			∅	∅	∅	∅
Coolant level - check			∅	∅	∅	∅
Oil, fuel and coolant systems - check for leaks			∅	∅	∅	∅
Air filter discharge valve - clean			∅	∅	∅	∅
Fan belt tension - check		∅		∅	∅	∅
Battery - check		∅		∅	∅	∅
Engine oil - replace		∅	∅		∅	∅
Oil filter - replace		∅	∅		∅	∅
Harness connections - check		∅	∅	∅		∅
Cooling system - check		∅	∅	∅		∅
Air filter - replace		∅	∅	∅		∅
PCV valve - check		∅	∅	∅	∅	
Valve tappet clearance - adjust		∅	∅	∅	∅	
Fuel system - check		∅	∅	∅	∅	
Fuel pump - check		∅	∅	∅	∅	
Fuel filter - replace		∅	∅	∅	∅	

Downloaded from www.Manualslib.com manuals search engine

https://truckmanualshub.com/

P0-5
Cummins Engine Maintenance – Under 1000 Hours

Additional engine maintenance is required. Refer to the *Programmed Maintenance Inspection Report* for the specific intervals that apply.

Required maintenance procedures and additional engine information are available in the manufacturer's manuals. Refer to Specifications, *Engine Operator and Maintenance Manuals*.

Cummins B3.3T		**Hour Intervals**		
Procedure	**∅ = Not required**	**Daily**	**250**	**500**
Oil, fuel and coolant systems - check for leaks			∅	∅
Fuel-water separator - drain			∅	∅
Oil level - check			∅	∅
Coolant level - check			∅	∅
Drive belt - inspect			∅	∅
Cooling fan - inspect			∅	∅
Engine oil - replace		∅		∅
Oil filter - replace		∅		∅
Valve lash clearance - adjust (initial, one-time interval with oil change)		∅		∅
Air intake system - inspect		∅		∅
Air cleaner restriction - check		∅		∅
Fuel filter - replace		∅	∅	
Fuel supply lines - vent		∅	∅	
Injection pump - vent		∅	∅	
Cooling system - check		∅	∅	

Downloaded from www.Manualslib.com manuals search engine

https://truckmanualshub.com/

Programmed Maintenance Procedures

P0-6
Deutz Engine Maintenance – Under 1000 Hours

Additional engine maintenance is required. Refer to the *Programmed Maintenance Inspection Report* for the specific intervals that apply.

Required maintenance procedures and additional engine information are available in the manufacturer's manuals. Refer to Specifications, *Engine Operator and Maintenance Manuals*.

This maintenance schedule applies to the following Deutz Engines:

Deutz D2011L03i **Deutz TD2011L04i** **Deutz D 2.9 L4** **Deutz TD 2.9 L4**

Deutz Engines		**Hour Intervals**		
Procedure	**∅ = Not required**	**Daily**	**250**	**500**
Oil level - check			∅	∅
Coolant level - check			∅	∅
Oil, fuel and coolant systems - check for leaks			∅	∅
Fuel system filter/water separator – inspect/drain			∅	∅
Air filter discharge valve - clean			∅	∅
Exhaust system - inspect			∅	∅
Check / clean the oil cooler and cooling fins - Deutz 2011 Models		∅		∅
Engine oil and filter – replace		∅	∅	
Air filter - replace		∅	∅	
Valve clearance - check/adjust		∅	∅	
Engine coolant - test/add		∅	∅	
Air intake pipes - inspect		∅	∅	
V-belts - inspect		∅	∅	
Fuel filter / separator - replace		∅	∅	

Downloaded from www.Manualslib.com manuals search engine

https://truckmanualshub.com/

P0-7
Ford Engine Maintenance – Under 1000 Hours

Additional engine maintenance is required. Refer to the *Programmed Maintenance Inspection Report* for the specific intervals that apply.

Required maintenance procedures and additional engine information are available in the manufacturer's manuals. Refer to Specifications, *Engine Operator and Maintenance Manuals*.

This maintenance schedule applies to the following Ford Engines:

Ford MSG 425 **Ford DSG 423**

Ford Engines		**Hour Intervals**				
Procedure	**∅ = Not required**	**Daily**	**100**	**200**	**400**	**800**
Oil level - check			∅	∅	∅	∅
Coolant level - check			∅	∅	∅	∅
Oil, fuel and coolant systems - check for leaks			∅	∅	∅	∅
Oil, coolant, fuel, exhaust and vacuum hoses - check for leaks, damage or deterioration		∅		∅	∅	∅
Electrical wiring - check for chafing or damage		∅		∅	∅	∅
Engine belts - check/adjust		∅	∅		∅	∅
Fuel filters - check/replace		∅	∅		∅	∅
Engine oil - replace		∅	∅	∅		∅
Oil filter - replace		∅	∅	∅		∅
Air filter - replace		∅	∅	∅		∅
Spark plugs - clean/adjust/replace		∅	∅	∅		∅
Loose or missing fasteners - tighten/replace		∅	∅	∅		∅
PCV valve - check		∅	∅	∅	∅	
PCV hoses, tubes and fittings - clean		∅	∅	∅	∅	

Downloaded from www.Manualslib.com manuals search engine

https://truckmanualshub.com/

Programmed Maintenance Procedures

P0-8
Kubota Engine Maintenance – Under 1000 Hours

Additional engine maintenance is required. Refer to the *Programmed Maintenance Inspection Report* for the specific intervals that apply.

Required maintenance procedures and additional engine information are available in the manufacturer's manuals. Refer to Specifications, *Engine Operator and Maintenance Manuals*.

This maintenance schedule applies to the following Kubota Engines:

Kubota D-1105-E3B **Kubota D1105-E4B** **Kubota WG972** **Kubota Z482-E**

Kubota Engines		**Hour Intervals**								
Procedure	**∅ = Not required**	**Daily**	**50**	**75**	**100**	**150**	**200**	**400**	**500**	**800**
Coolant level - check			∅	∅	∅	∅	∅	∅	∅	∅
Oil level - check			∅	∅	∅	∅	∅	∅	∅	∅
Fuel hoses and clamp bands - check		∅		∅	∅	∅	∅	∅	∅	∅
Engine oil - replace, Z482		∅	∅		∅	∅	∅	∅	∅	∅
Fan belt tension and damage - check		∅	∅	∅		∅	∅	∅	∅	∅
Battery electrolyte level - check		∅	∅	∅		∅	∅	∅	∅	∅
Spark plug - check		∅	∅	∅		∅	∅	∅	∅	∅
Air cleaner element - clean (Replace the element after 6 times cleaning)		∅	∅	∅		∅	∅	∅	∅	∅
Fuel filter (element type) - clean		∅	∅	∅		∅	∅	∅	∅	∅
Oil filter cartridge - replace, Z482		∅	∅	∅	∅		∅	∅	∅	∅
Oil filter cartridge - replace, D1105, WG972		∅	∅	∅	∅	∅		∅	∅	∅
Engine oil - replace, D1105, WG972		∅	∅	∅	∅	∅		∅	∅	∅
Radiator hoses and clamps - check		∅	∅	∅	∅	∅		∅	∅	∅
Intake air line - check		∅	∅	∅	∅	∅		∅	∅	∅
Fuel filter cartridge - replace		∅	∅	∅	∅	∅	∅		∅	∅
Air cleaner element - replace		∅	∅	∅	∅	∅	∅	∅		∅
Fan belt - replace		∅	∅	∅	∅	∅	∅	∅		∅
Cleaning of water jacket (radiator interior)		∅	∅	∅	∅	∅	∅	∅		∅
Removal of sediment in fuel tank		∅	∅	∅	∅	∅	∅	∅		∅
Recharging battery		∅	∅	∅	∅	∅	∅	∅		∅
Damage in electric wiring and loose connections - check		∅	∅	∅	∅	∅	∅	∅		∅
Valve clearance - check		∅	∅	∅	∅	∅	∅	∅	∅	

Downloaded from www.Manualslib.com manuals search engine

https://truckmanualshub.com/

P0-9
Perkins Engine Maintenance – Under 1000 Hours

Additional engine maintenance is required. Refer to the *Programmed Maintenance Inspection Report* for the specific intervals that apply.

Required maintenance procedures and additional engine information are available in the manufacturer's manuals. Refer to Specifications, *Engine Operator and Maintenance Manuals*.

This maintenance schedule applies to the following Perkins Engines:

Perkins 403D-11	**Perkins 403F-11**	**Perkins 404D-22**	**Perkins 404F-22**
Perkins 404F-22T	**Perkins 804D-33**	**Perkins 854F-34T**	**Perkins 1104D-44T**

Perkins Engine		**Hour Intervals**		
Procedure	**∅ = Not required**	**Daily**	**50**	**500**
Air filter discharge valve - clean			∅	∅
Oil, fuel and coolant systems - check for leaks			∅	∅
Alternator belt - inspect/adjust/replace			∅	∅
Coolant level – check/add			∅	∅
Oil level - check			∅	∅
Fuel system filter/water separator – drain			∅	∅
Engine air precleaner - check/drain			∅	∅
Fuel tank water/sediment - drain		∅		∅
Hoses and clamps – inspect/replace		∅		∅
Battery electrolyte level - check		∅	∅	
Cooling system supplement additive - test/add		∅	∅	
Engine oil and filter – replace		∅	∅	
Fuel system filter(s) - replace		∅	∅	
Radiator – clean		∅	∅	
Air cleaner element - clean/replace		∅	∅	
Fan clearance - check		∅	∅	

Downloaded from www.Manualslib.com manuals search engine

https://truckmanualshub.com/

Programmed Maintenance Procedures

P0-10
GM .998L Engine Maintenance – Under 1000 Hours

Additional engine maintenance is required. Refer to the *Programmed Maintenance Inspection Report* for the specific intervals that apply.

Required maintenance procedures and additional engine information are available in the manufacturer's manuals. Refer to Specifications, *Engine Operator and Maintenance Manuals*.

GM .998L Engine		**Hour Intervals**					
Procedure	**∅ = Not required**	**Daily**	**100**	**150**	**200**	**400**	**800**
Coolant level - check			∅	∅	∅	∅	∅
Oil level - check			∅	∅	∅	∅	∅
Oil, fuel and coolant systems - check for leaks			∅	∅	∅	∅	∅
Fan belt tension and damage - check		∅		∅	∅	∅	∅
Radiator hoses and clamps - check		∅		∅	∅	∅	∅
Intake manifold - check for vacuum leaks		∅		∅	∅	∅	∅
LPG system - check for leaks		∅		∅	∅	∅	∅
Radiator – clean		∅		∅	∅	∅	∅
Engine oil and filter – replace		∅	∅		∅	∅	∅
LPG Vaporizer - drain/clean		∅	∅		∅	∅	∅
PCV valve - check		∅	∅	∅		∅	∅
Air cleaner element - clean/replace		∅	∅	∅		∅	∅
Timing belt - check		∅	∅	∅		∅	∅
Electrical wiring - check for chafing or damage		∅	∅	∅	∅		∅
Vacuum lines and fittings - check		∅	∅	∅	∅		∅
Fuel filter - replace		∅	∅	∅	∅		∅
Fuel lines and clamps - check for leaks		∅	∅	∅	∅		∅
Air intake system - inspect for leaks		∅	∅	∅	∅		∅
Cylinder head bolts - torque (40.5 ft-lbs / 55 Nm)		∅	∅	∅	∅		∅
Valve clearance - check/adjust		∅	∅	∅	∅		∅
PCV valve - replace		∅	∅	∅	∅	∅	
Cooling system coolant - replace		∅	∅	∅	∅	∅	
Spark plugs - replace		∅	∅	∅	∅	∅	
Spark plug wires - check/replace		∅	∅	∅	∅	∅	

Downloaded from www.Manualslib.com manuals search engine

https://truckmanualshub.com/

P0-11
GM 3.0L Engine Maintenance – Under 1000 Hours

Additional engine maintenance is required. Refer to the *Programmed Maintenance Inspection Report* for the specific intervals that apply.

Required maintenance procedures and additional engine information are available in the manufacturer's manuals. Refer to Specifications, *Engine Operator and Maintenance Manuals*.

GM 3.0L Engine		**Hour Intervals**						
Procedure	**∅ = Not required**	**Daily**	**100**	**150**	**200**	**250**	**400**	**800**
Coolant level - check			∅	∅	∅	∅	∅	∅
Oil level - check			∅	∅	∅	∅	∅	∅
Oil, fuel and coolant systems - check for leaks			∅	∅	∅	∅	∅	∅
Radiator – clean		∅		∅	∅	∅	∅	∅
LPG Vaporizer - drain/clean		∅	∅		∅	∅	∅	∅
Air cleaner element - clean/replace		∅	∅	∅		∅	∅	∅
Engine oil and filter – replace		∅	∅	∅	∅		∅	∅
Fuel filter - replace		∅	∅	∅	∅	∅		∅
Air filter - replace		∅	∅	∅	∅	∅		∅
Distributor cap - replace		∅	∅	∅	∅	∅	∅	
Spark plug wires - replace		∅	∅	∅	∅	∅	∅	

Downloaded from www.Manualslib.com manuals search engine

https://truckmanualshub.com/

Programmed Maintenance Procedures

P1-1
Perform Engine Maintenance – 1000 Hours

Engine specifications require that this procedure be performed every 1000 hours.

Required maintenance procedures and additional engine information are available in the manufacturer's manuals. Refer to Specifications, *Engine Operator and Maintenance Manuals*.

Continental TME27

- Spark plugs - replace
- O2 sensors - replace

Cummins Models

- Drive belt tension - measure
- Drive belt - check

GM 3.0L

- Fan belt - inspect/replace
- Radiator hoses and clamps - check
- PCV system - check

Deutz Models

All Models:

- Fuel system primary filter (water separator) element – replace
- Fuel system secondary filter – replace
- Hoses and clamps – inspect/replace
- By-pass oil filter - replace
- Engine mounts - check
- Hoses and clamps - check
- Glow plugs - check
- V-belts - re-tension/renew
- Cold starting device (if equipped) - check
- Battery and cable connectors - check
- Engine valve lash – inspect/adjust

D 2.9 and TD 2.9 Models:

- Coolant (additive concentration) - check

Downloaded from www.Manualslib.com manuals search engine

https://truckmanualshub.com/

Perkins Models

All Models:

- Alternator and fan belts - replace
- Engine valve lash – inspect/adjust
- Engine crankcase breather - replace

403D-11, 404F-22

- Turbocharger - inspect

804D-33

- Alternator - inspect
- Starting motor - inspect
- Turbocharger - inspect

854F Models

- Water pump - inspect
- Engine crankcase breather - replace

Kubota Models

WG972

- Spark plug - replace
- Coolant and vacuum lock hose of LPG vaporizer - check
- Radiator coolant (L.L.C.) - replace
- Cleaning water jacket and radiator interior
- Valve clearance - check
- Cleaning cylinder head
- Valve seats - check
- Air cleaner element - replace
- Gasoline fuel hose and clamp bands - replace
- Carburetor and fuel tank inside - clean

Z482-E, D-1105

- Fuel injection nozzle injection pressure - check

P1-2
Replace the Drive Hub Oil

Drive hub specifications require that this procedure be performed after the first 50 hours of operation. After the initial oil replacement, specifications require that this procedure be performed every 1000 hours.

Replacing the drive hub oil is essential for good machine performance and service life. Failure to replace the drive hub oil may cause the machine to perform poorly and continued use may cause component damage.

Drive Hubs:

1 Select the drive hub to be serviced. Drive the machine until one of the two plugs is at the lowest point.

2 Remove the plugs and drain the oil into a suitable container.

Downloaded from www.Manualslib.com manuals search engine

https://truckmanualshub.com/

Programmed Maintenance Procedures

3 Drive the machine until one of the two plugs is at the highest point.

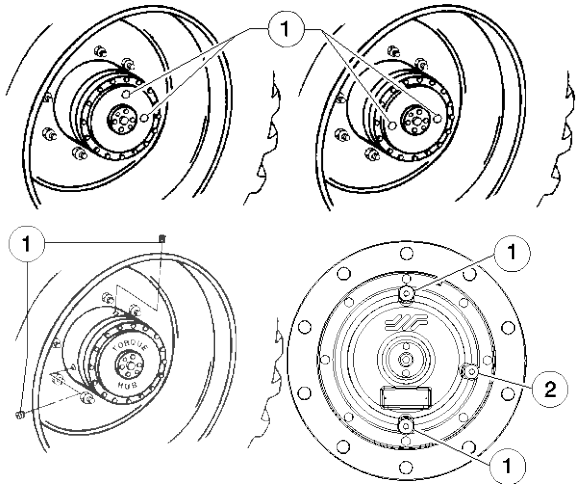

1 drive hub plugs
2 middle plug

4 **Drive hubs with 2 plugs**: Fill the hub until the oil level is even with the bottom of the lowest plug hole. Refer to Specifications, *Hydraulic Specifications*.

Drive hubs with 3 plugs: Fill the hub until the oil level is even with the bottom of the middle plug hole. Refer to Specifications, *Hydraulic Specifications*.

5 Install the plugs into the drive hub.

6 Repeat this procedure for each drive hub.

Models with TRAX:

1 Select the drive hub to be serviced. Loosen and remove as many sprocket retaining fasteners as possible from the hub adapter.

2 Drive the machine in either direction just enough to access the remaining fasteners. Do not remove the the retaining fasteners.

3 Chock the tracks at the opposite end of the machine to prevent the machine from rolling.

4 Center a lifting jack of ample capacity (20,000 lbs / 10,000 kg) under the drive chassis between the tracks.

5 Lift the machine until the tracks are off the ground and place jack stands under the drive chassis for support.

6 Attach a lifting strap from an overhead crane (2000 lbs / 1000 kg) to the center-point of the track assembly, above the sprocket.

7 Remove the remaining sprocket retaining fasteners from the hub adapter.

8 Carefully remove the track assembly from the drive hub and set aside.

⚠ CAUTION Crushing hazard. The track assembly could become unbalanced and fall when removed from the machine if not properly supported by the overhead crane.

Downloaded from www.Manualslib.com manuals search engine

https://truckmanualshub.com/

9 Locate the hub disconnect pin in the center of the drive hub. Manually depress the pin and rotate the drive hub until one of the two plugs is at the lowest point.

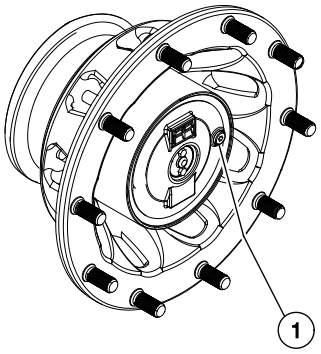

1 drive hub plug

10 Remove the plugs and drain the oil into a suitable container.

11 Manually depress the hub disconnect pin and rotate the drive hub until the plugs are one on top and the other at 90 degrees.

12 Fill the hub until the oil level is even with the bottom of the side plug hole. Refer to Specifications, *Hydraulic Specifications*.

13 Install the plugs into the drive hub.

14 Attach a lifting strap from an overhead crane to the center-point of the track assembly, above the sprocket.

15 Install the track assembly onto the drive hub adapter while guiding the hub adapter studs into the sprocket of the track assembly. Install as many sprocket retaining fasteners as possible to the hub adapter and torque to specification. Refer to Specifications, *TRAX Torque Specifications*.

16 Raise the machine, remove the jack stands lower the machine.

17 Drive the machine in either direction just until the remaining sprocket retaining fasteners can be installed onto the drive hub adapter. Turn the machine off.

18 Install the remaining sprocket retaining fasteners to the drive hub adapter and torque to specification. Refer to Specification, *TRAX Torque Specifications*.

19 Repeat this procedure for each drive hub.

Turntable Rotate Drive Hub:

1 Secure the turntable from rotating with the turntable rotation lock pin.

2 Tag, disconnect and plug the hydraulic hoses to the drive hub drive motor and brake.

⚠WARNING Bodily injury hazard. Spraying hydraulic oil can penetrate and burn skin. Loosen hydraulic connections very slowly to allow the oil pressure to dissipate gradually. Do not allow oil to squirt or spray.

3 Attach a suitable lifting device to the lifting eye of one turntable rotate drive hub assembly.

Downloaded from www.Manualslib.com manuals search engine

https://truckmanualshub.com/

Programmed Maintenance Procedures

4 Remove the drive hub mounting bolts from the drive hub assembly. Carefully remove the turntable rotate drive hub assembly from the machine.

Note: If equipped with two turntable rotation drive hub assemblies, do not remove them both at the same time.

WARNING Crushing hazard. The turntable rotate drive hub assembly could become unbalanced and fall when removed from the machine if not properly supported by the lifting device.

5 Remove the plug from the side of the drive hub. Drain the oil from the hub into a suitable container.

6 Install the drive hub assembly onto the machine. Lubricate and torque the drive hub mounting bolts to specification. Refer to Specifications, *Machine Torque Specifications*.

7 Fill the drive hub with oil. Apply pipe thread sealant to the plug. Install the plug. Refer to Specifications, *Hydraulic Specifications*.

8 If equipped with two turntable rotation drive hub assemblies, repeat steps 2 through 7 for the other turntable rotate drive hub assembly.

9 Adjust turntable rotation gear backlash. Refer to Repair Procedure in the appropriate Service and Repair Manual for your machine, *How to Adjust the Turntable Rotation Gear Backlash.*

P2-1
Perform Engine Maintenance – 2000 Hours

Engine specifications require that this procedure be performed every 2000 hours.

Required maintenance procedures and additional engine information are available in the manufacturer's manuals. Refer to Specifications, *Engine Operator and Maintenance Manuals*.

Cummins Models

- Cooling system - flush
- Valve clearance - check/adjust

GM .998L

- Intake manifold - check for vacuum leaks
- Timing belt - replace

GM 3.0L

- Electrical wiring - check for chafing or damage
- Vacuum lines and fittings - check
- Spark plugs - replace
- LPG fuel lock-off valve - check for leaks
- Fuel lines and clamps - check for leaks
- Air intake system - inspect for leaks
- Intake manifold - check for vacuum leaks
- Exhaust manifold - check for leaks
- Exhaust system – check for leaks
- HEGO sensor - check for damage
- Catalyst - Inspect

Downloaded from www.Manualslib.com manuals search engine

https://truckmanualshub.com/

Programmed Maintenance Procedures

Deutz Models

All Models

- V-Belts - replace
- Glow plugs - replace

D 2.9 and TD 2.9 Models

- Cooling system coolant - replace
- Extended life coolant (ELC) - replace

Perkins Models

All Models

- Alternator - inspect
- Engine mounts - inspect
- Starting motor - inspect
- Engine crankcase breather - replace

Perkins 854F-34T

- Water pump - inspect
- Turbocharger - inspect
- Aftercooler core - inspect

Perkins 1104D-44T

- Aftercooler core - inspect
- Turbocharger - inspect
- Water pump - inspect
- Cooling system coolant - replace

Kubota Models

Z482-E, D1105, WG972

- Radiator coolant (L.L.C.) - replace
- Battery - replace
- Radiator hoses and clamp bands - replace
- Fuel pipes and clamp bands - replace
- Intake air line - replace

WG972

- Fuel filter - replace
- LPG fuel hose and clamp bands - replace
- Coolant and vacuum lock hose of LPG vaporizer - replace

Downloaded from www.Manualslib.com manuals search engine

https://truckmanualshub.com/

Programmed Maintenance Procedures

P2-2
Test or Replace the Hydraulic Oil

Genie requires that this procedure be performed every 2000 hours.

Replacement or testing of the hydraulic oil is essential for good machine performance and service life. Dirty oil and a clogged suction strainer or hydraulic filters may cause the machine to perform poorly and continued use may cause component damage. Extremely dirty conditions may require oil changes to be performed more frequently.

Note: Before replacing the hydraulic oil, the oil may be tested by an oil distributor for specific levels of contamination to verify that changing the oil is necessary. If the hydraulic oil is not replaced at the 2000 hour inspection, test the oil quarterly. Replace the oil when it fails the test.

Note: When removing a hose assembly or fitting, the O-ring (if equipped) on the fitting and/or hose end must be replaced. All connections must be torqued to specification during installation. Refer to Specifications, *Hydraulic Hose and Fitting Torque Specifications.*

Testing the oil:

1 Complete the hydraulic oil testing with an oil distributor.

⊙ If the hydraulic oil passes testing at the 2000 hour maintenance interval, the oil must be tested every quarter by an oil distributor until the oil fails the test and is replaced.

⊠ If the hydraulic oil fails testing at the 2000 hour maintenance interval, the oil must be replaced. After the oil has been replaced, continue the scheduled quarterly maintenance inspection.

Replacing the hydraulic oil:

1 Remove the drain plug from the hydraulic tank and completely drain the tank into a container of suitable capacity. Refer to Specifications, *Hydraulic Fluid Capacities Specifications*.

2 Fill the tank with the proper hydraulic oil for your machine. Refer to Specifications, *Hydraulic Specifications*.

3 **Engine Models**: Prime the pump. Refer to Repair Procedure in the appropriate Service and Repair Manual for your machine, *How to Prime the Pump*.

4 Clean up any oil that may have spilled.

Note: When replacing the hydraulic oil, it is recommended that the hydraulic tank be cleaned using a mild solvent and all hydraulic filters and strainers be replaced.

Note: Always use pipe thread sealant when installing the suction hose fittings and the drain plug.

Note: After the oil has been replaced, continue the scheduled quarterly maintenance inspection.

Downloaded from www.Manualslib.com manuals search engine

https://truckmanualshub.com/

P2-3
Replace the Hydraulic Filters

Genie requires that this procedure be performed every 2000 hours.

Perform this procedure more often if dusty conditions exist.

Replacement of the hydraulic filters is essential for good machine performance and service life. A dirty or clogged filter may cause the machine to perform poorly and continued use may cause component damage. Extremely dirty conditions may require that the filter be replaced more often.

Note: There are four types of hydraulic filters: tank return filter, medium pressure filter, high pressure filter and drive motor case drain filter. The quantity and type of filter(s) may vary by model.

⚠ CAUTION Bodily injury hazard. Beware of hot oil. Contact with hot oil may cause severe burns.

Note: Perform this procedure with the engine off.

Hydraulic return filter

Note: The return filter may be mounted in the top of the hydraulic tank (internally) or outside of the tank (externally).

Internal:

1 Locate the hydraulic return filter housing on top of the hydraulic tank.

2 Remove the cap from the filter housing.

3 Lift the handle on the filter element and rotate the element counterclockwise to release the element from the housing.

4 Remove the filter element from the housing.

5 Install the new filter element into the filter housing.

6 Push the filter element down to be sure the O-ring on the element is fully seated into the housing.

7 Rotate the filter element clockwise to lock it in place.

8 Install the filter housing cap.

9 Use a permanent ink marker to write the date and number of hours from the hour meter on the oil filter housing.

10 Inspect the filter housings and related components to be sure that there are no leaks.

External:

1 Locate the hydraulic return filter.

2 Place a suitable container under the filter(s).

3 Remove the filter with an oil filter wrench.

4 Apply a thin layer of fresh oil to the gasket of the new oil filter.

5 Install the new hydraulic return filter element and tighten it securely by hand.

6 Clean up any oil that may have spilled during the installation procedure.

7 Use a permanent ink marker to write the date and number of hours from the hour meter on the oil filter.

8 Inspect the filter housings and related components to be sure that there are no leaks.

Downloaded from www.Manualslib.com manuals search engine

https://truckmanualshub.com/

Programmed Maintenance Procedures

Medium and high pressure filters

Note: The medium pressure filter is for the charge pump and the high pressure filter is for all machine functions except the drive circuit and oscillating axle circuit.

1 Locate the medium and high pressure filters.

2 Place a suitable container under each filter.

3 Remove the filter housings by using a wrench on the nut provided on the bottom of the housings.

4 Remove the filter elements from the housings.

5 Inspect the housing seals and replace them if necessary.

6 Install the new filter elements into the housings and tighten them securely.

7 Clean up any oil that may have spilled during the installation procedure.

8 Use a permanent ink marker to write the date and number of hours from the hour meter on the oil filter housings.

9 Inspect the filter housings and related components to be sure that there are no leaks.

Case drain filter:

Note: The case drain filter is for the charge pump.

1 Open the engine side turntable cover and locate the case drain filter mounted to the engine tray near the hydraulic pumps.

2 Place a suitable container under the filter(s).

3 Remove the case drain filter housing by using a wrench on the nut provided on the bottom of the housing.

4 Remove the case drain element from the housing.

5 Inspect the housing seal and replace it if necessary.

6 Install the new case drain filter element into the housing. Install the filter housing onto the filter head and tighten it securely.

7 Clean up any oil that may have spilled during the installation procedure.

8 Use a permanent ink marker to write the date and number of hours from the hour meter on the oil filter.

9 Start the engine from the ground controls.

10 Inspect the all of the filter housings and related components to be sure that there are no leaks.

Tank breather filter (if equipped):

1 Locate the breather filter on top of the hydraulic tank.

2 Remove the filter and install the new hydraulic tank breather filter. Tighten securely by hand.

Downloaded from www.Manualslib.com manuals search engine

https://truckmanualshub.com/

P2-4
Check the Free-wheel Configuration

Genie requires that this procedure be performed every 2000 hours.

Proper use of the free-wheel configuration is essential to safe machine operation. The free-wheel configuration is used primarily for towing. A machine configured to free-wheel without operator knowledge may cause death or serious injury and property damage.

Models with 2 wheel steer will be referenced with Non-steer and steer wheels.

Models with 4 wheel steer will be referenced with Circle-end and Square-end wheels.

WARNING Collision hazard. Select a work site that is firm and level.

NOTICE Component damage hazard. If the machine must be towed, do not exceed 2 mph / 3.2 km/h.

Non-steer or Circle-end wheels:

1 Chock the steer/square-end wheels to prevent the machine from rolling.

2 **Models with 2 wheel steer:** Center a lifting jack of ample capacity (20,000 lbs / 10,000 kg) under the drive chassis between the non-steer tires or tracks.

Models with 4 wheel steer: Place a lifting jack of ample capacity (35,000 lbs / 16000 kg) under each of the steer yokes at the circle-end of the machine.

3 Lift the wheels or tracks off the ground and then place jack stands under the drive chassis for support.

4 Disengage the drive hubs by turning over the drive hub disconnect caps on each non-steer / circle-end wheel hub.

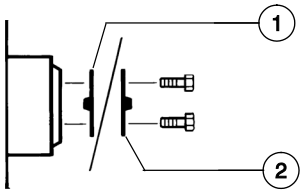

1 brake disengaged position
2 brake engaged position

5 Manually rotate each non-steer / circle-end wheel.

⊙ Result: Each non-steer / circle-end wheel should rotate with minimum effort.

Note: **TRAX Models**: Due to the additional components of the track system, which increase rotational friction, the track may not be able to be rotated manually.

6 Re-engage the drive hubs by turning over the hub disconnect caps. Rotate each wheel or track to check for engagement. Lift the machine and remove the jack stands.

WARNING Collision hazard. Failure to re-engage the drive hubs could result in death or serious injury and property damage.

Downloaded from www.Manualslib.com manuals search engine

https://truckmanualshub.com/

Programmed Maintenance Procedures

Steer or Square-end wheels: 4WD Models

7 Chock the non-steer / circle-end wheels or tracks to prevent the machine from rolling.

8 **Models with 2 wheel steer:** Center a lifting jack of ample capacity (20,000 lbs / 10,000 kg) under the drive chassis between the steer tires.

Models with 4 wheel steer: Place a lifting jack of ample capacity (35,000 lbs / 16000 kg) under each of the steer yokes at the square-end of the machine.

9 Lift the wheels or tracks off the ground and then place jack stands under the drive chassis for support.

10 Disengage the drive hubs by turning over the drive hub disconnect caps on each steer / square-end wheel hub.

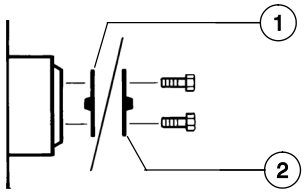

1 brake disengaged position
2 brake engaged position

11 Manually rotate each steer / square-end wheel or track.

⊙ Result: Each steer / square-end wheel or track should rotate with minimum effort.

Note: **TRAX Models**: Due to the additional components of the track system, which increase rotational friction, the track may not be able to be rotated manually.

12 Re-engage the drive hubs by turning over the hub disconnect caps. Rotate each wheel or track to check for engagement. Raise the machine, remove the jack stands and lower the machine.

⚠WARNING Collision hazard. Failure to re-engage the drive hubs could result in death or serious injury and property damage.

Models with Hydraulic Pump free-wheel valve:

13 Be sure the free-wheel valve on the drive pump is closed (clockwise).

Note: The free-wheel valve should always remain closed.

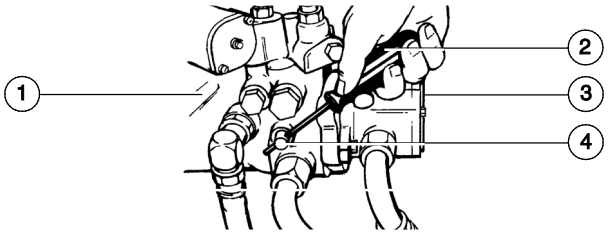

1 drive pump
2 screwdriver
3 lift pump
4 free-wheel valve

Note: The location of the free-wheel valve may vary by model.

Downloaded from www.Manualslib.com manuals search engine

https://truckmanualshub.com/

P2-5
Check the Boom Wear Pads

Genie requires that this procedure be performed every 2000 hours.

Maintaining the boom wear pads in good condition is essential to safe machine operation. Wear pads are placed on boom tube surfaces to provide a low friction, replaceable wear pad between moving parts. Improperly shimmed wear pads or continued use of extremely worn wear pads may result in component damage and unsafe operating conditions.

1 Measure each wear pad. Replace the wear pad once it reaches the minimum allowable thickness. If the wear pad is still within specification, shim as necessary to obtain minimum clearance with zero binding.

2 Extend and retract the boom through the entire range of motion to check for tight spots that may cause binding or scraping of the boom.

Note: Always maintain squareness between the outer and inner boom tubes.

SX-150 / SX-180

3 Grease the platform end bottom wear pads with a suitable lubricant.

SX-150: Grease the #1 and #2 boom tubes.

SX-180: Grease the #0 and #1 boom tubes.

S-40 / S-45 / S-60 / S-65

Wear pad specifications	Minimum
Top and side wear pads (platform end of boom)	0.50 inch 12.7 mm
Bottom wear pads (platform end of boom)	0.625 inch 15.9 mm
Top and side wear pads (pivot end of boom)	0.50 inch 12.7 mm
Bottom wear pads (pivot end of boom)	0.625 inch 15.9 mm

S-80 / S-85 / S-80X

Boom wear pad specifications	
Boom number one	**Minimum**
Bottom wear pads (extension end of boom)	0.50 inch 12.7 mm
Top and side wear pads (extension end of boom)	0.625 inch 15.9 mm
Boom number two	
Top, bottom and side wear pads (extension end of boom)	0.50 inch 12.7 mm
Bottom wear pads (pivot end of boom)	0.50 inch 12.7 mm
Top and side wear pads (pivot end of boom)	0.625 inch 15.9 mm
Boom number three	
Top, bottom and side wear pads (pivot end of boom)	0.50 inch 12.7 mm

S-100 / S-105 / S-120 / S-125
S-100HD / S-120HD

Boom wear pad specifications	0.50 inch 12.7 mm

Downloaded from www.Manualslib.com manuals search engine

https://truckmanualshub.com/

Programmed Maintenance Procedures

SX-150 / SX-180

Primary boom wear pad specifications	Minimum
Platform end	
Bottom and side wear pads	0.63 in 16 mm
Top wear pads (#1 to #2; #2 to #3)(SX180 #0 to #1)	0.35 in 9 mm
Top wear pads(#3 to #4)	0.47 in 12 mm
Pivot end	
Top wear pads	0.63 in 16 mm
Side wear pads	0.47 in 12 mm
Grease Specification	
Lube a Boom grease Genie part number	110147

Z-30/20N (RJ), Z-34/22N, Z-34/22DC

Models without rotating jib boom	
Primary boom wear pad specifications	**Minimum**
Top, bottom and side wear pads (extension end of boom)	0.625 inch 15.9 mm
Bottom and side wear pads (pivot end of boom)	0.625 inch 15.9 mm
Top wear pads (pivot end of boom)	0.375 inch 9.5 mm
Models with rotating jib boom:	
All wear pads	0.375 inch 9.5 mm

Z-33/18

Primary boom wear pad specifications	Minimum
Top wear pads - platform end	0.6875 inch 17.46 mm
Side wear pads - platform end	0.5625 inch 14.29 mm
Bottom wear pads - platform end	0.625 inch 15.9 mm
Top and side wear pads - pivot end	0.69 inch 17.46 mm
Bottom wear pads - pivot end	0.81 inch 20.64 mm

Z-34/22 IC, Z-34/22 Bi-Energy

Primary boom wear pad specifications	Minimum
Top, side and bottom wear pads - platform end	0.625 inch 15.9 mm
Bottom wear pads - pivot end	0.50 inch 12.7 mm
Top wear pads - pivot end	0.625 inch 15.9 mm
Side wear pads - pivot end	0.375 inch 9.5 mm

Z-40/23N (RJ)

Primary boom wear pad specifications	Minimum
Top and side wear pads (platform end of boom)	0.625 inch 15.9 mm
Bottom wear pad (platform end of boom)	0.375 inch 9.5 mm
Top bottom and side wear pads (pivot end of boom)	0.375 inch 9.5 mm

Downloaded from www.Manualslib.com manuals search engine

https://truckmanualshub.com/

Z-45/25 (J) IC, DC, BE, Z-51/30J

Primary boom wear pad specifications	Minimum
Top, bottom and side wear pads (platform end of boom)	0.625 inch 15.9 mm
Side and bottom wear pads (pivot end of boom)	0.50 inch 12.7 mm
Top wear pads (pivot end of boom)	0.625 inch 15.9 mm

Z-60 DC/FE, Z-62

Primary boom wear pad specifications	Minimum
Top and bottom wear pads	0.486 inch 12.3 mm
Side wear pads	0.519 inch 13.2 mm

Z-80/60

Boom wear pad specifications	Minimum
Primary boom	
Top, bottom and side wear pads	0.625 inch 15.9 mm
Primary and secondary extension boom	
Top wear pads	0.625 inch 15.9 mm
Side wear pads	0.50 inch 12.7 mm
Secondary boom	
Top wear pads	0.50 inch 12.7 mm
Side and bottom wear pads	0.875 inch 22.22 mm

Z-135/70, ZX-135/70

Note: The minimum shim clearance for the secondary boom wear pads is 0.070 inch / 1.8 mm and the maximum allowable shim clearance is 0.25 inch / 6.4 mm.

Note: The minimum shim clearance for the jib boom and primary boom wear pads is 0.070 inch / 1.8 mm and the maximum allowable shim clearance is 0.188 inch / 4.8 mm.

Primary boom wear pad specifications	Minimum
Top, bottom and side wear pads (platform end of boom)	0.625 inch 15.9 mm
Top and bottom wear pads (pivot end of boom)	0.50 inch 12.7 mm
Side wear pads (pivot end of boom)	0.375 inch 9.5 mm
Secondary boom wear pad specifications	**Minimum**
Top wear pads (extension end of boom)	0.375 inch 9.5 mm
Side wear pads (extension end of boom)	0.50 inch 12.7 mm
Bottom wear pads (extension end of boom)	7/8 inch 22 mm
Top and bottom wear pads (pivot end of boom)	0.625 inch 15.9 mm
Side wear pads (pivot end of boom)	0.50 inch 12.7 mm
Jib boom wear pad specifications	**Minimum**
Bottom and side wear pads (platform end of boom)	0.625 inch 15.9 mm
Top wear pads (platform end of boom)	0.50 inch 12.7 mm
Top and side wear pads (pivot end of boom)	0.375 inch 9.5 mm
Bottom wear pads (pivot end of boom)	0.625 inch 15.9 mm

Downloaded from www.Manualslib.com manuals search engine

https://truckmanualshub.com/

Programmed Maintenance Procedures

P2-6
Check the Extendable Axle Wear Pads - S-100, S-105, S-120, S-125, S-100HD and S-120HD

Genie requires that this procedure be performed every 2000 hours.

Maintaining the axle wear pads in good condition is essential to safe machine operation. Wear pads are placed on axle tube surfaces to provide a low friction, replaceable wear pad between moving parts. Improperly shimmed wear pads or continued use of worn out wear pads may result in component damage and unsafe operating conditions.

Note: Be sure that the axles are fully extended before attempting this procedure.

1 Measure each wear pad.

Wear pad specifications	Minimum
Top, side and bottom wear pads	0.437 inch 1.12 mm

2 Replace any wear pad if it is less than specification. If a wear pad is not less than specification, shim as necessary to obtain minimum clearance and no drag.

Note: If the wear pads are still within specification. Refer to Repair Procedure in the appropriate Service and Repair Manual for your machine, *How to Shim the Extendable Axles*.

Note: If any wear pads are replaced, refer to Repair Procedure in the appropriate Service and Repair Manual for your machine, *Grease the Extendable Axles*.

3 Extend and retract the axles through the entire range of motion to check for tight spots that may cause binding or scraping of the axle tubes.

Note: Always maintain squareness between the outer and inner axle tubes.

P2-7
Check the Turntable Rotation Gear Backlash - ALC1000 Models

Genie requires that this procedure be performed every 2000 hours.

Properly adjusted turntable rotation gear backlash is essential for good machine performance and service life. Improperly adjusted turntable rotation gear backlash will cause the machine to perform poorly and continued use will cause component damage. The turntable rotation drive hubs are mounted on an adjustable plate on the swing chassis behind the fixed side cover at the ground controls side of the machine.

Note: Perform this procedure with the machine fully stowed and the counterweight at the square end of the machine.

Note: Perform this procedure with the machine on a firm, level surface that is free of obstructions.

1 Rotate the turntable until the boom is centered between the circle end wheels.

2 Apply approximately 20 lbs / 89 N of side force to the platform, moving the platform to one side as far as it will go.

3 Using a feeler gauge, measure the gap between the swing hub pinion gear and the turntable rotation bearing at the center tooth on one of the drive hubs. The gap should be measured on one side of the pinion gear on the center tooth.

Note: The pinion gear can be accessed on the outside of the chassis under the pinion gear guard.

Downloaded from www.Manualslib.com manuals search engine

https://truckmanualshub.com/

S-100, S-100HD, S-105, S-120, S-120HD and S-125

- ⊙ Result: The gap is between 0.010 inch / 0.254 mm and 0.022 inch / 0.559 mm. The backlash is within tolerance.
- ⊠ Result: The gap is less than 0.010 inch / 0.254 mm or more than 0.022 inch / 0.559 mm. The backlash needs to be adjusted. Refer to Repair Procedure in the appropriate Service and Repair Manual for your machine, *How to Adjust the Turntable Rotation Gear Backlash*.

SX-150 and SX-180

- ⊙ Result: The gap is between 0.016 inch / 0.406 mm and 0.024 inch / 0.62 mm. The backlash is within tolerance.
- ⊠ Result: The gap is less than 0.016 inch / 0.406 mm or more than 0.024 inch / 0.62 mm. The backlash needs to be adjusted. Refer to Repair Procedure in the appropriate Service and Repair Manual for your machine, *How to Adjust the Turntable Rotation Gear Backlash*.

Z-135/70 and ZX-135/70

- ⊙ Result: The gap is between 0.013 inch / 0.33 mm and 0.023 inch / 0.58 mm. The backlash is within tolerance.
- ⊠ Result: The gap is less than 0.013 inch / 0.33 mm or more than 0.023 inch / 0.58 mm. The backlash needs to be adjusted. Refer to Repair Procedure in the appropriate Service and Repair Manual for your machine, *How to Adjust the Turntable Rotation Gear Backlash*.

4 Repeat the procedure for the other turntable rotation hub.

P2-8
Grease the Steer Axle Wheel Bearings, All 2WD Models (except S-60, S-65, Z-60 DC/FE and Z-62)

Genie requires that this procedure be performed every 2000 hours.

Perform this procedure more often if dusty conditions exist.

Maintaining the steer axle wheel bearings is essential for safe machine operation and service life. Operating the machine with loose or worn wheel bearings may cause an unsafe operating condition and continued use may result in component damage. Extremely wet or dirty conditions or regular steam cleaning and pressure washing of the machine may require that this procedure be performed more often.

1 Loosen the wheel lug nuts. Do not remove them.

2 Block the non-steer wheels, then center a lifting jack under the steer axle.

3 Raise the machine 6 inches / 15 cm and place blocks under the drive chassis for support.

4 Remove the lug nuts. Remove the tire and wheel assembly.

5 Check for wheel bearing wear by attempting to move the wheel hub side to side, then up and down.

- ⊙ Result: There should be no side to side or up and down movement.

Skip to step 10 if there is no movement.

Downloaded from www.Manualslib.com manuals search engine

https://truckmanualshub.com/

Programmed Maintenance Procedures

6 Remove the dust cap from the hub. Remove the cotter pin from the castle nut.

7 Tighten the castle nut to specification, to seat the bearings.

S-40, S-45, Z-45/25 IC, Z-30/20N, Z-34/22N, Z-33/18, Z-34/22 IC	**35 ft-lbs 47 Nm**
Z-34/22 BE, Z-40/23, Z-45/25 DC, Z-45/25 BE	**158 ft lbs 214 Nm**

8 Loosen the castle nut and re-tighten to specification.

S-40, S-45, Z-45/25 IC, Z-30/20N, Z-34/22N, Z-33/18, Z-34/22 IC	**8 ft-lbs 11 Nm**
Z-34/22 BE, Z-40/23, Z-45/25 DC, Z-45/25 BE	**35 ft lbs 47 Nm**

9 Check for wheel bearing wear by attempting to move the wheel hub side to side, then up and down.

⊙ Result: If there is no side to side or up and down movement, continue with step 11 and grease the wheel bearings.

⊠ Result: If there is side to side or up and down movement, continue to step 11 and replace the wheel bearings with new ones.

Note: When replacing a wheel bearing, both the inner and outer bearings, including the pressed-in races, must be replaced.

10 Remove the dust cap from the hub. Remove the cotter pin from the castle nut.

11 Remove the castle nut.

12 Pull the hub off of the spindle. The washer and outer bearing should fall loose from the hub.

13 Place the hub on a flat surface and gently pry the bearing seal out of the hub. Remove the rear bearing.

14 Pack both bearings with clean, fresh grease.

15 Place the large inner bearing into the rear of the hub.

16 Install a new bearing grease seal into the hub by pressing it evenly into the hub until it is flush.

17 Slide the hub onto the yoke spindle.

NOTICE Component damage hazard. Do not apply excessive force or damage to the lip of the seal may occur.

18 Place the outer bearing into the hub.

19 Install the washer and castle nut.

20 Tighten the slotted nut to specification, to seat the bearings.

S-40, S-45, Z-45/25 IC, Z-30/20N, Z-34/22N, Z-33/18, Z-34/22 IC	**35 ft-lbs 47 Nm**
Z-34/22 BE, Z-40/23, Z-45/25 DC, Z-45/25 BE	**158 ft lbs 214 Nm**

21 Loosen the castle nut and re-tighten to specification.

S-40, S-45, Z-45/25 IC, Z-30/20N, Z-34/22N, Z-33/18, Z-34/22 IC	**8 ft-lbs 11 Nm**
Z-34/22 BE, Z-40/23, Z-45/25 DC, Z-45/25 BE	**35 ft lbs 47 Nm**

22 Install a new cotter pin. Bend the cotter pin to lock it in.

Note: Always use a new cotter pin when installing a castle nut.

23 Install the dust cap, then the tire and wheel assembly. Torque the wheel lug nuts to specification. Refer to Specifications, *Tires and Wheels Specifications*.

Downloaded from www.Manualslib.com manuals search engine

https://truckmanualshub.com/

P2-9
Grease the Steer Axle Wheel Bearings, 2WD Models - S-60, S-65, Z-60 DC/FE and Z-62

Genie requires that this procedure be performed every 2000 hours.

Perform this procedure more often if dusty conditions exist.

Maintaining the steer axle wheel bearings is essential for safe machine operation and service life. Operating the machine with loose or worn wheel bearings may cause an unsafe operating condition and continued use may result in component damage. Extremely wet or dirty conditions or regular steam cleaning and pressure washing of the machine may require that this procedure be performed more often.

1 Loosen the wheel lug nuts. Do not remove them.

2 Block the non-steer wheels, then center a lifting jack under the steer axle.

3 Raise the machine 6 inches / 15 cm and place blocks under the drive chassis for support.

4 Remove the lug nuts. Remove the tire and wheel assembly.

5 Check for wheel bearing wear by attempting to move the wheel hub side to side, then up and down.

⊙ Result: If there is no side to side or up and down movement, continue with step 10 and grease the wheel bearings.

⊙ Result: If there is side to side or up and down movement, continue to step 10 and replace the wheel bearings with new ones.

Note: When replacing a wheel bearing, both the inner and outer bearings must be replaced.

6 Remove the cover from the hub.

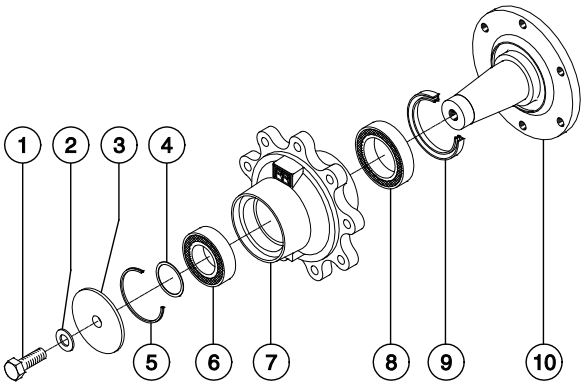

1 retaining fastener
2 washer
3 cover
4 shim
5 outer ring
6 outer bearing
7 hub
8 inner bearing
9 inner seal
10 spindle

Downloaded from www.Manualslib.com manuals search engine

https://truckmanualshub.com/

7 Remove the shims.

8 Gently pry the outer ring out of the hub.

9 Pull the hub off of the spindle. The outer bearing should fall loose from the hub.

10 Place the hub on a flat surface and gently pry the inner oil seal out of the hub. Remove the inner bearing.

11 Pack both bearings with clean, fresh grease.

12 Place the large inner bearing into the rear of the hub.

13 Install a new inner oil seal into the hub by pressing it evenly into the hub until it is flush.

14 Slide the hub onto the spindle.

NOTICE Component damage hazard. Do not apply excessive force or damage to the lip of the seal may occur.

15 Place the outer bearing into the hub.

16 Install the outer ring.

17 Install the shims.

18 Install the cover and torque the retaining fastener to 383 ft-lbs / 519 Nm.

19 Install the tire and wheel assembly. Torque the wheel lug nuts to specification. Refer to Specifications, *Machine Specifications*.

P3-1
Perform Engine Maintenance – 3000 Hours

Engine specifications require that this procedure be performed every 3000 hours.

Required maintenance procedures and additional engine information are available in the manufacturer's manuals. Refer to Specifications, *Engine Operator and Maintenance Manuals*.

Deutz Models

All Models:

- Injection valve- replace
- Toothed belt - replace
- V-belt and tensioning pulley - replace

D 2.9 and TD 2.9 Models:

- Aftercooler core - clean/test
- Turbocharger compressor outlet- clean
- Charge air cooler entry- drain lube oil/condensate

Ford Models

- Coolant filler cap - clean/replace

Downloaded from www.Manualslib.com manuals search engine

https://truckmanualshub.com/

Perkins Models

403D-11, 403F-11, 404D-22, 404F-22, 404F-22T, 804D, 1104D-44T

- Water pump - inspect
- Fuel Injector - test/change
- Cooling system coolant (Heavy Duty) - change

403F-11

- Coolant temperature regulator - replace

404F-22, 404F-22T

- Coolant temperature regulator - replace
- Diesel particulate filter - clean
- Glow plugs (ARD combustion) - replace
- Radiator cap - inspect/replace

854F-34T

- Alternator - inspect
- Alternator and fan belts - replace
- Diesel particulate filter - clean
- Radiator cap - inspect/replace

Kubota Models

Z482-E, D-1105-E3B

- Turbocharger - inspect
- Injection pump - check
- Fuel injection timing - check

P4-1
Perform Engine Maintenance – 4000 Hours

Engine specifications require that this procedure be performed every 4000 hours.

Required maintenance procedures and additional engine information are available in the manufacturer's manuals. Refer to Specifications, *Engine Operator and Maintenance Manuals*.

Perkins Models

854F-34T, 1104D-44T

- Aftercooler core - clean/test

Downloaded from www.Manualslib.com manuals search engine

https://truckmanualshub.com/

Programmed Maintenance Procedures

P5-1
Perform Engine Maintenance – 5000 Hours

Engine specifications require that this procedure be performed every 6,000 hours.

Required maintenance procedures and additional engine information are available in the manufacturer's manuals. Refer to Specifications, *Engine Operator and Maintenance Manuals*.

GM 3.0L

- Cooling system coolant - replace

P6-1
Perform Engine Maintenance – 6000 Hours

Engine specifications require that this procedure be performed every 6,000 hours.

Required maintenance procedures and additional engine information are available in the manufacturer's manuals. Refer to Specifications, *Engine Operator and Maintenance Manuals*.

Perkins 1104D-44T

- Cooling system coolant extender (ELC) - add

Downloaded from www.Manualslib.com manuals search engine

https://truckmanualshub.com/

P12-1
Perform Engine Maintenance – 12000 Hours

Engine specifications require that this procedure be performed every 12000 hours.

Required maintenance procedures and additional engine information are available in the manufacturer's manuals. Refer to Specifications, *Engine Operator and Maintenance Manuals*.

Perkins Models

All models

- Cooling system coolant (ELC) - change

P12-2
Replace the Boom Extend/Retract Cables - S-100HD and S-120HD

Genie specifications require that this procedure be performed every 7 years.

The boom extend and retract cables are responsible for the extension and retraction of the boom tube(s). Replacement of the boom extend and retract cables, when required, is essential to good machine performance and safe machine operation. The boom extend and retract functions should operate smoothly and be free of hesitation, jerking and unusual noise.

1 Replace the boom extend and retract cables. Refer to the appropriate Service and Repair Manual for repair procedure, *How to Replace the Boom Extend/Retract Cables*.

Downloaded from www.Manualslib.com manuals search engine

https://truckmanualshub.com/

Programmed Maintenance Procedures

P12-3
Replace the Boom Extend/Retract Cables - S-60 Models, S-80 Models, S-100, S-105, S-120, S-125, SX-150 and SX-180

Genie specifications require that this procedure be performed every 10 years.

The boom extend and retract cables are responsible for the extension and retraction of the boom tube(s). Replacement of the boom extend and retract cables, when required, is essential to good machine performance and safe machine operation. The boom extend and retract functions should operate smoothly and be free of hesitation, jerking and unusual noise.

1 Replace the boom extend and retract cables. Refer to the appropriate Service and Repair Manual for repair procedure, *How to Replace the Boom Extend/Retract Cables*.

Downloaded from www.Manualslib.com manuals search engine

https://truckmanualshub.com/

California Proposition 65

Warning

The exhaust from this product contains chemicals known to the State of California to cause cancer, birth defects or other reproductive harm.

Distributed By:

Genie North America
Phone 425.881.1800
Toll Free USA and Canada 800.536.1800
Fax 425.883.3475

Genie Australia Pty Ltd.
Phone +61 7 3375 1660
Fax +61 7 3375 1002

Genie China
Phone +86 21 53853768
Fax +86 21 53852569

Genie Singapore
Phone +65 67533544
Fax +65 67533544

Genie Japan
Phone +81 3 6436 2020
Fax +81 3 5445 1231

Genie Korea
Phone +82 2 558 7267
Fax +82 2 558 3910

Genie Brasil
Phone +55 11 4082 5600
Fax +55 22 4082 5630

Genie Holland
Phone +31 183 581 102
Fax +31 183 581 566

Genie Sweden
Phone 0046 3157 5101
Fax 0046 3157 5104

Genie France
Phone 0033 237 260 986
Fax 0033 237 260 998

Genie Iberica
Phone 0034 900 808 110
Fax 0034 935 725 080

Genie Germany
Phone 0800 180 9017
Phone 0049 4221 491 810
Fax 0049 4221 491 820

Genie U.K.
Phone 0044 1476 584 333
Fax 0044 1476 584 330

Genie Mexico City
Phone +52 55 5666 5242
Fax +52 55 5666 3241

Downloaded from www.Manualslib.com manuals search engine