https://truckmanualshub.com/

S178 4-2018

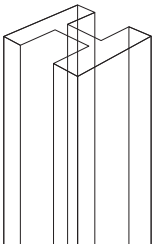

2–3.5t

Counterbalanced Type
Forklift Truck with Engine

OPERATION SERVICE MANUAL

CHL 安徽合力股份有限公司
ANHUI HELI CO., LTD.

https://truckmanualshub.com/

FOREWORD

The performance, structure, operation and maintenance and other aspects of the CHL series 2-3.5t forklift truck are described in this manual in order to guide the operators to use and maintain the truck properly.

The rules and notices in the manual should be abided seriously by all of relative person to enable trucks in optimized working state for long period and bring the highest efficiency.

https://truckmanualshub.com/

CONTENTS

FORWARD

I.Driving Operation and Daily Maintenance of Forklift Truck 1

1. Transport of forklift truck 1

2. Storage of forklift truck 1

3. Precautions before operation 1

4. Operation of forklift truck 2

5.Cautions on cooling system 3

6. Oil for forklift truck 5

7. Lubrication chart 6

II.Specifications of Forklift Truck 7

III.Description of Main Parts of Forklift truck 12

IV.Construction, Principle, Adjustment and Maintenance of Forklift Truck 13

1. Power system 13

2. Clutch and clutch pedal 16

3. Transmission, reduction gear and differential 19

4. Hydraulic-powered transmission & torque converter 33

5.Drive axle 43

6. Steering system 47

7. Steering axle with lateral positional cylinder 50

8. Brake system 54

9. Hydraulic system 72

10. Lifting system 91

11. Electric system 94

I.Driving Operation and Daily Maintenance of Forklift Truck

It is important that driving and managing persons for forklift trucks remember the principle of the“first safety”and ensure the safety operation as the description of 《Operation and Service Manual》.

1. Transport of Forklift Truck

Pay attention to the following items when you transport forklift trucks with container or trucks:

(1)Apply the parking brake.

(2)Fix the mast and the balance weight with steel wire. Wedge up all wheels.

(3)Sling points should be always at the positions specified in sling index plate when hoisting up the forklift truck.

2. Storage of Forklift Truck

(1)Drain off fuel completely. Don't drain off the cooling water containing antifreeze and rustproof agent.

(2)Apply antirust to the surface of the parts not painted. Apply lubrication oil to the lift chain.

(3)Lowing the mast to the lowest position.

(4)Apply the parking brake.

(5)Wedged up the wheels.

3. Precautions before Operation

(1)Don't check fuel leakage and level or instruments at the place there is open flame. Never fill the fuel tank with the engine running.

(2)Check the tire inflation pressure.

(3)The forward-reverse lever should be in neutral.

(4)Never smoke while the fuel system is under working or the battery is inspected.

(5)Check all the levers and pedals.

(6)Complete the provisions before starting.

(7)Release the parking brake.

(8)Make trial of the mast for lifting, lowing and forward and backward tilting and the truck for steering and braking.

(9)The contamination level of the hydraulic oil should be lower than 12 as described in NAS 1638.

4. Operation of Forklift Truck

(1)Only trained and authorized operator shall be permitted to operate the truck.

(2)Wear all the safety guards, such as shoes, helmet, clothing and gloves while operating the truck.

(3)Check all the control and warning devices before staring the truck. If any damages or defects are found, operate it after repairing.

(4)The goods handled should not exceed the rated capacity of the truck. Insert forks deeply under goods and make the loads distribute on the forks evenly. Don't pick the loads with one fork tip.

(5)The starting, turning, driving, braking and stopping of the truck should be done smoothly. When steering on the humid or low friction road, the truck should be decelerated.

(6)Travel with loads as low as possible and tilted backward.

(7)Be careful when traveling on a slope. When climbing grade with a slope more than 10%, the truck should travel forward, and when descending so grade, backward travel. Never turn on a slope. Avoid loading and unloading operation when descending.

(8)Pay attention to pedestrian, obstacle and bumpy road when driving. Pay attention to the clearance over forklift truck.

(9)Never allow any person(s) to stand on the forks or the truck to carry person.

(10)Never permit anyone to stand or walk under upraised forks.

(11)Don't operate truck and attachment at any position out of the driver seat.

(12)On the high lift forklift truck with the lift more than 3m, it is noted that the

goods on it should not fall down or the protection measures be taken if necessary.

(13) Tilt the mast of the high lift forklift truck as backward as possible when the truck works. Use minimum forward and reverse tilt when loading and unloading.

(14)Be careful and slowly driving over a dockboard or bridge-plate.

(15)Shut down the engine and don't stay on the truck when filling fuel. Don't ignite the engine when checking battery or fuel lever.

(16)The unloaded forklift truck with attachment(s) should be operated as a loaded truck.

(17) Don't handle unfixed stacked goods. Be careful to balky goods to be handled.

(18) When leaving lower the forks on the ground and let the shift lever to neutral, shut down the engine or cut down electric supply. If parking on a grade is unavoidable apply the parking brake and block the wheels.

(19) Don't open the radiator cap when the engine is warm.

(20) Don't adjust the control valve and relief valve at will to prevent the damage of hydraulic system and its components because of excessive pressure passing them.

(21) Tyres should be inflated according to the pressure valve specified in the mark plate of “Tyre pressure”.

(22) According to the measure method specified in JB/T 3300. Max. noise at the outboard of the truck should be not more than 89dB(A).

5. Cautions on Cooling System

Cooling system which is filled with HELI exclusive coolant free from maintenance normally before leaving the factory is used to cool engine and hydraulic powered transmission unit (hydraulic powered type forklift truck). The coolant filled in the truck can not only protect the truck against freezing above -35℃, but also protect the cooling system from corrosion, scale-forming and increase the coolant boiling point remarkable. So the coolant concentration will not be reduced even in the warm season or area because of water replenishing. If greater anti-freezing protection

https://truckmanualshub.com/

is needed considering climate, please contact with local HELI sales network for HELI exclusive coolant with greater anti-freezing ability.

(1) If the radiator appears “boiling” or excessive coolant temperature, it is prohibited strictly to open the radiator cover immediately. Do as the following:

(a) Park the truck at a safe area;

(b) Keep the engine idling and open the engine hood to keep good ventilation;

(c) Shut off the engine when the water temperature indicator points to the normal range;

(d) Check the following points when the engine is cool completely:

- Check if the coolant lever is correct;
- Check if the fan belt is loose;
- Check the engine oil quality and oil level;
- Check if the radiator is clogged;
- Check if the thermostat can open normally;

(2) Use HELI exclusive coolant in order to keep the engine and cooling system in good condition. Change it once a year. If the coolant is bad in less than one year, change it when necessary. When changing the coolant, clean the interior of the cooling system. The freezing point of the coolant should be at least 10℃ lower than the lowest environment temperature.

(3) Replenish the coolant with HELI exclusive one only when the engine is cool when necessary avoiding engine damage. If there is no HELI exclusive coolant in an emergency, never add any additives. Add water only and contact with local HELI sales network for proper mixture as possible. Use new HELI exclusive coolant when replenishing. It is prohibited to add any liquid into the cooling system except the specified coolant in order to avoid radiator corrosion or scale forming which will reduce radiator performance and service life.

(4) It is prohibited to contact the radiator core directly with sharp hard objects if the core is dirty. Clean it with water flow or air flow with the following set pressure

value. Keep the mouth against the radiator core.

Water flow pressure: no higher than 0.49MPa (5kgf/cm²);

Air flow pressure: no higher than 0.98MPa (10kgf/cm²).

(5) Coolant storage notes:

(a) Avoid direct contact with the coolant which is bad for health;

(b) Store the coolant in proper sealed container because the coolant steam is harmful. Make sure to keep it out of the reach of children because there is a danger of poisoning;

(c) Once the coolant goes to eyes, please wash with water and see a doctor;

(d) See a doctor immediately once the coolant is drank carelessly;

(e) Never use the coolant drained from the truck again. Place the coolant drained from the truck in a special container and deal with environmental rules.

6. Oil for Forklift Truck

Type	Oil number, oil code and applying temperatur				
Diesel (refer to note)	Light diesel number	0#	−10#	−20#	−35#
	Applying temperature (℃)	⩾ 4	⩾ −5	⩾ −5 ～−14	⩾−14 ～−29
Engine oil(CD)(refer to note)	Viscosity degree	5W／30	10W／30	15W／40	20W／50
	Applying temperature (℃)	−30 ～+30	−25 ～+30	−20 ～+40	−15 ～+50
Hydraulic oil	HLW-40(Dedicated for HELI)				
	Normal temperature: Mobil DTE 10 Excel 25 Shell Tellus S2 V 46		Low temperature: Mobil DTE Excel 46 Shell Donax TC 10W		
Hydraulic-powered transmission oil	HLT-9(Dedicated for HELI)				
	Normal temperature: Total Dyantrans AC 30 FUCHS RENOLIN ATF-Y 8		Low temperature: Mobil Fluid 424 Shell Donax TD 10W		
Brake liquid	D0T3 compound brake liquid				
Lubricating grease	3# general lithium grease				
Heavy duty tuck gear oil	Viscosity degree	85W／90GL−5		80W／90GL−5	
	Applying temperature (℃)	−15 ～ +49		−25 ～ +49	
Anti-freezing liquid	Code	FD−1	FD−2	FD−2A	FD−3
	Applying temperature(℃)	⩾ −25	⩾ −35	⩾ −45	⩾ −50

7.Lubrication Chart

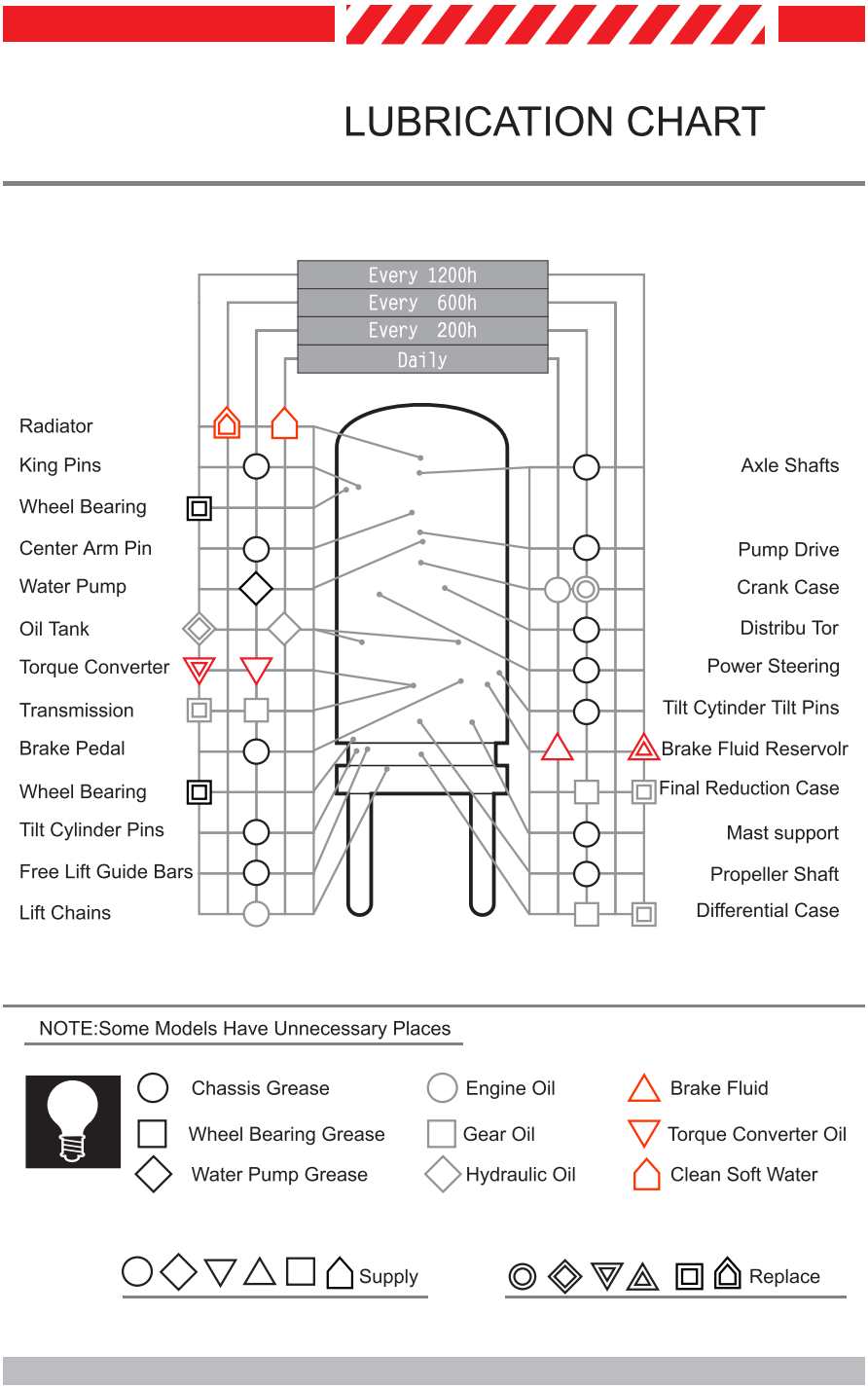

https://truckmanualshub.com/

II.Specifications of Forklift Trucks

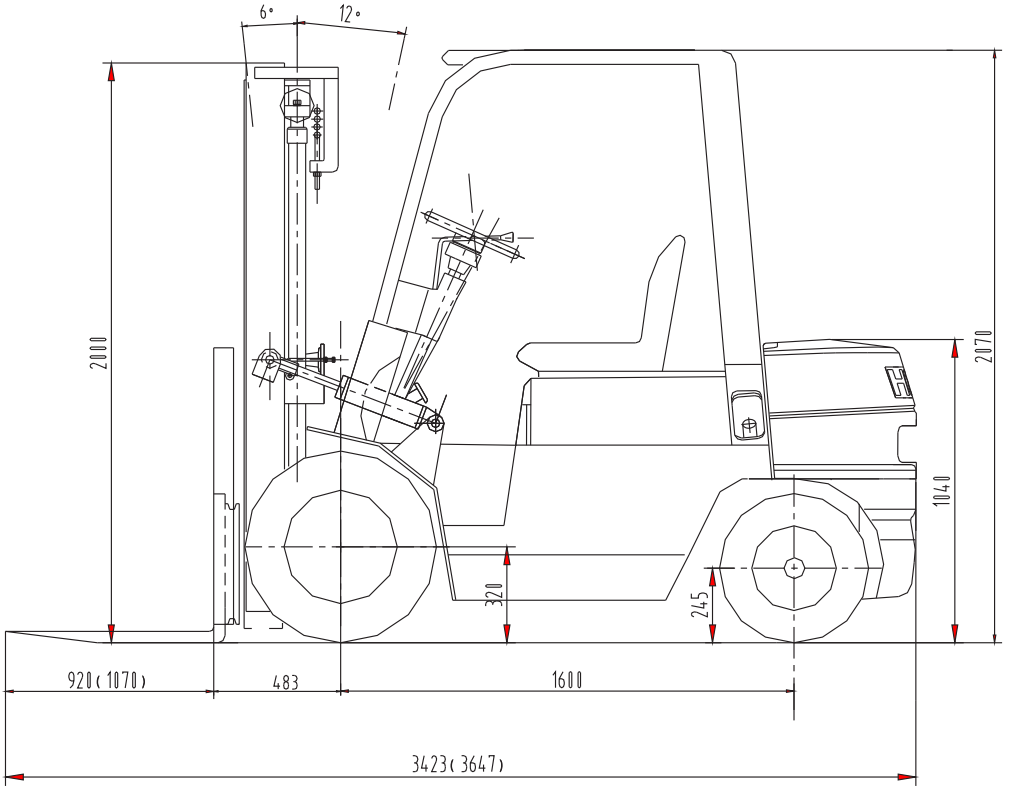

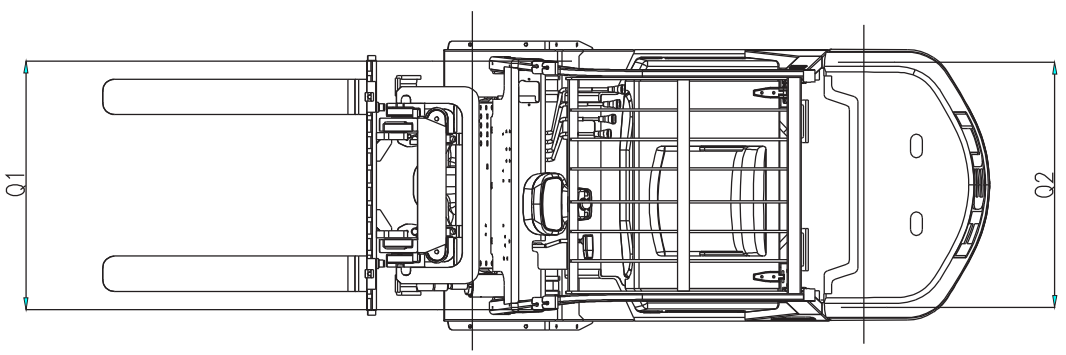

External View of Forklift Trucks

https://truckmanualshub.com/

Specifications of Forklift Trucks

Table 1

Parameters \ Model				CPC 20	CPCD 20	CPC 25	CPCD 25	CPC 30	CPCD 30
Performance	Rated Capacity kg			2000		2500		3000	
	Load Center mm			500					
	Standard Lift Height mm			3000					
	Free Lift Height mm			170				160	
	Mast Tilt Angle Fwd/Rwd			6° /12°					
	Lifting Speed mm/s		Unloaded	520				470	
			Loaded	480				435	
	Travel Speed km/h	Mechanical	Unloaded	19	19	19	19	21	21
			Loaded	17	17	17	17	18	18
		Hydraulic	Unloaded	19	19	19	19	21	21
			Loaded	17	17	17	17	18	18
	Max. Drawbar Force kN		Unloaded	8.3	8.3	8.8	8.8	9.8	9.8
			Loaded	13	17	13	17	15	15
	Gradeability %		Unloaded	20	20	20	20	20	20
			Loaded	20	20	20	20	15	15
	Min. Turning Radius mm			2170		2240		2400	
	Min. Intersecting Aisle mm			2200		2280		2380	

https://truckmanualshub.com/

Specifications of Forklift Trucks

Table 1

Parameters \ Model				CPC 20	CPCD 20	CPC 25	CPCD 25	CPC 30	CPCD 30
Dimensions	Overall Length		mm	3422		3646		3752	
	Overall Width		mm	1170		1170		1225	
	Overall Height (contracted mast)		mm	2070		2070		2090	
	Overall Height(extended mast)		mm	4030		4030		4262	
	Wheelbase		mm	1600		1600		1700	
	Tread	Front	mm	970		970		1000	
		Rear	mm	970		970		970	
	Front Overhang		mm	477		477		479	
	Rear Overhang		mm	420		494		495	
	Forks	Length	mm	920		1070		1070	
		Width	mm	100		100		125	
		Thickness	mm	45		45		45	
	Fork Spacing (adjustable)		mm	200 ~ 1024		200 ~ 1024		250 ~ 1060	
	Underclearance (at mast)		mm	110		110		135	
Service Weight (with water & oil)			kg	3320		3680		4270	

https://truckmanualshub.com/

Specifications of Forklift Trucks

Table 2

Parameters \ Model				CP(Q)Y 25	CP(Q)YD 25	CP(Q)Y 30	CP(Q)YD 30	CP(Q)Y 35	CP(Q)YD 35
Performance	Rated Capacity		kg	2500		3000		3500	
	Load Center		mm	500					
	Standard Lift Height		mm	3000					
	Free Lift Height		mm	170		160		170	
	Mast Tilt Angle		Fwd/Rwd	6° /12°					
	Lifting Speed mm/s		Unloaded	530		500		380	
			Loaded	490		450		340	
	Travel Speed km/h	Mechanical	Unloaded	20	20	20	20	19	19
			Loaded	19	19	19	19	19	19
		Hydraulic	Unloaded	20	20	20	20	19	19
			Loaded	19	19	19	19	19	19
	Max. Drawbar Force kN		Unloaded	8.6	8.6	9.8	9.8	9.8	9.8
			Loaded	9.8	12	13.5	15	14	17
	Gradeability %		Unloaded	20	20	20	19	15	15
			Loaded	15	15	17	16.9	15	14.5
	Min. Turning Radius		mm	2240		240		2420	
	Min. Intersecting Aisle		mm	2280		2380		2400	

https://truckmanualshub.com/

Specifications of Forklift Trucks

Table 2

Parameters \ Model				CP(Q)Y 25	CP(Q)YD 25	CP(Q)Y 30	CP(Q)YD 30	CP(Q)Y 35	CP(Q)YD 35
Dimensions	Overall Length		mm	3646		3752		3763	
	Overall Width		mm	1170		1225		1225	
	Overall Height (contracted mast)		mm	2070		2090		2090	
	Overall Height(extended mast)		mm	4030		4262		4262	
	Wheelbase		mm	1600		1700		1700	
	Tread	Front	mm	970		1000		1000	
		Rear	mm	970		970		970	
	Front Overhang		mm	477		479		498	
	Rear Overhang		mm	494		495		495	
	Forks	Length	mm	1070		1070		1070	
		Width	mm	100		125		125	
		Thickness	mm	45		45		50	
	Fork Spacing (adjustable)		mm	200 ~ 1024		250 ~ 1060		250 ~ 1060	
	Underclearance (at mast)		mm	110		135		135	
Service Weight (with water & oil)			kg	3680		4270		4700	

https://truckmanualshub.com/

III.Description of Main Parts of Forklift Truck

Power System — Transmission System { Clutch — Mechanical Transmission / Torque Converter — Hydraulic Transmission } —

Reduction Gear & Differential — Drive Axle — Steering System — Steering Axle —

Lifting System —

Operating System — {
- Operation of Brake and Clutch Pedals (Clutch type truck)
- Operation of Brake and Inching Pedals (Torque converter type truck)
- Parking Brake
- Operation of Accelerator
- Operation of Choke

— Hydraulic System — Electric System

https://truckmanualshub.com/

IV.Construction, Principle, Adjustment and Maintenance of Forklift Trucks

We herein explain the construction, basic principle, adjustment, disassembly and assembly, repair, troubleshooting and other contents of forklift trucks made by us for the operators to use, maintain and repair them more successfully.

1. Power System

1.1 Fuel System

The fuel system is composed of a tank, fuel volume sensor and fuel meter (see Fig. 1-1).

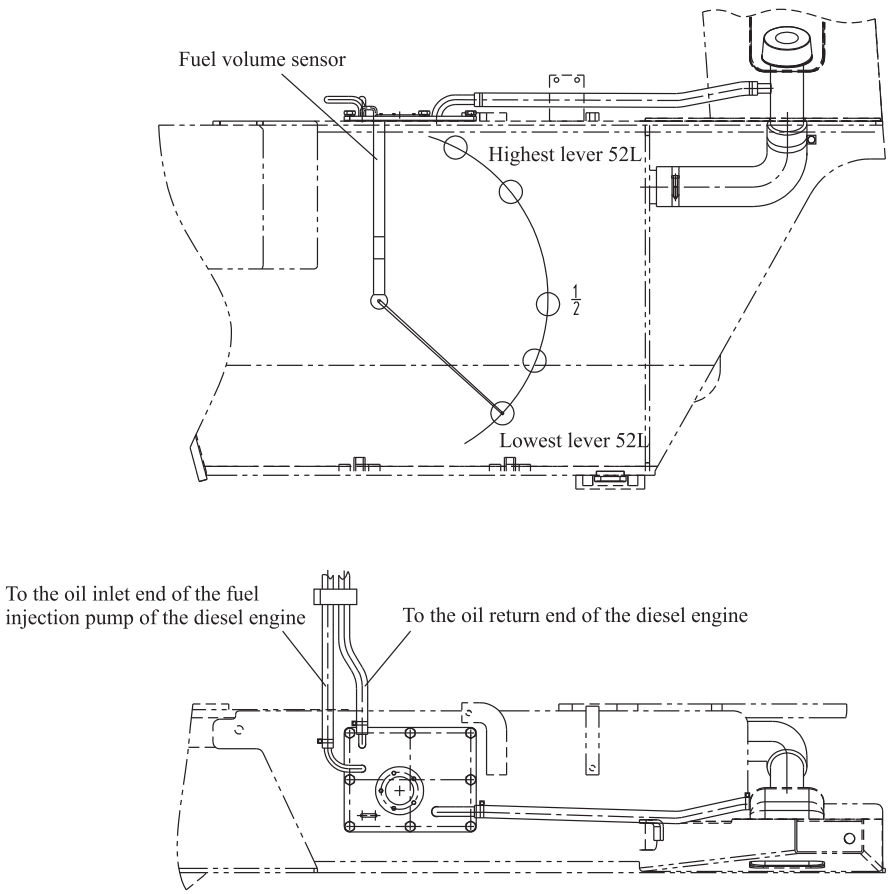

Fig. 1-1 Fuel tank for 2-3.5 ton forklift trucks

1.1.1 Fuel tank

The fuel tank is a welded construction integrated with the truck frame. It is located on the left side of the truck frame and has a capacity of 52l for 2-3.5 ton trucks. The fuel volume sensor is installed on the tank cover to detect the fuel level.

1.1.2 Fuel volume sensor

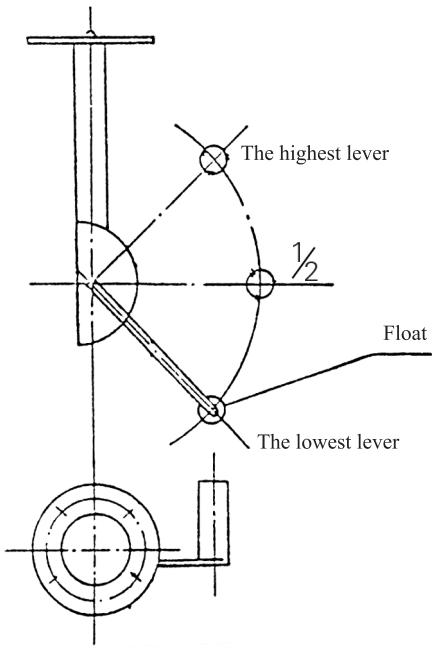

Truck capacity	2–3.5 (ton)
Float position	Resistance (Ω)
1	55
1/2	43
0	10

Fig. 1-2 Fuel volume sensor

The sensor is designed to convert the remaining amount of fuel into voltage. (See Fig.1-2) The sliding type resistor made of alloy steel wire is linked with float. As the float moves up and down, resistance is changed. With electro-magnetic fuel meter, the remaining amount of fuel in the fuel tank can be read off the meter panel.

1.1.3 Maintenance

Once every 100 working hours, it is required to maintain the fuel system according to the following methods. Once every 600 working hours, it is required to clean the fuel tank.

https://truckmanualshub.com/

(1) Fuel filter

The fuel filter is for clearing the fuel of the dust and impurity. It is installed between the feed pump and injection pump.

The filter is of cartridge type. Generally it can not be disassembled. Replace the filter assembly when required.

For maintenance of the filter, proceedings are as follows (See Fig.1-3):

a) Once a 100 working hours, it is required to remove the cartridge cover by specific tools and then take out the filter element.

b) Once a 600 hours operation, it is required to replace the filter assembly.

c) After the re-fitment of filter, check it for leaks.

d) Check overflow valve (1) for correct working.

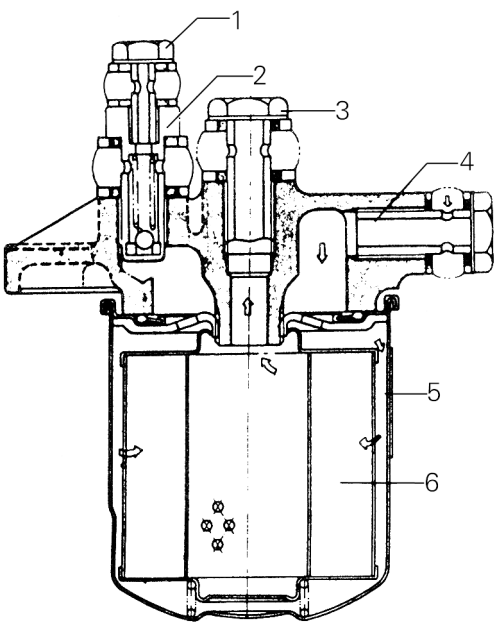

Fig. 1-3 Fuel filter

(2) Cleaning of fuel tank

Once every 600 working hours, the fuel tank should be cleared.

2.Clutch and Clutch Pedal

Table 2

Parameters \ Truck Model		CPC(D)20、25、30、35
Type		Single plate, dry
Dimensions of Friction Piece mm	Outer dia.	275
	Inner dia.	175
	Thickness when pressed	8.0
Friction Surface Area cm^2		352
Weight kg		about 10
Operation Mode		Foot operated

2.1 General Description

The clutch consists primarily of pressure plate, friction piece and clutch yoke. The pressure plate is bolted to the engine flywheel. There is an inspection hole attached to the clutch cover. The clutch pedal pushes the clutch yoke by push rod in order to release the friction piece from flywheel which normally mesh together.

2.2 Replacement of Friction Piece

(1) Press the clutch pedal and place three spacers between the pressure plate case and release lever to cause the friction piece apart.

(2) Turn counter clockwise the slide lead screw in the upper of the transmission to let the driving shaft go into the transmission (See Fig.3-1).

(3) Remove six mounting bolts on the pressure plate case to cause the flywheel apart and remove the old friction piece right away.

(4) When a new friction piece is installed, notice the hub (See part 5 in Fig.2-1) with the longer spline boss being toward the transmission.

(5) Turn the slide lead screw clockwise and pull out the driving shaft step by step and let its spline match with the hub spline.

https://truckmanualshub.com/

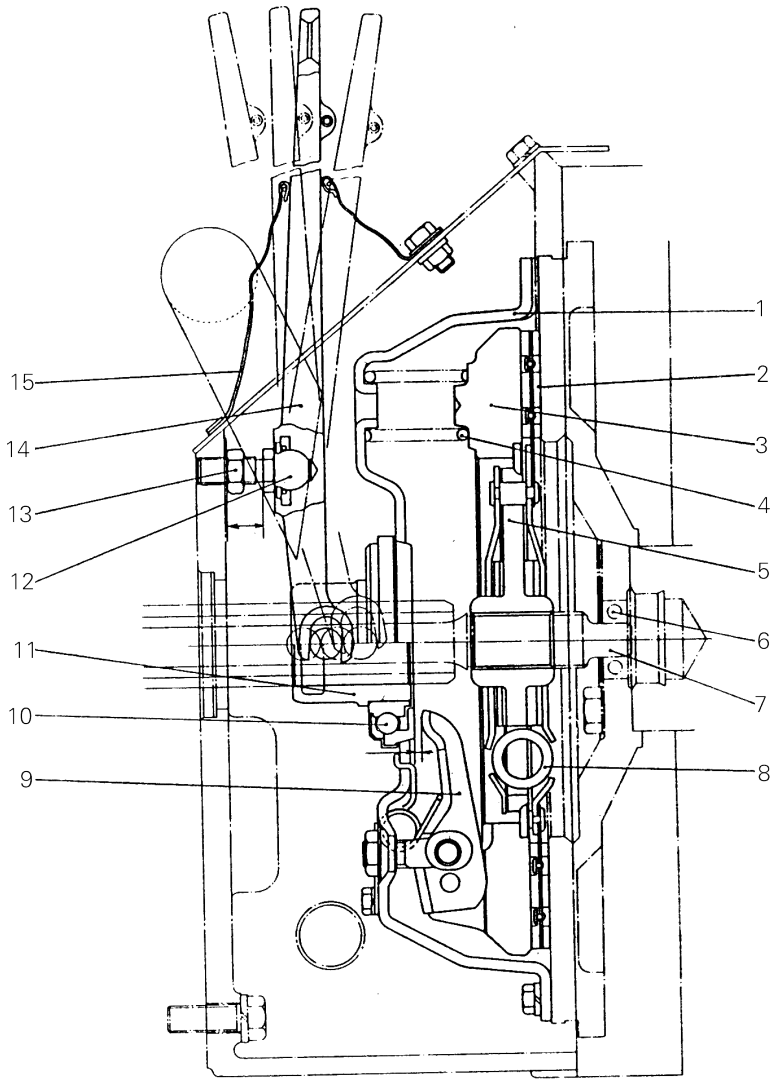

Fig.2-1 Clutch

(1) Pressure plate case (2) Friction piece (3) Pressure plate (4) Pressure spring
(5) Hub (6) Bearing (7) Driving shaft (8) Coil spring (9) Release lever
(10) Release bearing (11) Release bearing block (12) Bolt (13) Lock nut
(14) Release yoke (15) Cover

(6) After making certain that the driving shaft end has entered the middle bearing of the flywheel, tighten the slide lead screw to the torque of 107-119N.m (10.9-12.1kgm).

(7) Install the pressure plate case on the flywheel.

https://truckmanualshub.com/

(8) Press the clutch pedal and remove the three spacers.

(9) Adjust the travel of the clutch pedal. (See Fig.2-2)

2.3 Clutch Pedal

The clutch pedal and the brake pedal are fitted on the same bracket. The clutch pedal is secured on the transmission.

2.4 Adjustment of Clutch Pedal Travel (See Fig.2-2)

(1) Loosen clutch pedal stopper bolt (a).

(2) Using stopper bolt (a) to get a pedal height from the floor of 111mm. Spare travel is 30-40mm.

(3) Detach the spring at the end of the clutch pedal and loosen the nut (b).

(4) Press the clutch pedal about 30 to 40mm. At this time, pull the release yoke forward. When resistance is felt, turn spherical nut (b) until it comes into contact with release yoke and then lock with lock nut (c).

(5) Install the pedal spring properly.

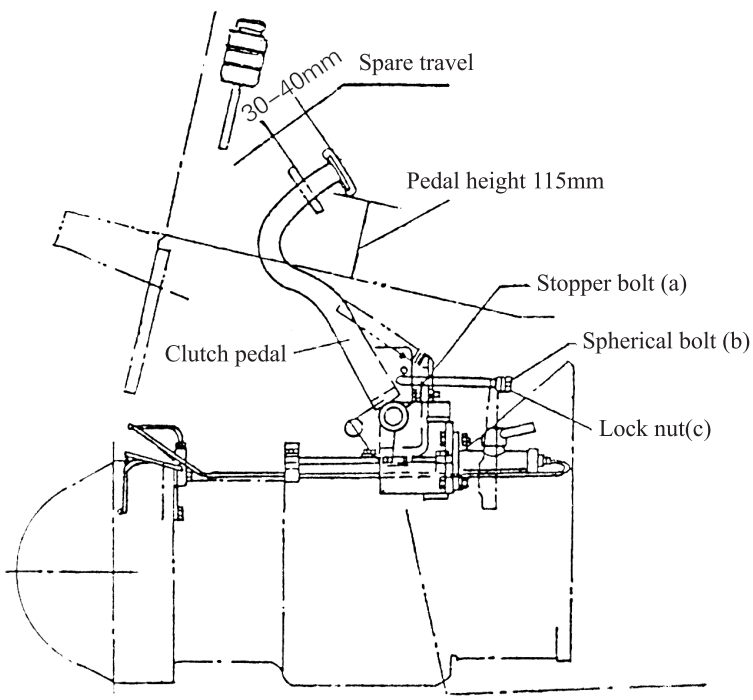

Fig.2-2 Clutch pedal

https://truckmanualshub.com/

3.Transmission, Reduction Gear and Differential

Transmission	
Type	Manual-shift, slide type synchromesh mechanism
Gears number	FWD:2 BWD:2
Gear ratio FWD 1st/2nd	3.253/1.407
BWD 1st/2nd	3.204/1.386
Reduction gear	
Gear	Spiral bevel gear
Reduction ratio	2.1
Differential	
Gear	Spur gear
Reduction ratio	6.182
Differential gear	Bevel gear
Oil amount	8 L
Dry weight (no oil)	Approx.100kg

3.1General Description

The drive unit of clutch type truck is a one-body construction consisting of the transmission, reduction gear and differential (Fig.3-1). The transmission is provided with a synchromesh mechanism that synchronizes the rotation of gears which are about to be meshed, ensuring smooth gear shifting. The transmission of this type avoids clashing gears and reduces noise arising when shifting, especially shifting from forward to reverse or vice versa.

3.2 Transmission

The transmission consists mainly of a driving shaft, an output shaft, a main shaft and an idler shaft, each having gear(s) of different sizes on it. The gear(s) can be shifted with the aid of the synchromesh mechanism installed on the main shaft by operation of the shift handle. The power from the output shaft is transmitted through the reduction gear differential and half shafts to the drive shaft.

3.2.1 Driving shaft and slide lead screw

Driving shaft's end toward the clutch is held by the ball bearing located in flywheel, another end fitted with input gear is held in transmission case by the ball bearing and its middle portion is held in the bearing retainer which is fixed in transmission case with the slide lead screw. When the replacement of the friction piece is required, the driving shaft along with the bearing retainer is moved axially through turning the slide lead screw until the shaft end toward the clutch returns inside the transmission case.

3.2.2 Output shaft

The cluster gear is installed on the output shaft through two needle bearings and a spacer. Also the output gear is splined to the output shaft through a spacer. The output shaft is held in the transmission case with two tapered roller bearings and several shims are used to adjust the backlash between the output gear and the bearing. The bigger gear of the cluster gear normally meshes with the input gear and high speed gear while the smaller gear with the low speed gear. The output gear normally meshes with the forward gear or reverse idler gear.

3.2.3 Main shaft

The high and low speed reverse and forward gears are all installed on the main shaft through needle bearings. As they normally mesh with the cluster gear, idler gear and input gear respectively, it's easy to shift for changing speed or direction synchronizer by operating the synchromesh mechanism.

3.2.4 Idler shaft

Both ends of the idler shaft are supported by the transmission case and its rear end is positioned by a steel ball. The idler gear is installed on the idler shaft through needle bearings and normally meshes with the reverse gear and output gear.

3.2.5 Rotating rod and shift forks (See Fig.3-1 and Fig.3-2)

Two rotating rods are used for performing the changeover in travel speed and direction respectively. The shift forks are supported on the shift rods. The ball is designed to rest in the notch of the shift rod to secure gearshifting position.

https://truckmanualshub.com/

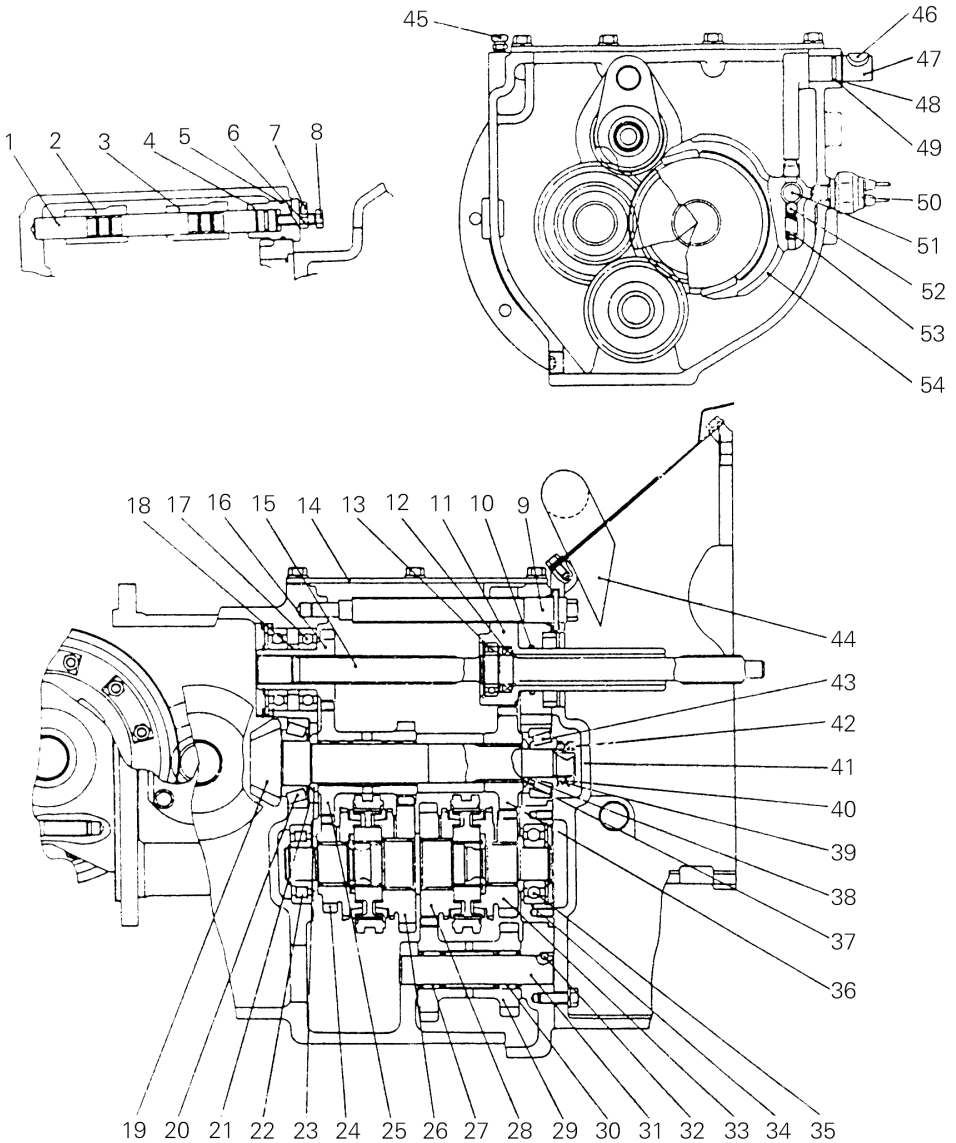

Fig. 3-1 Drive unit

(1) Shift rod
(2) Shift arm
(3) Shift arm
(4) Shaft arm
(5) O-ring
(6) Lock nut
(7) Adjusting bolt
(8) Stop bolt
(9) Slide lead screw
(10) O-ring
(11) Bearing retainer
(12) Oil seal
(13) Ball bearing
(14) Cover
(15) Driving shaft
(16) Input gear
(17) Ball bearing
(18) Spacer
(19) Output shaft
(20) Tapered roller bearing
(21) Shim
(22) Roller bearing
(23) Thrust washer
(24) High speed gear
(25) Cluster gear
(26) Low speed gear
(27) Needle bearing
(28) Reverse gear
(29) Idler gear
(30) Needle bearing
(31) Idler shaft
(32) Ball
(33) Forward gear
(34) Bearing case
(35) Ball bearing
(36) Output gear
(37) Spacer
(38) Shim
(39) Nut
(40) Lock washer
(41) Clutch case
(42) Lock nut
(43) Tapered roller bearing
(44) Ventilator duct
(45) Breather
(46) Key
(47) Rotating
(48) Snap ring
(49) O-ring
(50) Back-up lamp sw.
(51) Shift rod
(52) Ball
(53) Spring
(54) Shift fork

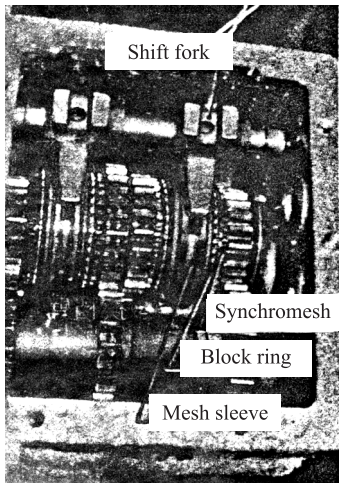

Fig.3-2 Gearshifting mechanism

3.2.6 Synchromesh mechanism (See Fig. 3-3)

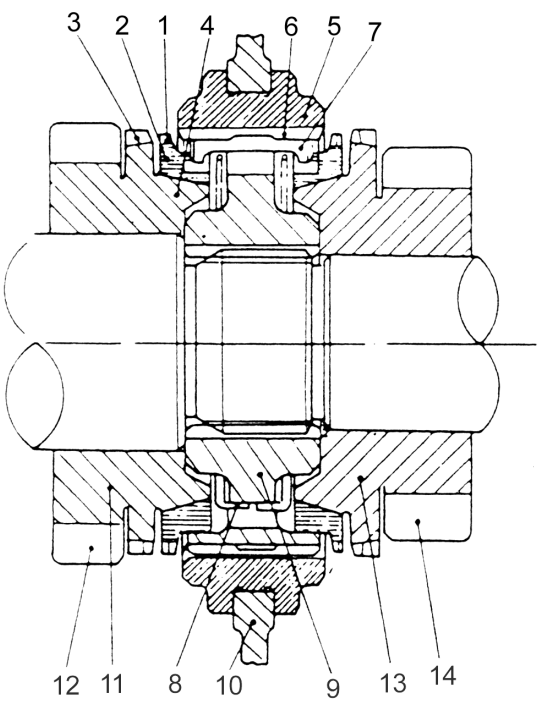

(1)Block ring spline
(2) Block ring
(3) Spline of gear (11)
(4) Synchromesh cone
(5)Mesh sleeve
(6) Mesh sleeve spline
(7) Inserter
(8) Spring
(9) Clutch hub
(10)Shift arm
(11) Constant-mesh gear
(12) Gear teeth of gear (11)
(13) Constant-mesh gear
(14) Gear teeth of gear (13)

Fig.3-3 Synchromesh mechanism

https://truckmanualshub.com/

The synchromesh mechanism consists primarily of synchromesh cones, block rings and inserts.

(1) Synchromesh cone

The gear (11) or (13) has a male cone, i.e. synchromesh cone mating with the block ring (2) through respective cone friction surface, and an involute spline (3) engaged with mesh sleeve spline (6).

(2) Block ring

The block ring has a female cone friction surface mating with the male cone's of the synchromesh cone and three notches on its circumference to align the spline of mesh sleeve with block ring's so that the mesh sleeve spline (6) is to be pressed toward the block ring spline (1).

(3) Inserter

There are three inserters included. Their center projections are fitted in the inner annular groove of the mesh sleeve spline, respective two ends in three notches of the block ring. These inserters are pressed against the top of mesh sleeve spline by two springs (8) to keep the block ring in position.

The operation of synchromesh mechanism is completed in six steps below (take the gear (11) for example).

1st Step (See Fig.3-4)

When the force is applied on the shift lever, it is transmitted to the mesh sleeve (5) through the shift fork and then makes the mesh sleeve (5) and inserters (7) axially move toward the gear (11) by X_1 and X_2 respectively. In this time, the center projections of inserters (7) are still in the groove of mesh sleeve spline.

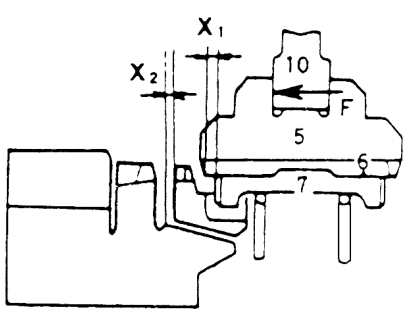

Fig. 3–4

https://truckmanualshub.com/

2nd Step (See Fig.3-5)

After the elimination of the clearance X_1 and X_2, the force above acts on the inserters (7) and synchromesh cone (4) through respective friction surface and makes the inserters inclined by an angle against the spring force to contact with synchromesh cone. At this time the mesh sleeve moves by a distance of Z.

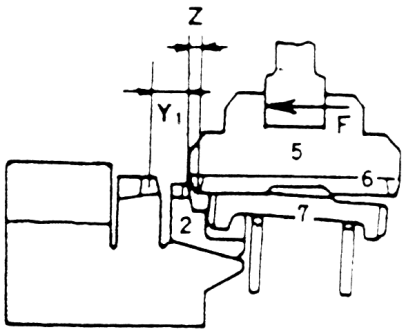

Fig. 3–5

3rd Step (See Fig.3-6)

Fig.3-6 to Fig. 3-10 are all vertical views.

The force acting on the block ring creates a friction moment between synchromesh cone and block ring and in turn makes the block ring turn an angle and the side of the notches of the block ring contact with the side of inserters. The mesh sleeve and the block ring turn an angle and the side on the notches of the block ring keeps in position at this time.

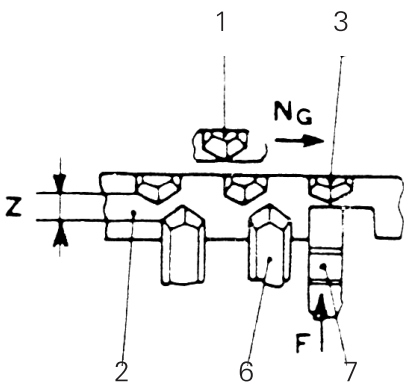

Fig. 3–6

4th Step (See Fig.3-7)

While the completing the 3rd step, the mesh sleeve shifts over a distance of Z and the chamfer (15) of the block ring comes into contact with the chamfer of the mesh sleeve spline (6) and the friction torque between the synchromesh cone and block ring gradually increases and the inertial moment of the gear (11) gradually decreases until the former's value is bigger than the latter's, i.e. Tc>Ti, driving the gear.

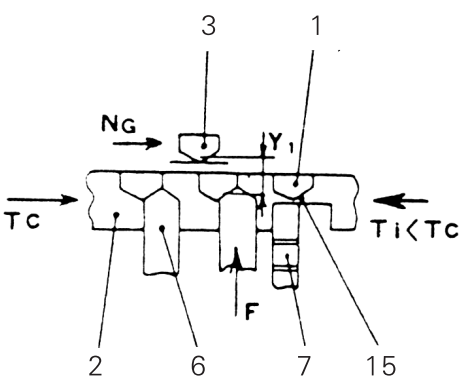

Fig. 3–7

https://truckmanualshub.com/

5th Step (See Fig.3-8)

When the relative speed between the gear (11) and the mesh sleeve (5) becomes zero, the inertial torque Ti becomes zero too and the speed of the gear (11) is equal to the main shaft's. At this time, the block ring shifts in peripheral direction to allow every mesh sleeve spline tooth to place between the spline teeth of the gear (11) and, in the case of the block ring floated by foreign force, the mesh sleeve to pass through the block ring smoothly.

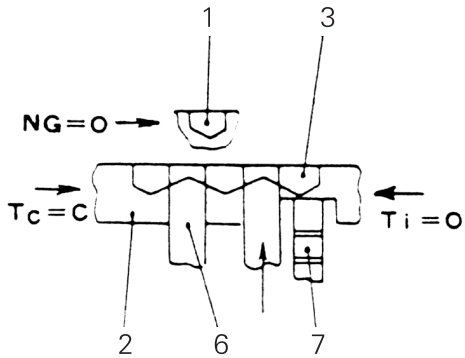

Fig. 3–8

6th Step (See Fig.3-9 and Fig. 3-10)

While passing through the block ring, the mesh sleeve shifts by a distance of Y, shown in Fig.7 and the chamfers of the mesh sleeve spline (6) come into contact with the chamfer of the spline (6) (See Fig.3-9). Due to the contact of chamfers, the torque Tc turns the gear (11) over an angle relative to the mesh sleeve and meshes the mesh sleeve spline with the spline (6).

Until now the complete synchronization course is over and then the power is output through the main shaft, clutch hub, mesh sleeve and gear (11).

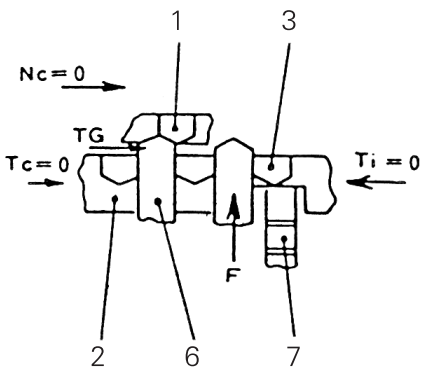

Fig. 3–9

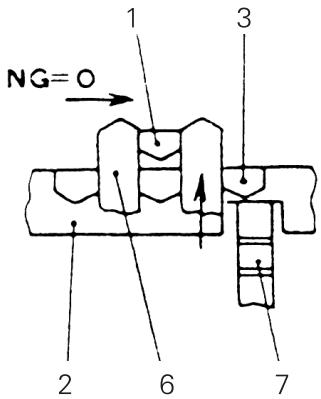

Fig. 3–10

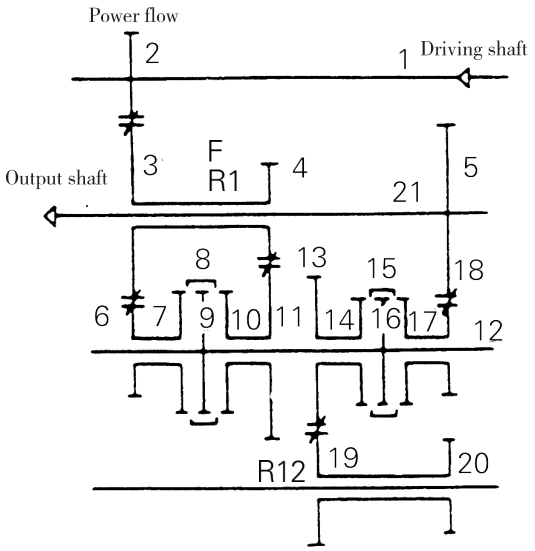

(1) Driving shaft
(2) Input gear
(3) Cluster gear
(4) Cluster gear
(5) Output gear
(6) High speed gear
(7) Synchronizing cone
(8) Mesh sleeve
(9) Clutch hub
(10) Synchronizing cone
(11) Low speed gear
(12) Main shaft
(13) Reverse gear
(14) Synchronizing cone
(15) Mesh sleeve
(16) Clutch hub
(17) Synchronizing cone
(18) Forward gear
(19) Idler shaft
(20) Idler gear
(21) Output shaft

Fig. 3-11

In neutral position —

The power from the driving shaft (1) is transmitted through the input gear, the cluster gear (3) & (4) to the high speed gear (6) or low speed gear (11). Due to the mesh sleeve is in the neutral position, the main shaft, output gear and output shaft are not rotated so the power is not transmitted to the high speed or low speed gear,

Gear shifting —

When the shifting lever is operated, the shift fork moves the mesh sleeve to allow relative gears to mesh through the synchromesh mechanism. Power is transmitted in the following order:

Driving shaft-Input gear-Cluster gear-High (or low) speed gear-Synchromesh mechanism-Main shaft-Synchromesh mechanism-Reverse (or forward) gear-Output gear- Output shaft.

Power flow in forward 1st speed gear position:

1-2-3-4-11-10-8-9-12-16-15-17-18-5-21

Power flow in forward 2nd speed gear position:

1-2-3-6-7-8-9-12-16-15-17-18-5-21

Power flow in reverse 1st speed gear position:

https://truckmanualshub.com/

1-2-3-4-11-10-8-9-12-16-15-14-13-19-20-5-21

Power flow in reverse 2nd speed gear position:

1-2-3-6-7-8-9-12-16-15-14-13-19-20-5-21

3.3 Reduction Gear (See Fig.3-12)

The reduction gear located in the front of the transmission is used to reduce the speed and increase the torque from the output shaft of the transmission and impart them to the differential. It consists primarily of a small spiral bevel gear on the output shaft and a pinion shaft splined with a big spiral bevel gear. Both ends of the pinion shaft are supported by tapered roller bearing. Several shims are installed between the case and bearing covers to adjust the clearances between them.

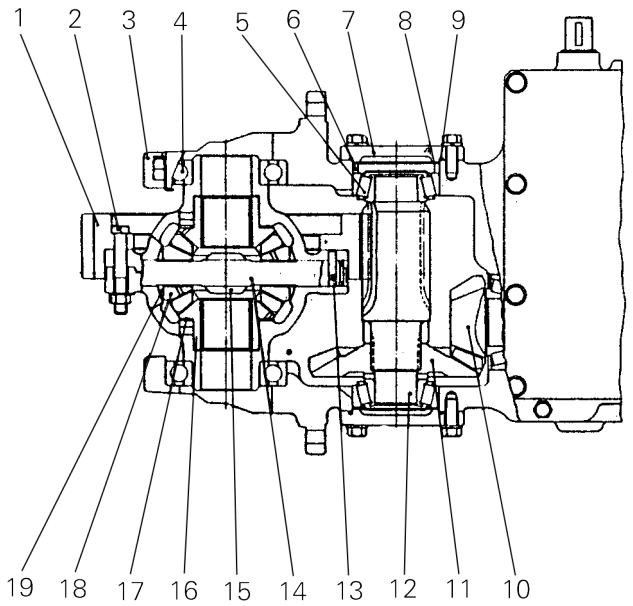

Fig. 3-12 Reduction gear & differential

(1) Ring gear (2) Bolt (3) Bearing seat (4) Ball bearing (5) Thrust washer (6) Tapered roller bearing (7) Bearing cover (8) Shim (9) O-ring (10) Output shaft (11) Big spiral bevel gear (12) Pinion shaft (13) Knock pin (14) Planet gear shaft I (15) Planet gear shaft II (16) Half shaft gear (17) Washer (18) Planet gear

https://truckmanualshub.com/

3.4 Differential (See Fig.3-12)

The differential is housed in the front portion of the case of the differential the front end of which is connected with the axle housing. The differential case is of splitting type. The differential includes two half shaft gears and four planet gears. The thrust washers are installed between the differential case and each gear and between gear pairs to keep a proper clearances between them. The planet gears are supported by planet gear shaft Ⅰ and Ⅱ. The shaft Ⅰ and ring gear (1) are fixed to the differential case respectively with knock pin and bolt.

The power from the transmission is transmitted through the reduction gear, differential, half shaft gear and half shaft to driving wheels.

3.5 Removal of Shift Forks

The figures from 3-13 to 3-20 show the removal procedures of the shift forks in the drive unit which has been removed from the truck. The procedures are also applicable to the removal of the shift forks under the condition that the drive unit is in the truck.

(1) First remove the mounting bolts on the shaft arm positioned at the rear end of the side shift rod (Fig. 3-13).

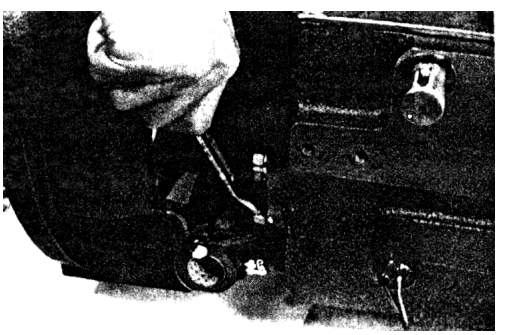

Fig. 3-13

(2) Draw out the shaft arm little (Fig.3-14).

Fig. 3-14

https://truckmanualshub.com/

(3)Remove the mounting bolts on the transmission case cover (Fig. 3-15).

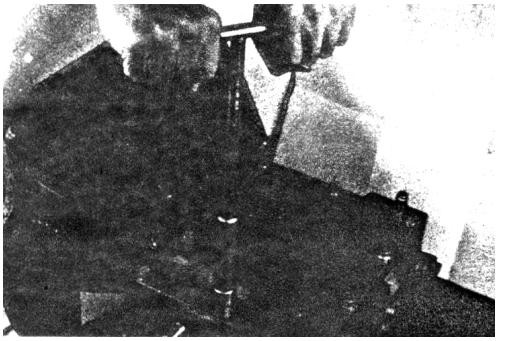

Fig. 3-15

(4)Speedly shift the speed gear from forward gear to backward gear or vide versa to let the front end of the shift rod leave the transmission housing (Fig.3-16).

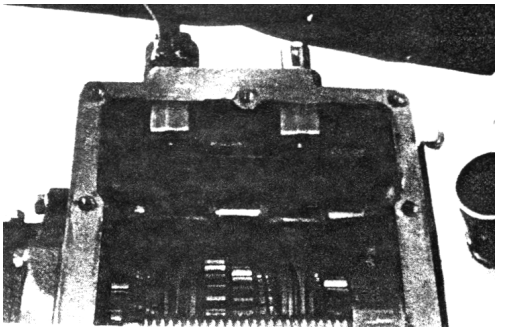

Fig. 3-16

(5)Remove the shaft arm (See Fig. 3-17).

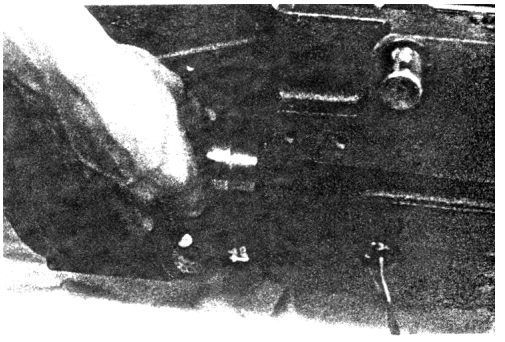

Fig. 3-17

(6)Remove the clip ring placed at the outer end of the rotating rod with a pair of pliers (SeeFig.3-18).

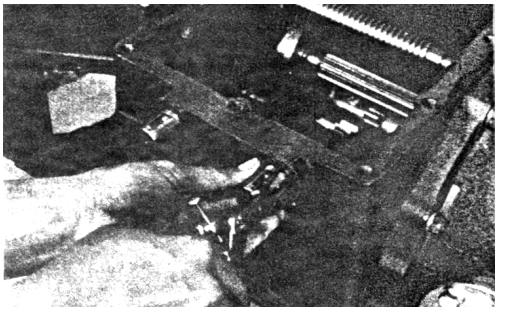

Fig. 3-18

https://truckmanualshub.com/

(7)Knock at the end of the rotating rod slightly but not heavily and remove the rod (See Fig. 3-19).

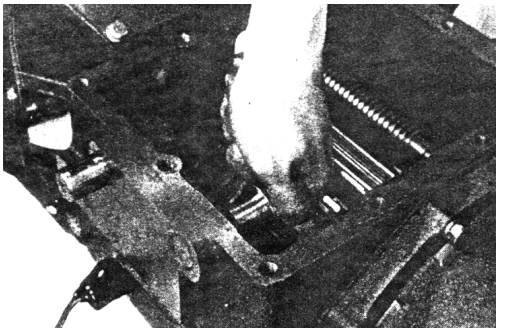

Fig. 3-19

(8)Remove the shift forks together with the shift rod.

Note: Take down the position of the shift forks then. (See Fig.3-20)

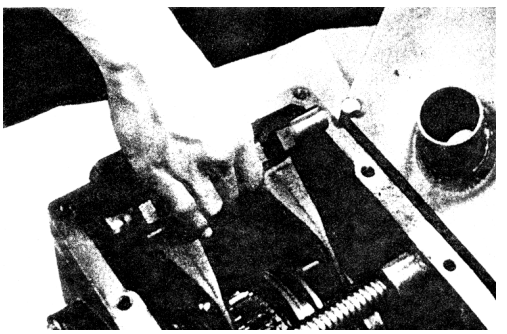

Fig. 3-20

3.6Remounting of Shift Fork

The remounting of the shift forks is contrary to the removal of them in operation order. Besides these, the followings should be noticed in the course of the remounting:

(1) The remounting should be done in a clean place to prevent dust and foreign matters from going into the transmission.

(2) Check all parts for wear and damage and replace the parts excessively worn or damaged.

(3) As a rule, each of O-ring and other seals removed should be replaced with new ones.

The remounting procedures of the shift forks are as follows:

a) Place the spring and the steel ball into the hole of the shift forks and put the shift lever in and then slightly knock at the lever to fit them properly (See Fig.3-21).

Note: ● The shift forks position should be the same as the position before the removal above.

https://truckmanualshub.com/

● **The steel ball in the shift fork should fall into relative midchannel of the shift lever.**

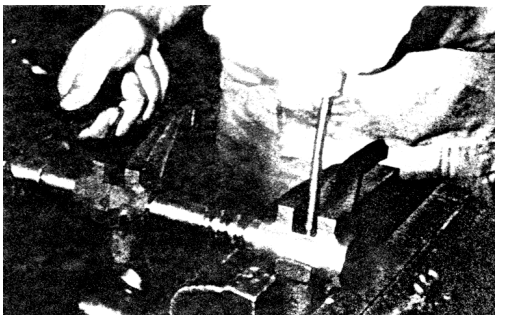

Fig. 3-21

b) Align the shift forks with the channel of mesh sleeve and put the shift forks and the direction shift lever into the transmission. (See Fig.3-22)

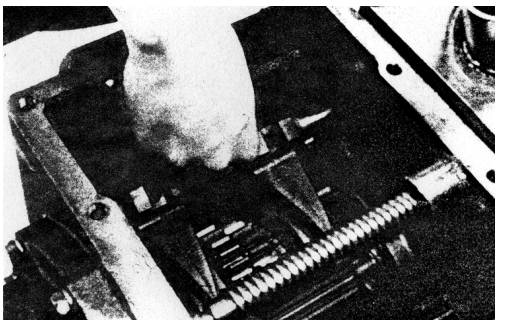

Fig. 3-22

c) Properly fix the shaft arm (See Fig.3-23) and notice the position of the shift rod. (See Fig.3-24)

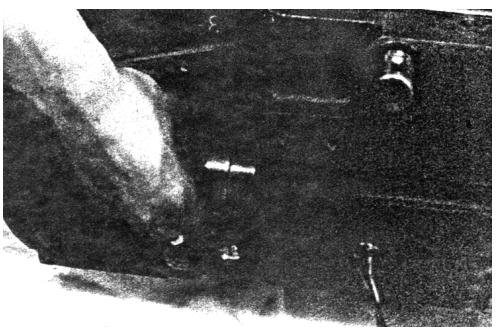

Fig. 3-23

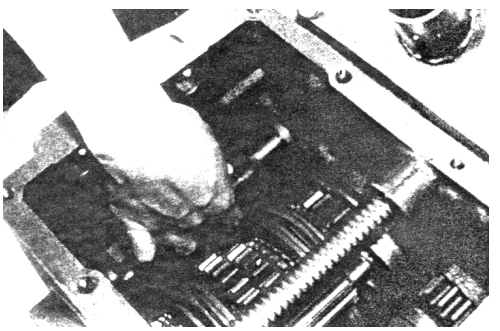

Fig. 3-24

d) Two mounting bolts should be tightened to a torque of 28.4-44N.m (2.9-4.5kgm) before tightening the stop screw at the end of the shaft arm (See Fig.3-25).

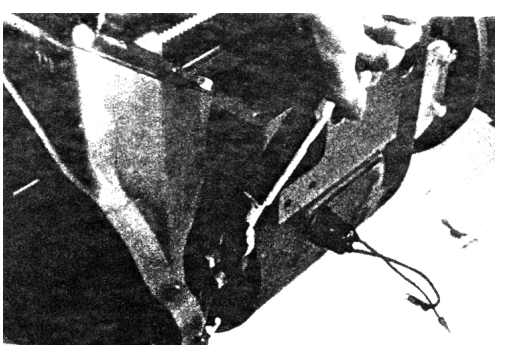

Fig. 3-25

https://truckmanualshub.com/

e) After the front end of the shift lever is put into the transmission, tighten the stop bolt to a torque of 7.8-17.6N.m (0.8-1.8kgm) and the lock nut to a torque of 3.7-23.5N.m (1.4-2.4kgm) (See Fig.3-26, Fig.3-27).

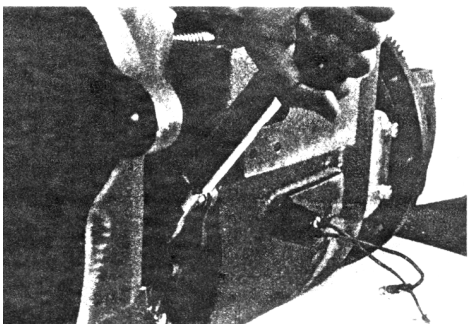

Fig. 3-26

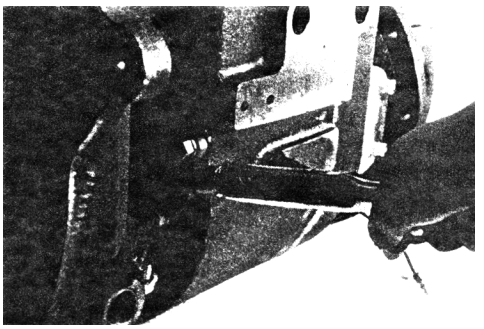

Fig. 3-27

f) Place the rotating rod and O-ring into the transmission case (See Fig.3-28) and fix them with a clip ring (See Fig.3-29).

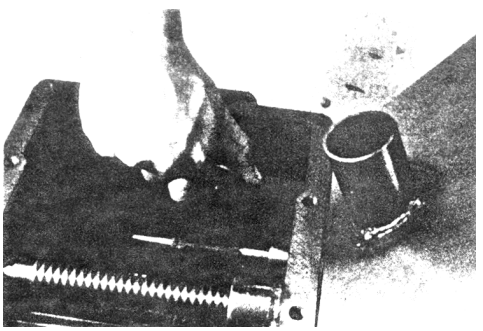

Fig. 3-28

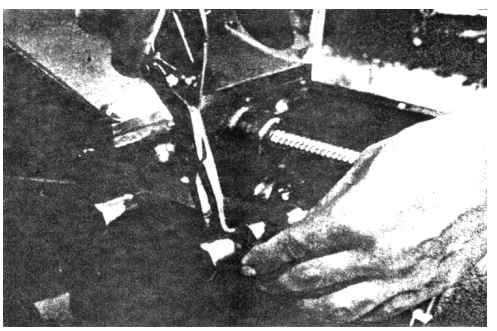

Fig. 3-29

g) Put the transmission cover and its gasket on the case and tighten all bolts to a torque of 20.6-34.3N.m (2.1-3.5kgm) (See Fig. 3-30).

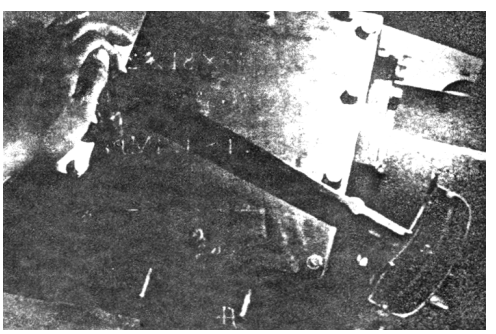

Fig. 3-30

https://truckmanualshub.com/

4.Hydraulic-powered Transmission & Torque Converter

Torque converter	
Type	Three elements, single stage, two phases
Torque ratio	3
Set pressure	0.5-0.68MPa
Charging pump	
Type	Inner-mesh gear type
Flow rate	27l/min (2000rpm, 1.5MPa)
Transmission	
Type	Power shifted
Speed ratio FWD/BWD	1.35/1.35
Hydraulic clutch	
Friction piece O.D.×I.D.×T.	125×81×2.7mm
Friction area	71cm^2
Set pressure	1.1-1.4MPa
Weight of drive unit	165kg
Oil amount	9L
Oil type	Model SAE 10W engine oil HLT-9 (Dedicated for HELI)

4.1 General Description

Hydrodynamic transmission type forklift trucks are provided with a drive unit including a torque converter and a hydraulic transmission (See Fig.4−1). They feature the following:

(1) With an inching valve, the inching operation can be done under the conditions that the engine runs at both high and low speeds.

(2) Each of two hydraulic clutches is provided with four pairs of steel plates and paper friction pieces specially-treated, so as to improve the durability of friction pair.

(3) Both on-way overrun clutches in the torque converter are used to increase the efficiency for power transmission.

(4) High quality of oil filters is helpful to increasing the life of the torque converter.

https://truckmanualshub.com/

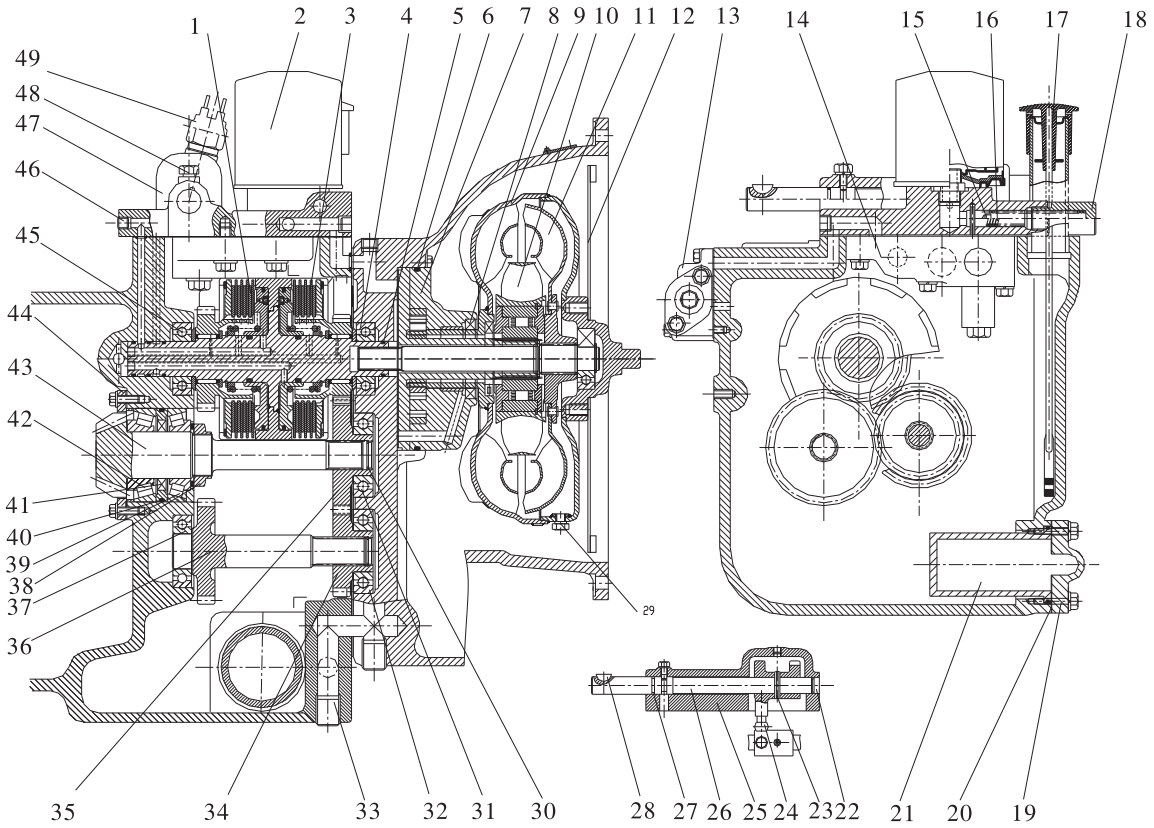

Fig. 4–1 Hydrodynamic transmission type drive unit

(1) Forward clutch
(2) Oil filter (Ⅱ)
(3)Backward clutch
(4) Single–row radial ball bearing
(5) Seal ring (A)
(6) O–ring seal
(7) Charging pump
(8) Oil seal
(9) Impeller
(10) Stator
(11) Turbine
(12) Spring plate
(13) Inching valve
(14) Control valve
(15) Piston
(16) Spring
(17) Oil inlet cover
(18) Safety valve cover
(19) End cover
(20)Paper pad
(21) Oil filter (Ⅰ)
(22) Plug
(23) Spring pin
(24) Shift arm
(25) Transmission case cover
(26) Shift arm shaft
(27) O-ring seal
(28) Half-round key
(29) Oil drain plug
(30) Clip ring for hole
(31)&(32) Single-row radial ball bearing
(33)Plug
(34) Idler
(35) Output gear
(36) Idler shaft
(37) Single-row radial ball bearing
(38) Nut for bearing
(39) Single-row tapered roll bearing
(40) O-ring seal
(41) Oil seal
(42) Single-row tapered roll bearing
(43) Output shaft
(44) Supporting piece
(45) Single-row radial ball bearing
(46) Inner-hexagoned plug
(47) Transmission case cover
(48) Mounting bolt
(49) Reverse lamp switch

https://truckmanualshub.com/

4.2Torque Converter

The torque converter mainly consists of an impeller, a turbine and a stator.

The liquid, from the impeller driven by an input shaft, is jetted along its leaves to leaves of the turbine to transmit the torque to the output shaft (i.e. Mechanical energy is changed into kinetic one). And the flowing direction of the liquid from the turbine wheel is changed by the stator to cause a part of the liquid return to the impeller at an angle and produce so large reaction torque driving the stator that the value of output torque is more than that of input torque by the value of the reaction torque. When the turbine speed keeps on increasing up to near speed of the impeller, the change rate of the flow angle slows down and the value of the output torque keeps on decreasing until the liquid flows into the leaves of the stator in opposite direction. When original reaction torque acts in the opposite direction, the torque value of the output shaft is less than that of the input shaft. To prevent this, a one-way overrun clutch is fitted in the stator, causing the stator freely rotate in this case.

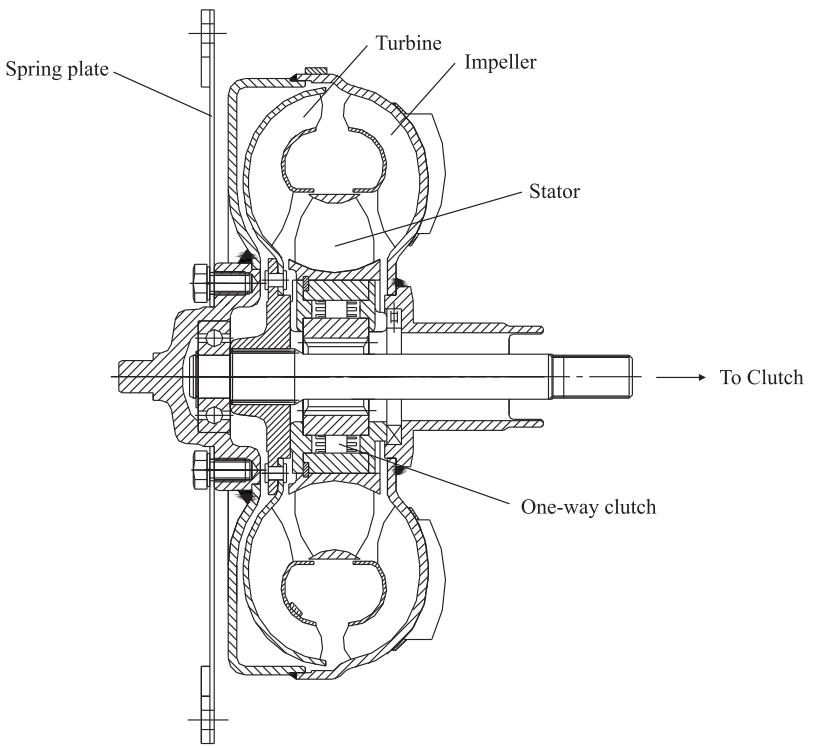

Fig. 4-2 Torque converter

The way of torque-converting can be used to ensure efficient and smooth work of the torque converter.

The torque converter, filled up with the torque converter oil, in the drive unit is driven by an engine through a spring plate and flywheel on the engine. A charging pump is driven by a driving gear which is splined to the impeller. The oil for the torque converter and the transmission is supplied by the pump. The power is transmitted to the transmission through a turbine shaft splined to the turbine.

4.3 Hydraulic Clutch (See Fig.4-3)

Both hydraulic multipiece clutches of wet type are fixed on the input shaft of the transmission. The pressure oil is supplied to the forward or the backward clutch through a control valve to achieve the forward or the backward travel of the truck. All of gears in the transmission are normally meshed.

Every clutch consists of four spacers (24) and four friction pieces (25) assembled alternately and a piston. On the inner and the outer circles of the piston are seal rings for sealing the piston. In the neutral, the piston is still and the spacers and the friction pieces are disengaged each other. When shifting, the oil pressure acts on the piston and the spacers and the friction pieces are engaged each other to form an integral so that the power from the torque converter is transmitted to the forward driving gear (13) or the backward driving gear (4).

The power from the torque converter is transmitted to the transmission in following order:

Turbine-Input shaft-Spacer-Friction piece-Forward or backward driving gear-Output shaft.

https://truckmanualshub.com/

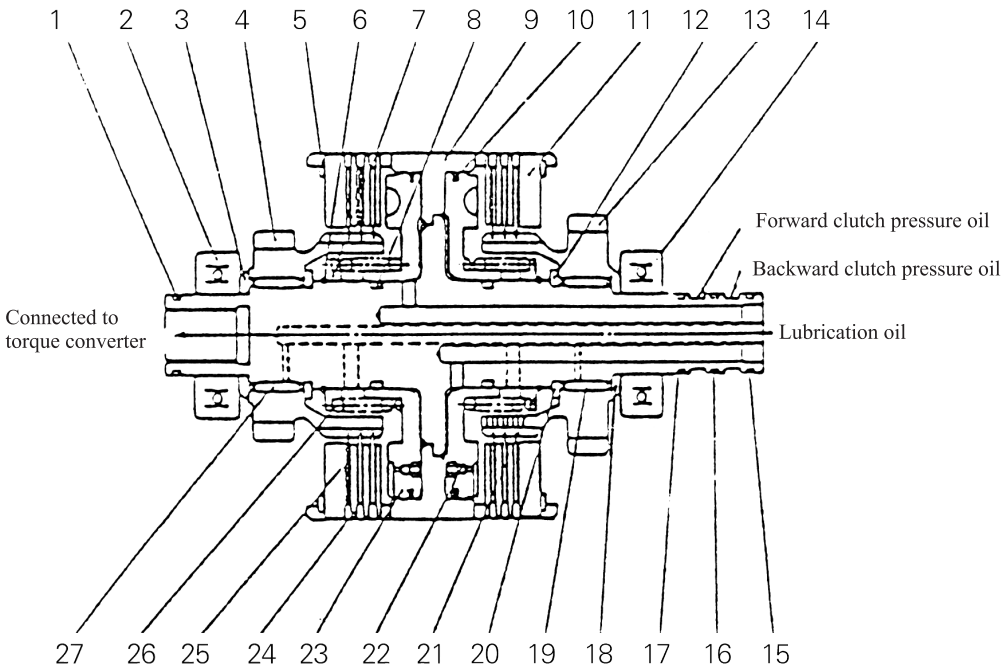

Fig.4-3 Hydraulic clutch

(1)Seal ring (A)	(8) O-ring	(15) Seal ring (A)	(21) Snap ring
(2) Bearing	(9) Input shaft	(16) Seal ring (A)	(22) Check valve ball
(3) Thrust ring (B)	(10) Seal ring (B)	(17) Seal ring (A)	(23) Piston ass'y
(4) Forward driving gear	(11) End plate	(18) Thrust ring(B)	(24) Spacer
(5) Snap ring	(12) Snap ring (A)	(19) Needle bearing	(25) Friction piece
(6) Snap ring	(13) Backward driving gear		(26) Return spring
(7) Spring seat	(14) Bearing	(20) Snap ring (A)	(27) Needle bearing

4.4 Control Valve, Relief Valve and Inching Valve

4.4.1 Control valve

The control valve positioned at the inside of the transmission cover includes three valves: an operation slide valve, a pressure valve and an adjusting valve (See Fig.4-4).

https://truckmanualshub.com/

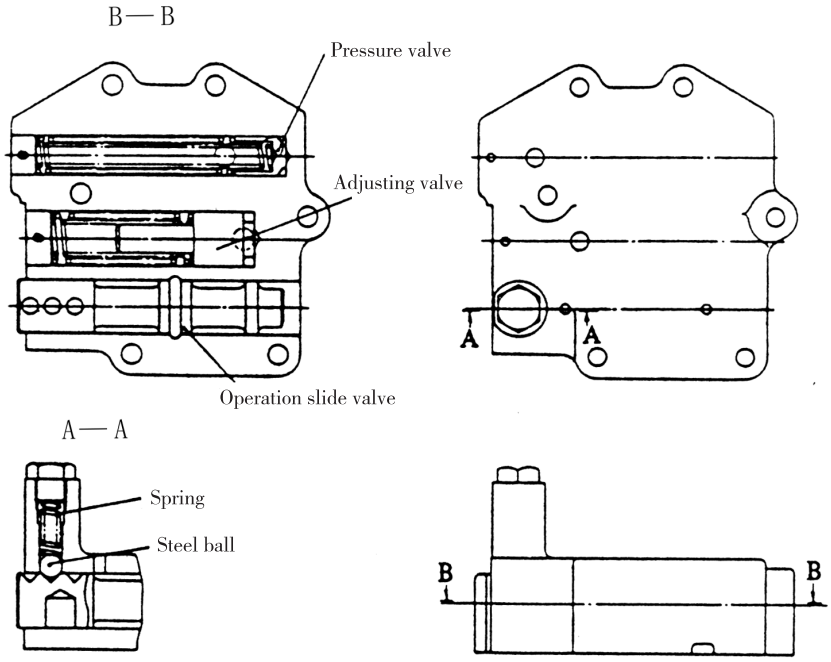

Fig.4-4 Control valve

4.4.2 Pressure valve

It is used to keep the oil pressure within 1.1-1.4MPa. Through the valve and the relief valve, the pressure oil is sent to the torque converter.

4.4.3 Adjusting valve

It is positioned between the inching valve and the operation slide valve. The adjusting valve comes to work as soon as the operation slide valve is opened, so as to reduce the shock from the engagement of either clutch.

4.4.4 Relief valve

The relief valve connected with the transmission case keeps the oil pressure in the torque converter within 0.5-0.7MPa to prevent air corrosion.

4.4.5 Inching valve

It is fixed in the outside of the transmission. Its spool is connected with a connection rod of the inching pedal. When the pedal is stressed, the spool moves to right, and the oil pressure in the clutches is lowered temporarily to get the inching of the truck (See Fig.4-5).

https://truckmanualshub.com/

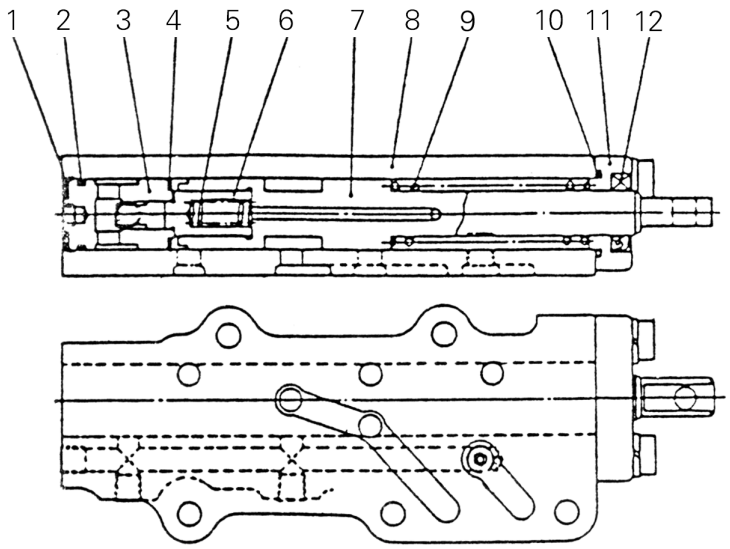

(1)Snap ring
(2) O-ring
(3) Inching valve rod
(4) Snap ring
(5) Spring
(6) Valve core
(7) Spool
(8) Valve body
(9) Spring
(10) O-ring
(11) Cover
(12) Oil seal

Fig. 4-5 Inching valve

4.5 Transmission Case

It is used to contain the input shaft, the output shaft, etc. and serve as an oil tank. There is an oil filter (I) of 150 meshes in specification at the bottom of the case to filter the oil from the charging pump. The oil filter (II) for the pipeline, the oil inlet cover and the dip stick are all fixed at the top of the case cover.

4.6 Charging Pump (See Fig.4-6)

The charging pump between the torque converter and the input shaft of the transmission is a gear pump driven by the turbine shaft concluding a pair of inner-meshed gears for the purpose of feeding the oil to the torque converter and the transmission.

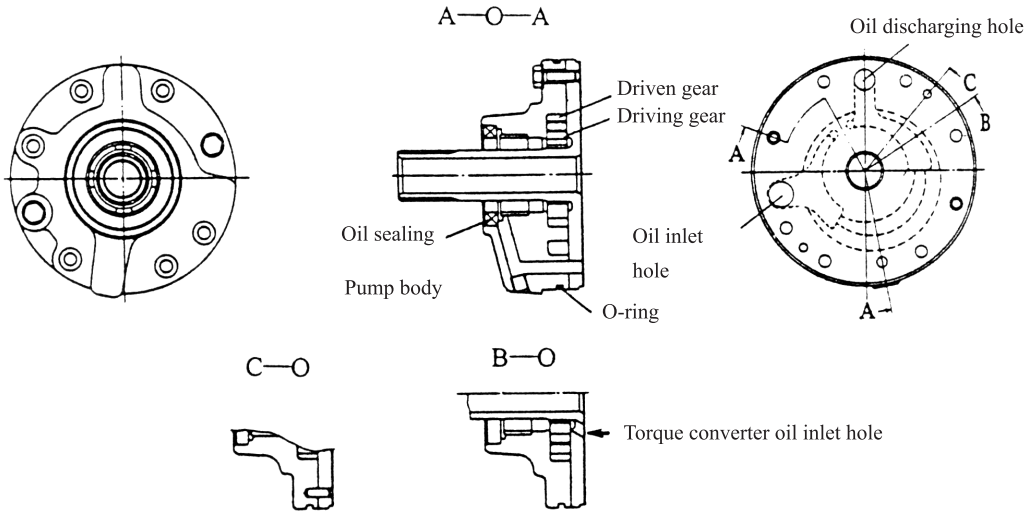

Fig.4-6 Charging pump

4.7 Hydraulic Circuit(Hydrodynamic Transmission Type Drive Unit)(See Fig.4-7)

After the engine is started, the charging pump inhales the oil from the oil tank (i.e. transmission case). The pressure oil from the pump serves two parts for hydraulic clutches and torque converter.

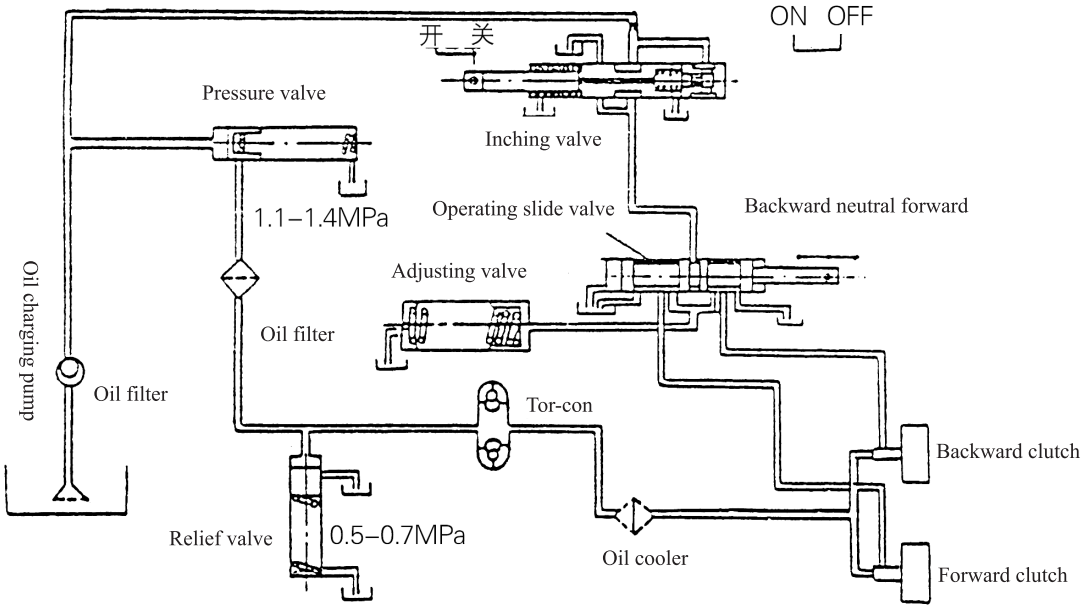

Fig.4-7 Hydraulic circuit

The oil necessary to operate the hydraulic clutches is divided into two circuits through the pressure valve (set pressure of 1.1-1.4MPa): one circuit flowing to the torque converter via. a relief valve (set pressure of 0.5-0.7MPa) and another to the

https://truckmanualshub.com/

inching valve and the operation slide valve. The oil out of the torque converter is cooled by and oil radiator and used to lubricate the hydraulic clutches and finally returns to the oil tank.

In the neutral, the circuit from the operation slide valve to the clutches is intermitted, and the pressure valve is opened to let the oil only flow into the torque converter. When the operation slide valve lies at its forward or backward position, the circuit from the operation slide valve to either the forward clutch or the backward clutch is closed accordingly, thus causing corresponding clutch come to work. When a clutch is at work, another must stop working, i.e. its spacers and friction pieces must be disengaged each other and be lubricated and cooled. When the inching valve is operated through stressing the inching pedal, a part or most of the oil in the clutches flows into the oil tank through the inching valve rod. The oil circulation for the torque converter then is the same as that in the neutral.

4.8 Reduction Gear & Differential (See Fig.4-8)

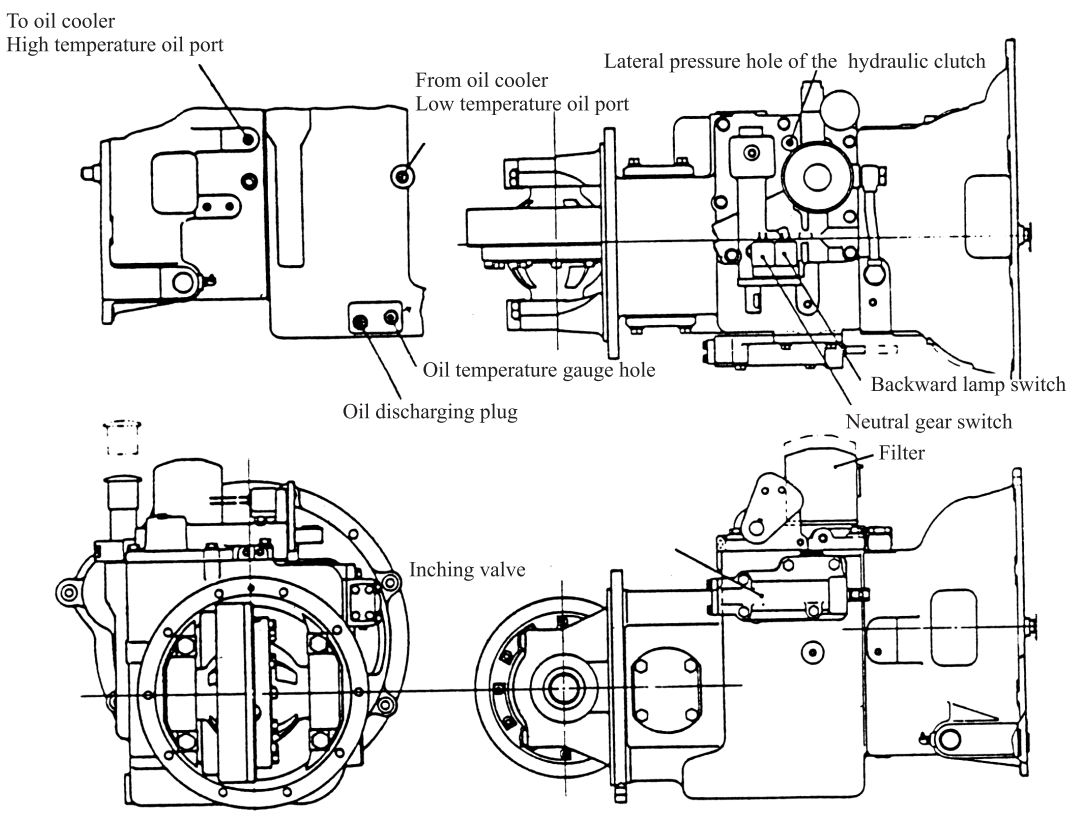

Fig.4–8 Reduction gear and differential

https://truckmanualshub.com/

The reduction gear and differential for torque converter type truck is the same as those for clutch type truck in construction (See 3.3 & 3.4).

4.9 Towing Disabled Truck

The followings should be done when the torque converter type truck to be repaired is towed by other truck:

(1) Remove the half -shaft from the front wheel.

(2) Shift lever should be placed in the neutral.

4.10 Positions of Connection Ports for Hydraulic Oil (See Fig.4-8)

https://truckmanualshub.com/

5. Drive Axle

Type	Front wheel drive type truck, axle body rigidly connected to truck frame, fully floated halfshaft					
Truck capacity	2t、2.5t		3t		3.5t	
	Single wheel type	Twin wheel type	Single wheel type	Twin wheel type	Single wheel type	Twin wheel type
Tyre size	2 x 7.00-12-12PR	4 x 7.00-12-12PR	2 x 28 x 9-15-14PR	4 x 28 x 9-15-14PR	2 x 28 x 9-15-14PR	4 x 28 x 9-15-14PR
Rim size	5.00S-12D	5.00S-12D	7.00-WFB-15	7.00-WFB-15	7.00-WFB-15	7.00-WFB-15
Tyre pressure	860kPa		970kPa		970kPa	

5.1 General Description

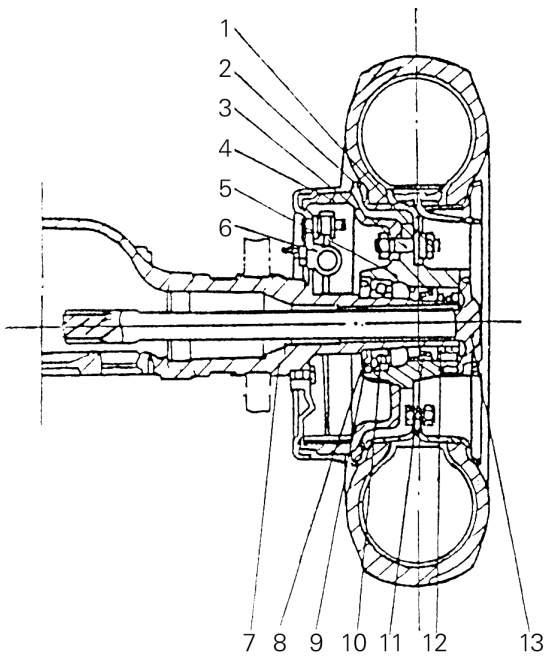

(1)Tapered nut
(2) Rim
(3) Stud
(4) Brake drum
(5) Wheel hub
(6) Operation cylinder
(7) Housing
(8) Clip ring for oil seal
(9) Oil seal
(10) Tapered roll bearing
(11) Tapered roll bearing
(12) Nut
(13) Half-shaft

Fig.5-1 Drive axle

https://truckmanualshub.com/

The drive axle mainly consists of the housing, the wheel hubs, the half-shafts and the brakes. The housing is an integrally casted. The tyre with the rim is fixed to the hub with studs and nuts. The power is transmitted to the half-shafts through the differential and drives the front wheels through the hubs. Each hub is fixed on the housing with two tapered roll bearings, so that the half-shafts bear only the torque transmitted to the hubs. In the inside of the hub are oil seals to prevent water and dust from entering and oil leakage.

The rim for 2-2.5ton truck is splited. The 3ton and 3.5ton truck is provided with wide tyre and 2-3.5ton truck with two tyres (Refer to Fig.5-2).

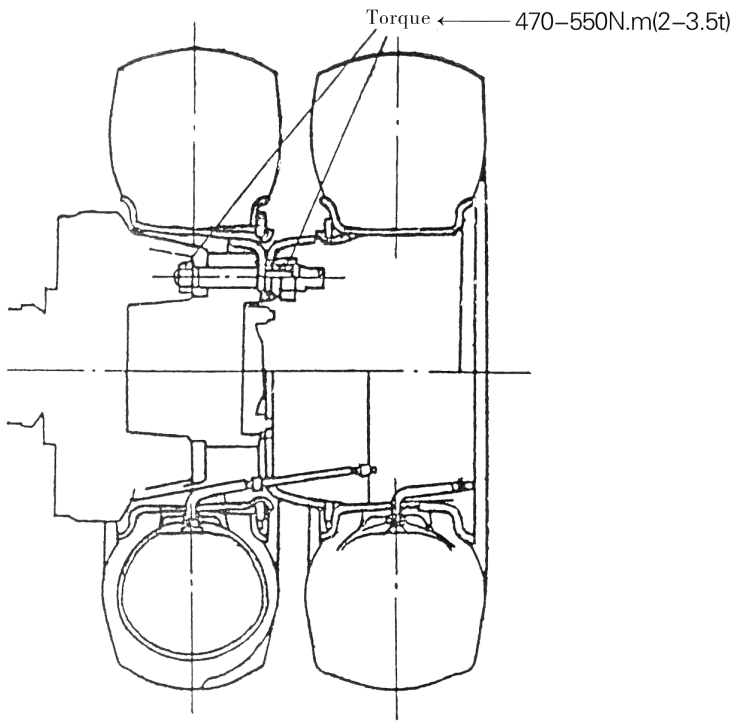

Fig.5-2

5.2 Maintenance of Drive Axle

The remounting of the hubs of the drive axle is done in following procedure:

(1) Grease the tapered roller bearings.

(2) Screw down the lock nut for the tapered roller bearing to ensure it can bear the hub rotating torque of 9.8-29.4N.m (1-3kgm) or screw it out for 1/8 turn, after the

https://truckmanualshub.com/

nut is tightened, to let the wheel hub be able to be rotated freely.

(3) Screw down the nut for the half-shaft to a torque of 96-111N.m (9.8-11.3kgm).

(4) Screw down the wheel nut to a torque of 470-550N.m.

(5) Screw down the nut for the brake drum to a torque of 206-225N.m.

6.Steering System

Steering system type			Rear wheel steering powered	
Truck capacity			2t、2.5t	3t、3.5t
Cycloid gear type powered steering unit			BZZ-100	BZZ-125
Steering cylinder	Bore	mm	Φ70	
	Dia. of piston rod	mm	Φ50	
	Stroke	mm	199	
Dia. of steering handwheel		mm	Φ360	

6.1 General Description

The steering system principally consists of a powered steering ass'y and a steering cylinder.

(1) Powered steering ass'y (See Fig.6-1)

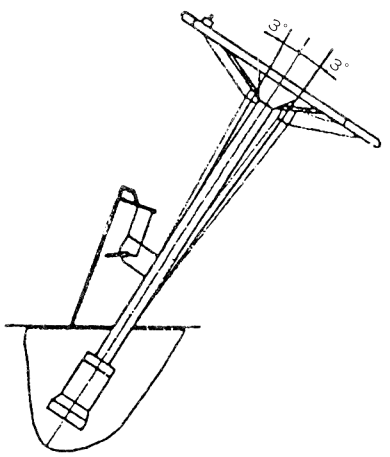

Fig.6-1

It contains mainly a powered steering unit (see Fig.6-2), a steering column and a steering handwheel. The angle of the column to the handwheel can be adjusted within 4.5°in line of driver's body.

The powered steering unit can transmit the pressure oil from the flow-divider by metering to the steering cylinder in terms of the rotating angle of the handwheel.

When the engine stops running, the charging pump will not work. In this time a manpowered steering should be adopted.

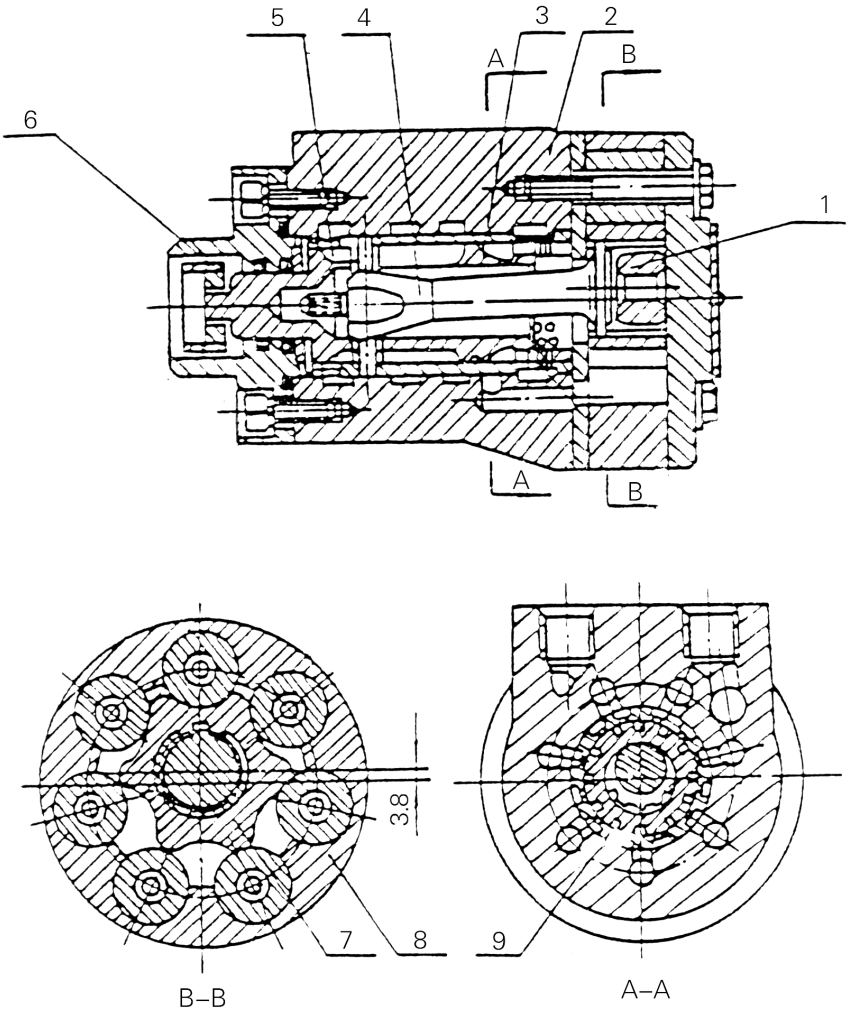

Fig.6-2 Cycloid gear type powered steering unit

(1) Spacing sleeve (2) Valve body (3) Valve core (4) Interlock axle

(5) Spring piece (6) Joint sleeve (7) Rotor (8) Stator (9) Valve sleeve

(2) Steering cylinder (See Fig.6-3)

The steering cylinder is of double-action piston type. Both ends of the piston rod are connected with steer knuckles through connection rod. Left or right of the truck turning is achieved with the help of the forward or the backward travel of the piston rod driven by the pressure oil from the powered steering unit.

https://truckmanualshub.com/

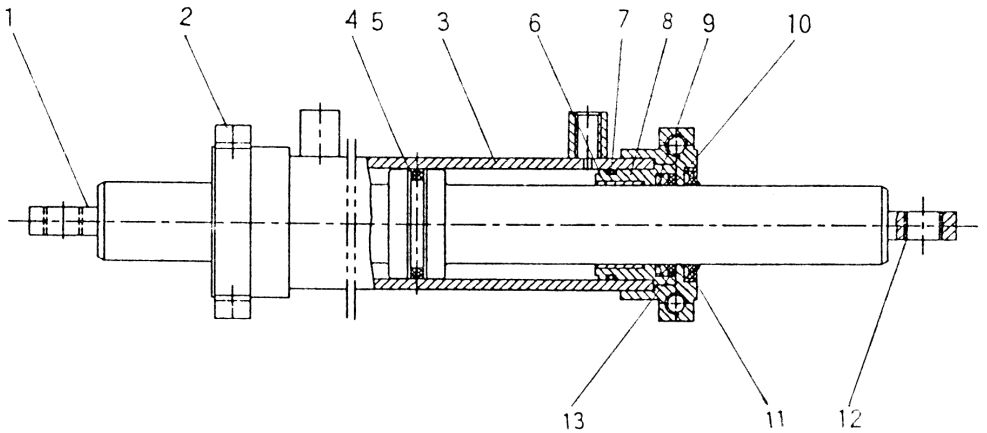

Fig.6-3 Steering cylinder

(1) Piston rod (2) Cylinder cover (3) Cylinder body (4) O-ring (5) Bearing ring
(6) Sleeve (7) O-ring (8) Sleeve (9) Yx-ring (10) Gasket
(11) Dust ring (12) Bushing (13) Clip ring

6.2 Inspection on Reassembly of Steering System

(1) Check the forces necessary to turn the steering handwheel to right and left until it can't be turned any more to see if they are identical each other and check the operation of the steering handwheel for smoothness during above operation.

(2) Check the arrangement of hydraulic pipeline and turning direction of the truck for correctness.

(3) Put up the rear wheels and slowly turn the handwheel over again to exhaust the air in the hydraulic pipelines and the cylinder.

https://truckmanualshub.com/

6.3 Steering System Troubleshooting

Problem	Analyses of Trouble	Remedies
Fail to turn handwheel	Pump damaged or breaking down.	Replace
	Flow–divider blocked or damaged.	Clean or replace
	Hose or joint damaged or pipeline blocked.	Clean or replace
Difficult to turn handwheel	Too low oil pressure from flowdivider.	Adjust pressure
	Air in steering oil circuit.	Exhaust air
	Steering unit fail to recover due to spring piece damaged or elasticity–insufficient.	Replace spring piece
	Excessive inner–leakage in steering cylinder.	Check piston seals
Truck's snacking or moving with oscillation	Excessive flow rate for steering.	Adjust flow–divider for flow rate
Excessive noise	Too low oil level in oil tank.	Refill oil
	Suction pipeline or oil filter blocked.	Clean or replace
Oil leakage	Seals of guide sleeve, pipeline or joint damaged.	Replace

https://truckmanualshub.com/

7.Steering Axle with Lateral Positioned Cylinder

Truck capacity		2t、2.5t	3t、3.5t
Axle body type		Center-pivoted supporting	
Turning angle	Inside wheel	78°	
	Outside wheel	54°	
King pin	Distance between pin axes	810mm	
	In-tilting angle	0°	
Out-tilting angle of wheel		1°	
Size of tyre		2 × 6.00–9–10PR(J)	2 × 6.50–10–10PR(J)
Size of rim		4.00E–9DT	5.00F–10
Tyre pressure		860kPa	790kPa
Total weight		About 155kg	

https://truckmanualshub.com/

7.1General Description

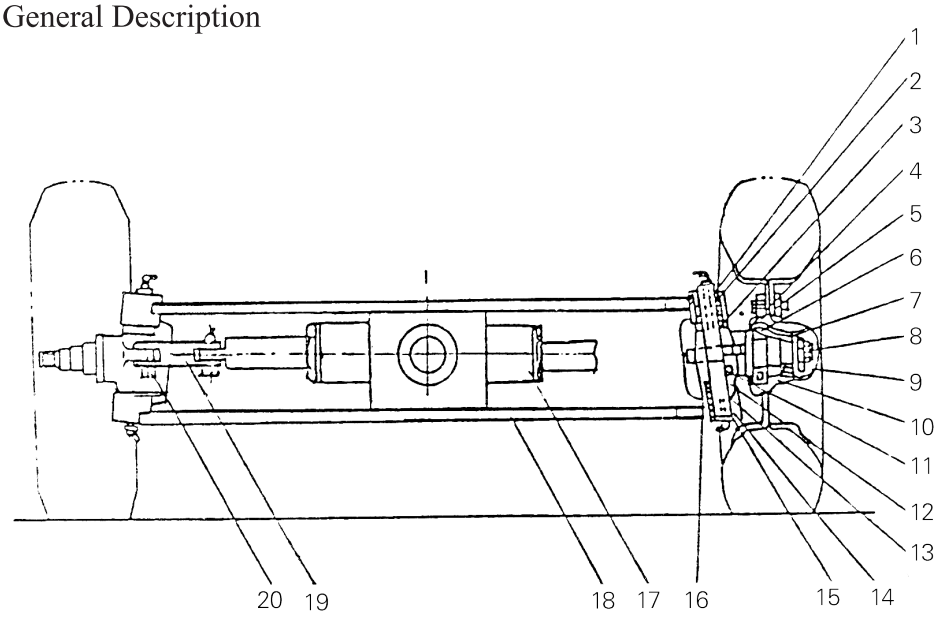

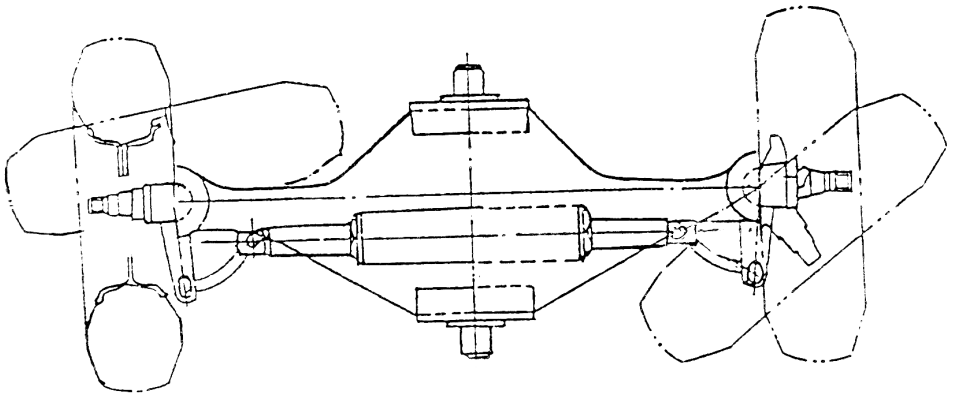

Fig.7-1 Steering axle

(1) Oil seal (2) Needle bearing (3) Thrust bearing (4) Oil seal (5) Hub nut
(6) Tapered roll bearing (7) Tapered roll bearing (8) Lock nut (9) Hub cap
(10) Steer hub (11) Stop pin (12) Shim (13) Needle bearing
(14) Oil seal (15) King pin (16) Knuckle (17) Steer cylinder
(18) Steer axle body (19) Tie rod (20) Pin axle

The steer axle is of section-boxed welded construction type (See Fig.7-1). It includes axle body, steer cylinder, tie rods and steer wheels. The front and rear axles of the steer axle are pivoted in the bearing seats bolted to the rear frame, thus causing the axle body be able to oscillate around the axles. Left and right knuckles are

https://truckmanualshub.com/

positioned at two sides of the steering axle respectively. The rear wheel hubs are fitted to the knuckle shafts through tapered roll bearings with oil seals keeping the grease in the chambers of the hubs and the knuckles. The wheels with rims are bolted on the hubs.

7.2 Steering Knuckle and King Pin

Both steering knuckles are fitted between the upper and the lower bushes through two king pins, thrust bearings and shims. The king pin is locked on the steering knuckle with a lock pin. Both ends of the king pin are supported by needle bearings which are pressed into the bushes. There are oil seals at two faces of the needle bearing, Each king pin is provided with an oil cup placed at the top of it.

7.3 Rear Wheel Bearing Pre-load Adjustment

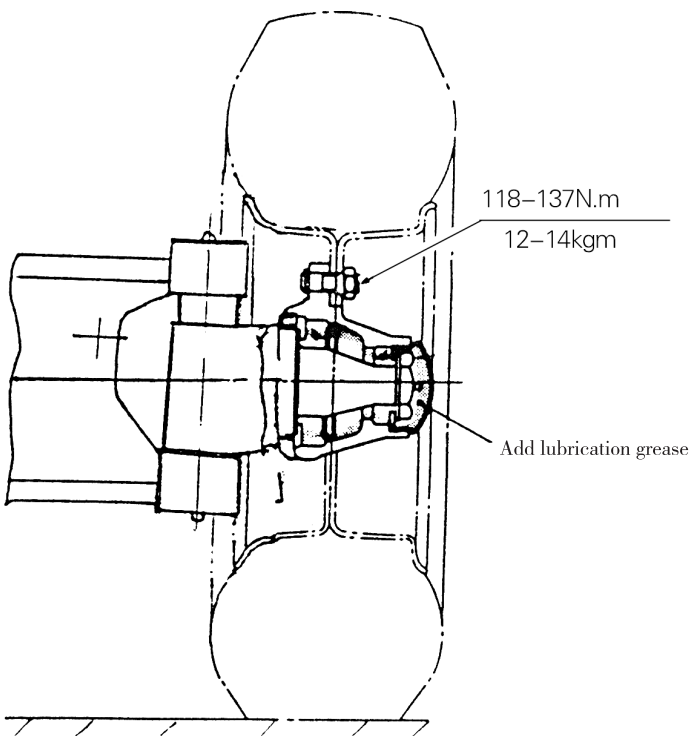

Fig.7-2 Pre-load adjustment

(1) As shown in Fig.7-2, with lubricating grease, fill up the chamber formed by wheel hubs, wheel hub bearings and wheel hub covers and coat the lips of the oil seals.

https://truckmanualshub.com/

(2) Press the hub bearings into the hub and fit the hub on the knuckle shaft.

(3) Fit a flat washer and tighten a castle nut to a torque of 206-235N.m (21-24kgm) and loosen it and then tighten it again to a torque of 9.8N.m (1kgm).

(4) To ensure firm installation of the hub, slightly knock at it with a wooden hammer and in the meantime, rotate the hub for 3-4 turns.

(5) Tighten the castle nut and align one of its notches with a cotter pin hole drilled in the steering knuckle.

(6) Again slightly knock at the hub with a wooden hammer and in this time, rotate manually the hub for 3-4 turns to ensure its smooth rotation with a specified torque of 2.94-7.8N.m (0.3-0.8kgm).

(7) If the torque value necessary to rotate the hub is more than the specified one above-mentioned, screw out the castle nut for 1/6 turn and measure the torque value then.

(8) When the torque value measured is up to the specified one, lock the castle nut with a cotter pin.

https://truckmanualshub.com/

8. Brake System

Truck capacity	2t,2.5t	3t,3.5t
Brake system type	Front two-wheel braking internal expansion, hydraulic type	
Pedal ratio	5.66	
Master cyl. bore	19.05mm	
Wheel brake type	Duo-servo type with parking brake	
Operating cyl. bore	28.58mm	
Lining size (LxWxT)	324 × 60 × 7mm	348 × 76 × 8mm
Friction surface	194.4cm^2 × 4	264cm^2 × 4
Inner dia. of brake drum	310mm	314mm
Parking brake type	Front two-wheel braking internal expansion, hydraulic type	

https://truckmanualshub.com/

8.1 General Description

The brake system is the front two-wheel braking type consisting of a master cylinder, wheel brakes and brake pedal mechanism.

8.2 Master Cylinder

The cylinder contains valve seat, check valve, return spring, primary cup, piston and secondary cup, which are all kept in place with a stop washer and a stop wire. The exterior of the cylinder is protected from dust by means of a rubber dust cover. The piston is actuated through the push rod by operation of the brake pedal. As the brake pedal is pressed, the push rod pushes the piston forwards. The brake fluid in the cylinder flows back to the reserve tank through the return port until the primary cup blocks up the return port. After the primary cup passes through the return port, the brake fluid in the cylinder is pressurized and opens the check valve, flowing through the brake pipeline to the operating cylinder. Thus, each operating cylinder piston is forced outwards. This brings the friction pieces on the brake shoes into contact with the brake drum and slows or stops the truck. Meanwhile, the cavity caused behind the piston is filled with brake fluid led through the return port and inlet port. When the brake pedal is released, the piston is forced back by the return spring. At the same time, the brake fluid in each operating cylinder is pressurized by the return spring, returning into the master cylinder through the check valve. With the piston in its original position, the fluid in the master cylinder flows into the reserve tank through the return port. The brake fluid in the brake pipelines and operating cylinders has a residual pressure proportioned to the set pressure of the check valve, which makes each operating cylinder piston cup securely seated to prevent oil leakage and eliminates a possibility of air locking when the truck is sharply braked.

https://truckmanualshub.com/

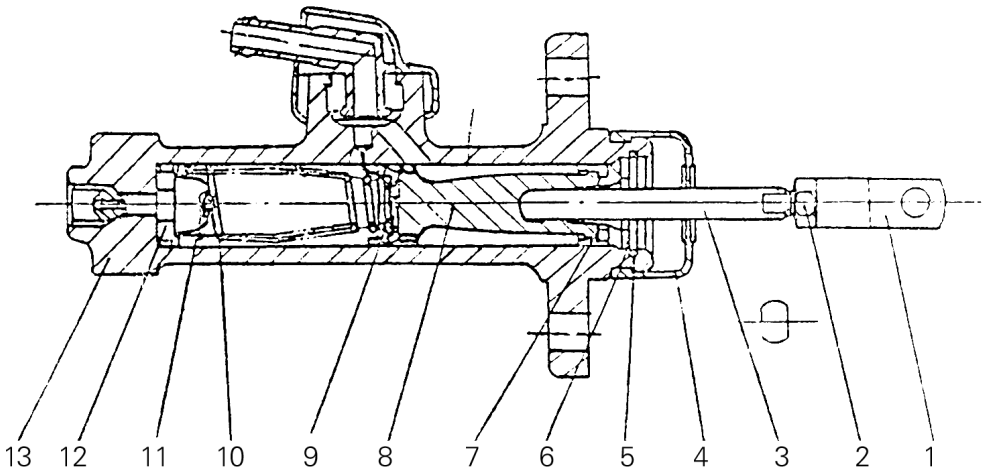

Fig.8-1 Master cylinder

(1) Supporting ear (2) Lock nut (3) Push rod (4) Dust cover (5) Stop wire
(6) Stop ring (7) Secondary cup (8) Piston (9) Primary cup (10) Spring
(11) Check valve (12) Valve seat (13) Cylinder body

8.3 Wheel Brake

The wheel brake is the internal expansion hydraulic type consisting of brake shoes, springs, operating cylinder and adjuster and backing plates. Two wheel brakes are provided o each end of the front axle. The brake shoe, one end of it being connected to the anchor pin and the other to the adjuster, is stressed on the backing plate by the spring and spring pull rod. The primary shoe is provided with the parking pull rod while the secondary shoe with the adjusting lever of the clearance self-adjuster. See Fig.8-2 and 8-3.

https://truckmanualshub.com/

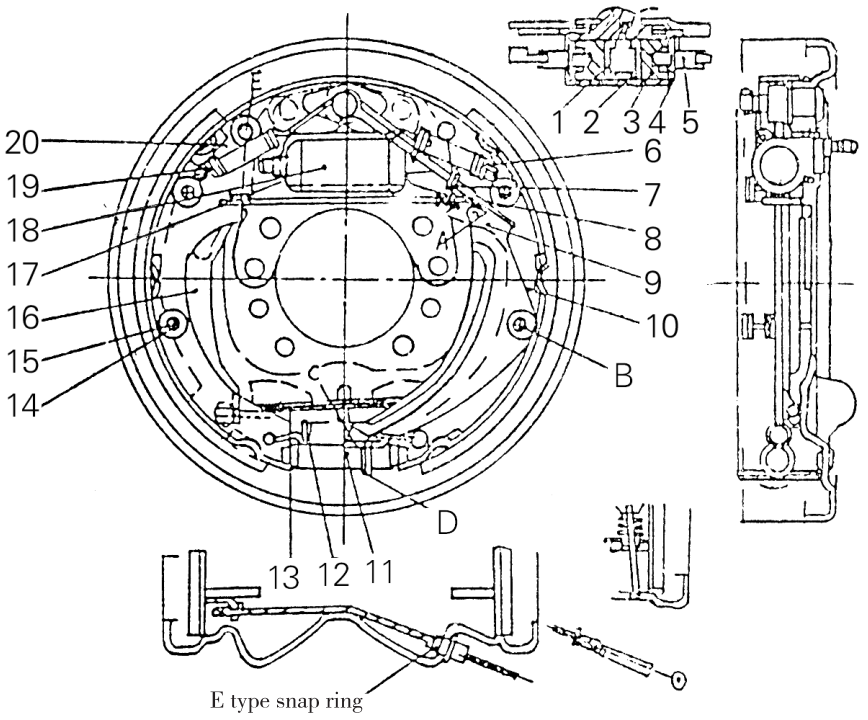

Fig.8-2 Wheel brake for 2 and 2.5 ton trucks

(1) Spring
(2) Cup
(3) Piston
(4) Cylinder body
(5) Push rod for piston
(6) Return spring
(7) Push rod
(8) Return spring
(9) Adjusting lever
(10) Secondary shoe
(11) Clearance self-adjuster
(12) Spring
(13) Parking cable ass'y
(14) Spring cover
(15) Spring pull rod
(16) Parking pull rod
(17) Parking push rod
(18) Operating cylinder
(19) Return spring
(20) Primary shoe

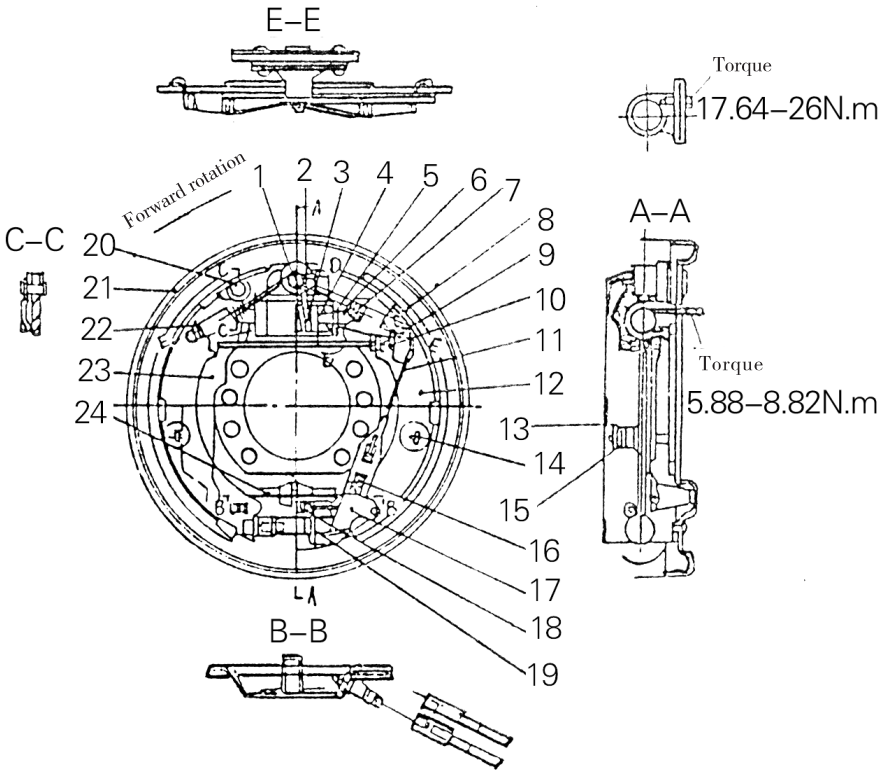

Fig.8-3 Wheel brake for 3 and 3.5 ton trucks

(1) Operating cylinder ass'y	(9) Spring	(17) Ratchet pawl
(2) Spring	(10) Parking push rod	(18) Spring
(3) Cup	(11) Spring pull wire	(19) Clearance self-adjuster
(4) Piston	(12) Brake shoe	(20) Pin
(5) Boot	(13) Spring seat	(21) Backing plate
(6) Push rod for piston	(14) Spring pull rod	(22) Return spring
(7) Return spring	(15) Spring	(23) Parking pull rod
(8) Friction piece	(16) Spring	(24) Brake cable ass'y

The braking operation in the truck's forward travel is as follows: see Fig.8-4. The primary and secondary shoes are respectively forced by a force equal in value and contrary in direction each other, by operation of the operating cylinder to bring the friction piece in contact with the brake drum. The primary shoe forces the adjuster with the aid of friction force between the friction piece and the drum. Due to this, the

adjuster pushes the secondary shoe by the larger force than that offered by operation of the operating cylinder. The secondary shoe upper end is forced strongly against the anchor pin, providing large braking force. On the other hand, the braking operation in the truck's reverse travel is performed in reverse order, but the braking force is the same as that in the case of the truck's forward travel.

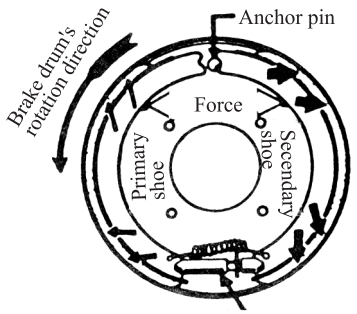

Fig.8–4 Braking operation in the truck's forward travel

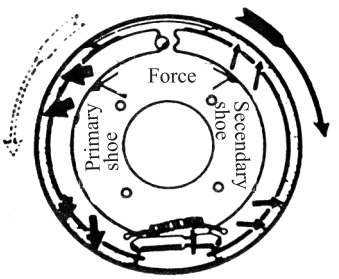

Fig.8–5 Braking operation in the truck's backward travel

8.4 Clearance Self-adjuster

This section states mainly the clearance self-adjuster in the 2 ton truck's brake. And the clearance self-adjusters in the remainder truck's brakes are the same as that in the 2 ton truck's brake in operation principles.

The clearance self-adjuster keeps clearance between the friction piece and drum within 0.4-0.45mm (0.25-0.4mm for the 3 ton and 3.5 ton trucks) by itself. This adjuster, however, actuates only when the truck in reverse travel is braked. When the brake pedal is pressed in the truck's reverse travel, the brake shoe are spread. As a result of this, the secondary and primary shoes come into contact with the brake drum and rotate together until the upper end of the primary shoe comes into contact with the anchor pin.

As the secondary shoe leaves the anchor pin, the section (A) of the adjusting lever (Refer to Fig.8-2) is relatively pulled. Therefore, the adjusting lever turns around the section (B) so that the section (C) of the adjuster lever lowers, causing the section (D) of the adjuster to turn left and the adjusting achieved. As the brake pedal is further

pressed, compression force applied on two ends of the adjuster becomes larger. This results in increasing of the rotating resistance of the thread and then causing the force from the adjuster lever don't be able to rotate the section (D) of the adjuster.

8.5 Parking Brake

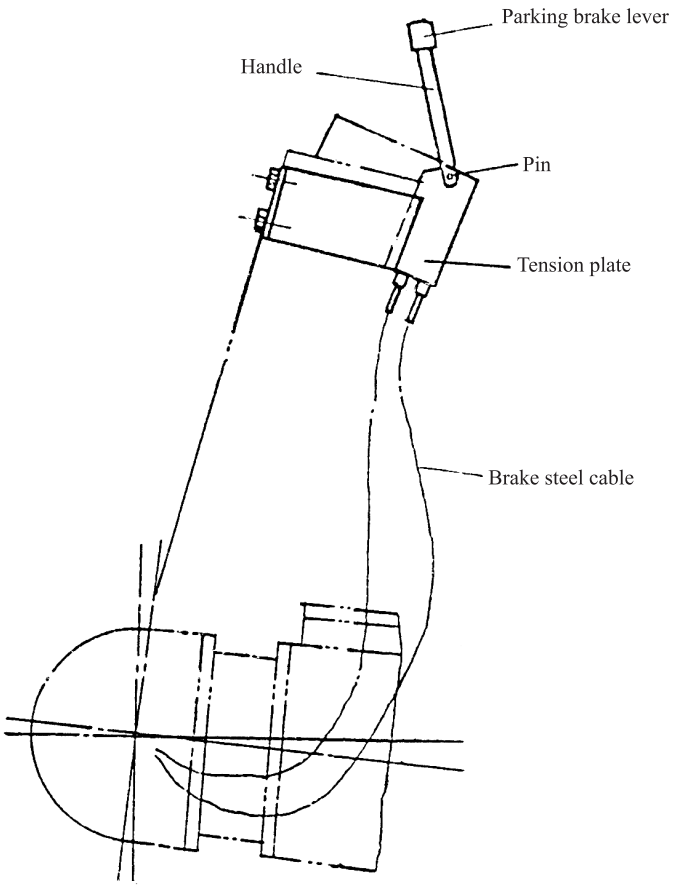

Fig.8-6 Parking brake

The parking brake is of mechanical, internal expansion type and built in the wheel brake. It shares the brake shoes and brake drum with the foot brake. As the parking brake lever is pulled, the parking pull rod is actuated through the brake cables (See Fig.8-3E). The parking pull rod pushes, in turn, the parking push rod to the right with the aid of the pin as a fulcrum, forcing the secondary shoe against the brake drum.

https://truckmanualshub.com/

8.6 Brake Pedal Adjustment (Truck with clutch) (See Fig.8-7)

(1) Make the push rod short.

(2) Adjust the pedal to the height of 111mm.

(3) With the brake pedal pressed by the idle stroke of 30-40mm, pull the push rod out until its front end comes into contact with the master cylinder piston.

(4) Tighten the push rod lock nut.

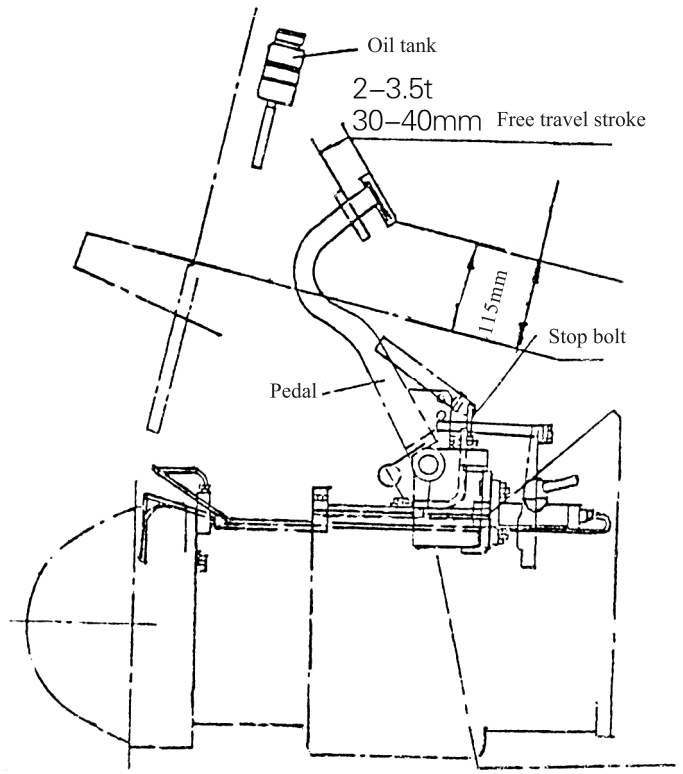

Fig.8-7 Brake pedal adjustment (truck with clutch)

8.7 Brake Pedal Adjustment (Truck with torque converter) (See Fig.8-8)

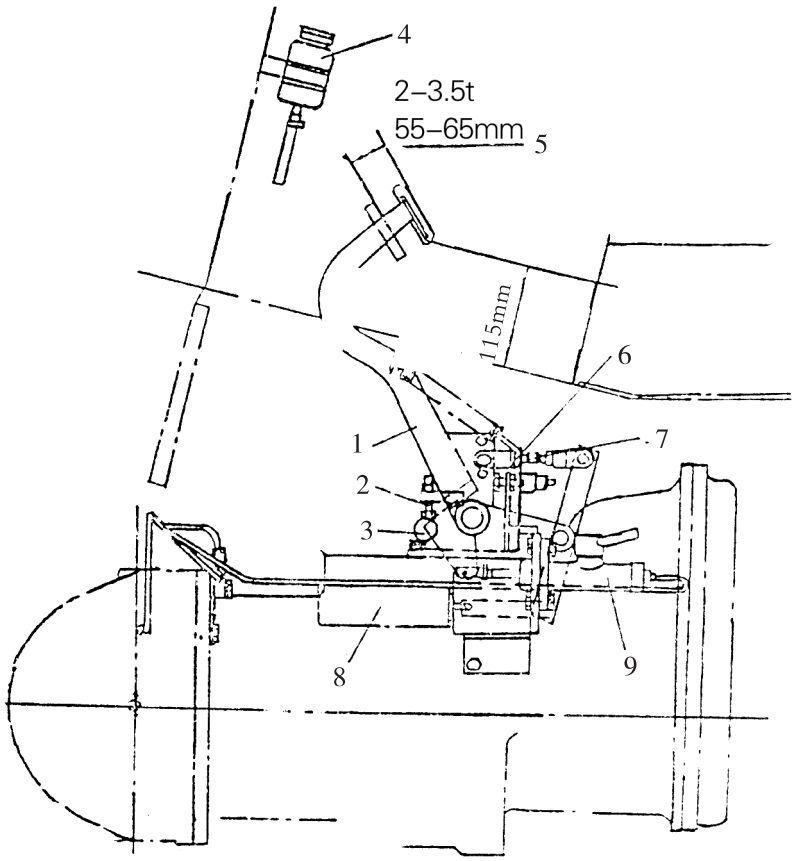

Fig.8-8 Brake pedal adjustment (truck with torque converter)

(1)Pedal (2)Linking bolt (3)Connecting shaft (4)Oil tank (5)Free travel stoke

(6)Stop bolt (7)Screw stem (8)Inching valve (9)Brake master cylinder

(1) Loosen the push rod and interlocking bolt.

(2) Adjust the pedal to the height of 111mm with the stopper bolt.

(3) Adjust the left side pedal (inching pedal) for 2-10mm idle travel with the stud.

(4) Press the right side pedal for 60mm and adjust the stud length until the front end of the push rod get in contact with the master cylinder piston, then lock with a lock nut.

(5) Adjust the interlocking bolt until its head comes in contact with the connection axle and lock the bolt.

https://truckmanualshub.com/

8.8 Maintenance

This paragraph covers the disassembly, reassembly and adjustment of the brake. (The description here is mainly for 2 ton truck's brake, the 3 ton and 3.5 ton trucks brake is similar to it in general.)

8.8.1 Wheel brake disassembly

(1) Remove the hold-down spring of secondary shoe, the adjusting lever and push rod and its return spring. (See Fig.8-9)

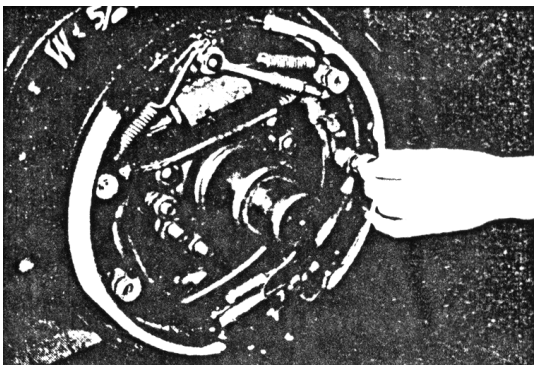

Fig. 8-9

(2) Remove two shoe return springs. (See Fig.8-10)

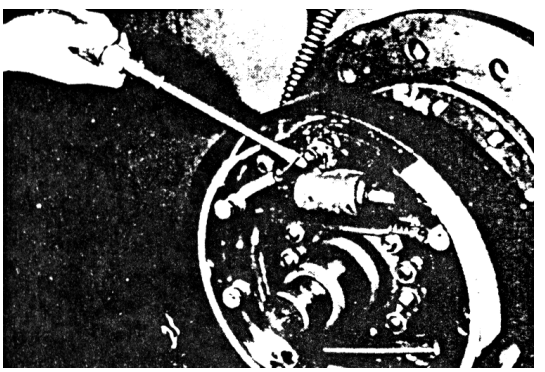

Fig. 8-10

(3) Remove three hold-down springs. (See Fig.8-11)

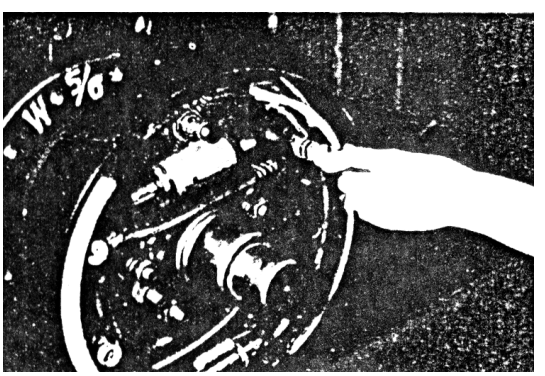

Fig. 8-11

https://truckmanualshub.com/

(4)Remove the primary and secondary shoes, at the same time, remove adjuster spring. (See Fig.8-12)

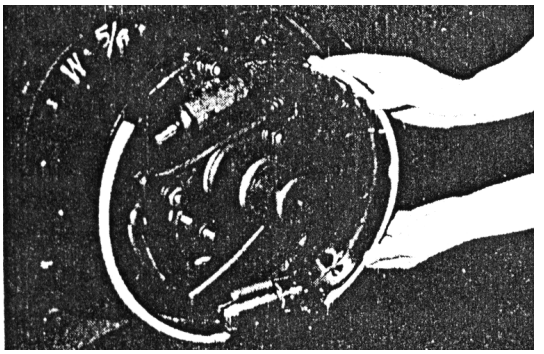

Fig. 8-12

(5) Remove the braking oil pipe from the operating cylinder, remove operating cylinder mounting bolts and detach the operating cylinder from the backing plate. (See Fig.8-13)

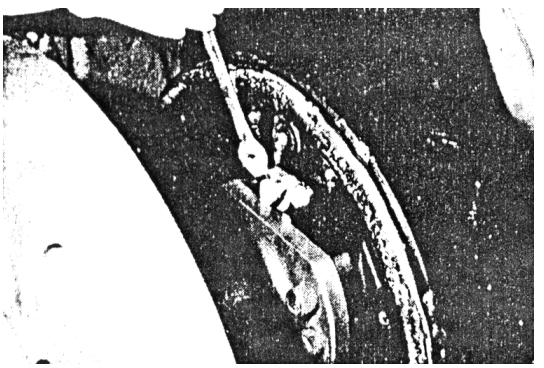

Fig. 8-13

(6) Remove the E-retainer for securing the parking brake cable to the backing plate. Remove the backing plate mounting bolts and detach the backing plate from the drive axle body. (See Fig.8-14)

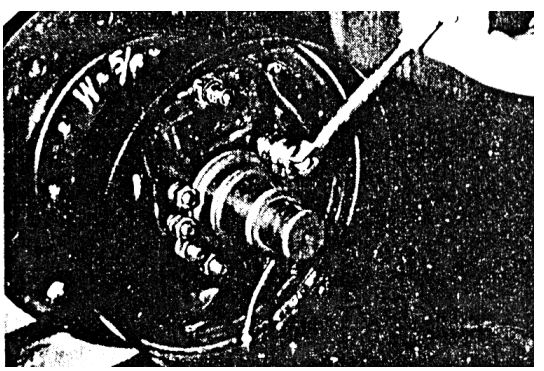

Fig. 8-14

(7) Remove the operating cylinder boot and push all parts out of the cylinder. (See Fig.8-15)

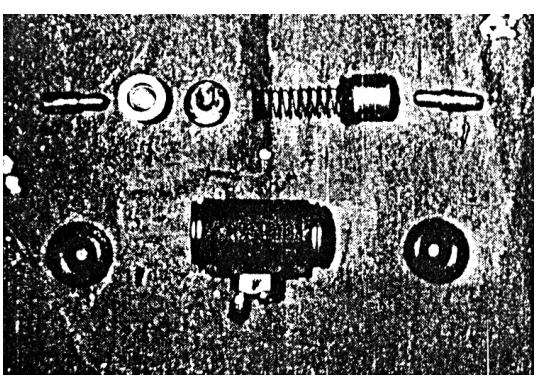

Fig. 8-15

https://truckmanualshub.com/

8.8.2 Inspection of wheel brake

Inspect all parts to make sure if there's any worn or damaged part. If necessary, repair or replace with new one.

(1) Check the operating cylinder body's inner surface and the piston periphery surface for rusting. Then, measure the clearance between the piston and cylinder body.

Specified clearance: 0.065mm-0.150mm;

Maximum clearance:0.15mm.

(2) Visually check the piston cup of the operating cylinder for damage or deformation. If necessary, replace it.

Outer dia. of cup: $30.1_{-0.2}$;

Cup interference: standard: 1.52mm; minimum: 0.42mm.

(3) Check the operating cylinder spring for free length. If necessary, replace it.

Specified free length: 60mm for 2 ton trucks; 58mm for 3 ton and 3.5 ton trucks.

(4) Check the friction piece for thickness to see if it is excessively worn If necessary, replace it.

Specified thickness: 7.2mm for 2 ton trucks; 8.0mm for 3 ton and 3.5 ton trucks;

Minimum thickness: 5.0mm for 2 ton trucks; 6.0mm for 3 ton and 3.5 ton trucks.

(5) Check the inner surface of brake drum for damage and excessive wear. If necessary, replace it.

Standard inner dia. of drum: 310mm for 2 ton trucks; 314mm for 3 ton and 3.5 ton trucks;

Max. inner dia. of drum after repair: 312mm for 2 ton trucks; 316mm for 3 ton and 3.5 ton trucks.

(6) Check the shoe return spring for free length and setting load (See Fig.8-16 and part No.6 on Fig.8-2, part No.7 on Fig.8-3).

Free length: L=106mm for 2 ton trucks; L=115.1mm for 3 ton and 3.5 ton trucks;

Setting length: L=116mm for 2 ton trucks; L=122mm for 3 ton and 3.5 ton trucks;

Setting load: 246N for 2 ton trucks; 225N for 3 ton and 3.5 ton trucks.

(7) Check push rod return spring for free length and setting load (See Fig.8-17 and part No.8 on Fig.8-2, part No. 9 on Fig.8-3).

Free length: L=124.5mm;

Setting length: L=130mm;

Setting load: 245N.

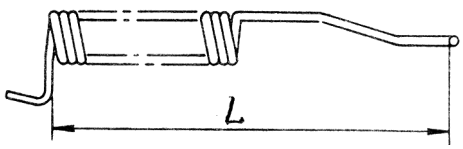

Fig. 8-16

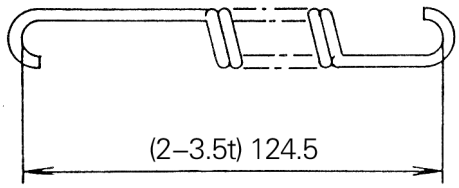

Fig. 8-17

(8) Check the adjuster spring for free length and setting load (See Fig.8-18 and Fig.8-19 and part No.12 on Fig.8-2, part No.18 on Fig.8-3).

Free length: L=86mm for 2 ton trucks; L=121mm for 3 ton and 3.5 ton trucks;

Setting length: L=97mm for 2 ton trucks; L=137mm for 3 ton and 3.5 ton trucks;

Setting load: 153N for 2 ton trucks; 71.5N for 3 ton and 3.5 ton trucks.

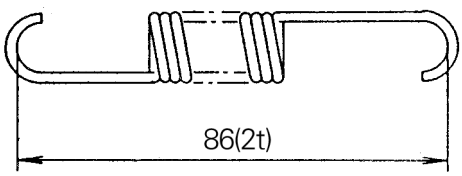

Fig. 8-18

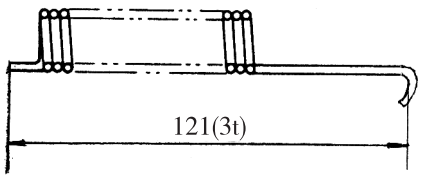

Fig. 8-19

(9) Check the ratchet pawl spring for free length and setting load (See Fig.8-20).

Setting load: 14.7N for 3 ton and 3.5 ton trucks.

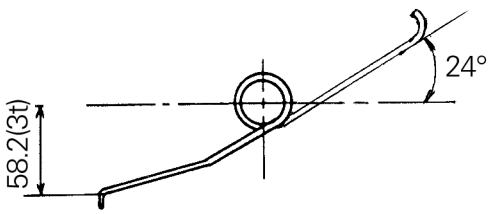

Fig. 8-20

(10) Check the adjuster to see if it is damaged or in good condition and the contact of the adjuster lever for breakdown. If necessary, replace it.

https://truckmanualshub.com/

8.8.3 Wheel brake remounting

(1) Apply brake fluid to the piston and piston cup and reinstall spring, cup, piston and dust cover in this order.

(2) Install the operating cylinder on the backing plate.

CAUTION: Make sure each component is in position when in stalling it. Bolts should be torqued to 14.7-19.6N.m for 2 ton trucks and 17.6-26.5N.m for 3 ton and 3.5 ton trucks.

(3) Install the backing plate on the front axle.

Torque moment for bolts: 120-140N.m.

(4) Apply No.2 calcium-base grease on the a, b, c, d and e points indicated in Fig.8-21and Fig.8-22, with care not to contaminate the friction piece with grease.

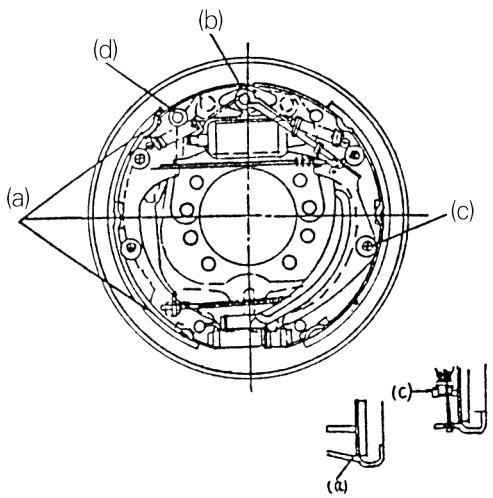

Fig.8-21 Lub. points in brake for 2ton trucks

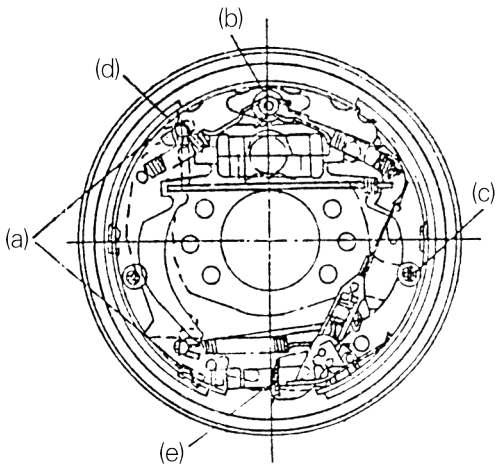

Fig.8-22 Lub. points in brake for 3ton and 3.5ton trucks

(a) Backing plate bearing surface (b) Anchor pin, parking puller (c) Anchor pin

(d) Screws of the adjuster and other rotating part

(e) Contact surfaces between shoe and spring seat

(5) Install the brake cable assembly on the backing plate with and E-retainer.

(6) Install shoes on the backing plate with hold-down springs. However, hold-down spring at the secondary shoe lower part should be fitted only after the spring seat and adjusting lever are properly mounted. Make sure the spring seat settles snugly in the shoe and the adjusting lever holes. (See Fig.8-23)

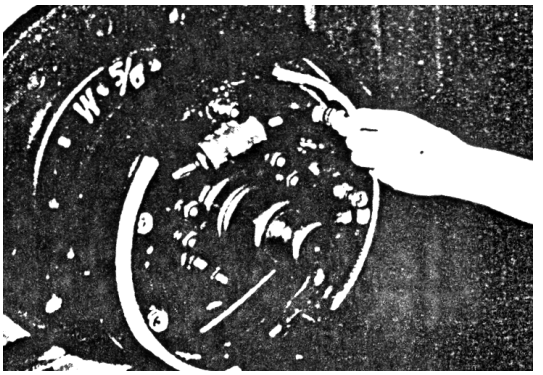

Fig. 8-23

(7) Put the spring on the parking push rod and then install the rod on the shoe.

(8) Install the shoe guide plate on the anchor pin, and install the shoe return spring. (See Fig.8-24)

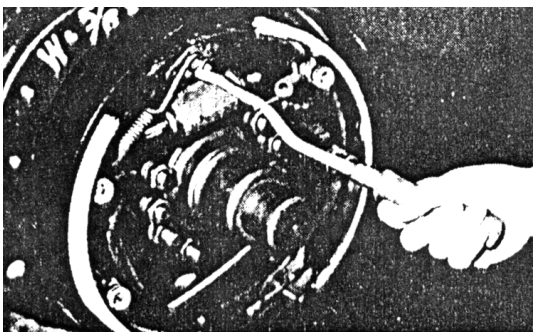

Fig. 8-24

(9) Install the clearance self-adjuster, adjuster spring, and push rod and its return spring. (See Fig.8-25)

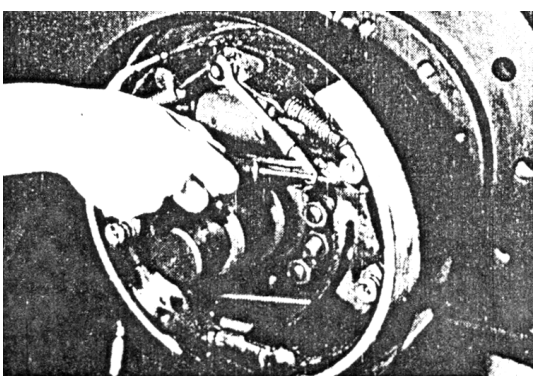

Fig. 8-25

Pay attention to the following points:

a) Adjuster thread direction and its mounting direction (In the 2 ton trucks, right-hand thread for left-side brake and left-hand thread for right-side brake. In 3 ton and 3.5 ton trucks, right-hand thread for right-side brake, and left-hand thread for left-side brake.)

https://truckmanualshub.com/

b) Adjuster spring direction. (Do not allow the adjuster gear teeth to contact with the spring.)

c) Return spring direction of the push rod. (Spring hook at anchor pin side should be located at the opposite side to push rod.)

d) Push rod and its return spring should be located in the groove on the anchor pin.

e) Make sure that the adjusting lever lower end is in contact with the adjuster gear teeth.

(10) Install the braking oil pipe on the operating cylinder.

(11) Measure the inner dia. of drum. Adjust the adjuster to obtain the difference needed between the drum inner diameter and the friction piece outer diameter.

Specified difference: 0.8-0.9mm for 2 ton trucks; 0.5-0.8mm for 3 ton and 3.5 ton trucks.

8.9 Operation Test to Clearance Self-adjuster

(1) Make the brake shoe diameter approach the specified mounting size, and pull the adjusting lever with your finger along the arrow marks as shown in Fig.8-26 to turn the adjuster gear. When removing off your finger, the adjusting lever should return to its original position without rotation of the adjuster gear.

CAUTION: Even if the adjuster gear turn back along with the adjusting lever motion when removing your finger, the adjuster will still operate normally after it is built in the machine.

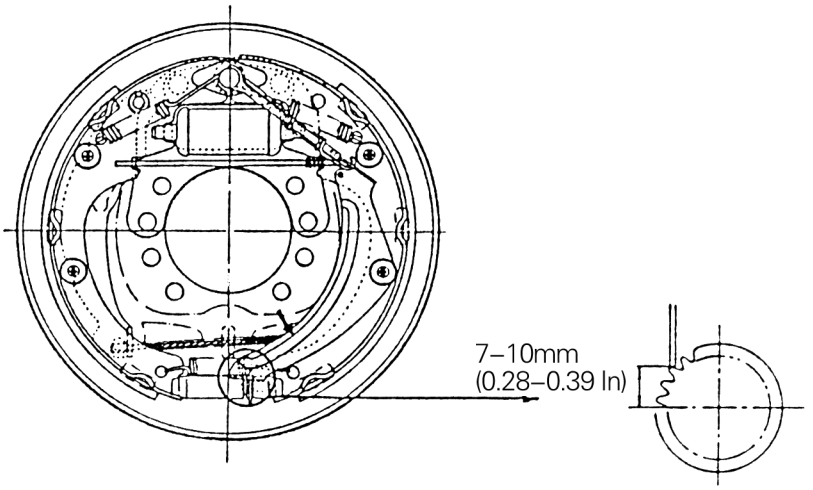

Fig. 8-26

(2) If the adjuster fail to do the above operation when the adjusting lever is pulled, proceed with the following inspection:

a) Make sure that the adjusting lever, push rod, return spring for push rod are securely installed.

b) Check to see if the adjusting lever and adjuster gear are correctly arranged. (See Fig.8-26 for 2 ton trucks and Fig.8-27 for 3 ton and 3.5 ton trucks) If necessary, replace them. Also check if the adjusting lever is in contact with the gear.

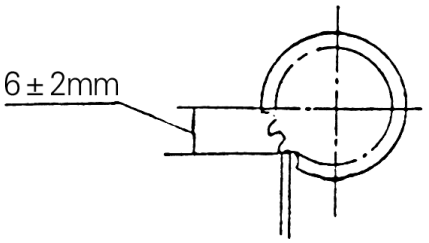

Fig. 8–27

c) Check the push rod return spring and adjuster spring for deterioration, and also check the adjuster gear for rotating condition and undue wear or damage of the meshing section.

https://truckmanualshub.com/

8.10 Wheel Brake Troubleshooting

Problem	Probable cause	Remedy
Poor braking	1)Fluid leaks from brake system.	Repair
	2)Maladjustment of brake shoe clearance.	Adjust the adjuster
	3)Brake overheating.	Check for dragging
	4)Poor contact between brake drum and friction piece.	Readjust
	5)Foreign matter adhered on friction piece.	Repair or replace
	6)Foreign matter mixed in brake fluid.	Check brake fluid
	7)Maladjustment of brake pedal (inching valve).	Adjust
Noisy brake	1)Hardened friction piece surface or foreign matter adhered thereto.	Repair or replace
	2)Deformed backing plate or loose bolts.	Repair or replace
	3)Deformed shoe or incorrect installation.	Repair or replace
	4)Worn friction piece.	Replace
	5)Loose wheel bearing.	Repair
Uneven braking	1)Oil-contaminated friction piece.	Repair or replace
	2)Maladjustment of brake shoe clearance.	Adjust the adjuster
	3)Malfunctioning operating cylinder.	Repair or replace
	4)Shoe return spring deteriorated.	Replace
	5)Deflected drum.	Repair or replace
Soft or spongy brake	1)Brake fluid leaks from system.	Repair
	2)Maladjustment of brake shoe clearance.	Adjust the adjuster
	3)Air mixed in brake system.	Bleed air
	4)Maladjustment of brake pedal.	Readjust

9.Hydraulic System

Truck model			2t,2.5t	3t	3.5t
Main pump	Model		CBHz-F28.2-ALH6L	CBHz-F31.5-ALH6L	
	Type		Gear type		
	Displacement		28.2ml/r	31.5ml/r	
Control valve	Model		CDB-F15		
	Type		Twin-pool type with relief valve, flow divider and tilt valve		
	Setting pressure		17.5MPa		
	Flow divider	Pressure	10 MPa		
		Flow rate	11 l/min		
Lifting cylinder	Type		Single-action piston type with cut-off valve and flow regulator valve		
	Bore dia.		50mm	56mm	63mm
	Stroke		1495mm (only for lift height of 3m and standard mast of two stage) (variable with mast type and required lifting height)		
Tilting cylinder	Type		Double action type		
	Bore dia.		70mm		80mm
	O.D. of piston rod		32mm		35mm
	Stroke		167mm (only for tilting angles of forward 6°and backward 12°of mast) (variable with tilting angles of mast)		

9.1 General Description

The hydraulic system consists of main pump, control valve, lift cylinder, tilt cylinder and hydraulic lines. The main pump is driven directly by the PTO device of the engine.

9.2 Main Pump

The main pump is a gear pump consisting mainly of a pump body, a cover, a pair of gears, and bushings. This pump uses pressure-balance type bearings and a special

https://truckmanualshub.com/

lubrication method so as to minimum the clearance of the gear face.

Since the pump body and cover are made of aluminum alloy, they are light and rigid. The driving gear and driven gear are integrated with their respective shafts which are held in bushings. The bushings made of special metal serves both as bearings for each shaft and as side plates for the gear face.

At the driving shaft side, an oil seal is press fitted into the pump body to provide oil tightness performance. Oil tightness between the pump body and the pump cover is secured with a packing with special shape.

9.3 Control Valve & Divider (See Fig.9-1)

The control valve (2 spool type) consists of four valve housings, two spools, one relief valve and one flow divider. The four valve housings are assembled together with three stud bolts and nuts. The tilt spool valve contains a tilt lock valve.

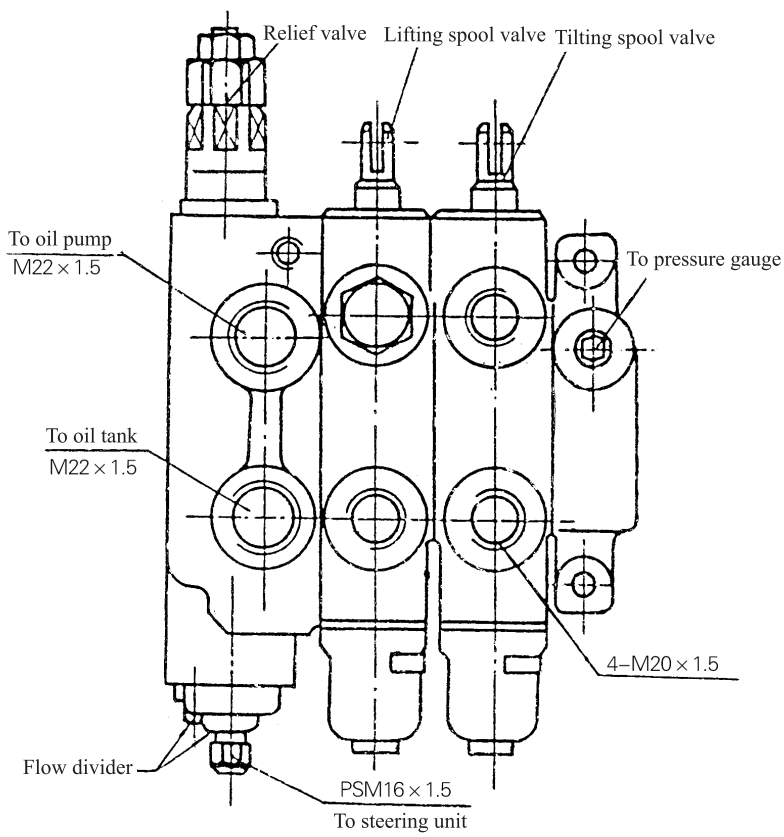

Fig.9-1 Control valve

https://truckmanualshub.com/

9.3.1Spool operation

Take the tilt spool valve for example.

(1) Neutral position (See Fig.9-2)

The high pressure oil discharged from the pump returns to the tank through the mid-passage.

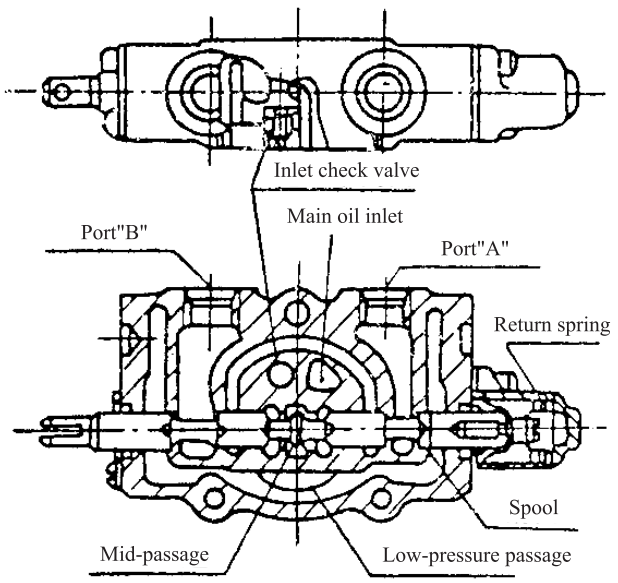

Fig.9-2

(2) Pushing-in of spool (See Fig.9-3)

In this time, the spool is pushed in to close the mid-passage. This causes the oil from the main oil inlet to push up the inlet check valve and to flow into the port “B”. The return oil from the port “A” flows through the low-pressure passage to the tank and the spool is restored to its neutral position by the return spring.

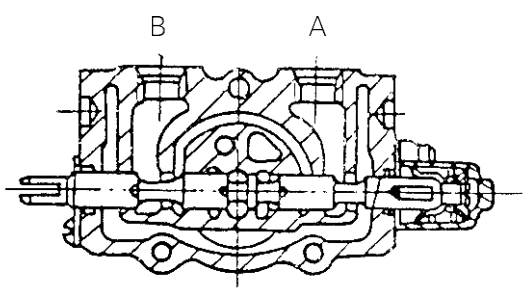

Fig.9–3

(3)Drawing-out of spool (See Fig.9-4)

With the mid-passage closed, the oil from the main oil-inlet pushes up the check valve and flows into the port “A”. The return oil from the port “B” flows through the low-pressure passage to the tank. The spool can be restored to its neutral position by return spring.

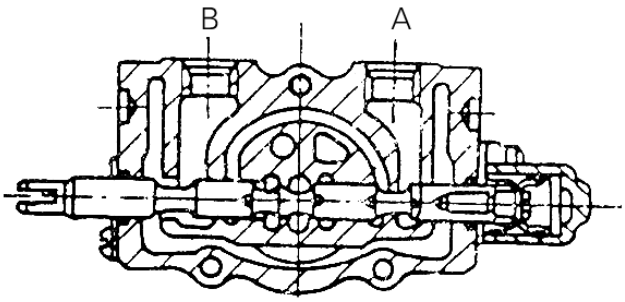

Fig.9–4

9.3.2 Relief valve and flow divider (See Fig.9-5)

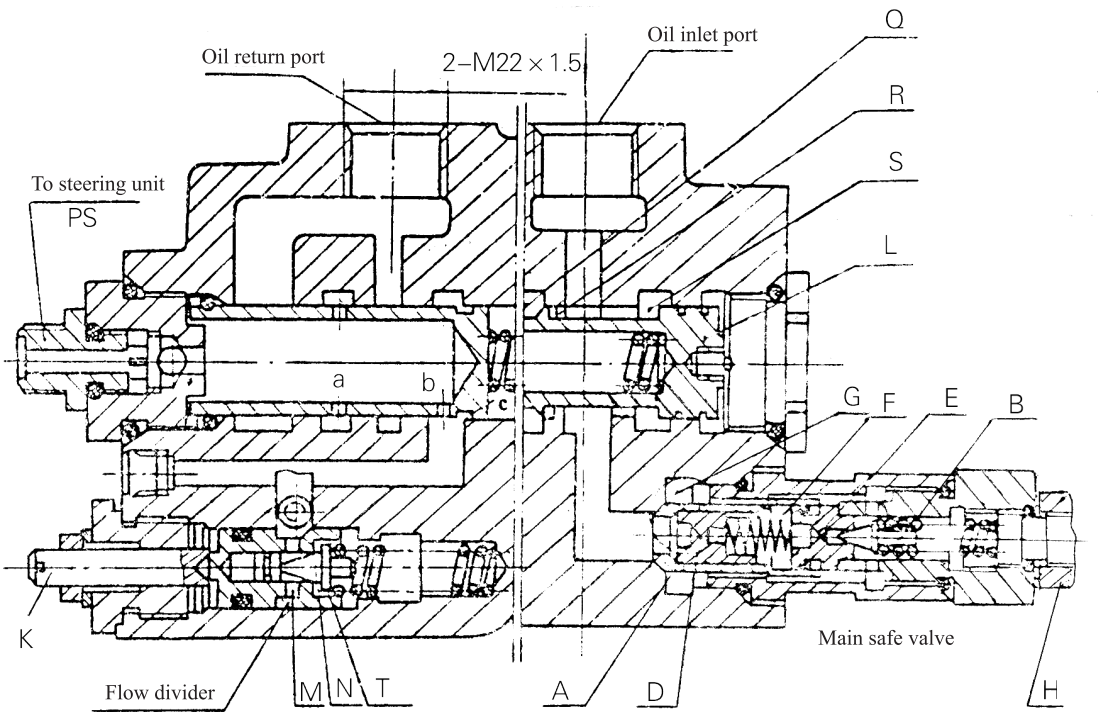

Fig.9-5

The relief valve consists of main valve A and proceeding valve B. When the spool of the control valve is operated, chamber C linked with the operating cylinder is filled with high pressure oil. The high pressure oil affects proceeding valve B through throttle hole D and E. If the system pressure is higher than the setting pressure, the proceeding valve B will be opened to make the pressure in F chamber lower and thus causes the main valve A to move right, then the oil in chamber C may directly flow to low-pressure passage G and reduce chamber C pressure. In this way, the system pressure may keep unvaried. The setting pressure may be adjusted by adjusting the screw H.

The construction of the flow divider is quite simple. It is of direct overflow type, and ensures the constant pressure of the power steering system by balancing the oil pressure with fixed spring force. When turning, chamber M gets through with the high pressure passage. If the oil pressure is higher than the spring force, the poppet N moves right, causing the high pressure oil to flow directly to the low-pressure passage via. Chamber T and keeping the pressure of the power steering system unvaried The setting pressure is adjusted by adjusting the screw K.

Poppet L is a balance type spool valve and may move right of left according to the variety of the oil flow and pressure passing through it to change the opening of chamber R and S and ensures the oil flow to working chamber Q and to power steering port PS keeps in balance condition and is smoothly divided in certain proportion.

All of a. b. and c. are fixed throttle holes.

9.3.3 Action of tilt-lock valve

Tilt spool valve housing contains a tilt lock valve. The tilt lock valve is intended to prevent vibrations of the mast resulting from the negative pressure I the tilt cylinder and also to avoid danger incurred from mishandling of the spool. On the conventional model, even if the engine is not running, the mast can be tilted forward by actuating the tilt lever. But this newly adopted tilt-lock valve does not allow the mast to tilt

forward when the engine is at rest, even if the tilt lever is pushed with a full load. The construction of the tilt-lock valve. (See Fig.9-6)

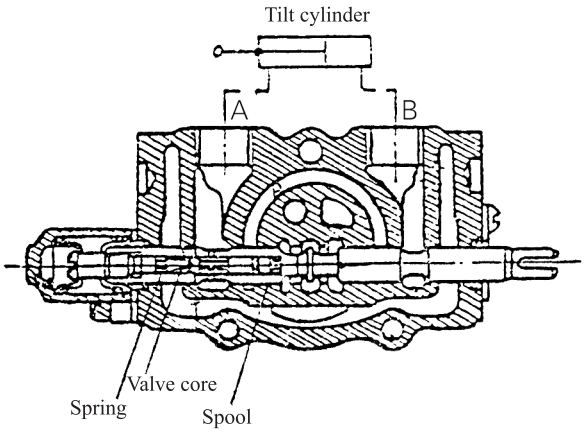

Fig.9-6

The port A and B are connected respectively to the front and the rear chambers in the tilt cylinder. When the spool is pulled out, the pressure oil flows through the port A and the oil in rear chamber flows into the oil tank through the port B and the mast is tilted backward.

When the spool is pushed in, the pressure oil flows through the port B and moves the tilt-lock valve to let the port A connect the low pressure tank and the tilt cylinder and the mast is tilted forward. When the engine stops, no pressure oil moves the tilt-lock valve, the port A can't connect the low pressure tank and the tilt cylinder and the mast can't be tilted forward.

9.4 Hydraulic System (See Fig.9-7)

The oil from the main pump cones to the control valve first and there is divided by the flow divider into two parts, one being sent to lift cylinder or tilt cylinder, and another to the power steering unit in constant flow rate to operate the steering cylinder. With the spools of the lift and tilt spools in neutral position, the oil from the pump directly returns to the tank through the passage in the control valve. When the lift spool is pulled, the oil from the pump flows through the flow regulator valve and reaches the lower part of the lift cylinder to push the piston up. When pushes the lift

spool, the circuit between the lower part of the lift cylinder and the oil tank is connected and the piston begins to descend due to the weight of the load and all of lifting parts. In this case, the oil flow returning to the control valve is regulated by the flow regulator valve and the fork descent speed is controlled. When the tilt lever is operated, the high pressure oil reaches the front or rear chamber of the cylinder and pushes the piston forward or backward. The oil pushed out by the piston returns to the oil tank through the control valve and the mast then tilts forward or backward.

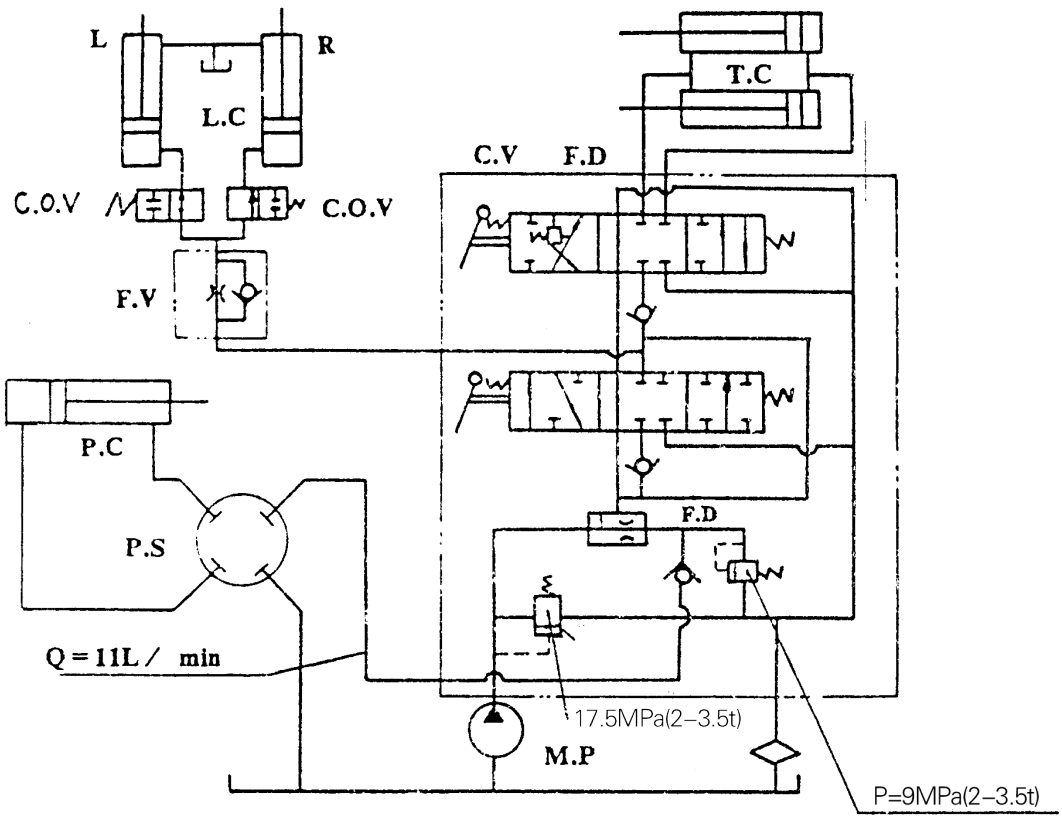

Fig.9-7 Hydraulic oil circuit

T.C.- Tilt cylinder L.C.- Lift cylinder C.V.- Control valve F.D.- Flow divider

F.V.- Flow regulator valve C.O.V.- Cut-off valve P.C.- Power steering cylinder

P.S.- Power steering unit M.P.- Main pump L.- Left R.- Right

9.5 Lift Cylinder(See Fig.9-8)

The two single-acting type lift cylinders are located behind the outer mast

channels and the bottoms of the cylinders are connected with the cylinder supporter of the outer mast by bolts and pins, while their tops (i.e. piston rod heads) are held by the inner mast piston head guide. Two piston rods should be synchronous during the lifting or lowering. Readjusting the strokes of two pistons or article 28& 29 shown in Fig.9-8 should be done, if they are not so.

The lift cylinder consists primarily of cylinder body, piston, piston rod, cylinder cap, cylinder base and oil seals. At the lower part of the cylinder body is an inlet for high-pressure oil and at the upper part is arranged the return pipe which allows leak oil from the clearance between the piston and cylinder body to return to the oil tank. The piston, fastened to the piston rod with castled nut and cotter pin is fitted with a Yx-type seal, snap ring and packing on its outer periphery. It moves up along the inner surface of the cylinder by high-pressure oil from the cylinder bottom. With press-fitted bushing and dust seal, the cylinder cap is screwed into the cylinder body. The bushing supports the piston rod and the dust seal keeps dust off. The stroke of the piston can be adjusted with cylinder cap.

When the lift spool is pulled backward, high pressure oil flows into the lift cylinder through the cylinder bottom and pushed up the piston, causing the forks and inner mast to rise with the aid of lift chains. When the lift spool is pushed forward, the piston descends because of the weight of load and all of lifting parts, causing the oil under the piston to flow out of the cylinder. The oil flow discharged from the cylinders is regulated by the flow regulator valve and returns through the control valve to the oil tank.

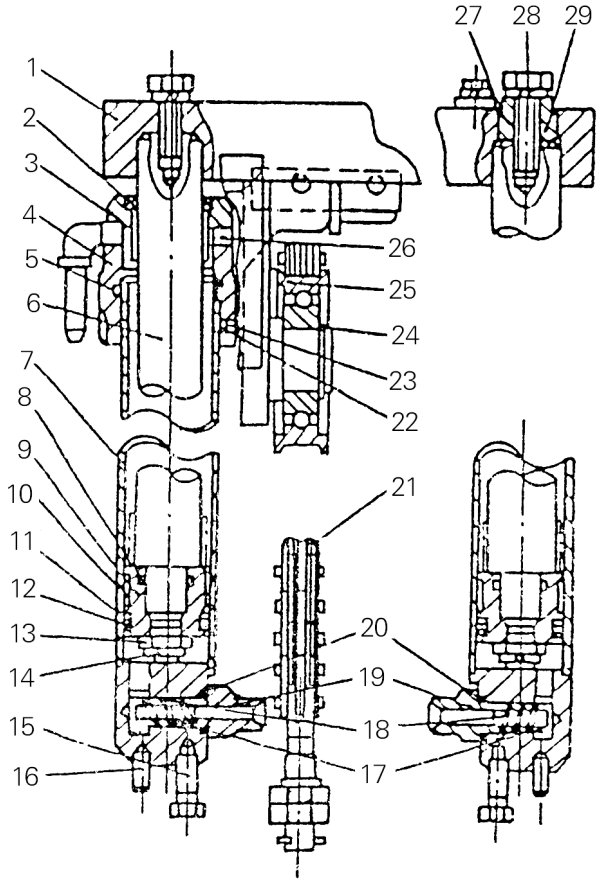

Fig.9-8 Lift cylinder

(1) Piston head guide	(9) Piston	(17) Flow regulator valve spool	
(2) Dust seal	(10) Packing	(18) Spring	(25) Chain wheel
(3) Bushing	(11) Snap ring	(19) Nipple	(26) Plug
(4) Cylinder cap	(12) Yx-ring	(20) O-ring	(27) Stop plate
(5) O-ring	(13) Nut	(21) Lift chain	(28) Set screw
(6) Piston rod	(14) Cotter pin	(22) Plug	(29) Screw plug
(7) Cylinder body	(15) Set screw	(23) Lock screw	
(8) O-ring	(16) Knock-out pin	(24) Snap ring	

At the bottom of the lift cylinder is a cut-off valve (See Fig.9-9), which operates when the high-pressure hose bursts for any reason to prevent the load from dropping down abruptly. The oil from the lift cylinder flows through small holes in the circumference of the cut-off valve spool and produce a pressure difference between two chambers. As the pressure difference as result of passing the holes is smaller than

https://truckmanualshub.com/

the spring force so that the cut-off valve spool won't move. If the high-pressure hose bursts, the pressure difference will be big enough to overcome the spring force, causing the spool to move until the holes on the circumference on thee spool are blocked up and allowing only a small amount of oil to flow through the holes at the spool end to let the forks descend at low speed.

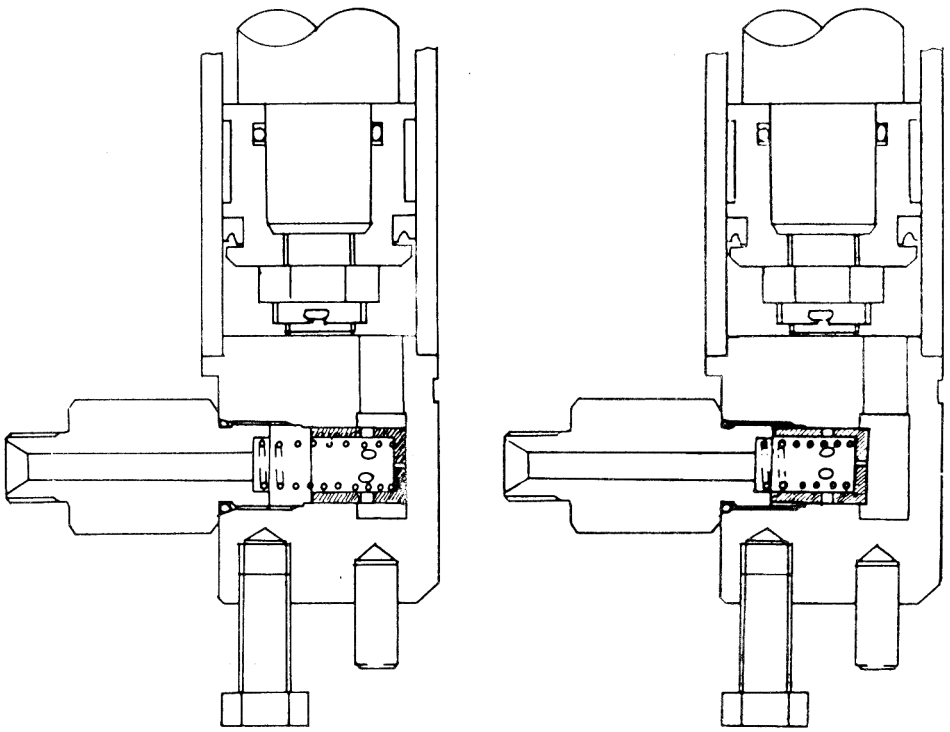

Normal state Working state

Fig.9-9

9.6 Flow Regulator Valve

The flow regulator valve, located in the lift cylinder circuit to limit the descending speed of loaded forks, has the construction as shown in Fig.9-10. When the lift spool is placed in the "lift" position, the oil from the control valve flows through the oil chambers A and B, oil holes C, D, E and F, and the chamber G to the lift cylinder without any regulation. When the lift spool is placed in the "down" position, the oil flows in the reverse direction. When the oil passes the orifice plate(5) and a pressure difference generates between the chambers A and B, the purssure

difference overcomes the force of the spring(2) and moves the valve core(7) right, thus the oil flow being decreased by narrowing of the hole D and C, and reduces the oil flow passing through the orifice plate(5).

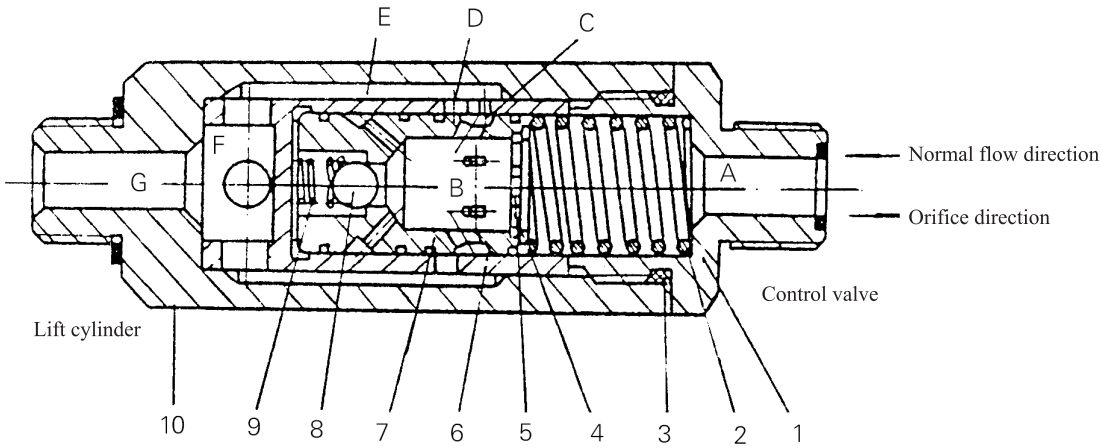

Fig.9-10 Flow regulator valve

(1) Nipple (2) Spring (3) O-ring (4) Snap ring (5) Orifice plate

(6) Sleeve (7) Valve core (8) Ball (9) Spring (10) Valve body

9.7 Tilt Cylinder (See Fig.9-11)

The tilt cylinder is of double-acting type. Each truck has two tilt cylinders which are installed on two side of the mast assembly with pin while their piston rod ends are connected with the outer mast channels.

The tilt cylinder assembly consists primarily of piston, piston rod, cylinder body, cylinder base, guide sleeve and seals. The piston, welded to the piston rod, is fitted with two Yx-rings and one wear ring on its circumference. A bushing press-fitted to the inner side of the guide sleeve supports the piston rod. The guide sleeve is fitted with dust seal, snap ring, Yx-ring and O-ring to prevent oil leakage and keep dust off. Fitted with them, the guide sleeve is screwed into the cylinder body.

When the tilt lever is pushed forward, the high-pressure oil enters into the cylinder body from the cylinder tail, moving the piston forward and causing the mast assembly to tilt forward until 6 degrees. When the tilt lever is pulled backward, high-pressure oil enters into the cylinder body from the guide sleeve and moves the piston

backward, tilting the mast backward until 12 degrees.

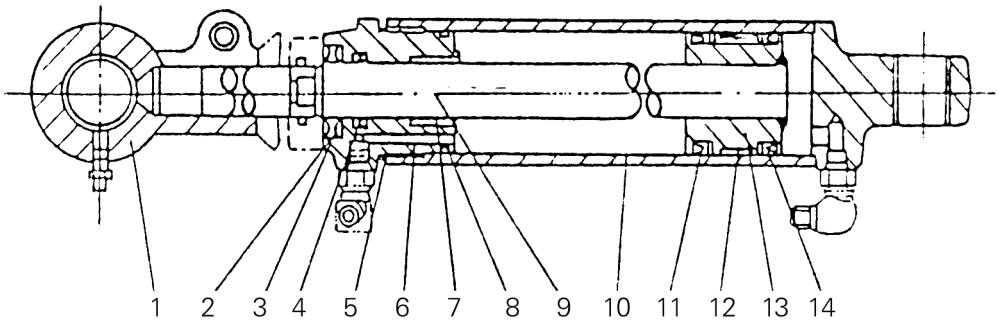

Fig.9-11 Tilt cylinder

(1) Joint (2) Dust seal (3) Snap ring (4) Yx-ring (5) O-ring

(6) Guide sleeve (7) Bushing (8) O-ring (9) Piston rod (10) Cylinder body

(11) Yx-ring (12) Wear ring (13) Piston (14) Yx-ring

9.8 Maintenance of Main Pump

9.8.1 Disassembly (See Fig.9-18 & 9-19 import pump)

(1) Hold the pump cleaned in a vice by lightly clamping the flange section and remove bolt(12).

(2) Remove rear cover(1) and packings(8), (9), (10) and (11).

(3) Remove front cover(7) and (8), (9), (10), (11).

(4) Remove bearings(3), (4) and gears(5), (6) out of pump body(2). If it is difficult to remove the bearings and gears, press a gear in to solve it.

For the convenience of checking, it is recommended to place the disassembled parts in this order as shown in Fig.9-18 & 9-19.

9.8.2 Inspection and repair

The disassembled parts except rubber parts should be washed with light oil. These disassembled parts should be checked and repaired or replaced as follows:

(1) Pump body inspection

The gear pump is designed to allow the gear teeth to rotate with slightly touching the pump body inner surface to give a high efficiency. The inner surface of the pump body and the gear circumference will surely get scraping traces. The normal scraping

trace is not more than 1/3 long of the inner periphery of the pump body. If the scraping trace is up to 1/2 long of the inner periphery, it indicates that the bearing and gear shaft are subject to excessive wear. When the dimension X shown in Fig.9-12 exceeds 39.180mm or the scraping trace becomes longer than 1/2 long of the inner periphery, replace the pump body.

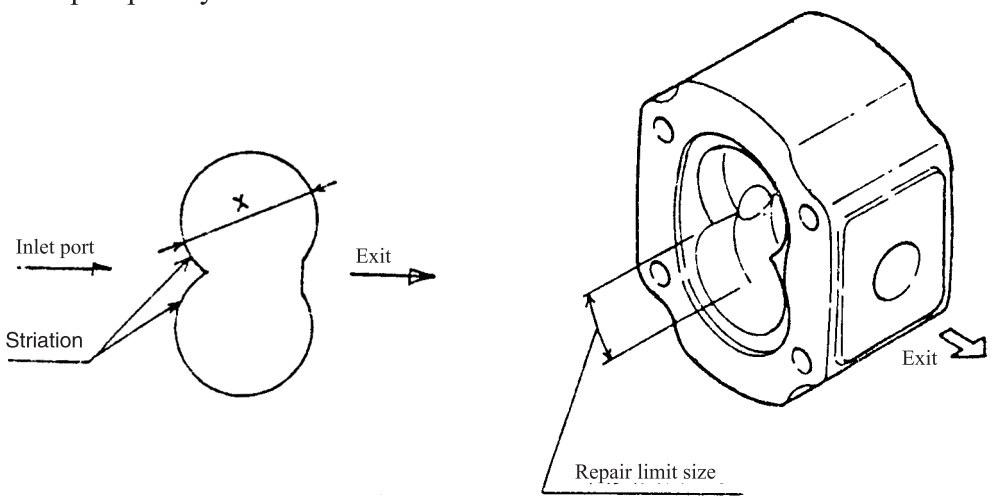

Fig.9–12

(2) Bushing inspection (See Fig.9-13 & 9-14)

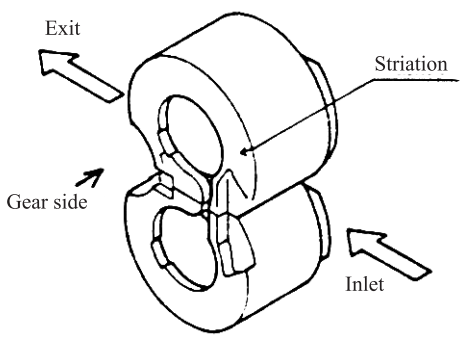

Fig.9-13

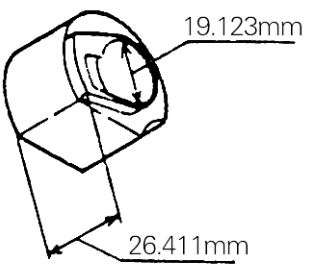

Fig.9-14

It is desired as an ideal condition that the inner sliding surface of the bushing is smooth and about the half portion toward the inlet side presents lustrous contact surface. If any one of the following conditions is found, replace the bushing.

a) The whole inner sliding surface shows contact trace and gets rough to the feel if your nail catches.

https://truckmanualshub.com/

b) Flaws can be found on the face of the bushing and gets very rough to the feel if your nail catches.

c) The inner sliding surface and face have foreign matters sticked.

In most case, above troubles on the bushing are caused by contamination of hydraulic oil. If any trouble occurs, flush the whole circuit and change oil. On rare occasions, however, the bushing may get troubles due to overload of safety valve, cavitation, too high oil temperature or too low oil viscosity. If in these cases the gear shaft or gear face get rough or worn excessively, replace the gears as well as the bushings. The service limit of the bushing is as follows: (See Fig.9-14)

Inner diameter: 19.123mm;

Overall length: 26.411mm.

(3) Gear inspection

As long as clean hydraulic oil is used, the gear shaft and gear face will not get damaged. If the gear shaft and gear face feel rough with your nail or flaws in gear face are found, or the gear surface is very unevenly worn, replace the gear with new one. When the gear surface is worm or discolored, it indicates that the bushing and pump body also get troubles and need to be inspected. The gear shaft diameter limit is 18.935mm (See Fig.9-15).

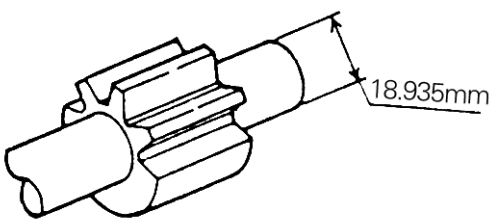

Fig.9-15

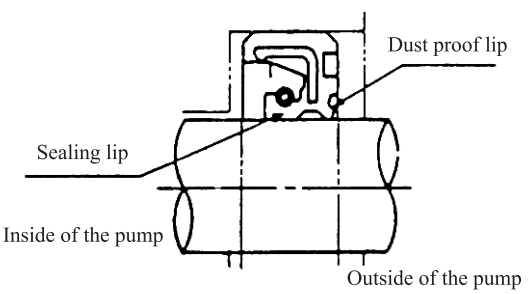

Fig.9-16

(4) Seal inspection

a) Oil seal(14) (See Fig.9-18 & 9-19)

Oil seal(14) is a combined seal. The seal lip toward the pump shaft provides oil

https://truckmanualshub.com/

tightness and the seal lip outward mainly prevents enterance of dust (See Fig.9-16). Inspect the seal for flaw, wear or deformation and also its rubber to see if it has sufficient elasticity. If any defect is found, replace with new one.

b) Packing ring(8) and (9)

Pump body packing ring(8) and bushing packing ring(9) should be replaced with new ones before reassembling the pump.

c) Packing rings(10) and (11)

Check for wear or breakage.

9.8.3 Reassembly (See Fig.9-17)

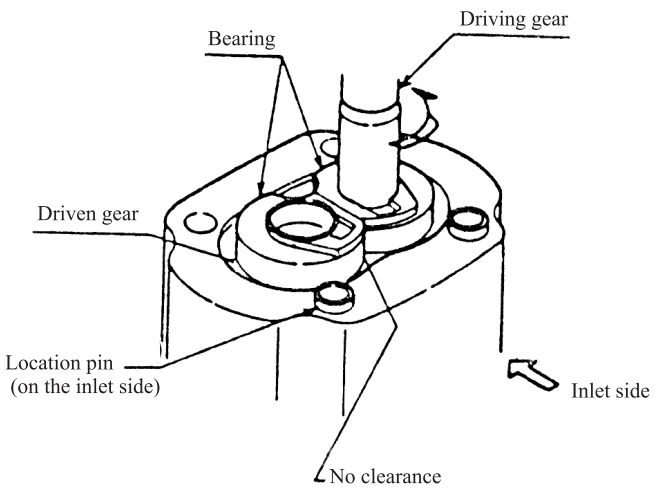

Fig.9-17

(1) Clean disassembled parts.

(2) Apply a thin coat of clean grease on the lips of packing ring(8), (9), (10), (11) and (14).

(3) Put pump body(2) on a plain stand with cover(1) upward. Put clean hydraulic oil on the inner surface of the pump body.

(4) Hold bushings(3) and (4) properly in the pump body. Notice not to have the wrong arrangement of them. If they are difficult to be installed, pull them out and try again. Do not tap or press by force.

(5) Turn the pump body over. Put driving gear(5) and driven gear(6) in the pump

body so that the same teeth may be engaged as they were meshed before disassembly.

(6) With the same procedure as step(4), install bushings(3) and (4) toward the front cover side.

(7) Install the packing ring(8), (9), (10) and (11) correctly. Be careful not to overlap the packing at the center.

(8) Install the front cover(7) with the driving gear face covered with tapes to avoid the lip of the oil seal to be damaged, but do not forget to remove the tapes after the installation.

(9) Notice to prevent the packing rings(8), (9), (10) and (11) installed in the step(7) from sliding when turning the pump body over to install the rear cover.

(10) With the same method as in step(7), install another packing rings(8), (9), (10) and (11).

(11) Install the rear cover(1).

(12) Install the lock washer(13) and bolts(12) and tighten up the bolts with a torque of $47^{+0.25}_{0}$ N.m ($4.7^{+0.26}_{0}$ kgm).

Check the gear pump for completeness and correctness and then clamp down its driving shaft with a vice to check the pump to see if it is easy to be rotated. If it is hard to be rotated, recheck the pump.

Check the gear pump for the assembly and rotation direction before installing it to the machine.

The followings should be noticed when installing it to the machine:

a) Check the gear pump's portion below the center section for damage and dust.

b) Check the flange surface of the pipeline for damage and dirts.

Install the O-ring in the flange of the pipeline after finishing procedures above.

9.8.4 Trial run

After installing the gear pump in the truck, check it reassembled for specified performance and do the running-in for it. If the pump’s gears are seized or internal ports worn excessively, you should renew the hydraulic oil and filters or strainers or

https://truckmanualshub.com/

clean them. The trial run procedures are as follows:

(1) Install a pressure gauge in the pressure pipeline as near to the pump as possible.

(2) Place the control valve in its neutral position and run the pump at 500 to 1000rpm. The reading on the gauge should be slightly lower than 1MPa (or 10kg/cm^2) and the pump runs for ten minutes.

(3) Increase the speed of the pump to 1500 to 2000rpm without load for ten minutes.

(4) Without the change of the speed I step(3), increase the pressure to 2 to 3MPa (or 20 to 30kg/cm^2) and run the pump for five minutes. Then increase the pressure to maximum with loading the relief valve. Each circuit works for five minutes and then renew or clean the element of return filter. During the increase of the pressure, observe the change of oil temperature and pump body surface temperature and working voice. If the oil temperature or pump body surface temperature is excessively high, discharge the pump to adjust the temperature.

(5) After finishing above-mentioned procedures, recover the relief valve and do the discharge test.

(6) No matter what the relief valve is loaded or not, the pump should be to pass the discharge test to ensure that the pump runs at proper speed.

Fig.9-18 show the sketches of hydraulic pipeline.

https://truckmanualshub.com/

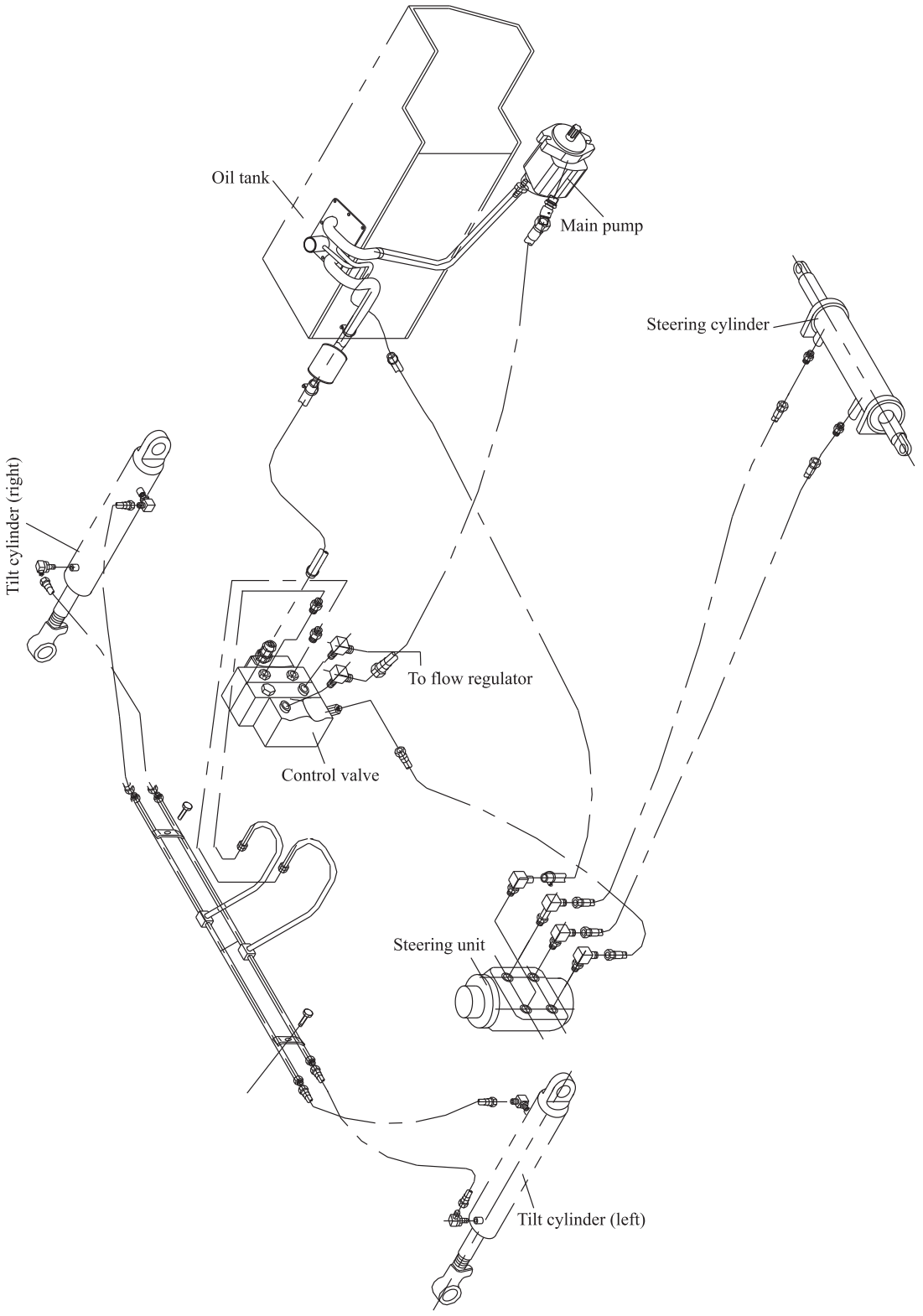

Fig.9-18 Hydraulic pipeline sketch

https://truckmanualshub.com/

9.8.5 Trouble shooting

Problem	Possible cause	Remedies
Oil can't be pumped out	Lower oil level in oil tank.	Add oil up to specified oil level.
	Blocked suction pipeline or oil filter.	Clean it or replace oil if the oil iscontaminated.
Gear pump can not be pressurized	Worn bushing(3) and (4) or broken down packing(9), (10) or (11).	Replace
	Misadjusted relief valve.	Notice pressure gauge when increasing pressure.
	Air entering into the pump.	1) Retighten loose connections for suction pipe. 2) Add oil into oil tank. 3) Check oil seal. 4) Do not start the pump until no air bubble is in oil tank.
Noisy gear pump	Twisted suction nose or caviation incurred by oil filter blocked.	Correct hose and clean filter.
	Air entering-in resulting from loose suction connections.	Retighten each connection.
	Too high oil stickiness, incurring caviation.	1) Use oil with proper stickiness. 2) Start the pump until oil is at normal temperature.
	Eccentrically mounted gear pump.	Concentric mounted gear pump.
	Air bubble in oil.	Find out causes and correct them.
Oil leakage in pump	1) Oil seal and packing(8) in pump broken down. 2) Worn sliding surface (increasing the inner leakage).	Replace

https://truckmanualshub.com/

10.Lifting System

For 2 to 3.5t trucks

Type: rolling type, J shaped inner mast, C shaped outer mast with free lift. 2 stage telescopic mast.

Cross section of inner mast:

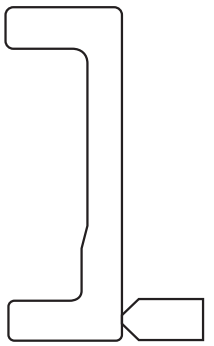

Cross section of outer mast:

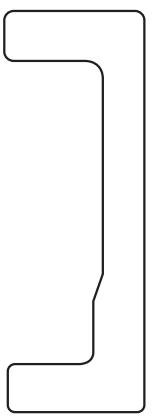

Roller:

Main roller 1	Φ 119.2
Roller 2	Φ 109.7
Retaining roller	Φ 80 (3.5t Φ91.5)
Side roller Ⅰ	Φ 80
Side roller Ⅱ	Φ58
Side roller	Φ91.5(3t,3.5t)
Lifting chain (ISO)	LH 1234 (2t,2.5t)
	LH 1623 (3t)
	LH 1634 (3.5t)
Lifting system of the fork, mast	Hydraulic
Fork spacing adjustment	Manual

10.1 General Description

The loading system is of the two-stage, rolling telescopic mast type. The inner mast has J-shaped cross section and the outer mast has C-shaped cross section. Forks and lift brackets both are designed according to international standard. The loading system has a free lift of 300mm.

10.2 Inner and Outer Masts

The mast assembly consists of the inner and outer masts. The bottom of outer mast is connected with the drive axle. The weight of the mast assembly is sustained primarily on the axle housing. At the outside middle of outer mast, there are tilt cylinder supports connected with the piston rods of tilt cylinders. The mast assembly can be tilted forward 6°and backward 12°by operating the tilt spool of the control valve. The inner and outer masts are welded parts. With the aid of end rollers and side rollers to sustain the longitudinal and transverse load, the inner mast can operate smoothly.

10.3 Carriage

The carriage is a welded part. It moves up and down smoothly along the channel of the inner mast with main rollers and clearance adjustable side rollers sustaining the longitudinal and transverse loads. For the carriage for 2 to 3.5ton trucks, three groups of main rollers and two groups of side rollers fitted on each side of it. When forks reach its maximum height, the upper pair of main rollers will extend from the inner mast top.

The forks are installed on the finger bar of the carriage by stopper pin. The distance between two forks can be adjusted manually. Both forks and the carriage are designed according to the international standard (ISO), so that they will be used universally and exchangeable.

10.4 Adjustment of Lifting System

(1) Make the forks descend to the ground and adjust the lift chains to assure that the distance between the center of carriage lower rollers and the bottom of inner mast

is within the range of 15-20mm.

(2) Make the mast assembly tilt backward, adjust the pulling force of lift chains and let the tightness of lift chains be equal at b point (See Fig.10-1).

(3) The travels of two lift cylinders should be equal. The travels may be adjusted by using the cylinder cap(4) (See Fig.9-8).

(4) Make use of the set bolt of the right lift cylinder cap (See Fig.10-2) to eliminate the difference in height between the right and left cylinder caps.

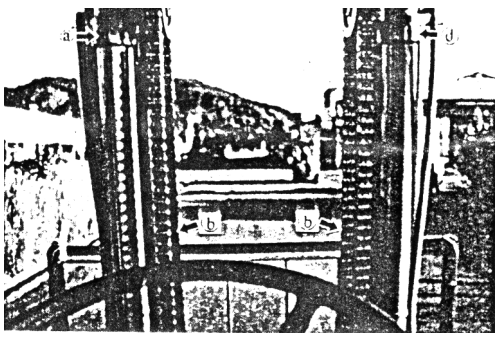

Fig.10-1

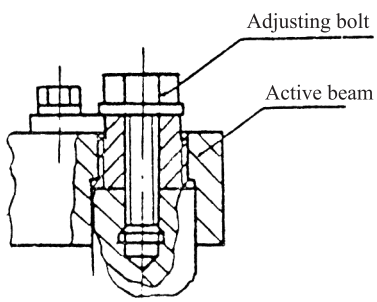

Fig.10-2

10.5 Rust Protection and Maintenance of the Lift Cylinder

The moisture content of the atmosphere and salt fog will go into the cylinder through the oil return pipe and the clearance between the sealing parts and other parts if the cylinder is not used for a long time. And thus the piston rod and inside of the cylinder barrel will be corroded and the exterior of the cylinder will become rusty. Once the cylinder gets rusty, it will be no longer serviceable.

Rust protection and maintenance measures:

(1) Rust protection of the piston rod exposed outside: wipe the surface of the piston rod with oil cloth evenly every one or two week in sunny days so as to form oil firm. If it is humid weather, do as above every 3-5days.

(2) Rust protection of the interior of the cylinder: lift and lower the mast several times in sunny days every 3-5 days to make the interior of the cylinder be fully oil lubricated; do the above every 2-3 days in humid weather.

11.Electric System

11.1 General Description

The electric system is a system with single wire circuit connecting the negative pole with truck frame.

It consists of following subsystems:

(1) Charging subsystem

This subsystem includes a generator, a set of battery, a charging indicating light and etc. The subsystem is the power source for the electric system. Rated voltage is 12 volts.

(2) Starting subsystem

It includes mainly a starter and a starting switch and is used to start the engine.

(3) Instruments

They are some monitors such as an hour meter, a fuel meter, a water temperature meter and etc.

(4) Lighting and signal devices

They include some lighting and signal devices, horn and buzzer.

Front big lamp: 35W;

Front combination lamp for turning/width-indicating: 21W/8W;

Rear combination lamp for width-indicating/braking/reversing: 8W (white)/21W (red)/21W (red).

11.2 Description on Operation of Meters

(1) Preheating/starting switch

Turn the switch to 1st step to turn on meters and ignition coil. For diesel engine, the preheating process is automatically starting and the preheating indicator lights up and goes out in 3.5sec.. After the preheating time of 13.5sec., turn the switch to 2nd step to start the engine.

Notice: For the trucks with tor-con., do not start the engine until the change-over level is at its neutral position. Otherwise, the neutral switch will turn off the

starting circuit and the starter can not be started.

(2) Light switch

The switch is put out to 1st step to turn on the front and rear width indicators and to 2nd step to turn on the front big lamp.

(3) Signaling for left turning

Pull back the turning lamp switch and the left turning lamp in the front combination lamp lights up.

(4) Signaling for right turning

Push froward the turning lamp switch and the right turning lamp in the front combination lamp lights up.

(5) Signaling for braking

When the emergency braking is required, press the braking pedal and the braking lamp in rear combination lamp (red) lights up.

(6) Signaling for the reverse of the truck

When the reverse of the truck is required, position the change-over lever to the reverse step, the reverse lamp lights up and the back buzzer sounds.

(7) Displaying for charging signal

When right turning the key switch to 1st step, the charging indicator lights up and after the engine starts, it goes out automatically. If it lights up during the engine running, this indicates the charging circuit goes out of order. In this time it is necessary to stop the truck to find reasons.

(8) Displaying for oil pressure signal

When right turning the key switch to 1st step, the oil pressure indicator lights up and after the engine starts, it goes out automatically. If it lights up during the engine running, this indicates the lubrication goes out of order. In this case, it is necessary to stop the truck to find reasons.

(9) Fuel meter

It indicates the volume of fuel oil in fuel system.

https://truckmanualshub.com/

(10) Water temperature meter

It indicates the temperature of cooling water in engine. The white area in scale is used to indicate 60℃to 80℃, the green area to indicate 80℃to 110℃(normal working temperature of the engine) and the red area to indicate 110℃to 145℃.When the meter pointer reach at the red area, stop the truck until it returns to the green area.

(11) Hour meter

It is used to indicate the sum of working hours of the engine.

Figure 11-1 Electric principle diagram for CHL series 2-3.5t truck(for mechanical direction changing of Quanchai engine and Xinchai engine)

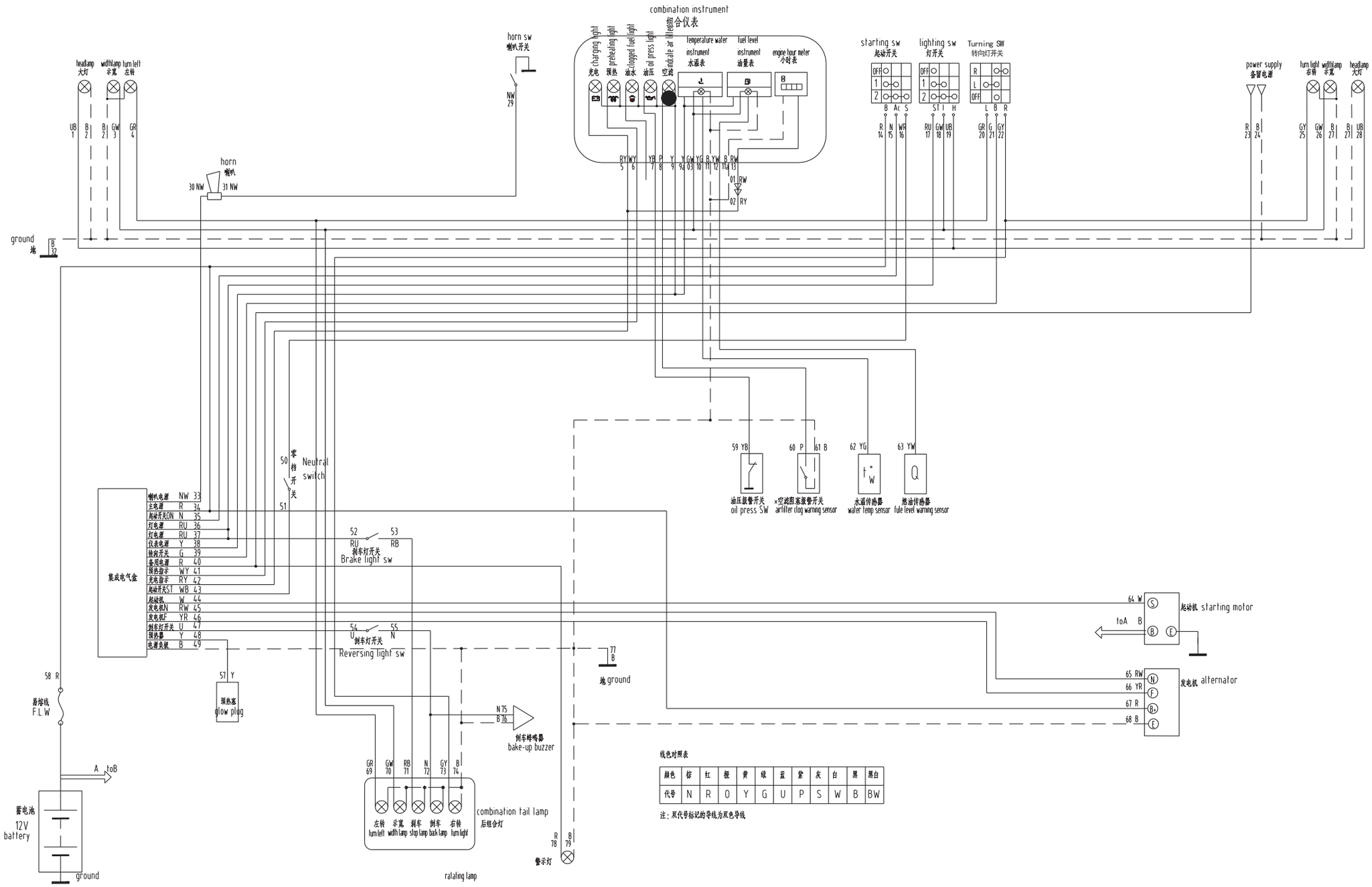

Chinese and English in principle diagram

集成电器盒 integrated electric box	后退继电器 backward relay	起升电磁阀电源 lifting solenoid valve power	控制器 controller	空调电源 air conditioner power
中央控制盒 central control box	起升继电器 lifting relay	诊断接口 diagnosis interface	大灯电源 lamp power	灯开关电源 light switch power
后退开关信号 backward switch signal	泵继电器 pump relay	后退电磁阀电源 backward solenoid valve power	启动机 starter	前进电磁阀电源 forward solenoid valve power
前进开关信号 forward switch signal	CAN 总线 CAN bus	启动开关信号 start switch signal	预热塞 heater plug	仪表电源 meter power
主继电器控制 main relay control	闪光器 flasher	自动熄火信号 automatic flameout signal	备用电源 power standby	方向开关电源 direction switch power
机油压力传感器 engine pressure sensor	空气流量计 air flow meter	启动开关控制电源 start switch control power	喇叭电源 horn power	主电源 main power

大灯开关信号 lamp switch signal	启动继电器 starting relay	倒车灯电源 backward light power	预热控制 preheat control
电子油门踏板 accelerator pedal	预热继电器 preheating relay	转向开关电源 steering switch power	前进继电器 forward relay
座椅报警声信号 seat alarm signal	电源继电器 power relay	熄火阀电源 flameout valve power	保险片 fuse
ECU 主电源 ECU main power	主继电器 main relay	座椅开关报警 seat switch alarm	
座椅开关 seat switch	熄火继电器 flameout relay	电源负极 power negative pole	
空档指示 neutral gear indicator	大灯继电器 lamp relay	120 欧姆电阻 120 ohmic resistance	

Figure 11-2 Electric principle diagram for CHL series 2-3.5t truck (for K21, K25 and Baofa engine)

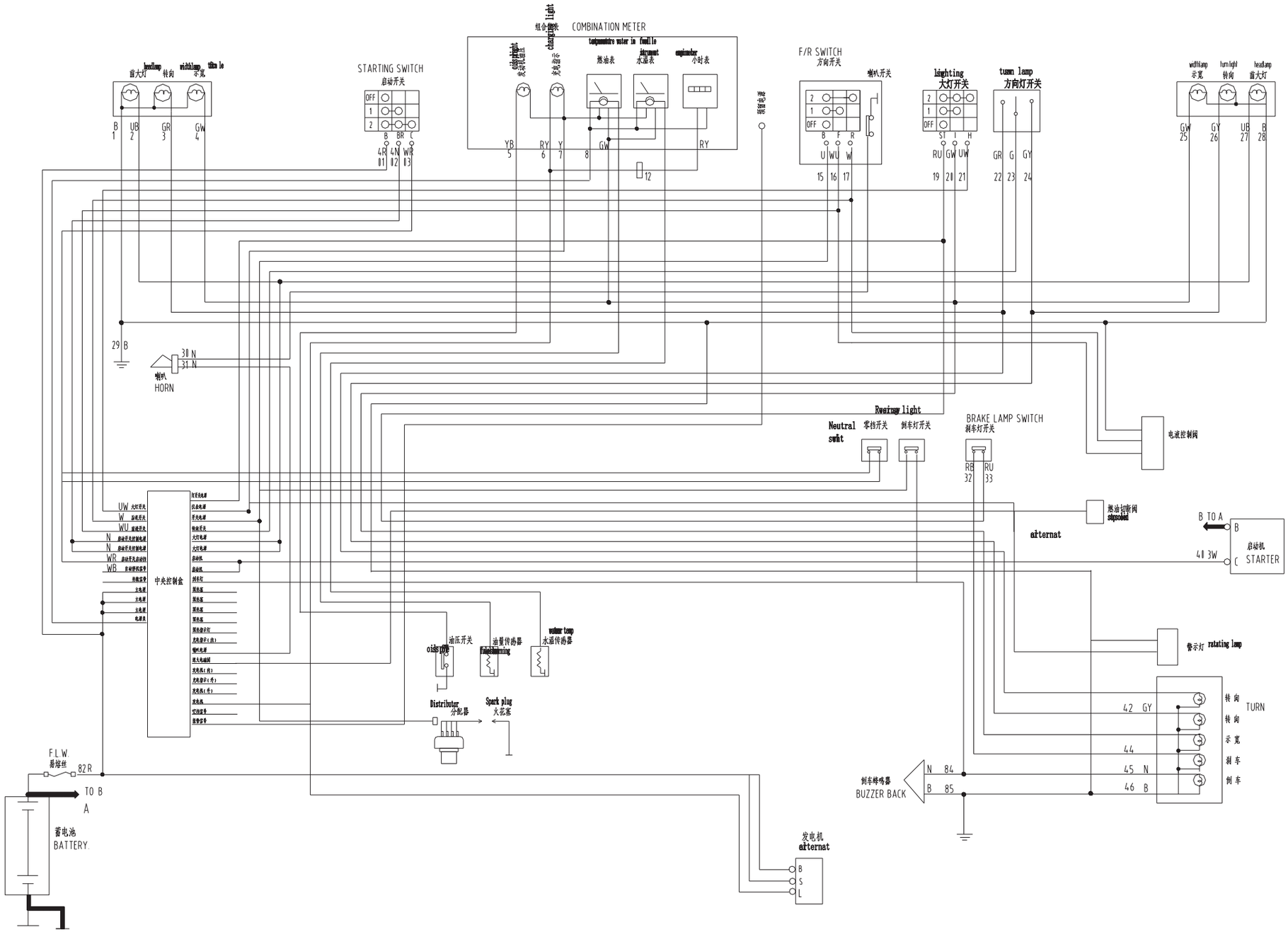

https://truckmanualshub.com/

Chinese and English in principle diagram

集成电器盒 integrated electric box	后退继电器 backward relay	起升电磁阀电源 lifting solenoid valve power	控制器 controller	空调电源 air conditioner power
中央控制盒 central control box	起升继电器 lifting relay	诊断接口 diagnosis interface	大灯电源 lamp power	灯开关电源 light switch power
后退开关信号 backward switch signal	泵继电器 pump relay	后退电磁阀电源 backward solenoid valve power	启动机 starter	前进电磁阀电源 forward solenoid valve power
前进开关信号 forward switch signal	CAN 总线 CAN bus	启动开关信号 start switch signal	预热塞 heater plug	仪表电源 meter power
主继电器控制 main relay control	闪光器 flasher	自动熄火信号 automatic flameout signal	备用电源 power standby	方向开关电源 direction switch power
机油压力传感器 engine pressure sensor	空气流量计 air flow meter	启动开关控制电源 start switch control power	喇叭电源 horn power	主电源 main power

大灯开关信号 lamp switch signal	启动继电器 starting relay	倒车灯电源 backward light power	预热控制 preheat control
电子油门踏板 accelerator pedal	预热继电器 preheating relay	转向开关电源 steering switch power	前进继电器 forward relay
座椅报警声信号 seat alarm signal	电源继电器 power relay	熄火阀电源 flameout valve power	保险片 fuse
ECU 主电源 ECU main power	主继电器 main relay	座椅开关报警 seat switch alarm	
座椅开关 seat switch	熄火继电器 flameout relay	电源负极 power negative pole	
空档指示 neutral gear indicator	大灯继电器 lamp relay	120 欧姆电阻 120 ohmic resistance	

Figure 11-3 Electric principle diagram for CHL series 2-3.5t truck (for electric-hydraulic direction changing of Isuzu C240, 4JG2, Xinchang,Jiangling and Mitsubishi S4S engine)

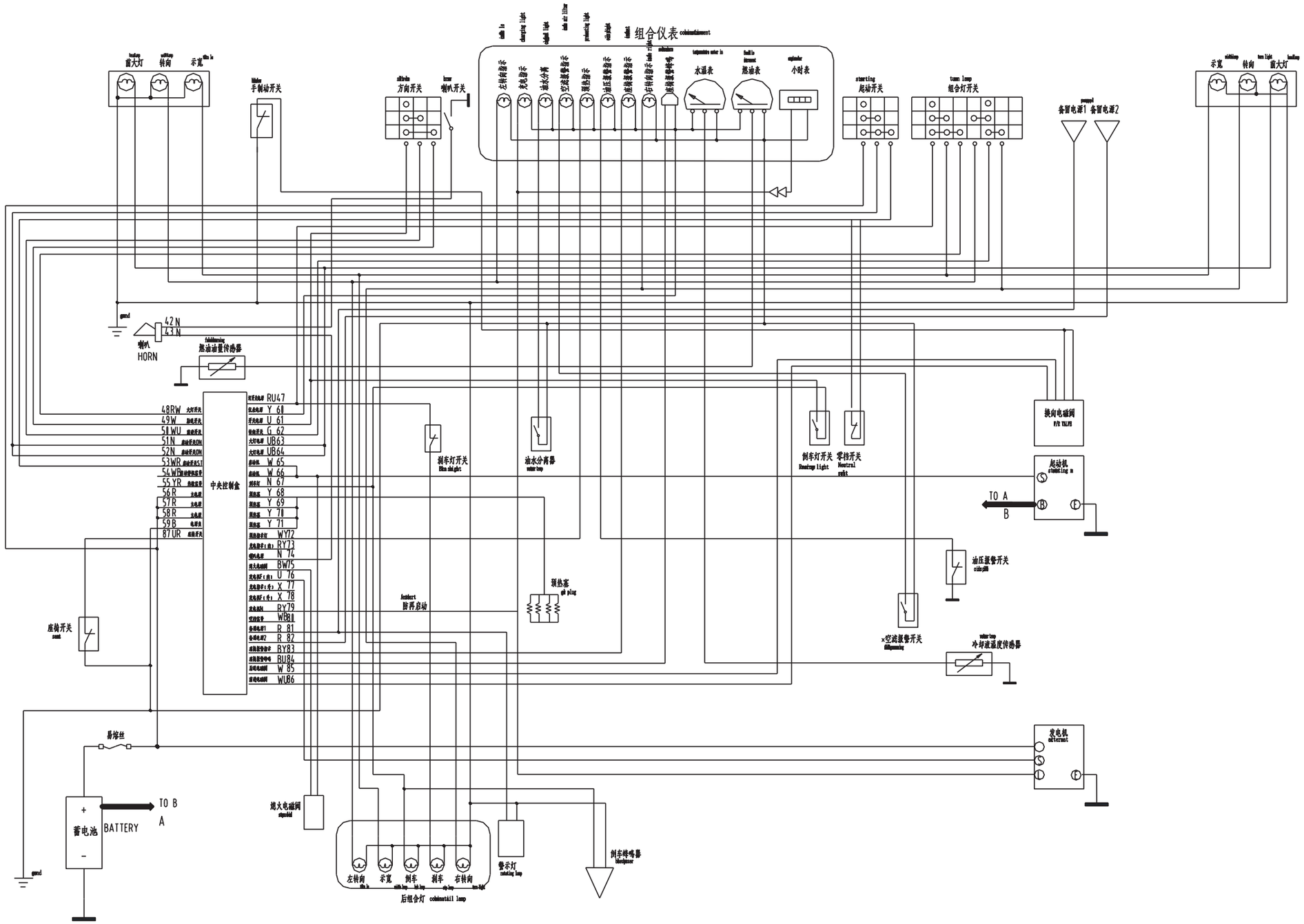

https://truckmanualshub.com/

Chinese and English in principle diagram

集成电器盒 integrated electric box	后退继电器 backward relay	起升电磁阀电源 lifting solenoid valve power	控制器 controller	空调电源 air conditioner power
中央控制盒 central control box	起升继电器 lifting relay	诊断接口 diagnosis interface	大灯电源 lamp power	灯开关电源 light switch power
后退开关信号 backward switch signal	泵继电器 pump relay	后退电磁阀电源 backward solenoid valve power	启动机 starter	前进电磁阀电源 forward solenoid valve power
前进开关信号 forward switch signal	CAN 总线 CAN bus	启动开关信号 start switch signal	预热塞 heater plug	仪表电源 meter power
主继电器控制 main relay control	闪光器 flasher	自动熄火信号 automatic flameout signal	备用电源 power standby	方向开关电源 direction switch power
机油压力传感器 engine pressure sensor	空气流量计 air flow meter	启动开关控制电源 start switch control power	喇叭电源 horn power	主电源 main power

大灯开关信号 lamp switch signal	启动继电器 starting relay	倒车灯电源 backward light power	预热控制 preheat control
电子油门踏板 accelerator pedal	预热继电器 preheating relay	转向开关电源 steering switch power	前进继电器 forward relay
座椅报警声信号 seat alarm signal	电源继电器 power relay	熄火阀电源 flameout valve power	保险片 fuse
ECU 主电源 ECU main power	主继电器 main relay	座椅开关报警 seat switch alarm	
座椅开关 seat switch	熄火继电器 flameout relay	电源负极 power negative pole	
空档指示 neutral gear indicator	大灯继电器 lamp relay	120 欧姆电阻 120 ohmic resistance	

https://truckmanualshub.com/

CHL

S178-4:2018

Manufacturer: ANHUI HELI CO., LTD.
NO.668 Fangxing Street,Economical Development Zone,
Hefei ,P.R.China
TEL:86-551-63639458
FAX:86-551-63639966
WEBSITE:HTTP://WWW.CHLFORKLIFT.COM
E-MAIL:CHL@CHLFORKLIFT.COM

S178-4:2018

Fokeli Print