Zislin SG, MOZOHIN NG, PELYUSHENKO OI,
CHERNOMASHENTSEV AI, Yakubovich IE
CARS
GAZ-69 and GAZ-69A
Design description,
ADJUSTMENT AND CARE
GORKOVSKAYA BOOK PUBLISHING 1956
The book describes the construction of car -
Lei GAZ-69 and GAZ-69A, and the main indication by adjusting the individual mechanisms and the care of aggregaghats.
The book is designed for personnel involved in
Exploitation of GAZ-69 and GAZ-69A (vodi - makers and engineers), and can serve as a tool
For teachers and students of driving schools and technology -
mov.
Chief Editor
Designer Automobile them. Molotov
N. Borisov
The request for the expulsion of the book, contact: Mr. Gorky Str. Sverdlov, 12, Shop Knigotorga number 1 "Book-mail"

PREFACE

GAZ-69 is a car-road-drive Th - tyre-wheel drive (4X4).
This car has successfully replaced in the national economy car GAZ-67B. Being single tipnym car with GAZ-67B, it surpasses it in every respect.
In order to best meet the diverse needs of the economy and the population automobile GAZ-69 is available with two types of bodies: eight-(utility) and five-seater (passenger).
Chassis of the car, with the exception of the rear springs and gasoline tanks, the same for both bodies.
Rational layout would double the capacity of the GAZ-69 in comparison with the automobile GAZ-67B (8 people instead of 4 persons).
Weight vehicles, falls on one person, is (in kg):
for eight-car GAZ-69 190
for a five-seater car GAZ-69A 307
Car GAZ-67B 330
Thus, despite the significant increase in the size of the new eight-car and use of more nodes, its own weight, which falls on a passenger, a 57% less than the GAZ-67B.
GAZ-69 can pull a trailer weighing 850 kg, well overcomes the sand, marsh and snow-covered stretches of road, rises (over 20 ° with the trailer and more than 30 ° without a trailer) and goes on fords a depth of up to 60 cm.
Payload GAZ-69 is 650 kg, while the GAZ-67B only 400 kg.
GAZ-69 has much better efficiency compared with the vehicle GAZ 67B. Fuel consumption per ton-kilometre by car GAZ-69 on 65 - 80% less than the car GAZ-67B.
GAZ-69 has a soft suspension four longitudinal semi elliptical springs and the tyre double acting hydraulic shock absorber.
The car can reach a maximum speed of 90 km / h without a trailer and up to 80 km / h with Pricapom.
It should also be noted that the GAZ-69 (compared with the GAZ-67B) has two or three times in elevated wear resistance of parts and assemblies, improved design of units and the best sustainity (due to the low centre of gravity).
GAZ-69 has a greater capacity and comfort of the body, has easily governance.
PRINCIPLES FOR GOOD GOVERNANCE and good access to the unit for servicing and repair.
Past state tests showed that the GAZ-69 and GAZ-69A (pyatimest -HYDRATED) fully satisfy the requirements for passenger cars increased Pass conductivity.
GAZ-69 is widely used in collective and state farms, MTS, construction, trade network, postal service (especially in bad road conditions). In the car GAZ-69 used in full (or with slight changes) units and aggregates GAZ. From car M-20 used: engine, clutch, gearbox, cardan va ly, hinges steering rods, the

main transmission and differential, the master cylinder hydraulic brakes, foot brake, shock absorbers, ignition device and the heater body. From car GAZ-51 used: steering wheel, a lamp starting heater, lights and podfar - Niki, tail lights, light switch, the petrol tank. Steering gear (except the steering shaft and column) taken from the car ZIM. The book describes the design of cars GAZ-69 and GAZ-69A and are some basic guidelines for their operation and maintenance of individual units.
The book is designed for personnel involved in the operation of GAZ-69, and in the first instance, red drivers of these vehicles, and may also serve as a teaching tool in driving schools.

Chapter I

Car specifications

GENERAL DATA

The number of places, including the driver, and load

1. For car GAZ-69: 8 people or 2 persons and 500 kg of cargo.
2. For GAZ-69A: 5 people and 50 kg cargo in the trunk.

Dimensions (rounded) in mm:

Length	3850
width for the GAZ-69 and GAZ-69A, with a spare wheel removed	1750
width of the GAZ-69 with installed spare wheel	1850
height of an awning in the unloaded state for GAZ-69	2030
same for the GAZ-69A	1920
Base (distance between axles)	2300
Track front and rear wheels (in the plane of the road)	1440
The lowest point of the car under load:	
Carter front axle	210
Rear axle	210
crossbar transfer case	310
Angles patency (with load):	
Front	45 °
Rear	35 °

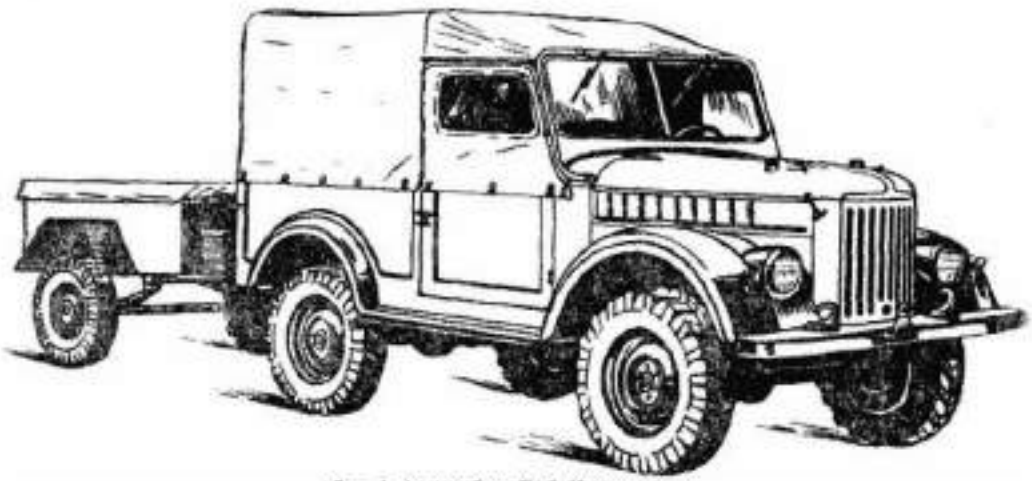

Фиг. 1. Автомобиль ГАЗ-69 с прицепом.

Fig. 1. GAZ-69 with a trailer.

Minimum turning radius in m: the trail of the outer front wheel	6
on the front bumper	6.5

The highest rate with normal load (horizontal smooth sections of highway without a trailer) 90 km / h.

Weight distribution and the total weight of the car GAZ-69 in kg:	Unlade	Full load
front axle	860	940
rear axle	665	1235
total weight of the car	1525	2175
Weight distribution and the total weight of the GAZ-69A in kg:	Unlade	Full load
front axle	820	925
rear axle	715	1035
total weight of the car	1535	1960

Notes:

1. In the unladen weight of the car include the weight of fuel, water, grease, set the driver's instrumentment and spare wheel.
2. The payload for the GAZ-69 adopted: 2 people on front seats and 500 kg of cargo.
3. The payload for the GAZ-69A, adopted by: 5 people and 50 kg of cargo in the trunk.
4. Weight allowance of one man is 75 kg.

Фиг. 2. Автомобиль ГАЗ-69А.

Fig. 2. GAZ-69A.

Allowable weight trailer with load	850 kg
Angle of ascent for the car on solid ground:	
a) without a trailer	30 °
b) a trailer weighing up to 850 kg	20 °

ENGINE

Engine Type 4-stroke, gasoline, carburettor
Cylinders 4
Cylinder capacity 2,112
Compression ratio 6,2 - 6,5
Maximum power 55 hp. with. at 3600 rpm
Maximum torque 12.7 kgm
Minimum specific fuel consumption at full throttle (in it t - Zone 2200 - 2400 rpm)
265 g / elsch
Fuel Auto. petrol A-70 GOST 2084-51 (70 octane)

Note:

These external characteristics are given to normal conditions (760 mm Hg. Art. And 15 ° C) and otno reduction the engines passed the bedding on the stand for 50 hours.
Upon removal of the external characteristics of the engine is tested without the generator, fan and water pump. As fuel is gasoline octane 70.

CHASSIS Strength Dry, single plate
Transmission
Two-pass, with three forward gears and one back
Ratios:
1-gear 3.115
2 gear 1.772
3rd transfer 1.000
reverse 3.738
Transfer Case Gear, has two transmissions with allow exact numbers 1,15 and 2,78
Drive shafts
Driveshaft’s three: intermediate, posterior ny and the front
Alignment of front wheel
Camber of the wheels 1 ° 30 '.
The angle of lateral inclination kingpin 5 °.
The angle of inclination of the lower end of the kingpin 3 °. Ret wheels 1,5 - 3 mm
The main gear front and rear axles Conical, with spiral tooth, allo - the exact number of 5,125
Type semi axes Flanged, fully unloaded
Transmission pushing efforts and the perception of reactive torque ment of both bridges Springs
Suspension Vehicle Leaf, the four longitudinal poluel lipticheskih springs, running joint but with four hydraulic piston double-acting shock absorbers
Spare wheel: car GAZ-69 On the bracket on the left side Car GAZ-69A On the bracket in the trunk
Tires Low pressure the size of 6,50 - 16. "Protec tor equipped with cleats

Type of gear and gear ratio
Globoidalny worm with a double roller.
Gear ratio 18,2:1 (average)
Type brakes treadle
Drum on all 4 wheels drive Hydraulically from the pedal
Type brakes with manual transmission
Block with a drum. Located on transfer case behind. Drive mechanical Czech and rope from the lever

ELECTRICAL

Power voltage (nominal) 12 volts
Generator Type G20, 12 volt, 18 amp, shunt, pabot with voltage-and lim ranichitelem current type PP12 and PP20-A-B
Battery Type 6-CT-54, 12 volt, 54 ampere capacity hours
Coil Type B21 or B1 with an additional resistance tion is automatically turned off when starting the engine starter
Distributor Type P23, with centrifugal and vacuum regulyatorom ignition timing and octane - proofreader
Spark plugs Type M12U, with the thread 18 mm
Starter Type St20, mechanically forced inclusion
Headlamps
Type OP2-A2, 2 pcs. Two tiers of windows - with neighbours and distant light
Signal Type S56-B, an electric vibrator
Fuses
Heat, such as WP2-B in the lighting circuit, melting in the signal chain and the rear lights and devices Wiring
Single-wire, plus the battery batteries connected with the mass of the car

SPECIAL EQUIPMENT

Starting Heater Thermo siphon working on solder Lamp Tank for oil
By car GAZ-69 is installed in a box with right side, front under the rear seat it.
By car GAZ-69A is installed in trunk

BODY

Body of GAZ-69
All-metal, open, vosmime - stny, two-door with rear folding bur - Volume
Body of GAZ-69A All-metal, open, pyatimest - HYDRATED, four-door with a trunk in the rear part Windscreen
Rotating in a special frame.
Frame with the windshield can be posited on the hood

FILLING CAPACITIES AND STANDARDS IN LITRES

Petrol tanks GAZ-69: major 48 (10.6 gallons) additional 27 (5.9 gallons)
Petrol tank car GAZ-69A (a) 60 (13.2 gallons)
Cooling 12
Engine lubrication system (including filters for coarse and fine filter
and oil cooler) 5.5
Inhaler 0.25
Carter gearbox 0.8
Carter, transfer case 1.1
Carters Bridge (each) 0.75
Carter steering 0.33
Damper (each) 0.145
Hydraulic Brake System 0.4
Spare tank for oil 6

DATA FOR adjustment

Gaps between the pushers and the valves (in mm) for cold start:
at the intake valves 0.23

from exhaust valves 0.28
Free running clutch pedal with the engine off (in mm) 38 - 45
Free lift the brake pedal (in mm) 8 - 14
The normal deflection of the fan belt by pressing between the pulleys (mm) 10 - 15
The gap between the contacts of the breaker (in mm) 0,35 - 0,45
The gap between the electrodes of spark plugs (in mm) 0,7 - 0,8
The normal water temperature in the cooling system (heat treatment) 80 - 90 ° C
Inflation pressure (in kg/cm2):
front wheels 2
rear wheels 2.2
Engine oil pressure (for control, not subject to adjustment) 2 - 4 kg / cm 2 - At the speed of the vehicle 45 km / h on a straight transfer; idling - 1 (rounded).

CONTROLS AND CONTROL DEVICES

Location of controls and monitoring devices car shown in FIG. 3 and 4. Pedal *25* clutch, pedal *24* brake and gear shift lever *18* are in accordance with the obscheprinyatym standard. The right of the brake pedal is the throttle pedal *22,* and the left of the pedal-laced
PRINCIPLES FOR GOOD GOVERNANCE - *26* button footswitch light.
In the center of the steering wheel *1* is placed button *3* beep. To activate the starter is pedal *19.* At the feet of the driver, on the floor on the right, set off switch *23* gasoline, which has three positive zheniya handle: handle faucet is turned forward - turn off the tap handle is turned to the left - including OS - thus a key tank, the handle is turned to the right - included an additional tank. Between the front seats of Ras laid levers: *21* - inclusion of the front axle and *20* - the transfer case (demultiplika - Torr). The provisions of the heads of these instruments are shown on the nameplate located on the dashboard. Lever *17* central (hand) brake lever is located to the right gear.
Note.
By car GAZ-69A, put a gasoline tank and three-way stopcock *23* no.

On the dashboard LOCATED:

1. **The combination of devices** *5,* consisting of the speedometer *35,* ammeter *38,* the pointer *31* levels of benzo - mainly on the tank, thermometer *36,* showing the temperature of coolant in the head tsilind - ditch, and a manometer *33,* showing the oil pressure in lubricating system of engine. Combined devices there are also: two light bulbs *34* lighting devices, the indicator lamp *37* (red), show - schaya inclusion of main beam, and the pilot light *32* (green) illuminates when the temperature coolant in the radiator within 92 - 98 ° C. If ignition of the light bulbs need to find out the reason that caused the increase in temperature, remove it and only then continue. When you turn off the ignition devices (except the ammeter) are switched off. In this hands-level pointers nya petrol gauge and stop at zero scale, and the arrow pointer-temperature terminated by Vaeth left dividing 100 ° C.

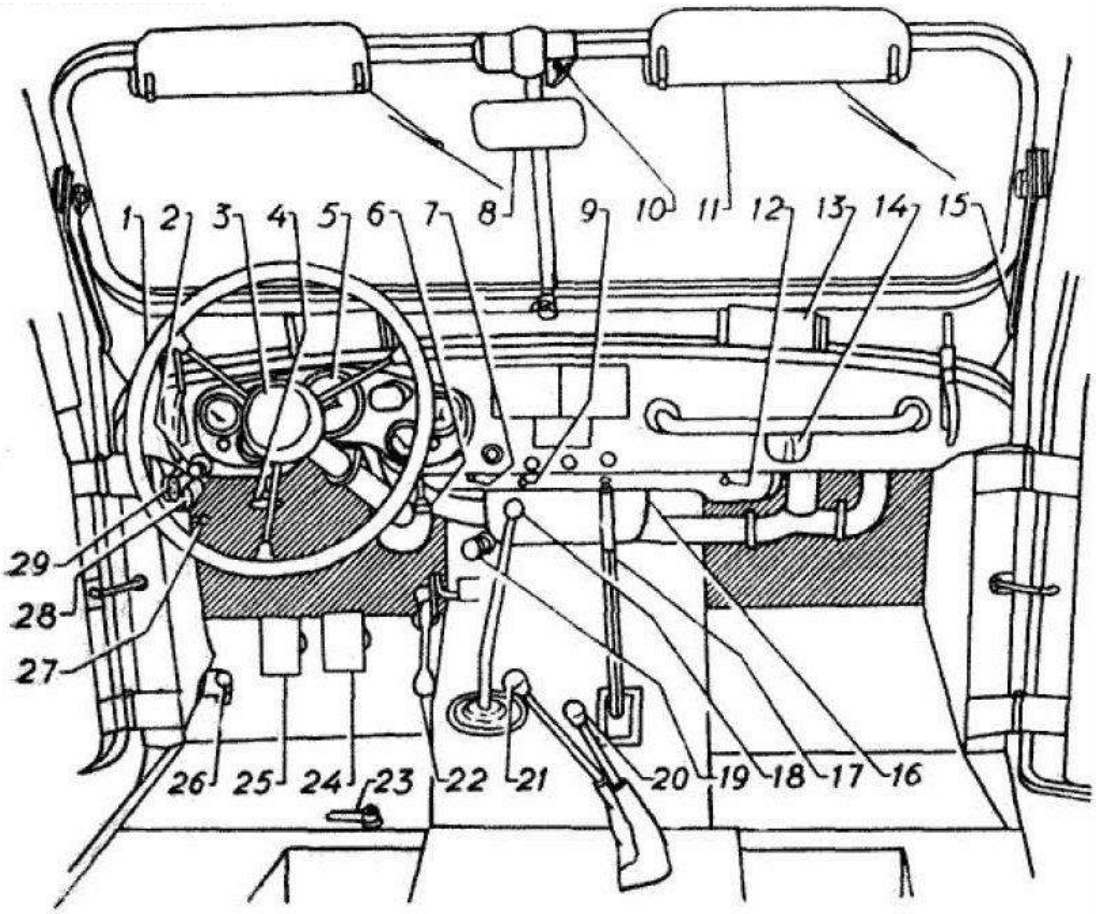

Фиг. 3. Органы управления:

Fig. 3. Controls:

1 - steering wheel, 2 - Latch windshield, 3 - button signal, 4 - lever radiator shutter, 5 - a combination of devices, 6 - lever hatch cover ventilation, 7 - button lighting the fuse, 8 - mirror, 9 - switch lighting devices 10 - wiper switch, 11 - protivosolnechnyh shield, 12 - switch lamp, 13 - directional airflow windshield, 14 - lamp, 15 - coulisse windscreen, 16 - heater, 17 - a central brake lever, 18 - lever gear, 19 - pedal starter, 20 - the transfer case lever, 21 - lever inclusion of the front axle, 22 - pedal Droß - lodging, 23 - Three-way valve (on the car GAZ-69A or put), 24 - brakes, 25 - clutch pedal 26 - button footswitch switch the light 27 - switch turning lights, 28 - fuse block, 29 - socket.

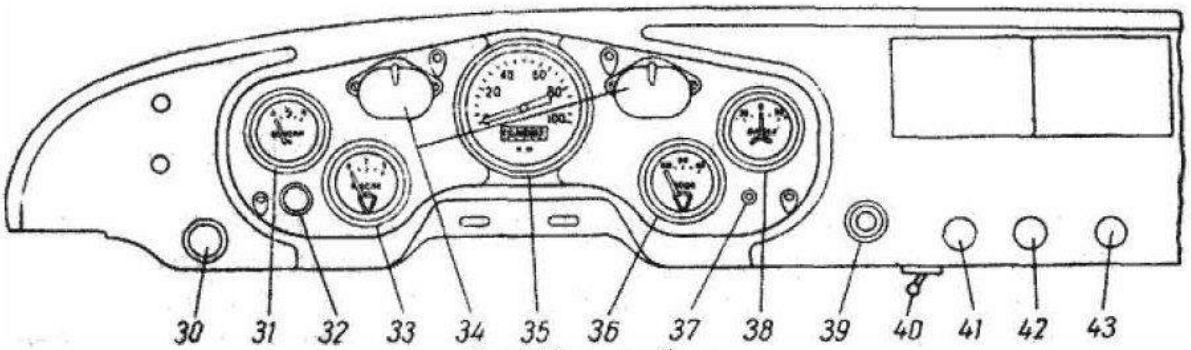

Фиг. 4. Панель приборов:

Fig. 4. Dashboard:

30 - central light switch, 31 - Index level of gasoline, 32 - control lamp water temperature, 33 - manometer, 34 - bulb illumination devices, 35 - speedometer, 36 - thermometer, 37 - LED beam, 38 - ammeter, 39 - lock-lighting Nia, 40 - switch lighting devices, 41 - button suction, 42 - button hand control throttle, 43 - switch ventilator - Dr. blowing the windscreen.

2. The central light switch *30.* His button has three positions: the first - full-button Push the Stu - lighting is off, the second - the button pulled in half - includes Front and back - ny lantern, and they brought the current to the switch lighting dashboard, and the third - Button pulled out completely -- including headlamps, rear lights, and they brought the current to the switch lighting devices.

3. Ignition *39.* To turn the ignition key is turned clockwise. This simultaneously with the ignition current is delivered to the switch wiper *10* and the switch fan blowing the windscreen. To turn off the key to turn back to the vertical in proposal.

4. Suction button *41.* When pulling the button choke carburettor closes and mixture is enriched, it is necessary only when starting a cold engine. When a hot engine Knop - ku need to drown in order to avoid overspending gasoline.

5. Button hand control throttles *42.* When pulling the button opens throttle valve carburettor, while driving a car button must be fully recessed.

6. The switch the fan airflow to the windshield *43.* Glass blown heated air through the guide nozzle *13,* with an electric fan. The switch has three provisions lines: The right arm - the fan is off and the lever to the left - the fan runs at low speed; py - koyatka right - the fan runs at high speed.

7. Lamp *14* (Fig. 3) equipped with a switch *12.*

At the lower edge dashboard LOCATED:

1. Button bimetallic fuse lighting circuit *7.* In the absence of light necessary - mo click on this button. If the light will appear and disappear again, then it indicates a short circuit. Kaegoricheski forbidden to hold the button down the fuse, as it is short circuit will fuse blowout.

2. Switch lighting devices *9.* The switch operates only when the central Mr. switch light.

3. Switch lamp *12.*

Under the panel units are:

1. Radiator shutter control handle *4.* To cover up the handle to move the blinds back for the opening - in advance.

2. Lever hatch ventilation and heating body *6.* When you move the lever back (toward you) opens the hatch cover in front of the windshield and in while driving a car fresh air through the heater enters the body.

3. Socket *29* **for portable lamps.**

4. Fuse *28.*

5. The switch lights turning *27.*

Chapter II

ENGINE

Engine GAZ-69 - four-cylinder, carburettors, differs significantly from nosoustoychivostyu and economical in operation. Most of its parts equally with the details of motion gateley M-20 and GAZ-51, but it has a slightly higher maximum power and torque - ment in comparison with the engine M-20. In Fig. 5 - 6 shows the general types of engine. Speed characteristics and fuel consumption curve shown in Fig. 7. In Fig. 8 - 10 show the longitudinal and transverse sections of the engine.

Block and Cylinder

Cylinder block. Engine cylinders are arranged vertically in series and the cast from gray iron together with the upper part of the crankcase. The cylinder block is fully interchangeable with the engine block of M-20. To reduce wear of the cylinders in the upper part of their pressed sleeve of acid-proof Chu guna, length of 50 mm. The thickness of the wall sleeve is equal to 2 mm.

These sleeves increase durability of the cylinders in 2 - 3 times. The block has a water jacket on the entire length of the engine cylinders. Inlet and outlet channels written in block separately for each cylinder in order to improve the filling of cylinders of combustible mixture. Saddles exhaust valves are made of special heat-resistant cast iron of high hardness and pressed in the block, saddle inlet valves are made directly into the body of the block. At the bottom of the block are four main bearings of the crankshaft, covers Coto ryh accurately recorded grooves made in the top of the crankcase. Each cover is fastened to the block two bolts, the heads of which pin: in the first three bearings - wire, the fourth -- Special shut-off plate. Caps bearings at the factory are final on developing joint with the block and therefore vzaimonezamenyaemy. The back plane of the block by six bolts fastened crankcase clutch, fixed on the block two mounting pins. The necessary alignment of the crankshaft and drive shaft gear provides final processing crankcase clutch assembly with a cylinder block. Therefore, re - furnish clutch crankcase from one block to another cannot.

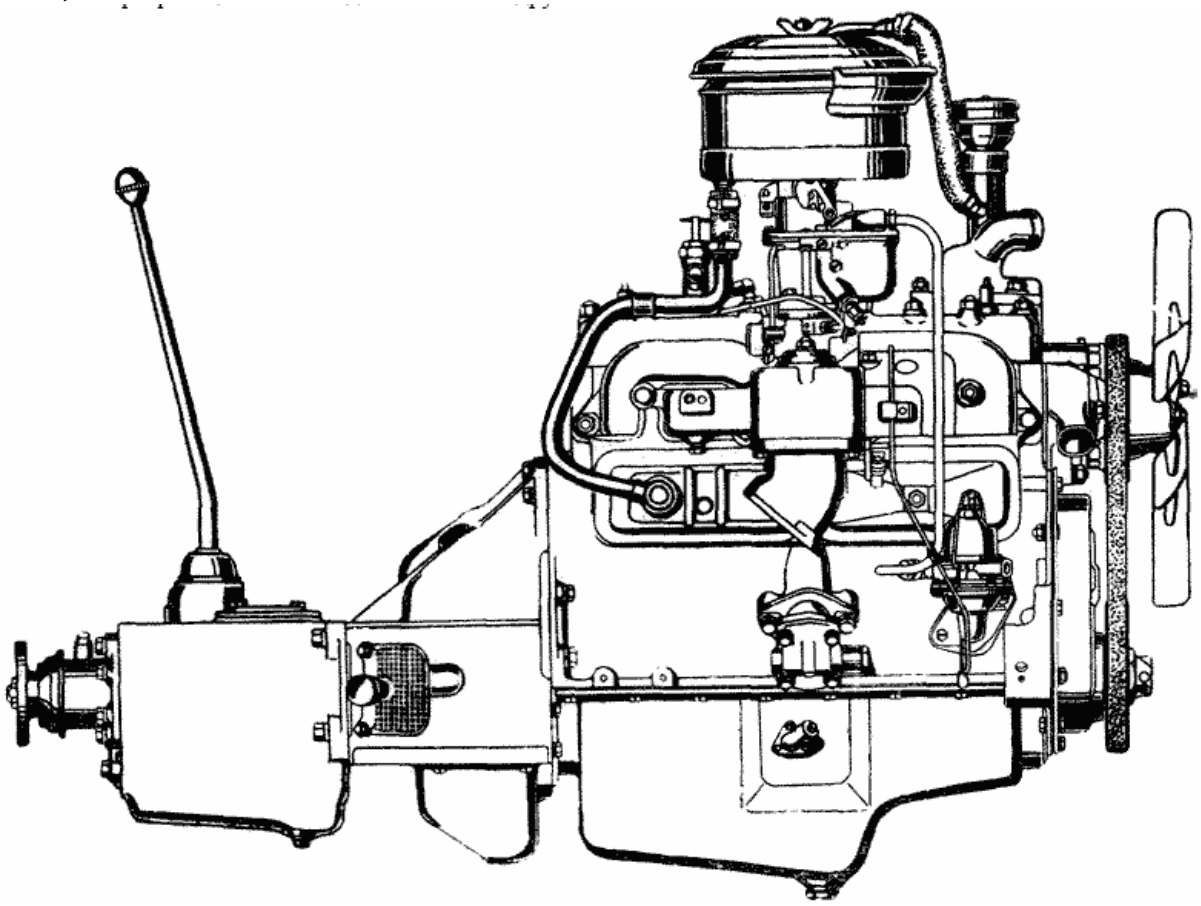

Фиг. 5. Вид на двигатель с правой стороны.

Fig. 5. View of the engine on the right side.

https://truckmanualshub.com/

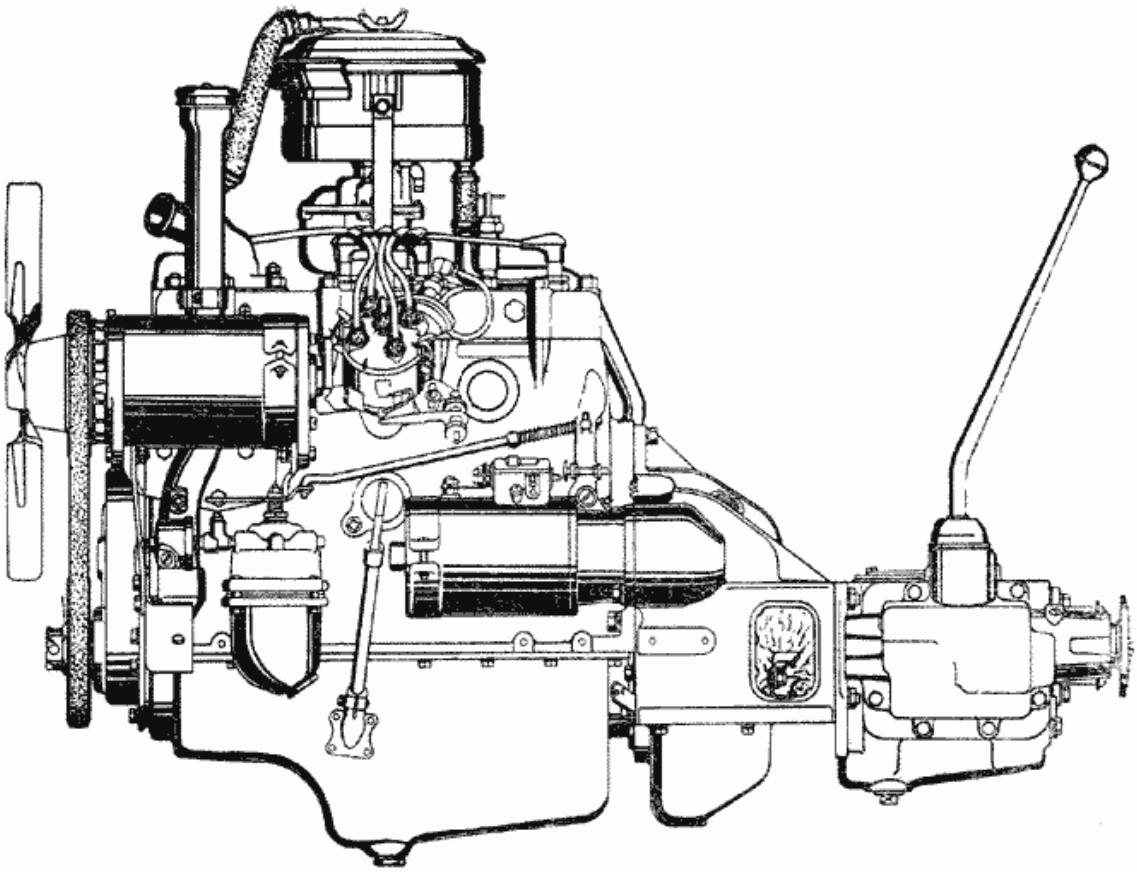

Фиг. 6. Вид на двигатель с левой стороны.

Fig. 6. View of the engine on the left side.

Cylinder head. The total for all cylin - firewood, removable cast aluminium alloy.

Interchangeable with the head of the engine M-20. Intergovernmental do block and cylinder heads put sealing eliminating the gasket made of asbestos cloth, impregnated with graphite. The thickness of the gasket in a compressed state with - submits approximately 1,5 mm. Windows-burning chambers Nia and water holes in the lining edged sheet thickness of 0,25 mm. In order to avoid harassment of asbestos to the block and head, gasket, before directing the place to rub on both sides of graphite powder. Cylinder head is attached to the Block *23* studs, nuts are placed under the flat tsianirovannye washers. The order of tightening, as well as braces these nuts very important; tightening should be done in two receiving, at first tentatively and then final - Indeed, in the sequence shown in FIG. 11. We recommend using dinamometriche - Skim the key (Fig. 12) with controlled moments Volume tightening within 6,7 - 7,2 kg. Without a key tightening screws is usually carried Spanner wrenches from the driver's set of instrumenta, without jerks, the effort of one hand in the cottage - zhanie disruption studs or deformation of cylinders. Tightening or tightening the screws to make sure a cold start, as vsledstence of different linear expansion coefficients of aluminium heads and steel studs delay, produced on the hot engine, after it proved insufficient cooling.

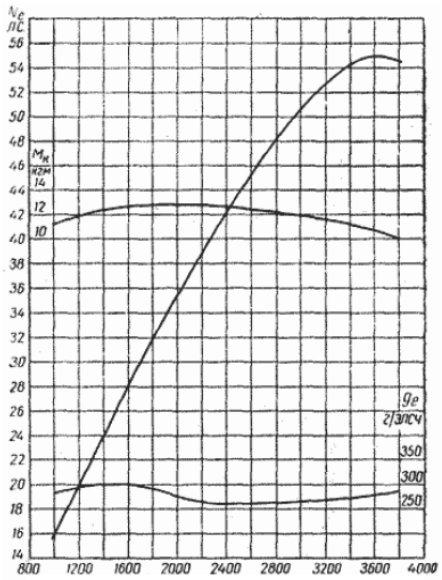

Фиг. 7. Скоростная характеристика двигателя.

Fig. 7. High-speed characteristics of the engine.

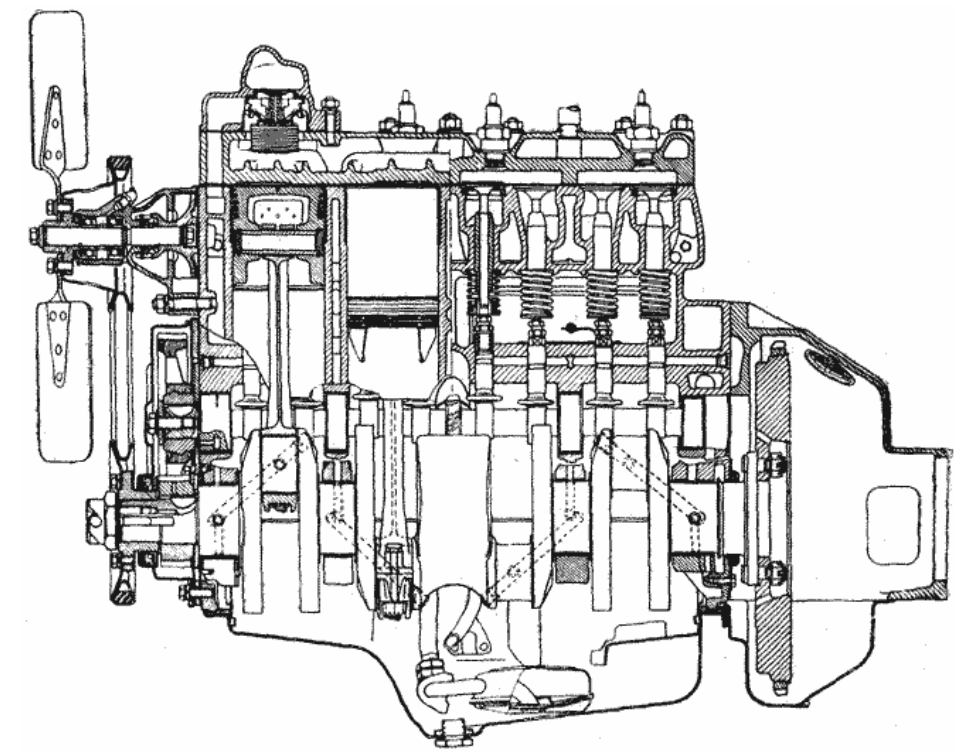
Фиг. 8. Продольный разрез двигателя.

Fig. 8. Longitudinal section of the engine.

Crank Mechanism

Pistons - interchangeable with the engine piston M-20, GAZ-51, GAZ-63 and ZIM. Cast from heat-treated aluminium alloy, have flat bottoms and elliptic shape of the skirt. Magnitude of the ellipticity skirts 0,29 mm. The major axis of the ellipse is located in the plane perpendicularlar axis of the piston pin in the direction in which the piston side force acting on the connecting rod. For make skirt springy properties, it made U-shaped slot. When heated, while the engine, the piston due to an elliptic shape and U-shaped slits in the skirt expands differently: in the direction of the piston pin higher than in the direction SRI perpendicular to the axis. As a result, hot ellipticity of the piston decreases and its shape approximation etsya to round. This form allows you to reduce the gap between the cylinder and the piston in the direction is the real Via the lateral force that supports the work of the cold engine without knocking pistons and excludes edu - cation scoring pistons when the engine is at full capacity. At the head of the piston ring grooves, there are five. Upper, narrow groove serves to reduce heating of the upper compression ring by reducing heat transfer to him from the bottom of the piston. In second and third grooves are placed compression ring in the fourth and fifth -

maslosemnye ring ca. In the grooves for oil rings drilled holes through which oil is withdrawn from the walls cylinders is given in the crankcase. In the middle part of the piston there are two bosses with holes for the installation of piston pin. Under boss made two tide for fitting the pistons by weight. Piston standard size weighs 450 + 2 years To improve the running for the cylinders pistons coated with a thin layer of tin (0,005 mm). The pistons are installed in the cylinders so that the U-shaped slit skirt was turned aside opposite valve box. This side of the cylinder is not exposed to lateral forces in During the working piston. For repair purposes larger-diameter pistons are available: 82, 82,08, 82.24, 82.36, 82.5; 82.58, 82.62, 83; 83.25 and 83.5 mm. The numbers indicate the size of repair on the bottom of the piston.

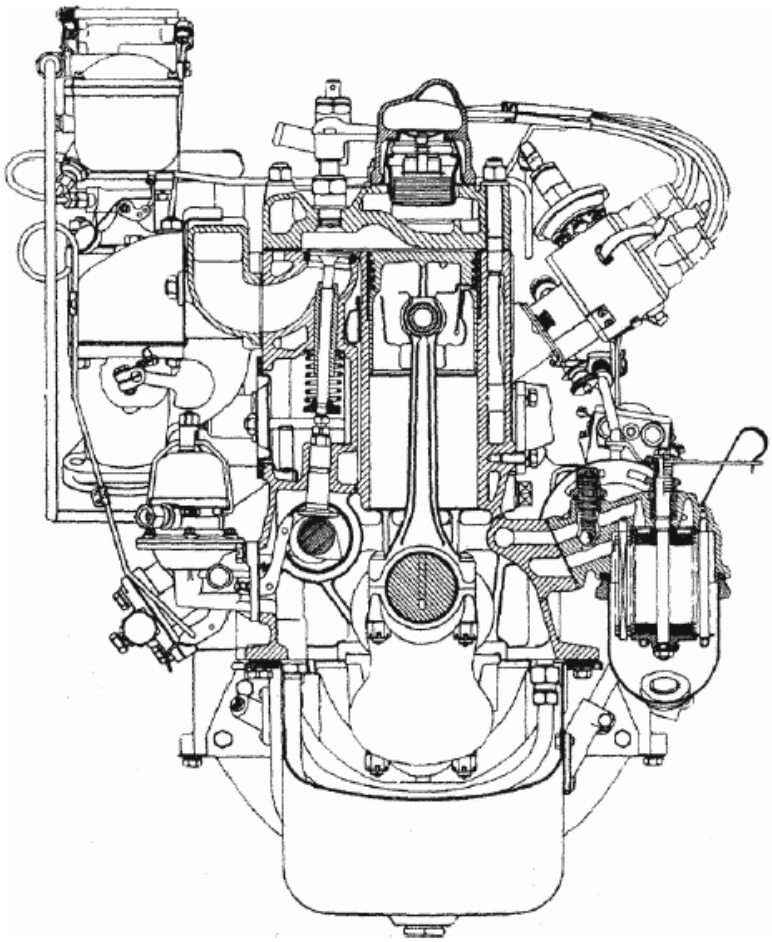

Фиг. 9. Поперечный разрез двигателя по первому цилиндру.

Fig. 9. Cross section of the engine on the first cylinder.

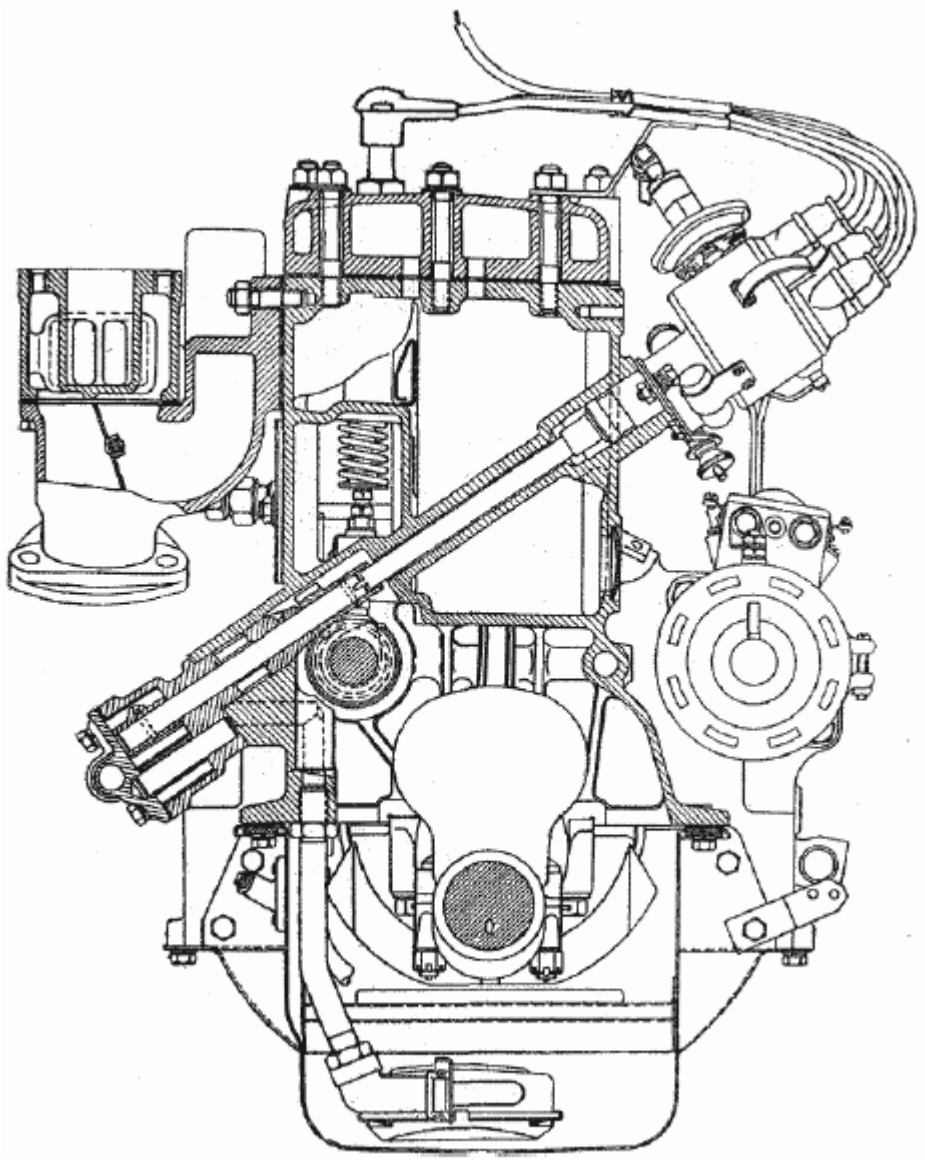

Фиг. 10. Поперечный разрез двигателя по масляному насосу.

Fig. 10. Cross section of the engine oil pump.

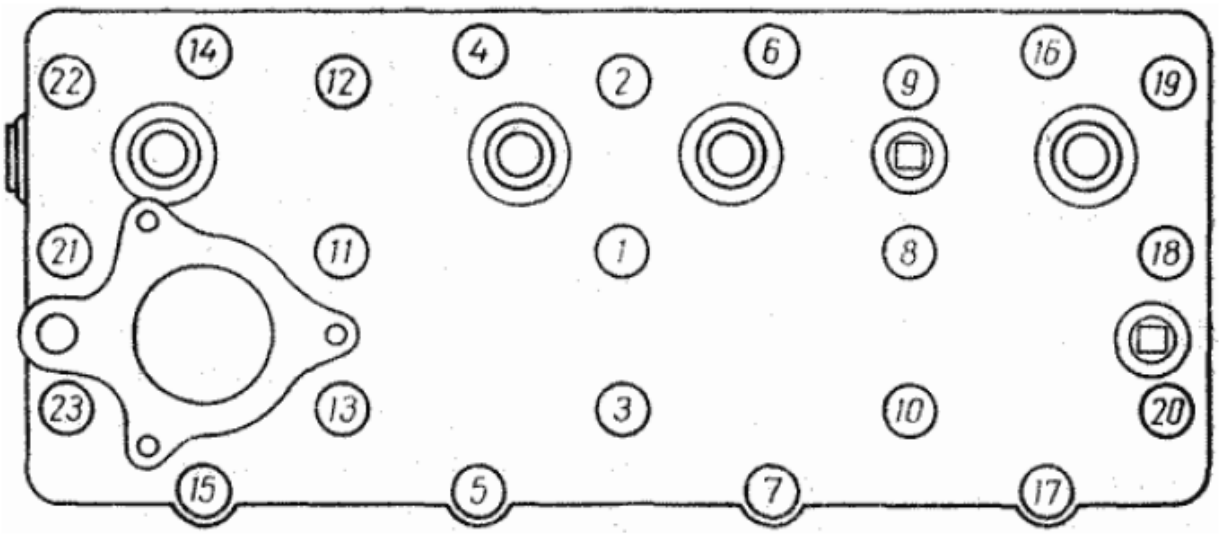

Фиг. 11. Последовательность затяжки гаек крепления головки цилиндров.

Fig. 11. The sequence of tightening the screws fastening the cylinder heads.

Piston rings: two compression and two maslosemnyh. Accordingly unified with rings engine M-20, GAZ-51, GAZ-63 and ZIM. The rings are made of gray iron castings by an individual in a non-

circular shape; this provides an appropriate framework material and sealing rings. Compression rings are the same size. The outer cylindrical surface of the upper - second compression ring, operating in very difficult conditions, covered with a porous chromium, which is 3 - 4 times increases its longevity. Increased durability of the upper compression ring in ity will be the durability of all other rings cylinder engine. To improve and accelerate the break - compression rings on the inner tsilind - psychiatric surface is a facet of, causes quick muscular especially those for small bias rings in the groove piston, in which they adjoin - Xia with the cylinder is not the entire surface, but only bottom edge. The rings are installed on chamfers piston upwards, towards the bottom (Fig. 13). Both maslosemnyh rings are the same. They have a slot for removing oil, snimaemo - On the walls of the inner cylinder in smallness of the piston. For a better running-in cylinder AMD outer surface of the second compression - tional and two oil rings exposed - Xia solderability. All rings have a straight lock with gap equal to 0,2 - 0,4 mm after installation but - Vågå ring in the cylinder of the engine.

Piston fingers floating type, hollow. Harmonized with the fingers engines M-20, GAZ-51, GAZ-63 and ZIM. They are made of steel with hardening the outer surface to a depth of 1 - 1,5 mm with high frequency currents. From axial displacement fingers are held round spring rings set in annular grooves of both bobyshek piston. In engines produced until 1955 laying down lis flat retaining rings. The grooves in the piston for round and planar rings have a different configuration, and therefore such Pistons vzaimonezamenyaemy. Installation and removal of flat rings should be made by special kruglogubtsami (Fig. 14). When the engine piston pins perceived - The World Health Report large dynamic loads, therefore, for prevention in Nia tapping fingers gaps between them and the holes in the pistons and rods made minimal. For repair purposes fingers produced larger diameter at 0,08, 0,12 and 0,2 mm marked accordingly black, blue and brown paint.

Cranks - steel, forged, I-section. In upper end of connecting rod are pressed thin-walled sleeve of tin bronze. Bush has an opening coinciding with the pro - rezyu at the top end of connecting rod, to lubricate the piston pin. Lower end of connecting rod - Plug-in.

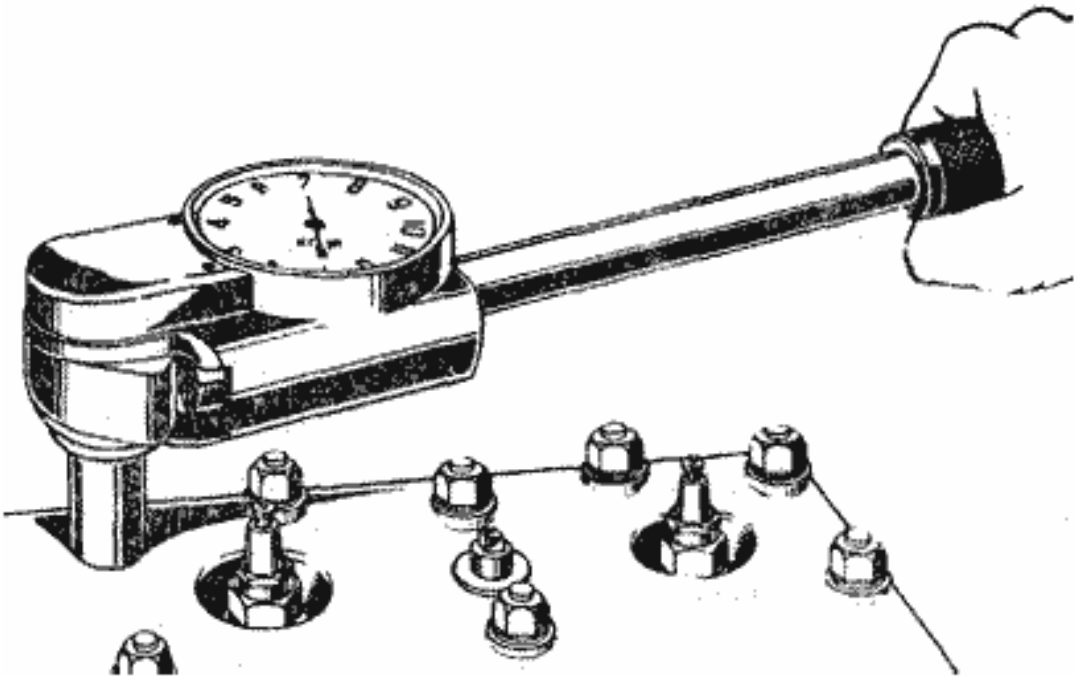

Фиг. 12. Динамометрический ключ.

Fig. 12. Torque Wrench.

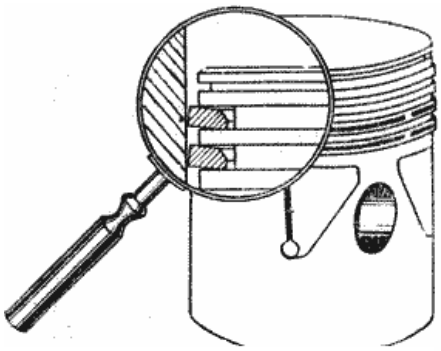

Фиг. 13. Расположение компрессионных поршневых колец в канавках поршня.

Fig. 13. Location compression - GOVERNMENTAL piston rings in grooves piston.

Lid of the lower head-credit pitsya to crank two bolts, grad - ki which the individual pin - tial. Hole in the bottom head connecting rod is treated as an assembly with its cover, so permute cover with a connecting rod on the other impossible. In place of transition of the lower second - nimble in the rod connecting rod has hole diameter 1.5 mm, through which is carried out grease degree of NOC cylinders, cams dis - duration of the shaft and plates tolkate - lei. This hole should be ob rascheno installing rods in side of the valve box. At the upper end of the connecting rod and on the cover of the bottom heads are boss, cutting off that the factory is carried out on the fit - schego weight of the connecting rod and the weight distribution between their heads. The difference in weight rods for one engine over 8 g is not allowed. Crank the engine GAZ-69 with the same engine connecting rods M-20 and VMS, but with vzaimonezamenyaemy connecting rods engine GAZ-51, which are asymmetrical lower heads.

Crankshaft - steel, forged, Four-, unified with the shaft of the engine M-20. Has a counterweight to the discharge of main bearings from the forces of inertia, statically and dynamically Balanced lansirovan. To improve the wear resistance of connecting rod and the root neck shaft hardened to a depth of 3 -- 5 mm. The diameter of the root necks - 64 mm, connecting rod - 51,5 mm. Neck connecting rod shaft for supplying lubricant to connecting rod bearings, combined with indigenous tails drilling channels having special WIDE deadlocks - Mud closed by threaded plugs.

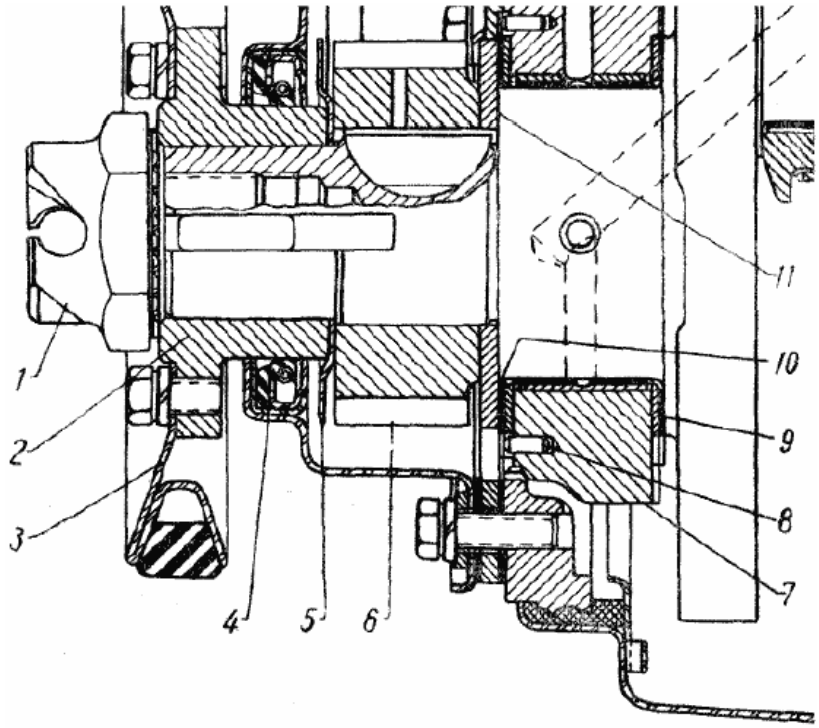

Фиг. 15. Передний коренной подшипник коленчатого вала:

Fig. 15. Front Crankshaft bearings:

1 - ratchet, 2 - hub, 3 - pulley, 4 - gland, 5 - slinger, 6 - the crankshaft timing gear, 7 - cover front bearings, 8 - pin, 9 - Rear washer thrust bearing, 10-front washer thrust bearing, 11 - thrust washer.

Axial displacement of the shaft bearings are perceived front two persistent washers (Fig. 15) of steel, stained babbits tape. Value of the axial clearance is 0,075 - 0,175 mm Front washer *10* facing the surface, flooded babbit, to a steel thrust washer *11*, sat -

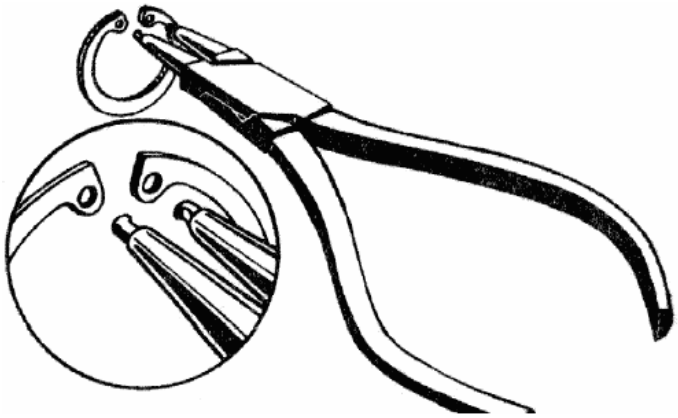

Фиг. 14. Круглогубцы для установки и снятия стопорных колец поршневого пальца.

Fig. 14. Kruglogubtsy for installation and removal of locking piston rings

Vågå finger.

ing on the shaft at the pins and pressed to the side of main bearings. Rear washer *9* is facing surfaces Stu, flooded babbit, to the shaft collar cheeks. From the rotation washers held: front - two pin - mi, molded into the block and the lid and outside the seizure washers, rear - projection within the groove at the end of the cover bearings. At the front end of the shaft pins were planted on the timing gear *6,* maslosbrasyvayuschee ring *5* and the hub *2,* pressed to the side thrust washer *11* with a ratchet, *1* screwed in the butt shaft. By the stepped - tse six bolts privertyvayut stamped pulley drive the water pump and generator. In lid distribution gears placed samopodtyagivayuschiysya gland *4* front end of the shaft with a rubber cuff, which operates on the outer surface of the hub. While raising cap must be ottsentri - Immunized by glands in order to avoid leaks in this compound. Omentum rear end of the crankshaft comprises two semi rings made of prografichen - tion of asbestos cord invested in two clips. The upper clip is bolted to the side of the block, back - to the top of the bearing. Rear radical neck of the crankshaft has to seal maslosbrasyvayuschy shoulder, part of a ring-carved ku bearing. From this recess oil flows through a special hole in the crankcase. At the end of the crankshaft has a flange for mounting the flywheel.

Flywheel cast from gray iron and steel has Napressovannye toothed rim to put the moving telya starter. To find the top dead centre (ie VM) to install the ignition in the outer surface flywheel pressed steel ball. On both sides of the ball hit the 12 ticks, each division Coto ryh corresponds to one to degree of rotation of the crankshaft. Flywheel mass fixed to the flange of the four special bolts that have tight fit in the hole - stiyah. Nuts These bolts are tightened and the individual shplintovku dynamometer key a point in 7,6 - 8,3 kgm.

Inserts the corresponding connecting rod and main bearings of the crankshaft is interchangeable - mye, thin-walled, made of low carbon steel strip, flooded babbits special composition. The thickness of the steel strip connecting rod inserts of 1.45 mm, root - 1,9 mm thick layer of babbit respectively 0,35 and 0,4 mm. Width of the liner connecting rod - 28 mm. A small layer of babbit practically at work does not shrinkage, so the main and connecting rod bushings do not require the use of braces and adjusting pro - batches. Production of the necks of the crankshaft, liners and beds for them in the block and connecting rods with high accuracy allows replacement of inserts in the repair of the engine without fitting. Each bearing set for two of the liner, they are held in them by fic - compensating ledges within the grooves, which are available in rods and in the block. Both connecting rod and the liner are the same unified engine to the liner M-20 and ZIM. Non - large hole, which coincides with the hole in the bottom end of connecting rod for supplying lubricant to the cylinder cam camshaft and tappets to the plate, there is also in the liner, which is mouth - tive to the connecting rod cap to ensure their interchangeability.

Both liner bearings have a circular groove, which coincides with a hole in neck of the crankshaft. Inserts that are installed in the block are in the centre of the groove hole for supplying lubrication; deposits - Shi, set in the lid, such openings do not. In the rear bearing inserts to make additional annular groove located near their end. Of this, oil flows through the grooves in the insert and the hole in the lid into the crankcase Engine la. Inserts bearings vary in width: the width of the front bearing inserts - 30,5 mm, medium - 26 mm and rear - 42,5 mm. Inserts respective bearings Unification from certified forests to the liner engine M-20 and ZIM. The gap between the crankshaft journals and connecting rod liners and bearings lies in the Within 0,026 - 0,077 mm on the new engine. Bolts and nuts are indigenous types of bearings should be delayed dynamometer with key point in the 12,5 - 13,6 kgm for indigenous and 6,8 - 7,5 kgm for connecting rod bearings.

DISTRIBUTION MECHANISM

Camshaft steel, forged. Has four necks, who work in stalebabbitovyh sleeves pressed into the block. For ease of assembly of the neck are made of different diameter: the first - 52 mm, the second - 51 mm, the third - and fourth 50 mm - 48 mm. Profile of the intake and exhaust cams is the same. Kulaks, ki grinding width of the cone size of a 7,5 '- 12.5' for co - communication speed pusher at work (Fig. 16). For one with a camshaft carried out: ex - Dunhill Homme drive a petrol pump and gear drive oil - second pump. Cams, cam and pinion to increase the wear - the stability of the surface subjected to tempering. Camshaft driven by two six - thorns with spiral tooth of the crankshaft of the engine. Gear on the crankshaft - steel, at a switching shaft - textolite with steel or cast iron hub. Both six - Terni have threaded holes for the puller. To ensure correct phase distribution installation meshing gears should be made on labels (Fig. 17). From axial displacement camshaft holding hard steel flange *6* (Fig. 18), privernuty two bolts to the block. Between the ends of the neck of the shaft and hub gears are trapped spacing washer *5,* whose thickness of 0,1 - 0,2 mm larger than the thickness of ness persistent flange, resulting in a necessary - dimy axial clearance of the shaft.

Round blade plate, steel. Worktop thickness Katele melting chilled cast iron to ensure high durability and polished to area. At the top of the pusher made threaded hole into which the adjusting bolt *7* screwed (Fig. 19), latching lock nut *8.* With this bolt is governed by the gap between the pusher and valve.

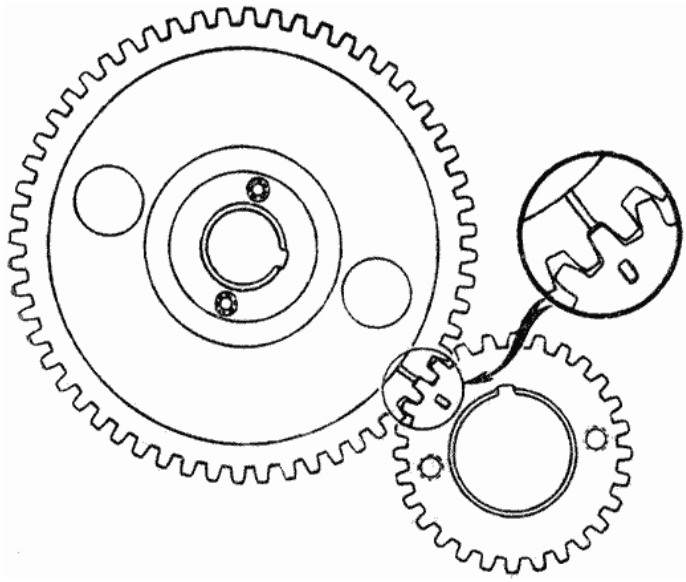

Фиг. 17. Установочные метки на распределительных шестернях.

Fig. 17. The installation marks on the timing gear.

The rounded surface of the head of the adjustment bolt subjected to surface hardening and otshli - fovana on the field. To even out the wear plates and rods pushers should when the engine is commit - PRE-rotate. This is achieved by grinding plates on a sphere with a radius of 750 mm and a small Inclination Mr. cams camshaft, resulting in a point of contact plates with a few fist-mixture schena the axis of rotation of the pusher.

Valves. The inlet valve is made of chrome steel 40Kh, graduation - of heat-resistant steel SH8. The outer diameter of the intake valve is 39 mm, exhaust - 36 mm. Both valves have a corner saddle LA 45 ° and lift height of 9.2 mm. The top of the head valve has a slot for lapping at the lower her side of

the head abbreviations: Tech - Graduation and VP - inlet. At the bottom of the valve stem *2* (Fig. 19) made recess, which includes his shoulder Two crackers *5* bumper spring. Both valves operate in the guide bushing. Bushings are made of cast iron and final PRE-processed after pressing the block.

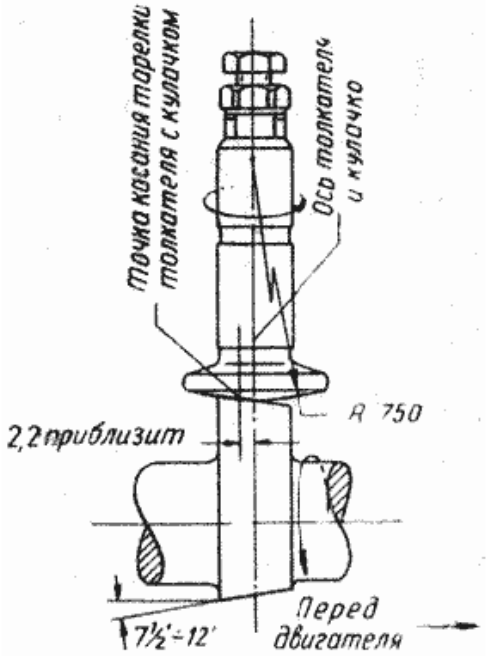

Фиг. 16. Схема работы толкателя.

Fig. 16. Scheme of work pusher.

4 valve springs are made of special Noah, oil-hardened spring wire mark C-65A diameter of 4.1 mm. To increase the fatigue strength of the springs are blasting. The springs have a variable pitch winding for the decrease in Nia vibration. When installing the end of the spring with a smaller step of winding should be turned up. The lower end of the spring rests on the plate *6,* a conical socket, which is under the action of the spring sits tightly on the conical surface tions crackers. All details of the distribution mechanism of the engine GAZ-69 is fully harmonized with similar governmental parts engine M-20, GAZ-51, GAZ-63 and ZIM.

Engine lubrication system

Engine lubrication system combined: the pressure and spray (Fig. 20). Under pressure tion lubricated bearings, crankshaft and camshaft and rods pushers. Pumped - my pump oil flows through pre-filter in the longitudinal channel of the engine oil and Ott - Yes through the cross-channel unit to the main bearings and camshaft bearings, and also for special longitudinal channel to the rod pushers. All channels for oil in the block - Drill - WIDE. By crank neck oil served on drilling channels available in the body of the crankshaft from its bearings. The surface of the cylinder, piston pins, cams camshaft, tappets and plates valve stems are lubricated by oil spray, which derives from the gap-bearing knee chatogo and camshafts. The walls of the cylinders are lubricated by oil jets also emitted from the holes in the lower second - adroit rods. Distribution gears lubricated with a pulsating stream of oil coming from the front

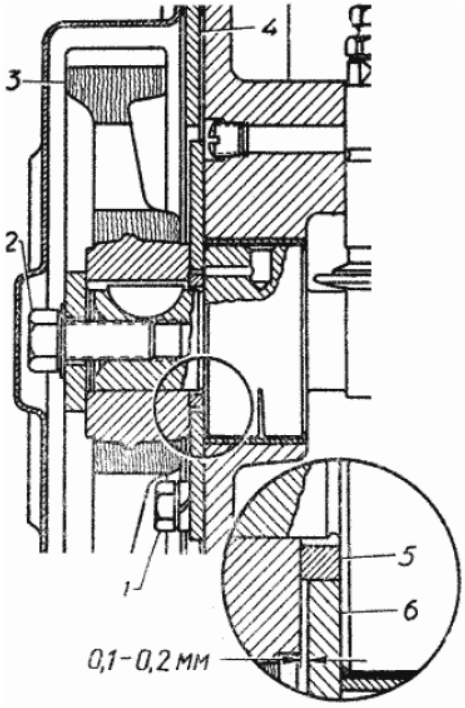

Фиг. 18. Упорный фланец распределительного вала:

Fig. 18. Hard flange of the camshaft:

1 - stubborn attachment bolt washers, 2 -, six-bolt mounting However, 3 - timing gear, 4 - plate engine, 5 -- spacing ring, 6 - thrust flange.

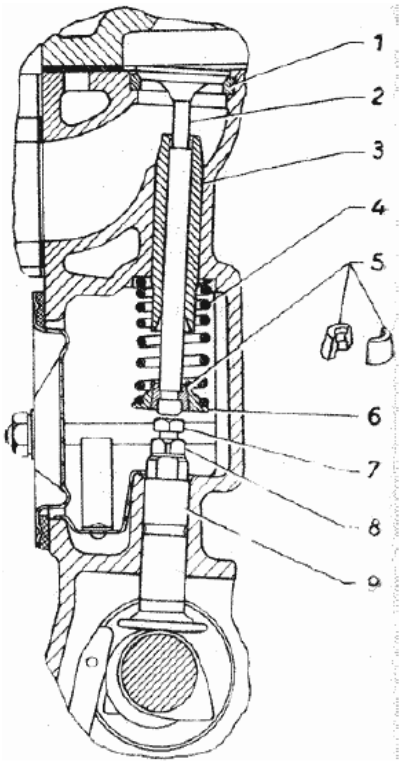

Фиг. 19. Распределительный механизм:

Fig. 19. Distribution mechanism:

1 - saddle valve, 2 - valve, 3 - in - pravlyayuschaya bush, 4 - spring, 5 - rusk, 6 -- plate, 7 - the adjusting bolt, 8 - nut, 9 - Pusher.

Bearing camshaft through the tube *1*. Front neck camshaft has two grooves in which tube *1* twice for every revolution of the shaft is connected to a channel in the block. From front bearing is lubricated and hard flange *6* camshaft two drilling holes in the neck, located at an angle of 90 ° (Fig. 18).

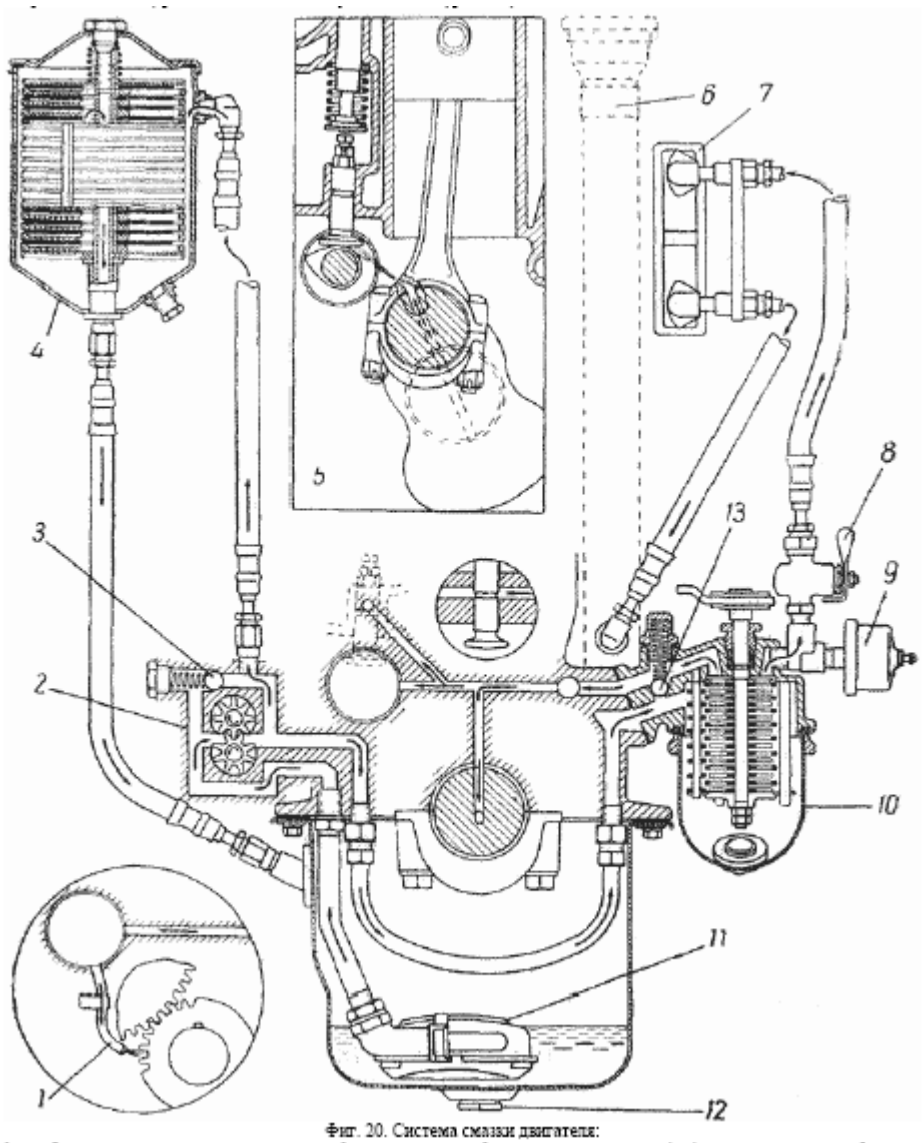

Фиг. 20. Система смазки двигателя:

Fig. 20. Engine lubrication system:

1 - tube lubricant distribution gear, 2 - oil pump, 3 - pressure-reducing valve, 4 - fine filter, 5 - scheme lubrication cams camshaft and cylinder wall, 6 - oil filler, 7 - oil cooler, 8 - tap oil - tion radiator, 9 - gauge oil pressure gauge, 10 - pre-filter, 11 - floating maslopriemnik, 12 - drain plug holes, 13 - relief valve-filter.

Engine lubrication system includes an oil sump, maslopriemnik, oil pump, filters for coarse and fine cleaning of oil and oil cooler. Capacity oil system, including filters and oil cooler, is 5.5 liters. Oil Capacity through the filler pipe *6* (Fig. 20), hermetically closed, passer lid. The level of oil in the crankcase is checked by rod-probe, which is placed in the tube ARGET side of the engine (Fig. 21). At the bar marked label "P" - the upper limit and "O" - the lower limit. When the engine is necessary to maintain the oil level within the upper half of the distance between the marks "P" and "O". The decline in oil below the label "O" is dangerous because it may cause podplavlenie bearings and in This in no way is unacceptable. Excess levels over labels "P" is splashing oil and candles rapid coking of piston rings. Oil pressure in the system when the vehicle speed 45 km / h shall be within 2 - 4 kg / cm 2 . On cold, cold engine, it can rise up to 4,5 kg / cm 2 But in hot summer weather to fall to 1,5 kg /cm 2 . Oil Pressure at medium engine speeds Me - than 1 kg / cm 2 indicates a malfunction in the sys - IU, and further operation of the vehicle must terminated prior to its elimination. At low idle - Dry run oil pressure should be approximately equal to nym 1 kg / cm 2 or slightly below, depending on the degree worn motor bearings. To control the oil pressure in the engine is electrical pulse pressure gauge, a sensor which vvertyvaetsya in a special socket on the filter housing rough treatment. It should be borne in mind that in these Numbers above the oil pressure in the system are ignored error sensor and receiver, oil pressure gauge, serviceability which should be periodically pro - Believing control manometer or the manner specified below (see the chapter

"Electrical"). In the lubricating system of engine has two valves: pressure reducing *3* (Fig. 20), located in the lid oil pump and a bypass *13* in the case prefilter. The valves are adjusted at the factory, and change this rule in operation (through the stocking of washers under the spring, changing the thickness pads under the cork, reducing the number of coils, etc.) is prohibited. Pressure reducing valve *3* limits the oil pressure limit value of 4,5 kg / cm 2 and thereby protects it from excessive build up of pressure when the engine is at large equip - max, as well as starting it with frozen butter. Bypass valve *13* automatically turns off the oil filter (through which passes all the engine oil) in the case of clogging of the filter element and it skips to the trunk unfiltered oil. Bypass valve is in the pressure drop in the filter 0,7-0,9 kg / cm 2 .

Oil sump made of steel, stamped. The capacity of the crankcase up to the mark "P" on schupe is 4 liters. Inside the casing has a wall which protects the oil from splashing when driving. On the left side to side wall of the crankcase privernut four bolts, pipe, which includes the stop of the rod-tube probe is secured to bolt. On the other hand crankcase three rivets attached to the discharge pipe oil cooler. All flanges, as well as front and rear radiused part, Carter compacted cork pro - masonry with twenty bolts, which he privertyvayut to the bottom plane of the block. The bottom part of the crankcase has a hole to drain the oil. In hole screw cap with sealing washer. **Maslopriemnik** floating type, hinged to the tube waiting for the oil pipe - pump. The presence of floating maslopriemnika provides admission to pump more pure oil, in - walking in the crankcase. Maslopriemnik equipped with fine wire mesh and is therefore a primary filter engine, which prevents oil pump from contamination. Grid (Fig. 22) is in the middle of the ring, lined hole. This hole is automati - cally valve, acting on the dilution created by the pump, in case of contamination of the grid.

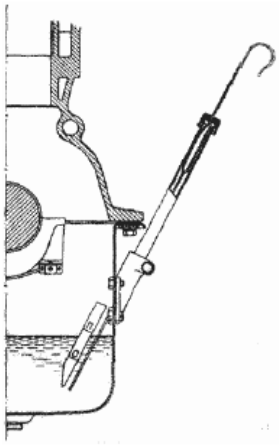

Фиг. 21. Указатель уровня масла.

Fig. 21. Oil level.

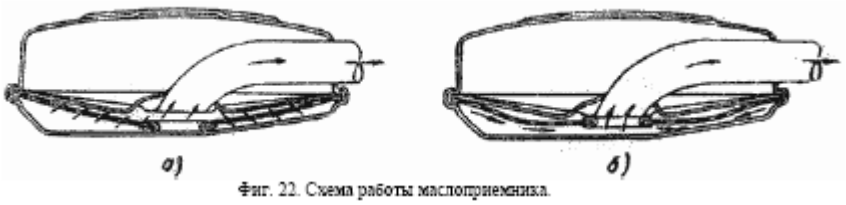

Фиг. 22. Схема работы маслоприемника.

Fig. 22. Scheme of work maslopriemnika.

and - when nezasorennoy grid, b - when clogged grid. When the net is not clogged, it is pressed against this opening to the pallet maslopriemnika and oil in walks into the pump through the holes in the grid. When contamination grid increases its resistance to the passage of mas - LA, and under the influence of dilution created by the pump, it is pushed to the side of the tube, releasing the hole - stie, through which enters oil.

Oil pump gear (Fig. 23), installed outside the engine, on its right side. Uniform with the pump motor M-20. Pump casing its cylindrical shank part of the on - Verst tide block and secured it with two bolts. Between the flange of the pump housing and the tide Block put gasket from paronita thickness of 0,5 mm. The roller pump is in rotation schenie from the camshaft gear, which engages the helical gear *2*, sitting at the upper end of the roller and the fixed pin. At the lower end of the roller Pressing the leading six - nya pump *8*, fixed pin, perceiving axial force arising in helical gears his drive and downward toward the lid of the pump. Between the face gear *2* and the cross rail liner also allowed

clearance 0,2 - 0,4 mm. At the upper end of the roller *4* is asymmetrical its axis groove to drive the distributor lighting - Niya. Driven gear *6* is free to rotate on an axis *5*, pressed into the pump housing. Both cylindrical gear oil pump are identical and have a straight tooth. Driven gear phosphating. Bottom pump casing lid *10*, which placed pressure-reducing valve, attach - My four bolts. Between the body and lid set paronit gasket thickness 0,3 - 0,4 mm. End the gap between the gear pump and the lid is in the range. 0,125 - 0,475 mm. Increasing this gap as a result of laying greater thickness dramatically reduces pressure tion, developed by the pump. To reduce noise at work reducing valve between the ball *11* and springs *13* installed point - Officer cap *12*. Diametral clearance between ball *11* and the channel in the lid is 0,079 - 0,189 mm, so this valve is very sensitive to contamination of crankcase oil and by ingestion. channel of foreign particles the ball wedged in it, causing a drop pressure in the lubricating system of engine. The pump starts to work only with in - lichii oil in it, so when setting it necessarily be filled with oil in two holes in its flange. The engine pump, situated obliquely, so that oc - tanovkah engine oil does not flow out of it can. To ensure proper position - Nia Distributor ignition setting mas - lyanogo pump on the engine must be productivity be conducted by the following:

1) to the crankshaft of the engine the position corresponding to the top of Meurthe - howl at (VM etc.) the compression stroke, the first Chi - lindre (see "System-lighting Nia ");

2) turn the oil pump shaft so that the notch at its end, in which includes the spike shank Distributors telya was located at an angle so as shown in Fig. 24 A;

3) in this position, without turning his body, gently insert the pump in the unit, observing that, helical gear it would not to touch the walls of the holes on the block and do not turn around. When the propeller -

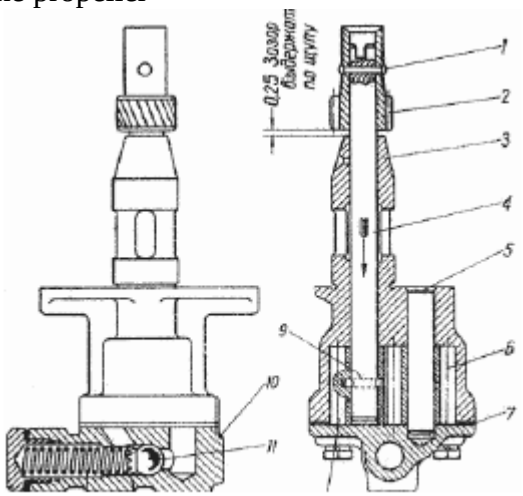

Фиг. 23. Масляный насос:

Fig. 23. Oil Pump:

1 - pin 2 - gear drive pump and the distributor, 3 - body, 4 - Shaft, 5 - axis, 6 - led by the gear, 7 - gasket, 8 - Leading the sixth turn, 9 - pin 10 - cover, 11 - ball pressure reducing valve, 12 -- guide cap spring 13 - spring 14 - gasket cork, 15 - cork.

Vai gear pump will enter into engagement with helical gear and the camshaft rotates, the slot roller takes the horizontal position shown in FIG. 24 MB When installing the oil pump should put a new gasket between his body and block the Qi - lindrov.

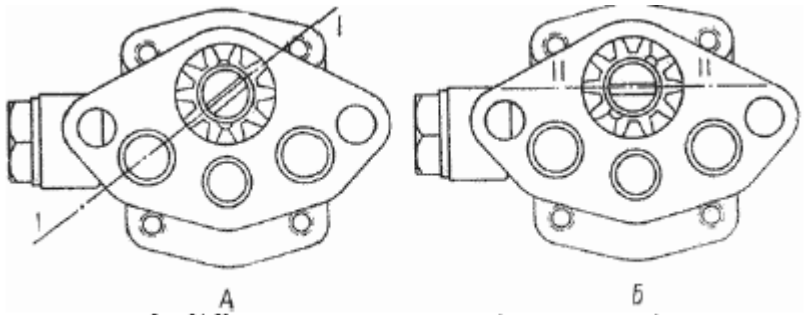

Фиг. 24. Установка валика масленого насоса (вид на валик сверху)

Fig. 24. Install the oil pump shaft (a view of the roller on top) A - before setting the block, B - after setting the block. **Pre-Filter oil** (Fig. 25) plate, slit, is unified with the filter by moving - telya M-20. Through this filter will pass all the oil to pump to lubricate the engine, and therefore negligible internal resistance (pressure drop before and after the filter is equal to approximately 0,1 kg / cm 2).

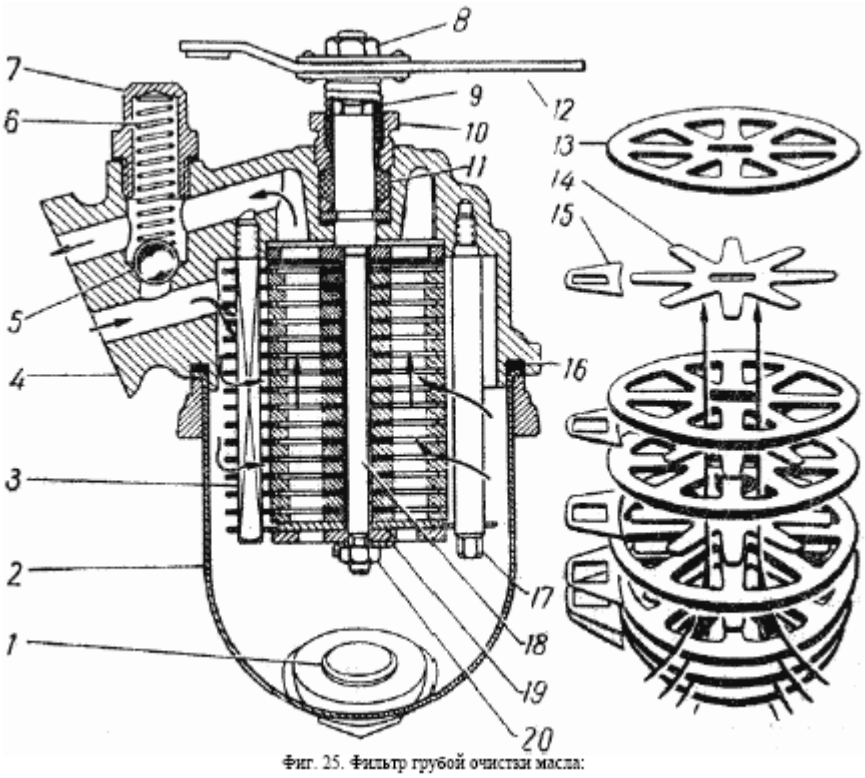

Фиг. 25. Фильтр грубой очистки масла:

Fig. 25. Pre-Filter Oil:

1 - plug the drain holes, 2 - filter housing, 3 - rod scrape plates, 4 - filter housing, 5 - ball bypass cluster Pan, 6 - spring relief valve, 7 - congestion relief valve, 8 - nut grip roller, 9 - spring roll, 10 - Nut Gland, 11 - gasket, 12 - handle roller, 13 - filter plate. 14 - intermediate plate (asterisk), 15 - is removed plate, 16 - gasket, 17 - front desk, 18 - roller filter, 19 - Lock washer, 20 - Lock nut. Pre-Filter large particles retards the impurities and dirt (over 0,1 mm), as well as resinous education available in the oil. The filter element consists of a set of his Me - full metallic, molded filter plates *13* of thickness 0.35 mm and thin intermediate star - *14* check the thickness 0,09 - 0,10 mm, collected alternately on the central shaft *18.* The plates are compressed at Vale Nike between the upper and lower bearing washer through the nuts *20,* screwed on the lower end of the vali - ca and fixed lock washer *19.* Clearances between the filter and intermediate plate form element filtering slit width of 3 mm. Passing under pressure through these cracks, oil-eyes nated from mud and tar formations. To clear the filter from the crevices of mud between its plate - *13* mi put scrape plate *15* of thickness 0,07 - 0,08 mm, typed on a separate square rod, *3-set* in the casing. When turning the shaft *18* together with turning also the filter element, while still scrape the plate *15* removes dirt from filtering - ning slits element. During one rotation roller filter element is cleaned the whole circumference. The rotation of the roller shall handle *12,* coupler which is connected with a roller through pru - zhiny *9.* Resultant between the inner surface of the coils and the outer surface of the roller and clutch friction when turning the handle in a counterclockwise twisting the spring, in resulting in the handle and shaft rotate as a whole. In the reverse rotation of the spring is unwound, and thereby made free lift ruko - yatki. Handle standstill on the roller nut *8* with left-handed, zakernennoy top three spots. For auto matic cleaning the filter handle *12 is* a thrust with a pedal starter, when clicked, roller the filter is rotated by 15 - 20 °. The force of the pedal starter transferred to the handle through the spring, that ensure its inclusion in the clogged filter or thickened, cold oil. If the engine constantly give birth to the starting handle, then roll the filter be rotated by the handle of the hand of every Day 1 - 2 turns. *Care for the filter* is to remove the sludge at each change of engine oil through the drain hole plugged with *1* (Fig. 25) and flushing the filter every 6 thousand kilometers of the car. Drain oil from the tank to the hot engine, after turning the roller filter 1 - 2 turns. For washing and cleaning the filter it should be removed from the engine, clean the tank and filter element from dirt and small particles,

thoroughly wash the item in benzene, rotating roller on the handle, and then rinse in the liquid oil. After installing the filter on the engine and the accession of his drive, make sure to rotation schenii roller when pressing the pedal to the refusal starter.

Fine filter oil (Fig. 26) has a replaceable filter element DASFO-2, Zaderei - residing tiny particles of dirt, sand, metal, carbon, etc., are in a suspended state, SRI in the oil. Uniform with the filter engine M-20.

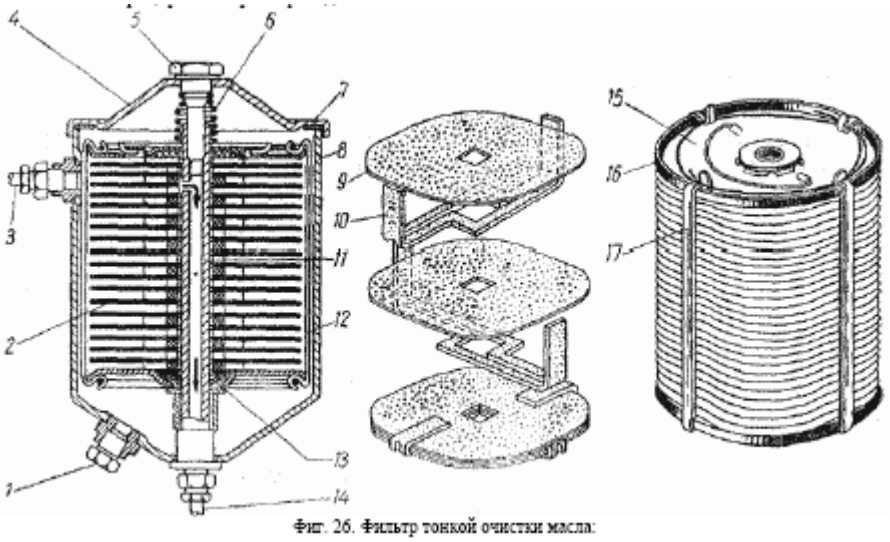

Фиг. 26. Фильтр тонкой очистки масла:

Fig. 26. Fine filter oil:

1 - plug the drain holes, 2 - filter element, 3 - tube inlet hose, 4 - housing cover, 5 - stud,
6 - Spring, 7 - gasket lid, 8 - Corps, 9 - disc filter element, 10 - installation of the filter element,
11 - central rod, 12 - screed, 13 - overflow hole of the filter element, 14 - tube exhaust hose
15 - handle of the filter element, 16 - cover of the filter element, 17 - screed.

Since the filter element has a great resistance to passing through it smoothly, then This filter is included along an oil pipeline engine. Oil enters the filter housing, for - Rack mounting on the dashboard of car, through the hose *3* from the oil pump cover and freely poured through the hose *14* in the crankcase. Top of housing rose lid *4,* which tightened bolt *5,* vvertyvaemym in the central hollow shaft *11* Corps. At the core is placed a removable filtering - ning element *2,* consisting of a set of cardboard discs *9* thickness 0,5 - 0,7 mm and shaped pads *10* thickness of 3 - 3,5 mm. The number of seals in the elements 28 - 32 pieces. Top and bottom of the filter set closed with metal lids *16,* fitted with a cardboard glands, and is tied with four metal ties *17* with a force of 25 kg. Upper lid has a wire handle *15* for you - Beware when replacing the element. Oil from the shell falls into the cavity formed by the discs *9* and shaped spacers *10,* where deposited his contaminating particles and resin formation. Hence oil pressure seeping - etsya between the discs and pads jumpered radial grooves *10* in the past and it goes to central square opening element. From the inner cavity of the cleaned oil passes through the ca -

librovannoe hole 1,6 +0.1 mm, located in the top of the hollow rod *11,* and enters the crankcase. For a quick warm-up filter and accelerate the circulation of oil through the element in the lower lid *16* there is a small hole 1,1 +0.05 mm, to which oil bypassing the filter element, in walks out of the case after six holes located in the holder of the lower flange of the cover. In results those that, when starting a cold engine oil circulates through the overflow hole, heats filter, and he begins to work normally. In the case of clogging or overflow hole of connecting holes in the bottom filter cover - Officer element virtually ceases to operate. Effects of fine filter is very effective, and up until his filter element working oil in the crankcase is bright. *Care for the filter* is to remove the sludge after one thousand kilometers and with ca - zhdoy change the engine oil through the drain hole in the hull, closed cap *1* (Fig. 26), having tapered thread, and the periodic replacement of filter elements. Remove sediment from the filter should be the same as a pre-filter, on a hot engine,

when the oil and sludge liquid. The filter element should be changed in the black for oil in the crankcase, when taken out schupe hundred - novyatsya invisible its label. The service life of the filter element depends on the quality of oil and the degree of deterioration Engine To; for new engines, he is several times greater than for engines with a strong pass gases through the piston rings. The average service life of filter elements is 2 - 3 thousand kilometers of the car. The change of the filter element is

recommended to coincide to a change of oil in the crankcase. To change the filter element is necessary:

1) remove the lid *4* Filter assembly with bolt and spring;
2) Loosen the stopper *1* drain hole and drain off oil from the shell, remove the filter element and completely wipe the inner surface of the filter housing with a rag;
3) insert a new filter element, wrap the cork and pour the drain holes in the body fresh butter;
4) to check whether your pads *7,* without removing it from the cover, and if necessary, replace new;
5) Install the cover in place on the label, available on the body and lid, to avoid the appearance leaks, and turn stud *5.* Should not make too strong tightening the bolt, since the ne - retyazhke it can damage the gasket;
6) let the engine, check for leaks in the joints of oil filter;
7) to stop the engine, check oil level in the crankcase and, if necessary, add it to the mark "P" on masloizmeritelnom rod.

Oil heater - tubular-plate, single-row (Fig. 27). Skeleton oil cooler consists of eight flat brass tubes with soldered to them with steel, solder cooling plates and brass tank lid. Skeleton are soldered to the right and left tanks, enclosed in cover, and they are soldered steel frame, which is attached by four bolts to the leading-gon On the radiator. Right-wing, steel tanks are excretory tubes, which, through flexible hoses with - unifying the radiator with the engine. Oil cooler, as well as oil fine filter, includ - chaetsya parallel oil pipeline engine. Oil in the radiator comes from the filter housing rough cleaning and passing through it, cooled, poured into the crankcase. Switching the oil - tion is the radiator valve *4* located next to the shell-filter. Oil heater is used to prevent overheating of oil in the long-term operation of the engine with heavy load, as well as in conditions of high ambient temperature. It should include while riding in the summer, and, regardless of the season, when driving on bad roads with a large on - Transshipment engine and low speed traffic.

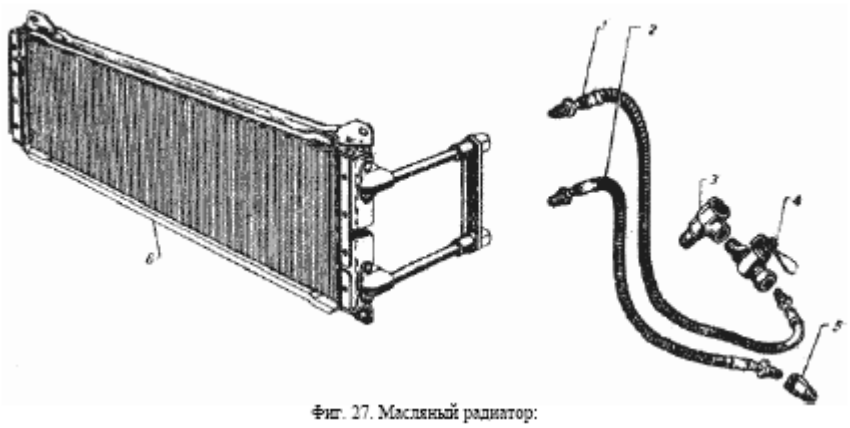

Фиг. 27. Масляный радиатор:

Fig. 27. Oil radiator:

1 - inlet hose, 2 - exhaust hose, 3 - inlet hose fitting, 4 - tap, 5 - choke exhaust hose, 6 - frame radiato - ra.

Caring for oil radiator is to verify the density of compounds and oil-lines, as well as in periodically, at least as a 1200 km path, washing it and cleaning hoses. Flushing the radiator must be done if you disconnect the hose from the engine with liquid oil passing it under pressure in the opposite direction of normal circulation. *Care for the engine lubrication system* consists of a daily inspection of oil in the crankcase and if necessary, its top up to the mark "P" on masloizmeritelnom rod. Periodic change of mass LA should be performed, guided map grease car depending on the quality of the applied oil, its degree of contamination and the state of the engine. Terms of oil changes can be significantly Uwe - licheny, if timely and regularly replace the filter element oil filter wastewater thin - ki. Drain oil from the crankcase and from the two filters to the car after work when it hot and drain well. After the oil spilled, it should turn a few times crankshaft Engine starting handle, not wrapping up drain plugs holes. For the engine lubricating oil must be used, specified in the map grease car (p. 183). Using air or diesel oil can only be subject to liquefaction of spindle - nym or turbine oil to the viscosity: the summer of 5,5 - 7, and the winter 3,5 - 4,5 Engler at 50 ° C. Application Lubricating neiznoshennogo engine oils with high viscosity is unacceptable because it leads to Uwe - An increase in fuel

consumption, increased wear and difficult starting the engine. To determine the viscosity of oils or mixtures thereof should use special garage whiskey zimetrami. For heavily soiled crankcase to the engine wash liquid (spindle) mas - scrap used for flushing the engine kerosene in any case not allowed. Letting the dirty oil in Carter pour 5 liters of wash oil, and turning the candle, quickly rotate the crankshaft starting py - koyatkoy within 2 - 3 min. After this flushing oil is poured, and poured into the crankcase with fresh oil.

DEFECTS IN THE GREASE AND THEIR ELIMINATION

1. *The fall of oil pressure at low and medium speed to zero at neiznoshennom engine.* Prica - Noah is the blockage of the reducing valve oil pump located in its lid. For troubleshooting, you need to carefully remove the lid of the pump, knowing that with her and falls led gear, disassemble, rinse the cavity pressure-reducing valve and its parts and re-assemble. If be found during the inspection of heavy wear or breakage of teeth of the guide spring cap, then it can not put back, but the noise of the valve of this increase. Install guide cap to recess to the ball. Before the assembly is necessary to fill cavity lid with a thick oil, the same oil to moisten waged gear and quickly add cover to the body, without which the dry pump will not work and may occur podplavlenie. podshipni - kov.

2. *Reduced oil pressure at all engine speeds.* The reason for this may be:

a) the failure or refusal to work the oil pressure gauge. This is the most frequent cause. Elucidation of the causes of failure should always start with a test gauge. Checks should be pro - harass or control tested manometer (see below under "Electrical");

b) clogged the oil-filter when the oil passes through the bypass valve and line pressure is reduced by approximately 1 kg / cm 2 . Eliminated by washing and removing the filter;

c) substantial deterioration of crankshaft bearings, causing increased oil consumption in increased clearances. Eliminates replacement liners and connecting rod, if necessary, bearings or the use of oils with high viscosity;

g) long engine overheating or a strong spring wear reducing valve, resulting which spring sits and loses elasticity. It eliminates the formulation of a new spring;

d) seizure maslopriemnika in the up position or operation of the engine with low-level its oil, causing a leak of air into the suction cavity of the oil pump.

Seized maslopriemnika can be found through the drain hole in the crankcase is fused with oil;

e) failure of the oil pump due to wear or looseness in the joints.

3. *Increased oil consumption engine.* The reasons for this are:

a) wear of piston rings. Typically, piston rings should be changed after 35 - 40 thousand km pro - racing car;

b) failure of the crankcase ventilation (see section below, "the crankcase ventilation);

c) Engine malfunction glands, resulting in leakage of oil through there gaskets and other seals. Eliminates replacement of oil seals or tightening sealing compounds engine.

Crankcase ventilation

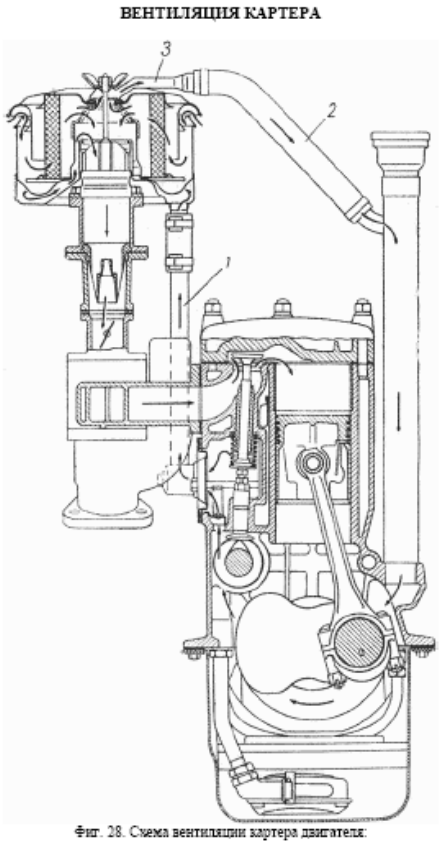

Фиг. 28. Схема вентиляции картера двигателя:

Fig. 28. Scheme crankcase ventilation:
1 - the branch exhaust ventilation, 2 - inlet branch of ventilation, 3 - nozzle air filter.

Crankcase ventilation system - forced, closed, avalvular (Fig. 28). Valid through thinning of the difference in different zones of air filter, resulting in a suction is carried out reflection oped gas in the suction pipe and the flow of fresh air in the crankcase. Exhaust Branch *1* consists of a ventilation tube outer diameter 19 mm, connecting the valve box with lid lower reservoir of the air filter. Ventilation Induced ventilation branch *2* consists of a hose inner diameter of 18 mm, which connects the central hole in the lid of the filter through a special, printed NACO - nechnik *3* with a curved tube oil-filling pipe. Tip *3 embodies* the same bolt, Coto Eye mounted air filter to ensure that this branch has always been attached to the filter after disassembly. With the help of ventilation of the engine exhaust gases are removed, as well as a pair of gasoline-penetrating penitents through leakages piston rings into the crankcase. Thus, oil is protected from the "aging" and dilution of gasoline, and polished surface of the engine - from attack by acid, which edu - ized by the connections oxide gases and water vapor contained in exhaust gases. Not allow the engine to the oil-filling open orifice tube or looseness in compounds of the ventilation system. Because of the dilution created by the branch exhaust ventilation in Carter will be sucked in a lot of dust, greatly increases engine wear. *Care for the crankcase ventilation* is to verify the density of connections and purification of tarry by - proposal of tubes and hoses. It should be remembered that significant gaps in the gas piston ring tsami, or with a strong engine wear, crankcase ventilation is unable to cope with exhaust gases, resulting in the crankcase creates high blood pressure, causing oil to flow through the glands, and other looseness of the engine. This ultimately leads to increased operating costs of oil on the car. Increased pressure in the crankcase, with all the ensuing consequences, can occur also in the running, neiznoshennom engine due to deposits on the tubes and hoses, and consequently Consequently, the restriction of flow areas. Clear all tubes and hoses crankcase ventilation should be pro - hobnob not less than 6 thousand kilometers of the car. After 12 thousand kilometers should scour also the labyrinth in the back cover of an oil separator valve box, removing it from the engine.

COOLING SYSTEM

Engine cooling system - liquid, closed with forced circulation created centrifugal water pump (Fig. 29). Closed (sealed) system significantly reduces the loss coolant evaporation and therefore does not require frequent filling-up of the radiator. The system of cooling - ation included a boiler and engine start-up heater radiator body (see "Kuzo - you "). The capacity of the system with a boiler start-up

heater - 12 liters, without the boiler - 11 liters. Thermal regime of the engine has an extremely great influence on the efficiency of its work and life. Lack of engine operating temperature affects the evaporation of fuel, and it is, a capacitor - Cyr, flows down the walls of the cylinders, washing them with the oil film, which sharply increases the wear-qi lindrov, pistons and piston rings. The oil is diluted with petrol and loses its lubricating properties. Therefore, the temperature of cooling water in the system should always maintain the highest in the pre - ai 80 - 90 ° C. It is also crucial to reduce the heating time of the engine at its start. The optimum thermal regime of the engine is supported by a thermostat, blinds Radiation torus and thermal insulation cover that is worn on the hood of a car in the winter. To control the water temperature in the instrument cluster car has a thermometer, the sensor co - torogo vvertyvaetsya in the cylinder head. On the dashboard, left, in addition, there are signal green light, which illuminates when the temperature of water in the cylinder head 92 -- 98 ° C. If ignition of the lamp to immediately stop the engine and eliminate the cause of his re - heating of. The direction of circulation of water in the cooling system is shown by arrows in FIG. 29. From the lower tank of the radiator water is water pump in the engine through the cylinder jacket water distribution pipe *2,* passes along the block. This tube has four cut-out located against the exhaust valves, resulting in a more intensive cooling of hot places the engine. From the cylinder jacket through the holes in the block and the laying of water enters the jacket of the head and over - order through the thermostat and its nozzle (with a hot engine), the upper radiator tank.

The thermostat is placed in the outlet cylinder heads and has two valves: the basic, let the water in the radiator and the bypass, carrying water circulation system in addition to ra - diatora (Fig. 30). Uniform with a thermal engine M-20, GAZ-51, GAZ-63 and ZIM. When the water temperature to 68 ° C, the main valve *2* thermostat is closed, and bypass valve *5* is closed (Fig. 30 A). In this position the thermostat on the engine is running water from the cylinder head-translational em through two windows in the side surface of its housing *4* to bypass the channel back to the water pump, bypassing the radiator. Since the number of circulating fluid inside the water jacket of the engine did not conduct - to, it quickly heats up. When the radiator heating body water also circulates and Th - Res heater. When the water temperature in the engine reaches 68 - 72 ° C, the main valve *2* begins to open - vatsya and implement a partial circulation of water through the radiator. When the water temperature at 80 - 86 ° C oc - thus a key valve is fully open and the bypass valve *5* closes the window on the thermostat housing and all water in the cooling system begins to circulate through the radiator.

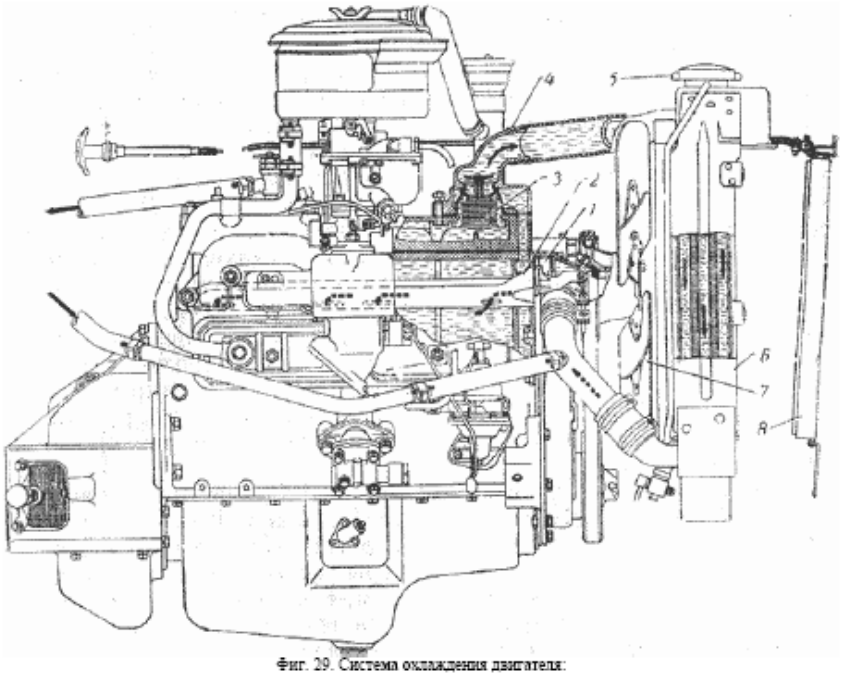

Фиг. 29. Система охлаждения двигателя:

Fig. 29. Cooling system engine:

1 - water pump, 2 - water distribution pipe, 3 - Circulator, 4 - exhaust pipe radiator, 5 - plug radiator 6 - Radiator, 7 - Fan, 8 - blinds.

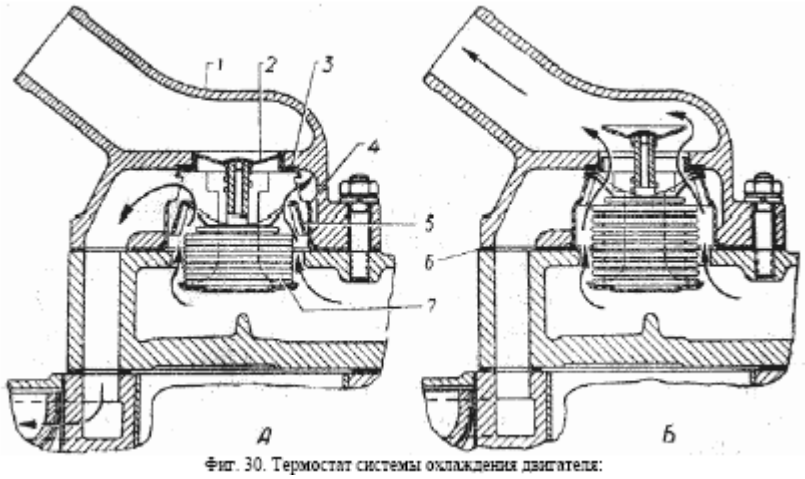

Фиг. 30. Термостат системы охлаждения двигателя:

Fig. 30. Thermostat engine cooling system:

A - thermostat valve is closed, B - the thermostat valve is open, 1 - pipe exhaust valve cylinder heads, 2 - valve thermostat main Noah, 3 - laying thermostat, 4 - thermostat housing, 5 - thermostat bypass valve, 6 - laying pipe, 7 - cylinder thermostat.

Opening and closing valves *2* and *5*, the thermostat automatically by changing the length corrugated container *7*, which lies volatile liquids. When the tempera - tours of water pressure inside the cylinder increases and it becomes longer, and with it the rise and both valves; with decreasing temperature and decreasing cylinder valves fall down. Between the upper thorium body thermostat and rubber gasket pipe is installed *3* to prevent the passage of water into the radiator when the main valve closed. To prevent education Nia air sacs in the system in pouring water into the radiator, the plate valve *2* thermostat made no - large hole. The thermostat in the cooling system significantly reduces warm up time of the engine and automatically supports the required temperature of water in the cylinder jacket. Because, if the thermostat su - I can freeze the radiator (due to cessation of circulation of water through it), it is necessary to close blinds and radiator heat insulation.

Water pump centrifugal type (Fig. 31) is unified with the pump motor M-20, GAZ-51, GAZ-63 and ZIM. On the roller pump *4* from the outer end of the planted hub for mounting the drive pulley and fan. The pump is powered by a wedge-shaped belt pulley from the crankshaft of the engine; this same belt actuates an electric generator. The roller pump *4* is mounted on two ball bearings standard size 40X17X14 mm between which there is distance sleeve *11*. Internal cage tightly sandwiched between the hub *8* and the locking ring *13* compress - Volume in the groove roller. External clamps are held in the axial direction from one side cross rail cor - Busan, on the other - spring, locking ring *10*, within the annular groove on the end of the shank pump casing. At the ends of the roller has Lysko and internal threaded holes in the ends. Openings impeller *2* and the hub *8* stitched with the ledge under Lysko, thereby preventing their conductivity rachivanie on the shaft during operation. From the axial displacement rotor and hub are held flat washers and bolts, *1* set out from the weakening of spring washers. The space between the bearings nicknames filled refractory lubricant Approved (1 - 13) through the lubricator *5*, vvertyvaemoy in the body. For Retention lubrication bearings are external to the special felt seals (tallow - ki). The grease in the bearings is supplied to the syringe until it begins to go out of control - *6* miles to the pump casing. For the convenience of monitoring the emergence of lubricant in a test hole pulley drive has two openings on its conical surface.

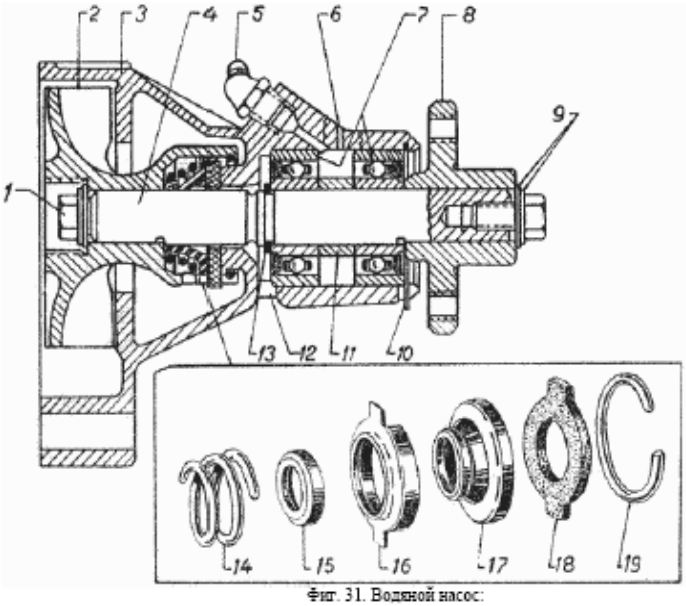

Фиг. 31. Водяной насос:

Fig. 31. Water pump:

1 - attachment bolt rotor and hub, 2 - rotor, 3 - pump casing, 4 - shaft, 5 - pressmaslenka, 6 - control hole Release lubrication in the body, 7 - bearings, 8 - fan hub, 9 - washer, 10 - locking ring in the body, 11 - distance sleeve, 12 - control the hole to exit the water leak in the omentum, 13 - circlip on the shaft, 14 - spring omentum, 15 - inner ferrule gland 16 - outer ferrule gland 17 - rubber sleeve, 18 - textolite washer, 19 - Keyhole ring gland.

Gasket pump is samopodtyagivayuschimsya gland, located in the impeller and consisting of a rubber sleeve *17* with two ferrule *15* and *16*, textolite thrust washer *18* and pru - zhiny *14*. Textolite washer *18* is retained in the impeller two ledges, falling in the corresponding a feasibility slotted rotor. In position washer *18* with ground surfaces is pressed against the polished end face body spring *14* and creates a seal, prevent - schee leaking water from the cavity of the pump, the rotation omentum, together with the impeller and roller. The flow in - dy on the roller and the reverse side textolite Washers prevents rubber collar *17*. To improve the SMPs - batyvaemosti textolite puck to the body of the outer its surface is lubricated with a thin layer of graphite SmAZ - ki. Ingress of water into the bearings in the tallow-drip ka, prevents ring vodosbrasyvatelem (channel - Coy) on the arm. Therefore, in no case be closed hole *12* in the body, as this water is inevitably penetrate into the bearings and lead them out of action. Loss sealing gland, causing the leak of water from pump casing, is mainly due to wear textolite thrust washer *18*. To replace worn parts gland pump should be removed from the engine and got caught in the grip of the hub *8* fan. Then unscrew the bolt *1* and the two washers, refusal to turn the nut puller *2* (Fig. 32) in the impeller pump and rotating bolt *1* puller, vypressovat impeller with seal.

Fan - shestilopastny, stamped. Fastened to the crosspiece flange hub *8* (Fig. 31) stamped pulley with four bolts. *Care for water pump and fan* is a periodic lubrication of bearings, according map grease the car and check the belt tension. Belt tension is checked by pressing it with your thumb, as shown in FIG. 33. Proper belt tension corresponds to the prog - Bu it with a 10 - 15 mm. Too little tension causes the belt slip at high equip - max engine and its separation from heat; too strong - disables bearing water pump and generator. Drive belt to protect from expose it to grease, as it destroys the belt and causes it to slip. After contact with belt oil should be immediately removed it with a clean, lightly-QS chennoy in gasoline with a rag. Grease bearings water pump should done until it appears from the control hole - stiya on the case. After that, the excess grease should must be removed to avoid grease on the fan belt.

Radiator - tubular - plate (Fig. 34). To flat tubes, located in three rows around perimeter of the cooling plate soldered red copper. Top and bottom of the tube soldered to the stamped brass tanks, which are attached to the inlet *6* and exhaust pipes *15* radiator. Behind, to the side racks mounted radiator fan shroud *16*, the ad - mong the four special brackets - oil radiator. In the lower part of the exhaust pipe *15* vvertyvaetsya drain tap *14*. In the filler neck of the upper radiator tank welded tube parootvodnaya *10*. The radiator is fixed in four points. Below - on two rubber pads *2* and *3*, strapped with bolts *4*, the sides - to the mud flaps of the wings by rods *13*. Cork radiator (Fig. 35), hermetically

closed, lation filler cap is compacted with two gaskets. In a traffic jam radiator has two valves that connect the cooling system with the atmosphere, in-house zhanie radiator damage from increased pressure in the boiling liquid or a vacuum after vapor condensation.

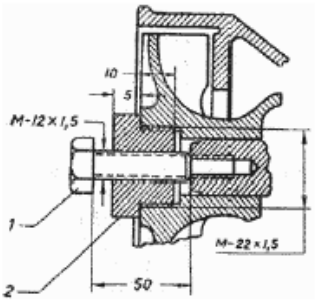

Фиг. 32. Съемник для крыльчатки во-

Fig. 32. Puller for the impeller in - dyanogo pump:
1 - pin puller, 2 - nut puller.

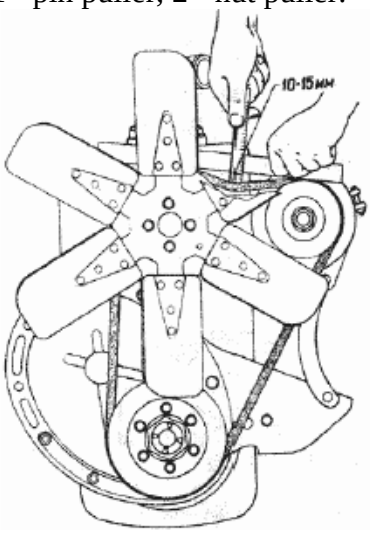

Фиг. 33. Проверка натяжения ремня вентилятора.

Fig. 33. Check fan belt tension.

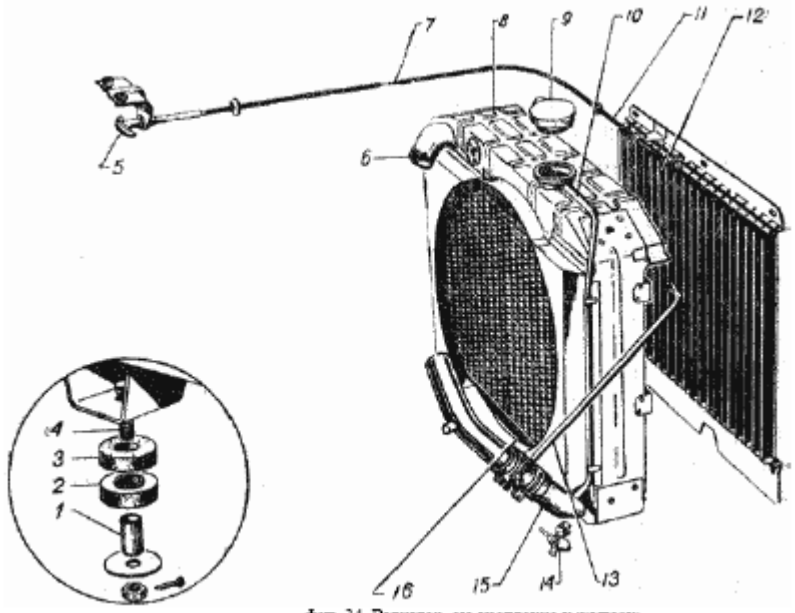

Фиг. 34. Радиатор, его крепление и жалюзи:

Fig. 34. Radiator, its fastening and blinds:
1 - distance sleeve, 2 and 3 - pillows fixing the radiator, 4 - stud, 5 - handle control blinds, 6 - inlet connection radiator, 7 - thrust control blinds, 8 - the upper radiator tank. 9 - the radiator cap, 10 - control parootvodnaya tube, 11 - hull draft, 12 - blind, 13 - pull the radiator mounting, 14 - Drain tap, 15 - exhaust pipe radiator, 16 - Shroud fan. Exhaust valve *2* opens outward at an excess pressure in the system at 200 - 260 mm Hg. Art. in

resulting boiling point of water rises to 108 ° C. Such a device can safely work at elevated thermal conditions, without fear of boiling and loss of water.

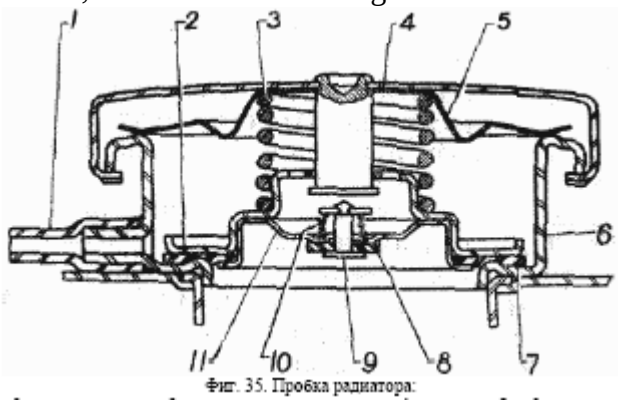

Фиг. 35. Пробка радиатора:

Fig. 35. Cork Radiator:

1 - control tube, 2 - the exhaust valve, 3 - spring valve, 4 - housing cork, 5 - stop spring 6 - neck radiator, 7 and 8 - gaskets, 9 - inlet valve, 10 - spring intake valve, 11 - seat inlet valve

With increasing temperature to 108 ° C, when the water begins to boil, the exhaust valve pressure pair opens and steam is coming out in parootvodnuyu tube out. The inlet valve *9* opens when a vacuum in the system, equal to 30 - 50 mm Hg. Art. Operation is plug and valve is possible only with intact seals, so for co - hrannostyu and state need to be carefully monitored. On a hot engine stopper to open carefully to avoid steam burns. To release a liquid from the system must necessarily two tap: one placed at the bottom radiator tank, the other - on the bottom of the boiler start-up heater. For the convenience of tap start heater has a handle, the end of which is located under the radiator (front). The end of the handle when closed position, faucet standstill stop Pla stinchatoy spring. To rotate the handle in the open - TII tap lightly to squeeze the locking spring. Due to leakage of fluid from the discharge be sure to remove the radiator cap.

Blinds (Fig. 34) serve to regulate heat Vågå of the engine and consists of a set of vertical GOVERNMENTAL wings, connected by a hinge at the top and bottom gon. Louvers are attached to the radiator in the front and controlled from the driver's seat through the draft concluded, chennoy in the shell. When pulling the handle on a is closing blinds, with vydviganii from themselves - their opening. *Care for the cooling system* is in daily basis, Noah verification and, if necessary, top up the water in the radiator, there - kvidatsii leak when it appears and periodically wash - Nike entire system to remove it from rust and scale. Cooling system to fill and clean perhaps more soft water containing no salt. Ho roshey water for cooling the engine is rain water. Hard water causes a rapid and significant on - proposal scum in the radiator and in the jacket of the engine, with - leading to reduced efficiency of cooling and re - heating of the engine. However, to soften hard water by adding to it alkali can not, because the latter destroys the aluminum cylinder head. To reduce fouling, the water in the system may be changed less frequently and only in the case - Tea really is necessary. Scale and rust forming in the cooling system, leading to overheating of the engine, which implies to a reduction of its power and overrun fuel. Therefore, the cooling system must periodicity briefs cleaned by washing. For washing can not use solutions containing acid or alkali, because they are destructive to the aluminum alloy from which the cast cylinder head. Before the flushing system should otedinit hoses connecting the engine with the radiator and a cat Scrap trigger heater, remove the water pump and remove the thermostat from the pipe-valve cylinder heads. Overflow hole and a hole for the thermostat connection of the boiler to the head should be drown sample - Kami. Rinsing is recommended to make a strong jet of clean water, letting the water in the direction opposite to the normal circulation of the system. Radiator, water jacket of the engine and boiler start-up heater should be washed separately. When washing water jacket of the engine should be thoroughly cleansed water distribution pipe with long wire hooks (Fig. 36). If the pipe can not be cleaned or badly prorzha - led, it must be changed by setting the new pipe cutouts to the side of the valves. To prevent freezing of water in the radiator during the heating of the engine, when you close the main Mr. valve thermostat in the winter time should be poured into the system only hot water. To protect the cooling system from freezing better to fill her low-freezing mixture, Sue (antifreeze). It is recommended for these purposes to apply the standard mixture etilenglikolievuyu brand B-2 (GOST 159-41). When using etilenglikolievoyu mixture in the radiator should only add water because the boiling point of the

mixture above the boiling point of water. Given the large volume ratio ext - rhenium etilenglikolievoy mixture should be poured into the radiator is less than water, approximately one liter. Antifreeze-2 is highly toxic and if it enters the stomach, causing poisoning.

SUPPLY SYSTEM

The power supply system of the engine (Fig. 37) consists of a petrol tank (one in the car GAZ-69A and two in the car GAZ-69), fuel pipe, filter tank, a petrol pump, carburetor, an air - tion filter and intake pipe. For engines of GAZ-69 and GAZ-69A should be used petrol with octane number 70. When using gasoline with lower octane number (but not below 66) engine can run satisfies the satisfactorily only with the corresponding higher installation of ignition. Use of gasoline with octa - new number: 66 requires such a late installation of ignition in order to prevent detonation that fuel consumption and loss of engine power is inevitable. *Note.* The octane number of gasoline describes the ability to resist the emergence of the engine de

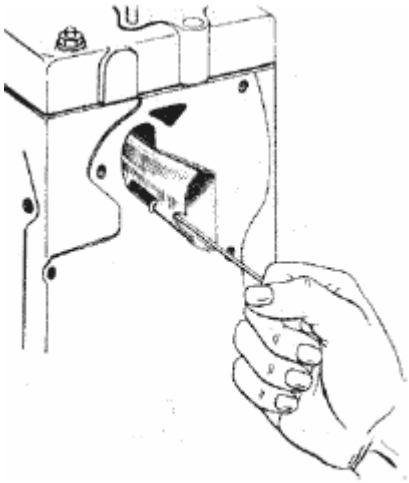

Фиг. 36. Вынимание водораспределительной трубы.

Fig. 36. The extraction of water distribution tube.

detonation, so the higher the octane number, the higher the anti-knock quality of gasoline.

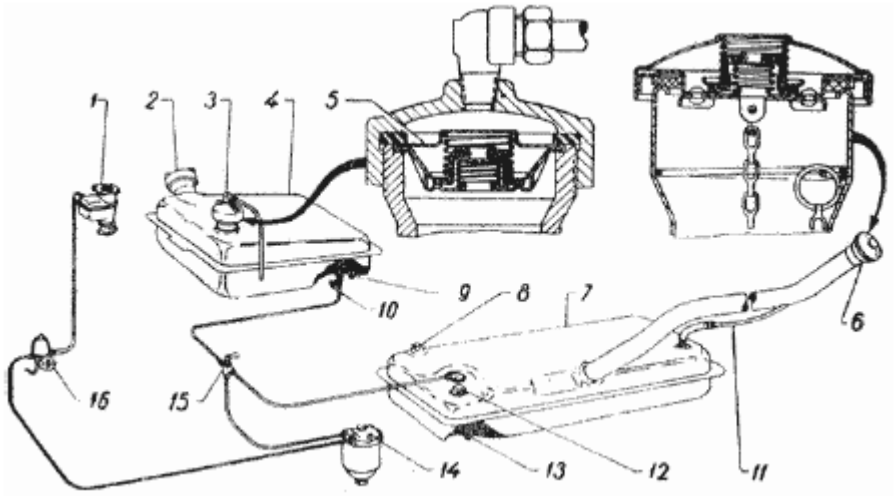

Фиг. 37. Система питания автомобиля ГАЗ-69:

Fig. 37. Power system GAZ-69:

1 - Carburetor, 2 and 6 - cork filler, 3 - plug the pipe valve, 4 - additional fuel tank, 5 - inlet and outlet valves, 7 - the main tank, 8 - Index level of gasoline (core), 10 - stopcock, 11 - air tube, 12 - rheostat pointer level, 9 and 13 - plug the drain holes, 14 - filter sump, 15 - Three-way valve, 16 - petrol pump.

Detonation - is an abnormal combustion of fuel flowing with enormous speed and having nature of the explosion. Detonation combustion of fuel accompanied by the ringing knockings, which can be heard in the cylinders especially when the engine with a large load; these knocks are often mistaken for a knock piston pins. Detonation is a very dangerous and harmful phenomenon, as it is, except reducing engine power and increase fuel consumption - the destruction and deterioration of its parts. On detonation tion burn through the bottom of the piston, the jumper in the head between the combustion chambers, head gasket and obgo - a term head valves. Detonation causes the formation of

cracks in the cylinder head, leads to increased wear chi - lindrov, piston rings and liners of the crankshaft. To increase the octane number of fuel added to it as tetraethyl lead antiknock vy lead (ethyl liquid R-9) in an amount up to 1,5 cm 3 1 kg of gasoline. Since all the lead antiknock poisonous, then at work on leaded gasoline necessary - mo comply with special instructions for its use.

Petrol tank (Fig. 38) GAZ-69A, stamped out of leaded steel, capacity 60, located in the posterior part and is attached to the floor of the body by means of two flexible steel cable ties *2*. Tank filler injected into the left side of the car body. At the top of the tank sdela - but deepening (vyshtampovka), which established a flange sensor electrical level indicator ben - zina. Flange through the cork is attached to the tank with six screws. To the tank with connections joins Reception benzinoprovoda tube, which is at the end of the grid-filter *9*. At the bottom of the tank has a drain hole, closed stopper *8* with tapered threads. To control the level of gasoline is also a core index *1*, screwed into the tank. At index bear the risks to the price of divisions - 5 l and figures. To exit the air from the tank during refueling serves as a pipe 6, derived in the neck. Cork filler cap (Fig. 39) with plate springs and seals tightly closes the throat, preventing evaporation from the tank light fractions of gasoline. From the loss of the stopper prevents the chain *10* with a wire ring, stuck in the throat. Cork has two valves, protecting a tank from high blood pressure or excessive vacuum. Valve *3* opened in the presence of excess pressure in the tank at 90 - 136 mm Hg. Art. and connects the tank through a hole *1* with the atmosphere. Valve *6* is opened by dilution in 12 - 26 mm Hg. Art. and also through holes *1* com - plies a tank with the atmosphere. To work correctly, valves and plugs is possible only when healthy seals.

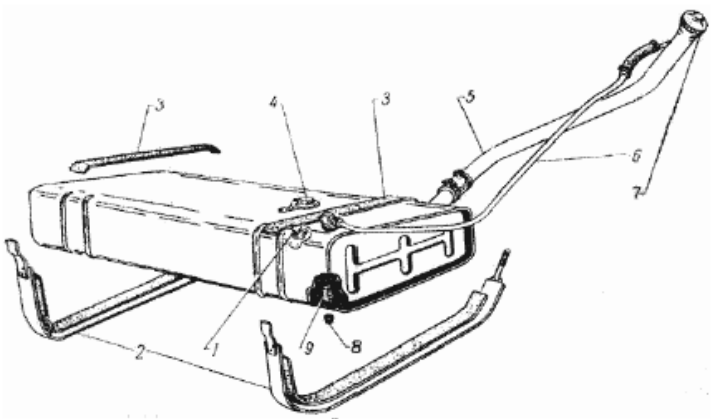

Фиг. 38. Бензиновый бак автомобиля ГАЗ-69А:

Fig. 38. Petrol tank car GAZ-69A:

1 - dipstick gasoline (core), 2 - tie belt, 3 pads, 4 sensor electrical fuel level gauge, 5 - filler pipe, 6 - tube for the air outlet from the tank, 7 - cork filler cap, 8 - plug the drain holes, 9 - filter.

Care should be taken so that holes *1* were clean and do not overlap liner *8*.

GAZ-69 has two petrol tank capacity: primary, capacity 47 liters, located in the middle left side underneath the body, and an additional, capacity 28 l, - with the right side under the seat-driving la. The main tank is attached to the floor by means of two flexible steel cable ties, extension - the three bolts. Additional tank has a sealed tube filler and is connected with the atmosphere tube, which was derived under the floor of the body. Neck cork excretory tube equipped with a valve as described above. Located under the driver's seat makes it possible to tap the power switch on the motion gatelya of additional or main tank. *Care petrol tank* is dumping of sewage sludge of mud and water through drainage holes after every 6 thousand kilometers, washed with petrol once a year axially New systematic review of attachment.

Filter tank of gasoline (Fig. 40) fixed to a bracket of the left longeron frame with two bolts. The iron body Filter attached stamped steel tank *8*, through price - tral bolt *3*, wrench in the ster - jen, welded to the bottom of the tank. Between housing and settler put seal - cen gasket *2* of paronita. At the central core of settler worn filter element *6*, Coto ry spring is pushed to the side of corporations ca. Seal between the upper base - tion element and the housing is provided paronit gasket *5*. Filter element *6* consists of a set of 165 - 170 ton - FIR brass plates of thickness 0.14 mm worn by two counters *7*, riveted to upper base element. Filter schaya plate *11* is made in the form of washers and has two holes, which it svo - mean free put on the rack *7*, and six

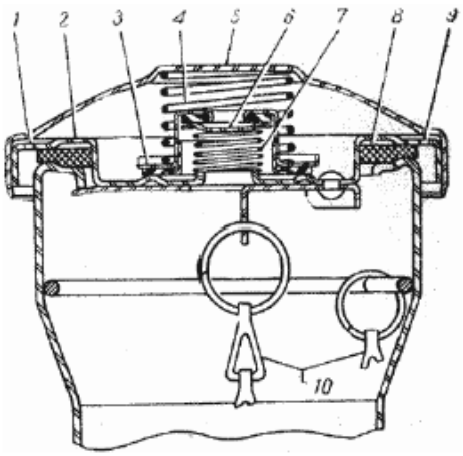

Фиг. 39. Пробка наливной горловины:

Fig. 39. Cork filler cap:
1-9 - holes, communicating with the atmosphere, 2 - body plugs, 3 -- exhaust valve, 4 - spring valve, 5 - lining cork, 6 - inlet valve, 7 - spring intake valve, 8 - pro - masonry plugs, 10 - chain attachment plugs the neck.

holes evenly spaced on each its semicircle. In the intervals between these There are two openings on the ledge *13* in height 0,05 mm. Due to the symmetrical arrangement protrusions on each plate and the semicircle set of plates with each turn on it related to 180 °, they are not on one another, and a gap between the plates, equal height projections. Lower bearing washer has four figures - GOVERNMENTAL holes and two holes for putting on at rack. Racks are made much longer compressed filter element, and the lower ends their crimped to prevent the decay of plas - films. In the case drilled inlet channel, com - propagating with a sump *8* and exhaust - com - propagating from the inner cavity of the element *6.* Since both ends of the channels are threaded on - miles to join chokes benzinopro - water. Unused holes jammed threaded plug with tapered thread. Ben zin comes from the tank *8* through the filter slot element with the outside and the inside of his side and purified, for *12* holes-own customer images DIT in the central cavity of the shell, connected with the exhaust channel. Hence petrol direction etsya further in petrol pump motor. In bottom of the rod are Drilled hole - stiya going into the central drilling with closed - Toe screw cap *9.* To seal between the bolt *3* and the outer side of the case is Fiber washer. Petrol sump engine GAZ-69 is unified with sump engine GAZ-51 and GAZ-63. *Care for the filter* is to remove sludge and water from the tank through the drain hole after every thousand kilometers of the car. Before otvertyvaniem drain plug *9 is* re - beat them tap a petrol tank. After every 6 thousand kilometers, or more frequently if necessary, to remove septic tank cleaning filter element. Cleaning the tank removed from the rod element is by washing it in gasoline by shaking, filter plates on racks and light shaking element. Washing should be done carefully so as not to damage or bend the filter plate, take his hand element, it should be for its upper base.

Petrol pump (Fig. 41) diaphragm, driven by eccentric *21* distrib - tary shaft. Uniform petrol pump motors M-20, GAZ-51, GAZ-63 and ZIM. Between the top *3* and bottom *4* of the casing, cast zinc alloy, sandwiched by six screws, mi diaphragm *19,* consisting of four layers of cloth soaked in petrol-resistant lacquer. In the center of the diaphragm reinforced rod *7,* which includes the cut lever mounted on the axis *24.* At the same axis sits lever *22,* based one end of the lever *8,* and others - on the eccentric *21.* At the top of the housing *3* located - wife, two valves: intake *15* and discharge *14,* and filter *13.* Tank cap *12* is pressed to the body of nut *11* and is compacted by cork proklad - ki *16.* The lower part *4* is fastened to the flange of the cylinder block with two bolts. Between the flange and the platform block set gasket of paronita. Hole *6* connects the space under diaphragm to the atmosphere, and the seal *20* prevents the penetration of crankcase gases. Lever *22,* is constantly pressed against the eccentric *21* by a spring, is connected with the lever *8* in such a way that when rotation of the cam moves the diaphragm only in the extreme lower position, creating a working on - voids above the diaphragm vacuum pump. Under the influence of dilution opens the suction valve *15* and gasoline through the filter *13* is sucked into the working cavity of the pump. From the bottom of the diaphragm re - substituting up through the springs *5,* creating a working cavity pressure, under the influence of which ICA - described by the valve closes and the discharge *14* is opened, and gasoline in

the tube attached to hole *2,* enters the carburetor float chamber. When filling the float chamber feed gasoline pump stops, as the pressure created by the spring of the pump, not enough to open the needle valve.

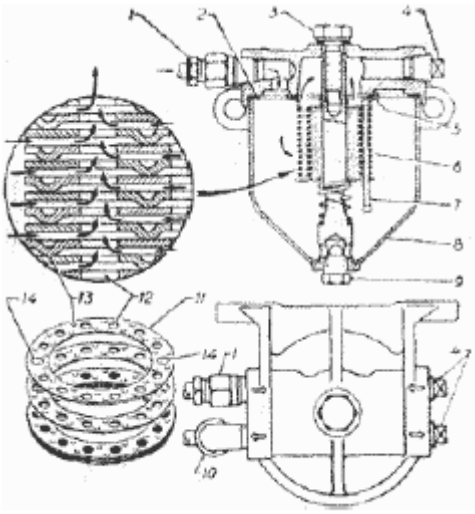

Фиг. 40. Фильтр-отстойник бензина:

Fig. 40. Filter tank of gasoline:

1 - inlet pipe, 2 - installation of the shell, 3 - bolt, 4 - thread - Vai cork, 5 - laying the filter element, 6 - filtering, ning element, 7 - rack filter element, 8 - of - stoynik, 9 - plug the drain holes, 10 - exhaust tube 11 - filter plate, 12 - hole in the plate for passage of purified gasoline, 13 - the tabs on the plate, 14 -- hole in the plate for the rack.

At this time the diaphragm is lowest position and the lever *22* swings - Xia idling. Petrol pump has a manual lever pumping gasoline *10,* fastened to the shaft *9,* in the middle part which is cut. Pru - zhina *25* all time, has delayed the lever *10* in the lower her position, which cut the roller *9 is* not prevents movement of the lever *8* at the work on - Sosa from the eccentric. When the swing arm *10* hand edge of the notch on the shaft *9* clicks on the ry - Chag *8,* resulting in hand-carried pumping gasoline. If aperture *19* is located in the extreme lower position, the hand-pumping is not ra - bot. In this case, turn the crankshaft of the engine per revolution, which - be eccentric moved into the upper diaphragm position. *Care for a petrol pump* concludes, Xia in a periodic clean-up sump pump and filter and leak check all compounds. When setting tank after cleaning, you must follow tight pressing of gasket *16* (Fig. 41) in the escape - tion of leakage of gasoline and air suction.

Restore crumpled cork can be achieved by steaming it in hot water. If the gasket is damaged and can not be replaced by a new, then you can restore the sealing of singing, brushing her mashed mild soap and water. To test the action on petrol - Sosa should otedinit tube from the carburetor and disappoint petrol lever manual swap. If the pump is defective, then the tube gasoline will out a strong, pulsating jet. If gasoline flows from the holes *6* in the case UsAbout - sa, it indicates the failure of a diaphragm we need to replace it. It should be borne in mind that when faults in the power of the pump should be disassembled productivity be conducted by only in case of real need for this, after blowing benzinoprovodov and verification pump.

Carburetor K-22D - vertical, with the incident flow and a diffuser of variable section. Carburetor (Fig. 42) consists of a housing *14* and lid *16,* cast from zinc alloy under pressure eat and lower cast iron pipe *12.* Between the body and lid posited thin carton sealing gasket *15;* between corporations catfish and lower pipe - thin cardboard strip *13.* Lower tube *12* has a flange for mounting the carburetor with two pins on the inlet - Noah pipe of the engine. Between the flange carburetor and intake pipe is placed staleasbestovaya gasket. In the upper tube cover *16 per* axis installed choke *1* (Fig. 43) with a valve *2,* lower tube is throttle carburetor. Carburetor has a float and the mixing chamber, the main metering device, ekonomay - Glaser, accelerator pump and the system idling.

Float chamber - balanced, because its air cavity is not connected with the atmosphere, and with an air pipe through a tube *26* (Fig. 43). The advantage of balanced camera is that the ontamination of the air filter does not get the enrichment of the combustible mixture, due to various pressures in the air tube and float chamber. Constant level of fuel in the float chamber is supported by the float *22* and needle valve *21.* When filling the float chamber float *22* rises and closes the needle valve *21,*

stopping the flow of gasoline from the pump. The normal level of fuel in the float chamber should find - Xia 15 - 17 mm below the plane of the connector body and cover the carburetor.

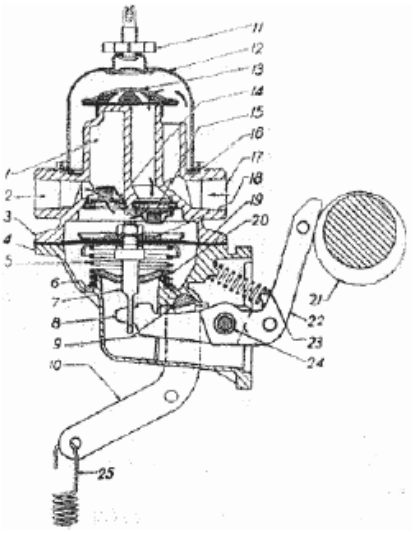

Фиг. 41. Бензиновый насос:

Fig. 41. Petrol pump:

1 - air chamber, 2 - pulling hole, 3 - upper part of the body, 4 - lower part of the body, 5 - diaphragm spring, 6 --Hole communicating with the atmosphere, 7 - rod aperture, 8 -- lever rod, 9 - roller lever manual swap, 10 - Manual lever paging, 11 - nuts tank, 12 - cap 13 - filter, 14 - pressure valve 15 - suction valve, 16 - gasket, 17 - inlet, 18 - washer, 19 -, diaphragm, 20 - diaphragm rod seal, 21 - Eccentric camshaft, 22 - lever pump 23 - spring lever, 24 - axis of the lever, 35 - spring snatch lever manual swap.

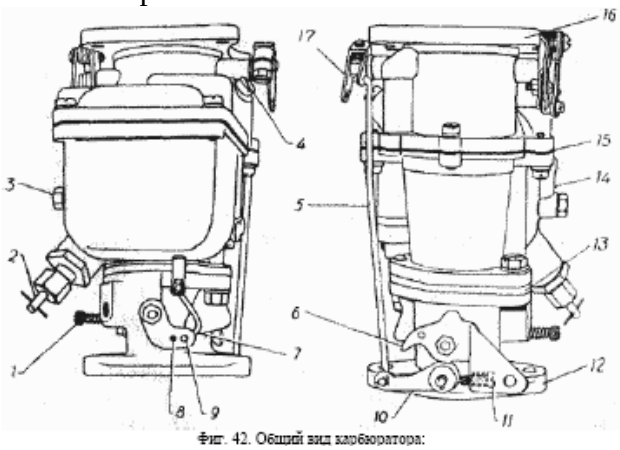

Фиг. 42. Общий вид карбюратора:

Fig. 42. General view of the carburetor:

1 - screw adjust the mixture of idling, 2 - adjusting mist main jet, 3 - jet idling, 4 - nozzle accelerator pump 5 - rod connecting the air and the throttle valve, 6 - lever throttle, 7 - thrust accelerator tary pump, 8 and 9 - hole in the lever of the accelerator pump, 10 - a lever with a cam lock screw to 11 - screw regula - perature idle yes, 12 - bottom outlet, 13 - gasket, 14 - body of the carburetor, 15 - gasket, 16 - cover of the carburetor, 17 - choke lever axis.

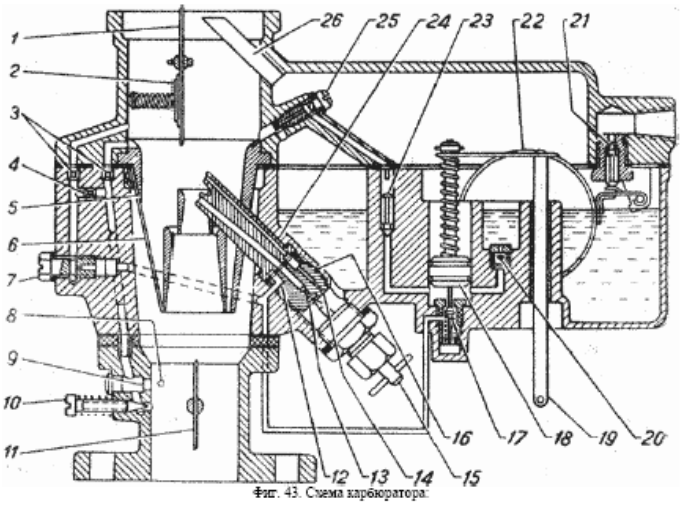

Фиг. 43. Схема карбюратора.

Fig. 43. Scheme of Carburetor:

1 - air damper, 2 - safety valve choke, 3 - air jets, 4 - emulsion jet, 5 - unit-cell, 6 - spring plate diffusers, 7 - jet idling, 8 - hole for the vacuum tube regulyato - RA, 9 - upper, outlet (gap) of idling, 10 - Screw adjust the mixture idling 11 - throttle, 12 - jet-power (economizer), 13 - the main jet, 14 - compensating jet, 15 - the main adjustment needle jet, 16 - unit jets, 17 - valve economizer, 18 - piston acceleration pump, 19 - drive rod acceleration pump, 20 - return valve acceleration pump, 21 - needle valve float chamber, consisting of valve springs and the rod, 22 - float 23 - valve acceleration pump, 24 - pack sprayers, 25 - os-jet koritelnogo pump, 26 - balancing tube. To reduce the transfusion of fuel through the race - pylitel main jet, in dealing with rises and with the strong shaking the car, the needle valve *21* is connected to a float through the spring, which pome - nated in the groove valve. Spring upper end rests on the end face of the valve recess and the bottom - in the pre - of supplementary thrust rod guide tail - stovik which goes inside the spring. In the mixing chamber, located in the building - Behold, the block is placed diffusers *5*, executed in the vi - De overall casting clamped between the body and lid. The outer cone has *4* windows that closed elastic plates *6* stainless hundred - I set out at the top screws. At small negative pressure in the upper tube carburetor plates are pressed to the diffuser, with large sparse air flow turn down the ends plates and some of the air bypass in addition to internal - rennih diffusers.

Main metering device consists of Block nozzles *16* and the block of nozzles *24* (Fig. 43).

Block jets has two openings: the central *13* which is the main jet, and the side *14* - compen - satsionnym. At the bottom of the case is the nest through which the block of nozzles *24* is a slit-cell block *5*. Block dispensers mounted in nest housing unit jets, screwed on the thread, and compacted fiber gaskets. Outside in Nest vvertyvaetsya body adjusting needle *15* also with seal. Vvertyvaetsya adjusting the needle into the body for carving and will reduce the flow area main jet. Needle compacted seal, placed inside the nut. In the main and compensating jet fuel from the float chamber passes through a hole in housing. When the economizer valve is opened, fuel is delivered to the spray gun further compensation, tional jet, in addition to this jet.

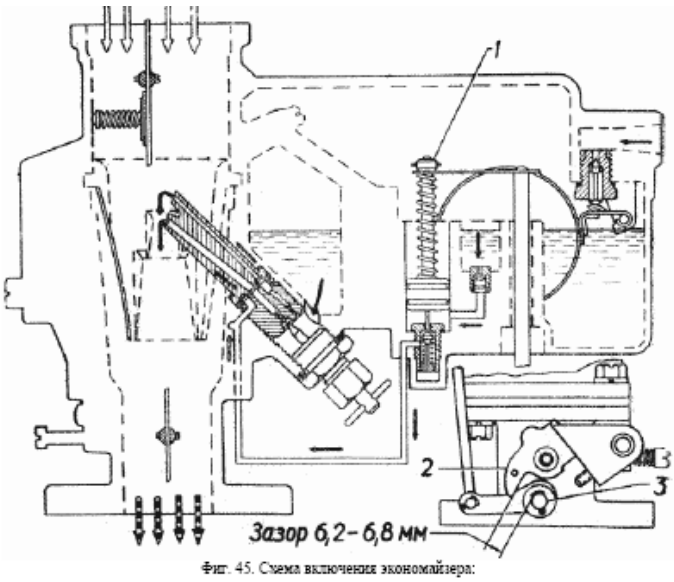

Фиг. 45. Схема включения экономайзера:

Fig. 45. The scheme included the economizer:
1 - nut for adjusting the moment of inclusion of the economizer, 2 - lever throttle, 3 - axis.

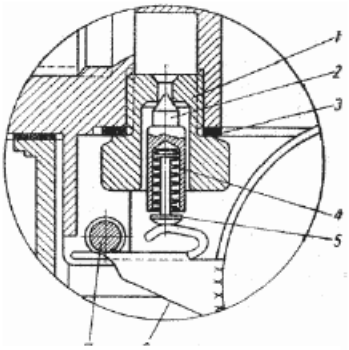

Фиг. 44. Клапан подачи топлива карбюратора К-22Д:

Fig. 44. Valve fuel carburetor K 22D:
1 - valve body, 2 - needle valve, 3 - gasket, 4 - spring, 5 - hard core, 6 - float lever, 7 - the axis of the float.

Channel sprayer main jet is the center of the small cell, the channel compensation, tional jet - the upper part of the outer cone, and the supply of fuel nozzles of each depends on thinning in his cell. Because of various sizes and nature of changes in dilution in the large and the small diffuser, with an increase in throttle opening and engine speed, the nature of the fuel each page - smoke jets also varies. The main jet with increasing air flow through the carburetor impoverishes the fuel mixture, the compensation - on the contrary, enriches. The cross section of the main and compen - satsionnogo jets are chosen so that as a result of their joint action in the working mode semi - chaetsya fuel mixture is the desired composition and ensures economical operation of the engine.

Economizer - mechanical, connected with the axis of the throttle. Economizer included for enrich the mixture in a moment of almost full throttle when you need to get the most engine power regardless of its speed. At the time of inclusion economizer throttle lever *2* must not have reached all the way into the axis *3* to 6,2 - 6,8 mm (Fig. 45). Inclusion of the economizer can be easily determined to increase efforts in the axis of rotation of the throttle dampers for the lever arm *2*. Adjusting the moment include economizer is turning nuts *1* (Fig. 45) when installing rod *7* in the extreme hole *9* of the accelerator pump lever (Fig. 42). Economizer valve *17* (Fig. 43), placed in the bottom of the cylinder acceleration pump, opens when you click on its piston rod pump. From the economizer gas enters the spray compen - tional jet through a side opening 12 (jet power) in the block nozzles. Work carb at full throttle and turned economizer is shown in Fig. 45.

Accelerator pump is used for short-term enrichment of the combustible mixture with a sharp open - TII throttle (Fig. 43). Piston *18* of the accelerator pump rods connected with a lever, fixed on the axis of the throttle - slonki. Each sharp throttle acceleration pump injects into the mixing chamber carburetor through jet *25* additional quantity of gasoline. To increase the duration injection and protect parts from damage, the force on the piston pump is not transmitted directly sredstvenno, and

through the spring. From the float chamber fuel enters the cylinder acceleration pump through the valve *20*, which during the course of the piston down does not pass gas back to the camera. Discharge valve *23* does not transmit air from the mixing chamber in the cylinder acceleration pump gasoline at its filling, and at preventing, rotates the suction pump gasoline from the accelerator at a constant throttle position,

or slow its opening. In the carburetor provides for the possibility of the accelerator control tary pump by installing a rod *7* (Fig. 42) in the holes *8* and *9*, lever, located on the time - Mr. distance from the axis of the lever.

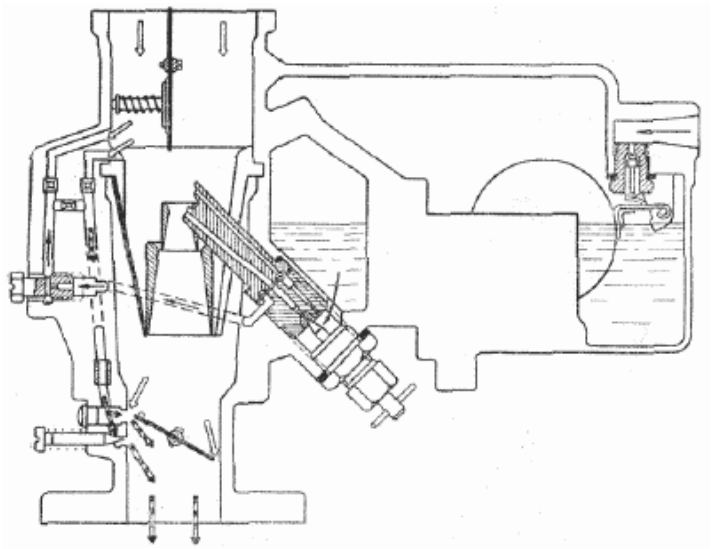

Фиг. 46. Работа карбюратора на холостом ходу.

Fig. 46. Job carburetor at idle.

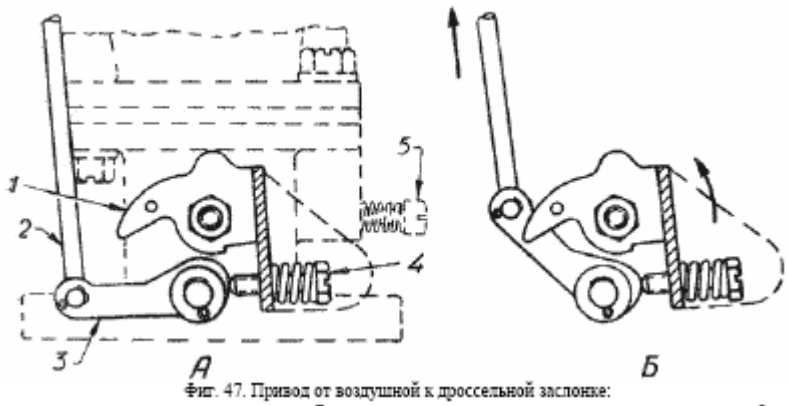

Фиг. 47. Привод от воздушной к дроссельной заслонке:

Fig. 47. Drive from the air to the throttle:

A - air damper is open, throttle closed, B - air damper is closed, throttle slightly open to the need, for Ignition and value; 1 - Lever throttle, 2 - draft of air to the throttle, 3 - lever with a cam

4 - screw adjust idle speed, 5 - screw adjust the mixture of idling. In the winter, to increase the fuel supply, traction should be placed in the hole *9*, in the summer, to reduce feed - in the hole *8*.

System Idle (Fig. 43). By idling jet *7*, located on the outside Stora HN corps carburetor, gasoline is supplied from the float chamber via a compensatory EA Petrzhik - ler. After jet *7*, gasoline mixed with air coming through the air jet *3*, forming mixture, which, passing emulsion jet *4*, the second time is mixed with air coming through jet *3*. The formed emulsion passes through the canal into the lower nozzle carburetor through the slit *9* and round hole, against whom an adjustment screw *10*. Wrapping the screw *10* decreases etsya flow emulsion in the bottom hole and spray the mixture is depleted; vyvertyvaniem screws -- mixture is enriched. Upper slit opening *9* serves to ensure a smooth transition of Small engine idle speed for increased.

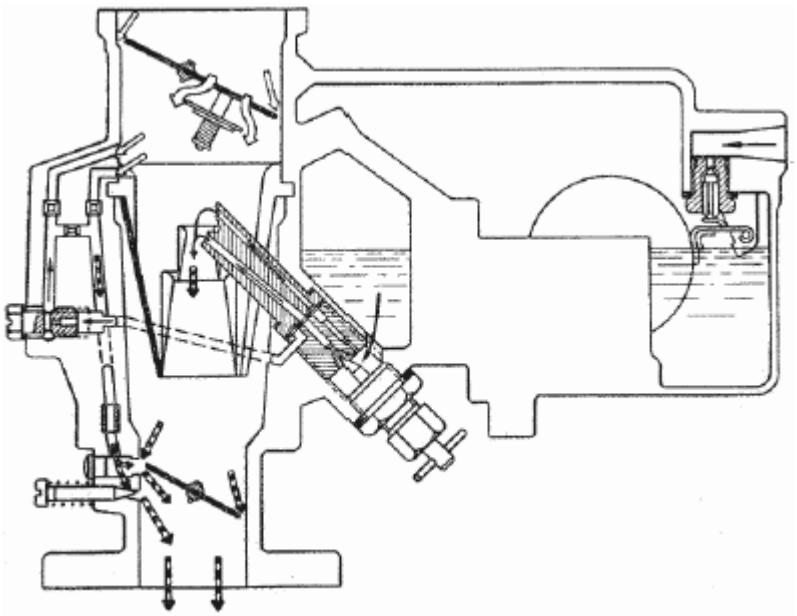

Фиг. 48. Работа карбюратора при пуске холодного двигателя.

Fig. 48. Job carb at start up cold engine.

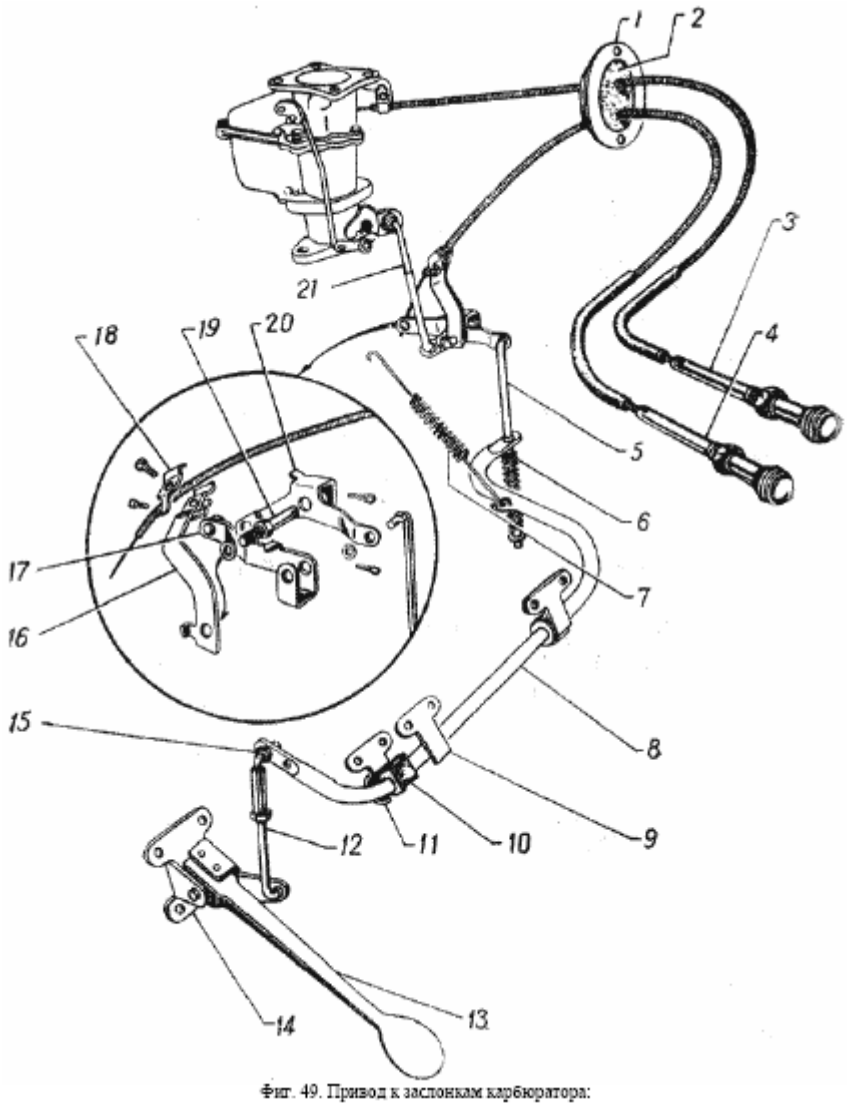

Фиг. 49. Привод к заслонкам карбюратора:

Fig. 49. Drive valve to the carburetor:

1 - ferrule sealing, 2 - seal envelopes, 3 - button "suction, 4 - button throttle, 5 - pull the lever shaft accelerator, 6 - spring draft, 7 - spring accelerator, 8 - roller accelerator, 9 - lining, 10 - bushing bracket 11 - bracket roller accelerator, 12 - thrust roller accelerator, 13 - accelerator, 14 - pedal bracket, 15 - hinge traction 16 - bracket shell traction, 17 - pull the lever, 18 - clamp shell, 19 - pin, 20 - lever, 21 - pull the lever.

The work-load system is shown in Fig. 46. To start a cold engine should be pro - harry enrichment of the combustible mixture entering the engine cylinders. This is done enlarge - eat dilution in the mixing chamber of the carburetor with choke *1* (Fig. 43), drive - My thrust with the driver's seat. In the flap is a safety valve *2*, preventing excessive enrichment of the mixture at start-up. This valve opens under the effect of dilution, overcomes the spring force when the motion gatel start working, and transmits the required amount of air into the mixing chamber. To ensure the successful starting of the engine to ensure that the air damper was tightly closed. Required if this priotkryvaniya throttle automatically through mechanical connection between the two flaps (Fig. 47). Lever *1*, combined draft *2* with air damper has a cam, which rests against the screw *4* re - gulirovki low idle speed associated with the throttle. Job carburetor with a cold engine start-up is shown in Fig. 48. The throttle plate car - byuratora system of rods and levers connected with the pedal *13* (Fig. 49), located in the back of the car. For prevent damage to parts of drive, when you press the pedal *13* to stop it in the floor of the body, effort of it is transmitted to the flap through the spring *6*. Button manual control valve is located on the dashboard of the vehicle (Fig. 4). *Care carburetor* is to maintain the purity of its exterior surfaces, verification hermetic seal and the needle position of the main jet, the periodic inspection of the level of gasoline in float chamber and the lack of backlash and jamming in the drive, checking and purging in the case of debris nozzles and cleaning the carburetor. Blowing jets should be done with compressed air using a hand pump to pump tires. Use to clean jets wire or other items not allowed. Cleaning spring plate diffuser carburetor from resinous deposits, causing increase - chenie fuel, is produced by immersing the cell for 8 - 10 hours in benzene (or turpentine) and the subsequent withdrawal of the film with a cloth dampened with the same liquid. The work of the carburetor can be monitored by color skirts insulator candles. If the work-moving telya at candlelight type M12U corresponding grades of gasoline and the normal thermal regime, skirt insulator Dr. candle is brown or brown, it means that the adjustment of the carburetor is correct. When the engine on a low-mix skirt candle is a light gray, and her image - etsya bubble oxide. When the engine at a rich mixture of the skirt and the electrodes are covered black, easily removed with soot. Candles should inspect the work after the engine under load. Adjusting the carburetor is made after disassembly or not working properly, it leads to excess fuel consumption and the deterioration of the traction qualities of the car.

The level of fuel in the float chamber is determined by a glass tube (internal diameter not less than 9 mm) without disassembling the carburetor, as shown in FIG. 50; it should be at 17 - 19 mm below the plane of the connector body and cover the carburetor. Filling the chamber is done by the manual swap petrol pump for 5 minutes. Adjusting the fuel is produced at SAE - of the lid by podgibaniya uvula and relied on the needle valve, as shown in FIG. 51. When This is necessary to check whether your on - fusion, the lack of it jamming on the line and work needle valve. Adjust the main jet *13* pro - usual needle *15* (Fig. 43). The optimum opening of the needle depends on the quality of applicability - On fuel and lies within 1 - 2 turns its from the wrapped position. At an orientation Noah adjusting the needle, it should turn away - ta 1 3 / 4 turnover. More accurate adjustment can be pro - driving on a hot (80 ° C) engine in the follow - blowing procedure:

1) raise the jack stand at the front - ny and the rear axle so that the oscilla - sa not touching the floor;
2) put the lever in the front axle in proposal "on" to prevent the bully bushings at the front end of the secondary shaft once - datochnoy boxes;
3) start the engine and include direct transfer;
4) open the throttle with the button manual control so that the speedometer showed 50 km / h;
5) Loosen the needle jet at the two main Traffic from the position at which the moving - Tel worked to adjust;
6) wrap the needle on 1 / 4 turnover, with slushivayas to the uniformity and tone of the motion gatelya to a noticeable reduction in turnover (with reducing the speedometer on 5 - 8 km / h), often accompanied by the appearance interruptions in his work;

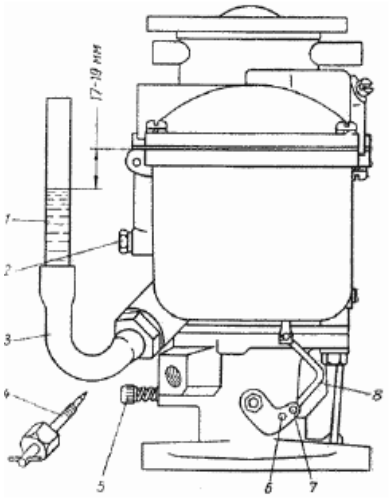

Фиг. 50. Замер уровня бензина в поплавковой камере:

Fig. 50. Gauging the level of gasoline in the float chamber:
1 - glass tube, 2 - jet idling, 3 - rubber tube, 4 - adjustment needle, 5 - screw adjustment quality mixture, 6 and 7 - the opening thrust of the accelerator pump, 8 - draft accelerator pump.
7) wrench on the needle 1 / 8 Traffic to the cessation misfire and a marked increase in Kazan speedometer; 8) turn off the ignition, turn the needle, counted its speed to determine the received control, and unscrew it again to the found number of revolutions. A needle is better to open a little (to 1 / 8
turnover) more than required at the setting in order to not get into a zone of precarious work carburetor (with "failures"), which causes excess fuel consumption. To refine the adjustment should be pro - harass in a vehicle. When ra - Bothe car on short journeys with frequent continued
Prolonged stop you have to give a more rich mixture, with long-town trips mixture to impoverish, wrapping up the needle on 1 / 8 -- 1 / 4 turnover comparison pared to urban adjustment. In winter, the regulatory perature should be somewhat richer than in the summer. Pra - Vilna use of the adjusting needle main nozzle provides significant savings of gasoline the operation of the vehicle.
Adjusting the engine **idling speed** is on a hot engine, after pro - verifications and the correct installation of ignition and gaps in the contact breaker and spark between the electrodes. Work done by regulation of the engine with the least stable idling speed (450 - 500 rpm) on the ability of poor mixture. The adjustment with two screws: screw *4* (Fig. 47) on throttle lever controls the amount of the mixture and the screw *5* in the channel idle - the quality mixture. When otvertyvanii Screw *4* throttle is closed and the engine speed decreases, with vvin - Chivanov screw *5* mixture is depleted, with otvertyvanii - enriched. Before the adjustment screw *4* vvertyvayut, and screw *5* wrench 1 1 / 2 - 2 turns. The sequence of engine idle speed as follows:
1) turning away the screw *4*, to fix the steady pace;
2) wrapping up the screw *5*, to impoverish the mixture until the engine begins to make cuts, then this screw a little wrench for smooth operation of the engine;
3) repeat the operation - the first and second;
4) examine the sharp adjustment of the opening and releasing the throttle. If the engine is not muffled, adjustable up correctly. Otherwise, the fol - em a bit to increase the idling speed.
Adjust idle speed for a lean mixture protects the candle from zakapchivaniya and thereby eliminating disruptions in the ignition.
The check orifices produce **jets** by identifying their capacity-ACT IMD, ie, the amount of water in cm 3 Having a temperature of 20 °, which flows through the orifice in one minute under the pressure of one meter. Throughput jets carburetor K-22D cm 3 rpm: Main 220 Compensation 280 Jet idling 52
Major fault carburetor. During the operation of the vehicle to the desired composition mixture of one reason or another is broken, leading to unsatisfactory performance of the engine. Ra - boat engine pereobogaschennoy mixture is accompanied by a dark colored exhaust gas and flares, Kami ("shots") in the muffler. The reasons for the enrichment of the combustible mixture, causing excess fuel consumption, are:
1) increased level of gasoline in the float chamber;

2) pouring gasoline through the spray of the main and compensating jet due to non leak needle valve in the float chamber;
3) leakage of the valve of the economizer;
4) incomplete opening of the air damper;
5) excessive otvertyvanie adjusting the main needle jet;
6) hole in the block gaskets dispensers and nozzles;
7) fuel leak through the junction of the shell and flange of the main needle jet;
8) incorrect adjustment of idling.

If you are a poor mix engine overheats badly and does not develop a large number of revolutions.

Acceleration of the engine in case of sudden opening of the throttle is deteriorating. Working poor mixture accompanied by a flash ("sneeze") in the carburetor.

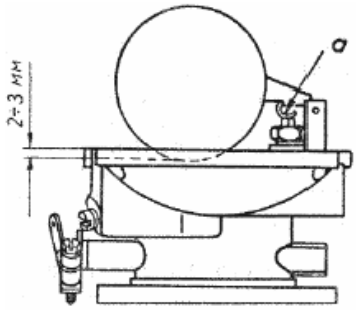

Фиг. 51. Регулировка положения поплавка:
а - язычок.

Fig. 51. Tilt the float:
and - tongue.

The reasons for the depletion of the combustible mixture are:
1) lack otvertyvanie adjusting the main needle jet;
2) clogging of the main, compensating jet, or jet idling;
3) refusal to work the accelerator pump;
4) leakage in the connection flange of the lower pipe carburetor.

Air Filter - mesh with an oil bath (Fig. 52).

As a result of the dilution created by the engine during operation, air is sucked through the slit inter - DU shell and cover the filter and is directed downward. After reaching the supporting ring *1*, moistened with oil, air dramatically changes its direction, leaving oil in the largest dust particles. Pulling the drops of oil, air passes through the mesh rolled into a cylinder *4* and cleaned, leaving the dust on the coated oil grid. Oil flows on the grid and carries the dust on the bottom of the case itself is a grid with the refined. Cleaning the air filter is up as long as its net wetted with oil.

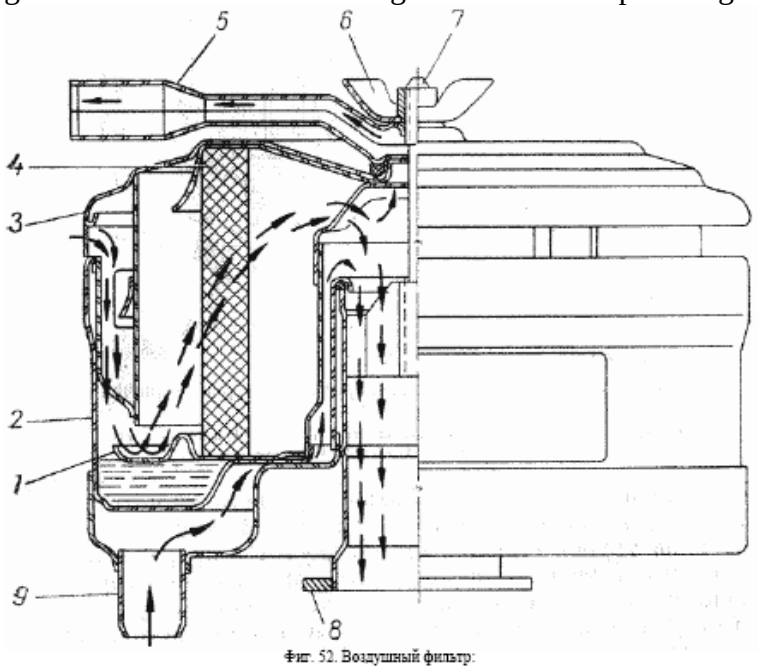

Фиг. 52. Воздушный фильтр:

Fig. 52. Air filter:

1 - foot ring nets, 2 - filter housing, 3 - filter cover, 4 - mesh filter, 5 - crankcase ventilation tube, B - butterfly nut mounting crankcase ventilation tube, 7 - bolt mount filter, 8 - pipe filter, 9 - crankcase ventilation tube.

Branch pipe filter *8*, which sits on the housing *2* is attached to the carburetor flange with four bolts; cover *3*, together with the crankcase ventilation tube *5* fixed nut-lamb *6*. Between the lid *3* and tube *5*, as well as between the body *2* and the pipe *8* placed seals. Bottom housing a tank with a pipe welded to it crankcase ventilation *9*. *Care filter* is periodically (simultaneously with the change of engine oil) cleansing filter and change oil in it. When working on the dusty roads of oil change the filter needs to produce a daily basis. To clean the filter to unscrew the nut *lamb-6* (Fig. 52), remove the lid *3* and remove the grid. Wash the grid in kerosene and allowing him to drain, moisten the grid with oil. Remove support ring *1*, to merge from the cor - Pusa dirty oil and wash the ring and the body with kerosene. Pour into the body (0,25 l) A net or spent - Noe, a well-settled butter, blended from the engine, and build a filter.

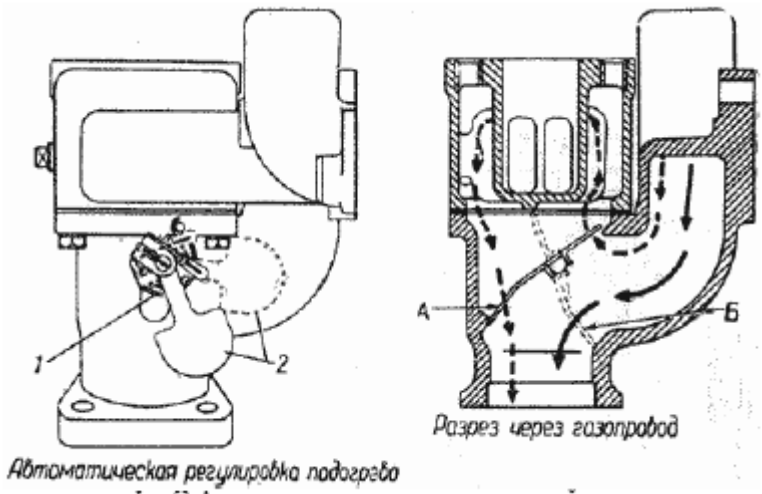

Фиг. 53. Автоматическая регулировка подогрева горючей смеси:

Fig. 53. Automatic adjustment of heating fuel mixture:

1 - spring, 2 - load. Regulations: A - summer (small heating), B - winter (high heating).

Inlet pipe of gray cast iron. Top in the middle of the pipe has a pipe on the flange which establishes the carburetor, the bottom to the flange with four bolts attached outlet pipe. Between the flange to the exhaust pipe is put staleasbestovaya gasket. Pipe has two pipe separated by partitions cast, flanges where it joins the bloc. Below, in the back of the tube has a hole plugged with a tapered thread for drainage gasoline at peresosah during engine start. The average outlet is surrounded by a heating jacket of the combustible mixture, which is washed by the warm reflection oped gases, to improve the evaporation of gasoline. The degree of heating fuel mixture is regulated for - slonkoy, located in the vent automatically with the help of a bimetallic spring measured propagating its tension, depending on temperature. While the engine is cold, the spring holds the valve *1* in position *B* (Fig. 53), which corresponds to em big heating. When the engine warms up and spring tension decreases, the flap under the influence of load *2*, recognized by law and prisoner on its axis, turns and takes *a* position that corresponds to a small heated.

EXHAUST GASES

The exhaust system consists of a gas exhaust pipe connected to the inlet pipe to the overall gas wire motor attached to the block of pins, and the silencer to the reception and the discharge pipe. Ha - zoprovod engine GAZ-69 is unified with the gas pipeline engine M-20. Between the flanges of the pipeline and unit installed staleasbestovye gaskets. Flange pipeline connects to the receiving tube silencing staleasbestovuyu three bolts through the liner.

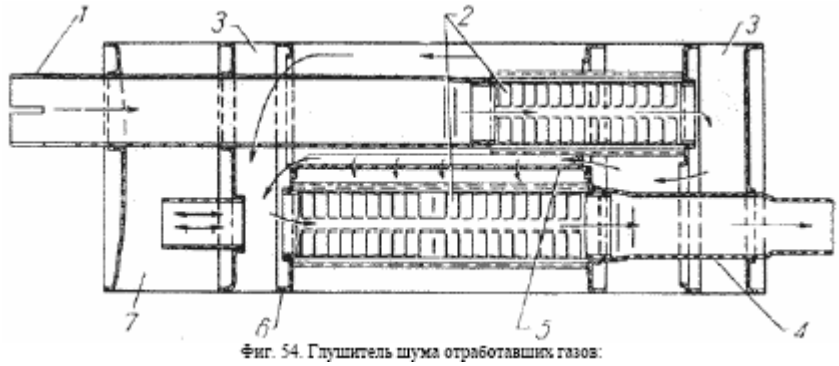

Фиг. 54. Глушитель шума отработавших газов:

Fig. 54. Exhaust silencer:

1 - suction intake, 2 - perforated pipe, 3 - Expansion chamber, 4 - exhaust pipe, 5 - a longitudinal septum, 6 - lateral septum, 7 - resonator chamber.

Care for the gas pipeline is a periodic lifting bolts and nuts of his attachment to the block and receiving tailpipe.

Exhaust silencer - ram, three-chamber (Fig. 54). Exhaust from the engine comes to the suction intake muffler *1*, having at the end perforated pipe *2*. The gases leaving the tube *2* in the chamber *3*, expand and reduce speed. From the chamber *3* gases pass into the next cell through a hole in the partition *5* and the second perforated centered tube terminating outlet *4*, go into the atmosphere.

Passing through the first perforated pipe, gas partial view of the camera, connected to the camera *3-hole* in the longitudinal bulkhead *5* muffler, and fill the resonator chamber *7*. As a result of consistent expansion chamber muffler filling gas pressure decreases, and they go into the atmosphere with almost no noise.

ENGINE SUSPENSION

The engine is attached to the chassis at three points on rubber pads, two attachment points for the printed ted in the front, one rear (Fig. 55). Front suspension type has a tangential two pillows *3*, located obliquely to the axis of co - lenchatogo shaft.

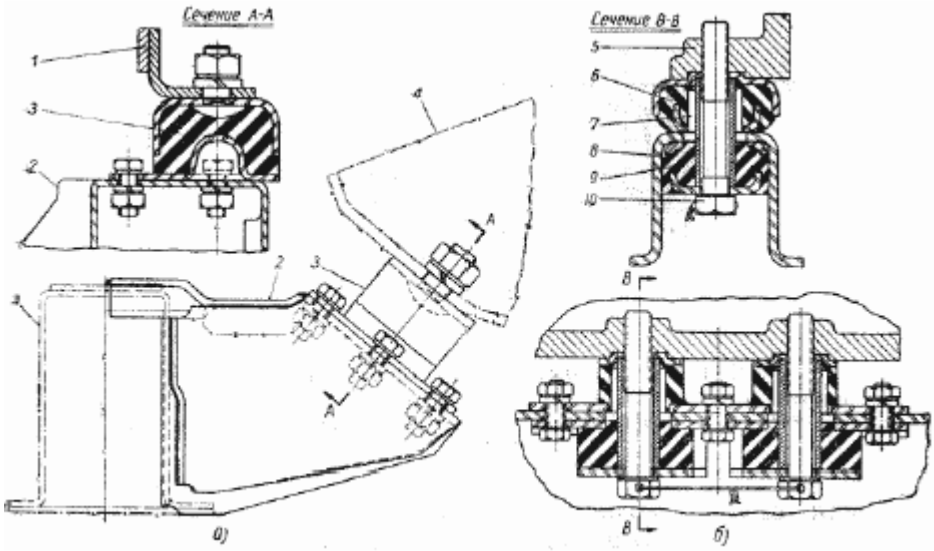

Фиг. 55. Подвеска двигателя:

Fig. 55. Suspension engine:

and - front suspension, b - rear suspension, 1 - spar frame, 2 - front support bracket, 3 - pillow front support, 4 - plate covers the distribution of gears, 5 - Carter, clutch, 6 - upper back support pillow, 7 - distance sleeve, 8 - crossbar frame, 9 - lower back support pillow, 10 - bolt.

The pillow privulkanizirovana armature, which is attached by bolts to the bracket on the frame and paws to the front bearing plate of the engine. The rear suspension is located between the engine crankcase clutch and transmission housing, she consists of two pillows placed on top and bottom cross *8*. Upper cushion *6* has fixtures above in the form of steel plates that protect it from falling oil; to the bottom cushion *9* privulka - attendants; otherwise fitting that the top is attached by three bolts to the crossbar. Pillows shrink bolts *10*, screwed into the crankcase clutch delay which is limited to the spacer *7*.

CARE OF THE ENGINE

1. Nuts cylinder head engine should pull up after running the car and a thousand miles after each removal of the head. Forehead should be done in sequence ARRANGEMENTS indicated in Fig. 11. Forehead should be done only key to be given to the vehicle, without falls, the effort of one hand, on a cold engine. Too heavy lifting can cause breakage pins.

2. It should clean up the engine of carbon, which is formed in the cylinder head and piston. With proper, neiznoshennom engine, in the presence of high-quality gasoline and Oil and subject to proper heat treatment (80 - 90 ° C) soot is small. In addition, the length tional suburban driving long distances at high speed before you formed snuff - Mountain - and the head is self-cleaning. When engine wear, especially the piston rings, cylinder engine gets a lot of oil and on - razuetsya thick layer of soot. The presence of carbon determined by the following characteristics of the engine: strengthening of detonation, overheating, drop in engine power, the increasing cost of gasoline and oil. To clean the soot from the engine cylinder head should be removed. If the engine is worked on these, correlated gasoline, the carbon deposits before scraping to wet kerosene. 3. After 35 - 40 thousand kilometers engine usually needs to change piston rings and connecting rod liners. In the wear of piston rings, engine loses power, increased oil consumption, reduce decreases compression, increased output gases through the crankcase ventilation, there is pollution carburetor resinous deposits. If you change the rings must be cleaned of soot grooves of the piston and the holes in the grooves for oil - removable rings. Connecting rod liners should be changed, not because they were already worn out, but due to ingress of large number of solid particles, more wear on the neck of the crankshaft. Connecting rod contribution for breathe should be replaced in the standard or reduced by 0.05 mm, depending on the wear of the necks. 4. Check and adjust the clearance between the valves and push made in the following orders of magnitude - Re:

a) raise the front axle jack, put on the stand, remove the right front wheel and bryz - govik;

b) To remove the lid valve box;

a) turn the crankshaft in a position where the first cylinder exhaust valve (the first valve, starting from the front end unit) is fully open, and then turn the crankshaft even at half - turnover;

d) check probe clearances inlet valves of the second and fourth cylinders (the third and seventh valves, starting from the front end block) and exhaust valves of the third and fourth cylinders (fifth and eighth valves). Clearances at cold start should be at the intake valves 0,23, graduations -- 0,28 mm;

d) If the gap is incorrect, then hold the key pusher for existing on it Lysko, weaken locknut and turn adjusting screw, set the necessary clearance. After adjustment locknut tighten and then check clearance;

e) turn the crankshaft one complete revolution and, if necessary, adjust the gaps in intake valves of the first and third cylinders (second and sixth valves), the exhaust valves of the first and second cylinders (first and fourth valves). When adjusting in any case should not be reduced backlashes against the above. Decrease in tion gaps can cause not dense landing valves on the saddle and get burned. Slight increase gap causes knocking in the valve mechanism, but they are not dangerous for the engine.

5. There should be no need to disassemble the engine, because it violates the landing when - worked out the details.

BRIEF INFORMATION ON ENGINE REPAIR

Overhaul of the engine, in which he half - tions disassembled, bore cylinders and polished crankshaft journals should be made according to needs - sti. The main defects that cause require - Property in the repairing of the engine are:

1) Increase pass gas rings, the caller increased pressure in the crankcase, causing oil leaks through the glands, and other compounds in the engine;

2) drop in engine power;

3) increased consumption of oil (over 0.5 liters per 100 km);

4) drop in pressure in the lubricating system of engine below 1 kg / cm 2 at medium speeds or when driving a car for direct transmission speeds of 40 - 45 km / h;

5) a sharp knock in the engine.

Term of the engine to overhaul dependence Sieve mainly on the operating conditions of the car.

Roughly, during normal operation, capital - HYDRATED engine repair must be made no earlier than across. 60 - 80 thousand kilometers of the car.

Фиг. 56. Проверка зазора в замках поршневых колец.

Fig. 56. Checking the gap in castles piston rings.

To extend the life of the engine to repair should be performed replacing piston rings and connecting rod liners, and and lapping valves, in 35 - 40 thousand km run. This will significantly enhance the durability such expensive and difficult to repair parts, a cylinder block and crankshaft of the engine. Liners should be changed not because of their wear usually very small, but because of falling babbitt in a large number of solid particles leading to increased wear of the necks of the shaft. The change liners bearings should be pro - drive only when necessary (knocking indigenous bearings), as it requires the removal of engine with the car. Note. Since late 1955, the engine shall cover the front bearing with drowning pin. This allows you to take cover the front bearing (pressing drown - Officer pin, so as not to damage the lining plates HN) without removing the engine from the car. For the purposes of repair plant produces piston rings increased diameter: 82,25 mm, 82.5 mm, 82.8 mm, 83.25 mm and 83.5 mm. Marking (increase in diameter) dimen - ditch repair rings is one of its ends. Standard rings are not marked. Identified in the cylinder ring must have a gap in the castle 0,2 - 0,4 mm. The gap is adjusted to ensure cylinder, which will operate the ring, sawing his joints. To adjust the rings to the cylinders You can use the ring a few large size, not exceeding, however, 0,25 mm. Checking gap in the castle, there must be a ring without the distortions in the area of the smallest diameter of the cylinder in the pre - affairs of the piston rings (Fig. 56). Fitted to the cylinders and the grooves in the piston rings must put on the piston by means of a special device (Fig. 57). Must be remembered that compression rings should be placed facet, available on their inner cylindrical surface ARRANGEMENTS, upward (Fig. 13). Locks adjacent to the piston - rings worn on the piston must be removed one relative to the other approximately 90 °. To avoid damage to the rings when you enter piston in the cylinder should use special crimp device type shown in FIG. 58. If you change piston rings (without changing Porsche it) is necessary to remove carbon deposits from ring grooves and maslootvodyaschih holes of the piston and with his head. Na - harmonics of maslootvodyaschih holes located in grooves for oil rings, removed drill 3 mm. If you change the pistons need to pick them ensure proper clearance between the piston and cylinder. This gap must be between 0,012 -- 0,024 mm. Selection is tantalizing - probe planted between the piston (without the piston to - rings) and the cylinder along the entire length of the piston, opposite slits in the skirt (Fig. 59). Value efforts with tantalizing in normal com - room temperature to 20 ° C must lie within 2,25 - 3,25 kg. Belt dimensions: thickness - 0,05 mm, width at - 12 mm and length - 250 mm. For the purposes of repair plant produces liners repair sizes with reduced internal diameter of 0.05, 0,25, 0,30, 0,50, 0,75 and 1,25 mm. The outer diameter of repair - GOVERNMENTAL liners are identical with similar standard liners. Replacement liners should be pro - to associate only in pairs, without fitting, replacement of a liner is not allowed. When changing inserts non - required to ensure that:

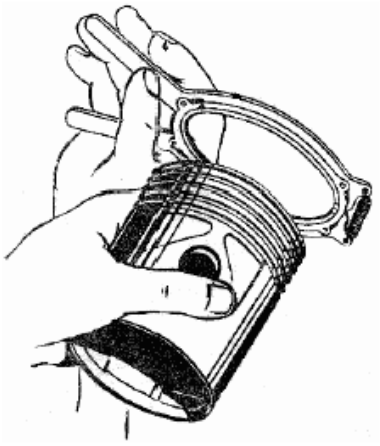

Фиг. 57. Приспособление для надевания поршневых колец на поршень.

Fig. 57. Device for putting on a piston rings on the piston.

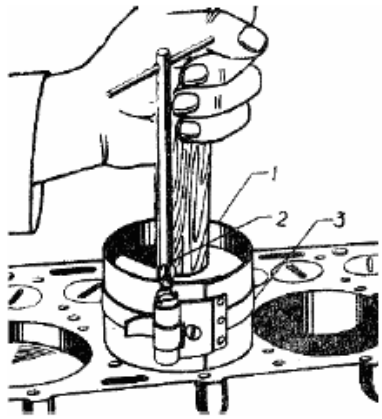

Фиг. 58. Приспособление для установки поршневых колец в цилиндре

Fig. 58. Adapting to install piston rings in the cylinder:
1 - strap, 2 - key 3 - coupling tape.

1) Adjusting the tabs on one of the joints each liner correctly included in the slots, I have - schiesya in bed; 2) the upper halves of the root liners bearings in the middle of which there are openings for the supply of lubricant, were placed in bed unit, and the lower tion halves without holes - in the bed covers. When improperly installed liners oil will not come to a radical, but also to connecting rod bearings, resulting in these sub - shipniki neck and shaft will fail. Radial clearance in the connecting rod and indigenous sub - shipnikah should be 0,026 - 0,077 mm. Necessary - ìûé by changing the size of the liner is selected in dependence bridge from the actual size of the diameter of the neck shaft. It is strictly forbidden to file down or prishabri - vat lids bearing joints, and are set - vat pads under the ear to reduce slish - com large radial clearances in bearings. Also unacceptable prishabrivat liners because of the small thickness of the layer of Babbitt. In exceptional cases, for small increased diametral clearance in the individual sub - shipnikah allowed to apply for adjustment laying of brass foil. Gaskets in this must necessarily WMO - dit also in the junction between the Provisional and inserts Nia snug fit liners to the bed. The thickness of the pads, mounted on both sides of the bearing should not exceed 0.05 mm, and installed on the one hand - 0,1 mm. Change of pistons, rings and connecting rod liners performed without removing the engine from the automo - Beal. In this case, to reverse the post - adjustment elements of the place of the oil sump and replacement cork seals must front and rear pad moistened oil. The ends of the cork gasket to assembly steamed in hot water (80 -- 90 ° C), then greased on both sides solid oil and tied each thin thread in two places to the crankcase through-hole stie for bolts. Insert sump and sub - Giwa bolts should be carefully watching so that the ends of the front and rear plug - howl pads not break and no bending - condom was used as the otherwise inevitable flow in these compounds. Same carefully ing performance is necessary for installation front and rear crankshaft oil seals shaft. Front oil seal, pressed into cover distribution of gears, long - female mounted concentrically to the shaft axis with a special mandrel (Fig. 60).

Rear gasket before installing the shaft must be pressed by the mandrel speed, which is clamped a lid bearing (Fig. 61).

Interchangeable units and parts ENGINES GAZ-69 and GAZ-51

Crank Mechanism: pistons, piston rings and fingers, snap rings Porsche Financials finger, the upper sleeve head and connecting rod bolts, bushings front and medium-sized indigenous bearings workers, front and rear bimetallic and hard steel plate, crankshaft, gear and hub crankshaft pulley, ratchet, front oil seal, gasket and the rear flange holders, locking

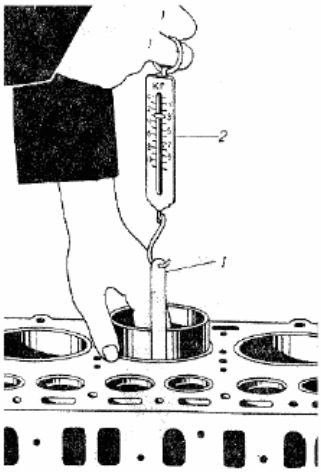

Фиг. 59. Подбор поршней к цилиндрам:

Fig. 59. Selection of the pistons to the cylinders:
1 - tape-probe, 2 - Spring scale.

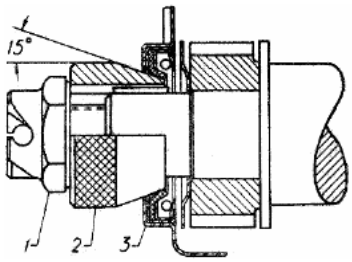

Фиг. 60. Центрирование переднего сальника коленчатого вала

Fig. 60. Centering the front flange of the crankshaft installing the cover distribution of gears:
1 - ratchet 2 - arbor, 3 - cover distribution of gears.

plate bolt rear-Root On the bearing, flywheel bolts, drive shaft bearing box - Key gear in the flywheel.

Distribution Bf anism: intake valves and you - pusknye, guide bushings valves, springs and biscuits cluster pans, bumper EPAM - HN, saddle valve, pushers, adjustment screws pushers with locknuts, bime - full metallic sleeve bearings distribution divider wall, textolite timing gear and washer its mount, hard flange.

Lubrication system: oil - receiver assembly, tube mass lopriemnika, clamp seals front of the oil-map ra, gears (Master and Slave) oil pump, the axis of the driven gears and parts reducing - First valve oil pump prefilter and all its details except the arms and roller, fine filter assembly and oil cooler (no corporations sa and oil-lines).

Cooling system: water pump and all its parts, fan belt, thermostat, cork Radiation torus.

Power supply system: petrol pump, petrol tank.

Gaskets: lid rear bearings of the crankshaft (right and left), oil Carter (front and rear), staples sealing the front of the oil pan, valve cover, GOVERNMENTAL gears, housings and covers the oil pump, oil filter coarsand fine cleaning, hull water pump, thermostat, petrol pump, petrol tank, the bottom of the crankcase coupled - Niya.

https://truckmanualshub.com/

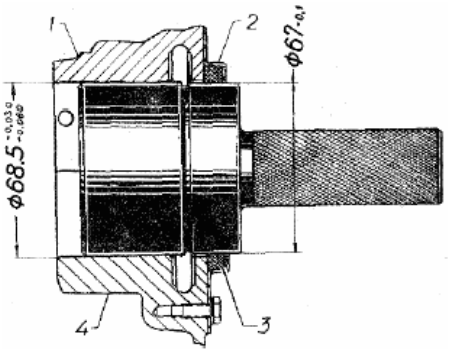

Фиг. 61. Опрессовка заднего сальника коленчатого вала с помощью

Fig. 61. Crimping the rear flange of the crankshaft with the stepped mandrel:
1 - bearing, 2 - the holder of the omentum, 3 - packing gland, 4 - cover bearings nick.

Chapter III CHASSIS CLUTCH

Strength GAZ-69 - single-plate dry with a vibration absorber on the slave drive (Fig. 62). From car clutch M-20 differs only more powerful compression springs *18.* This provides a higher coefficient of adhesion, which is necessary to avoid slipping when working in heavy traffic conditions. Clutch consists of two structurally distinct parts: the pressure plate *21* with a casing clutch *19* in the collection and the driven clutch plate *2* in the assembly. Punched clutch housing *19* is attached to flywheel *1* by six bolts. Rotate the pressure plate is transferred from the flywheel through three lugs am - ing in the disk and outside the window casing, clutch.

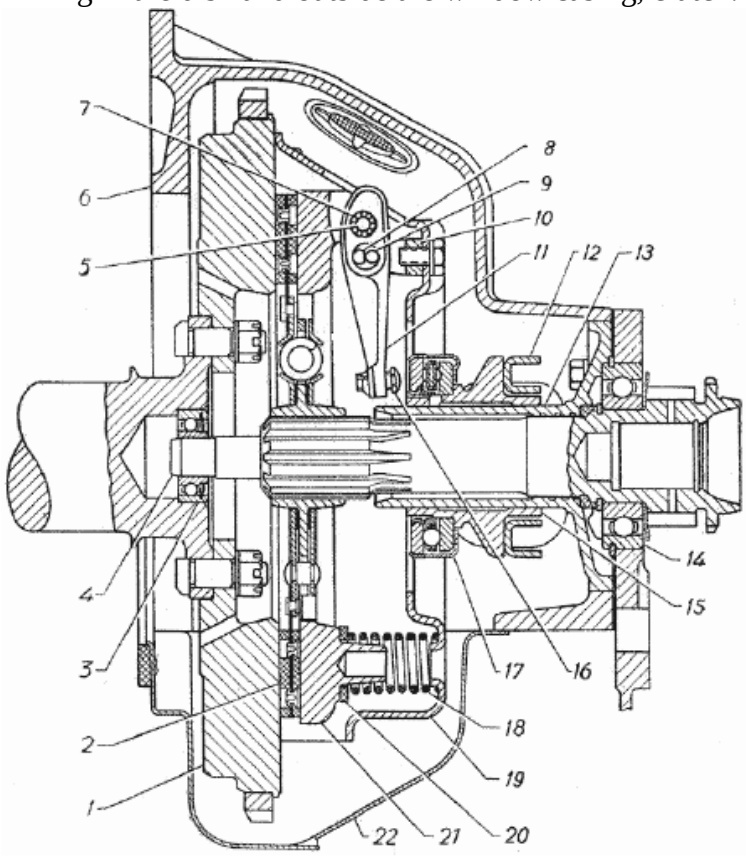

Фиг. 62. Сцепление:

Fig. 62. Strength:

1 - Handwheel, 2 - slave drive, 3 - bearing drive shaft gearbox, 4 - primary shaft gearbox, 5 - axis of the lever on pressure plate, 6 - casing coupling, the upper part, 7 - needle bearing, 8 - axis of the lever on the support fork, 9 - video, 10 - cradle - Nye fork clutch lever, 11 - clutch lever, 12 - clutch fork, 13 - cap bearings Nick primary shaft of the gearbox, 14 - bearing drive shaft transmission, 15 - clutch clutch, 16 -- adjusting bolt, 17 - clutch bearing, 18 - spring clutch, 19 - clutch cover, 20 - thermal insulation (asbestos) washer spring clutch 21 - the pressure plate, 22 - lower part of the crankcase stamped clutch.

Six springs *18* is clamped slave clutch disc between the ends of the flywheel and pressure plate. To prevent the release of springs due to heat friction linings slave drive under them put asbestos, insulating washers *20.* For the clutch to clutch *15* with sitting on her hard ball bearing *17* to move to the left. This rotating bearing ring rests on the head bol - Comrade 16 levers *11.* Last divert pressure plate from the flywheel and released slave drive. Lever *11* mounted in a pressure plate on the needle bearings *7.* Rotate the lever is carried around the axis *8,* installed in the fork *10,* a fortified enclosure in the clutch. Since the axis having Lysko, touches Ro - face *9.* This suspension design allows you to change the distance between the axis of the bearing *5* and the axis *8,* which inevitable when you turn off and the clutch engaged and ensure easy movement of pressure plate along the axis. Needles *7* and the rollers *8* are produced on Bearing Plant.

DEVICE STATEMENTS Clutch Disc

Slave clutch disc GAZ-69 is the same as a car M-20 (Fig. 63). Each of the friction pads *1* and *13* priklepyvaetsya separately to the four spring-loaded plates *3,* riveted, in turn, to a steel disk *5.*

Plates *3,* made of thin sheet steel and slightly curved, play the role of the elastic ele - ment, ensuring the inclusion of a soft grip. Disc *5* with six springs *11* connected to the hub *8,* sitting on the slots of

the primary shaft gearbox. For one with the hub flange *8* is made on both sides of which are located CDs *5* and *12*, these drives are interconnected saw off both sides of the fingers *7*, located slots in the flange hub *8*. Torque from the engine to the drive shaft frame is transmitted at the initial time through spring *11*, the value of compression which is proportional to the moment. This provides - Xia soft clutch engaged. Compression springs limited emphasis finger *7* in the wall cut-outs in flange of the hub *8*.

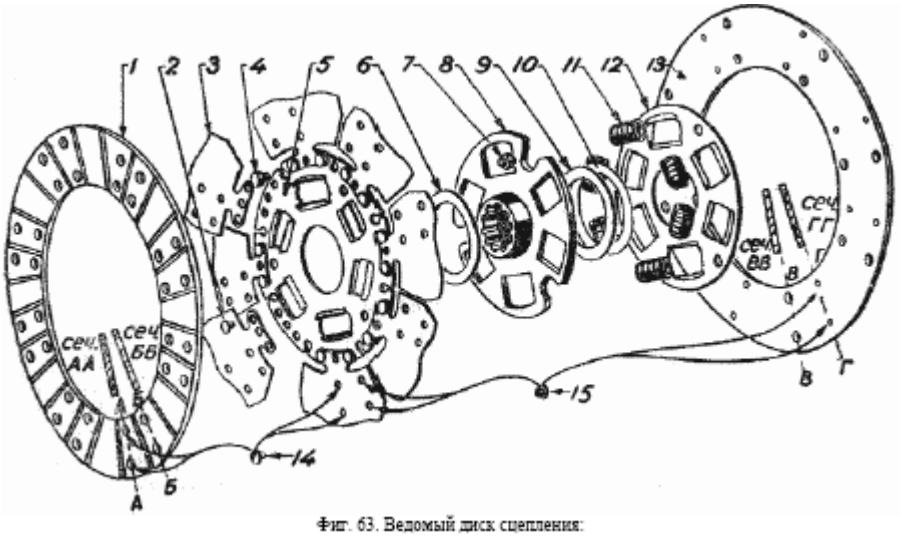

Фиг. 63. Ведомый диск сцепления:

Fig. 63. Slave clutch disc:

1 - friction lining, 2 - rivet, 3 - Plate wavy spring, 4 - a balance weight, 5 - Disk 6 - friction Xai ba, 7 - thumb, 8 - hub 9 - friction washer, 10 - adjusting steel washer, 11 - spring hub, 12 - CD 13 - clutch - Nye lining, 14 and 15 - rivets fastening the friction linings.

To prevent the possibility of significant torsional vibrations in the system transmission given extinguishing device consisting of friction paronit washers *6* and *9*, sandwiched between the flange hubs and discs *5* and *12*. Vibration is carried through the friction between the details. When you build a factory clutch friction torque tuned mass dampers installed within 1,5 - 1,9 kgm with steel adjustable washers *10*.

Device causes clutch (Fig. 64)

Clutch by pressing his foot on the clutch pedal *7*. When lowering pedal springs *9* and *10* return the pedal to the starting position and the clutch is included. Clutch pedal rod *7* through *11* related to the intermediate roller *14*, mounted on spherical pin.

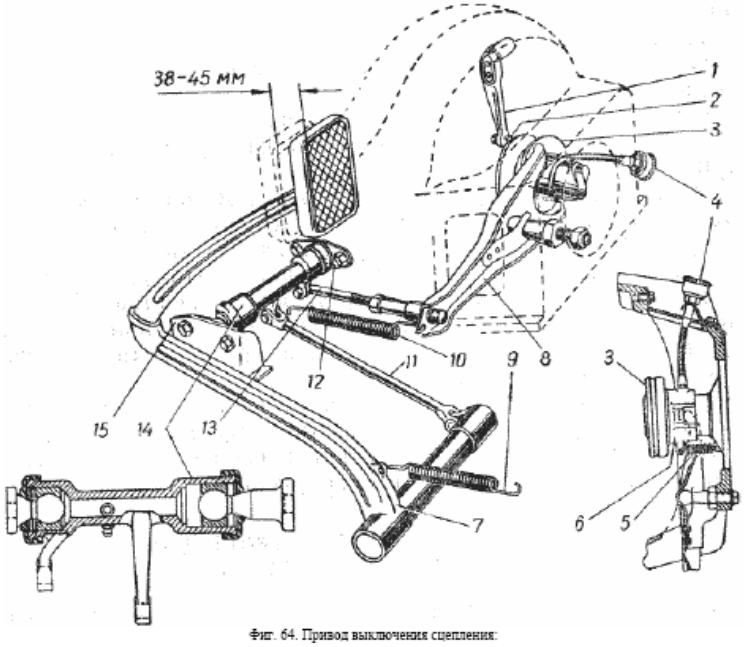

Фиг. 64. Привод выключения сцепления:

Fig. 64. Drive clutch:

1 - snatch lever, 2 - adjusting bolt snatch lever, 3 - thrust bearing clutch, 4 - Cap-mas Lenca, 5 - snatch spring clutch, 6 - clutch clutch, 7 - the clutch pedal, 8-clutch fork, 9 - of - tyazhnaya spring

pedals, 10 - snatch spring clutch fork, 11 - thrust roller clutch, 12 - bracket bracket roller clutch on the engine, 13 - pusher clutch fork, 14 - roll off coupled - Nia, 15 - a support bracket roller clutch on the spar. Intermediate shaft connected to a pusher *13,* is pivoted fork *8* ball around your finger. Fork moves the sleeve *6* with sitting on her contact ball bearings clutch *3.* The rotating bearing ring rests on the bolt head *2,* screwed into the ends of the levers *1.* Levers turning, turning off the clutch. Grease bearing clutch is Cap lubricator *4.* Grease to the bearing passes through a flexible hose. Butter is the right side of car - tera clutch. Access to the oiler from the bottom of the car. If the flexible hose for some reason was withdrawn and removed from the grease or he for - menen new, then after installing in his place be filled with grease in the number of double filling lubricator. Lubrication in the bearings will begin only after the third refueling lubricator. It should be because run abundant lubrication of the bearing, leading to the lubrication of the friction linings slave drive and slippage clutch. During the drive can not keep his foot on the clutch pedal, as it leads to premature failure of the bearing clutch and clutch as a whole - due to the inevitable with his slip.

CARE Clutch, ADJUSTMENT, TROUBLESHOOTING

Care for the clutch is systematically adjusting freewheel clutch pedal, infringed by the wear of the friction lining disc, bearing lubrication and friction parts drive clutch and in addressing some faults that appear when operating a tion of the car. As the wear of the friction linings driven clutch plate thickness is reduced and on - zhimnoy drive closer to the flywheel. This leads to a decrease in the gap between the bolt head *16* of levers *11* (Fig. 62) and rotating bearing ring *17.* For a small gap or lack of it will inevitably encounter a ring bearing with heads bolts, which leads to a reduction of force pressing springs *18* and, as a consequence - slippage clutch, rapid - rum wear of friction linings, as well as to premature failure of the bearing off adhesion. Value of the above gap should be 3.5 mm. It produces a periodic regula - perature freewheel clutch pedal, which when engine off should be equal to 38 - 45 mm. Failure to comply with the requirements of storage freewheel clutch pedal to the limits leads to the appearance in the exploitation of two characteristic failure of adhesion: the incomplete integration of (slipping clutch) and incomplete off (clutch "leads"). a sign of incomplete shutdown are: the difficulty of shifting and noise when switching. Both defects lead to prezh - devremennomu output clutch failure. Adjustment effected by changing the length of the pusher *13* (Fig. 64). Navertyvaniem tip with a ball head on the plunger rod length decreases, and the free pedal increases. In It should adjust to the tip Lock the nut. Not allowed to adjust the gap by bolts *16* (Fig. 62), as these bolts mouth - renewed and the ends of their zakerneny a lever at the plant so that the bearing ring in contact simultaneously with all three of their heads. Violation of the factory setting will lead to distortions in - zhimnogo drive and clutch will "lead." Adjusting the gap by means of bolts 16 may be required only in the repair of clutch. Lubricate bearing clutch should be in every thousand kilometers in vertyvaniem cover lubricator *4* (Fig. 64) for two or three turns.

Removing and installing CLUTCH

Remove the clutch can, without removing the engine from the car. The order of disassembly: 1) remove the gearbox and the lower part *22* forged crankcase clutch (Fig. 62), 2) Loosen the six screws fastening the casing pressure plate clutch *19* to the flywheel, to withdraw several clutch back, remove the slave clutch disc *2* and after him - the pressure plate along with co - zhuhom clutch. Before mounting the enclosure holding the flywheel must be: 1) by turning the flywheel, to combine tags *0,* available on the casing and the flywheel. Keywords those knocked out at the flywheel after a joint balancing of the crankshaft with the flywheel and clutch, and 2) centered slave drive with the axis of the crankshaft with using a spare drive shaft gear, the end of which should enter into ball bearings nickname in the flywheel.

TRANSMISSION STRUCTURE AND ACTION

Transmission (Fig. 65) two-pass, has three forward and one backward gear numbers: the first transfer - 3,115, the second - 1,772, the third - 1, reverse - 3,738. From gearbox automo - Beal M-20 differs only in a gear selection (normal, rocker arm, instead of snarling ha, appeared on the steering column with M-20) and the device back cover (no gears speedometer built into the transfer case). Thus, almost all the major details of the gearbox (Carter, gears, shafts, bearings, glands, etc.) on the cars M-20 and GAZ-69 - the same. This represents a lot of flexibility operation. Certain peculiarity in comparison with boxes of M-20 (manufactured before 1952) was introduced in back cover of the box

GAZ-69 maslootgonnaya groove, preventing leakage of oil through the gland. The gears are made from chromium steel 40X tsianiruyutsya and quenched in oil until the hardness 48 - 56 Rockwell C. The gears are subjected to additional processing at the plant - blasting work hardening for Towards improved sheniya fatigue strength. Gears of permanent links are made with an oblique tooth gear first gear and reverse course have direct tooth. The gears in the factory equipped with matched pairs and the noise, contact and backlash in meshed within 0,1 - 0,2 mm. When failure of a gear change it may cause some increase in noise, Opa Why should not touch any installations. For the noiseless and shock-free inclusion of the second and third gear has a synchronizer.

First gear is not equipped with a synchronizer, so to avoid breakage of gear teeth switching from second to first gear should be carried out only after slowing down to 5 km / hour.

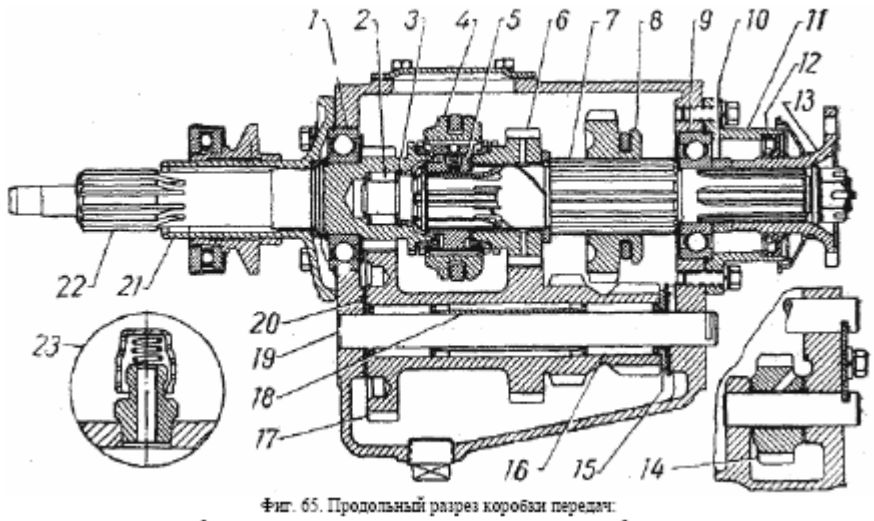

Фиг. 65. Продольный разрез коробки передач:

Fig. 65. Longitudinal section of the gearbox:

1 - bearing drive shaft, 2 - roller bearing front end of the secondary shaft, 3 - Closing the ring roller bearings Nick, 4 - clutch second and third gears, 5 - synchronizer hub, 6 - second gear ransmission, 7 - main shaft, 8 -- first transmission gear and reverse, 9 - bearing rear end of the secondary shaft, 10 - spacing washer bearing and oil - transhumance device, 11 - back cover, 12 - cardan flange gasket, 13 - cardan flange, 14 - reverse gear, 15 - stubborn floating steel washer, 16 - roller bearing cluster gear, 17 - cluster gear, 18 - distance sleeve bearing block 19 - axis of the gear cluster, 20 - bronze thrust washer, 21 - cover the front bearing, 22 - the primary shaft, 23 - breather.

Carter cast iron boxes and is attached by four pins, screwed into the crankcase clutch. Transmission is centered with the clutch crankcase collar front cover *21*. Primary shaft box *22* is made of one piece with the shaft coupling. Near it is the mainstay ball bearing, mounted at the butt end of the crankshaft of the engine. Ball bearing rear support *1* is mounted in the crankcase nest boxes. The secondary shaft *7* has also two pillars: a cylindrical roller bearing *2,* located the hole in the primary shaft and ball bearing *9* mounted in the seat back of the crankcase. Roller bearing is a set of *14* free spots, tread which are the surface of primary and secondary shafts. Total lateral clearance between the rollers selected ta - Kim, that the rollers, forming a dome, does not fall in the radial in - rule. This is done to ease assembly and disassembly boxes - there is the possibility of sub-assemblies of the primary shaft rollers, held back from fall-out in the axial direction spring-loaded locking ring *3.* Block gear intermediate shaft *17* rotates at two cylindrical bearings with long rollers. Bearings have cages and recorded on their mo - max pressed the spacer *18.* Axle Gear unit *19* are pressed into the crankcase. Axial thrust block gears restored accepted bronze washers *20,* arranged with the ca - zhdoy hand, and steel floating washer *15,* placed of the crown gear reverse. The new axle-box howl gap cluster gear ranges 0,04 - 0,32 mm. In front of the secondary shaft on slots sits stu - *pizza, 5* to which the teeth of the outer sleeve moves *4* inclusion of the second and third (direct) transmission. Gear WTO - Roy transmission *6* with extruded in her bronze bushings svo - mean free spins on the secondary shaft. Gears drive shaft and the second transmission equipped additional crowns for the inclusion of transfers and cones synchronizers. At the rear end of the secondary shaft set of disposition ing ring *10,* the outer surface of which, matching with

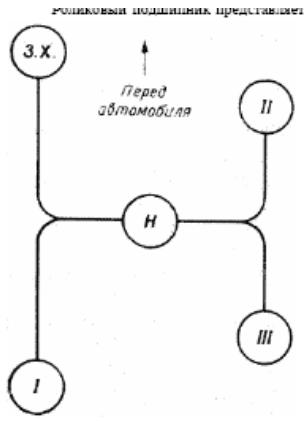

Фиг. 66. Схема положений рычага переключения передач.

Fig. 66. Scheme of the lever re - tion programs.

maslootgonnoy groove drives the oil from the stuffing box. The gap between the surface of the ring and the hole naho - is reproduced in range 0,17 - 0,44 mm. By slotted secondary shaft *7* moves the first transmission gear and reverse *8.* Pa - razitnaya reversing gear *14* with extruded in her bronze bushings rotating on a steel axle. In rear cover *11* is installed breather *23* for preventing the formation of internal overpressure, you - is called leaking grease out of the box. In the lid pressed rubber gasket *12.*

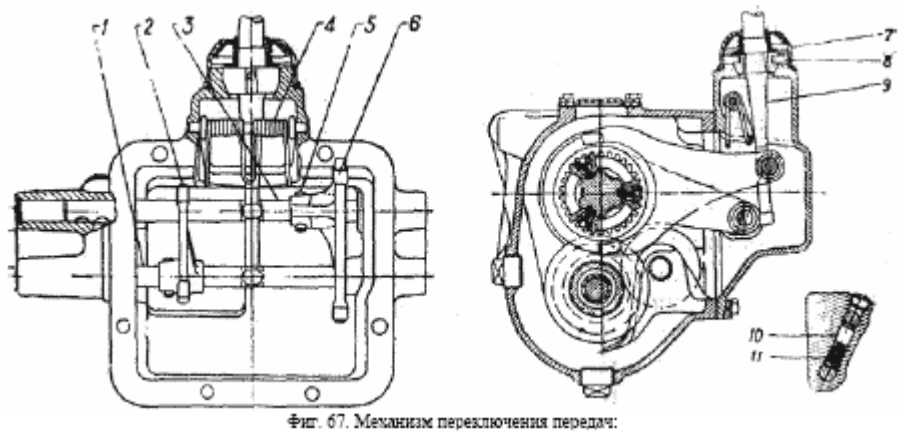

Фиг. 67. Механизм переключения передач:

Fig. 67. Gear selection:

1 - the first stock transfer and reverse, 2 - fork first gear and reverse, 3 - rod second and third gears, 4 - spring extractors lever, 5 - finger fastening fork, 6 - Fork the second and third gear, 7 - cap lever, 8 - pin lever, 9 - lever, 10 -- plunger locking device, 11 - spring plunger.

The gear shift is a lever-type blade, located in the lateral cover. Scheme of the shift lever shown in FIG. 66. **The gearshift** is mounted in the side cover (Fig. 67). On the lever *9* are two spherical projection. One of them is in the groove rod *3* forks *6* switching the second and third re - cottages; others were included in the groove rod *1* fork *2* switching first gear and reverse. Forks held on the rod with your fingers *5,* hollow ends of which are distributed after assembly punch. Spring *4* constantly pushes the lever *9* in the position where is inclusion of the second and third gear. The lever is fixed in the lid cap *7* and is held from turning the pins *8.* In working position the gears are fixed retainers conventional design: two of the plunger *10,* spherical ends of which are included in the wells of stocks, and the spacing spring *11* between them. Blocking transmission, ie impossibility of the simultaneous operation of two programs being implemented due to the fact that the inclusion of a transfer, the movement of the lever *9* must always begin necessarily in the position corresponding to neutral. The simultaneous movement of stocks *1* and *3* excluded due to sample clearance between the ends of plungers *10.*

DEVICE AND WORK Synchronizer

Inclusion of the second and third gear is made using the synchronizer that allows - em include the transfer only after the aligned rotational speed of the secondary shaft and gears includes the transfer, allowing the inclusion of transfers, is silent. Device synchronization - torus shown in Fig. 68. In the hub *10,* sitting on the slots of the secondary shaft, there are three slot in which placed slides *2.* Meatballs *4,* located in the holes of sliders, with *5* springs are pressed against the semicircular groove

on the inner surface of the sleeve *9*. On the cones of the primary shaft and the second gear transmission sit blocking bronze rings *11*. Friction between the cones, rings and gears and ensures alignment (sync) speed rotation scheniya included elements. On the inside the cones of rings made small (step 0.6 mm) screw-thread in order to break the oil film and create the greatest friction between the surfaces of cones at work synchronizer. Since the slides *2*, located in the grooves of the hub *10*, its ends are slotted ring *11*, in slednie always rotate with the hub *10*. Rings *11* can rotate relative to the hub on the magnitude of the gap between the sliders and the groove - mi in the rings (the gap is equal to approximately half step teeth crowns include transfers *8)*. Step synchronizer consists of two stages: when you switch the transmission sleeve *9* through balls 4 moves the sliders *2*, which by their ends pressed locking ring *11* to the cone of the primary shaft or the second gear transmission. Because friction arising between the cones, locking ring zo few turns (within the gap between the slot ring and slider) - completed the first phase synchronization. With further movement of clutch teeth *2* slants its impact on slants blocked - vochnogo ring, friction between the cones increases, clutch teeth are engaged with the teeth-units rovochnogo ring - completed the second phase of the synchronization is complete alignment of velocities rotation includes the transfer and coupling *9*. At the further movement of the teeth clutch smoothly and without ud - ditch engages with teeth crown of the main drive shaft or the second gear transmission.

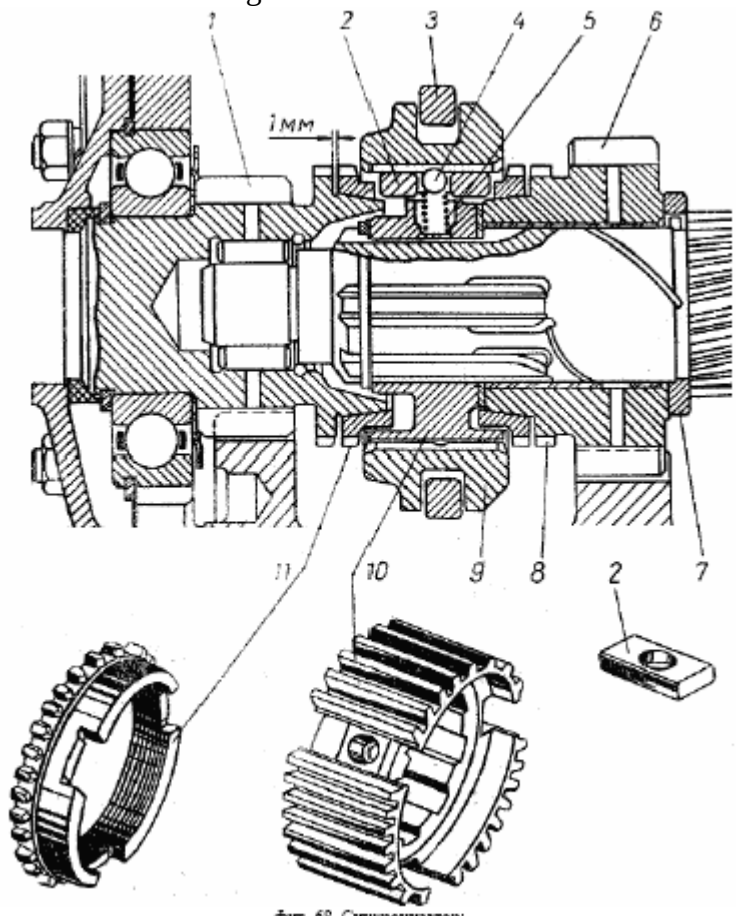

Фиг. 68. Синхронизатор:

Fig. 68. Synchronizer:

1 - pinion drive shaft, 2 - ram, 3 - fork, 4 - ball, 5 - spring, 6 - second gear transmission, 7 - Circlip, 8 - crown, 9 - clutch, 10 - synchronizer hub, 11 - locking ring.

Synchronizer allows silent switching only when smoothly, without jerks ne - redvizhenii lever. Too fast switching, especially with the direct transfer to the WTO - Rui, can damage the mechanism synchronizer. In the operation of the car, after a strong run, sometimes you may receive the failure in work synchronizer - noise during gear changes, even if the driver uses the right-roaring GOM switching. Most often this indicates that the thread of the conical surfaces interlock *11* rings worn out, the gap between the ends of the ring and the crown gear disappeared (in Fig. 68 shows a gap of 1 mm in new gearbox) and the friction between the cones during switching clutch *9* is absent. Because of this, First and terminate synchronizer. To test the need to remove the side cover and the box probe to check the gap, what clutch locking ring should be pressed to the cone gears. If

the gap is less than 0,2 - 0,3 mm, blocking rings should be replaced. When should be borne in mind that the car factory blocking ring mate and lapped with the co - nusami gears, the assembly of boxes, as well as in parts of the ring and pinion come in sets. Therefore, to correct the malfunction synchronizer may be necessary Change with the rings and gears.

CARE TRANSMISSION

Care for transmission is to maintain the level of oil in the crankcase, it periodically change, as well as identifying and troubleshooting. The oil level in the box should be placed at the edge of filler or below the 5 - 10 mm. Should change the oil every 6 thousand kilometers, as well as by changing seasons (spring and autumn). It is necessary to periodically monitor, it is not clogged breather gear, and, if necessary, clean it dirt. Should periodically check the tightening nuts flange propeller shaft. Attenuation in cages flange is not allowed. Waste oil from the crankcase to lower the gear to be warm (immediately after stopping the av - tomobilya), otherwise would not receive its complete removal. If the waste oil was contaminated, nym, and there are products of wear (metal particles), then after the descent of oil to a box rinse with kerosene. To do this: 1) fill in the crankcase 1 liter of kerosene (a filler); 2) right lever transfer case (see "Transfer Case") to put in neutral position, ie, turn off the rear and front axle. Include first gear in the gearbox and PUS - tit engine at low speed for one or two minutes; 3) pull the wash kerosene and pour fresh oil in the crankcase to the level of oil-filling hole - stiya.

Disassembly and assembly of the gearbox. Removing the box and setting it in place are carried out without removing the engine from the car. Disassembling the box must be done in the following main sequence CONTRACT PERIOD: in neutral gear to remove the side cover; vypressovat axle gear unit intermediate shaft and the lower block on the bottom of the crankcase, remove the lid of the primary shaft and remove the primary shaft; through the side hatch of the crankcase to remove the main shaft assembly with a synchronizer and the two gears. This should draw attention to the fact that the clutch did not descend from the release, otherwise it will lead to loss of balls and springs, with force pushed out of nests synchronizer hub. When disassembling synchrnizer also need to take precautions against the outburst - Nia and loss of balls and springs. Gearbox assembly must be done in reverse sequence.

Transfer Case

STRUCTURE AND ACTION

Transfer box (Fig. 69), set for transmission and connected with her intermediate nym cardan shaft, serves to transfer torque to the rear and front axle. Available in the transfer case drivedown allows, where necessary, to increase traction Wuxi - Leah on wheels. Transfer box has two programs: the operational transfer of permanent links with ne - redatochnym number 1,15 and downshift with the gear ratio 2.78. Gears of permanent links are oblique tooth, which provides low noise driving. The gears are made of steel 40X tsianiruyutsya and quenched in oil to a hardness of 48 - 56 in Rockwell C. The gears in the factory equipped with matched pairs and the noise, contact and backlash in meshed within 0,1 - 0,2 mm. When failure of a gear change it may cause some increase in noise, Opa Why should not touch any installations. Carter cast iron transfer case, undivided. In its upper part has a hatch for installation, obstruction pressed lid. Transfer box attached to the crossbar of the frame at four points on rubber cushions. Leading shaft *3* is mounted on two ball bearings *4* and *37*. By size bearings (30X72) are identical with the bearing secondary shaft gearbox. Leading pinion *5* is installed on slots and fastened with a flange *2*. Intermediate shaft *9, as* set out in the slots *7* and *8*, the gears rotate at the two identical tapered roller bearings *12* and *35*. Inner rings of bearings *12* and *35* and the gears *7* and *8* are mounted nuts *11* and *33*. Driven shaft *18* is mounted on two identical tapered roller bearings *22*. Its slots shifted gear *24* of the rear axle and reducing gear.

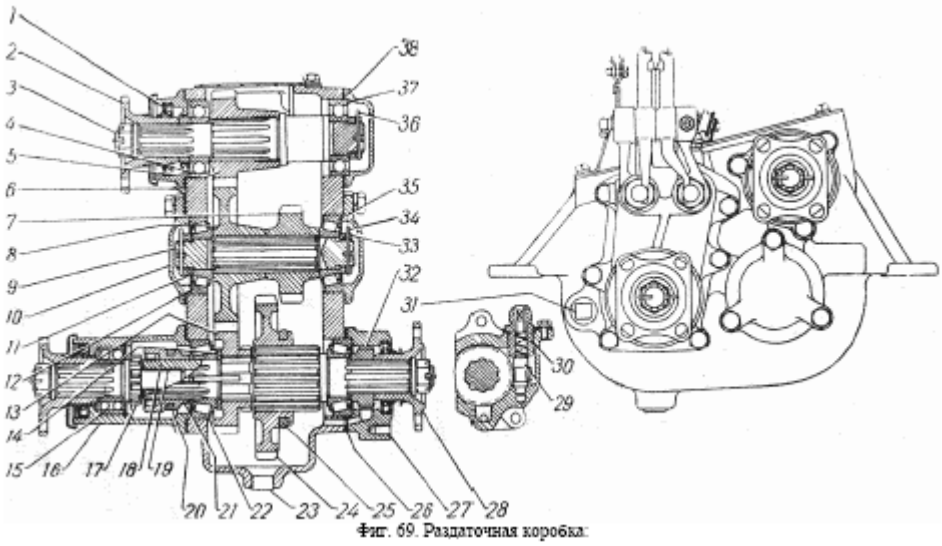

Фиг. 69. Раздаточная коробка:

Fig. 69. Transfer Case:

1 - gasket, 2 - cardan flange of the gearbox, 3 - drive shaft, 4 - front drive shaft bearing, 5 - Leading gear, 6 -- shims, 7 - Leading the gear reduction gearing, 8 - gear intermediate, 9 - intermediate shaft, 10 -- cover, 11 - nut, 12 - intermediate shaft bearing, 13 - Pinion led, 14 - thrust washer, 15 - drive shaft bearing front axle, 16 - Carter rods, 17 - drive shaft front axle, 18 - driven shaft, 19 - sleeve, 20 - the inclusion of front fork Bridge, 21 - clutch front axle, 22 - bearing output shaft, 23 - maslospusknaya cork, 24 - gear (clutch) included - cheniya rear axle and the reduction gearing, 25 - fork of the rear axle and the reduction gearing, 26 - adjustment pro - masonry, 27 - back cover, 28 - cardan flange to the rear axle, 29 - led by the speedometer drive gear, 30 - socket gear speedometer, 31 - oil-filling (control) plug, 32 - Leading the drive gear speedometer, 33 - nut, 34 - pin, 35 - under - shipnik, 36 - pin, 37 - rear drive shaft bearing, 38 - locking ring.

In the neutral position lever transfer box (as shown in FIG. 69) led gear *13* freely rotates on the shaft. In the rear output shaft gear set *32* and *29* drive speedometer. In front of the output shaft to move coupling slots *21* enable the front axle. Shaft drive front axle *17* is mounted on two pillars. Minor support is a ball double-row angular contact ball bearing *15*. As a back support applied bronze bush *19,* pressed into the hole output shaft. Rubber gaskets *1,* working on the neck three flanges - same with the secondary shaft seal boxes transmission. In the lid *16* stocks switch installed breather to prevent formation of excessive internal pressure Niya, causing leakage of lubricant. Before the seal and drive shaft *3* and shaft drive ne - rednego bridge *17* have maslootgonnye grooves made - WIDE in the body covers. Role maslootgonnogo devices gland slave va - la performing helical teeth of the leading gears spin - dometra *32,* mounted in the rear lid with a gap of 1,1 -- 1,3 mm in diameter.

Gear by two-lever mi, mounted in the cap stocks change, the strengthening communities, had the front end of the crankcase transfer case (Fig. 70). Right lever to turn the rear axle and reducing gear. He has three positions: neutral, front - when downshift, and back -- When the rear axle. Left lever to turn the front axle and has two positions: the front - when the front axle turned off,

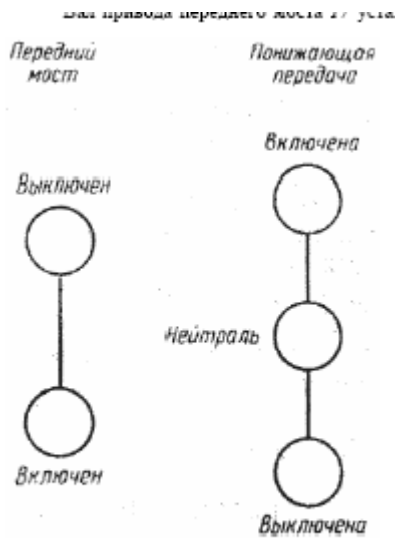

Фиг. 70. Схема положений рычагов переключения раздаточной коробки.

Fig. 70. Scheme of the lever re - tion transfer case.
Chan, and back - when it is enabled.

The gearshift is mounted on the front cover (Fig. 71) and consists of two-INTO kov *11* and *73*, which screws *8*, zashplintovannymi wire, reinforced forks switching re - cottages. Stocks lever *9* and *10*, the ends of which are in the slots of stocks. Switching mechanism is provided with retainers, consisting of springs *2* and the balls *1*, members of dimple rods. To prevent outflow of grease from the nests of stocks, as well as falling dirt and dust, there are rubber felt glands, consisting of a rubber ring *16*, a steel washer *15*, of felt rings *14* and nuts *12*.

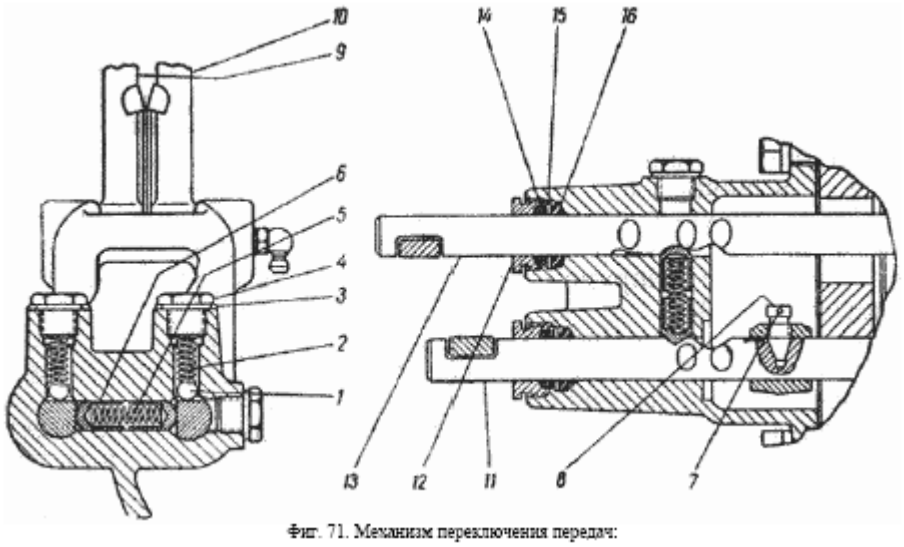

Фиг. 71. Механизм переключения передач:

Fig. 71. Gear selection:
1 - ball 2 - spring, 3 - sealing washer, 4 - bolt springs, 5 - spring plungers, 6 - piston, 7 - shplintovaya wire, 8 - Screw, 9 and 10 - lever, 11 - stock front axle, 12 - nut, 13 - stock rear axle and the reduction gearing, 14 - a felt ring 15 - Steel washer, 16 - rubber ring.

The vehicles manufactured before March 1, 1954 set with the same glands, glands GAZ-67B (nut and two felt rings). There is a locking device, precluding the possibility of introducing a lower gear when off the front axle, as well as off the front axle at downshifts. Locking device consists of two plungers 6, the spherical ends of which are in the hole INTO - kov, and the spacing spring 5 between them. Blocking based on the usual principle - a sample of the gap between the ends of plungers, thanks different depths of holes on the rod. Lock prevents driveshaft and rear axle overload.

TERMS OF USE Transfer Case

Include the front axle should be when driving in heavy road (sand, mud, snow and road, etc.). Standing Riding enabled the front axle increases the wear of the car, its tires, and increasing em fuel consumption. Therefore Riding enabled the front axle on paved roads are not re - Komenda. Switching the front axle can be made at any speed. When This squeezing clutch pedal is not required.

Active is because that includes the elements (toothing of the shaft drive front-ISO ta *17* and clutch *27*, sitting on the slots output shaft *18*, - FIG. 69) rotate at the same speed and equalization rates in this case is not required. If the front axle is not included, it could ordinances - vat at different radii of rolling front and rear tires and the need to check pressure of Air in the tires. Downshift (2.78) in the transfer case should be included only in cases where non - required large tractive force (for example, lifts, very heavy traffic conditions, etc.). To avoid breakage of teeth include a lower gear is recommended only after the remain - adjustment elements of the car with the clutch disengaged. Previously must be enabled front axle (due to the presence, as indicated above, block - perature in the mechanism of switching). Shutting down the reduction gearing and the transition to operational ride (switch on the transfer 1.15) can be carried out while the car with the clutch disengaged. At the same time for silent switching to the right lever moves the transfer case - levee smoothly, with exposure to the neutral position. Exposure should be greater, the higher the speed (as in the transition from second to third ne - redachu car GAZ-51). At a speed of less than 8 km / h exposure is required. Too Long exposure lever in the neutral position did not give the correct and silent inclusion. In this case, you should use double-twisting coupling and progazovku, ie, to include clasped - lenie, press the accelerator pedal (for a small increase in engine speed), then again, you strained to avoid adhesion and to include operational transfer (1,15).

ADJUSTING BEARING Transfer Case

Tapered roller bearings transfer case require in the exploitation is not often, but ne - riodicheskoy their adjustment to eliminate a large axial play due to wear themselves shaft bearings workers, as well as "obminaniya" mating surfaces. It is mandatory to adjust bearings in the case of a forced disassembly time - datochnoy boxes for any reason (knocks and noise, breakage of parts and others). Overly large axial play harmful impact on the work gear, breaking the correctness of their per - tsepleniya. When the factory adjustment of new transfer cases axial play in the shaft bearings are within 0,04 - 0,11 mm. Adjustment is made with steel adjusting pads *6* and *26* (Fig. 69) thick - Noah 0,1 and 0,25 mm, installed under the cover. Measurement of axial shaft play should be made possible indicator. In the absence of indica - torus, regulation needs to be done such that the shafts had no appreciable axial play, but free-agile takes a hand would be with a small effort.

Adjustments made as follows:

a) **intermediate shaft bearings.** As indicated in the section "Maintenance of motor - Beal, "you must remove the top cover of the transfer case, which should be removed from the hatch on floor of the car and otedinit central brake cable. Screwdriver (or hand) to check whether there axial game gear. If games need to remove the front cover *10* (Fig. 69), rasshplintovat-gai Ku and tighten it up to match the slots in the nut with a hole in the shaft. After the braces put the lid in place, wrap it bolts and re-check the axial play. If the game has not disappeared, it is necessary to adjust removing unnecessary adjustment spacers *6* and *26* between the ends of the cover and the crankcase.

b) the **output shaft bearings.** remove the center brake rasshplintovat nut flange back propeller shaft and tighten it possible to match the slot with a hole on the shaft. Check axial play of the shaft. If necessary, make adjustments bearings removing regulation vochnyh gaskets *26* between the ends of the rear cover *27* and the crankcase.

Disassembly and assembly Transfer Case

Disassembly of the transfer case must be conducted in the following order:

1. Remove the brake, remove the top hatch, unscrew the nut flange cardan drive shaft and remove flange. Remove the front and rear lids. Hold the drive gears, a slight blow to remove the shaft towards the back end of the crankcase transfer case with rear ball bearing. Leading gear pull through the hatch.
2. Remove the lid intermediate shaft. Rasshplintovat and unscrew the two screws shaft. Light blow lead hammer vypressovat shaft of the gear spline holes towards the front wall crankcase. Remove the two gears through the hatch box.
3. Remove the cap stocks, along with all its details, pre-releasing mount forks Switching gears *20* and *25* (Fig. 69).
4. Remove the flange and the back cover of the driven shaft. Light blow a lead hammer to knock out the shaft towards the rear of the crankcase.

5. Remove the gears *13* and *24* through the hatch. Rubber gaskets should not be unnecessarily vypressovyvat of the lids, as this inevitably their destruction. The montage transfer case should be made in reverse order, ie, collect the lower shaft, intermediate shaft and then the upper shaft.

When assembling the bottom of the shaft should consider the following: the inner ring of the roller to the left - chronically bearing *22* should be pressed on the shaft *18* is strictly up to the stop (after putting on the shaft gear *13* and washer *14).* The correct mounting ring of the bearing should be controlled by the axial Gap gears *13* on the shaft. This gap must be no more than 0,25 mm (Fig. 69). Check the probe between ends of the gears and shaft. Failure to do so (nedopressovka bearing) can cause a knock pinion on the shaft and the rapid adjustment of violation of the bearings.

CARE Transfer Case

Care for the transfer case is to maintain the level of oil in the crankcase, it periodically tion changes, as well as in identifying and troubleshooting. The oil level in transfer case dol - wives stay at the edge of filler or below the 5 - 10 mm. Change the oil should be in each page - Dyje 6 thousand kilometers, as well as by changing seasons (spring and autumn). It is necessary to eriodically monitor, if not clogged breather transfer case, and, if necessary, the eyes - schat it from the mud. Should periodically check the tightening of the screws mounting flanges cardanic (three locations). Reducing the landing flanges are not allowed. If you find a leak grease through the rod packing switching to more subjected to one's nut *12* (Fig. 71). Waste oil from the crankcase to lower the transfer case should be warm (immediately after the stop car), otherwise would not receive its complete removal. If the waste oil was contaminated and there are products of wear (metal particles), then after the descent of oil transfer case needs to be washed by kerosene To do this:

1. Pour into the crankcase 1,2 liter of kerosene (a filler).
2. Right to put the transfer case lever to neutral position, ie, turn off the rear and front axle. Gear lever to put on one of the gears (second or third). Let the engine at low speed for one or two minutes
3. Pull wash kerosene and pour fresh oil in the crankcase to the level of oil-filling hole - stiya.

Cardan gear

Cardan gear consists of three tubular shafts and six cardanic with needle-bearing mi (Fig. 72). Details cardanic and slots shafts partially harmonized with cardan car M-20 and ZIM; shafts differ only in length. One shaft (intermediate) transmits force from the gearbox to transfer case and two other shaft (main) transmit force from the transfer case to the main re - give back and front axle.

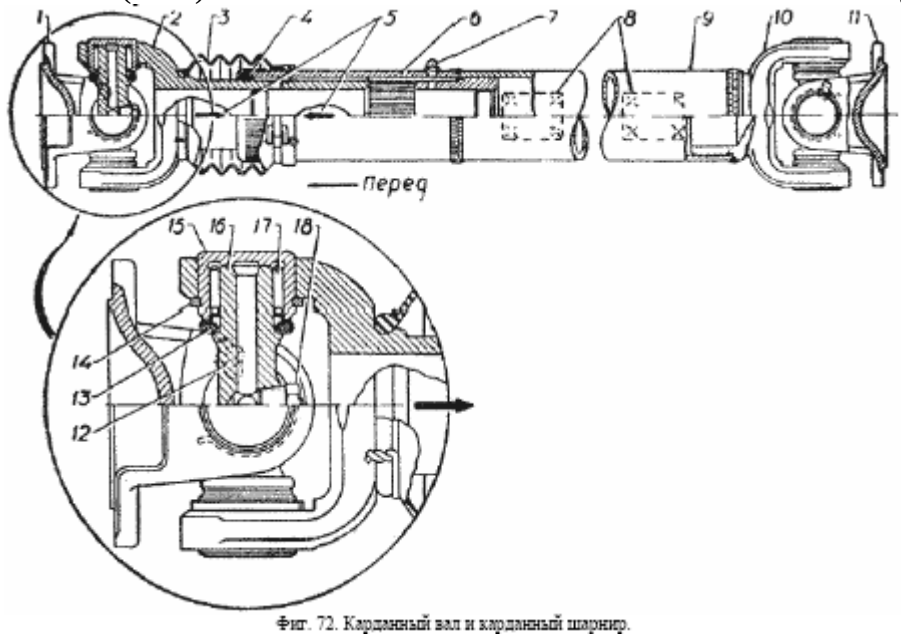

Фиг. 72. Карданный вал и карданный шарнир.

Fig. 72. Cardan shaft and cardan joint.

1 - front flange, 2 - Moving Fork universal joint, 3 - rubber boot. 4 - gland shaft, 5 - arrows, 6 - front-NACO nechnik, 7 - shaft oiler, 8 - balancing plate, 9 - trumpet, 10 - rear fork, 11 - rear flange, 12 - oiler hinge, 13 -- gland, 14 - locking ring, 15 - cage 16 - spider. 17 - needle bearing, 18 - safety valve.

Cardan shaft consists of a thin-walled tube *9,* to one end of which is welded Fork *10* universal joint, and another - the tip *6* with internal splines, which slide the fork *2.* To protect the splines from pollution is a protective rubber boot, *3* and for keep grease in the slots - the felt gasket *4.* Cardan

consists of two forks, crosses and four needle bearings in each House bearing has 20 needles. Centering cross *16* in the forks carried ends credit - stoviny and inner ends of the cup needle bearings *15*. Glasses are fixed in the holes fork spring stop ring *14*. To retain lubricant in the bearings are the oil seals *13*. To ensure uniformity of the rotation shaft is necessary for the assembly to install plug card electrons so that the arrows are available on the shafts and forks were in the same plane. Fully assembled cardan shafts are fastened to flanges flanges forks gearbox, Sec - fine boxes, drive gears and the rear main gear of the front axle bolts. To prevent leakage of oil from the spline connections between the flanges installed cardboard gaskets. Drive shafts complete with hinges at the plant carefully balanced with the rocker - vochnyh plates *5* welded to the pipe. Imbalance causes vibration, which affect transmission. Therefore, if the wear or shaft deflection is not possible to balance, the mixture should thread of the entire shaft. Grease needle bearings made syringe through Grease *12*. Grease comes through cross-cutting channels in the cross pin. The center cross is a safety valve *18*, designed to release excess grease and prevents the increase of pressure inside the crusaders guilt when heated during operation. Increased pressure within the cross could lead to damage oil seals *13*, leakage of lubricant and failure of the cardan. Needle roller bearings should be lubricated Nigrol or other liquid oil with high viscosity, but in any case no solid oil or other greases. Grease solid oil can quickly disable the bearings, because, having low mobility, insufficient solid oil lubricates the ur - ly bearing. Lubricate solid oil is prohibited because, while in the cross channels, he zatverdeva - em, and forms a plug preventing the passage of liquid lubricant. Slots solid oil lubricated propeller shaft through Grease *7*. For disassembly cardan should remove retaining rings *14* on both ends of the fork. Then light ud - ramie knock both oppositely located bearings, remove them from the cross pins and distortions Last, remove it from the edges with a fork. During the assembly should check all 20 needles in the bearing. The absence of at least one needle will cause rapid failure of bearings and crosses. Care for cardan shaft is periodically lubricated needle bearings and slot in clean of dirt and moving up the bolts on the flange.

REAR AXLE AND MAIN TRANSMISSION

The design of the rear axle is shown in Fig. 73. Rear axle, made the type of rear Bridge GAZ-51, consists of two parts with the connector in the vertical plane, cast ductile iron. In both halves of the crankcase (right *23* - Carter and left *1* - cover), connected by bolts, pressed housings axes *2* and enhanced plug lap. By the outer ends of the casings welded butt hammered flan - Qi for fixing the brake shields. At the neck flange set of tapered roller bearings Rear wheel hub. For both paddle semi welded pillow for fastening springs. Many details of the rear axle GAZ-69 is unified with the axle M-20 and VMS (Leading pinion, differential, bearings, cardan flange, gaskets, front cover, etc.). Main gear conical, with spiral tooth. Gear ratio 5.125 (41:8)-is the same as main transmission car M-20. The dimension of the tooth main gear is identical to the main transmission av - tomobilya M-20. Leading the main transmission gear *16* is identical with the leading car gear M-20 as established Lena on two bearings: double-tapered roller *10* with a common outer ring and role - kovom cylindrical *22*. The latter is placed in the internal tide crankcase and provides increased rigidity of the supports drive gears that promotes better recoupling of gears and their efficiency. Cars - Lyakh first release set the same bearings as on the cars M-20 (GKP-992205). Since Mar - ta in 1954 they were replaced with new bearings (CDB-772).

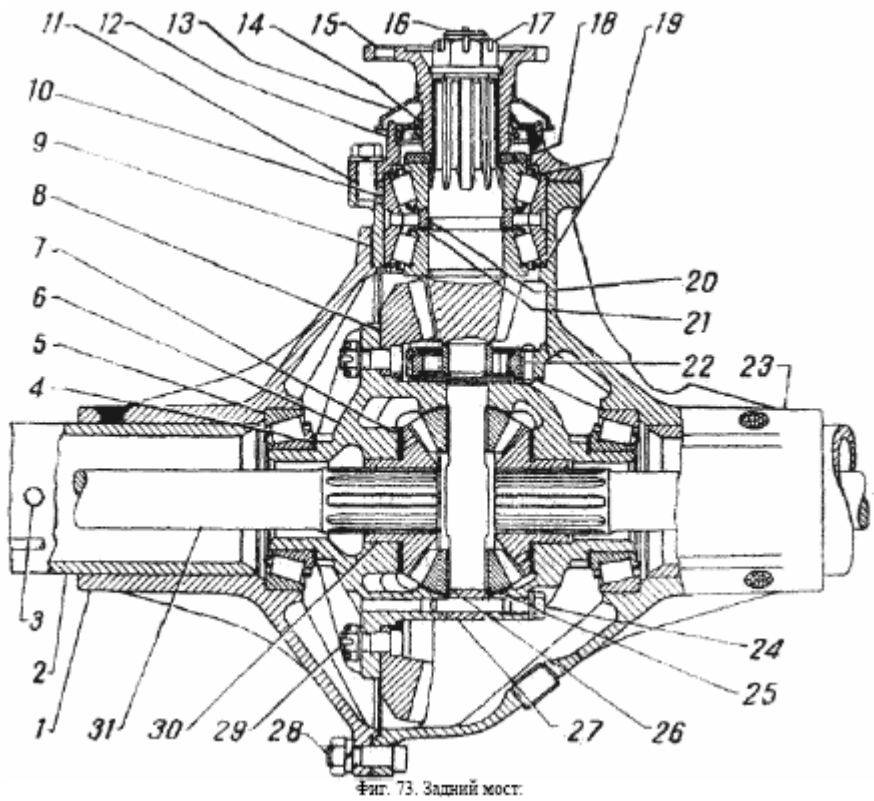

Фиг. 73. Задний мост.

Fig. 73. Rear Axle:

1 crankcase cover, 2-half-shell, 3-breather, 4 shims, 5-bearing differential, 6-box differential 7 oponaya washer pinion axis, 8-gear led, 9-laying, 10-double roller bearing, 11-pad, 12-cap, 13 reflector, 14-caul, a 15-flange, 16-gear presenter, 17-nut 18 thrust washer with maslootgonnoy groove, 19 -- adjustment ring 20-ring spacing, 21-shims, 22-roller bearing, 23-Carter Bridge, 24-bolt axle satellites, 25 satellites bearing washer, 26-satellite, 27-axis satellites, 28-bolt, 29-bolt gear driven, 30 - pinion axis, 31 - axis.

The new bearing comes bearing industry, complete with the inner ring. In the old bearing inner ring was absent. In the latter was used as a sleeve, on - Pressed and strengthen the neck of drive gears. Gears main gear at the plant chosen and mate with the noise and contacts engaged. When failure of one gear, you should replace both. In parts plant produces the main gear transmission paired sets. The outer ring of the bearing *10* pressed into the neck of the crankcase and pressed the lid *12*. The delay made a double roller bearing nut *17* through a cardan flange *15*, Ras porn ring *20* and a set of adjustable spacers *21*. Thrust washer *18*, on the periphery of which is cut a spiral groove on the left helix, performs simultaneously the role maslootgonnogo device that prevents leakage of oil through the oil seal rear axle. Driven by the main transmission gear *8* privernuta ten bolts to the flange of the box differen - LA *6*. Differential - conical, with two satellites, is used entirely from the car ZIM. Box-one that provides greater rigidity and simplicity of design. Cast from ductile iron. Satellites *26 people* sit on the axis *27*, fixed in the box bolt *24*. Pinions differential Monte UM in a box through two windows, available in a box. Through these windows are also provided lubrication labor ing details of the differential. Gears axes *30* and satellites *26* are provided with bearing washer *7* and *25*, made of low carbon (mild) steel. The differential is based on two tapered roller bearing *5*, the same with differen - scrap car ZIM. To prevent high-pressure therefrom to the crankcase rear axle with its heat - Institute during the work on the shell half-mouth stalled breather *3*. Care should be taken purely flow areas of the breather and periodically purge them. Semi-axes of *31* fully unloaded type. The design is similar to GAZ-51. On Interior ends of the axes are available slots, which sewn gear axes. The outer ends of the axes are made together with the flanges, which, through six studs and nuts, each attached to the hubs to - forest. In semi fitted jackets rubber vye glands, *13* (fig. 114), preventing overflow of oil from the crankcase of the bridge in the hub wheels. The design of the rear axle provided for Rena abundant lubrication of roller cone bearing drive gears. Oil circulates through a special oil channels (Fig. 74) in car - Tere and injected by rotating the driven gear. Waste hole in

the lid and the casing are located in such a way that the bearings have a constant - The Permanent level of lubrication.

ADJUSTING THE REAR BRIDGE

In the rear axle GAZ-69 there are three types of adjustments:

1) preload bearing drive gears,

2) preload bearing boxes differential

3) engages the main transmission gears (backlash and tooth contact). It should be borne in mind that the durable and silent operation of the rear axle depends not only on quality - STVA main transmission gear manufacturing at the plant, but mainly determined by the correctness adjustment of bearings and gearing (contact) gears. Gears main gear rear axle should not be regulated to compensate for wear their teeth, as well as satisfactory meshing driving and driven gears is btained only in One of their mutual situation, in which the gears are processed on the gear-cutting machines and in which the forming the initial cones is common to both gears. In this position, the gears can operate silently to a very significant increase in lateral backlash in gearing due to wear, then needed to replace them with a new pair of gears. Failure to comply with the above requirements, ie, an attempt to reduce backlash in the teeth of the main transmission due to their depreciation djustment of gears, can lead to increased noise bridge or on - breaking the gear teeth. If necessary, adjust the drive gears and bearings of the differential box it fol - blows to produce, without violating the correctness of engagement (contact) bedded each other over - tions gear teeth. The order of testing links is given below.

Adjustable preload roller cone bearing drive gears Implemented etsya change in the number of spacers *21* (Fig. 73), placed between the spacer rings *20* and an internal - rennih ring bearing *10* and tightening the nut *17* to failure. Steel shims are used thickness of 0,10, 0,15, 0,25 mm. Nut necessarily be prolonged until failure. Not allowed otvertyvanie it back in order to hplintovochnoe hole in the shank pinion coincided with a slot in the nut. If necessary, this should be obtained at the expense of some "necking" nuts. With a weak tightening the nut able to rotate the inner rings of the bearing on the shaft of the six - However, that would inevitably lead to wear pads and adjusting the premature appearance of unacceptable axial clearance drive gears. When tightening the nut *17* should turn the pinion flange in order to under-rollers shipnika the correct position in the rings. The value of preload should be checked with the spring balance (Fig. 75). For this to be corroded, string banjo and remove it from the box with the knowledge of the differential gear. Cover *12* (Fig. 73) with tallow - whom shall be removed in order to exclude the effect of friction on the omentum testimony weigher. Effort on Bezmenov applied at the radius of the location of bolt holes in the flange Cardano, be within

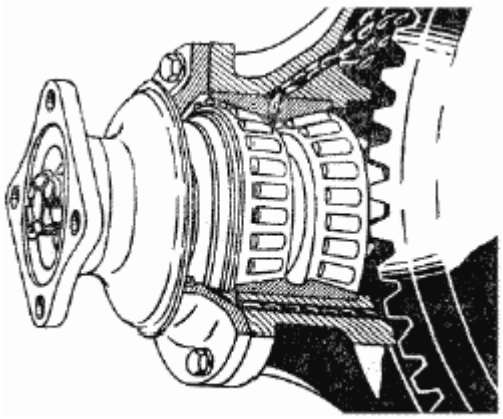

Фиг. 74. Схема смазки подшипника ведущей шестерни главной передачи заднего моста.

4 - 6 kg.

Fig. 74. Scheme bearing lubrication drive gears

main gear rear axle. After proper adjustment of the axial backlash drive gears must be absent, and gear must be rotated with a small - ed the effort of one hand on the flange cardan. When installing the cover *12* in place of non - required carefully to make sure that on - miles to the flow of oil in the crankcase cover and Cover gasket combined. After setting correct - tions set preload bearings should check on their heating during the motion of the vehicle. Small cap heating crankcase not dangerous. But if the temperature reaches 80 ° C and above, the adjustment should be repeated, adding one of the shims to reducing the value of the bearing preload. Adjustable preload bearings drive gears should be considered completely mandatory if the axial clearance in the bearings, gears up to 0,05 mm. Check

the clearance, you can use the indicator (Fig. 76), moving the drive gears from one extreme to the other. In the absence of indicator devices need to govern - Nike checked shaking hand drive gears for cardan flange. If there is a "rocking" in the bearings and the axial clearance of gears, bearings control commitments cen.

Adjustable preload tapered roller bearings of the differential box-impl

is ongoing change in the number of gaskets *4* (Fig. 73), placed on both sides between the ends of the internal rings bearings and the supporting ends of the box differential. Thickness of gaskets: 0,10, 0,15, 0,25 and 0,50 mm. Preload adjustment should be made so that there was no lateral roll and axial displacements, scheniya driven gears. The check adjustment can be made through a hole for the oil-filling plugs. After adjustment of the differential gearbox must rotate in the bearings with little effort hand. When adjusting the pads on each of the two necks of the boxes of the differential should be the mouth - lished approximately equal amounts. After adjustment is necessary to follow the on - heating of bearings while driving a car. If heat reaches 80 ° C and above, should remove one regu - lirovochnuyu pad on the right bearing (in the crankcase) boxes differential. On the left bearing (in the lid crankcase) to remove the gasket should not be, as it vyzo - Veterinary change, backlash in the gears meshed main transmission.

Adjusting the meshing of gears major re - Cottage is made only when installing *new* gears. Before adjustment gearing must be adjust - van preload in the bearings, as indicated above. Adjusting the meshing of gears is reduced to the Mutual installing master and slave gears, which ensures proper *meshing and backlash* engage.

Regulations drive gears adjusted under - Boron adjusting ring *19* required thickness (Fig. 73), installed between the ends of the outer ring roller cone bearing and persistent Carter collar. Rings are manufactured in a factory four - PEX thicknesses: 1,48, 1,53, 1,58 and 1,63 mm. Without ring one of these thicknesses it can be replaced lar set of thinner rings (the adjustment pro - batches). After selection of the ring is the same ring should be established between the lid *12* and the top end outdoor - tion ring of the bearing.

The situation is governed by **the driven gear** re -

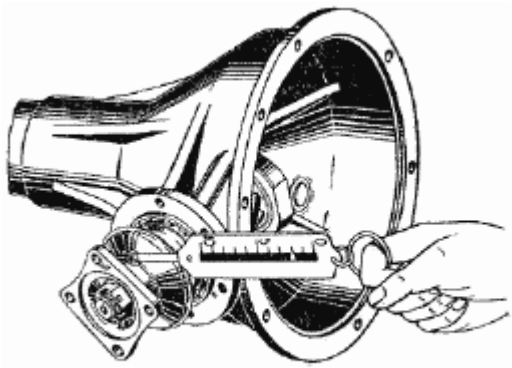

Фиг. 75. Проверка затяжки подшипников ведущей шестерни главной передачи заднего моста.

Fig. 75. Checking tightening bearings leading six - no main gear rear axle.

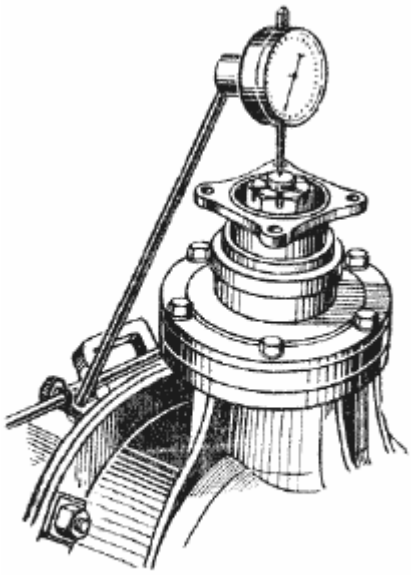

Фиг. 76. Проверка осевого зазора подшипников ведущей шестерни главной передачи.

Fig. 76. Check axial clearance bearings main transmission drive gears. tuting gasket *4* with one side of the differential frame to another. Backlash in the gears meshed main gear change with a change of the driven gears. However, when I was laying in the box by the differential driven gear, then gap in the gearing increases if the same add padding - the gap is reduced. Grommets can only transpose from one side to another, but not as clear, change their number, set - tion when adjusting the differential bearing preload. Backlash in the gears meshed main gear must be in the range 0,2 - 0,6 mm when measured at a radius of 40 mm povertyvaniem flange *15* leading gears.

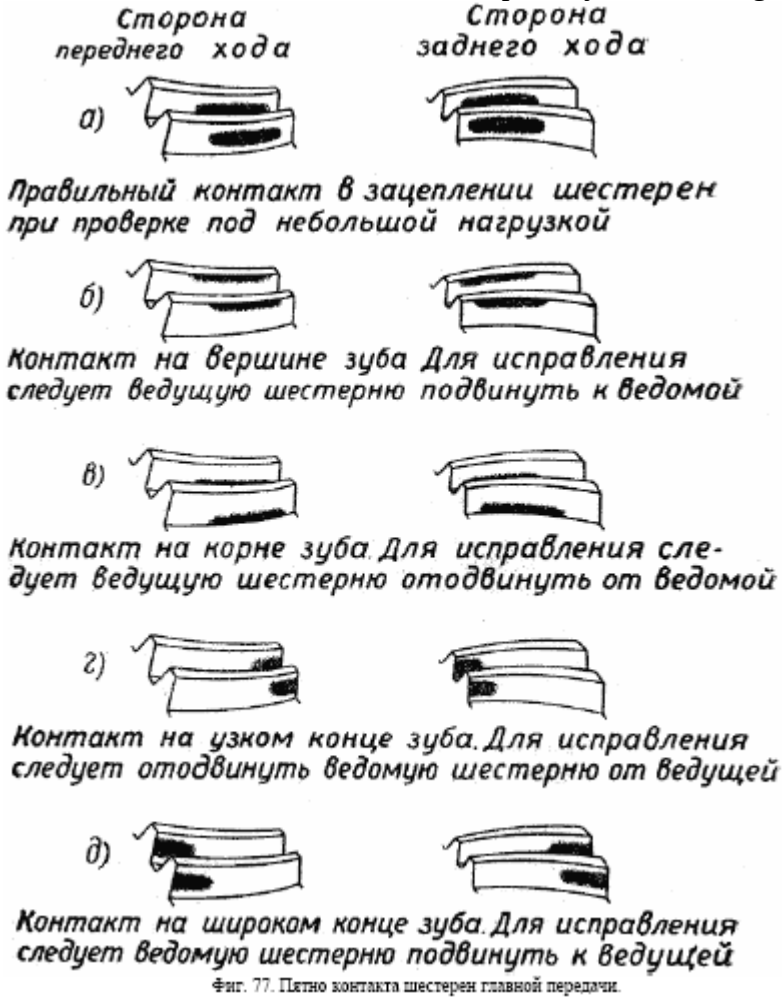

Фиг. 77. Пятно контакта шестерен главной передачи.

Fig. 77. Contact patch main gear transmission. Checking this gap should distinguish it from the gap in the teeth of the gears of the differential (Satel - lit and poluosevaya gear) and the slots in the semi. Backlash in the gears meshed main gear there is a slight impact on them if it is carefully turn the drive gears for the flange arm. After adjusting backlash in gearing installed correctly the main transmission gears verified by spot contact between the teeth. To check the contact teeth of the driven gear cover - Xia thin layer of paint, and drive gears carry through in both directions. Spot correct contact (A), as shown in FIG. 77, should be located closer to the narrow end of the tooth and should be less sharply expressed at its edges along the length and height of the tooth. Such contact provides the most durable and demon - noisy work gear main transmission. At the wrong contact *(b, c, d, e)* should be amended position of the driven and drive gears, as shown in FIG. 77.

REAR BRIDGE DEFECTS AND THEIR REMOVAL

In the operation of the vehicle GAZ-69 may be some failures rear axle, his - temporary removal of which is the key to a normal and enduring his work. The main ones are: 1. Worn bearing washer *7* and *25* (Fig. 73) satellites and gear axes, the result could not - permissible increase backlash in the gears of the differential gearing (poluosevyh and satellites), con - tact teeth will move along the length of the tooth, will shock loads. As a result, breakage may occur teeth of gears, which is very often the cause of premature failure of the rear axle. Backlash in the gears of the differential is checked for axial game poluosevyh gears.

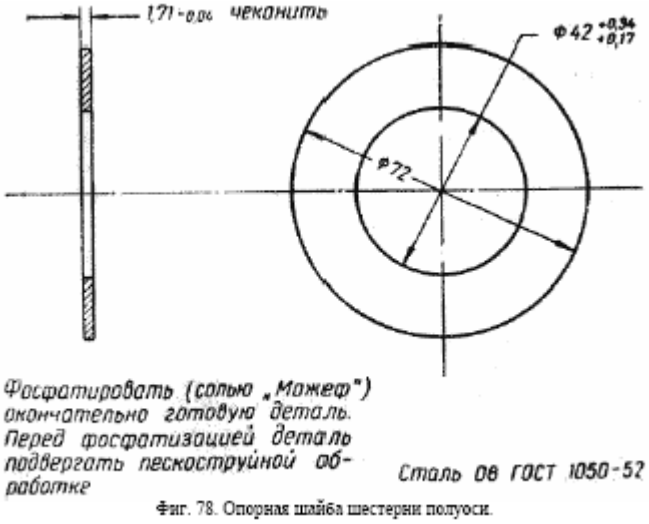

Фиг. 78. Опорная шайба шестерни полуоси.

Fig. 78. Supporting washer pinion axis.

Фиг. 78. Опорная шайба шестерни полуоси.

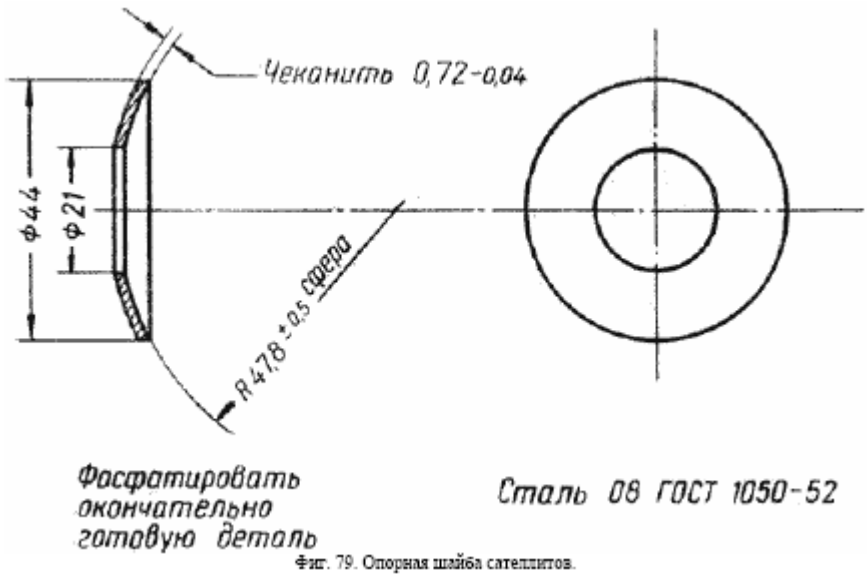

Фиг. 79. Опорная шайба сателлитов.

Fig. 79. Supporting washer satellites.

After 30 - 40 thousand kilometers car should open the rear axle and, without investigating differen - la, check the gap between the probe bearing washer *7* and the differential cross rail frame *6* (Fig. 73). If gap greater than 0.6 mm, it is necessary to disassemble the differential and replace worn washers

with new nominal thickness or discs with increased thickness (if there is deterioration of end surfaces differential gear box and half). Worn washers are allowed up to 0,4 mm for the washer satellites and up to 1,2 mm for the washer gear axes. If there is no ready replacement washers, they can be manufactured according to the drawings, shown in FIG. 78 and 79. The thickness of the washer poluosevoy gear must be selected such that the gap between the bearing washer and traf - CEM box when checking differential probe was within 0,3 - 0,45 mm. 2. Noise rear axle. Increased noise and breakage of the rear axle gears often occur due to the heavy wear bearings, or due to the weakening of the delay, which leads to razverke links and violate PRA Vilna gaps in gearing. Worn bearings can be caused by lack of lubrication, improper choice grade lubricants and overdue oil changes. If there is suspicion of an increased noise of the rear axle, then, before you start disassembling and adjustment, you should make sure whether the noise is coming from the rear axle. Perhaps source of noise is tire wheels, gearbox or other places of the car. Tire noise is well heard on smooth asphalt or concrete road, and he disappears in the soft dirt road. Tire Noise increases with deterioration of the tread and with decreasing air pressure in them. A knock at the rear axle, audible when passing vehicle movement from the "tightness" in the "roll forward" (at dropping of gas), or vice versa - is associated with higher clearances in the main transmission gears. Reason high-pitched noise (howling) is too small gap in the meshed gears. One of the causes of noise can be a very low level of oil in the crankcase rear axle. If this time is enough to bring the amount of oil to the desired level, without resorting to adjusting the bearings and gearing.

If the new rear axle works silently, but the noise occurs after run 3,5 - 4,5 thousand km, it almost always associated with a violation of the correctness of regulation - ki bearings from falling into the rear axle of sand and other foreign particles. In such cases, the noise can remove only the removal of dirt and thorough washing all the details of the rear axle in kerosene or hot water sodium bicarbonate solution. When washing special attention should be paid bearings. Must be remembered that even the smallest particles of dirt can cause jamming of the bearings and output their failure. The cause of intermittent noise rear axle is beating of the driven gear, which can be caused by: weak bout the delay in the differential bearings or wear, deformation or cracks in the box differential, non - Uniform tightening the screws, fasten waged gear to the box, warp the driven gears. Rear axle noise when cornering the car is connected with malfunctions in the details of the differential. Serviceability of the differential can check the follow - following manner:

1) raise the rear axle jack and put under He has two stands (goat); 2) manually rotate one wheel, pre - putting the gears in the neutral position. In good condition differential opposite - false wheel must rotate freely in reverse a hundred - Ron without knocking and noise in the differential. If the opposite wheel rotates in the same hundred - Ron, this points to the seizure (or breakage) satellites or poluosevyh gears.

Disassembly and assembly of rear axle does not represent per - trudneny and therefore there is no need to go touch this part. Some of the difficulties is the dismantling of the leading gears, a double roller bearing which zapresso - van into the crankcase of the bridge. For this purpose, can recommend puller, whose design is shown in Fig. 80. Lid *12* and cardan flange *14* (Fig. 73) should be removed. Instead put the cover on the neck of the puller, whose action

clear from the figure.

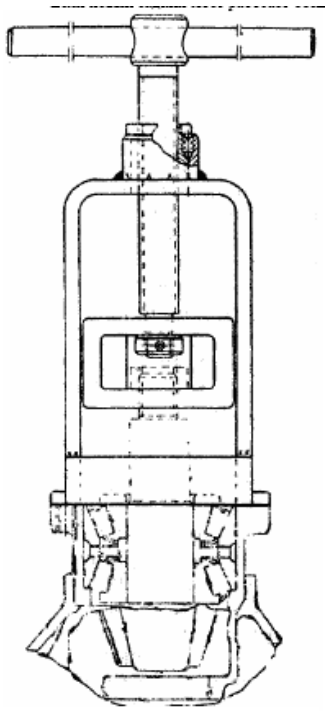

Фиг. 80. Съемник ведущей шестерни.

Fig. 80. Puller drive gears.

CARE OF THE REAR AXLE

Care for the rear axle is to maintain the level of oil in the crankcase and its periodic change in spring and autumn, in a regular face lift weakened joints (flange nut drive gears, front cover, fastening the right and left halves of the crankcase), the periodic adjustment of bearings in accordance with the above, in troubleshooting. After every 6 thousand kilometers should be checked tightening the mounting bolts halves of the crankcase. Every 12 thousand kilometers should check the axial clearance of bearings drive gears. Every 30 - 40 thousand kilometers should check the gap between the ends of the box differentiation building and supporting, hockey gear axis. It is necessary to periodically clean the rear axle breather from the mud.

FRONT AXLE

Front axle of GAZ-69 transmits traction to the front driven oscilla - himself. Transfer effort to steered wheels by typing in the transfer of the half (Fig. 81) to co - Forest Cardan, a device which is shown in FIG. 82. Construction special cardan and principled differs from conventional cardanic (a frog), cardan shafts used in automobiles.

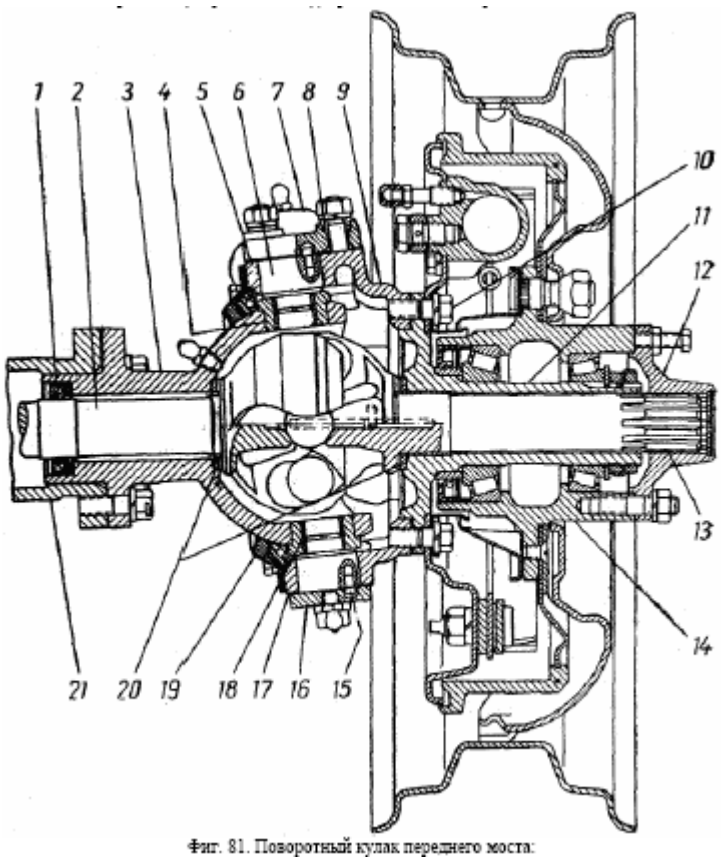

Фиг. 81. Поворотный кулак переднего моста:

Fig. 81. Steering knuckle front axle:

1 - gasket, 2 - Leading cardan fork, 3 - ball-bearing, 4 - case brass bushings, 5 and 17 - shims pins, 6 - Pin, 7 - lever steering linkage, 8 - split-sleeve, 9 - housing steering knuckle, 10 - attachment bolt pins steering knuckle to the chassis, 11 - pin swivel pin, 12 - flange hubs, 13 - led by the fork Cardano, 14 - wheel hub, 15 - Pin 16 - pad, 18 - bronze sleeve, 19 - felted rubber gasket ball bearing, 20 - Thrust washer Cardano, 21 - Shroud axis.

These cardans unsuitable for major bridges, angle of rotation of the wheels of which reaches 30 °. At such angles between the shafts does not occur - uniformity of the rotation shaft, which, in turn, causes considerable dynamic in - gruzok. Cardano, mounted in the drive to the leading steered wheels are a detail, re - enabling the torque, not crosses, and beads. This design provides equal speed rotation scheniya both shafts regardless of the angle between the va - selves. Therefore, such cardans called "cardan equal angular speeds. Internal structure and size cardanic GAZ-69 are identical with cardan GAZ-67B. Workers balls *3* and the central ball *6* (Fig. 82) in the two cardan same. The main gear, bearings, and differential the front axle are the same as in the rear axle. Carter crankcase cover the front axle differ from the corre - of corresponding parts rear axle only Nali - by the presence of the cut area, flanges in the front. This is to ensure the necessary clearance between the sump of the front axle and the steering rod ladder - tion. Method of connecting boxes with semi sump and cover the same as that of the rear axle. Maslootgonnoe ring gland leading main gear pinion front axle (see the child. *18* FIG. 73) has the right thread. To distinguish it from the corresponding parts of rear axle to the left threaded its end there is a stigma - the letter *P*. This should know, as a permutation of the rings will cause the opposite Effects maslootgonnogo device (grease leaking from the gland). Axle drive gears main gear of the front axle is moved from the axis of symmetry of the car 190 mm to the right. Therefore, the half-casings and axes are different lengths. Just as in the rear axle, in the front axle on the left casing half installed breather to prevent high blood pressure in crankcase bridge when heated during operation. Necessary to keep the purity of flow areas breather from time to time purge them. The sequence of bearings drive gears, differential gears and gearing Heads - Noah transmission is the same as that of the rear axle. Housing swivel pin *9* (Fig. 81) is cast from ductile iron. To him fastened by six bolts pin swivel pin *11* and the shield of the brake. Above and below in the steering knuckle pressed pins *6* sandwiched with the ends of the steering lever tra - petsii *7* - at the top and lining *16* - at the bottom. Between these parts and body steering knuckle at the top and installed at the bottom of the shims *5* and *17* to adjust the preload in the pivot bearings dents. Steel shims are used

thickness of 0,10, 0,15 and 0,40 mm. When the factory assembly preload in the bearings is set within 0,02 - 0,10 mm. The presence of adjustment spacers allows operation of the vehicle during wear of ating details to make timely lift bearings and eliminate axial clearance, are detrimental, tional container work of the front axle. The sequence of the pivot bearing is given below. Rotating - tion pins in the housing swivel pin prevented pins *15,* molded in the eccentrically ends of the pins. Heads are pins in the holes overlap. Lever steering linkage *7* is attached to the chassis steering knuckle four bolts. Reliability ensured mounting split sleeve *8.* Zapf pins rotate in the bronze bushings *18,* aligned with the GAZ-67B. Bushings are pressed into the housing *4,* pressed, in turn, the ball-bearing *3.* The latter is attached to the half-shell and five bolts, zashplintovannymi one wire. The fuel flows from the lubricant cavity steering knuckle, and hit her in the dust and water prevented a felt-rubber gasket *19,* working on the outer surface of the ball bearing. Rubber gasket *1,* pressed into the spherical bearing, prevents the ingress of lubricant from the cavity swivel pin in the half-shell and back. Grease steering knuckle pins and Cardan made through pressmaslenki. Inside the ball bearing is Cardano, a device which is shown in FIG. 82. Leading *2* cardan fork made for a single unit with the axis. Driven fork *1* through the flange *12* (Fig. 81) is connected to the wheel hub. Four leading ball *3* (Fig. 82) are in the grooves of the forks. The grooves are a form of a torus. Central ball to center *6* cardan fork. Pin *5 is* -

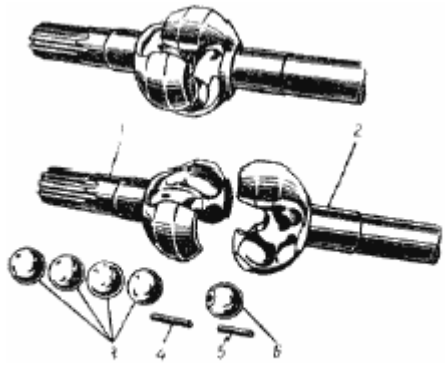

Фиг. 82. Кардан равной угловой скорости вращения:

Fig. 82. Cardan equal to the angular velocity of rotation Nia:
1 - led by the fork, 2 - Leading fork, 3 - working balls 4 - the locking pin 5 - pin - axis of the central Chari ca, 6 - central ball. Top kardan assembled form.

etsya central axis of the ball. He keeps the ball in the desired position, securing neraz - emnost cardan. From the fall-out of the ball pin *5* is protected by another pin *4,* inserted in the cross-hole driven fork and raskernennym on both sides. For disassembly cardan pin *4* should be removed (light stroke), pin *5* should be removed from the central ball. After that, the ball *6* can turn its Lysko so that the leading ball *3* can be removed from the grooves and kardan be dismantled. It should be borne in mind that the dismantling of Cardano in operation, usually carried out not be. If kardan be defective, it must be replaced completely new. Individual parts cardan vzaimonezamenyaemy. This applies to both forks and balls. When assembling cardanic plant selection is leading balls (there are 9 groups of size) to fork so that the beads were collected with a preload. In kardan set balls of only one any group.

BEARING ADJUSTMENT preload pivot steering knuckle

In operation inevitable wear of friction surfaces of end pins *6* (Fig. 81) and body bushings kingpin *4.* In particular, the lower pins will wear out as the most loaded. After - stvie wear preload bearing disappears and forms an axial gap between the ends of the pins and corporations joint bushings. This gap must be addressed removing the top and bottom of an equal number of adjustment gaskets *5* and *17* (Fig. 81). The sequence of the following:

1. Raise the front axle on a jack and remove the wheel.
2. Thoroughly clean, rinse and wipe the steering knuckle.
3. Loosen the bolts fastening flange *19* of ball bearing and push the gland so that it does not prevented the identification of the gap pins.
4. Hand over hand steering knuckle housing, try to move the steering knuckle up and down in the vertical plane (along the axis of pins). If there would be a gap in the axial kingpin, non - required to make adjustments.

5. Loosen mounting bolts and remove the lever steering linkage *7* - top and the pad kingpin *16* -- bottom. Upper and lower packages adjustable spacers *5* and *17* at the same time should not be confused.
6. Remove to a very thin (0.10 mm) shims at the top and bottom (the change of the thickness thickness of the upper and lower package seals must be the same amount in order to maintain the price - trovki cardan). Others put the pads in place, install and secure the lever steering linkage and - clutch kingpin.
7. Check the result of adjustment. If the axial clearance is not corrected, repeat adjustment, taking off on a thick layer of 0.15 mm at the top and bottom and put back in their place gasket thickness thickness 0,10 mm. Continue adjustment is necessary until such time as there is no axial clearance is eliminated pins. In It should adjust the steering knuckle to rotate on trunnion pins easily under the dei - stviem efforts of one hand. If a fairly large force, need to loosen tightening pins formulation of the same number of thin spacers on top and bottom. The difference in the thickness of the package seals the top and bottom should not exceed 0,1 mm. If as a result of earlier manufactured under the lining of adjustment is only one thickness stop laying thick (0.4 mm), then it should be replaced by a set of two or three thin pads with Summar - Noah thickness of 0.1 mm less than the removed gaskets. Shim thickness of 0,1 mm, 0,15 mm are given in the tool kit to each driver car, and they must be carefully stored.
8. Put in place a ball bearing oil seal and fix it. This should draw attention the state of the omentum and, if necessary - to replace it with new. It may be that even when adjusted correctly tightened, the pivot bearings bu - child observed angular play in the steering knuckle kingpin in a vertical plane, causing "vi - lyanie "wheels when driving or reverse breakdown, visible to the eye. Reason is the excessive surface wear pins and bushings, pins on the slide meter. In this case, worn parts should be replaced with new or renovate old (going - fovka pins and bushings with reduced production of internal diameter). In Fig. 83 and 84 are given drawings kingpin and kingpin bushings.

Disassembly and assembly steering knuckle

Disassembling the steering knuckle in the following order:
1. Raise the front axle on a jack and remove the wheel.
2. Remove the flange *12* (Fig. 81) hubs with bolts, extractors, free mount bearings workers hubs and remove the hub.
3. Remove the shield brakes and trunnion swivel pin *11*.
4. Remove cardan assembly of the semiaxis.

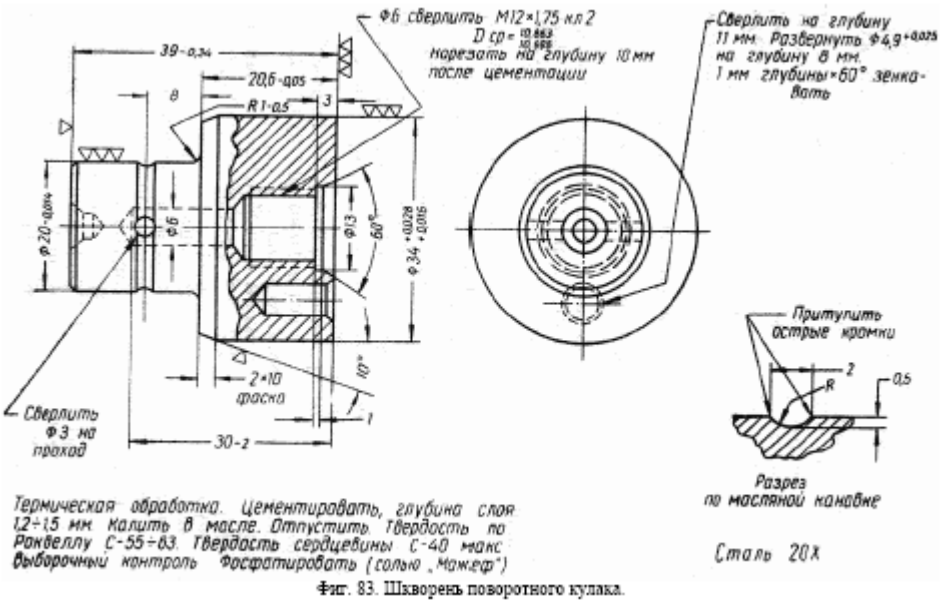

Фиг. 83. Шкворень поворотного кулака.

Fig. 83. Pin steering knuckle.

5. Remove the lever steering linkage *7*, strip *16* and packages of the upper and lower adjustable Proclus - Doc. To save the old control each packet without changing its thickness must be at assembly placed on its original place.
6. Take out the pins, using the remover, available in a set of instrument driver.

7. Loosen the bolts fastening flange *19* of ball bearing and push it from the body turning fist *9.*
8. Remove the steering knuckle housing.
9. To remove the ball bearing *3* should rasshplintovat and unscrew bolts, fastening it to the skin - xy-half of the front axle.
10. If you need a *19* or examination of the omentum his replacement, it can be removed from the flange ball support.

Steering knuckle assembly is performed in reverse order. When setting cardan follows - lozhit a spherical bearing and grease with a mixture kardan Nigrol. Bearings pins lubricated through press lubricator according to the map lubrication.

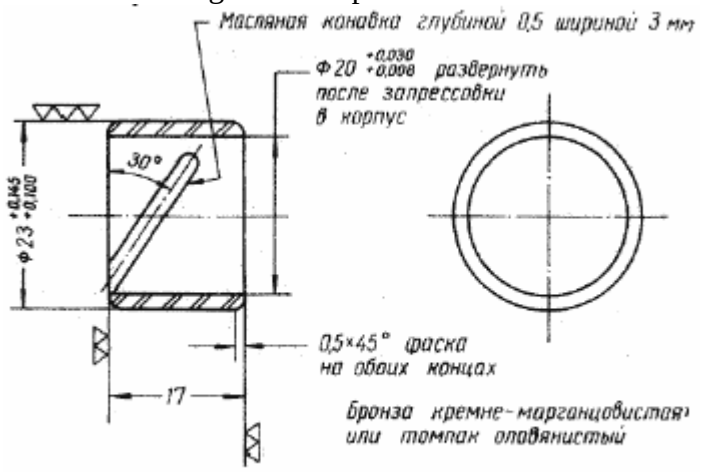

Фиг. 84. Втулка шкворня поворотного кулака.

Fig. 84. Bush kingpin steering knuckle.

If for any reason requires disassembly cardan front axle, it should be productivity be conducted by the following order:

1. Before disassembling kardan be thoroughly washed in kerosene and paint or mark Punch mutual arrangement of parts.
2. Knock beard locking pin (Fig. 85).
3. Rotate Cardano in the vertical position (the driven fork down), put it on a wooden lining cross rail and knock on the stand, that finger down into the hole and driven fork cardan out of the central hole of the ball.
4. Rotate the fork leading to Cardano greatest angle relative to the driven fork.
5. Rotate the central ball in a position to be able to take one of the leading balls, then pull out the remaining balls. The montage cardan be in next orders of magnitude -

Re:

1. Hold down waged a fork upright in tis - paper and inserted into the hole cardan finger (Fig. 86).
2. Insert a central ball in the ball deepening ve - duschey cardan fork, turning it Lysko to yourself.
3. Set on a central ball waged a fork car - given and alternately inserted into the grooves of the two forks cardanic three lead ball.
4. Rotate the ball in a central position at which the rum his Lysko will coincide with the groove for the fourth ball.
5. Dilute forks cardanic at maximum angle (Fig. 87) and put the fourth leading ball so that it passes through mi - mo Lysko central ball.
6. Rotate the central ball so that its end coincides with the channel driven fork cardan.
7. Remove kardan from the clutches of a fork and turn over leadership down, hit the lead with a fork on a wooden lining so that - to finger went into the hole of the ball.
8. Put the locking pin and raskernit it.

Alignment FRONT WHEEL

Ease of driving, the stability of its motion zheniya, as well as normal and even wear tires ne - rednih wheels are provided by the right angle installation wheels.

Camber of the wheels (Fig. 88), or the angle formed

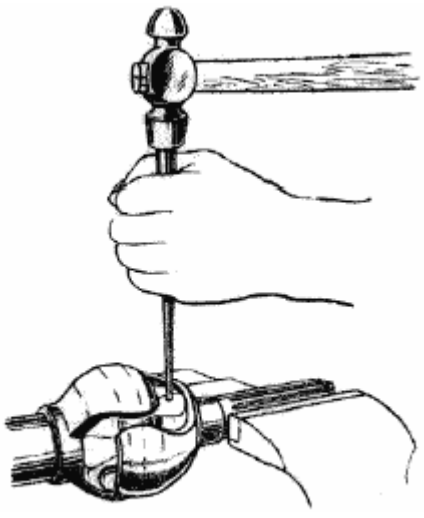

Фиг. 85. Разборка кардана равной угловой скорости вращения.

Fig. 85. Disassembly cardan equal angular velocity rotation.

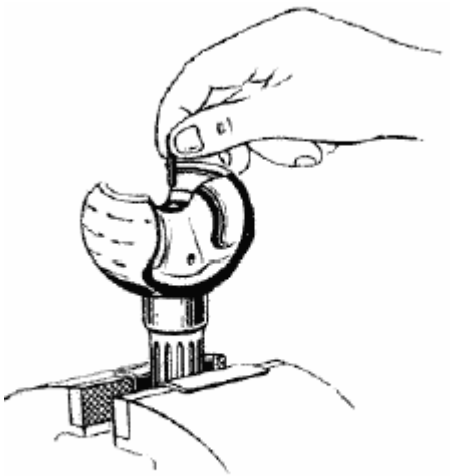

Фиг. 86. Установка пальца центрального шарика в отверстие ведомой вилки кардана.

Fig. 86. Installing the ball in the central finger hole driven cardan fork.

Фиг. 87. Положение кардана, в котором устанавливается последний рабочий шарик.

Fig. 87. Situation Cardan, in which installed last working ball.

plane of the wheel with a vertical plane parallel to the longitudinal axis of the vehicle is 1 ° 30 '.
Angle This corresponds to the difference in distance between the wheels of *A* - *B* = 32 mm approx.

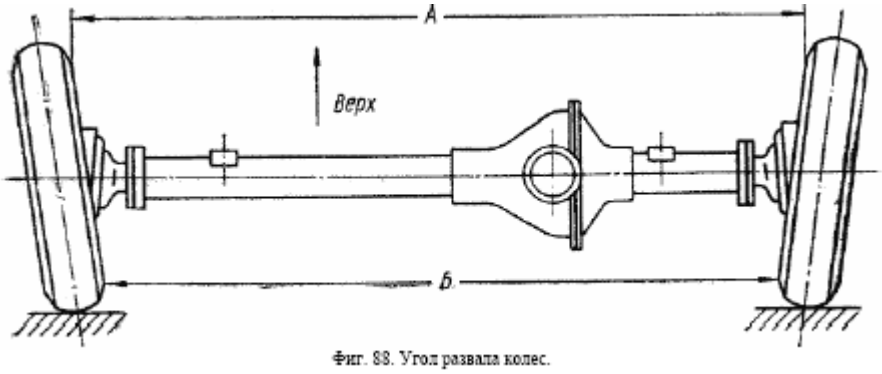

Фиг. 88. Угол развала колес.

Fig. 88. Camber of the wheels. The collapse of the wheels reduces the effort required for their turn, and facilitates the proper working wheel bearings. The collapse of the wheels of the car GAZ-69 is not regulated. It provides constructive tilt pins steering knuckle. When measuring the size of *A* and *B*, the car must be on horizontal area - Nike, the air pressure in tires front wheel must be 2 kg / cm 2 In tire rear wheels - 2,2 kg / cm 2 .

During the operation of the car right corner of the collapse may be broken due to wear pins and bushings, pivot bearings, and the appearance of excessive clearances in the front hub bearings wheels. You should periodically check the correctness of the collapse of the wheels, make timely regula - perature of the pivot bearings (if necessary - to replace or repair the pins and bushings) and bearing hubs. Violation of the angle of the collapse of the wheel leads to uneven tire wear of the front wheels. Depreciation tires on the outside indicates an increase in the angle of the collapse of the wheels. Zero or negative - tion leads to the collapse of the tire wear on the inside, causes "wobble" of the wheels and the increase effort on the steering wheel when turning the car.

The angle of inclination of the lower end of kingpin forward (Fig. 89) is 3 °. This angle provides the automo - bilyu good stability (especially on the turns), and facilitates the management of the car. Just as camber, kingpin inclination angle is not regulated. The slope of the lower end of the pins is achieved in advance of the installation of front springs (front ears above the rear). As the angle pins motion car becomes less stable (steering bad "holds" the road), partially lost "self-resetting"the steering wheel when you exit the car from Powo - company, appears "wobble" of the wheels. If the car is at normal inflated Shih tries leads in one direction, it indicates that the angles of inclination of the lower ends of pins of both wheels unequal. During operation angle pins can be reduced with significant sediment or broken front springs, and also because of the wear pins pivot bearings and bushings.

The angle of lateral inclination of the coupling pin (Fig. 90) or angle between the axis of the pins with a vertical plane - bone, parallel to the longitudinal axis of the vehicle is 5 °. This angle is not adjustable. He achieved matched - without quotation marks axle pivot bushings in the Sharo - howl reliance steering knuckle front axle. Side slope of pins increases the ability to keep the car road. Turning around an inclined axis of the pins, when turning the wheel of a car tends to rise from ground up, but this prevents the force of gravity forward of the car. Under the action of gravity to - forests tend to turn themselves into a position corre - sponding movement of the car in a straight line, and to

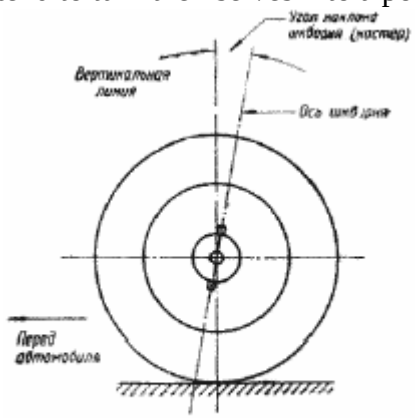

Фиг. 89. Угол наклона нижнего конца шкворня вперед.

Fig. 89. The angle of inclination of the lower end of kingpin forward. withdraw them from the neutral position, is required when - lozhit them some effort. This explains that all the small tremors felt by the wheels while driving, do not remove them from the neutral in of Annex. **The angle of convergence of the wheels** (Fig. 91) measured difference between the distances *C* and *D* between the inner edge - mi tires, rear and front, measured at a height of price - centers of the wheels in a position corresponding to the movement a straight line. *Dimension* B must be greater than the size of *G* 1,5 - 3 mm. Front-wheel drive, with the collapse would be ca - intercede without sliding tires on the road in the event If the motion they will have a certain angle convergence. Due to the collapse of the wheels rolling on the race - walking arcs. To avoid this phenomenon, you - is called slippage, and associated on - elevated tire wear is required angle of convergence wheels to last rolled convergent SELF arcs, and thus would neutralize harmful effect of collapse. The value of convergence of the wheels selected in accordance with the magnitude of their collapse. Convergence of the wheels is governed by a change in length HN rod *15* (Fig. 95) the steering linkage. In operation must be periodically pro - believing the convergence of the wheels and, if it is broken down, should regulate it. If the toe both wheels are not the same, the car "leads" in the direction of the wheels with less shozhde - tion. It may be that the convergence of the wheels suddenly become too big - the reason for this may be curvature thrust steering linkage. When checking and adjusting the convergence of the wheels of the car must be on horizontal area - Nike, the tire should be the normal air pressure, front-wheel drive must be placed in sex - closure, the corresponding movement in a straight line. Gauging the size *and D* is a special ruler. The check is desirable to produce two wheel positions, which after the first measurement to move the car at 1 m and repeat the measurement.

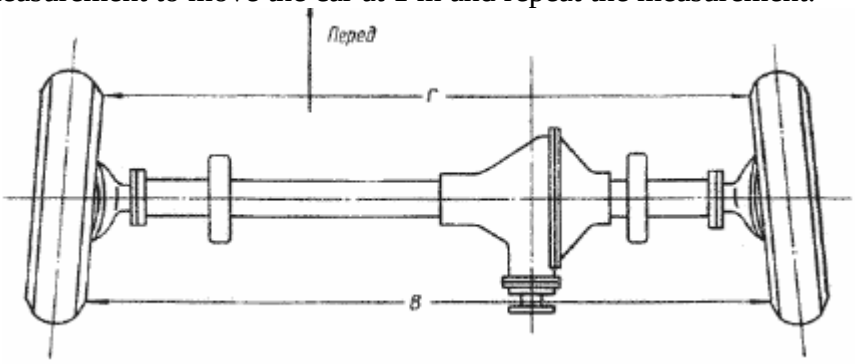

Фиг. 91. Угол схождения колес.

Fig. 91. The angle of convergence of the wheels.

Adjusting the angles of rotation of the front wheels. Maximum angle of internal wheel (relative to the center of rotation of the car) should be equal to 30 °; outer wheel when it should turn at 28 - 29 °. Angle of rotation of the wheels is limited by contact heads of the adjustment bolt, screw in the swivel pin housing, with emphasis, privernutym to the flange of the ball bearing (Fig. 95). Heads of the adjustment screws *12* should come into contact with the focus by turning the wheels at 30 °: PRA Vågå wheel - right and left - the left. After adjustment should be tightly Lock the bolts *12* nut *13.*

CARE OF THE FRONT AXLE

Care for the front axle is to maintain the level of oil in the crankcase and its periodic change in spring and autumn, in the lubrication cardan pins and steering knuckle, in a regular lifting weaken

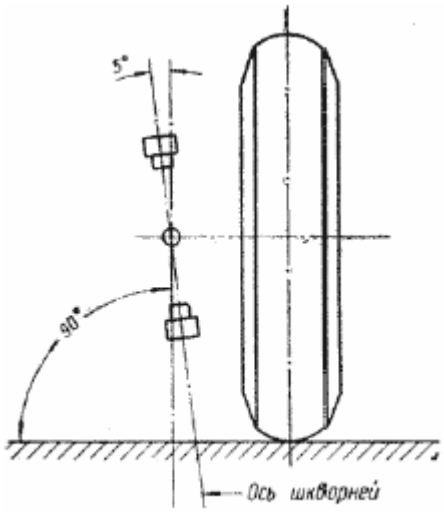

Фиг. 90. Угол бокового наклона шкворня.

Fig. 90. The angle of lateral inclination of kingpin.

Shih connections (flange nut drive gears, front cover, fastening the right and left halves Carter, fastening lever steering linkage to the body of the swivel pin), the periodic adjustment main drive gear bearings and steering knuckle pins in troubleshooting.

Every 6 thousand kilometers should:

1. Check tightening the mounting bolts halves of the crankcase.
2. Check and, if necessary, adjust the bearings, steering knuckle pins.
3. Check and, if necessary, adjust the angle of convergence of the front wheels.

Every 12 thousand kilometers should:

1. Check the axial clearance of bearings drive gears.
2. Tighten the nuts lever steering linkage to the swivel.

Every 30 - 40 thousand kilometers should check the gap between the ends of the box differentiation building and supporting hockey gear axis. If full turn of the wheels do not provide decent turning radius vehicle or If the tire for anything offend, you should check the value of the maximum rotation angles front wheels. You should periodically clean the front axle breather from the mud.

STEERING and tie rod ends

The steering is composed of the steering mechanism and the steering rods front steering wheels. The steering mechanism of GAZ-69 partially unified with steering car - Lei M-20 ZIM, GAZ-51. Working couple steering mechanism consisting of globoidalnogo worm and double roller, and conjugate - zhennye with her details (casing, bearings, caps, etc.) are applied in full from the car M-20. The steering wheel buttons and the detail signal is applied from the GAZ-51. Carter *21* (Fig. 92) the steering mechanism is mounted by three bolts to the left spar frame. Steering gear consists of globoidalnogo worm *20* and a double roller *22.* At the GAZ-69 release from March 1954 are set reinforced rollers vzaimonezame - nyaemye roller cars first issue. Accordingly, the shaft fry *5* lost interchangeable - dence.

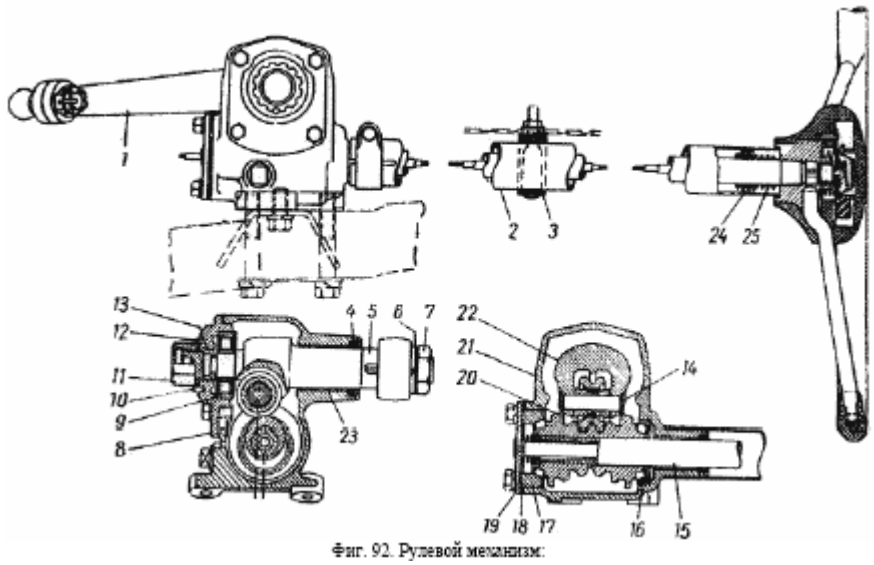

Фиг. 92. Рулевой механизм:

Fig. 92. Steering mechanism:

1 - fry steering, 2 - column, 3 - rubber seal, columns, 4 - gland, 5 - shaft fry, 6 - Disc Spring, 7 - nut, 8 - cover, 9 - Roller bearings, 10 - pin retainer, 11 - nut, 12 - Lock washer adjusting screw, 13 - adjusting Screw, 14 - axis of the roller, 15 - steering shaft, 16 and 17 - Roller bearings, worm, 18 - Shims, 19 - front cover Carter, 20 - a worm, 21 - banjo steering wheel, 22 - double roller, 23 - bronze sleeve, 24 - ball bearing angular contact ball bearing shaft steering, 25 - spring bearing.

However bipod shaft assembly with roller number 20-3401060-B are basically interchangeable. The gear ratio steering gear 18.2. At the upper end of the hollow shaft *15* is mounted steering wheel, and at the bottom - a worm *20,* mounted in two tapered roller bearings *16* and *17.* Bearings have inner rings. Instead rolling surfaces of the cones are made in concert with the worm. Bearings regulated spacers *18,* placed between the lid *19* and the crankcase. Gaskets used two thicknesses: 0,25 mm (made of cardboard) and 0,13 mm (parchment). Double roller *22* (which is a product bearing plant), set in the head of the shaft bipod rotates on two angular contact ball bearings. As one of the surfaces rolling bearings used raceways, performed directly in the roller. Val bipod mounted on two pillars: a bronze bushing *23* and cylindrical roller bearings Nike *9,* set in the lid *8.* At the top of the steering shaft mounted on radial contact ball bearings *24.* Axial and radial clearance in the bearing is eliminated action spring *25.* This design (in contrast to previous designs with a cylindrical roller under - shipnikom) ensures the absence of "rolling" the steering wheel.

ADJUSTING THE STEERING TRANSMISSION

Adjusting the steering gear is needed to maintain the gaps in gearing worm and roller, and bearings of the worm within the required limits, ensuring normal play in steering. Inconsistencies Observing this condition leads to the fact that the driver did not "feel" the road and there is "return" in the steering wheel. The need for periodic adjustment is caused by wear of the steering and a pair of roller bearing worm. Peculiarity of the worm meshing with the roller is the volatility of the gap in the wheel a couple times when - personal situation of the steering wheel. When the vehicle is moving in a straight line, this gap in a properly adjusted steering wheel from almost - absent. As the steering wheel to either side of the gap increases, reaching the edge - these provisions 30 ° angled free game steering wheel. Adjust steering pair should be the case if the angular free play in the steering wheel in proposal to direct movement of the car exceeds 40 mm when measured at the rim. Before the caster - drink to adjust the steering couples should make sure that it is the real cause high game steering wheel. Very often, it is not a wear a pair of steering and its bearings, and in the weakening of landing fry on its shaft, loosening of ball fingers, loosening of the crankcase to the frame and steering other compounds of the steering. Only after eliminating these faults can be in - step to adjust the worm meshing with the roller bearings and worm. First regulated bearings worm (if this is necessary), then - entanglement worm with a roller. Before adjusting bearings worm should check whether there is an axial gap worm (steering shaft).

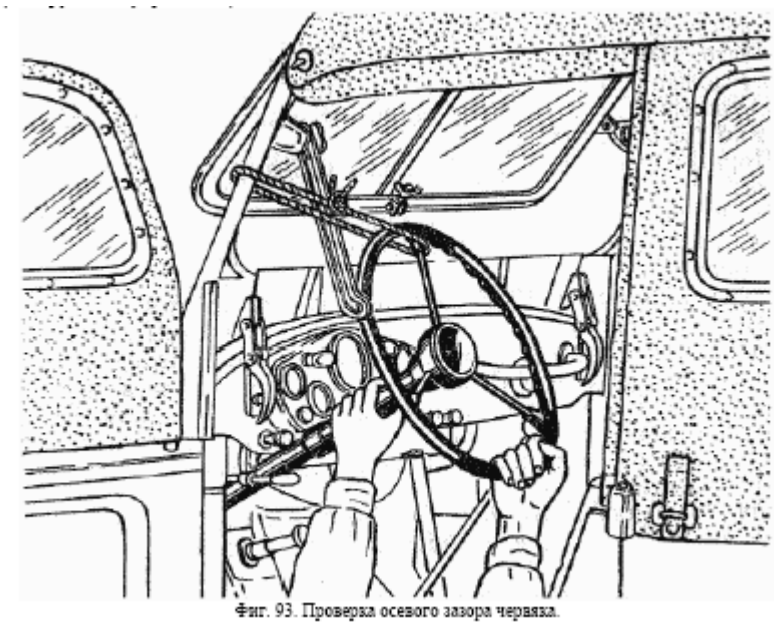

Фиг. 93. Проверка осевого зазора червяка.

Fig. 93. Check axial clearance worm.

Verification procedure is as follows:

1. Turn the steering wheel one turn to the left from its position when the vehicle is moving on line and fix it in this position, tied for the knitting-needle to the left rack wind window.
2. Right hand to tighten the leash and hold the wheel of revolution, covering a steering column with so that the thumb touched the end face of the steering wheel hub (Fig. 93). Then, swinging heavily front-wheel from side to side, check the axial clearance of the worm - ka (shaft). This gap reveals a finger or an eye to axial movement of the end hub on steering column. In the presence of axial gap must be addressed adjustable bearing worm. For this, First, should:
1. Remove steering gear from the car, pre otediniv wire signal pour oil from Carter, a mechanism to disassemble and wash all the details.
2. Set in the crankcase with the worm shaft and bearings and put on the steering wheel shaft splines.
3. Take out a thin paper gasket *18* (Fig. 92) of the existing adjustment spacers under the lid *19,* gasket and put the rest to make a normal tightening four bolts crepe PRINCIPLES FOR GOOD GOVERNANCE cover. When tightening the bolts to rotate the steering wheel more to videos bearing worm took the correct (without distortion) position.
4. Of the absence of the axial gap and the ease of turning the steering wheel shaft without manufacture bipod and roller. If the axial clearance exists, should be removed from a thick pad, and shot past a thin pad again put on the spot. After adjustment of axial clearance in the bearings of the worm must by - sutstvovat. In this case the force required to rotate the steering wheel, attached to the rim (Fig. 94), should be within 0,2 - 0,5 kg. The sequence of the worm meshing with the roller follows:
1. Insert the shaft into the crankcase fry with roller and the shaft cover podsobrannuyu *8* (Fig. 92) with podshipni - com *9.* The cover screws to fix. Turning the screw *13* with the help of a key set of tools to install the driver shaft to fry axial direction so that at the middle position on the roller worm (within 45 ° Powo - company of the steering wheel side to side) clearance in the worm meshed with the roller was missing. In extreme positions (when you turn the steering wheel until it stops) clearance in the gearing could reach 30 ° rotation of py - left wheel. When rotating the screw 13 clockwise into engagement gap decreases, the rotation against clockwise - increases.
2. Check the force required to turn the steering wheel to either side of the average situation. This force applied to the wheel rim (Fig. 93), should be within 0,7 - 1,2 kg pro - of extended turn the steering wheel to the left of the average of approximately 200 ° and right - to 100 °. After a few adjustments in the corners of the difference may disappear.
3. Put lock washer *12* (Fig. 92) (pin *10* should be in one of the grooves washers) and tighten, locknut *11*.

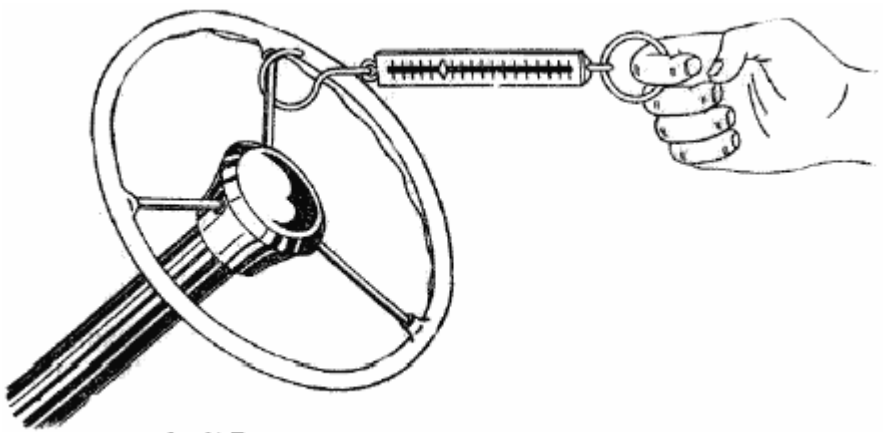

Фиг. 94. Проверка усилия, необходимого для поворота рулевого колеса.

Fig. 94. Checking the force required to turn the steering wheel.

After adjusting to install steering wheel on the car, put the steering wheel, put the worm in the movie middle position and then put fry. When the situation of the front wheels, the corresponding movement of direct, fry should be located approximately parallel to the longitudinal axis of the vehicle. As mentioned above, the ease of turning the steering wheel is checked force on a wheel rim. Ec - if for some reason there is no possibility to verify this effort, it is necessary to show if the egulatory perature caution, avoiding tugogo rotation. "Tight" rudder loses its ability to self-return after the car out of a turn and leads to a deterioration of the stability of the car while driving with high velocities.

DRIVE FROM STEERING MECHANISM TO FRONT WHEELS

Steering actuator shown in FIG. 95. At the ends of the tubular rod bipod *17* navernuty tips, which set forth the fingers *9* with sha - rovoy head. Pins *9* are connected to one side with a plow *16*, the other - with the right lever *18* Powo - commander's fist. Ball heads are in two fingers of hemispherical breadcrumbs *6*. The gap in heads "Select" action of the spring *5*. *5* is a mainstay of the spring bearing washer *4*, restrained by the locking ring *3*, rose - oxidized in the groove tip body *1*. Seal *7*, consisting of two spherical washers, springs and seals, securely holds SmAZ - Ku in the tip and prevents it from falling into the dust and dirt. Tips do not require adjustment, so as the spring *5* automatically removes the gaps that appear with wear. The design of the steering linkage rod *15* - the same thrust bipod *17* and differs from the latter only length. At the ends of rod *15* set are the same as in the draft *17*, with ball tips of finger - mi. One of them is connected with the right lever *18, the* other - with the left arm *14* steering knuckle. The ends of the rods 15 and *17* have the right and left thread, which enables convenient to change the length of the rods when adjusting the convergence of the wheels. Tips standstill clamps *10* and clamping bolts.

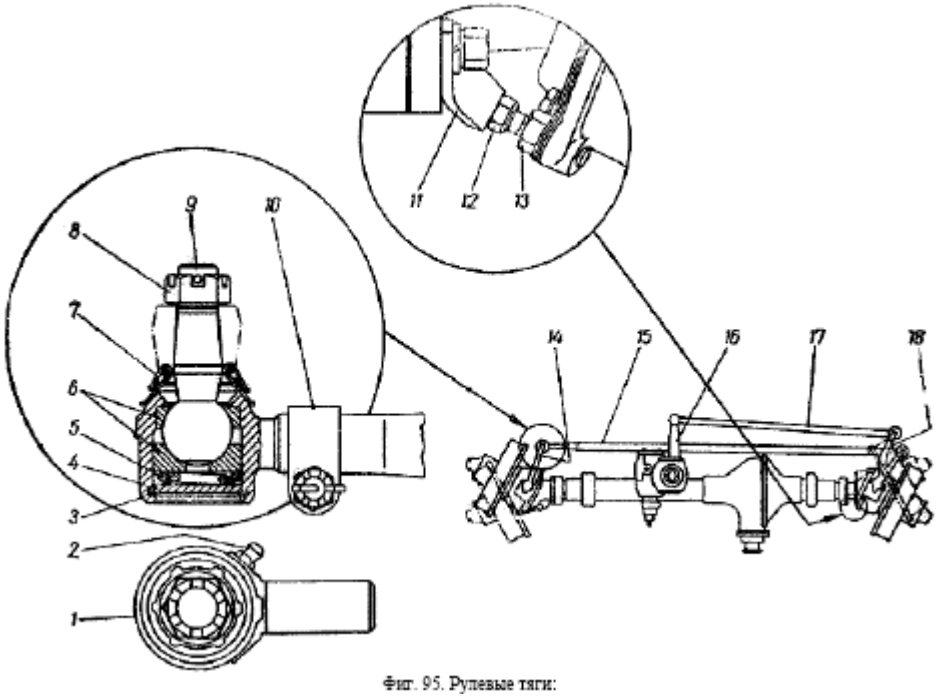

Фиг. 95. Рулевые тяги:

Fig. 95. Tie rod:
1 - body of the tip, 2 - pressmaslenka, 3 - locking ring, 4 - bearing washer springs, 5 - spring, 6 - biscuits, 7 - protective yn lotnenie, 8 - nut finger, 9 - finger with a ball head, 10 - belly brace, 11 - emphasis on ball of 12 - the adjusting bolt 13 - • nut, 14 - lever steering knuckle, 15 - pull the steering linkage, 16 - fry steering, 17 - draft bipod, 18 - lever rods.

CARE STEERING

Care steering is a systematic lubrication of gear and SHarni - ditch steering rods, verification and if necessary - lifting the attachment of gear to heart - Gerona, fry nuts, bolts fastening lever steering linkage to the swivel. As indicated in the section "Maintenance of the car, tightening the crankcase attachment to heart - Gerona and steering fry should be made within 6 thousand kilometers, or earlier if this appears need. Before the attachment of gear to release the nuts fastening ladders column to the dashboard. After bolting crankcase steering column to secure a position in which it located. If the steering wheel departed downward from the dashboard, you need to put under rubber cushion pad columns required thickness. If the column moved away, then prodolgo - vatye holes in the panel can fix it in a new position. If you need to tolerate any at - repents sawing holes in the right direction. During installation, the steering mechanism in any case not be bending the column, as it can lead to breakage of the steering shaft, due to violations of centering bearing shaft and worm - ca.

BRAKE

Brakes GAZ-69 consists of a foot brake and a central brake Tikhiy Stream - nym drive. All brakes - drum type. Foot and central inhibitors act independently each other. Foot brake is hydraulic actuator acting on the pedal on all wheels. Central brake is located directly behind the transfer case and acts on the rear driveshaft. He has a mechanical rope drive.

DEVICE footbrake

Front and rear brakes are the same. The only difference in the way of accession to the pipeline to - Forest cylinder brake. In the rear brakes laminated end of metal tube pipe connected socket with wheel cylinder. The front brakes are controlled in view of the front wheels, connection of the wheel cylinder to the pipeline by means of a flexible rubber hose. All parts brakes car GAZ-69, except for the brake shields are the same with the brakes car "Pobeda". The design of the rear brake shown in FIG. 96 and 97.

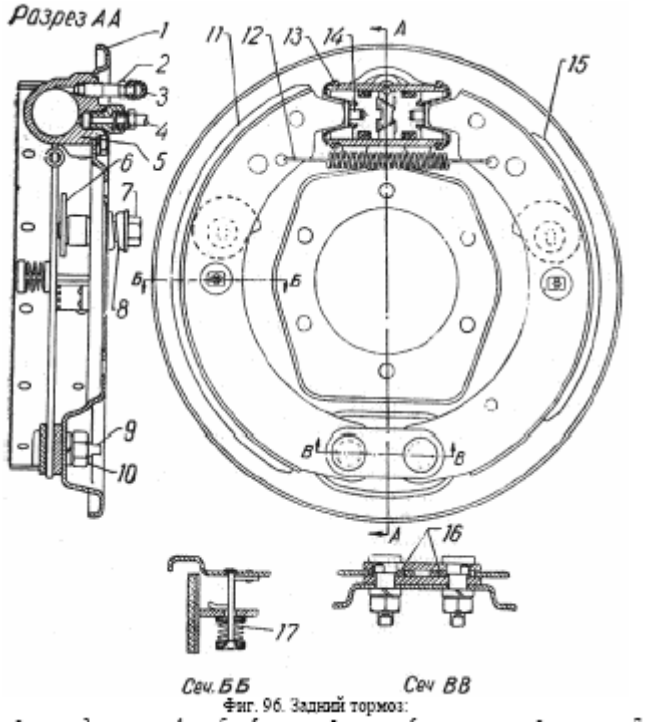

Фиг. 96. Задний тормоз:

Fig. 96. Rear brake:
1 - Shield 2 - relief valve, 3 - cap 4 - tube, 5 - wheel cylinder, 6 - adjusting eccentric, 7 - Hexagon th - agile axis of the cam, 8 - spring eccentric, 9 - holding finger 10 - nut reference finger, 11 - front pad, 12 - coupling spring pads, 13 - the protective cap of the cylinder, 14 - rusk piston, 15 - rear block, 16 - eccentric washer reference Pal - ca, 17 - spring, pressing the brake shoe to the shield.

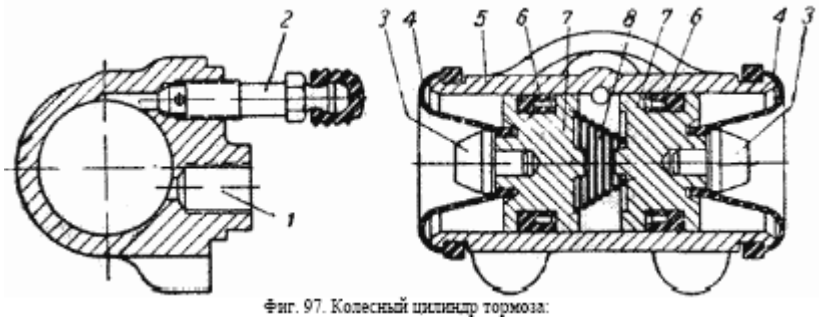

Фиг. 97. Колесный цилиндр тормоза:

Fig. 97. Wheel cylinder brake:

1 - screw hydraulic line choke tubes, 2 - relief valve, 3 - rusk piston, 4 - the protective cap of the cylinder, 5 - Wheeled chi - lindr, 6 - sealing ring, 7 - piston, 8 - spring.

By missile shield *1* rear brake with two bolts privernut to - Forest cylinder *5*. In Fig. 97 shows the internal structure of the wheel cylinder. At the wheel cylinder pistons installed *7* with resistive new cuffs 6 and Expansion spring *8,* is constantly presses the sleeve to the piston. To prevent on - falling down the dirt inside the cylinder are made of rubber caps *4*. In the middle of the cylinder has two openings are one above the other. A lower opening in the cylinder comes fluid under braking, through the top of the cylinder is removed air when filling the system with fluid. Upper hole closed bypass valve *2* with the re - Zinovy cap. In the lower part of the shield (Fig. 96) are supporting fingers *9,* which wore bronze eccentric *16,* is - schiesya axes swing pads *11* and *15*. Turning the fingers with eccentric bottom ends of colo - Doc converge or removed, resulting in a change-over zor between shoes and drum at the bottom of the brake. When installed correctly pads with new, non - worn pads, labels on the fingers (on the outer cores ends) must be converted to one another, as shown in FIG. 98. Brake pads *11* and *15* (Fig. 96) based on the upper end Rusks *14,* pressed in the wheel cylinder pistons. When apart of the piston pads pressed against the drums and pro - comes inhibition. Both blocks are identical, but lining them different: front pads have long lining, rear - short, what has been done to align them to wear. Each block is based on the inside of the regu - lirovochny eccentric *6,* latching in any position spring *8*. turning this changes the gap between the cam - do shoe and brake drum. The axis of the eccentric withdrawn outside (for the shield of the brake) and ends with Allen *7* under key. Kolodko its edge (see section *BB* in FIG. 96) build - Xia at the elbow, riveted to the shield, and pressed him spring *17*. pads are attracted to the eccentric *6* coupling spring *12*. brake drums, with an internal dia - meter equal to 280 mm, composed of steel and cast iron disc about - Yes, connected together in the process of casting. To drive the drum welded amplifying ring. Brake drum detachable (Fig. 99), put on the wheel studs and spigot hub, then screw tight to her three screws *3*. The screws are evenly around the circumference that provides installation of the drum only in one particular position (after dismantling).

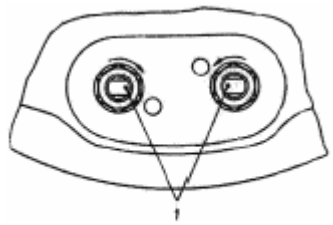

Фиг. 98. Положение опорных пальцев колодок при неизношенных накладках:

Fig. 98. Position of the reference finger shoes with neiznoshennyh linings: 1 - label (cores).

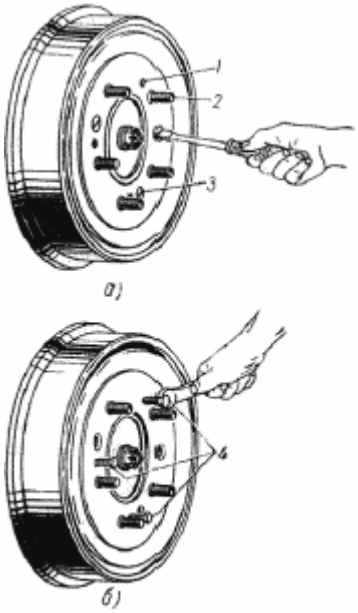

Фиг. 99. Демонтаж тормозного барабана со ступицы:

Fig. 99. Dismantling brake Baraba - at the hub: a - otvertyvanie crews, b - the removal of the drum rotation of the three bolts, 1 - hole bolts, 2 - pin-wheel, 3 - screw-matured Nia brake drum. 4 - screws for dismantling. Three holes with thread *1* in the amplification ring are used to remove the drum from the hub at Pomo - soup bolts, wrapped in these holes. Screws *3* are intended only to keep the drum in place when wheel removed. When attaching wheel nuts drum is clamped between the wheel and the hub flange, and screw *3* discharged. You can not brake drum of a wheel wear on the hub of another, as the windows - radiative processing of brake drum is assembled with their hubs, so the brake bar - bans separately from the hub vzaimonezamenyaemy.

Foot Brake consists of a pedal, master cylinder and pipes connecting master cylinder to the wheel.

The brake pedal is installed on the axis, attached to the frame. In boss pedals are pressed bronze - Vai bush. Lubrication is supplied to the pedal through pressmaslenku on drilling in the axis. Axial clearance pedal mouth - injuring spring washer installed between the ends of bobyshek brake and clutch.

Master cylinder (Fig. 100) has the same device on all cars manufactured by Gorky - Stark automobile plant. He was cast in one piece with a reservoir for brake fluid. Constructed and operates the master cylinder as follows: when the brake pedal pusher *16* presses the plunger *14,* fitted with two rubber sealing ring *3* and 5. Edge cuffs 5-hole covers compensatory stie *B.* Then, inside the cylinder in the cavity *D* is increased pressure, liquid, overcoming the force of spring *6* valve *8,* and opens the valve, acting on pipelines in the wheel cylinders, resulting in the brakes. When you release the brake pedal force is a spring *20* returns to its original position, and then - *14* Shen force springs *13* moves followed by a pusher *16.* Brake pads under the influence tie springs closer together, stopping inhibition, and brings wheel cylinder pistons. Brake - Nye fluid is displaced from the wheel cylinders and back into the cavity *D* of the master cylinder through the CPG - sknoy valve 7.

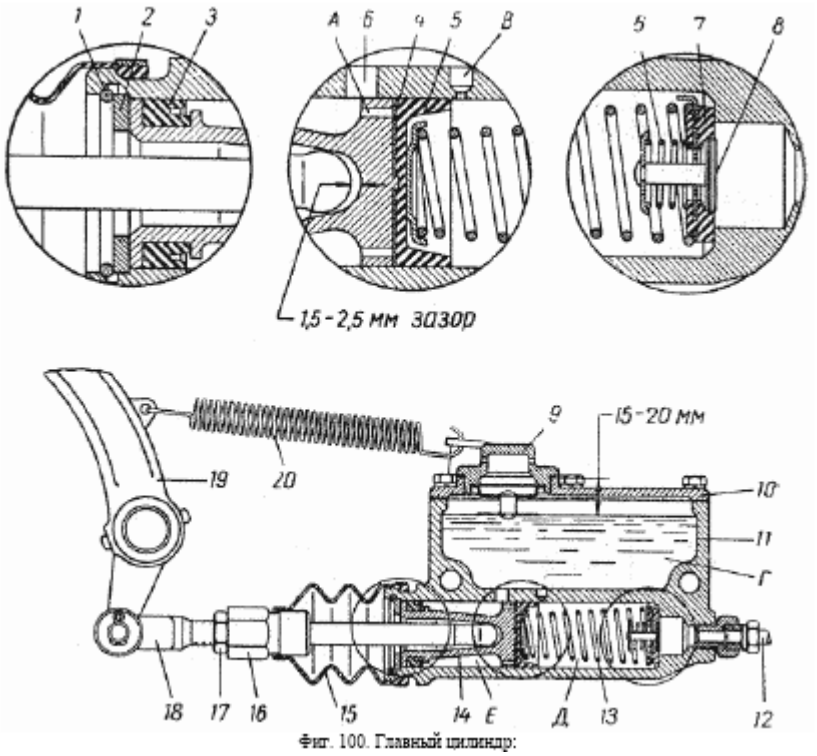

Фиг. 100. Главный цилиндр:

Fig. 100. Master cylinder:

1 - Keyhole ring, 2 - thrust washer, 3 - sealing ring, 4 - star-shaped spring plate, 5 - cuff, 6 - Spring valve, *7* - inlet valve, 8 - exhaust valve, 9 - cap 10 - cap 11 - housing 12 - tube 13 - returnable pru - zhina, 14 - piston 15 - protective housing 16 - Pusher 17 - nut, 18 - rod, 19 - Pedal, 20 - snatch spring, A - hole piston, B-B - the opening of the master cylinder, D - reservoir, D and E - the cavity of the cylinder. The volume of liquid flowing back into the master cylinder from the pipeline in inhibition, may be less than the amount discharged piston in the cylinder. In this case, the *cavity-D* image etsya vacuum under the action of which the fluid from the cavity *E* flows into the cavity *D* of the holes in the *A* head of the piston, pressing the edge of cuffs *5*. Replenishing fluids while in the cavity *E* is due reservoir through the hole *B.* In the extreme position of the piston cavity *14* through a hole *in the D* will be reported to the vessel *D*, and pressure in it becomes equal to atmospheric. Overflow of liquid from the pipeline in the master cylinder will stop as soon as the shoe-Tormo call under the influence of coupling springs uprutsya in the adjustment cams. After this valve *7* should sit on place. Spring *13* is designed so that in the pipeline after the cessation of inhibition is superfluous pressure of 1 kg / cm 2 Preventing the penetration of air into the system. **Pipelines brakes** consist of copper tubes and connecting fittings. All connections Due to the high pressure in the pipes must be leakproof. The latter is achieved the double Flare tube ends. In Fig. 101 shows the sequence of operations for the double flange using devices and two specially sharpened beard.

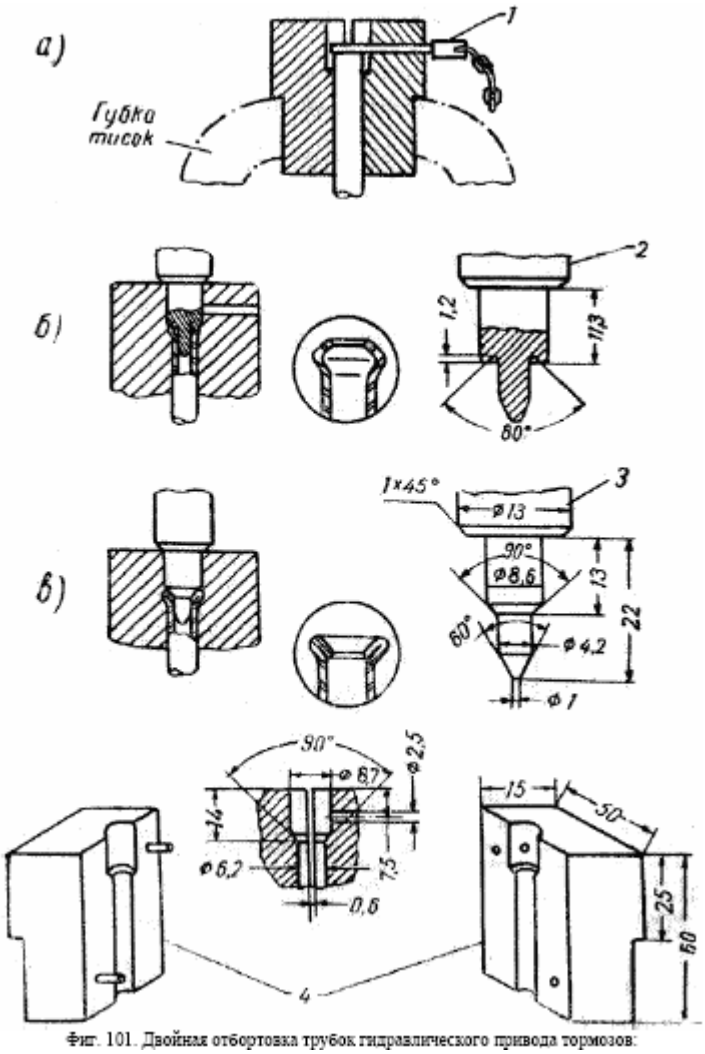

Фиг. 101. Двойная отбортовка трубок гидравлического привода тормозов:

Fig. 101. Double flange pipes hydraulic Brake:

a, b, - sequential operations; 1 - set pin, 2 - punch the first operation 3 - punch the second operation, 4 - Halves matrix.

Hoses brake pipes consist of a rubber inner tube, braided bi - name the layers of tissue, privulkanizirovannoy to rubber, and the outer rubber layer. Inner diameter Hose is 3,2 mm. When the braking pressure in the brake system reaches 70 - 80 kg / cm 2 . Tor - OIML hoses shall withstand, without fracture monitoring test at a pressure of 350 kg/cm 2 . On end of the hose is installed metal connecting fittings. Do not use hoses, hand-made because of their low reliability and feasibility accidents. When mounting the front brake flexible hoses to ensure that the hoses were not knotted. Twisted hoses acquire increased stiffness and additional bends, pre - compromises their normal location. When cornering, and the vertical vibrations of the wheels overlap - chennye hose touches the wheels or suspension parts and eventually fray. Twisting injury, but also for the rear hose, because it can cause abrasion on the floor of their body. Avoid twisting to be mounted hoses in the following order:

1. Screw hose into the wheel cylinder front brake (or tee for the rear brakes) and finally tighten.
2. Embed a free nozzle hose bracket, tighten the nut fastening the tip and for - to turn the coupling nut of the pipe. Tightening the coupling bolts and nuts to make the tip will support - Coy key for hexagon tip.
3. Rotate the front wheel to the left and right to check out and not swing a hose wheels. In the subsequent lifting (to eliminate leaks) hose connections to the wheel cylinder or tee (for the rear brakes) to the opposite end of the hose to turn on the matched - clearing house, a corner, after loosening the coupling nut of the pipe.

ADJUSTMENT footbrake

Adjusting the clearance between the pads and brake drums. As the wear of the friction linings, brake pads, and the gaps between the pads and brake drum are increased, and the pedal braking begins to approach the floor body. To eliminate unnecessary gaps must be pro - harry current brake

adjustment eccentrics. Hexagon ends of the axes of these clowns you - plotted out through the bearing shields brakes slightly above the axes of the wheels (fig. 102). In the figure the arrow shows the direction of rotation of the cam, in which the gap decreases. When changing the lining (or completely blocks), as well as in violation of the lower bearing tines set at the factory, it is necessary to make a full adjustment of the brakes. This adjustment is performed by adjusting eccentrics and lower bearing fingers in order to ensure that the brake pads fit on the whole surface of the brake ba - Rebbetzin. Before adjusting the front brakes need to check the correctness of adjusting bearings workers wheels. In conducting the current brake adjustment should:

1. Raise the jack wheel, brake which re - Gulira, so that the tire is not touching the floor.
2. By rotating the wheel, turn the adjusting eccentric front pads until the pad until not slow the wheel.
3. Gradually let eccentric, rotating hand to the wheel until the wheel will not rotate in Xia freely (no grazing for the drum pads).
4. Adjust the back of the pad as well as front.
5. Perform these operations with all OS - for Basic brakes.
6. Check the absence of heating of the brake bar - ban during the trip. When adjusted correctly the gaps between pads and drum brake pedal with full braking should fall no more than half - Well, your turn. *Hi in no case should be in the current regula - perature brake wrench nuts 10 team finger 9 blocks (Fig. 96), located in the lower part reference board brakes, and violate the factory's mouth - save your settings of the fingers.* When conducting a full brake adjustment non - required:

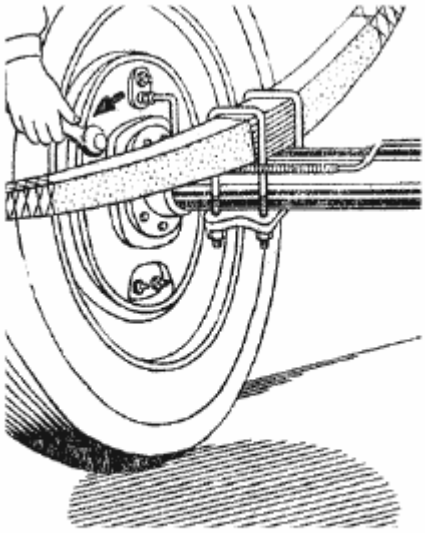

Фиг. 102. Регулировка зазора между колодкой и тормозным барабаном (задняя колодка заднего тормоза). Стрелкой показано направление вращения для уменьшения зазора.

1. Perform the current regulation, as Fig. 102. Adjusting the gap between the shoe and brake drum (rear block rear brakes). The arrow shows the direction of rotation Nia to reduce the gap. above.
2. Release the nuts *10* team finger *9* (Fig. 96).
3. Click on the brake pedal with a force 10 - 15 kg and turn supporting the fingers in directions, UCA - lated by arrows (Fig. 98) to failure, but without much effort. As a result, the entire surface of the lining is pressed against the brake drum. In this position slightly tighten the nut *10,* bearing latching fingers.
4. Release the pedal and check the ease of rotation of the drum: the drum should not touch the overhead ki. When grazing a few turn the supporting fingers in the direction opposite the arrows (Fig. 98), to eliminate grazing.
5. Finally tighten the nut *10*
6. Click on the brake pedal and make sure that the market does not reach the pedal at 20 - 25 mm or more to the floor. If the distance is less than this, it is necessary to reduce the gap between the co - boats and brake drums with adjustable eccentrics.
7. Check the absence of heating of the brake drum during the trip.

Adjusting to free movement of the brake pedal to ensure the gap between the pusher and

master cylinder piston. This gap is necessary to prevent inadvertent pritorma - ities car on the move, obtained by shaking the pedal, and for full inhibition system, which is achieved by opening the bypass hole *in reporting a* cavity of the main chi - lindra *D* with a reservoir for brake fluid *T* (Fig. 100). The magnitude of the gap should be 1,5 - 2,5 mm, which corresponds to the course area 8 - 14 mm (in its middle). Adjustment is a change in the length of the pusher *16* through navertyvaniya it on connective nuyu thrust *18*. The sequence of:

1. Check the position of the pedal that is subjected to snatch the spring. Pedal should rest against the rubber buffer is, fastened under the sloping floor of the body.
2. Loosen locknut *17* and rotating the plunger *16* for the hexagon, to achieve free status PEDA - Does equal to 8 - 14 mm.
3. Tighten locknut *17* and tightly again check the value of free running pedals.

BRAKE FLUID FILLING SYSTEM

In the braking system should be poured only a special brake fluid. It under - admissible to add at least a small amount of mineral oil, because of this are easily building all rubber parts of the braking system. Not allowed to use ethylene glycol, causes quick musclular HGV corrosion of metal parts. Guidance on the brake fluid are given below. When filling liquid must do the following:

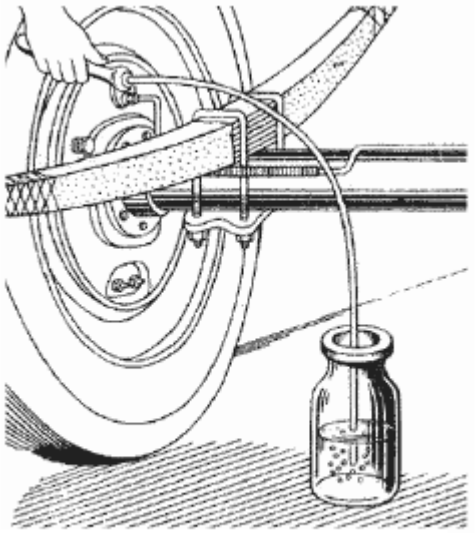

Фиг. 103. Удаление воздуха из тормозного трубопровода.

1. Carefully remove any dirt from the master cylinder and with a relief valve on the brake shields (over the place of connection of tubes and hoses to wheel cylinders).
2. Loosen the cork filler master cylinder and liquid-filled cylinder Stu. Access to jam through a hatch in the sex body.
3. At the wheel cylinder right posterior it brakes off the protective cap on relief valve and put on its spherical ethical tip end of the rubber specially On hose length 350 - 400 mm. The other end of the brake hose lower liquid poured into a glass vessel capacity least 1 / 2 l. Liquid poured into the vessel to the positive fault of his height (Fig. 103).
4. Loosen to 1 / 2 -- 3 / 4 traffic bypass valve *2* (Fig. 96), and then repeatedly press the brake pedal. Push to quickly let go - honey - Leno. In this fluid under the action of the piston master cylinder will fill the pipeline and oust him from the air. Pump the working fluid through the Heads - HYDRATED cylinder should be as long until the end allocation of air bubbles from the hose, omitted - tion in the vessel with the working fluid. During the pro - Fig. 103. Remove air from the brake pipelines water. roll to fill up the hydraulic fluid in the reservoir master cylinder, not allowing in any case - tea drying bed, as this in the system once again penetrate the air.
5. Tightly wrap bypass valve of the wheel cylinder and remove the hose. Wrap-Bypass Noah valve should be pressed when the pedal.
6. Pump the brakes in turn, observing the following sequence: right rear, front right, front left, rear left.
7. After pumping all four brakes pour the liquid in the reservoir master cylinder to a level located at 15 - 20 mm below the upper edge of the filler, and tightly wrap the cork. Before statement of the place must be clean and blow out vent holes drilled on the verge cork. When the correct gaps between

the pads and drums and the absence of air in the pedal torus Mozah pressing his foot should not fall by more than half full speed, after which the leg should feel "hard" pedal. Lowering the pedal on the value of more than half of the evidence of the due unnecessary gaps between the pads and brake drums. The feeling of "soft" pedal, allowing for a slight resistance to squeeze its way into the floor, indicates the presence of air in the system. *Do not press the brake pedal when withdrawn at least one drum, as the pistons under action of pressure in the system come out of the wheel cylinder and the liquid spilled out.* During the assembly of wheel cylinders must lubricate aluminum pistons and the inner in surface of a cylinder with castor oil to prevent sticking of the brakes in operation vsledst - ence of corrosion of cylinders.

BRAKE FLUID

Fluid for hydraulic brakes shall meet the following conditions:

1. The viscosity of the fluid should be little change with changes in operating temperature. When insufficient accurate viscosity of the fluid flows from the cylinder, bypassing the cuffs. When excessive viscosity hindered fluid flow through the tubes, which slows down the lockup and the inhibition of the car.
2. Have a high boiling point. In applying the liquid with low boiling point in braking system formed steam bags, which have the same effect as the presence in the system air.
3. Having a low pour point.
4. Possess lubricity to avoid wear and seizing of pistons.
5. Do not destroy the rubber parts: hoses, gaskets, valves. Mineral oils quickly destroy the rubber, therefore, is strictly prohibited their use in as brake fluid or the addition of a liquid even in trace amounts (at least due to the use dirty dishes from which to fill the liquid was poured mineral oil).
6. Not induce corrosion of metal brake system (cast-iron cylinder, aluminum nievyh pistons, etc.).

To fill the brake system to apply brake fluid factory-fabricated Niya. In the case of its lack of fluid can be prepared, amounting to a mixture of 40% (by weight) of castor-mas LA and 60% butyl, isoamyl or diacetone alcohol. Other liquids can not replace this mixture as it does not fully satisfy the above conditions. Replacing butyl, isoamyl alcohol or diacetone anhydrous alcohol wine rectified permissible only in winter as in summer rectified easily evaporates and therefore the system may generate steam bags. Temporarily if damaged pipeline away from the garage can apply to fill the system any alcohol. In a pinch you can even use vodka or just pure water (summer only), but Nemed - Leno on arrival in the garage they should merge, the system thoroughly washed with alcohol and fill with fresh torus OIML fluid. *Brake fluid is poisonous.*

DEVICE CENTRAL BRAKE

Device central brake and drive shown in FIG. 104 and 105. Shield brake *12* fasten - Flax four bolts *24* to the back cover of the transfer case output shaft *27*. In the upper part of the shield two bolts attached thereto Corps Expansion Mechanism *8*. In opening the case inserted Tappets *9*, in the outer grooves which include upper ends of the blocks *6* and *14*. The lower ends of the pads are floating finger grooves *2*. On the inside ends of the pins should be placed at an angle to the axis of the cylindrical grooves, which moving balls *10*. During braking central brake lever *17 mounted* on the gearbox, with the help cable *18* and its nozzle *20*, screw in case of balls *8*, moves it along the axis, and the balls through pushers pushing the pads, pressing them to the brake drum. This braking drags primary brake shoe *6* and causes it to move in the direction of rotation of the drum. This re - placement is transferred to the secondary shoe *14* through the fingers *2* and the floating adjusting wedge 1. Snatch springs *5* primary pads *6* weaker than the springs *13* of the secondary stocks. In this effect comes first primary, then secondary block. Weak springs are painted red color, strong - in black. At the bottom of the shield with two bolts privernut housing *3* of the adjustment screw *4*, with the help of Coto rogo governed by the gap between the pads and brake drum. Pad his ribs with a spring *11* are pressed against the shield of the brake. Brake drum *25* is centered on the shoulder of the cardan flange *26* and screw tight to him two mounting screws *23*. The connection of both flanges and drum cardan carried out by four-ball Tami. In the central action of brake lever *17*. Latch lever *15* is fixed toothed Sector *16*, fastened to the gearbox. Central brake is designed to lock-up car parked in the case of sudden - On failure of the foot brake. You should not use them instead of the foot brake, since sudden stop that brake failure may occur parts of power transmission, and besides, the brake but

will be heavily congested. Especially not encouraged to use the central brake when driving on slippery road due to the fact that this could lead to a skidding car.

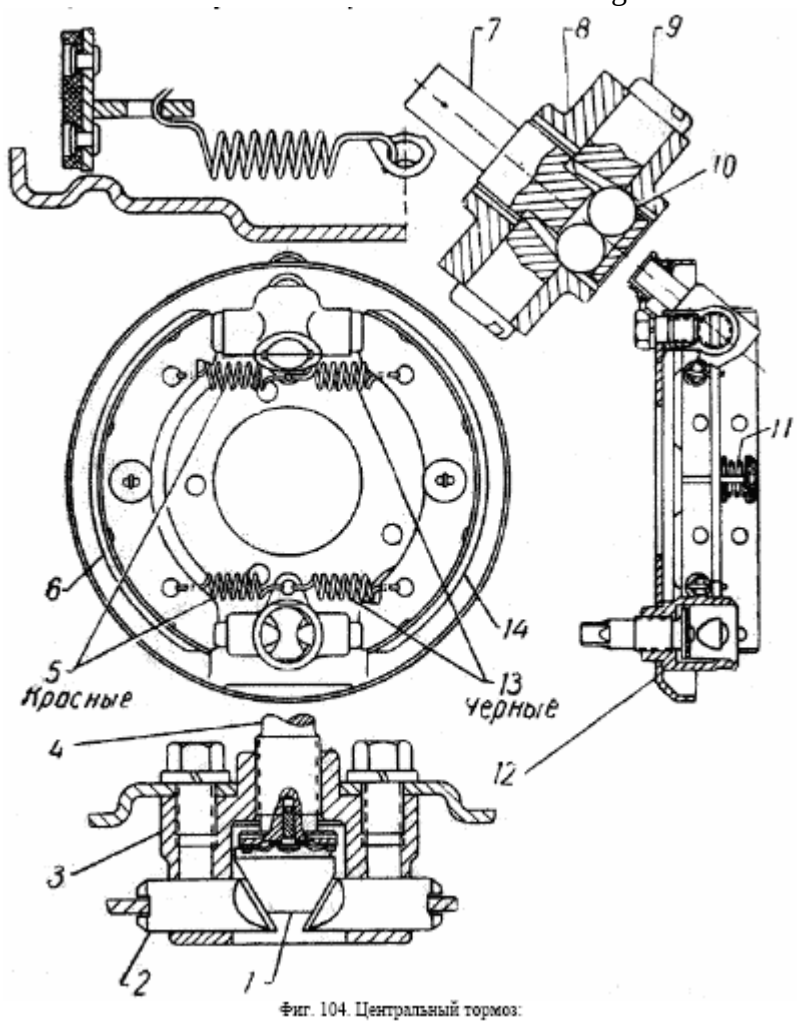

Фиг. 104. Центральный тормоз:

Fig. 104. Central brake:

1 - floating adjusting wedge, 2 - floating finger, 3 - body adjustment screw, 4 - adjustment screw, 5 - snatch spring primary pads (red), 6 - primary block, 7 - Expansion rod, 8 - Corps Expansion Mechanism, 9 -- pusher, 10 - Expansion balls, 11 - spring, pressing the brake shoe to the shield, 12 - shield, 13 - - snatch spring secondary Noah pad (black), 14 - secondary block.

CENTRAL BRAKE ADJUSTMENT

Adjusting the gap between the pads and brake drum. As the wear of the friction in - clutches brake pads suitable gaps between them and the drum restored podvertyvani - eat adjusting wedge *1* (Fig. 104) with the screw *4* with a square head. When wrapping screw fingers *2,* goes into conical surface of the wedge, *1* divided and pushed the lower ends of blocks, pridvi - Gaya them to the surface of the drum. When vyvertyvanii screw snatch blocks under the action of springs retreat from the surface of the drum. In order to experience the value of products "braces" brake and at the same time securely per - fix the wedge in a certain position on its conical surface made ten cuts. In These slits are the ends of fingers 2, which at the turn of the wedge on each tenth of the jump with a slit on the other, thus fixing the wedge.

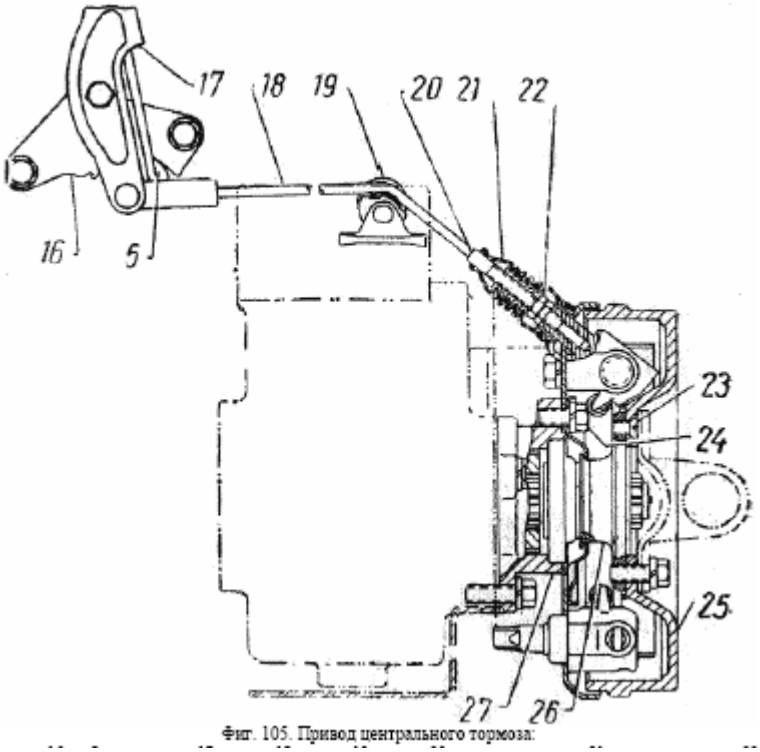

Фиг. 105. Привод центрального тормоза:

Fig. 105. Drive central brakes:

5 - latch lever, 16 - toothed sector 17 - lever, 18 • - cable, 19 - movie 20 - the tip of the cable, 21 - shielding, 22 - nut and nut, 23 - adjusting screw, 24 - attachment bolt shield, 25 - brake drum, 26 - flange 27 - cover the transfer case.

At every turn, in addition, can hear the "click", whose number and characterizes The magnitude - Well produced "suspenders." When adjusting screw *4* to be wrapped until it stops, then unscrew it to 4 - 6 clicks 1 / 3 -- 1 / 2 turnover.

Adjusting the length of the cable. As the pulling cable *18* (fig. 105) length must be measured adopt. Adjusting the length of rope is vvertyvaniem or vyvertyvaniem its tip *20 in the* cor - PUS *8* ball *10.* After adjustment should be securely Lock the cap nuts *22.* Regulate length of rope necessary so that when the latch lever *5* in the third hollow toothed sec - torus *16* (counting back) brake drum began to slow down (tight turn of the hand).

CARE BRAKES

As the need to regulate the brake and continuously monitor the condition of hoses: on - presence of these lesions and leak fluid. Defective hoses should be immediately replaced by new ones. Need for timely action to pull the weakened connecting pipelines. Once every thousand kilometers should check the fluid level in the master cylinder and topped up if necessary, and check the value of free running brake pedal (8 - 14 mm). After every 6 thousand kilometers should test the brakes. Remove the brake drums, pro - wash and wipe them and clean the boards brakes. Ensure there are no leaks from the brake tsilind - ditch. Check wear of brake pads and make sure that the rivet heads are quite sunk - HN in the lining. Check and, if necessary, adjust the length of the central cable brakes. After every 12 thousand kilometers to disassemble the main and wheel cylinders * . Remove dirt from Porsche her working surfaces of cylinders and other parts with greater caution. Allowed in This use of wooden wedges and a clean cloth soaked in alcohol or in the brake liquid bone. Do not use metal tools, not to damage the working surface of the part, and liquid STI mineral origin (gasoline, erosene, etc.) that destroy rubber parts brakes. Pro - wash pipes alcohol or brake fluid (not gasoline). Lubricate before assembling the pistons kas - Tore oil. Fill the brake fluid system and to pump it.

Car suspension

ПОДВЕСКА АВТОМОБИЛЯ

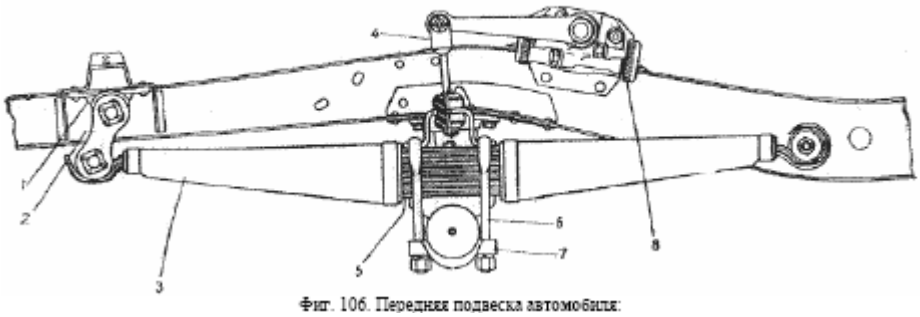

Фиг. 106. Передняя подвеска автомобиля:

Fig. 106. The front axle of a vehicle:
1 - front spring bracket, 2 - Earring, 3 - soft case springs, 4 - Rack Spring, 5 - spring, 6 - ladder, 7 - lining, 8 -- absorber.

Front and rear suspensions are analogous to a car gichnoe device and consist each of two ongitudinal springs, working together with two hydraulic double-acting shock absorbers. In Fig. 106 shown device front suspension.

SPRING

Sheets springs are made of flat steel special section with beveled (parabolic - mi) edges and subjected to heat treatment and subsequent work hardening with shot to increase the weary code of good strength. In order to protect the sheets from premature GOVERNMENTAL breakdowns of contact fatigue and the elimination of su - Khogoev friction between the sheets of spring set proklad - ki 1 mm in thickness from a three-layer birch plywood first grade, oiled in mineral oil in those - chenie 20 - 30 min. at 50 - 100 ° C. Sheets springs tightened pivot bolt and Snab - wife four lug. To prevent on - of falling dirt and to keep the lubricant on the spring wear soft covers, fixed braid. Inside covers per - lozhena graphite lubricant. The pushing force and the moment before the jet - ARE from the bridge springs to the frame. Springs are attached to the frame through the fingers with rubber sleeves (similar to spring back under - Veski Vehicle M-20). The front end of the front springs and rear end rear springs are mounted to the frame with the earrings. In Fig. 107 shown mounting the front end front springs and rear end of the rear springs to the frame. * Dismantling the brake cylinders and flushing of pipelines after run of 12 thousand miles to make the operation Vehicle on dusty roads. When operating on paved roads, these operations do once in year autumn.

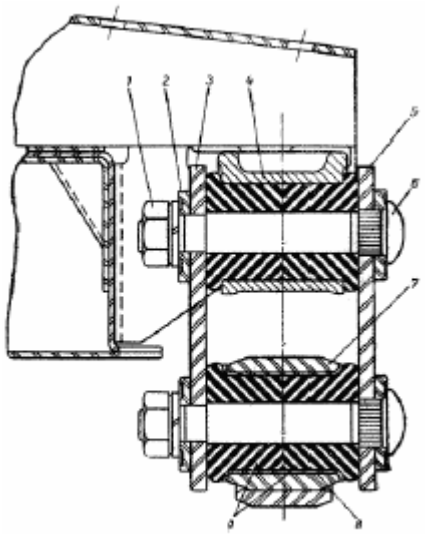

Фиг. 107. Крепление переднего конца передней рессоры и заднего конца задней рессоры:

Fig. 107. Mounting the front end of the front springs and the rear end of the rear springs:
1 - nut, 2 - washer amplifier, welded, end it rear springs. 3 - jaw earrings, 4-arm res - ry, 5 - cheek earrings with fingers in the collection, 6 - finger, 7 -- radical leaf springs, 8 - steel sleeve in the ear, res - Sora, 9-rubber bushings.

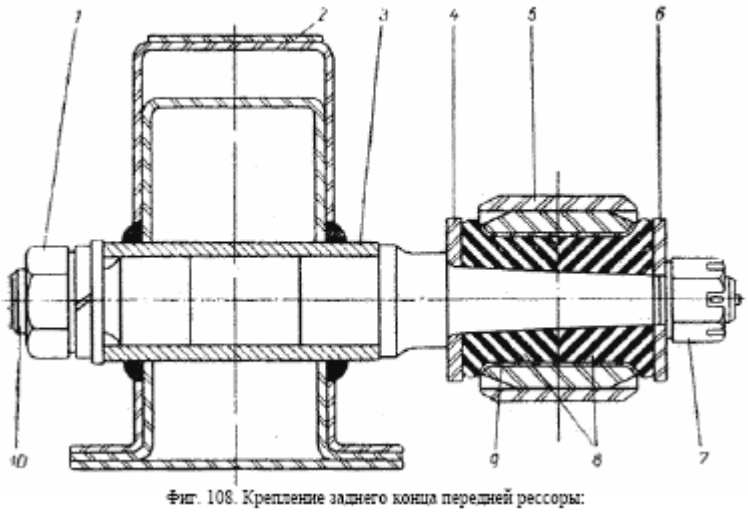

Фиг. 108. Крепление заднего конца передней рессоры:

Fig. 108. Mounting the rear end of front spring:

1 - nuts finger to spar, 2 - spar frame, 3 - pin bushing, 4 and 6 - washers, rubber bushings, 5 - the second sheet of res - ry, 7 - nut, 8 - rubber bushings, 9 - steel sleeve in the ear, springs, 10 - finger.

In Fig. 108 shown mounting the rear end of the front springs to the frame, as in Fig. 109 - anchorage front end of the rear springs. In spring ears pressed steel sleeve 8 (Fig. 107) with an internal diameter of 35 +0.25 mm. Vtul - ki blind expansion joints, which are obtained by perms Ushkov springs and provide a smooth on - surface for planting rubber bushings. Two rubber sleeve *9*, with the assembly freely are ears res - Sor. Digits *6* Napressovannye him amplification washer *2* and cheek *5* passes through the rubber bushing and second cheek *3*. Nut *1* is delayed until failure; delay bosh limited to bolts, which rests on the cheek. This design provides a tight connection to the outer surface of the rubber sleeve surface Ushkov springs, and interior - with a finger. During the spring suspension Origin of - walk the angular displacement Ushkov on finger springs. These movements are carried out due to deformation (twisting) rubber bushings. With a weak tightening or wear sleeves, as well as due to residual strain of rubber can arise when working springs creaking due to swift - magnetization sleeves on ushkam and fingers. In such cases, Yah should increase the negative allowance in sleeves staging between the inner ends of the rubber bushings, rubber washers thickness 2 - 3 mm. Washer can produce the segments from the old bushings. In order to ensure - cheniya better connection rubber bushings with Me - thallus Ushkov and fingers should be directly Bushings sredstvenno before directing the place to dip 2 - 3 min. in pure gasoline. Ears springs and fingers before assembly must also be well-washed you gasoline. Final tightening rubber bushings must be carried out, spring loaded own weight of the engine and body (without the passen - fat). This delay provides a twisting rubber bushings with fluctuations car res - sorah approximately the same in both directions. Heavily worn bushings must be per - change with new ones. The front springs are from 9 sheets (except addition, one opposite the leaf). Rear springs have for 11 sheets. The difference between the rear axle GAZ-69 from GAZ-69A is only in the thickness of 5,6 and 7-lis

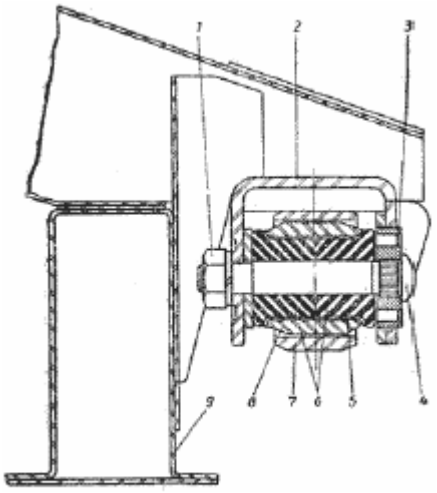

Фиг. 109. Крепление переднего конца задней рессоры:

Fig. 109. Mounting the front end of the rear springs: 1 - nut, 2 - arm springs, 3 - ring 4 - finger, 5 -- steel sleeve, 6 - rubber bushings, 7 - the second sheet of res - ry, 8 - radical leaf springs, 9 - spar frame .

Comrade, who at the GAZ-69 has a thickness of 6.5 mm, and GAZ-69A - 6 mm. The length of the front straightened res - ry (between the centers Ushkov) 1000 mm, rear - 1200 mm. Sheet width 45 mm.

Care of springs is a periodic lubrication sheets, moving up ladders and timely Mr. eliminate turning rubber bushings in the springs ears and earrings with the appearance of squeak.

SHOCK

Front and rear suspensions are equipped with hydraulic shock absorbers car bilateral action.

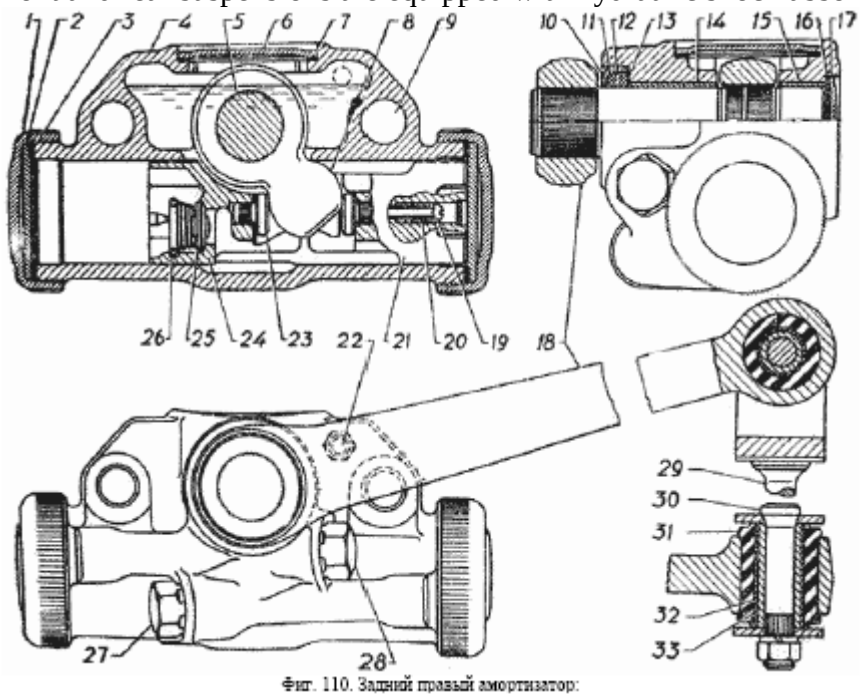

Фиг. 110. Задний правый амортизатор:

Fig. 110. Rear right shock:

1 - cylinder head, 2 - steel plate, 3 - Fiber gasket, 4 - shell shock absorber, 8 - roller damper, 6 - cap Reser - vuara, 7 - laying Stoppers. 8 - cam, 9 - holes for mounting shock-absorber, 10 - a cup of stuffing box, 11 and 13 - cork ring Gland, 12 - rubber ring gland, 14 and 15 - the roller sleeve, 16 - cap gasket, 17 - cap 18 - lever, 19 - coupling screw piston, 20 - spring clamp screws 21 and 24 - half of the piston, 22 - filler cap, 23 - rusk piston, 25 - of - feat of arms flap, 26 - spring-loaded locking ring, 27 - cap service valve of the compression (only the right shock absorber), 28 - sample - ca service valve of the impact (only the right shock absorber), 29 - front desk, 30 - finger joint rack, 31 - rubber bushing joint Rack, 32 - bronze bushing pivot Stoics, 33 - steel sleeve hinge stand.

Appointment of shock absorbers is the extinction fluctuations car while driving on rough pre - horn, which increases the smoothness of the car. Shock absorbers dampen vibrations in the course of the car up (for the recoil spring) and in the course of his down (for the Compression springs). Design and device depreciation - congestion similar to shock absorbers Rear suspension Vehicle M-20. Each shock absorber is attached by two ball - Tami to the bracket, riveted to the frame. Lever shock absorber pivotally connected with springs in in power rack *4* (Fig. 106) with fellow members rubber - tions at the ends. **D amper device. The** cast-iron cor - puse *4* (Fig. 110) has a cylinder, closed with a two - their sides tightly wrapped cap *1* with fibro - Vym spacers *3* and the steel plate *2* with ring propoints of fiber pro - batches. At the top of the crankcase of the cylinder there is a reservoir, hermetically sealed from the top

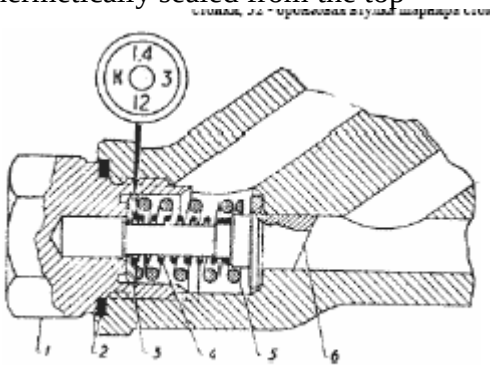

Фиг. 111. Устройство рабочего клапана хода сжатия заднего амортизатора:

Fig. 111. Unit service valve compression stroke, back -
He damper: 1 - plug valve, 2 - aluminum strip plugs, 3 - Xai ba, 4 - inner spring is weak, 5 - outside an EPAM - at 6 - valve. In the circle shows the labeling of the valve, broken its washer.
cap *6.* The cylinder and the tank filled with oil. In the cylinder is a piston consisting of two halves *21* and *24.* In both halves of the piston There are check valves *25,* closing the action of the spring ring *26.* through the valve *25* fluid enters the cylinders, a reverse path for fluid through the valve is closed. Half of the piston are interconnected by two screws *19,* their astringent action of the spring *20.* These springs constantly pressed by the pistons pressed them biscuits *23 to the* cams *8.* Cam *8* on the small slots напрессован on the platen *5,* at the end of which is also on the small slots напрессован lever *18.* The roller *5, which* runs in two bronze bushings *14* and *15.* At the point where they exit from the crankcase shaft damper os - tanovlen gland. When moving pistons fluid from one chamber of the cylinder *A* is distilled in another -- *B* (Fig. 113), working through the valves and check valves *25* (Fig. 110). The device is working valve rear damper shown in FIG. 111 and 112. At the time of the impact damper lever goes down, the pistons move to the left and the fluid flows from the cavity of a cavity B (Fig. 113) through the valve *2.* When the melt - Noah impact spring fluid flows through the valve *2 "by* Lysko his rod (see also Fig. 112), and the cluster Pan is pressed to the saddle spring *3.* With a sharp impact spring pressure of the fluid increases, vtul - ca *1* valve rises above a saddle and the cross section for the passage of the liquid increases. During the compression stroke damper lever goes up, the pistons are moved to the right and the fluid ne - retekaet of oral cavity *B* in *A.* For a smooth compression springs, fluid flows through small continuous se - cheniya both valves *2* and *3* (Fig. 113). In the valve *2* liquid goes through Lyskov on the web (see also fig. 112), and the valve *3* - through the slit formed by the valve disk *6* (fig. 111), squeezed to the outside of the spring 5. With a sharp compression springs, fluid pressure increases dramatically compressed both springs *4* and *5,* the velocity - weighted end of the valve 6 is beyond the edge of the nest hole of the valve and the flow area through the valve increases. A small portion of the liquid also passes through the valve stem on Lyskov *2.* Regular hydraulic resistance in the shock absorbers needed for vibration vehicles under different traffic conditions, permit the recruitment of workers adjustment valves produced at the plant. It must be borne in mind that all amorphous tizatorah resistance during the course of compression incomparable certainly did less than during the impact, ie, if the lever damper arm pull up, then the resistance his movement will be considerably less than if pull the lever down.
Care for shock absorbers. Shock absorbers are not need to be adjusted during operation.
Care for shock absorbers is:
1) in the periodic inspection of dampers and timely lifting their attachment

2) to top up the liquid with absorber - transparently map lubrication
3) in the washing damper gasoline one once a year and filling them with fresh fluid.
Filling of shock absorbers is Th - cut a hole, closed with a plug *22,* before level (Fig. 110). Should be applied spindle AU butter or in the absence of a mixture of oils: 60% transformer and 40% of the turbine. Allowed application and one transformer oil, but in this case, shock absorbers are softer. Other oil can not be applied. A cleared for pouring a liquid absorber to vise the lever, not the body. Must be taken to prevent the ingress of dirt inside the shock absorber. When filling shock absorber fluid to the rocker arm to remove air from the cylinder and add liquid bone up until not stop lowering when the swing lever. When pumping into escape - tion spilled liquid should cover the filling hole (you can finger). Irrigate dampers should be once a year. After removing the shock absorbers need to unscrew cork workers valves (two on each shock absorber), remove the valve and pour the liquid. Irrigate to gasoline through Filling holes. Remove the covers *1* (Fig. 110) it should not be. After washing to dry the bumpers and put in place working valves. After each page - doy disassembly recommended aluminum pads under corks working valves replaced by new ones in avoid leaks. In the absence of aluminum you can use red copper. The thickness of the gasket should be 0,8 mm. You should not deviate from that size, as this will change the tension valve springs and be broken factory adjustment. After washing in shock to pour 145 cm 3 Working liquid bone. Particular attention should be drawn to the fact that all the valves were working at their seats. Ec -

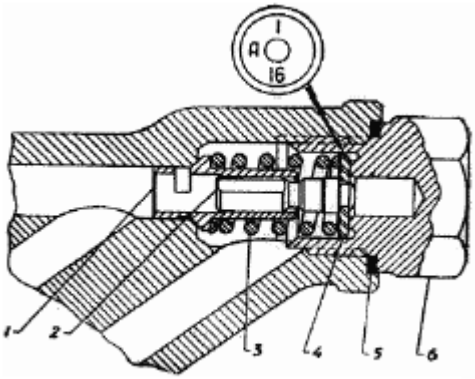

Фиг. 112. Устройство рабочего клапана хода отдачи заднего амортизатора:

Fig. 112. Unit service valve of the impact rear shock:
1 - sleeve valve, 2 - valve, 3 - spring, 4 - Puck, 5 -- aluminum gasket cork valve, 6 - plug valve.
In the circle shows the labeling of the valve, broken at its Xai Priva. I swap valves of the impact and compression, the shock will not work correctly. Unwanted PRE-even transpose the same name with a single shock absorber valves on the other, ie, should not be made, For example, the valve of the impact of the left rear shock absorber on the appropriate place in the right rear absorber. To distinguish all working valves are marked as follows. At the rear of the recoil damper valve has the stamp of a 1 16 (Figure 112). In front of the recoil damper valve has the stamp of a 1 10 . Return valves are placed: in the right absorbers in the enclosures of the levers and liquid plugs, located above the axis of the working-chi lindra (fig.110) in the left shock absorber as from levers and liquid plugs, are no - same axis of the working cylinder (Fig. 110). Valve compression stroke rear shock has a stigma to 1.4 12 3 (Fig. 111), front shock absorber - K 2.8 12
3. Valves compression stroke is placed in enclosures on opposite sides leverage and liquid plugs.

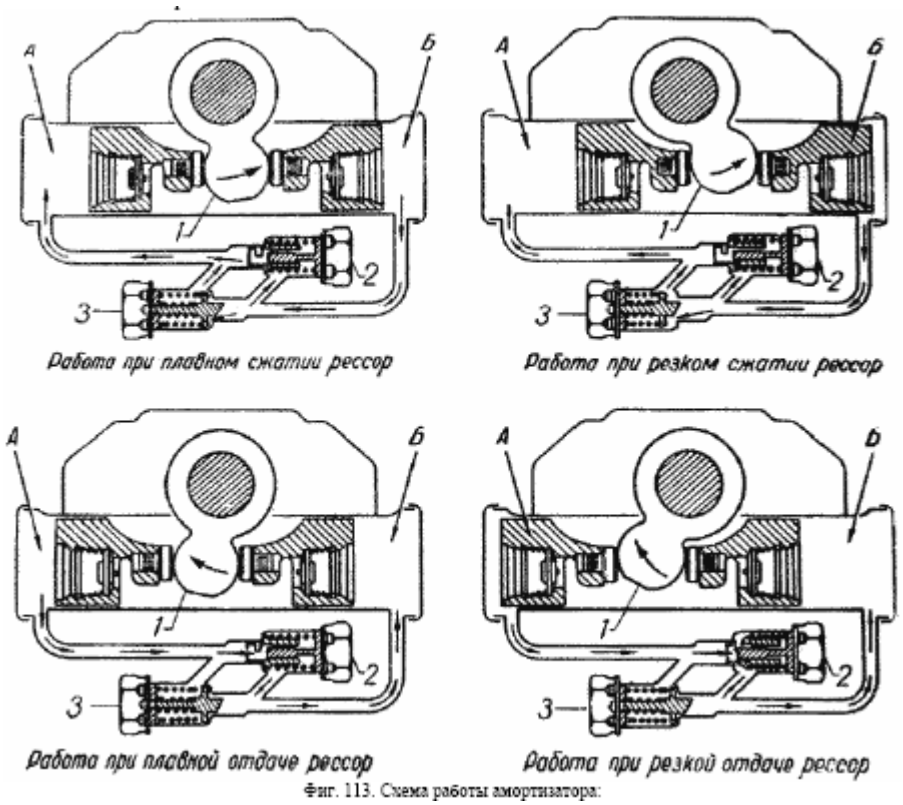

Фиг. 113. Схема работы амортизатора:

Fig. 113. Scheme of shock absorber:

1 - cam 2 - valve of the impact, 3 - valve compression stroke, *A* and B - the chamber of the cylinder.

Repair and Demolition shock absorbers. Dampers in the garage under repair is impossible, but. We can only fix some malfunction and, in particular - leaking stuffing box. To do so, to press levers to press. Disassembly with a hammer should not be pro - harass. Defective parts oil seals should be replaced. If the leak is caused by wear of pins and bushings - they to be replaced. When a small leak in the stuffing box should be limited only more frequent filling-up liquid. In undertaking the work can not clinch shock absorber in a vise for housing, as this just edu - botan working cylinder loses the right form and the shock absorber is defective or windows - definitively ceases to operate. To carry out works that do not require greater effort, amorphous tizatory can be clamped in a vise their instruments, as mentioned above. If the work requires the application great effort, for example otvertyvanie plugs on the ends of the cylinder rear shock, then amortizato - ry must be secured to the apparatus (to the squares, plate) for the holes, which they are attached to the car - Liu. Otvertyvanie corks on the ends of the cylinder damper and install them in place - a very responsible operation. It must be borne in mind that these caps close working cavity of the cylinder, where fluid pressure very large (up to 100 kg / cm 2) And that, moreover, corks stamped. Suffice it only once unscrew the stopper pipe wrench, that it was completely ruined. When replacing the ma - Coy plugs leaking quite inevitable. Before you unscrew the plug, you should make sure that this action - an urgent need. Do not plug wrench only to see in what condition is a cylinder. Before otvertyvaniem cork absorber must securely attach, as described above, and plug wrench special key ring with internal teeth, wearing into small slots cork. The length of the handle of this key must be 700 - 800 mm. Slots on the cork are processed on Zawoja - de wire, and therefore all the traffic they are completely identical; key, made by a traffic jam, come to any other. While raising plugs in place should definitely change the fiber gaskets *3* (Fig. 110), as the old ones compression and to re-install completely useless. *No real need to disassemble shock absorbers, and when disassembling be extremely careful and cautious.*

Hub rear and front wheels

Interior design of the rear hubs and front wheels (fig. 114 and 81) the same. Hubs, differ - Tide of ductile iron, rotate at the same tapered roller bearings.

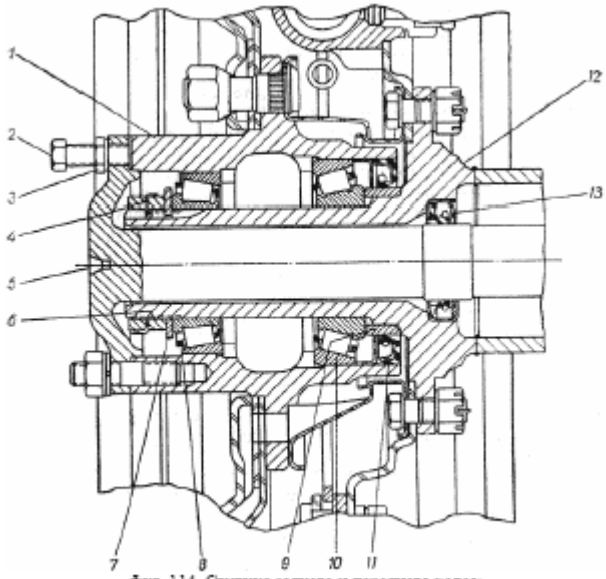

Фиг. 114. Ступица заднего и переднего колес:

Fig. 114. Hub rear and front wheels:

1 - hub, 2 - bolt for the dismantling of the half, 3 - nut, 4 - Lock washer, 5 - axis, 6 - nut bearings, 7 - thrust Xai ba, 8 - outer bearing, 9 - flange sleeve, 10 - inner bearing, 11 - caul hub, 12 - the half-shell with pin bearings, 13 - gland.

The inner hub cavity partially filled with grease. From the brake in the hub-Set Lena rubber gaskets. The outer rings of bearings are pressed into the hub. Inner ring have landed on a moving pin housings (steering knuckle) and mounted on hand. The delay, under - shipnikov carried nut and lock nut *6* (Fig. 114). Between *8* and nut bearing *6 is* installed washer *7,* retained by the rotation of the projection, WMO - dyaschim in the slot pins. Between the nut and lock nut lock washer installed *4,* the edge which, after per - great are bearing slant off on the verge of nuts. Disc *4* also has a protrusion that enters into the groove pins. Bent edge washer *4* protects the nut *6* from the self.

ADJUSTING BEARING front and rear wheels In the operation of the vehicle must periodically adjust bearings ne - rednih and rear wheels. It should pay special attention to quality control. At too tightened very tight bearings are heated, the grease melts and flows. Lack of lubrication in the over - but overextended bearings leads them to "burning" and their premature failure. When too weak tightening bearings presence of slacks ("rolling" wheels) leads to the appearance of Niya attacks when driving a car, resulting bearings are destroyed. Furthermore, too weak tightening the front wheel bearings results in poor drivability. Adjustment Wheel bearings must be done in the following order:

1. Raise the jack up the wheel bearings which must be adjusted.
2. Take out the axis of the rear axle (Fig. 114) or the flange hub front wheel (Fig. 81).
3. Bend edge locking washer *4* (Fig. 114), Loosen locknut *6,* remove the lock washer.
4. *6* Loosen the nut tightening the bearings on the 1 - 2 edges.
5. Check the ease of rotation of the wheel, pushing his hand. If the wheel turns is not quite free - but it is necessary to eliminate the cause of inhibition (for example, graze the brake drum pads for) and only then proceed to adjust the bearings. If there is a suspicion that the bearings are damaged, they should be adjustable to inspect and if necessary - to replace.
6. With the key and vorotka little effort one hand tighten the nut *6.* At vorotok NAJI - mother smoothly, without jerks. When tightening the nuts to turn the wheel so that the rollers bearing in the correct position. Tightening the nut to produce up to tugogo of rotation of the ru - ki.
7. Letting go of the nut *6* at 1,5 - 2 faces for run-in bearings or 2 - 2,5 brink - but for - Closed bearings, put the lock washer *4,* tighten the locknut, nut stall otgibom edges washers on their faces.

Before stoporeniem need to carefully examine the edge of the locking washer and make sure that they or cracks. In the presence of even small cracks should be replaced with a new washer, or may otlamy - tion edges of the washers and the self or samozatyazhka bearings. And, both can lead under - shipniki failure. After adjustment wheel must rotate freely without appreciable axial play and pitching. Final quality control check for the supervision of the heating wheel hubs during the Es - dy. Reduced heating hub is not dangerous, but if the heating temperature is such that the hand does not tolerate, to

release the nut *6, in addition* to 1 / 2 faces, which should be repeated in the above sequence CONTRACT PERIOD operation. After that, 200 - 300 km mileage must be re-tighten the nut *6* on 1 / 2 face. It should be borne in mind that too tight delay bearings, obtained by the heating of the hubs, can be quickly spotted by the driver and promptly diminished. Too weak puff same time it is difficult to detect, thus bearing hubs can quickly fail.

CARE BEARINGS Hub

Care bearings hubs front and rear wheels is the periodic replacement of lubricants verification delay and timely adjustment. It should pay particular attention to the correct adjustment of the bearings. We must carefully monitor the density of tightening the screws fastening the half-back pins ISO - ta to the hub (the hub flange of the front wheel). Loosening these nuts can lead to cutting pins. The change in lubrication and adjust hub bearings should be performed every 6 thousand miles pro - running. Every 12 thousand kilometers to wash the hub and inspect the condition of bearings workers (in terms of damage to them).

WHEELS AND TIRES

Wheels stamped from sheet steel. Consists of the rim with a deep groove and riveted to him drive. From wheels GAZ-67B differ only in the drive with another flight and a hole for stepped - particle. By the wheel hub is fixed to five studs with nuts, outside its spherical surface styami a conical surface nests wheel. Rim diameter 406 mm, the width of the rim 114 mm (16 "X4, 5"). The spare wheel is mounted: car GAZ-69 on a bracket on the left side; car GAZ-69A - on a bracket in the trunk.

TIRES

Low-pressure tires, size 6.50X16 ". Protector is equipped with cleats. Tire pressure front wheels 2 kg / cm 2 , The rear wheels - 2,2 kg / cm 2 . Mounting tires with the cleats on the wheels must be made taking into account the direction of rotation as shown in FIG. 115. If you have tires with a particular pattern and arrows pointing in the direction tion of rotation when the vehicle is moving forward, it is necessary to put the wheels in accordance with the instructions arrows.

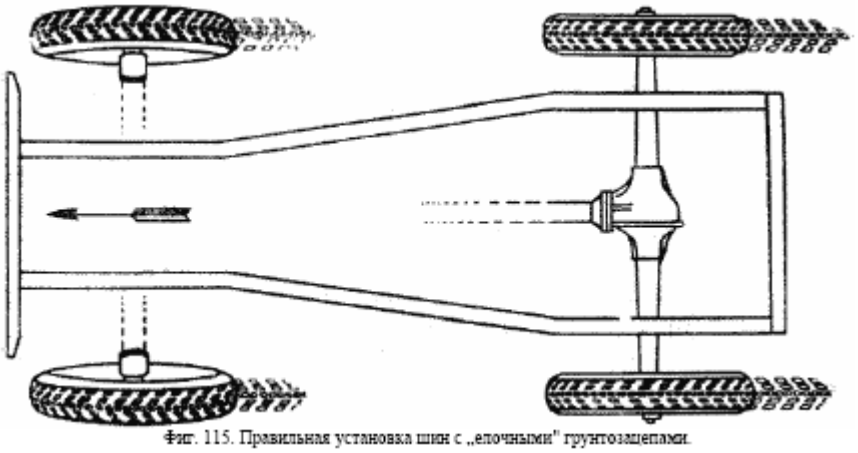

Фиг. 115. Правильная установка шин с „елочными" грунтозацепами.

Fig. 115. Proper installation of tires with a "Christmas-tree" cleats. Front wheels with tires should be balanced on a special machine (Fig. 116). Naseby - lansirovannost degrades controllability and stability of the car. Effect of imbalance in the rear wheel is less visible. Balancing is performed by special weights, strengthening those dealing on the rim in such a situation in which we obtain the dimen - personal balance wheel.

MOUNTING TIRES

Before mounting should check the status of the rim - whether on the It dents and rust. Defects must be removed and corrected mo - she painted. Before staging the camera in the tire should be carefully inspect and probe the inner surface of the hand tires and remove from it all dirt, dust, lumps of talc, as well as to check whether speakers sharp foreign objects that may damage the ca - measure. Camera and inner surface of the tire should be dry and lightly powdered talc. When assembling and disassembling should use special blades, available in the driver's tool kit. Should for these purposes to use objects with sharp edges, which can - mi damaging the camera and tires. Mounting tires need to perform as follows:

1. Put the wheel so that the hole for the valve chamber to - Lo directed upward.
2. Apply tire on the wheel, with the serial number on the tires should be on top.

3. With mounting blades wear of the lower side tires on the wheel rim to put on the side of the tire to enter middle deep part of the rim, as shown in FIG. 117 *a*, then the post - Foam fill in all the lower rim side tires.
4. Insert part of the chamber in the casing and fill valve in the on - Verst rim, as shown in FIG. 117 *b*.
5. Slipped up in the chamber air, straighten it, then unscrew valve and let the air out of it.
6. With the help of mounting the blades on the rim to put on the second board tires; start filling the second side should be the part, the proto - vopolozhnoy valve evenly in both directions (approaching ventilator - Liu). As part of putting on the board tucked tires necessary - mo shift in the deep part of the rim as shown in FIG. *117.*
7. Pump air into the chamber and to ensure that the tire bead the whole circumference adjoined to the sides of the rim (Fig. 118 *a).* Incorrectly

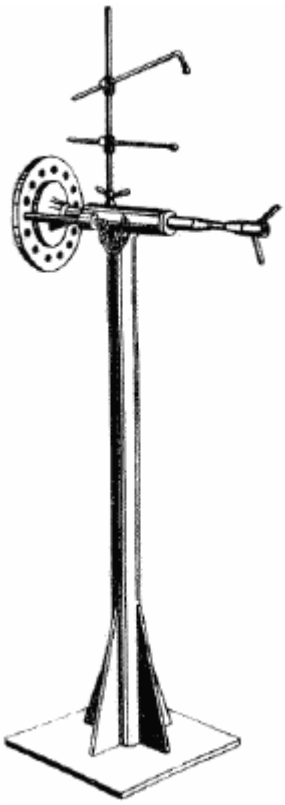

Фиг. 116. Балансировочный станок.

Fig. 116. Balancing machine.

ing position tire shown in FIG. 118 *b.*
8. To increase the air pressure in the tires to normal; ensure no air to pass - ha through valve and the valve chamber to put the cap. When dismantling the tire after the release of air from the chamber may encounter difficulties because of the stuck - Nia tire to the rim. In this case you should separate the tire from the rim with the jack. This must put the site on the tire jack and start lifting the car for the front bumper (Fig. 119). If you want to change only the camera, should be removed from the rim, only one side of the valve. To do this: 1) Loosen the cap valve, unscrew the nut valve (only for cameras with a metal valve), unscrew the valve and release air;
2) eliminate the adhesion of tires (if necessary);
3) press in part of the side tires on the side opposite the valve, in the middle of the deep rim, and then mounting board blades move through the rim, starting it with a valve, and continuing in both hand until the output side of the rim;
4) push the valve from the hole rim and take out the camera. If you want to remove the tire completely, after removal of the camera should move into the deep part of the rim of the second side tires and pro - continuing to dismantle the opposite side, thus laying the blade from the bottom casing (Fig. 120). Deepening in the middle of the rim was done deliberately in order to be able to mount and dismantle the tire. If you do not move in side tires in the deep part of the rim, the assembly and disassembly tires possible.

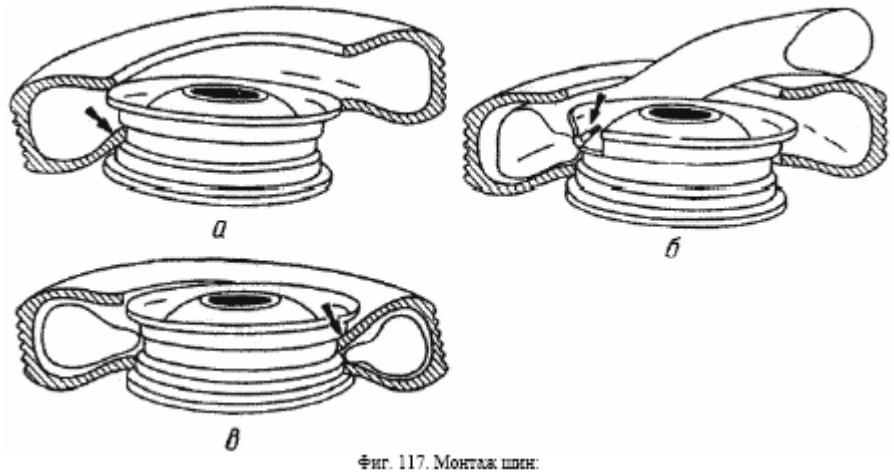

Фиг. 117. Монтаж шин:

Fig. 117. Mounting tires:
and - filling the first side tires, b - to insert the camera in - filling the second side tires.

Фиг. 118. Положение покрышки на колесе:

Fig. 118. Situation tire on the wheel:
a - right - side tires fit snugly to the rim around the circumference, b - wrong - side tires are not adjacent to
rim.

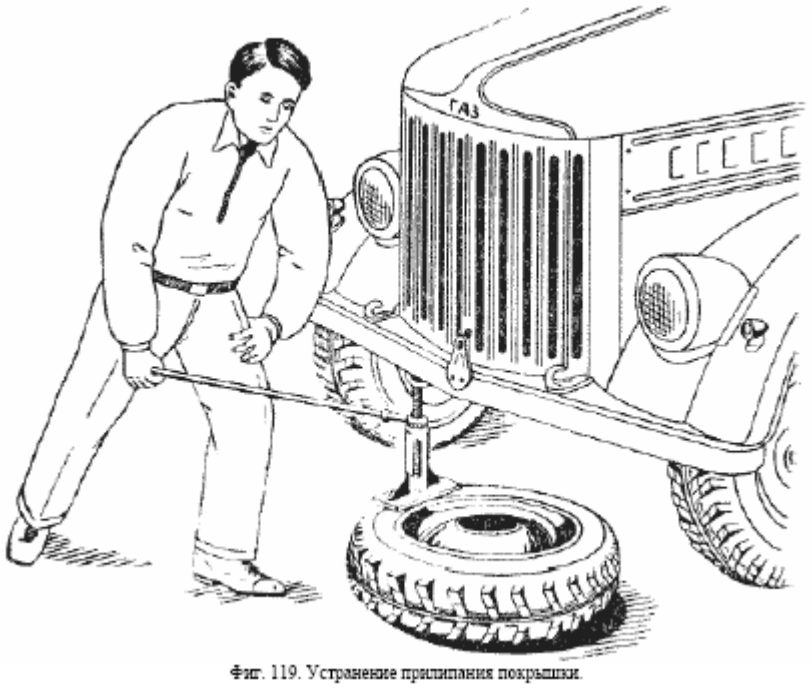

Фиг. 119. Устранение прилипания покрышки.

Fig. 119. Removal trapping tires.

BASIS OF USE AND STORAGE OF TIRES

As indicated in the section "Maintenance of the car, you will need on a daily basis, before vyez - house to check the tire pressure gauge and bring it to normal. Check should be in the ho - lodnyh tires. Should also check the serviceability of valves, chambers and the presence of these caps.

Maintaining proper tire pressure front and rear wheels for the car GAZ-69 is particularly important because failure to do so makes it difficult to switch on and off the front axle after - stvie fact that in this case are different radii tire. Moreover, the work enabled the front axle with incorrect tire pressure

causes overheating of the transfer case and a large tire wear. With proper tire pressure front axle should be freely switched on and off at run (no clutch). *After work,* the car should be put on a clean, dry floor, no dirty oil prod - Tami, to inspect tires. Remove, if necessary, nails and similar items. Damaged tires should be put into repair, as most minor damage to the tread are beginning to further destruction tires. Should not be allowed contact with tire oil and gasoline. *During long-term parking* (more than 10 days) the car should be put on the stand so that unload tires (casings under bridges). In no circumstances should there be parking the car on-launched GOVERNMENTAL tires. *Keep* tires and tubes should be dry room temperature of minus 10 ° to 20 ° C and a relative humidity of 50 -- 80%. Tires should be stored vertically in proposal on wooden shelves, and the cameras - in a slightly inflated hanging with a semicircular shelf. From time to time, tires and tubes need cooks, Chiva to change the points of reference. *Avoid uneven wear of* the coating - NIS follows the path of 3 thousand miles rearrange Shih HN with the wheels. Permutation to produce, as shown in FIG. 121.

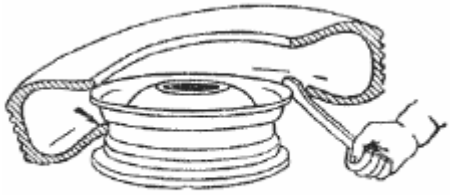

Фиг. 120. Демонтаж покрышки.

Fig. 120. Dismounting tires.

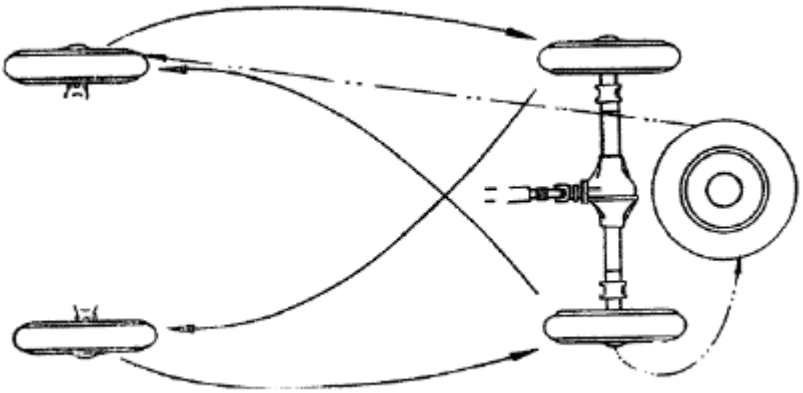

Фиг. 121. Последовательность перестановки шин.

Fig. 121. The sequence of permutations of tires.

The order of the permutation spare tire is shown dotted. Spare tire rearranged only in if it has the same wear as the other tires. If you notice uneven wear the front tires should be checked and adjusted by varying the length Ret wheels transverse steering rod. Vanishing value should be between 1,5 - 3 mm in measuring the tires at the height of the centers.

CARE TIRE ON THE WAY

On the road the driver must:

1. Monitor not "is" whether the car in one direction. If you find "slip" to immediately stop a - You know the car and inspect the tires.
2. Monitor the air pressure in the tires and not to travel at a reduced pressure, even small distance.
3. Do not reduce the pressure in the tires warmed up, letting them air. During the movement of an increase in pressure in the tires is inevitable due to heating of air in them.
4. Do not slow down abruptly and does not touch sides of tires for the curb.
5. At the stops to inspect the tires and remove them from the nails and similar items.
6. Should be carefully wiping the tires from them trapped grease. Avoid parking the car on the ground, contaminated oils.

RAMA

Rama GAZ-69 (fig. 122) stamped from sheet steel and consists of two spars, interconnected with six cross members. Five cross spar welded to the arc Swar - Coy. One binder (the third front), that contains a transfer box, connected to lonzhero - We rivets. By spar welded parts: bracket pillows

bearing engine mountings chicanery, damper brackets, support brackets earrings springs, bracket boiler starting heater motor and other parts.

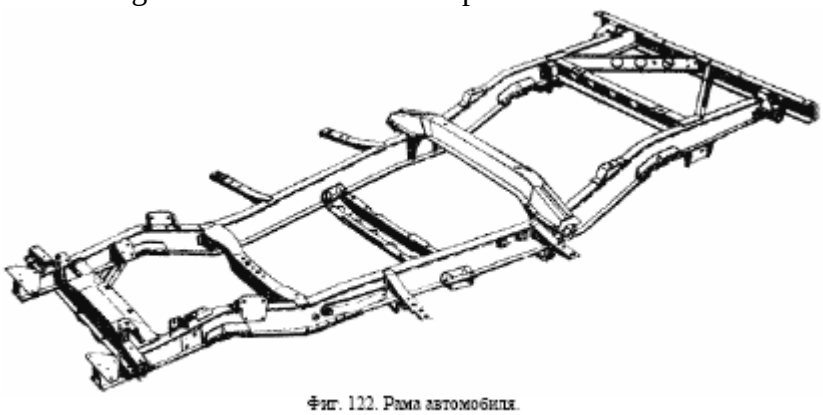

Фиг. 122. Рама автомобиля.

Fig. 122. The frame of the car.

The front spar attach tow hooks and front buffer. Behind, on the crossbar has two buffers and a towing device.

TOWING

Towing arrangement consists of two hooks are set in front of the frame on the spar and towing device mounted on the rear crossbar of the frame. Concrete device bilateral Dei - stviya. Equipped with a strong spiral: spring, softening impact loads when starting the car with trailer from the spot, as well as when driving on rough roads. Device towing device shown in FIG. 123. Forged hook *4 is* equipped with a latch 7, which under the action of the spring *8* closes the mouth of the hook. Benefit - giving this trailer drawbar can not withdraw from the engagement with the hook. In the open position of latch uder - tion is a dog *6.*

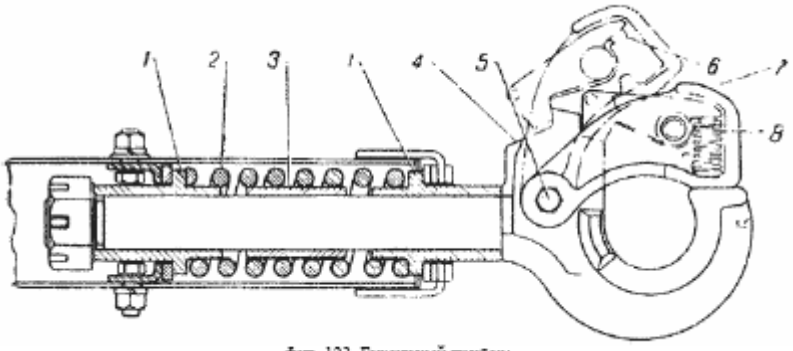

Фиг. 123. Буксирный прибор:

Fig. 123. Concrete unit:

1 - spacing ring, 2 - spring, 3 - guide bushing, 4 - hook, 5 - axis of the latch, 6 - dog, 7 - latch, 8 - spring latch.

Care for towing device is lubricated and clean it from dirt. Axles latch and dogs, and also need to lubricate the rod hook liquid oil once a month.

Chapter IV

BODY

On the chassis of GAZ-69 are set depending on the appointment of two types of bodies: eighth - mimestny - Model "76" (GAZ-69) and Five - Model "77" (GAZ-69A). Both the body open to all-metal base and soft-top (tent). Body parts connected by electric welding. Plumage, doors and tailgate removable, attached to the body with on - strength bolts. Details plumage: grille, hood, front fenders, mud flaps, side steps right and right howling rear fender on both models (GAZ-69 and GAZ-69A) are unified. Both models have the same wind frame with glass and the seal and a unified ap - Mathur (windscreen wipers, locks, handles, hinges, stoppers and door locks). The front seats of cars GAZ-69 and GAZ-69A - are interchangeable. When driving off-road for the convenience of rail passengers are provided on the dashboard and on the backside of the front seats.

BODY GAZ-69

The body is designed to carry eight passengers including the driver, or 500 kg of cargo.

Body (fig. 124) has two doors *4* and 7 and tailgate *9*. Passengers are placed in the back of the front and side seats *5* and *6* (two front, including the driver, and three men on each side seat). For ease of entry and exit of passengers right door 7 has increased dimensions: the right front seat *6* is shifted forward and has a hinged back. Entry and exit from the rear side and curtain has a hinged rear curtain, and the role chicanery in this case, the rear bumper *1*. The rear half of the body is made in the form of a flat platform that is convenient for transportation of cargoes.

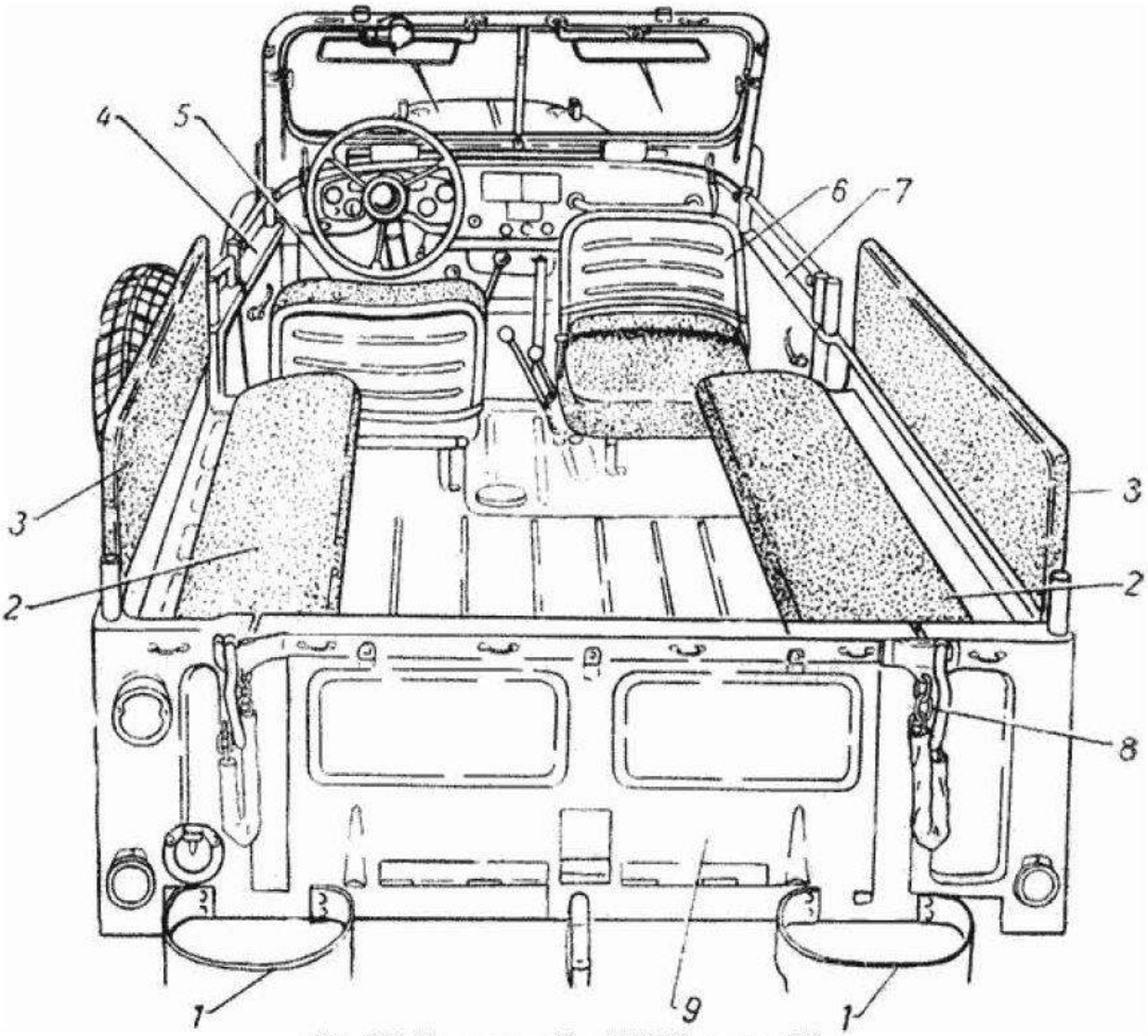

Фиг. 124. Кузов автомобиля ГАЗ-69, модель „76":

Fig. 124. Body of GAZ-69, model "76":

1 - rear bumper, 2 - outboard, 3 - back, side seat, 4 - left door, 5 - the driver's seat, 6 - front seat, 7 -- right door, 8 - chain rear-side, 9 - tailgate.

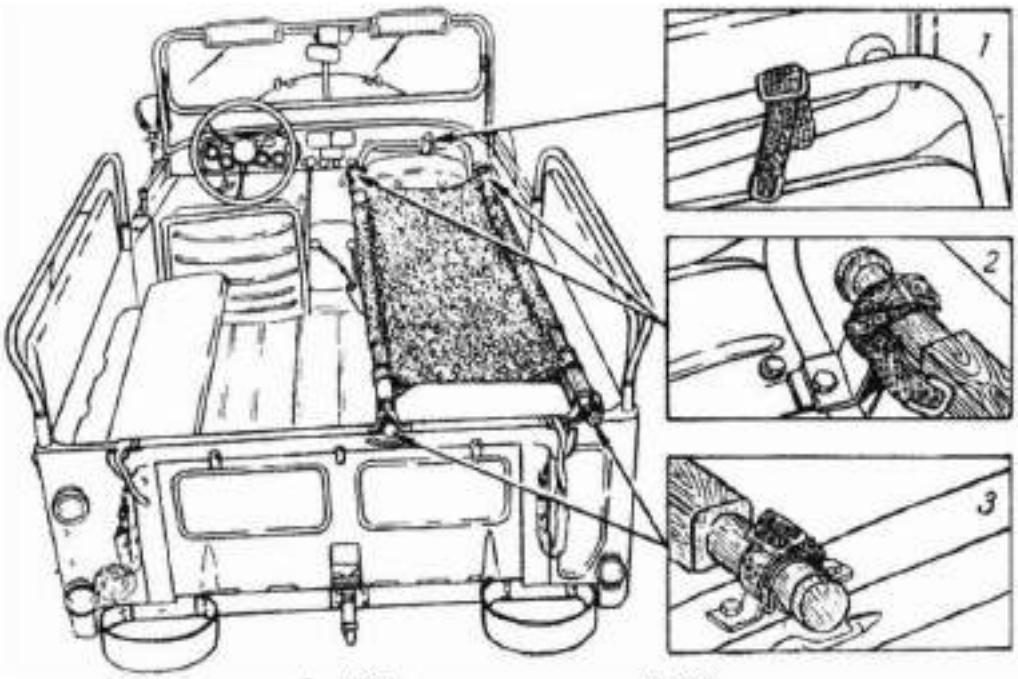

Фиг. 125. Крепление носилок в кузове ГАЗ-69:
1 - крепление спинки переднего сиденья к поручню на панели приборов, 2 - крепление ручки носилок к съемному кронштейну с ремнем на откидной спинке правого сиденья, 3 – крепление ручки носилок к съемному кронштейну на задней борту кузова.

Fig. 125. Mounting a stretcher in the back of GAZ-69:
1 - mount the front seat to the back handrail on the instrument panel, 2 - mount handles a stretcher to a removable bracket with belt hinged on the back right seat, 3 - mount the stretcher handles removable bracket on the rear side bodywork.

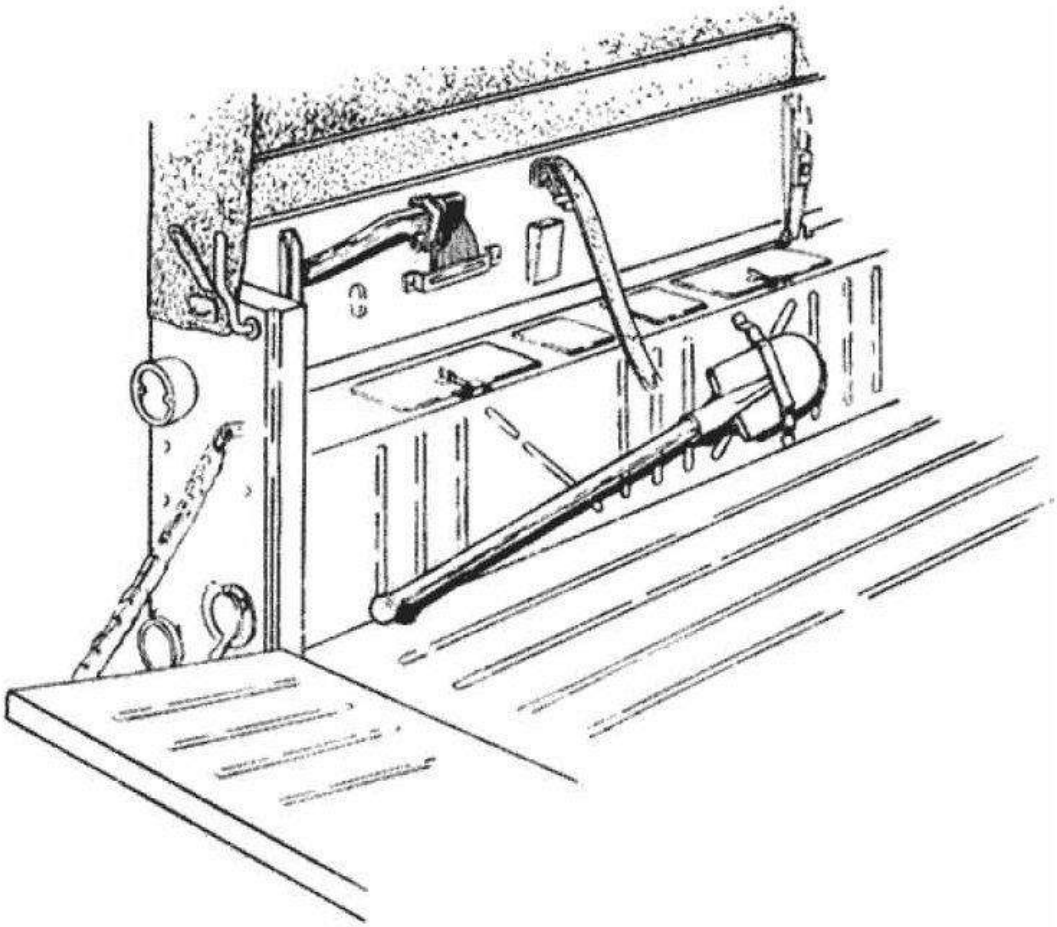

Фиг. 126. Крепление топора и лопаты в кузове ГАЗ-69.

Fig. 126. Mounting an ax and a shovel in the truck GAZ-69.

Tailgate *9* is suspended by chains, *8* in order to avoid damage on the rear bumper in the open - acceptance, as well as for extending the cargo area when carrying long loads. The body is equipped with an additional bracket for mounting a stretcher, an ax and shovel and install vochnymi holes for the placement of fire extinguisher. For securing the stretcher in the back board and the mesh back right seat with a detachable Crown mattes with straps *2* and *3* (Fig. 125). When installing the back of the front seat of a litter should be thrown back forward and fixed belt *1* (available in the tool kit) to the handrail dashboard. Handles stretcher attached to the front flap back and to the bracket 3 folding rear side. Mounting ax carried out on the inner side of the left side seat with velocities would clamp with wing nut, a shovel blade is installed in the bracket mounted on the left internal her body panel (Figure 126). For mounting brackets extinguisher type OC-2 on the amplifier right pane Chuck Body (next to the door limiter) has two openings. Brackets are issued with a fire extinguisher.

The base body. The base body consists of panels in the front and rear floor, reinforced by ransverse River beams, resting on the frame of the car. The base in the area of doorways enhanced by Ledge longitudinal box-section. For ease of installation and dismantling of transmissions and transfer case, as well as conve - STVA access to the central brake assembly has a floor hatches (fig. 127), closed lids *1* and *7,* and detachable front cross member *9*. Caps transmission set with pads *8, 10, 11* of sponge rubber and fastened to the floor bolts 5. Appointment pads - seal the floor and the removal of noise. Notches in the cover of the transmission lever (shift gearbox with central brake and transfer case) have special seals. For sealing and thermal insulation of the front floor Rubber mats are provided. In operation mats shall be placed on a dry floor in order to avoid corrosion.

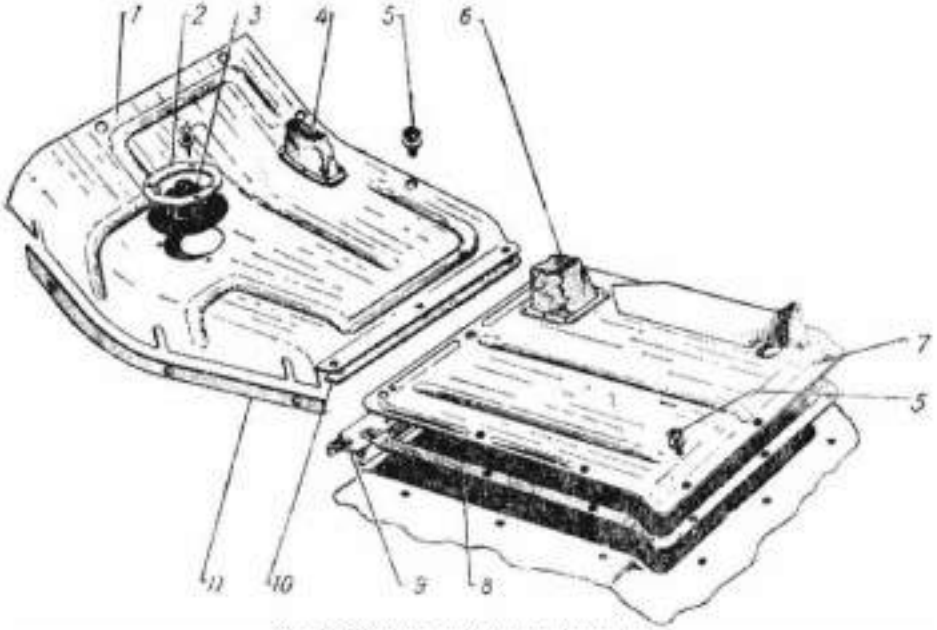

Фиг. 127. Крышки люков переднего пола кузова

Fig. 127. Manhole covers the front floor pan:
1 - front cover of the hatch floor, 2 - mounting ring rubber seal gear lever, 3 - rubber seal - Tel gear lever, 4 - seal the central brake lever, 5 - screw cover attachment to the floor, 6 -, yn - lotnitel transfer case shift levers, 7 - hatch floor transfer case, 8 - rubber foam gasket fastening the hatch floor, 9 - removable crossbar, 10 and 11 - spongy rubber gasket hatch sex transmissions.

Doors. Doors Body GAZ-69 consists of outer and inner panels, stamped from sheet steel and connected by a resistance spot welding. The door (fig. 128) is suspended on two forged hinges *9,* one leaf of which is welded to the two - ri, the second is attached to the body with screws. To unload the loop when driving a car door has a fixation tor, consisting of the guide stud *13* and slot *11* with sliding biscuits. In order to protect wings from being damaged when you open the door to the inside of the door is installed restrictor *8* represents the traction with a rubber buffer.

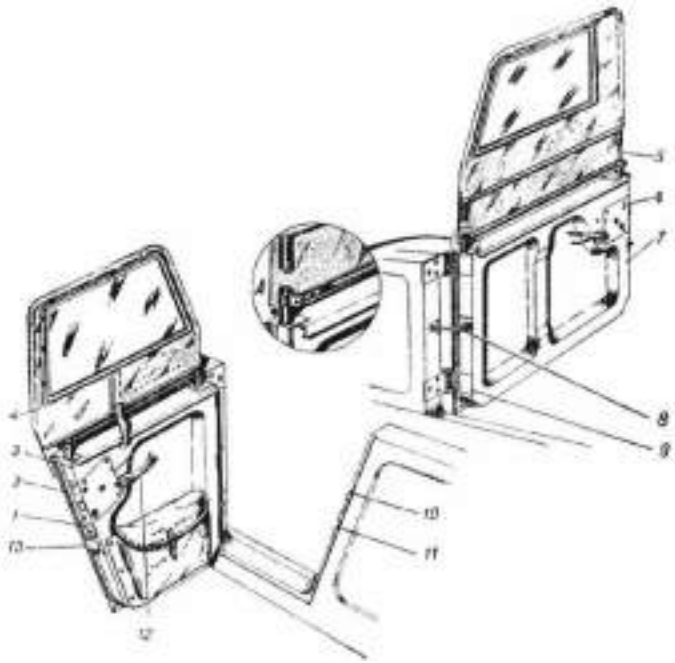

Fig. 128. Doors Body GAZ-69:
1 - left door, 2 - left door lock, 3 - sponge rubber gasket, 4 - left removable sidewall, 5 - right removable sidewall, 6 - Lock the right door, 7 - right door, 8 - limiter, 9 - door hinge, 10 - catch the language of the castle, 11 - jack retainer, 12 - internal - rennyaya door handle, 13 - a guide spike doors; A - mounting retainer sidewall.

To provide secure door in the closed position locks are *2* and *6*, mounted on interior door panels. Opening and closing doors is carried out inside and outside handle MI associated with the lock mechanism. Language lock is held closed door latch *10,* is - gramme to rack locking doors.

In cold or rainy weather to protect the driver and passenger doors are installed removable sidewalls *4* and *5*. The left sidewall is opening valve to access the driver's hands to turning lamas ne-lamp. If there is no need to use sidewalls of the past fit into the tailgate Body (Fig. 129).

Tailgate (Fig. 129) consists of the internal and outer panels. The hinged outer panel gives the possibility of laying the sidewalls of the curtain in the space between the inner and outer panels. Rear board hung on chains in the open position, in closed securely locked constipation, which is adjusted to ensure dense - On fitting the rear side of the gap. Adjustable locking side shall co - ronnoy nut with cotter pin. To seal the opening rear side of rack-mounted tubular body rubber seals, trimmed with leatherette. Fig. 129. Laying the sidewall in the rear board Body GAZ-69.

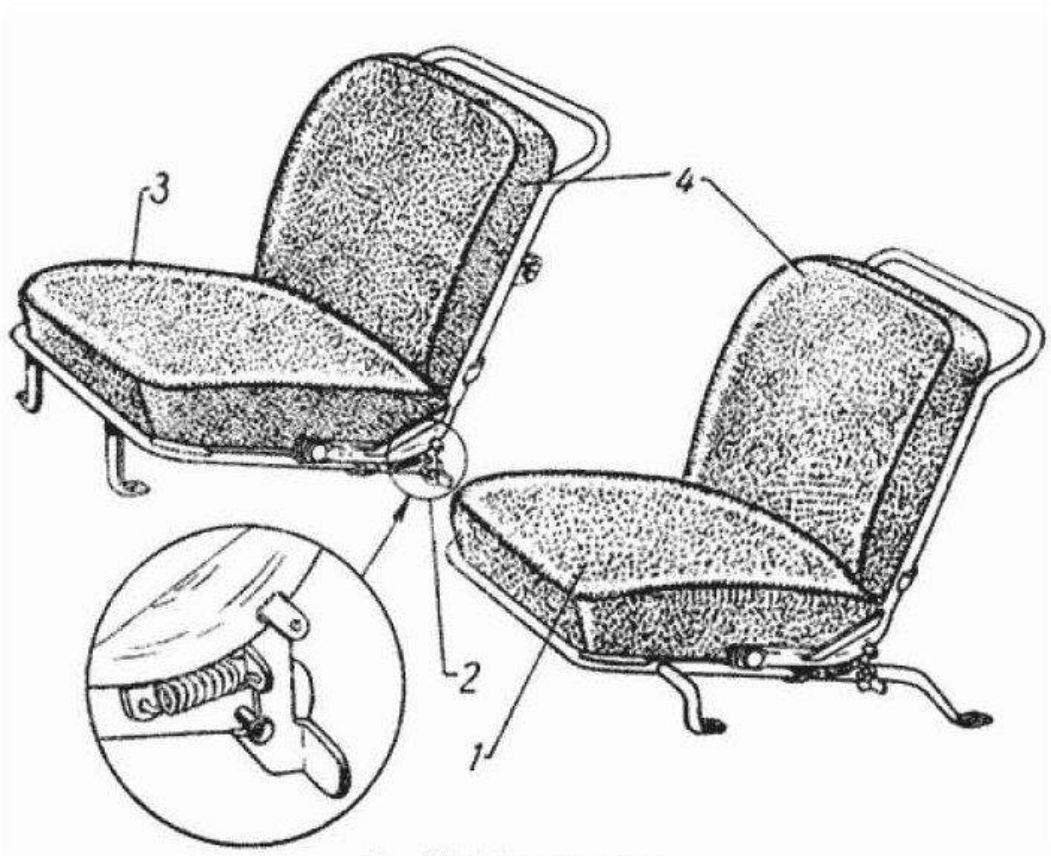

Fig. 130. Front seats:
1 - the driver's seat, 2 - latch flip back the front seat, 3 - the front seat, 4 - folding backrest.

At the rear circuit board to eliminate the noise to put on covers. In order to exclude the possibility chain in the rocking motion and closure of the last plate is welded tailgate velocities would, in which to invest part of the hanging chains.

Front seats (Fig. 130) separate, have a tubular welded frame. Seat back otkid - WIDE. The driver's seat *1* has a longitudinal adjustment, the right seat *3* - unregulated. For fixing Seats in the position provided spring latch *2*. The driver's seat holds easily removable, allowing for good access to the battery battery. To remove the left seat, enough to weaken the three screws fastening the legs to the floor of the body. The seats are upholstered avtobimom * . Cushion backs and seats have their own frame and can be easily removed from the core to conserve them for servicing, repair or con - Serwacy car.

Side seats have a wooden base on which the stacked foam rubber cushion upholstered avtobimom * . Under each side seat has four compartments (hatch) with lids. In the right front compartment houses the oil tank, which mounted a special clamp. In left front compartment provides attachment for a blowtorch. Other compartments can be used - use for the tool and installation of other things. To save the upholstery outboard seats in the carriage of goods they can be raised and secured strap to the back, as shown in FIG. 133 *B.*

Tent. To protect the passengers and cargo from the sun, rain, cold, in the body structure is provided Removable Canopy, consisting of a collapsible metal frame (Fig. 131) and canopy (Fig. 132), a spe - tial duplicated waterproof fabric or canvas. Awning can be removed and easily stowed (FIG. 133), without taking up valuable space body. Collapsed canopy awning fits under the driver's seat A; longitudinal connection arcs awning fit into special HYDRATED canvas bag, which is fixed with straps under the right longitudinal seat *B;* front and rear arc permuted along the left and right sides of the body in the nest until it stops, forming a rail *B.* Canopy awning should be removed from the carcass and put under the seat just dry. * Car upholstery material. *

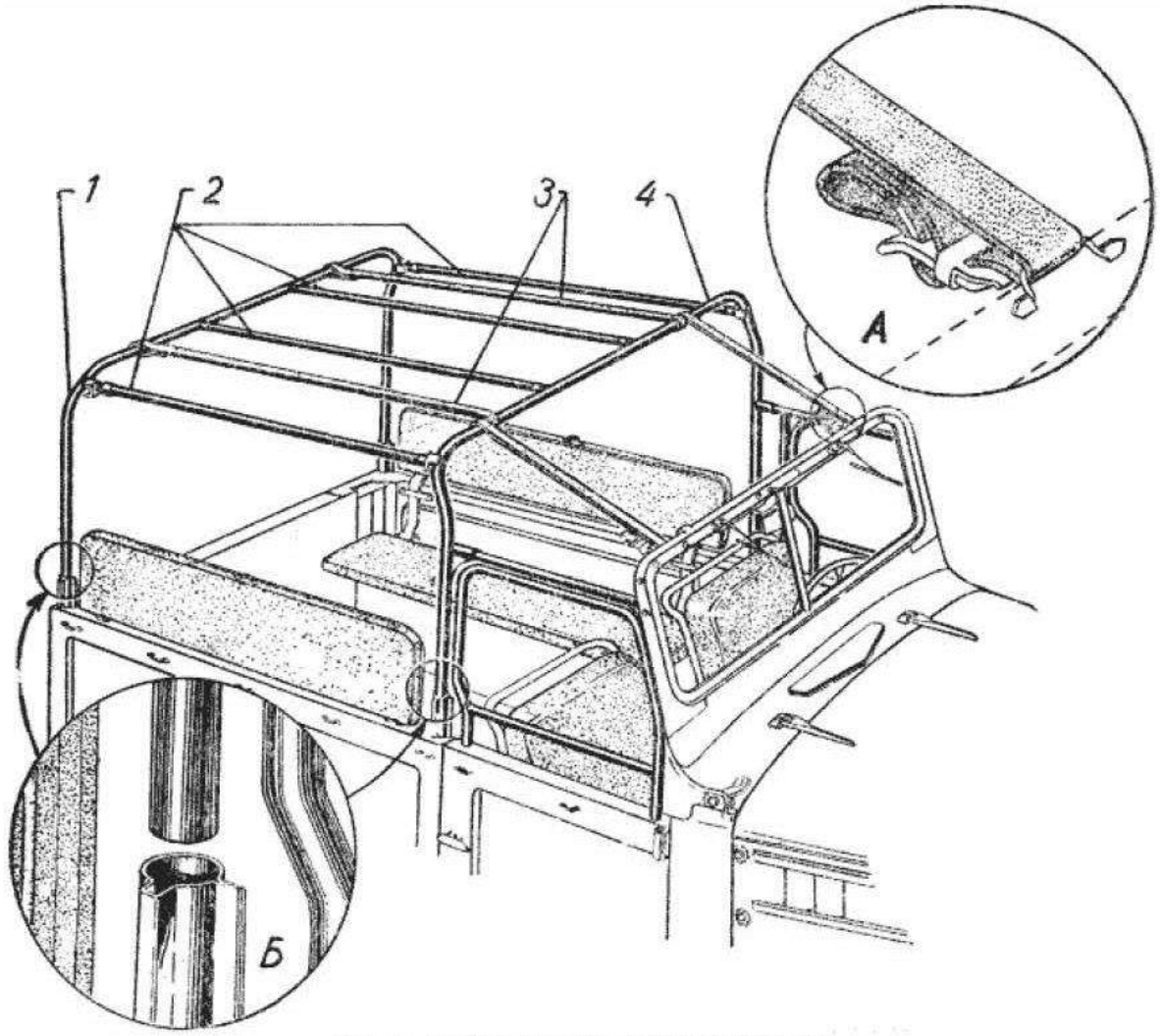

Fig. 131. The tubular frame tent body GAZ-69:
1 - posterior arch, 2 - longitudinal connection arcs awning, 3 - tie straps dug awning, 4 - front arc. A - belt anchorage to wind-bracket window, B - slot for installing an awning arcs.

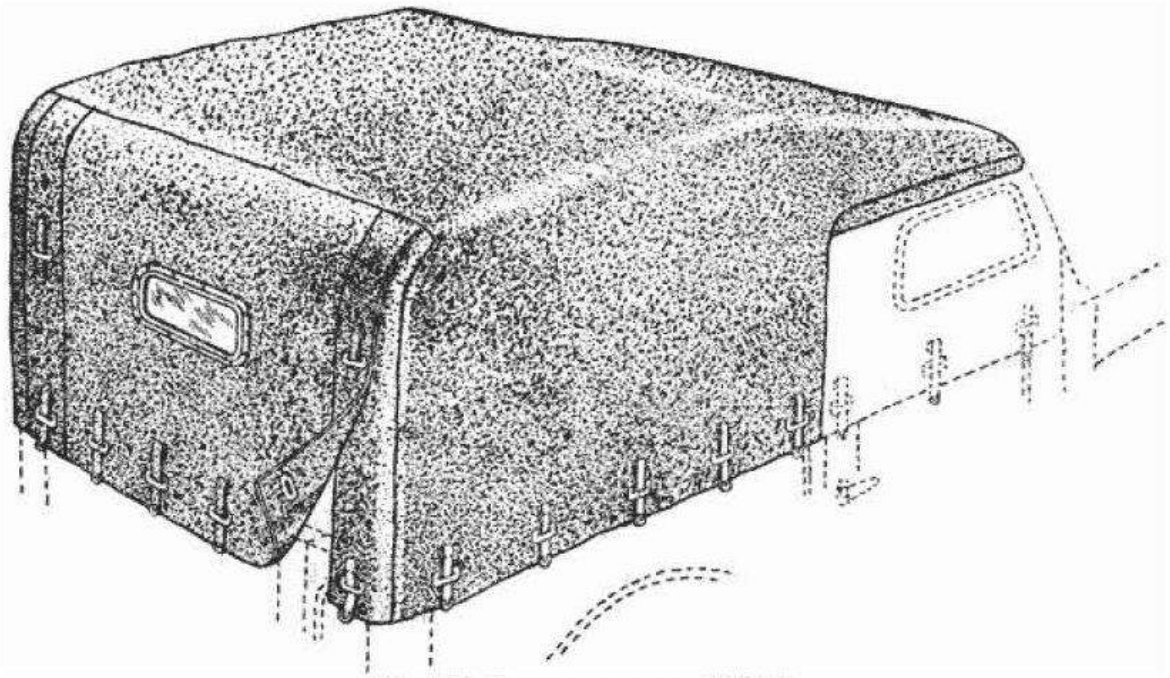

Фиг. 132. Полог тента кузова ГАЗ-69.

Fig. 132. Canopy tent body GAZ-69.

Spare wheel GAZ-69

Spare wheel GAZ-69 is mounted on a special bracket 5, located in on - the District of left-side panels (FIG. 134). Spare wheel to the bracket is carried lining *4* which presses the bolt 3 wheel to the bracket. Spring washer *2* protects the bolt from the self.

BODY GAZ-69A

The body is designed to carry five passengers including the driver (Figure 185). Body open, all-metal, four-door, with transverse seats, equipped with a fast folding awning, luggage rack and stock - tion wheels. Doors each side are interchangeable and somewhat extended in comparison with the left eight-door body GAZ-69 (due advertisement spare wheel and luggage). Front 2 - separate, Konst - ruktsiya their seats similar body GAZ-69. Rear seat 4 - triple, non - separation; besides location, differ - chaetsya from the eight-model GAZ-69 more comfortable at the expense spring framework. For the convenience of passengers seated behind on the back of the front seats have handrails.

Wind window. Appointment of wind windows - to protect the driver and passengers from the grass - ming eyes road dust and from streams counter cold air. Design of the wind window knockdown, that facilitates the replacement of windows with their failure. Glass windows bezoskolochnye - triplex or Tempered glass - "Stalin". In order to seal the glass ustanav - Lebanon in the window frame with a gasket of Si swarm of rubber. To seal the window opening on perimeter has a rubber yn lotnitel special profile. Wind window mounted with two loops and locked wings with curly nuts. Rocker mechanism and the folding frame make it possible - UT have three of the wind window: Per - howling-closed (Fig. 135), second - elated upwards (Fig. 136) and the third - is completely open - Toe (Fig. 137) with a fixation for the special - stitches on the bonnet. When driving with the window open and the driver Passengers are advised to wear protective points. Box mounted on the windshield as electric windshield wiper drive for the second brush, the two co-addition: bubbles and the rear view mirror.

Tent. Tent GAZ-69A is a hinged metal related links - A skeleton, covered with the canopy of duplicated - Noah tissue. In contrast to the awning GAZ - 69, an awning is not removable and collapsible.

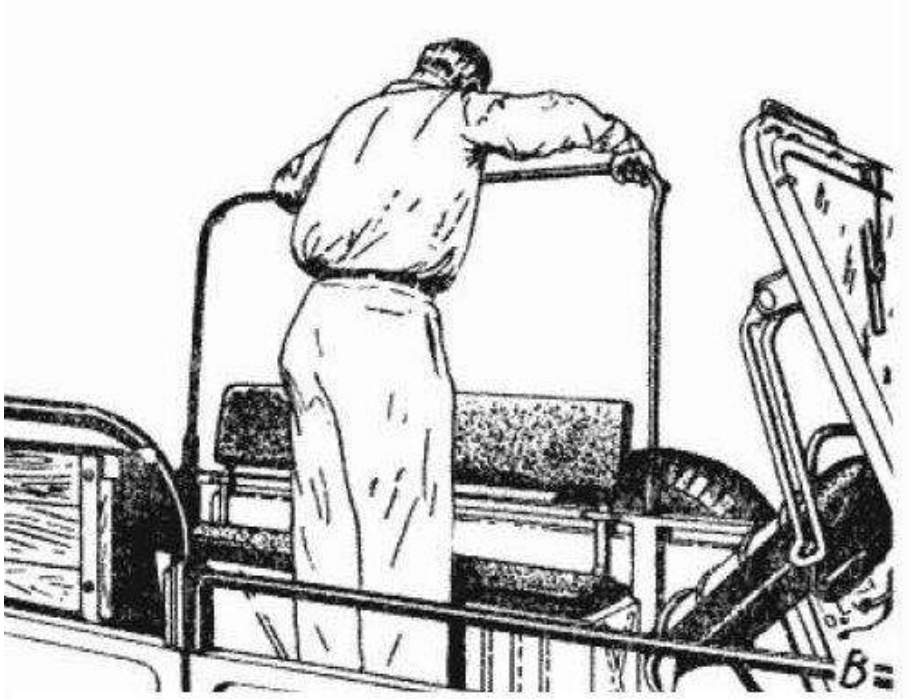

Фиг. 133. Укладка полога тента в кузове ГАЗ-69:

Fig. 133. Laying canopy tent in the back of GAZ-69: A - stacking the folded canopy under the driver's seat, B - crepe - lenie mantle with longitudinal connections to outboard V -- permutation of the tent poles along the sides of the body.

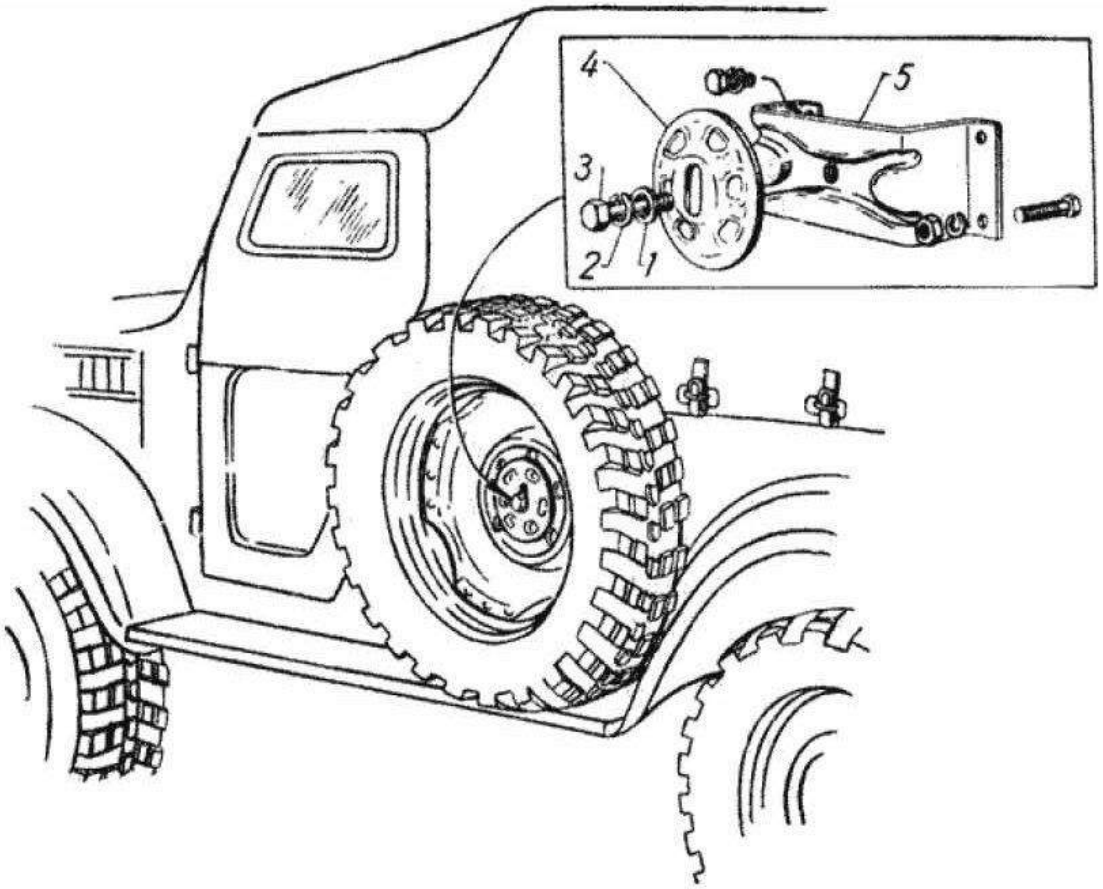

Фиг. 134. Крепление запасного колеса автомобиля ГАЗ-69:

Fig. 134. Spare wheel car GAZ-69:

1 - flat washer bolt mounting the spare wheel, 2 - spring washer, 3 - bolt mounting the spare wheel, 4 - washer clamping Spare wheel, 5 - Spare wheel mounting bracket.

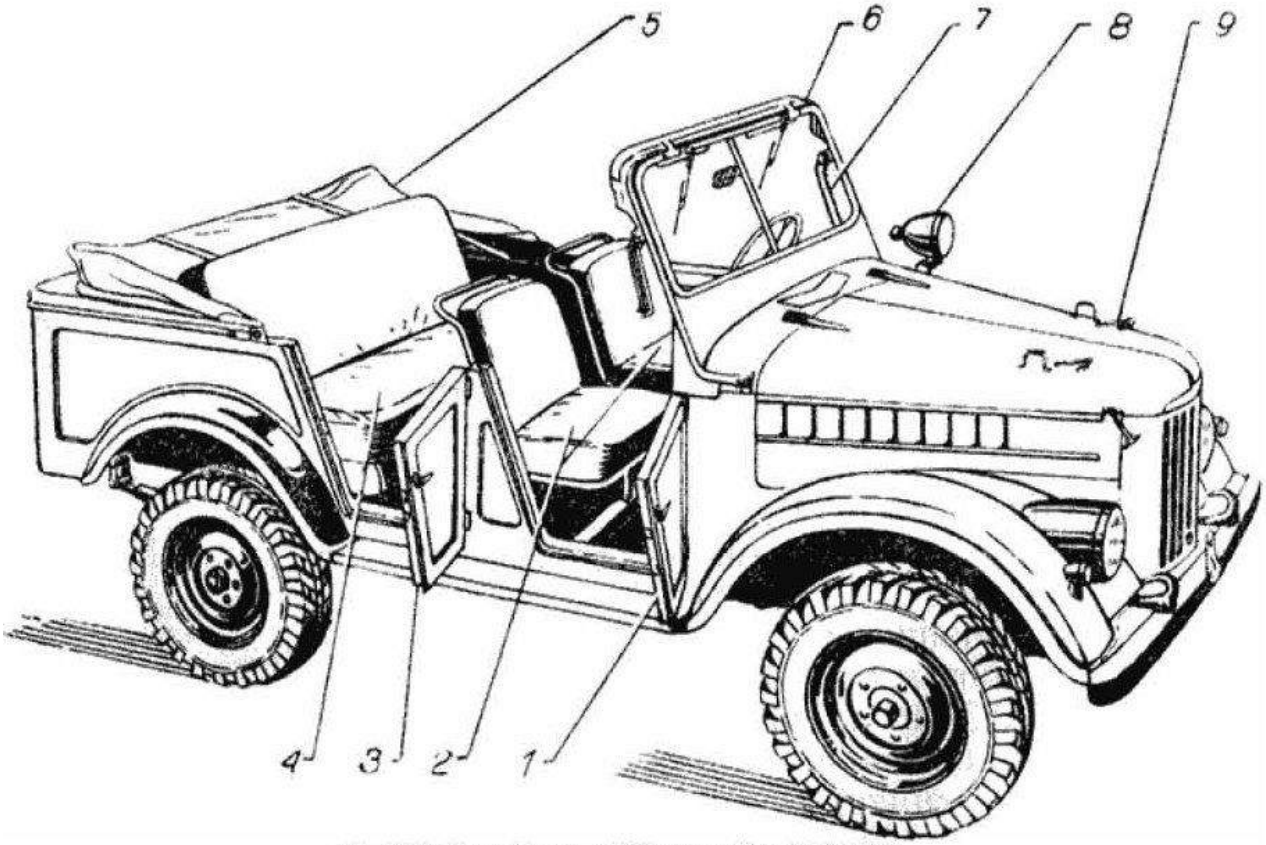

Фиг. 135. Кузов (модель. 77") автомобиля ГАЗ-69А:

Fig. 135. Body (model. 77) GAZ-69A:

1 - front right door, 2 - front seats, 3 - rear left door, 4 - rear seat, 5 - tent in the folded position, 6 - wind howling window, 7 - coulisse wind window, 8 - turning lamp-headlamp, 9 - clasp fastening frame of the wind window.

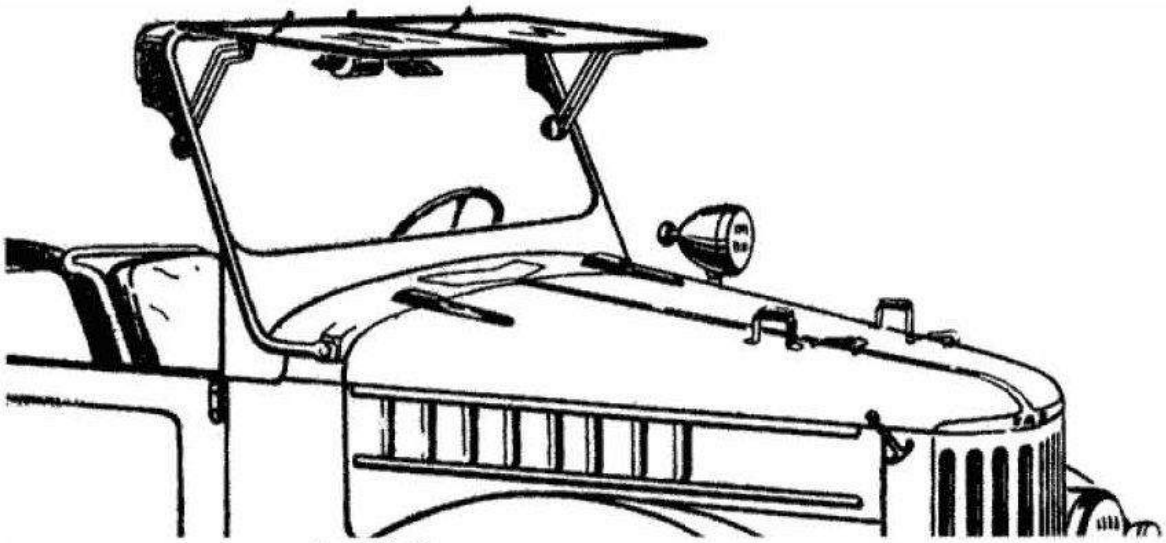

Фиг. 136. Ветровое окно в приподнятом положении.

Fig. 136. Wind window in the raised position.

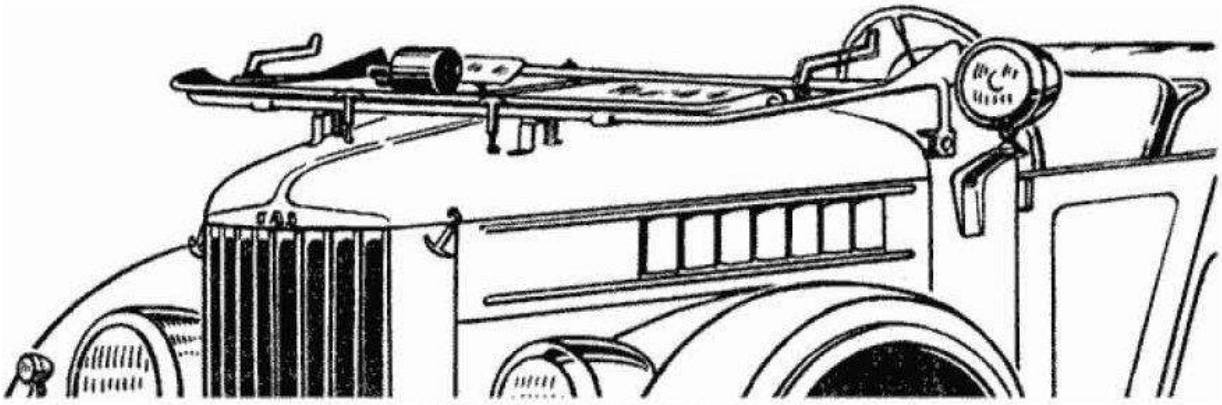

Фиг. 137. Ветровое окно, полностью открытое.

Fig. 137. Wind window fully open.

In order to lay down their tent, you should unscrew the screws holding the curtain to the frame of the wind window and oc - vobodit two supporting frame tent rack *1* of the pins *2* in the board body (Fig. 138), then metal frame and soft top tent folded and tied with straps. At the packed tent reclose Vaeth case. In the fourth quarter of 1955 the factory produced design changes rapidly-evolving Xia awning without the support poles. To fold this tent enough to unfasten the two lever buckles (terminals) at the top of the frame of the wind window, lift the front of the curtain, after which the tent at the expense of tightening the springs in the frame easily folded over the back seat. Trunk (Fig. 139) is located behind the rear seat. Trunk lid *1* (unified rear overboard GAZ-69) hung on hinges in the open position is supported by two hinges *3*. Placed in the trunk spare tire, Coto ROE is fastened to the floor bracket *2*.

HEATER Body and leather shift GLASS

Heating bodies and blowing (heating), wind Glass GAZ-69 and GAZ-69A carried heater (Figure 140), established in front of Body under the dashboard. The flow of cold air during the motion of motor - Beal through the open hatch *1* passes through the radiator *8*, where it is heated and enters the body of the car, enriched revaya it. Hot water radiator heater comes from engine cooling system through pipelines - *3* and *4* through the tap *2*. In the winter should keep the tap is fully open - Tym and regulate body heat only the opening hatch.

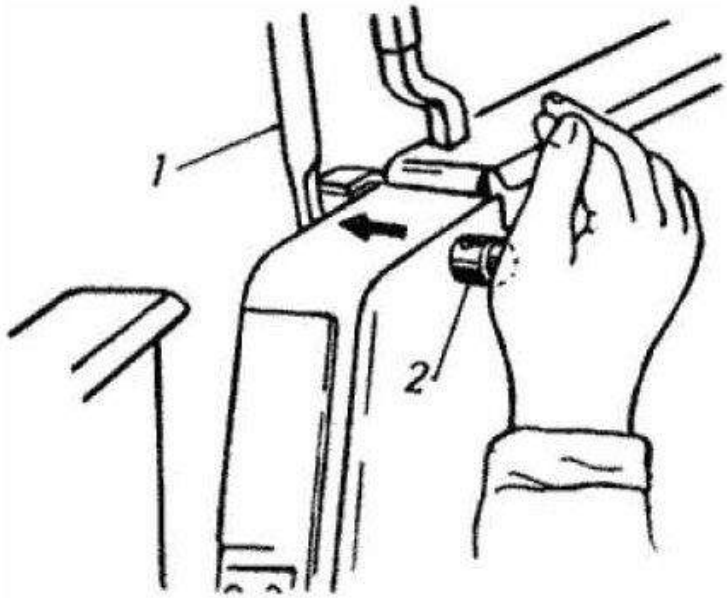

Fig. 138. When rack frame tent:
1 - front desk, 2 - pin.

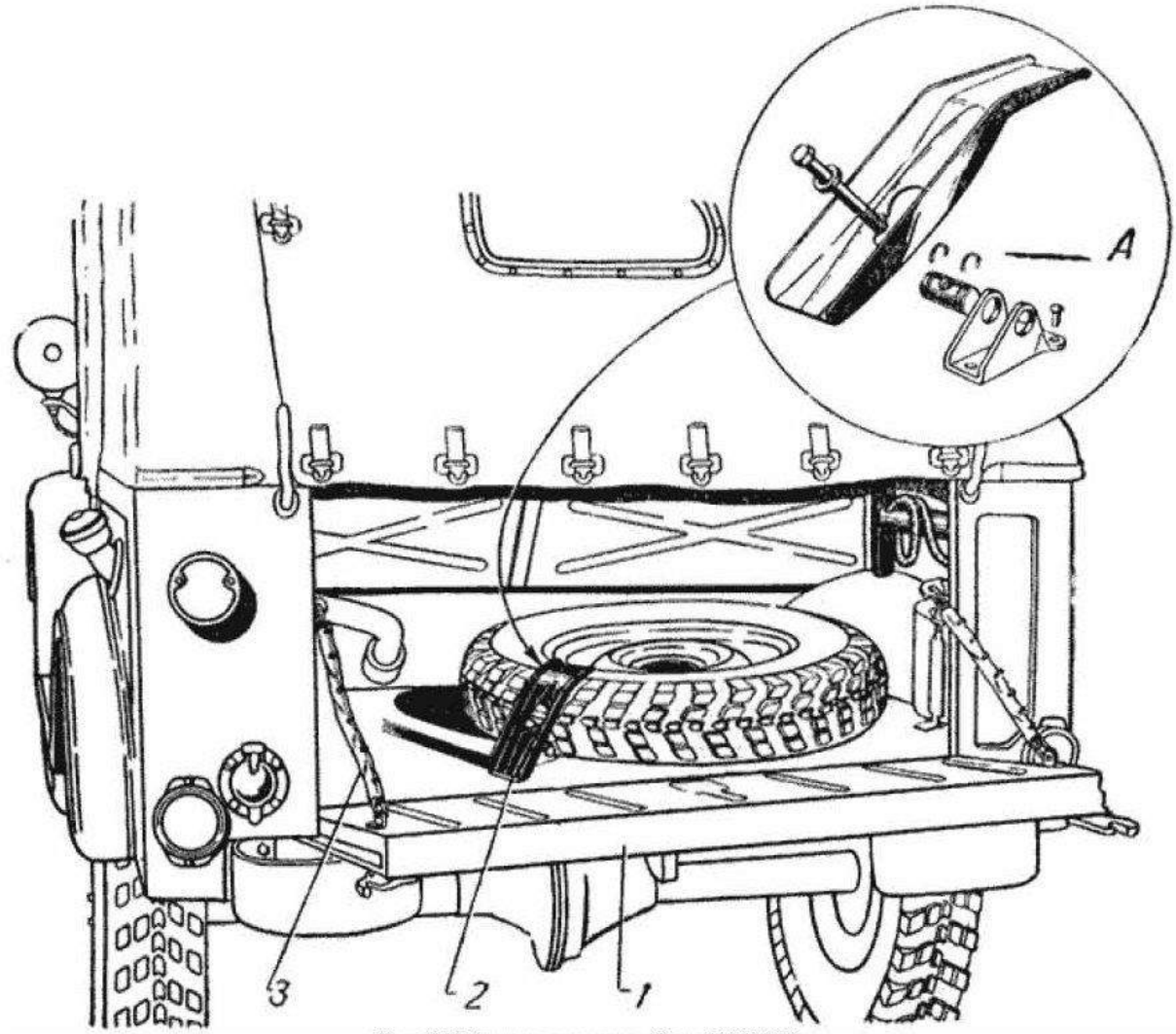

Фиг. 139. Багажник автомобиля ГАЗ-69А:

Fig. 139. Trunk GAZ-69A:
1 - boot lid, 2 - Spare wheel mounting bracket, 3 - chain A - Spare wheel.

For heating (blowing) the windshield against the frosting on the right side hood radiator *7* os - tanovlen fan with an electric motor *5*. Airflow through the tower, is heated to the right side of the radiator, and injected on flexible hose (ventilation channels) *10* and *17* (Fig. 141) to the two slot

nozzles located on the left and right of the wind window. Switches electric fan *12* (FIG. 141) can adjust the intensity of the blowing surface of the windshield, changing the speed of the electric motor. The switch has three positions: straight - off, left - the fan runs on small equip - max and the right - at high speed. When moving the car from the place in frosty weather should be sure to turn on the fan-on Duva glass. Once the glass clean, and to turn off the fan, or at least, translate into reduced speed. In the summer heat should be shut down, closing the water tap, and use ventilation hatch for submission to the body nepodogretogo fresh air. Every autumn, should clean up the heating system: Rinse the radiator, and unscrew clean the stop tap and check the status of pipelines. Regulation of heating can be carried out by varying the opening of the handle *16* (FIG. 141) hatch *2*. Opening the hatch should be regulated depending on the speed of the car. At high speed the opening should be reduced, because the body will be exposed to more elec - stvo cold, not had time to warm the air. Tap *5*, located in the cylinder head, you can change the speed of water circulation in radiator *8* and regulate the level of heat supplied to the heater for cold air. During long-town trips in the body temperature may be too high. In ta - FIR cases should cover the tap, reducing the supply of hot water in the radiator heater. Recommendation etsya first turn on the tap clockwise to failure, and then unscrew it for 3 - 4 full rotations. In the future, should select the value of opening on the desired temperature in the body, turning heads, ku faucet on the side or the other not less than one turnover in each sample. For the normal is the real - Via heating system requires a temperature of water in the radiator of about 80 ° C.

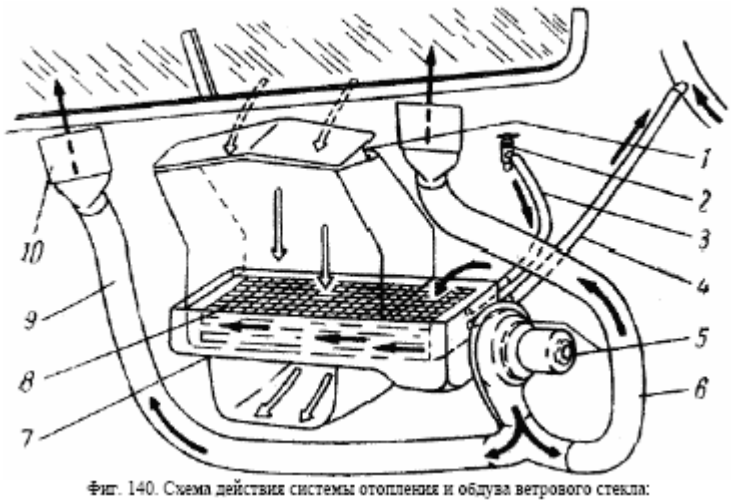

Фиг. 140. Схема действия системы отопления и обдува ветрового стекла:

Fig. 140. Scheme of the heating and blowing the windscreen:
1 - ventilation hatch, 2 - tap, 3 and 4 - hoses, supply and drain water in the radiator, 5 - fan and an electric motor, 6 - air duct to right slotted tube, 7 - radiator cover, 8 - radiator, 9 - air line to the left slotted tube, 10 - slotted tube.

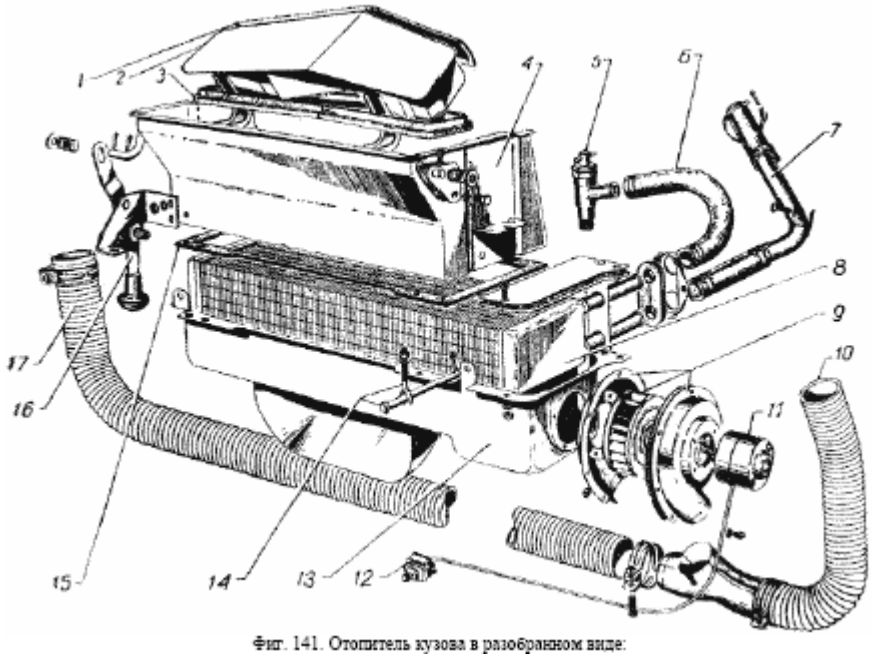

Фиг. 141. Отопитель кузова в разобранном виде:

Fig. 141. Heater Body Disassembled: 1 - mesh air filter, 2 - hatch ventilation. 3 - rubber seal manhole covers, 4 - box, 5 - tap, 6 - hose hot water in the radiator 7 - water drainage hose from the radiator, 8 - radiator, 9 - fan blowing the windscreen 10 - flexible air duct blowing to the right side of the windscreen, 11 - electric 12 - switch of the electric motor, 13 - Shroud radiator, 14 - fixing the radiator duct, 15 - rubber gasket hood radiator, 16 - handle hatch ventilation, 17 - flexible air duct blowing to the left side of the windscreen

Grease body. After 6 thousand miles, and in case of creaking before, you should lubricate the hinges two Rey, hood hinges, door locks, door hinge limiter easily penetrating lubricant. The composition of Lubrication is the following: oil koloidalno-graphite product - 60% and white spirit - 40%. White spirit (purified kerosene) can be replaced with pure gasoline. In the absence of the above lubricating her can replace oil for the engine. In this case, lubrication should be performed more frequently. Rusk nest Shih PA door guiding tongue and the language of the lock should be lubricated with a 6 thousand km lubricant pencil. Its composition: ceresin, or natural wax - 30%, paraffin - 60%, and graphite "P" - 10%. Stir the mixture until 60 - 80 ° C, and then cast into the form. In the absence of lubricating grease pencil, these details should be pro - badger often, a thin layer of grease.

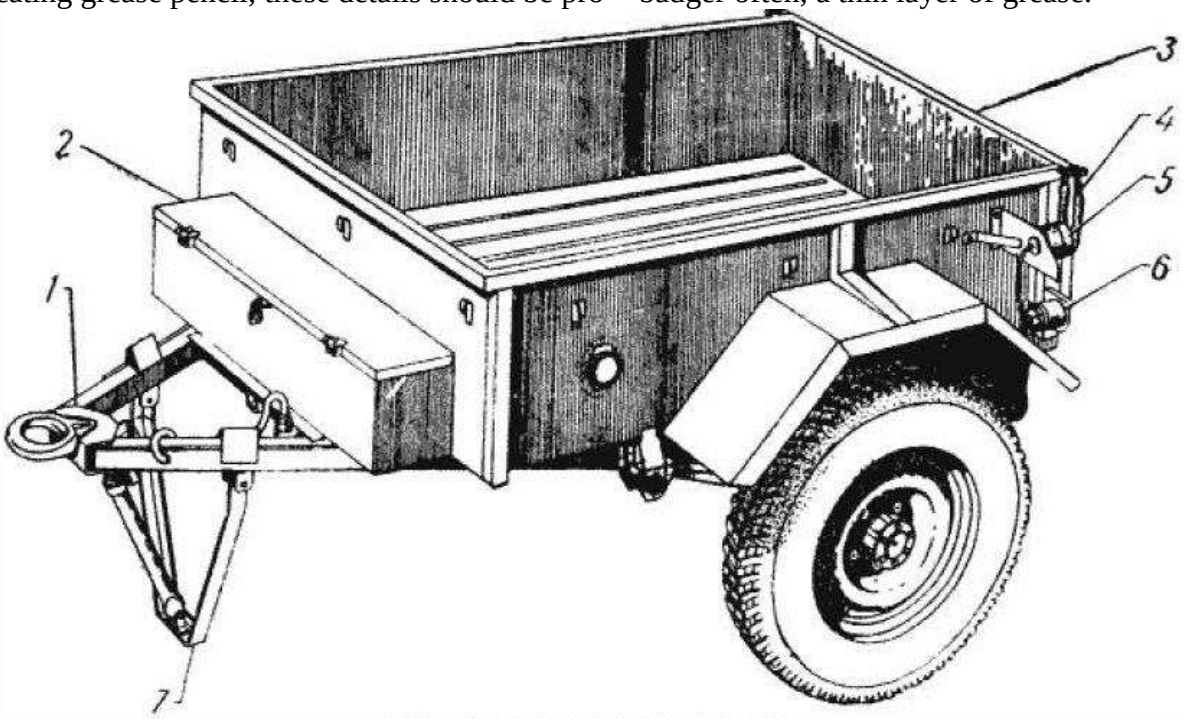

Фиг. 142. Прицеп модели ГАЗ-704:

Fig. 142. Trailer model GAZ-704:

1 - drawbar trailer with removable loop, 2 - drawer for accessories, 3 - tailgate trailer, 4 - chain rear-side, 5 - rear pho - nar, 6 - Socket 7 - folding rack.

GAZ-704 TRAILER FOR TOWING CAR GAZ-69 and GAZ-69A

Single axle trailer, intended only for the carriage of goods. Trailer (Fig. 142) is made in the form of an all-metal welded construction. Shaft - *1* and frame welded together, the body - box-section, open, with the flap *3*, with uvyazochnymi hooks tent and a box *2* for supplies, chain *4 Hold* the tailgate in a horizontal position, cos - enabling the transport of long loads. To install the trailer in a horizontal position and to facilitate coupling with a car on the shafts trailer has a stubborn device - folding rack *7*.

GENERAL DATA TRAILER

Payload 500 kg Number of axes 1 Net weight 340 kg Track 1440 mm

Maximum permissible speed of a normal load on the horizontal partici - Kach highway 75 kph

Dimensions (rounded) in mm:

length 2700

width 1645

Height (no load) in the horizontal position of the frame 1150

The lowest point of the trailer load: mid-axis 315

under ladders 280

RUNNING GEAR

Frame - welded, stamped from sheet steel.
Springs - longitudinal, semielliptical of GAZ-69A.
Dampers - Hydraulic, double acting, from GAZ-69.
Wheels - lean on GAZ-69.
Tires - low-pressure, size 6, 50 - 16.
Shaft - welded, with the coupling loop.
Hitch rack - folding with the fixation on the shafts.
The rear towing device - two-sided action from GAZ-69.

CARE TRAILER

During operation of the trailer should systematically monitor tire pressure and condition suspension, tire pressure should be 2 kg / cm 2 . In run-trailer to monitor the temperature of wheel hubs and with a significant heating of weaken the tightening of the adjusting nut bearing on 1 / 6 turnover. Wheel bearings lubricated with solid oil M (US-M) or synthetic solid oil CSS-2. Greasing change over 6 thousand kilometers. Grease sheet springs made of a graphite grease as required but at least twice a year. Care for shock absorbers is to periodically check and top up fluids (if necessary - bridge) after every 6 thousand kilometers. Once a year, dampers should be removed, disassemble, wash kerosene and fill with fresh fluid. To ensure ease of emphasis should be systematically cleaned the hinges on the rack mud. The trailer has brakes, which reduces the driving stability on bends. Therefore, category - psychiatric forbidden to overload the trailer, and move with high velocities. While raising the trailer in the garage should be set on the counter shaft.

Chapter V ELECTRICAL GENERAL

One part of GAZ-69, GAZ-69A and trailer GAZ-704 is elektroobo - damaged equipment. Reliable and faultless operation of cars depends on the condition of electrical equipment so it requires constant maintenance, which should be strictly observed. The system consists of electric cars from the sources and consumers of electric current, wires, control devices and auxiliary equipment. At the GAZ-69 and GAZ-69A, installed electrical direct current. Electrical devices are connected to a single-wire system, the second wire are the Me - full metallic parts of cars. With "mass" cars are connected all the positive terminals of devices electrical equipment. Nominal system voltage of 12 volts. Schematic diagram of electric cars GAZ-69 and GAZ-69A is the same and shows Fig. 143. Schematic diagram of the electrical trailer is given in Fig. 144.

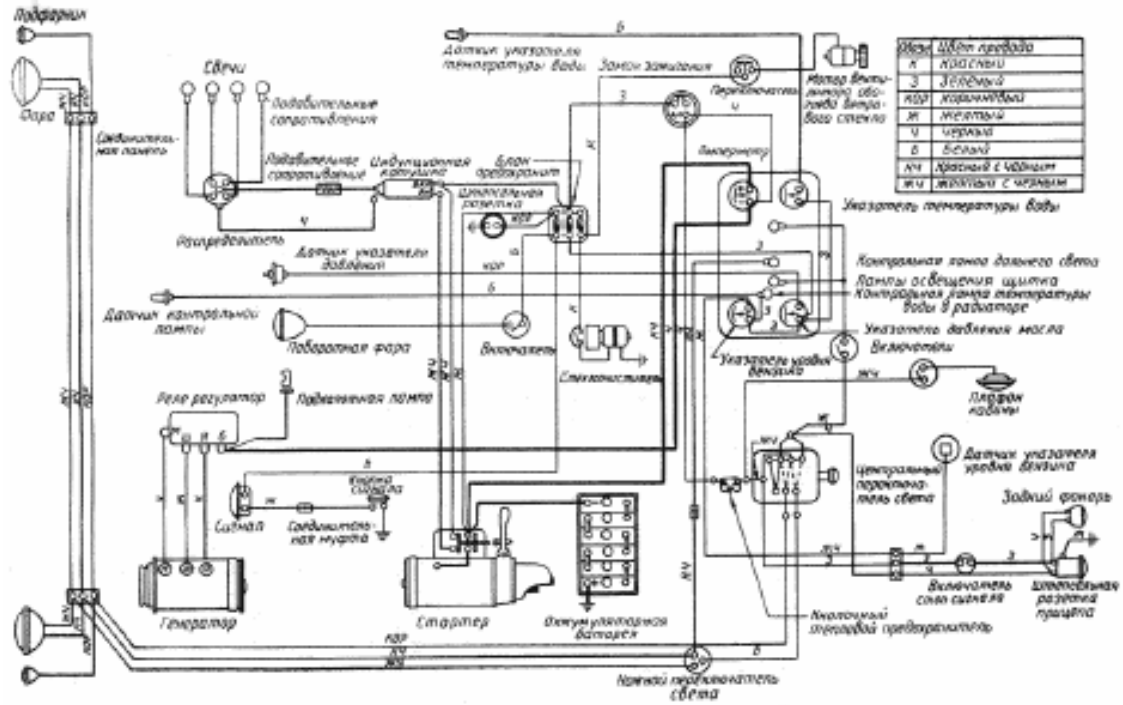

Фиг. 143. Принципиальная схема электрооборудования автомобилей ГАЗ-69 и ГАЗ-69А.

Fig. 143. Schematic diagram of electric cars GAZ-69 and GAZ-69A.

Фиг. 144. Принципиальная схема электрооборудования прицепа.

Fig. 144. Schematic diagram of the electrical trailer.

SUPPLY SYSTEM AND STARTING

Battery

For power users and to start the engine starter on GAZ-69 and GAZ-69A-US tanovlena battery type 6-ST-54 with a nominal capacity of 54 ampere-hours at 10-hour mode discharge current of 5.4 amps. Nominal battery voltage of 12 volts. The battery pack is installed in a special nest under the driver's seat.

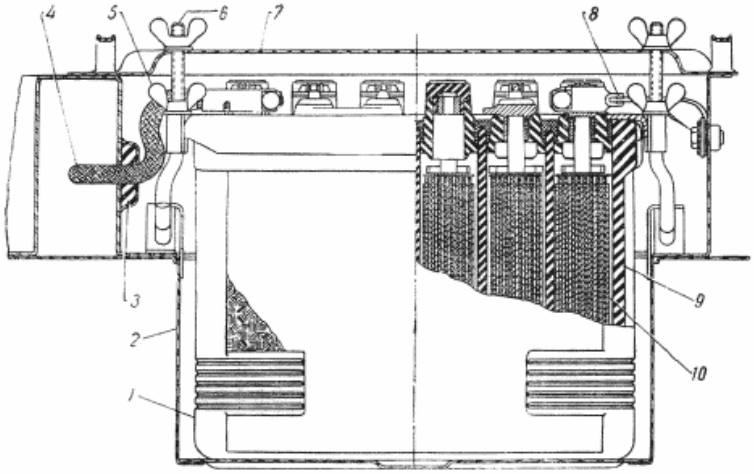

Фиг. 145. Аккумуляторная батарея:

Fig. 145. Battery:

1 - Rechargeable Battery, 2 - slot 3 - wire seal, 4 - minus lead, 5 - butterfly nut fastening frame and lid, 6 - Screed, 7 - cover, 8 - the positive wire, 9 - Tank Battery, 10 - plate with the active mass.

In the nest battery is attached with a frame and two screws, rams navernutyh to tie (Fig. 145).

On top of the slot-fitting lid. For the convenience of care for the battery driver's seat can be removed. Battery 6-CT-54 consists of six series-connected batteries (elements). Ebony - tovy tank battery is divided by partitions into six cans. Each element is placed in the bank and consists of four positive and five negative plates. Between the plates are installed separators made of mipora (microporous Latinas). On top of each bank's closed lid, which is liquid and vent openings. Pouring - ing hole is closed with a stopper. Under hole plugs have a protective mesh for protection from falling on the plate of foreign objects. The cell has a vent baffle plate, protecting the electrolyte from splashing. Through the cover pass pole pins on the positive and negative plates. The space between the lid and the tank is filled with pouring cement. Each bank is filled with battery electrolyte, which consists of sulfuric acid and dis - tillirovannoy water. Depending on the climate zone in which the working vehicles, and from time - no, the density of the electrolyte batteries shall conform to table 1. Normal operation of vehicles is possible only when good condition battery batteries on this should follow the rules of care for her. Timely implementation of simple opera - tions for the care will significantly increase battery life. The driver should remember that a discharged battery is especially dangerous to operate in winter os - loviyah, as the electrolyte may freeze and break the tank battery.

CARE Battery

Care for the battery pack consists of periodic inspection of the battery and keep it on clean and in a charged state. Contamination of the surface of the battery, the presence of oxides at the terminals, as well as leaks and evil co - unification cause rapid relaxation of the battery and prevents the proper charging her. Frequent and prolonged stay in a discharged battery or even olurazryazhennom condition is sulfatatsiyu plates (coating of lead sulfate crystals). This leads to a decrease in capacitance battery and to increase its internal resistance. At long stay in a discharged for ensure proper operation and longevity of the battery must first under - refrain in her proper level of electrolyte. Evaporation of the electrolyte from its membership takes water from

to replenish this loss of electrolyte should be topped up to the battery only distilled bath water. Lowering the electrolyte can also cause sulfatatsiyu exposed parts.

In the absence of distilled water you can drink the water, obtained from the pure snow, or rain water, but not collected with iron roofs and not in an iron pot. Use tap water is strictly prohibited, as it has harmful impurities (iron, chlorine, etc.) that once - rushayusche operate on battery. state of the battery as a result sulfatatsii completely out of order. During normal operation of a car battery is constantly charged and process of work does not require additional charge. If the battery while working on any at - ranks discharged more than 25% in winter and more than 50% in summer, it should be removed from the car and pass on the loading station. Such a battery should be charged the current in 4 - 5 amps before gassing. After that, reducing the current strength up to 1.5 - 2 amps, to continue charging for two hours prior to the abundant gassing and a constant voltage and specific gravity of the electrolyte. Fully discharged battery must be put in charge not later than 24 hours after discharge. Upon the termination of operation of the car for a long time, to avoid damaging

the batteries from self - morazryadki sulfatatsii and plates, it should be removed and fully charge on the charging station. In the pro - cess storage on a monthly recharge the battery. If there is no possibility to recharge the battery, then it should defuse the current of 5 amps until the voltage at the terminals of 10.2 volts, pour the electrolyte, wash distilled water and thoroughly clogged. Bringing such a battery in working condition is just like new. When you stop the car less than a month to make sure that the battery is charged, and disconnect her from the chain, otediniv one of the wires from the terminals. The density of the electrolyte in the battery should be consistent climatic region of the cars listed in Table 1, taking into account the emperature freezing of the electrolyte according to Table 2.
Table 1 Climatic conditions in which the works car The density of the electrolyte at 15 ° C the filling the first charge at the end of the dawn - yes
1. The extreme northern regions with temperature winter below - 35 ° C winter 1.280 1.310 summer 1.240 1.270
2. The northern and central regions with temperature
ture in winter to - 35 ° C winter 1.255 1.285 summer 1.240 1.270
3. The southern winter 1.240 1.270 summer. 1.210 1.210
Table 2
Share electrolyte at 15 ° C Temperature freezing point in ° C Share electrolyte at 15 ° C Temperature freezing point in ° C 1.100 - 7 1.290 - 74 1.150 - 14 1.300 - 66 1.200 - 25 1.320 - 64 1.250 - 50 1.350 - 49 At the temperature of the electrolyte, different from 15 ° C, the amendment needs to be done in accordance with Table 4. In the winter, whenever possible, should the battery heat insulation felt or cloth. At long stay car parking in the open without a work that poses a threat to measurement - sion of the electrolyte, the battery should be removed and stored in a room with a temperature greater than 0 ° C. To move from winter to summer operation - and vice versa - the battery is removed from the the car and put on the normal charging current of 5 amps. At the end of charging, with unending current charge, it is necessary to produce fine-tuning of the density of the electrolyte to the values shown in Table 1. Pre - Vodka is produced using a rubber bulb in several steps: suction of the electrolyte of the elements Comrade and top up with distilled water or electrolyte density of 1,400. The gaps between the two pre - bavkami water or electrolyte must be at least 30 minutes. When installing the battery on the car is necessary to observe proper polar tions of terminals (the positive terminal more negative).
Daily care.
1. Inspect the battery and if necessary, clean the dust and dirt. Electrolyte spilled on the surface of the battery, wipe cloth, dry or soaked in liquid ammonia or Ras creative soda. Oxidised battery terminals and cable lugs clear and uncon - stroke of grease or vaseline Technical solid oil.
2. Check the density of mounting the battery in the socket. Lambs, pull the frame attachment fol - blowing prolong tightly by hand without the use of any instrument, as excessive tightening them may cause damage to a tank battery.
3. Check the connection and the density of the contact tips of wires with the battery terminals. Do not tolerate any - deal about the tension wires to prevent damage to terminals and formation of cracks in the mastic.
4. Clean vents batteries. Cleaning the holes should be done cautiously because under the hole that is reflective plate, which can be damaged. *Once every thousand kilometers,* but not less than 10 - 15 days in winter and 5 - 6 days le
Volume:
1. Check the electrolyte level in all six banks of battery and, if necessary, pre - pour distilled water.
2. Check the density of the electrolyte to determine the degree battery. Before checking density, if the filling-up was carried out in the elements of battery, you must run the engine and give it porabo - thief for charging the battery, it is necessary to ensure that the electrolyte mixed up and became homogeneous.
3. Check the reliability of the battery connection wires, as well as the integrity of the tank. *Once a month* check the load with a fork as a battery voltage of each ele - ta. The voltage of each element of a functioning battery should remain unchanged for 5 seconds. Kole - banie stresses in individual elements must not exceed 0.2 volts. In an intensive operation of the vehicle is recommended to extend

the life accumulate reflex decrease the density of the battery electrolyte at 0.02 units from the values shown in Table *1*, but not lower than 1,240.

Warning:

1. During the care of the battery should only use a portable lamp.
2. The use of open fire or circuit elements may cause the explosion of detonating gas velocities drunk in the battery banks.
3. Got on the skin acid must be quickly wipe dry and neutralize the 10% solution soda ash or washed with a strong jet of water.

CHECKING THE BATTERY STATUS

The electrolyte level should be 10 - 15 mm above the safety net set over separators. Check the electrolyte level is a glass tube with an internal diameter of 3 -- 5 mm.

To measure the level of electrolyte in the battery as needed, turning cork, alternately deleted in each can filler tube in a vertical position; close the hole - stie top of his thumb and then pull out the tube (Fig. 146). The height of electrolyte level in the tube will meet the level of the electrolyte over the safety net. In the absence of the tube test level can produce a clean wooden stick. Enhance level permitted only with distilled water. Apply a river or tap water category - psychiatric prohibited. To avoid water freezing in the winter it is recommended to fill up just before departure or when the engine is running. The electrolyte is allowed to fill up only in exceptional cases, when level will decrease as a result of splashing or crack the tank. In this case the battery must be put on charging and electro - lit to add at the end of charging. To top up with distilled water should be let go on - Shower cap, put it on tightly fitting of ventilation - miles, pour water to the level of 5-10 mm from the top edge of the filling - tion holes, remove the cork and screw it into place. This level is automatically set to the desired height (Figure 147). The density of the electrolyte depends on the degree of infection ac - kumulyatornoy battery. The density of the electrolyte measured by a special kislotome - rum (preometrom) with the scale of density from 1.00 to 1.32. For easurement density of the electrolyte to unscrew the stopper pouring hole - stiya, press the rubber bulb acidimeter, vertically vsta - build it in the filler all the way and let the bulb (Fig. 148).

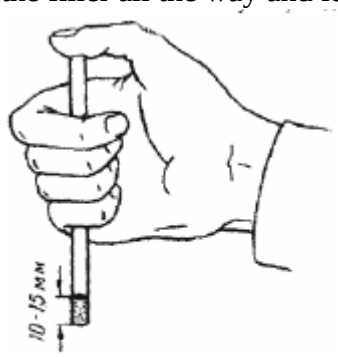

Фиг. 146. Проверка уровня электроли-та

Fig. 146. Check level of electrolyte - ta

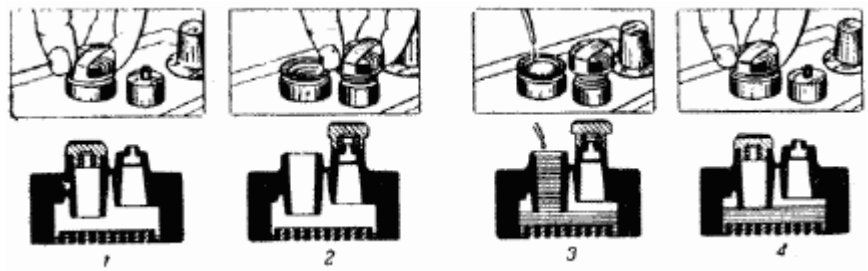

Фиг. 147. Порядок доливки воды или электролита в элементы батареи:

Fig. 147. The order of filling-up of water or electrolyte in the battery cell:

1 - removal of stoppers, 2 - putting caps on the vent fitting, 3 - filling-up, 4 - inverse statement cork.

Table 3

The density of the electrolyte at 15 ° C at the end of charge

when Low 25%	when Low 50%
1.310	1.285
1.270	1.240

1.270 1.245
1.230 1.200
1.230 1.205
1.190 1.160
Table 4
Electrolyte in ° C
Amendment to the testimony of sour Tomer Electrolyte in ° C
Amendment to the testimony of sour Tomer
+ 45 + 0.02
-15 - 0,02
+ 30 + 0.01
- 30 - 0,03
+ 15 0
- 45 - 0,04
0 - 0,01

The level of immersion in the electrolyte will float density of the electrolyte. When measurements should ensure that the float did not touch the walls of the flask. Density of the electrolyte in all elements of the battery must - to be identical and correspond to Table 1. If the density of individual elements of different bo - Leia than 0.02, it must be aligned by placing the baht - yard on charging. After filling-up the electrolyte water or after Use the starter, the measurement of density should be pro - driving while charging a small shock or a one - two o'clock holding the battery in working order to electrolyte had become homogeneous. When determining the battery state of charge - Noah batteries, as well as filling the electrolyte into the new bata - yard, you should consider the influence of electrolyte temperature on its weight, and always introduce the relevant amendment ku, ie, the density of lead to 15 ° C. Amendments are shown in Table 4. At a temperature of electrolyte in the cell for more than 15 ° C found necessary to add an amendment to the testimony of acid - measure, at a temperature below 15 ° C, the amendment should be deducted. If the density of the electrolyte in the cell is not the same, it should be aligned by adding a stronger elec - lytes or distilled water. Aligning tightly - STI electrolyte is required at the battery in full - Stu charged state when the density of the electrolyte reaches a constant and due to the "boiling" provides - Xia rapid mixing of the electrolyte. To determine if the battery bata - yards, as well as for orienting judgments about the extent of its charge, except for checking the density of the electrolyte should once a month to check the status of each element ba - tarei under high current load, using load fork, equipped with resistance and a voltmeter (Figure 149).

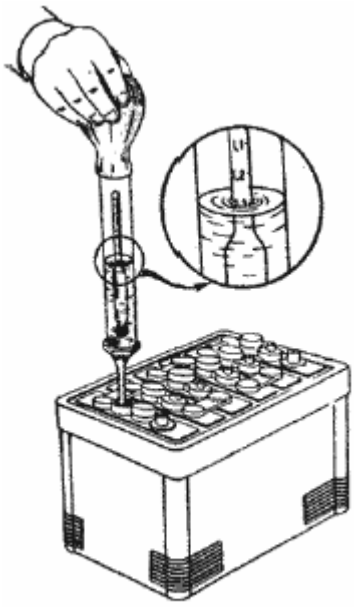

Фиг. 148. Проверка плотности электроли-
та в элементах аккумуляторной батареи.

Fig. 148. Check the density of electrolyte - ta in the elements of the battery.

Voltage, which should show the current - meter checking, depends on the type and design of on - unloading fork and indicated in the instructions that came Guy to fork. When checking with a fork SIPA type HB-2, equipped with a load resistance, calculated nym of approximately 150 current in amperes, the voltage of each element of a fully charged battery should be not less than 1.8 volts and should be kept in stable for 5 seconds. If the voltage is below 1.7 volts or decreases during the inspection, it means that battery is discharged more than 50% or defective. The battery pack is also defective, if - voltage of individual elements are not the same and differ - etsya more than 0.2 volts. When testing batteries loading plug holes in the lid elements be plugged. Battery ba - tareyu or individual elements can not verify the Deputy Chairmen, kaniem terminals with metal objects or conductivity dami. Short-circuit destroying the active mass plates.

FIRST BATTERY CHARGE

Prepare the electrolyte from the battery ki - slots GOST 667-41 density of 1.83 and distilled Noi water. Dishes for preparation of electrolyte nuzh - but apply only resistant to the action of sulfuric acid (ceramic, ebonite, lead or glass). Use an iron or zinc utensils are not allowed. In bowl pour the water, and then, with continuous stirring, pour acid. Pour water into the ki - slot is strictly prohibited. For a certain density the electrolyte can use the table 5. Elements of the battery electrolyte to be poured at a temperature no higher than 25 °, S. The volume of electrolyte poured into the battery 6-CT-54, equal to 3.75 liters. From the vents to remove the tube, unscrew the plug from the filler and put them firmly on the socket vents. Per - pour into elements of the battery electrolyte to a level 5 - 10 mm below the upper edge of the filler, and remove cork (the electrolyte is automatically set to the desired level). After 4 - 6 hours after pouring the electrolyte at a temperature not exceeding 25 ° C, the battery put on charge by connecting the positive terminal of the battery to the positive terminal of the charger unit, negative - to the negative.

Table 5

The density of electrons LTL at 15 ° C For 1 liter of water add sulfuric acid share 1,83 (at 15 ° C) in *l*

1.210 0.245
1.240 0.295
1.255 0.305
1.270 0.345
1.280 0.365
1.285 0.375
1.300 0.405
1.310 0.425
1.320 0.450
1.340 0.495
1.400 0.650

Power charging current for the first charge is set in 3.5 amperes. Charging lead to long not excessive gassing occurs in all elements, and the density of the electrolyte and the voltage will not o constant for 3 hours, which is a sign of the end of charging. When charging is necessary eriodicity briefs check the temperature of the electrolyte and make sure that it does not rise above 45 ° C. If temperature ature rises above 45 ° C, it is necessary to reduce the charge current by half or terminate the charge at the time, necessary to reduce the temperature to 30 ° C. Duration of the first charge can take in the pre - cases from 25 to 50 hours, depending on the length of storage batteries in stock. At the end of the first charge density of the electrolyte, tends to be above or below the norm. The density of the electrolyte must be brought to the normal value shown in Table 1, by pre - Livke distilled water or electrolyte density of 1,400. Before filling-up of the electrolyte from

Фиг. 149. Проверка степени заряженности аккумуляторной батареи с помощью нагрузочной вилки.

Fig. 149. Checking the state of charge Accu - mulyatornoy battery with load forks. element must be selected with the help of a rubber bulb. If one method does not have to bring the density of electrolyte to the rules, then fine-tuning is necessary to continue. For good mixing of the electrolyte between two additions of water should be at least 30 minutes. Bringing density to normal is necessarily at the end of charging, when the density reaches a constant electrolyte and due rapid outgassing ensured good mixing of the electrolyte. After first charging the battery can be installed on the car, pre - carefully wiping it with rags soaked in ammonia or a 10% solution of sodium soda.

Malfunction BATTERIES AND THEIR ELIMINATION

1. The battery can not be a long time discharge current of great strength. Use starter is recommended that no more than 5 seconds. When you run the engine in the winter time, the starter is not desirable use, as this starter consumes very large current, which can cause warping plates.
2. Do not discharge the battery more than 50% and leave it for a long time without recharging. This can cause sulfatatsiyu plates. Low electrolyte level and top up the battery electrolyte high-density, instead of distilled water, also causes sulfatatsiyu plate batteries. White raid (lead sulfate) on the plates closes the pores of the active mass and impairs the access of the electrolyte, that causes a decrease in battery capacity, and it is worse than taking charge. Was little sulfatatsiyu can eliminate some low-battery charging current. To do this, pour out of the battery electrolyte and fill it with a weak solution of sulfuric acid density tions 1,050 or distilled water. Battery recharge current of 2 amps until the electrolyte - Volume density of 1,150, then the electrolyte is poured and poured a new weak electrolyte solution, or water. These operations continue until as long as the density of the electrolyte will cease to rise. After This electrolyte is poured from the normal density and make the normal charge.
3. During the operation there may be an increased self-discharge battery, which is called pollution of surface and oxidation of terminals and wires. Application of unclean water and acid also cause an increased self-discharge batteries. Self-discharge can be eliminated proper care of the baht - Rhea (see "Caring for the battery) and the supervision of the state of wires, which can damage give discharge the battery.
4. Very frequent top up the water to raise the level of electrolyte can be caused by razregulirov - Coy voltage regulator (see "Relay-regulator").
5. Permanent undercharged battery can be caused by low control voltage regulator Nia (see "Relay-regulator").
6. When leakage of electrolyte through cracks in the molding mastic latter can be eliminated light flame blowtorch or hot metal spatula.
7. At destruction and buckling of plates, mated active mass of the plates, the closure of individual GOVERNMENTAL elements and the appearance of cracks tank battery should be given for repairs to the workshop.

CHARACTERISTICS BATTERY

Type (GOST 959-41) 6-ST-54

Rated voltage
12 volts Capacity at 10-hour rate and temperature of the electrolyte + 30 ° C 54 ampere-hour
The discharge current at 10-hour discharge 5.4 Amperes Capacity at the starter mode when: initial temperature of the electrolyte +30 ° C 14.6 ampere-hours initial temperature of the electrolyte - 18 ° C 6.0 ampere-hours The discharge current in starter mode 160 amperes Minimum duration of the discharge on the starter mode: an initial temperature of electrolyte 30 ° C 5,5 min an initial temperature of the electrolyte - 18 ° C 2,25 min
Number of positive plates in a single element 4
The number of negative plates in a single element 5
The volume of electrolyte is poured into a 6 cell battery 3,75 l
Current value of the first charge 3.5 Amperes
The amount of current follow-up charges 5 amps

GENERATOR

Generator type IV-G20 power of 220 watts, bi-polar with a parallel excitation, constant tion current, working in conjunction with the relay-regulator and is used to supply consumers and for recharging battery. Generator installed on the left side of the engine on a special bracket that attaches to engine three bolts. To mount the generator is attached with two bolts and nuts. The front cover of the generator has the ad - tsialnoe eye to mounting tension strips, which serves to adjust the belt tension. Drive to the sheaves anchor generator carried by wedge-shaped belt from the crankshaft pulley engine.

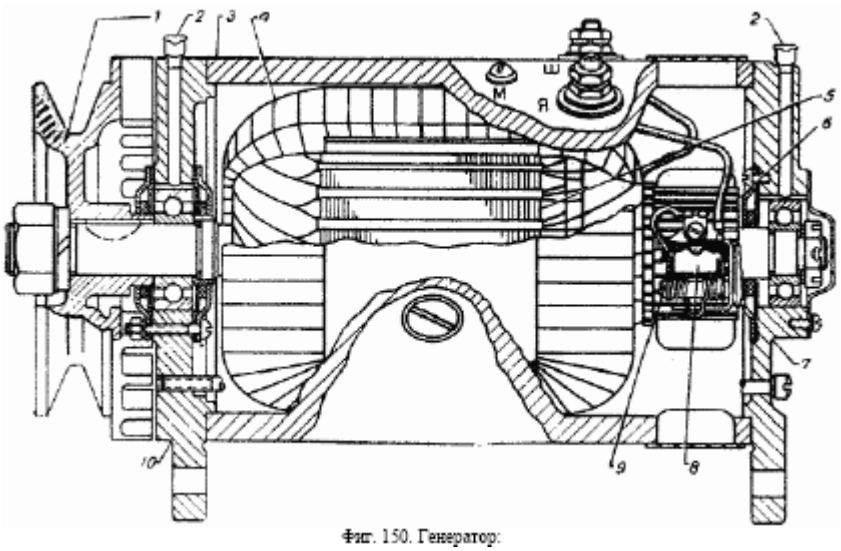

Фиг. 150. Генератор:

Fig. 150. Generator:
1 - pulley. 2 - oiler, 3 - body, 4 - exciting winding, 5 - anchor, 6 - collector, 7 - back cover, 8 - brush holders, 9 - brush, 10 - front cover.

For better cooling of the generator has a forced air ventilation. Under the influence impeller performed at the same time with a pulley anchors, air enters the body through the window in the rear cover and out the windows of the front cover. The device generator shown in FIG. 150. Steel casing *3* has two caps with sharikopodship - nicknames, which rotates the anchor *5*. On the wall anchors sewn pulley *1* and the fixed nut. To avoid turning the pulley on shaft has a spline. enerator attached to the body of the two pole shoe with winding *4*. Caps generator have lubricator *2* for lubrication of bearings. On the back cover *7* has two brush arm *8* with brushes *9*, which are pressed to count lecturer *6* springs. The main body of the generator there is a window to inspect the reservoir, brushes and three terminals marked "I", "W" and "M". The positive brush and start winding connected to the body of the generator. Terminal "I" is connected with the negative brush of the generator, and the terminal "W" is connected with the end obmot - ki excitation. Screw labeled "M" is used for joining wires "mass" switch-controller. Generator terminals connected to the terminal "I", "W" and "M" relay control. Electric generator circuit with relay-regulator is shown in FIG. 153.

CARE GENERATOR

Through every thousand kilometers, the car must:

1. Wipe the generator, removing dirt and dust from the hull, terminals and greasers generator.

2. In lubricator generator pour 5 drops of fresh butter, used for the engine. It does not lubricator should be poured into an excessive amount of grease as lubricant, emerging from the bearings may cause scorching collector.
3. Check the reliability of fastening the wires to the "terminals of the generator.
4. Check the tension of the belt. *After every 3 thousand kilometers the car must:*
1. Perform the operations provided after run 1 thousand km.
2. Check the generator is mounted to the bracket and the bracket to the engine and, if not - required, tighten attachment.
3. Check the connection pulley on the shaft of the generator armature. *After every 6 thousand kilometers the car must:*
1. Perform the operations provided after run 1 thousand miles and 3 thousand miles.
2. Remove the protective tape and inspect the state of the collector and brushes. Isolation of the collector should be below the plates at 0,3 - 0,8 mm, brushes should not be chopped off.
3. Check force brush springs, which must be 1,25 - 1,75 kg. Height brushes should be not less than 17 mm, with a reduced height brushes should be replaced. Brushes in the brush arm to its a - mean free to move without noticeable jamming. If the collector has traces of scorching, and brush jammed in brush arm, they should be wiped clean with a cloth dampened with clean gasoline. Before rubbing Collector generator should blow with compressed air.
4. If traces of scorching can not remove the cloth, the collector should mop up small glass - Noah paper number 00. Use abrasive skin unacceptable.
When the wear of the collector and scorching the generator should be put into repair.
5. Check the density of brush contact with the surface of the reservoir. In non-densely-pril ganii brush to the collector should be rubbing.
6. Loosen belt tension and check the rotation anchor - the anchor to rotate freely without jamming.
After mileage 12 - 15 thousand miles must:
1. Perform the operations provided after run 1 thousand miles and 3 thousand miles.
2. Remove the generator from the engine, disassemble and clean from dirt and dust. Pulley from the generator must remove puller.
3. Perform the operations provided for after 6 thousand kilometers of the car.
4. Thoroughly rinse the generator bearings in kerosene, dry and fill with fresh grease mark "KB" GOST 2931-45, after which the generator to build and install in its place. Not wearing a belt, prov rit of the generator on the engine mode. To do this, connect to the generator corresponding pro - water from the bundle of wires and relay-regulator circuit the terminals of "I", "W" and "B" between them. It fol - blowing caution to the wire, which locks the terminals, did not touch the "masses" of the car. Serviceable and correctly assembled generator to consume a current of 3.5 - 5 amps on the ammeter, and the anchor - Rotate clockwise (from the drive) at a speed of 550 - 700 rpm. Detail test of the generator, see "Verification of the generator.

FAULT GENERATOR AND THEIR ELIMINATION

The most common malfunction of the generator - it hangs brushes and a violation of contacts ta between brushes and collector of the generator. Stuck brushes causes a strong arcing and increased scorching the collector, which further lead to the cessation of normal operation of the generator. The reasons for the termination of the generator can be the following:
1. Stuck or sticking brushes in brush arm, which causes pollution schetkoderzha - teley, the weakening brush springs or damage them. It should be borne in mind that the slightest abrasion brushes in the brush arm is scorching collector. Excessive gaps between the brush and schetkoder - Admirers also not acceptable. Contaminated brushes and brush holders should be wiped with a cloth, soak - Noah in gasoline, and replace damaged springs. If the height of brush less than 17 mm should be the last for - Undo. Use another type of brush can not. New brushes must be rubbing the collector stripe glass skins number 00 in the width of the collector. Skin impose on the smooth side of the collector, in brush arm is inserted into the brush, and the skins go, clutching her broom to complete her contact with the count lecturer. Then, if necessary, should be rubbing the second brush and blow air generator. When partial disassembly of the generator pulley can not shoot.
2. Heavy wear and scorching the collector and anchors, as well as protrusion of insulation between the plates collector. In addressing the need to check force brush springs. Slam on brush may de -

call a larger heat reservoir and its rapid depreciation. Worn collector anchor should be proto - chit on the lathe and the Blades to remove the insulation between the plates of the collector at a depth bean 0,8 mm, and then sanded glass skin on number 00. Permissible pulse of the collector relative PRE pins shaft 0.05 mm.

3. Sometimes there are cases of breakdown of winding insulation anchor or breakages conclusions. Less common - Xia seizure of bearings and graze the anchor for the pole. When such injuries generator should take repair in workshop. For the repair should note that the generator IV-G20 is set to auto M-20 and ZIM. Ge - erator IV-G20 is unified with the generator IV-G21, installed on GAZ-51 - GAZ-63, and generator IV-G15-B vehicle ZIS-150. The difference between these generators is the dimension of pulleys, which can be freely transpose. Other details of generators IV-G20, IV-G20-U, IV-D 21 and IV-G15-B - interchangeably.

Verification of Generator

After disassembly and repair the generator should check the correctness of its repair and assembly. The generator should check with a motorized mode and stand idle and when working with full on - Transshipment. To test the generator on the engine mode, it should be included in a circuit the battery 12 volts and measure the power consumed by the current. Case of the generator should be connected with positive Klem - my battery, and generator terminal "I" and "W" - with its negative terminal. When connecting wires from battery to the generator should strictly observe the polarity. Incorrect connection may cause the reversal of the generator, which may further lead to sintering of the reverse current relay and the failure of the relay control. Measure ammeter consumption amperage generator after five minutes of work. Remedial HYDRATED generator must consume current in the 3.5 - 5 amps, while developing 550 - 700 rpm, and the anchor should rotate clockwise (from the pulley) smoothly, without jerks. Uneven rotation anchor at the approach to the same collector plate is malfunction armature windings. When the generator to the engine mode, sparking a brush - MI should be barely noticeable. Reduced turnover and increased current consumption indicate improper installation, peroxide - CLI lids or graze the anchor for the pole. Increased current consumption and higher turnover evidenced ment of a failure in the electrical part of the generator. Poor brush contact with the collector anchor and a weak pressure springs can cause a drop in consumption of current. Scheme of testing the generator on the engine mode is shown in Fig. 151 A. To determine the failure of the generator above-mentioned checks can be conducted on car - le. Need to remove the strap and the terminal "I", "W" and "B" relay-regulator close to each other. The full test of the generator can be made on a special stand-type CIS-2 or other sub - GOM similar stand.

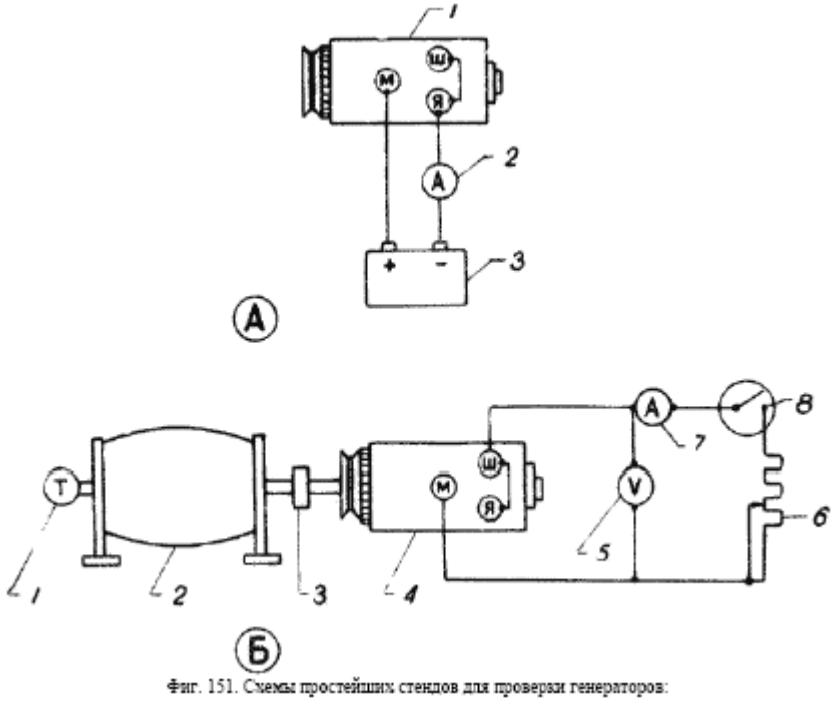

Фиг. 151. Схемы простейших стендов для проверки генераторов:

Fig. 151. The pattern is simple bench for the generators:

A - circuit of the generator when testing on a motorized mode: 1 - generator, 2 - ammeter, 3 - Battery B - circuit connection of the generator when testing with the load and at idle speed: 1 - tachometer, 2 - electric motor, 3 - coupling, 4 -- generator, 5-voltmeter, 6-rheostat, 7 - ammeter, 8 - switch.

The audit also can be made on the stand, the circuit is shown in Fig. 151 MB When testing the generator without load (cold) voltmeter *5* should show 12,5 volts at the generator speed anchors about 825 per minute. Smoothly increasing momentum of the generator to anchor 1450 rpm, load generator rheostat *6* to 18 amps (the voltage should be not less than 12,5 volts).

A similar test can be done by car (see "Checking the relay-regulator to car ").

TECHNICAL DATA GENERATOR

Type (GOST 6117-52) IV-G20

Rated voltage 12 volts Maximum amperage 18 amps

The minimum speed at which the generator is developing on - voltage 12.5 volts

no load at + 20 ° C 825 rpm load at + 20 ° C 1450 rpm

no load at + 70 ° C 900 rpm load at + 70 ° C 1700 rpm

Current consumption at work on a motorized mode 5 amps

Gear ratio from the crankshaft to the generator 16

Number of poles 2

The number of grooves in the anchor 22

The number of plates in the collector 44

The number of sections in the anchor slot 4

Step on the grooves 1 - 11

Step on the collector 1 - 2

Wire winding anchor Wire PELBD Ø1, 16 mm, GOST 6324-51

Winding coil excitation Wire PEL Ø0, 83 mm (without insulation) Ø0, 89 mm (insulated)

Number of turns in the coil 314

The resistance of two coils excitation 7 th

Type brush EG-13 P or EG-13 Clicking on the brush springs 1250 - 1750 gr

Ball Number 303 from the pulley number 202 from collector

Direction of rotation (drive side) Right

RELAY-REGULATOR

At the GAZ-69 and GAZ-69A set the relay-type controller PP 12-A and PP20, which is work - melts together with the generator IV-G20 and serves to automatically activate and deactivate the generator from network, protect the generator from overloading and automatic voltage regulation and power charge - current in the prescribed limits. Electrical circuit relay controller is shown in Fig. 153.

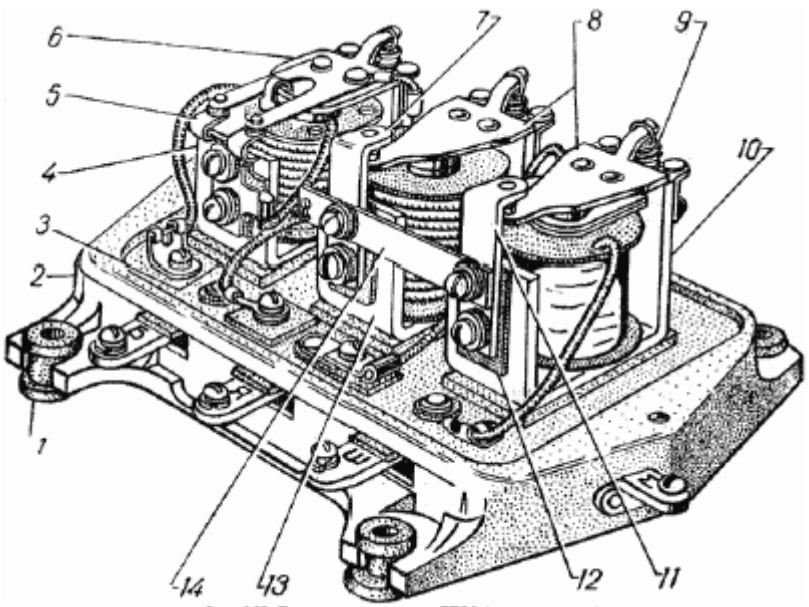

Фиг. 152. Реле-регулятор типа РР20 (крышка снята):

Fig. 152. Relay-regulator-type PP20 (lid removed):

1 - rubber shock absorber, 2 - base, 3 - insulating plate, 4 - reverse relay, 5 - contacts reverse relay, 6 - - anchor reverse relay, 7 - contact current limiter, 8 - anchor current limiter and the voltage regulator, 9 - spring, 10 - regu - accumulators voltage, 11 - contact voltage regulator, 12 - insulating plate, 13 - current limiter, 14 - connecting Pla Stina.

Relay lights installed in the motor part of the left pane panel chuck consists of three non - regardless automata: reverse relay, current limiter and a voltage regulator, smon - ort on one panel and enclosed common lid (Fig. 152). Relay controllers PP12 and PP20-A differ - chayutsya from each other only in size and structural design. Based on the relay-regulator has four terminals for connection of wires.

Reverse relay automatically turns on the generator to the network when its voltage exceeds the on - voltage battery to a certain amount, but also disables the generator from the network when its voltage below the battery voltage. Reverse relay (Fig. 153) consists of a coil with core, which are wound two coils: shunt 1 with a large number of turns of fine wire and seriesnaya *4* with a small amount of vitamin - kov thick wire yoke 8 and the anchor *5* from the contact system. ontacts in an open position uder - tion is coil spring *3*. Shunt winding relay enabled so that it is constantly under voltage generator, and seriesnaya winding Included in series (generator - battery). With a small number of engine speed when the voltage of the generator below the battery voltage, magnetic flux generated by a current shunt winding is relatively small in order to attract anchor to the core, and therefore contacts are disconnected under the action of the spring. As the number of the engine speed increases the voltage of the generator, and consequently and the magnetic flux shunt windings. As soon as the voltage of the generator reaches the value of 12,2 - 13,2 volts, defined regulation - Coy relay, the effect of shunt coil will increase so that the spring force is overcome, the anchor attract to the core and the contact is closed, including generators in the network.

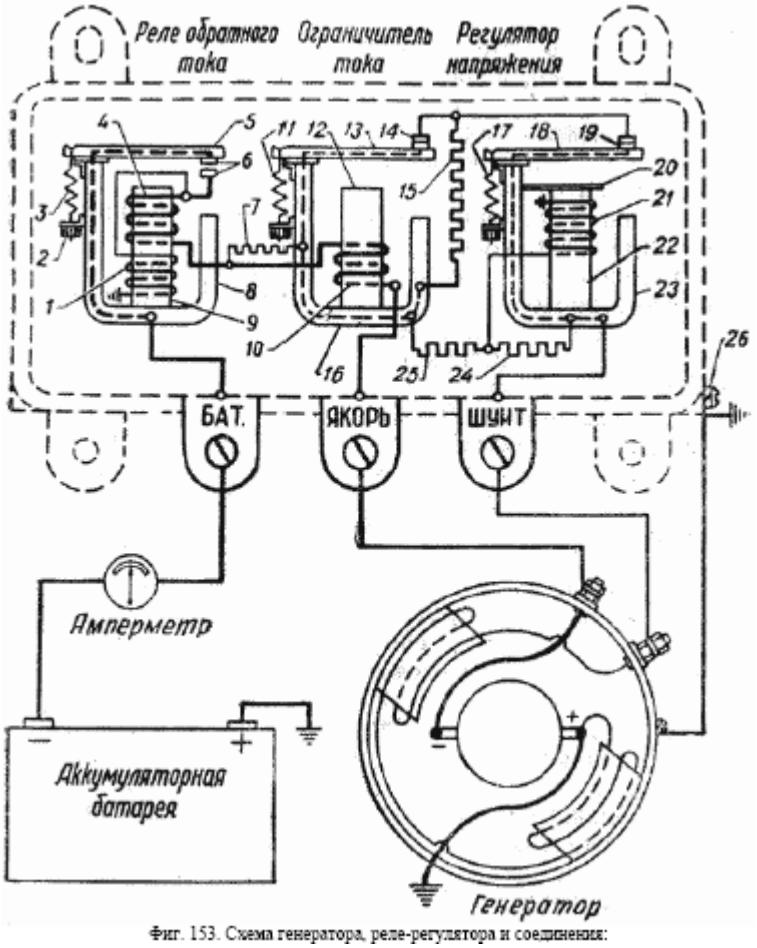

Фиг. 153. Схема генератора, реле-регулятора и соединения:

Fig. 153. Generator circuit, relay-regulator and connections:

1 - thin (shunt) winding reverse relay, 2 - adjusting screw and nut, 3 - snatch spring anchors, 4 - thick (series - Naya) winding reverse relay, 5 - anchor, 6 - Contact 7 - additional resistance of 1 ohm, 8 - yoke, 9 - core, 10 - obmot - ca coil current limiter, 11 - snatch spring anchor, 12 - core, 13 - Anchor, 14 - the contacts 15 - resistance of 30 ohms, 16 -- yoke, 17 - snatch spring voltage regulator, 18 -

Anchor, 19 - contact 20 - the magnetic shunt, 21 - winding coil regulator voltage, 22 - core, 23 - yoke, 24 - resistance of 80 ohms, 25 - impedance of 15 ohms, 26 - propeller «mass».

The direction of turns and shunt seriesnoy windings is such that when feeding the network from the generator magnetic field netic flows both coils are added and the anchor is attracted more strongly.

By reducing the engine speed voltage generator decreases, and when it will below the battery voltage, current from the battery goes in the gene-operators. Since in this case, the current will be held on seriesnoy winding in the opposite direction, magnetic flux will decrease and thus, reduce the force of gravity anchors. When the reverse current reaches the value 0,5 - 6,0 amps, contacts under the action of the spring razomk - nutsya and generator will be disconnected from the network. Anchor relay installed on a flat spring made of thermostatic bimetal. When changes are so - temperature stress of the spring constant, which compensates for the effect of temperature on the resistance obmo - current relay. To the same end of the shunt relay coil is made of constantan wire. Voltage switch on the relay must always be not less than 0.5 volts below the voltage, under - supported the voltage regulator. The voltage regulator maintains the voltage type of vibration generator in the given pre - tals. Voltage regulator (Fig. 153) consists of: coil with core, which has a winding *21,* yoke *23,* the anchor *18* with the contact system, the magnetic shunt *20* and the cylindrical spring. Winding ca - carcass *21* with one end attached to the mass, and others - through the resistance *25,* the yoke current limiter *16,* the resistance 7 and the relay coil current limiter *10* - connected to the terminal "I" of the generator. Thus, current, and hence the magnetic flux of the core depends on the voltage devel - passer generator. In a small number of revolutions of the generator when the voltage to below 13.8 volts, the current in the winding re - gulyatora *21,* and thus attracting force of the core is small and not able to drag anchor. Therefore, contact voltage regulator under the action of the spring remain closed, and the current in the circuit ob - excitation coils of the generator passes, bypassing the resistance *24* and *25,* which included parallel contacts. Once the voltage of the generator reaches the value 13.8 volts, an attractive force ser - dechnika increases so that the anchor *18, having* overcome the force of tension springs *17,* is attracted to core and the contact *19* opens. At the same time in the chain excitation winding of the generator will be included resistance of *24* and *25,* which drastically reduce the current strength in the excitation winding, and the latter will lead to reduced - Niya voltage generator. Reduce the voltage of the generator causes a decrease in the current in winding *21* voltage regulator zheniya and the spring *17,* overcoming the force of gravity, the anchor returns to its original position, and contacts for - roam, turning off of the drive circuit of the generator resistance *24* and *25.* Voltage generator is increased, and the anchor again breaking contacts, including a chain-winding excitation excitation of resistance *24* and *25.* The process of breaking and contact closure is repeated many times with high frequency. This regulator maintains the voltage of the generator in the range 13.8 - 14.8 volts, which depends on its initial adjustment. Voltage generator, supported by the regulator, vary depending on the temperature of approx - Ružany environment. This is achieved through the magnetic shunt *20,* which changes the magnetic con - dence, depending on the temperature. As the temperature increases the voltage-controlled Xia, with an increase in temperature - is reduced. Increasing the controlled voltage increases because per - discharge current batteries in cold weather. This is highly desirable due to the increased consumption of electricity energy in winter. When using a voltage regulator is automatically adjusted the power of charging current. When discharged, Noah battery charging current increases, and at the end of the charge is reduced to 1 - 3 amps. This adjustment in radiant by changing the difference between battery voltage and voltage regula - cBhP voltage regulator. Current limiter protects the generator from overload. The limiter consists of a coil with ser - dechnikom *12* (fig. 153), which has a coil of thick wire *10,* the yoke and the armature with a contact system theme. Current limiter works on the same principle as the voltage regulator, including a chain-on excitation of the generator coils *15,* with resistance load increases above 17 - 19 amperes. The entire load current passes through the generator windings limiter, and when the load exceeds a set value, the attractive force of the core increases so that, having overcome tension spring *11,* armature *13* is attracted to the core and contact *14* opens. Thus the chain winding includes the resistance *15,* which drastically reduces the current in the drive circuit, and consequently, decreases the voltage of the generator, which in turn reduces the current impact of the generator. As a result, decreases the power of attracting the core and the anchor returns to its original position zamknuv contacts. Closure and opening of contacts occurs with great frequency and will continue until you eliminate the factors

causing the congestion. Normal operation of the regulator-relay is determined by the ammeter on the dashboard and, as battery. Arrow ammeter with the engine running and a charged battery (after a few minutes after run) and included headlamps should be near zero division, somewhat to the right of his. If the ammeter included in the headlights constantly shows a large charge, despite the good states tion battery, it shows the work of the voltage regulator on the over-voltage. Key singing of the electrolyte in batteries and the need to frequently top up with distilled water, as well as their undercharged indicate abnormal operation of the voltage regulator. Relay-regulator - a complex instrument that requires skillful handling and precise control. It bear in mind that the control relay-regulator without control devices - "the eye" - can lead to you - run down of all electrical equipment and therefore strictly prohibited. Break the seal with the relay-regulator can be used only if full confidence in his faults and allowed only a qualified electrician.

CARE RELAY-REGULATOR

Through every thousand kilometers, the car should check:

1. Reliability mounting relay control.
2. Reliability of connection wires to the terminals. Especially check the status of the wires that connect schego "mass" switch-controller with the generator. *After every 6 thousand kilometers the car must:*
1. Perform the operations provided after run 1 thousand km.
2. Check the car properly adjust the switch-controller (see "Checking the relay - regulator in a car "). In the case razregulirovki relay-regulator last send in the studio. *Every 24 thousand kilometers of vehicle:* Relay-regulator should be removed from the car and sent to the shop for cleaning contacts and regu - wording.

VERIFICATION OF RELAY controllers and generators in the vehicle with the help Control Devices

Check proper operation and accuracy of control-control relays, as well as cleaning his contacts operations and adjustments should be performed only by a qualified electrician with the elec - troizmeritelnyh devices according to the directions below.

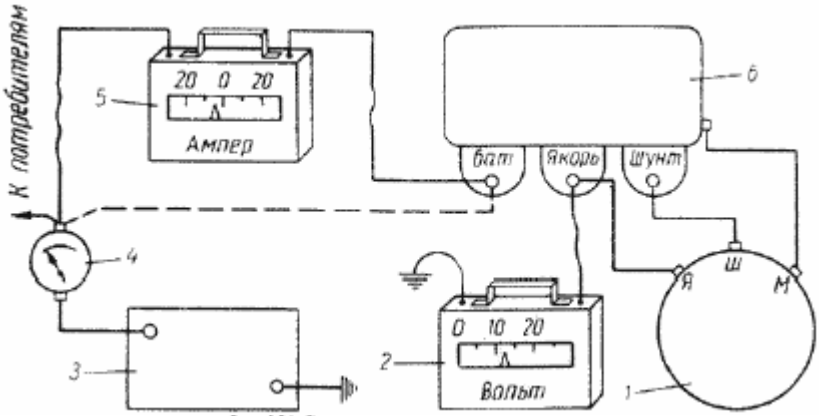

Фиг. 154. Схема проверки реле обратного тока:

Fig. 154. Scheme verification reverse relay:

1 - generator, 2 - control voltmeter, 3 - Rechargeable Battery, 4 - ammeter mounted on the dashboard, 5 - control - HYDRATED ammeter, 6 - relay-regulator.

CHECK reverse relay

1. Otedinit wire from terminal "B" relay-regulator and insert between this wire and terminal "B" Circuit ammeter (fig. 154).
2. Inserted between the terminal "I" relay-regulator and a mass of "controlling voltmeter.
3. Start the engine and slowly increasing his speed, to determine the voltage at which per - roam contacts reverse relay (when the closure is determined by the deflection ampere meter). This voltage should be within 12.2 - 13.2 volts.
4. By reducing the engine speed, the ammeter to determine the magnitude of the reverse current, at which NC relay contacts. Reverse breaking current shall be within the range from 0,5 to 6,0 amperes.

Note. All are listed here and below the figures relate to the cold re - le-regulator (at 20 C).

CHECK force limiters CURRENT

1. Raise the jack and put up on supports all four wheels. On the front axle. When subsequent works should be careful that the car is not fell off the stands.
2. Include control ammeter as well as checking reverse relay.
3. Click several times on the pedal starter in order to ease slightly accumulates lyatornuyu battery car.
4. Start the engine and gently insert a direct transfer. Open the throttle plate to at - radiation the speedometer - 41 - 46 km / h, which corresponds to 1800 - 2000 rpm geniculate On the motor shaft.
5. Include all the skylights and loads with a car. Amperage on the control ammeter should be no more than 17 - 19 amperes at fully charged battery. Readings ammeter should be done quickly, because within a 1 - 2 minutes after the engine start battery charged so that charging current can be less than ten amperes.

CHECKING THE VOLTAGE REGULATOR

1. Post all four wheels of the car. Enable the front axle.
2. Include control voltmeter between terminals "B" relay-regulator and "mass" (Fig. 155).
3. Include control ammeter between terminals "B" relay-regulator and the black wire, go - schim from the car ammeter.
4. To bring the mileage up to 41 - 46 km / hr. If the voltmeter in the control fully over - groom battery will more than 15.5 volts, it signals a fault relay-regulator or excessive regulation. In this case the relay-regulator should be removed from the car and give a workshop. If the voltmeter shows the control voltages of less than 15.5 volts, it should produce more exact test. To do this you must disconnect the battery when the engine is running, otediniv wire from the battery.

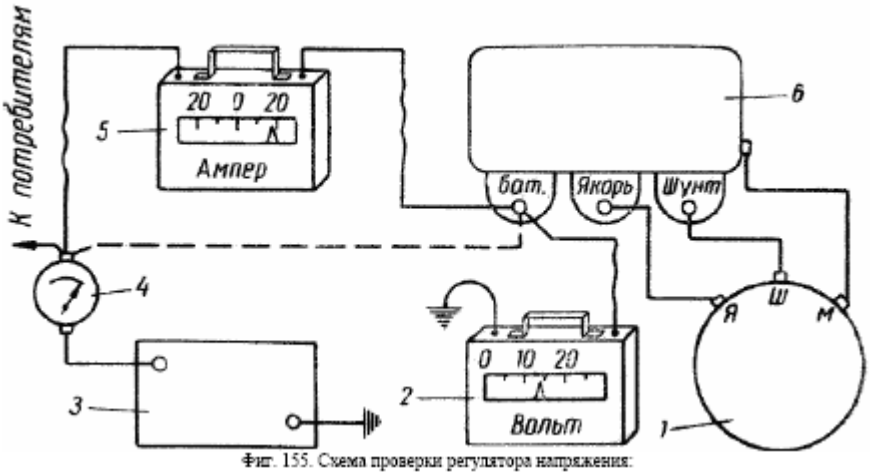

Фиг. 155. Схема проверки регулятора напряжения:

Fig. 155. Scheme checks the voltage regulator:

1 - generator, 2 - control voltmeter, 3 - Rechargeable Battery, 4 - ammeter mounted on the dashboard, 5 - control - HYDRATED ammeter, 6 - relay-regulator.

Include as many consumers that the load generator was about 10 amperes on the control ammeter. Voltage reading of the voltmeter after 10 minutes of work, should be 13,8 - 14,8 volts.

VERIFICATION OF THE GENERATOR AND REGULATOR RELAY-THROUGH Ammeter SHIELDS DEVICES

During the operation of the automobile work of the generator and the relay-regulator can be checked with user definable schyu ammeter dashboard. With proper generator and relay-regulator ammeter readings will depend on the degree charge the battery. Charging current, with a fully charged battery is reduced to 1 - 3 amps, and when discharged battery reaches 17 - 19 amperes. After the engine starts, the charging current can reach 17 - 19 amperes and as charging the battery drops to 1 - 3 amps. If the density of the electrolyte corresponds to the established norm of a fully charged battery, and on ammeter charging current for a long time is not decreasing, then we can assume that the regulator voltage regulation is inflated. If you start the engine starter feels that battery is discharged and the density of the electrolyte is lowered, and on ammeter charge current decreases rapidly to zero, the WMS - but to assume that the voltage regulator is underestimated adjustment. To determine if the generator can be cont - lat this test: start the engine, disconnect wires from the terminals "B" and "I" relay-regulator and attach them to terminal *"W"*, not putting them on the screw terminals. Then, increasing engine speed, monitor the ammeter. With proper the alternator charging current should

increase with increasing speed. Enhance the current above 17 - 19 amps can not. If per - in-line current is not increased or not, the generator of non - required repair. After checking to be intersection unites the wires for proper operation and to stop moving, Tel; stop the engine before reconnection of wires not allowed. Prior to the above checks need to convince be conducted by the integrity and serviceability of the posting.

SETTING RELAY-REGULATOR

After every 24 thousand kilometers relay-regulator fol - shoot em with the car, open its lid, inspect and pull all the terminals. Inspect and, if necessary, per - clean and align the contacts of the pecial abrasive Pla Stinco or a thin needle files, and then wipe with paper. Below are the adjustment data gap relay regulator type PP12-A In the voltage regulator and current limiter to check the clearance between the armature *8* (Fig. 156) and core *6,* which should be within 1,0 - 1,2 mm first breaking the contacts *4 and 5.* It should be borne in mind that the gap should be measured from the anchor to the core 6 (as shown in FIG. 156), but not to the brass pin *7,* which is designed to protect the anchor from "Sticking" to the core at work. To adjust the above gap should weaken the screws *2* and rack *3* to move up or down. The gap at the contacts *4 and 5,* with disconnection should not be less than 0,25 mm. To measure this gap should be anchored to press your thumb all the way into the brass pin. Pressure contact must be within 200 - 250 g. After cleaning the contacts and adjust the gap to test the voltage regulator Nia on a special stand-type CIS-2 with the help of electrical or other similar stand. A stand must be equipped with a generator of type IV-G20 (with a smooth change of speed to 3000 in minute), battery type 6-CT-54 and rheostat to create loads of up to 20 amperes. Simple - Shai scheme of the stand shown in FIG. 158. When adjusting and testing of the relay-regulator is installed in the ra - bochem position. The verification regime of the voltage regulator shown above in the section "test governs - ki relay-regulator in a car. "To increase the voltage produced by the generator should increase the tension springs *10* (fig. 156), tightening the adjustment nut *12.* To reduce the voltage Nia spring tension to slacken. Checking and adjustment of the gap in current limiter is the same as a voltage regulator. To increase the strength of the current spring tension should be strengthened to reduce - to weaken. We reverse relay gap between the armature and the core should be within 1,3 - 1,6 mm in relay contacts, is open to the 0,4 - 0,7 mm. Changing the gap between the anchor and the core is podgibaniem limiter of the anchor. Changing the gap between the contacts - podgibaniem grounds lower contacts. To increase the voltage at which the contacts are closed, the tension springs should be increased. After adjusting relay-regulator should be filled.

Gap adjustment REGULATOR RELAY-TYPE PP-20

We reverse relay gap *6* (FIG. 157) between the anchor and the core should be within 1,3 -- 1,6 mm, is open relay. The gap *in* between the contacts *13* and *14* should be within 0,7 - 0,9 mm. Changing the gap between the anchor and the core is podgibaniem limiter of the anchor. Changing the gap between the contacts - podgibaniem grounds of the lower contacts. To increase the voltage zheniya in which contacts are closed, spring tension should be increased. In the voltage regulator and current limiter to check the clearance between the armature and core, Coto ry must be within 1,4 - 1,5 mm when closed contacts *3* and *4.* It should be borne in mind that the gap be measured from the anchor to the core *7* (as shown in FIG. 157), but not to the brass pin *6,* which designed to protect the anchor of "sticking" to the core when pulling. To adjust above the gap should weaken the screws *1* and *2* to move the rack up or down.

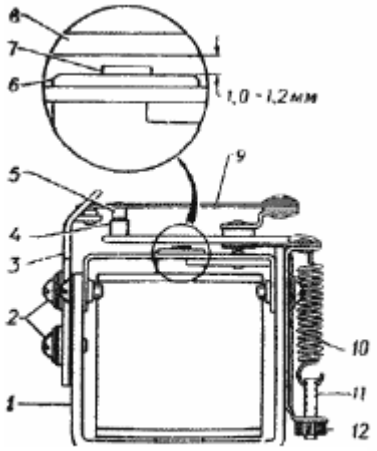

Фиг. 156. Проверка зазоров в реле-регуляторе типа РР12-А:

Fig. 156. Check clearances in the relay - regulator type PP12-A:
1 - yoke, 2 - screw, 3 - rack, 4-bottom contact 5 - upper contact, 6 - core, 7 - brass pin, 8 - Anchor, 9 - spring plate upper his contact, 10 - tension spring, 11 -- Screw, 12 - adjusting nut.

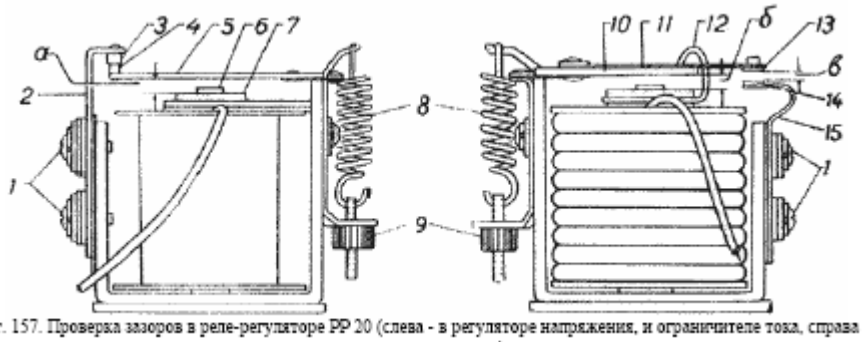

Фиг. 157. Проверка зазоров в реле-регуляторе РР 20 (слева - в регуляторе напряжения, и ограничителе тока, справа - в реле обратного тока):

Fig. 157. Checking clearances in the relay-regulator PP 20 (on the left - in the voltage regulator and current limiter, right - in the reverse relay):
1 - Rack mounting screws rolling pin 2 - proof of contact. 3 - fixed contact, 4 - movable contact, 5 - anchor, 6 -- brass pin, 7 - core, 8 - spring anchors, 9 - adjusting nut, 10 - Anchor 11 - current-carrying plate, 12 - bracket, 13 -- movable contact, 14 - a fixed contact 15 - contact front desk, *and* - the gap between the armature and a core voltage regulator and current limiter, *b* - the gap between the armature and a core reverse relay, *in* - the gap between the contacts at the reverse relay.

Checking and adjusting gaps in current limiter to do the same as that of the voltage regulator. To increase the amperage increase spring tension, to reduce - relaxing. After cleaning the contacts and adjust the clearances necessary to check the work of the relay-to-regulator voltage on a special stand using electric appliances, as specified in section adjusting relay regulator type PP12-A. To increase the voltage of the generator should increase the tension springs *8* tightening the nut *9.* To reduce - the tension of the springs to weaken. After adjusting relay regulator should close the lid and sealed.

FAULT RELAY-REGULATOR

When faulty relay-regulator of the electrical system may be the following: absence - ence charging current, a weak charge current at low battery, a strong charging current at full charged battery. Before troubleshooting the relay-regulator, to check the generator, for which on - to start the engine, connecting together all the terminals of the relay-regulator and, as indicated by the ammeter test the generator. With increasing engine speed charging current serviceable generator must rise to 17 - 19 amperes (further increase in engine speed is unacceptable). Then you should reduce engine speed to 500 rpm and disconnect the trailing jumper, then stop the engine. Stop the engine before removing the jumper, may cause damage to the generator. If per - in-line current is terminated after removing the jumper from the relay terminals, the regulator, this means that the relay - regulator does not work reverse relay or voltage regulator. To determine what kind of automatic switch-controller does not work, you must do the following:

1. Start the engine and give it a medium speed. A separate conductor to connect terminal "I" and "W" relay-regulator, and if this charging current appears, it indicates a fault voltage regulator.

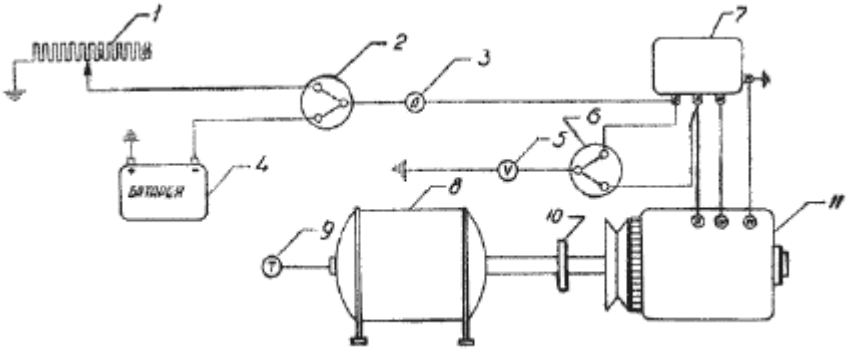

Фиг. 158. Стенд для проверки работы реле-регулятора:

Fig. 158. Stand for testing the relay-regulator:

1 - rheostat, creating loads of up to 20 amperes, 2 - Switch 3 - ammeter, 4 - battery, 5 - voltmeter, 6 - the switching -

consignee, 7 - Relay-regulator, 8 - electric motor, 9 - tachometer, 10 - coupling, 11 - generator.

2. If the connection terminals "I" and "W" relay-regulator does not introduce any changes necessary in the medium engine rpm to connect terminal *"B"* and "I". The appearance of charging current would indicate a malfunc - tions reverse relay. To address the deficiencies identified relay-regulator should be sent to he workshop. If the relay-controller goes down the road, away from the base, the generator can be included in the network without relay control. If only a faulty voltage regulator, then to the terminals of *"I"* and "W" relay-regulator or a generator must attach a light bulb in the 15 candles, 12 volts (using a portable lamp). When defective reverse relay to terminals *"B"* and "I" relay-regulator to attach separate pieces of insulated wire and the second ends deburred enter into the body of the car. If car moving to direct transfer speeds over 15 km / h, the ends of the wires to connect, with reduce speed to 12 km / hr wires should be disconnected. Note that include the generator in the chain, bypassing the relay-regulator, are permitted only in Deletions the defining cases. Generator without a relay-regulator allows higher voltage, which can dramatically shorten of lamps, contacts, a circuit breaker and other devices. At the first opportunity faulty relay regulator should be sent in for repair.

3. When operating a car has decreased the density of electrolyte battery ba - tarei. Battery constantly nedozaryazhaetsya. After the engine starts, the charging current is not achieving reaches 17 - 19 amperes and rapidly decreases to 1 - 3 amps. All these signs point to the wrong regu - wording of the voltage regulator. Relay-regulator, with low adjustable voltage regulator, fol - blows to send in for repair.

4. In the battery has often topped up with distilled water. Density of the baht - yards fit into the norm, but on the ammeter is strong charging current, persistent levels of less than 8 - 10 amperes. This points to recharge the battery as a result of excessive control voltage regulator

zheniya. Relay-regulator should be sent in for repair.

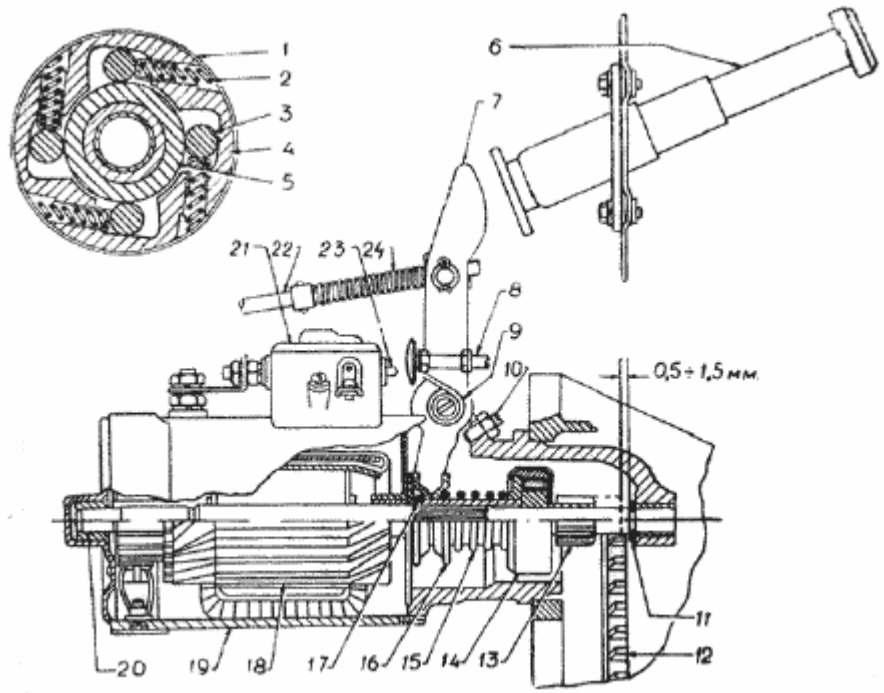

Фиг. 159. Стартер и его привод:

Fig. 159. Starter and its drive:

1 - outer ferrule, 2 - spring, 3 - movie 4 - housing clutch, 5 - internal ferrule, 6 - Pedal, 7 - engaging lever, 8 - push screw, 9 - spring 10 - adjusting screw, 11 - thrust washer, 12 - gear wheel, 13 - Pinion starter, 14 - clutch free - tion of the 15 - spring 16 - sleeve, 17 - Keyhole ring, 18 - anchor starter, 19 - building a starter, 20 - shaft starter, 21 - switch, 22 - rod to pre-filter, 23 - rod, 24 - spring.

STARTER

To start the engine GAZ-69 and GAZ-69A has an electric starter type III-CT20.

It is installed on the left side of the engine and is attached with two bolts to the crankcase clutch. The starter is chetyrehpolyusny direct current motor with a sequence nym excitation. Device starter shown in FIG. 159. Steel cabinet *19* has four pole shoe with windings and two lids with bronze - graphite sleeves, which rotates the anchor *18.* In case there is a window to inspect the collector and brushes, closing the protective tape. On the front cover there are four brush arm with brushes. Shaft of the starter *20 with* one side has slots, which moves the drive. Starter Drive consists of: a roller freewheel *14,* pinion *13,* for meshing with the crown wheel *12* and Bushings layers *16.* freewheel prevents the anchor starter from "blowing up" after start-up Engine

la.

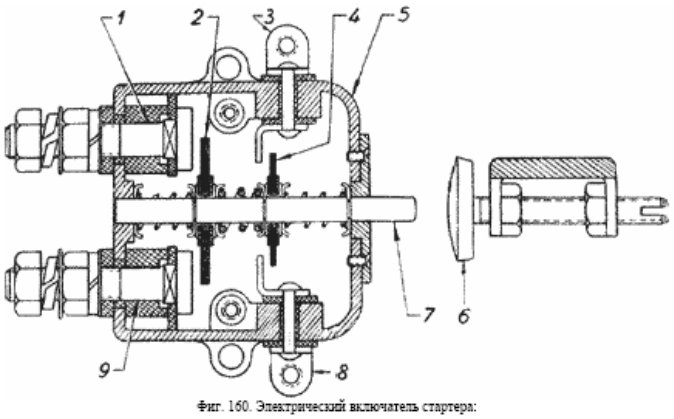

Фиг. 160. Электрический включатель стартера:

Fig. 160. Electric starter switch:

1 - screw conductive plate to the starter, 2 - plate-switch starter, 3 and 8 - terminals for additional tion resistance of ignition coils, 4 - plate-switch additional resistance to ignition coils, 5 - - case 6 - Screw, 7 - rod, 9 - screw wire from the battery.

Entering the gears in mesh with the crown wheel shall force the lever *7* with depressed - TII pedal *6.* disengage shall return spring *9.* on the lever *7* has a spe - tial screw *8* for pressing the rod *23* of a switch starter VK14-B, a fortified building on - ce starter. The device of the switch shown in FIG.

160. The switch has two pairs of terminals and two copper-shai be. The main terminal is used to include the starter, extra - to turn off the additional resistance to ignition coils. When you start the engine starter should be aware that freewheel is designed for short - kovremennuyu work, so as soon as the engine be acquired, we must immediately take our foot off the pedal inclusion starter. Using a starter for a long time without interruption can not avoid its overheating can lead to failure of the starter motor and battery. During a cold start at minus 25 - 30 ° C using a starter re - Komenda only after warming up the engine starting preheater and scrolling crankshaft Engine starting handle.

CARE STARTERS

Through every thousand kilometers, the car must:

1. Check the status of terminals, preventing contamination and reducing the attachment.
2. Check the connection to the starter clutch crankcase.

After every 6 thousand kilometers the car must:

1. Remove the protective tape and inspect the state of the collector and brushes, if necessary to remove
malfunction and blow compressed air.
2. Open the lid switch starter, mop up additional terminals and trailing the puck then switch to blow compressed air.
3. If necessary, tighten the clamp bolt body.
4. When operating the vehicle in difficult conditions, the starter should be removed for cleaning dirt under - water and freewheel.

Every 12 thousand kilometers the car must:

1. Remove the starter from the engine and disassembled.
2. Check the status of the collector and brushes. Ensure that the brushes are not stuck in the brush arm. If the height of brush less than 6 - 7 mm starter should be sent in for repair, as in the garage under brush difficult to replace.
3. Check the force pressing the springs on brushes, which should be 900 - 1300 г.
4. Wipe parts starter and blow compressed air. Particular attention should be paid to the ne - rednyuyu lid, which type of brush to remove dust.
5. If the shaft of the starter, in the place where the drive gear rotates, there are yellow raids on bearing, they should be sure to remove. These attacks may cause jamming the gears in shaft.
6. Lubricate bearings with liquid butter and trunnion shaft anchor.
7. After assembling the starter test the drive. When you click the lever to lock the drive must move to the slotted part of the shaft without jamming and to return to its original position under the action return spring. Turning the gears in a clockwise anchor should not get a move on, with reverse rotation of the gear must rotate with the shaft.
8. Check and, if necessary, adjust the inclusion of starter.

Verification of Starters and switches

Serviceability is determined by checking the starter, made in the following amounts:

1) checking idling
2) test for complete inhibition,
3) checking control switch starter.

Full scan of the starter can be made on a special stand KIS-2 or another stand, adapted for testing starters. In the absence of the stand can be a starter check the following: pressing and holding the starter in a vise, the starter switch terminal to connect the wire section 35 mm 2 through the ammeter to 1000 amperes with the negative terminal of the battery 6-CT-54 (Figure 161). The positive terminal of the battery connect the wire cross section 35 mm 2 with housing starter. The body and to the starter terminal to connect a voltmeter. Insert the starter and let him work in one minute. Serviceable starter at a voltage of 12 volts consumes a current of 75 amperes and while developing no less than 5000 revolutions per minute. If the starter does not develop speed or consumes high current, it should be dismantled and repaired. After testing the starter at idle it should be checked for complete inhibition. For this purpose, establishes a special starter gear lever with a dynamometer at the end (Fig. 161).

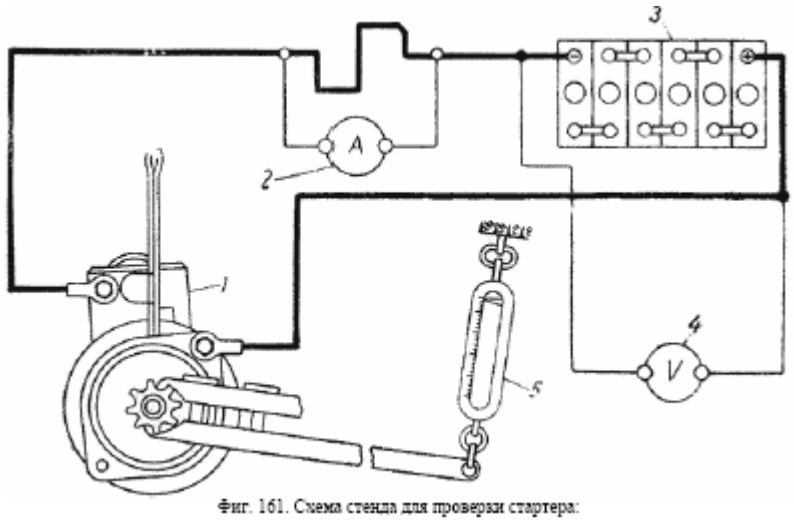

Фиг. 161. Схема стенда для проверки стартера:

Fig. 161. Scheme of the stand to verify the starter:

1 - Starter 2 - ammeter with a shunt, 3 - Rechargeable Battery, 4 - voltmeter, 5 - a spring dynamometer. Incorporating a starter, for several - FIR seconds metering and dynamometer. Braking torque is deter - a product of lever length in meters on the testimony of the dynamometer in kilograms. Serviceable starter with voltage 8 volts Current consumption less than 600 am Lane and develops a braking torque example - but at 2.6 kgm. If inhibited gear anchor rotates, it points to the unutilized interferences freewheel. Za - zhenny braking torque indicates defective starter. To test starter for complete inhibition accumulate Thorn battery should be fully used, flawless and fully charged. When testing a starter on the full inhibition should observe caution tions, because at the moment when the deadlock - being able to get a strong surge starter armature shaft. The switch starter must be adjusted so that the time of introduction into engagement gear starter is consistent with a contact closure switch. When you click on the starter lever *7* (FIG. 159) to the gap between the face of failure starter gear *13* and Thrust washer *11* should be 0,5 - 1,5 mm. During the measurement of the gap gear should be slightly overcome toward the collector. If the gap is beyond limits of 0,5 - 1,5 mm, it should adjust the adjusting screw *10* and tighten the locknut. Remove the cover from the starter switch (Figure 160), and pressing the lever, to measure the gap between the six - her, and thrust washer at the time of closing the main contacts. This gap must be in the range of 1 mm up to 4 mm. If necessary, the time of inclusion should adjust pressure screw *6.* Subsidiary WIDE contacts should confine some time before or simultaneously with the principal. The moment of contact closure switch can be determined with the help of the warning lights, includ - chennyh the scheme shown in Fig. 162. At the time, check jumper between actuators and starter starter must be removed.

STARTER PROBLEM AND THEIR ELIMINATION

Before searching for faults starter should check the battery, wiring, state of terminals on the battery and pedal included. When testing the operation of the starter should include one of light consumers and to change the glow lamp can determine the nature of the problem. Major faults starter the following:

1. When you activate the pedal starter anchor does not rotate. The brightness of the light when you turn the starter does not change. The reasons may be:

a) breach of contact between the collector and brushes. To fix the problem to the eyes - Stith collector and brushes the dust and dirt, check for sticking brushes in brush holders and pro - believe the state of springs brushes, replacing the brush with a height of less than 6 - 7 mm. Collector should skive Skin № "00", after stripping the insulation between commutator segments do not have to cut;

b) a breach of contact in the starter switch as a result of scorching contacts or razregulirov - ki. Scorched contacts to mop up, and when razregulirovke starter remove and adjust the provisions tion will go;

a) cliffs or Desoldering wire inside the starter - a starter to send to repair shop.

2. When you activate the pedal starter motor shaft rotates very slowly or not at all rotates. The light intensity sharply decreases. This can be for the following reasons:

a) is discharged or defective battery - replace if necessary;

b) short circuit inside the starter, or graze the anchor for the pole, if the closure to remove can not send a starter for the repair shop;
a) violation of the chain, which may be caused by a bad connection or wire breakage peremych - ki between the engine and body, inspect the chain starter and troubleshoot.
3. When you activate the pedal starter motor shaft does not rotate as the shaft rotates with the anchor high turnover. The reasons may be:
a) slipping freewheel - faulty clutch should be replaced;
b) several broken teeth on the crown wheel - Change the crown;

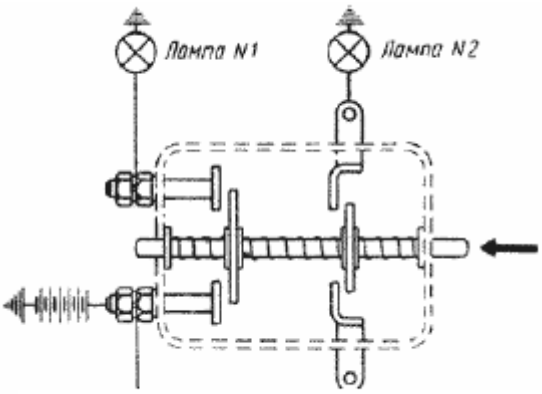

Фиг. 162. Схема проверки включателя стартера с помощью двух контрольных ламп.

Fig. 162. Scheme verification switch starter with two lights.
4. The pedal can hear the gears grinding the starter, which is not included in the mesh. In - leading cause of this may be:
a) packed teeth on the crown wheel - fix filling teeth;
b) incorrectly adjusted the time of switching the starter, check and adjust, if A necessary - Dimo, adjust the time of closing the main contacts;
c) the starter is out of alignment - a starter set correctly.
5. After starting the engine starter is not disabled. The reason for this may be jamming the pedal inclusion or grabbing traction prefilter. Find fault and fix. When repairing a starter St20 can use parts of other starters. Basically: anchor obmot - ki excitation freewheel, brushes and some other parts are unified with the starters ST08 GAZ-51, GAZ-63 and the starter St20-B car ZIM.

CHARACTERISTICS STARTER

Type (GOST 6210-52) III-CT20
Rated voltage 12 volts
Drive Type ST8-3708600-A
Number of teeth of gears starter 9
Maximum power 1.3 liters. with. Regime of complete inhibition on battery
Current consumption not more than 600 amperes
torque not less than 2.6 kgm
Number of poles 4
Winding excitation 4 coils of 5.5 turns each. Compounds been met consistently. Section conductivity loki 1,8 X6, 9.
The number of grooves in the anchor 22
Number of collector plates 23
The number of turns in the section 1
The number of sections in the groove 2
Step on the grooves 1 - 7
Step on the collector 1 - 13
Wire winding anchor section 2,5 X4, 2 mm, glabrous
Tension springs brushes 900 - 1300 gr
Type switch VK14-B
Brushes copper-graphite, brand SCI, 4 pcs. size 8,5 X9X12

IGNITION SYSTEM

СИСТЕМА ЗАЖИГАНИЯ

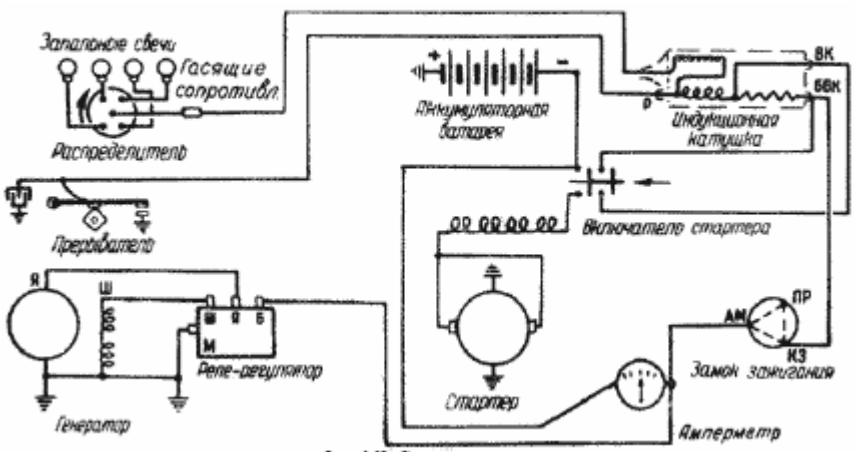

Фиг. 163. Схема зажигания.

Fig. 163. Scheme of ignition.

Reliable and economical operation of the engine depends on the uninterrupted operation of the ignition system. In operation should closely monitor ignition system and quickly resolve appear - schiesya malfunction. You must correctly set the ignition, since small inaccuracies in installing ignition timing led to a sharp increase in fuel consumption and reduce power engine. Ignition engines of cars GAZ-69 and GAZ-69A - Battery. Ignition system consists of sources of electric current, ignition coil, distributor, glow-plugs, ignition switch (switch) and wires of low and high voltage. Scheme sys - We plug shown in FIG. 163. To eliminate interference caused by the ignition system, a high-voltage wires to the ca - zhdoy candle and a central wire included podavitelnye resistance of 8 - 13 thousand ohms each page - Doe.

Ignition coil

Ignition coil-type B21 or B1 is used to convert the current low-voltage current-you sokogo voltage. Reels B1 and B21 differ only in a constructive design hull and complemented tively resistance. Unified coil B1 is more perfect than the previously ustanav - Lebanese coil-type B21. Ignition coil has a bracket for mounting and installed in a panel of board - ca chuck body with two screws with washers "asterisks". Device unified ignition coil type B1 * shown in Fig. 164. On the iron core *9* is wound the secondary winding *12, on* top of it - the primary winding *8.* Rewinding made layers between layers of insulation laid paper. The core is secured in a sealed steel casing insulators. The space between the core, insulators and steel frame filled rubraksom. In the lower It has a terminal insulator high-voltage and low voltage terminals. Between the legs clamp fastening coil is located incremental resistance 1, connected in series with the primary winding. Resistance is made in the form of a spiral of iron wire and automatically zakorachi - as a supplement in the starter switch terminal pedal starter.

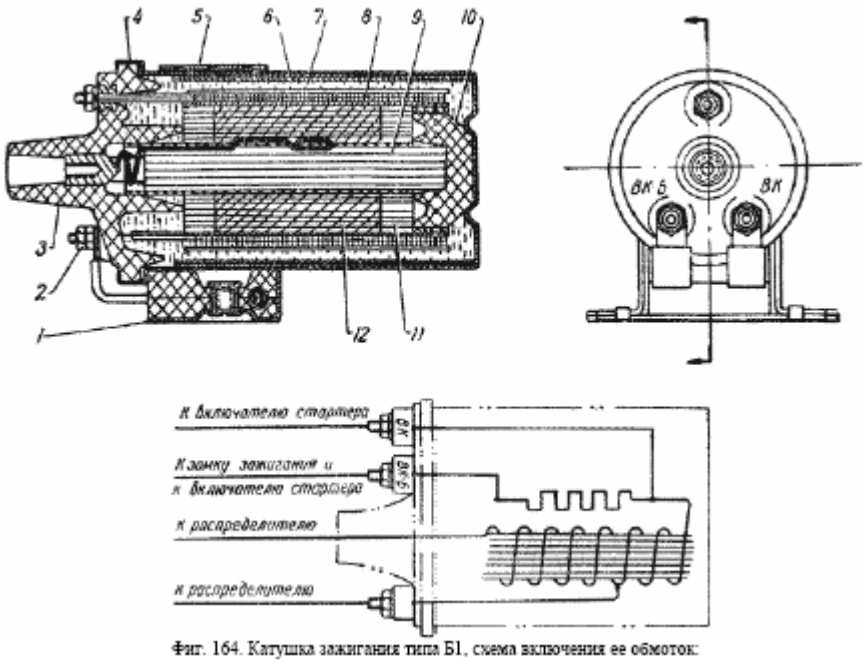

Фиг. 164. Катушка зажигания типа Б1, схема включения ее обмоток:

Fig. 164. Ignition coil type B1, a scheme to incorporate its windings:
1 - incremental resistance, 2 - terminal (VC-B) low-voltage, 3 - cover with terminal, 4 - case, 5 - mounting bracket, 6 -- plate to increase the magnetic flux, 7 - priming sealant, 8 - primary winding, 9 - core, 10 - insulator, 11 - insulation, into bond pads, 12 - secondary winding.

This facilitates the starting of the engine, as the battery voltage is applied to the coil in addition dobavoch - tion resistance and voltage of the secondary circuit increases, despite the reduction in voltage at Clem - * Internal structure of the old ignition coil type B21 is similar to the device coil type B1. Pre - additionally the resistance of the coil B21 is under the upper lid.

Max battery when you turn the starter. When the engine incremental resistance changes in the current per - even primary circuit coil, depending on engine speed. This improves the response of the system ignition is achieved through incremental change in the value of resistance, depending temperature. At high engine speeds by decreasing the current in the primary circuit-INS ues also heating temperature resistance, which decreases the value of the additional co - resistance. Reducing the resistance causes an increase in current in the coil primary circuit at high engine speeds. When the engine idling current in the primary circuit of the coil increases. Increase current causes an increase in heating temperature resistance and increase the additional value of the resistance Nia, which reduces the current in the primary circuit of the coil. Thus, the additional resistance, automatically adjusting the magnitude of the current in the primary circuit, reduces the voltage drop when the engine at high speeds and reduces the heating coil and consumption of high current at low engine speeds.

CARE OF IGNITION COIL

Care for the ignition coil is the periodic inspection of the coil and clean it from dust and mud. Every 3 - 6 thousand kilometers a car is necessary to check the reliability of fastening conductivity Dov. If engine is not running not to be a long time to leave the ignition turned on because Bejanov overheating the coil.

Ignition coil DEFECTS AND THEIR REMOVAL

Faults coils are connected mainly with damage to its insulation windings and additional damage resistance. Before you remove the coil for repair or replacement, you should verify the reliability and accuracy connection wires to the terminals of the coil, starter switch and the ignition, then check the ACT - IMD spark overcome spark gap, as described below under "system failure ignition and remove them. If provertyvanii engine starter sparking normal, and when provertyvanii engine crank no spark, then it indicates a malfunction of the additional resistance PRINCIPLES FOR GOOD GOVERNANCE. The characteristic feature of damage to the incremental resistance or its chain is also nor - mal start the engine by pressing on the pedal starter and instant stop it when removing the legs from pedal. Defective incremental resistance of the coil should be corrected or replaced. If the cause failure is a breach of contact or breakage of the wire in place of fastening the ends, the wire in the designated area should be carefully solder or rivet. Soldering at the same time must be acid-free.

Burnt resistance to be replaced. In the absence of alternate resistance can be manufactured twist of iron wire. Ignition coil windings with damaged insulation should be replaced. When replacing a faulty ignition coil or damaged wiring should, attentively but treat the accession of entries to the terminals of the coil, as the entanglement of wires may have a entail damage to the coil and a strong burning contact breaker distributor or short circuit in the chain. Low voltage wires to the coil attached as follows: the terminal "BK-B (starter switch - battery), two wires - the first from one of the additional terminals of the switch-old tera, the second terminal of the "BB" ignition. By the terminal "BK" (starter switch) joins the lead from the second additional terminal starter switch. The third terminal of the "P" joins the wire from the breaker distributor. Wire High voltage from the distributor joins the high-voltage terminal.

SPECIFICATIONS Ignition coil

Type B21 or B1

Rated voltage primary circuit 12 volts

Spark gap on a standard three-electrode discharge - nickel, in which the coil must provide uninterrupted sparking at 1900 rpm roller distributor P23 not less than 7 mm (checked pas test)

Primary winding 330 turns of wire marks PEL-diameter rum 0,72 - 0,78 mm Secondary winding 19000 revolutions ppovoda brand PEL dia - meter 0,1 - 0,12 mm Additional resistance 1,25 - 1,35 ohms made of iron wire diameter 0,4 mm Brand Art. About GOST 3284-46

Note. Ignition coil type B21 and B1 are installed on GAZ-51, GAZ-63, GAZ-69, GAZ-69A, F-20, VMS and VMS-150. The vehicle ZIS-150 previously mounted coil-type B21 - B, which differs from the coil B21 only bracket and output high voltage.

IGNITION DISTRIBUTOR

Distributor-type P23 is used to interrupt the current circuit of low voltage ignition coils, distribution of current pulses of high voltage for candles and for automatic control of mo - ment of ignition, depending on engine speed and engine load. To manually set the moment the ignition distributor has octan-corrector. Automatic ignition timing depending on engine speed and load-carrying etsya centrifugal and vacuum machines. Installed valve obliquely from the left side of the engine and is rotated from the roller oil pump. The direction of rotation of the distributor shaft right (clockwise), if smot - ret of the lid. Fastened to the block valve cylinder engine with a single screw.

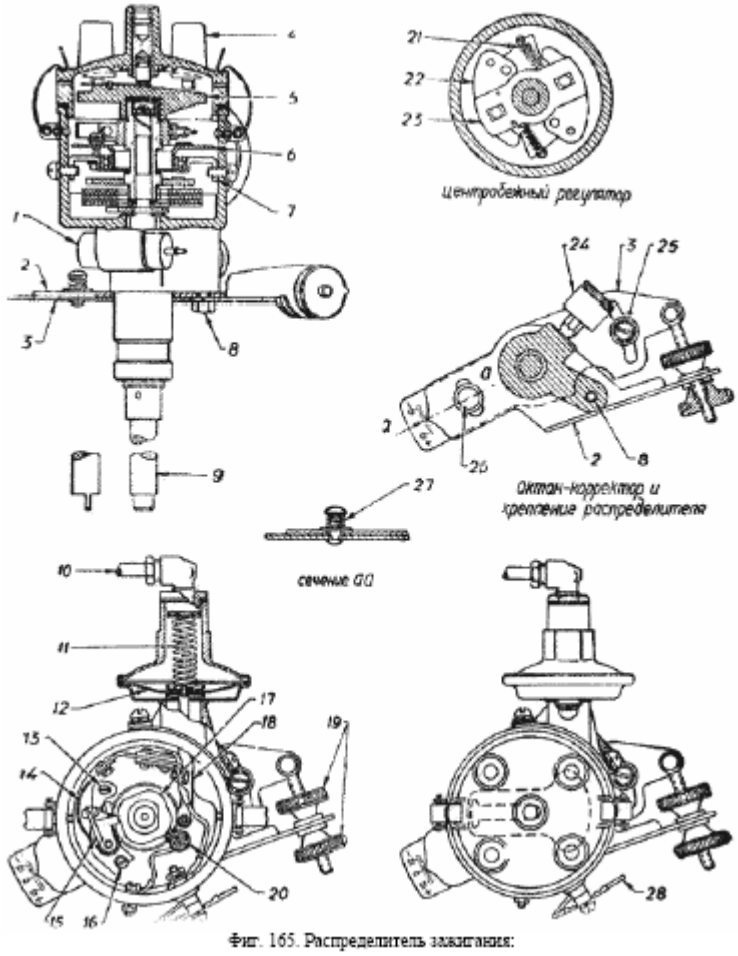

Фиг. 165. Распределитель зажигания:

Fig. 165. Distributor Ignition:

1 - condenser, 2 - upper plate octane-corrector, 3 - lower octane corrector plate, 4 - distributor cap, 5 - rotor, 6 - Breaker panel, 7 - skid plate, 8 - attachment bolt top plate octane-corrector to the body of the distributor, 9 - shaft intermediate, 10 - the tube from the carburetor to the vacuum regulator, 11 - spring diaphragm vacuum regulator, 12 - diaphragm ma vacuum regulator, 13 - set screw counter-breaker, 14 - spring lever, 15 - lever breaker. 16 - regulation vochny eccentric screw counters, 17 - jaw breaker, 18 - pull the diaphragm vacuum regulator, 19 - nuts octane - corrector, 20 - a felt brush. 21 - spring centrifugal automatic advance, 22 - centrifuge machine, 23 - plate centrifugal machine, 24 - Cap oiler, 25 - screw the bottom plate octane-corrector to the block, 26 - coupling rivet plates octane-corrector, 27 - spring coupling studs, 28 - lead from the terminals of low voltage ignition coils.

Device distributor shown in FIG. 165. In the case of two shank bushings installed roller with a hinge. The lower end of the roller *9* has a thorn, which is part of the oil pump shaft slot. At the top of the roller is mounted centrifugal machine with four-sided cam *17,* the top-ku Lacko installed rotor *5.* In the case panel mounted breaker *6,* made of two parts -- fixed plate which is fastened to the hull, and the mobile plate. On the mobile plate of mouth - lished contacts circuit low voltage. Parallel contacts connected capacitor *1,* mounted on the outside of the hull. The movable plate is connected with the diaphragm rod *12* of the vacuum machine, installed in the cor - puse distributor. Top housing lid *4,* which are terminals for high voltage from spark plugs and ignition coils.

CENTRIFUGAL DEVICE AND WORKING MACHINE Ignition timing

On the drive shaft fixed plate *23* with the axes of rotation of weights *22,* is pressed against the under - Water roller springs *21.* At the upper end of the roller freely planted with bush Pressing on her fists and the contoured plate in the slot which includes hairpin weights. Thus rotation of the cams breaker is not transmitted directly from the drive shaft, and through the weights *22,* and hairpins disagreement weights, pushing the plate *23,* turning it, and con - zanny with her fist on the shaft, as shown in FIG. 165. Table 6 Speed roller dis - divider in minutes Advance angle (on roller distribution divisor) in deg sah 333 400 1000 1600 - 1900 0.2 2 - 4 4,5 - 6,5 7.9 At low engine speeds, centrifugal forces are small and the weights *22* can not be pre - overcome the tension springs *21.* In this case, cam breaker receives the angular displacement of the - relatively shaft and the centrifugal automatic

advance is not working. As the number of revolutions of the engine weights under the action of centrifugal force diverge and their pins through the plate *23* rotated with the cam sleeve *17* in the direction of rotation of the drive shaft. Thus contact breaking occurs earlier and ignition advance angle increases, Xia. With the increase in engine speed centrifuge flow rate on the bigger angle, resulting in increases and the ignition advance angle. As the engine speed spring opposing the sliding weights, return them to their former position, turning with the fist against the direction of rotation. Consequently, the contact breaking breaker pro - comes later and ignition advance angle decreases. Changing the angle of ignition advance for the work of a centrifugal machine distributor in the P23 per - dependence on the speed is given in Table. 6.

SYSTEM AND WORK MACHINE VACUUM Ignition timing

Between the two halves of the hull machine clamped aperture *12* (Fig. 165). The internal cavity housing the vacuum machine communicates with the body cavity of the distributor, in that there is always supported by air pressure. Outside the cavity through the tube *10* is connected to the mixing chamber carburetor. Input opening the tube connecting the carburetor with a vacuum regulator, is located on the throttle over - slonkoy. Thus, in the outer cavity of the vacuum creates a negative pressure regulator, depending on the degree of fine throttle opening and hence the load of the engine. The diaphragm by the distributor attached rod *18,* pivotally connected with the mobile Pla Stino breaker *panel, 6* attached to the ball bearing. From the outside of the diaphragm-temperature - maet spring *11,* an opposing force caused by pressure. If you reduce the load of the engine vacuum in the suction system, and consequently in-band ty housing of the vacuum machine increases, so the diaphragm, deformation, overcomes the force spring and through the sliding rod *18* rotates the plate *6* against the breaker panel direction Nia rotation of the cam, thereby breaking contact occurs earlier and ignition timing Uwe - many countries. With increasing load magnitude dilution decreases and the spring rotates the diaphragm pa - nel-breaker in the direction of rotation of the cam, reducing the ignition timing. When the engine idling hole connecting the carburetor with a vacuum auto - that is slightly higher veiled throttle, so the pressure in the outer cavity housing the machine close to atmospheric and the spring rotates the breaker panel to lock in the direction lenii rotation cam. Thus, with the vacuum machine has no effect on the advance ignition, which respectively receive a minimum, as is required for - a stable work engine at low engine speeds. Table 7 Vacuum in mm Hg. Art. Advance angle (on roller distribution divisor) in deg sah 100 230 320 0 - 2 3 - 5 5 - 7 Changing the angle of ignition advance for the work of the vacuum machine, depending on the dilution by the suction system is given in Table 7. Besides the two described automatic adjustment ignition timing, valve has device for manual adjustment, with the help of so-called octane-corrector. Hand regula - perature is to install ignition timing depending on the inclination of fuel to detonation, ha rakterizuemoy its octane rating, and is produced when testing the engine on the road - Yah, as discussed below. When you manually adjust the ignition timing can be changed within ± 12 ° (on the angle of rotation co - lenchatogo motor shaft), by rotation of the distributor body in one direction or another within slits in the plate octane-corrector, which is performed by turning the screws *19* (fig. 165). Moving cor - Pusa on one scale division octane-corrector corresponds to change the angle of advance of 2 ° in angle from Gates of the crankshaft. To protect against inadvertent violations of adjusting the ignition, the nuts-octane corrector must always be securely Lock the ie, tightly wrapped by hand until it stops.

CAPACITOR

The main body of the distributor is installed capacitor *1* (FIG. 165) volume 0,17 - 0,25 uF, accession JOINT parallel contacts breaker. The capacitor serves to reduce: sincerity, the transfer of metal and scorching-interrupting contacts ent. The capacitor provides a more abrupt change of current in the coil primary circuit when disconnecting contacts. Sharp change in current in the primary circuit of the coil is necessary for obtaining a normal for - voltage in the secondary winding of the ignition coil. Care for the capacitor is to clean it from dirt and check the reliability of fastening. Major failure of the capacitor is the breakdown of insulation between the plates. Capacitor is not repaired recommended.

ADJUSTING THE GAP BETWEEN CONTACT BREAKER

To adjust the gap between the contacts of the breaker should:

1. Release spring-loaded latch and remove the distributor cap.

2. Remove the rotor.
3. Slowly turning the crank crankshaft of the engine, install the cam *17* in position - tion, giving maximum clearance between the contacts of the breaker (Figure 165).
4. Check the gap between the contacts with a probe, which should include, but are not pressing for - Vision contact. The gap between the contacts must be within the range 0,35 - 0,45 mm. If the measured clearance does not meet the specified value, it is necessary to weaken the screw *13* credit - captivated rack (fixed contact) and turn the adjusting eccentric screw *16*, set normal clearance.
5. Wrap the screw *13* and a second to check the gap between the contacts.
6. Set the rotor *5* and the lid *4* distributor in place and secure the latter. Getting adjusted, should first examine the working surface of contacts and, if they are dirty, moist or burned, clean them, adhering strictly to the instructions given in the time - to "Care for a divider." We must always remember that the quality of the ignition system depends primarily on the right - STI gap in the breaker and the purity of his contacts.

CARE DISTRIBUTOR

After every 3 thousand kilometers the car must:

1. Check the reliability of fastening distributor.
2. Check the reliability of fastening the wires of low and high voltage. Wires on the high - voltage must be tightly inserted into the slot cover. If improperly installed wiring can turn out burnout plastic lid and the breakdown of insulation ignition coils.
3. Remove the lid, wipe the dirt, dust and oil. With scorching electrodes cover non - required to wipe it clean with a piece of cloth soaked in petrol. To avoid increasing the gap, zachi - stku electrode needle files and sandpaper is not recommended. Ember in the nest should move freely, without jamming.
4. The inner cavity of the distributor housing if necessary to blow compressed air.
5. Rotate the three traffic Cap lubricator on the body of the distributor. In Cap-mas Helen should be laid grease KB or refractory solid oil. *After every 6 thousand kilometers the car must:*

1. Perform the work under a car after driving 3 thousand miles.
2. Inspect the breaker contacts.

If contacts do not need cleaning, check the gap between them and, if necessary, on - regulate under section "Adjusting the gap between the contacts of the breaker. With a strong scorching contacts should be smooth out. Contact breaker, over - tions which has a grayish color and minor irregularities, should not be cleaned. The charred contacts should smooth out flat with a thin velvet with a file or a special abrasive plate. Tool for cleaning contacts must be clean. The condition of a long and reliable operation contact breaker is their parallelism and good adhesion to each other across the surface sti. To contact surfaces were strictly parallel, with the clean-up should be pressed a finger on lever breaker. You can not dress contacts with emery sandpaper or a coin. After stripping contacts should be renounced, gulirovat gap.

3. Blow valve with compressed air.
4. Lubricate axle arm rolling contact, which let one drop of motor oil on the axle. Lubricate the cam felt brush and felt washer under the rotor, two drops of motor oil. When lubricated cam and the axis of the lever should be careful that the oil is not horrible to contacts You breaker. Contact with oil on the contacts, greatly reducing their service life. If oil fell to the con - cycles, it should be removed with a cloth soaked in petrol. *Every 12 thousand kilometers the car must:*

1. Carry out the work under a car after driving 3 - 4 thousand km. Remove the distributor and on a special stand to check the work of the centrifugal and vacuum auto - mats, as well as the tensile force spring lever movable contact. Effort should be within 400 - 600 g. At the same time should check the condenser.

Malfunction of control valve and eliminating

1. The main failure of the distributor is scorching contact breaker. Prepared by revshie contacts should smooth out as described in the section "Caring for a divider." Strong scorching contacts, weak yellow-red spark and difficulty starting the engine can be caused by damage to the condenser. The failure of the capacitor should be replaced. 2. Interruptions in the distributor may be caused by contamination of the rotor and the cap or the appearance of tion in these cracks, through which the strong leakage current of high voltage. Contaminated rotor and the lid should be wiped. When you

are in the rotor or cap cracks, their should be replaced with new ones. 3. Interruptions in the distribution center in high engine speeds can be caused by the weakening spring tension lever movable contact. You need to check the efforts of spring tension, and if it is below 400 grams, a spring with a movable contact should be replaced.

4. Interruptions in the distributor can be caused; high roller wear sleeves, nonequi - dimensional wear of the distributor cam, strong wear-axis rolling contact or textolite pillows. This valve should be sent to the shop for repairs.

5. Increased fuel consumption and reduction of engine power can be caused by jamming centrifuge machine ignition timing. The distributor should be addressed and eliminated cause of seizure weights. The increased fuel consumption, especially when driving without load can be caused by malfunctioning of the vacuum machine ignition timing. The first step is check the tube that connects the carburetor to the distributor, and if damages are not available, vacuum intelligent machine should be checked on the stand and replace if necessary.

6. The reason for failure distributor may be breakage of conductors connecting the sub - Vision contact with earth and a moving plate - with a fixed. Identify this problem can be set with hood lamp. To do this:

a) connect the individual wires hood lamp with earth on the body of the distributor, not from - combining available spend there;

b) to include ignition switch, and rotating the engine crank, watch the tube. With the closure of contacts lamp extinguished, and when disconnecting - light up. If the lamp is not extinguished for the closure of contacts, this indicates to the precipice of one of the connecting conductors. When repairing the distributor is permitted to use certain parts, such as Ro - tor, contact breaker, capacitor, coal and other parts from distributors P20 GAZ - 51, P20-B car and the R21 car ZIM ZIS-150. Motor vehicles M-20 is set as distributor P23.

Shock absorber

On engines GAZ-69 and GAZ-69A set can type spark plugs such as CH4-B (M12U), a threaded screw of 18 mm and a length of 12 mm (the old designation NM 12/12-U). Spark plugs are used to ignite the mixture in the working ca - Measures combustion engine cylinders. The device plugs shown in FIG. 166. Spark-plug is steel casing *1* with a side electrode *7* and uralitovogo isolated torus *2* with the central electrode *3*. The central electrode in the insulator fixed. The insulator in the housing is installed on special pads *5*. The space between the upper ring and the casing is filled with spe - tial powder, bead and shell seamed. Indecomposable candle has a good air-tightness and practice Cesky in operation does not require maintenance, except periodic regula - perature gap. At the GAZ-69 and GAZ-69A can be set per - palnye candle type CH4-D (NM 12.12 B-Y) with the GAZ-51 and GAZ-63, CH4-B (NM 12.12 A-D) with the car M-20. The above spark plugs are different from CH4-B only contact nut. In parentheses specify the oldmark of candles, now marking of Candles - M 12U. Installation on other engines glow of candles is not recommended etsya. Candles with long screw-in part of a 12 mm set Katya - goricheski prohibited.

Care glow plug is to verify their co - standing, clean from scale and adjust the gap between the electrodes. Should be regularly clean insulators candles (not verified - sidering them).

Not less than 6 thousand kilometers candles should be removed for inspection and adjustment of the spark gap. Before removing the spark for inspection and replacement should be required clean brush or compressed air obdut jack plugs in the cylinder head to ensure that prevention предить to dirt inside the cylinder. Vvertyvat candles should only be a special wrench, available in the tool-kit ment. Apply for vvertyvaniya candles pliers, wrenches or conventional keys discrepancies - the live size is strictly prohibited, as it always results in damage to the candles. On examination, the candles should pay special attention to the absence of cracks insulator, the availability and nature of the carbon layer, as well as the state of the electrodes. Unsatisfactory work of candles, manifested in the rapid and systematic education in - gara in their custody or exits insulators failed due to cracking, melting skirts or the appearance of the oxide film, and also expressed in the burning or corrosion of the electrodes, mo - Jette called:

1. Stacking, not the engine GAZ-69 on its thermal characteristics. When the engine on the "hot" spark skirts of insulators are made of white bubble with approx - Sydney film. Conductive oxide film and thus causing interruptions in sparking, especially but when driving at high speeds or under heavy

loads. Skirts insulators "hot" candles are cracks or fused ends, and the electrodes burn or have signs of corrosion. These candles, in addition, can cause surface ignition. Too "cold" spark when the engine quickly zakapchivayutsya and also cause jamming sparking.
2. To rich adjusting the carburetor, causing the formation of dry carbon, ie zakapchivanie candles. Dry snuff is the deposition of particles of unburned carbon and easily removed.
3. Too poor adjustment of the carburetor. This candle overheat and obtained the same phenomenon as when working on "hot" spark (intermittent ignition while driving at high speeds or under heavy loads). Skirts insulators and electrodes candles in these cases do not differ in appearance from the skirts insulators and electrodes hot candle (see above, n. 1).
4. Wear of piston rings in the engine, leading to the formation of fatty oil coke.

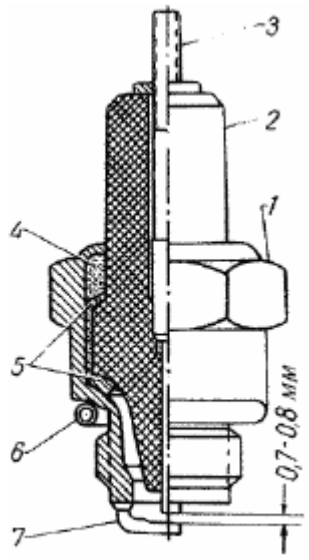

Фиг. 166. Свеча зажигания.

Fig. 166. Sparkplug.
1 - body, 2 - uralitovy insulator, 3 -- central electrode, 4 - seal - Tel Aviv, 5 - gaskets, 6 - O-ring, 7 - side electrode.
Lubrication candles also observed during prolonged operation of the engine at idle and zavodke engine, especially when repeated, fruitless attempts. Lubrication of candles, with their hand, very difficult launch.
5. Abnormal operating conditions. In a slow ride with frequent stops and long-term operation of the engine at idle for Candlelight can form carbon deposits. Do not apply when cleaning insulator sharp steel scrapers and tools, as well as in that formed on its surface scratches and roughness, further contributing to the deposition coke. If you do clean-up of candles is not possible, a layer of carbon is large - should be replaced spark new. After cleaning, you should check the electrode gap with a round wire probe. Flat probe to determine the gap can not, because on the side electrode is formed on the case of wear - close to the cylindrical surface. Adjusting the gap between the electrodes must be made through podgibki side electrode. You should never try to bend the central electrode spark, as it will inevitably lead to in - phenomenon of cracks in the insulator and spark to the door of its failure. The gap between the electrodes candles be 0,7 - 0,8 mm. Candles, purified from scale, with the adjusted gap between the electrodes, before installing on engine is ecommended to check on the device for testing spark plugs under pressure. In IS-fit plugs dye at a pressure of 8 - 9 kg / cm 2 should regularly, without interruption, and surface discharge, appear between central and lateral electrode. At a pressure of 10 kg / cm 2 new, not worked candle should be half tions is tight and no air flow in conjunction with core body, or in conjunction rod with an insulator. For candles, working on the engine is allowed passage of air to 60 cm 3 min. Candle should always be set in place with a gasket. Vvertyvat candle should first hand, and then tighten the candle key. Lining is not a solid puck and manufacture county of thin copper and is designed for crushing when tightening. It should not be installing candles produce excessive tightening. Need to tighten it so that the copper strip was not flattened completely. If removed for examination to prove that the construction of completely flattened, it is recommended Change the gasket. If the engine is one of the candles does not work,

then it can be detected alternate off - tion of candles. Disabling normal operating candles accompanied by a drop in engine speed, and when on - tion of damaged spark momentum remain unchanged. In addition, unemployed or working with large interruptions candles colder than the rest by touch - GOVERNMENTAL and they can sometimes be detected on this basis. Note that for reliable operation of the engine required to adequately care for the candles and their timely change. Candles, insulators which are damaged, subject to mandatory substitution, even in the case of EU - whether the faults in their work have not yet discovered. It is recommended to ensure the starting of the engine before the start of winter long worked to change the light - chi new. Later taken candles can be used in summer months.

6. Failure in the ignition or abnormal spark gap in the candlelight.
7. The absence of the gasket between the shell candles and cylinder heads, loose wrapping candles during her set, as well as pass gas inside the candle between her body and insulator. In these cases, a candle overheats and in a short period fails.
8. Incorrect installation of ignition (too early or too late). It must be remembered that the prolonged use of candles on their skirts are usually formed by reddish brown plaque, which does not interfere with candles, this plaque should not be confused with carbon, and such Candles do not need to be cleaned. Candles with carbon or oxide film to be thoroughly cleaned on a special sand apparatus.

Power lines

High-voltage wires that connect the ignition coil to the distributor and Distributors Tel with candles, made of wire marks PVL-2 (GOST 3923-47). In rupture of the central wire resistance podavitelnoe installed a special type of SE-01. At the ends of the wires, suitable for candles, set podavitelnye resistance type SE-12 or SE - 02. These resistances serve to reduce the level of the field interference caused by the ignition system. Influences on the quality of the engine serviceable podavitelnye resistance do not have. Photographing podavitelnye resistance is strictly prohibited. Care for the ignition wires. Should be carefully monitored so that the surface of the wires not falling oil and gasoline, which destroy the lacquer film and the rubber insulation and thus set damaged wires. We should not allow contamination of wires and getting them wet, because it causes leakage current and the breakdown of insulation. On examination, the wires need to pay attention to the state of isolation, the density of planting tips of wires in the nests of the distributor, the density and purity of compounds wires at low - voltage and the state of the rubber cap, put on high voltage wires and terminals: distributor cap. To remove the wires from dust and dirt should blow them with compressed air or wipe dry rag. Wires with insulation damage or lacquer film, and rubber caps, am - ing cracks, to be replaced. Not allowed to work with wires that have visible damage to insulation, as it un - bezhno lead to misfire.

Ignition

Ignition switch (switch) to turn on and off the current in the primary circuit coil Ignition and other devices. With the ignition power is taken to the control devices, motor-stekloochi stitelya and motor fan blowing the windscreen. Lock is set on the instrument panel and is attached special nut *12*.

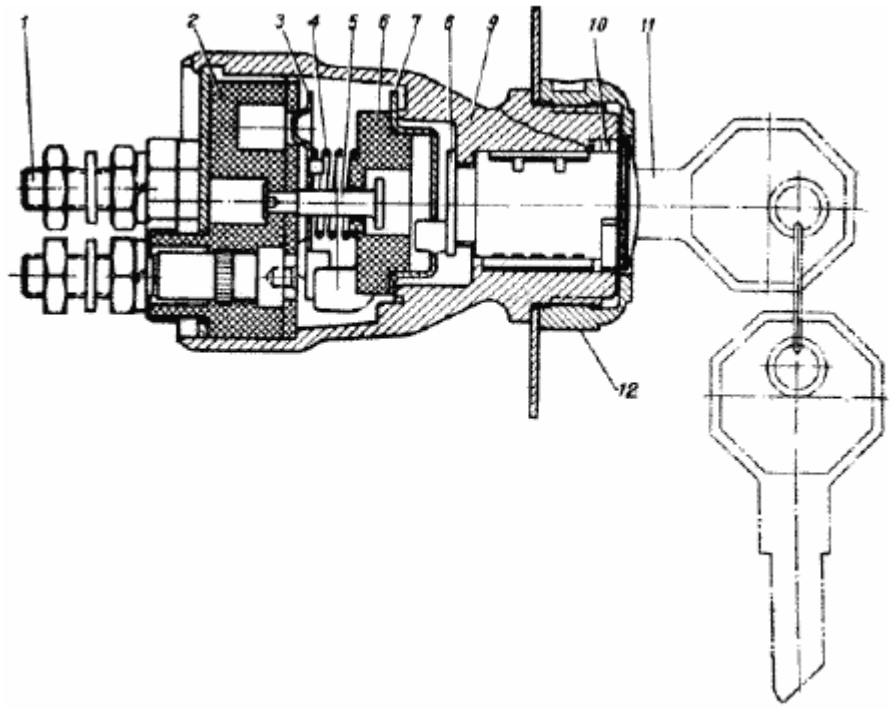

Фиг. 167. Замок зажигания:

Fig. 167. Ignition:

1 - terminal, 2 - insulator, 3 - Contact plate, 4 - spring, 5 - axis, b - leash contact, 7 - plate leash, 8 - cylinder lock - HYDRATED, 9 - housing, 10 - Spring Lock, 11 - key 12 - nuts.

Device lock shown in FIG. 167. Turning the key *11* to clockwise until it stops stop cylinder *8* of the castle to its leash in vorachivaet contact system. In this case contact plate *3* connects all the terminals of the castle ignition. Feeding terminal is designated as "AM". Terminal to connect the ignition coil about - means "BB" and the terminal to power devices - "OL". Key *11* is inserted and removed from the ignition only in the off position.

UNIT IGNITION

Install the ignition is on labels on the flywheel. To determine in. MT is a steel ball pressed into the rim of the flywheel. In addition, the flywheel affixed white warning feature and on both sides of the century. MT made risks. These risks (labels) can be seen through a hatch in the crankcase flywheel, located at the starter. Breaking current interrupts ers during the installation of ignition should occur when the piston in the cylinder when the first ho - de compression will not come on up to 4 °. MT (with metering for flywheel). Accordingly, the wire against the terminal first cylinder (in the top of the distributor) should be located rotor. Installing ignition vol - telya car must be made with great accuracy, because even with small errors in Installation sharply increases fuel consumption, and powerful - tions of the engine decreases. Additionally, there may have been cases of breakdown cylinder head gaskets, get burned valves, etc. The phenomenon caused detonation. The order of operations when you install ignition following:

1. Remove the distributor cap and check the gap between the contacts of the breaker (in If necessary, adjust the gap as described in "Adjusting the gap between the contacts of the breaker).

Install distributor, if it was removed. This shank roller to enter into the groove roller oil pump. Wrap screw distributor to the engine block.

2. Remove the lid hatches on the top of the crankcase near the flywheel starter.
3. Take out the candle of the first cylinder.
4. Closing the finger hole of the first candle of the cylinder, turn the crankshaft of the engine for the plant nuyu handle before the release of air from under the finger. This will happen at the beginning of the compression stroke in the first Chi - lindre engine.
5. Convinced that the contraction began, carefully turn the crankshaft of the engine to the coin - Denia risks to the flywheel, designated numbered *4*, with the arrow on the casing coupling (Fig. 168).

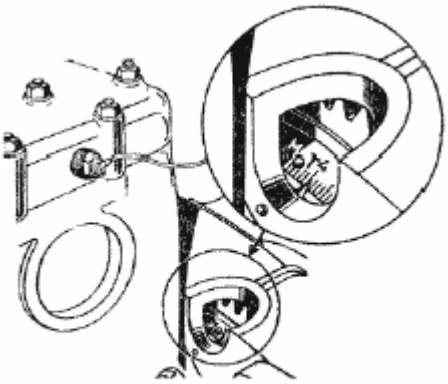

Фиг. 168. Установка коленчатого вала двигателя в положение в верхней мертвой точке (в. м. т.) по метке на маховике.

6. Disconnect the vacuum tube regulator.
7. Remove the distributor cap and make sure that the rotor is against its internal contact connected with wires to the candle of the first cylinder.
8. Nuts *19* (FIG. 165) a smooth adjustment to establish the scale of octane-corrector to zero division.
9. Loosen the screw slightly and turn the distributor body clockwise to contact breaker is closed.
10. Detach the end of the wire hood lamp from terminal "B" relay-regulator and attach it to terminal "R" low voltage, located below the ignition coil. Enable switch under - hood lamp. Insert the ignition and gently rotate the cor - PUS distributor counterclockwise until ignition bulbs. Stop the rotation of the distributor to precisely at the time of the flashing bulbs. If this is not ud - elk, the operation must be repeated, turning the housing distribution divider to its original position.
11. Hold the body of the distributor provorachi - tures, tighten the screw, put the lid and the central wire in place.
12. Check the correctness of joining wires of the candles, starting with the first cylinder. Wires should be added in the order I, II, III, IV, counting clockwise arrow (Fig. 169). After each installation of the ignition and after the regulatory perature gap in the breaker to verify the accuracy of the mouth - adjustment elements of the ignition, listening to the engine in motion zhenii car. Customization of the installation of ignition must be de - lat-octane proofreader, without weakening the screw attachment to block. It's enough to turn the nuts, turning the one - well, wrapping up another. Moving the needle on one de - lenie scale octane-corrector corresponds to a change installation of ignition at 2 °, counting on the crankshaft. If you turn the distributor body clockwise Fig. 168. Installing the engine crankshaft in position at top dead center (ie VM) on the met - Nike flywheel. Fig. 169. Scheme of high-wire connection second voltage from the distributor to

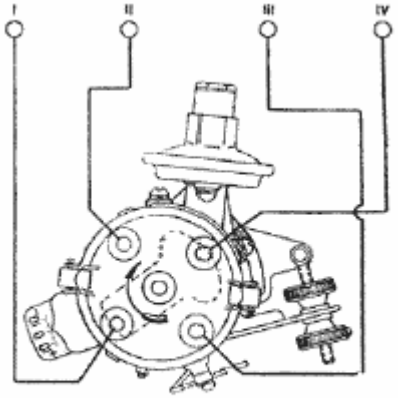

Фиг. 169. Схема соединения проводов высокого напряжения от распределителя к свечам (I, II, III и IV - порядковый номер цилиндров).

candlelight (I, II, III and IV - the serial number of cylinders).
installation of ignition will be later, counter-clockwise - earlier. The verification of the engine at the final fine-tuning the installation of ignition must be done follows: warm the engine up to temperature 70 - 80 ° C and moving on a straight transfer of the ditch - Noah road with a speed of 25 - 30 km / h, acceleration to give the car sharply to the refusal by clicking on the throttle pedal. If It will be

observed small and transient detonation (erroneously called the driving - sentatives of "knocking fingers"), the installation of ignition timing is made correctly. With a strong detonation fol - blows to turn the distributor body on one scale division octane-corrector clockwise. When complete absence of detonation to turn the distributor body counter-clockwise as the one de - lenie. If necessary, you should check again to make the installation of ignition. You should always work with the installation of ignition, which provides high load engine only lay - kuyu and rapidly disappearing detonation. With too early ignition, when heard a strong detonation, can be breached cylinder head gasket and can fold up the valves and pistons. When too late ignition sharply rising fuel and there is a loss of throttle response. Engine overheats, especially the exhaust manifold. If the engine was removed oil pump, then before installing it in place and should be removed distributor. Then, guided by the section "Lubrication", install oil pump in place. Then install the distributor and the ignition. Should strictly adhere to the order of installation oil pump, since improper installation can not be properly installed on the ignition.

LIGHTING SYSTEM

In a lighting system GAZ-69 and GAZ-69A includes two lights, two front position, turning headlights, tail lights, lamps, lighting equipment, lamp passenger, hood and portable lamps. Management carried out by appropriate lighting on / off switches and switches, as described in section "Controls".

LAMP

In the front fender lights installed two rows of windows such FG2-A2. The headlights are lighting the way area, located in front of the car. Unit lights in are shown in Fig. 170.

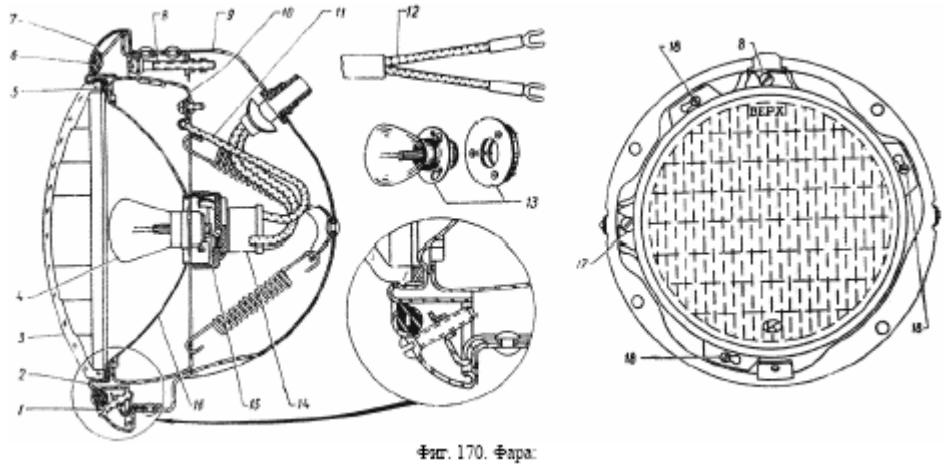

Фиг. 170. Фара:

Fig. 170. Headlight:

1 - screw facing the rim, 2 - bezel mounting glass and optical element, 3 - glass (lens), 4 - two-week Vai lamp, 5 - glass washer, 6 - lining the rim, 7 - facing the rim, 8 - screw to adjust the lights in a vertical plane STI, 9 - housing, 10 - adjusting ring optical element, 11 - lead to the «mass», 12 - wires 13 - double strand lamp with re - hodnikom (set temporarily in place of the lamp 4), 14 - Kolodochka with wires, 15 - cover with contact, 16 - Reflector, 17 -- screw to adjust the lights in a horizontal plane, 18 - screw rim glasses. Each lamp has: Building *9,* polurazborny optical element with flanged lamp *4* or *13,* the mouth - total employment to adjust and rims *2* and 7. Optical polurazborny element consists of steel reflector *16,* covered with a thin layer aluminum polish sublayer, glass diffuser 3, flanged lamp *4* or *13,* and cover with special Noah plug *15.*

At the fork is placed special Kolodochka *14,* from which wires go into the connection panel, installed on the mud flaps of the wing.

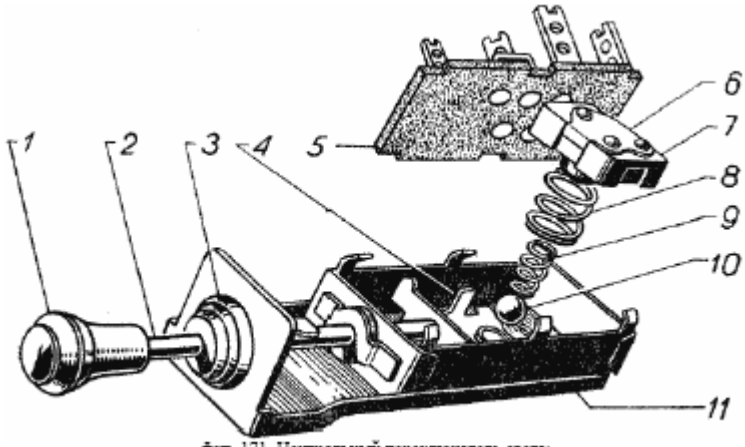

Фиг. 171. Центральный переключатель света:

Fig. 171. Central light switch:
1 - pen, 2 - stem, 3 - nuts, 4 - Bottom Bracket, 5 - contact the panel with the contacts, 6 - slider, 7 - insulator slider, 8 - EPAM - on insulator, 9 - spring fixative ball 10 - ball fixative, 11 - body.

Flanged tube *4* or *13* with krepton-senonovym Content has two filaments 50 and 21 of the candle. Lower filament lamp of 50 candle is located in focus of the reflector and produces a strong beam of light (deep light). Upper filament in the 21 candle is you - Shae horizontal axis of the reflector and gives a weaker beam of light directed downward (low beam). The inclusion of front headlamps and carried central light switch type P6-B2, mouth - assessed for the dashboard, left of the panel instru - ditch. Device central switch for the light - are shown in Fig. 171.

The central switch has three provisions Nia:
1 - off,
2 - includes front and rear lights,
3 - integrated headlights and rear lights. Switching the lights on "passing" or "distant" light carried footswitches light type UGC is mounted on the clutch pedal. Clicking on the foot switch rod productivity ditsya switch headlamps. When the "Dal - it "light on the dashboard lights up signaling lamp. Footswitch device shown in FIG. 172. Central and foot switches light operation does not require special care for themselves.

Care for the headlights. Care for the headlights is periodic inspection of the headlamps adjusting, replacing faulty bulbs and removing dust from the case lights. After replacing the lamp should check the regula - perature headlights. When dust on the surface of the reflector it should be removed without disassembling the item. Dust with reflection Admirers removed by thorough washing element water with the help of cotton wool. After washing element fol - blow dry at a temperature of 16 - 20 ° C in overthrow - the position (mirror down). Every 6 thousand kilometers vehicle fol -

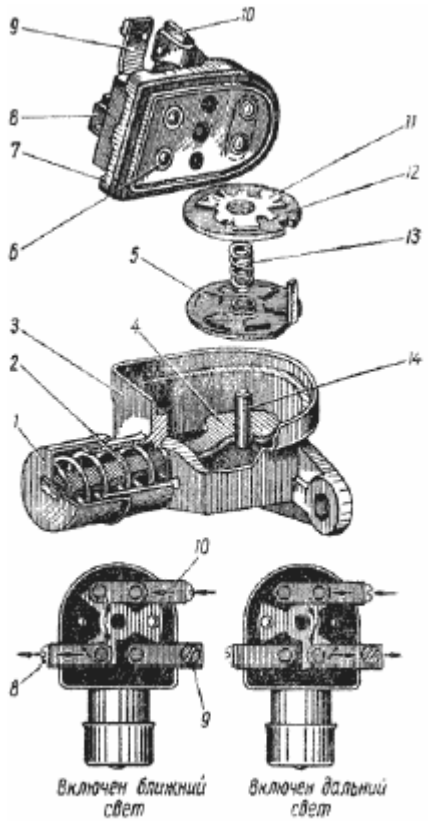

Фиг. 172. Ножной переключатель света фар:

Fig. 172. Footswitch headlamps:

1 - cap 2 - spring, 3 - body, 4 - rod, 5 -- ratchet, 6 contact, 7 - insulator with a gasket, 8 -- terminal beam, 9 - terminal beam, 10 - terminal supply, 11 - rolling contact, 12 -- Insulator washer, 13 - spring 14 - axis.

blows to verify the reliability of the connection of all wires, as well as the reliability of the connection of the wings with a body car. The voltage measured at terminal "distant" light fork element in the lamp body, must be within 11,5 - 12,5 volts, while the "distant" light and the engine is running at medium speed. If the voltage exceeds the specified limits, check the adjustment of the relay-regulator purity and reliability of the connection wires and wings with the body.

Repair lights. Changing the lamp burned-through hole, a closed plastic lid. To remove the cover should be slightly pressing on it, turn all the way counterclockwise, then *2* off. Before the change burned-lamp with its cap to remove dust and dirt. Cracked or damaged lens should be replaced immediately to avoid contamination of the reflector. When replacement of the lens optical element must be removed from the car, for which you want to remove outdoor - lished and inner rims lights and disconnect the wires connecting the pad. Consistently bend the teeth of the reflector and carefully remove the damaged lens. Remove the rubber gasket and align the teeth with pliers. Place the gasket in place, install new lens and zavaltsevat teeth on the device shown in FIG. 173.

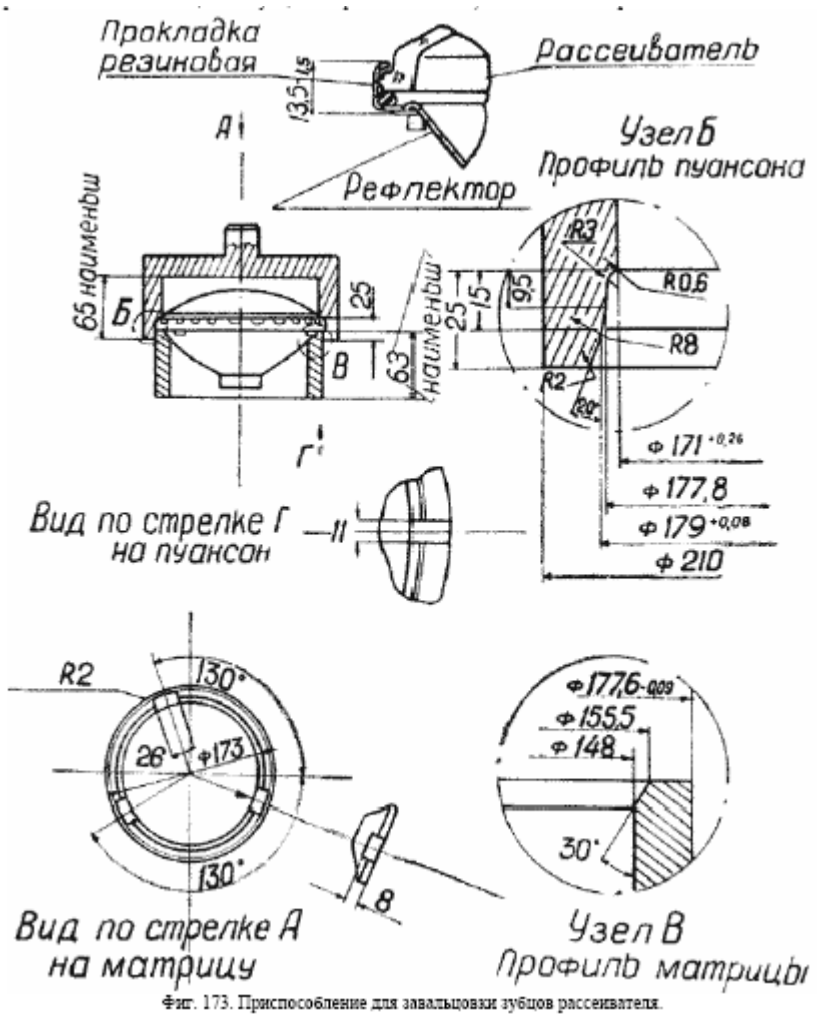

Фиг. 173. Приспособление для завальцовки зубцов рассеивателя.

Fig. 173. Device for rolling peaks of the lens. In exceptional cases rolling by hand with pliers. Hand rolling is done by successive cautious podgibki diametrically pro - oppositely teeth. The manual rolling teeth alignment is not necessary. In the process of changing the lens is forbidden to touch the reflective surface of the reflector (on - razhatelya). When repairing lamps can be used headlights from cars M-20, GAZ-51, GAZ-63, as well as optical sky element from the headlights ZIS-150 and others.

Adjusting headlights. Headlights must be adjusted very carefully, otherwise the strong lamp headlights will dazzle oncoming vehicles and thereby contribute to accidents. In meetings to re - nected lights on the "near" light. To adjust the headlamps must:

1. Set in front of the car unloaded screen at a distance of 7,5 m and remove the rims at both headlights.

2. Add light and acting foot light switch, make sure that connections are made correctly and in both headlights light up simultaneously filament "distant" or "passing" of light. 3. Insert "further" light, and covering one of the headlights, install another screw pickup so that center of the light spot on the screen located, as shown in FIG. 174.

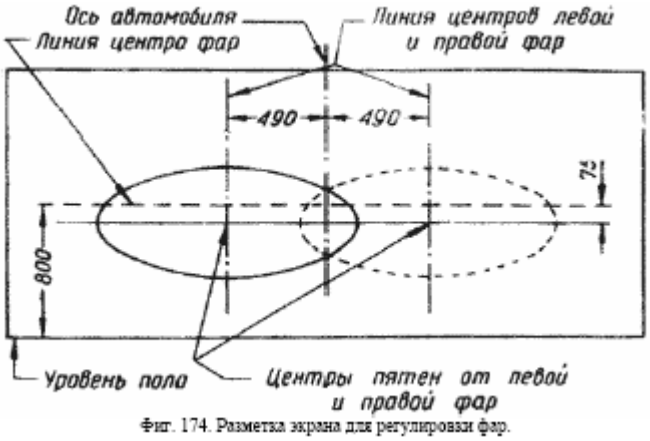

Фиг. 174. Разметка экрана для регулировки фар.

Fig. 174. Partitioning of the screen to adjust the headlights.

4. Similarly, install a second lamp, observing that the upper edges of the two light spots were at the same height. After this, rims put on headlamps and check adjustment.

TECHNICAL DATA PAR Type FG2-A2 Lamp A38 21X50 candles The lowest intensity element in "far" light 16200 spark Lowest intensity element in the "near" the light 6000 candles A useful angle of horizontal 18 ° min vertically 6 ° min

FRONT

Position type FP3-in with trehsvechovoy lamp are to denote the dimensions of the car when parking at night and when driving on lighted streets. Position established on front wings. Device front position shown in FIG. 175. During the operation to monitor matured - tion of front to the wings and serviceability lamps. Position includes a central switch light.

BUTTERFLY LAMP

To further illuminate the road when passing or sharp turns on the car is turning lamp type FG16. The device lights shown in FIG. 176. Estab - turning lamp on the left side near the windshield on the special bracket. Turn lights carried py - Coy through a hole in the sidewall of the tent. Faro can be rotated in any direction, but not re - Komenda rotate the lamp a few times around the axis. Included,

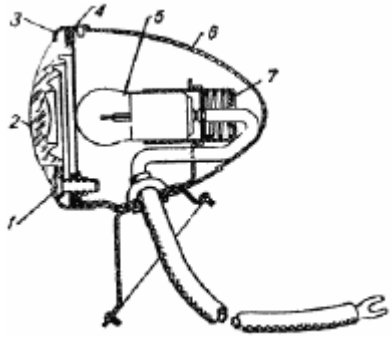

Фиг. 175. Подфарник:

Fig. 175. Front position lamp:

1 - rotor, 2 - glass, 3 - ring 4 - gasket, 5 - -- lamp, 6 - body position lamp, 7 - chuck.

chaetsya turning lamp separate switch-type P19, located on the left strut chuck near socket outlet in a portable lamp. The device of the switch shown in FIG. 177. Care turning lamp is similar to the care of the front headlights. Periodically, it is recommended to lubricate the hinge lights solid oil.

REAR LAMP

Rear lamp type FP13 is installed on the rear wall of the body and serves to illuminate the registration sign, designation of dimensions of the car and to warn the driver behind the ongoing transport of traf - being able to.

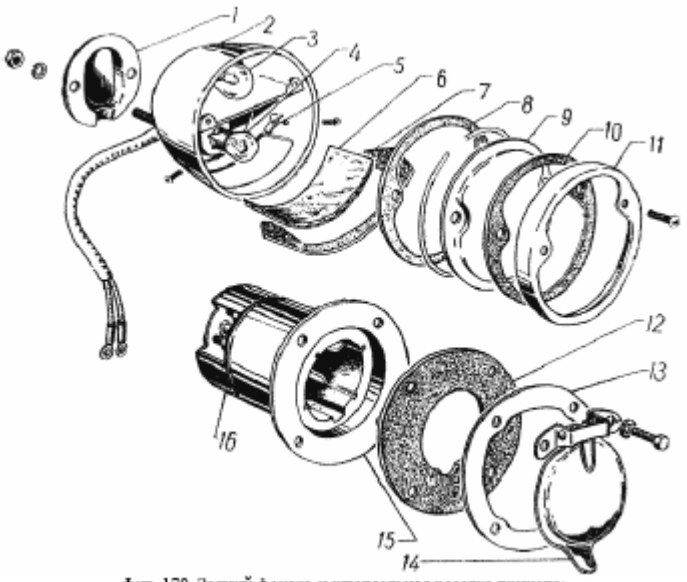

Фиг. 178. Задний фонарь и штепсельная розетка прицепа:

Fig. 178. Rear lamp socket and the trailer:

1 - cover terminals, 2 - housing, 3 - light bulb «stop», 4 - marker light bulb, 5 - glass holder, 6 - Glass Lighting registration sign, 7, 8 and 10 - gaskets, 9 - Lens (ruby), 11 - bezel mounting glass, 12 - gasket, 13 - adjusting ring, 14 -- cover, 15 - body sockets, 16 - cap terminals sockets.

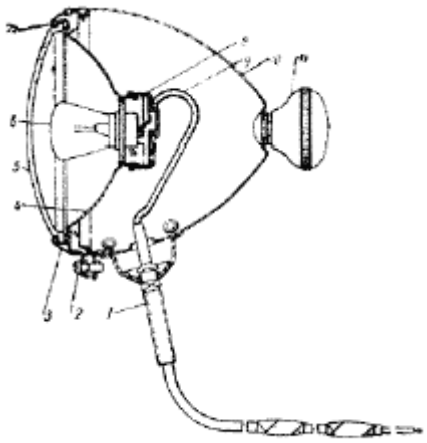

Фиг. 176. Поворотная фара:

Fig. 176. Swiveling headlights:

1 - screw, 2 - pints mounting rim, 3 - about - Doc, 4 - reflector, B - glass, 6 - lamp, 7 - rubber gasket, 8 - cover with contacts, 9 - wire, 10 -- housing, 11 - pen.

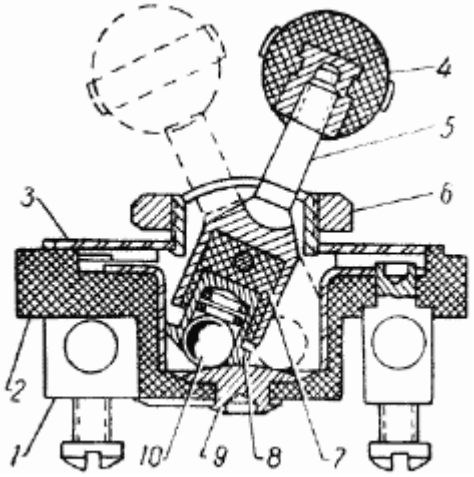

Фиг. 177. Включатель поворотной фары:

Fig. 177. The switch turning lights:

1 - terminal, 2 - housing, 3 - base, 4 - pen, 5 - lever, 6 - Nut, 7 - insulator, 8 - movable contact, 9 - fixed contact, 10 - ball.

Device lamp shown in FIG. 178. Lamp of 21 candle is lit only by clicking on the torus OIML pedal. To activate the lamp in the system of hydraulic brake switch is a special type of VK12. Set - total employment of the switch shown in FIG. 179. With increasing pressure Nia in the brake system above 3.5 atmospheres, the rubber diaphragm click on the puck, which closes the contacts and thus in gives power to the lamp rear lamp. Light switch "stop" is not recommended to disassemble. Vc - tanovlen switch under the body of car, near the main brake cylinder. For illumination plate serves as a lamp in 3 candles, which burns when switching on the front or headlamps. Tail light FP13 is a uniform canopy for all trucks.

LAMP LIGHTING EQUIPMENT

Instruments covered by two lamps on 1,5 candles, pome - schennymi in the case dashboard. In the case dashboard lights are held special ammunition type PP9-in spring - mi holders. Included are lamps lighting devices such as actuators P19, located on the panel instru - ditch. Lamps lit only by switching on the front or headlamps.

LAMP PASSENGER

Lantern passenger type FP12-B serves to illuminate the passenger seat and installed on the panel in - forests near the handrail. Lamp in the lamp is used in candles .1,5. Lantern includes separate switch type P19, located on the dashboard.

Hood LAMP

Hood lamp type PD1 is set to shield chuck and serves to illuminate the engine of - division. On and off hood lamp rotating lever, located on her body. For convenience, the cap hood lamp made swivel.

Portable lamps

Portable lamp type PLTM used for lighting when repairing a car at night. In portable lamp bulb is used in 15 candles. Sockets for the inclusion of the portable lamp located on the left strut Chuck, next to the fuse block. *Applied lamps on vehicles GAZ-69 and GAZ-69A, see p. 257.*

PROBLEM OF LIGHTING AND THEIR ELIMINATION

1. Do not burn the individual lamps. This problem most often caused by blowing the filaments lamp. These lamps should be replaced by new ones. The cause of failure may also be a bad contact in the lamp holder. Most bad contact in the cartridges found in the front and headlamps. In the position lamps do not put tension wires, which passes under the wing, as it mo - Jette cause contact failure in a holder. To ensure good contact in the lamp holder in the headlights should bend spring-loaded contacts and check the reliability of the connection plugs. On plastic cover of the optical element, besides the main two springy contacts, there is a third contact for connection reflector with "mass", this contact should be pressed firmly to the cylindrical part of - azhatelya. Poor wire connection to the connecting panels and switches can also cause termination of one of the lamps. Lack of light in the headlamps can be caused by a malfunction in the central switch, or foot - consignee of the world. Lack of light in the front or rear lamp (marker light and numberplate light sign) may be caused by a malfunction of the central light switch. The lack of light "stop" in the rear lamp during braking can be caused by removing wires from the switch or a hydraulic malfunction. Defective switch or circuit breaker can be easily detected by connecting the wires apart his or connecting terminals of the individual conductor. Damage to a chain or a faulty switch can be easily detected by control - Noah lamps, as you can use a portable lamp with separate wires.
2. Filament lamps frequently burn out. Premature blowing bulbs are usually caused razregulirovkoy voltage regulator or maladjustment in the direction of over-regula - cBhP voltage. In such cases, the relay-regulator is necessary to check, as described in "Relay regulator. Lamps, especially in the headlights, can often fail from vibration when driving on rough roads.
3. The entire lighting system is not working (except the portable and hood lights).

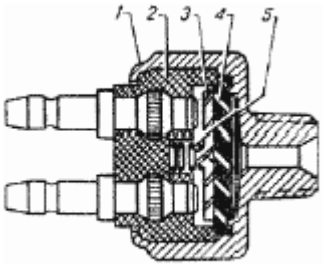

Фиг. 179. Включатель света "стоп":

Fig. 179. A light switch "stop":
1 - body, 2 - insulator with terminals and con - clocks, 3 - contact washer 4 - rubber diaphragm, 5 - spring.

Power lighting system through the heat bimetal fuse. Short circuit in the lighting circuits or appliances OS - vescheniya to fuse goes higher current, which in - grevaet bimetallic plate, and the latter, bending from the heat, breaks the chain of supply. Must eliminate the cause of shutdown fuse and turn it on. To activate the fuse, briefly press its button. Fuse should be included in the switched off consumers. Then, gradually including consumers, make sure to regularly - STI system. If the inclusion of a consumer's pre - keeper again shut down, then in the chain of the consumer is not the mouth - wounding injury. When disconnecting the fuse heard ha The characteristic click.

ALARM TONE

Horn S56-B scales installed on the ad cial arm in front of the radiator. An alarm by pressing button in the center of the steering wheel. Device signal and buttons shown in FIG. 180 and the device button signal - in FIG. 181. When you click the current from the battery through fuse passes through the winding of an electromagnet, contacts, pre - ryvatelya, button and the "mass" of the vehicle returns to accumulate thorn battery. During the passage of current through the winding *12* electro - magnet *10* iron anchor *9,* the bars with stainless steel membrane brane *8* and the cavity *6,* is attracted to the yoke of the electromagnet, and co - nets anchor by clicking on a movable contact breaker, switches the chain. At the time of contact separating interrupts Vatel flow of current in the coil electro - magnet ceases, and the anchor, membrane and resonator under the action of a springy - STVA membrane and springs, located under the rod, return to the initial ing position and the contacts are closed again. Current again goes to the winding elec - tromagnita and anchor with the membrane and re - resonator are attracted to the electromagnetic yoke Nita, and the end anchor by clicking on the mobile contact opens the circuit. Thus pro - come rapid fluctuations anchor and connected - GOVERNMENTAL with the membrane and the cavity. Fluctuations membrane and the cavity causing sound fluctuations in the air, which we hear. For reduce the arcing contacts breaker parallel to them switched capacitor *14* capacitance bone 0.1 microfarads.

CARE Beeps

After every 6 thousand kilometers should check the car mount wires to terminals signal and the signal-to-mount bracket. As required under strong reducing power of sound to adjust the signal re - gulirovochnym screw, the head of which is on the rear wall of the body. If the signal can not be adjusted, it should be sent to the workshop. When operating the vehicle should be taken into account that the signal is designed for short-term work Therefore, to avoid premature wear contact breaker should not use the signal a long time. *Note.* When repairing a signal most of the details, except the winding, can be used - summons from the signal type S52 installed on the car "Moskvich".

TECHNICAL DATA SIGNAL

Type S56-B Volume 110 decibels Current consumption 2.5 Amperes
The number of turns in the coil of an electromagnet 100
Mark the wires and the diameter PELBO Ø 0,57 without isolation GOST 6324-52
The capacity of the condenser 0.1 microfarads

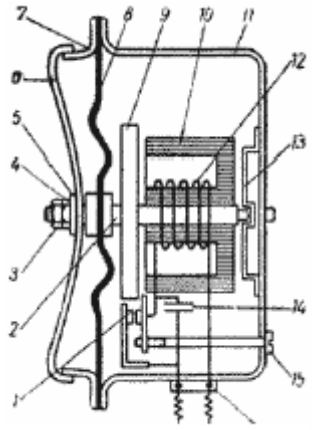

Фиг. 180. Звуковой сигнал:

Fig. 180. Horn:

1 - contacts, 2 - shaft, 3 - Kolpachev - kovaya nut, 4 - nut, 5 - washer, 6 -- resonator, 7 - the outer ring, 8 -- membrane, 9 - Anchor, 10 - electro - nit, 11 - housing 12 - winding, 13 -- Spring, 14 - condenser, 15 - regu - lirovochny screw, 16 - the panel contacts ta.

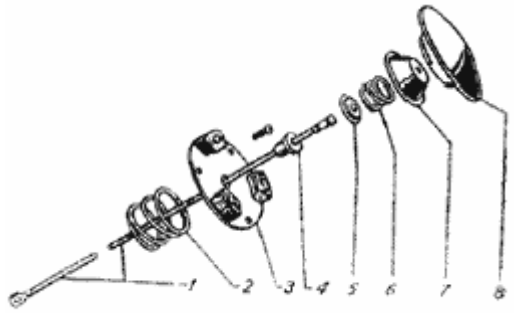

Фиг. 181. Кнопка сигнала:

Fig. 181. Button signal:

1 - button signal wire, 2 - spring contact plate, 3 - con - stroke plate with the holders of a button signal. 4 - insulator, 5 -- contact cup, 6 - Spring, 7 - saddle springs, 8 - button signal.

SYSTEM WIRING AND PROTECTION ELECTRIC POWER

To connect all the devices and units of electric vehicles in the general scheme of note - íÿþò wire low voltage stamps AOL GOST 974-47, and for connecting the battery -- Brand Asol and LDV, section 35 mm 2 . For ease of installation and protection of wires last entwine cotton braided in beam ki. At the GAZ-69, GAZ-69A, as well as the trailer GAZ-704 applies single-wire system inclusion of electrical appliances. A second wire is the "mass" car and trailer. This should be considered when disassembling and assembling cars and install the washer in place of stars, ensure - good connection to the fulfillment of metal parts of the car. Single-wire system reduces the co - lichestvo wiring, greatly simplifies and cheapens the whole system wiring. Such a system requires a bou - Lee attentive care of the insulation of wires and secure fastening beams. In violation of the wire insulation may relate to the "masses" of the vehicle or trailer, causing a short - Kie-circuit, leading to a fuse blowout, combustion of isolation and even to the fires. Fig. 182. Fuse block. When car inspections every 6 thousand kilometers should carefully check the condition isolate and eliminate the causes of possible abrasion of wires. Particular attention should Inspections give clean and reliable connection lugs wires. Wires, even with a minor in vrezhdeniem insulation must be isolated with adhesive tape. In operation must be carefully monitored so that the surface of the wires do not fall oil and gasoline, as they destroy the lacquer and rubber insulation wires. When washing the car wiring bundles wet is not recommended, as it leads to a rapid failure of the cotton braid.

FUSES

In the system of electric cars GAZ-69 and GAZ-69A are applied fuses the two types: fuse block type PR10-B and thermo-bimetallic type WP2-B.

Fuse

The block is installed on the side panel Rack girth on the left side. The device will prevent the block - teley shown in

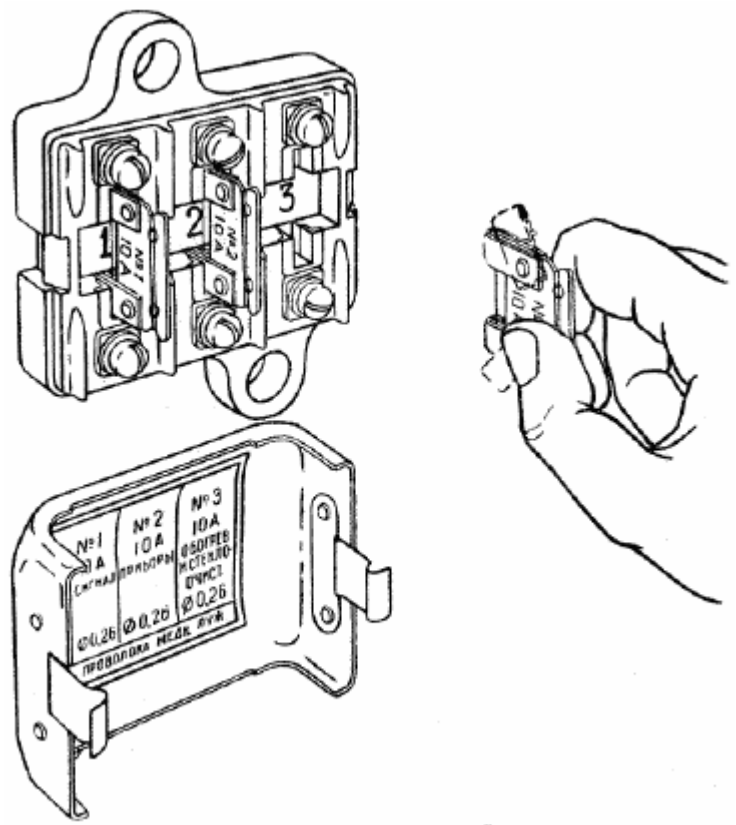

Фиг. 182. Блок предохранителей.

FIG. 182. In block mounted three separate fuse for 10 amps each page - dy. Leftmost fuse protects the circuit *1* alarm and chain swinging lamp. Average fuse *2* protects the food chain of instrumentation and the extreme Rule *3* - The food chain wiper moors and the fan blowing the windscreen. As fuse fuses used tinned copper wire diameter 0,26 mm. Replacing burnt spots made the wire, wound on textolite holder. To replace the burnt insert must remove the holder from the base into different parties pru - zhinnye contacts, insert) in the rack contacts the segment spare wire length 35 mm, bend her con - Qi at 180 ° and by setting the spring contacts in place, insert the holder into the base. Do not stand between the winding wire spring contacts in two or more ovarian - bilities as a fuse can not prevent damage to electrical equipment and appliances
wiring for short circuits in the circuits.

THERMAL FUSE thermo-bimetallic

Fuse type WP2-B is established for the protection of lighting circuits of devices. The device is fuse shown **in FIG.** 183. In the plastic case *2 is* bimetallic plate 3 with the contacts, which she per - roam circuit between terminals. When in the chain, which includes a fuse, the current strength, due to ca - Koi no failure, above 20 amperes, bimetal plate is heated above MPC. When heating the plate above the norm the latter begins to pull in another side and thereby opens the circuit.

In the initial position bimetalliche - Skye plate back button. Included, chenie fuse after removing reasons for increasing the current strength or short - Who branch circuit is short - kovremennym clicking on the button. Included, chat fuse should only be after troubleshooting. The inclusion of pre - dohranitelya with unrepaired malfunc - phases may lead to failure of fuse.

7. To adjust pre - Custody should not be in operation. When failure of the fuse should be replaced.

GAGE INSTRUMENTS AND ALARMS

To monitor the performance of engine lubrication, the temperature of water in the ox - lazhdayuschey system, the state accumulate reflex battery and a number of petrol tank car has control instruments.

Dashboard

All measuring instruments are mounted on a single dashboard, which is being placed on the dashboard above the steering column. At the GAZ-69 and GAZ-69A is installed dashboard type KP12. General view of the dashboard is shown in Fig. 4. In the shield are the following devices:

Speedometer.

Ammeter.

Index of water temperature.
Index oil pressure.
Index level of gasoline.

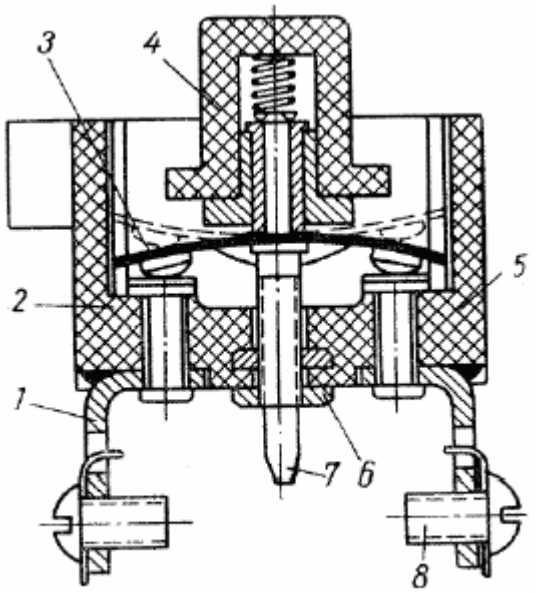

Фиг. 183. Термобиметаллический кнопочный предохранитель света:
1 - клемма, 2 - корпус, 3 - биметаллическая пластина, 4 - возвратная

Fig. 183. Thermo-bimetallic button fuse light:
1 - terminal, 2 - housing, 3 - bimetal plate, 4 - returnable button, 5 - contact, 6 - Hanka, 7 - adjusting screw, 8 - Clemmow screw.

Special bulb limit temperature of water in the radiator. Signal lamp beam.

Lamps used in automobiles GAZ-69, GAZ-69A and trailer GAZ-704

The position of the lamp	Nominal voltage	tion in volts	Co Lich eats in	Intensity at candlelight Marking GOST 2023-50
Headlamps	12	2	50 +21	A-28 or A-38
Tail light	12	1	21	A -26
Tail light	12	1	3	A-24
Front position lamp	12	2	3	A-24
Hood lamp	12	1	3	A-24
Swiveling lamp	12	1	50 +21	A-28 or A-38
Portable lamp	12	1	15	A-10
Flashlight Body	12	1	1.5	A-23
Scutellum devices	12	2	1.5	A-23
Lamp control beam	12	1	1	A-22
Lamp temperature control	12	1	1	A-22

Scutellum devices running complete with water temperature gauges, oil pressure, the level of ben - Zina and the sensor limit temperature of water in radiator. For illumination devices panel has two Lamp for 1,5 candles in a special nests with visors. Below is a description of each instrument shield.

SPEEDOMETER

In the dashboard speedometer installed ty - PA NP-24, which has a turnout Index velocity and the total computer-performed tion path. The rate is a scale from 0 to 100 km / h with a scale division of 5 km / hour. Device spin - dometra shown in FIG. 184. Mechanism pointer rate consists of a permanent magnet *3,* holdfast - ning on the drive shaft *1,* and aluminum compass card *4,* installed on the axis *14,* the upper end is sewn on the arrow *8,* and in the middle hour ty Pressing sleeve *17* with coil spring - Filament *5.* Insi-end hair consolidated condensed structure on the sleeve *17, and* external - on the bracket *16,* case - zhaschem to regulate the tension in the hair factory adjustment speed indicator. Axle *14* is free to rotate in two bearings dents. Ekran *19,* located above the compass rose, designed to increase the magnetic flux passing through the compass rose. Magnetic field lines, intersecting at magnet compass rose, excite it electromotive force. This emerging compass rose electric currents create their own magnetic field. Interaction of a rotating field magnet with a field

compass card creates a torque which carries compass card in the magnet. This moment is balanced by the spiral pru - zhinoy - hairs. Thus the compass rose with the axis and turn the arrow on the corner, is proportional a subregional number of revolutions the speedometer shaft and accordingly the velocity of the car. Total odometer consists of worm gears and associated drums. Drums are on the inside of the rim and the teeth are connected tribkami, placed between each pair of drums on the brackets. On the outer side of the rim barabanchi - kov plotted, at regular intervals, the numbers 0 to 9. The total count is six drums, of which the extreme right shows tenths of a mile, and the color is different from other figures five drums.

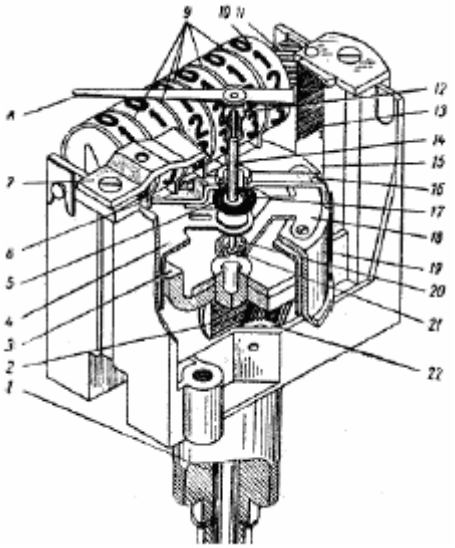

Фиг. 184. Механизм спидометра:

Fig. 184. The mechanism of the speedometer:
1 - shaft, 2 - a worm, 3 - permanent magnet, 4 - compass rose, 5 -- spiral spring (hair), 6 - gon, 7 - bridge, 8 -- pointer speed indicator, 9 - brackets tubes, 10 -- initial drum, 11 - gears, 12-screw, 13 - worm 14 - axis of the compass card, 15 - roller, 16 - Bracket, 17 - bush, 18 - - bearing bracket, 19 - iron casing (magnetic screen compass card), 20 - bearing, 21 - toe, 22 - the sixth thistle.

Maximum total meter reading 99999.9 miles, after which he again begins with testimony zero. For one kilometer traversed path axis of the magnet and magnet, respectively, making 624 rpm. Direction of rotation axis of the magnet from the drive - left. The drive carried to the speedometer flexible shaft GV69 from the transfer case. Flexible shaft GV69 -- collapsible type, ie, its flexible cable from the shell is removed. **CARE speedometer and a flexible shaft** When operating the vehicle should be periodically performs the following operations:

1. Check the reliability of tightening the screws joining the flexible shaft to the speedometer and a distributing co - timidly transmissions. Nuts should be wrapped by hand to failure, with loosening-tips of nicks shell flexible shaft at shaking their hand felt they should not.
2. Check the correctness of installation of a flexible shaft. Flexible shaft speedometer in a car-mount Xia, with smooth curves of a radius of not less than 150 mm. Keep in mind, especially when changing a flexible shaft, that the presence of sharp bends leading to shorten the life of the shaft and, furthermore, may cause oscilla - speedometer needle vibrations and knocks. Therefore, when viewed from a car should check the correctness of mon - tazha shaft. Val must be necessarily fixed brackets and should not have sharp bends (radius less than 150 mm), especially near its end, as a result of excessive stretching of the shaft;
3. Drive roller speedometer is lubricated at the factory liquid paraffin, which soaked wick laid down in the hole on the shank of the device. The hole is closed from above stamped brass cap. Their power reserve of oil that is embedded in the assembly, enough to run about 25 thousand km. Then run the speedometer must be removed from the car, plug in the shank removed, the wick removed from the hole and re-impregnated with liquid paraffin IMP GOST 1805-51. If the plug, shut - schaya hole will be damaged during removal, it should be replaced by a new, chiseled brass.

4. At the factory during assembly flexible shaft GV69 inside its shell lays special thick lubrication, which is designed to work both at low (up to - 50 ° C) and at high temperatures (up to +55 ° C). Under these conditions, the specified grease hardens and does not follow from the shell.

Grease is laid in a quantity sufficient for the duration of the warranty period of service flexible shaft -- 15 thousand kilometers of the car. Upon the expiration of that period, and sometimes earlier, for example, if the automo - Biel systematically working in hot, weather, or if the assembly flexible shaft in the shell laid lubricant is less than the established norm, there is a need to add lubricant inside the envelope. It found on the vibrations of the needle speedometer while driving a car and the sound of a flexible shaft. For lubricant should remove a flexible shaft from the car and disassemble, ie pull the flexible cable from the shell, thoroughly PRE wash rope and shell in kerosene and then dried. After drying, apply a thin cable to layer of grease NC-30, GOST 3275-46, or SOI-54, GOST 3276-46, and carefully inserted into the envelope. When installing the flexible shaft in place should strictly observe the track on which he was laid. After installing the Union nuts shaft must be filled.

PROBLEM speedometer and flexible shaft The most common failure of the speedometer is the sticking mechanism. In such malfunction speedometer should change or submit to the workshop for repairs. In operation often have cases cliff cable flexible shaft. When replacing a shaft to voice - go check the speedometer shaft and the lack of stiffness. This requires a flexible shaft mount by car (the radius of curvature of the shaft must be not less than 150 mm), and before joining the dispensing box, turning the rope several times to make sure there is no seizure. The cable must be free to rotate, Xia hand, and the speedo needle should move away from zero.

Ammeter

Ammeter shows the power charger or discharge current in the circuit the battery. Scale at ammeter two-sided, at 20 amperes with a zero in the middle (20 - 0 - 20), in addition, the scale shows the + and -, Mean + charge (on the right side of the scale), and - discharge (on the left side of the scale). Ammeter is a magneto-electric devices. Interaction field permanent magnet which is a detail of the ammeter with the magnetic field produced by passing current through the brass base unit, turns anchor with an arrow at the different angles to the right or left of the middle position, Niya, depending on the magnitude and direction of current. Ammeter to use care is needed. A necessary, Dimo periodically tighten the nuts on the terminals of the ammeter.

INDEX OF WATER TEMPERATURE

Temperature control is used to control water temperature in the cylinder head engine range from +40 ° to 100 ° C. Temperature control pulse electrothermal type, and consists of a receiver, located on the dashboard and the sensor type TM2 installed in the cylinder head. Schematic design of the temperature indicator shown in FIG. 185. The main detail of the receiver a bimetallic U-shaped flat spring *10,* which is wound coil of wire, you sokogo resistance *9.* One end of the spring is attached to the hull of the receiver, another is connected with an arrow *8.* The ends of the coil terminals displayed on the receiver corps. The sensor is a sealed container with a male thread. Inside the container there is also bimetallic spring with winding. The winding of the receiver and the sensor are connected in series. The active layer of a bimetallic spring probe positioned so that when heated spring elec - electrically shock, passing through coils, it rises up and breaks the chain. Chilled EPAM - returned to its original position and closes the circuit. The process of breaking and Deputy Chairmen, Qiniyye circuit is repeated many times, and in the chain is set a certain mode of - pulse current. When the water temperature in the cylinder head bimetal spring cools more period of time than at low temperature. Consequently, the number of pulses with increasing temperature ry per unit time decreases, and consequently reduced and the amount of current in the circuit windings. With on - decreasing temperature the number of current pulses per unit time increases and the current in the circuit windings increase, will achieve. Change the value of the current causes heating of the different bimetallic spring in the receiver, and she said, bending from the heat, set the arrow in a certain position. Index temperature only works when the ignition key. When ignition is turned off arrow cursor to the right temperature is set a few de - PRINCIPLES FOR GOOD GOVERNANCE 100 °. Due to the fact that the receiver and sensor temperature indicator designed to work in a circuit with a voltage tion at 6 volts, for their normal work in a circuit with a voltage of 12 volts included incremental resistance lenie, which is set next to the receiver or the receiver. Index of water temperature does not require any maintenance. Repair of the receiver and the sensor in operation -

onnyh conditions impossible. Therefore, in the event of device failure should be checked only the electric cal connections, the integrity and serviceability of the fuse wiring and, if they are in order to change the reception - nickname or sensor. Serviceability index of water temperature can be checked by comparing the readings of the device and mercury thermometer. To do this, unscrew the sensor device to lengthen with additional segment of his cable, connect the instrument to individual body segment of the wire to terminal "M" (mass) of generation - torus and the sensor and the mercury thermometer in the jar with boiling water, placing them closer to its center (the distance from the walls). Terminals at the same time immersed in boiling water should not be. Then compare the instrument readings and mercury thermometer, slowly bringing the temperature of water in bank to top up the required quantity of cold water. The error in the testimony of the device at 100 ° to 4 ° C at 80 ° to 5 ° C and at 40 ° C to 10 ° C is permissible. If the error of the instrument above these limits, it is necessary to change the sensor in the case When checking it with the receiver of another car (in the same manner as described above) confirm his fault. If the fault detector with no confirmed, it should replace the receiver.

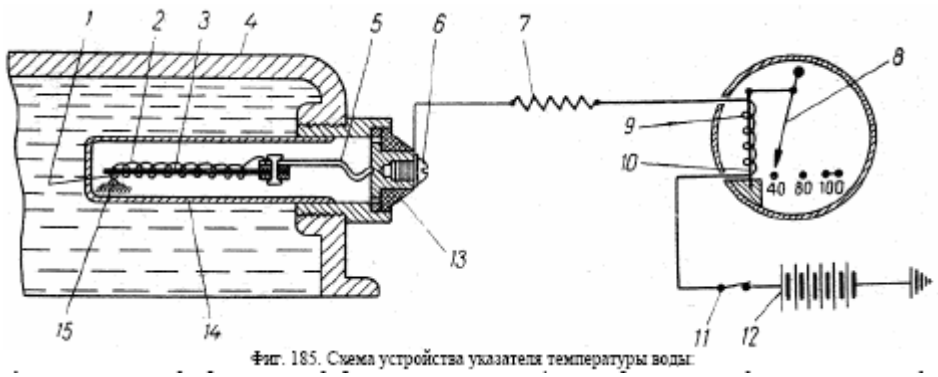

Фиг. 185. Схема устройства указателя температуры воды.

Fig. 185. Scheme of the device pointer water temperature:
1 - mobile contact, 2 - coil sensor, 3 - bimetallic plate, 4 - cylinder head, 5 - printing plates, 6 -- pin screw, 7 - additional resistance, 8 - Arrow receiver, 9 - receiver coil, 10 - bimetal plate 11 - ignition 12 - Rechargeable Battery, 13 - insulator, 14 - sensor body, 15 - stationary contact.
During repairs of electrical wiring or changing devices (receiver and sensor) can not tolerate any - deal about the closure of their terminals. Even a short-circuit leads to loss of instrument adjustment and longer (5 - 8 minutes) can lead to burnout winding. Must continuously monitor the temperature and water level. Starting and warming up the engine when on - presence of water in the radiator, used by some drivers in the winter, causing exit Water temperature sensor failure.

INDEX OF OIL PRESSURE

Pressure gauge is designed to control oil pressure in lubricating system of engine. The device is designed to measure the pressure in the range from 0 to 5 kg / cm 2 . Index Oil pressure pulse electrothermal type, consists of a receiver, is - tion on the dashboard, and the sensor (type MM4, installed on pre-filter). Receiver UCA - refractive pressure on the structure is the same with the receiver indicator of water temperature and differs only scale. The design of the device is shown schematically in Fig. 186. Oil under pressure enters through the sleeve *1* in the cavity between base *8* and the membrane *2*. K-ce fray of the membrane is pressed against a curved bronze plate *9*, carrying on the free end of contact. Dru - goy contact placed on the free end of a bimetallic spring, the opposite end of which motionless. In the spring is wound winding insulated wire of high resistance, one end of which is welded to the spring, and the other through the screw *4* is attached to the receiver. Apart from the winding-bime full metallic spring 5 is connected to the screw *4* parallel chains through additional resistance *3* placed inside the sensor.

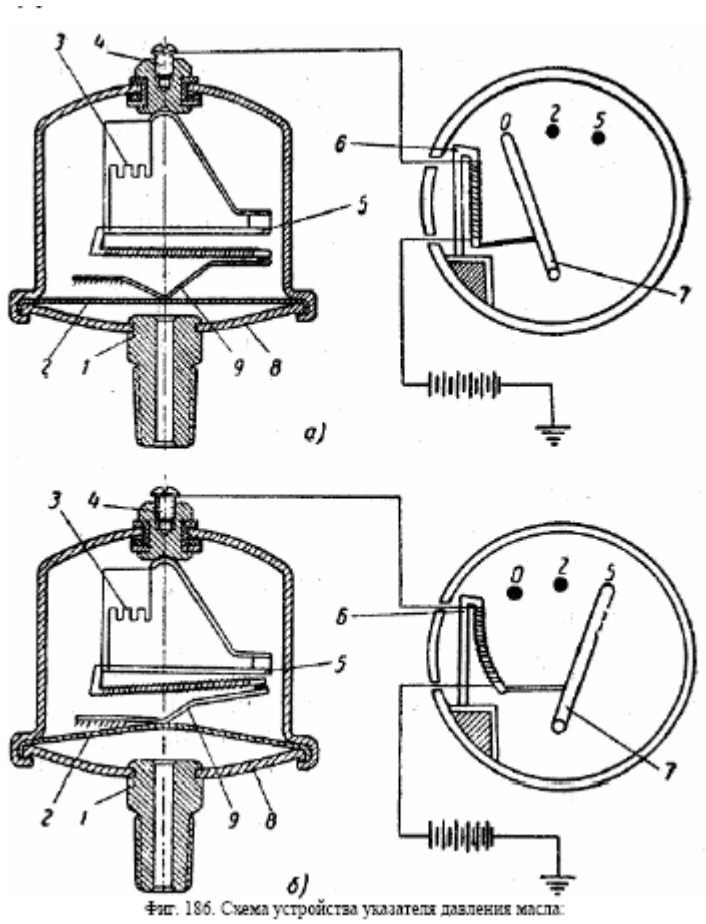

Фиг. 186. Схема устройства указателя давления масла:

Fig. 186. Scheme of the device pointer oil pressure: and - position of parts in the absence of pressure, b - position of parts at maximum pressure, 1 - fitting, 2 - membrane, 3 - to - additionally resistance, 4 - screw, 5 - bimetal spring probe, 6 - bimetal spring receiver, 7 - hands, 8 -- base, 9 - Spring plate.

When the device under the action of the current sensor is heated bimetal spring and Izgi - bayas away from the membrane, opens the contacts. Cooled, it again closes the contacts, etc. If oil pressure is low, the sensor contacts are compressed slightly, and most of the time open. Bimetal -

Ceska spring receiver is heated slightly and only slightly removes the arrow from the starting position (Fig. 186 *a).* When the oil pressure force, compressive contacts increases and requires more in - Grev bimetallic spring sensor and the time to contact us opened up. Contact majority time are in the closed position, and therefore the current in the circuit increases, and consequently heating of the bimetallic spring receiver increases. Arrow of the last great a departure from the outcome - tion position (Fig. 186 *b).* Just as a pointer in water temperature between the sensor and receiver oil-pressure gauge included Ceno quenching resistance, located on the dashboard of the terminals of the receiver or in the under - emnike. To ensure adequate accuracy of the sensor readings of the device must be installed on the moving - body in such a way as to present in its body the word "top" was at the top. Oil pressure gauge does not require any maintenance. Repair of the receiver and the sensor in the operational conditions impossible. Therefore, in the event of device failure should be checked only the electrical connection, the integrity and serviceability of the fuse wiring and, if they are in order, to replace the receiver or sensor. If the oil pressure gauge readings indicate a malfunction of the engine oil system, before proceeding to repair the engine, it is recommended to check whether your device. In absence - Wii control device for carrying out the audit can be used in a car, a co - torogo serviceability of the oil system and a manometer is not in doubt. The check must be done in

follows:

1. Put both cars side by side and see the testimony of their gauges at an average speed motion gateley.
2. Open the hood and connect a segment of wire terminals "M" (mass) of the two-generator ditch.
3. Disconnect the wires from the terminals of sensors.
4. Attach with an additional segment of the wire terminal of the first car with the sensor wire sensor of the second (control) car.

5. Start the engine of the first car and at an average speed compare readings con - trolnogo car with the readings during testing to paragraph 1 (with my receiver).
6. In the same way, reconnect the wires, respectively, to check if the work of control engine at high revs the pressure in the oil system on the receiver of the first car (in the remedial ARRANGEMENTS whom there is doubt) and compare the testimony of the receiver with the testimony received at inspection under paragraph 1 (with its receiver). Based on the results of testing on items 1, 5 and 6, to change, if required, the sensor or in - emnik. All the above on non-circuit terminals indicator of water temperature also applies to oil pressure gauge. Oil pressure indicator operates only when the ignition ganii.

INDEX LEVEL OF GASOLINE

Index level of gasoline - electromagnetic and only works when the ignition key. Device consists of a pointer located in the dashboard and the sensor type BM-18, located on the benzo - new tank. Scheme of device level indicator of gasoline is shown in Fig. 187.

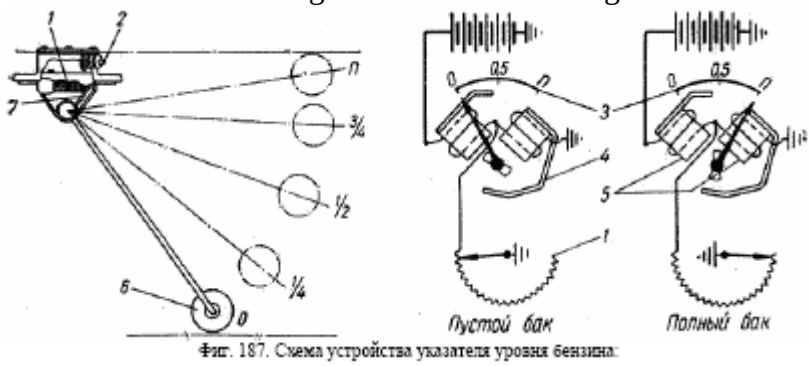

Фиг. 187. Схема устройства указателя уровня бензина:

Fig. 187. Scheme device level indicator of gasoline:
1 - rheostat, 2 - terminal, 3 - Scale 4 - shoe electromagnet, 5 - solenoid, 6 - Float 7 - the slider.

Sensor index represents rheostat *1*, mounted inside a metal box, inserted above the hole petrol tank and privernutoy to the last screw. One end of the winding resistors connected to the "mass", the other - with the wire windings coils ukazate - la. By winding slide rheostat slider *7*, fastened to the upper end of the rod the float *6*, swim - schego on the surface of gasoline. Slider from the masses" is not isolated, so depending on the level of benzo - on the slider in the tank completely or partially displays the resistance of resistors. Index consists of two coils located at 90 ° to each other. At the point of intersection geometric axes of the coils on the axis of an iron anchor with an arrow. Scale consists of a pointer five divisions. Against the extreme and middle divisions of the scale of the digits *0* (tank empty) and the letter *P* (half - HYDRATED tank). Winding coils left pointer is included in series "battery - rheostat" and winding Right coil - parallel resistors. Direction of turns of windings is satisfied so that the same name in Luce both coils are located respectively above and below. At the upper ends of the cores of coils an iron shoes, serving to the magnetic field generated by coils. Job level indicator of gasoline is as follows. With an empty tank, the float is omitted down, and the rheostat slider is in the right position, thus shutting down the resistance resistors, with current in the coil winding right does not go nearly as well as damper resistors she shorted to "mass". Thus, almost all current flows through the coil winding left, resulting in an anchor under the magnetic field is rotated in the direction of this coil and the arrow pointer becomes against the numbers *"0"* scale instrument. With full tank, the float is the highest position at which the slider is fully includes the resistance of resistors. Therefore, the current mainly passes only through the winding right coil resulting anchor under the influence of the magnetic field of this coil turns and the needle pointer is against the letter *P*. In case of partial filling of the tank with gasoline, respectively, the situation in the float circuit switched resistance of the rheostat, and current at the same time enters the winding two coils. This If situation yakorka, and hence the arrow pointer is determined by the combined action of mag - magnetic fields of both coils, depending on the ratio of which (depending on the level of petrol in the tank) arrow pointer occupies a particular intermediate position between *0 and P* scale of the instrument. Index level of gasoline does not require any maintenance. In the event the device fails to be pro - believe the electrical connections, serviceability of the fuse and wiring and, if they are in order, change pointer or a rheostat. In case of defect or the food chain (disturbance of the electrical connections) with the arrow - boron in the ignition remains fixed (to the left of division *0* scale). Malfunction or a chain of resistors is the position of the arrow to the right of the instrument - Nia *P*

scale, regardless of the amount of fuel in the tank. Warning. It is important for the repair wiring or changing devices can not tolerate any - good deal about: a) circuit terminals pointer; b) confusion The ends of wires attached at its terminals; c) confusion The wires were their accession to the connector panel, located on the dashboard of the body, since in these cases inevitably burn resistance of resistors and the sensor goes down. Validation evidence of the level indicator of gasoline can be made by observation the status of the instrument needle during filling or emptying the petrol tank dimensional dishes. If the error of the instrument readings above 10%, then you must change the receiver or sensor. To determine which parts of the device to be replaced (the receiver or sensor), in the absence of con - trolnogo resistors, you can use the same way as described in the "oil pressure indicator, device with another car, the accuracy of the testimony which corresponds to the norms. To do this: 1) as well as checking the oil pressure indicator, put two cars side by side and connect segment of wire terminals "M" (mass) of generators; 2) Disconnect the wires from the terminals sensors (rheostats). Attach with additional wire segment terminal sensor of the first car with a wire gauge of the second (control) of the car and pro - monitor Monitoring instruments during filling or emptying the petrol tank. Applying the results of verification, to replace the device or sensor. If the error of the instrument at all points of the scale uniformly understated or overstated uniformly, then device can adjust the float arm podgibkoy resistors.

ALARMS Signal lamp limit temperature of water in the radiator. The dashboard is set signal lamp with a green lens limit temperature of water in the radiator. In the upper radiator tank set limit temperature sensor type MM7. When the water temperature in the radiator above the 92 - 98 ° C signal lamp lights up. Sensor device shown in FIG. 188. Bimetal *4,* placed in sealed cylinder as the temperature rises above normal bends, contacts *3* are closed and the lamp lights up. In the case of a car ignition lights you must stop and remove the cause that caused the overheating (weakening of the fan belt, excessive closing blinds or a warm hood, etc.).

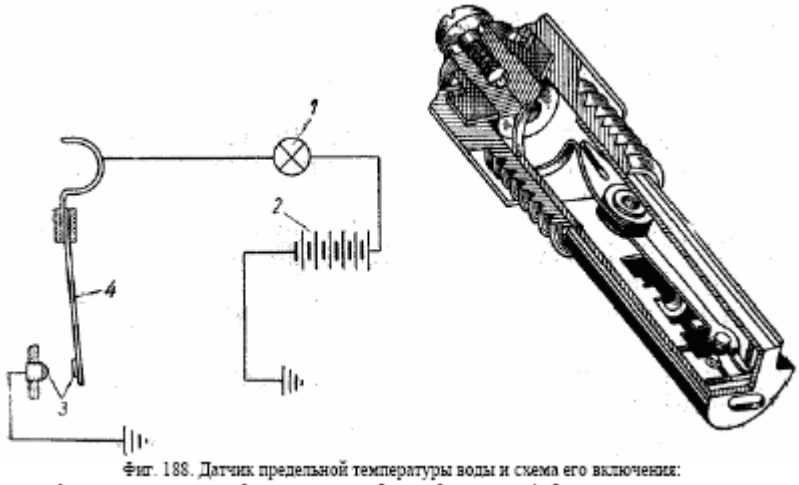

Фиг. 188. Датчик предельной температуры воды и схема его включения:

Fig. 188. Maximum water temperature sensor and a roadmap for its inclusion:
1 - control lamp, 2 - Rechargeable Battery, 3 - contacts 4 - bimetallic plate.

If the cause of the overheating was excessive closing blinds, the motion to suspend should not be. Signal lamp can light up and the parking lot, immediately after the stop. In this case, the motion You can resume, without waiting until the lamp goes out, as the lamp ignition caused by local overheating, CMV by interrupting the circulation of water. When resumes water temperature quickly level off to normal and the control lamp goes out. Signal lamp limit temperature of water in the radiator works only when the ignition ganii.

Signal lamp "distant" light. On the left side dashboard indicator lamp installed "Distant" light. When you turn on headlights in the "distant" light signal lamp lights up.

Accessories WINDOW

At the GAZ-69 and GAZ 69A for cleaning the windshield from precipitation and dust-os tanovlen electric wiper type SL26 with two brushes. Wiper is set to frame of the windscreen. The device of windshield wiper shown in FIG. 189. Electric brush resulting in a variable - rotational movement through the worm gear, rack or crank and transmission system of levers and rods. Switching the wiper motor is carried out switch on the re - duktore. When operating in every 10 - 12 thousand kilometers should lubricate all the friction surface mass Scrap IMP GOST 1805-51. Gear housing must be filled

in 2 thirds of the volume of grease NC-30, GOST 3275-46. The same cardan shaft is covered with grease. Partial disassembly and subsequent assembly of gear you should:

a) when the clutch with the gear rack drive axis of the third tooth brush from the center of rotation of Rey ki combined with depression, located against the slot gear. *Note.* Reducers in the latest releases rack-transfer rod replaced, it should into account when disassembling.

b) provertyvaniem worm by hand to check the ease of travel and the absence of jamming worm pair and meshed with the rack gear drive axis brush.

a) check the ease of the axes of the brushes and the absence of jamming and distortions in the rods.

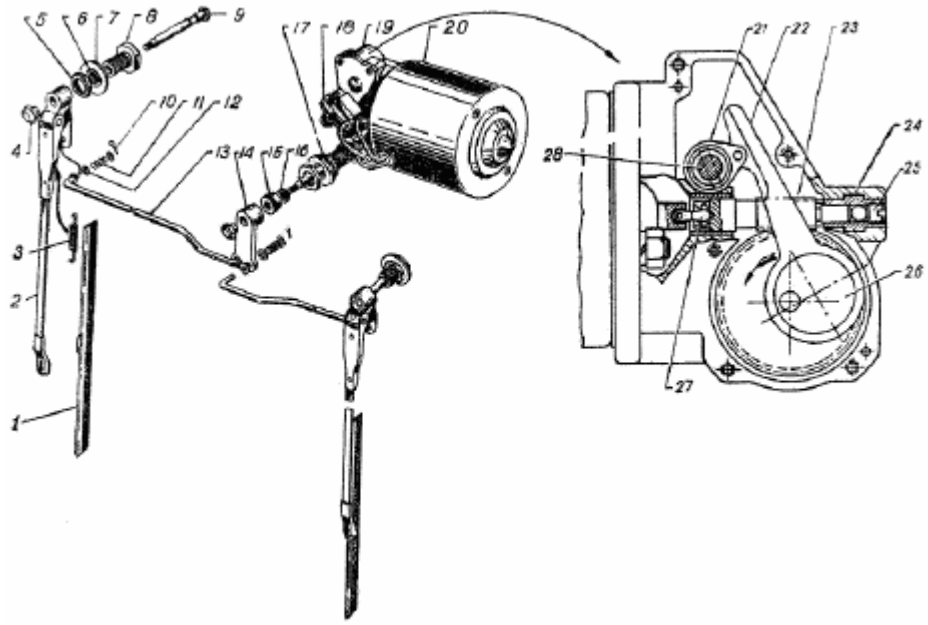

Фиг. 189. Стеклоочиститель:

Fig. 189. Windscreen:

1 - brush, 2 - leash brushes, 3 - spring, 4 - nut fastening leash, 5 - nut, 6 - snap ring with seals, 7 - washer, 8 - vtul - cc, 9 - axis, 10 - pin, 11 - spring 12 - washer, 13 - rod, 14 - lever, 15 - cap nut, 16 - gasket, 17 - rubber gasket, 18 - switch, 19 - reducer, 20 - motor, 21 - lead, 22 - connecting rod, 23 - a worm, 24 - bearing, 25 - adjusting screw, 26 - cher - vyachnoe wheel, 27 - cardan shaft, 28 - axis of the drive. Correctly assembled wiper makes 45 double strokes per minute and consumes a current of not more 1.3 amps. In this effort brushes should be 100 - 120 g each.

ELECTRIC FAN rinsing WINDSCREEN

Fan blowing the windshield is rotated by an electric motor type ME6-D Towering Stu 4 watts. Electric bipolar, a coherent excitation. The device of the electric motor shown in FIG. 190. Anchor electric motor *3* rotates in the two self-aligning bronze-graphite *bushings, 5* impregnated turbine oil. In the bush wearing felt washer *6,* which contain a reserve of lubricant on the lifetime electro - motor. Brushes *10 is* installed in boxy holders *13* and pressed to the cylindrical collector clamps. Motor housing split and countersigned by two screws. To activate the electric motor has a switch-type P24-B installed on the panel instru - ditch. The switch has the additional resistance, with which you can reduce turnover electric motor. During the heating of glass electric hot air should include long speed only when necessary or at the beginning of heating, and then move to the reduced speed. During the operation the electric motor requires no maintenance.

TROUBLESHOOTING ELECTRIC AND THEIR ELIMINATION

During operation, there are instances when the anchor, the electric motor begins to rotate with a small speed or stops spinning altogether. This may be caused by short circuit between the collective Torney plates, due to accumulated dust from between the brushes. In this case, you must remove the electric motor and clean the interstices between collector Pla Stina from dust with a wooden stick, then the collector and wipe the brush holders and pro - blowing compressed air. During the assembly of electric connectors Cover should be placed in the *same* position in the co - torus, they rested in their shift at 180 ° is not allowed. Putting an electric motor, should see to it the wires from the brushes did not touch an anchor. If defective and properly assembled electric motor is not working satisfactorily - it should be send to repair shop.

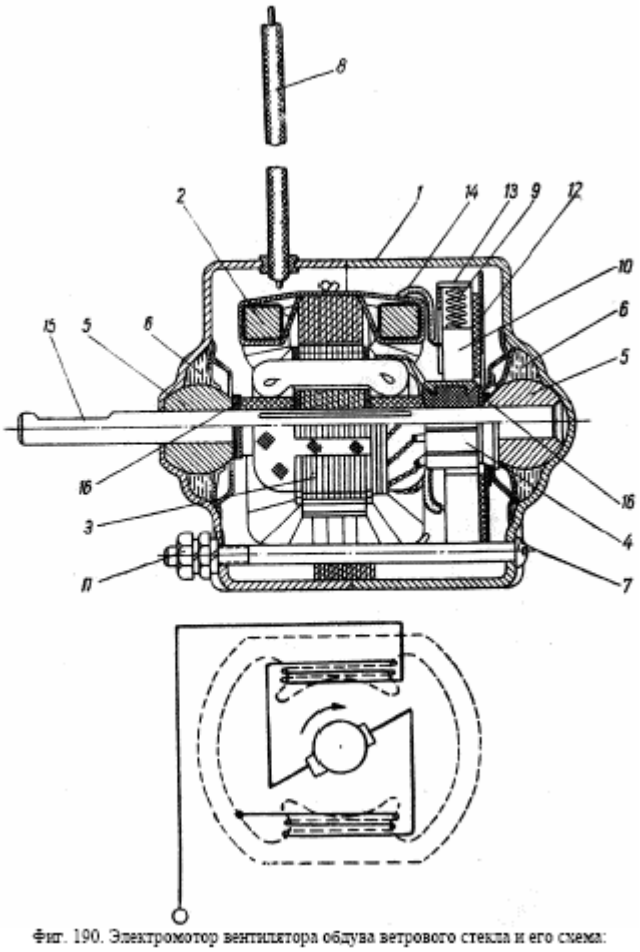

Фиг. 190. Электромотор вентилятора обдува ветрового стекла и его схема:

Fig. 190. Electric fan blowing the windscreen of his scheme:
1 - cover of the collector, 2 - coil excitation, 3 - anchor, 4 - collector, 5 - bronze-graphite sleeve, 6 - a felt washer, 7 - Screw coupling, 8 - wire, 9 - brush spring, 10 - brush, 11 - nut fixing the fan housing, 12 - insulation plate 13 - brush holders, 14 - to wire brush, 15 - shaft anchors, 16 - adjusting washer.
In the absence of electric ME6-D it can be replaced by electric motors installed at Vehicles M-20, and ZIM GAZ-63.

Plug sockets and plugs FOR FOOD TRAILERS

At the GAZ-69, GAZ-69A, as well as the trailer GAZ-704 has sockets type PS10 to enable plug trailer. On the trailer there is a plug-type PS11. If you are towing a trailer plug should be included in the socket. Before removing the trailer from the car plug should be disconnected from the wall outlet and insert a special place on the trailer drawbar. If you disable his hand to take up the plug - nuyu plug, not the cord.

Chapter VI

OPERATION VEHICLE

When operating CAR should be considered:

1. Nuts cylinder heads need to tighten only the engine is cold.
2. Polluted element fine filter oil to promptly replace the new (see section of the engine lubrication system ").
3. Drain water from the cooling system is required in two tap. When water drainage to open the radiator cap (see "Cooling System").
4. Must continuously monitor the temperature and water level. We can not allow the lack of in - dy in the upper radiator tank (exposure tubes), as it causes damage to the sensor temperature water placed in the cylinder head.
5. Engine GAZ-69 and GAZ-69A has a degree of compression equal to 6,2 - 6,5, and for its operation You need petrol with octane number 70. Permitted to use gasoline with octane number 66; in This engine is the later installation of ignition is working satisfactorily, without great loss power and significant cost overruns fuel. Use gasoline with an octane number below 66 TPE - buet install ignition so late that a large loss of power and fuel variance un - bezhny. High efficiency motor is achieved only with proper installation of ignition. Therefore to monitor the proper installation of the ignition and make it in accordance with the instructions in section "Ignition system". If the fuel is so bad that the detonation to eliminate the installation of a later ignition is not fails, the driver can significantly reduce the harm of detonation, strictly observing the tricks away. Detonation tion is reduced or completely disappears with decreasing throttle opening and higher - Institute of the engine speed. Therefore, in the event of detonation to reduce throttle and move to a lower gear. It should be borne in mind that when the mixture is too poor and too high temperature cooled - giving water (over 90 ° C) the tendency for engine knock increases. Driving with a strong, continuous detonation nation totally unacceptable - the engine will inevitably be put out of action (see "fuel-consumption va). The emergence of a detonation after a long life of the engine caused by the accumulation of carbon on the cylinder head, which in these cases must be removed and cleaned.
6. In the case of leaded gasoline must comply with the rules stipulated by the ad - hoc instructions. Leaded petrol is toxic and if mismanaged is very heavy poisoning.
7. It is necessary to monitor the correctness of the opening tip of the main jet carburetor. The needle should be let go at 1 1 / 2 -2 Turnover. Typically, for normal operation of the opening of the needle should be 1 3 / 4 turnover (see "Fuel").
8. Between the carburetor and intake manifold at the factory put protective Droß - selnaya washer. After running it should be removed, accounting for this act.
9. Enrichment of the mixture with suction button at start-up of cold engine should be made sparingly to avoid falling into the suction pipe excess gasoline. The use of suction when starting a hot engine is totally unacceptable. When heating capacity - telya after start button suction to pull very little. In the rear of the suction pipe-INS Dhu have threaded plug to remove excess gasoline in peresose. It should be borne in mind that after starting a cold engine can not give him once great momentum. Cold thickened oil reaches slowly to the bearings, and at high speeds, they can be podplavleny.
10. Efficiency of the engine and wear to a great extent depend on the temperature regime of the engine. Need to maintain the temperature of the cooling water 80 - 90 ° C and did not travel with the ho - lodnym or cold engine. Winter necessarily need to apply a warm cover and cover-Ms lyuzi radiator. Due to the presence in the engine water thermostat during the heating of the engine through the ra - diator does not circulate, so the radiator can be frozen, although the water in the jacket of the engine will hot. Can not also open the hatch heater before the water reaches the temperature of 60 ° C, otherwise the WMS - but freeze heater.
11. During the motion in a fully charged battery ammeter does not show charging. Therefore, the absence of evidence charge is not a malfunction of the generator or relay regulator. *disassembly* and adjustment of the relay-control should produce only a qualified elec - trick.
12. The headlights have a great intensity. To avoid the oncoming car - Lei must follow the correct installation of lights and traveling go to the "closest" light from using the footswitch.
13. Care should be taken serviceability foot hydraulic brakes. The system gidrotormo - call to pour only a special fluid in accordance with section "brake."

Avoid failure of the rubber components of the braking system can not allow to enter She mineral oils, even in tiny quantities (in the use of dirty dishes in the VRE - name refueling). 14. Free running clutch pedal must be maintained within 38 - 45 mm, and the brake pedal - 8 - 14 mm.

15. Cardan joints have needle bearings, so they must be lubricated with liquid oil. Applications for this grease is not allowed.

16. When driving you have to remember that the engine GAZ-69 draws and accelerates better at higher speed. Should therefore be timely to switch from third to second gear, first What car will lose much speed. It should be borne in mind that the first transfer has no synchronizer. Therefore, switching from the secondary - swarm on the first transfer should be made only after slowing down to 5 - 6 km / h (speed ne - shehoda) to avoid breakage of gears.

17. Leaf suspension GAZ-69 and GAZ-69A and their stability can ride with a big rate as good, and on bad roads. But you can not abuse the fast ride - it leads - leads to an increase in onsumption of gasoline and accelerate the wear of the car. High speed on steep turns leads to rapid tire wear. The most economical speed is 30 - 45 km / hr. It should blowing in mind that an increase in speed from 40 to 70 km / h consumption of gasoline increases by 40% (Fig. 191).

18. When driving on dry hard roads need to turn off the front axle. This significantly decrease shield consumption of gasoline and tire wear.

19. Need to monitor the proper pressure in the front and rear tires. Improper pressure tion in the tires when the front axle can cause a great tire wear and damage the car. Fig. 191. Graph of the relative fuel consumption.

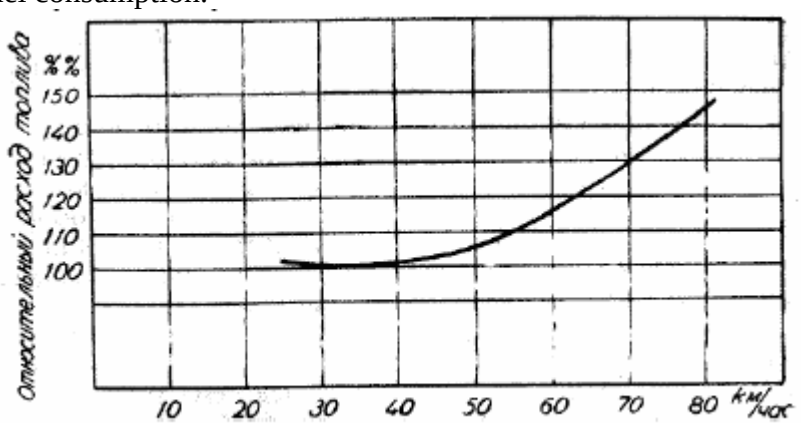

Фиг. 191. График относительного расхода топлива.

START AND STOP ENGINE

Engine GAZ-69, located in a serviceable condition, readily indulges in the application of correct - GOVERNMENTAL methods, depending on the conditions under which the are fired. We must distinguish three cases launch Engine: start a warm engine, start a cold engine at moderate temperatures (above minus 5 ° C) and starting a cold engine at low temperatures (below minus 5 - 10 ° C). **WARM START ENGINE**

When starting the engine heat should do the following:

1) turn on the ignition;

2) turn off the clutch, press to failure on the clutch pedal;

3) click on the starter pedal and hold it in position until the engine is not be acquired (but not more 5 sec.). As soon as the engine be acquired, the pedal to release the starter, because otherwise there is spacing anchor. To press his foot on the pedal starter during the start of the engine should be warm, not touching the throttle pedal. We must remember that every time you click on this pedal is the fuel injection accelerator UsAbout - som carburetor that when the heat engine is pereobogaschenie mixture and "refusal" to start. If the engine is warm with intact ignition will not start from the first speed crank va - la, the reason for this is almost always a pereobogaschenie mixture. Pereobogaschenie mixture often be - Vaeth because of the increased level of gasoline in the float chamber, because of the unnecessary use of suction, Naka - magnetization of gasoline at the pump accelerator pedal and the throttle body due to too rich regula - perature system idle carburetor. To resolve pereobogascheniya to blow the engine cylinders of fresh air. For This should turn on the ignition and pressing the throttle pedal, turn the crankshaft starter-capacity telya a few turns. It should not repeatedly press the throttle pedal to avoid inflate the new portions of gasoline into the intake pipe. If, during blowing at full

throttle the engine is not be acquired, then let him in It should be blowing in the usual way. If you want to start a warm engine leak, it indicates a clogged nozzles karbyura - torus (primarily of idling). They need to unscrew and blow (disassembly karbyura - torus is not required). When starting a hot engine, especially the stalled due to its overload Trough - NII from their seats and so forth, it is recommended, along with the pedal starter, push the pedal Droß - mudflow. However, after several revolutions of the crankshaft occur scavenging and the engine easily acquired.

COLD START ENGINE WITH LOW TEMPERATURES --

After a lengthy car parking is recommended before the start swop gasoline karbyura - torus manual lever gasoline pump to compensate for possible losses due to evaporation of gasoline or leakage. Then do the following:

1. Pull out the button to the suction carburetor. Pulling button manual control Droß - selnoy flap or press the throttle pedal should not be.
2. Turn off the clutch, by pressing the pedal to failure. It unloads the starter, because it saves him from need to turn the crankshaft with the engine pinion gear, find - schiesya in the thickened oil.
3. Insert the ignition.
4. Press the toe on the pedal starter. Keep the starter can be turned on no more than 5 seconds., In - interval between the inclusions starter should be at least 10 - 15 sec.
5. Immediately release the pedal the starter after the engine starts operating, and the press in Knop - ku suction on 1 / 4 its course. Then you can slightly increase the engine speed button or ne - distant throttle. Engine with a properly adjusted carburetor and a functioning ignition system start up the first or second attempt to launch. As warm engine button suction should be gradually move in before the full opening of the choke. It should be remembered that the abuse of leak-Uwe - lichivaet engine wear and cause excess fuel consumption. If the engine is not be acquired after three attempts, you need to make blowing, as indicated by you - Shae, and repeated attempts to launch. If, after three successive attempts the engine will not give flashes, pre - zhde than continue to start, you need to check whether your ignition and nutrition. Multiple without result - WIDE attempts to start the engine not only discharge the battery and ruin, but also significantly increase the wear of engine cylinders. Beware of excessive suction of fuel, as it is extremely difficult to start the engine. Usually the causes of difficult starting of the engine at the correct use of the leak are:

1) lack of fuel in the carburetor;
2) the poor state of the breaker contacts, or the wrong size of the gap between them;
3) leakage current of high voltage in the top of the distributor as a result of pollution from the outside or within;
4) broken (broken insulators, electrodes, etc.) or contaminated with candles;
5) faulty wiring high or low voltage. Vehicle traffic can begin only after warming up the engine for 2 - 3 min. in mind - sured speed. To accelerate heating radiator shutter should be closed, and in cold weather, when opened up additional thermal insulation and valve cover hood. Not allowed to accelerate heating of cold - On the engine performance at high speeds or long ride on the first and second gears.

COLD START ENGINE AT LOW TEMPERATURE

Start the engine in the cold season in low temperature conditions require the driver's skills which can be purchased, let us clarify only the following major concepts Start the engine depends on:

1) ease of cranking the engine;
2) on education in the cylinders of the engine working mixture, which will give the flash at a low temperature ture;
3) the receipt between the electrodes spark sparks with sufficient energy for ignition Nia blends.

In the absence of one of the three given conditions to let the engine fails.

Provide easy cranking ENGINE

Engine start up only when the gas pressure after the outbreak in one cylinder will be dos cutting duties in order to turn the crankshaft, at least, to the position of the mo - ment outbreak in the next cylinder. Necessary to ensure ease of rotation of the crankshaft of the engine properly received, UCA - zannymi below, and only then proceed to launch. Determination of readiness for launch of the engine is in the feeling on the starting handle resis - resistance of the compression in the cylinders of the engine. If cranking starting rukoyat - Coy compression in individual cylinders, there is clear and

the power of compression in a position somewhat rotate the crankshaft in the opposite direction, the engine is ready for launch. Winter to ensure easy cranking should use low-viscosity oils with low freezing point (see map lubricants, Fig. 193). However, at very low temperature these oils also gusteyut and the engine must be warm. The best way, providing easy start, is the use of boiler start-heating telya (Fig. 192). If you can not use any of the following methods of boiler heating motion gatelya.

1. **Fill in the hot engine oil.** With this method at the end of the day-If the oil should vat from the engine to clean the dishes. The day before the start of this oil should be heated to a temperature 80 - 90 ° C and pour it into the engine just before the launch. Pour warm instead of hot oil is useless. The disadvantage of this method, besides its complexity, is a high probability of contamination oil from the discharge and storage.
2. **Heating the cylinder with hot water.** Hot water is poured into the radiator and, as oc - tyvaniya available from T-shirts to as long as the crankshaft of the engine begins to rotate comparative PRE easily. Disadvantage of this method is the need to have several buckets of very hot in - dy.
3. **External heating crankcase currently in its oil.** Recommended heating produce a blowtorch, while avoiding local overheating and crankcase oil. This method gives best results while warming up with hot water cylinder, as indicated above.

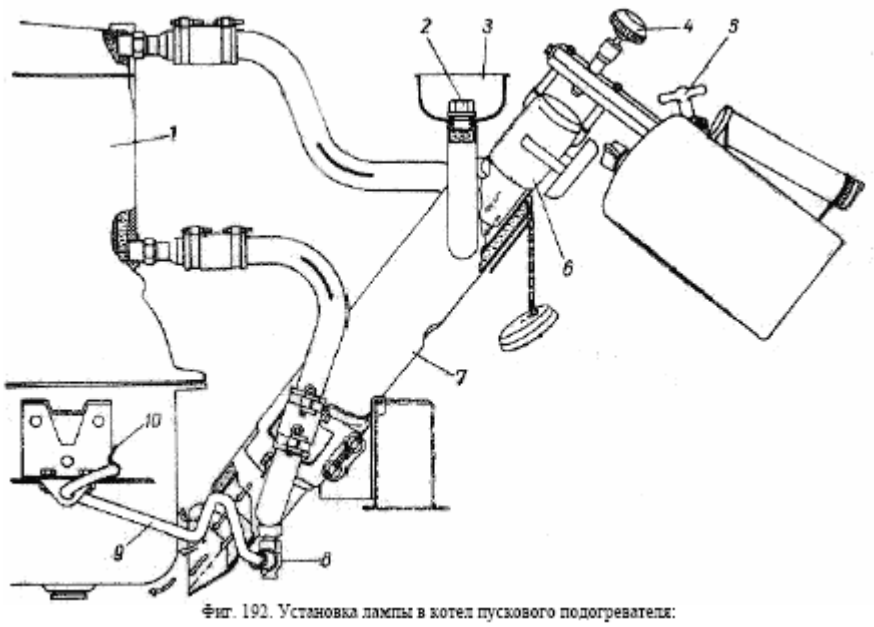

Фиг. 192. Установка лампы в котел пускового подогревателя:

Fig. 192. Installing the lamp in the boiler start-up heater: 1 - cylinder block, 2 - congestion of the boiler, 3 - funnel of the boiler, 4 - adjustment needle tubes, 5 - the handle of the pump lamp, 6 - burner tubes, 7 - The boiler start-up heater, 8 - drain cock, 9 - handle drain tap, 10 - spring drain tap.

PROVISION OF EDUCATION WORKING MIXTURE OF ALL NECESSARY IN A CYLINDER ENGINE

It is known that a mixture of gasoline and air is ignited only if its composition is within certain limits - too poor or too rich mixture is not ignited. Motor gasoline is a small amount of volatile (launchers) the factions involved in PUS - Nike in the formation of a combustible mixture, and therefore the start should not only give additional quantitative - stvo gasoline in the cylinders, but must take steps to possibly complete evaporation and sputtering of gasoline. Number of gasoline, additionally present at start-up, should not be excessive. Excess gasoline in the carburetor is going to the upper inlet and can not get out. When the engine begins to give the flash, the gas flows into the cylinders, filling the candles: and this over - hinders start. To provide education in the cylinders of the working mixture composition due to:

1. Ensure that, when fully extended the button suction choke carburetor was tightly closed.
2. Produce a preliminary sucking, not including the ignition, with fully elongated suction button, without opening an additional throttle pedal or button. Droß - selnaya flap while automatically ajar how to eccentric related controlled suction. This way of sucking provides a more complete evaporation and sputtering Bin Zina due to the increased dilution of the inlet system and the income of her part of the gasoline through the aspirations stvo idle carburetor.

3. At temperatures below minus 10 - 12 ° C heated hot water inlet pipe, as indicated below, in the description of the launch.
4. After turning the ignition to let the engine as with the fully extended suction button, not further opening the throttle pedal or button. With this method the first time after engine start-up receives air through a valve in the air flap carburetor. This engine is stable only if the throttle over - slonka open fully, as it automatically opened by the eccentric, associated with the thrust suction.

ENSURING THE WORKING MIXTURE IGNITION

Education sparks at the electrodes of spark plugs in an environment strongly compressed working mixture is difficult. If the IP - crater the electrodes of candles, from the twisted cylinder, is weak and its color is red, then the system is not in order and expected to start the engine without difficulty can. Spark at the electrodes should be clear and long, and its color - blue. In order not to have difficulties with launching in the cold season, it is necessary for the occurrence cold check and fix all the faults in the ignition system, ie, check all wiring, eyes - Stith and pull up all contacts, replace unfit wires, check the battery. Wish - PRE also replace all the plugs with new ones. In any case it is necessary to replace the candles, giving disruptions sparking. Should be checked and continuously monitor:

1) the purity and correctness of the breaker contact gap between them,
2) lack of leakage current in high voltage wires
3) purity of candles and correct gaps between their electrodes,
4) good condition and charging the battery. To avoid deposition of soot on the insulators candles to adjust the system load of the carburetor to be poorer and to prevent the mixture of long-term operation of the engine on the Holo - Stom go before stopping for the night. Clean insulators candles is of paramount importance. Contact gasoline to clean insulator almost harmless, while Wet gasoline sooty insulator leakage current appears and the light - why do not give a spark when starting a cold engine. The use of candles colder than the M12-V, the recommended plant, inevitably leads to formation of soot on the insulators. In cases where the candles in the engine became zakapchivayutsya and moist - vayutsya because of the large depreciation of the engine, it is recommended to start to apply a set of pure light - someone who, after commissioning should immediately replace the old. Latest in a hot engine will normally, but let them cold engine is sometimes impossible.

ORDER OF COLD START ENGINE WITH LOW TEMPERATURES WITHOUT THE USE START-HEATER

To initiate a start-up of cold engine at low temperatures can only be a working system theme and clean spark plugs.

1. Before starting to cook should be 2 liters of boiling water or very hot water with a temperature of not lower 80 ° C.
2. Turn off the clutch, putting between the pedal and the seat any girth.
3. Turn the hand fan to eliminate possible freezing of the water pump shaft.
4. Provide one of the methods described above easy cranking Engine To the extent that at the starting handle distinctly felt compression in individual cylinders.
5. Disappoint gasoline into the carburetor manual lever gasoline pump.
6. Heat the inlet pipe, pouring it 1.5 liters of hot water. Water should be poured slowly thin jet from the spout or hose with a hole diameter 5 - 6 mm. If you pour the water quickly, its heat does not have time to be transmitted to an intake pipe. When the air temperature above minus 10 ° heating pipe can not produce.
7. Pull out the button to the suction, then, not including the ignition and opening the throttle for - slonki, make a preliminary sucking gasoline (to charge the engine), crank provernuv shaft starting handle on three turns.
8. Pour the remaining 0.5 liter of hot water inlet pipe.
9. Insert the ignition and let the engine or the starter handle (if it allows the state battery) with a fully extended suction button, without increasing the throttle opening dampers. If the launch is the starter, you should not keep it turned on for more than 5 seconds. Intervals between the inclusions should be at least 10 - 15 sec.
10. Once the engine begins to work immediately release the pedal and Push the starter button suction on 1 / 4 its course. Only then can increase the engine speed button or foot pedal

throttle. As the warming of the engine button suction should gradually move in, leaving her outstretched the extent necessary for the stable operation of the engine.

11. Close both drainage tap the cooling system and fill it slowly with water to have time exit air. When starting with the starter should be borne in mind that the starter clutch with outbreaks in individual cylinder is not turned off, and in this case allowed the "unwrapping" of the engine simultaneous but the effort is the starter and the effort of individual flares in the cylinders. In other words, when an outbreak in individual cylinders do not have to let go of the pedal the starter, but should keep it pressed until the engine is not starts. However, to avoid breakdowns starter pedal should be immediately released as soon as engine acquired. To extend the life of the battery is recommended for cold-engine start - To avoid the use of starter. Also, please note that at low temperatures, the capacity of ac - kumulyatornoy battery decreases. It is recommended to remove the battery from the car at the time of his long stand - Key in the cold and keep it in a warm room. This will dramatically improve battery life and provide a po - Lee high speed of the crankshaft of the engine at its start. If start-up in these conditions, the engine sucked the excess supply of gasoline, which will be indicate the absence of flares, wet the electrodes and insulators for spark plugs, as well as clubs of white steam, escaping from the tailpipe, you should stop and start to blow the engine cylinders. To purge (in this case) should unscrew the candles, fully open the throttle carburetor, unscrew the drain stopper on the inlet pipe, to give drain gasoline and to make a few times the motor shaft. Followed pour approximately half a tablespoon of hot oil in each cylinder. In It should of put across the motor shaft several times to ensure that smeared the oil spread over the walls of the chi - lindrov and this compression is restored. Clean and dry the plugs (without overheating the top of the insulator), screw them in place and for - the cork back in the mudhole in the inlet and warm up again inlet pipe and resume launch the engine. After repeated unsuccessful attempts to start the engine oil level in the crankcase can greatly from rise above, because it gets gasoline, flowing down from the walls of the cylinders. In such cases replace with fresh oil, or even merge the superfluous from the crankcase. Pouring water in the cooling system at starting a cold engine in the cold should be done after how the engine started to work, it is necessary to produce slow, so that all the air from the system had quit. Water may be more desirable to apply hot to reduce the risk of freezing it in the radiator during the heating of the engine when the thermostat valve closed, ie, when there is no zirconia - kulyatsii water through the radiator.

ORDER OF COLD START ENGINE WITH LOW TEMPERATURE APPLICATION START-HEATER

Systematic zavodka motor vehicles idle for a long time on the Moro - else and, thus, greatly solidifying, not to mention the considerable difficulties, it is extremely harmful affects the durability of the engines themselves. This is understandable, given that zavodka in such conditions (especially when gasoline containing low - zhaniem launchers fractions) is inevitably linked with flushing grease from the walls of the cylinders. Lubrication system cold start (with a strong frozen butter) does not work effectively and far incomplete. Poorly lubricated bearings, as the pump oil is not able to push layer of grease, hardened in the channels of the block. Very poorly lubricated those places in the engine, where the lubricant is supplied by spraying. As a result, the life of engines, are subject to frequent cold start, sharply falls, and the engines require serious repairs after a small time operation. In order to ensure - cheniya confident start the engines at low temperatures, as well as to increase their durability, STI GAZ-69 is equipped with starting heater. Heater is mounted on the left side engine under the hood.

Preparations for the launch vehicle and launch himself in the presence of start-up heater should be pro - drive in the following order:

1. Prepare a bucket of water and separately (in a small bucket with a spout) 4 liters of water.
2. Close drain cock of the cooling system, located on the boiler (the handle of the faucet derived under the radiator, front). Turning the handle to flush tap lightly squeeze finger locking plate spring, latching end of the handle. Loosen the stopper in the pouring funnel of the boiler.
3. Kindle the lamp start-up heater. To do this, tightly wrap the cork pouring hole - stiya shell lamps and turn the adjusting needle injector. Make 5 - 6 moves the pump. From - close off the cover burner, pour gasoline and light, having a lamp near a stone wall or a sheet of iron with in - zorom until the end of the burner 10 - 20 mm, protecting the flame from the wind. To accelerate the heating of the

lamp should be set so that the output end of the burner was slightly elevated. After 10 minutes of burning reveal slightly adjusting the needle to close the lid and burners. If, after the heating lamp is burning yellow flame and gasoline periodically ejected from the Fort sunki in liquid form, heating lamps should be extended. Lamp is lit normally, if the flame has a bluish color and the combustion can hear a slight hum. Nozzle burner needs to be periodically cleaned with a special needle, which is stored in the handle lamp. Maintenance burning lamps made periodically pumping the pump. Rules lamp in the form of tablets, available in its reservoir.

4. For ease of installation of lights in the boiler heater to turn front-wheel drive car - To the far right position (it is recommended to do in the evening, when you stop the car).

5. Remove the hatch cover on the left wing mud flaps for access to the boiler, subtract a few flames lamp and put it in the flame tube boiler (Fig. 192).

6. Immediately pour the water in the boiler to the level of filler in the funnel (4 liters) and wrap cork. This will be filled with water boiler and partly shirt cylinder (in the radiator water is not in falls). Then again reinforce the lamp flame.

7. Close radiator shutter, and the presence of thermal insulation hood to close completely and the front - ny valve. A strong wind to protect the bottom of the windward side of the machine so that the hot gases, you - walking from the lower end of the boiler and the surrounding casing, not blown away.

8. After 20 - 30 min. normal intensity lamp burning in the boiler (in the cold 20 - 30 ° C) when cylinder head warmed to 45 - 50 ° C, put across the engine several times with a clockwork ruko - yatki. Ready to start the engine easily rotated, with the distinct feeling the crank - etsya resistance to compression. *Note.* 50 ° C is the limit that can tolerate the outer side of the hand when touching the hot object. Prolonged burning lamps in the fender area of the lamp may be too warm. Something to prevent damage to paint, you should cool the specified place snow or a wet rag.

9. Pull out the lamp start-up heater from the boiler.

10. Be sure to reveal the hood to exit from under it, combustion products and ensure access fresh air to the carburetor.

11. Let the engine, using the instructions given in paragraphs 2, 3, 5, 7, 9 and 10 of section "Procedure starting a cold engine at low temperature without the use of start-up heater.

12. When the engine be acquired, to close the drain cock and fill the cooling system water. Per - Livke produce water slowly so that all the air time to get out of the cooling system.

13. Extinguish the lamp start-up heater, several unscrew the cork filler re - zervuara lamp for the gradual release of air and gasoline vapor. Lid opening in bryzgovi - Nike wing. *Note.* Is prohibited on the burning lamp is fully specified plug wrench to avoid ignition of gasoline vapors. Fill lamp gasoline should be only after full cooling. If you have a cooling-freezing mixtures, "antifreeze" prepare for launch capacity - telya should be conducted, as described above, except paragraphs 1, 6 and 12. Before heating engine make sure that the antifreeze in the cooling system and the boiler is not stopped and is in a liquid co - standing. Frozen coolant can not circulate through the boiler and a shirt unit, and therefore in the heating - ve boiler can burst. When using frozen antifreeze starting preheater impossible. To reduce the time warming up the engine with the power-on start-up heater and reliable of education normal working mixture is very important that, the car was equipped with Utepov - duration cover on the hood of the engine. It is recommended (especially with the lack of experience) not to hurry the beginning zavodki and give extra heater to work out the starting 5 - 10 min., warming up the engine properly. If you are starting to happen "peresos", the engine should "blow", as was mentioned earlier. When using the starting preheater, as well as at start-up and warming up the engine in a closed in placement should take precautions in order not to be poisoned extremely yado - twisted carbon monoxide.

Engine start Towing

Start the engine towing vehicle should be made only in exceptional cases. In particularly unacceptable to let towing engines with frozen oil, ie, when a point view of the driver is most needed. As mentioned earlier, start the engine when frozen butter always leads to a drastic reduction in service life, and sometimes to severe accidents, up to the cliff-sha tunov. No damage to the engine start towing can be used only for engines rotating so easy, that compression is clearly felt at the crank. In the latter case, the engine usually can be easily wound up and without towing. Thus, the only

justified, nym case of start-up is the elimination of heavy towing peresosov whose elimination otherwise requires certain skills, a lot of work and time. To start the engine towing is necessary:

1. Connect towing device of the towing vehicle with the front hook with a towed the cable (rope or chain) of adequate strength, length 8 - 10 m. Especially recommended note - adopt a hard tug length of about 4 m, made from a water pipe or other material.
2. We towed the car to include the second or direct transfer, turn on the ignition and press the on the clutch pedal.
3. Gently off and, after reaching a constant speed of 15 - 20 km / h, gently insert coupling a towed vehicle. Further, using, if necessary, "leak" and the throttle pedal, the veil - ty engine, as is usually done at start-up starter. Produce zavodku towing at speeds above 20 km / h should not be, because it is connected with risk of collision with an unexpected starting of the engine towed the car.
4. As soon as the engine be acquired, turn off the clutch, put the gear selector in neutral position and slightly braking, to give a signal to stop the front of the car. Draw attention tion on the testimony of an oil pressure gauge, and if after 10 - 15 seconds gauge will not show the pressure Nemed - Leno to stop the engine and warm it in oil.

STOPPING ENGINE

After the cessation of movement of the car with a big load of the engine should give the last worked out within two minutes at low idle, and only then turn off ignition ganie. It is necessary to ensure a gradual and uniform cooling of engine valves and other of its working parts. Must be remembered that the carbon deposits, contamination or lubrication candles greatly complicate the start. The length - cen when engine idling results in zakapchivaniyu candles. Should not be without absolute necessity long time to leave the car standing in the cold, from time to time warming up to his long work - that idling. Warm up the engine at idle should be in such cases to complement the small - haul to the engine after warm-up idling spent a little under load. Release of water from the engine cooling system is required in two tap: the ra - diatore and on the boiler start-up heater (handle faucet under the radiator in the front). Turning py - koyatki tap lightly to squeeze the locking plate spring, latching end of the handle. The discharge of water required to remove the radiator cap. The discharge of water in very cold weather should not leave the car until all the water is not stechet. As need to be cleaning the drainage valves wire or blast them. It is advisable to pour water dishes to the number of vylivsheysya water can be judged on its full plum (12 liters). During the drain tap water heater (at the cylinder head) must be open, otherwise If water from the heater is not stechet, and the heater will be frozen. With the withdrawal by any reason the boiler start-up heater, the second tap should be wrapped in the unit via an adapter on the left side of the engine.

Driving a car

On the road management GAZ-69 and GAZ-69A is different from managing other lay - kovymi cars. The front axle while driving on a firm and smooth roads and hard ground turn off, thereby achieved fuel savings and reduced wear and tear. Movement of vehicles should occur at the highest possible transmission, mainly on the line. By reducing the speed below 20 km / h on a straight transfer may be signs of overload Engine To: vibration of the engine, knocking, and more. In this case you should move to a lower gear. When speed increases should move again to higher gears. Overloading Engine harmful responds to its efficiency and therefore unacceptable. A car is necessary to conduct so that the engine worked without a palpable tension, for which on - time to change gears. When driving on the hard roads and in the hottest time of year should include the oil cooler. It is useful to overcome the grave of the road to read it and identify the path of motion car. For off-road driving on soft ground can reduce the pressure in the tires up to 1 kg / cm 2 . After overcoming this site is the tire pressure should be brought to normal, since reduced pressure sharply increases tire wear. When driving off-road, slippery roads, at high elevations (over 15 °) should include the front axle and in the cases mentioned below, also the lowest transmission (2,78) in the dealer's co - timidly - splitter. Include splitter (transmission 2.78) is recommended after stopping the car. After - lowing switching to transfer 1,15 can be made on the fly, with the clutch disengaged. To demon - switching noise should be done on neutral extract. Exposure should be greater than higher speeds the car is switching (as in the transition from second to third gear car GAZ-51). When the vehicle speed below 8 km / h exposure is not needed. If exposure to Neutral do too long, then the correct placement will not. In

this case, should be included chit clutch, press the accelerator pedal (for a small increase in engine speed), then back off the clutch and include the transfer of 1.15.

Movement on the sand. When moving to include the front axle, low gear in the dealer box (demulti - plikator) and the first gear in the gearbox. Throttle valve should be opened as soon as possible less. Opening of the valve should be such as to ensure the movement of the car without pro - buksovki wheels, then make the transition to the second and third (direct) transmission. If resistance movement is not particularly great and the car on a straight transfer can increase the speed, it should be, including the second or first gear, turn off the downshift in transfer case. For WHO - possibility should move to higher transmission. Steep sandy rises must cope with the acceleration in the second or first gear with the included - chennoy in low gear transfer case.

Movement on the marsh meadow. When driving on the marsh meadow can reduce the velocity - growth, and especially to stop. If you want to stay, then it needs to select hillock or a dry place. Resume movement after a stop at the marsh meadow is very difficult, because to run on such ground requires large tractive force, and such a force developed wheels on the ground, causing the failure of the sod layer (upper layer of soil) and the jam of the car. Movement on the marsh meadow should start with downshifts in the dealer box in second gear in the gearbox with a cautious clutch slips, preventing slipping wheels. As soon as a slippage of the wheels, you should immediately squeeze the clutch pedal. If the slippage in the background during repeated, we must immediately put under the wheels firewood, boards, etc. to increase the adhesion with the ground and ensure the movement of the car. Non-stop on the marsh meadow must be carried out on the second or third allo - chah with downshifts in the transfer case and a large throttle. It is not recommended to make sharp, steep turns. Must take into account the need to pre - gate and do it smoothly on a large radius, such a turn does not reduce the speed of the car and Deletions chaet to disrupt turf, inevitable when a sharp turn at high speed. Very swampy places should go around. Brody hard soil, depth to 700 mm, must be overcome in first gear with switched - Noah in low gear transfer case, at low speed. Fan belt should be removed and per - close off the radiator shutters. Brody depth to 500 mm in calm water can be overcome, without removing the belt fan, but with closed shutters radiator. In Overcoming fords should avoid stopping engine as the water will flood the silencer and complicate engine start. If the hard ground is covered with a layer of silt, then the rate should be increased, but to avoid wheel spin. When will override the ford water gets into the brakes, but with a deep ford can get held up in - lenie, so when you exit the water they should be dried: clutch - by incomplete incorporation, Tormo, зы - periodic inhibition to move the car. In addition, when leaving the water to check on whether the water got into the crankcase: the engine, bridges, transfer box, gearbox. Therefore, breaking the ford should be let go, after neprodolzhi - tional parking (5 min.) plugs these crankcases and flush. It would appear oil, cork should turn. Change the color of oil and its turbidity indicates the presence of water in it. This oil in the sumps should be replaced.

Movement on snow-covered roads. / Road covered with loose, neukatannym sleep - police department, breaking the snow seine should be made with the enabled the front axle. At length tional travel in these conditions should include oil cooler. During the movement of specified - nym snowy roads to avoid heavy braking to avoid skidding car.

Driving on slippery and icy roads. Driving on slippery and icy roads danger - and requires a lot of attention of the driver. Sudden braking and throttle opening, unplanned WIDE turns when driving on slippery and icy roads inevitably lead to a skidding car - la. Movement is included with the front axle and low-speed vehicle. Tropics gatsya to places you need at low engine speeds in second gear in the gearbox, to avoid slipping wheels. When driving on slippery or icy roads can not stop even a small rise. When going downhill it is recommended to produce engine braking, one - provisionally snubs brakes. Braking should be made smooth by clicking on the ne - distance, without the clutch.

Overcoming rises. Gradability tend to be on the straight path. Overcoming obliquely, with a roll, sharply reduces the maximum force of traction. Maximum traction force on the wheels is deter - is achieved not only by the power of the engine and gear-ratio transmission, and wheel weight (weight attributable to the driving wheels). When there is roll the car, his load on the wheels redistribution mined. The wheels are located above, lose some weight, allotted to them, as well as left and right wheels connected differential, then such a transfer is stalling unloaded wheels. The rises steeper than 20 ° must be overcome in first gear enabled the front axle and low - necks in the transmission transfer

case. Trenches, pits, trenches should be overcome at low speed with enabled the front axle in the direction perpendicular to the slope. Not allowed to take impeded - ence on the move, if possible frontal impact in the wheel. Ditches and trenches can be overcome obliquely, but should consider the possibility of a skew posting of the car and stuck because of wheel spin.

When moving to a trailer is necessary to reduce speed to 10 - 15 km / hr. Sharp turns mo - Gut cause rollover. It should also be remembered that while driving with the trailer braking path-increase combifitPremium in 11 / 2 times. Get a move should always be in first gear, avoiding falls, adversely affecting on power transmission car. To try to drive smoothly, without abrupt accelerations and traf - being able to. If recovery is necessary in advance to include such a transfer, which may be overcoming lenie it without switching. Shift gears on an uphill gradient dangerous and difficult, as car quickly loses speed. On steep slopes should be sure to use engine braking and include pre - the desired transmission and front axle. If necessary, it should also further slow down car foot brake. When driving on slippery roads, especially when there is oncoming traffic, you must comply great caution. To reduce the throttle to gradually slow down gradually in several stages, not turned off - Tea clutch.

When driving on dusty roads with established tent is recommended, if not ahead another car, slightly lifts the windscreen. This reduces the dust in the back, so as in closed windshield in the vehicle body negative pressure is formed, which contributes to suck dust. During prolonged operation of the vehicle along the dusty roads of the air filter should be washed and Me - adopt it oil daily.

Running a new car

The durability of the car is largely dependent on the mode in the initial period its operation, from its running. During the running are running-working surfaces of parts (shafts, seals), draft gaskets, etc. Therefore, during a run must comply with the special regime of ex - measure the operating costs. The duration of running is set to 1 thousand kilometers. In run-must be respected follows:

1. Do not ride on the direct transmission at speeds above 45 - 50 km / h, the second - 25 km / h and the first -- 15 km / hr. In the dispersal can prevent short-term rates exceed those in the second and first gear if the engine is warm.
2. Do not start a movement of the car with a cold engine, and in any case not to give work - thief cold engine at high revs. Warm up the engine for several minutes before order - water temperature in the radiator and no less than 50 ° C. Do not ride a leak, as this greatly increases Ras move fuel and increases engine wear.
3. Do not overload the car. Avoid driving in heavy roads: deep mud, sand, steep climbs. Not be riding with a trailer.
4. Run-car manufacture gasoline A-70 or A-66. In the case of gasoline more low quality useful to add it to 30% of aviation gasoline B-70.
5. After the run the first 500 miles engine oil is useful to replace. To do this, pour the oil from crankcase and the corps both filters and pour into the crankcase oil SU with the addition of 30% of faith - tennogo oil. If there is no SU oil, until the end of the running to replace the factory oil should not be. This If after driving 500 km is recommended to merge the oil only from the sump, clean it, passing through cloth, and pour back into the crankcase. While running top up the engine oil should be provided for lubrication chart for the winter, as more liquid, which contributes to a better running-in details.
6. Establish a somewhat higher number of revolutions of the crankshaft with the engine idling, as in the new engine crankshaft rotates not as easy as it bedded in, and at low revs may not provide stable operation of the engine.
7. Monitor the temperature of the brake drums and in the case of significant heat regulation vat brakes in accordance with the instructions in "brakes" (see page 133), giving them a pre-cool. Note that prior to running shoes to the drums brakes do not give the full effect. At the same time need to monitor the heating of the wheels. When the heat to weaken their per - hard adjusting nuts on 1 / 2 face (see "Adjusting the bearings front and rear wheels). After a run of 200 - 300 miles over tighten the nut (see page 158).
8. Should be especially careful to monitor the state of all the anchorages of the vehicle; weakened nuts and bolts should be tightened immediately. Carefully follow the pipe joint and, if found to eliminate leaking oil, gasoline, water and brake fluid.

BEFORE THE FIRST EXIT

1. Check refueling vehicle fuel, refilling the radiator with water, the oil level in engine level of electrolyte in the battery banks, the level of brake fluid in the main brake cylinder, the oil level in the reservoir air filter, carburetor, air pressure in tires, zatyazh - ku bolts fastening the wheels.
2. Check the oil level in the transmission housing and the transfer case front and rear bridges. If the level below the top of the filling holes - add oil if the level above this region - To give an excessive drain.
3. Lubricate all points of the car, for which the map provides lubrication grease after run 500 - 1000 km. Make sure that the grease passes through all the lubricator.
4. Carefully inspect the entire car. Let the engine and check if there are any leaks of oil, water and gasoline.
5. Descend from petrol tanks and septic tank sludge of mud and water through the drain plugs. (From - stoynik petrol pump cleaned only if necessary).

AFTER the run of the first 500 km

1. Change engine oil, if oil is available in the SU. If oil SOUS not, run-of - finish at the factory oil, purifying it, as stated above.
2. Lubricate all points of the car, for which the map provides lubrication grease after run 500 and 1000 km.
3. Tighten the nuts of the wheels.
4. Tighten the nut fixing steering fry.
5. Tighten the nuts of bolts fastening the front, rear and intermediate cardanic to flanges ISO - Comrade, gearbox and transfer box.

AFTER the run of the first 1000 km

1. Remove the seal, unscrew the bolts fastening the carburetor and remove the restrictive washer which are off - dyaschuyusya between the flange carburetor and intake pipe, up act and put the carburetor on place.
2. Tighten the nuts of the engine cylinder head, respecting the order of suspenders, listed in FIG. 11. This operation should make a special key that came with the car, without jerks and only a cold engine. Should beware of constriction nuts, as this can cause breakage pins. 3. Tighten the nuts pipeline to the engine.
4. Tighten the three screws connecting the pipeline to the tailpipe.
5. Tighten the bolts fastening the bracket of the generator *to* the engine and generator mounting bolts to the bracket.
6. Check and, if necessary, adjust the fan belt tension.
7. Check, fully open throttle carburetor with the full course of pedal throttle. Check, fully opens and closes choke carburetor. If non - As required, adjust.
8. Check if there are any deposits of mud in a glass tank cap gasoline pump. From - stoynik should be cleaned only if absolutely necessary. In setting the cap back to voice - go to trace the absence of under it leak gasoline. Pull the sludge from the gasoline from the filter - stoynika.
9. Adjust the carburetor idle system, as described in "Power system.
10. Check the electrolyte level in all six banks of battery and, if necessary, pre - pour distilled water.
11. Tighten the wire terminals on the battery and lubricate them with petroleum jelly (substitute - with - lidol).
12. Check the density of the wire connection of the generator, starter relay, regulator and other instru - electrical trench.
13. Blow generator air and wipe it clean with a rag collector, slightly moistened in numerical including gasoline.
14. Check the value of free running clutch pedal (38 - 45 mm) and brake (8 - 14 mm) and renounced - gulirovat, if necessary.
15. Check the action foot brake, and if the maximum pedal gap between It turns out the floor and less than 20 mm, adjusted as described in the "brake."
16. Check and, if necessary, adjust the length of the cable drive hand brake and the gap between the co - boats and drum, as indicated in the "brake."
17. Check the fluid level in master cylinder - top up if necessary.

18. Tighten the nuts semi rear axle and front axle flange leading to the stepped - tsam wheels.
19. Tighten the screws (4 pcs.) Mounting plates to swivel pins (for 2 screws on the ca - zhdom fist, bottom).
20. Check and, if necessary, tighten the screws (8 pcs.) Mounting brackets to dispensing - timid to the crossbar.
21. Tighten the nuts to the kulaks turning levers on each side of the car.
22. Rasshplintovat bolts fastening ball bearings to the casing of the front axle, tighten the bolts them again zashplintovat.
23. Tighten the nuts ladders springs. Eyelid produce without the use of excessive force.
24. Spanner wrenches to tighten the nuts out bolts, tightening rubber bushings with springs fingers in the ears of springs and brackets.
25. Tighten the nuts damper to the bracket nuts and bolts, tightening proushi - HN stands absorbers.
26. Check for exit lubricant outside the shield between the front brake and body tilt - On the fist. If you notice grease to remove the front wheel hub, tighten the bolts fastening pins and shields Comrade brakes to the swivel, put the hub in place and adjust the bearings.
27. Tighten all the other feeble attachment sites. and details, drawing attention to the mounting plumage, hinge doors, mudguards and buffers.
28. Drain the sediment from the fine filter and coarse clean engine oil. Check rotated whether the rod-filter when you press the pedal starter.
29. Change engine oil, the viscosity of fresh oil must comply with the time of year, as indicated in the map of lubricant.
30. Change oil in air filter.
31. Change grease in sumps of the front and rear axles, gearbox and transfer box washing with kerosene.
32. Lubricate all points of the chassis, which provides lubrication after run 500 and 1000 km.

After a run of 1000 km in compliance with the rules and running after all the above works vehicle can operate normally, including the trailer. However, during the next 3 thousand kilometers should avoid prolonged driving at speeds above 70 miles per hour, and give the engine work with a very high speed when driving on hard roads and off-road to reducing allo - tat in the gearbox and transfer case, as it leads to premature wear of automo - Beal.

FUEL CONSUMPTION

State operating Petrol consumption is not factory installed. The plant provides guarantee only on the value of control flow. The plant ensures that the car GAZ-69 with a full load, but without the trailer, located in the as - flawless condition and properly adjusted after the race at least 2500 km, has a direct re - cottage, with off the front axle, the control flow is not more than 14 liters per 100 km in the summer on a dry flat paved roads and short-ups (up to 1,5%) at a constant speed of 30 - 40 km / hr. In winter control flow shall not exceed 15.4 liters per 100 kilometers. In determining the control flow taken the arithmetic mean of two measurements with the pro - highway driving section length of 3 - 5 km in both directions. Contents of the car in good condition and correct it contribute to the maintenance of reduced - Niya fuel consumption. Here are basic instructions for efficient cars. 1. The car should be easy to roll (to have a good inking), for which the chassis should be properly adjusted. We can assume that the chassis is in good condition, if completely cobble car (after driving 3000 - 4000 km) will roll on a flat asphalt turned off the road with a gearbox and front axle, with no wind, the speed of 30 km / h to a full stop not less than 150 m.

Car, standing on flat ground, should get a move on an effort of one man. To reduce friction losses in the mechanisms of the vehicle must:

a) To apply lubrication, appropriate season, as indicated in the map of lubrication;
b) the right to regulate bearings front and rear wheels;
a) Avoid touching the brake pads on the drums • when released by the brake (adjust provision of wheeled shoes and a central brake, free foot brake pedal, the length of the Tropics sa central brake);
g) To maintain normal pressure in the tires;
d) To regulate the convergence of the front wheels (1,5 - 3 mm).
2. Should use gasoline with octane number 70 (see "System Power").

3. Never use the engine a lot of other grades of fuel (naphtha, kerosene, mixture of different fuels with gasoline), because the engine is only on the use of gasoline.
4. You must correctly set the ignition and refine its installation, depending on the grade used fuel. Typically, the ignition should be installed possibly earlier, that when sharp pedal throttle detonation was heard brief, rapidly disappearing due that the vacuum machine distributor ignition will work and will set a later ignition. If you use high-octane gasoline detonation may not bugged. In this case the correct installation of ignition should be judged by the intake capacity of the vehicle (details on the installation Ignition stated in section "Ignition system"). 5. Necessary to apply a candle-type M12-U.
6. It should properly adjust the needle jet at the main economy. From the optimum - covered needle depends on the quality of fuel and, moreover, it varies in different carburetors and co - lebletsya within 1 1 / 2 - 2 turns from the fully latched position. Usually, the opening should be 1 3 / 4 turnover. This adjustment of the needle of the main jet is indicative. (For details on adjusting the needle main jet described in the section "System Power").
7. You have to properly regulate the level of gasoline in the float chamber, which must be 17 - 19 mm below the plane of the connector carburetor (see "System Power").
8. As the need to be cleaned spring plate diffuser carburetor from resinous deposits formed on them and causing an increase in fuel consumption (see "System diet Nia "). In addition, it is necessary to monitor the serviceability pads located between the float chamber and its cover, under the spray of the main metering device and between the block and spray nozzles. Block jets should be sure to tighten to avoid leakage of gasoline into the mixing chamber in addition to spray.
9. Thermal regime of the engine has a very big impact on fuel consumption. When non - sufficiently high temperature motor gasoline evaporates bad. Normally in the cooling system engine temperature should be 80 - 90 ° C, which helps reduce fuel consumption and reduce wear. Consumption of gasoline in the early movement of the car with a cold engine can be increased by half -- three times the normal. Must take all measures to maintain the water temperature while driving and parked, using blinds, and even the extra heat in the winter cover (see "Cooling System").
10. Speed greatly affects the consumption of gasoline. For example, increasing the speed from 30 to 70 km / h increases fuel consumption by about 50%. GAZ-69 is easy to develop a speed-bo Lee 80 km / h and at high speeds is quite stable on the road, but keep in mind that fast driving causes an increase in consumption of gasoline. Movement with frequent acceleration and braking also causes an increase in consumption of gasoline. It should blowing in advance view of the forthcoming stop (eg traffic lights) and slow on the turns, timely Menno discharge gas, giving the car to roll on inertia.
11. Condition of roads has a significant impact on the consumption of gasoline. When driving on bad roads, requiring continuous application of low transmission, as well as the inclusion of the front axle, the fuel consumption sharply.

MAINTENANCE VEHICLE

Once the car has been properly run-in, its longevity depends on the quality of after - blowing of care and quality of materials used in the operation. Following are detailed instructions what exactly the care of the car, which operations should be performed at the same time and in what time frame. Some drivers, these instructions may seem cumbersome, complex and even superfluous, since the car without their performance continues to work. This is totally incorrect pre - submission. The car will actually work and if the worst care or even without a care, but the term service it will be dramatically reduced.

GREASE CAR

Places of the chassis and engine to be lubricated are shown in FIG. 193.

Cap lubricator used to lubricate the bearing clutch and roller-races predelitelya ignition, after the stock runs out they lubricants (cap wrapped up failure) should fill again. To do this, unscrew the cap and using shovels to lay in it CONSI - stentnuyu lubricant to the brim. Then put the cap in place, wrap in 2 - 3 turns. For the filling lever-plunger syringe to unscrew the cylinder of the syringe to draw far - shen handle and tightly fill the cylinder with grease. If the syringe is not tightly packed with grease, but with the air layer, it can not work properly: pressure lubrication is low or no filing will. To ensure tight fill-A necessary Dimo while filling cylinder head knock on wood blocks. Similarly in walk, if properly filled syringe is not working satisfactorily.

OPERATION CARE

Operation Care Products Factory recommends the following dates: as hath need - ARRANGEMENTS, every day, after covering a distance of every 500, 1000, 3000, 6000, 12000 km, seasonally - twice a year (spring and autumn) and once a year.

Care as required

When necessary operations are performed, the frequency of which depends not only on the value run, but on the conditions under which is operating a car, or operations, the need which does not occur naturally, but from time to time, as well as the operations, which can not postponed. These operations include:

1. Cleaning the engine, cleaning the chassis and car bodies, which are carried out depending on the degree of fines pollution. To remove soot must be removed cylinder heads and a clear head, and bottom pistons. The rapid re-formation of soot usually means that the engine needs repairs, pre - zhde just cleaning or changing piston rings. When working with leaded petrol heads on the exhaust valves are formed from sediment - compounds of lead. These deposits have a characteristic gray and serobury color. When a large amount Lead deposits can occur get burned valves. If the engine there is high propensity for detonation, and a marked decrease in power, it should be removed from the cylinder heads to inspect valves and remove deposits of lead. This operation must comply with any prophylactic removal cylinder heads. It should be borne in mind that the carbon deposits that are very poisonous. In order to avoid poisoning by dust or pieces dry soot, who are able to get into the respiratory system, it is recommended snuff before scraping wet kerosene and use other precautions in the special instructions. To reduce the deposits of lead compounds useful from time to time to work (a few hundred ki - lometrov) for unleaded petrol.
2. Adjusting the clearance between the valves and the pushers and lapping valves.
3. Correct the inequalities of the engine at low engine speeds and during acceleration (moving - Tel "jerks" when you press the throttle pedal, while driving at low speed) on the direct transfer (see section "Electrical").
4. Cleaning the carburetor when it is detected inside the mixing chamber gummy deposits causing an increase in consumption of gasoline. These deposits occur in the use of resin fuel - Island or are a sign of a strong gas passes through the piston rings, which indicates the necessary - dence repair.
5. With creaking wheels should tighten the wheel nuts.
6. When creaking springs should be lubricated with their lists. Creaking and knocking on the ears springs indicates wear rubber sleeves or dense enough to land.
7. If you press the brake pedal is a gap between its platform and the floor is less than 20 mm, it is necessary to adjust the brakes (see "Brake").
8. After each adjustment of the brakes and adjust the wheel bearings need to follow during drive for heating the drums and hubs.
9. When pollution drive mechanism of the central brake, causing stiffness, it is necessary remove the brake drum and clean the mechanism. Rubbing the details slightly lubricate the drive solid oil and re - collect.
10. Timely replacement of worn parts and suspenders weakened joints.

DAILY Car Care

1. Inspect the battery, which is located under the driver's seat in a special nest and covered with a lid. Lid reinforced with two nuts, lamb. If necessary, clean battery from dust and dirt. Electrolyte is shed on the surface of the battery, wipe dry with rags or soaked in liquid ammonia, or in a solution of soda ash. Oxidised battery terminals and tips to clean the wires and influence of technical smear Vaseline or solid oil.
2. Check the density of mounting the battery in the socket. Lambs, pull the frame attachment fol - blowing prolong tightly by hand, without using any tool, since excessive delay can cause damage to a tank battery.
3. Check the connection and the density of the contact tips of wires with the battery terminals. Do not tolerate any - deal about the tension wires to avoid damage to terminals and formation of cracks in the mastic.
4. Clean the vents are elements of the battery.

Before leaving REQUIRED:

1. Check refueling vehicle fuel, the water level in the radiator, the oil level in the engine.

2. Inspect the vehicle and ensure that no leakage of fuel, water, oil and brake fluid. To do so, inspect the scene of a car parking, as well as external surfaces of the main cylinder and brake drums.
3. Make sure that the action of steering, brakes, sounds, lighting.
4. Inspect the tires and remove them if they are found, foreign objects (nails, etc.), check the air pressure in tires (2 kg / cm 2 front and 2.2 kg / cm 2 in the rear).

CARE AFTER every 500 km Mileage

Lubricate with a syringe pressmaslenki pins, according to the map lubrication. When using av - tomobilya on dusty or muddy roads lubricate all points of the chassis, for which the map ubrication prevention Pleasure lubricant at 1 thousand km.

CARE AFTER every 1000 km Mileage

After a run of 1000 km to perform the following work:
1. Thoroughly wash the car.
2. Check fan belt tension.
3. Check operation of valves radiator caps, check availability and serviceability of seals cluster pans.
4. Pull the sludge of mud and water from the gasoline tank.
5. Check the density and purity of compounds generator wiring, relays, regulator, starter and pro - What electrical equipment.
6. Check the electrolyte level in all six banks of battery and, if necessary, pre - pour distilled water. Check the density of the electrolyte to measure the discharge of the battery. Before checking density, if made top up the battery elements, you need to let the engine and give him a foreman, thief for charging the battery. This is to ensure that the electrolyte is mixed up and became homogeneous. Detailed instructions on care, see the section "Battery".
7. Check the density of connection wires to the battery, as well as the integrity of the tank (presence of cracks and leakage of electrolyte).
8. Check freewheel clutch pedal (38 - 45 mm) and brake (8 - 14 mm) and otregu - for framing, if necessary.
9. Check the brakes and, if the maximum pedal gap between its ASW - schadkoy and the floor less than 20 mm, adjusted as described in the "brake."
10. Check the fluid level in the main brake cylinder and, if necessary, pour.
11. Check the condition of fixing the car, especially fixing crankcase steering, steering-roaring gov, fry steering, generator bracket to the engine and generator - to the bracket.
12. Execute all instructions lubrication charts.

CARE AFTER EVERY 3000 km Mileage

1. Perform the work under after run 1000 km.
2. Inspect condition of tires for uneven tread wear, find and eliminate the cause. Transpose wheels with tires, as shown in FIG. 121, to check and, if necessary, adjust the retired wheels.

CARE AFTER EVERY 6000 km Mileage

1. Together with a mechanic inspect the car.
2. Make a small test run (3 - 5 km), during which the test pressure in the system engine lubrication (g), water temperature in the engine, brakes work, the work of adhesion and co - timid transmission, steering operation and behavior of the car on the road at various speeds, ra - bot engine at idle and under load, and to monitor the behavior of the ammeter needle.
3. Listen to the work of the valves and adjust them if necessary.
4. Check fan belt tension and serviceability of the water pump.
5. Clean the tube and the crankcase ventilation hoses.
6. Tighten the nuts pipeline to the engine.
7. Tighten the three screws connecting the pipeline to the tailpipe.
8. Check the connection petrol pump to the engine, the state of the flexible hose benzinoprovoda and tightness of all connections of the latter.
9. Drain the gasoline tank sediment from the mud and water through the drain holes, bending the car in side of these openings.
10. Inspect and, if necessary, smooth out the breaker contacts in the distributor ignition. From - adjust the gap.

11. In a way sure to specify the installation of ignition, which, after adjusting the gap to the breaking - body will inevitably be compromised.
12. Inspect and adjust spark gap between the electrodes.
13. Check serviceability of the water pump and the absence of leakage from the water.
14. Tighten the bolts fastening the generator to the bracket and the bracket - to the engine.
15. Check (by pressing a finger) the effect of radiator valves, plugs and serviceability pads.
16. Check with the devices work correctly relay-regulator (see "Elektroobo - damaged equipment ").
17. Check the density and purity of compounds generator wiring, the relay-regulator, starter and other electrical equipment, also check the state of isolation and fixing the wires.
18. Check the condition of brushes, the state of the collector of the generator and starter. Blow the generator and starter air and wipe them clean with a rag collectors, slightly dampened with pure gasoline.
19. Check the connection and contacts the alarm wires to the signals.
20. Check the correctness of all connections and systems required to verify the installation headlights.
21. Check the level and density of electrolyte in all six banks, battery and ec - if necessary, top up with distilled water.
22. Remove the tips of the wires from the battery pins, smooth out the surface contact ARRANGEMENTS, put the wires in place, tighten the terminals and lubricate them with petroleum jelly (substitute - solidol). Prov rit serviceability of the tank (the absence of cracks and leakage of electrolyte).
23. Remove the hub, to clean up the brakes and replace the grease in the wheels. When taken front hubs, trunnion shaking up and down, to determine the presence of slack in the king-pin and make an adjustment, if necessary. Ensure there are no leaks grease and brake fluid. Tighten the bolts fastening shield brakes. Perform adjustment of wheel bearings.
24. Check the value of free running clutch pedal (38 - 45 mm) and brake (8 - 14 mm).
25. Check the brakes and, if the maximum nom pedal gap between its ASW - schadkoy and the floor less than 20 mm, adjusted as described in the "brake."
26. Check the fluid level in the main brake cylinder, as indicated in the map of lubricant and, if necessary, refill it.
27. Check the status of heads steering rods, serviceability of their seals.
28. Check the condition of front and rear shock absorbers, refill, if necessary, shock-absorption fluid. Tighten the screws fixing shock absorbers and struts.
29. Unscrew and blow Vents to the atmosphere of the front and rear axles, transfer case and frame re - cottages.
30. Check the status of cardan shafts, their joints and connections.
31. Check and, if necessary, adjust the handbrake (the length of the cable drive and the gap between the co - boats and drum).
32. Check Ret front wheels and adjust if necessary.
33. Inspect condition of tires. If you notice uneven tread wear with the find - HN and eliminate them,
34. Check the condition of the rubber bushings springs.
35. Tighten the nuts to the crankcase steering spar.
36. Tighten the nut fixing steering fry.
37. Remove the propeller shafts and tightening the screws, fasten flanges on the drive gears bridges, the secondary shaft of the gearbox shaft and the lower the transfer case (front and rear). After the braces, but before shplintovki nuts, want to check if the axial backlash in podshipni - Kach drive gears front and rear axles and bearings of the lower shaft of the transfer case. This there is a backlash, if the hand pull the flanges (in the transfer case pull the rear flange). When Nali - chii backlash should be made adjustable lifting pads. After adjusting axial gap to be absent, and the rotation shafts should be smooth under a force of one hand (for the flange). Then the nuts should zashplintovat and put into place cardan shafts. When shplintovke not allowed otvertyvanie nuts to match the holes in the shaft with pro - rezom in the nut. For this match the nuts need only hold out.
38. Check the condition of fixing body parts.

39. Execute all instructions lubrication charts.

Care after each 12000 km Mileage

Complete all work set after run 6 thousand miles, with the following additions:

1. At trial run to find out whether the engine does not need to remove carbon from the combustion chamber.
2. Remove, disassemble and clean the carburetor. Remove deposits of resin with a diffuser plate (see Sec - Affairs "Fuel"). Ensure satisfactory condition of all the gaskets, replace unfit. Check the fuel level in float chamber. After installing the carburetor on the engine will adjust - vat closing choke, idling the main jet and needle.
3. Check for deposits inside back cover of the engine valve box, if necessary, Mosty clear lid. In the presence of resinous deposits in the intake pipe, remove them.
4. Remove from the motor-filter, clean his tank and filter element from precipitation, rinse the element in the liquid oil and build a filter.
5. If the engine runs on leaded petrol, to remove the cylinder heads and clean-Issue WIDE valves from deposits of lead.
6. Verify automatic ignition timing: centrifugal and vacuum.
7. Remove the starter motor, disassemble it, clean, lubricate and assemble.
8. Remove the glass cap gasoline tank and remove the mesh filter. Empty tank and the grid. While raising the cap in place to monitor the absence of under it leaks.
9. Perform inspection of wheel bearings, replaced in their lubrication and cleaning of the brake system in follows:

a) remove the hub of the wheels;

b) wash hub, steering knuckle and bearings, check their condition;

c) Rinse thoroughly and wipe the brake drums and shields all the brakes;

d) understand the main and wheel cylinders, brake, remove the dirt from the piston, the working surface rectification of cylinders and other parts, while exercising greater caution. Allowed the use of de - revyannym wedges and a clean cloth soaked in alcohol or brake fluid. Not allowed use of metal tools and fluid mineral origin (gasoline, kerosene and etc.).. Rinse the piping with alcohol or brake fluid. Lubricate before assembling the pistons custodian

rovym oil or brake fluid;

d) check the brake lining wear, make sure that the rivet heads are sufficiently tightened in the lining;

e) Loosen the bolts fastening the front brakes to swivel, remove the brake and pins (flexible hose is not disconnected the brake hydraulic line), remove the hinges from the ball bearings, remove the old and lay fresh grease (300 g in each hinge). Collect node. Formulation hinge produce PICs -

pricks not to damage the gasket installed in a ball anvil;

g) to tighten the nuts fastening lever steering linkage to swivel nuts and bolts of credit -

captivated the rear brakes to the flange housings axes;

r) put in place the bearings and hubs, laying fresh grease;

i) adjust the wheel bearings;

a) complete the system of hydraulic fluid and pump it.

Dismantling the brake cylinders and flushing of pipelines after driving 12000km made with operation on dusty roads. When operating on paved roads, these operations de - lat 1 times per year - autumn.

10. Wash with kerosene treadle include starter and lubricate it with oil.
11. Execute all instructions lubrication charts.
12. Complete all the steps in the section "Electrical".

SEASONAL MAINTENANCE - once or twice a year

1. Autumn and spring should be replaced by oil, according to the instructions card lubrication in the engine box transmission, transfer case, steering mechanism, and both bridges.
2. Fall in the cooling system should be replaced with liquid water with low temperature freezing - Nia (antifreeze).
3. Autumn clean and wash the heating body. Collate pipelines, unscrew and clean tap located on the cylinder head.
4. Autumn rinse thoroughly with petrol tanks without removing them from the car.

5. Autumn carefully check the ignition system in order to avoid difficulties when starting cold engine in the winter.
6. Autumn and spring produce, if the operating conditions necessary fine-tuning of the density electrolyte.

MAINTENANCE PERFORMED ONCE A YEAR

1. Remove the rear and front shock absorbers, unscrew the plug, closing valve seats. Remove valves and flush valves as well as housing. For cleaning Corps should pour gasoline or kerosene through the filler and shook the lever. Washing produce before the appearance of completely pure liquid bone. During the assembly not to change the valve seats to avoid the incorrect use of shock absorbers. Prohibited shock twist of fresh fluid. Plugs not working cylinder wrench.
2. Lubricate springs. To do this, remove the spring from the car, make out separate sheets clean, lubricate them and then collect. Check the integrity of the rubber bushings in the ears of springs and earrings, and as the integrity of seals between the sheets of spring, to replace worn out.
3. Remove the top cover of the transfer case (to access it to remove the hatch cover on the sur - Lu and otedinit central brake cable), and, pressing with a screwdriver gear intermediate shaft, defined pour axial backlash. In the presence of backlash to remove the back cover and rasshplintovav nut try to tighten it to match the holes in the shaft with a slot in the nut. After the braces put the lid on the place and again to check end-play. If the gap has not isappeared, then must make an adjustment of tightness in the bearings removing seals from under the back cover. After adjust the end-play should be absent, and the gears have to turn the force of one hand. Check end-play in the bearings of the lower shaft and eliminate its control (SAE - data and closing the spacers from under the back cover output shaft), removing the pre-central brake. Remove the central brake and disassemble. Refine its details. Lubricate friction parts and Expansion adjusting mechanisms with a thin layer of grease, brake assemble and adjust the gap between the deck - Kami and the drum. Keep out of the grease on the working surface of the drum. During the assembly not to be confused spring seats. Weaker springs (red) should be left.

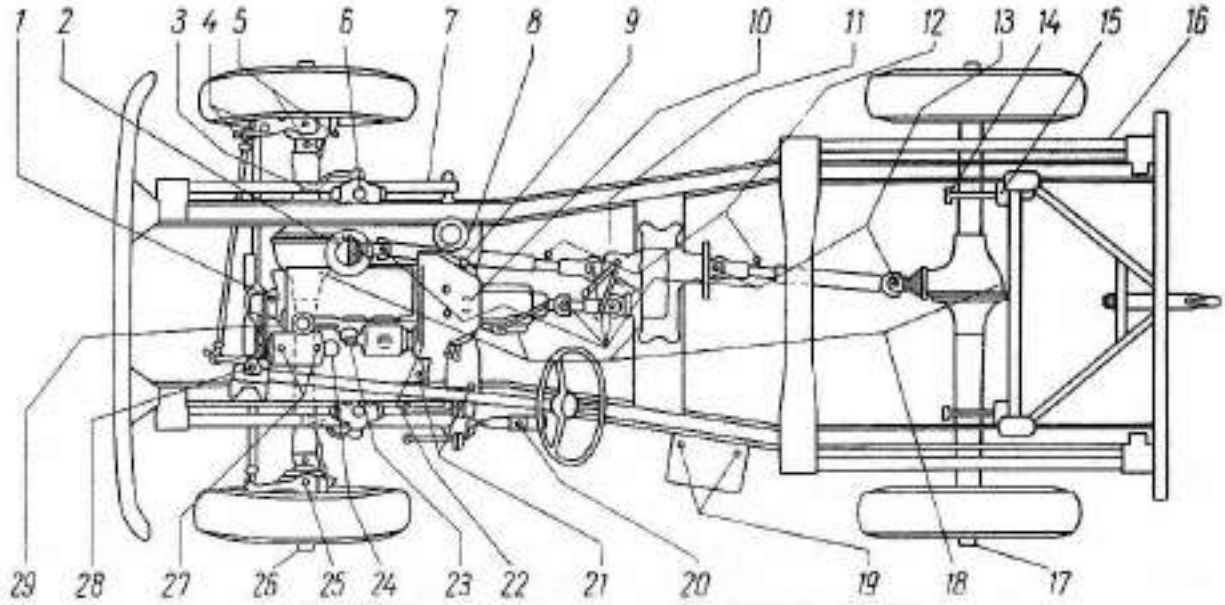

Фиг. 193. Карта смазки шасси автомобилей ГАЗ-69 и ГАЗ-69А.

Fig. 193. Map grease chassis GAZ-69 and GAZ-69A.

Applied lubricant and their symbols

Probation. indicated. Lubrication
Lubricants used in summer (at temperatures above +5 ° C)
Lubricants used in the winter (at the WHO - spirit below +5 ° C)
M The engine oil SD or motor oil with additives TSA-5 *, AKP-5 *. Replacement: AutoTrack - Turn oil AU - 5 ** or motor oil 6. For engines strong pass gas (due to wear Porsche nevyh rings) used motor oil with in - cages TSA-9, 5 * and ACP-9, 5 *. Substitutes: AutoTrack - Turn oil AC-9, 5 ** or motor oil 10. Mixture of oils: 60% oil and 40% SU spindle AU (substitute - spindle 2). The viscosity of a mixture of 3,5 ° -- 4,5 ° E at 50 ° C or motor oil with Prisada -

Kami: TSA-5 * and AKP-5 *. Replacement: autotractor AS-5 oil or motor oil ** 4. For engines with a strong pass gas (due to wear of piston-to - rings) to apply machine oil SU. Substitutes:
motor oil AS-5 ** 6 or motor oil
H Tractor Nigrol summer. Tractor Nigrol winter. Replacement: a mixture 60% Nigrol years and 40% of oil used for Engine With Solidol OSS-2 and OSS-3, CSS-2 or CSS-3. Solidol Uss-1, Uss-2, VC-1 or CSS-2
Y Grease Approved (1 - 13) GOST 1631-53
T Fluid for brakes. Replacement: a mixture of 50% castor oil and 50% ethanol (wine) or isobutene - Vågå (poison) of alcohol.
A AU spindle oil or a mixture of 60% of transformer oil and 40% of turbine A (by weight).
G Graphite lubricant ST-2-4649 or a mixture: 30% grease, 30% graphite "P" and 40% Nigrol L. AM Lubricant for steering knuckle (GOST 5730-51) or a mixture of: solidol CSS-3 - 70% and Nigrol 30%. Mixing in cold.
In Vaseline
Note. STOST * 3503-50, ** GOST 5239-51.
Map grease the chassis and engine
(see note at end of table)
Table 8
Time change grease Notes Number then Th to SmAZ ki (cm . fi g . 1 93)
Name Me - nism or part - Lei Co Lich eats in then -- Th to SmAZ ki With ort SmAZ ki (yc -- lo UPE e Reports GAP and -- across 500 km across 1000 km across 1000 km different 1 Bearing leading - On pump
1 Y -- X -- -- Adding grease
2 Air Filter carburetor 1 M -- X -- -- Irrigate and change the oil. When ra - Bota a particularly dusty roads eyes - stku produce daily. See instructions on the filter housing
3 Joints Racks front amortiza - tori 2 H -- -- X -- Adding grease 4 Joints steering tractions
4 With -- X -- -- Adding grease
5 Joints turn - GOVERNMENTAL Fists 4 AM -- -- X -- Add to 150 g. In the spring and autumn, or some 1200 km, wash fists and found 300 grams of lubricant
6 Carters front dampers 2 A -- -- X -- Topped up with liquid. Once a year, INS - mother, wash and replace the liquid bone
7 Front springs (sheets) G -- -- -- X as must - STI, but not least two annually Produce lubrication
8 Oil filter Microfilter 1 -- X and each change oil engine -- -- Drain sediment. Replace filtering - ning element through the 1500-2000 km run in black for oil in the car - tere. See the instructions on the package filter and a "Grease engine"
9 Bearing turned off - cheniya clutch 1 Y -- X -- -- The lid Cap lubricator in back to 2 - 3 turns Bearing
10 per - even primary shaft 1 Y -- X -- X at Remon - those Found lubrication
11 axis levers Sec - fine boxes 1 With -- X -- -- Adding grease
12 Slots front and rear cardan Shafts 2 With -- X -- -- Adding grease
13 Joints anterior First, rear-and pro - the intermediate car - these shafts 6 H -- X -- -- Grease solid oil is not allowed
14 Joints Racks rear amortizato - ditch 2 H -- -- X -- Adding grease
15 Rear dampers 2 A -- -- X -- Topped up with liquid. Once a year, INS - mother, wash and replace the liquid bone
16 rear springs (sheets) G -- -- -- X as must - STI, but not least two annually Produce lubrication Bearings
17 stu - pizzas back 2 Y -- -- X --
18 Carters boxes transmissions razdatoch - Noah boxes before - him and rear-ISO Comrade 4 H -- -- X and spring and autumn -- Check level and top up through 1000 km
19 terminals accumulate reflex battery 2 In -- -- -- X least twice year Produce lubrication
20 Master cylinder brakes 1 T -- X -- -- Check the fluid level, Koto - ry must be 20 mm below

edge of the filler. Zaprav - cc mineral oil, the origin Denia is not allowed, since it incapacitates rubber parts braking system.
21 Axis pedals and roll drive off - Nia Clutch 2 With -- X -- -- Adding grease
22 Bearings vali - ca accelerator 2 T -- -- X -- 1-2 drops
23 Distributor Ignition 2 M -- -- X -- To put 2-3 drops of motor oil axle hammer, a brush and cam felt washer under the rotor.
24 Oil filter rough cleaning 1 -- -- -- X Drain sediment when changing oil engine. See the instructions on the front - It shield under the hood
25-pin turn tion fist 2 With or AM X -- -- -- Adding grease Bearings
26 stu - pizzas front wheels 2 Y -- -- X --
27 Generator 2 M -- -- X -- 5 drops
28 Carter steering mechanism 1 H -- -- -- X spring and autumn After 1000 km check and if necessary, As required slug
29 crankcase 1 M -- -- -- across 1500 -- 2000 km
The oil level is checked daily
Notes.
1. Before you need to wipe the grease lubricator.
2. Greasing the chassis should be performed after washing the car.
3. When operating the vehicle on the dusty and dirty roads all the points to be lubricated through 1000 km, lubricated by 500 km.

REFERENCES

1. *Belyshev VN, Borisov VI, Lipgart AA, Prosvirnin AD, Schneider GK* GAZ-51. The device, service and repair, 1952.
2. *Lipgart AA, Wasserman GM* Vehicle M-20 "Pobeda", Mashgiz, 1955.
3. GAZ-69, instruction on care, the publication of GAS. Molotov, 1955.
4. *Schneider GK* engine repair GAZ, Gorky Book Publishers, 1955.
5. *Popov VA* Tractor Equipment Mashgiz, 1953.

CONTENTS

Preface 3
CHAPTER I
Car specifications 4
General data 4
Controls and instrumentation panel 8
CHAPTER II
Engine 10
The block and cylinder head 10
Crank mechanism 12
Distribution Mechanism 16
Engine lubrication system 18
Crankcase ventilation 26
Cooling 27
Power system 32
Gas Exhaust 45
Engine Suspension 46
Care engine 46
Brief information on repair of engine 47
Interchangeable parts and engine components GAZ-69 and GAZ-51 49
CHAPTER III
Chassis 51
Strength 51
Transmission 54
Transfer Case 58
Cardan gear 62
The rear axle and the main channel 63

https://truckmanualshub.com/

Front Axle 70
Steering and tie rod ends 77
Brakes 81
Suspension Vehicle 90
Hub rear and front wheels 95
Wheels and tires 96
Frame 100
Towing arrangement 101
CHAPTER IV
Body 102
Body of GAZ-69 102
Body of GAZ-69A 108
Heater body and heating windscreen 110
Trailer GAZ-704 to tow vehicles GAZ-69 and GAZ-69A 113
CHAPTER V
Electrical 115
General 115
The power supply system and run 115
Ignition system 136
Lighting system 147
Beep 153
The system wiring and protection 154
Instrumentation and alarm 155
Accessories 162
CHAPTER VI
Vehicle Maintenance 165
Start and stop the engine 166
Driving a car 172
Running a new car 174
Fuel 176
Maintenance Vehicle 177
Literature 185

Zislin SG, Mozohin NG, Pelyusheiko OI,
Chernomashentsev AI, Yakubovich IE
GAZ-69 and GAZ-69A
Editor *A. D. Ponomarenko*
Artist *B. B. Lebedev*
Artist. Editor *L. I. Nemchenko*
Technical Editor *K. Zakharov*
Corrector *R. G. Brulikovskaya*
Izd. № 2696. Signed to print 16/-III
1956 Paper 60x92 1 / 16 - 20 = print 20 conv. print, 20,47 uch-izd.listov.
MC 00076. Circulation 15000 ekz.3akaz 4432.
Price 8 r.. 15 K.
Gorky's publishing house,
Gorky Str. Gogol, 19.
*
Gorky Regional Printing
Gorky Str. Figner, 32.

https://truckmanualshub.com/

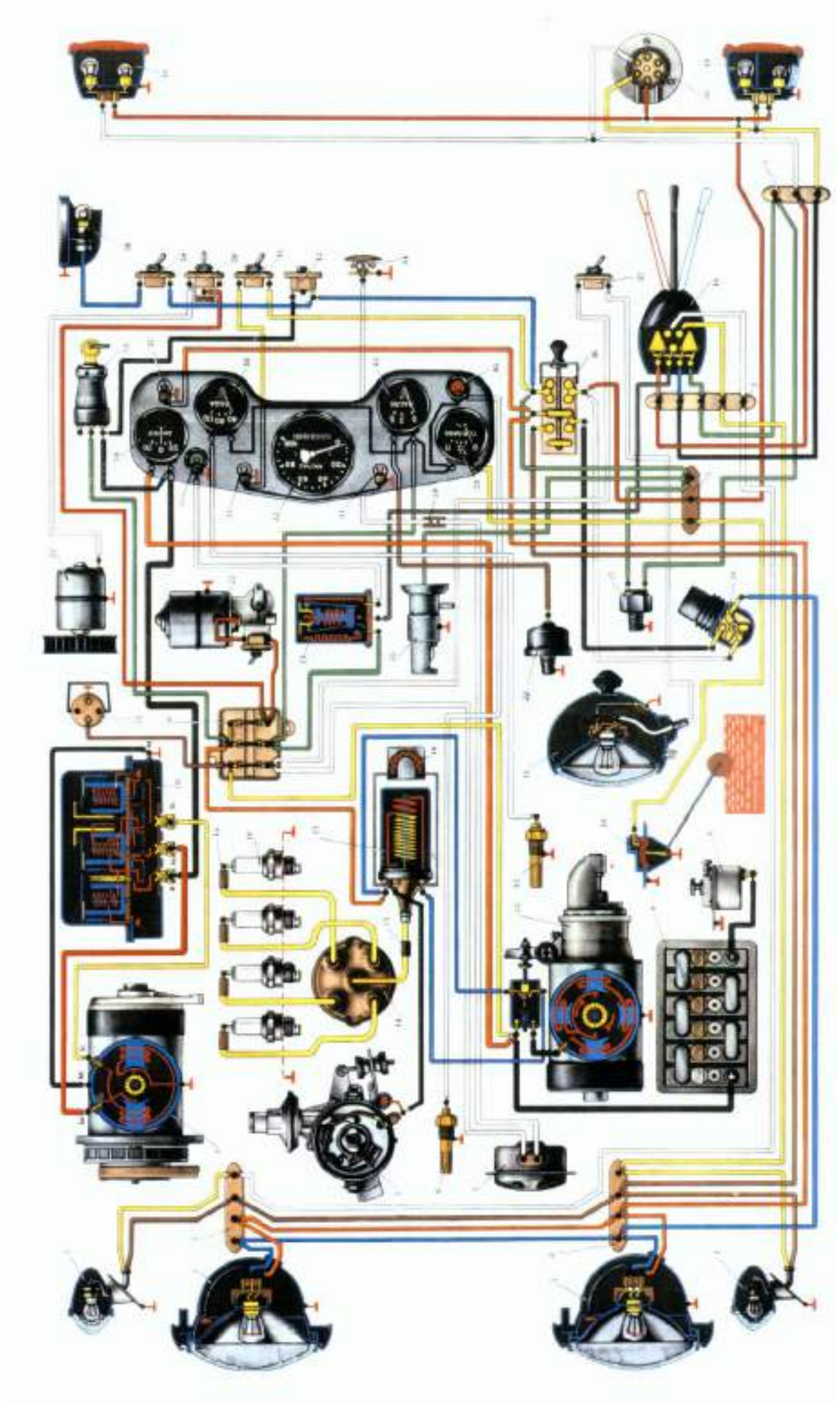

WIRING DIAGRAM FOR 12N TYPE 7-PIN Black socket or plug

for vehicle road lights

Colour	Terminal	Purpose
Yellow	1 (L)	LH Indicator
Blue	2 (54G)	Rear Fog Light (or Aux.)
White	3 (31)	Earth
Green	4 (R)	RH Indicator
Brown	5 (58R)	RH side Light
Red	6 (54)	Stop Lights
Black	7 (58L)	LH Side Light

Looking at the Socket towards the plug.
Looking at the Plug towards the socket.

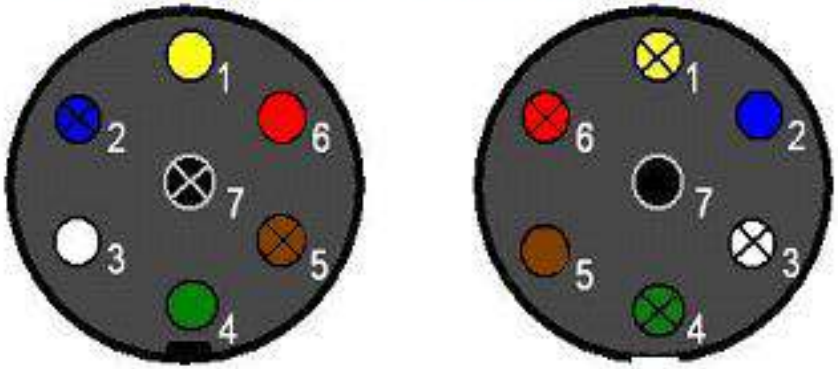

https://truckmanualshub.com/