https://truckmanualshub.com/

VALTRA – VALMET

MEGA MEZZO HI-TEC

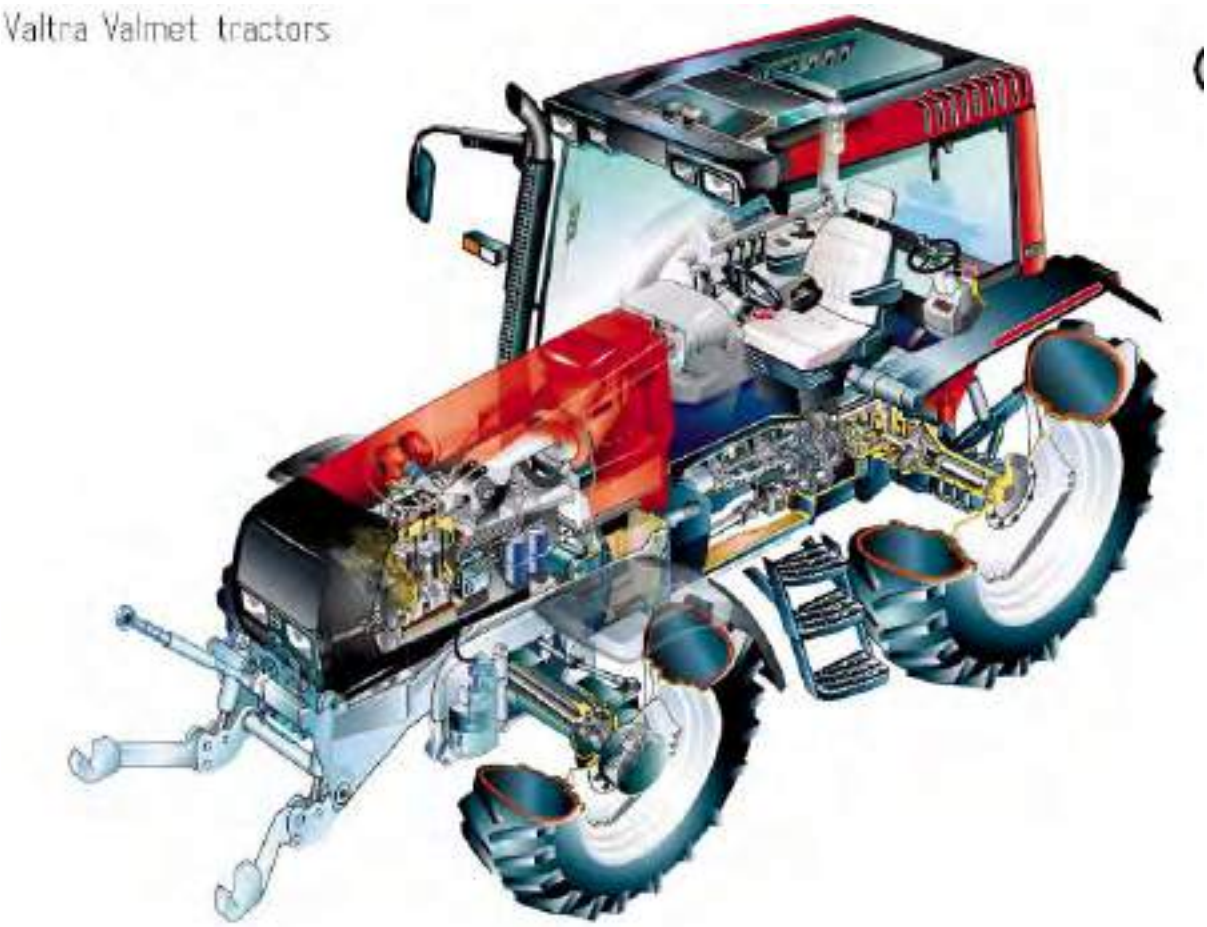

WORKSHOP MANUAL

https://www.truck-manuals.net/

https://truckmanualshub.com/

VALTRA

6000, 6100, 6200
6250, 6300, 6350
6400, 6550, 6600
6650, 6800, 6850
6900, 8000, 8100
8200, 8400, 8050
8150, 8450, 8550
8750, 8950
6600E – 8750E

Service Manual

Tractors

Groups 10 – 100

10 General

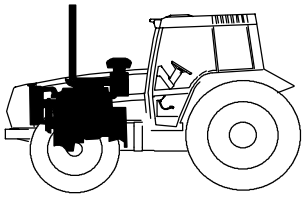

20 Engine

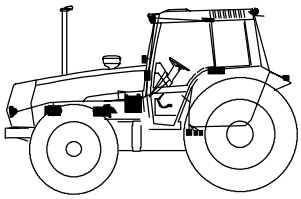

30 Electrical system

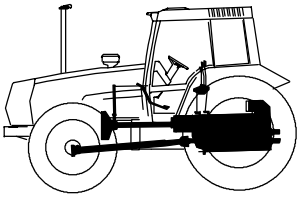

40 Power transmission

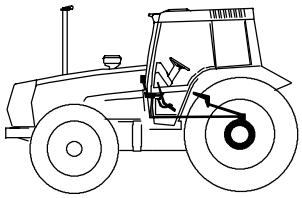

50 Brake system

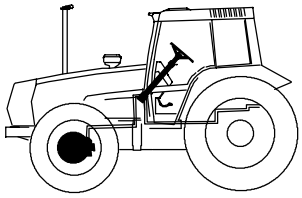

60 Steering system and Front axle

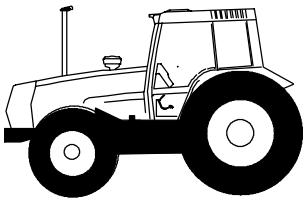

70 Frame and Wheels

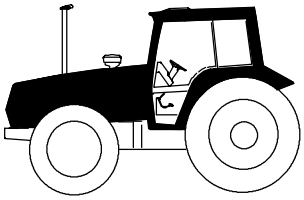

80 Cab and Shields

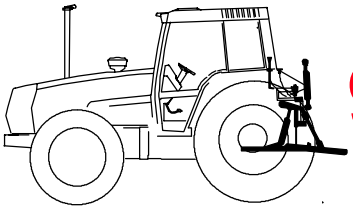

90 Hydraulics

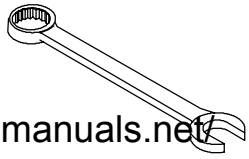

100 Tools

Valtra Inc.
44200 Suolahti, Finland

https://www.truck-manuals.net/

https://truckmanualshub.com/

Order no 39 210 211
ENGLISH

https://www.truck-manuals.net/

https://truckmanualshub.com/

10. General

11. Layout

12. Repairs

13. Maintenance

https://www.truck-manuals.net/

https://truckmanualshub.com/

https://www.truck-manuals.net/

https://truckmanualshub.com/

To the reader

The Service Manual for the Valmet tractors is intended to be a practical reference source to be used in workshop. The repair instructions in the manual are based on methods which have been worked out in practice during normal workshop conditions and which are based on the use of special tools from the manufacturer when stated in the instructions. The manual also contains descriptions of the design and function of the components.

Detailed maintenance instructions can be found in Operator's Manual.

The Service Manual will be continually updated with new revised pages which should be inserted in the manual. Alterations and additions will first appear as service bulletins.

Only genuine Valmet spare parts should be used to ensure the best possible function of the machine. Certain operations should be carried out with the aid of special tools designed by Valmet.

Valmet Tractors Inc.
Tractor Service

https://www.truck-manuals.net/

https://truckmanualshub.com/

https://www.truck-manuals.net/

https://truckmanualshub.com/

11. General	~~1. 8. 2000~~ 1. 9. 2002	Model 6000 – 8950	Code 110	Page 0

The following supplements have been published for the Valmet 6000 – 8950 Service Manual:

Ordering number	Date	Notes
39 256 211	15. 6. 1992	
39 256 212	1. 9. 1992	
39 256 213	15. 5. 1993	
39 256 214	1. 1. 1994	
39 256 215	1. 1. 1995	
39 256 216	15. 4. 1995	
39 256 217	15. 5. 1996	
39 256 218	1. 4. 1997	
39 256 219	1. 8. 1998	
39 260 211	1. 11. 1998	
39 260 212	1. 6. 1999	
39 260 213	1. 10. 1999	
39 260 214	1. 8. 2000	
39 260 215	1. 9. 2002	

Supplement no. 39 256 211 (15. 6. 1992)
Includes:
– Autocontrol III
– air conditioning
– tractor 8000
– amendments

Supplement no. 39 256 212 (1. 9. 1992)
Includes:
– 20 – series engines
– amendments

Supplement no. 39 256 213 (15. 5. 1993)
Includes:
– Delta Powershift
– tractor 8400
– amendments
– the latest fitting instructions of optional equipment

Supplement no. 39 256 214 (1. 1. 1994)
Includes:
– tractors 6000 and 8200
– Autocontrol II
– Autocontrol IV
– Sige – axle differential lock
– industrial front axle
– latest air conditioning
– amendments

Supplement no. 39 256 215 (1. 1. 1995)
Includes:
– amendments
– the latest fitting instructions of optional equipment

Supplement no. 39 256 216 (15. 4. 1995)
Includes:
– engine intake air system and cooling system, modifications
– Autocontrol 2.1
– Agrodata – instrument
– hydraulic type clutch release mechanism
– DPS, modifications

Supplement no. 39 256 217 (15. 5. 1996)
Includes:
– tractor 6800
– tractors 8050 – 8750
– amendments

Supplement no. 39 256 218 (1. 4. 1997)
Includes:
– tractors 6200 and 8000R
– front PTO
– CareTel
– Hi Shift
– amendments
– the latest fitting instructions of optional equipment

Supplement no. 39 256 219 (1. 8. 1998)
Includes:
– FieldMaster
– pressure air brakes for trailer (optional)
– latest fitting instructions for optional equipment
– amendments
– new folder, new index leaves (10 – 30 and 40 – 100) and new spine labels.

Supplement no. 39 260 211 (1. 11. 1998)
Includes:
– HiTech reverse shuttle
– Autocontrol V
– New 50 – series models
– Front axle air suspension
– E – engines
– Amendments

Supplement no. 39 260 212 (1. 6. 1999)
Includes:
– Autocontrol 2.2
– amendments (e.g. for AC V)
– fitting instructions for optional equipment

Supplement no. 39 260 213 (1. 10. 1999)
Includes:
– Carraro 20.29 front axle
– amendments (e.g. version 42 of AC V)

Supplement no. 39 260 214 (1. 8. 2000)
Includes:
– HiTech gen. 2, AC – 5.2
– front PTO on 6250H – 6850Hi tractors
– modified lubricating oil pump for 6 – cyl. engines
– new rear axle housing for transmissions 650/550
– amendments
– updated fitting instructions for optional equipment

Supplement no. 39 260 215 (1. 9. 2002)
Includes:
– transmission and final drives 700
– Agroline – instrument
– technical modifications

https://www.truck-manuals.net/

https://truckmanualshub.com/

https://www.truck-manuals.net/

Layout of Service Manual

1. Division into groups

The manual is divided into groups (10 – 100) which are based on the make – up of the tractor. The groups are listed on the first index leaf.

Example.
10. General
20. Engine, fuel and cooling systems
30. Electrical system
40. Power transmission
a.s.o.

The number designation for each group is given in the top left box of the respective pages (and the first figure in the code designation)

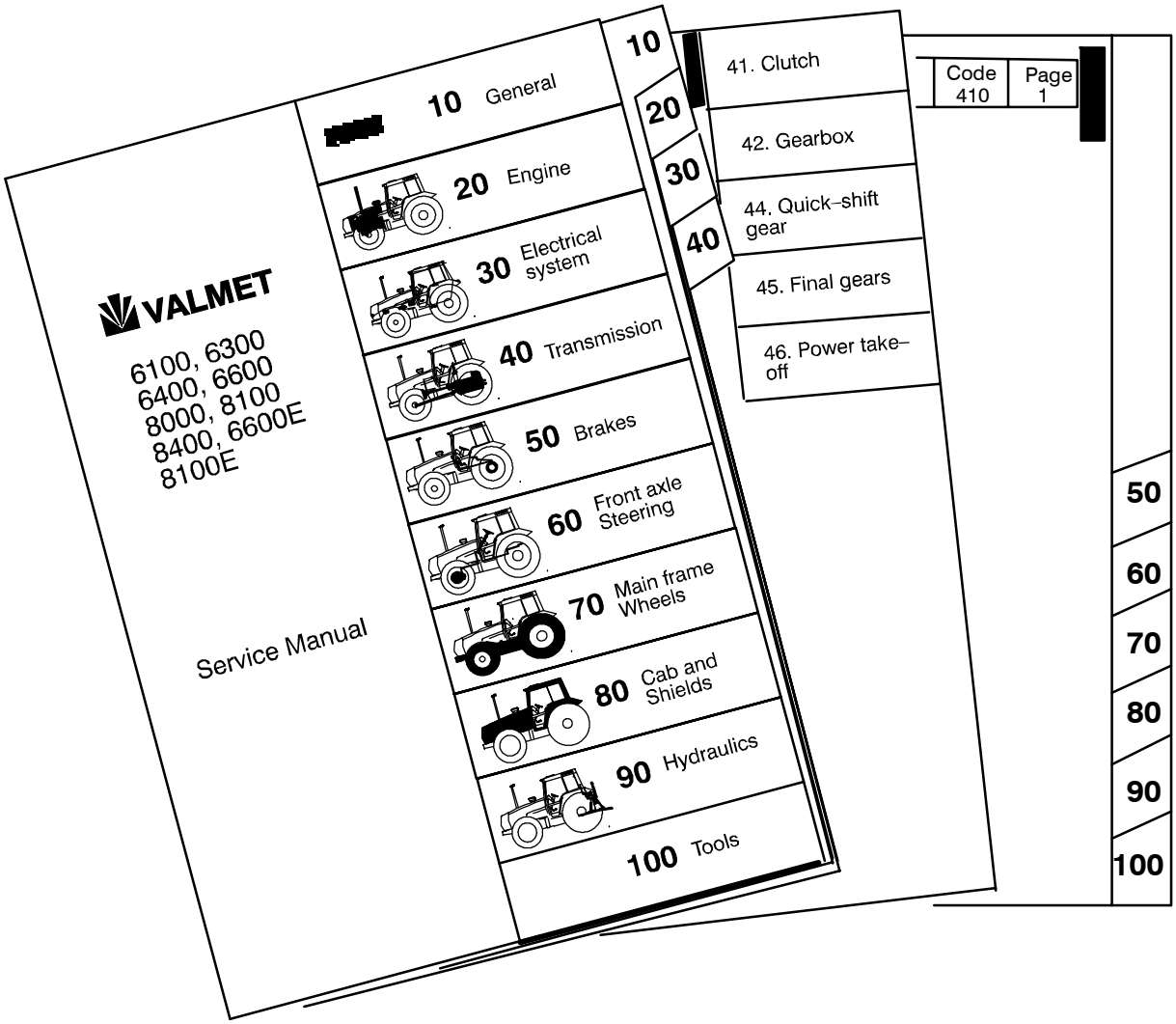

2. Division into components or sub – groups

Each group is further divided into components or sub – groups. The number and the name of each component is given in the top left box on each page (and comprise the two first figures in the code designation).

Example. 41. Clutch
42. Gearbox
44. Quick – shift gear
45. Final drives etc.

https://www.truck-manuals.net/

https://truckmanualshub.com/

3. Code designation

Three–digit code designations are used to distinguish the different document groups for the respective components. The same code is also used in the Time List as a reference to the text in this Manual. The code designation numbers appear both in the box at the top of the page and also in the headings.

Example: Code 410:
– Group: Power transmission (4)
– Component: Clutch (41)
– Document group: General (410)

4. Page numbers

The instructions for all components are numbered in consecutive order in the right–hand box at the top of the page. The page numbers begin with page 1 for each component.

VALMET

41. Clutch	~~8. 11. 1990~~ 15. 5. 1993	Model 6100–8400	Code 410	Page 1

5. Date

At the top of each page there are two boxes for dates. In the case of a revised issue, the date of the earlier issue is printed in the crossed–over box and the date of the current issue is printed in the ”real” date box.

6. Model

At the top of each page the tractor model for which the page is valid is indicated.

7. Additions and amendments of the service manual

New and up–dated pages will be continually added to the service manual. The new pages should be inserted as indicated by the code: the first digit (also the first digit on the index leaf) indicated the group:
– the two first digits indicate the component or sub–group
– the third digit indicates the document group for the respective components
– the page number indicates the definite position of the page within the service manual

If there are two pages with the same code and page number the page with the later date in the date box (and the old date in the crossed–over box) is valid (or the current page).

N.B. Fitting instructions for extra equipment are inserted into the service manual at the end of group concerned (E.g. code 39 is inserted at the end of group 30).

https://www.truck-manuals.net/

Code designation in the Service Manual

10. General
110 Layout
120 Repairs
130 Maintenance

20 Engine

21. Engine
210 Technical data, tools, description
211 Cylinder block and flywheel housing
212 Cylinder head and valve mechanism
213 Crank mechanism
214 Timing gears
215 Lubrication system and oil sump
216 Induction and exhaust system, turbocharger
219 Removing and fitting engine

22. Fuel system
220 Technical data, tools, description
222 Fuel feed pump and fuel filters
223 Injection pump and injectors

23. Cooling system
230 Technical data, tools, description
231 Thermostat and coolant pump

30. Electrical system
310 Specifications, wiring diagrams
311 Autocontrol II
312 Autocontrol 2.1
313 Sigma–power
320 AC power lift
321 ACD power lift
330 Agrodata
331 AD–instrument
340 Autocontrol–III
350 Autocontrol IV
360 CareTel

40. Power transmission

41. Clutch
410 Technical data, tools, description
411 Clutch assembly and pedal rods
412 Hydraulic coupling

42. Gearbox
420 Technical data, tools, description
421 Selector forks
422 Gear shift levers
423 Shafts and gear wheels
424 Differential

44. Quick–shift gear, DPS, reverse shuttle, 4WD clutch
440A Quick–shift gear, technical data, tools, description
440B Reverse shuttle, technical data, tools, description
440C 4WD clutch, technical data, tools, description
441 Quick–shift gear, repair instructions
442 Reverse shuttle, repair instructions
443 4WD clutch, repair instructions
444 DPS, repair instructions

45. Final drives
450 Technical data, tools, description
451 Final drives, repair instructions

46 Power take–off
460 Technical data, tools, description
461 Power take–off, repair instructions
463 Front PTO, repair instructions

https://www.truck-manuals.net/

https://truckmanualshub.com/

50. Brakes
510 Technical data, description
511. Service brakes
520 Parking brake

60. Steering system and front axle

61. Steering system
610 Technical data, tools, description
611 Steering valve
612 Priority valve
613 Steering cylinder
614 Adjustment

64. Powered front axle
640 Technical data, tools, description
641 Front axle housing and front axle suspension
643 Hubs
644 Differential
645 Industrial front axle

70 Frame and wheels
710 Tractor frame
720 Tyres and wheel discs

80 Cab and shields
810 Cab
820 Shields
830 Air conditioner

90 Hydraulics
910 Technical data, tools, description
911 Pump and pipes
912 Working hydraulics
913 Three–point linkage, towing hook
920 AC power lift

100. Special tools
101 Special tools (ETV)
102 Locally manufactured tools

Note! Separate fitting instructions for the optional equipments are inserted into the Service Manual. These instructions are positioned to the end of each main group. E.g. code 39 are placed to the end of group 30.

https://www.truck-manuals.net/

General instructions for repairs

Outer oil seals

The Service Manual contains instructions for changing all outer oil seals, (e.g. oil seals on the PTO shaft end, on the output shaft to the front wheel drive and on the pinion shaft on the powered front axle, and so on).

Sealing compound and glue

If sealing compounds or glue are required for the repair work, the instructions will specify a sealing compound or glue which is readily available through specialist dealers. Some seals should be greased before fitting and the space between the lips of the seal should be filled with universal grease. If the seal is to be pushed over splines or sharp edges the seal should be protected with for example a thin plastic foil.

Tightening torques and setting values

All necessary tightening torques and setting values for each repair operation are given at the beginning of each repair section under the heading Technical Data. The most important values can also be found in the repair instructions.

Table 1 later gives the tightening torques in order of dimension, quality and surface treatment. The values given in the table should be used if the tightening torque is not given in the repair instructions.

Safety

Always bear safety in mind when repairing or servicing the tractor. Use tools and lifting devices in the correct way . When you are removing tractor components or splitting the tractor, every tractor part must be supported in such a way, that no risk of accident exists. Avoid working under the supported tractor part if it is not absolutely necessary. When supporting the tractor the centre of gravity of the frame part must always be checked. For instance the wedges must always be fitted between front axle and engine to prevent axle oscillation when splitting the front frame of the tractor.

Trouble–shooting

The following procedure, combined with the information contained in the workshop manual will be helpful in tracing faults accurately. It consists of following a number of logical steps to locate and correct the problem:

a) Determine the problem

b) List possible causes

c) Differentiate the causes

d) Conduct checks in logical order to determine the exact cause

e) Consider approximate remaining service life against cost of parts and labour..

f) Make any necessary repairs.

g) Recheck the parts and functions for correct operation

https://truckmanualshub.com/

Handling of heavy components

Unless otherwise specified, all removals should be accomplished using adjustable lifting equipment. All supporting slings must be parallel to each other and as near vertical as possible in relation to the object being lifted. However, where slings are of a far greater capacity than the weight of the load to be fitted, a triangular lifting arrangement may be used.

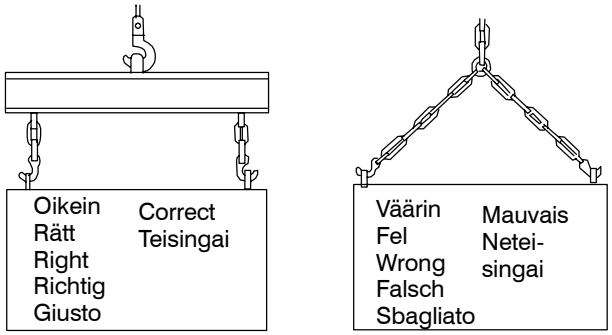

When removing a component at an angle, remember that the capacity of an eyebolt is reduced when the angle between the supporting members and the object becomes less than 90˚.

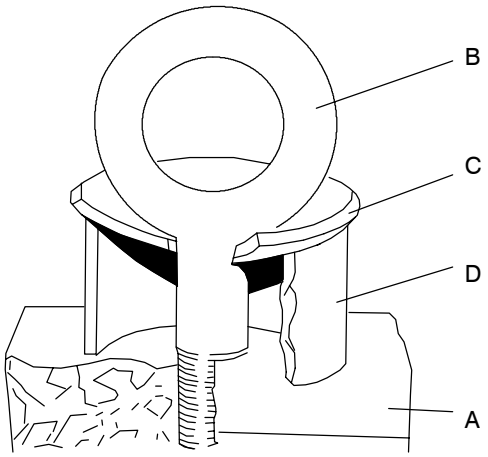

Forged eyebolt support

A. Load
B. Lifting shackle
C. Shackle retaining plate (3 mm thick)
D. Sleeve

When necessary the forged eyebolt can be supported in the way shown in figure above. Sleeve D may or may not be welded to plate.

Warning! If a part resists removal, check that all nuts and bolts have been removed and that there is no interference from adjacent parts.

Cleanliness

To ensure long life of a machine, it is important to keep dirt and foreign material out of its vital working components. Precautions must be taken to safeguard against this. Enclosed compartments, seals and filters have been provided to keep the supply of air, fuel and lubricant clean. These protective devices must not be removed.

Whenever hydraulic, fuel, lubricating oil or lines are disconnected, clean the point of disconnection and the surrounding area. As soon as a line has been disconnected, cap, plug or tape the line or opening to prevent the ingress of foreign material.

The same cleaning and covering precautions should be taken when access covers or inspection plates are removed.

Clean and inspect all parts. Make sure that all passages and holes are clear. Cover all parts to keep them clean. Make sure parts are clean when they are reassembled. Leave new parts in their wrapping until they are actually needed for reassembly

Assembly

When reassembling a machine, complete each step in sequence. never partially assemble one part then start to assemble another. Make all recommended adjustments. Always check the job on completion to ensure that nothing has been overlooked. Recheck the various adjustments before putting the machine back into service.

Note! Before fitting new parts, remove rust preventative compound from all machined surfaces (usually ”peel–off substances).

Lubrication

Where applicable, fill the compartments of repaired or renewed components with the quantity, type and grade of clean lubricant recommended in the routine maintenance section of the Operator’s Manual.

Shims

When shims are removed, tie them together and identify their location. Keep shims clean and take care not to bend them before refitting them.

Gaskets

Make sure that the holes in gaskets line up with lubricating oil passages in the mating parts. If gaskets have to be made, use material of the correct type and thickness. Make sure that holes are punched in the right places.
Incorrectly punched gaskets can cause serious damage.

Lip type rubber seals

Lubricate the lips of lip–type rubber seals with oil before fitment. Do not use grease on seals, except for grease seals.

https://www.truck-manuals.net/

https://truckmanualshub.com/

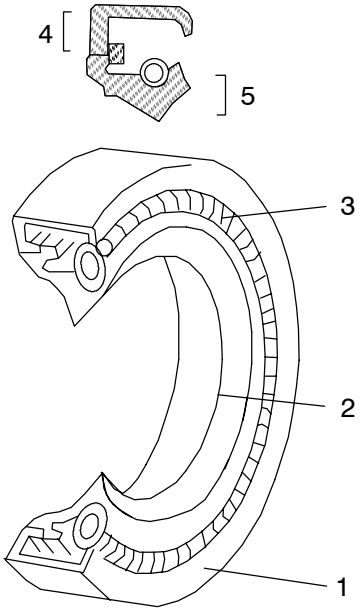

The main parts of lip–type seal:
1. Case
2. Sealing element
3. Ring spring

The figure above shows the construction of a simple lip–type seal. The cross section shows the heel (4) and the toe (5), used to identify the sides of a single element seal. With a few exceptions, the toe of a single–lip is located on the lubricant side. Some seals have a second auxiliary lip which has no spring.

Cables and wires

When removing or disconnecting a group of cables or wires, label each one to ensure correct refitment.

Locking devices

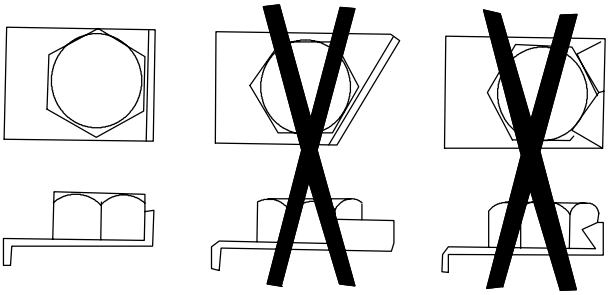

Correct and incorrect use of retainers

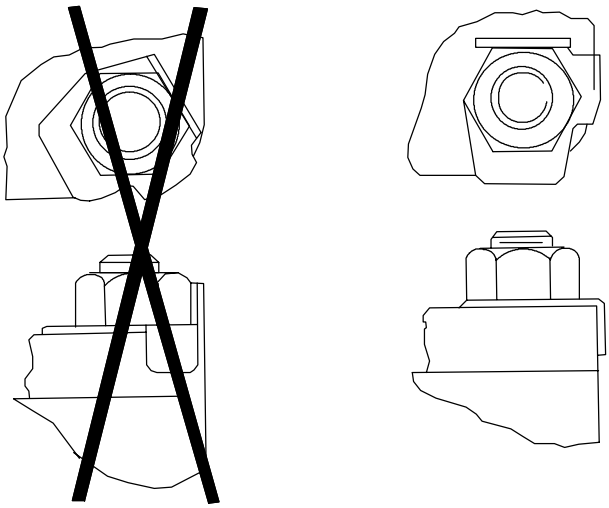

Correct and incorrect method of fitting and bending locking tabs.

Slackening of nuts and bolts is prevented by mechanical means such as lockwashers, tab washers and cotter pins, or by Loctite–type locking agents.

Flat retainers must be installed properly to be effective. Bend one end of the retainer against the edge of the part. Bend the other end against one of the nut or bolt head.Always fit new retainers in compartments which house moving parts. When fitting lockwashers on aluminium housings, place a flat washer between the lockwasher and the housing.

Note!
1) Never fit a lockwasher (Grower, fan, spring, etc.) under a nut or bolt to which a specified torque has to be applied.

2) Always thoroughly degrease components before applying Loctite type locking agents.

Bushes and press fits

Do not fit bushes with a hammer alone. Use a suitable fitting tool and a hammer or, better still, a press if possible..

When using a press, ensure that pressure is applied directly in line with the bore. If the ring has an oil hole, take care to align it with the oil hole in the mating part. When press fitting a part into another part, lubricate the mating surfaces. Tapered parts should be assembled dry. Before assembly, check that the tapers are dry and free from burrs.

Fitting bolts in blind holes

Use bolts of the correct length. A bolt which is too long may ”bottom” before the head comes into contact with the part it is to hold: this will cause damage to the threads. If a bolt is too short, there may not be enough threads engaged to hold the part securely.

https://www.truck-manuals.net/

Table

Table 1. Tightening torques, metric standard thread (ISO)

Dim.	Tightening torques Nm[1])									
	Quality, surface treatment, material and so on									
	8.8 lubr.	tol.±	8.8 Zne[2])	tol±	8.8 Znk[3])	tol. ±	10.9 lubr.	tol. ±	12.9 lubr	tol. ±
M4	–		–		–		–		–	
M5	6,4	0,6	5,7	0,5	–		9	1	11	1
M6	11	1	10	1	12	1,2	15	1,5	18	2
M8	25	2	23	2	30	3	35	4	45	5
M10	50	5	45	5	60	5	70	7	90	10
M12	90	10	80	8	100	10	125	10	151	15
M14	140	15	125	10	160	15	200	20	240	20
M16	220	20	195	20	250	25	300	30	370	40
M18	300	30	270	30	350	35	430	40	510	50
M20	430	40	380	40	480	50	600	60	720	70
M22	570	60	500	50	650	65	800	80	970	100
M24	740	70	660	70	830	80	1030	100	1250	120
M27	1100	100	950	100	1200	120	1500	150	1800	180
M30	1500	150	1300	130	1600	160	2040	200	2500	250

[1]) 1 Nm=0,102 kpm
[2]) Zne=zinc electroplating
[3]) Znk=hot galvanized

If the bolts differs from the standard range the values in the table must not be used.

https://www.truck-manuals.net/

Conversion table for common units

Quantities and units	Conversion factors
Overall and detail dimensions millimetres (mm)	100 mm=3,94 inches 1 inch=25,4 mm
Short distances e.g. turning circles metres (m)	1 m=3,28 ft 1 ft=0,305 m
Travel distances kilometres	1 km=0,62 mile 1 mile=1,61 km
Tractor weights, axle loadings kilograms (kg)	1 kg=2,2 lbs 1 lb=0,454 kg
Travel speed kilometres per h (km/h)	1 km/h=0,62 mph 1 mph=1,61 km/h
Drawbar pull kilonewtons (kN)	1 kN=224,8 lbs 1 lb=4,448 N
Power (identified by such terms as crankshaft power, pto power, belt power, drawbar power, indicating the point at which the measurement was taken) kilowatts (kW)	1 kW=1,34 hp 1 hp=0,746 kW
Engine torque newton metres (Nm)	1 Nm=0,74 ft lb 1 ft lb=1,356 Nm
Fuel consumption by weight (kilograms per hr, kg/h) (by volume) litres per hr (l/h)	1 kg/h=2,2 lb/hr 1 lb=0,454 kg 1 l/h=0,22 gal/hr 1 gal=4,54 l
Fuel economy (specific fuel consumption) grams per kilowatt hr (g/kWh)	304 g/kWh=0,5 lb/hp hr
Engine displacement litres (l)	1 l=61,02 m cu in 100 cu in=1,639 l
Hydraulic pump pressure–mecapascal (MPa) delivery–millimetres per sec (ml/s)	1 MPa=145 psi 1000 psi=6,9 MPa 100 ml/s=1,32 gpm 1 gpm=75,77 ml/s
Tyre pressure–kilopascal (kPa)	100 kPa=14,5 psi 1 psi=6,9 kPa
Area acres–hectare	To convert multiply by 0,404686
Volume bushel–litre	To convert multiply by 39,3687
Quantity pound per acre–kilogram per hectare	Multiply by 1,12085
Volume superficial foot–cubic metre	Multiply by 0,002360

https://www.truck-manuals.net/

https://truckmanualshub.com/

https://www.truck-manuals.net/

https://truckmanualshub.com/

Maintenance Valmet 6000 – 8750

N.B. Detailed maintenance instructions, see Operator's Manual.

General

Correct maintenance at the right time is a basic condition for reliable operation of the tractor. Maintenance costs are small compared with any repair costs resulting from lack of maintenance. The most important measures are those which you carry out yourself and which include lubrication and various checks and adjustments.

The service intervals shown apply for normal operating conditions but in more severe conditions servicing should be carried out more frequently.

General instructions concerning oil checks and oil filling

– Always stop the engine before starting work
– Apply the parking brake to ensure the tractor cannot move. If the ground is uneven the wheels should be scotched
– Wash down the tractor first so that the work can be done more easily and quickly.
– Always observe the utmost cleanliness in all maintenance work. Thoroughly wipe off filler caps and plugs as well as surrounding parts of the tractor before filling up with fuel or oil.
– Inspect the oil and filters when changing. Large amounts of dirt (e.g. heavily clogged filters) can point to a fault which could cause extensive and costly repairs if not corrected in time.
– When carrying out checks the tractor should stand on level ground.
– Levels should be checked in the morning when the oil is cold and has had time to run down to the bottom of the unit concerned.
– When changing the oil, bear in mind that the oil can be very hot when it drains from the tractor. Waste oil and oil filters should be handled carefully and disposed of properly
– After completion of the service work always replace all safety covers etc.

Greasing lubricating points fitted with grease nipples

– Always clean the grease nipples before applying the grease gun.
– Apply grease through the nipples until clean grease oozes out (unless otherwise instructed).
– Wipe away superfluous grease which has been pressed out at the lubricating point.
– Preferably carry out lubrication with bearing points and joints unloaded and with the bearings in different positions.

Lubrication and maintenance schedule

All intervals are counted from zero hours on the hour recorder. For example, 1000 hours service is carried out every 1000 (yearly), 2000 hours (every other year) etc. even if the guarantee service has been carried out.

Example: The 1000 hour service contains all items mentioned under 10 h/Daily, 50 h/once a week, 250 h, 500 h and 1000 h.

https://www.truck-manuals.net/

Maintenance schedule

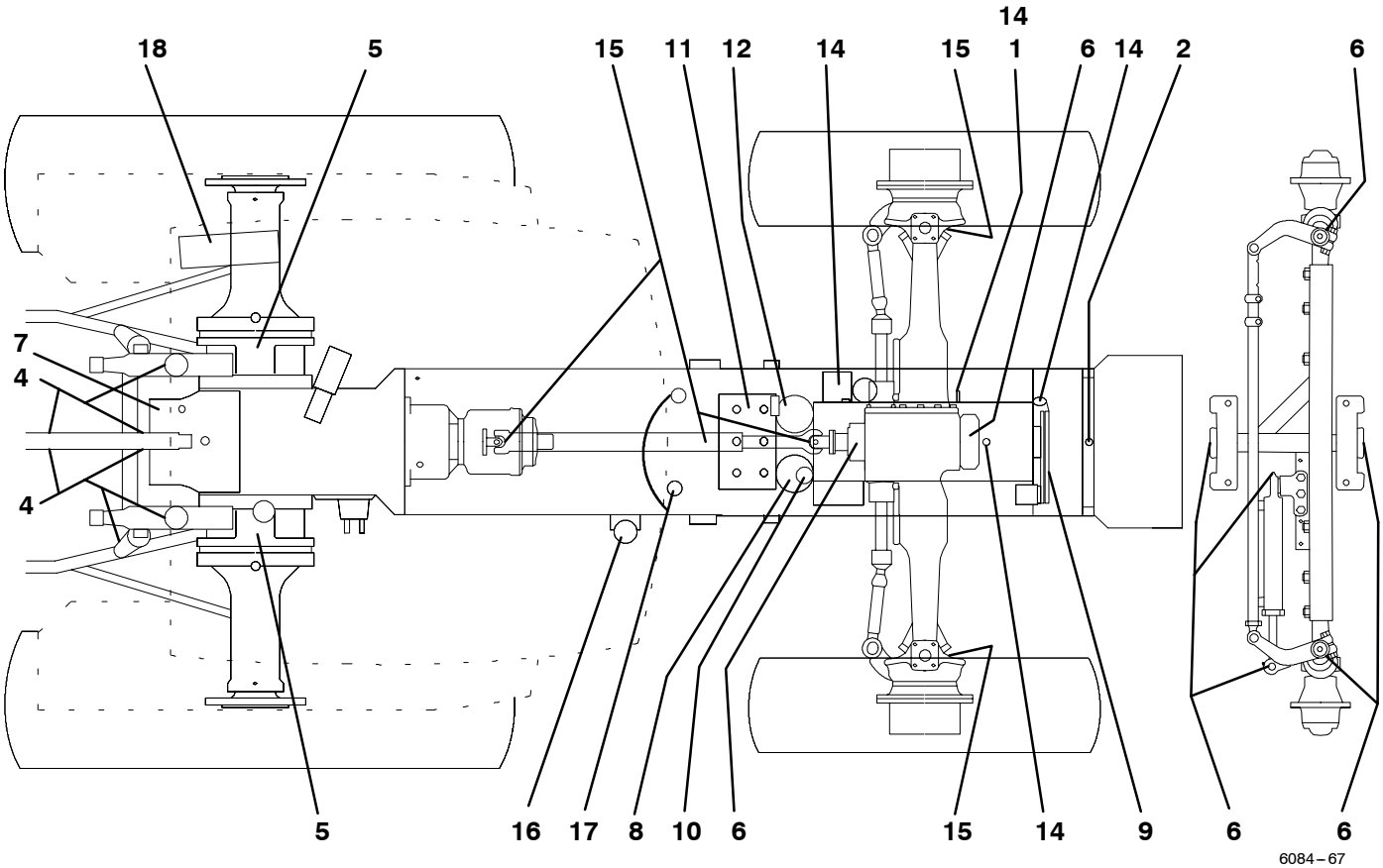

Daily/every 10 hours

1. Check engine oil level
2. Check coolant level and radiator fins
3. Check for leakage

Weekly/every 50 hours

4. Grease three – point linkage and towing hook
5. Grease brake mechanism (EP grease)
6. Grease front axle brackets (also nipples on steering system and on non – powered front axle)
7. Check oil level in transmission and hydraulics
8. Clean air filter cyclone (tractors with a horizontally fitted air filter and an ejector pipe; clean suction housing hole plate)
9. Check fan belt tightness
10. Check water trap (on 6 – cylinder engines. On other models on the other side. On models 8200, 8400 and 8050 – 8750 also under both fuel filters)
11. Check electrolyte level in battery

Every 250 hours

12. Clean engine air filter
13. Grease door and window hinges and locks
14. Change engine oil and filter
15. Grease front axle joints (powered axle)
16. Change pressure filters. First change at 100 hours warranty service, then at 250 hours and after that at 500 hours and then at intervals of 500 running hours.
17. Check brake fluid level (and clutch fluid level, 668103 –)
18. Clean cab ventilation air filter
19. Check wheel nuts and bolts and tyre pressures

https://www.truck-manuals.net/

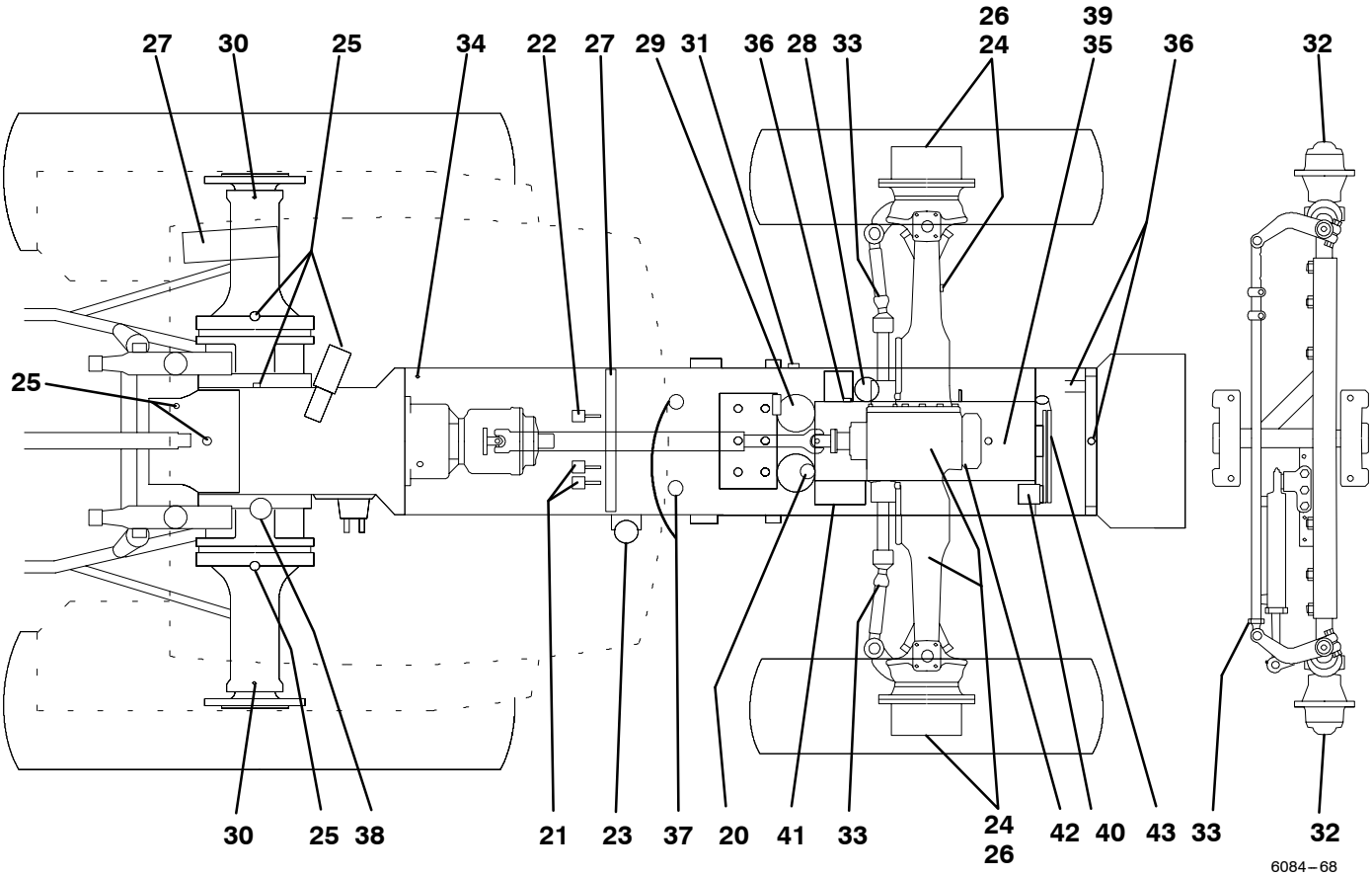

Every 500 hours

20. Clean water trap (fuel system) (on 6 – cylinder engines. On the other models on the other side. On models 8200, 8400 and 8050 – 8750 also under the fuel filters). Does not concern 6200 and 8000R tractors.
21. Check brake pedal free travel
22. Check clutch pedal free travel, – 668102.
23. Change pressure filters (transmission and hydraulics)
24. Check oil level in front axle differential and hubs

24a. Calibrate first time gaspedal on HiTech models. Later at intervals of 1000 running hours.

Every 1000 hours/yearly

25. Change oil in transmission/hydraulics and clean suction strainer
26. Change oil in front axle differential and hubs
27. Change cab ventilation air filter and wash cab recirculation filter, if fitted.
28. Change fuel filters. 6200, 8000R: change also the water trap filter
29. Change safety filter (in engine air filter)
30. Grease rear drive axle bearings
31. Grease flywheel ring gear
32. Check, grease and adjust front wheel bearings on non – powered front axle
33. Check/adjust front wheel toe – in
34. Clean fuel tank
35. Adjust valves

35a Calibrate gas pedal on HiTech models

Every 2000 hours/every other year

36. Change engine coolant
37. Change brake fluid (and clutch fluid, 668103 –)
38. Change transmission housing breather
39. Check and clean injectors
40. Check alternator
41. Check starter motor

Every 4000 hours

42. Check function of turbocharger at authorized workshop (if fitted)
43. Change engine rubber vibration damber on 6 – cyl. engines (not 8200 and 8450 – 8750)

https://www.truck-manuals.net/

https://truckmanualshub.com/

Recommended fuel and lubricants (all capacities are incl. of filters)

Part of machine	SAE–grade	API–grade	Capacity (litres)
Engine: – 6100 (3–cyl.)	15W40 +40°C...–10°C 10W/30 +30°C...–20°C	CG–4 CH–4	10
– 6000, 6200–6650Hi, 6800–6850Hi (4–cyl.)			13
- 6900, 8000, 8100, 8200, 8400, 8050-8950Hi (6-cyl.)			19
Hydraulics/transmission	HT 60: –30°C...+30°C HT 100: –10°C...+40°C	GL–4 (G2–98)	34 (43 max/HiTech, 8050–, J02316–: 45 max) (extra max 50/HiTech, 8050–, J02316–: extra max 53). 6200–8950 *): min 45, max 55, extra max 65. 8950Hi **): min 45, max 55, extra max. 65.
Powered front axle: – differential, Dana / ind. Carraro	80W/90	GL–5 (LS)	8 / 6
– hubs, Dana			2x1
– hubs, ind. front axle Dana+Carraro			2x1,5
Fuel tank: – 6000–8000 Hi Trol, 6250Hi–6650Hi HiTrol	diesel fuel		158
– other models			165
– extra fuel reservoir, metallic / plastic			+82 / +121
Cooling system: – 6100 (with larger radiator)	water+anti–freeze agent (standardi ASTM D3306–86a tai BS 6580:1985)		13,5 (17,5)
– 6000, 6200–6600 (with openable front grille)			15,5 (17)
– 6250 Hi–6650 Hi			17
– 6800 / 6850 Hi			22 / 22
– 8000–8400 (with openable front grille)			24 (25)
– 8200, 8400, 8050, 8150 with expansion tank			28 (8400, model 2001: 30)
– 8050 Hi and 8150 Hi			28
– 8450, 8550 / 8450 Hi, 8550 Hi			25 / 27
– 8750 / 8950Hi			31 / 31
Brake fluid reservoir/Clutch fluid resesvoir	brake fluid SAE J1703		0,3 / 0,2
Window washer reservoir	washer fluid		3
Oils in front PTO units	see page 463/9.		

*) Tractor frame numbers, see page 450/6.

**) Tractor frame numbers, see page 450/8.

Oil quality and capacity in fluid couplings (Hi–Trol)

Voith TD–VA coupling used up to serial no **658205** and **Voith TD–FVA1** from serial no **666066**. Engine oil SAE 10W/30 year around or automatic transmission fluid ATF which meets standards: GM type A Suffix A, GM Dexron II (e.g. Neste ATF–X)**:**

	–658205	**666066–**
– 6000, 6100	–	7,20 litres
– 6200, 6300	7,4 litres	6200: 7,35 litres. 6300: 7,45 litres. 6250Hi: 7,40 litres. 6350Hi: 7,80 litres.
– 6400	7,6 litres	7,85 litres. 6550Hi: 7,90 litres.
– 6600	7,8 litres	7,90 litres. 6650Hi: 8,00 liter
– 6800, 8000R, 8000		6800: 8,40 litres. 6900, 8000: 8,00 litres. 6850Hi: 8,00 litres.

Transfluid–coupling with effect from tractor serial no **658206** up to tractor serial no **666065**. Engine oil SAE 10W/30 year around or automatic transmission fluid ATF which meets standards: GM type A Suffix A, GM Dexron II (e.g. Neste ATF–X)**:**

	658206–659408 *)	**659409–666065**
– 6100	5,2 l	6,4 l
– 6300	5,4 l	6,6 l
– 6400	5,6 l	6,8 l
– 6600, 8000	5,8 l	7,0 l

*) Check the manufacturing date of the coupling. If it is 1292 or later, use larger filling quantities.

https://www.truck-manuals.net/

https://truckmanualshub.com

20. Engine

21. Engine

22. Fuel system

23. Cooling system

https://www.truck-manuals.net/

https://truckmanualshub.com/

https://www.truck-manuals.net/

Contents

General (Op. no. 210):

Specifications 3
Special tools 10
Engine, description 12

Repair instructions

Cylinder block and flywheel housing (Op. no. 211):

1. Cylinder block and cylinder liners:
A. Measuring cylinder liner wear 1
B. Removing cylinder liners 1
C. Checking cylinder block 1
D. Changing camshaft bushing 1
E. Oversize bushings for camshaft 2
F. Fitting plug at rear end of camshaft 3
G. Fitting pipe for oil dipstick 4
H. Fitting cylinder liners 4

2. Flywheel housing:
A. Fitting flywheel housing 6
B. Changing crankshaft rear oil seal 6
C. Changing flywheel starter gear 7
D. Fitting flywheel 7

Cylinder head and valve mechanism (Op. no. 212):

1. Cylinder head:
A. Removing cylinder head 1
B. Removing valves 1
C. Checking cylinder head 1
D. Changing valve guides 2
E. Machining valve seat 2
F. Changing valve seat inserts 3
G. Grinding valves 3
H. Fitting valves 3
I. Fitting cylinder head 4

2.Valve mechanism:
A. Reconditioning rocker arm mechanism 5
B. Changing camshaft/camshaft gear 5
C. Adjusting valve clearance 6

Crank mechanism (Op. no. 213):

1. Crankshaft:
A. Removing crankshaft 1
B. Checking crankshaft 1
C. Changing crankshaft gears 1
D. Changing crankshaft ring gear (420–engines) 2
E. Fitting crankshaft 2

2. Connecting rods and pistons:
A. Removing piston together with connecting rod 3
B. Changing connecting rod bearings 3
C. Checking connecting rod 3

D. Connecting rods, weight classes 4
E. Changing piston rings 5
F. Checking piston 6
G. Fitting piston pin 6
H. Fitting piston together with connecting rod 6

3. Balancer unit, 420–engines:
A. Removing and dismantling balancer unit 7
B. Reconditioning balancer unit 7
C. Fitting balancer unit 8

Engine timing gears (Op. no. 214)
A. Removing timing gear casing 1
B. Reconditioning idler gear 1
C. Fitting timing gear casing 2

Lubrication system and oil sump (Op. no. 215):

A. Reconditioning oil relief valve for lubrication oil pressure 1
B. Removing and dismantling lubricating oil pump 1
C. Assembling and fitting lubricating oil pump 2
D. Fitting oil sump gasket 2
E. Lubricating oil quality requirements 3

Inlet and exhaust system, turbocharger (Op. no. 216):

A. Checking air filter 1
B. Checking inlet and exhaust system 1
C. Checking turbocharger 1
D. Reconditioning turbocharger 3
E. Fitting turbocharger 5

Working orders (Op. no. 219) 1

https://www.truck-manuals.net/

Specifications

Engine designations

1. Basic markings: **320**, **420**, **620** and **634**. The first digit indicates the number of cylinders and the two last digits the stroke (–20=120 mm, –34=134 mm).
2. Letters after the basic markings:

– **D**=diesel engine
– **S**=turbocharger (Schwitzer)
– **W**=by-pass turbocharger, Delta turbo (Schwitzer S1BG or S2BG)
– **B**=Bosch P in–line pump
– **R**=distributor pump (Stanadyne)
– **I**=intercooler
– **E**=low emission engines (E–engines)
– **C**=emission tested engines (certificated).

Note! R24, E77 and EPA–homologations has been made for E–engines.

Tractor	**6000**	**6100**	**6200** (–K41123)	**6200** (K41124–)	**6250 Hi**	**6300**	**6300** (K41309– –L23437)
Designation	420D	320 DS	420DSRE	420DSRE	420DSRE	420 DS	420DS
Turbocharger	no	yes	yes	yes	yes	yes	yes
No of cylinders	4	3	4	4	4	4	4
Displacement (litres)	4,4	3,3	4,4	4,4	4,4	4,4	4,4
Cyl. bore (mm)	108	108	108	108	108	108	108
Stroke (mm)	120	120	120	120	120	120	120
Compr. ratio	16,5:1	16,5:1	16,5:1	16,5:1	16,5:1	16,5:1	16,5:1
Output (kW/r/min DIN)	55/2300	58/2300	59/2225	59/2200	59/2200	62,5/2225	66/2200
Torque (Nm/r/min DIN)	290/1450	310/1550	320/1400	360/1400	360/1400	330/1550	360/1400
Moment rise %	27	28,5	27	41	41	23	25
Low idling (r/min)	750	800	750	750	850	750	750
Compr. press [1]) (bar)	24	24	24	24	24	24	24
Max. no-load revs (r/min)	2500	2500	2425	2400	2400	2425	2400

Tractor	**6300** (L23438–)	**6350 Hi**	**6400**	**6400** (J17109–)	**6400** (K41106–) (Delta)	**6400** (L23506–) (Delta)
Designation	420DSRE	420DSRE	420 DS	420 DW	420DW	420DWRE
Turbocharger	yes	yes	yes	yes	yes	yes
No of cylinders	4	4	4	4	4	4
Displacement (litres)	4,4	4,4	4,4	4,4	4,4	4,4
Cyl. bore (mm)	108	108	108	108	108	108
Stroke (mm)	120	120	120	120	120	120
Compr. ratio	16,5:1	16,5:1	16,5:1	16,5:1	16,5:1	16,5:1
Output (kW/r/min DIN)	66/2200	66/2200	70/2225	70/2225	73,5/2200	73,5/2200
Torque (Nm/r/min DIN)	400/1400	400/1400	365/1550	390/1550	415/1400	430/1400
Moment rise %	39	39	22	31	30	35
Low idling (r/min)	750	850	750	750	750	750
Compr. press [1]) (bar)	24	24	24	24	24	24
Max. no-load revs (r/min)	2400	2400	2425	2425	2400	2400

Tractor	**6550 Hi**	**6600**	**6600E**	**6650 Hi**	**6750Hi*)**	**6800**	**6800E**
Designation	420DWRE	420 DS	420 DS	420DWRE	420DWRIE	420 DWI	420DWI
Turbocharger	yes	yes	yes	yes	yes (+interc..)	yes (+interc..)	yes (+interc..)
No of cylinders	4	4	4	4	4	4	4
Displacement (litres)	4,4	4,4	4,4	4,4	4.4	4,4	4,4
Cyl. bore (mm)	108	108	108	108	108	108	108
Stroke (mm)	120	120	120	120	120	120	120
Compr. ratio	16,5:1	16,5:1	16,5:1	16,5:1	16,5:1	16,5:1	16,5:1
Output (kW/r/min DIN)	73,5/2200	77/2225	77/2225	81/2200	77/1800	85/2225	85/2225
Torque (Nm/r/min DIN)	430/1400	405/1550	405/1550	460/1400	530/1150	440/1550	440/1550
Moment rise %	35	22	22	31	29	21	21
Low idling (r/min)	850	850	850	850	800	850	850
Compr. press [1]) (bar)	24	24	24	24	24	24	24
Max. no-load revs (r/min)	2400	2425	2425	2400	2000	2425	2425

[1]) Minimum value at operating temperature and starting revs. Max permitted difference between cylinders 3,0 bar.
*) Low revs engine.
E = AC–4, Control system for tractor.
Hi = HiTech.

https://www.truck-manuals.net/

Specifications

Tractor	6800 (L23517–)	6850 Hi	6900	8000	8050 (–L23317)	8050 (L23318–)
Designation	420 DWRIE	420 DWRIE	620 DRE	620 D	620 DSR	620DSRE
Turbocharger	yes (+interc..)	yes (+interc..)	no	no	yes	yes
No of cylinders	4	4	6	6	6	6
Displacement (litres)	4,4	4,4	6,6	6,6	6,6	6,6
Cyl. bore (mm)	108	108	108	108	108	108
Stroke (mm)	120	120	120	120	120	120
Compr. ratio	16,5:1	16,5:1	16,5:1	16,5:1	16,5:1	16,5:1
Output (kW/r/min DIN)	88/2200	88/2200	75/2225	73,5/2225	81/2200	81/2200
Torque (Nm/r/min DIN)	490/1400	490/1400	390/1400	380/1550	490/1300	490/1400
Moment rise %	28	28	21	20	39	21
Low idling (r/min)	850	850	750	750	750	850
Compr. press [1]) (bar)	24	24	24	24	24	24
Max. no-load revs (r/min)	2400	2400	2425	2425	2400	2425

Tractor	8050 Hi	8100	8100E	8150 (–L24138)	8150E	8150 (L24139–)	8150 Hi
Designation	620DSRE	620 D	620 D	620 DSR	620 DSR	620DSRE	620DSRE
Turbocharger	yes	no	no	yes	yes	yes	yes
No of cylinders	6	6	6	6	6	6	6
Displacement (litres)	6,6	6,6	6,6	6,6	6,6	6,6	6,6
Cyl. bore (mm)	108	108	108	108	108	108	108
Stroke (mm)	120	120	120	120	120	120	120
Compr. ratio	16,5:1	16,5:1	16,5:1	16,5:1	16,5:1	16,5:1	16,5:1
Output (kW/r/min DIN)	81/2200	88/2225	88/2225	92/2200	92/2200	92/2200	92/2200
Torque (Nm/r/min DIN)	490/1400	455/1550	455/1550	540/1300	540/1300	540/1400	540/1400
Moment rise %	39	21	21	35	35	35	35
Low idling (r/min)	750	750	750	750	750	750	750
Compr. press [1]) (bar)	24	24	24	24	24	24	24
Max. no-load revs (r/min)	2400	2425	2425	2400	2400	2400	2400

Tractor	8200	8200E	8350Hi*)	8400 (–K34331)	8400E	8400 (K32135– –L33320)	8400 (L23130–)
Designation	634 D	634 D	620DSRIE	620 DS	620 DS	620 DS	620 DSIE
Turbocharger	no	no	yes (+interc..)	yes	yes	yes	yes (+interc..)
No of cylinders	6	6	6	6	6	6	6
Displacement (litres)	7,4	7,4	6,6	6,6	6,6	6,6	6,6
Cyl. bore (mm)	108	108	108	108	108	108	108
Stroke (mm)	134	134	120	120	120	120	120
Compr. ratio	16,5:1	16,5:1	16,5:1	16,5:1	16,5:1	16,5:1	16,5:1
Output (kW/r/min DIN)	95,5/2225	95,5/2225	99/1800	103/2200	103/2200	110/2200	118/2200
Torque (Nm/r/min DIN)	490/1550	490/1550	650/1100	520/1550	520/1550	625/1400	650/1400
Moment rise %	20	20	23	16	16	30	27
Low idling (r/min)	750	750	800	750	750	750	750
Compr. press [1]) (bar)	24	24	24	24	24	24	24
Max. no-load revs (r/min)	2425	2425	2000	2400	2400	2400	2400

[1]) Minimum value at operating temperature and starting revs. Max permitted difference between cylinders 3,0 bar.
*****) Low revs engine.
E = AC–4, Control system for tractor.
Hi = HiTech.

https://www.truck-manuals.net/

Specifications

Tractor	8450 (–L24134)	8450E	8450 (L24135–)	8450 Hi	8550 (–L24115)	8550E	8550 (L24116–)
Designation	620 DWR	620 DWR	620 DWRE	620DWRE	634 DSR	634 DSR	634DSRE
Turbocharger	yes	yes	yes	yes	yes	yes	yes
No of cylinders	6	6	6	6	6	6	6
Displacement (litres)	6,6	6,6	6,6	6,6	7,4	7,4	7,4
Cyl. bore (mm)	108	108	108	108	108	108	108
Stroke (mm)	120	120	120	120	134	134	134
Compr. ratio	16,5:1	16,5:1	16,5:1	16,5:1	16,5:1	16,5:1	16,5:1
Output (kW/r/min DIN)	103/2200	103/2200	103/2200	103/2200	118/2200	118/2200	118/2200
Torque (Nm/r/min DIN)	580/1450	580/1450	615/1400	615/1400	650/1450	650/1450	650/1400
Moment rise %	30	30	38	38	27	27	27
Low idling (r/min)	750	750	750	750	750	750	750
Compr. press [1]) (bar)	24	24	24	24	24	24	24
Max. no-load revs (r/min)	2400	2400	2400	2400	2400	2400	2400

Tractor	8550 Hi	8750 (–J32215)	8750E	8950 Hi
Designation	634DSRE	634 DS	634 DS	634 DSBIE
Turbocharger	yes	yes	yes	yes (+interc..)
No of cylinders	6	6	6	6
Displacement (litres)	7,4	7,4	7,4	7,4
Cyl. bore (mm)	108	108	108	108
Stroke (mm)	134	134	134	134
Compr. ratio	16,5:1	16,5:1	16,5:1	16,5:1
Output (kW/r/min DIN)	118/2200	118/140/2200	118/140/2200	118/147/2200
Torque (Nm/r/min DIN)	650/1400	650/1450	650/1450	650/820/1400
Moment rise %	27	27	27	27/28
Low idling (r/min)	750	750	750	750
Compr. press [1]) (bar)	24	24	24	24
Max. no-load revs (r/min)	2400	2400	2400	2400

[1]) Minimum value at operating temperature and starting revs. Max permitted difference between cylinders 3,0 bar.
E = AC–4, Control system for tractor.
Hi = HiTech.

Valves, rockers and tappets

With a valve clearance of 1,0 mm:
- inlet valve opens ..... 0°±2° B.T.D.C
- inlet valve closes ..... 16°±2° A.B.D.C
- exhaust valve opens ..... 39°±2° B.B.D.C
- exhaust valve closes ..... 1°±2° A.T.D.C

Valve clearance cold and hot:
- inlet valve ..... 0,35 mm
- exhaust valve ..... 0,35 mm

Angle of valve seat in cylinder head:
- inlet valve ..... 35°+20'
- exhaust valve ..... 45°+20'

Width of valve seat in cylinder head:
- inlet valve ..... 2,9...3,7 mm
- exhaust valve ..... 1,3...2,3 mm

Angle of valve face:
- inlet valve ..... 35°–20'
- exhaust valve ..... 45°–20'

Outside diameter of valve head:
- inlet valve ..... 48 mm
- exhaust valve ..... 41 mm

Max valve movement:
- inlet valve ..... 10,9 mm
- exhaust valve ..... 12,1 mm

Inlet valve stem diameter ..... 8,960...8,975 mm
Exhaust valve stem diameter ..... 8,925...8,940 mm
Inlet valve stem clearance ..... 0,025...0,055 mm
- Reject limit ..... 0,30 mm

Exhaust valve stem clearance ..... 0,060...0,090 mm
- Reject limit ..... 0,35 mm

https://www.truck-manuals.net/

Inside diameter of valve guide before fitting . . . . . 9,000...9,015 mm
Outside diameter of valve guide . . . . . 16,028...16,039 mm
Diameter of valve guide bore in cylinder head . . . . . 16,000...16,018 mm
Protrusion of valve guide top above cylinder head surface . . . . . 21 mm
Depth of valve face below cylinder head surface:
– inlet valve . . . . . 0,7±0,05 mm
– exhaust valve . . . . . 0,6±0,05 mm
Valve spring free length . . . . . 69,8 mm
Spring pressure when spring compressed to a length of:
– 48,6 mm . . . . . 327±17 N
– 37,4 mm . . . . . 500±23 N
Rocker arm shaft diameter . . . . . 19,959...19,980
Inside diameter of rocker arm bearing bush:
– (when fitted in position) . . . . . 19,990...20,010 mm
Outside diameter of rocker arm bearing bush . . . . . 23,035...23,075 mm
Diameter of rocker arm bore . . . . . 23,000...23,021 mm
Max. permissible push rod deflection (when free) . . . . . 0,4 mm
Free length of rocker arm spring . . . . . 80 mm
Spring pressure when spring compressed to a length 58 mm . . . . . 80...100 N
Outside diameter of tappet . . . . . 29,939...29,960 mm
Diameter of tappet bore in cylinder block . . . . . 30,000...30,043 mm
Engines from week 34 1996:
Rocker arm shaft diameter . . . . . 22,970...22,990 mm
Diameter of rocker arm bore . . . . . 23,000...23,021 mm

Camshaft

Diameter of camshaft bearing journal no 1 . . . . . 49,925...49,950 mm
Diameter of camshaft bearing journals (others that no 1) . . . . . 49,885...49,910 mm
Diameter of camshaft bearing journals nos 2, 3 and 4 (620/634–engines) . . . . . 49,865...49,890 mm
Inside diameter of camshaft bearing bushes (when fitted in position) . . . . . 50,010...50,070 mm
Diameter of camshaft bearing bores (others than no 1) . . . . . 50,000...50,025 mm
Camshaft clearance in bearing bush no 1 . . . . . 0,060...0,145 mm
Camshaft clearance in bearing bushes (others than no 1) . . . . . 0,090...0,140 mm
Camshaft clearance in bearing bushes nos 2, 3 and 4 (620/634–engines) . . . . . 0,110...0,160 mm
Bearing bush tolerance in block (press fit) . . . . . 0,025...0,080 mm
Diameter of bearing bush bore in block 55,620...55,650 mm
Camshaft end play with 0,5 mm gasket between cylinder block and timing gear
housing and between timing gear housing and front cover . . . . . 0,5...1,0 mm
Cam height (distance between back of cam and tip of cam):
– inlet valve . . . . . 41,180...41,430 mm
– exhaust valve . . . . . 40,080...40,330 mm
Cam lift:
– inlet valve . . . . . 7,38 mm
– exhaust valve . . . . . 8,28 mm
Camshaft max permissible deflection (total indicator reading) . . . . . 0,03 mm

Cylinder liners

Protrusion of cylinder liner above cylinder block top face . . . . . 0,030...0,080 mm
Max. permissible height difference between liners (under same head) . . . . . 0,02 mm
Outer diameter of cylinder liner guide:
– at upper end of liner . . . . . 124,475...124,500 mm
– at lower end of liner . . . . . 122,961...122,986 mm
Liner bore . . . . . 108,000...108,022 mm
Height of cylinder liner flange . . . . . 9,03...9,05 mm
Height of cylinder liner flange, 1st oversize, part no 8366 47933 . . . . . 9,08...9,10 mm
Height of cylinder liner flange, 2nd oversize, part no 8366 47934 . . . . . 9,13...9,15 mm
Height of cylinder liner flange, 3rd oversize, part no 8366 47935 . . . . . 9,23...9,25 mm
Outer diameter of cylinder liner flange . 131,700...131,800 mm

Piston, rings and gudgeon pin

Minimum distance between piston and cylinder head (measured with a piece
of lead wire thought the injector location hole) . . . . . 0,900...1,150 mm
Piston diameter:
– 17 mm from lower edge (320, 420, 620–engines) . . . . . 107,873...107,887 mm
– 19 mm from lower edge (634–engines) . . . . . 107,883...107,897 mm

https://www.truck-manuals.net/

Pin bore in piston . . . . . 40,003...40,009 mm
Piston pin diameter . . . . . 39,991...40,000 mm
Width of ring grooves:
– 1st groove (right–angled ring; 6000, 6200, 6300, 8000R, 8000, 8100, 8050, 8150) . . . . . 2,560...2,580 mm
– 2nd grove . . . . . 2,520...2,540 mm
– 3rd groove . . . . . 4,040...4,060 mm
Side clearance of piston rings in their grooves:
– 1st ring (right–angled ring; 6000, 6200, 6300, 8000R, 8000, 8100, 8050, 8150) . . . . . 0,07...0,102 mm
– 2nd ring . . . . . 0,03...0,062 mm
– 3rd ring . . . . . 0,05...0,082 mm
– reject limit . . . . . 0,15 mm

Piston ring height (in direction of cylinder):
– 1st ring (right–angled ring; 6000, 6200, 6300, 8000R, 8000, 8100, 8050, 8150) . . . . . 2,478...2,490 mm
– 2nd ring . . . . . 2,478...2,490 mm
– 3rd ring . . . . . 3,975...3,990 mm

Piston ring gap (with piston fitted in cylinder)
– 1st ring (wedge shaped ring; 6100, 6400, 6600, 6800, 8200, 8400, 8450, 8550, 8750) . . . . . 0,40...0,55 mm
– 1st ring (right–angled ring; 6000, 6200, 6300, 8000R, 8000, 8100, 8050, 8150) . . . . . 0,30...0,45 mm
– 2nd ring . . . . . 0,60...0,80 mm
– 3rd ring . . . . . 0,30...0,60
– reject limit . . . . . 1,0 mm

Max. permissible weight difference between pistons in same engine . . . . . 25 g
Piston to be heated up to 100˚C before fitting gudgeon pin.
Piston position in cylinder: combustion chamber of piston to face towards injector.

Connecting rod

Inside diameter of piston pin bush (with bush pressed into connecting rod) . . . . . 40,025...40,040 mm
Outside diameter of piston pin bush . . . . . 44,082...44,120 mm
Interference fit: connecting rod small end bushing–connecting rod . . . . . 0,057...0,120 mm
Connecting rod small end bore . . . . . 44,000...44,025
Connecting rod big end bore . . . . . 71,730...71,749 mm

Big end bearing shell thickness:
– standard . . . . . 1,835...1,842 mm
– 1st undersize 0,25 mm . . . . . 1,960...1,967 mm
– 2nd undersize 0,50 mm . . . . . 2,085...2,092 mm
– 3rd undersize 1,00 mm . . . . . 2,335...2,342 mm
– 4th undersize 1,50 mm . . . . . 2,585...2,592 mm
Big–end bearing clearance . . . . . 0,046...0,098 mm
End float (side clearance) at big–end on crankshaft . . . . . 0,200...0,410 mm
Piston pin bushing location perpendicular to longitudinal axis of connecting
rod to be within 0,15:100
Piston pin bushing location and big–end bearing location to be parallel to within 0,05:100
Weight marking (letter) at lower end.
Max. permissible weight difference between connecting rods in the same engine . . . . . 20 g
Position of connecting rod; order no at valve mechanism side
(away from the combustion chamber in the piston)

Crankshaft

Crankpin diameter:
– standard . . . . . 67,981...68,000 mm
– 1. undersize 0,25 mm . . . . . 67,731...67,750 mm
– 2. undersize 0,50 mm . . . . . 67,481...67,500 mm

https://www.truck-manuals.net/

– 3. undersize 1,00 mm . . . . . 66,981...67,000 mm
– 4. undersize 1,50 mm . . . . . 66,481...66,500 mm
Crankpin length . . . . . 40,000...40,160 mm

Main bearing journal diameter:
– standard . . . . . 84,985...85,020 mm
– 1st undersize 0,25 mm . . . . . 84,735...84,770 mm
– 2nd undersize 0,50mm . . . . . 84,485...84,520 mm
– 3rd undersize 1,00 mm . . . . . 83,985...84,020 mm
– 4th undersize 1,50 mm . . . . . 83,485...83,520 mm
Main bearing location diameter (in cylinder block) . . . . . 91,000...91,025 mm

Main bearing shell thickness:
– standard . . . . . 2,955...2,965 mm
– 1st undersize 0,25 mm . . . . . 3,080...3,090 mm
– 2nd undersize 0,50 mm . . . . . 3,205...3,215 mm
– 3rd undersize 1,00 mm . . . . . 3,455...3,465 mm
– 4th undersize 1,50 mm . . . . . 3,705...3,715 mm

Main bearing clearance . . . . . 0,050...0,127 mm
Length of thrust bearing journal (journal nearest to flywheel):
– standard (2 standard thrust plates) . . . . . 45,000...45,080 mm
– 1st oversize (one std and one 0,1 mm overthick thrust plate) . . . . . 45,100...45,180 mm
– 2nd oversize (one std and one 0,2 mm overthick thrust plate) . . . . . 45,200...45,280 mm
– 3rd oversize (one 0,1 mm and one 0,2 mm overthick thrust plate) . . . . . 45,300...45,380 mm
– 4th oversize (two 0,2 mm overthick thrust plates) . . . . . 45,400...45,480 mm

Other crankshaft journals may not be ground longer.

Crankshaft end float . . . . . 0,100...0,380 mm
Max. permissible ovality and other deformity of crankpins or journals . . . . . 0,03 mm
Crankshaft unbalance . . . . . 1,0 Ncm Max.
Balancing unit ring gear location, diameter (420 engines) . . . . . 150,220...150,260 mm
Balancing unit ring gear I.D. (420 engines) . . . . . 150,000...150,040 mm

Flywheel

Flywheel ring gear no. of teeth . . . . . 133 pcs
Interference fit between ring gear – flywheel . . . . . 0,425...0,600 mm
Before fitting the ring gear, heat up to a temperature of . . . . . 150...200˚C
Flywheel unbalance . . . . . 1,0 Ncm Max
Max permissible axial wobble of flywheel clutch face, measured at inner edge
of clutch face on diameter 200 . . . . . 0,06:ø200

Timing gears

Tooth backlash:
Crankshaft – idler gear . . . . . 0,05...0,25 mm
Idler gear – camshaft gear . . . . . 0,05...0,25 mm
Idler gear – fuel injection pump gear . . . . . 0,05...0,25 mm
Max. permissible side wobble of gears . . . . . 0,05 mm
Idler gear shaft, diameter . . . . . 54,951...54,970 mm
Inner diameter of idler gear bushing (fitted) . . . . . 55,000...55,030 mm
Inner diameter of Idler gear hole . . . . . 60,000...60,030 mm
Camshaft gear hole diameter . . . . . 32,000...32,025 mm
Camshaft end diameter . . . . . 32,043...32,059 mm

Timing marks:
Timing marks on gears are in alignment when the 1st cylinder piston is at its top dead centre between compression and power strokes.

On crankshaft gear . . . . . 2 dots on tooth
On idler gear:
– against crankshaft gear mark . . . . . 0 on tooth
– against camshaft gear mark . . . . . 1 dot on tooth
– against fuel injection pump gear mark . . . . . 1 dot on notch
On camshaft gear . . . . . 1 dot on notch
On injection pump gear . . . . . 1 dot on tooth

Cylinder block

Holes for guide pins . . . . . 13,250...13,320 mm
Main bearing location diameter . . . . . 91,000...91,025 mm
Main bearing location (with bearings 8361 40950) . . . . . 92,000...92,025 mm
Cylinder liner location, diameter:
– upper end . . . . . 124,514...124,554 mm
– lower end . . . . . 123,000...123,040 mm
Inner diameter of camshaft bushing (fitted) . . . . . 50,010...50,070 mm
Cylinder block height . . . . . 428,170...428,430 mm

Distance between piston and top dead centre at different crank shaft angles

Grad	320, 420, 620 mm	634 mm	Grad	320, 420, 620 mm	634 mm
6°	0,423	0,485	21°	5,100	5,841
10°	1,173	1,344	22°	5,587	6,399
11°	1,418	1,624	23°	6,095	6,980
12°	1,686	1,931	24°	6,624	7,585
13°	1,976	2,264	25°	7,173	8,214
14°	2,289	2,623	26°	7,742	8,865
15°	2,625	3,007	27°	8,331	9,539
16°	2,983	3,417	28°	8,939	10,235
17°	3,363	3,852	29°	9,567	10,952
18°	3,765	4,312	30°	10,213	11,692
19°	4,188	4,797			
20°	4,633	5,307			

Cylinder head

Height of cylinder head . . . . . 104,800...105,000 mm
Height (min.) of cylinder head after repair grinding . . . . . 104,000 mm
Cylinder head straigthness:
– in lateral direction . . . . . 0,05 mm
– in longitudinal direction . . . . . 0,10 mm
Valve guide inner diameter (not fitted) . . . . . 9,000 – 9,015 mm
Valve guide outer diameter . . . . . 16,028...16,039 mm
Valve guide bore diameter in cylinder head . . . . . 16,000...16,018 mm
Height of valve guide upper end from cylinder head surface . . . . . 21 mm
Valve head depth from cylinder head surface:
– inlet valve . . . . . 0,7±0,05 mm (max. 1,70 mm)
– exhaust valve . . . . . 0,6±0,05 mm (max. 1,60 mm)
Valve sealing surface angles:
– inlet valve . . . . . 35° +20'
– exhaust valve . . . . . 45° +20'
Valve sealing surface width:
– inlet valve . . . . . 2,9...3,7 mm
– exhaust valve . . . . . 1,3...2,3 mm
Diameter of exhaust valve seat insert . . . . . 44,070...44,132 mm
Diameter of exhaust valve seat insert location . . . . . 44,000...44,025 mm
Diameter of exhaust valve seat insert (repair part 8366 52269) . . . . . 44,270...44,332 mm
Diameter of exhaust valve seat insert location (repair part 8366 52269) . . . . . 44,200...44,225 mm

Diameter of inlet valve seat insert (8366 47936) . . . . . 48,570...48,632 mm
Diameter of inlet valve seat insert location . . . . . 48,500...48,525 mm
Diameter of inlet valve seat insert (repair part 8368 55347) . . . . . 48,770...48,832 mm
Diameter of inlet valve seat insert location (repair part 8368 55347) . . . . . 48,700...48,725 mm

https://www.truck-manuals.net/

Lubricating system

Oil pressure at normal running temperature:	
– at idling speed (min.)	100 kPa (1,0 kp/cm^2)
– at running speed	250–400 kPa (2,5–4,0 kp/cm^2)
Free length of oil pressure valve spring	80 mm
Spring pressure when valve spring is compressed to a length of 52 mm	54+5 N (5,4+0,5 kp)
Diameter of oil pressure valve plunger	19,602...19,635 mm
Diameter of oil pressure valve cylinder	19,700...19,752 mm
Oil filter by–pass valve opens at a pressure difference of	2±0,5 kp/cm^2

Oil pump (320, 420 engines)

Backlash between gears when crankshaft lies firmly against the lower side of main bearings:	
– crankshaft gear–lubricating oil pump gear	0,05...0,25 mm
– between the pump gears	0,16...0,26 mm
Diameter of drive shafts:	
– at bearings for body and cover	17,966...17,984 mm
– at gear wheel pressed on shaft	18,099...18,109 mm
Diameter of shaft holes on body and cover	18,000...18,018 mm
Diameter of gear wheel holes	18,060...18,078 mm
Drive shaft gear (press fit), distance between side gear (thread side) and first shoulder	14,80...15,20 mm
Fixed shaft, diameter	18,028...18,039 mm
Protrusion of fixed shaft end below pump body face	0,5...1,0 mm
Thickness of cover gasket	0,06...0,08 mm
Outside diameter of gear	43,486...43,525 mm
Housing diameter	43,650...43,750 mm
Thickness of gears	24,000...24,027 mm
End play of gears	0,03...0,11 mm
Depth of housing	24,000...24,043 mm
Number of teeth on drive gear (320 engines)	51 pcs
Number of teeth on drive gear (420 engines)	46 pcs

Oil pump (620, 634 engines)

Backlash between gears when crankshaft lies firmly against the lower side of main bearings:	
– crankshaft gear–lubricating oil pump gear	0,05...0,25 mm
– between the pump gears	0,16...0,26 mm
Diameter of drive shafts	
– at bearings for body and cover	17,966...17,984 mm
– at gear wheel pressed on shaft	18,099...18,109 mm
Diameter of drive shaft bearing hole on body and cover	18,000...18,018 mm
Hole diameter of gear pressed on drive shaft	18,060...18,078 mm
Drive shaft gear (press fit), distance between side gear (thread side) and first shoulder	16,5±0,2 mm
Diameter of fixed shaft at gear wheel	17,966...17,984 mm
Inner diameter of bearing for gear wheel which rotates on fixed shaft	18,000...18,018 mm
Fixed shaft in pump body, diameter	20,035...20,048 mm
Protrusion of fixed shaft end below pump body face	0,5+0,5 mm
Thickness of cover gasket	0,06...0,08 mm
Outer diameter of gear wheels (620 engines)	43,486...43,525 mm
Outer diameter of gear wheels (634 engines)	55,824...55,870 mm
Housing diameter (620 engines)	43,650...43,750 mm
Housing diameter (634 engines)	56,000...56,120 mm
Thickness of gears	32,000...32,027 mm
End play of gears	0,03...0,11 mm
Depth of housing	32,000...32,043 mm
Number of teeth on drive gears	46 pcs

https://www.truck-manuals.net/

https://truckmanualshub.com/

Balancing unit (420 engines)

Tooth backlash:
– crankshaft ring gear – balancer weight gear wheel . . . . . 0,1...0,3 mm
– between the balancer weights gear wheels . . . . . 0,05...0,250 mm
Balancing weights end float . . . . . 0,1...0,5 mm
Shaft diameter at bearing surfaces . . . . . 36,000...36,016 mm
Bearing bushing inner diameter (fitted) . . . . . 36,050...36,075 mm
Diameter of holes in body for shafts, rear end . . . . . 36,058...36,083 mm
Diameter of holes in body for shafts, front end . . . . . 35,958...35,983 mm
Shim thickness, cylinder block – balancer unit . . . . . 0,2 mm

Turbocharger

Schwitzer S1A (320 DS engines)

Shaft end float . . . . . max 0,14 mm
Shaft radial clearance [1]) . . . . . max 0,61 mm
Turbine housing attaching bolts . . . . . 22 Nm
Nut at end of shaft . . . . . 6,8 Nm

Schwitzer S1B (420 DS engines) and S1BG by – pass turbo (420DW engines)

Shaft end float . . . . . max 0,14 mm
Shaft radial clearance[1]) . . . . . max 0,51 mm
Turbine housing attaching bolts . . . . . 22 Nm
Nut at end of shaft . . . . . 8,1 Nm
By – pass passage opening pressure (S1BG) . . . . . 1,035 bar

Schwitzer S2B (620DS, 634 DS engines) and S2BG by – pass turbo (620/634DW)

Shaft end float . . . . . max 0,14 mm
Shaft radial clearance[1]) . . . . . max 0,95 mm
Turbine housing attaching bolts . . . . . 17 Nm
Nut on end of shaft . . . . . 15,6 Nm
By – pass passage opening pressure (S2BG) . . . . . 0,9 bar

[1]) Measured at nut on end of shaft.

Tightening torques

Main bearing bolts . . . . . 200 Nm
Cylinder head bolts . . . . . 80 Nm + 90° + 90° + 60°
Cylinder head studs to cylinder block . . . . . 30 Nm
Main bearing bolts . . . . . 200 Nm
Connecting rod bolts . . . . . 40 Nm + 90°
Crankshaft nut:
– 320/420 . . . . . 600 Nm
– 620 . . . . . 1000 Nm
Flywheel bolts:
– 10.9 . . . . . 140 Nm
– 12.9 . . . . . 160 Nm
Flywheel housing bolts:
– outer ring M12 . . . . . 110 Nm (8.8), 150 Nm (12.9)
– inner ring M10 . . . . . 60 Nm (8.8), 90 Nm (12.9)
Idler gear bolts:
– M10 . . . . . 60 Nm
– M14 . . . . . 200 Nm
Compressor V – belt pulley, nut . . . . . 80 Nm
Balancing weights, 420 . . . . . 60 Nm
Crankshaft counterbalance weight bolts (320) . . . . . 160 Nm
Exhaust manifold bolts . . . . . 50 Nm
Inlet manifold bolts . . . . . 30 Nm
Injector attaching nuts (on studs) . . . . . 15 Nm
Delivery valve retainer . . . . . 40 Nm
Injector nozzle sleeve . . . . . 60 Nm
Engine – oil sump:
– 320/420 engines M12 bolts . . . . . 110 Nm (8.8), 140 (12.9)
– 620/634 engines M8 bolts . . . . . 30 Nm
– 620/634 engines M10 bolts . . . . . 90 Nm
– 620/634 engines M20 bolts . . . . . 600 Nm
Nut for lubricating oil pump gear . . . . . 60 Nm
Lubricating oil pump fixing bolts . . . . . 60 Nm
Valve of piston cooling nozzles, 620/634 . . . . . 30 Nm

https://www.truck-manuals.net/

Special tools

Order no	Description
1 9051 73100	Puller for cylinder liner
2 9101 65600 *)	Milling cutter for cylinder liner seat
3 9052 46400	Centring tool for flywheel housing
4 9052 46300	Drift for fitting rear crankshaft seal
5 9030 15200	Drift for fitting front crankshaft seal
6 9052 46620	Drift for 40 mm cap plug
7 9052 46650	Drift for 16 mm cap plug
8 9025 87400	Drift for fitting camshaft cup plug
9 9101 66300 *)	Press tool for cylinder liner
10 9025 79200	Holder for dial gauge
11 9101 66100 *)	T – handle for valve seat milling cutter
12 9101 71100 *)	Milling cutter for facing exhaust valve seat
13 9101 65502 *)	Milling cutter for exhaust valve seat
14 9101 65503 *)	Inner milling cutter for exhaust valve seat
15. 9101 75800 *)	Milling cutter for facing inlet valve seat
16 9101 65505 *)	Milling cutter for inlet valve seat
17 9101 65506 *)	Inner milling cutter for inlet valve seat
18 9101 66200 *)	Lever for compressing valve spring
19 9052 47200	Counter nut for lever above
20 9101 66000 *)	Milling tool for injector seat
21 9052 46660	Drift for 36 mm cup plug
22 9101 65800 *)	Drift for removing valve guide
23 9101 65900 *)	Drift for fitting valve guide
24 9024 55800	Spanner for crankshaft nut, 634 – engines
25 9101 65700 *)	Spanner for crankshaft nut
26 9052 48800	Puller for crankshaft gears
27 9020 01100	Conical sleeve for fitting pistons
28 9025 98900	Drift for fitting dust cover, crankshaft front seal
29 9025 98800	Drift for fitting tension pin in timing gear casing
30 9025 98700	Drift for fitting tension pins in timing gear casing and flywheel housing
31 8366 62022	Electronical device for checking injection timing on E – engines

*) New tools for 20 – series engines. Other tools are the same as for engines on 505 – 905 tractors.

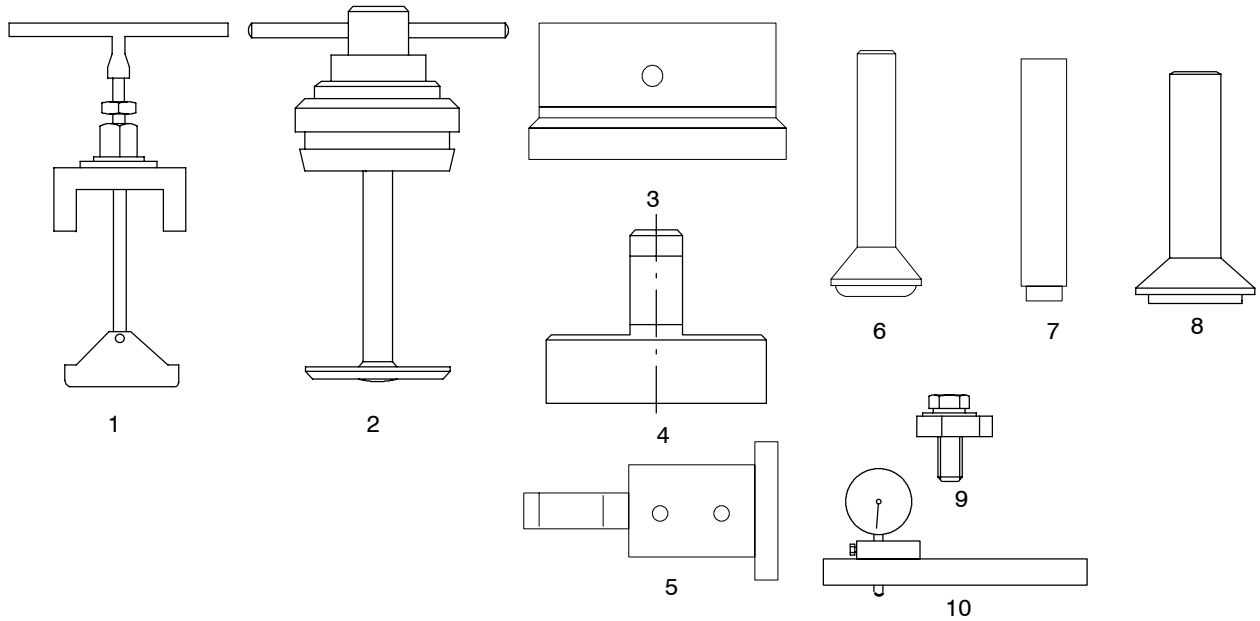

https://truckmanualshub.com/

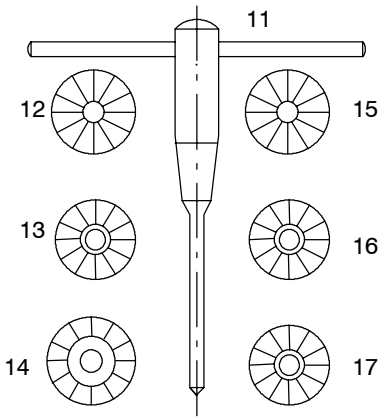

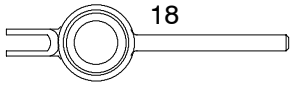

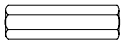

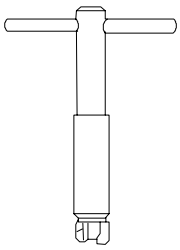

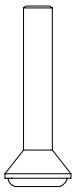

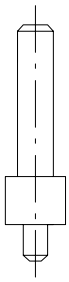

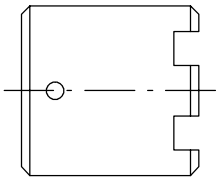

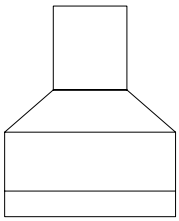

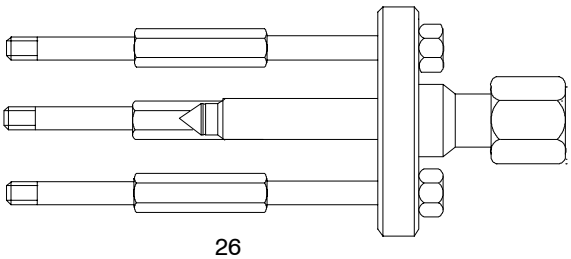

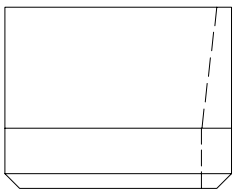

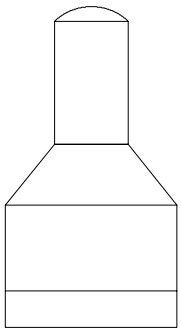

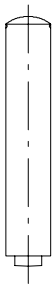

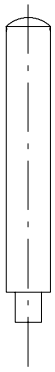

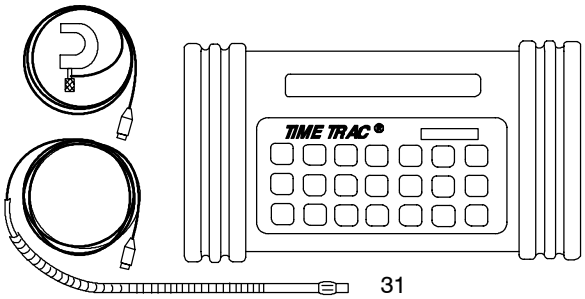

https://www.truck-manuals.net/

https://truckmanualshub.com/

Engine, description

General

The Valmet 20 – series engines (3 –, 4 –, or 6 – cylinders) are water – cooled, four stroke, turbocharged (not 8000 and 8100), direct – injection in – line diesel engines. Technical values, see page 210/3.

The engines have a rigid and ribbed cylinder block. The crank mechanism is designed for supercharging. The cylinder liners are wet and supported at the middle, the cylinder head bolts are high tensile bolts.

Cylinder block

The cylinder block is the main body of the engine, to which other engine parts are attached. Wet and replaceable cylinder liners are supported at the middle which reduces vibrations and directs coolant circulation mainly to the upper part of the liners.

The seal between the cylinder liner lower part and the cylinder block is achieved by three o – rings, which are fitted in grooves in the liner. The upper part is sealed by the cylinder head gasket.

The camshaft is located in the cylinder block. The camshaft front bearing location is fitted with a separate bearing sleeve. The remaining bearing locations are machined directly in the cylinder block. The latest 620 – engines have separate bearing sleeves in all camshaft bearing locations. The drilling for the camshaft rear end is covered with a plug.

There are spaces on both sides of the rear main bearing for guide bearing shims (the crankshaft thrust bearings).

Flywheel housing

The flywheel housing is fitted at the rear end of the cylinder block. The seal for the crankshaft rear end is placed in a bore in the housing. The starter motor fixing point is fitted in the flywheel housing.

The lower face of the flywheel housing functions as a sealing surface for the oil sump gasket. This means that the lower face of the cylinder block must be level with the flywheel housing. When fitting the flywheel housing, its position is determined by tension pins.

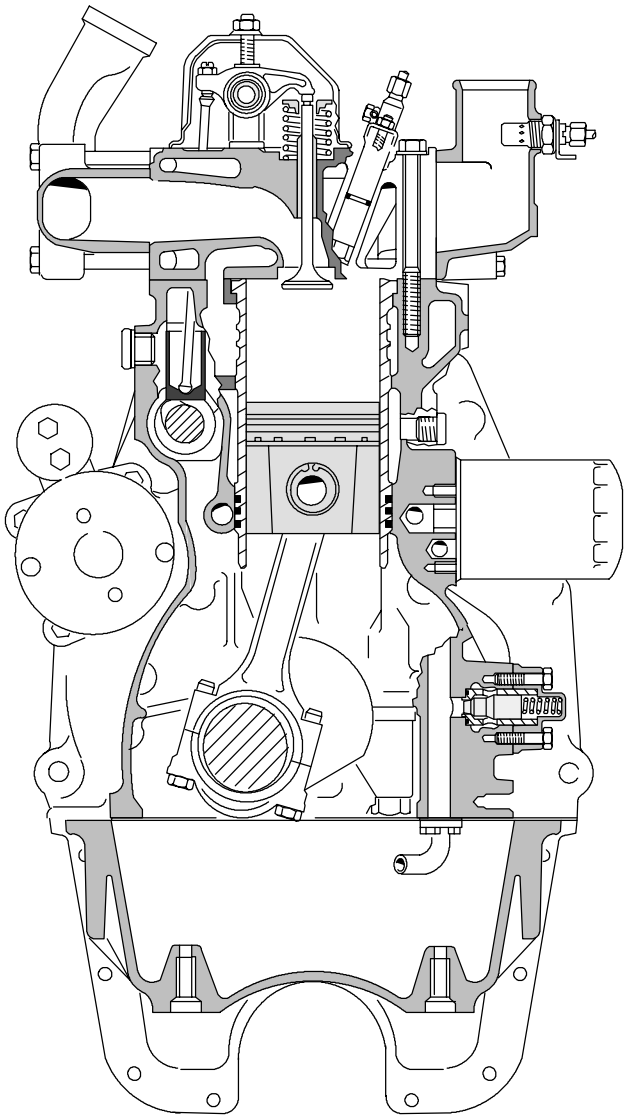

https://www.truck-manuals.net/

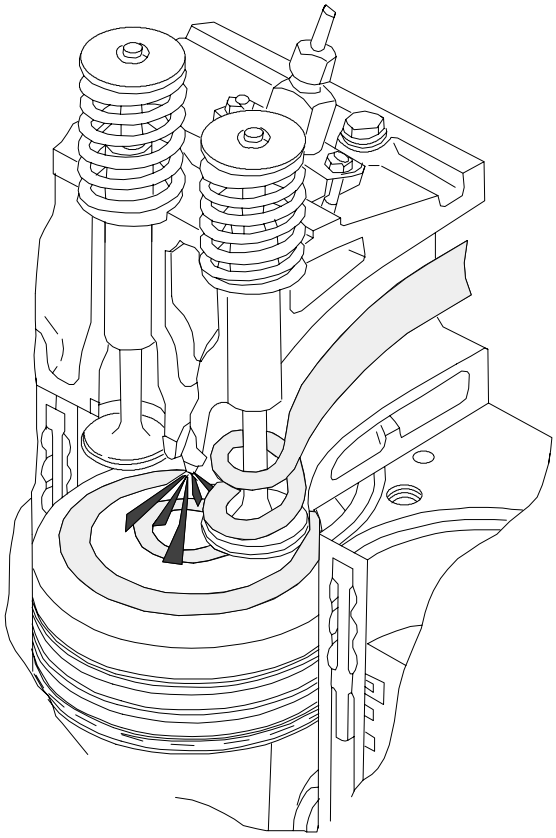

Cylinder head

320 – and 420 – engines have one cylinder head. 620 – engines have two cylinder heads which are exchangeable with each other and also with the cylinder head on the 320 – engine. Each cylinder has its own inlet and exhaust ports located on either side of the head. Between hot exhaust valves a cool inlet valve is fitted to balance the thermal load.

Cylinder head bolts are high tensile bolts which are tightened up to yield limit using angle tightening principle. Due to the large stretch the tightening forces are kept constant during the whole lifetime and retightening is unnecessary.

The injector locations are machined directly into the cylinder head. The inlet and exhaust valve guides are identical and can be interchanged. In addition, the exhaust valves are equipped with replaceable valve seat inserts.

Valve mechanism

The valve mechanism is operated by the camshaft which is located in the cylinder block. The drive is transferred with the help of tappets and pushrods. The camshaft gear wheel is fitted with a press fit and fixed with a key. Each bearing is lubricated by the force feed lubrication system through drilled oilways in the motor block.

Crank mechanism

The crankshaft is forged from chrome alloy special steel and is induction hardened at the bearing and sealing surfaces. This makes it possible to grind bearings four times without a new heat treatment. Gear wheels are located at the front end of the crankshaft. They are a press fit, and drive the idler wheel and oil pump. In addition, the front end of the crankshaft has splines for the hub of the V – belt pulley. An oil deflector ring is fitted between the hub and gear wheel, and a dust shield is fitted on the hub in order to protect the seal.

The crankshaft is supported on the cylinder block by main bearings which are placed on both sides of each cylinder. Thus there is one main bearing more than cylinders. The crankshaft thrust washers are placed in both sides of the rearmost main bearing.

At the rear end of the crankshaft there is fitted a flywheel on which is a press – fit a starter ring gear. The forged crankshaft has an I – section cross – section. The bearing location at the bottom end of the connecting rod is split, and the bearing cup is secured by two special bolts and nuts. The upper part has a wedge – shaped bearing location, in which the piston pin bearing bushing is fitted with a press fit.

The piston is made of an eutectic aluminium alloy. In the upper face of the piston there is a combustion chamber. The shape of the chamber is intended to maximise the mixture of air and fuel. The piston has three rings. The upper molybdenum – coated ring has a wedge – shaped cross – section. On natural aspirated engines and on slight supercharged engines the upper ring is right – angled. The middle ring is tapered and it fits into its groove. The taper taking up the clearance. The oil control ring is spring loaded and it has a two – stage, chromed scraping edge.

On the turbocharged engines the upper ring location is formed in a cast iron ring which is cast in the piston. In addition, the piston on supercharged engines is graphite coated to ensure correct running – in.

Four – cylinder engines (420) are equipped with a balancer unit. The eccentric weights, which rotate at twice the engine speed, even out the vibration forces exerted by the movement of the pistons and the crank mechanism.

https://www.truck-manuals.net/

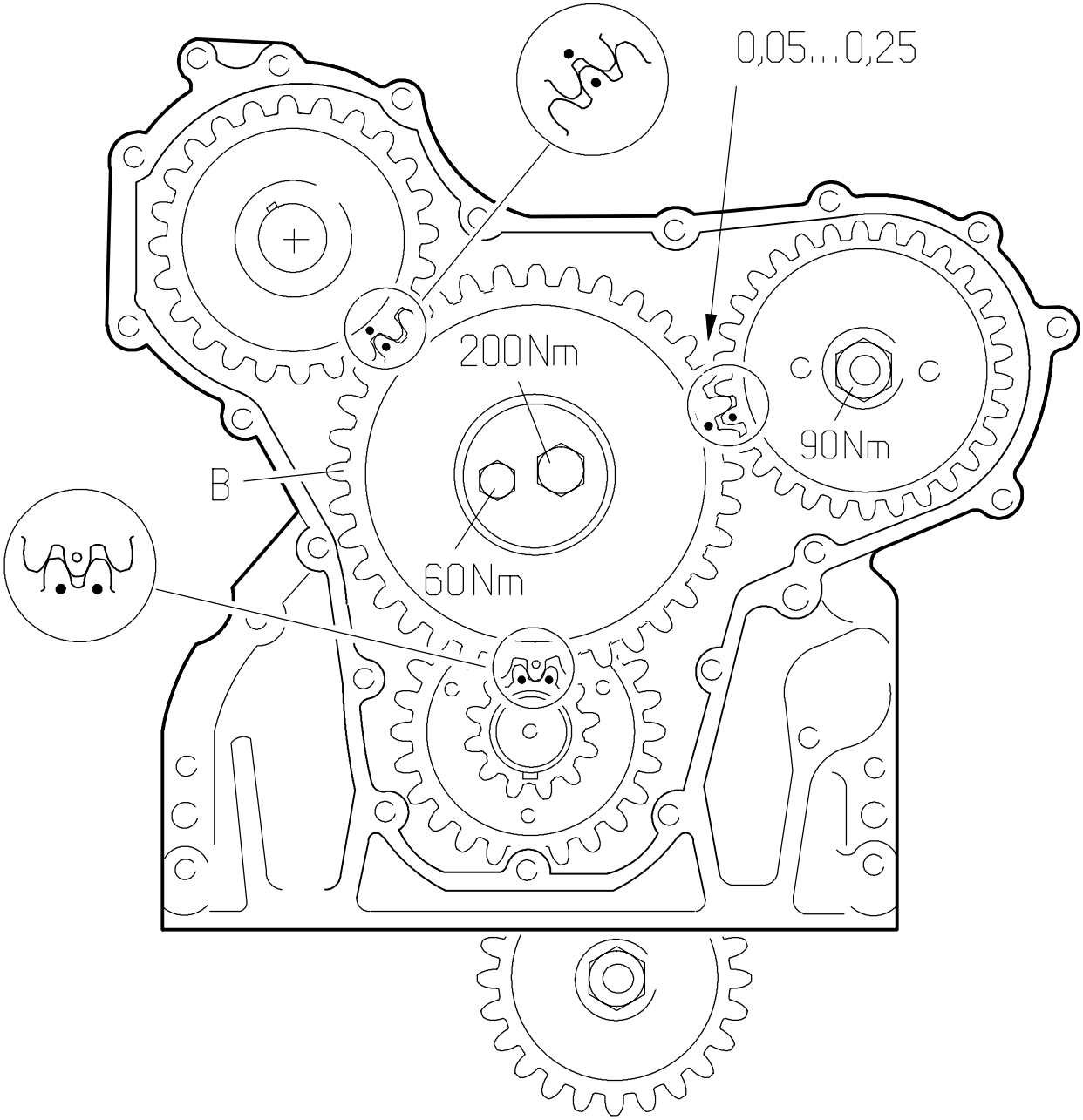

Timing gears

The timing gear train consists of hardened, helically cut gear wheels. The gears are encased by the timing gear casing which is fitted to the front of the engine. The timing gear drives the camshaft, fuel injection pump and oil pump.

The idler gear is supported with a bearing sleeve on the shaft on the front face of the cylinder block.

https://truckmanualshub.com/

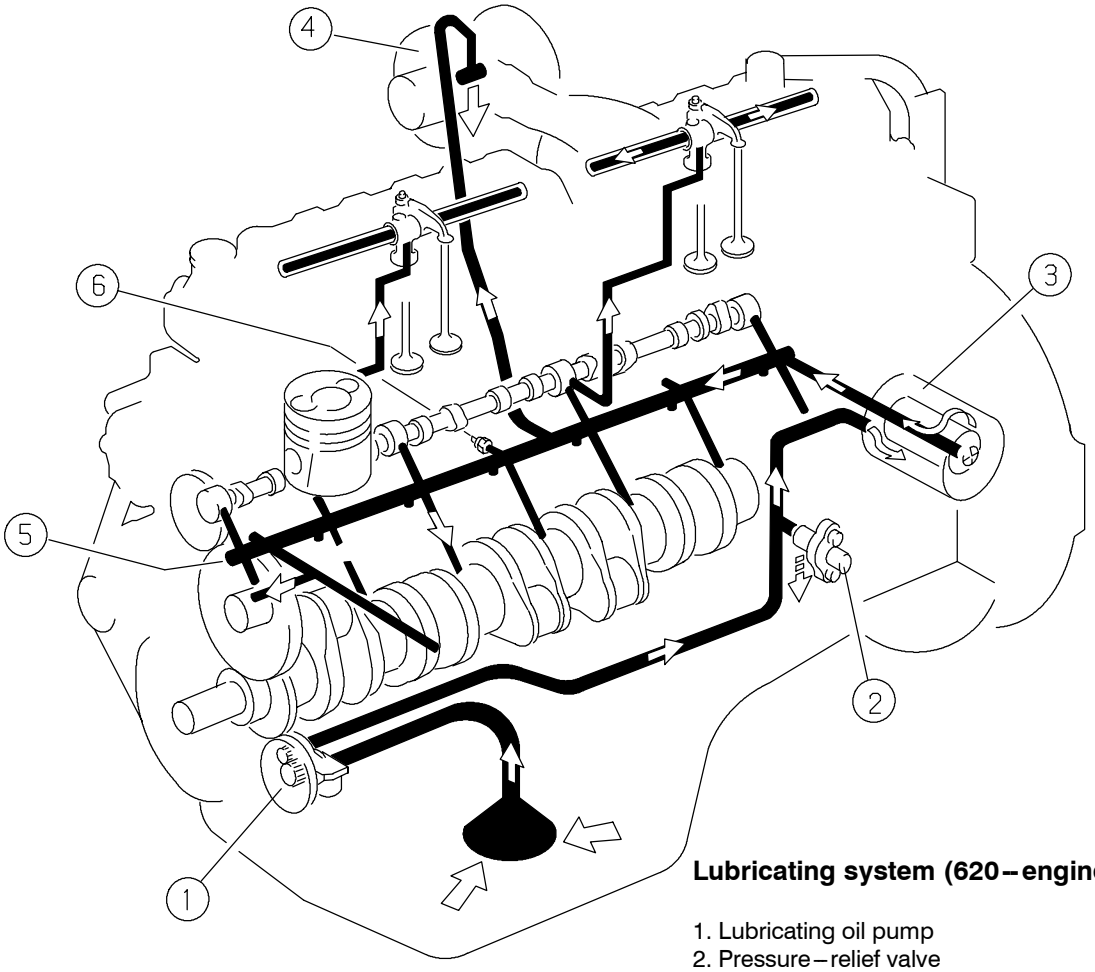

Lubricating system (620 – engines)

1. Lubricating oil pump
2. Pressure – relief valve
3. Oil filter
4. Turbocharger (not 8000 and 8100 tractors)
5. Main oil gallery
6. Oil pressure sensor

Lubricating system

The engine has a pressure lubricating system in which the oil pump (gear pump) is attached to the cylinder block lower face. The oil is sucked up by the pump through a suction strainer. After the pump the oil is led through an oilway to the relief valve and to the oil filter. After the filter, the oil is led through the main oil gallery from which oilways branch out. The oil is led through the oilways in the main bearings and through the crankshaft to the big – end bearings.

The oil is further directed from the main gallery to the injection pump, turbocharger, balancing unit (420) and to a possible compressor. In addition, the idler gear bushing, the camshaft bearing points and the valve mechanism get their lubrication oil via the main oil gallery.

The oil pressure relief valve is located under the oil filter on the left hand side of the engine. The valve regulates the lubricating oil pressure so that it is kept constant, regardless of the engine speed. Oil pressure is about **2,5 – 4 bar** depending on revs, oil quality and temperature, and at engine idling speed the pressure is min **1,0 bar**.

The oil filter is full – flow disposable type and is fitted on the left – hand side of the engine. A by – pass valve is located at the base of the filter to ensure safe cold – starting or to ensure adequate lubrication in case the filter becomes blocked. In addition, there is a non – return valve which stops the filter from being emptied of oil.

https://www.truck-manuals.net/

https://truckmanualshub.com/

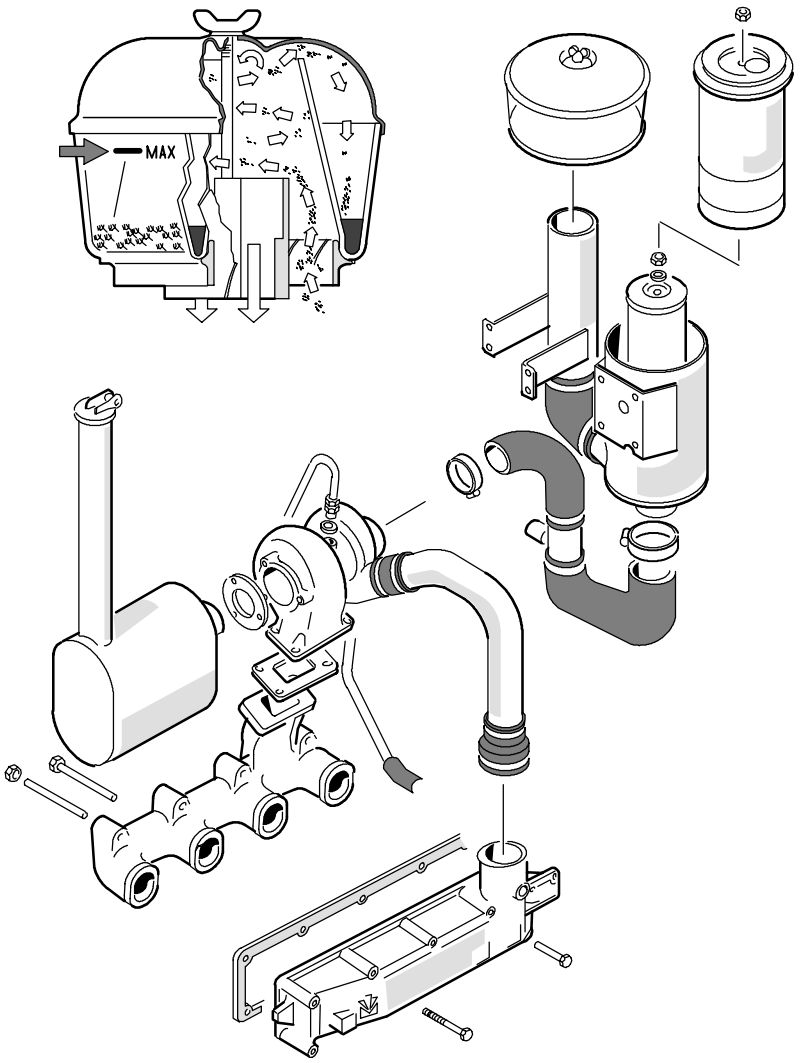

Induction and exhaust system

The filter system for the engine inlet air comprises a cyclone type precleaner, and a paper filter which acts as the main filter. The incoming air is made to rotate in the cyclone precleaner. This causes most of the impurities to settle out and collect in the cyclone precleaner dust collector. The paper filter comprises two replaceable filter elements. The paper is corrugated and surrounded by a metal support.

The impurities in the air collect at the larger filter element which can be cleaned when necessary. The inner safety filter prevents impurities form entering the engine should the main filter element break, or be fitted incorrectly.

An electric service indicator is located in the filter body. This sender lights a control lamp on the instrument panel when the air filter is blocked. The inlet system also includes the hoses between the air cleaner and the turbocharger and the turbocharger and the induction manifold.

The exhaust manifold is attached to the cylinder head with high tensile bolts without a separate gasket. Retightening of the manifold bolts is unnecessary.

The turbocharger is small and thus it reacts sensitively at low engine revs. The turbocharger gets lubricating oil and cooling from the engine lubricating and cooling system.

https://www.truck-manuals.net/

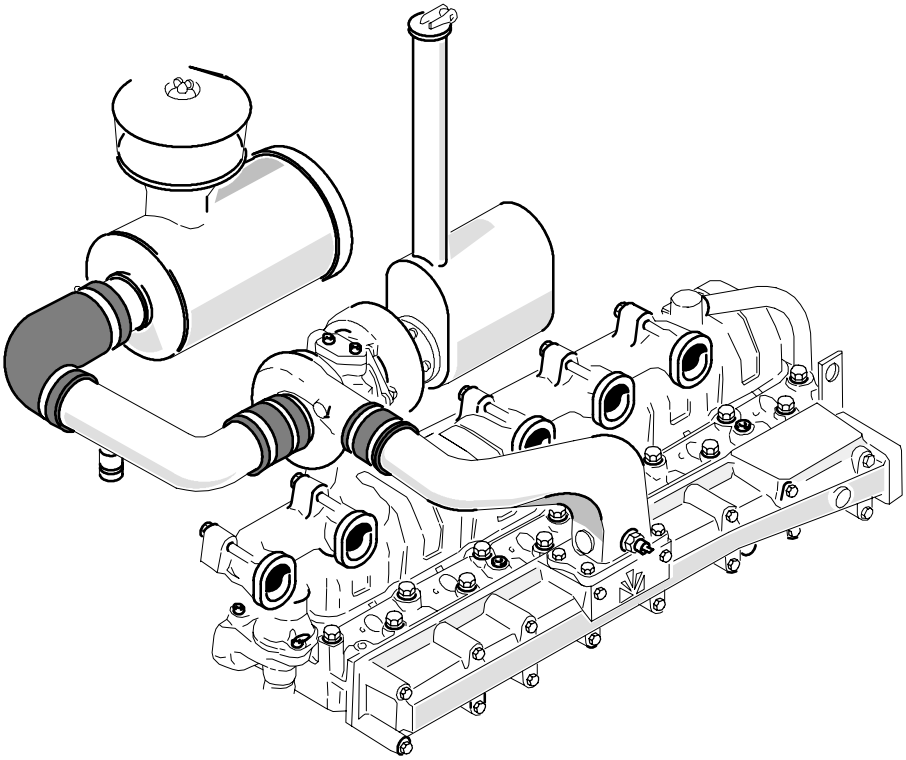

The picture above shows the air intake system of the 8400 tractor. 8400 has a turbocharged, 6 – cylinder engine with an output of 140 hp (103 kW). The turbocharger type is Schwitzer S2B.

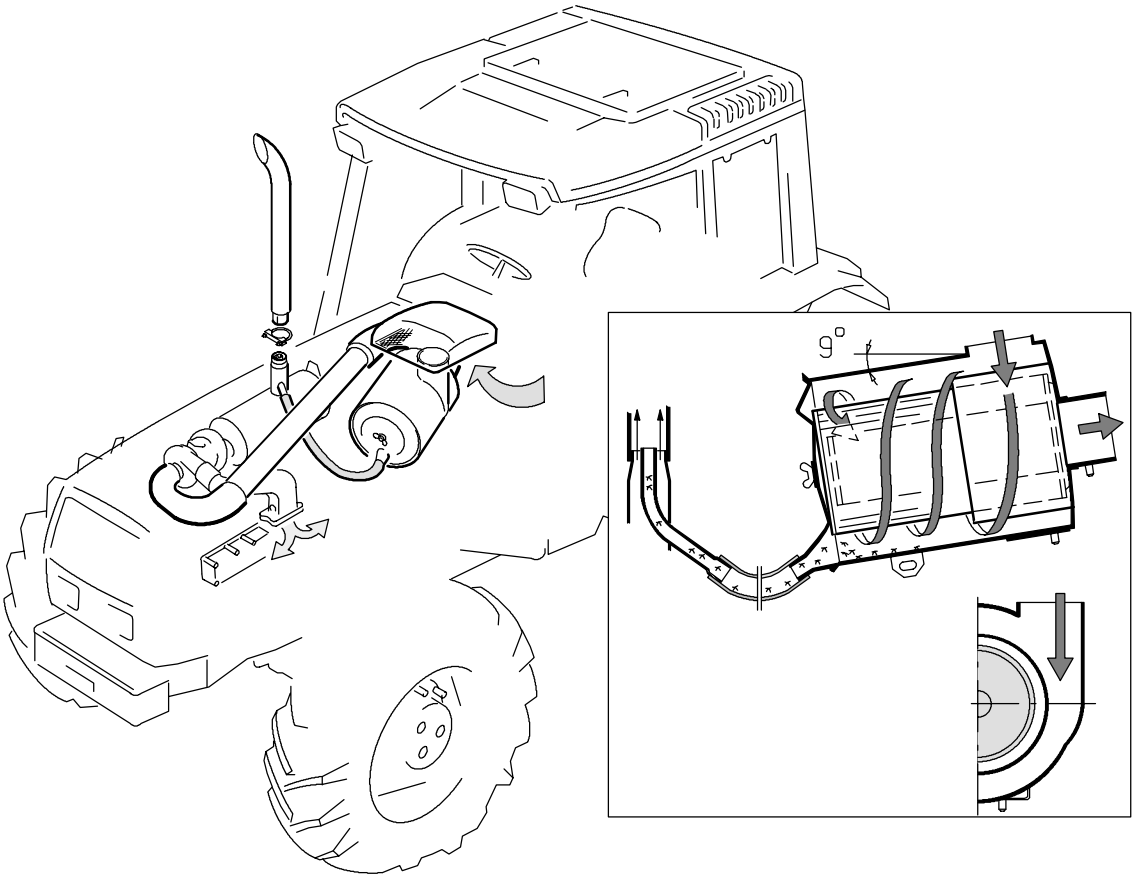

Air filter on later 8200 and 8400. In this filter the filter elements are a little bigger than on other models. Also a pipe, which removes impurities with the aid of the suction created by exhaust gas flow, is standard equipment. The air intake covering above the filter has a net, which filters larger impurities.

The filter elements are accessible after removing the LH side engine hood plate. There is a wing nut at the end of the filter housing.

Note! 6200, 6800, 8000R and 8050 – 8750 tractors also have this filter and later all Mezzo/Mega – series tractors.

https://www.truck-manuals.net/

https://truckmanualshub.com/

https://www.truck-manuals.net/

https://www.truck-manuals.net/

https://truckmanualshub.com/

https://www.truck-manuals.net/

Repair instructions

Cylinder block and flywheel housing (Op no 211)

1. Cylinder block and cylinder liners

A. Measuring cylinder liner wear

Note! Cylinder liner wear can be measured when the engine is attached to the tractor. Remove only the cylinder head and crank the engine so that the piston is in the lower position.

1. Using a micrometer set the dial gauge to zero using a new cylinder liner indicating the initial dimension of the bore: 108,00 mm.

2. Clean the inner surface of the cylinder liner thoroughly before measurement.

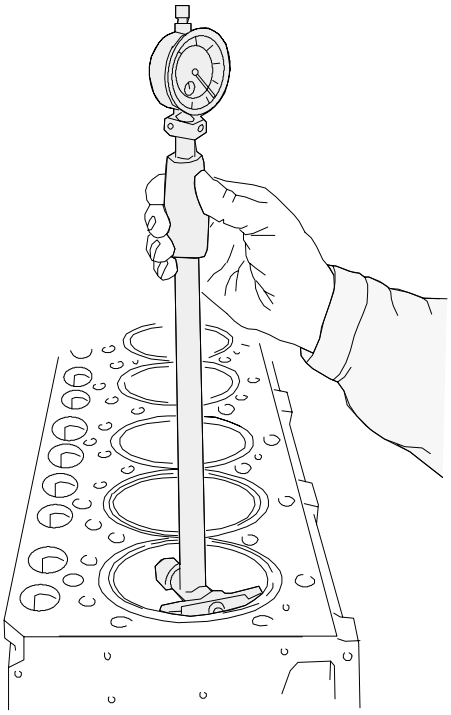

3. Perform the measurement crosswise at the liner top end, lower end and middle.

4. Check the gauge reading for maximum wear and ovalness (compare with rating on page 210/4).

B. Removing cylinder liner

Note! See also page **219/1** for working order**.**

1. If the cylinder liners are to be used again they should be marked so that they can be fitted in the same position.

2. Remove the cylinder liners using cylinder liner puller 9051 73100.

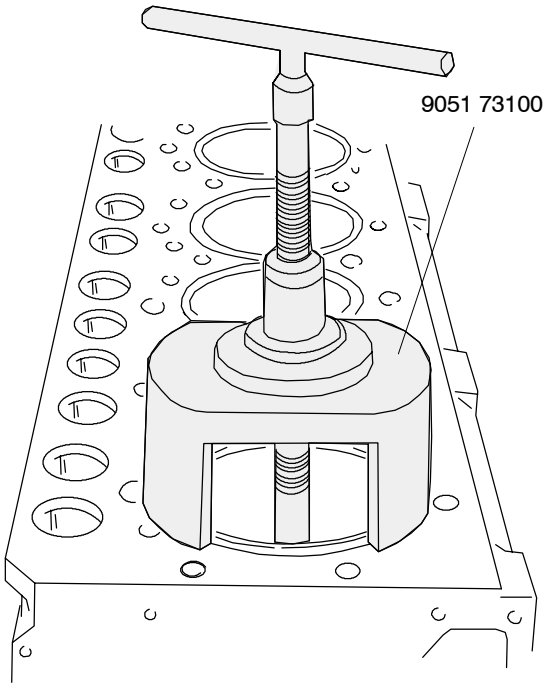

C. Checking cylinder block

1. Clean the cylinder block and all oilways.

2. Check the cooling channels and remove the scale and sediment to ensure engine cooling.

3. Check the tightness of the cup plugs and threaded plugs in the cylinder block as well as the condition of the cylinder block and sealing faces.

4. Measure the wear of the camshaft bearing points (compare with rating on page 210/4).

Note! If it is necessary to machine the upper face of the cylinder block, the pistons must be shortened by the same dimension. Observe the valve disc spaces on the piston upper face.

D. Changing camshaft bushing

1. Extract the bushing with an internal puller, for example Sykes 854. If the camshaft rear end plug is removed the bushing can be forced out with a long drift.

2. Clean the bushing location.

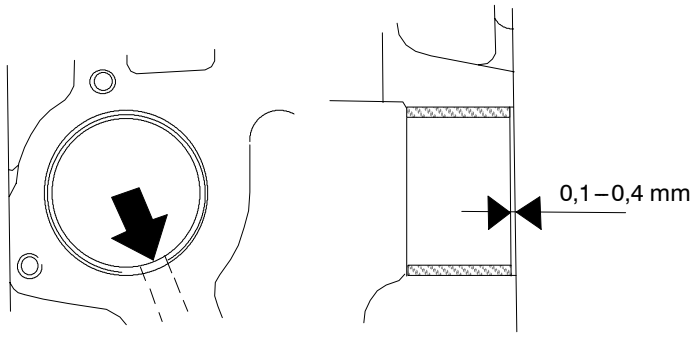

3. Press in a new bushing. Note the position of the oil hole. It is unnecessary to ream the bushing because it has a correct inner diameter when it is fitted in place.

Note! On the 620 and 634 engines from the engine ser. number C2751, all camshaft bearing points are provided with a separate bearing bushing. Observe the different outer diameters when removing and fitting.

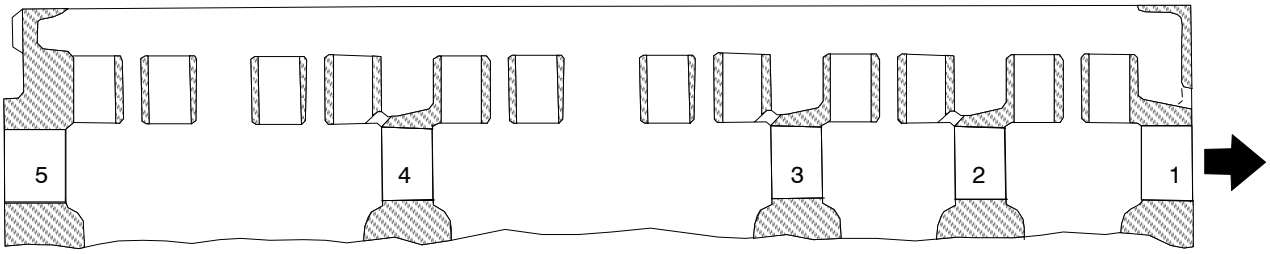

Order numbers of the camshaft bushings and hole diameters for the bushings on the 620/634 engines.

Note! Numbering begins from the front end of the engine.

Order no	Hole diameter
1. 8363 22610	55,62...55,65
2. 8368 52460	55,40...55,43
3. 8368 52459	55,20...55,23
4. 8368 52460	55,40...55,43
5. 8368 52461	55,62...55,65

E. Oversize bushings for camshaft

If the location of the camshaft bushing (front bearing) is damaged, a bushing with a **0,4 mm** oversize outer diameter can be fitted. Bushings are available even for other camshaft bearings which do not normally have bushings. Part numbers and machining dimensions for the bushing locations are shown in the figure.

Observe the position of the bushing oil holes. It is unnecessary to ream the bushings after fitting.

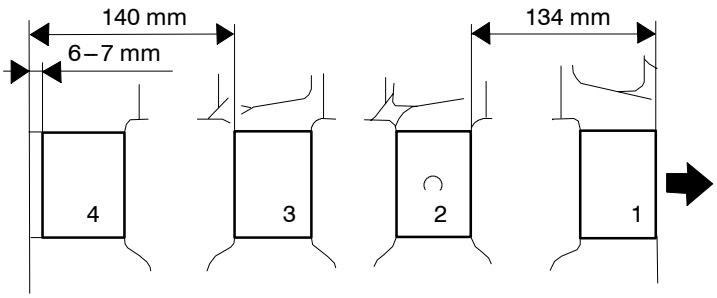

Oversize camshaft bushings for 320 – engines. Numbering begins from the front end of the engine.

Order no	Hole diameter
1. 8363 24661	56,02...56,05
2. 8368 52460	55,42...55,45
3. 8368 52460	55,42...55,45
4. 8368 52461	55,64...55,67

https://www.truck-manuals.net/

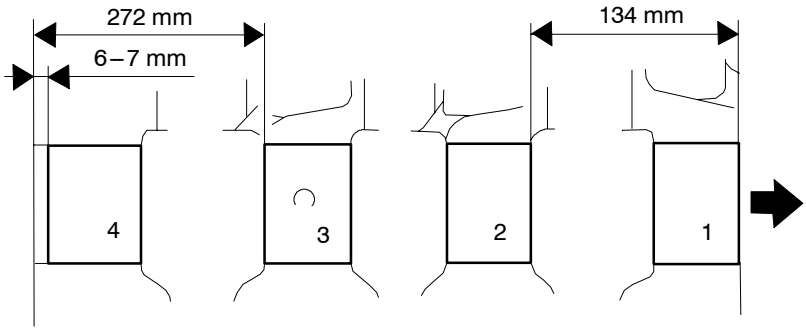

Camshaft oversize bearing bushings for 420 – engines. Numbering begins from the front end of the engine.

Order no	Hole diameter
1. 8363 24661	56,02...56,05
2. 8368 52460	55,42...55,45
3. 8368 52460	55,42...55,45
4. 8368 52461	55,64...55,67

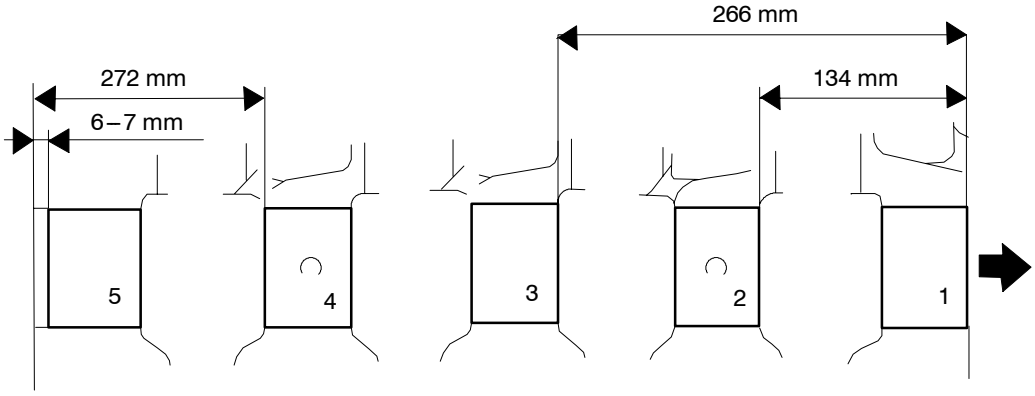

Camshaft oversize bearing bushings for 620/634 engines. Numbering begins from the front end of the engine.

Order no	Hole diameter
1. 8363 24661	56,02...56,05
2. 8368 52466	55,62...55,65
3. 8368 52460	55,42...55,45
4. 8368 52466	55,62...55,65
5. 8368 52467	55,84...55,87

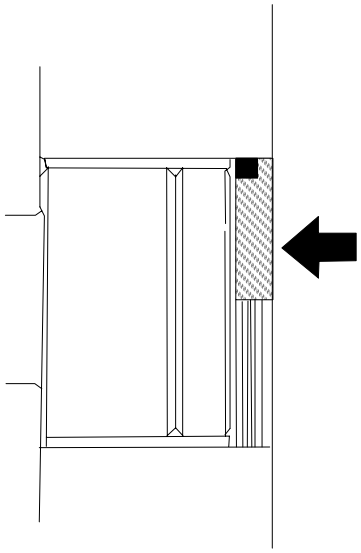

The camshaft rear end plug is replaced with plug 8363 24391 and o – ring 6146 05125 after machining.

F. Fitting plug at camshaft rear end

1. Clean the seat for the plug.

2. Apply sealing compound to the contact surface of the plug

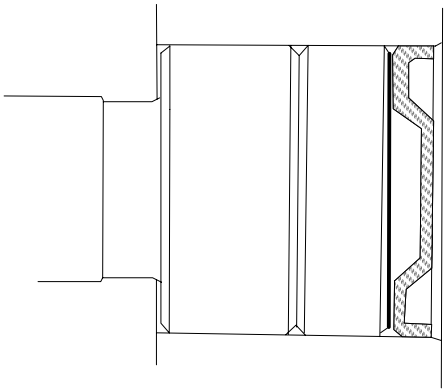

3. Drive in the plug with fitting drift 9025 87400.

Note! Do not drive in the plug too far because it will affect the camshaft end float.

https://www.truck-manuals.net/

https://truckmanualshub.com/

G. Fitting pipe for oil dipstick

1. Clean the seat for the pipe.

2. Apply locking fluid Loctite 601 to the lower end of the pipe.

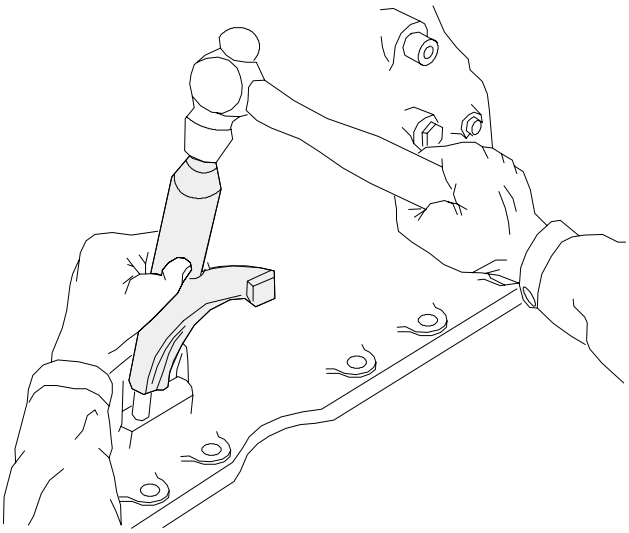

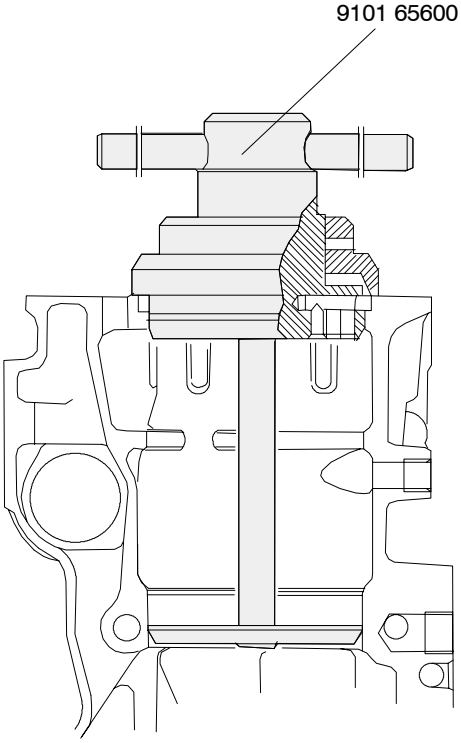

3. Tap the pipe in to the correct fitting height with tool 9025 95900.

Note! The position of the pipe affects an oil level in the engine.

H. Fitting cylinder liner

1. Clean the cylinder liner and its recess in the cylinder block. Without o – rings the liner should rotate easily in its recess.

2. Apply a thin layer of marking paint on the underside of the cylinder liner flange. Fit the cylinder liner without o – rings and turn it forwards and backwards. Lift out the liner and check that paint has been deposited on the whole contact surface.

3. If the recess is damaged, or the cylinder liner height (see point 5) needs to be adjusted, use milling cutter 9101 65600. If necessary, a light lapping can be executed after milling with the help of the cylinder liner. Apply lapping paste to the underside of the cylinder liner flange, and twist the liner with twisting tool. Lapping is not suitable for adjusting the cylinder liner height.

4. Clean the contact surfaces.

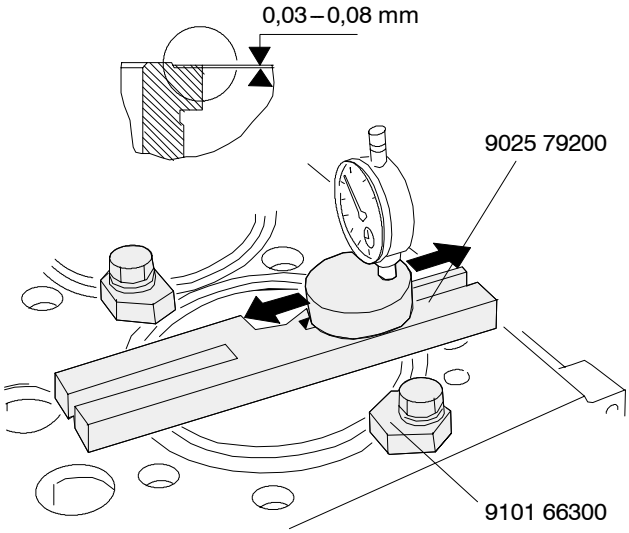

5. Fit the cylinder liners and fix each liner with two press tools 910166300. Measure the cylinder liner height with a dial gauge and holder 9025 79200. Zero the dial gauge against a flat surface, for example, the cylinder block face. Measure each liner in four places. The height of the liner above the cylinder block face should be **0,03 – 0,08 mm**. The height difference between cylinder liners under the same cylinder head must not exceed **0,02 mm**, nor must an intermediate cylinder liner lie lower than an outer one.

https://www.truck-manuals.net/

6. If the cylinder liner height is too low, a liner with a higher flange is fitted.

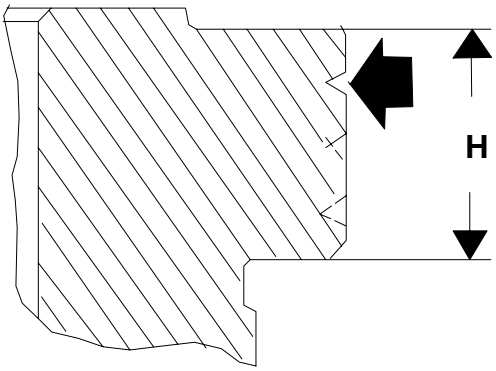

Order no	H	Marking grooves pcs
8266 47420	$9{,}03^{+0{,}02}$	– (norm)
8366 47933	$9{,}08^{+0{,}02}$	1
8366 47934	$9{,}13^{+0{,}02}$	2
8366 47935	$9{,}23^{+0{,}02}$	3

Cylinder liners with oversize flanges (higher flanges) are marked with grooves on the outer circumference as follows:

1st oversize, 0,05 mm = 1 marking groove
2nd oversize, 0,10 mm = 2 marking grooves
3rd oversize, 0,20 mm = 3 marking grooves

Note! Recess depth is adjusted with a cylinder liner recess cutter 9101 65600.

7. If the liner height of a cylinder liner is not the same all the way round, the cylinder liner flange and the cylinder block recess depth should be checked. Cylinder liners with warped flanges should be discarded.

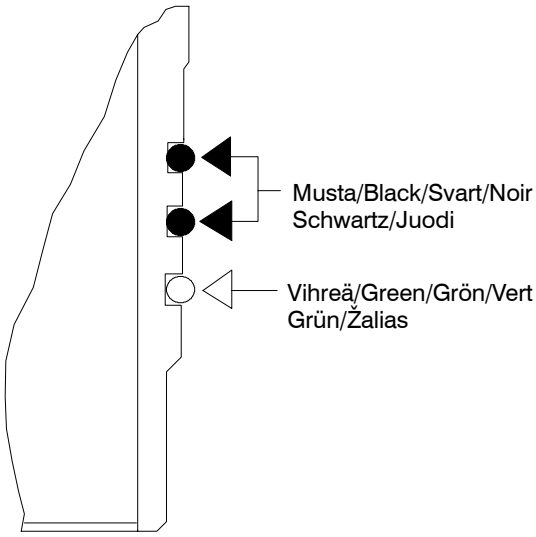

8. Fit the o–rings into the grooves in the cylinder lower part and lubricate them with a liquid soap (not with engine oil).

Note! Stretch the o–rings as little as possible when fitting them. Max allowable stretching is 6 %.

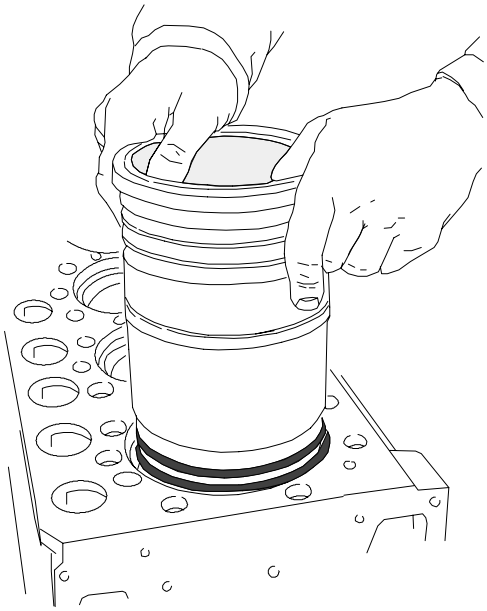

9. Press the cylinder liners into the cylinder block. It should be easy to press them fully home. Make sure that the liners do not rise up after fitting.

https://www.truck-manuals.net/

https://truckmanualshub.com/

2. Flywheel housing

A. Fitting flywheel housing

The flywheel housing is centred on the cylinder block by two tension pins. Even the flywheel housings which are delivered as spare parts have ready – made holes for the pins.

1. Clean the sealing surfaces between the cylinder block and the flywheel housing.

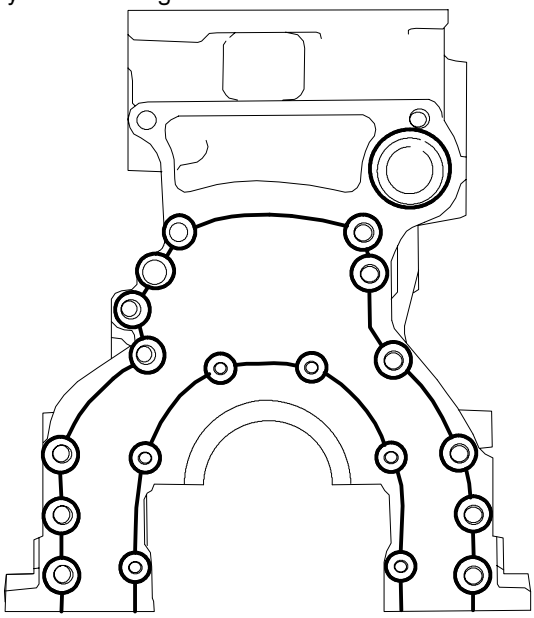

2. Apply silicone sealant as shown in figure above.

3. Lift the flywheel housing into place and fit all the bolts.

4. Centre the housing and fit the tension pins with drift 9025 98700.

5. Tighten the fixing bolts, the inner ring socket head bolts to **60 Nm** (8.8) or **90 Nm** (12.9) and outer ring hexagonal bolts to **110 Nm** (8.8) or **150 Nm** (12.9).

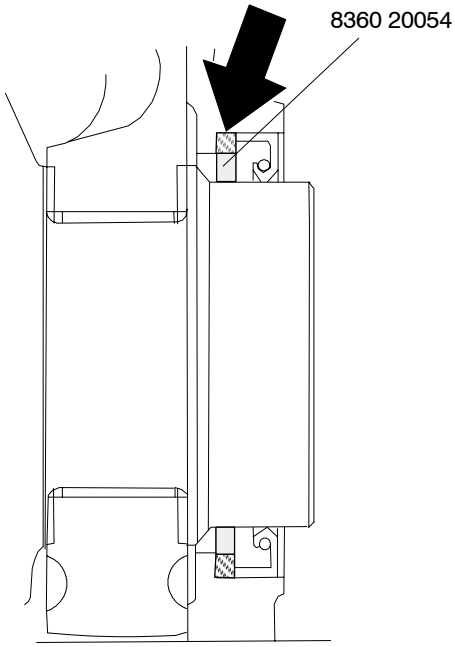

Note! If the crankshaft is worn at the sealing location, a 2 mm spacer ring, part no 8360 20054, can be fitted in front of the crankshaft rear oil seal.

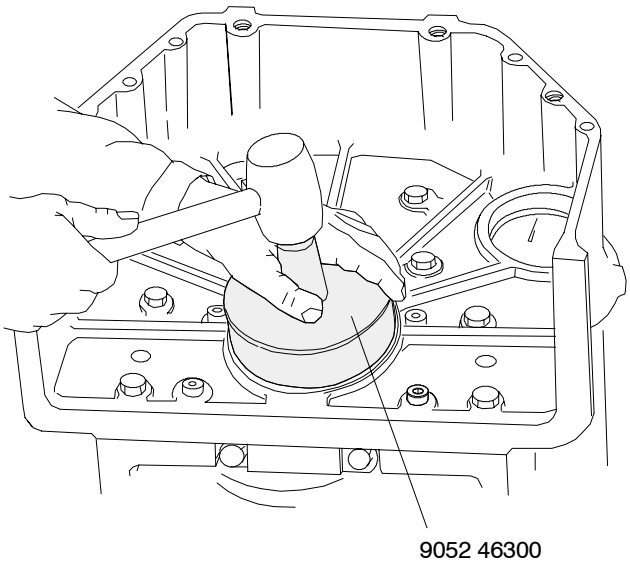

B. Changing crankshaft rear oil seal

1. Split the tractor at clutch. Remove the clutch assembly (and possible turbine clutch).

2. Remove the flywheel.

3. Remove the oil seal. Do not damage the crankshaft.

4. Clean the seal location and grind off any burrs.

5. Lubricate the sealing surfaces on the crankshaft and on the seal. Place the seal on the crankshaft and drive it in until it bottoms using drift 9052 46300. Other tools may cause the seal to be damaged or mounted askew, resulting in leakage.

Note! The cranckshaft rear oil seal has been changed to a Teflon type. The spare part seals have a mounting sleeve, which must not be removed before fitting. The spare part numbers do not change. When fitting the seal, place the plastic sleeve on the crankshaft and push the seal on the sleeve into place. Remove the sleeve and fit the seal with the special tool. The seal must be fitted dry.

https://www.truck-manuals.net/

C. Changing starter ring gear on flywheel

If the ring gear is worn, change it with a new one. The ring gear cannot be turned around because its teeth are chamfered and hardened on the starter motor side.

1. Split the tractor at clutch (see Op **411 1A**). Detach the clutch assembly (and possible turbine clutch) and the flywheel.

1. Detach the earlier ring gear by tapping it with a drift. Clean the ring gear seat on the flywheel with a steel – wire brush.

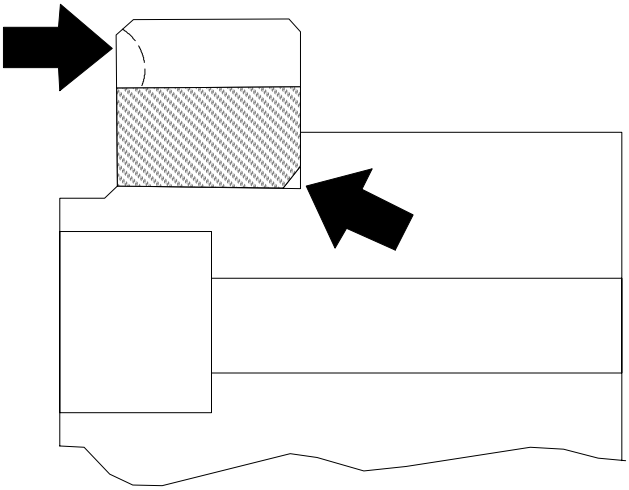

2. Warm the ring gear to the temperature of **150 – 200˚C**. Fit the ring gear with the inner diameter chamfering turned against the flywheel and the teeth chamfering against the starter motor.

3. Allow the ring gear to cool freely without using any coolant.

D. Fitting the flywheel

1. Clean the contact surfaces on the crankshaft rear flange and on the flywheel.

2. Fasten the flywheel to the crankshaft rear end. As a guide pins can be used studs (M12, 2 pcs) which are screwed in to the flywheel fixing bolt holes.

Note! On the flywheel there is a fuel injection timing mark. Fit the flywheel in the right position according to the guide pins.

Note! In the E – engines there is an injection timing register mark on the flywheel and the flywheel has been positioned with a guide sleeve to the crankshaft.

3. Tighten the flywheel fixing bolts evenly to a torque of **140 Nm** (10.9) or **160 Nm** (12.9).

Note! If a flywheel must be changed on the E – engines, an injection timing mark must be made on a new flywheel as follows:

– Rotate the crankshaft so that the piston in the first cylinder is in the top dead centre. Drop a valve down against the piston top. Place a dial gauge stylus against the valve upper end and zero the gauge to the top dead centre. Rotate the crankshaft in the running direction until the dial gauge shows value **4,633 mm** after the top dead centre (420, 620) or **5,307 mm** after the top dead centre (634).

– Drill the injection timing mark in the flywheel with the aid of a drill shown below.

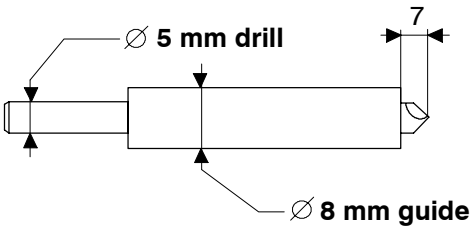

https://truckmanualshub.com/

https://www.truck-manuals.net/

Cylinder head and valve mechanism (Op no 212)

1. Cylinder head

A. Removing cylinder head

1. Remove the engine hood plates. Clean the engine externally and drain the coolant. Disconnect the coolant hoses from the cylinder head and the thermostat housing.

2. Remove the suction hoses between the turbocharger and the air filter and between the turbocharger and the inlet manifold (turbocharger only on 6100–6600 tractors).

3. Disconnect the turbocharger pressure and return oil pipes.

4. Remove the pipes to the thermostart fuel reservoir.

5. Remove the injector leak–off fuel pipes and the delivery pipes. Remove the injectors. Fit blanking–off caps on all open connections.

6. Remove the inlet and exhaust manifolds and the thermostat housing.

Note! It is possible to remove the cylinder head even thought these parts are attached to the head.

7. Remove the valve cover and the breather hose.

8. Remove the rocker arm mechanism and the push rods.

9. Loosen all the cylinder head bolts first by a 1/4 turn and then remove them. Remove the cylinder head.

B. Removing valves

Ensure that valves which are to be re–used are marked, so that they are fitted in their original locations.

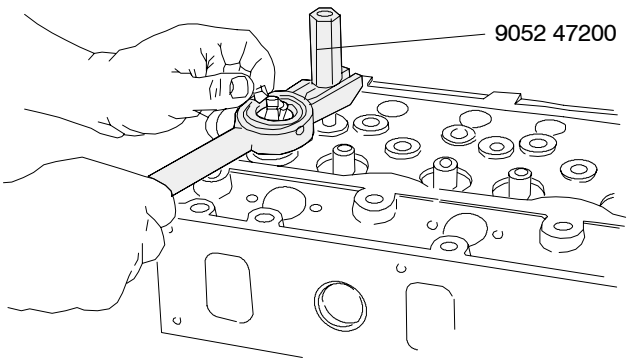

1. Thread the counterhold nuts 9052 47200 onto a screw stud for the rocker arm mechanism. On the 320–, and 620–engines there is not a screw stud at the valves for the centre cylinder. A bolt of suitable length should be used instead.

2. Compress the valve springs using lever 9101 66200. Remove the valve cotters, spring guide and spring. Remove the valves.

C. Checking cylinder head

1. Remove carbon deposits from the exhaust ports, clean the sealing surfaces and wash the cylinder head.

2. Check for cracks and other damage.

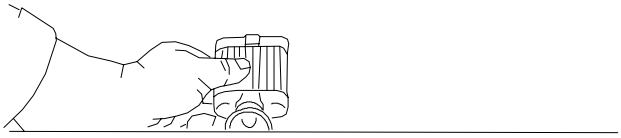

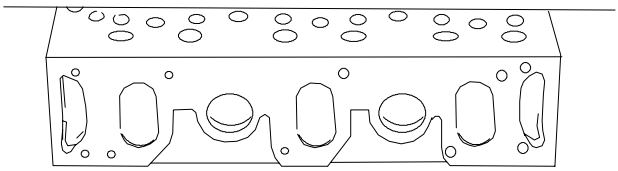

3. Check the flatness of the cylinder head by using a straight edge. An uneven or warped surface should be surface ground. The height of the cylinder head, after grinding, should not be less than **104,00 mm**. The valve disc depth from the cylinder head surface should be **0,60 mm** for the exhaust valves and **0,70 mm** for the inlet valves.

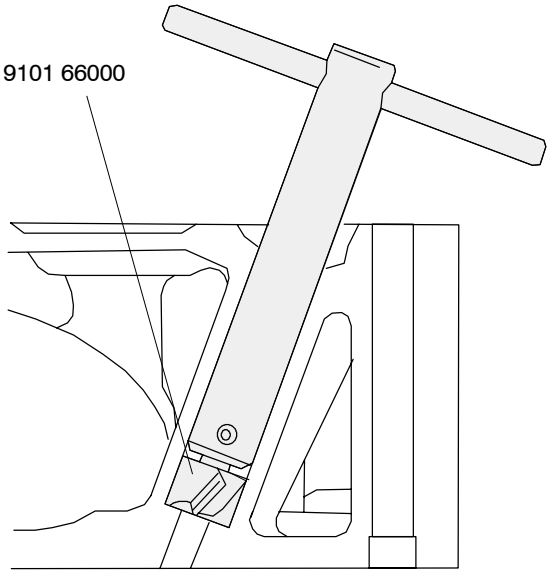

4. Straighten and clean the injector location seat in the cylinder head with cutter 9101 66000.

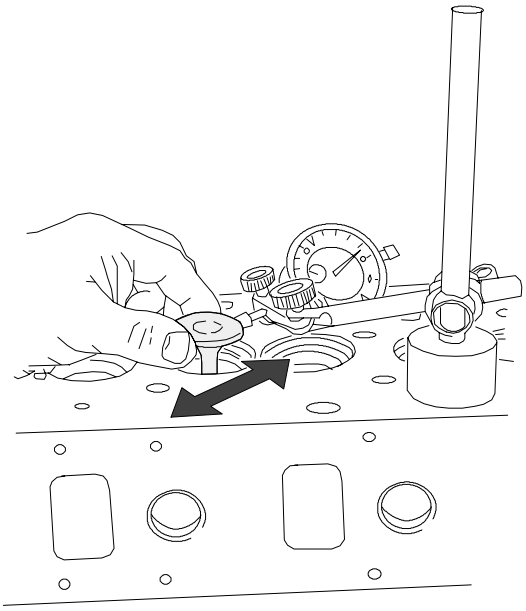

5. Measure the clearance between the valve stem and the valve guide with a dial gauge. Lift the valve so that the valve head is 15 mm from the face of the cylinder head, and measure the clearance. It must not be greater than **0,30 mm** for the inlet valves and **0,35 mm** for the exhaust valves. In order to establish the valve guide wear, a new valve should be used when measuring.

D. Changing valve guides

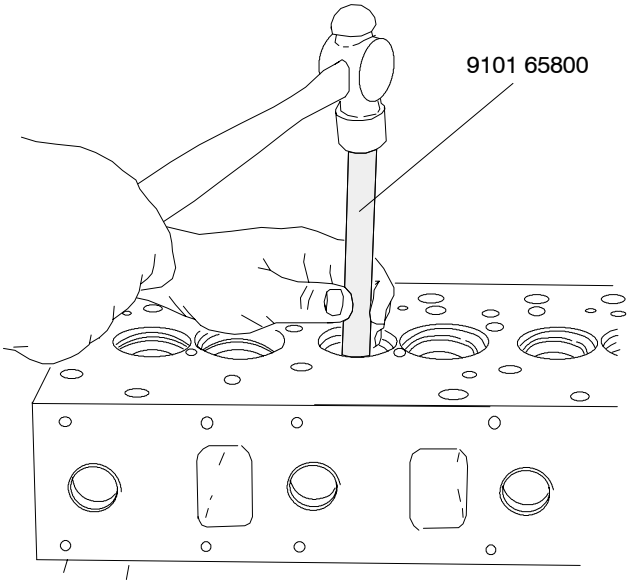

1. Press or knock out the old guides using drift 9101 65800. Clean the valve guide locations.

2. Lubricate the outside of the new guides and fit them using drift 9101 65900, which ensures the correct fitting height (**21 mm** over the spring face)

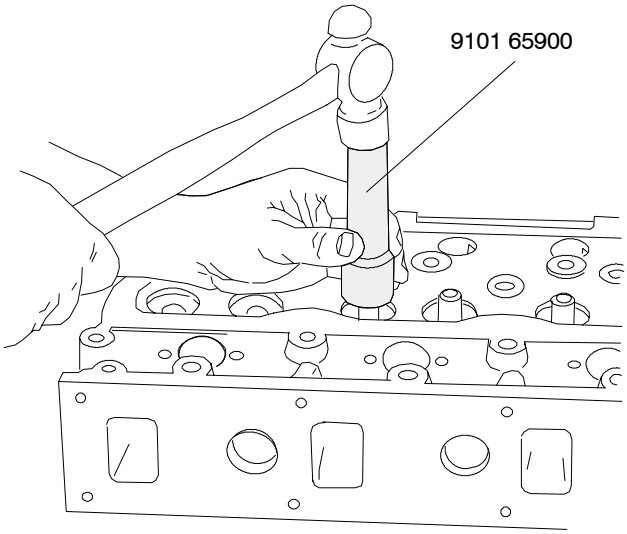

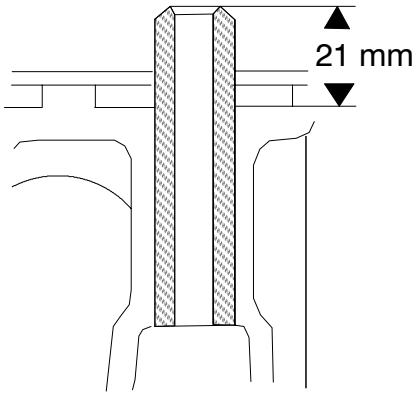

3. The guides are the same for the inlet and exhaust valves. Ensure that the steepest chamfer on the guide, faces the valve head. Check that the valves do not bind in the guides.

E. Machining valve seat

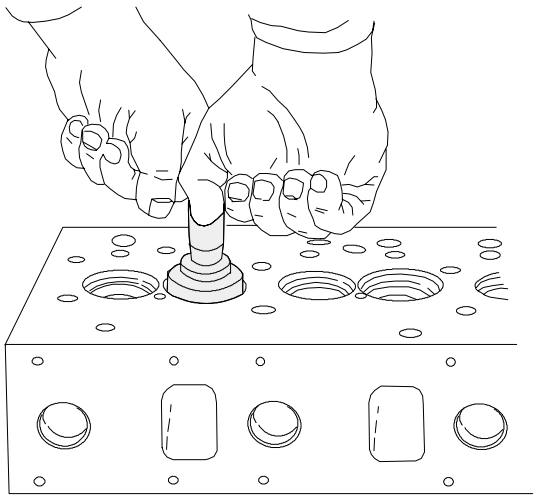

Machine the damaged valve seat with milling cutter (see page 210/10). If the width of the seat exceeds **2,3 mm** in exhaust and **3,7 mm** in intake, it should be reduced primarily at the outer edge.

The valve seat angle is **45° +20'** for exhaust valve and **35° ±20'** for inlet valve.

https://www.truck-manuals.net/

F. Changing valve seat inserts

Exhaust valves are fitted with separate valve seat inserts. If the sealing surface is damaged so badly that it cannot be repaired with machining, the seat inserts should be changed.

1. Grind the valve head on a discarded valve so that it sits down in the valve seat. Fit the valve and weld it in place in the seat. Cool with water.

2. Turn the cylinder head over and knock out the valve and seat.

3. Clean the valve seat location. Cool the new seat in liquid nitrogen until it stops bubbling, or alternatively place it in dry ice.

4. Fit the seat with a suitable drift. Machine the seat.

N.B. Where necessary, standard size seats can be replaced by inserts with a larger outer diameter. See Specifications.

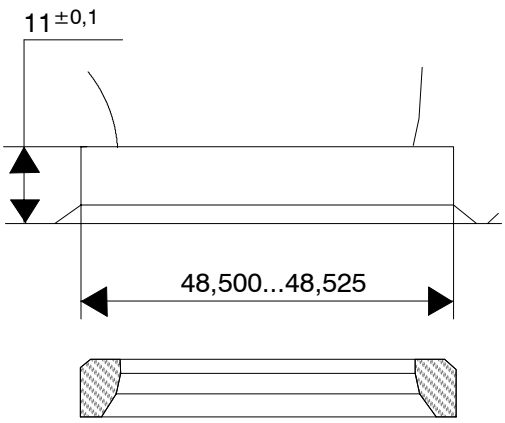

The inlet valve seat machined direct on the cylinder head, can be provided with a separate valve seat insert, order no 8366 47936. Machine the seat insert location on the cylinder head (see figure above). Fit the insert like a seat of the exhaust valve.

Note! Engines on tractors 8550 and 8750 have the valve seat inserts also on the inlet valves. From March 96 these cylinder heads have been marked with letter V, which is stamped on the cylinder head front upper surface on the exhaust side. As a spare part these heads can be fitted on all engines. The V – marked cylinder heads are also available for the 4 – cylinder engines.

G. Grinding valves

In order to ensure that there is a proper seal around the valves, there is a difference in the sealing surface angles. Thus there is a very narrow sealing surface which seals effectively even after prolonged running.

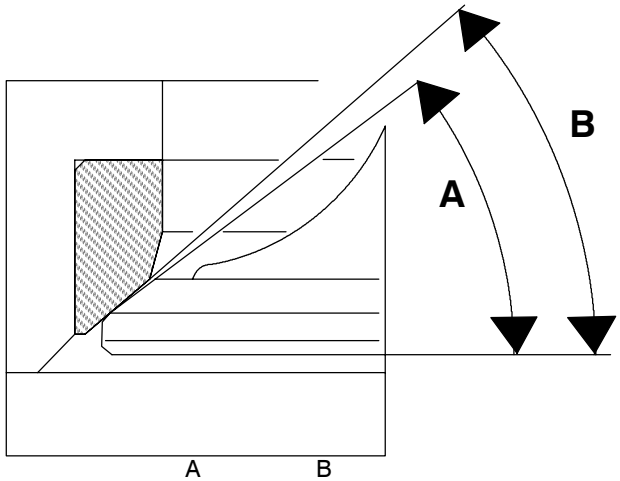

	A	B
INLET	35° – 20'	35° + 20'
EXHAUST	45° – 20'	45° + 20'

1. Grind the damaged valve disc with a valve refacer. Adjust angles to **45° – 20'** for exhaust valves and **35° – 20'** for inlet valves.

2. If the edge of the valve head is less than **1,5 mm** after it has been ground, or if the valve stem is bent, the valve should be discarded.

3. If necessary, grind the end of the valve stem.

4. Lap the valves with lapping paste and check the contact surface with marking paint.

5. Clean the cylinder head and valves of any remaining lapping paste.

H. Fitting valves

1. Check the valve springs for straightness, length and tension using a spring tester. Compare with specifications.

2. Lubricate the valve stems and fit the valves in the correct order in the cylinder.

3. Fit the springs, spring guides and valve keepers with the aid of a lever for compressing valve springs, 9101 66200.

4. Tap the end of the valve stems lightly after fitting the valve in order to ensure that they are secure.

https://truckmanualshub.com/

I. Fitting cylinder head

1. Measure the length of the cylinder head bolts. Compare with dimensions shown in figure below. Change too long bolts.

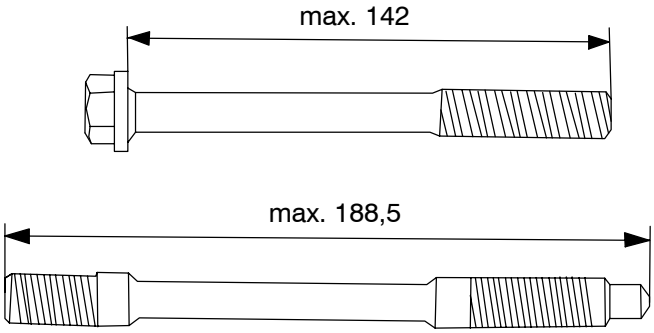

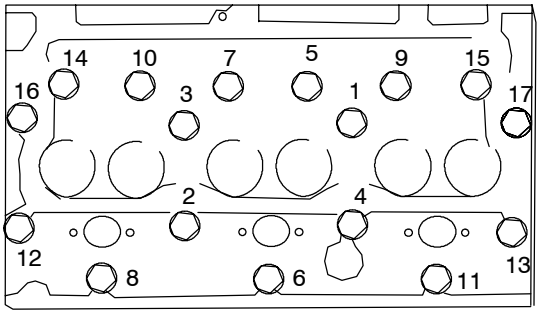

320, 620, 634

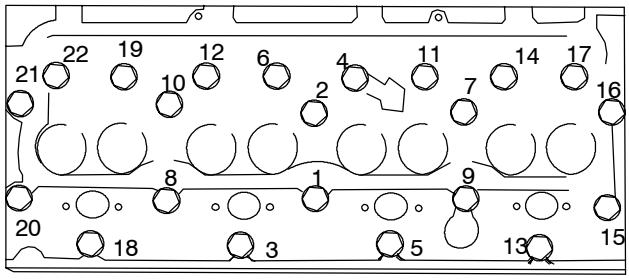

420

2. Screw the cylinder head stud bolts in to the cylinder block to a torque of **30 Nm**. Fit the valve tappets if removed.

3. Check that the sealing surfaces are clean and fit the cylinder head gasket(s) and the cylinder head(s). Ensure that on the six cylinder engines both cylinder heads are parallel by fastening lighty the exhaust manifold before tightening the cylinder head bolts (the exhaust manifold can damage, if the heads are not parallel). Clean and lubricate and fit the bolts.

Note! The cylinder head gasket order numbers are 8366 46351 (320/620/634) and 8367 46354 (420).

4. Pictures above show the correct tightening order of the cylinder head bolts. The order has also been marked on the cylinder heads.

5. Tighten the cylinder head bolts progressively as follows:

1. First tightening to 80 Nm
2. Tightening of 90˚
3. Tightening of 90˚
4. Adjust valve clearances
5. Warm engine up to normal operating temperature with light loading (approx. +75˚C)
6. Tightening of 60˚. Adjust valves.

Tighten the exhaust manifold bolts/nuts to **50 Nm**. DO NOT OVERTIGHTEN.

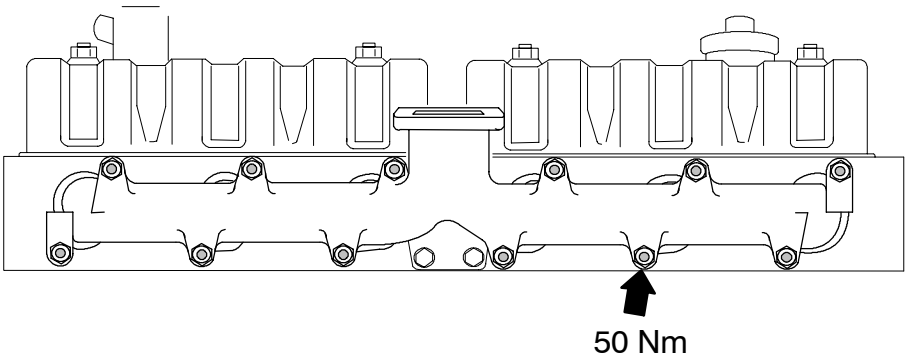

Note! On the six – cylinder engines the exhaust manifolds must always be fastened with new, thinner stud bolts and self – locking nuts (in the tractor production: F12761 –). In the tractor production and in the spare parts the material of the exhaust manifolds (six – cylinder engines) has been changed into new type (6900, 8000 – 8200: **H01722 –**. 8400, 8050 – 8750: **H01169 –**).

https://www.truck-manuals.net/

2. Valve mechanism

A. Reconditioning rocker arm mechanism

1. Check the valve tappets, especially the contact surface against the camshaft. Worn or damaged tappets should be discarded.

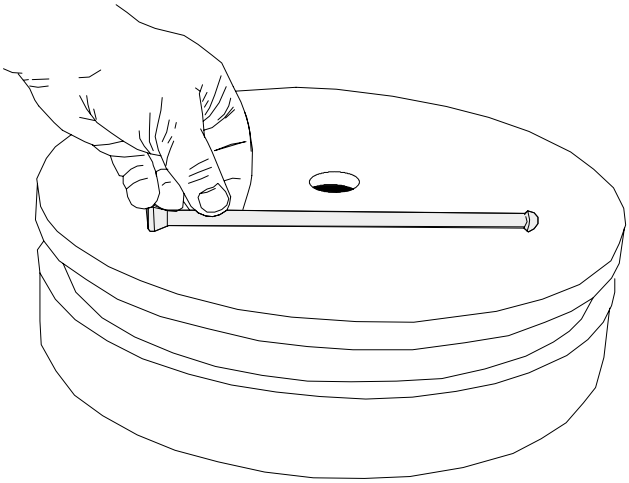

2. Check the straightness of the pushrods by rolling them on a surface table. Check also the spherical surfaces at the ends.

3. Dismantle and clean the rocker arm mechanism. Check the shaft for wear and that the oilways are clean.

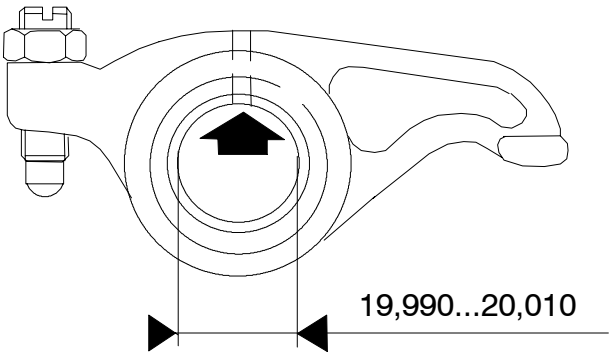

4. Check that the rocker arm bushings are not worn. Ensure that the oil hole is positioned correctly when pressing in new bushings. After pressing in the bushings they should be reamed to **19,990 – 20,010 mm**. Where necessary grind the rocker arm valve contact surface to the correct shape. Do not grind more than necessary as the hardened layer is thin.

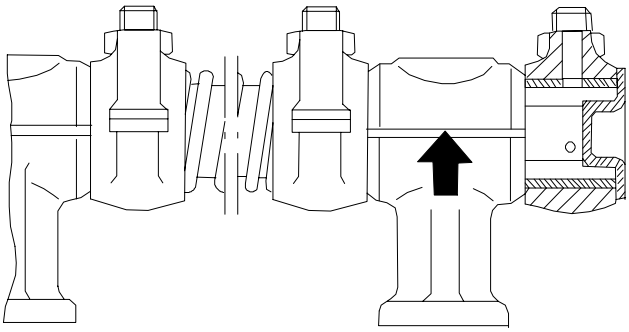

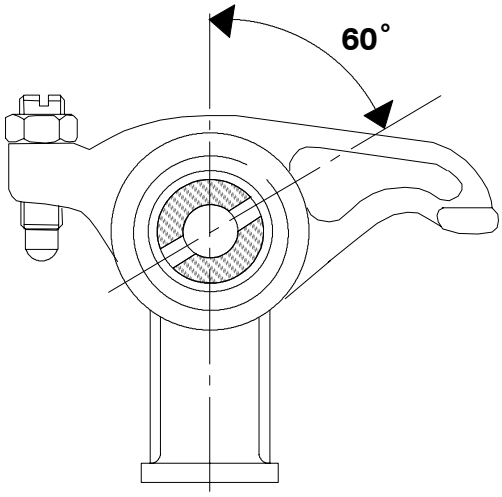

5. Fit the plug to the other end of the rocker arm shaft. Lubricate the shaft and fit various parts in a correct order. Note the correct position of the shaft and the bearing brackets. The split side of the bracket and the shaft oil holes must be turned to the valve side (see figure above). Fit the other end plug.

B. Changing camshaft/camshaft gear

1. Remove the inlet pipe between the turbocharger and the induction manifold. Remove the valve cover and the breather pipe. Remove the rocker arm mechanism.

2. Remove the radiator, cooling fan, alternator and the v – belt.

3. Remove the crankshaft nut. Remove the V – belt pulley including the hub (on 620 – engines the belt pulley must be removed first).

4. Remove the timing gear casing cover (engine front cover).

5. Connect the pushrods in pairs, using o – rings or elastic bands to prevent them from falling through.

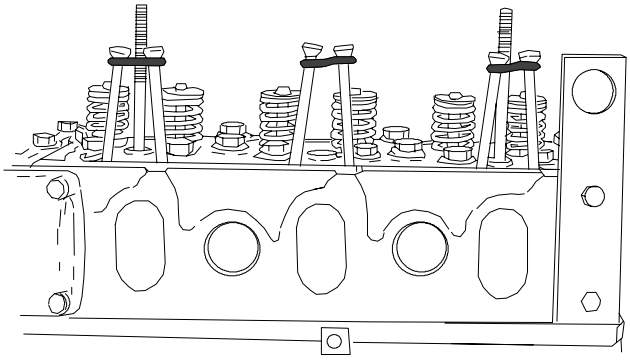

Note! Do not connect the pushrods too tightly as this might cause them to bend or snap.

https://www.truck-manuals.net/

6. Crank the engine until the aligning marks on the idler gear and camshaft gear are facing each other. Extract the camshaft.

7. Separate the camshaft from the gear wheel using a press or suitable drift.

8. Clean the parts which are to be refitted.

9. Fit the key in its groove. Heat the camshaft gear to 200˚C in an oven and fit it on the shaft.

10. Lubricate bearing surfaces and lobes and insert the shaft in the cylinder block. Ensure that the aligning marks on the gears agree.

11. Fit the timing gear casing cover and the crankshaft V – belt pulley and hub.

12. Free the pushrods and fit the rocker arm mechanism. Adjust the valves. Fit the valve cover and the breather pipe and the inlet pipe between the turbocharger and the induction manifold.

13. Fit the alternator. Fit the fan and the fan belt. Fit the radiator.

C. Adjusting valves

Note! Valmet 6400 DW, 6800 DWI and 8450 DW tractors have a by – pass turbo. The adjusting rod of this turbo should be released before removing the valve cover. Detach the front end joint of the rod. Do not detach the rod rear end from the membrane box since then the by – pass passage opening pressure changes. Before adjustment, also remove the silencer, fan space protective frame (if fitted), radiator support iron in the upper part and the boost pipe (if fitted), after which the valve covers can be removed.

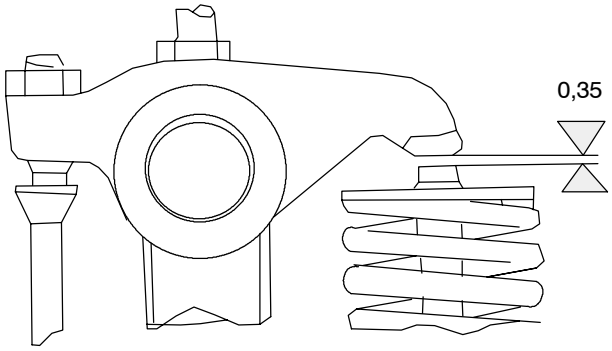

The valve clearance, which can be adjusted on a hot or cold engine, is **0,35 mm** for both inlet and exhaust valves. The clearance is adjusted when the respective piston is at T.D.C. in the compression stroke. The valves for the different cylinders are adjusted in the same sequence as the order of injection.

– slacken the lock nut of the adjusting screw
– measure clearance with a feeler gauge. The clearance is correct when a **0,35 mm** feeler gauge is slightly tight – fitted between the rocker arm and the valve stem end. Adjust clearance by rotating the adjusting screw.
– tighten the locking nut and check the clearance

320 – engines
Check the valve clearances in the injection order of the engine. Injection order is 1 – 2 – 3.
– check valves in the 1st cylinder, when the exhaust valve of no. 3 cylinder is completely open (valve no. 6)
– check valves in the 2nd cylinder, when the exhaust valve of no. 1 cylinder is completely open (valve no. 2).
– check valves in the 3rd cylinder, when the exhaust valve of no. 2 cylinder is completely open (valve no. 4).

420 – engines
– rotate the crankshaft in the running direction until the valves in the 4th cylinder are rocking (exhaust closes, inlet opens). Check the valve clearance of the 1st cylinder
– Rotate the crankshaft by 1/2 of a turn in the running direction so that valves in the 3rd cylinder are rocking. Check valves in the 2nd cylinder
– continue according to the order of injection:

Injection order	1 2 4 3
Valves rock in cyl. no	4 3 1 2

620 – engines
– rotate the crankshaft in the running direction until the valves in the 6th cylinder are rocking (exhaust closes, inlet opens). Check the valve clearance of the 1st cylinder
– rotate the crankshaft by 1/3 of a turn in the running direction so that valves in the 2nd cylinder are rocking. Check valves in the 5th cylinder
– continue according to the order of injection:

Injection order	1 5 3 6 2 4
Valves rock in cyl. no	6 2 4 1 5 3

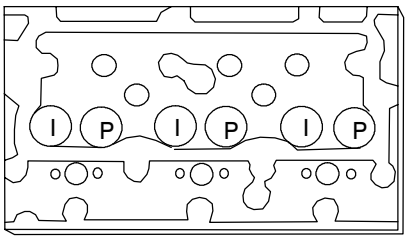

320, 620, 634

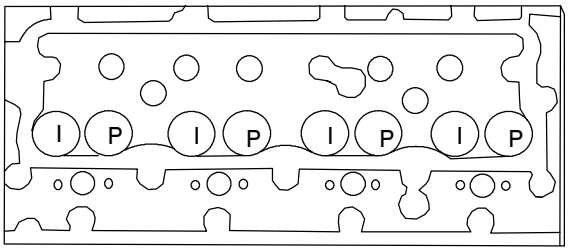

420

I = inlet P = exhaust

Note! With effect from engine serial no. **C6828**, the support strips have been added onto the valve covers. These strips prevent the gasket from moving inwards. At the same time the cover manufacturing accurancy has been improved. Spare part numbers of the covers do not change.

Crank mechanism (Op. no 213)

1. Crankshaft

A. Removing crankshaft

1. Split the tractor at the clutch, remove the clutch assembly (and possible turbine clutch) and the flywheel. Remove the engine (see also page **219**/**1**).

2. Disconnect the balancing unit lubricating oil pipe from the cylinder block and unscrew the balancing unit fixing bolts. Remove the balancing unit and the lubricating oil pipe (only 420 – engines).

3. Unscrew the lubricating oil pump pressure pipe fixing screws from the cylinder block. Remove the oil pump and the suction and pressure pipes.

4. Remove the flywheel housing.

5. Detach the belt pulley/hub from the crankshaft front end (see instr. timing gears).

6. Remove the connecting rod bearing caps and push the connecting rods out of the way of the crankshaft.

7. Remove the main bearing caps and lift out the crankshaft.

B. Checking crankshaft

1. Clean the crankshaft. Do not forget the oilways.

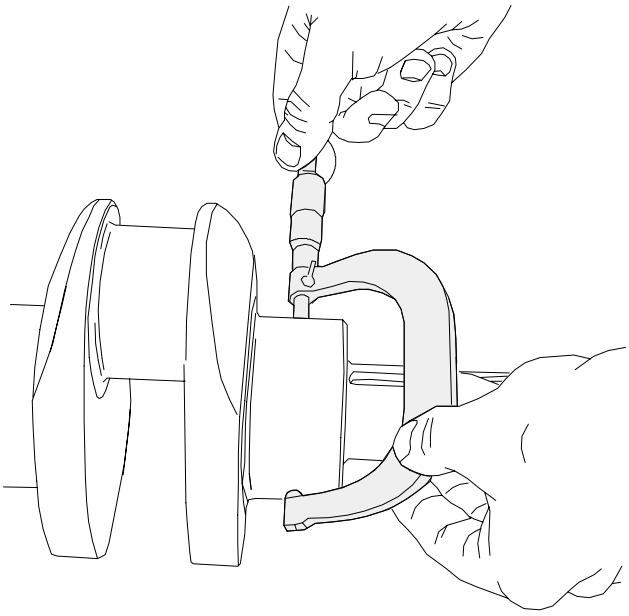

2. Measure the journal wear in several points. Out – of – round, taper or other wear must not exceed **0,03 mm**.

3. Refit the bearing caps with new bearing shells and tighten them to the correct torque. Measure the I.D. with a dial gauge which has been zeroed to the dimensions obtained in point 2. With this method the indicator shows the actual bearing clearance. Measure in several points in case the worn bearing housing is not round.

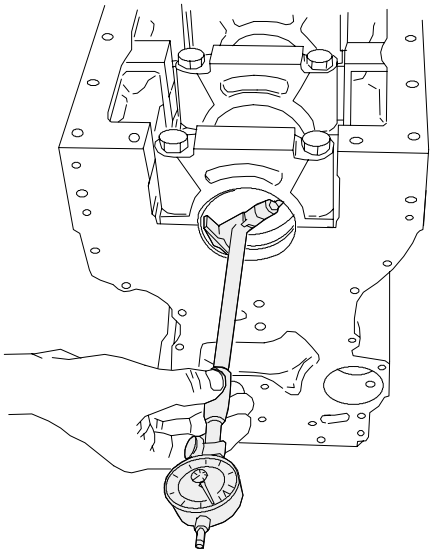

4. If the bearing clearance exceeds **0,18 mm** for main bearings or **0,14 mm** for connecting rod big – end bearings with new bearing shells, the bearing journals on the crankshaft should be ground. Refer to the specifications for the relevant correct undersize and the corresponding bearings. Ensure that the radii are not changed when grinding.

Note! Main bearings are available, which are 1,0 mm oversize (outer diameter) and 0,5 mm undersize (inner diameter). The cylinder block must then be machined to a dimension of 92,000 – 92,025 mm. The crankshaft must be machined to a dimension of 84,485 – 84,520 mm. The bearing shell with a hole and an oil groove must be fitted to the cylinder block and the other shell to the bearing cap.

C. Changing crankshaft gears

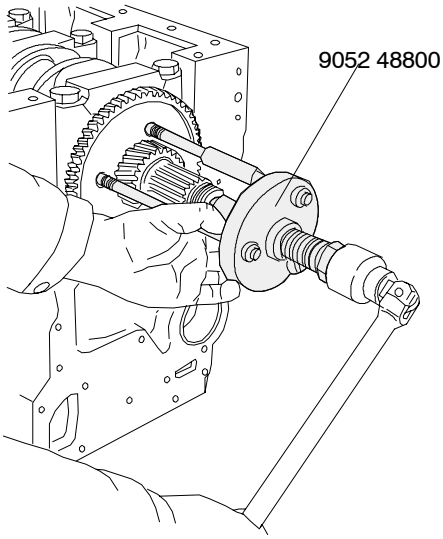

1. Apply puller for the crankshaft gears and pull off both gears.

2. Clean the seat on the crankshaft with, for example, a wire brush.

3. Heat the new gears to **200° C**. Tap them onto the shaft with a suitable sleeve or soft drift. Note the position of the key and ensure that the aligning marks on the front gear are visible. Leave it to cool.

D. Changing camshaft ring gear (420 – engines only)

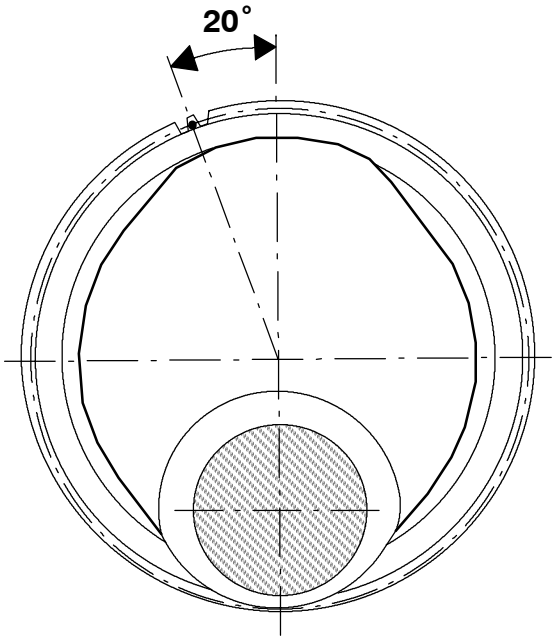

1. Mark the position of the ring gear on the shaft.

2. Heat the ring gear with a welding torch and drive it off using a suitable drift.

3. Heat the new ring gear to max. **250°C**. Fit the ring gear with the chamfer facing the crankshaft flange, and with the teeth according to markings or according to figure above. Tap the ring gear down and leave it to cool.

Note! The figure above shows a rear view of the crankshaft and no 2 cylinder big end bearing journal.

E. Fitting crankshaft

1. Clean the oilways, bearing shells and bearing locations. Check that the crankshaft is clean.

2. Fit the bearing shells into the cylinder block and the bearing caps. Ensure that the bearing shell clamping claws fit into their notches and that the shells to be fitted in the cylinder block have a hole coinciding with the oil port.

3. Lubricate the bearing surfaces and fit the crankshaft. Fit the crankshaft thrust bearings with the lubricating grooves facing the crankshaft.

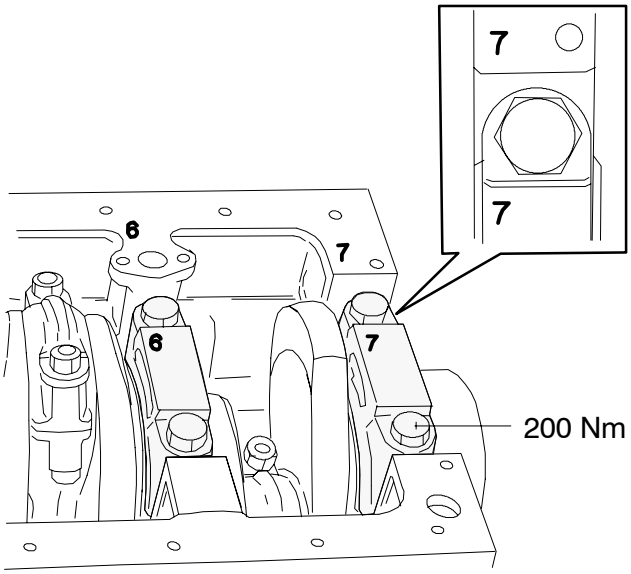

4. Fit the main bearing caps according to their numbering, the rear with thrust bearings provided with guide lugs. Lubricate the bolts and tighten them to **200 Nm**.

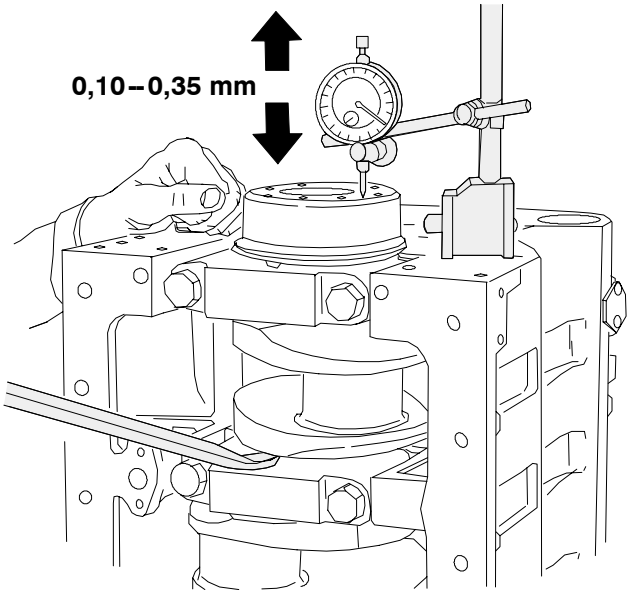

5. Check that the crankshaft can rotate without binding. Check the end float using a dial gauge. The correct end float is **0,10 – 0,35 mm**. If the end float is too large, oversize thrust bearings should be fitted.

Note! Bearing shells should never be reamed or machined in any other way, nor should the sides of the bearing caps be filed

2. Connecting rods and pistons

A. Removing pistons together with connecting rods

Note! Pistons and connecting rods can be removed from the engine when the engine is attached to the tractor by removing the front axle and the oil sump (see page **219/1**).

1. Detach the engine and the lubricating oil pressure and suction pipes.

2. Detach the cylinder head.

3. Scrape off the carbon edge in the cylinder liner. If the turning edge is clearly marked, smooth it down carefully with a scraper.

4. Remove the big–end bearing caps and bearing shells. Place the shells in order if they are to be re–used.

5. Push up the piston and connecting rod with the shaft of a hammer or similar wooden tool.

6. Remove the piston pin snap rings. Push out the pin.

Note! If the piston pin does not move under thumb pressure the piston should be heated to **100°C**.

B. Changing connecting rod bearings

1. Clean the connecting rod and bearing shells. Fit them together and tighten the bolts to **40 Nm+90°**.

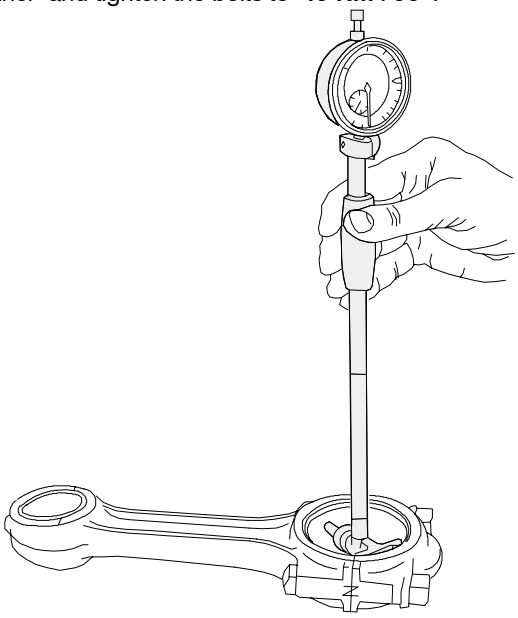

2. Measure the I.D. using a cylinder gauge which has been zeroed to the diameter of the respective bearing journal. If the clearance exceeds **0,14 mm** with new bearing shells, the big–end journals require grinding. Refer to the specifications for the correct undersize and the corresponding bearing. Ensure that the radii at the end of the bearing journals is not altered when grinding.

3. If the piston pin bushing is worn, it should be driven out using a suitable drift.

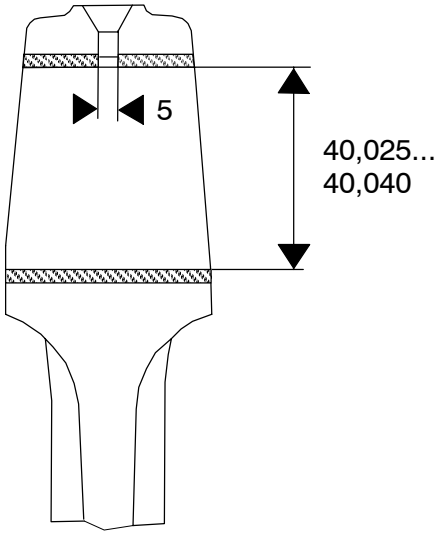

4. Drive in the new bushing and ensure that the oil hole is in the correct position. Ream the bushing to **40.025–40.040 mm** after it is fitted.

C. Checking connecting rod

The connecting rod is checked in a special fixture, intended for the purpose (e.g. Carl Larsson).

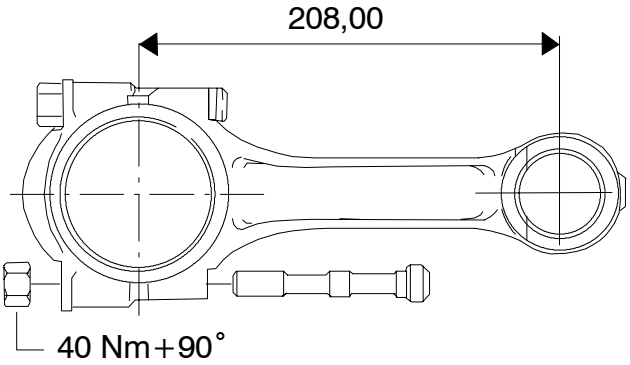

1. Fit the big–end bearing caps and tighten the bolts to **40 Nm+90°**.

2. Fit the connecting rod in the fixture and fit the piston pin which corresponds to that connecting rod.

https://truckmanualshub.com/

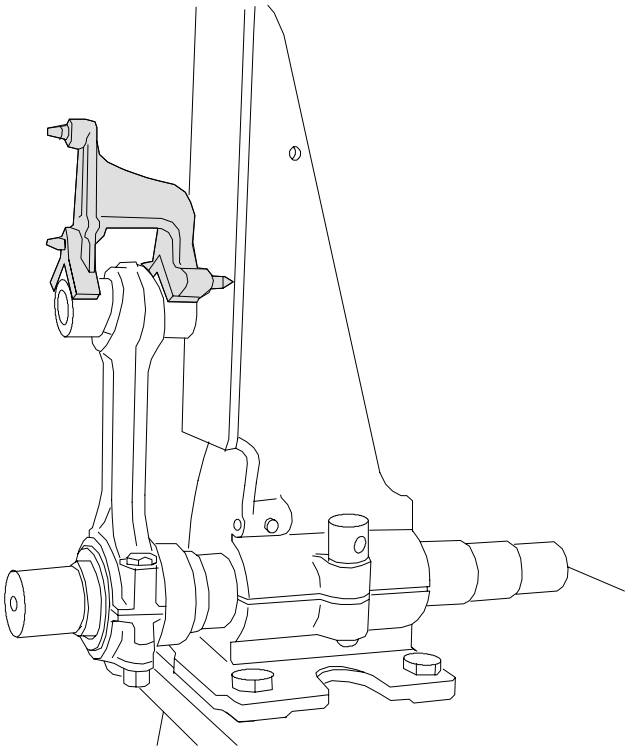

3. Check that the connecting rod is not twisted by positioning the measuring tool with the horizontally placed measuring points against the face of the fixture.

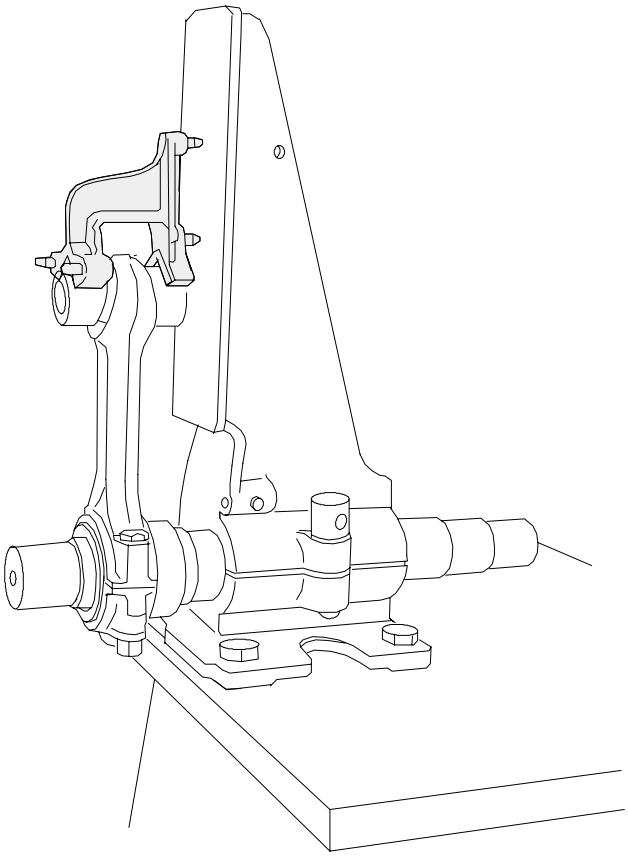

4. Turn the measuring tool round with the vertically placed measuring points against the face, and check the straightness of the connecting rod

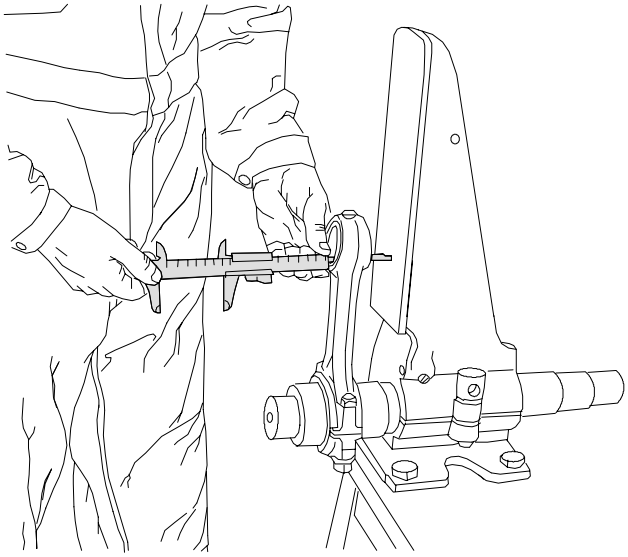

5. Also check the S – bending of the connecting rod by using sliding calipers to measure the distance between the edge of the small – end bearing bushing and the face of the fixture. turn the connecting rod round so that the other side of the connecting rod faces the fixture. Then measure the same distance. The accepted deviation is **0,6 mm**.

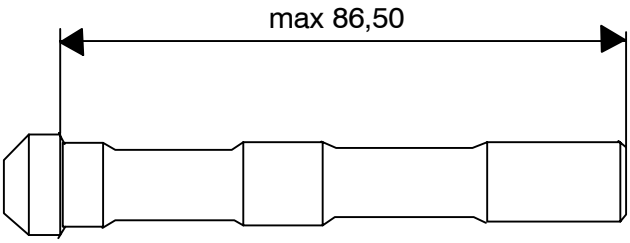

6. Measure the length of the connecting rod bolts. The length should be max 86,50 mm. If the bolt is longer, change it with a new one. It is recommended that the bolts are always changed when they are unscrewed.

D. Connecting rod weight classes

The connecting rods are divided into weight classes with intervals of **20 g**. The weight class (a letter) is stamped on the side face of the connecting rod. All the connecting rods in one engine should be of the same weight class, that is to say the greatest permissible weight difference is **20 g**.

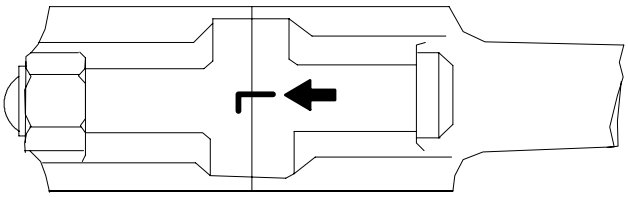

https://www.truck-manuals.net/

https://truckmanualshub.com/

Thank you very much for your reading.

Please Click Here Then Get More Information.

https://www.truck-manuals.net/