https://truckmanualshub.com/

SUNBEAR HEAVY EQUIPMENT

DL165 Skid Steer Loader

SUNBEAR

Owner's and Operator's Manual

PUBLICATION NO. 16500
SEPTEMBER, 2009

https://truckmanualshub.com/

https://truckmanualshub.com/

SUNBEAR HEAVY EQUIPMENT LIABILTY WARRANTY

THE WARRANTY IS THE ONLY OBLIGATION OF SUNBEAR HEAVY EQUIPMENT OR A SUNBEAR HEAVY EQUIPMENT DEALER TO THE PURCHASER OR ANYONE ELSE CONCERNING A PRODUCT. IT'S USE OR PERFORMANCE OR ITS LOSS OF USE OR FAILURE TO PERFORM. NEITHER SUNBEAR HEAVY EQUIPMENT NOR A IMPLIED REPRESENTATION, WARRANTY OR AGREEMENT CONCERNING A PRODUCT, NEITHER SUNBEAR HEAVY EQUIPMENT NOR A SUNBEAR HEAVY EQUIPMENT DEALER HAVE MADE OR WILL MAKE ANY REPRESENTATION, WARRANTY OR AGREEMENT CONCERNING A PRODUCT'S MERCHANTABILITY OR OTHER QUALITY, IT'S SUITABILITY FOR PURCHASER'S PURPOSE (EVEN IF A PURCHASER HAS INFORMED SUNBEAR HEAVY EQUIPMENT OR A SUNBEAR HEAVY EQUIPMENT DEALER OF THAT PURPOSE), IT'S DURABILITY, PERFORMANCE OR OTHER CONDITION.

EVEN IF SUNBEAR HEAVY EQUIPMENT OR A SUNBEAR HEAVY EQUIPMENT DEALER WAS ADVISED OF THE POSSIBILITY OF SUCH LOSS, NEITHER SUNBEAR HEAVY EQUIPMENT NOR A SUNBEAR HEAVY EQUIPMENT DEALER WILL BE LIABLE TO PURCHASER OR ANYONE ELSE FOR ANY INDIRECT, INCIDENTAL CONSEQUENTIAL, PUNITIVE, ECONOMIC, COMMERCIAL, OR SPECIAL LOSS WHICH IN ANY WAY ASSOCIATED WITH A PRODUCT. THIS INCLUDES ANY LOSS OF USE OR NON-PERFORMANCE OF A PRODUCT, ANY REPLACEMENT RENTAL OR ACQUISITION COST, ANY LOSS OF REVENUE OR PROFITS, ANY FAILURE TO REALIZE EXPECTED SAVINGS, ANY INTEREST COSTS, ANY IMPAIRMENT OF OTHER PERSON.

PURCHASER MAY NOT ATTEMPT TO ENLARGE ITS RIGHTS UNDER THE WARRANTY BY MAKING CLAIM, FOR INEMNITY, FOR BREACH OF CONTRACT, FOR BREACH OF COLLATERAL WARRANTY, FOR A TORT (INCLUDING NEGLIGENCE, MISREPRESENTATION OR STRICT LIABILITY) OR BY CLAIMING ANY OTHER CAUSE OF ACTION.

THE WARRANTY IS A CONDITION OF SALE OF THE PRODUCT TO THE PURCHSER AND WILL THEREFORE APPLY EVEN IF THE PURCHASER ALLEGES THAT THERE IS A TOTAL FAILURE OF THE PRODUCT.

WARRANTY DELIVERY: TWO (2) YEARS 1000HOURS (FOR ONLY SAMPLES).

N.B. Read and practice your Sunbear Heavy Equipment operating and servicing instructions.
Failure to do this may void the warranty.

PUBLICATION NO. 16500
SEPTEMBER, 2009

https://truckmanualshub.com/

https://truckmanualshub.com/

INDEX

1. SAFETY PRECAUTIONS

2. CONTROLS

2. 1 Instrument Panel
2. 2 Control Lever Handles
2. 3 Seat and Seat Belt
2. 4 Seat Bar
2. 5 Parking Brake
2. 6 Throttle Control
2. 7 Lift Arm Support
2. 8 Steering Control
2. 9 Auxiliary Controls
2. 10 Liftarm Control
2. 11 Quick - Tach
2. 12 Electrical Panel

3. OPERATION

3. 1 Starting Instructions
3. 2 Operating Procedure
3. 3 Filling From a Pile
3. 4 Digging with a Bucket
3. 5 Leveling and Backfilling
3. 6 Auxiliary Hydraulics
3. 7 Lifting
3. 8 Towing
3. 9 Securing and Transporting
3. 10 Lowering Lift Arms
3. 11 Accumulator

4. MAINTENANCE

4. 1 Preventive Maintenance Service Schedule
4. 2 Service Access
4. 3 Daily Service Checks
4. 4 50 Hour Service Check
4. 5 250 Hour Service Check
4. 6 Final Drive Maintenance
4. 7 Hydraulic / Hydrostatic System Maintenance
4. 8 Engine Maintenance
4. 9 Air Cleaner Maintenance
4. 10 Engine Cooling System
4. 11 Electrical System
4. 12 Tire Maintenance
4. 13 Trouble Shooting
4. 14 Hydraulic / Hydrostatic Circuit
4. 15 Special Tools

5. SPECIFICATIONS

5. 1 Loader Specifications
5. 2 Torque Specifications
5. 3 Decals

6. ATTACHMENTS AND BUCKETS

6. 1 SUNBEAR Approved Buckets and Attachments

https://truckmanualshub.com/

https://truckmanualshub.com/

FOREWORD

This book has been written to give the Owner / Operator necessary operating, servicing and preventative maintenance instructions on the loader.
Read this manual completely and know the loader before operating or servicing it.
Do not do any service procedures that are not in the Operator•s manual.
Only service personnel that have had training in the service of this loader can do these service procedures.

Reference Information

Write the correct information for your loaders in the spaces below. Always use these numbers when referring to your loader.

Model No. _____
Serial No. _____
Dealer Name _____
Address _____
Phone _____

Throughout this manual the terms DANGER, WARNING and CAUTION are used to indicate the degree of hazard in terms of personal safety. These words will be used in conjunction with the Safety - Alert symbol, a triangle with an exclamation mark.
Throughout this manual, the term IMPORTANT is used

* To indicate that instructions are necessary before operating or servicing the loader.
* To show important procedures which must be followed to prevent damage to the loader or attachment.

DANGER	**This warning indicates an immediate hazard which WILL result in severe personal injury or death.**
WARNING	**This warning indicates hazards or unsafe practices which COULD result in severe personal injury or death.**
CAUTION	**This warning indicates hazards or unsafe practices which COULD result in minor personal injury or product or property damage.**

IMPORTANT	**Instructions are necessary before operating or servicing this machine. Read the operators manual and service decals on the loader. Follow warnings and instructions in this manual when making repairs, adjustments or servicing. Check for correct operation after adjustments and repairs.**
IMPORTANT	**This notice shows important procedures which must be followed to prevent damage to the loader or attachment.**

https://truckmanualshub.com/

https://truckmanualshub.com/

1. SAFETY PRECAUTIONS

The following precautions are suggested to help prevent accidents.

A careful operator is the best operator. Most accidents can be avoided by observing certain precautions. Read and take the following precautions before operating this loader to help prevent accidents. Equipment should be operated only by those who are responsible and instructed to do so.

1. Read this manual carefully before using the loader. Working with unfamiliar equipment can lead to accidents.
2. Do not allow anyone to ride on the loader with the operator.
3. Make sure the seat bar is installed and functioning at all times.
4. Never run the engine in a closed building without adequate ventilation, as the exhaust fumes can cause death.
5. Always fasten the seat belt around your waist before starting the engine. Never fasten the seat belt behind you.
6. Never attempt to start the engine while standing beside the unit unless as specified in this manual or under specific service and backhoe operation procedures. Start the engine only while sitting in the operator•s seat with the seat belt fastened around you. Always check to make certain that the seat cushion is secured to the frame.
7 Keep the operator•s area free of debris.
8. Never enter or leave the loader while the engine is running. Always lower the lift arms down against the frame, drop the attachment down to contact the ground, set the parking brake and shut off the engine prior to leaving the loader.
9. If the unit is equipped with a cab enclosure kit always close the door prior to operating the loader lift arms.
10. Do not operate the loader unless all safety equipment, shields, seat belt, seat bar, hydraulic controls, parking brake, operator guard, and lift arm support are working properly, as well as all safety and instruction decals are in place.

OPERATING THE LOADER

1. Always drive the loader at speeds compatible with safety, especially when operating over rough ground, crossing ditches or when turning.
2. Avoid jerky turns, starts, stops, or reverses.
3. Use care when operating on steep grades to maintain proper stability.
4. Do not turn the loader while the lift arms are in the raised position.
5. Be careful when driving through door openings or under overhead objects. Always make sure there is sufficient clearance for the operator•s guard.
6. When travelling on public roads, know the local rules and regulations and make sure your loader is equipped with the proper safety equipment.
7. Always be sure of water, gas, sewage and electrical line locations before you start to dig.
8. Watch out for overhead and underground high-voltage electrical lines when operating the loader.
9. Park the loader on level ground where possible. If the loader is to be parked on an incline, always lower the attachment so it contacts the ground, set the parking brake and block the wheels.
10. Do not leave the loader when it is in motion.
11. Do not dismount from the loader and leave the loader lift arms raised, unless following specific service procedures. Always lower the lift arms down against the frame and drop the attachment down to contact the ground.
12. Always be watchful of bystanders when operating the loader.
13. Always carry the attachment low for maximum stability and visibility.
14. Exercise extreme caution when operating the loader with a raised attachment.
15. Never attempt to lift loads in excess of loader capacity.
16. Check that control lever functions are locked before getting out of the operator•s seat.
17. Keep both hands on the control levers while the loader is in motion.

MAINTENANCE

1. Stop the engine before performing any service on the loader.
2. Never refuel the loader while smoking or with the engine hot or running.
3. Replace all missing, illegible or damaged safety and warning decals. See Section 5.3 for list.
4. Do not modify or alter, or permit anyone to modify or alter this loader or any of its components or any loader function.
5. Do not bypass the safety system. Consult your **SUNBEAR** Equipment Dealer if your safety controls are malfunctioning.
6. Do not make mechanical adjustments while the loader is in motion or when the engine is running. However, if minor engine adjustments must be made, securely block the loader with the wheels clear of the ground, and use extreme caution.
7. Do not attempt to repair or tighten hydraulic hoses when the system is under pressure, when the engine is running or when the lift arms are raised.
8. Do not get under the attachment or lift arms or reach through the lift arms when they are raised.
9. Never attach the chains or ropes to the operator•s guard for pulling purposes, as the loader can tip over.
10. Whenever servicing or replacing pins in cylinder ends, buckets, etc., always use a brass drift and a hammer. Failure to do so could result in injury from flying metal fragments.
11. Cooling system operates under pressure which is controlled by the radiator cap. It is dangerous to remove the cap while system is hot. Always turn cap slowly to the first stop and allow the pressure to escape before removing the cap entirely.
12. Keep the operator area free from debris.
13. For lifting and towing instructions, refer to Sections 3.7 and 3.8 of this manual.

https://truckmanualshub.com/

1. SAFETY PRECAUTIONS

WARNING

To avoid personal injury, lower the lift arms, shut off the engine, raise the seat bar and cycle the hydraulics to ensure they are locked. Then, unlatch the seat belt and exit the loader. Do not enter or exit with the engine running unless as specified in this manual or under specific service and backhoe operating procedures.

WARNING

To prevent personal injury do not operate the loader without lowering the safety bar, fastening the seat belt and keeping feet on the cab floor.

WARNING

To prevent personal injury do not start the engine unless you are in the seat with the seat belt fastened around you.

IMPORTANT

This engine is equipped with glow plugs. Do not use ether or any high energy fuels to assist starting.

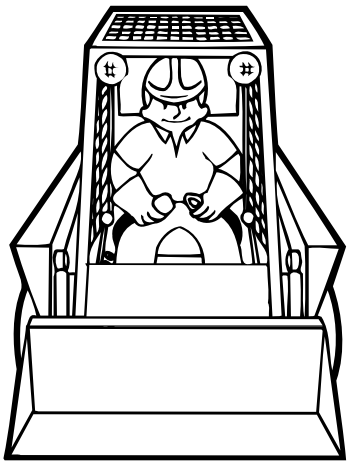

C - 360

START SAFELY

1. Sit in the operator's seat and adjust it so you can operate all of the controls properly.

2. Adjust the seat and fasten the seat belt. Cycle the controls to make sure they are in the locked or neutral position. Lower the seat bar.

3. Know the exact starting procedure for your machine. See Section 3 for the manufacturer•s instructions for starting.

PARK SAFELY

Select level ground whenever possible. If you must park on a slope or incline, position the machine at right angles to the slope. Lower the attachment to the ground, engage the parking brake and block the wheels (C359).

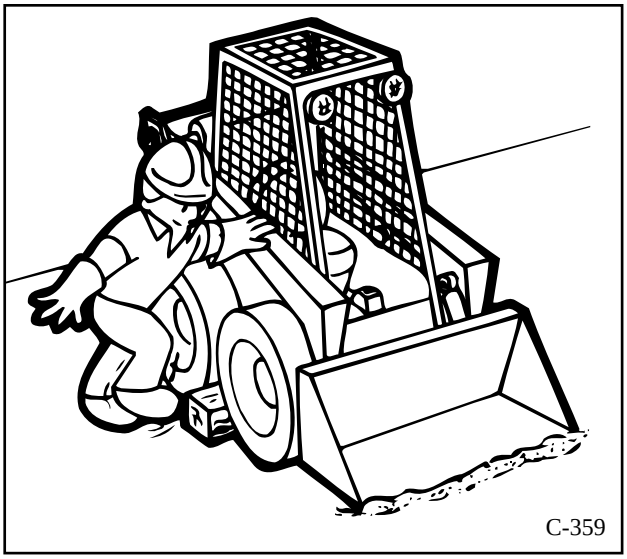

C-359

https://truckmanualshub.com/

2. CONTROLS

2. CONTROLS

2. 1 Instrument Panel
2. 2 Control Lever Handles
2. 3 Seat and Seat Belt
2. 4 Seat Bar
2. 5 Parking Brake
2. 6 Throttle Control
2. 7 Lift Arm Support
2. 8 Steering Control
2. 9 Auxiliary Controls
2. 10 Liftarm Control
2. 11 Quick-Tach
2. 12 Electrical Panel

https://truckmanualshub.com/

2. CONTROLS

2.1 INSTRUMENT PANEL

K5250A

1. Left Signal Indicator Light: This light will illuminate when the operator uses the optional left signal. (Optional)

2. Auxiliary Front Indicator Light: This light will illuminate when the loader auxiliary hydraulic front switch is turned on. Light does not operate when lever switch is depressed.

3. Hi-Flow Hydraulics Indicator: This light will illuminate when the loader hi-flow hydraulics are in use. (Optional)

4. Work Lights (Up) Indicator: The light will illuminate when the loader work lights are turned on. This will serve as a reminder to turn them OFF when the loader is not in use.

5. Right Signal Indicator Light: This light will illuminate when the operator uses the optional right signal. (Optional)

6. Hydraulic Oil Temperature Indicator: This light will illuminate when the oil temperature has exceeded recommended levels. Shut off the engine immediately and determine the cause.

7. Brake Light Indicator: The brake light will illuminate when the parking brake is engaged.

8. Seat Belt Indicator Light: This light will illuminate when the seat belt is unfastened.

9. Work Lights (Down) Indicator: The light will illuminate when the loader work lights are turned on. This will serve as a reminder to turn them OFF when the loader is not in use.

10. Work Lights (Back) Indicator: This light will illuminate when the loader Back light are turned on. This will serve as a reminer to turn them OFF when the loader is not in use.

11. Engine Oil Pressure Indicator: This light will illuminate when the engine loses lubrication pressure. Shut off the engine immediately and determine the cause.

12. Coolant Temperature Indicator Light: This light will illuminate if there is a rise in engine temperature. If this occurs, shut off the engine immediately and determine the cause.

13. Alternator Indicator Light: This light will illuminate when the alternator is not producing sufficient current.

14. Air Cleaner Indicator Light: This light will illuminate when there is an obstruction in the intake or when the air filter needs servicing. If this light illuminates, stop the engine and service the cleaner.

15. Pre-heat Indicator Light: This light will illuminate when the ignition key is turned counter clockwise to activate the engine glow plugs.

16. Headlight Switch: This is a toggle switch. Push up to turn the dipped beam lights on. These lights are located on the front of the loader.

17. Auxiliary Hydraulics Front Switch: This switch is a toggle switch. Push up to provide a continous flow of oil to the quick couplers when using an attachment.

IMPORTANT

This engine is equipped with glow plugs. Do not use ether or any high energy fuels to assist starting.

WARNING

To prevent personal injury do not start the engine unless you are in the seat with the seat belt fastened around you.

https://truckmanualshub.com/

2. CONTROLS

IMPORTANT

Ensure liftarm brace is properly stowed before raising or lowering lift arms

18. Back Light Switch: This switch is a toggle switch Push up to turn the dipped beam lights on. This light are located on the rear of the loader.

19. Door Window Wiper Switch: This switch is a toggle switch. Push up to turn the wiper on.

20. Hi-Flow Hydraulic Switch: This switch is a toggle switch. Push up to turn the Hi-Flow hydraulics on. (Not available on all models)

21. Hour Meter: The hour meter records the number of engine operating hours and has a total of 99999.9 hours.

22. Fuel Gauge: The fuel gauge indicates the quantity of fuel remaining in the fuel tank.

23. Ignition Switch: The ignition switch is a three (3) position switch: 'OFF', 'ON', 'RUN' and 'START'. Turn the Turn the key counter clockwise to engage engine 'PRE-HEAT'. Turn the key clockwise to the 'START' position, this engages the starter The key will be in the 'RUN' position when released. Turn the key to 'OFF' to shut off the engine and remove the key.

2.2 CONTROL LEVER HANDLES

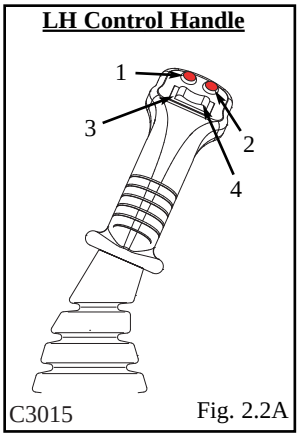

Fig. 2.2A

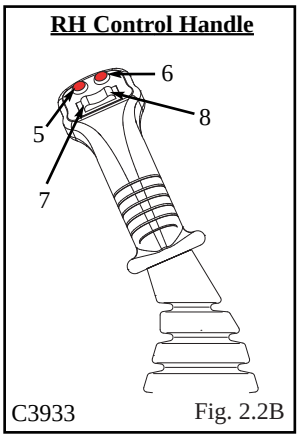

Fig. 2.2B

1. Spare
2. Spare
3, 4. Right / Left Direction Indicator (optional)
5. Horn
6. Spare
8. Auxiliary Hydraulic Switch

The left hand control lever is for moving the loader forward and reverse. Pushing the lever forward will cause the loader to move forward, and pulling the lever back towards the operator will cause the loader to move in reverse. This lever also operates hydraulic functions (refer to section 2.8 for instructions).

The right hand control lever controls the lift arms and bucket tilt. Pushing the lever forward will cause the lift arms to raise, while pulling the lever back towards the operator will cause the lift arms to lower. Moving the control lever to the left and right will tilt and untilt the bucket. Refer to section 2.10 for detailed operating instructions of this lever.

https://truckmanualshub.com/

2.3 SEAT AND SEAT BELT

The seat can be adjusted forward or back for operator comfort (Fig. 2.3A)

For your safety the loader is equipped with a seat belt. Before starting the loader adjust and fasten the seat belt (Fig. 2.3B) around you. The seat and seat belt also have integrated safety lock switches whereby the operator must be seated in the seat with the seat belt securely fastened and seat bar lowered before the loader hydraulics can be operated.

WARNING

To prevent personal injury do not start the engine unless you are in the seat with the seat belt fastened around you.

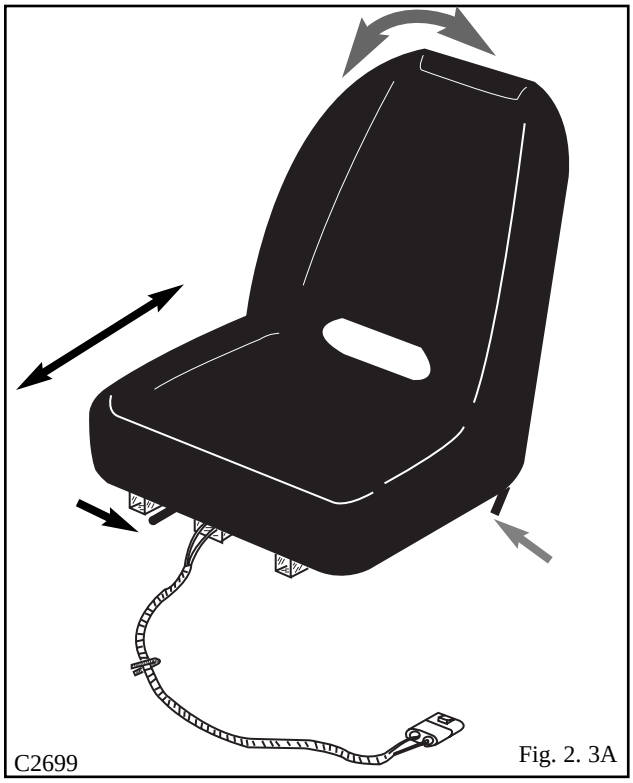

Fig. 2. 3A

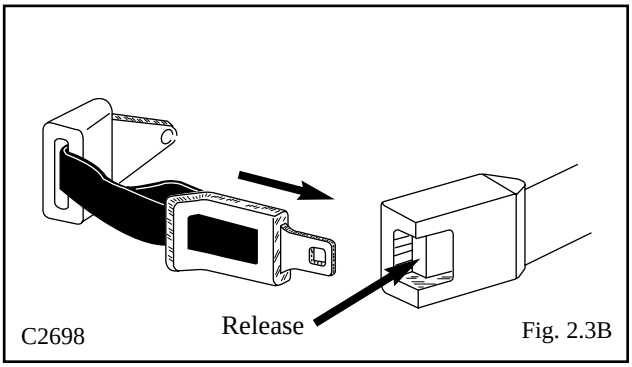

Fig. 2.3B

https://truckmanualshub.com/

2. 4 SEAT BAR

For operator protection the loader is equipped with a seat bar.

The loader must be started with the operator seated in the loader and the seat bar in the up position. To raise the seat bar, lift up on the bar (Fig. 2.4A). In the up position, the seat bar activates the parking brake and locks out the functions of the control levers including the auxiliary hydraulics.

When down (Fig. 2.4B), the seat bar releases the park brake and the hydraulic controls of the lift, tilt and auxiliary hydraulic circuits.

Before exiting the loader always check the controls by cycling them to ensure that they are in the neutral position.

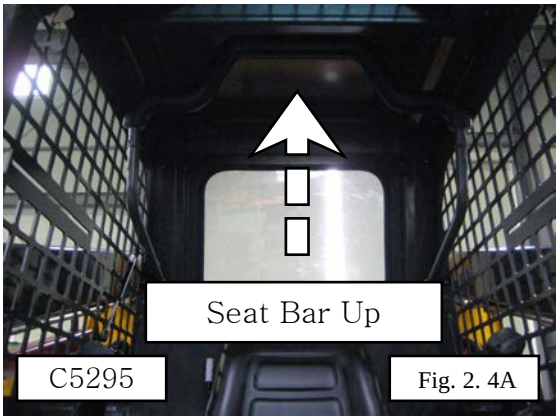

Fig. 2. 4A

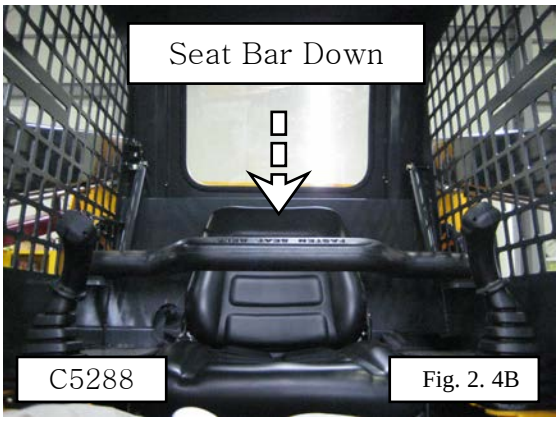

Fig. 2. 4B

WARNING

To avoid personal injury, lower the lift arms, shut off the engine, raise the seat bar and cycle the hydraulics to ensure they are locked. Then, unlatch the seat belt and exit the loader. Do not enter or exit with the engine running unless as specified in this manual or under specific service and backhoe operating procedures.

https://truckmanualshub.com/

2. 5 PARKING BRAKE

The loader is equipped with park brakes, located inside the torque motor. The brakes are activated and de-activated by the seat bar, via charge pressure. When the seat bar is in the up position, the brake is activated (Fig. 2.5A). When the seat bar is in the down position, the brake is off (Fig. 2.5B).

The loader has a parking brake indication light to warn that the brake is engaged. When the seat bar is in the down position, activation of the emergency break can be carried out by pushing on the button, located on the ROPS, in front of the left hand control lever handle.

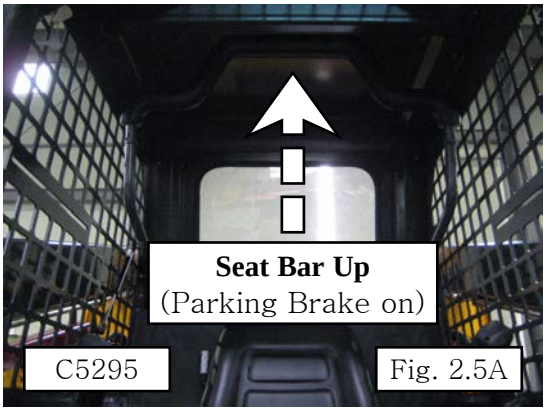

Fig. 2.5A

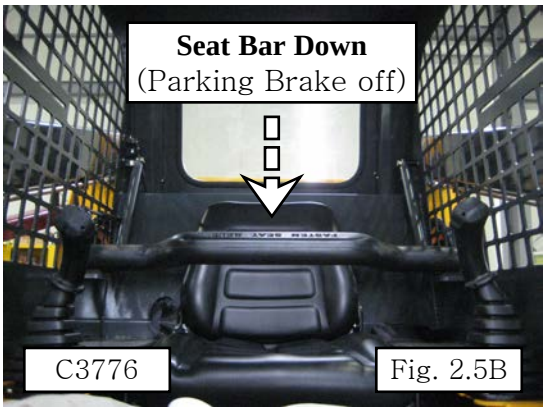

Fig. 2.5B

2. 6 THROTTLE CONTROL

The diesel engine throttle control is located on the left hand side of the loader behind the control lever (Fig. 2.6). Engine start and stop are controlled electrically by the ignition key.

Before shutting off the engine, return the throttle control to idle position and allow the engine to cool at least 2 minutes.

Pushing the lever full forward increases the engine speed to maximum high idle. Pulling the lever back decreases the engine RPM.

The engine should always be operated at full speed and the loader travel speed controlled with the steering control lever (See Section 2.8).

WARNING

To avoid personal injury, lower the lift arms, shut off the engine, raise the seat bar and cycle the hydraulics to ensure they are locked. Then, unlatch the seat belt and exit the loader. Do not enter or exit with the engine running unless as specified in this manual or under specific service and backhoe operating procedures.

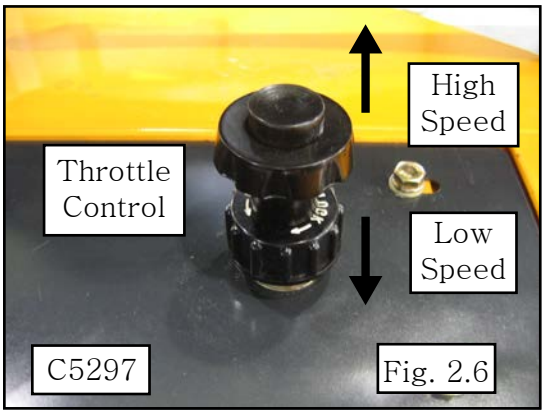

Fig. 2.6

https://truckmanualshub.com/

2. 7 LIFT ARM SUPPORT

For safety while performing regular service or maintenance work the loader is equipped with a liftarm support.

The liftarm support, when engaged, prevents the liftarms from dropping if hydraulic pressure is relieved or the right hand control lever is accidentally cycled.

To operate the liftarm support, remove attachment and park on level ground. Lower the liftarms to the ground and stop the engine. Exit the machine and remove pin that holds the liftarm support in stored positon(Fig. 2.7A). Lower the liftarm support to rest on the lift cylinder(Fig. 2.7B). Re-enter the machine and re-assume proper operating positon with the seat belt fastened and start the engine. Slowly raise the liftarms until the support falls onto the cylinder rod. Slowly lower the liftarms until support restricts movement. Stop the engine.

To remove the liftarm support, enter the loader and assume proper operating position with the seat belt fastened and start the engine, slowly raise the liftarms until the support is free, have a helper pin the support into its stored positon, lower the liftarms to the ground and shut off the engine before exiting the loader.

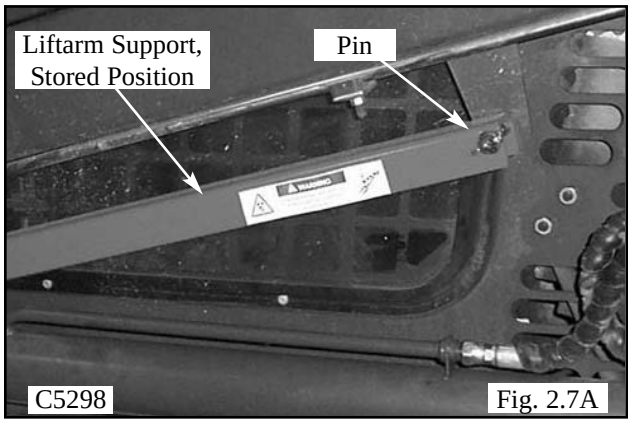

Fig. 2.7A

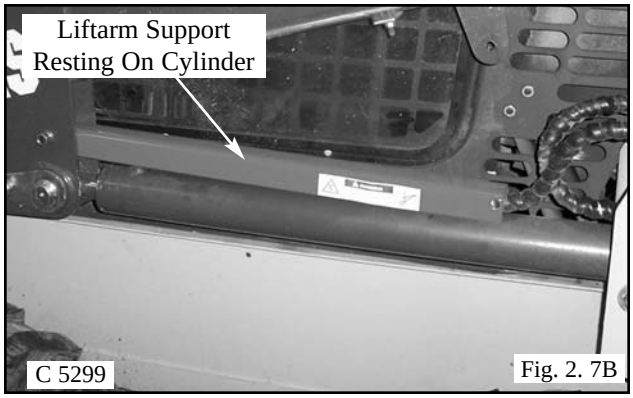

Fig. 2. 7B

IMPORTANT

Ensure liftarm brace is properly stowed before raising or lowering lift arms

2. 8 STEERING CONTROL LEVER

The left control lever controls speed, direction and turning of the loader. Loader speed is controlled by the amount the lever is moved from the centre or neutral position. (Fig. 2.8A) The further away from neutral, the faster the travel speed. For maximum power and slow travel speed move the control lever only a small amount.

To drive the loader forward in a straight line, move the left control lever forward from the neutral position (Fig. 2.8A).

To drive the loader in reverse in a straight line, move the left control lever back from the neutral position (Fig. 2.8A).

The loader is turned by moving the left control lever to the side. To turn right while in forward or reverse travel, ease the control lever to the right. To stop turning, return the lever to a center position. To turn left while in forward or reverse travel, ease the lever to the left from the neutral position. To stop turning, return the lever to a center position (Fig. 2.8A).

For the loader to turn or "skid-steer" within its own length, move the lever to the left or the right from the neutral position. This causes the wheels on one side to turn forward and the wheels on the other side to reverse turning the loader (Fig. 2.8A).

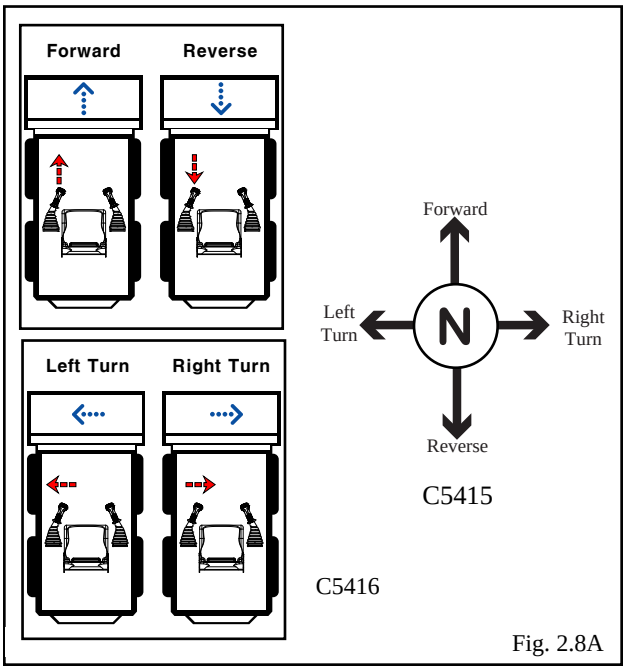

Fig. 2.8A

https://truckmanualshub.com/

2.9 ELECTRIC SOLENOID AUXILIARY CONTROLS

Auxiliary hydraulics (solenoid operated - standard) will only operate with the seat bar down.

A switch located on the R.H. steering control lever (Fig. 2.8A) is used to engage the loader's auxiliary hydraulic circuit to power attachments such as post hole augers, sweepers, etc. Pressing and holding the switch in position 1 (fig. 2.8A) provides hydraulic flow to the female quick connect coupling located at the front of the lift arms (fig. 2.8C). Releasing the switch returns the auxiliary hydraulic circuit to neutral, stopping the hydraulic flow.

Pressing and holding the switch in position 2 (fig. 2.8A) provides hydraulic flow to the male quick connect coupling located at the front of the lift arms (fig. 2.8C). releasing the switch returns the auxiliary hydraulic circuit to neutral, stopping hydraulic flow.

For continuous flow to the auxiliary hydraulic circuit, a toggle switch is located on the L.H. instrument panel (fig. 2.8B). Placing the switch in the "ON" position provides continuous hydraulic flow to the female quick connect coupling located at the front of the lift arms (fig. 2.8C). To stop hydraulic flow to the auxiliary hydraulic circuit, return the switch to the "OFF" position (fig. 2.8B). When the switch on the instrument panel is in the "ON" position, the switch located in the L.H. control lever is not operable.

NOTE: See Section 2.2 for information on the control handles.

WARNING

To avoid personal injury, lower the lift arms, shut off the engine, raise the seat bar and cycle the controls to ensure they are locked. Then, unlatch the seat belt and exit the loader. Do not enter or exit with the engine running unless as specified in this manual or under specific service and backhoe operating procedures.

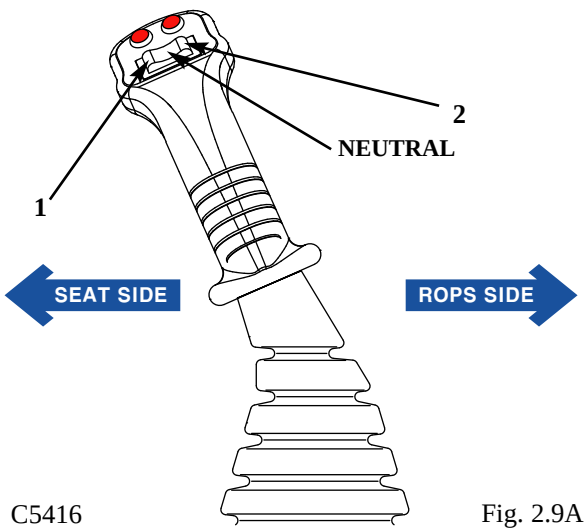

Fig. 2.9A

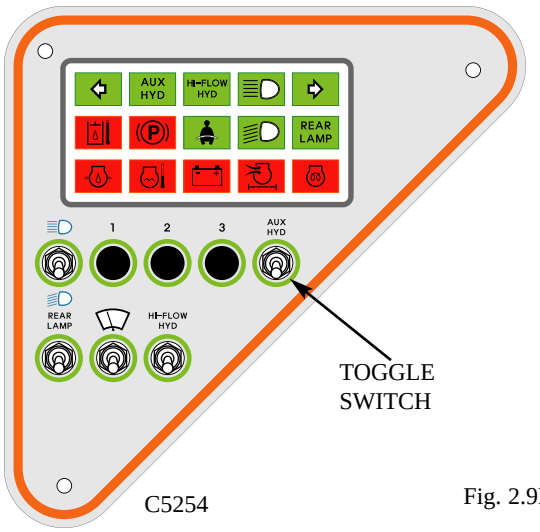

Fig. 2.9B

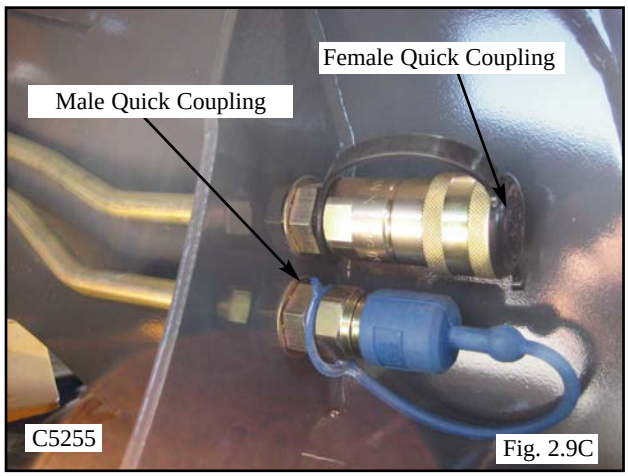

Fig. 2.9C

https://truckmanualshub.com/

2. 10 LIFTARM CONTROLS

The right hand control lever (Fig. 2.10) operates the loader•s liftarm and bucket hydraulic system. Refer to section 2.8 for instructions on steering control.

When the control lever is in the neutral position, the lift and tilt functions are static, the work attachment position should not change unless the control lever is moved. If the work attachment does move, service to hydraulic controls is required.

Having the control lever in the neutral position does not affect auxiliary hydraulics. Auxiliary hydraulics are controlled separately and will continue to operate with the control lever in the neutral position.

FLOAT (A)- Pushing the control lever all the way forward will lock the lever in liftarm float detent. This float position allows the work attachment to follow the contour of the ground. Lever will remain locked in float position until it is pulled out of float position.

LOWER (B)- To lower the liftarm, push the control lever straight forward from the neutral position, the control lever will return to the neutral position when released.

NEUTRAL (N)- Neutral (hold) position, lift and tilt functions are static. Liftarms should hold their position.

RAISE(D)- Pulling the control lever back from the neutral position will raise the liftarms, releasing the control lever will allow it to return to the neutral position.

TILT BACK (E)- Moving the control lever to the left will tilt the work attachment back (roll back bucket), releasing the control lever will allow it to return to a neutral position.

TILT FORWARD (F)- Moving the control lever to the right will tilt the work attachment forward (dump bucket), releasing the control lever will allow it to return to a neutral position.

By moving the control lever between two positons, both functions can be done at the same time.

- Move the lever diagonally between lower and tilt forward (B-F) to do both at the same time (lower and roll the work attachment forward).

-Move the lever diagonally between raise and tilt back (D-E) to do both at the same time (raise and roll the work attachment back).

WARNING

To prevent personal injury do not operate the loader without lowering the safety bar, fastening the seat belt and keeping feet on the cab floor.

-Move the lever diagonally between raise and tilt forward (D-F) to do both at the same time (raise and tilt the work attachment forward).

-Move the lever diagonally between lower and tilt back (B-E) to do both at the same time (lower and tilt the work attachment back).

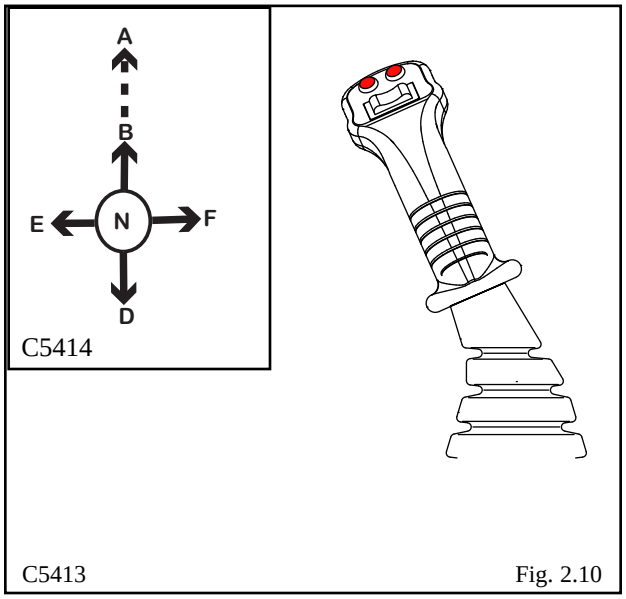

Fig. 2.10

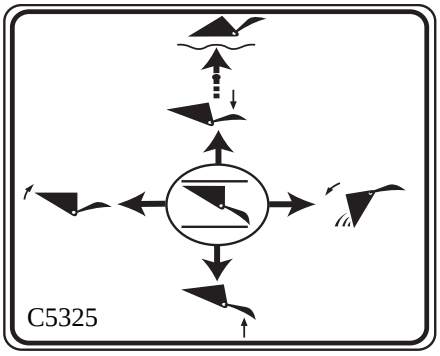

WARNING

To avoid personal injury, lower the lift arms, shut off the engine, raise the seat bar and cycle the hydraulics to ensure they are locked. Then unlatch the seat belt and exit the loader. Do not enter or exit with the engine running unless as specified in this manual or under specific service and backhoe operating procedures.

https://truckmanualshub.com/

2.11 QUICK - TACH

The quick-tach, which is standard equipment, allows changing from one attachment to another quickly without having to remove bolt or pins.

To operate, (Fig. 2.11A), lift the locking lever (1) up to completely retract the locking pins (2). Tilt the quick - tach frame forward (Fig. 2.11B) with the bucket tilt cylinders and drive into the attachment. Retract the bucket tilt cylinders (Fig. 2.11C) which will line up the bottom of the attachment with the quick - tach lock pins. Shut off the engine.

Push the locking lever (1) fully down (Fig. 2.11D) extending the lock pins (Fig. 2.11E item 2) through the attachment and securing the attachment.

Before operating the attachment check that the locking pins are correctly engaged.

WARNING

After hooking up the attachment check to be sure pins and locking levers are correctly engaged.

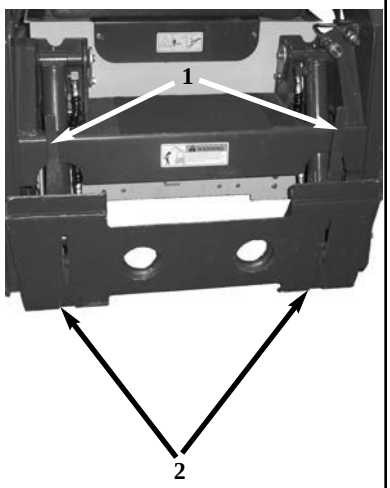

C5359 Fig. 2.11A

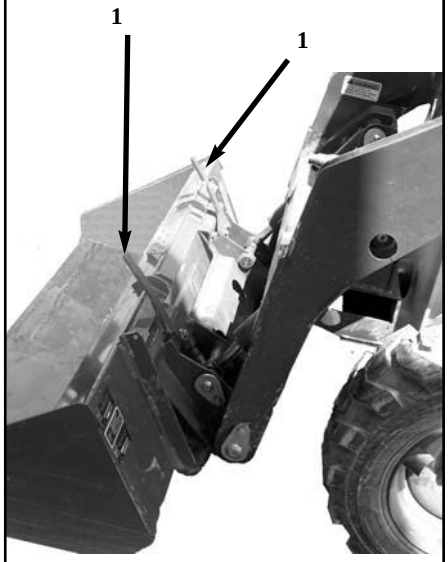

C5410 Fig. 2.11B

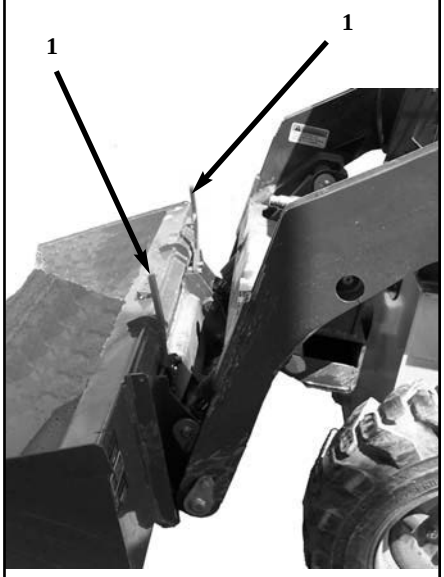

C5411 Fig. 2.11C

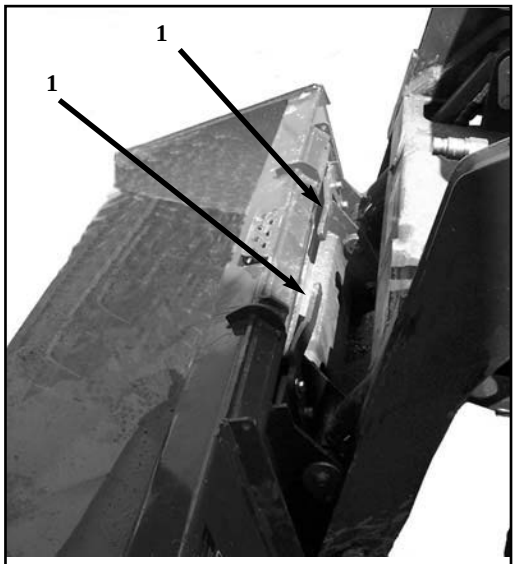

C5412 Fig. 2.11D

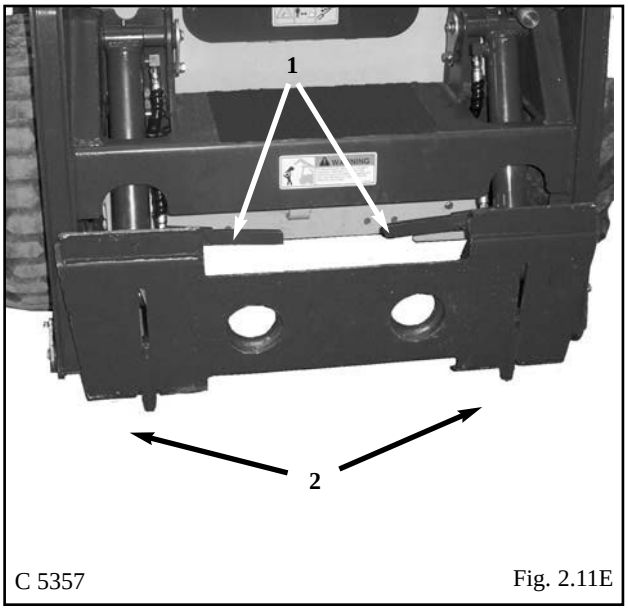

C 5357 Fig. 2.11E

https://truckmanualshub.com/

2.12 ELECTRICAL PANEL

The loader is equipped with a 12 volt, negative ground electrical system. The fuse and relay panel is located in the engine compartment on the underside of the engine cover. The panel consists of the following(Fig.2.12):

1. Engine Pre-Heater Relay.
2. Starter Relay.
3. Fuse Panel.
4. Turn Signal Flasher (optional)
5. Head Lamp. (20A)

FUSE PANEL (3)

6. Rear Lamp. (10A)
7. Wiper (15A)(Optional)
8. Back up Alram. (10A)
9. Front Horn. (10A)
10. Cigar Jack. (15A)
11. Aux, Hyd, Solenoid. (10A)
12. Alternator Light. (10A)
13. Brake Valve Solenoid. (10A)
14. Shut Down. (15A)

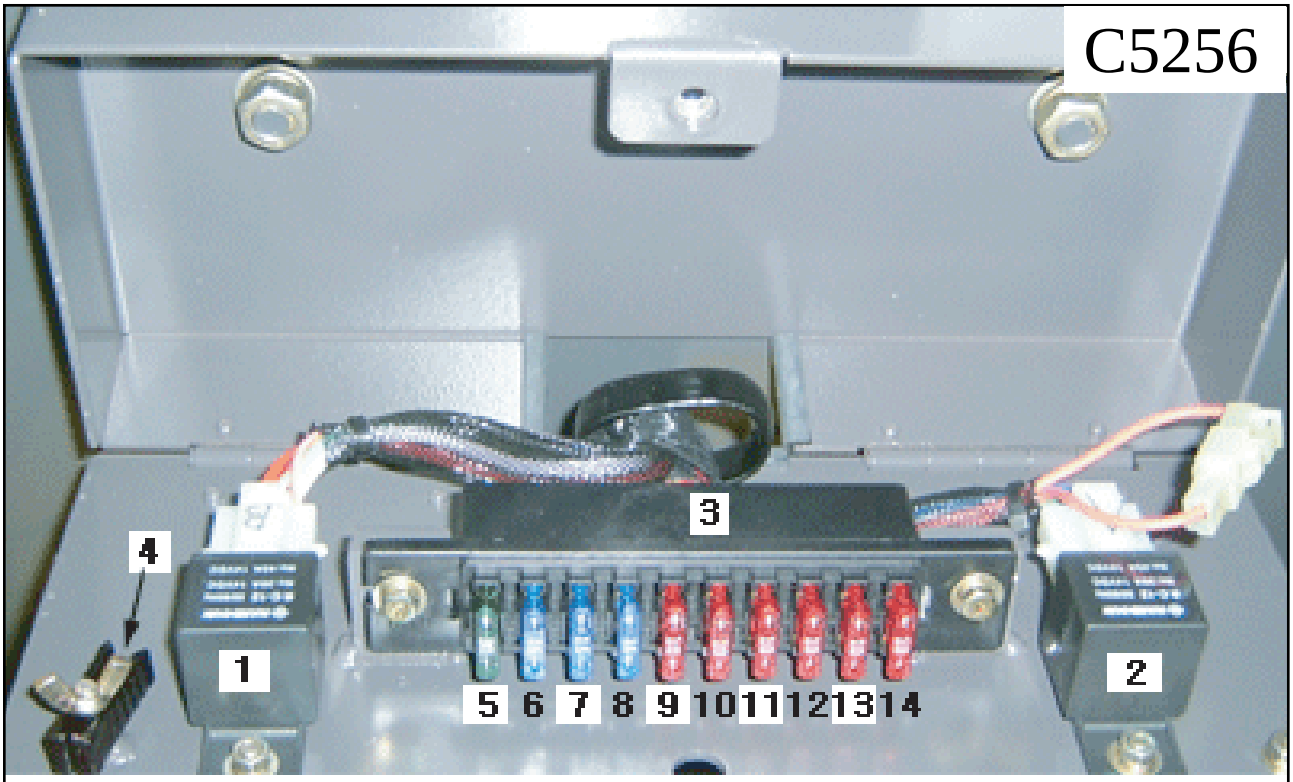

Fig 2.12

https://truckmanualshub.com/

3. OPERATION

3. 1 Starting Instructions
1. Pre-Starting Inspection
2. Starting Procedure
3. Shut-Off Procedure
3. 2 Operating Procedures
3. 3 Filling From a Pile
3. 4 Digging With a Bucket
3. 5 Leveling and Backfilling
3. 6 Auxiliary Hydraulics
3. 7 Lifting
3. 8 Towing
3. 9 Securing and Transporting
3. 10 Lowering Lift Arms
3. 11 Accumulator

https://truckmanualshub.com/

3. OPERATION

3.1 STARTING INSTRUCTIONS

1. Pre-Starting Inspection

Before starting the loader complete the following inspection:

(1) Check the hydraulic oil level, engine oil level, engine coolant level and fuel supply.

(2) Check for fuel, oil and hydraulic leaks.

(3) Check lights, battery level and cables.

(4) Check tire pressure:
10.00 x 16.5 . . . . 40 - 45 PSI (276 - 310 kPa)

(5) Check wheel nut torque 100 - 110 ft. lbs. (13.8 - 15.2 kgm) (136- 149 Nm).

(6) Lubricate all grease fittings.

(7) Check the condition and operation of all safety decals and equipment … Ensure all shields and safety screens are in place. If necessary repair or replace before starting.

For complete daily servicing refer to section 4. 3.

WARNING

To prevent personal injury do not operate the loader without lowering the safety bar, fastening the seat belt and keeping feet on the cab floor.

2. Starting Procedure

1. Ensure the seat bar is in the UP position and the control levers are in neutral.
2. Adjust and fasten the seat belt securely around you.
3. Place the throttle control in idle position.
4. Turn the ignition key counter clockwise to activate the glow plugs. Both the alternator and engine oil pressure warning lights should be on. Use chart for correct pre-heat times.

Glow Plug Pre-Heat Times

Ambient Temperature	Preheat Time
0 C(32 F) and Above	10 Seconds
-18 C(0 F) to 0 C(32 F)	30 Seconds
-23 C(-10F) to -18C(0 F)	60 Seconds
-29 C(-20 F) to -23 C(-10 F)	120 Seconds

IMPORTANT

This engine is equipped with glow plugs. Do not use ether or any high energy fuels to assist starting.

WARNING

To avoid personal injury do not start the engine unless you are in the seat with the seat belt fastened around you, unless as specified in this manual or under specific service and backhoe operating procedures.

5. Turn the key clockwise to start position to engage the starter. Do not crank the starter for more than 30 seconds. If the engine fails to start turn the key to off position, wait one minute, and repeat the procedure. If engine does not start after three attempts, check the fuel suppply system. The absence of blue or white smoke during cranking indicates that no fuel is being delivered.
6. When the engine has started the engine oil pressure and alternator warning lights should go out. If they don't, shut - off the engine immediately and determine cause.
7. Allow the engine to warm up for five minutes before operating. When ready to operate, lower the seat bar and advance the throttle to full on position.

IMPORTANT

Limit preheating to recommended preheat times; longer periods can ruin the glow plugs.

IMPORTANT

Overvoltage (14 volts or greater) will immediately destroy the glow plugs. Do not apply overvoltage to the starting circuit at any time. If boosting, use a battery of equal voltage to the loader and connect it in parallel,positive to positive, negative to negative.

https://truckmanualshub.com/

WARNING

To avoid personal injury, lower the lift arms, shut off the engine, raise the seat bar and cycle the hydraulic controls to ensure they are locked. Then, unlatch the seat belt and exit the loader. Do not enter or exit with the engine running unless as specified in this manual or under specific service and backhoe operating procedures.

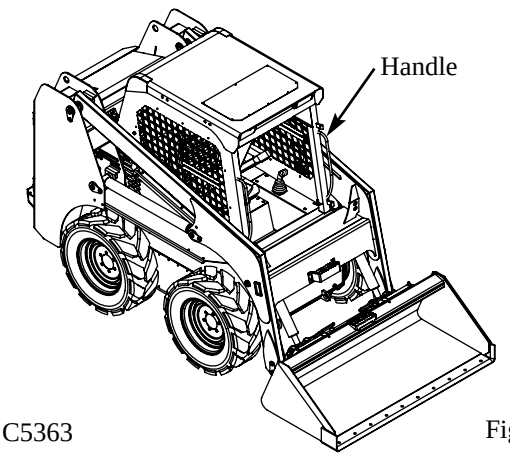

C5363 Fig. 3.3

3. Shut-Off Procedure

(1) Select level ground whenever possible. If you must park on a slope or incline, position the machine at right angles to the slope. Lower the attachment to the ground, engage the parking brake and bloke the wheels.

(2) Lower the lift arms and ground the attachment.

(3) Return auxiliary hydraulics to neutral or OFF position.

(4) Return the throttle control to idle position. If the engine is hot allow it to idle until normal, at least 2 minutes.

(5) Never enter or exit the loader when the engine is running.

(6) Raise the seat bar to apply the park brake. Turn the ignition switch to the OFF position, remove the key, unfasten the seat belt, and ensure the hydraulic controls are locked by rocking them.

3. 2 OPERATING PROCEDURES

1. When learning to use the loader, operate at a slow rate.
2. Take advantage of the efficient operation of the loader. Keep the travel distance as short as possible. Keep the work area small so the cycle time is short.
3. Keep the work area as level as possible.
4. Decrease cycle time by "Skid" turning (See Section 2.8A) rather than a go backward-go forward turn.
5. Fill the bucket to rated capacity. Turning is easier with a full load than with a partial load. Keep the loaded bucket close to the ground when transporting.
6. Tilt the bucket as you raise the lift arms or drive up a slope. This will prevent material from falling off the back of the bucket.
7. Do not drive across a slope. Always go up or down a slope with the heavy end of the loader pointing up towards the top of the slope.

https://truckmanualshub.com/

3. 3 FILLING FROM A PILE

Fig. 3.3A--Push ahead on the right hand control lever (**1**) and lower the lift arms completely down. Push to the right on the right hand control lever (**2**) and place the cutting edge of the bucket on the ground.

Fig. 3.3B--Push ahead on left hand lever to drive the loader forward slowly into the pile. As the bucket begins to fill pull to the left on the right hand lever (**3**) to raise the front of the bucket and pull back on the right hand lever (**4**) to raise the lift arms. When the bucket is full back away from the pile.

Fig. 3.3C--To dump the bucket pull back on the right hand control lever (**4**) to raise the lift arms, push to the right small amounts as the lift arms are raising to stop material from falling off the back of the bucket. When the bucket is at the correct height for dumping, push to the right on the right hand lever (**2**) to empty the bucket.

IMPORTANT	**Always let the engine warm completely before you begin operation each day.**

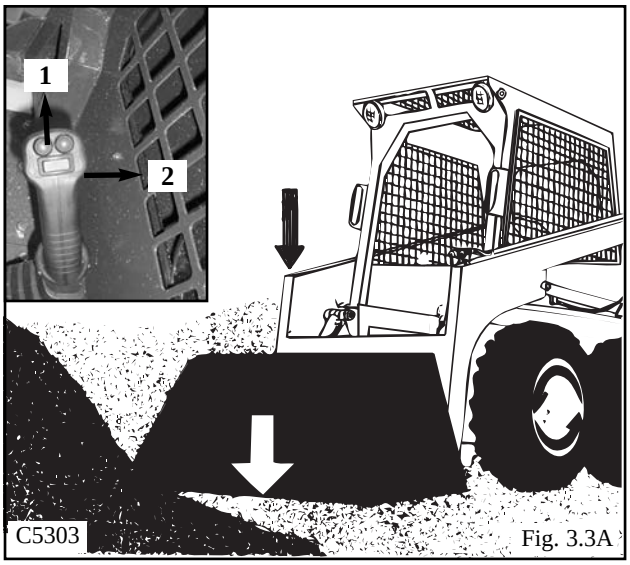

Fig. 3.3A

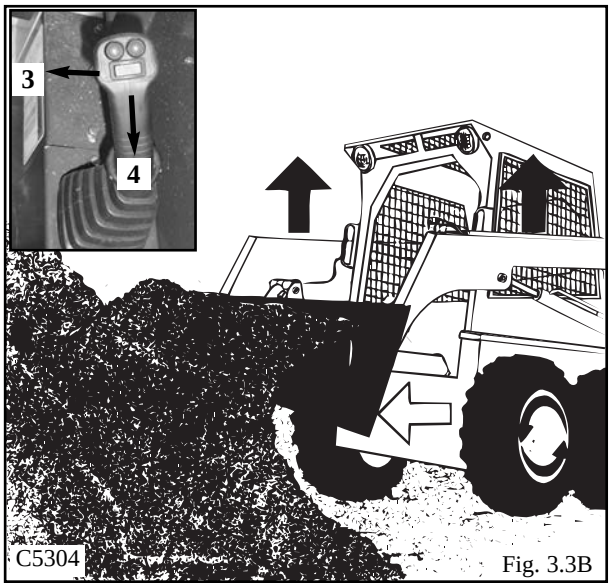

Fig. 3.3B

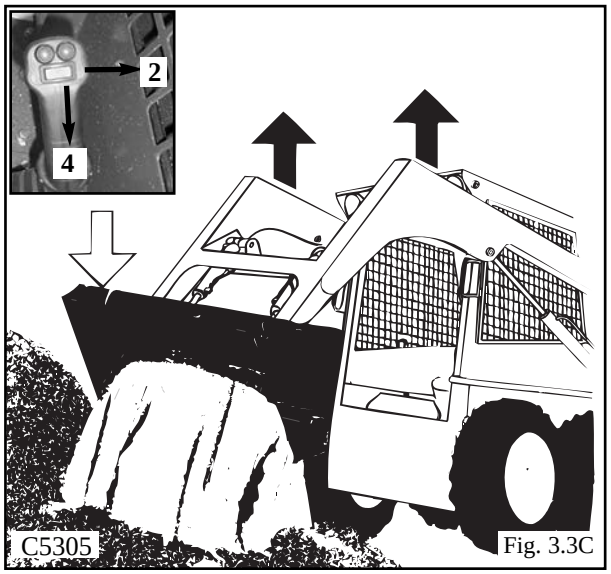

Fig. 3.3C

https://truckmanualshub.com/

3. 4 DIGGING WITH A BUCKET

Fig. 3.4D--Push ahead on the right hand control lever (**1**) and lower the lift arms completely down. Push to the right on the right hand lever (**2**) and place the cutting edge of the bucket on the ground. Drive the loader forward at a slow rate and continue to tilt the bucket down until it enters the ground.

Fig. 3.4E--Pull to the left on the right hand lever (**3**) to raise bucket edge to increase traction and keep an even digging depth.

Fig. 3.4F--Continue to drive forward until the bucket is full. When digging in hard ground, it is easier to raise (**3**) and lower (**2**) the bucket cutting edge with the right hand control lever while slowly driving forward. When the bucket is full, pull to the left on the right hand control lever (**3**) to roll back the bucket.

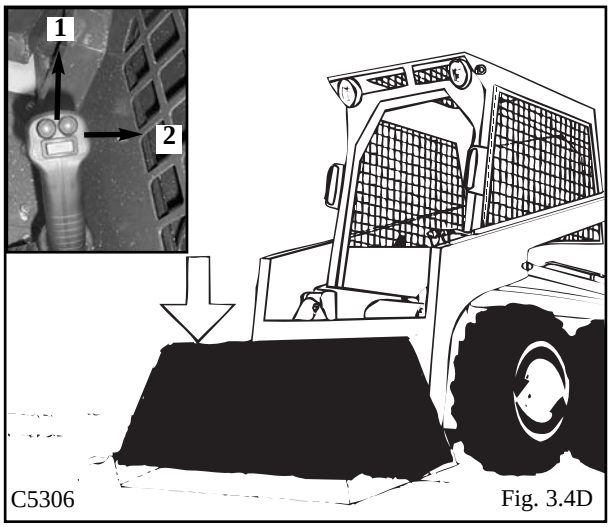

C5306 Fig. 3.4D

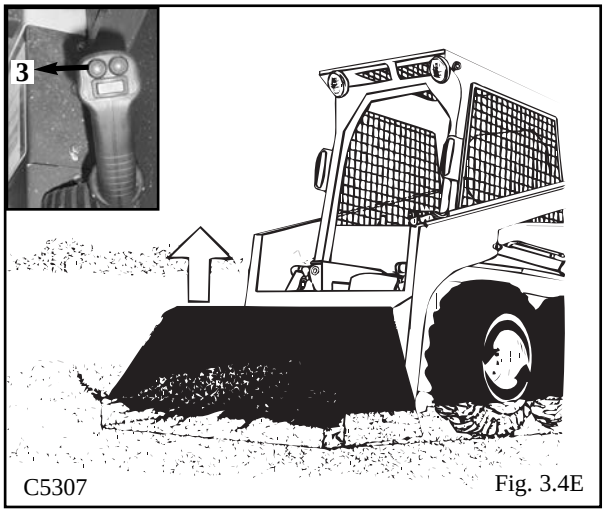

C5307 Fig. 3.4E

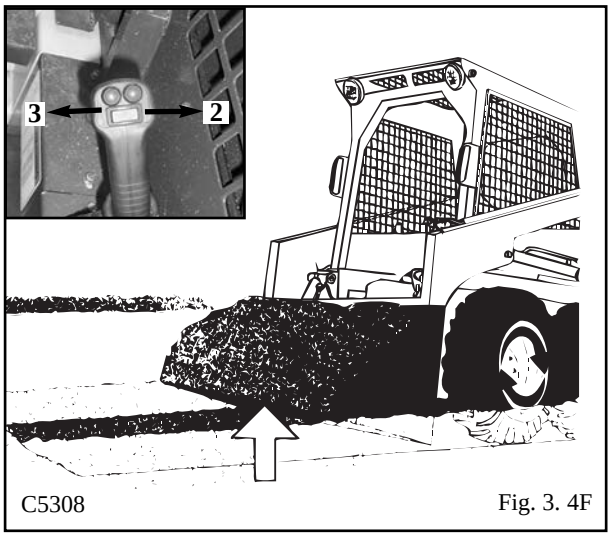

C5308 Fig. 3. 4F

WARNING **To prevent personal injury, ensure that the bucket with the proper rated capacity is being used for the job you are doing.**

WARNING **To avoid personal injury: When starting or operating loader in an enclosed area make sure there is enough ventilation. Exhaust fumes can kill.**

WARNING **To prevent personal injury always carry the load low.**

https://truckmanualshub.com/

3. 5 LEVELING AND BACKFILLING

Fig. 3.5G--Spread dirt on uneven ground by pulling back on the right hand control lever (**4**) to raise the lift arms and push to the right on the right hand control lever (**2**) to tilt the bucket down as you drive forward.

Fig. 3.5H--To level the ground; raise the lift arms and tilt the bucket down by pushing to the right on the right hand control lever (**2**). Push ahead firmly on the right hand control lever (**1**) to lock the lift arms in the float position. The weight of the lift arms and bucket will hold the bucket on the ground. Drive backward to level material.

Fig. 3.5I--To fill a hole drive the loader slowly with the bucket low, up to the hole. As the bucket passes the edge of the hole, push to right on the right hand control lever (**2**) to dump the bucket. When necessary raise the lift arms to empty the bucket.

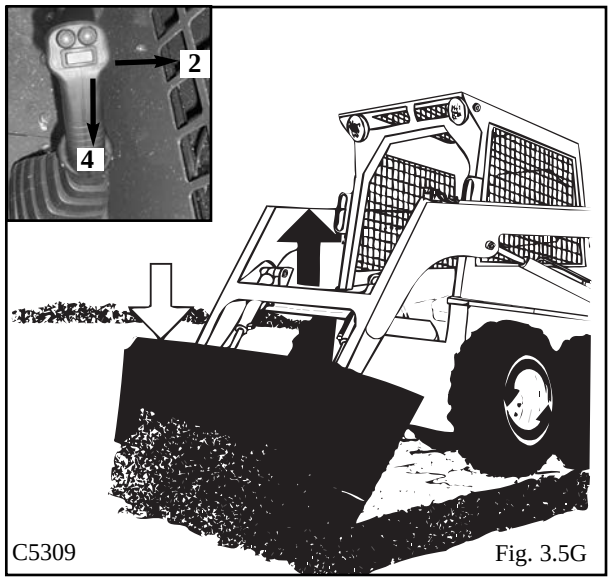

C5309 Fig. 3.5G

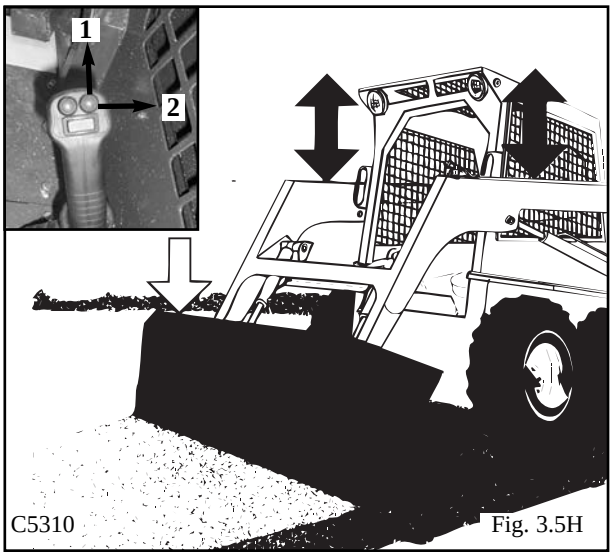

C5310 Fig. 3.5H

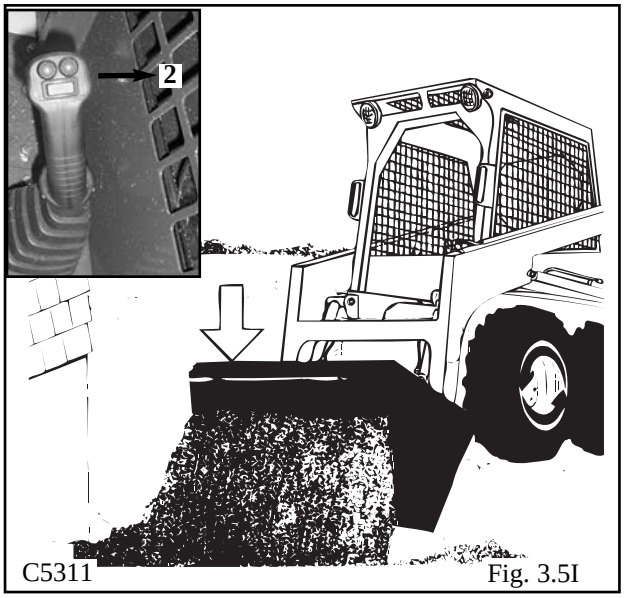

C5311 Fig. 3.5I

WARNING **To prevent personal injury always carry the load low.**

https://truckmanualshub.com/

3. 6 AUXILIARY HYDRAULICS

Fig. 3.6J--To operate an attachment such as a grapple fork the Auxiliary Hydraulic Control Switch (rocker switch) on the Left Hand Control Lever will be used. Push right of neutral on the Auxiliary Hydraulic Control Switch to open the grapple.

Fig. 3.6K--To close the grapple, push left of neutral on the Auxiliary Hydraulic Control Switch. The right hand control lever can be used to raise and tilt the grapple as with a bucket.

Fig. 3.6L--To operate an attachment which requires a constant flow of oil, a toggle switch (AUX HYD) on the L.H. instrument panel should be placed in the "ON" position.

When the auxiliary circuit is not in use, switch AUX HYD to the "OFF" position. Otherwise starting the loader may be difficult or impossible to start and damage to the starter may occur.

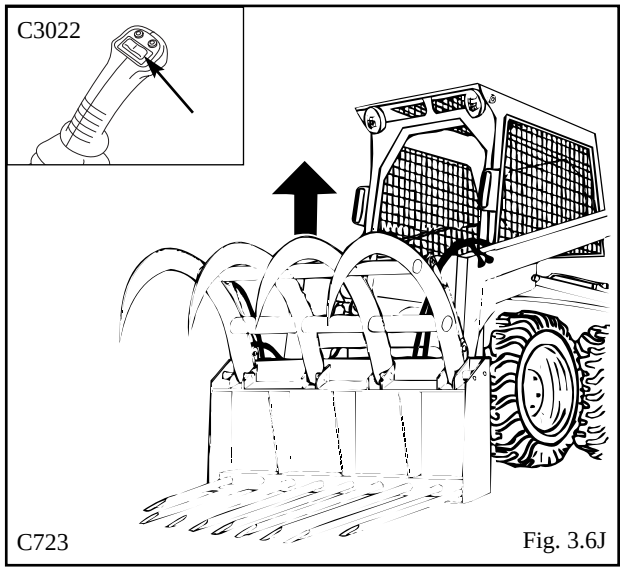

Fig. 3.6J

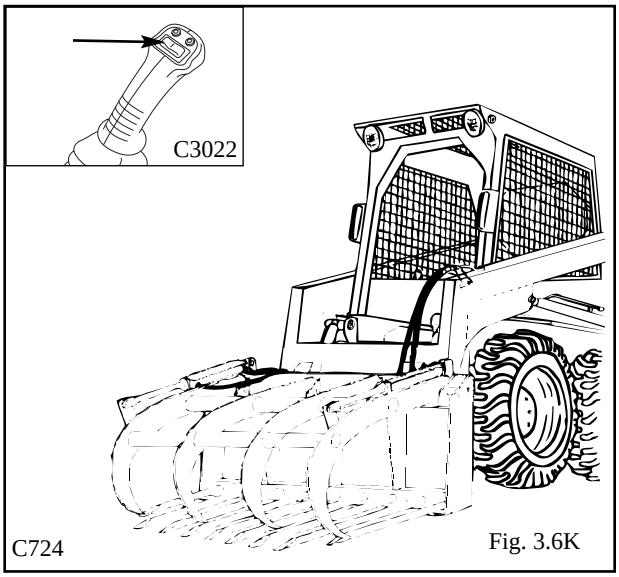

Fig. 3.6K

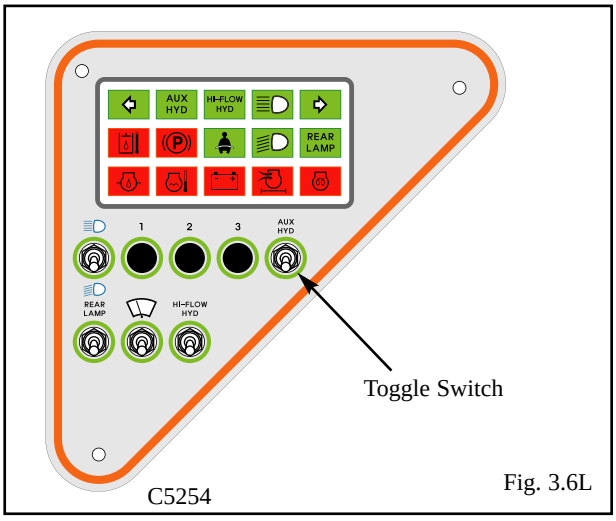

Fig. 3.6L

IMPORTANT

Return the auxiliary control to neutral when not in use otherwise starting may be impossible and damage to the starter may occur.

WARNING

To avoid personal injury, lower the lift arms, shut off the engine, raise the seat bar and cycle the hydraulics to ensure they are locked. Then, unlatch the seat belt and exit the loader. Do not enter or exit with the engine running unless as specified in this manual or under specific service and backhoe operating procedures.

https://truckmanualshub.com/

3. 7 LIFTING (Optional)

The loader can be equipped with features to use in lifting (for example by crane onto a flatbed trailer or a flat car), for securing, and for extraction (from mud or snow). To facilitate this requires the optional lifting lugs.

To lift using a crane, first follow the shut - off procedure in section 3.1-3.

Once this is done, attach properly rated cables, chains or straps to lift points provided (See Fig. 3.7). To prevent marking the operator guard or chafing of the lifting cable, a lifting frame should be used.

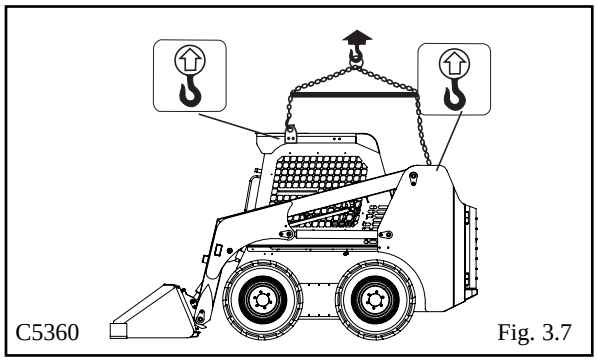

Fig. 3.7

3. 8 TOWING

1. When winching or towing a stuck loader from the rear, always lower the lift arms until the attachment is resting on the ground and then follow the shut - off procedure (See Section 3.1-3).
2. When winching or towing a stuck loader from the front, lower the attachment so that the front attachment points are accessible and have an assistant block the attachment, then follow the shut-off procedure (See Section 3.1-3).
3. Attach a properly rated chain, cable or towing strap to the towing point provided (Fig. 3.8).
4. Deactivate the brake system for towing (refer to section 2.5). To do this ensure that the restraint bar is in the down position. Attempting to tow with the restraint bar in the raised position could result in damage to the braking system.
5. The attachment point on the towing or winching equipment should be kept as low as possible and in as direct a line as possible with the stuck loader. A steep tow line angle or side pull could result in upsetting the stuck loader.

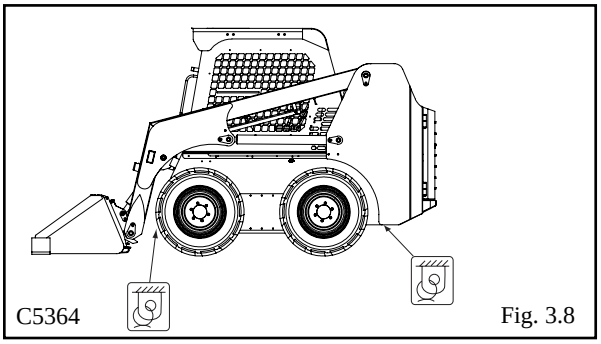

Fig. 3.8

IMPORTANT

Never install tie down chains across the bucket cylinders. Damage to the cylinders may occur.

WARNING

To avoid personal injury, lower the lift arms, shut off the engine, raise the seat bar and cycle the hydraulics to ensure they are locked. Then, unlatch the seat belt and exit the loader. Do not enter or exit with the engine running unless as specified in this manual or under specific service and backhoe operating procedures.

https://truckmanualshub.com/

3.9 SECURING AND TRANSPORTING

There are three tie down points provided for securing the skid steer while transporting. One at the lower front and two at the rear (Fig. 3.9).

Be sure the trailer and/or truck is of adequate size and capacity to safely transport your skid steer.

Measure the clearance height of the machine and trailer or truck, and post it in the cab of the truck.

Before loading the skid steer make sure the ramps and parking surface are free of all oil, grease, ice, etc. and of sufficient strength to support the load.

Know the local rules and regulations, and make sure your truck and trailer is equipped with the correct safety equipment.

When loading a skid steer with an attachment, always load the heavy end first.

Once the skid steer has been loaded, lower the attachment to the floor, stop the engine and engage the park brake.

Install chains at the front and rear tie down locations, and securely attach to the transport vehicle.

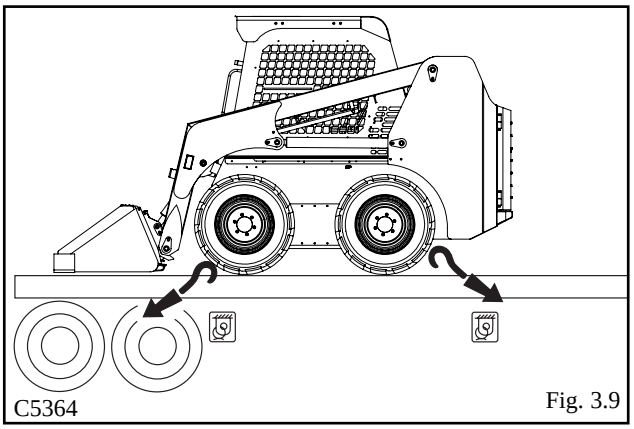

Fig. 3.9

IMPORTANT

When moving your skid steer on or off a transport vehicle, drive slowly and keep the machine centered.

WARNING

Ramps must be of sufficient strength to support the weight of your skid steer. Wooden ramps can break and cause personal injury.

SAFE SHUTDOWN PROCEDURES

- Stop machine
- Lower the bucket and other attachments flat on the ground
- Position controls in neutral
- Raise operator seat bar to engage parking brake
- Idle engine for short cool-down period
- Stop engine
- Cycle all controls to ensure they are de-activated.
- Raise operator seat bar.
- Check that lift arm/bucket controls are locked in neutral.
- Unbuckle seat belt
- Remove ignition key and lock covers and closures.

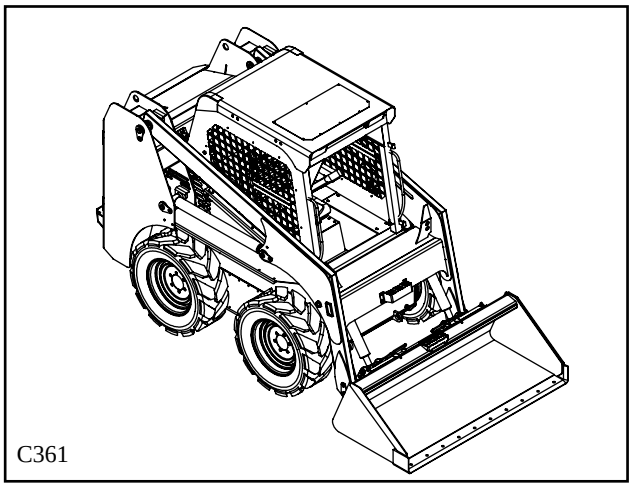

WARNING

To avoid personal injury, lower the lift arms, shut off the engine, raise the seat bar and cycle the hydraulics to ensure they are locked. Then, unlatch the seat belt and exit the loader. Do not enter or exit with the engine running unless as specified in this manual or under specific service and backhoe operating procedures.

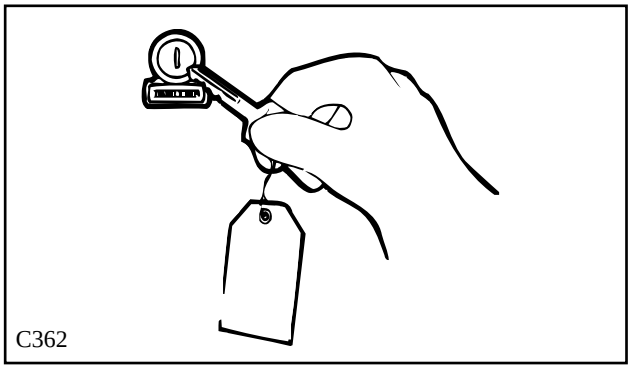

https://truckmanualshub.com/

3.10 LOWERING LIFT ARMS (ENGINE OFF)

This section is currently under review. You will be notified and supplied with an updated section when it is available.

WARNING

To avoid personal injury: Do not leave lift arms up unless the lift arm support is engaged.

WARNING

To avoid personal injury, always ensure that the liftarm support is in position before servicing machine

C5394

https://truckmanualshub.com/

3.11 BATTERY MAINTENANCE AND BOOSTING

Inspect the battery on a regular basis for damage such as a cracked or broken case or cover which would allow electrolyte loss. (Fig. 3.11A)

Check the battery cables for tightness and ensure they are corrosion free. Remove any acid corrosion from battery and cables with a baking soda and water solution. Coat the terminal connections with di-electric grease.

Use caution if it is necessary to use a booster battery to start the engine.

The ignition must be in the off position. The booster battery must be 12 Volt.

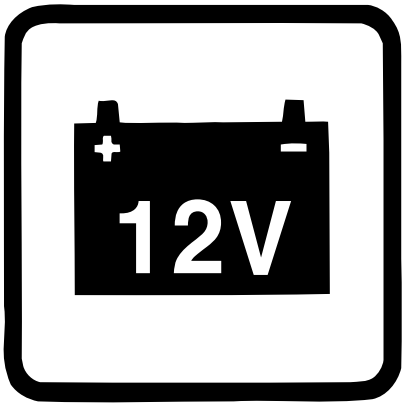

C1234 Fig. 3.11A

https://truckmanualshub.com/

3.12 ACCUMULATOR

The accumulator (fig. 3.11A) stores system pressure until it is required. The key must be placed in the "On" position to operate the electric auxiliary (engine not running).

The electric auxiliary and stored system pressure can be used to activate the spools. This decreases the hydraulic pressure from the male/female couplers located on the lift arms. This is accomplished by cycling the momentary switch on the R.H. control a couple of times (fig. 3.11B).

Once this pressure is decreased the operator can remove/replace the quick attach accessories easily.

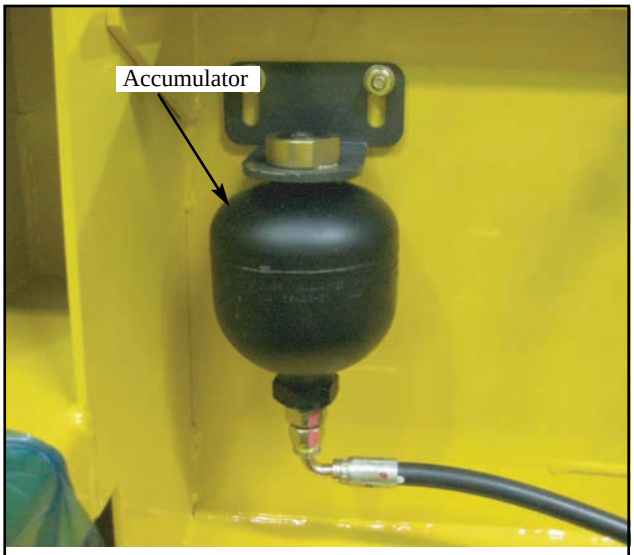

C5268 Fig. 3.11A

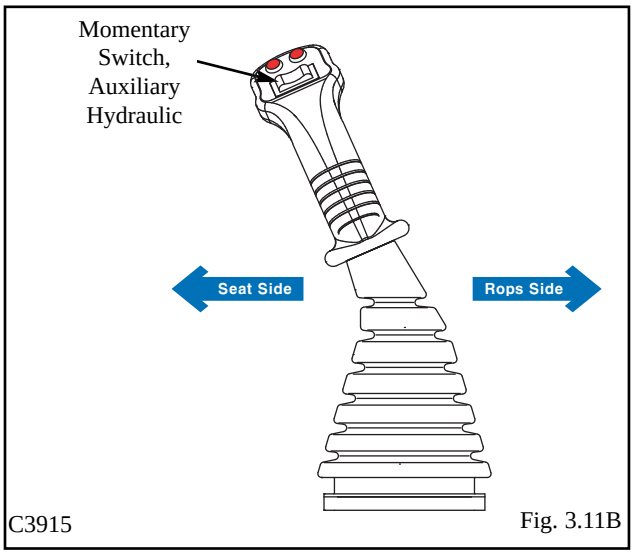

C3915 Fig. 3.11B

https://truckmanualshub.com/

4. MAINTENANCE

4. 1 Preventative Maintenance Service Schedule

4. 2 Service Access
1. Lift Arm Support
2. Tilt Cab
3. Battery Access

4. 3 Daily Service Check
1. Hydraulic Oil Level
2. Air Cleaner
3. Tires and Wheel Nuts
4. Safety Equipment
5. Decals
6. Lubrication
7. Engine Oil Level
8. Radiator / Oil Cooler Service

4. 4 50 Hour Service Check
1. Engine
2. Hydraulic / Hydrostatic
3. Final Drive
4. Controls and Safety Equipment
5. Electrical
6. Grease / Lubrication
7. General

4. 5 250 Hour Service Check

4. 6 Final Drive Maintenance
1. Oil Level Check
2. Adding Oil
3. Drive Chain, Axle and Sprocket Inspection

4. 7 Hydraulic / Hydrostatic System Maintenance
1. Oil Level Check
2. Adding Oil
3. Hydraulic Filter Replacement
4. Draining System Fluid
5. Oil Cooler and Cooling Fan
6. Brake Service Override

4. 8 Engine Maintenance
1. Engine Specification
2. Oil Level Check
3. Engine Oil and Filter Replacement
4. V-Belt Tension
5. Adding Fuel
6. Fuel Filter Replacement
7. Bleeding the Fuel System

4. 9 Air Cleaner Maintenance
1. Daily Maintenance
2. Servicing Cleaner Element

4. 10 Engine Cooling System

4. 11 Electrical System
1. Battery Maintenance and Boosting
2. Electrical Schematic - ROPS
3. Electrical Schematic - Engine

4. 12 Tire Maintenance
1. Tire Inflation and Service
2. Tire Rotation

4. 13 Troubleshooting
1. Hydraulic System
2. Hydrostatic Drive
3. Final Drive Transmission
4. Control Levers
5. Electrical
6. Engine

4. 14 Hydraulic / Hydrostatic Cicuit

4.15 Special Tools

https://truckmanualshub.com/

4. MAINTENANCE

4.1 PREVENTIVE MAINTENANCE SERVICE SCHEDULE

ITEM	SERVICE REQUIRED	8 HOURS	50 HOURS	200 HOURS	1000 HOURS
Engine Oil	Check level and add if necessary. Use 10W30 API Classification SJ.				
Hydraulic Oil	Check level and add if necessary. Use10W30 API Classification SJ.				
Radiator	Check level and add if necessary. Fill with 50% mixture of ethylene glycol and water. Check cooling fins for dirt. If necessary blow out with compressed air.				
Air Cleaner	Empty dust cap. Check condition indicator and service or replace element as required.				
Tires and Wheel Nuts	Check for low pressure or tire damage, refer to Section 5.1 for more information. Check wheel nut torque 100-110 ft. lbs. (136-149 Nm).				
Safety Equipment	Check all safety equipment for proper operation and condition. Seat belt, lift arm supports, quick-tach locks, parking brake, hydraulic control locks, safety treads, front shield and cab side screens. If necessary repair or replace.				
Decals	Check for damaged safety or instruction decals (See Section 5.3). If necessary replace.				
Lubrication	Grease all hinge pin fittings and pivot bearings until excess shows.				
Hydraulic Oil Filter	Replace hydraulic oil filter element. Initial change only.				
50 Hour Service	Perform complete 50 hour service (See Section 4.4).				
Engine Oil	Replace engine oil. Use 10W30 API Classification SJ.. (See Section 4.8-3).				
Engine Oil Filter	Replace engine oil filter.				
Final Drive	Check chain and sprocket condition. Check every 200 hours.				
Hydraulic Oil Filter(s)	Replace hydraulic oil filter element (See 4.7-3).				
Preventative Maintenance Service Check	It is recommended as a preventative maintenance procedure that the 50 hour service be repeated every 200 hours. (See Section 4.5)				
Engine Oil	Replace engine oil. Use 10W30 API Classification SJ. See 4.8-3. Replace every 200 hours.				
Engine Oil Filter	Replace engine oil filter. See 4.8-3. Replace every 200 hours.				
Engine Fuel Filter	Replace engine fuel filter. (See Section 4.8-6).				
Final Drive	Change final drive lubricating oil.				
Hydraulic reservoir	Remove and replace the 100 micron suction element in the oil reservoir. Change hydraulic oil.				
Engine Cooling System	Drain, flush and refill. Use 50% mixture of ethylene glycol and water.				

https://truckmanualshub.com/

4. MAINTENANCE

WARNING

WARNING: Escaping hydraulic fluid under pressure can penetrate the skin causing serious injury.

- **DO NOT** use your hand to check for leaks. Use a piece of cardboard or paper to search for leaks.
- Stop engine and relieve pressure before connecting or disconnecting lines.
- Tighten all connections before starting engine or pressurizing lines.

If any fluid is injected into the skin obtain medical attention immediately or gangrene may result.

WARNING

To avoid personal injury service repairs must be performed by an authorized SUNBEAR dealer.

4. 2 SERVICE ACCESS

1. Lift Arm Support

For safety while performing regular service or maintenance work, the loader is equipped with lift arm support. When properly used, the lift arm support prevents the lift arms from dropping if hydraulic pressure is relieved or the hydraulic controls are accidentally cycled during routine maintenance.

To operate the lift arm support, remove attachment, park on level ground. Lower liftarms to ground and stop engine. Exit the machine and remove pin that holds liftarm support in stored positon(Fig. 4.2A). Lower liftarm support to rest on lift cylinder(Fig. 4.2B). Re-enter the machine, assume proper operating positon with seat belt fastened and start engine. Slowly raise liftarms until support falls onto the cylinder rod. Slowly lower until support restricts movement. Stop engine. (Fig. 4.2C)

To remove support, sit in loader, fasten seatbelt, start engine and lower seat bar. Raise liftarms enough to release support. have a helper raise support and pin it into position, lower liftarms and stop engine.

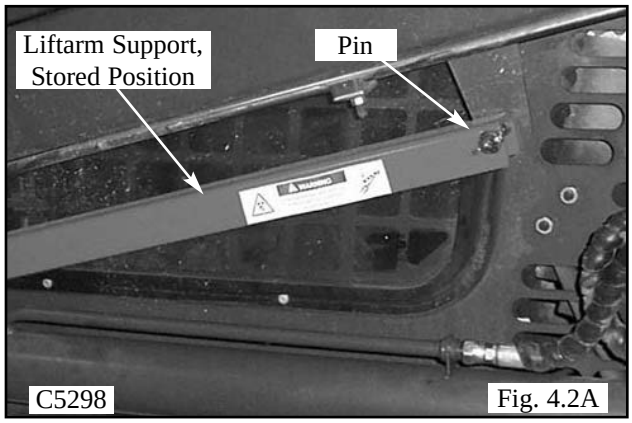

Fig. 4.2A

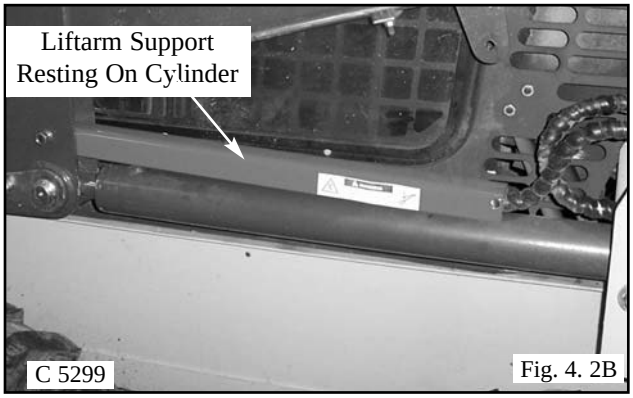

Fig. 4. 2B

https://truckmanualshub.com/

2. Tilt Cab

The cab assembly can be tilted up at the front to provide access to the controls, hydraulic and hydrostatic components. To tilt the cab assembly, remove the bolts located at the front corners of the cab,close and latch cab door if so equipped, tilt cab up and insert prop rod (Fig.4.2D and 4.2E). To close, remove prop rod from cab and store in clip on top of transmission, pull front of cab down until cab rests on front of loader. Re-install front cab bolts and torque to 78-84 lb/ft..

3. Battery Access

The battery is located in a compartment found under the operators seat. Remove the bolts that hold the front corners of the cab, tilt cab up and insert cab prop rod. Battery is located in a tray above the left side transmission.

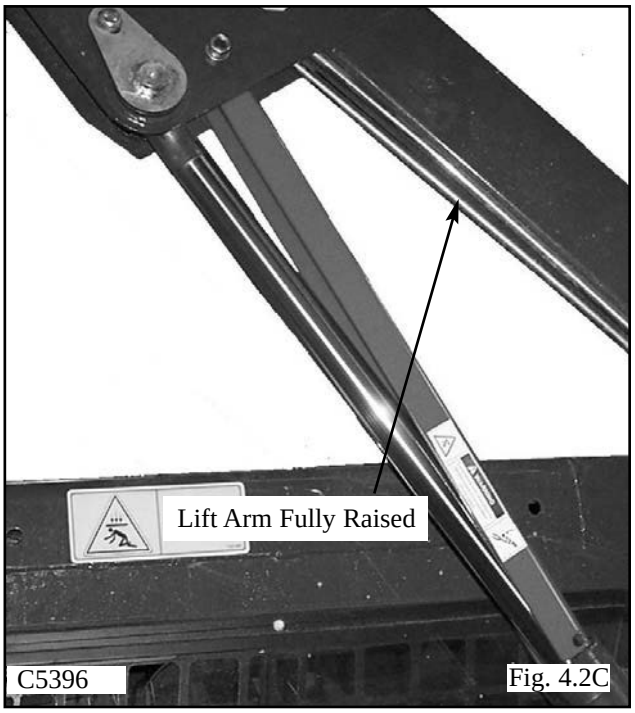

Fig. 4.2C

IMPORTANT — **Ensure lift support is properly stored before resuming normal loader operation.**

WARNING — **To avoid personal injury: Do not leave lift arms up unless the lift arm support is engaged.**

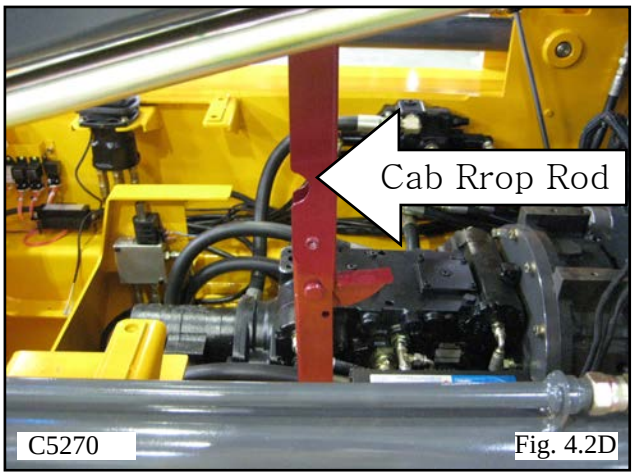

Fig. 4.2D

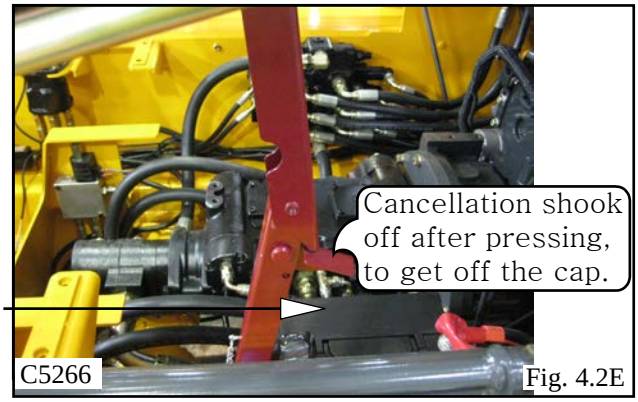

Fig. 4.2E

https://truckmanualshub.com/

4. 3 DAILY SERVICE CHECK

1. Hydraulic Oil Level

Check the oil level with the machine on a level surface with the lift arms down and the attachment grounded. Open the rear door and check the oil level sight tube (Fig. 4.3A). If oil is apparent the oil level is satisfactory.

If necessary to add oil, remove the reservoir cap located at the top of the oil reservoir and add oil until oil appears in the oil level sight tube.

WARNING

To avoid personal injury: Stop, Cool and Clean the engine of flammable materials before servicing. Never service or adjust machine with engine running.

2. Air Cleaner

The loader is equipped with an air cleaner restriction warning lamp. Should this lamp illuminate, shut off the engine and determine cause. Possibly a plugged air filter

Check that all hose clamps are tight and the hose is undamaged. Check the vacuator valve for damage (Fig 4.3B).

See Section 4.9 for Air Cleaner Maintenance.

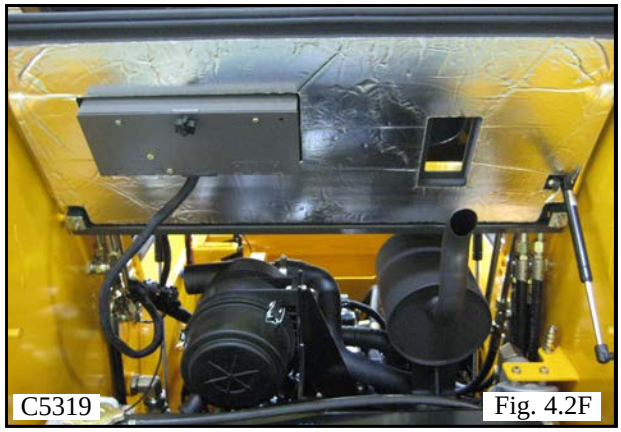

Fig. 4.2F

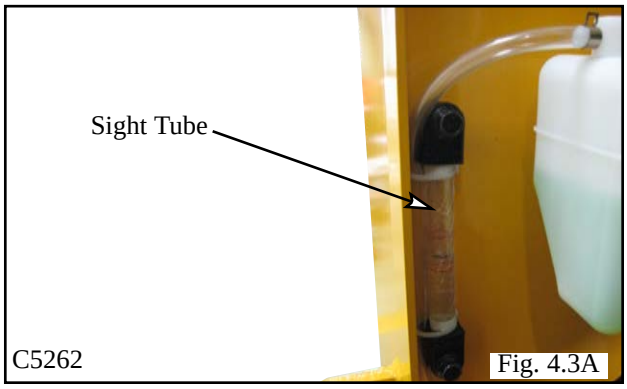

Fig. 4.3A

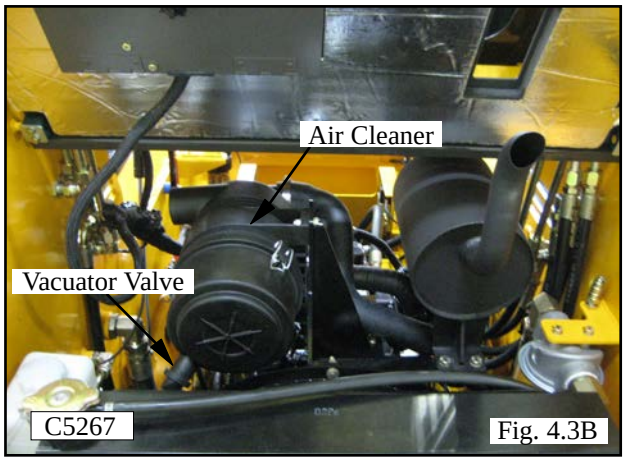

Fig. 4.3B

https://truckmanualshub.com/

3. Tires and Wheel Nuts

Inspect tires for wear or damage. Check and inflate tires to correct pressure:

10.00 x 16.5 .....40 - 45 PSI (276 - 310 kPa)

To prevent shearing of the wheel studs and rim damage check wheel nuts for proper torque 100 -110 lbs. ft. (136 - 149 Nm) daily (Fig. 4.3C). After changing a rim, Check wheel nuts hourly, until the reading stabilizes.

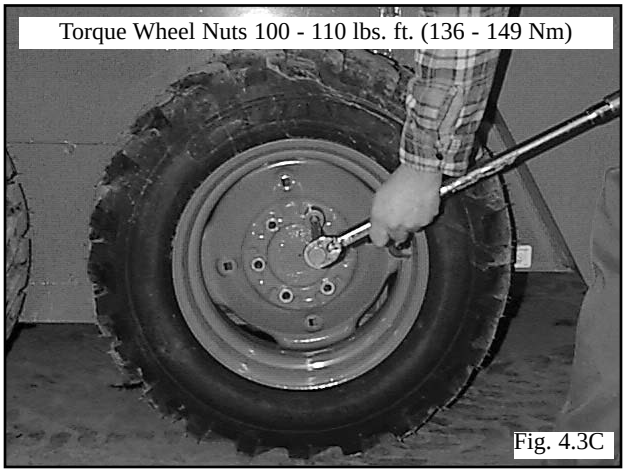

Fig. 4.3C

4. Safety Equipment

Check all safety equipment for proper operation and condition - seat belt, lift arm support, seat bar, steering neutral lock, parking brake, quick tach lock, shields and safety treads. Lubricate all linkages, springs and pivot points with a silicone based lubricant. Repair or replace if necessary.

5. Decals

Check the condition of all safety and instruction decals. Replace any damaged or missing decals. Refer to Section 5.3 for decal description and locations.

6. Lubrication

There are fourteen (14) grease fittings located in the loader that require lubrication every eight hours. Lubricate with a good quality multi-purpose lithium based grease. Apply grease until excess shows. Refer to the service schedule for complete service details. (See Fig. 4.3D). The fourteen (14) lubrication points are:

Rear Lift Arm Pivots (2)
Lift Cylinder Bushings (4)
Bucket Cylinder Bushings (4)
Quick Tach Pivot and Lock Pins (4)

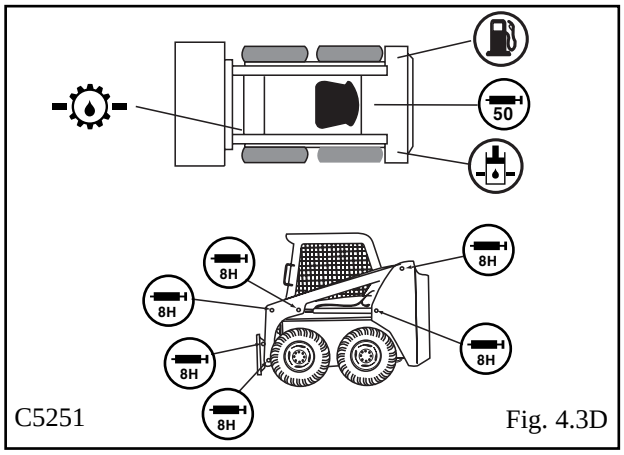

Fig. 4.3D

7. Engine Oil Level

Check the oil before engine start up. If the engine has been running let it cool for at least 5 minutes to allow the oil to drain back to the oil pan.

To check the oil level, check with the loader on level ground, open the rear door and remove the dipstick (Fig. 4.3E).

Keep the oil level between the full and low mark on the dipstick (Fig. 4.3F). Do not fill above the full mark. Use API Classification Ch-4 oil.

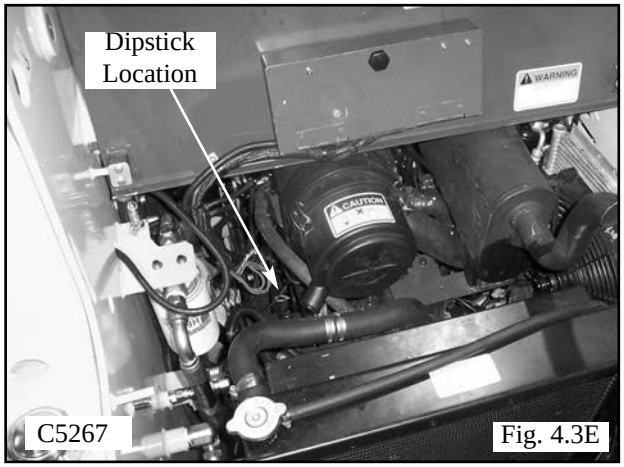

Fig. 4.3E

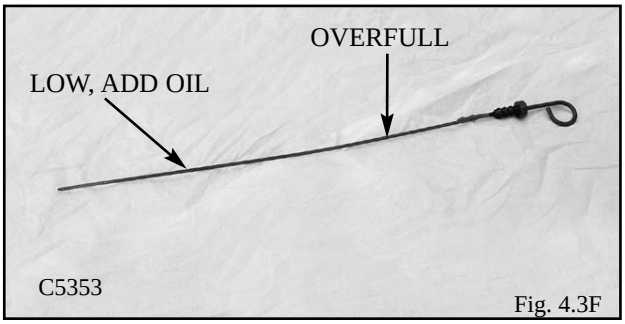

Fig. 4.3F

https://truckmanualshub.com/

8. Radiator / Oil Cooler Service

With the engine cool, check the coolant level in the overflow reservoir (fig. 4.3G). Ensure the coolant level is at the Full-Cold mark on the reservoir by adding 50% mixture of ethylene glycol and water if required.

The radiator and oil cooler fins must be kept free of debris otherwise overheating of the engine will occur. Inspect the radiator cooling fins for damage or buildup of debris. Repair any damage and if necessary flush the radiator with compressed air to remove debris.

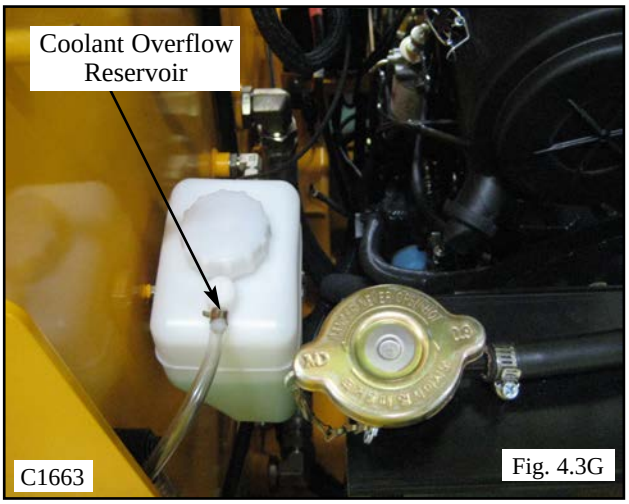

Fig. 4.3G

4. 4 50 HOUR SERVICE CHECK

The following service check is to be performed by your dealer after the first 50 hours of operation.

1 Engine

1.1 Oil and Filter:

Change the engine oil and filter. Use only original replacement parts. Change the oil every 200 hours thereafter. Change the filter every 200 hours thereafter.

1.2 Radiator:

Check the coolant level. If necessary flush the radiator with compressed air. A dirt buildup on the radiator cooling fins can cause both engine and hydraulic system overheating.

1.3 Fan Drive:

Inspect fan, bolts, v-belt and guard to ensure there is no buildup of dirt, trash, or wear. Use compressed air to clean the area.

1.4 Fuel System for Leaks:

Make a visual inspection of fuel system for leaks and potential hazards such as fuel line(s) touching exhaust manifold, flywheel, etc. Replace fuel filter every 300 hours.

1.5 Air Intake and Cleaner System:

Visually inspect the air cleaner system and be sure all hose clamps are secure and no hoses are damaged.

1.6 Exhaust System:

Visually inspect the exhaust system and ensure all clamps are secure and the manifold bolts/nuts are tight.

1.7 Engine Speed:

Check, and if necessary adjust engine RPM.

WARNING

To avoid personal injury, lower the lift arms, shut off the engine, raise the seat bar and cycle the hydraulics to ensure they are locked. Then, unlatch the seat belt and exit the loader. Do not enter or exit with the engine running unless as specified in this manual or under specific service and backhoe operating procedures.

IMPORTANT

Keep the rear door closed except for servicing. Make sure the door is closed and latched before operating the loader.

https://truckmanualshub.com/

2 Hydraulic/Hydrostatic

2.1 Hydraulic Oil Filter:

Change the hydraulic filter now and every 200 hours after the initial change. Lubricate the filter cartridge seal with system fluid.

2. 2 Hydraulic Oil Level:

If oil is visible in the oil level sight glass the level satisfactory. If not add oil.

2.3 Hoses and Pipes:

Make a visual inspection of all hydraulic lines and fittings for leaks. Check that steel lines do not touch one another.

2.4 Cylinders:

Inspect cylinders for leaks. Extend cylinders and check for rod damage.

2.5 Hydraulic Functions:

Check that the following operate properly: control valve float position, auxiliary hydraulic and hydraulic cylinders.

2.6 Pumps, Motors, and Controls Leakage:

Inspect pumps and motors for leaks.

2.7 Oil Cooler:

Inspect the oil cooler for leaks, fin damage or clogged with dirt. If necessary flush fins with compressed air.

3 Final Drive

3.1 Oil Level:

Check lubricating oil level. If necessary add oil.

3.2 Drive Chain Condition:

Check drive chains for any sign of wear or damage. Check lubrication oil in housing for signs of contamination.

3.3 Hydrostatic Motor Mounting Bolts:

Check torque 85 - 90 ft. lbs. (115 - 122 Nm)

3.4 Bearing End Play:

Check axle bearings for loss of bearing pre-load. If necessary, adjust the bearings for zero end play.

3.5 Axle Seal:

Inspect axle seal area. Clean area of debris build up and visually check for seal damage, replace as required.

4 Controls and Safety Equipment

Seat Bar Switch Check: Raise the seat bar and check that the hydraulic controls are not functional.

Seat Belt Switch Check: Unbuckle the seat belt and check that the hydraulic controls are not functional.

Seat Switch Check: With the seat bar down and the seat belt connected loosely around you, raise your weight off the seat and check that the hydraulic controls are not functional.

4.1 Engine Throttle Control:

Check that the throttle control operates freely without binding or slackening off due to vibration.

4. 2 Parking Brake:

Check that the parking brake engages and completely disengages. The park brake automatically engages with seat bar up.

4. 3 Lift Arm Supports:

Check that the lift arm support will operate without binding.

4.4 Quick-Tach, Operation & Linkage:

Ensure the quick-tach linkage operates smoothly without binding and engage completely.

4.5 Seat Belt:

Check seat belt condition. If necessary replace.

WARNING

To avoid personal injury: never repair or tighten hydraulic hoses or fittings with the engine running or the system under pressure.

https://truckmanualshub.com/

5 Electrical

5.1 Battery (s):

Maintenance Free.

5.2 Battery Terminals:

Check battery terminals for corrosion. If necessary, clean.

5.3 Starter Operation:

Engage and disengage the starter a few times to ensure it•s working properly. To prevent starter damage do not engage for more than 15 seconds. Allow 1 minute between starting attempts for cooling the starter.

5.4 Operation of Electrical Equipment:

Make a complete check of all electrical equipment, gauges, warning devices, pre- heater indicator, work lights, seat and seat belt switch, seat bar switch and all optional equipment to ensure they are operating correctly.

6 Grease/Lubrication

Lubricate the following points with a good quality grease every 8 hours. Numbers marked ( ) indicate the number of fittings at each location.

Rear Lift Arm Pivots (2)
Lift Arm Cylinder Bushings (4)
Bucket Cylinder Bushings (4)
Quick - Tach Pivot (4)

7 General

7. 1 Tire Pressure:

Check tire pressure and if necessary inflate to the following pressures:

10.00 x 16.5 . . . . . 40 - 45 PSI (207 - 241 kPa)

7. 2 Wheel Nut Torque:

Check and torque wheel nuts to 100 - 110 ft. lbs. (136 - 149 Nm).

7.3 Condition of Cab:

Inspect both the seat and seat belt. Ensure all safety and instruction decals are in place. Inspect sound insulation, side windows and door operation for machines equipped with cab enclosure kits. Inspect for structural damage and alterations to R.O.P.S.

7. 4 Condition of Shields and Safety Equipment:

Inspect and ensure all shields are in place and securely fastened. Inspect and ensure all safety equipment is working properly. Ensure owners and operators manual, safety manual and all safety and instruction decals are in place. If necessary, replace.

7. 5 General Condition:

Make a general inspection of the machine looking for loose or missing parts, oil leaks, etc.

4. 5 200 HOUR SERVICE CHECK

Initial 200 hour check should be performed by an authorized dealer.

1. It is recommended that the 50 hour check (see Section 4.4) be repeated at 200 hours.

https://truckmanualshub.com/

4. 6 FINAL DRIVE MAINTENANCE

1. Oil Level Check

The loader has two independent final drive housings. Check the lubricating oil level with the loader on a level surface. Remove the check plug (Fig. 4.6A) located on the front of the loader to determine the oil level. The oil level should be checked after 50 operating hours and every 200 hours thereafter. It is recommended the oil be changed after 1000 operating hours or if it shows signs of contamination.

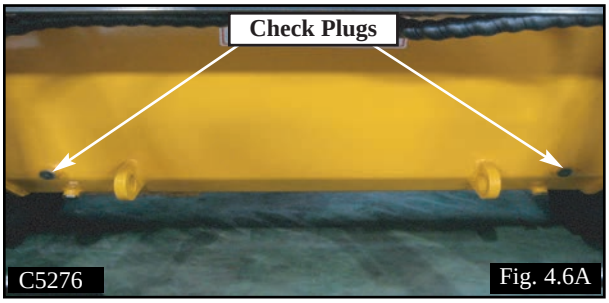

Fig. 4.6A

2. Adding Oil

Add oil with the loader on level ground. Remove the oil level check plug (Fig. 4.6A) on the final drive housing. Raise cab (Section 4.2) and remove the front foot shields. Remove the filler cap (Fig. 4.6B & Fig. 4.6C). Fill to the level of the check plug. (Fig. 4.6A)

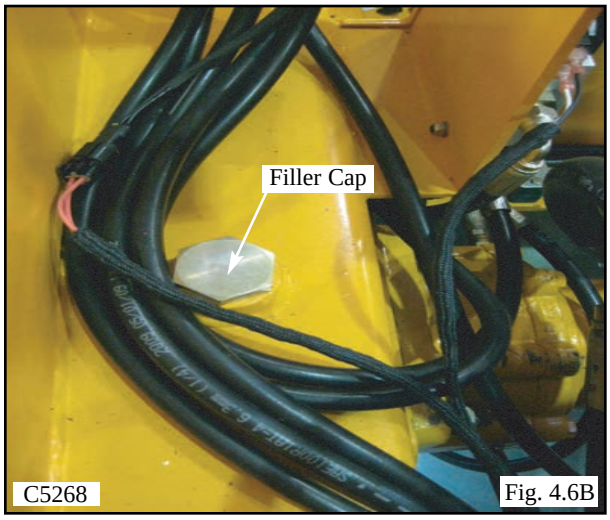

Fig. 4.6B

3. Drive Chain, Axle and Sprocket Inspection

The condition of the drive chains should be checked after the first 50 hours of operation and every 200 hours thereafter.

To inspect, block the loader securely with all four wheels off the ground. Remove both the front and rear wheels. On reassembly torque the wheel nuts to 100-110 ft. lbs. (136-149 N m). Remove the inspection cover on the side of the chain drive housing.

Inspect the chain for any sign of wear, damage or excessive looseness. Inspect the sprockets for any sign of damage or excessive wear. Inspect the lubricating oil for signs of contamination. Check the axle bearings for loss of bearing preload. If necessary adjust the bearings for zero end play.

Check the axle seals for leaking oil or damage. Replace seals at first sign of problem.

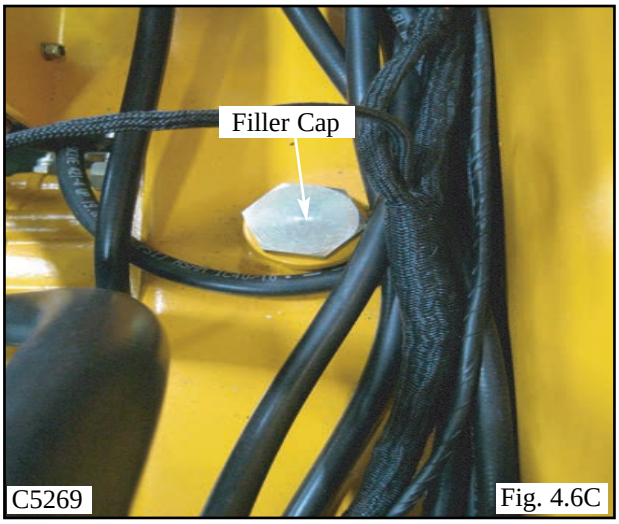

Fig. 4.6C

https://truckmanualshub.com/

4. 7 HYDRAULIC/ HYDROSTATIC SYSTEM MAINTENANCE

1. Oil Level Check

Check the oil level of the hydraulic reservoir with the machine on a level surface with the lift arms down and the attachment grounded. Shut off the engine. Open the rear door and check the oil level sight glass (Fig. 4.7A). If oil is apparent the level is satisfactory.

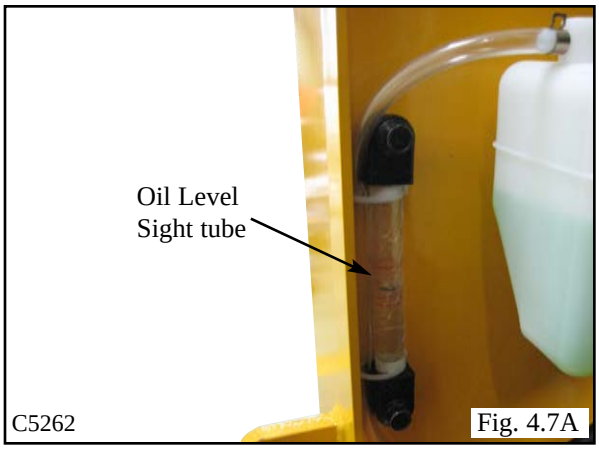

Fig. 4.7A

WARNING

WARNING: Escaping hydraulic fluid under pressure can penetrate the skin causing serious injury.

.DO NOT use your hand to check for leaks. Use a piece of cardboard or paper to search for leaks.

. Stop engine and relieve pressure before connecting or disconnecting lines.

. Tighten all connections before starting engine or pressurizing lines.

If any fluid is injected into the skin obtain medical attention immediately of gangrene may result.

https://truckmanualshub.com/

2. Adding Oil

To add oil, remove the oil filler cap located at the top of the oil reservoir (Fig. 4.7B). Check and ensure the filter screen in the filler neck is undamaged. Add ISO VG32 oil until oil is visible in the oil level sight glass (Fig. 4.7A).

3. Hydraulic Filter Replacement

The hydraulic oil filter (Fig. 4.7C) must be changed after the first 50 hours of operation and every 200 hours thereafter.

To change the filter; shut off the engine, lower the lift arms, ground any attachment and set the parking brake. Open the rear door and using an oil filter wrench remove the filter element. Lubricate the new filter seal with system fluid and reinstall hand tight.

4. Draining System Fluid

Change the hydraulic oil:

1. After 1000 operating hours.
2. If the oil has become contaminated.
3. After any major hydrostatic repair.

To drain the oil: remove the drain plug located at the bottom of the reservoir (Fig. 4.7D). Have a container(s) ready to hold approximately 20 gallons (76 liters) of fluid. Remove any metal particles stuck to the magnet. Seal the plug with teflon tape when replacing.

IMPORTANT

SUNBEAR recommends that you abide by all applicable enviromental regulations when disposing of oil.

WARNING

To avoid personal injury, lower the lift arms, shut off the engine, raise the seat bar and cycle the hydraulics to ensure they are locked. Then, unlatch the seat belt and exit the loader. Do not enter or exit with the engine running unless as specified in this manual or under specific service and backhoe operating procedures.

Fig. 4.7B

Fig. 4.7C

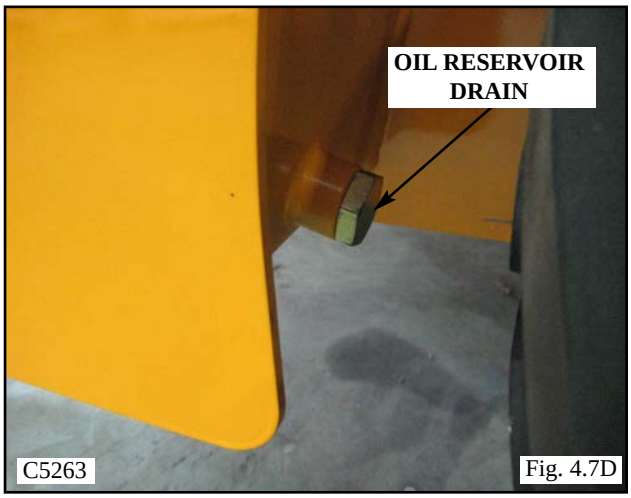

Fig. 4.7D

https://truckmanualshub.com/

5. Oil Cooler and Cooling Fan

Oil returning from the control valve is circulated through the oil cooler before being sent to other parts of the hydraulic system.

An engine cooling fan drives air through the oil cooler. Refer to Figure 4.7E.

The oil cooler should be checked daily for dirt buildup on the cooling fins. If the air flow is restricted through the cooling fins, overheating of the hydraulic system may occur. Clean any dirt buildup with compressed air. Flush with water if necessary. Figure 4.7E shows the radiator/oil cooler setup for the loader.

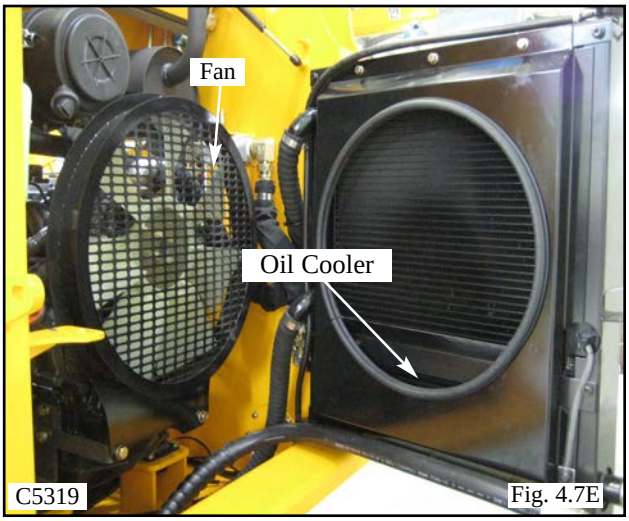

Fig. 4.7E

WARNING

To avoid eye injury always use safety goggles when cleaning with compressed air.

6. Brake Service Override

A service override has been incorporated for use by **SUNBEAR** Dealers. The normal position of the plunger is down and turned into the locked position (Fig. 4.7F).

To release the park brake, turn the release button counter -clockwise (Fig.4.7F). Go to the rear of the machine and pressurize the small quick coupler to 200 psi to release the park brake (Fig. 4.7G).

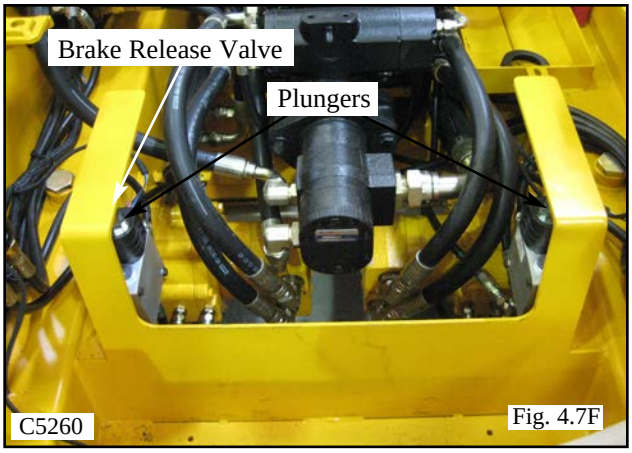

Fig. 4.7F

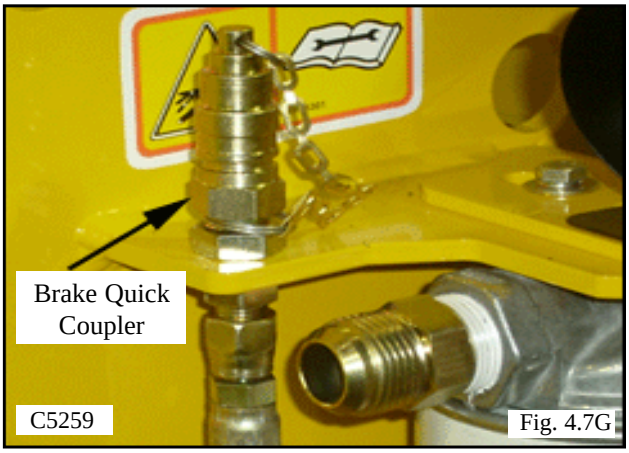

Fig. 4.7G

https://truckmanualshub.com/

4. 8 ENGINE MAINTENANCE

1. Engine Specification

Make	Cummins
Model	A2300T
No. of Cyls	4
Horsepower (Gross)	60
Power (ISO9249 Net Power)	44.7kW
High Idle	2800
Max. Torque	135(18.7kg/m@ 1600)
Displacement	139cid(2290cc)
Engine Oil	7.5 US qts.(7 L)
Firing Order	1-3-4-2
Alternator	45A
Oil Check	Daily
Oil Change	First@50 hrs.....Second@200 hrs.
Filter Change	First@50 hrs.....Second@200 hrs

2. Oil Level Check

Check the oil before engine start up. If the engine has been running let it cool for at least 5 minutes.

To check the oil level, stop the engine with the loader on level ground, open the rear door and remove the dipstick (Fig. 4.8A).

Keep the oil level between the full and low mark on the dipstick. Do not fill above the full mark.

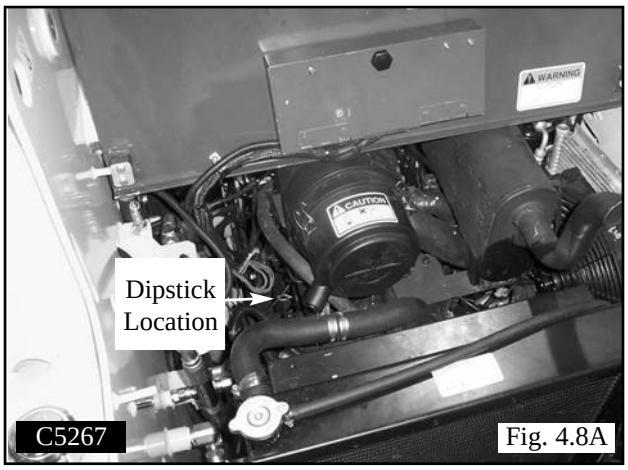

Fig. 4.8A

3. Engine Oil and Filter Replacement

Operate the engine until warm, approximately 5 minutes. Stop the engine. Remove the oil drain plug located at the bottom of the oil pan. Remove the oil filter (Fig. 4.8B). Clean the filter housing surface. Put clean oil on the seal of the new filter and install the filter hand tight.

Replace the oil drain plug. Remove the filler cap and add engine oil. Start the engine and run for 5 minutes. Stop the engine and check for leaks at the filter. Recheck the oil level and add oil until the level is at the top mark on the dipstick. Check daily and change every 200 hours.

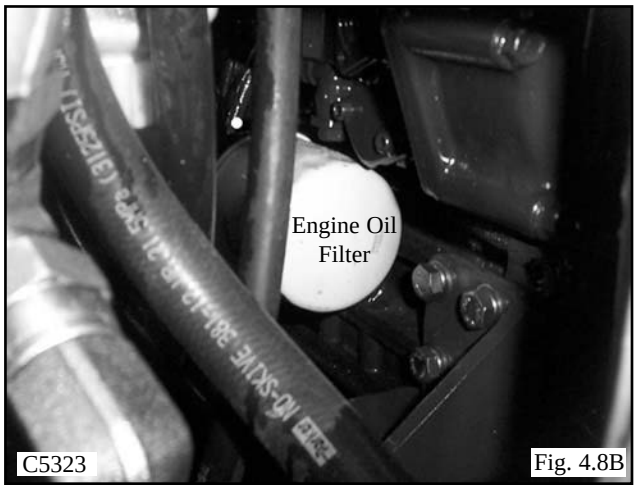

Fig. 4.8B

WARNING

To avoid personal injury: Stop, Cool and Clean the engine of flammable materials before servicing. Never service or adjust machine with engine running.

IMPORTANT

SUNBEAR recommends that you abide by all applicable enviromental regulations when disposing of oil.

https://truckmanualshub.com/

4. V-Belt Tension

Check the V-belt tension midway between the crankshaft pulley and alternator pulley (Fig. 4.8C). Deflection should be between 1/4 to 3/8 in. (7-9 mm).

WARNING

To avoid personal injury never add fuel to the loader when the engine is running or is hot. NO SMOKING.

5. Adding Fuel

Use No. 2 diesel fuel only. Total tank capacity 20 gal. (76L). Before adding fuel to the loader the key switch must be off and the engine must be cool. Remove the fuel cap (Fig. 4.8D). Use a clean approved safety container to add fuel. Add fuel only in an area that is well ventilated and away from open flames or sparks - NO SMOKING!

6. Fuel Filter /Water Separator

The fuel filter/water separator is located in the engine compartment on the right hand side (Fig. 4.8F). The fuel filter/water separator should be drained of water daily.

SHUT OFF ENGINE

Drain the water-fuel separator into a container and dispose of in accordance with local enviormental regulations. To drain, turn the drain valve (Fig.4.8G) on bottom of filter counterclockwise approximately 3-1/2 turns until the valve drops down 1" and draining occurs. Drain the filter sump until clear fuel is visible. To close the valve, lift the valve and turn clockwise until it is hand tight.

To replace the filter close the fuel inlet line shut - of f located on the side of the fuel tank (Fig. 4.8E). Remove the filter element (Fig. 4.8F). Lubricate the seal on the new filter and install the filter hand tight. Open the fuel inlet shut - off. It may be necessary to remove air from the fuel system after changing the filter element. (Refer to Section 4.8-7).

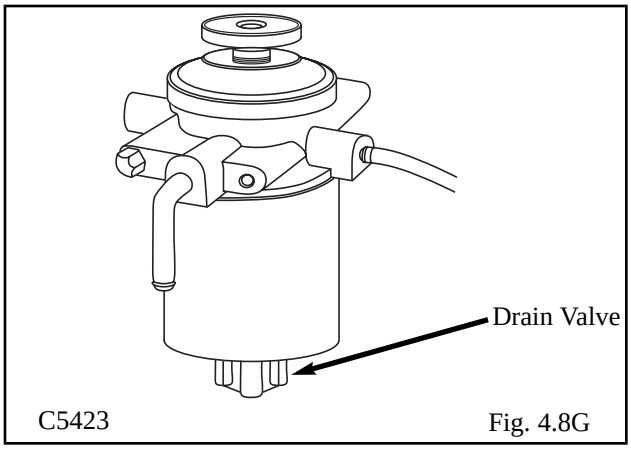

Fig. 4.8G

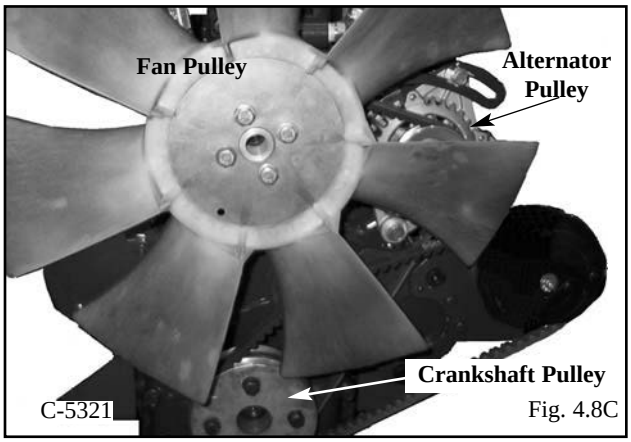

Fig. 4.8C

Fig.4.8D

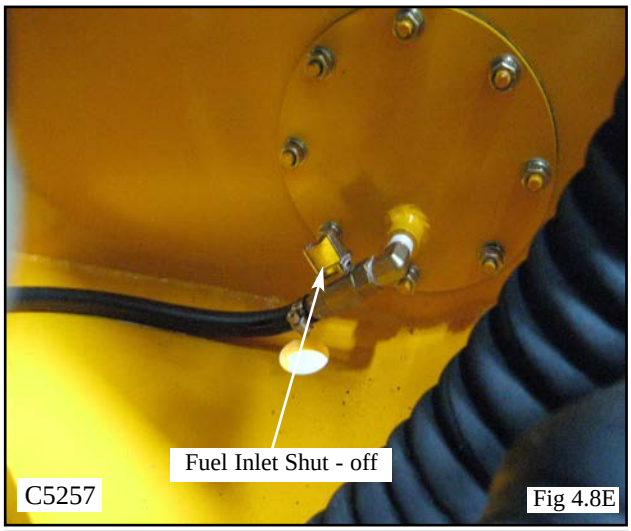

Fig 4.8E

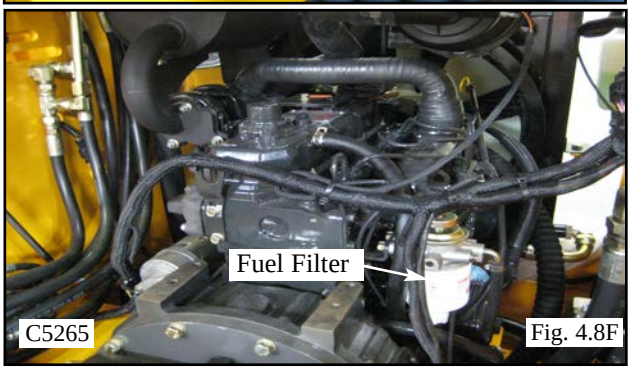

Fig. 4.8F

https://truckmanualshub.com/

7. Bleeding the Fuel System

Air must be removed from the fuel lines, after replacement of the fuel filter element, or when the tank has been run out of fuel, before starting the engine.

To remove air, ensure the fuel inlet shut-off located on the side of the fuel tank is open (Pg. 43, Fig. 4.8E). Open the air bleed screw on fuel filter head by turning it counter clockwise (Fig. 4.8H) . Operate the priming pump plunger until the fuel flowing from the bleed screw is free of air. Close the air bleed screw on the fuel filter head.

Bleed Low Pressure Fuel Lines

Note: Use this procedure only if the air bleed screw fails to remove air from the system.

Open fuel return line bleed screw on the pump (Fig. 4.8I). Hold the banjo bolt with a wrench while using a second wrench to open bleed screw.

Operate the plunger on the fuel filter head until the fuel flowing from the bleed screw is free of air.

Tighten the fuel return line bleed screw on the fuel pump using one wrench to hold banjo bolt while tightening the bleed screw with a second wrench.

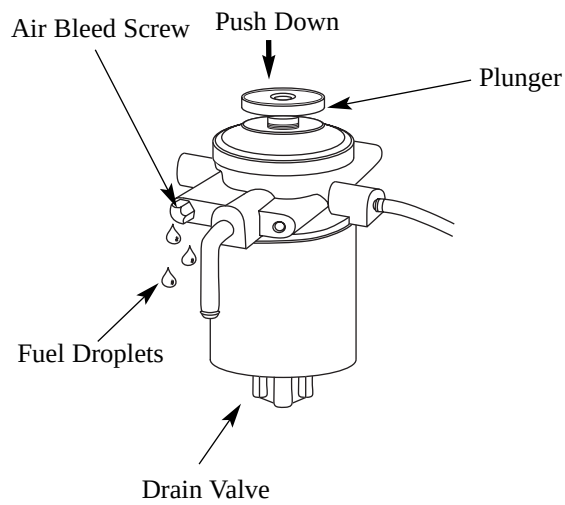

C5354 Fig. 4.8H

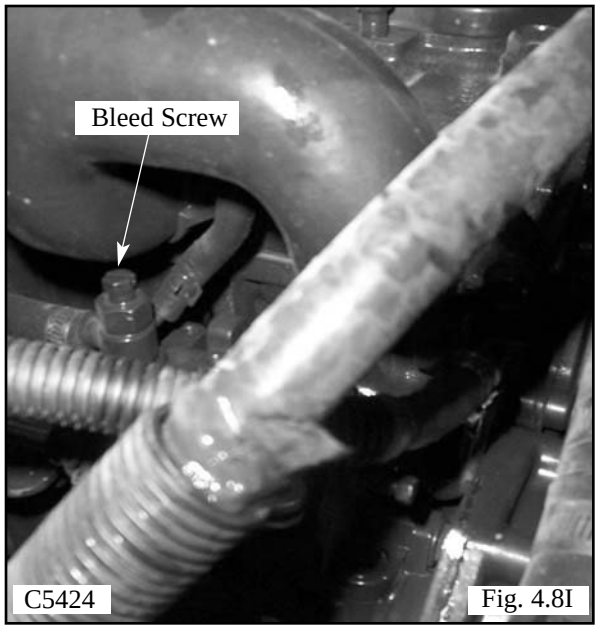

C5424 Fig. 4.8I

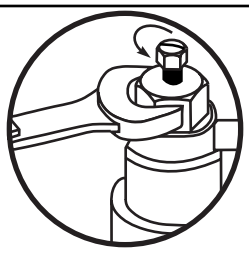

C5366 Fig.4.8J

https://truckmanualshub.com/

4. 9 AIR CLEANER MAINTENANCE

1. Daily Maintenance

Inspect the air cleaner canister for holes, dents, missing or mis-aligned gaskets. Check all hose clamps for tightness and inspect the hose and vacuator valve for damage (Fig. 4.9A).

2. Servicing Cleaner Element (Fig. 4.9B)

DO NOT open unless the indicator indicates a blocked filter or under normal scheduled servicing. To check the indicator, with the engine running, block half of the intake inlet and check the indicator on the dash panel. It should illuminate to simulate a blocked filter.

2.1 Unlatch and remove the cover assembly

2.2 Release The Seal Gently - The filter should be removed gently to reduce the amount of dust dislodged. Move the end of the filter up and down and side to side or twist to break the seal.

2.3 Avoid Dislodging Dust From The Filter - Gently pull the filter off the outlet tube. Avoid knocking the filter against the housing.

2.4 Always Clean The Sealing Surface Of The Outlet Tube - Dust on the outside diameter of the housing could hinder an effective seal.

2.5 Always Clean The Inside Of The Outlet Tube - Dirt inside of the outlet tube will reach the engine : it only takes 9 grams of dirt to dust an engine.

2.6 Check Your Old Filter - Inspecting your old filter will detect foreign material on the sealing surface that may causing leakage.

2.7 Inspect the new filter for seal or pleat damage.

2.8 Insert the new filter properly - The seal area is on the inside of the open end of the primary filter. A new filter has a dry lubricant to aid installation. The critical sealing area will stretch slightly, adjust itself and distribute the sealing pressure evenly. To complete a tight seal, apply pressure at the outer rim of the filter, not the flexible centre. No cover pressure is required to hold the seal.

2.9 Check connections and ducts for air tight fit - Make sure all clamps, bolts and connections are tight. Check for holes in piping. Leaks here send dust directly to the engine.

2.10 DO NOT reuse filters.

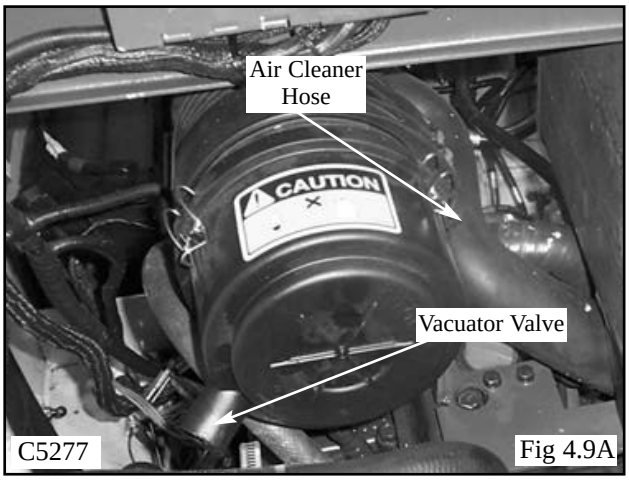

Fig 4.9A

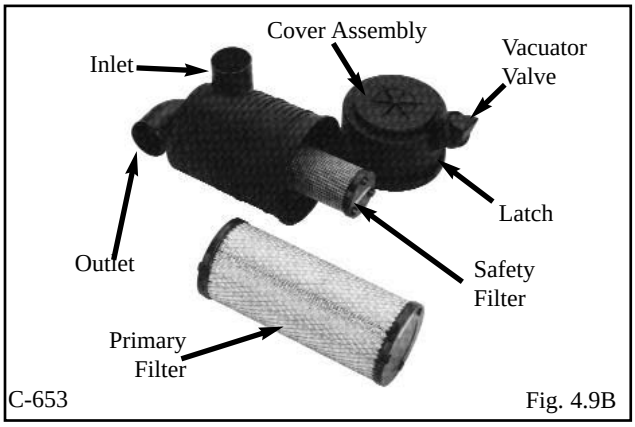

Fig. 4.9B

WARNING

To avoid personal injury: DO NOT charge a frozen battery because it can explode and cause personal injury. Let the battery warm to 60°F.(15.5°C.) before putting on a charger.

WARNING

To avoid personal injury, lower the lift arms, shut off the engine, raise the seat bar and cycle the hydraulics to ensure they are locked. Then, unlatch the seat belt and exit the loader. Do not enter or exit with the engine running unless as specified in this manual or under specific service and backhoe operating procedures.

https://truckmanualshub.com/

4. 10 ENGINE COOLING SYSTEM

The engine cooling system fluid is a 50-50 mixture of ethylene glycol anti-freeze and water for both cold-weather protection and boil over protection.

To drain the cooling system; locate the rad drain valve on the front right side of the radiator (Fig. 4.10B & 4.10C). Use the attached hose to direct coolant into an appropriate container and open valve to drain radiator.

To completely drain the engine, undo clamp and remove cap from the engine drain nipple located on the engine oil cooler (Fig. 4.10A) and attach a hose to drain coolant into a container. Remove the radiator cap.

To fill the cooling system; re-cap and clamp the drain nipple on the engine oil cooler (Fig. 4.10A) and close the radiator drain valve (Fig. 4.10B & 4.10C). Fill the radiator with a 50-50 mixture of ethylene glycol anti-freeze and water. Refit the radiator cap. (Fig. 4.10D)

WARNING **To avoid personal injury: DO NOT remove the radiator cap when the engine is hot.**

WARNING **To avoid personal injury never add coolant when the engine is running or is hot.**

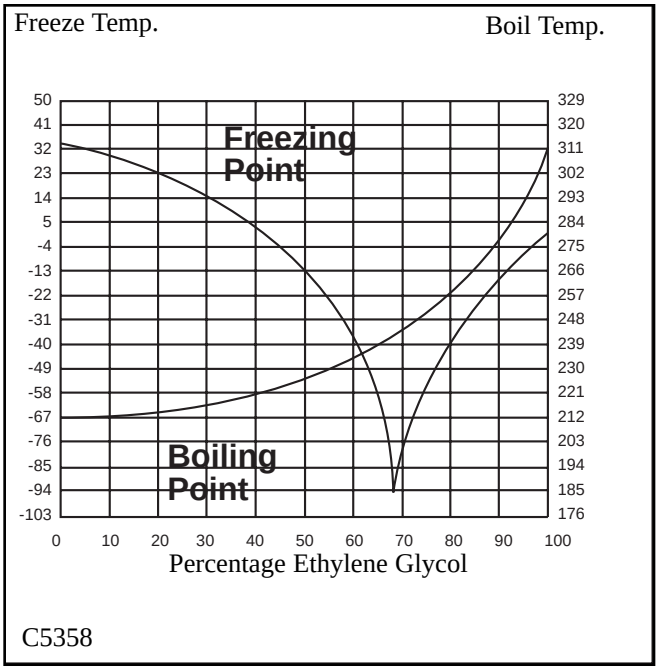

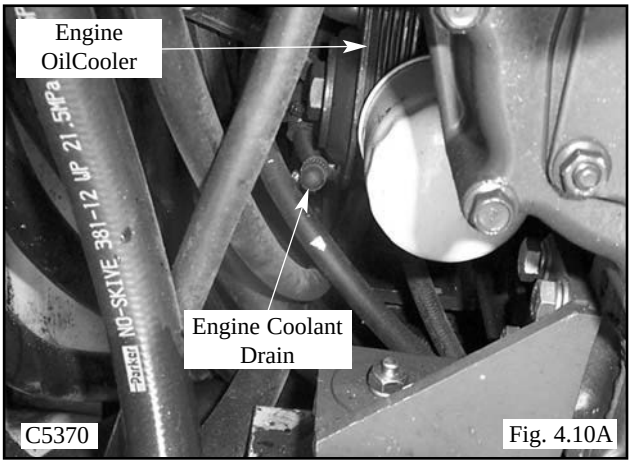

Fig. 4.10A

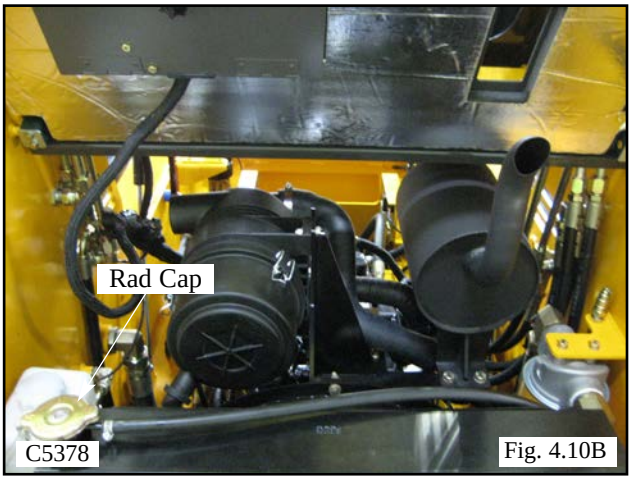

Fig. 4.10B

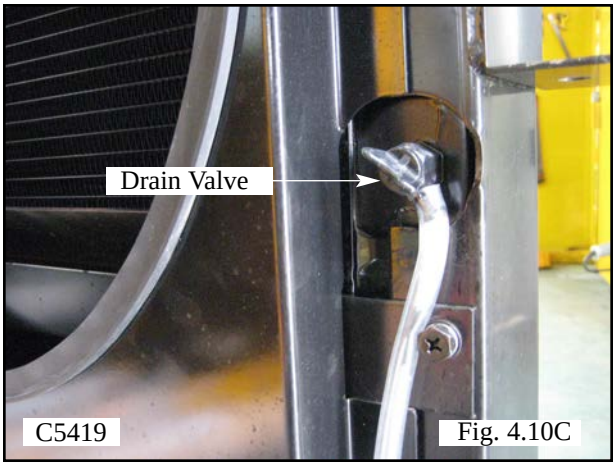

Fig. 4.10C

https://truckmanualshub.com/

4. 11 ELECTRICAL SYSTEM

1. Battery Maintenance and Boosting

Inspect the batteries on a regular basis for damage such as a cracked or broken case or cover which would allow electrolyte loss.

Check the battery cables for tightness and corrosion. Remove any acid corrosion from the battery and cables with a baking soda and water solution. Coat the terminal connections with di-electric grease.

If it is necessary to use a booster battery to start the engine, BE CAREFUL! There must be one person in the operators seat and one person to connect and disconnect the battery cables.

WARNING

Lead-acid batteries contain sulfuric acid which will damage the eyes or skin on contact. Always wear goggles to avoid acid in the eyes. If acid contacts the eyes, wash immediately with LARGE QUANTITIES of clean water and get medical attention. Wear rubber gloves and protective clothing to keep acid off the skin. If acid contacts the skin, wash off immediately with clean water.

WARNING

To prevent personal injury DO NOT charge a frozen battery because it can explode and cause personal injury. Let the battery warm to 60°F. (15.5°C.) before putting on a charger.

https://truckmanualshub.com/

2. ELECTRICAL SCHEMATIC, 1 OF 3

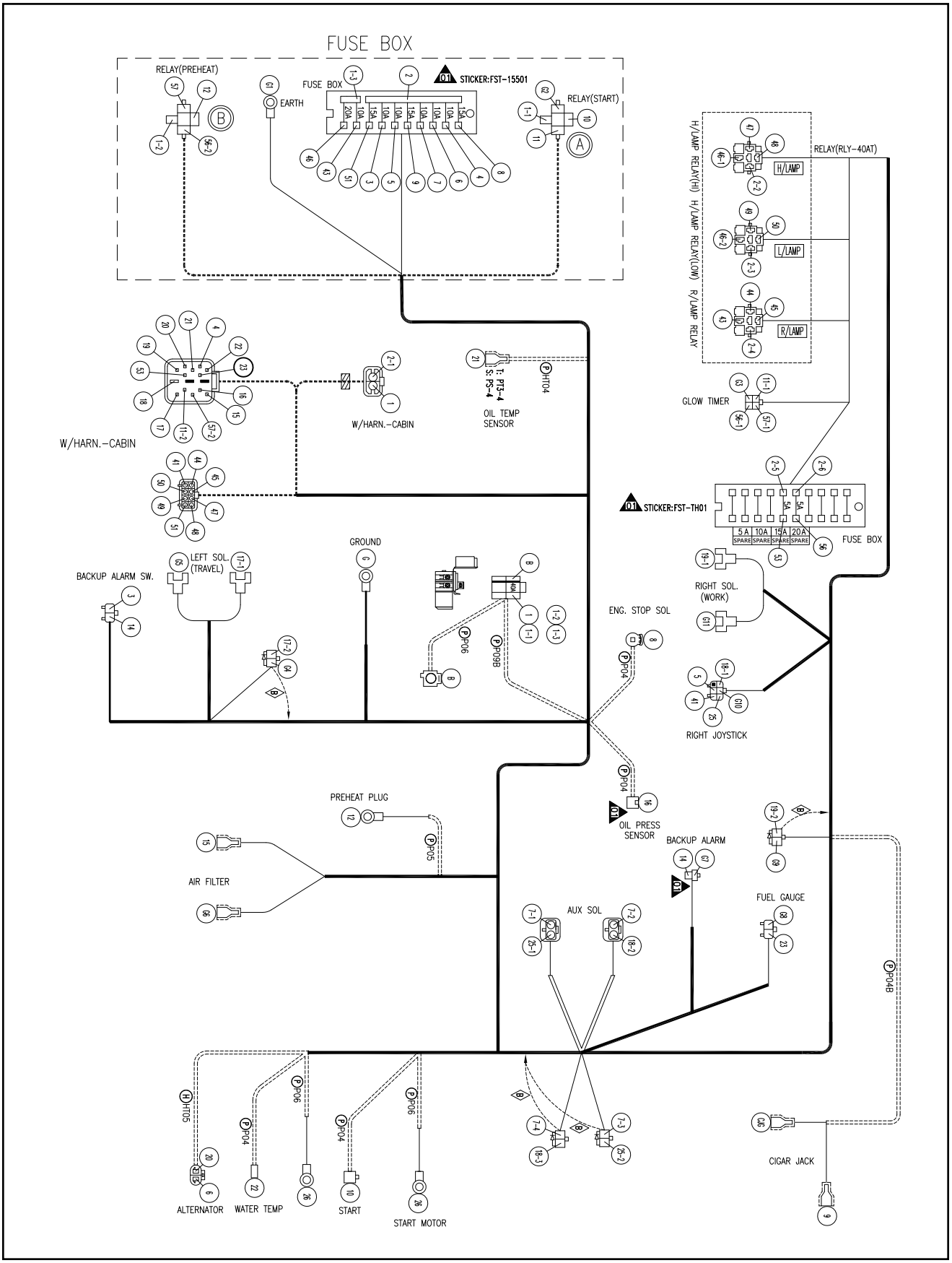

https://truckmanualshub.com/

2. ELECTRICAL SCHEMATIC, 2 OF 3

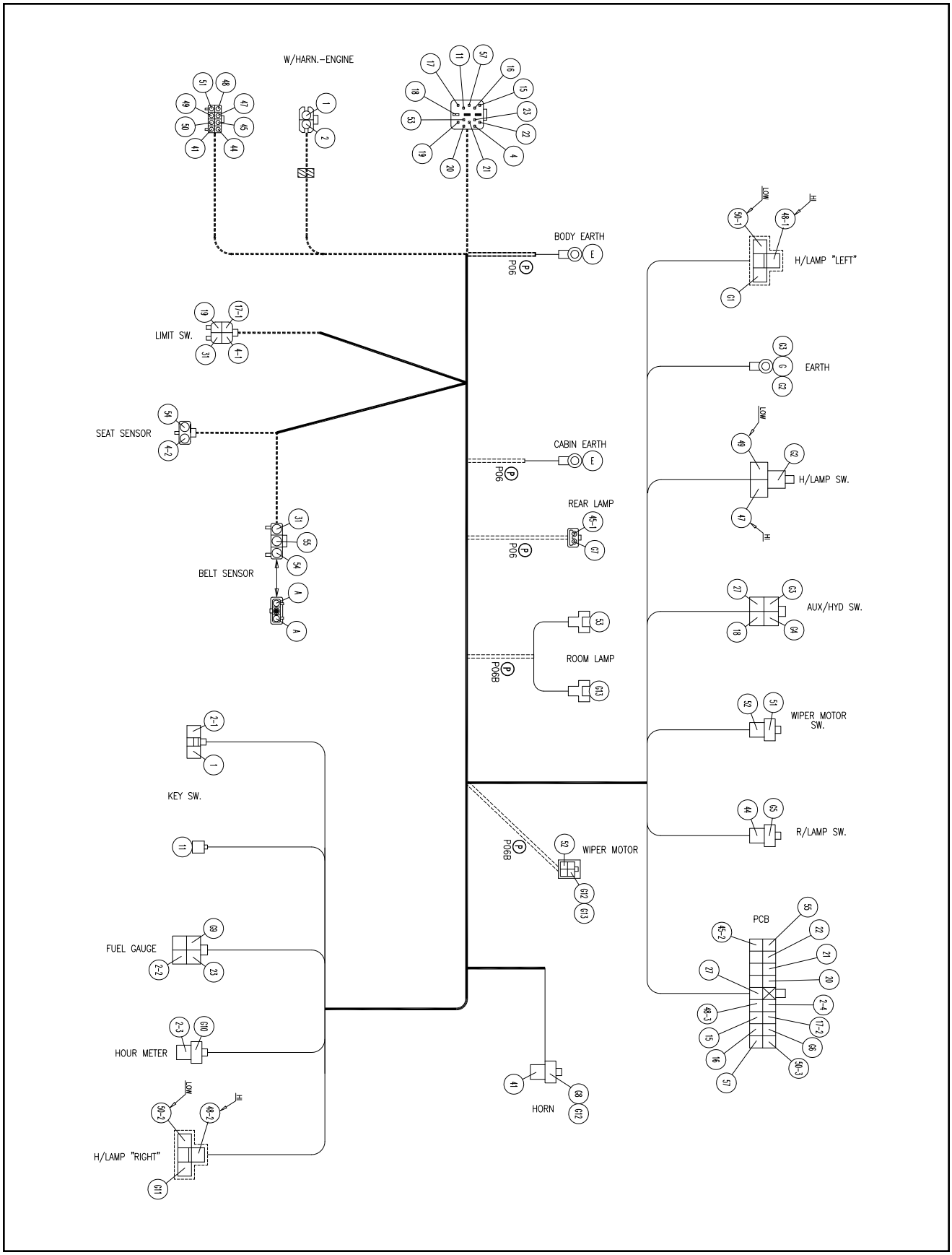

https://truckmanualshub.com/

2. ELECTRICAL SCHEMATIC, 3 OF 3

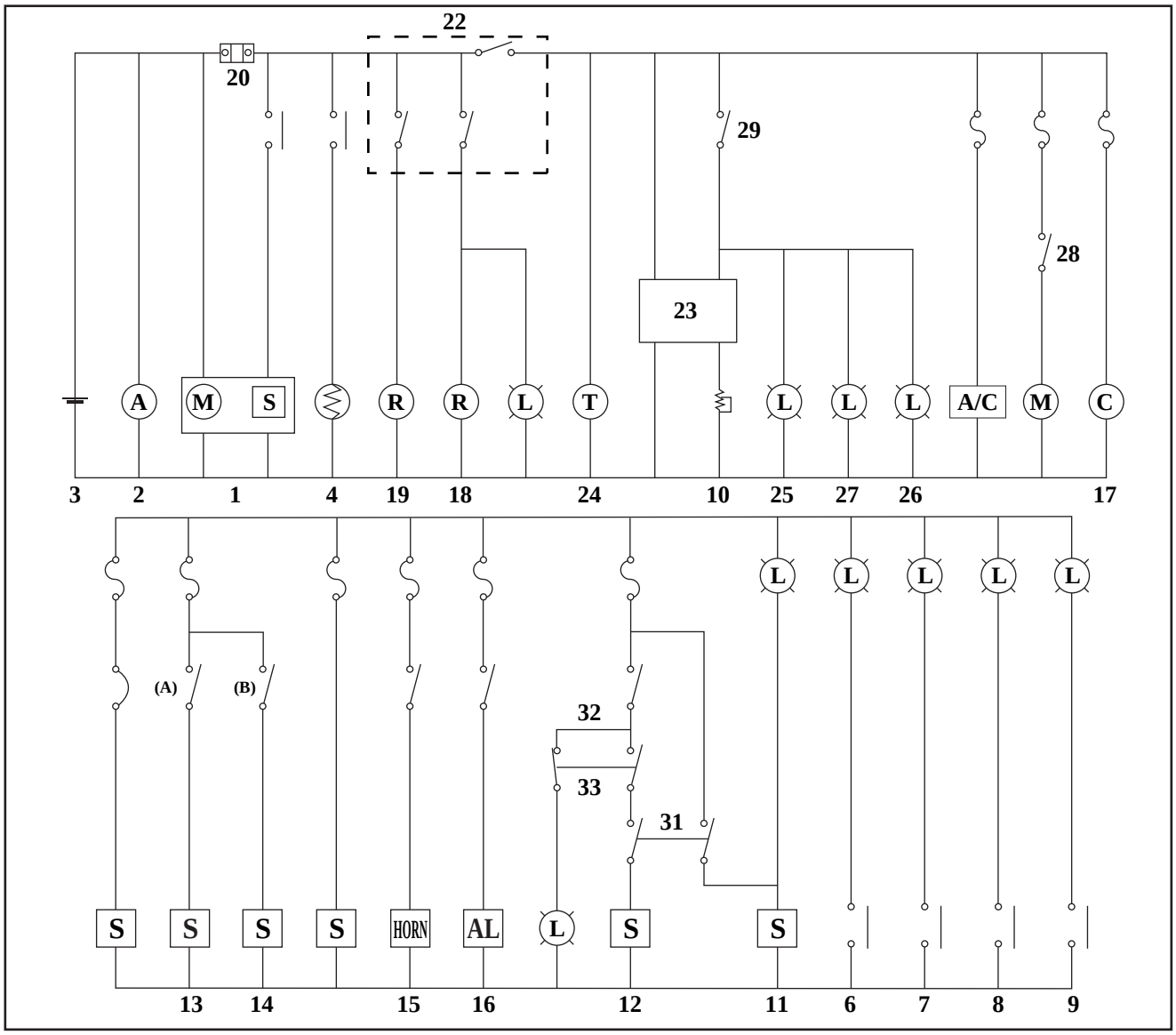

▣ INDEX (ELECTRICAL SCHEMATIC) ▣

1. Starter
2. Alternator
3. Battery
4. Glow plug
5. Engine Shut-off Solenoid
6. Air Filter Service Indicator
7. Engine Oil Pressure Indicator
8. Coolant Temp. Sender
9. Hyd. Oil Temp. Sender
10. Fuel Level Sender
11. Brake Valve Solenoid (Left)
12. Brake Valve Solenoid (Right)
13. Control Valve Solenoid (A)
14. Control Valve Solenoid (B)
15. Horn
16. Backup Alarm
17. Cigar Jack
18 Pre-heater Relay
19. Starter Relay
20. Circuit Breaker (40A)
21. Fuse Box
22. Iginition S/W
23. Fuel Gauge
24. Hour Meter
25. Work Light (Rear)
26. Work Light (Front, High)
27. Work Light (Front, Low)
28. S/W for the Wiper Motor
29. Toggle S/W for the Work Lights
30. Push Button S/W for the Aux.
31. Restraint Bar S/W
32. Seat S/W
33. Seat Belt S/W

https://truckmanualshub.com/

4. 12 TIRE MAINTENANCE

1. Tire Inflation and Service

1.1 Upon receiving your loader, check the air pressure in the tires as indicated in the tables.

1.2 Check tire pressure every 8 hours.

1.3 Tire inflation pressure affects the amount of weight which a tire may carry. Do not over-or-under inflate the tires.

1.4 Do not re-inflate a tire that has been run flat or seriously under-inflated until the tire has been inspected for damage by a qualified person.

1.5 When checking tire pressure, inspect the tire for damaged side walls and tread cuts. Neglected damage will lead to early tire failure.

1.6 Be sure the rim is clean and free of rust.

1.7 Lubricate both tire beads and rim flanges with soap solution. Do not use oil or grease.

WARNING

To avoid personal injury: Inflating or servicing tires can be dangerous. Trained personnel should be called to service and/or mount tires when possible. In any event to avoid possible serious or fatal injury, follow the safety precautions below.

1.8 Use a clip-on tire chuck with a remote hose and gauge which allows the operator to stand clear of the tire while inflating it.

1.9 After seating the beads, adjust inflation pressure to recommended operating pressure.

1.10 Do not inflate a tire unless the rim is mounted on the loader or is secured so that it will not move if the tire or rim should suddenly fail.

1.11 Do not weld, braze, or otherwise repair a rim, Do not use a damaged rim.

1.12 Never attempt tire repairs on a public road or highway.

1.13 Use jack stands or other suitable blocking to support the loader while repairing tires

1.14 Insure jack has adequate capacity to lift your loader.

1.15 Insure jack is placed on a firm level surface.

1.16 Do not put any part of your body under the loader or start the engine while the loader is on the jack.

1.17 Torque lug nuts to specification after reinstalling wheel. Check lug nut torque hourly until torque stabilizes.

TIRE	Inflation Pressure
10.00 x 16.5	40-45 PSI (276 - 310 kPa)

2. Tire Rotation

The front and rear tires will wear at different rates. For even wear move the front tires to the rear and the rear tires to the front when wear is first noticed.

If two tires become worn more than the other two put the two worn tires on the same side.

When new tires are installed, always keep tires the same size on the same side of the loader. Two different size tires on the same side of the loader will cause drive chain wear, tire wear and a loss of power.

WARNING

NEVER INFLATE TIRES TO OVER 240 kPa (35 PSI) TO SEAT BEADS. If beads have not seated by the time pressure reaches 240 kPa (35 PSI), deflate the assembly, reposition the tire on the rim, relubricate both tire beads, rim flanges and re-inflate. INFLATION Beyond 240 kPa (35 PSI) with unseated beads may break the bead or rim with EXPLOSIVE force, sufficient to cause serious injury.

https://truckmanualshub.com/

4. 13 TROUBLESHOOTING

1. Hydraulic System

Problem	Cause	Remedy
Loss of hydraulic power (no flow from gear pump)	Reservoir low on fluid.	Add oil and check for leaks.
	Coupling between engine and pump failure.	Inspect and replace damaged parts. Check for misalignment between engine and pumps.
	Spline coupling failure between front and rear hydrostatic pump.	Inspect coupling for sheared splines. Also check pump shaft bearings.
	Hydraulic gear pump not functioning.	Inspect and repair.
Loss of hydraulic power (flow from gear pump)	Reservoir low on fluid.	Add oil and check for leaks.
	Auxiliary hydraulics engaged.	Release auxiliary hydraulics.
	Relief valve failure in control valve.	Check pressure and adjust.
Hydraulic action jerky	Reservoir low on oil.	Add oil and check for leaks.
	Air in hydraulic system.	Check for leak between reservoir and pump. Bleed system by extending and retracting lift cylinders several times.
	Anticavitation check valve not functioning.	Inspect and repair or replace.
Hydraulic System Overheating	Engine fan not turning.	Clean cooling fan and repair or replace.
	Broken hydraulic fluid line.	Repair or replace damaged line and add oil.
Lift arms raise slowly at full engine RPM	Reservoir low on oil.	Add oil.
	Liftarm release valve engaged.	Ensure switch is off, valve is closed.
	Auxiliary engaged.	Disengage.
	Engine RPM too slow.	Check RPM and reset.
	Anticavitation check valve spring broken.	Replace.
	Main relief or port relief valve in control valve faulty.	Check pressure, if necessary - adjust.
	Internal leakage in pump due to wear.	Check pump flow and repair or replace as necessary.
	Oil bypassing one or both lift cylinder piston seals.	Install new piston seal kits.
Lift or tilt cylinders will not support a load	External leak between or at control valve and cylinders.	Check for leaks and correct.
	Control valve spool not centering.	Pilot hydaulic pressures not even.
		Check for broken or stuck return spring on valve spool.
	Oil leaking by one or both cylinder piston seals.	Install new piston seal kits.
Hydraulic fluid overheating	Reservoir low on fluid.	Add oil.
	Oil cooler plugged or dirty (also check engine radiator).	Clean cooling fins.
	Auxiliary engaged.	Disengage.

https://truckmanualshub.com/

1. Hydraulic System (Continued)

Problem	Cause	Remedy
Hydraulic fluid overheating (continued)	Engine RPM too slow	Check RPM and adjust.
	Incorrect temperature sensor	Replace.
Auxiliary hydraulic does not function.	Fuse blown.	Correct fault and replace fuse.
	Solenoid coils on control valve not working.	Replace
	Check valve in control valve not working.	Repair or replace.

2. Hydrostatic Drive

Problem	Cause	Remedy
No power on one side (both directions).	Reservoir low on oil.	Add oil and check for hose or fitting leak.
	Pilot hydraulic line failure.	Replace line.
	High pressure line failure.	Replace line. Ensure new line fits without being forced. If necessary stress relieve.
	Drive chain failure.	Replace chain or connection link.
	Motor shaft or key failure.	Inspect and repair defective parts. Check motor mounting bolts.
	Excessive internal leakage in motor and/or pump.	Inspect and repair defective unit. Flush all lines and tank. Replace filter. Check on type of fluid used and engine RPM.
	Defective relief valve.	Replace defective valve.
No power on one side (one direction only).	Pilot hydraulic line failure.	Replace line.
	Reservoir low on oil.	Add oil and check for hose or fitting leak.
No power on both sides (also loss of hydraulic power).	Coupling failure between engine and pump.	Inspect and replace damaged parts.
	Brake valve not releasing.	Repair/replace.
	Drive coupling between front and rear pump failure.	Inspect couplings for sheared splines, replace. Also check support bearings in pumps.
	Check system pressure.	If low contact your SUNBEAR dealer.
	Excessive internal leakage in pump and/or motor.	Consult your Thomas SUNBEAR dealer.
Gradual loss of power as machine warms up.	Air in system due to low oil level in reservoir.	Bleed air from the system and add oil.
System erratic and/or noisy.	Air in system due to leak at suction fitting.	Check fittings and tighten.
	Internal pump or motor wear caused by overspeeding.	Consult your SUNBEAR dealer.
	Air in system due to leak at oil reservoir.	Check fitting and tighten.
Machine will not travel in a straight line.	Pressure failure in hydraulic pump.	Check and adjust.

https://truckmanualshub.com/

3. Final Drive Transmission

Problem	Cause	Remedy
Final drive transmission noisy	No lubricating oil	Check and bring oil to the proper level.
	Axles have too much end play	Check and adjust.
	Parking brake damaged or out af adjustment	Inspect and adjust or replace damaged parts.
	Chain loose	Replace the chain.

4. Control Levers

Problem	Cause	Remedy
Control levers will not center.	Joystick will not center.	Adjust or replace.
Machine operates erratically.	Pilot hydraulic line leaking.	Replace hydraulic line.
	Failure in hydraulic line.	Check and repair.
Machine will not travel in a straight line.	Pilot hydraulic line leaking.	Replace hydraulic line.

5. Electrical

Problem	Cause	Remedy
Engine will not crank over.	Battery failure.	Check battery - charge or replace.
	Battery cable failure.	Check for loose or corroded connectors. Tighten and clean as required. Use di-electric grease to prevent corrosion.
		Check continuity of cables and replace.
	Starter failure.	Repair or replace.
	Fuse burnt.	Check and replace.
	Defective relay.	Check relay continuity. If defective, replace.
	Ignition switch failure.	Check continuity, repair or replace.

https://truckmanualshub.com/

5. Electrical (Continued)

Problem	Cause	Remedy
Engine cranks over, but will not start.	Auxiliary hydraulics engaged	Engine will smoke, but not run unassisted by starter. Disengage auxiliary hydraulics.
	Defective glow plug relay.	Check continuity and if defective, replace.
	Defective glow plug.	Check continuity and if defective, replace.
	Broken connection or defective wire.	Disconnect the ROPS harness from the engine harness. Open the dash panel and check continuity of the circuit not functioning properly in both engine and ROPS harness.
	No fuel.	Check fuel levels and system.
Loader starts, but hydraulic controls will not release.	Electric solenoids not releasing valve.	Defective solenoid or solenoid lock. Loosen screws and readjust. Check continuity of connectors and wire.

6. Engine

Problem	Cause	Remedy
Engine does not start.	No fuel.	Replenish fuel.
	Air in the fuel.	Vent air.
	Water in the fuel.	Change fuel and repair or replace fuel system.
	Fuel pipe clogged.	Clean.
	Fuel filter clogged.	Clean or change.
	Excessively high viscosity of fuel or engine oil at low temperature.	Use the specified fuel or engine oil.
	Fuel with low octane number.	Use the specified fuel.
	Fuel leak due to loose injection pipe retaining nut.	Tighten nut.
	Incorrect injection timing.	Adjust.
	Fuel cam shaft worn.	Replace.
	Injection nozzle clogged.	Clean.
	Injection pump malfunctioning.	Repair or replace.
	Seizure of crankshaft, camshaft, piston, cylinder liner or bearing.	Repair or replace.
	Compression leak from cylinder.	Replace head gasket, tighten cylinder head bolt, glow plug and nozzle holder.
	Improper valve timing.	Correct or replace timing gear.
	Piston ring and liner worn.	Replace.
	Excessive valve clearance.	Adjust.

https://truckmanualshub.com/

6. Engine (Continued)

Problem	Cause	Remedy
Starter does not run.	Battery discharged.	Charge.
	Starter malfunctioning.	Repair or replace.
	Key switch malfunctioning.	Repair or replace.
	Wiring disconnected.	Connect.
Engine revolution is not smooth.	Fuel filter clogged or dirty.	Clean or change.
	Air cleaner clogged.	Clean or change.
	Fuel leak due to loose injection pipe retaining nut.	Tighten nut.
	Injection pump malfunctioning.	Repair or replace.
	Incorrect nozzle opening pressure.	Adjust.
	Injection nozzle stuck or clogged.	Repair or replace.
	Fuel overflow pipe clogged.	Clean.
	Governor malfunctioning.	Repair.
Either white or blue exhaust gas is observed.	Excessive engine oil.	Reduce to the specified level.
	Low grade fuel used.	Repair or replace.
	Fuel filter clogged.	Adjust.
	Air cleaner clogged.	Adjust top clearance.
Either black or dark gray exhaust gas is observed.	Overload.	Lessen the load.
	Low grade fuel used.	Use the specified fuel.
	Fuel filter clogged.	Clean or change.
	Air cleaner clogged.	Clean or change.
Excessive lubricant oil consumption.	Piston rings gap facing the same direction.	Shift gap direction.
	Oil ring worn or stuck.	Replace.
	Piston ring groove worn.	Replace.
	Valve stem and guide worn.	Replace.
	Crankshaft bearing and crank pin bearing worn.	Replace.
Fuel mixed into lubricant oil.	Injection pump's plunger worn.	Replace pump element or pump.
	Injection pump broken.	Replace.
Water mixed into lubricant oil.	Head gasket defective.	Replace.
	Cylinder block or cylinder head flawed.	Replace.
Low oil pressure.	Engine oil insufficient.	Replenish.
	Oil strainer clogged.	Clean.
	Relief valve stuck with dirt.	Clean.
	Relief valve spring weakened or broken.	Replace.
	Excessive oil clearance of crankshaft bearing.	Replace.
	Excessive oil clearance of crank pin bearing.	Replace.
	Excessive oil clearance of rocker arm bearing.	Replace.
	Oil passage clogged.	Clean.
	Oil pump defective.	Replace.
High oil pressure.	Different type of oil.	Use the specified oil type.
	Relief valve defective.	Replace.

https://truckmanualshub.com/

6. Engine (Continued)

Problem	Cause	Remedy
Engine overheated.	Engine oil insufficient.	Replenish.
	Fan belt broken or elongated.	Change or adjust.
	Cooling water insufficient.	Replenish.
	Radiator net and radiator fin clogged with dust.	Clean.
	Inside of radiator corroded.	Clean or replace.
	Cooling water flow route corroded.	Clean or replace.
	Radiator cap defective.	Replace.
	Overload running.	Loosen the load.
	Head gasket defective.	Replace.
	Incorrect injection timing.	Adjust.
	Unsuitable fuel used.	Use the specified fuel.
Deficient output.	Incorrect injection timing.	Adjust.
	Engine's moving parts seem to be seizing.	Repair or replace.
	Uneven fuel injection.	Repair or replace injection pump.
	Deficient nozzle injection.	Repair or replace nozzle.
	Compression leak.	Replace head gasket, tighten cylinder head bolt, glow plug and nozzle holder.
Battery quickly discharges.	Battery electrolyte insufficient.	Replenish distilled water recharge.
	Fan belt slips.	Adjust belt tension or charge.
	Wiring disconnected.	Connect.
	Rectifier defective.	Replace.
	Alternator defective.	Replace.
	Battery defective.	Change.

https://truckmanualshub.com/

4.14 HYDRAULIC / HYDROSTATIC CIRCUIT

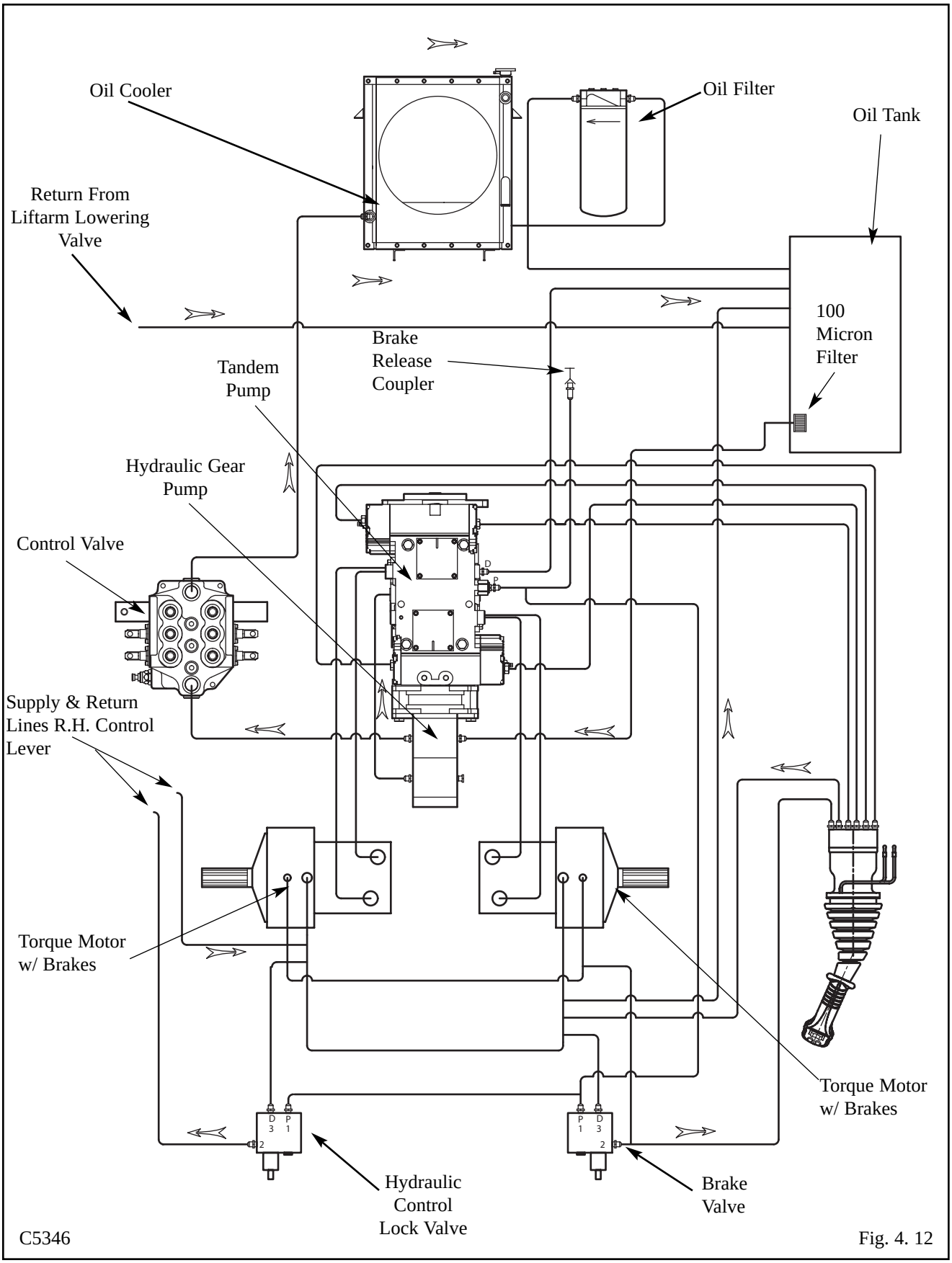

Fig. 4. 12

https://truckmanualshub.com/

4.14 HYDRAULIC CIRCUIT

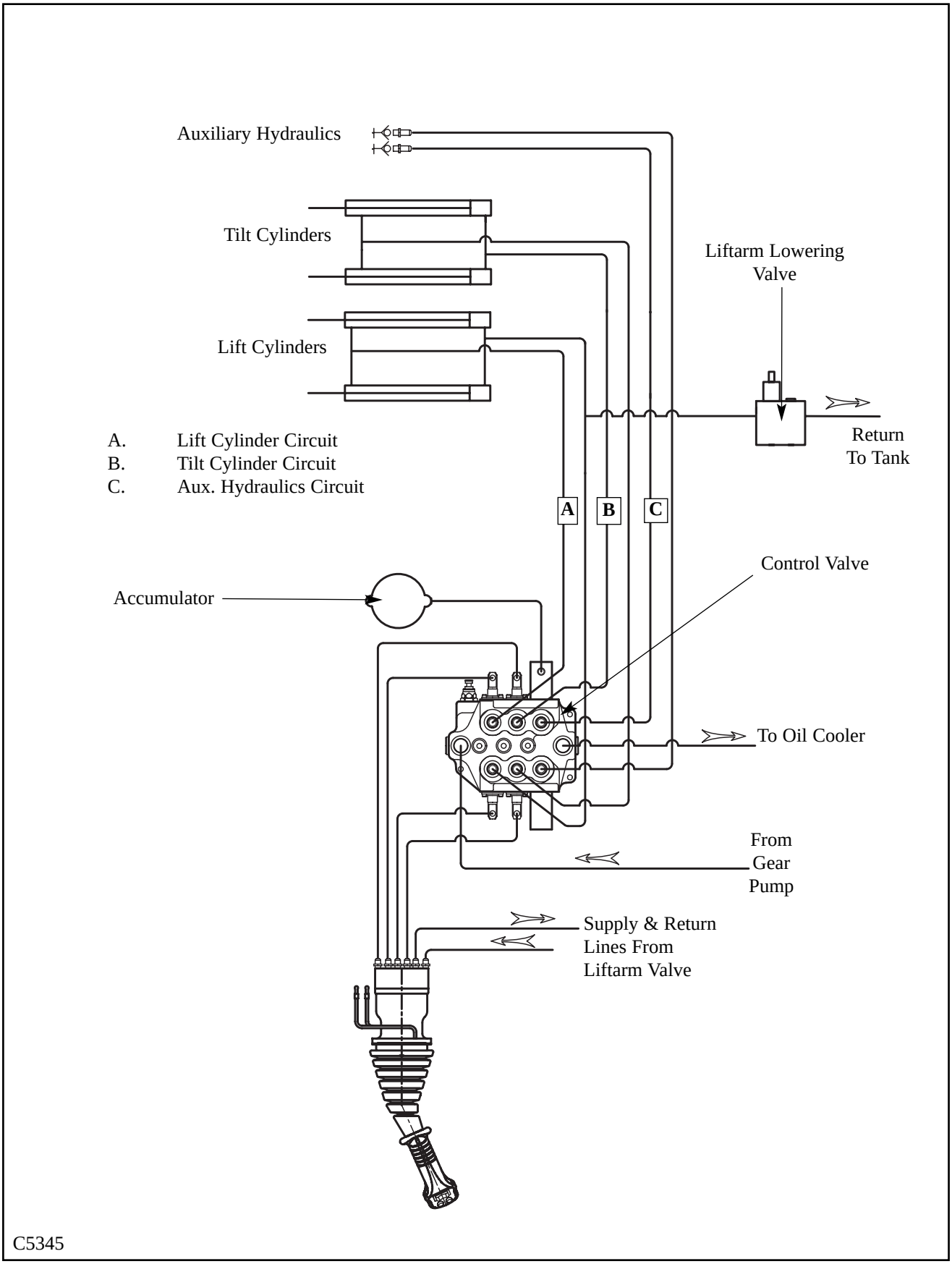

https://truckmanualshub.com/

4.15 SPECIAL TOOLS

Part #	ILLUSTRATION	DESCRIPTION	OPTION(O/X)
962201	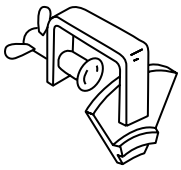 C3651	**SEAL INSTALLATION TOOL:** To install axle seal in final drive housing. Qty. 3 required	O
955283 (6 Bolt)	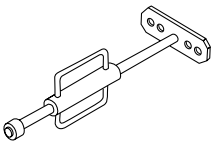 C3652	**AXLE EXTRACTOR TOOL:** To remove axle from final drive housing. Qty. 1	O
960475 (8 Bolt)	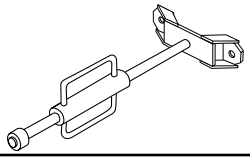 C3653	**AXLE EXTRACTOR TOOL:** To remove axle from final drive housing. Qty. 1	O
955287	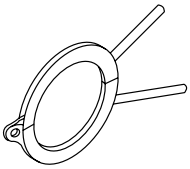 C3655	**SEAL INSTALLATION TOOL:** To install axle seal in final drive housing. Qty. 1	O
964613	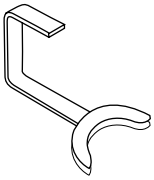 C3657	**SEAL INSTALLATION TOOL:** To install axle seal in final drive housing. Qty. 2 required	O
960997	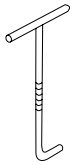 C3658	**CHAIN TENSION TOOL:** To test chain tension.	O

https://truckmanualshub.com/

4.15 SPECIAL TOOLS (Cont'd)

Part #	ILLUSTRATION	DESCRIPTION	OPTION (O/X)
U-1288	**Universal Tool Kit**	**UNIVERSAL TOOL KIT:** 1 each. Combination wrench 7/16", 1/2", 9/16", 11/16", 3/4", 1 1/16", 1 1/4". Sockets, 1", 1/2" drive, 7/8", 1/2" drive, tool pouch, allen wrench 5/32" and 1/8".	O
43979	C1840	**CHAIN PULLER**	O
43980	C1841	**SPANNER WRENCH 2" - 4 3/4":** To Repair Hydraulic Cylinders	O
43981	C1837	**PHOTO SENSOR / WHEEL SPEED TACHOMETER** (Dual Function)	O

https://truckmanualshub.com/

4.15 SPECIAL TOOLS (Cont'd)

Part #	ILLUSTRATION	DESCRIPTION	OPTION (O/X)
	C2342	**MULTI METER:** For measuring continuity, voltage, etc.	O
	C2343	**ANGLE FINDER:** For measuring control angles, U-joint and chassis angles etc.	O
960456		HYDRAULIC FLOW and PRESSURE GAUGE ASSEMBLY	O

https://truckmanualshub.com/

NOTES:

https://truckmanualshub.com/

5. SPECIFICATIONS

5. SPECIFICATIONS

5. 1 Loader Specifications
5. 2 Torque Specifications
5. 3 Decals

https://truckmanualshub.com/

5. SPECIFICATIONS

5.1 LOADER SPECIFICATIONS

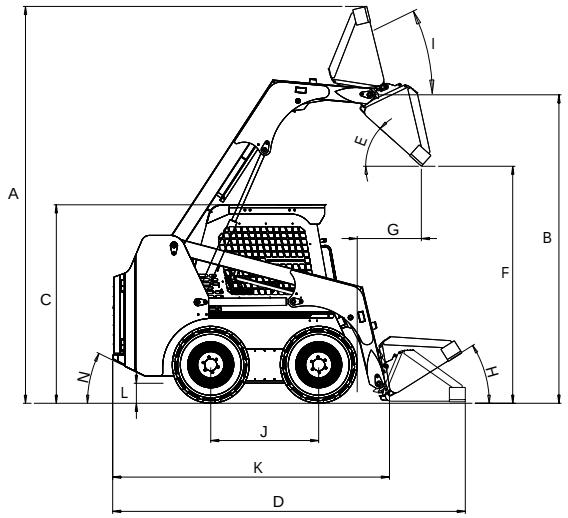

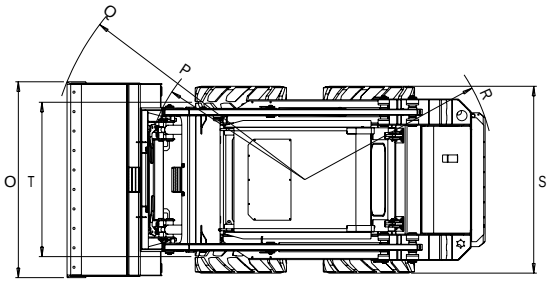

Dimensions: (With Std. Tires & Dirt Bucket)

A. Overall operating height ..... 152.4" (3870mm)
B. Height to hinge pin ..... 188.4" (3008mm)
C. Overall vehicle height ..... 76.2" (1935mm)
D. Overall length with bucket ..... 135.4" (3438mm)
E. Dump angle ..... 42°
F. Dump height ..... 91" (2311mm)
G. Reach - fully raised ..... 24.6" (626mm)
H. Maximum roll back at ground ..... 32.2°
I. Maximum roll back fully raised ..... 104°
J. Wheel base ..... 41.4" (1052mm)
K. Overall length less bucket ..... 106.3" (2699mm)
L. Ground clearance ..... 7.7" (195mm)
M. Maximum grading angle-bucket ..... 92.5°
N. Angle of departure ..... 26°
O. Bucket width ..... 63.4" (1610mm)
P. Clearance circle-front-less bucket ..... 51.6" (1310mm)
Q. Clearance circle-front-with bucket ..... 83.3" (2115mm)
R. Clearance circle-rear ..... 61.75" (1567mm)
S. Overall width-less bucket ..... 60.5" (1536mm)
T. Tread ..... 50" (1270mm)

Operational:

Tipping Load SAE ..... 3263 lbs. (1480 kg)
Rated Operating Capacity ..... 1632 lbs. (740 kg)
Operating Weight ..... 6283 lbs. (2850 kg)
Shipping Weight ..... 5677 lbs. (2575 kg)
Travel Speed ..... 6.55 mph (10.54 kph)

5. SPECIFICATIONS

Controls

VEHICLE: Steering direction and speed controlled by left control lever.

HYDRAULICS: Lift and bucket tilt are controlled by right control lever. Auxiliary hydraulics controlled by electical switches on right control lever and left dash panel.

ENGINE: Hand throttle lever, key type ignition switch and shutoff.

Engine

Make and model.....Cummins A2300T

Cylinder.....4
Cooling system.....Liquid
Displacement.....135 cu. in. (2290 cc)
Horsepower (Gross).....60
Electrical Power.....44.7kW
Max Torque.....135 ft.lbs. (18.7 kg/m @ 1600)
Fuel Type.....Diesel No.2
Air Cleaner.....Dual Replaceable Dry Cartridge w/Indicator
High Idle RPM.....2800
Fuel Tank Capacity.....76 L (20 gal.)

Hydraulic System

Pump type .....Gear
Pump Capacity (theoretical) .....20.1 GPM (76 L/min)
Control Valve.....Series type
Filtration.....5 Micron
Hydraulic Fluid.....ISO VG 32
Oil Cooler.....994 BTU (1050 kCal)

Cylinders.	Lift	Tilt
Type	Double acting	Double acting
Qty- per mach	2	2
Bore dia	2.55 in (65mm)	2.55 in (65mm)
Rod dia	1.57 in (40mm)	1.18 in (30mm)
Stroke	27.125 in (689mm)	13.375 in (340mm)

Hydrostatic Transmission & Final Drive:

Pump type .....Tandum
Pump displacement .....2.47 in^3 (41 cm^3)
Motor type .....Geroler
Motor displacement .....31.5 in^3 (523 cm^3)
System relief setting .....5000 PSI (345 bar)
Drive Type .....Two Drive Chain
Drive chain size .....RS#100

Electrical

Alternator .....50 A
Battery 12V
Cranking Amps.....680
Starter.....12 V (2.0 kW)
Circuit breaker setting .....40 A

https://truckmanualshub.com/

5. SPECIFICATIONS

Tires

Standard.....10.00 x 16.5, 8 ply rating, 60 PSI (414 kPa)

Fluid Capacities

Fuel Tank.....20 gal. (76 L)
Hydraulic Oil Tank.....20 gal. (76 L)
Drive Chain Box (each) .....2.6 gal. (10 L)
Engine Oil.....1.7 gal. (6.5 L)
Engine Cooling System.....2.9 gal. (10.2 L), 50/50 water and ethylene

5.2 TORQUE SPECIFICATIONS

Loader

Wheel nuts (24) . . . . . 100 - 110 ft lbs. (136 - 139 Nm)s
Torque motor drive sprocket (2) . . . . . 48 ft. lbs.(65 Nm)

Hydraulic / Hydrostatic

Gear pump section bolts (8) . . . . . 25 - 28 ft. lbs. (34 - 38 Nm)
Piston pump section bolts (8) . . . . . 27 - 31 ft. lbs. (37 - 42 Nm)
Torque motor section bolts (4) . . . . . 50 ft. lbs. (68 Nm)
Hydraulic filter, case (1) . . . . . .30 ft. lbs. (41 Nm)

5. SPECIFICATIONS

5.2 TORQUE SPECIFICATIONS

FOR NON-CRITICAL AND NOT OTHERWISE MENTIONED APPLICATIONS. THE FOLLOWING GENERAL ASSEMBLY TORQUES WILL APPLY:

BOLTS AND NUTS TORQUE SPECIFICATIONS

General Application Only

SAE

	SAE GRADE 5 TORQUE ft.lb. (Nm)	ft.lb. (Nm)	SAE GRADE 8 TORQUE ft.lb. (Nm)	ft.lb. (Nm)	
	DRY	LUBRICATED	DRY	LUBRICATED	
1/4 ~ 20	6 (8)	4 (5.5)	9 (12)	6 (8)	
1/4 ~ 28	7 (9.5)	5 (7)	10 (13.5)	7 (9.5)	
5/16 ~ 18	13 (17.5)	9 (12)	18 (24.5)	13 (17.5)	
5/16 ~ 24	14 (19)	10 (13.5)	20 (27)	14 (19)	
3/8 ~ 16	22 (30)	16 (21.5)	30 (40.5)	23 (31)	
3/8 ~ 24	25 (34)	18 (24.5)	35 (48)	26 (35.5)	
7/16 ~ 14	35 (48)	26 (35.5)	45 (61)	34 (46)	
7/16 ~ 20	39 (53)	29 (39.5)	55 (74.5)	41 (55.5)	
1/2 ~ 13	55 (74.5)	52 (70.5)	75 (101.5)	56 (76)	
1/2 ~ 20	60 (81.5)	55 (74.5)	80 (108.5)	59 (80)	
9/16 ~ 12	75 (101.5)	57 (77)	110 (149)	80 (108.5)	
9/16 ~ 18	85 (115)	63 (85.5)	120 (162.5)	90 (122)	
5/8 ~ 11	105 (142)	78 (105.5)	150 (203)	111 (150.5)	
5/8 ~ 18	120 (162.5)	89 (120.5)	165 (223.5)	125 (169.5)	
3/4 ~ 10	185 (250.5)	139 (188.5)	260 (352.5)	197 (267)	
3/4 ~ 16	205 (278)	155 (210)	290 (393)	220 (298)	

METRIC

	METRIC CLASS 8.8 TORQUE ft.lb. (Nm)	ft.lb. (Nm)	METRIC CLASS 10.9 TORQUE ft.lb. (Nm)	ft.lb. (Nm)	
	DRY	LUBRICATED	DRY	LUBRICATED	
M6 X 1.00	5 (7)	4 (5.5)	---	---	
M8 X 1.25	13 (17.5)	10 (13.5)	19 (26)	14 (19)	
M10 X 1.50	27 (36.5)	20 (27)	38 (51.5)	28 (38)	
M10 X 1.25	28 (38)	21 (28.5)	---	---	
M12 X 1.75	47 (63.5)	35 (47.5)	65 (88)	48 (65)	
M12 X 1.25	51 (69)	39 (53)	---	---	
M14 X 2.00	75 (101.5)	56 (76)	103 (139.5)	78 (105.5)	
M14 X 1.50	81 (110)	60 (81.5)	---	---	
M16 X 2.00	116 (157)	88 (119)	161 (218)	121 (164)	
M16 X 1.50	124 (168)	93 (126)	---	---	
M20 X 2.50	227 (307.5)	170 (230.5)	315 (427)	236 (320)	
M20 X 1.50	252 (341.5)	190 (257.5)	---	---	
M24 X 3.00	394 (534)	295 (400)	545 (738.5)	408 (553)	
M24 X 2.00	428 (580)	321 (435)	---	---	

5.3 DECALS

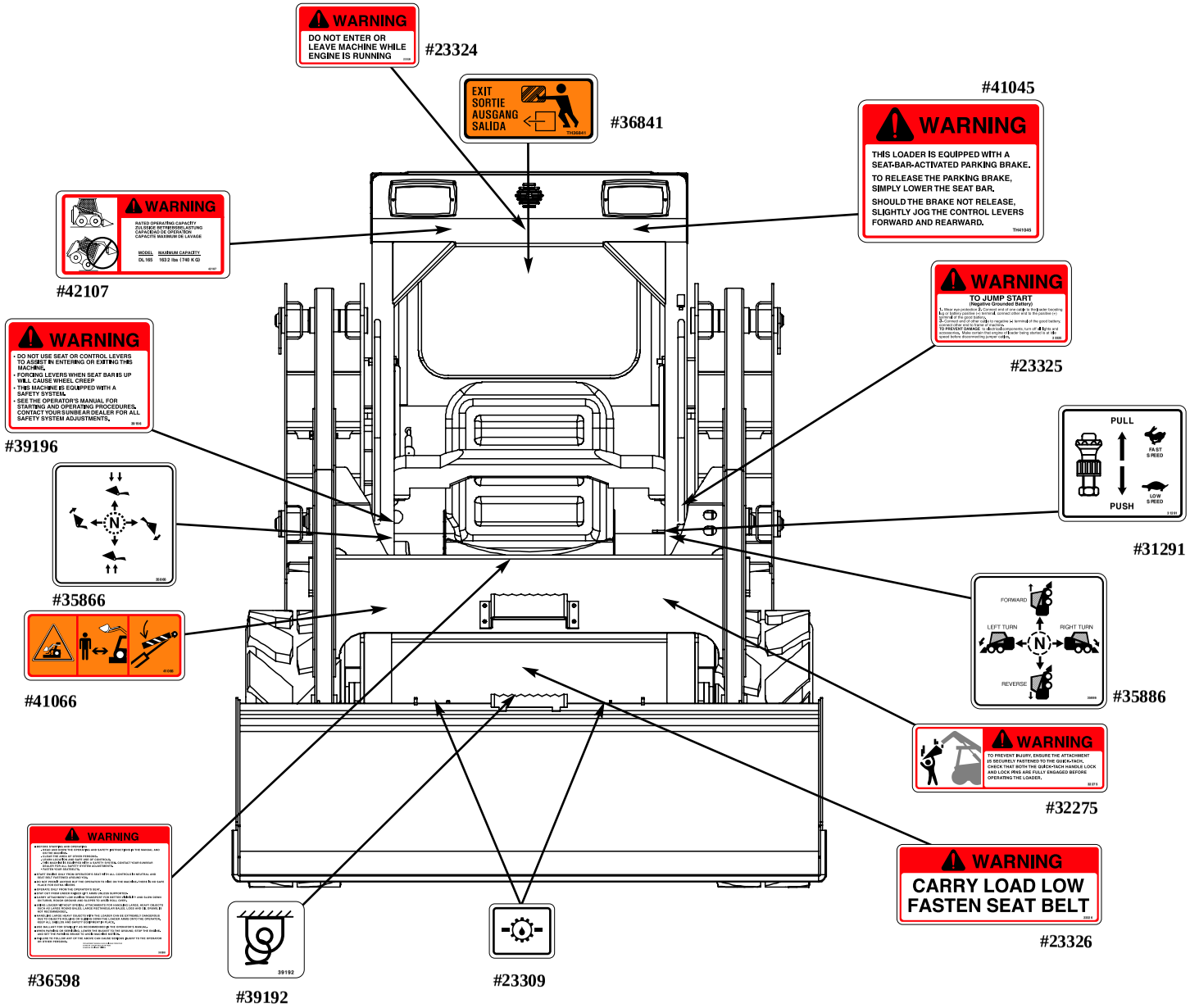

https://truckmanualshub.com/

https://truckmanualshub.com/

5.3 DECALS

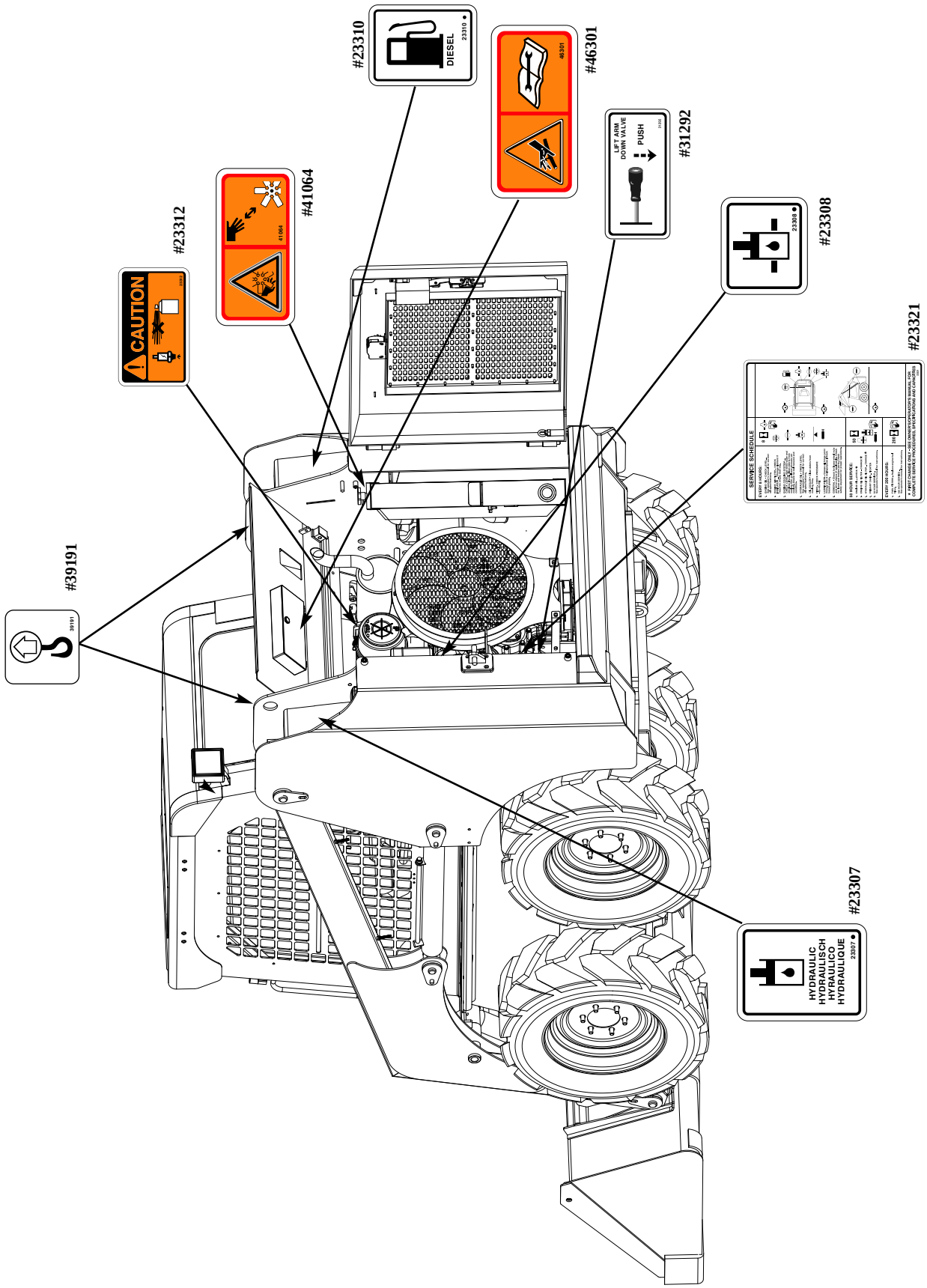

5.3 DECALS

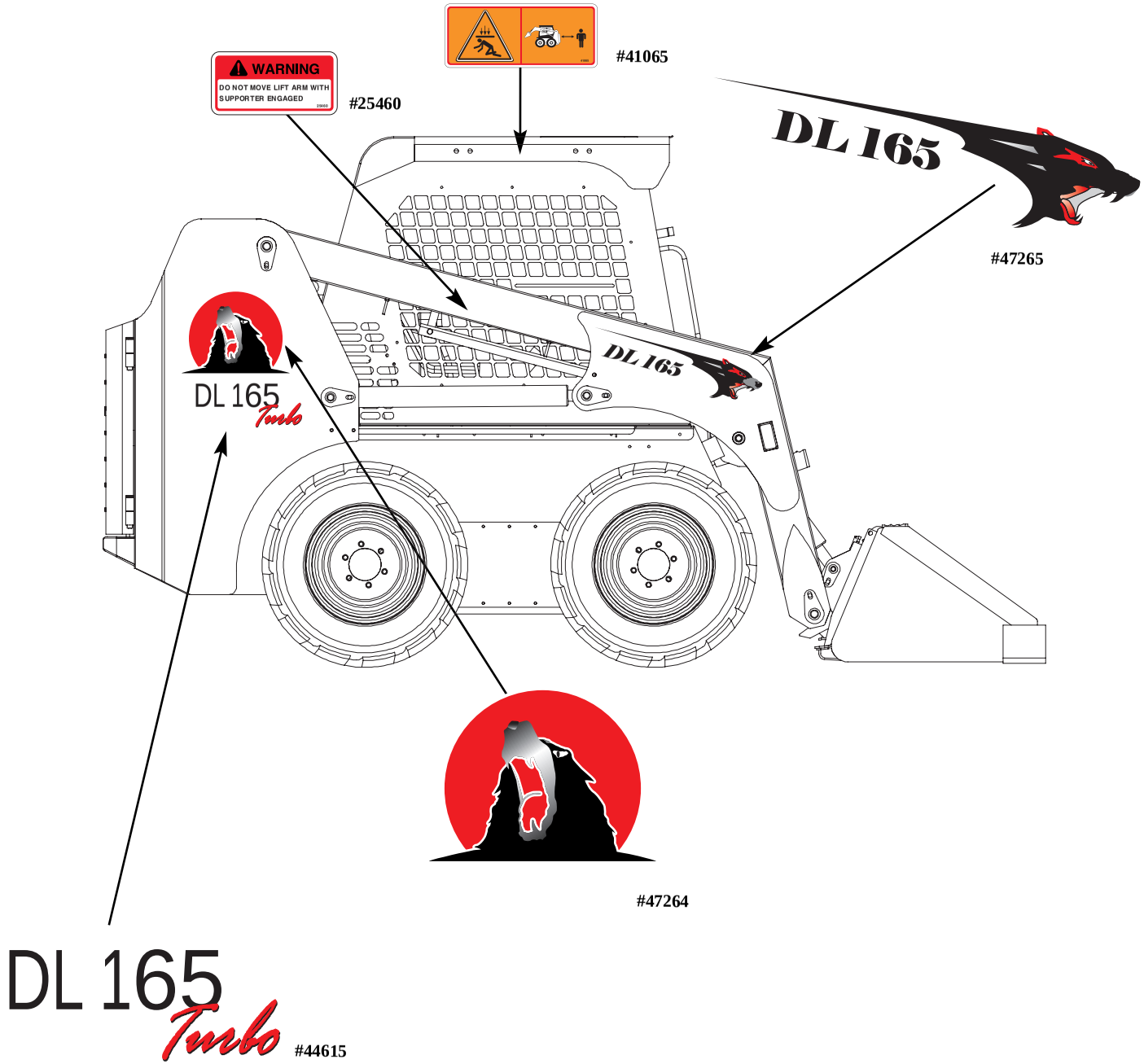

https://truckmanualshub.com/

https://truckmanualshub.com/

Notes:

https://truckmanualshub.com/

6. ATTACHMENTS AND BUCKETS

6. ATTACHMENTS AND BUCKETS

6. 1 SUNBEAR Approved Buckets and Attachments

https://truckmanualshub.com/

6. ATTACHMENTS AND BUCKETS

6. 1 SUNBEAR APPROVEDBUCKETS AND ATTACHMENTS

Buckets

Cat. #	Description	SAE Heaped Cap. (cu. ft.)	Approx. Weight
1955	66" (1676 mm) Snow and Light Material Bucket	23.7	468 lb. (212.3 kg)
2667	66" (1676 mm) Dirt Bucket	12.85	425 lb. (192.8 kg)
2002	68" (1727 mm) Fertilizer Bucket	20.6	396 lb. (179.6 kg)
2007	66"(1676mm)High Capacity Bucket	28.7	495lb.(224.6KG)
3763	66"(1676mm)Produce Bucket		

Bucket Options

Cat. #	Description	Approx. Weight
2670	Toothbar Complete for 66" Dirt Bucket	95 lb. (43.1 kg)
2668	Kit, Bolt-On Edge for 66" Bucket	90 lb. (40.8 kg)
3494	66" Bucket WithWeld On Teeth	
3495	68" Bucket,U-1890 With Weld On Teeth	
3496	68"Hi-Visib. Bucket,U-3181 With weld on Teeth	

Dozer Blade

Cat. #	Description	Approx. Weight
2032	70" (1778 mm) Dozer Blade, Hydraulic Swing **(1)**	710 lbs. (322 kg)

(1) Require Quick Coupling Kit

Hydraulic Spreader

Cat. #	Description	Approx. Weight
1943	Hydraulic Salt/Sand Spreader **(1)**	394 lb. (178. 7 kg)

(1) Require Quick Coupling Kit

Post Hole Auger

Cat. #	Description	Approx. Weight
2569	Model PA 40 Auger Drive (Requires Mount and Bit) **(1)**	160 lb. (72.6 kg)
1891	Auger Mount	126 lb. (57.2 kg)

(1) Require Quick Coupling Kit

Post Hole Auger Bits

Cat. #	Description	Approx. Weight
941	9" X 48" (228.6 mm x 1219 mm) Auger Bits	75 lbs (34 kg)
943	12" X 48" (304.8 mm x 1219 mm) Auger Bit w/Serrated Edges	100 lbs (45.4 kg)
119	14" X 52" (355.6 mm x 1320.8 mm)Auger Bit w/Serrated Edges	105 lbs (47.6 kg)
120	16" X 52" (406.4 mm x 1320.8 mm) Auger Bit w/Serrated Edges	118 lbs (53.5 kg)

Grapple Bucket

Cat. #	Description	Approx. Weight
1930	60" (1524 mm) Grapple Bucket	875 lb. (369.9kg)

Breaker Side Plates

Cat. #	Description	Approx. Weight
1694	HH 300/500 Side Plates	200 lb. (91 kg)
1891	HH 300/500 Breaker Mount	192 lb. (87.1 kg)

(1) Require Quick Coupling Kit

https://truckmanualshub.com/

6. ATTACHMENTS AND BUCKETS

6. 1 SUNBEAR APPROVED BUCKETS AND ATTACHMENTS (Continued)

Breaker Tools

Cat. #	Description	Approx. Weight
1533	Moil Point - DB10	25 lb. (11.3 kg)
1534	Chisel Point - DB10	35 lbs. (16 kg)
1535	Blunt Point - DB10	35 lbs. (16 kg)
1570	Asphalt Cutter - DB10	41 lbs. (18.6 kg)
1571	Tamping Pad, 12" x 12"	105 lbs. (47.6 kg)
1548	Gas Changer	2 lbs. (0.9 kg)

Bucket Brush

Cat. #	Description	Approx. Weight
2189	72" Brush (Requires quick coupler kit)	500 lbs. (226.8 kg)
2708	Pofit type quick coupler	5 lbs. (2.3 kg)
2873	Flat Face Type Quick Coupler	

Pallet Fork

Cat. #	Description	Approx. Weight
2330	Pallet Fork Frame (Requires Tines)	226 lb. (102.5 kg)
99	30" Tines (Set of Two)	110 lb. (49.9 kg)
98	36" Tines (Set of Two)	138 lb. (62.6 kg)
437	42" Tines (Set of Two)	149 lb. (67.6 kg)
2564	Tines (Set of Two)	160 lb. (72.6 kg)

Hydraulic Breaker (REQUIRES SIDE PLATES, MOUNT & TOOL)

Cat. #	Description	Approx. Weight
3349	HH 300-300 lb. Class Hydraulic Breaker **(1) (2)**	300 lb. (136 kg)

(1) Use Of A Cab Door Recommended With This Attachment
(2) Prices Are FOB Glendale Hts., IL.

BH 108 Backhoe

Cat. #	Description	Approx. Weight
2213	BH 108 Backhoe Base Unit **(1) (2)**	780 lb. (353.8 kg)
2211	External Controls **(1)**	470 lb. (213.2 kg)
2222	Internal Controls **(1)**	470 lb. (213.2 kg)
2234	Mounting Kit **(1)**	
2235	English Manuals and Decals **(1)**	1 lb. (0.5 kg)
1483	12" Bucket w/Teeth **(1)**	120 lb. (54.4 kg)
1482	18" Bucket w/Teeth **(1)**	140 lb. (63.5 kg)
1481	22" Bucket w/Teeth **(1)**	160 lb. (72.6 kg)

(1) Order one each base unit, controls, mount, manual & bucket.
(2) Includes flat face quick coupling kit.

https://truckmanualshub.com/

6. 1 SUNBEAR APPROVEDBUCKETS AND ATTACHMENTS (Continued)

Angle Broom

Cat. #	Description	Approx. Weight
2189	72" Angle Broom (Requires Quick Coupler Kit)	500 lb. (226.8 kg)
2708	Quick Coupler Kit, Poppet Style	5 lb. (2.3 kg)
2873	Quick Coupler Kit, Flat Face Style	

Bucket Sweeper

Cat. #	Description	Approx. Weight
1392	60" Bucket Sweeper Drive (Requires Quick Coupler, Plate, Bucket)	564 lb. (255.9 kg)
1428	72" Bucket Sweeper Drive (Req. CPLR, Plate, Bucket) **(1)**	660lb. (299 kg)
2708	Quick Coupler Kit. Poppet Style	5 lb. (2.3 kg)
2873	Quick Coupler Kit, Flat Face Style	
1427	Backing Plate	5 lb. (2.3 kg)
1935	60" Flat Bottom Utility Bucket	386 lb. (175 kg)
1936	73" Utility Bucket	480 lb. (218 kg)

(1) Dealer Assembly Required

Bucket Sweeper Options

Cat. #	Description	Approx. Weight
1834	Gutter Brush **(1)**	80 lb. (36.3 kg)
1298	Water Sprinkler System **(1)**	50 lb. (22.7 kg)

(1) Dealer Assembly Required

https://truckmanualshub.com/

INDEX

A

Accumulator 28
Air Cleaner 33,35,45
Attachments
- Installing 16
- Lists 74-75

Auxiliary Hydraulics
- Connecting 14
- Controls 14
- Operation 24

Axle 38

B

Backfilling 23
Battery
- Boost 47
- Maintenance 37,47
- Specification 66

Bearing,Axle 38
Boost Lug 47
Boosting Procedure 47
Brake
- Override 41
- Parking 12,36

C

Cab
- Maintenance 37
- Prop Rod 32
- Tilting 32

Chain, Drive 36,38
Control Levers
- Lever Function 13,15,36
- Switch Function 9

Coolant 35,46

D

Decals 69,70,71
Digging 22
Dumping, Bucket 21,22

E

Electrical
- Diagram 48-50
- maintenance 37
- Panel 17

Engine
- Oil 30,42
- Relay, Preheat 17
- Shut-down 20
- Specifications 42
- Speed 35
- Starting 19
- V-Belt Tension 43

Exhaust 35

F

Fan 36
Filters, Replace
- Air 45
- Engine 42
- Fuel 43
- Hydraulic Oil 40

Final Drive 38
Foreword 4
Fuel Gauge 8
Fuel System 35,43
- Bleeding 44

Fuse Panel 17

G

Greasing 34

H

Hoses And Pipes 36
Hour Meter 8
Hydraulic Function 36
Hydraulic/Hydrostastic 36
- Circuits 58,59
- Motor 36
- Oil Filter 36

INDEX

I

Ignition Switch 8
Indexes, Sections
Section 1 3
Section 2, Controls 7
Section 3, Operation 18
Section 4, Maintenance 29
Section 5, Decals 64
Indicator Lights 8,9
Inspection, Pre-Start 19
Instrument Panel 8,9

L

Leveling 23
Liftarm
Control 15
Lowering 27
Support 13,32,36
Lifting 25
Lubrication 34,37

M

Maintenance
Schedule 30
Special Tools 60-62

O

Oil Cooler 35,36,41
Oil, Engine 30,34,35,36,42
Hydraulic 30,33,36,39,40
Transmission 30,36,38
Operational Procedures 20-24

P

Pump 36

Q

Quick-Tach 37

R

Radiator/Oil Cooler 35,41

S

Safety Precautions 5,6
Seal, Axle 36
Seat 10
Seat Bar 11,36
Seat Belt 36
Seat Switch 36
Service Access 32
Service
Daily 33-35
50 hr 35-37
200 hr 37
Service Schedule 30-31
Shields 37
Shut-off Procedure 20-26
Slopes
Travel on 20
Parkingon 6
Specifications, Loader 65,66,67,68
Sprocket 38
Starter 37
Starting Procedure 19
teering Control 13

T

Throttle 12,36
Tilt Cab 32
ires
Maintenance 51
Pressure 37,51
T Rotation 51
Towing 25
Transporting 26
Troubleshooting 52-57
urning 13-20

V

V
-Belt Tension 43

W

Warranty Statement 2
Water Separator 43
Wheel Nuts 34,37

https://truckmanualshub.com/