https://truckmanualshub.com/

682954-Rev A

JACOBSEN

Parts Manual

Rotary Trim Mower

062801 - D400 – AR321, Kubota® D1105-E4B, 3WD, Treaded Tires

WARNING

Warning: If incorrectly used, this machine can cause severe injury. Those who use and maintain this machine should be trained in its proper use, warned of its dangers, and must read the entire manual before attempting to set up, operate, adjust, or service the machine.

GB

When Performance Matters.™

https://truckmanualshub.com/

FOREWORD

This manual contains adjustment, maintenance, troubleshooting instructions and parts list for your new Jacobsen machine. This manual should be stored with the equipment for reference during operation.

Before you operate your machine, you and each operator you employ should read the manual carefully in its entirety. By following the safety, operating and maintenance instructions, you will prolong the life of your equipment and maintain its maximum efficiency.

If additional information is needed, contact your Jacobsen Dealer.

The serial plate is located on the left rear frame rail. Jacobsen recommends you record these numbers below for easy reference.

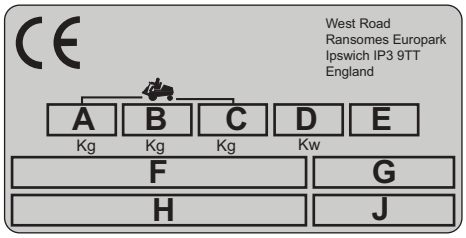

Suggested Stocking Guide

To Keep your Equipment fully operational and productive, Jacobsen suggests you maintain a stock of the more commonly used maintenance items. We have included part numbers for additional support materials and training aids.

To order any of the following material:

1. Write your full name and complete address on your order form.
2. Explain where and how to make shipment:
   - ❑ UPS
   - ❑ Regular Mail
   - ❑ Overnight
   - ❑ 2nd Day
3. Order by the quantity desired, the part number, and the description of the part.
4. Send or bring the order to your authorized Jacobsen Dealer.

Service Parts

Qty.	Part No.	Description	Qty.	Part No.	Description
	4113986	Engine Oil Filter		4283654	Ignition Key
	5000913	Element, Engine Air Filter		4176550	Engine Fan Belt
	550489	Cartridge, Engine Fuel Filter			
	2811255	Charge Filter			

Service Support Material

Qty.	Part No.	Description
	TBD	Safety & Operation Manual
	682954	Parts Manual
	TBD	Service Manual

Qty.	Part No.	Description
	TBD	Diesel Engine Parts Manual

Proposition 65 Warning

This product contains or emits chemicals known to State of California to cause cancer and birth defects or other reproductive harm.

Copyrighted Material
This manual may not re reproduced in whole or in part without the express permission of TSV (Augusta) Technical Communications Department.

https://truckmanualshub.com/

Table of Contents

1.1 ..... Operator Platform 1
2.1 ..... Seat Option 3
3.1 ..... Armrest and Control Panel 5
4.1 ..... Traction Pedal 7
5.1 ..... Traction Linkage 9
6.1 ..... Chassis 11
7.1 ..... Front Axle Assembly 13
8.1 ..... Front Axle 15
9.1 ..... Rear Axle Assembly 17
10.1 ..... Rear Axle 19
11.1 ..... Air Filter 21
12.1 ..... Radiator 23
13.1 ..... Remote Engine Oil Cooler and Filter 25
14.1 ..... Engine Mounting 27
15.1 ..... Engine and Pumps 29
16.1 ..... Engine Exhaust 31
17.1 ..... Fuel Tank and Routing 33
18.1 ..... Hydraulic Tank and Hood 35
19.1 ..... Hydraulic Valve Assembly 37
20.1 ..... 3WD Traction Hydraulics 39
21.1 ..... 3WD Gear Pump and Steering Hydraulics 41
22.1 ..... Front And Rear Motor Hydraulics 43
23.1 ..... Front And Rear Lift Hydraulics 45
24.1 ..... Drain Hydraulics 47
25.1 ..... Brake Valve and Charge Hydraulics 49
26.1 ..... Oil Cooler Hydraulics 51
27.1 ..... Electrical 53
28.1 ..... Standard Unit Fixing 55
29.1 ..... Gear Pump 57
30.1 ..... Brake Valve 59
31.1 ..... Lift-Weight Transfer Valve 61
32.1 ..... Steering Cylinder 63
33.1 ..... Center, Left and Right Decks 65
33.1 ..... Center, Left and Right Decks (Cont....) 67
34.1 ..... Deck Valve 69
35.1 ..... Bump Stop 71
36.1 ..... Lift Arms 73
37.1 ..... Rotary Unit Mounting 75
38.1 ..... Steering Valve 77
39.1 ..... Traction Pump 79
39.1 ..... Traction Pump (Continued) 81
40.1 ..... 3WD Rear Wheel Motor 83
41.1 ..... Electrical Schematic 85
42.1 ..... Hydraulic Schematic 89

https://truckmanualshub.com/

1.1 Operator Platform

Serial No. All

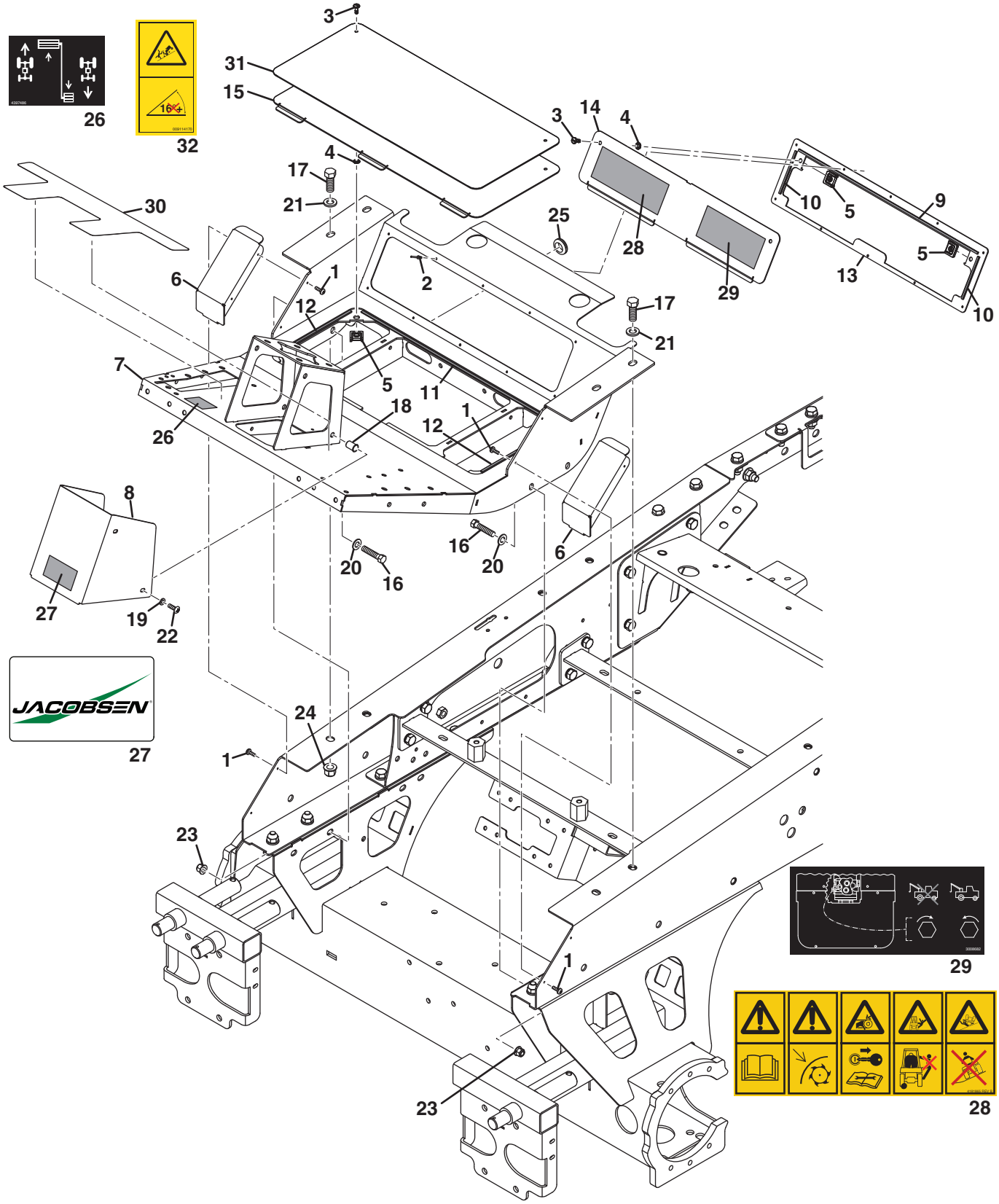

https://truckmanualshub.com/

Item	Part No.	Qty.	Description	Serial Numbers/Notes
1	001191331	4	Screw, M5-0.8 x 16 mm Taptite	
2	001496150	16	Pop Rivet, 3.2 x 10 mm	Stainless Steel
3	4314427	4	1/4 Turn Fastener	
4	4314429	4	1/4 Turn Steel Retainer	
5	4314430	4	1/4 Turn Receptacle	
6	4394747	2	Cover, Chassis End	
7	671357	1	Platform, Operator	
8	4395663	1	Cover, Steering Tower	
9	671682	1	Adhesive Foam, 578 mm	
10	4395665	2	Adhesive Foam, 3 x 4 x 90 mm	
11	4395666	1	Adhesive Foam, 4 x 5 x 529 mm	
12	4395667	2	Adhesive Foam, 3 x 5 x 202 mm	
13	671556	1	Plate, Rear Backing	
14	671585	1	Panel, Rear Service	
15	4395869	1	Panel, Floor Service	
16	450029	4	Hex Head Screw, M10-1.5 x 35 mm	
17	450241	4	Hex Head Screw, M12-1.75 x 30 mm	
18	450357	4	Nut, M6-1 Insert (0.7 to 4.2)	
19	450389	4	Washer, M6 x 12.5 x 1.8	
20	450391	4	Washer, M10 x 21 x 2.2	
21	450392	4	Washer, M12 x 24 x 2.7	
22	450541	4	Pan Head Screw, M6-1 x 16 mm	
23	452437	4	Nut, M10-1.5 Flange Nyloc	
24	452438	2	Nut, M12-1.75 Flange Nyloc	
25	002953223	3	Grommet, 20.6 x 31.8 x 9.5 mm	
26	4397486	1	Decal, Traction Pedal	
27	669813	1	Decal, Jacobsen Decal	
28	4181865	1	Decal, Mower Warning	
29	3008682	1	Decal, Tow Valve	
30	4420394	1	Floor Board Grip Tape	
31	4420395	1	Access Panel Grip Tape	
32	009114170	1	Decal, Max Slope 16 Deg	

> Change from previous revision

https://truckmanualshub.com/

2.1 Seat Option

Serial No. All

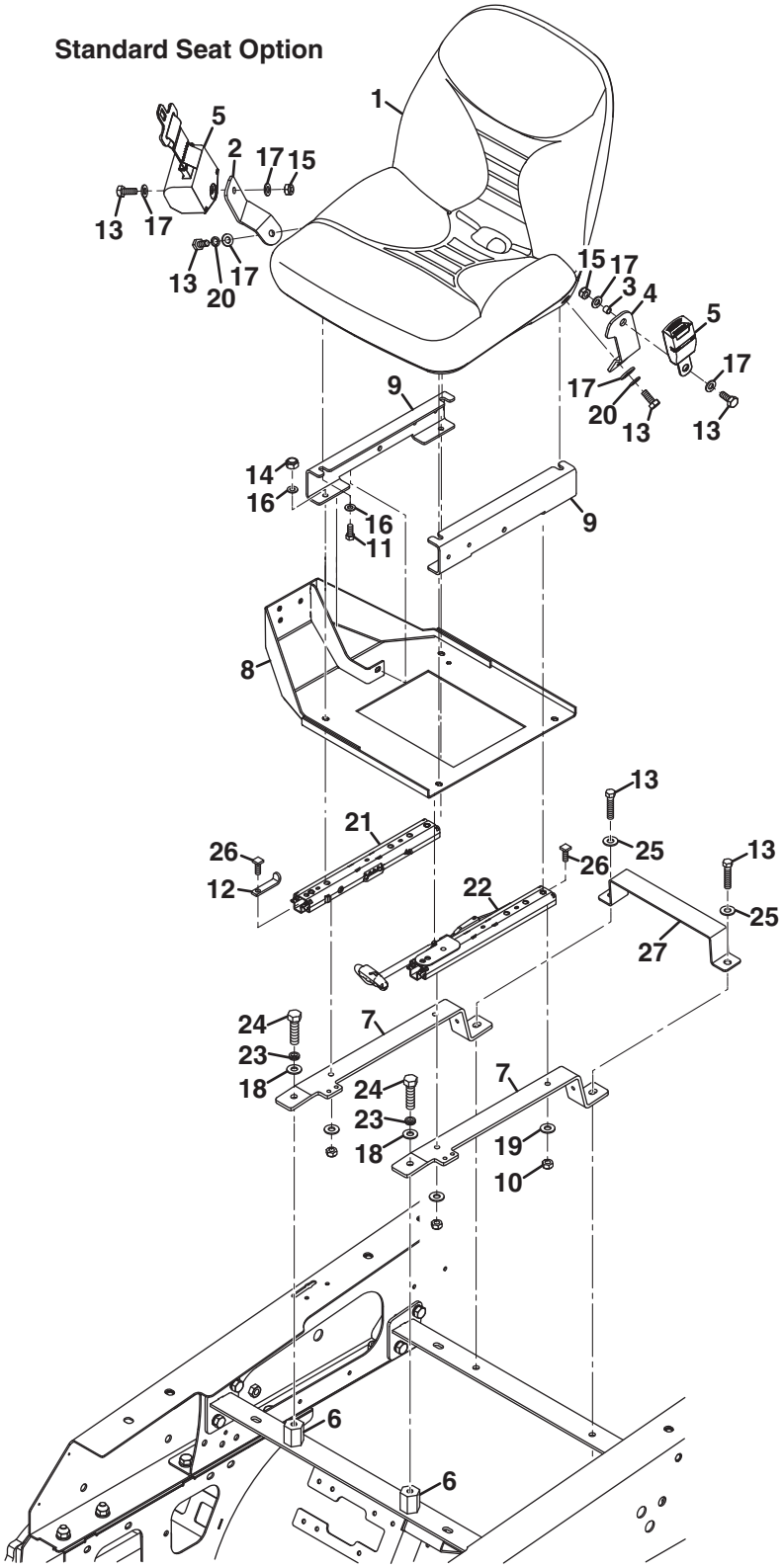

https://truckmanualshub.com/

Item	Part No.	Qty.	Description	Serial Numbers/Notes
1	4202462	1	Standard Seat	
2	4204341	1	Bracket, Right Side Seat Belt	
3	4205942	1	Spacer, Seat Belt Bracket	
4	4256475	1	Bracket, Left Side Seat Belt	
5	4257812	1	Seat Belt	Includes latch and retractor
6	4376646	2	Boss, Seat Mount	
7	4376647	2	Rail, Seat Mounting	
8	4376648	1	Armrest Seat Support	
9	4378526	2	Support, Standard Seat	
10	450120021	4	Nut, 5/16 - 18	Grade 1
11	450190	4	Screw, M8-1.25 x 16 mm Hex Head	
12	672483	2	Bracket, Seat Travel Limiter	
13	450214	6	Screw, M10-1.5 x 25 mm Hex Head	
14	450378	4	Nut, M8-1.25 Hex Nyloc	
15	450379	2	Nut, M10-1.5 Hex Nyloc	
16	450390	4	Flat Washer, M8 x 17 x 1.8	
17	450391	8	Flat Washer, M10 x 21 x 2.2	
18	450392	2	Washer, M12 x 24 x 2.7	
19	450411	8	Lock Washer, M8 x 12.75 x 2	
20	450412	4	Lock Washer, M10 x 15.9 x 2.5	
21	4193341	1	Adjuster, Seat Rail	
22	4193344	1	Adjuster, Seat Rail with Handle	
23	450413	2	Lock Washer, M12 x 17.9 x 2.5	
24	450240	2	Screw, M12-1.75 x 25 mm Hex Head	
25	450401	2	Washer, M10 x 24 x 2.2	
26	4203220	4	Screw, M8-1.25 x 20 mm Square Hd	
27	4384346	1	Fuel Tank Strap	

> Change from previous revision

https://truckmanualshub.com/

3.1 Armrest and Control Panel

Serial No. All

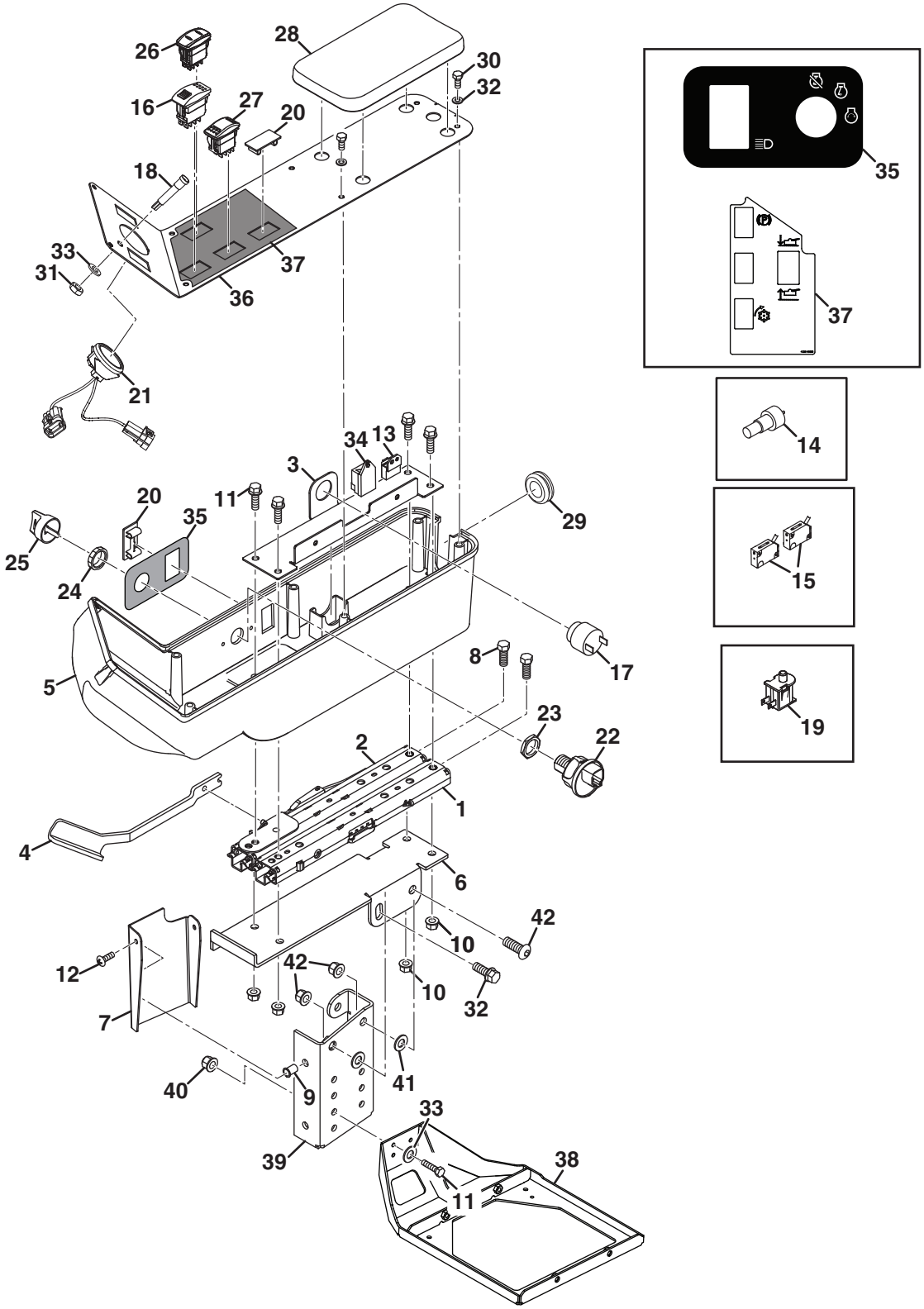

https://truckmanualshub.com/

Item	Part No.	Qty.	Description	Serial Numbers/Notes
1	4193341	1	Adjuster, Seat Rail	
2	4193344	1	Adjuster, Seat Rail with Handle	Replace handle with Item 4
3	4362366	1	Plate, Armrest Support	
4	672316	1	Rod, Armrest	
5	4370626	1	Armrest	
6	4395147	1	Top Plate, Armrest Support	
7	672309	1	Armrest Cover	
8	450192	4	Screw, M8-1.25 x 25 mm Hex Head	
9	450357	2	Nut, M6-1 Insert (0.7-4.2)	
10	450453	4	Nut, M8-1.25 Hex Flange	
11	450471	7	Screw, M8-1.25 x 20 mm Hex Flange	
12	450541	2	Screw, M6-1 x 16	Grade 4.8
13	2188154	1	Module Delay	**REFERENCE U4, See 41.1**
14	363996	1	Switch	
15	4125831	2	Switch, Neutral Proximity	
16	4139764	1	Switch, Parking Brake	**REFERENCE SW6, See 41.1**
17	4150539	1	Horn	**REFERENCE U3, See 41.1**
18	4212121	1	LED Indicator	
19	4217502	1	Switch, Seat	**REFERENCE SW3, See 41.1**
20	4225220	2	Plug, Panel	**Refer to Optional Kit**
21	4270811	1	Gauge, Fuel/Hourmeter	
22	4283269	1	Switch, 3 Position Key	**REFERENCE SW1, See 41.1**
23	4283653	1	• Nut, M22-1.5 Key Switch Backing	
24	4283652	1	• Nut, M22-1.5 Key Switch Face	
25	4283654	1	• Key, Replacement	
26	4324707	1	Switch, Rocker DPDT (MOM)	For side shift function
27	4343926	1	Switch, Yellow Rocker DPDT	**REFERENCE SW2, See 41.1**
28	674106	1	Pad, Armrest	
29	4382209	1	Grommet	
30	450516	8	Pan Head Screw, M4-.7 x 10 mm LG	
31	450331	1	Hex Nut, M8-1.25	Grade 8
32	450477	1	Screw, M10 - 1.5 x 20 mm Hex Flange	
33	450390	1	Washer, M8 x 17 x 1.8	
34	15694-65992	1	Lamp Timer	**REFERENCE U5, See 41.1**
35	4374506	1	Decal, Key Switch	
36	4395054	1	Control Panel, Standard Steel	
37	4391886	1	Decal, Control Panel Standard	
38	4376648	1	Armrest Seat Support	**See 2.1**
39	672308	1	Side Bracket, Armrest Support	
40	452436	3	Nut, M8 Flange Nyloc	
41	450391	5	Washer, M10 x 21 x 2.2	
42	4290433	2	Screw, Button Head M10 x 25	
43	450379	2	Nut, M10 - 1.5 Hex Nyloc	

> Change from previous revision

https://truckmanualshub.com/

4.1 Traction Pedal

Serial No. All

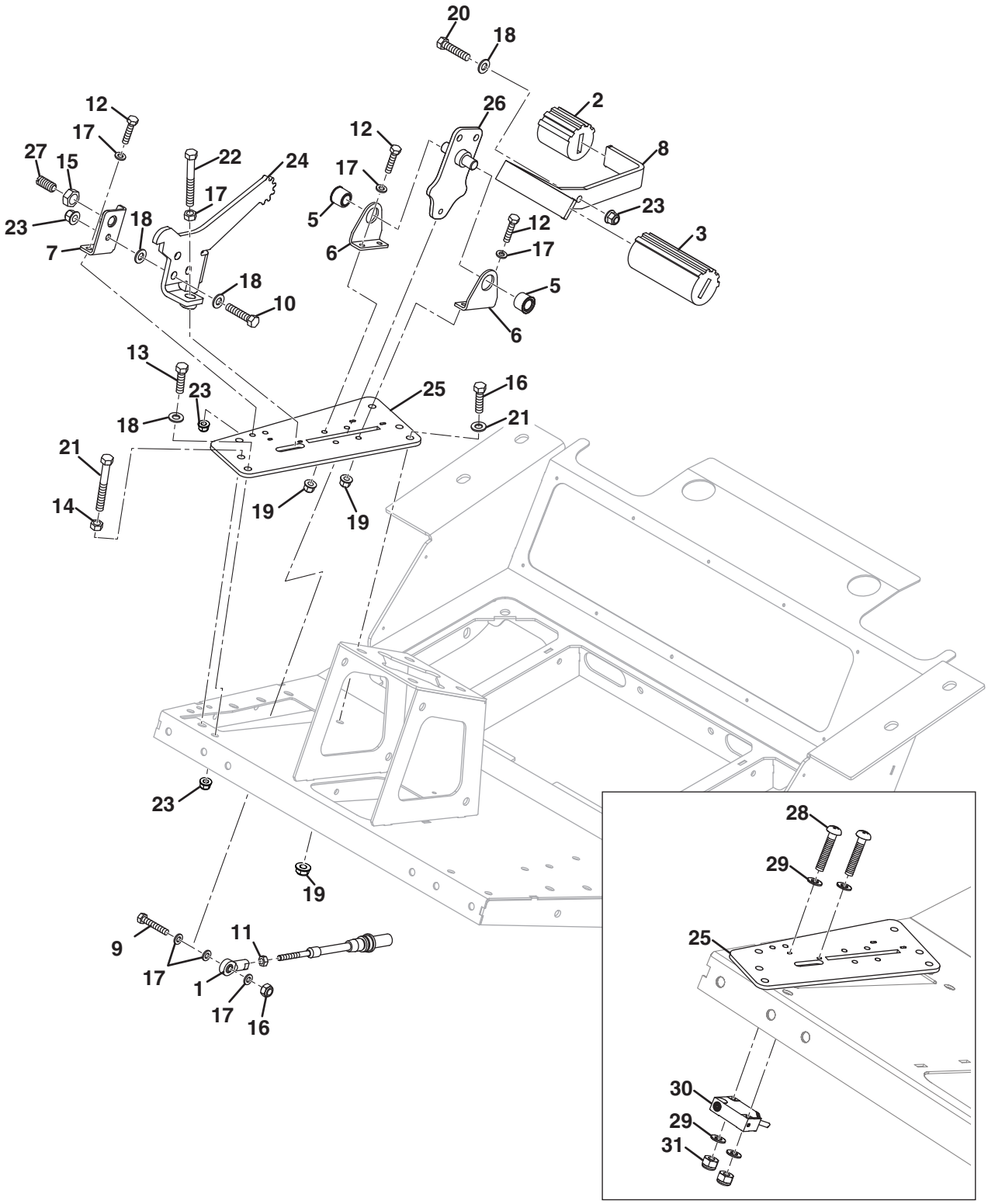

https://truckmanualshub.com/

Item	Part No.	Qty.	Description	Serial Numbers/Notes
1	128079	1	Rod End, 1/4 ”	
2	3003474	1	Reverse Pedal Grip	
3	3003475	1	Forward Pedal Grip	
4	4185740	2	Pedal Pivot Bracket Fitted Assembly	
5	4185741	1	• Self Align Bearing, 1/2 ”	
6	4185742	1	• Bracket - Pedal Pivot	
7	4377886	1	Mow Mode Bracket	
8	4378832	1	Pedal	
9	450001	1	Hex Head Bolt, M6 - 1.0 x 30 MM LG	
10	450014	1	Hex Head Bolt, M8 - 1.25 x 30 MM LG	Grade 8.8
11	450020231	1	Hex Head Thin Nut, 1/4 - 28	
12	450172	6	Hex Head Screw, M6 - 1 x 25 MM LG	
13	450192	4	Hex Head Screw, M8 - 1.25 x 25 MM LG	
14	450324	3	Hex Head Nut, M8 - 1.25	
15	450333	1	Hex Head Nut, M12 - 1.75	
16	450377	1	Hex Head Nut, M6 - 1.0	
17	450389	9	Washer, M6 x 12.5 x 1.8	
18	450390	8	Washer, M8 x 17 x 1.8	
19	452435	6	Hex Head Flange Nut, M6	
20	450193	2	Hex Head Screw, M8 - 1.25 x 30 MM LG	Grade 8.8
21	450199	2	Hex Head Screw, M8 - 1.25 x 60 MM LG	Grade 8.8
22	450200	1	Hex Head Screw, M8 - 1.25 x 65 MM LG	Grade 8.8
23	452436	7	Hex Head Flange Nut, M8	
24	670804	1	Mow Mode Player	
25	670806	1	Transmission Pedal Baseplate	
26	672014	1	Traction Lever Weldment	
27	4200040	1	Detent Screw, M12	
28	UK450511	2	Pan Head Screw, M3 - .5 x 25 MM LG	Grade 4.8
29	UK450386	4	Washer, M3 x 7 x 0.6	
30	4125831	1	Proximity Switch	
31	UK452436	2	Flanged Hex Nut, M3 - 0.5	Grade 8
32	671379	1	Mounting Plate Proximity Switch	(Not Shown)

> Change from previous revision

https://truckmanualshub.com/

5.1 Traction Linkage

Serial No. All

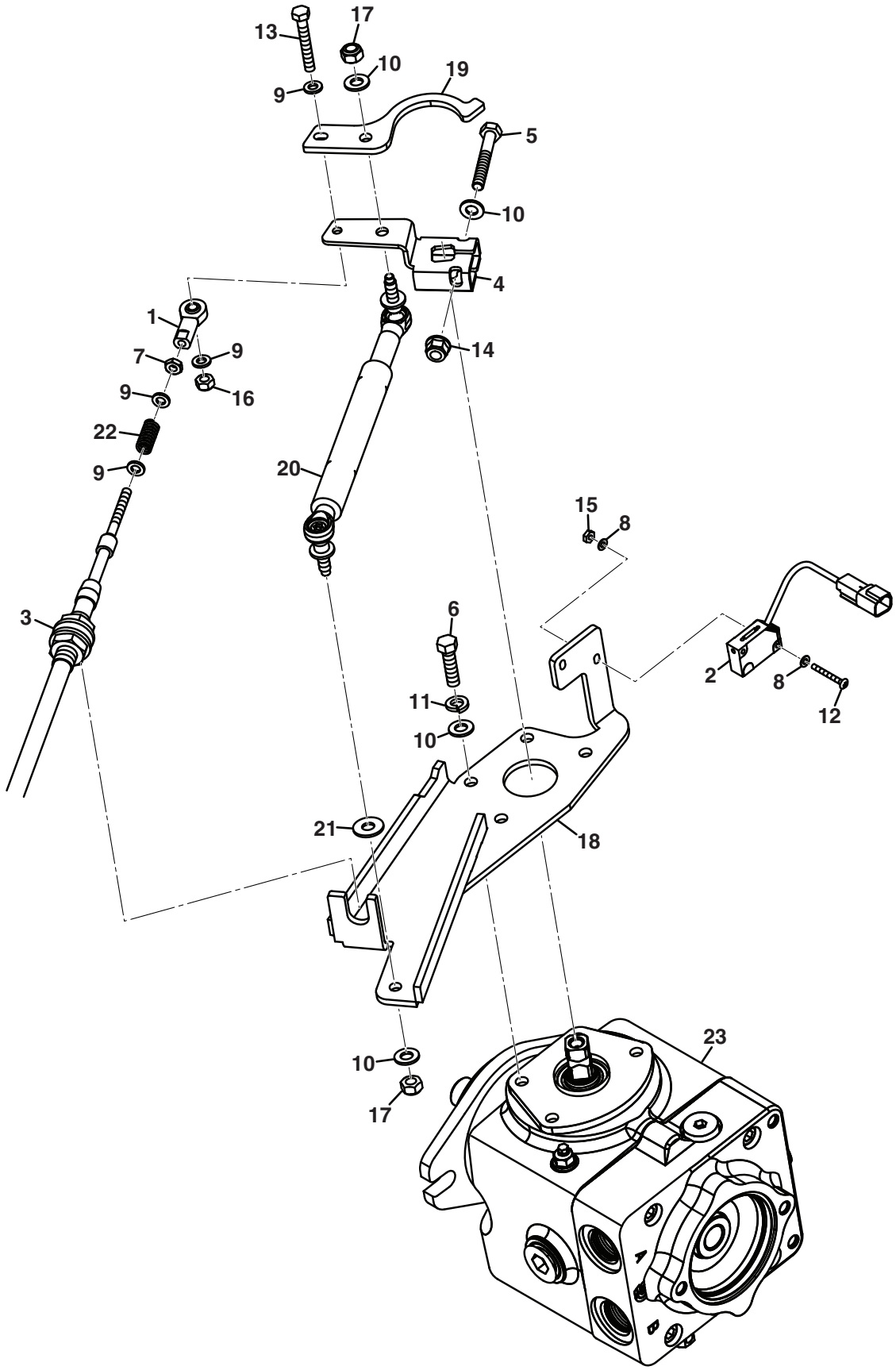

https://truckmanualshub.com/

Item	Part No.	Qty.	Description	Serial Numbers/Notes
1	128079	1	Rod End, 1/4”	
2	4125831	1	Switch, Neutral Proximity	**REFERENCE SW12, See 41.1**
3	4368187	1	Cable, Traction	**See 4.1 for other end of cable**
4	4386927	1	Control Arm	
5	450019	1	Screw, M8-1.25 x 55 mm Hex Head	
6	450192	4	Screw, M8-1.25 x 25 mm Hex Head	
7	450020231	1	Nut, 1/4-28 Thin Hex	
8	450386	4	Washer, M3 x 7 x 0.6 mm	
9	450389	4	Washer, M6 x 12.5 x 1.8	
10	450390	7	Washer, M8 x 17 x 1.8	
11	450411	4	Lock Washer, M8 x 12.75 x 2	
12	450511	2	Screw, M3-0.5 x 25 mm Pan Head	
13	450002	1	Screw, M6-1 x 35 mm Hex Head	
14	452436	1	Nut, M8-1.25 Flange Nyloc	
15	452716	2	Nut, M3-0.5 Hex Nyloc	
16	450377	1	Nut, M6-1 Hex Nyloc	
17	450378	2	Nut, M8-1.25 Hex Nyloc	
18	4397226	1	Plate, Cable Sensor	
19	4397230	1	Actuator, Neutral Switch	
20	4397526	1	Damper, Self Centering	
21	450400	1	Washer, M8 x 21 x 1.8	
22	4231340	1	Spring, 11.13 x 1,42 x 25.4	
23	4203740	1	Pump, LPV 35 cc Piston	**See 39.1 for Service Parts**

> Change from previous revision

https://truckmanualshub.com/

6.1 Chassis

Serial No. All

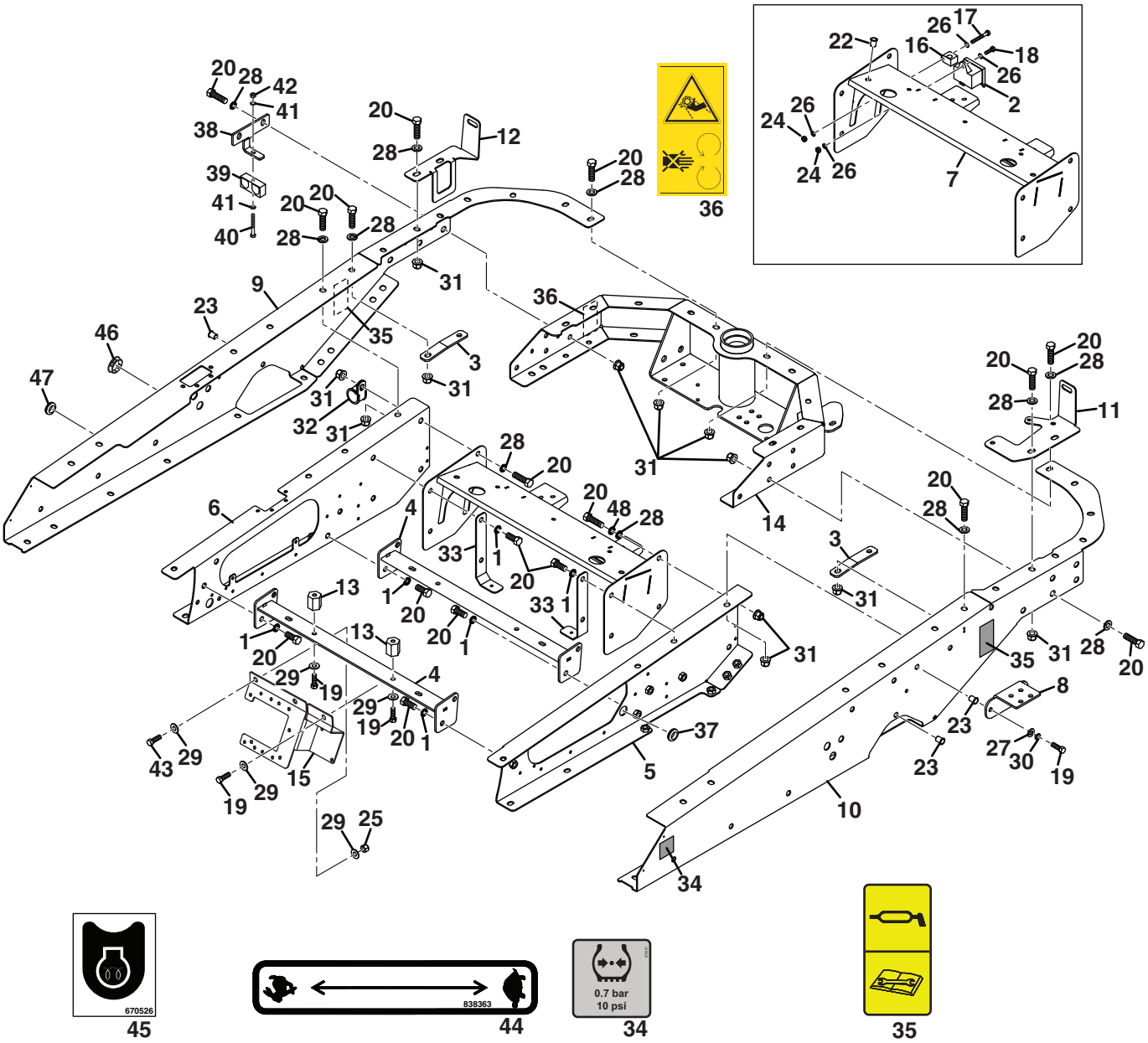

https://truckmanualshub.com/

Item	Part No.	Qty.	Description	Serial Numbers/Notes
1	4273470	15	AV Washer - 13 x 19.5 x 2.5	
2	4309904	1	3 Way Distribution Block	
3	4350748	2	Bracket, Angled Brace	
4	4350749	2	Cross Brace, Center	
5	4362466	1	ROPS Rail, LH	
6	4362467	1	ROPS Rail, RH	
7	4365086	1	Cross Brace, Radiator	
8	679511	1	Bracket, Charge Filter	
9	4393946	1	Rail, RH	
10	4393948	1	Rail, LH	
11	4375506	1	Bracket, LH Oil Tank	
12	4375566	1	Bracket, RH Oil Tank	
13	4376646	2	Boss, Seat Mount	
14	4386646	1	Chassis, Rear	
15	4394346	1	Bracket, Fuse Block & Brake Valve	
16	4394471	1	Stauf Clamp	
17	450003	1	Hex Head Screw, M6-1 x 40 mm	
18	450171	1	Hex Head Screw, M6-1 x 20 mm	
19	450214	4	Hex Head Screw, M10-1.5 x 25 mm	
20	450242	42	Hex Head Screw, M12-1.75 x 35 mm	Grade 8.8
21	450357	1	Insert, M6-1	
22	450369	3	Nut, M8-1.25 Insert (0.7 to 3.8)	
23	450371	4	Nut, M10-1.5 Insert (0.7 to 3.8)	
24	450377	2	Nut, M6-1 Hex Nyloc	
25	450379	3	Nut, M10-1.5 Hex Nyloc	
26	450389	4	Washer, M6 x 12.5 x 1.8	
27	450391	2	Washer, M10 x 21 x 2.2	
28	450392	27	Washer, M12 x 24 x 2.7	
29	450401	8	Washer, M10 x 24 x 2.2	
30	450412	2	Lock Washer, M10 x 15.9 x 2.5	
31	452438	29	Nut, M12-1.75 Flange Nylock	
32	4139045	1	P-Clip, 1-5/16 Dia	
33	4396546	2	Bracket, Tube Clamp	
34	673581	1	Decal, Tire Pressure	
35	4164580	4	Decal, Lubrication	
36	009034900	1	Decal, Belt	
37	002953223	1	Grommet, 20.6 x 31.8 x 9.5	
38	4398766	1	Bracket, Hose Clamp	
39	4398686	1	Clamp, Stauf - LBG-425, 4-PP	
40	450005	1	Screw, M6-1 x 50 mm Hex Head	
41	450389	2	Washer, M6 x 12.5 x 1.8	
42	450377	1	Nut, M6-1 Hex Nyloc	
43	450215	3	Screw, M10-1.5 x 30 mm Hex Head	
44	838363	1	Decal, Throttle	
45	670526	1	Decal, Glow Plug	
46	673618	1	Blanking Plug, 38 mm	
47	4305715	1	Grommet, 38 x 32 mm	
48	450413	1	Washer	
49	48228-06	1	P-Clip, 1.23” Dia	Not illustrated

> Change from previous revision

https://truckmanualshub.com/

7.1 Front Axle Assembly

Serial No. All

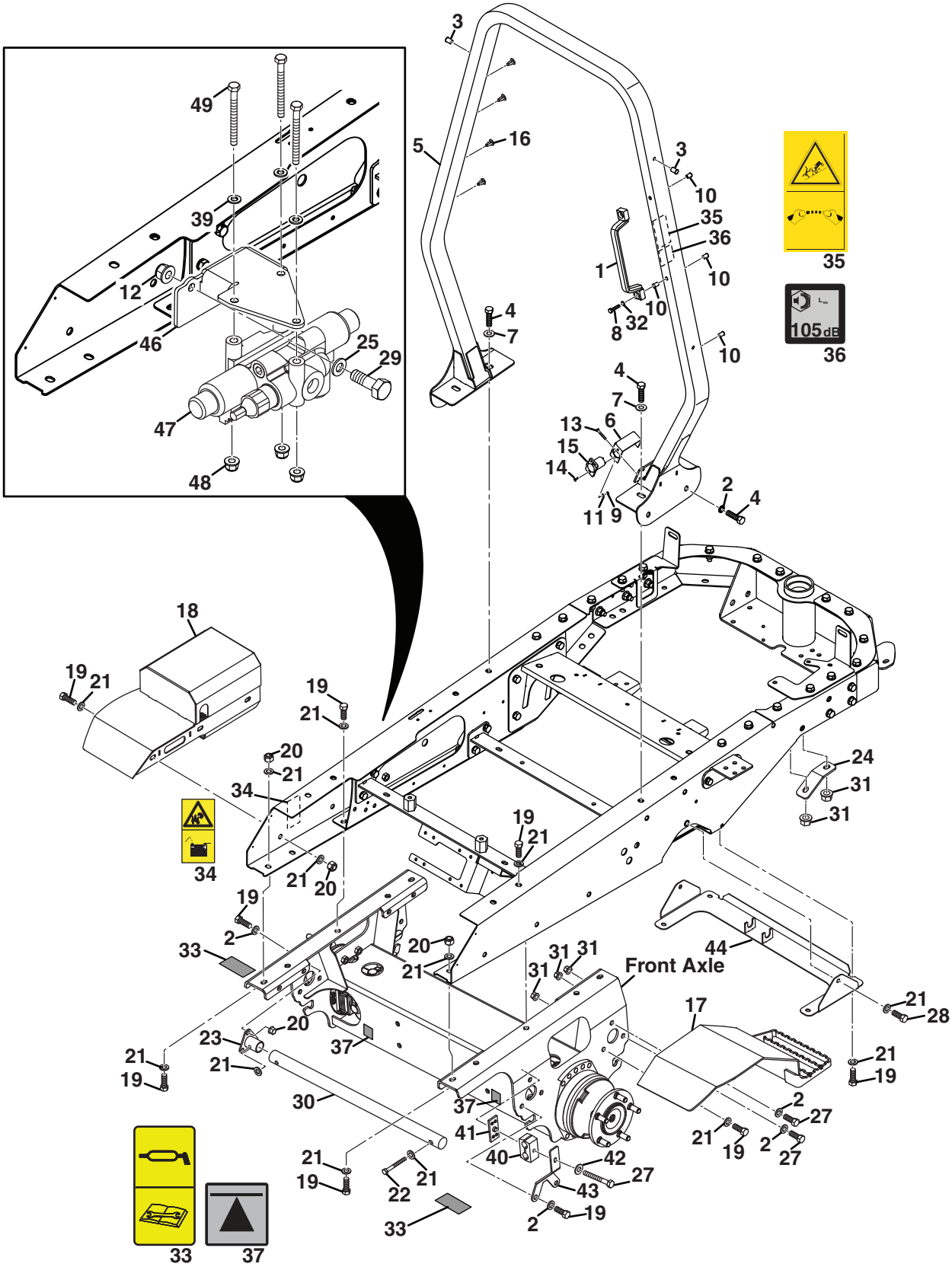

https://truckmanualshub.com/

Item	Part No.	Qty.	Description	Serial Numbers/Notes
1	4259710	1	Handle, ROPS	
2	4273470	8	AV Washer - 13 x 19.5 x 2.5	
3	669479	5	Fir Tree Insert, 13.5 mm	
4	4314627	8	Screw, M12-1.75 x 35 mm Hex Head	Grade 10.9
5	4370266	1	ROPS	
6	4395246	1	Bracket, Socket Mount	
7	450402	4	Washer, M12 x 28 x 2.7	
8	450172	2	Hex Head Screw, M6-1 x 25 mm	
9	450321	2	Nut, M4-0.7 Hex	
10	450358	5	Nut, M6-1 Insert (4.2 to 6.6)	
11	450387	2	Washer, M4 x 9 x 0.9	
12	UK452437	3	Nut, M10 Flange Nyloc	
13	450532	2	Screw, M5-0.8 x 35 mm Pan Head	
14	450594	2	Screw, M4-0.7 x 12 Countersunk	
15	843942	1	Outlet, 12 V Accessory	**REFERENCE U5, See 41.1**
16	669503	11	Mouting Button, 6.6 mm	
17	4388428	1	Fender and Step	
18	682967	1	Fender and Battery Box	
19	450242	22	Screw, M12-1.75 x 35 mm Hex Head	
20	450380	21	Nut, M12-1.75 Hex Nyloc	
21	450392	58	Washer, M12 x 24 x 2.7	
22	UK450055	4	Bolt, M12-1.75 x 75 mm Hex Head	
23	4381048	4	Carrier Support	
24	4391327	2	Lower Ch Rail Bracket	
25	UK450391	5	Washer, M10 x 21 x 2.2	
26	456110066	2	Screw, 3/8-16 x 1 Hex Head	
27	450243	8	Screw, M12-1.75 x 40 mm Hex Head	
28	450240	2	Screw, M12-1.75 x 25 mm Hex Head	
29	UK450215	3	Screw, M10-1.5 x 30 mm Hex Head	
30	4393546	2	Cross Bar, Chassis	
31	452438	20	Nut, M12 Flange Nyloc	
32	450389	2	Bolt, M8-1.25 x 50 mm Hex Head	
33	4164580	2	Decal, Lubrication	
34	009114100	1	Decal, Battery	
35	009114380	1	Decal, Seat Belt	
36	009034770	1	Decal, Sound	
37	4397046	2	Decal, Jacking	
38	450370	2	Nut, M8-1.25 Insert	
39	450389	3	Flat Washer, M6 x 12.5 x 1.8	
40	2208139	4	Hose Clamp Bottom	
41	4122501	2	Bore Hose Clamp, 5/8”	
42	450411	2	Lock Washer, M8 x 12.75 x 2	
43	008089500	2	Hose Clamp Bracket, Front Unit	
44	669323	1	Archway Panel Weldment	
45	450412	4	Lock Washer, M10 x 15.9 x 2.5	
46	670156	1	Cutter Valve Bracket	
47	4287791	1	Solenoid	
48	UK452436	3	Flanged Hex Nut, M8	
49	UK450025	3	Hex Bolt, M8-1.25 x 85 MM LG	**Grade 8.8**

> Change from previous revision

https://truckmanualshub.com/

8.1 Front Axle

Serial No. All

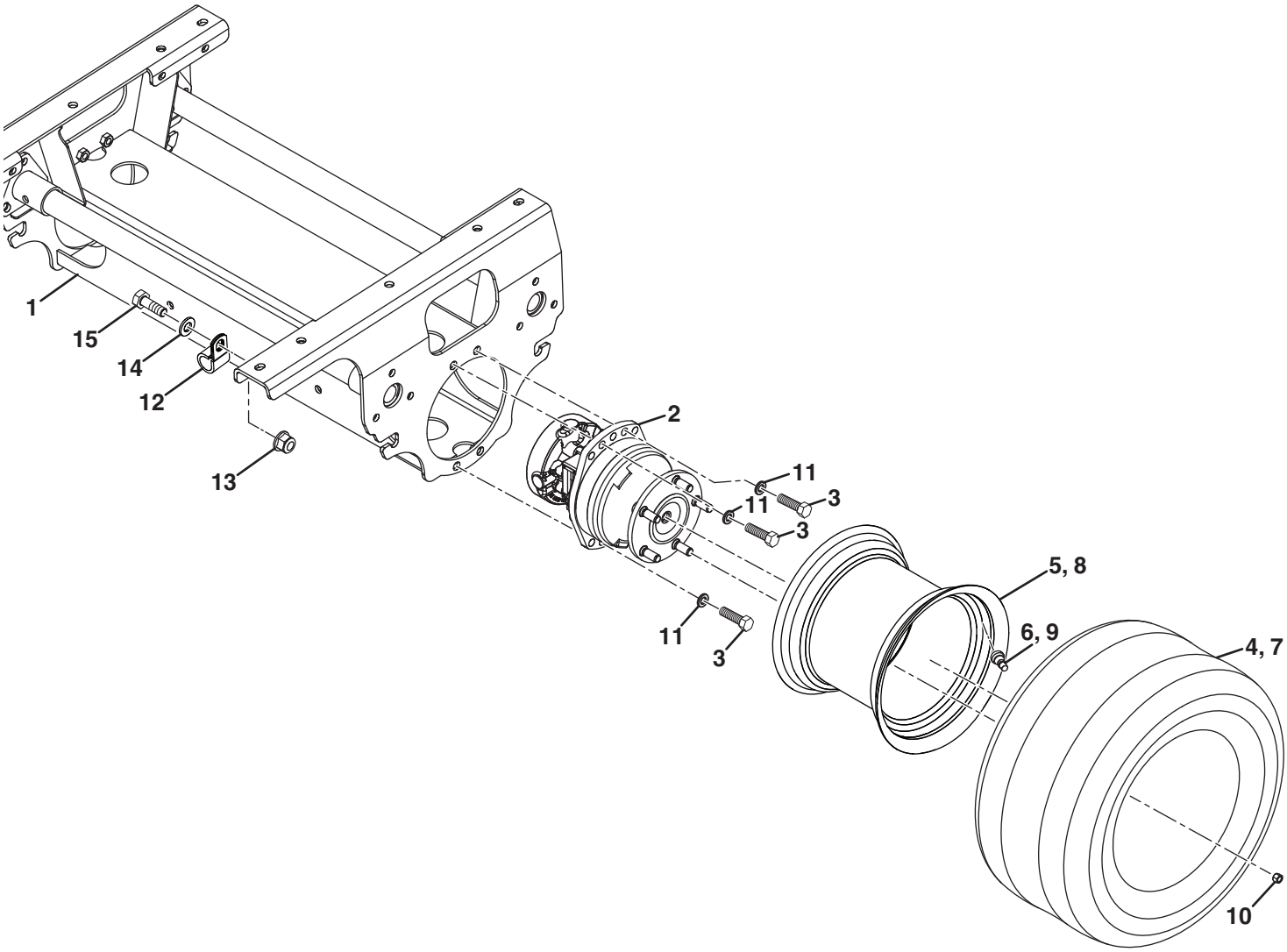

https://truckmanualshub.com/

Item	Part No.	Qty.	Description	Serial Numbers/Notes
1	4374927	1	Front Axle Weldment	
2	4379926	2	Wheel Motor, 235 cc	
	4229520	1	• Motor Seal Kit	
	4229521	1	• Multi Disc Brake Seal Kit	
3	450242	8	Screw, M12-1.75 x 40 mm Hex Head	
	4388026	2	Wheel and Tire Assembly	Treaded Tire Option
4	4233963	1	• Tire, 20 x 12-10 4 Ply Grassmaster	Treaded Tire Option
5	4375488	1	• Wheel, 10 x 8.5	
6	4220940	1	• Tubeless Tire Valve	
	4375489	2	Wheel and Tire Assembly	Smooth Tire Option
7	4233900	1	• Tire, 20 x 10 - 2 Ply OTR	Smooth Tire Option
8	4375488	1	• Wheel, 10 x 8.5	
9	4220940	1	• Tubeless Tire Valve	
10	001341110	5	Wheel Nut, 1/2-20	Torque to 112 Nm
11	4273470	8	AV Washer - 13 x 19.5 x 2.5	
12	674298	1	P-Clip, 19 MM LG	
13	UK452437	1	Flange Hex Nut, M10	
14	UK450391	1	Washer, M10 x 21 x 2.2	
15	UK450215	1	Hex Head Screw, M10-1.5 x 30 MM LG	

> Change from previous revision

https://truckmanualshub.com/

9.1 Rear Axle Assembly

Serial No. All

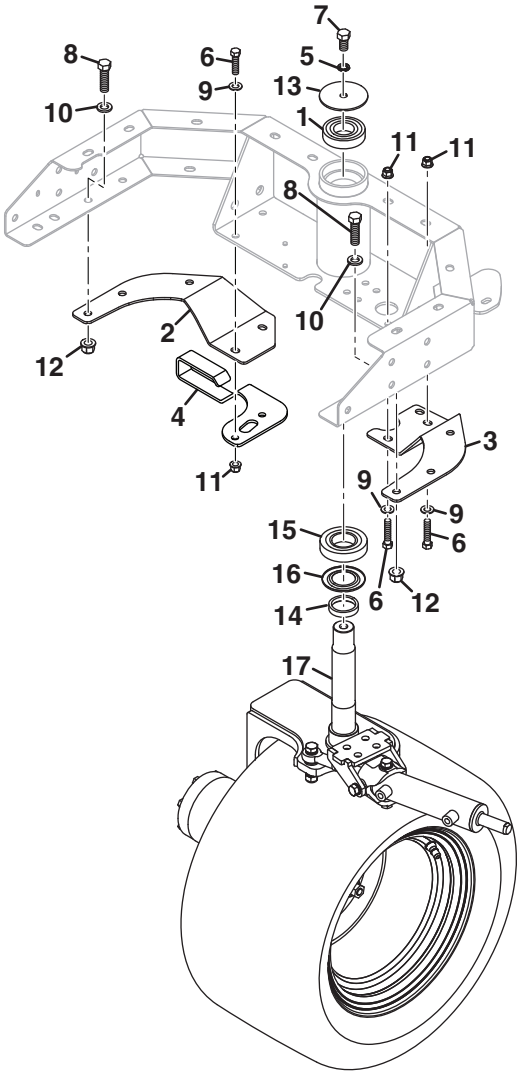

https://truckmanualshub.com/

Item	Part No.	Qty.	Description	Serial Numbers/Notes
1	002036070	1	Ball Bearing, 35 x 72 x 10	
2	4391085	1	Gusset, RH Rear Chassis	
3	4391106	1	Gusset, LH Rear Chassis	
4	4399209	1	Bracket, Rear Motor	
5	4273470	1	AV Washer - 13 x 19.5 x 2.5	
6	450216	4	Hex Head Screw, M10-1.5 x 35 mm	
7	450239	1	Hex Head Screw, M12-1.75 x 20 mm	
8	450242	6	Hex Head Screw, M12-1.75 x 35 mm	Grade 8.8
9	450391	4	Washer, M10 x 21 x 2.2	
10	450392	6	Washer, M12 x 24 x 2.7	
11	452437	4	Nut, M10-1.5 Flange Nyloc	
12	452438	6	Nut, M12-1.75 Flange Nyloc	
13	MBA2397A	1	Washer, 11 x 82 x 3	
14	4397266	1	Collar, Rear Axle	
15	4397488	1	Ball Bearing, 40 x 80 x 18	
16	4397507	1	Nilos Ring	
17	REF	1	3WD Rear Axle	**See 10.1**

> Change from previous revision

https://truckmanualshub.com/

10.1 Rear Axle

Serial No. All

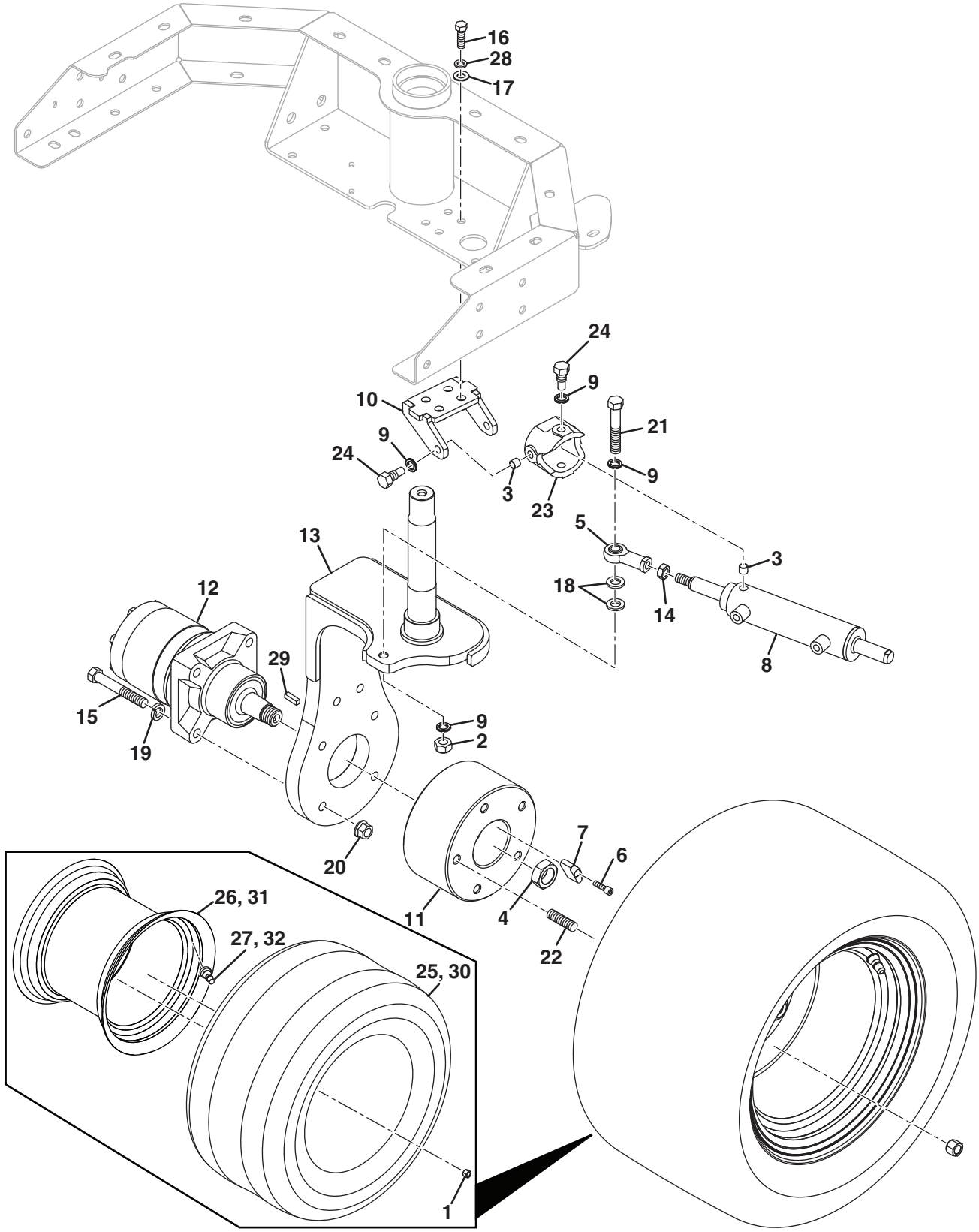

https://truckmanualshub.com/

Item	Part No.	Qty.	Description	Serial Numbers/Notes
1	008008460	5	Wheel Nut, M14-1.5 x 34 mm	Torque to 112 Nm (83 ft. lb.)
2	001399032	1	Nut, 1/2-20 Nyloc	
3	002143004	4	Bush, 10 x 12 x 10	
4	008006260	1	Nut, 1-20 Wheel Motor	Torque to 400 Nm (295 lb. ft)
5	008145256	1	Rod End, 1/2-20	
6	4183560	1	Screw, M6-1 x 20 mm Hex Socket	
7	4192800	1	Hub, Wheel Nut	
8	4244289	1	Cylinder, Steering	**See 32.1 for Service Parts**
9	4273470	6	AV Washer - 13 x 19.5 x 2.5	
10	4366566	1	Bracket, Journal Mounting	
11	4370787	1	Wheel Hub	
12	4379887	1	Motor, 28.7 in^3 Wheel	**See 40.1 for Service Parts**
13	4386741	1	3WD Wheel Yoke	
14	450020281	1	Nut, 1/2-20 Thin Hex	
15	450056	4	Screw, M12-1.75 x 80 mm Hex Head	
16	450214	4	Screw, M10-1.5 x 30 mm Hex Head	
17	450391	4	Washer, M10 x 21 x 2.2	
18	450392	2	Washer, M12 x 24 x 2.7	
19	450413	4	Lock Washer, M12 x 17.9 x 2.5	
20	450455	4	Nut, M12-1.75 Hex Flange	Grade 10, Torque to 120 Nm (88 lb. ft)
21	672713	1	Hex Head Screw, 2.1/2	Grade 8
22	4399226	5	Stud, M14-1.5 x 50 mm	
23	MBC5942	1	Journal	
24	MBC5959A	4	Bolt, 1/2-20 x 12 mm	
	4375486	1	Wheel and Tire Assembly	Treaded Tire Option
25	4375487	1	• Tire, 20 x 10-10 4 Ply Grassmaster	Treaded Tire Option
26	4375488	1	• Wheel, 10 x 8.5	
27	4220940	1	• Tubeless Tire Valve	
28	450412	4	Lock Washer, M10 x 15.9 x 2.5	
29	554780	1	Key	
	4375489	1	Wheel and Tire Assembly	Smooth Tire Option
30	4233900	1	• Tire, 20 x 10 - 2 Ply OTR	Smooth Tire Option
31	4375488	1	• Wheel, 10 x 8.5	
32	4220940	1	• Tubeless Tire Valve	

> Change from previous revision

https://truckmanualshub.com/

11.1 Air Filter

Serial No. All

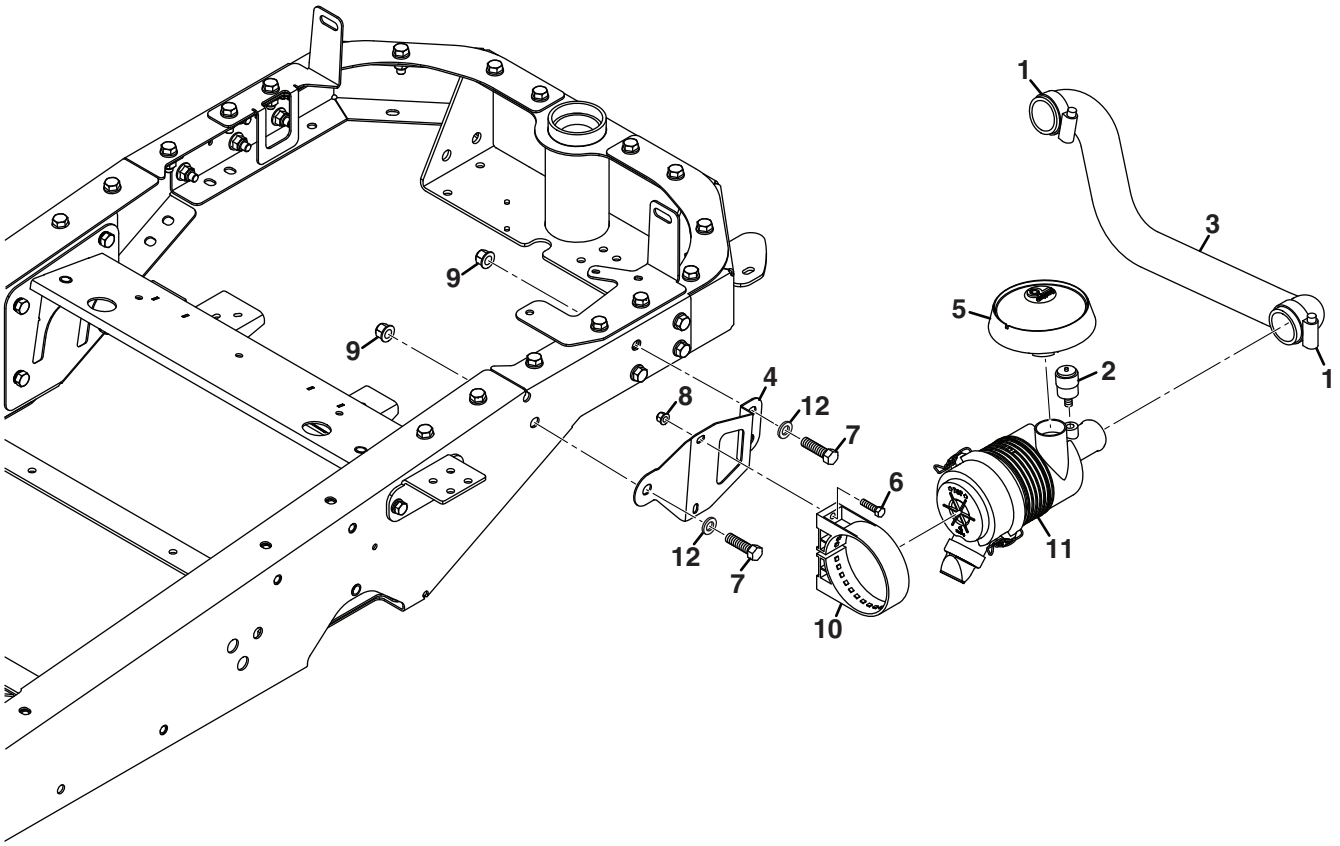

https://truckmanualshub.com/

Item	Part No.	Qty.	Description	Serial Numbers/Notes
1	674447	2	Clamp, 40-60 mm	
2	3002365	1	Indicator, Air Cleaner	
3	4378166	1	Hose, Air Cleaner Intake	
4	4378646	1	Bracket, Air Cleaner	
5	4395228	1	Rain Cap	Includes Clamp
6	450192	2	Screw, M8-1.25 x 25 mm Hex Head	
7	450242	2	Screw, M12-1.75 x 35 mm Hex Head	
8	452436	2	Nut, M8-1.25 Flange Nyloc	
9	452438	2	Nut, M12-1.75 Flange Nyloc	
10	819028	1	Mount, Air Cleaner	
11	4395230	1	Air Cleaner	
	5000913	1	• Element, Air Filter	
	5000912	1	• Cover, Assembly	
	5000914	1	• Valve, Vactuator	
12	450392	2	Washer, M12 x 24 x 2.7	

> Change from previous revision

https://truckmanualshub.com/

12.1 Radiator

Serial No. All

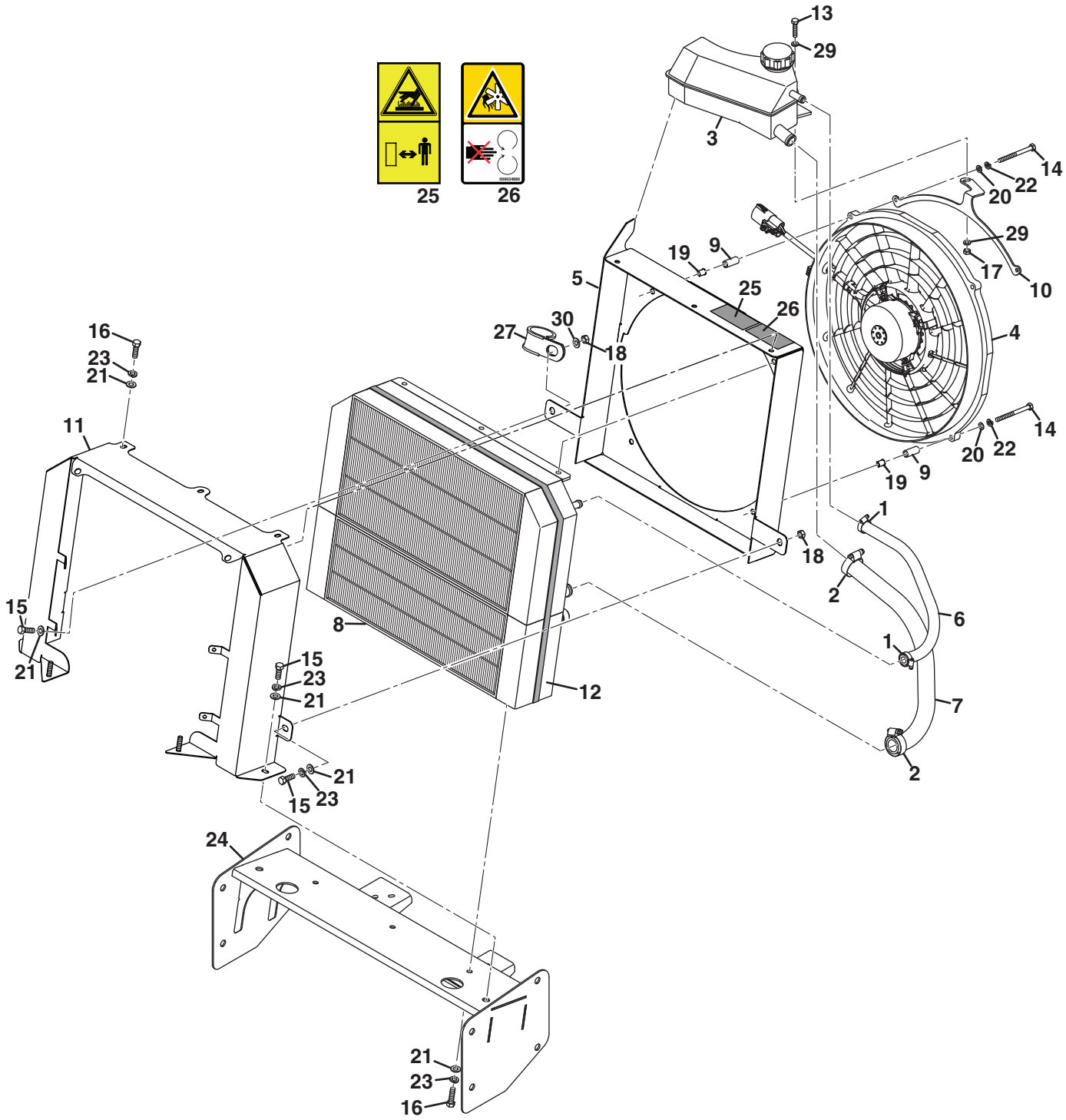

https://truckmanualshub.com/

Item	Part No.	Qty.	Description	Serial Numbers/Notes
1	108094-06	2	Hose Clamp,	
2	674440	2	Jubilee Clamp, 25 - 35 mm	
3	4123826	1	Expansion Tank	
	4123828	1	• Pressure Cap, 13 psi	
4	4348026	1	Fan, Electric 16 in. PWM	**REFERENCE M3, See 41.1**
5	4399308	1	Shroud, Rear Radiator	
6	4359066	1	Hose, Upper Expansion Tank	
7	4359067	1	Hose, Lower Expansion Tank	
8	4376688	1	Radiator and Hydraulic Oil Cooler	
9	4378487	4	Spacer, Fan	
10	4385186	1	Bracket, Expansion Tank	
11	4399443	1	Shroud, Front Radiator	
12	4394906	1	Seal, Radiator Foam	
13	450000	1	Screw, M6-1 x 25 mm Hex Head	
14	450008	4	Screw, M6-1 x 55 mm Hex Head	
15	450191	3	Screw, M8-1.25 x 20 mm Hex Head	
16	450192	7	Screw, M8-1.25 x 25 mm Hex Head	
17	450377	1	Nut, M6-1 Hex	
18	450324	3	Nut, M8-1.25 Hex	
19	450357	4	Nut, M6-1 Insert (0.7 to 4.2)	
20	450389	4	Flat Washer, M6 x 12.5 x 1.8	
21	450390	11	Flat Washer, M8 x 17 x 1.8	
22	450410	4	Lock Washer, M6 x 9.6 x 1.5	
23	450411	9	Lock Washer, M8 x 12.75 x 2	
24	4365086	1	Cross Brace, Radiator	
25	009034920	2	Decal, Hot Surface Warning	
26	009034880	1	Decal, Fan Warning	
27	4139045	1	P-Clip, 1.31” Dia	
28	48228-06	1	Clamp	Not Shown
29	UK452000237	2	Washer, 1/4 x 3/4 x .064	
30	450400	1	Flat Washer, M8	

> Change from previous revision

https://truckmanualshub.com/

13.1 Remote Engine Oil Cooler and Filter

Serial No. All

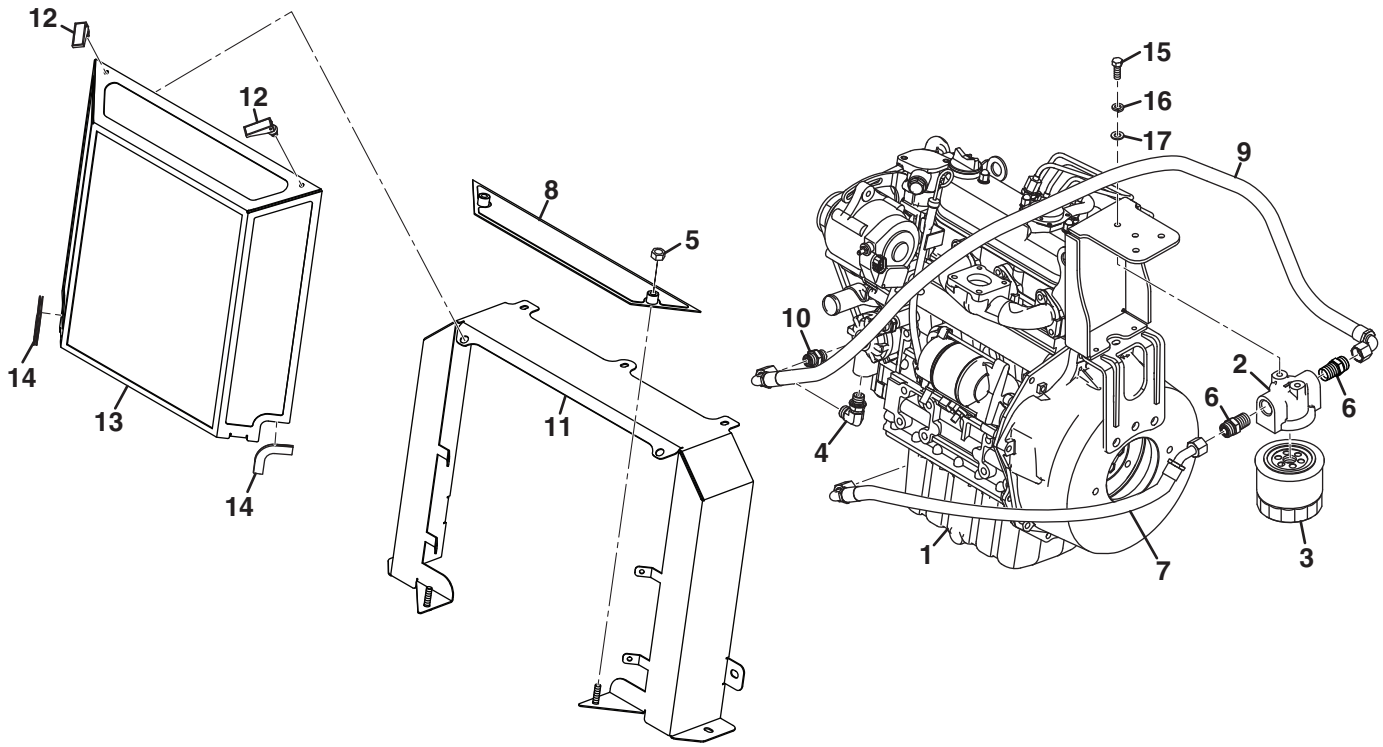

https://truckmanualshub.com/

Item	Part No.	Qty.	Description	Serial Numbers/Notes
1	4399316	1	Engine, Kubota D1105-E4B	
2	4133243	1	• Head, Filter	
3	4113986	1	• Cartridge, Oil Filter	
4	4398567	1	Fitting, -6 ORFS x M16-1.5 90°	
	339909	1	• O-Ring, -6 ORFS	
5	450331	2	Nut, M8-1.25 Thin Hex	
6	158065-03	2	Fitting, -8 ORFS x 1/2 NPTF Straight	Can Use 4186441
	339910	1	• O-Ring, -8 ORFS	
7	4399007	1	Hose, Oil Cooler to Filter	
8	672486	1	Panel, Radiator Bottom	
9	4399008	1	Hose, Filter to Engine	
10	4396366	1	Fitting, -6 ORFS x M16-1.5 Straight	
	339909	1	• O-Ring, -6 ORFS	
11	672598	1	Shroud, Front Radiator	
	672591	1	Shroud, Front Assembly	
12	2198084	2	• Latch, Swell	
13	4399434	2	• Shroud Front	
14	4399229	2	Trim, 150 cm	
15	450191	2	Screw, M8-1.25 x 20 mm Hex Head	
16	450411	2	Lock Washer, M8 x 12.5 x 2	
17	450390	2	Washer, M8 x 17 x 1.8	

> Change from previous revision

https://truckmanualshub.com/

14.1 Engine Mounting

Serial No. All

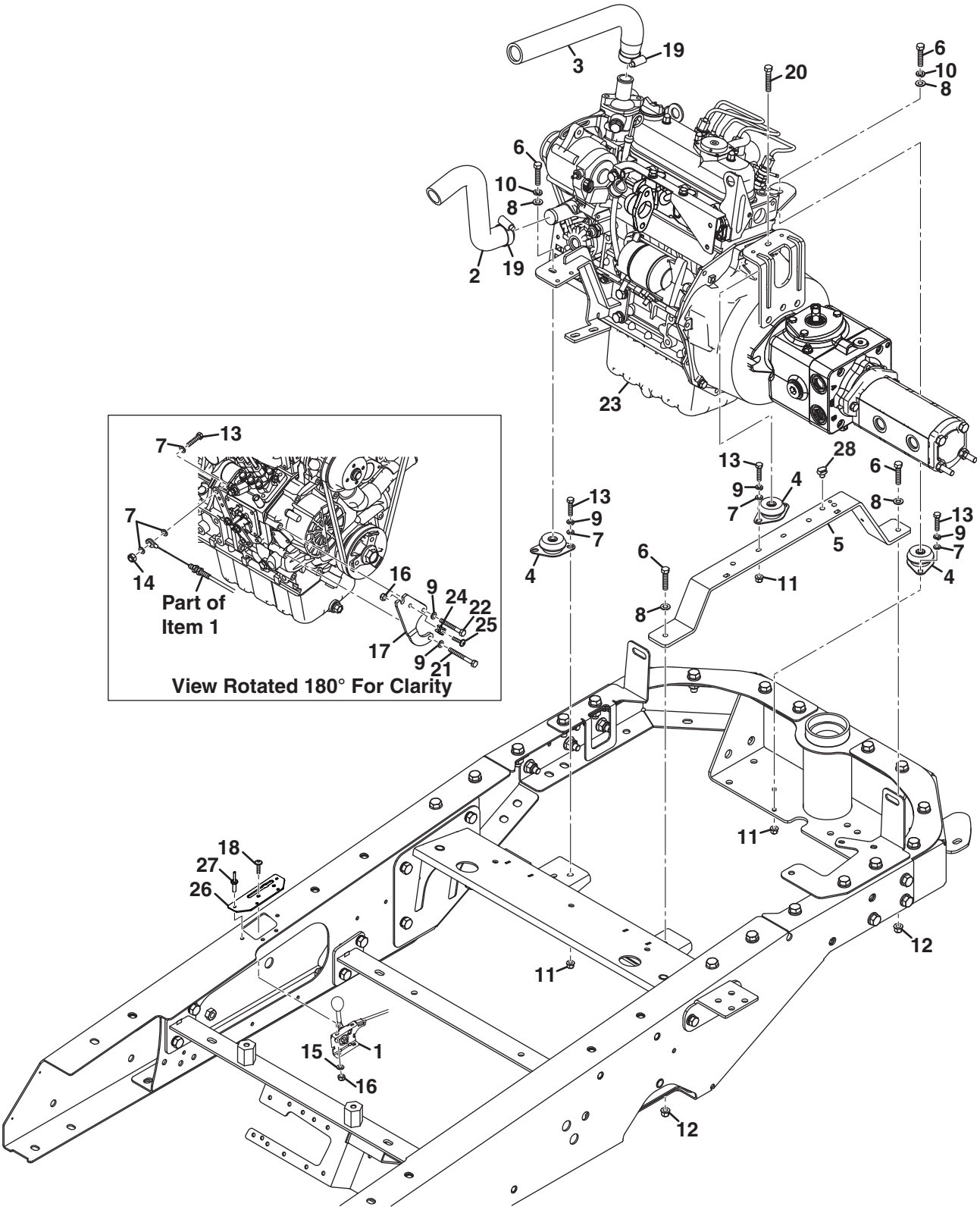

https://truckmanualshub.com/

Item	Part No.	Qty.	Description	Serial Numbers/Notes
1	4393088	1	Lever, Engine Throttle	
2	4244831	1	Hose, Radiator	
3	4359048	1	Hose, Upper Radiator	
4	4358026	3	Mount, Engine	
5	4377767	1	Bracket, Engine Subframe	
6	450193	4	Screw, M8-1.25 x 30 mm Hex Head	
7	450389	9	Washer, M6 x 12.5 x 1.8	
8	450390	4	Washer, M8 x 17 x 1.8	
9	450410	8	Lock Washer, M6 x 9.6 x 1.5	
10	450411	2	Lock Washer, M8 x 12.75 x 2	
11	452435	6	Nut, M6-1 Flange Nyloc	
12	452436	2	Nut, M8-1.25 Flange Nyloc	
13	450172	7	Screw, M6-1 x 25 mm Hex Head	
14	450377	1	Nut, M6-1 Hex Nyloc	
15	450388	2	Washer, M5 x 10 x 1.1	
16	450376	3	Nut, M5-0.8 Hex Nyloc	
17	4393167	1	Plate, Throttle Cable	
18	4306557	2	Screw, M5-0.8 Flange Button Head	
19	UK001925400	2	Hose Clamp (19-40 mm)	
20	450194	1	Screw, M8-1.25 x 35 mm Hex Head	
21	450006	1	Screw, M6-1 x 55 mm Hex Head	
22	450005	1	Screw, M6-1 x 50 mm Hex Head	
23	REF	1	Engine and Pump Assembly	**See 15.1**
24	4395489	1	Connector, Fir Tree mounting	
25	450528	1	Screw, M5-0.8 x 16 mm Pan Head	
26	4399727	1	Plate, Throttle Cable	
27	669840	4	Pop Rivet, 4.8 x 14 mm	
28	4370167	1	Mount, Fir Tree Cable Tie	

> Change from previous revision

https://truckmanualshub.com/

15.1 Engine and Pumps

Serial No. All

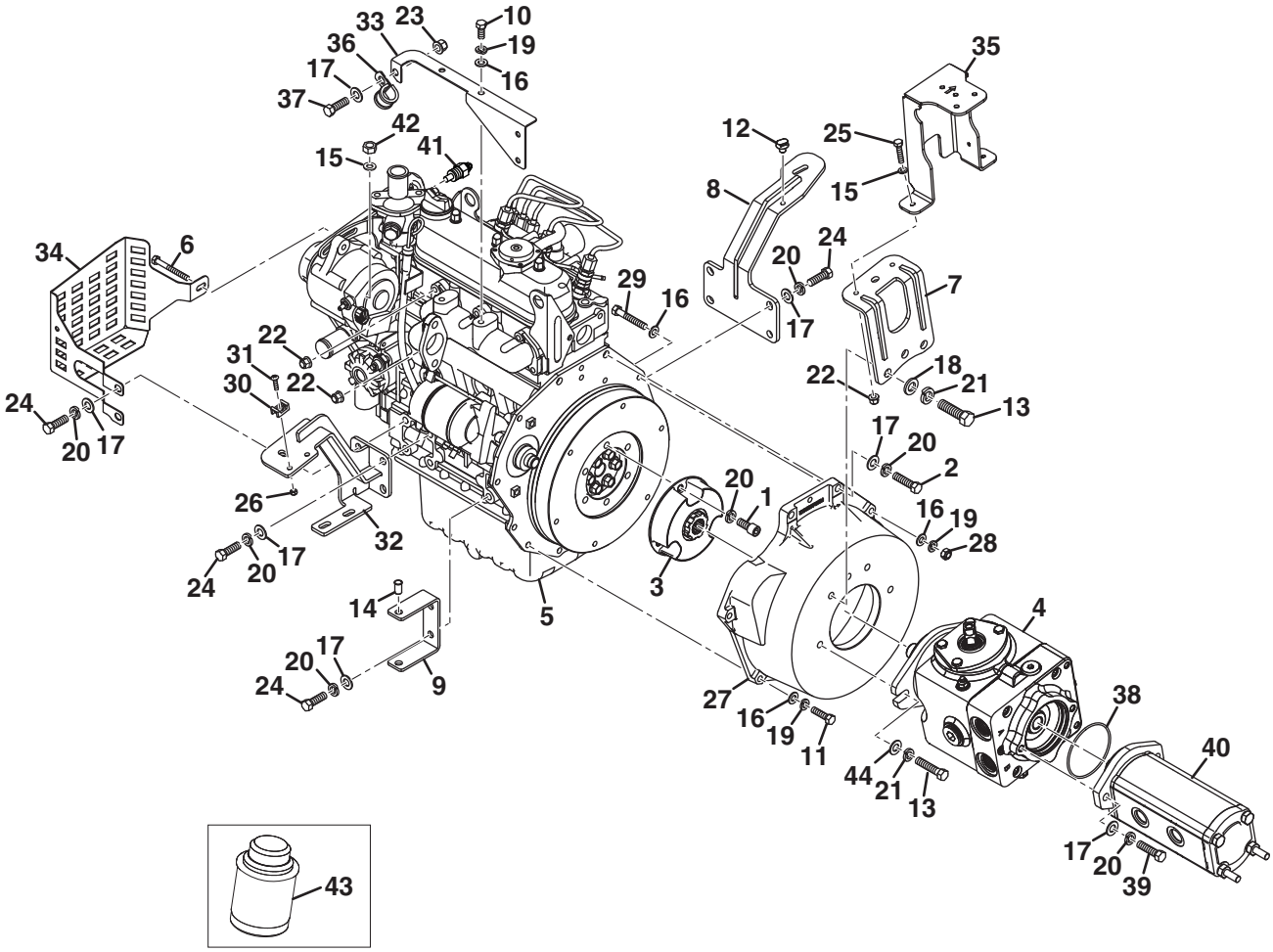

https://truckmanualshub.com/

Item	Part No.	Qty.	Description	Serial Numbers/Notes
1	400318	3	Screw, M10-1.25 x 30 mm SHCS	
2	001191520	2	Hex Head Screw, M10-1.25 x 35 mm	
3	4395240	1	Coupling, 13 Tooth	
4	4203740	1	Pump, LPV 35 cc Piston	**See 39.1 for Service Parts**
5	4399316	1	Engine, Kubota D1105-E4B	
6	553842	1	• Screw, M6 x 50 mm	
7	4396226	1	Mount, Engine	
8	4377606	1	Mount, Rear Engine	
9	4387056	1	Bracket, Exhaust	
10	450190	2	Hex Head Screw, M8-1.25 x 16 mm	
11	450193	4	Hex Head Screw, M8-1.25 x 30 mm	
12	4370167	1	Mount, Fir Tree Cable Tie	
13	450242	5	Hex Head Screw, M12-1.75 x 35 mm	Torque to 86.9 Nm
14	450358	2	Nut, M6-1 Insert (4.2-6.6)	
15	450389	3	Washer, M6 x 12.5 x 1.8	
16	450390	8	Washer, M8 x 17 x 1.8	
17	450391	14	Washer, M10 x 21 x 2.2	
18	450392	3	Washer, M12 x 24 x 2.7	
19	450411	7	Lock Washer, M8 x 12.75 x 2	
20	450412	17	Lock Washer, M10 x 15.9 x 2.5	
21	450413	5	Lock Washer, M12 x 17.9 x 2.5	
22	452435	8	Flange Nyloc Nut, M6-1	
23	452437	1	Flange Nyloc Nut, M10-1.5	
24	452740	10	Cap Screw, M10-1.25 x 25 mm	Grade 12.9
25	450172	2	Hex Head Screw, M6-1 x 25 mm	
26	450376	2	Nyloc Hex Nut, M5-0.8	
27	4395239	1	Bell Housing	
28	450378	1	Nyloc Hex Nut, M8-1.25	
29	450195	1	Hex Head Screw, M8-1.25 x 40 mm	
30	4395489	2	Saddle Clip, Cable Tie Mount	
31	450528	2	Pan Head Screw, M5-0.8 x 16	
32	4399299	1	Mount, Front Engine	
33	4399300	1	Bracket, Exhaust	
34	4399301	1	Guard, Belt	
35	4398946	1	Bracket, Oil and Fuel Filter	
36	4139045	1	P-Clip, 1 5/16 Dia	Remote Filter Hose
37	450214	1	Screw, M10-1.5 x 25 mm Hex Head	
38	002211520	1	O-Ring, 82.22 ID x 2.62 Section	
39	456110448	2	Screw, 3/8-16 x 1-1/4 Hex Head	
40	4177940	1	Pump, 2 Section Gear	**See 29.1 for Service Parts**
41	364501	1	Sender, Engine Temperature	**REFERENCE R5, See 41.1**
42	450323	1	Nut, M6-1 Hex	
43	4113986	1	Engine Oil Filter	
44	4368246	2	Top Hat Washer	

> Change from previous revision

https://truckmanualshub.com/

16.1 Engine Exhaust

Serial No. All

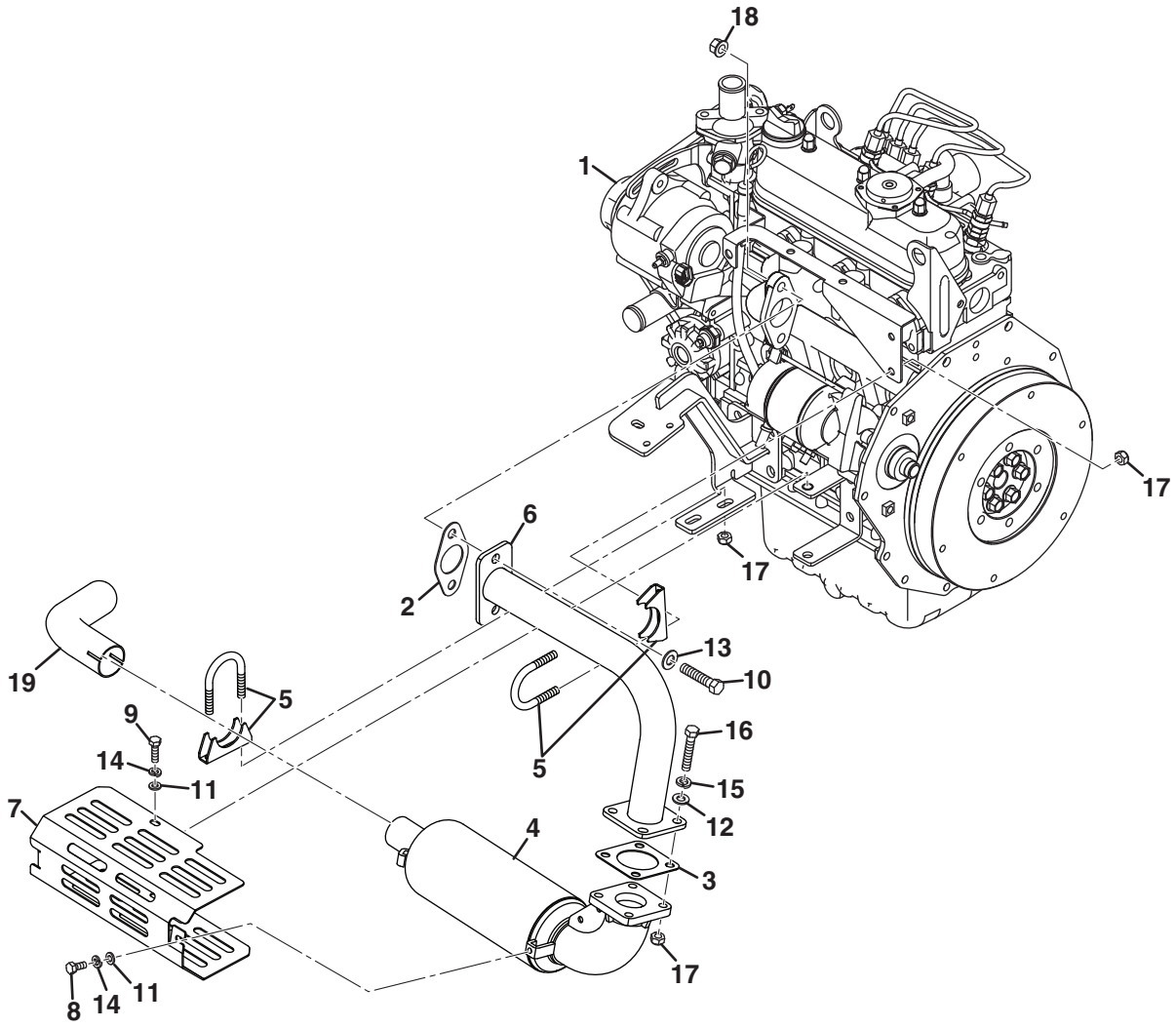

https://truckmanualshub.com/

Item	Part No.	Qty.	Description	Serial Numbers/Notes
1	4399316	1	Engine, Kubota D1105-E4B	
2	5003476	1	• Gasket, Exhaust	
3	553020	1	• Gasket, Muffler	
4	554482	1	• Muffler	
5	674600	2	U-Clamp, 38 mm	
6	4378129	1	Head, Pipe	
7	4387057	1	Cover, Exhaust	
8	450168	2	Screw, M6-1 x 12 mm Hex Head	
9	450171	2	Screw, M6-1 x 16 mm Hex Head	
10	450216	2	Screw, M10-1.5 x 35 mm Hex Head	
11	450389	4	Washer, M6 x 12.5 x 1.8	
12	450390	4	Washer, M8 x 17 x 1.8	
13	450391	2	Washer, M10 x 21 x 2.2	
14	450410	4	Lock Washer, M6 x 9.6 x 1.5	
15	450411	4	Lock Washer, M8 x 12.75 x 2	
16	450194	4	Screw, M8-1.25 x 35 mm Hex Head	
17	001339050	8	Nut, M8-1.25 Hex Staytite	
18	450454	2	Nut, M10-1.5 Hex Flange	
19	4378128	1	Tailpipe	

> Change from previous revision

https://truckmanualshub.com/

17.1 Fuel Tank and Routing

Serial No. All

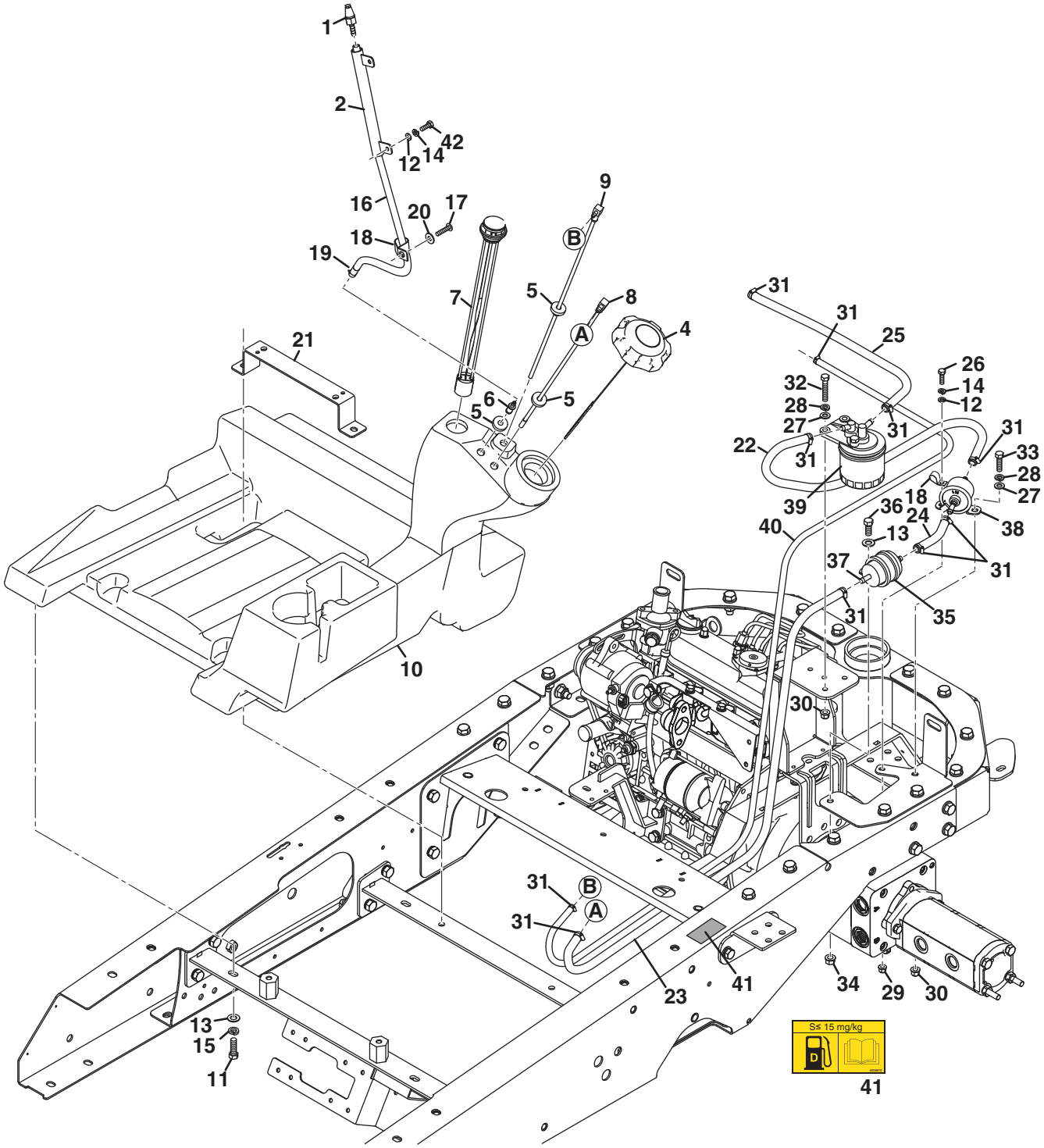

https://truckmanualshub.com/

Item	Part No.	Qty.	Description	Serial Numbers/Notes
1	002497040	1	Breather	
2	4387306	1	Vent Tube	
3	4354952	1	Tank, Diesel Fuel	
4	4287174	1	• Cap, Fuel Tank	
5	672550	3	• Grommet	
6	4291031	1	• Fitting, 1/4 Straight Barb	
7	4382366	1	• Gauge, Fuel Level	
8	4379146	1	• Tube, Fuel Pick Up	80 Mesh Screen On End
9	4386486	1	• Tube, Fuel Return Line	
10	4379626	1	• Tank, Diesel Fuel	
11	450214	2	Screw, M10-1.5 x 25 mm Hex Head	
12	450389	3	Washer, M6 x 12.5 x 1.8	
13	450391	3	Washer, M10 x 21 x 2.2	
14	450410	3	Lock Washer, M6 x 9.6 x 1.5	
15	450412	2	Lock Washer, M10 x 15.9 x 2.5	
16	672728	1	Hose, Fuel Breather	
17	450543	1	Screw, M6-1 x 25 mm Pan Head	
18	469016509	2	P-Clip	
19	4247950	1	Clip, Fuel Hose	
20	452000327	1	Washer, 1/4 x 3/4 x .064	
21	4384346	1	Strap, Fuel Tank	**See 2.1 for mounting**
22	672789	1	Hose, Fuel Pump to Fuel Filter	Cut Length 620 mm
23	672788	1	Hose, Tank to Pre-Filter	Cut Length 900 mm
24	672790	1	Hose, Pre-Filter to Fuel Pump	Cut Length 110 mm
25	672787	1	Hose, Fuel Filter to Engine	Cut Length 665 mm
26	450172	1	Screw, M6-1 x 25 mm Hex Head	
27	450390	3	Washer, M8 x 17 x 1.8	
28	450411	3	Lock Washer, M8 x 12.75 x 2	
29	452435	1	Nut, M6-1 Flange Nyloc	
30	452436	3	Nut, M8-1.25 Flange Nyloc	
31	4283232	10	Clamp, Hose (9.5-12 mm)	
32	450194	2	Screw, M8-1.25 x 35 mm Hex Head	
33	450192	1	Screw, M8-1.25 x 25 mm Hex Head	
34	450454	1	Nut, M10-1.5 Hex Flange	
35	4344103	1	P-Clip, 48 mm Rubber Sleeve	
36	450213	1	Screw, M10-1.5 x 20 mm Hex Head	
37	5001182	1	Fuel Pre-Filter	
38	5001948	1	Fuel Pump	**REFERENCE M2, See 41.1**
39	5001189	1	Fuel Filter	
	2500809	1	• Cartridge, Fuel Filter	
40	672715	1	Hose, Engine Return to Tank	Cut Length 1370 mm
41	4324674	1	Decal, Fuel	
42	450170	2	Hex Head Screw, M6-1 x 16 mm	

> Change from previous revision

https://truckmanualshub.com/

18.1 Hydraulic Tank and Hood

Serial No. All

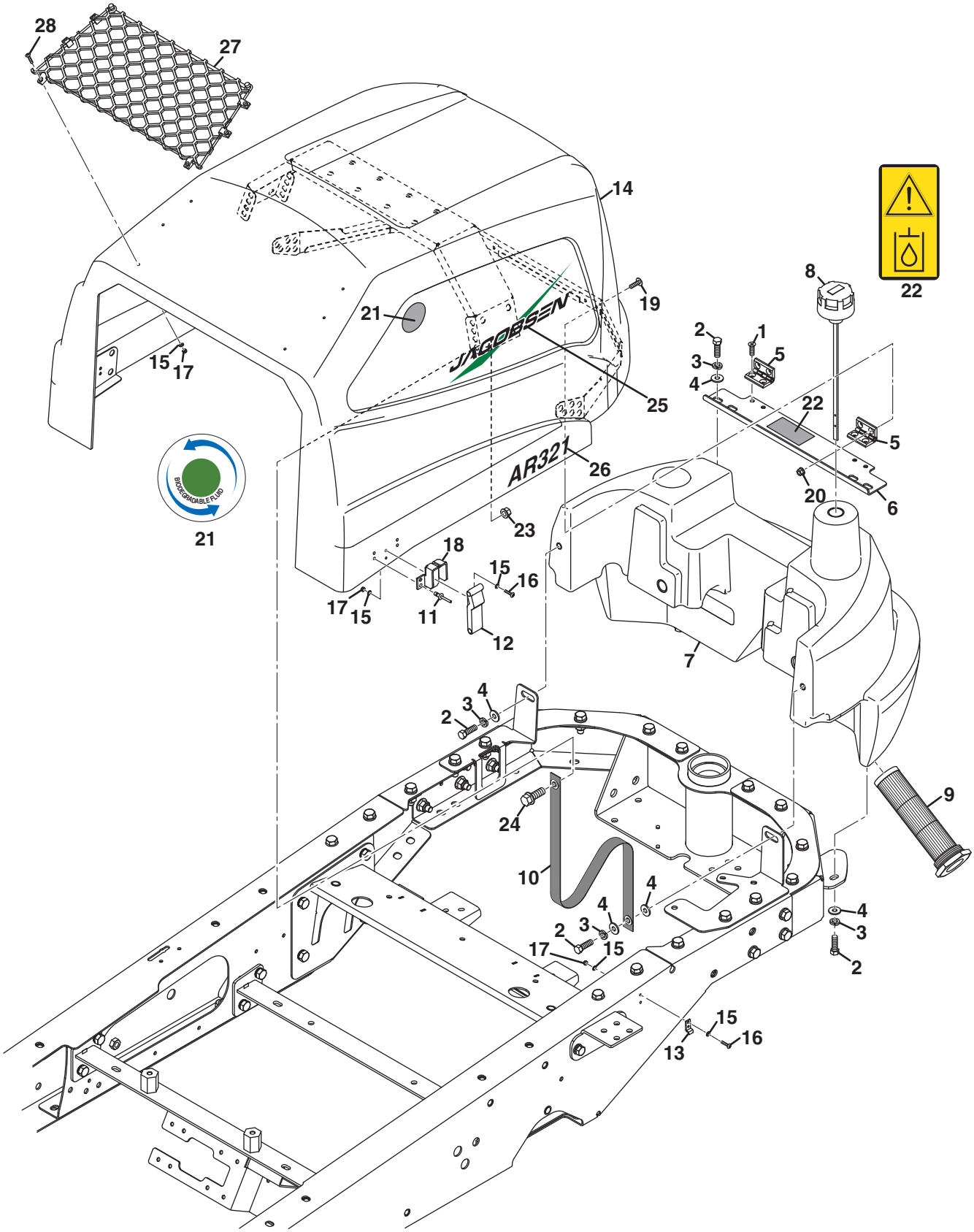

https://truckmanualshub.com/

Item	Part No.	Qty.	Description	Serial Numbers/Notes
1	450620	4	Screw, M6-1 x 20 mm Countersunk	
2	450214	9	Screw, M10-1.5 x 25 mm Hex Head	
3	450412	9	Lock Washer, M10 x 15.9 x 2.5	
4	001599264	10	Washer, 25/64 x 1 x .106	
5	4312406	2	Hinge, Dies Cast Zinc	
6	4363146	1	Bracket, Hood Mount	
	673809	1	Tank, Hydraulic	
7	673813	1	• Hydraulic Tank	
8	4370752	1	• Breather, Filter	
9	4394849	1	• Strainer, Suction	Torque to 40 Nm (29.5 ft. lbs.)
	339904	1	• • O-Ring, -32 ORB	
10	671857	1	Lanyard, Hood	
11	676936	4	Pop Rivet, 4.8 x 14	
12	2198112	1	Draw Latch	
13	N/S	1	• Latch, Keeper	
14	4356728	1	Hood, Engine	
15	450387	14	Washer, M4 x 9 x 0.9	
16	450520	4	Screw, M4-0.7 x 20 mm Pan Head	
17	452717	10	Nut, M4-0.7 Hex Nyloc	
18	MBG6720	1	Bracket, Hood Latch	
19	4334427	4	Screw, M6-1 x 20 mm Button Head	
20	450452	4	Nut, M6-1 Hex Flange	
21	4111408	1	Decal, Bio-Fluid	
22	4164860	1	Decal, Hydraulic Fluid	
23	450454	1	Nut, M10-1.5 Hex Flange	
24	450477	1	Screw, M10-1.5 x 20 mm Hex Flange	
25	4397106	2	Decal, Jacobsen	
26	4400104	2	Decal, AR321	
27	4389850	1	Cargo Net, Hood	
28	450519	6	Screw, M4-0.7 x 16 mm Pan Head	

> Change from previous revision

https://truckmanualshub.com/

19.1 Hydraulic Valve Assembly

Serial No. All

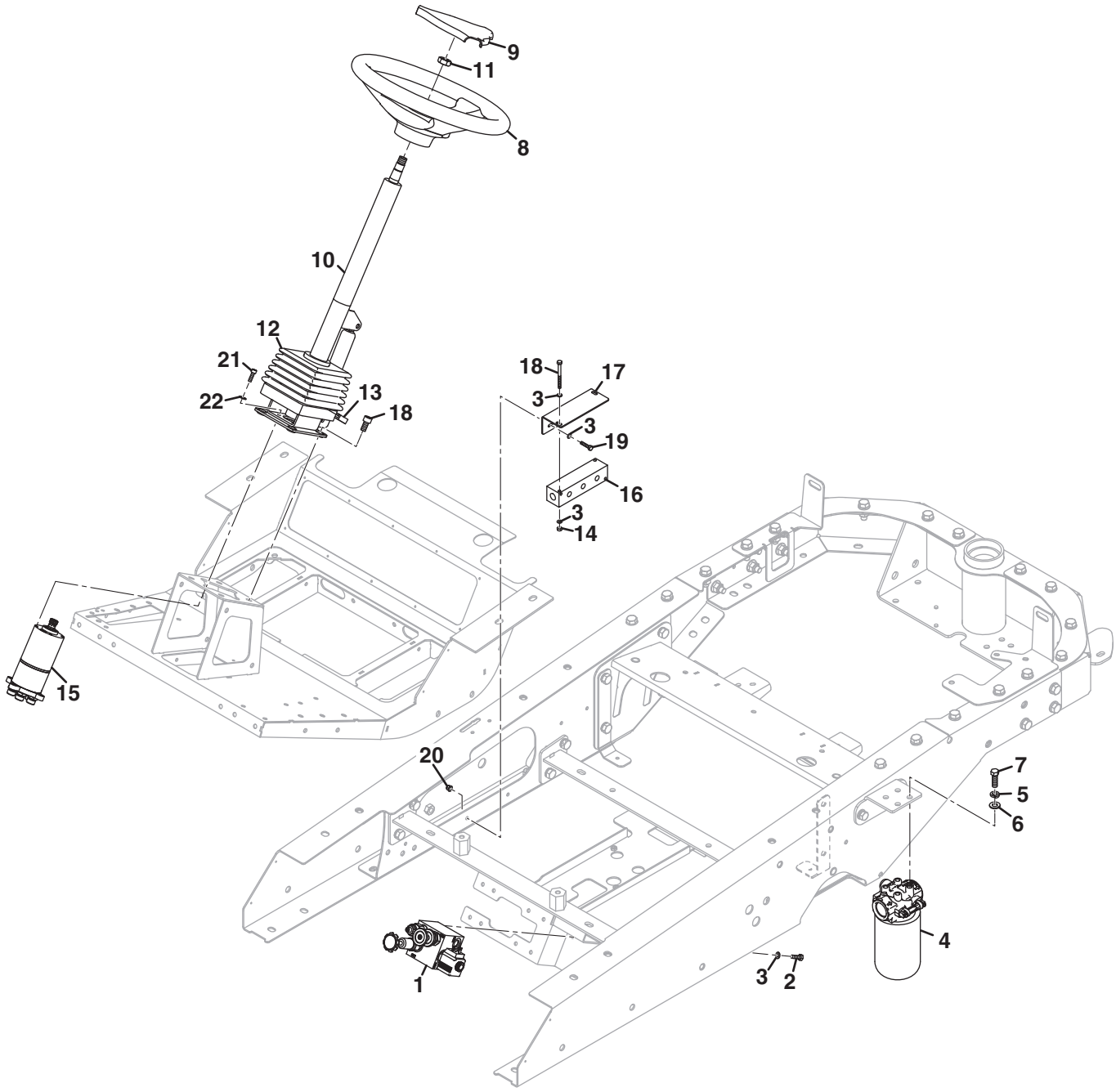

https://truckmanualshub.com/

Item	Part No.	Qty.	Description	Serial Numbers/Notes
1	4201021	1	Valve, Brake	**See 35.1 for Service Parts**
2	450170	2	Screw, M6-1 x 16 mm Hex Head	
3	450389	15	Washer, M6 x 12.5 x 1.8	
4	4395287	1	Charge Filter Assembly	
	2811255	1	• Cartridge, Filter Element	
	4395269	1	• Filter Head with Indicator	
	4395531	1	• • Indicator, Filter Service	
5	450412	4	Lock Washer, M10 x 15.9 x 2.5	
6	452000326	4	Washer, 3/8 x 3/4 x .072	
7	456110066	4	Screw, 3/8-16 x 1” Hex Head	
8	2811364	1	Steering Wheel	
9	2811365	1	• Cap, Steering Wheel	
10	4198282	1	Steering Column	
	4278451	1	• Kit, Gas Spring Pivot	
	4399466	1	• Kit, Steering Column Pivot	
	4397007	1	• • Sleeve Bearing, 16 x 18 x 8	
	4399298	1	• • Dome Capped Starlock, 10 mm	
	4397006	1	• Kit, Steering Column Pivot	
	4270219	1	• Kit, Universal Joint Service	
	4280351	1	• Gas Spring	
11	450020338	1	• Nut, 5/8-18 Thin Hex	
12	4375586	1	• Bellows	
13	4375587	1	• Cover, Foot Pedal	
14	450377	2	Nut, M6-1 Hex Nyloc	
15	4393849	1	Valve, Steering	**See 38.1 for Service Parts**
16	4394670	1	Manifold, Drain Header	
17	4394753	1	Bracket, Drain Manifold	
18	450737	4	Screw, M10-1.5 x 20 mm SHCS	
19	450172	2	Screw, M6-1 x 25 mm Hex Head	
20	452435	2	Nut, M6-1 Flange Nyloc	
21	450712	4	Screw, M6-1 x 20 mm SHCS	
22	450410	4	Lock Washer, M6 x 9.6 x 1.5	

> Change from previous revision

https://truckmanualshub.com/

20.1 3WD Traction Hydraulics

Serial No. All

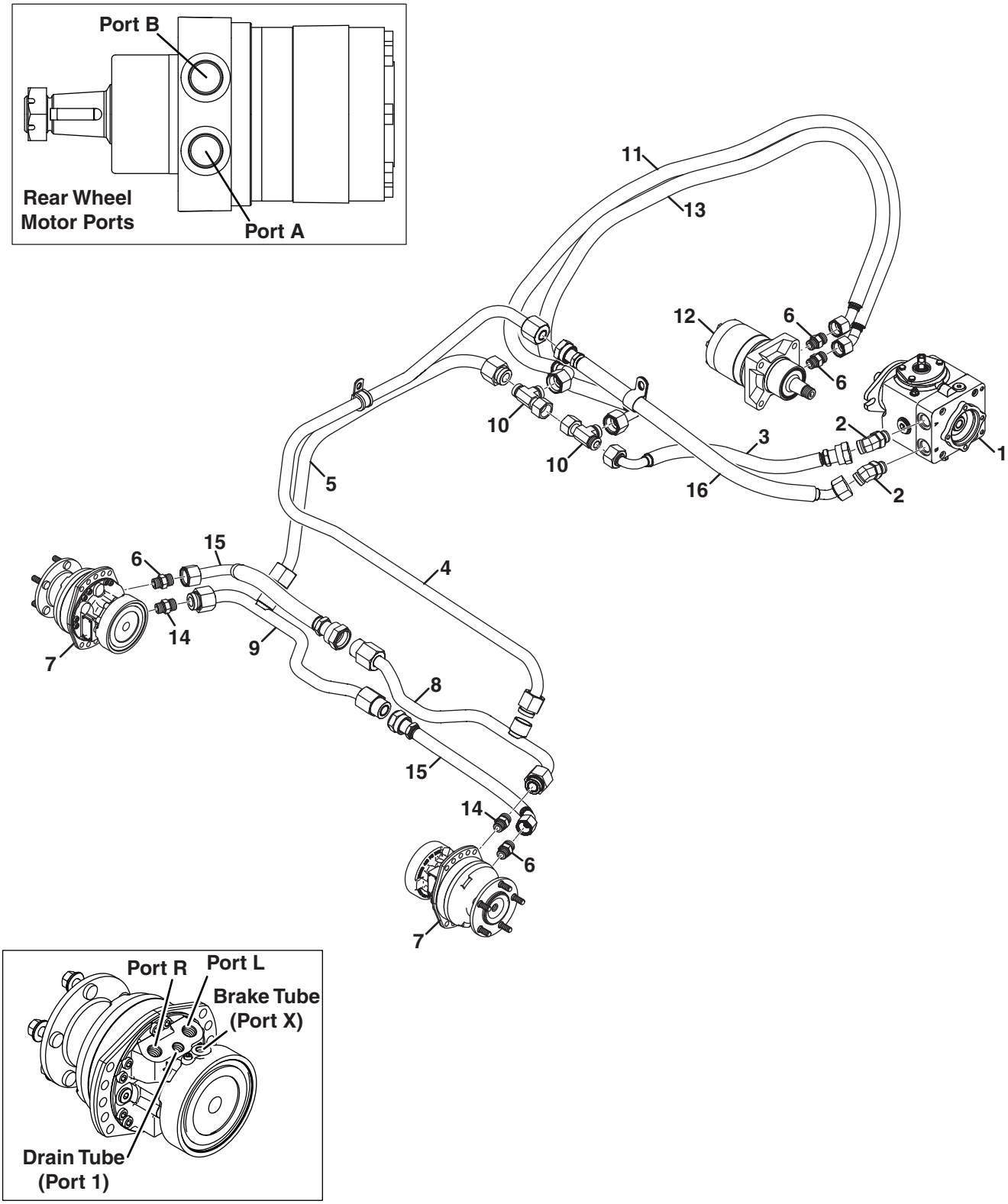

https://truckmanualshub.com/

Item	Part No.	Qty.	Description	Serial Numbers/Notes
1	4203740	1	Pump, LPV 35 cc Piston	**See 39.1 for Service Parts**
2	340036	2	Fitting, -12 ORFS x -12 ORB 45°	
	339912	1	• O-Ring, -12 ORFS	
	339900	1	• O-Ring, -12 ORB	
3	4391257	1	Hose, Transmission Pressure Line	Traction Pump Port B
4	4400020	1	Tube, Transmission Pressure Line	
	339912	1	• O-Ring, -12 ORFS	
5	4400019	1	Tube, Front Motor Return Line	
6	339989	4	Fitting, -10 ORFS x -10 ORB Straight	
	339911	1	• O-Ring, -10 ORFS	
	339899	1	• O-Ring, -10 ORB	
7	4379926	2	Wheel Motor, 235 cc	
8	4391026	1	Tube, Front Motor Transmission Line	Left Motor Port L
	339912	2	• O-Ring, -12 ORFS	
9	4398266	1	Tube, Transmission Line Front Motors	Right Motor Port L
	339912	2	• O-Ring, -12 ORFS	
10	340122	2	Fitting, -12 ORB Swivel Run Tee	
	339912	2	• O-Ring, -12 ORFS	
11	4398746	1	Hose, Rear Motor Pressure	Rear Motor Port A
12	4379887	1	Motor, 28.7 in^3 Wheel	**See 40.1 for Service Parts**
13	4398747	1	Hose, Rear Motor Return	Rear Motor Port B
14	339993	2	Fitting, -12 ORFS x -10 ORB	
	339912	1	• O-Ring, -12 ORFS	
	339899	1	• O-Ring, -10 ORB	
15	4391566	2	Hose, Front Motor Transmission Line	
16	4391258	1	Hose, Transmission Return Line	Traction Pump Port A

> Change from previous revision

https://truckmanualshub.com/

21.1 3WD Gear Pump and Steering Hydraulics

Serial No. All

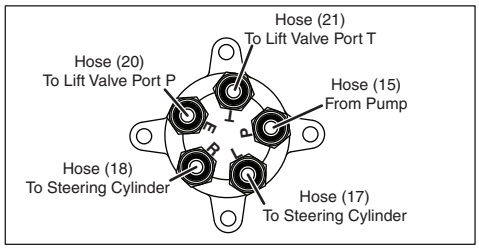

Steering Valve viewed from end

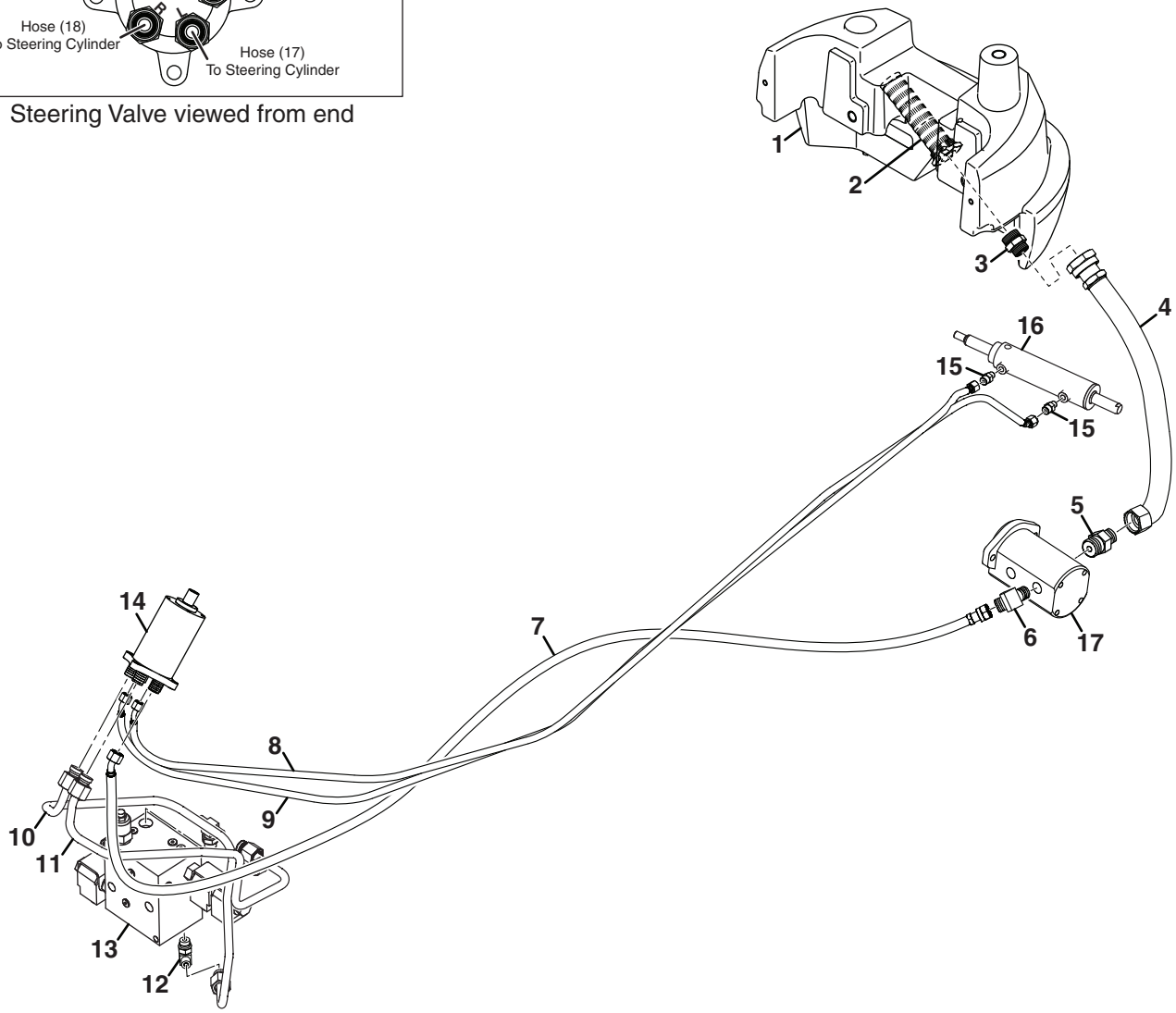

https://truckmanualshub.com/

Item	Part No.	Qty.	Description	Serial Numbers/Notes
1	4354951	1	Tank, Hydraulic	
2	4394849	1	• Strainer, Suction	
	339904	1	• • O-Ring, -32 ORB	
3	340001	1	Fitting, -20 ORFS x -20 ORB	Torque to 190 Nm (140 ft. lbs.)
	339914	1	• O-Ring, -20 ORFS	
	339902	1	• O-Ring, -20 ORB	
4	4391256	1	Hose, Tank Suction Line	
5	339999	1	Fitting, 90° 16-16 Straight Thread	
	339913	1	• O-Ring, -16 ORFS	
	339901	1	• O-Ring, -16 ORB	
6	340030	1	Fitting, 45° 8-10 Straight Thread	
	339910	1	• O-Ring, -8 ORFS	
	339899	1	• O-Ring, -10 ORB	
7	4371126	1	Hose, Pump to Steering Valve	Steering Valve Port P
	4396209	1	Bundle, 3WD Steering Hose	
8	4391206	1	• Hose, Steering Valve to Cylinder	Valve Port L, Cylinder Left Port
9	4391206	1	• Hose, Cylinder to Steering Valve	Cylinder Right Port, Valve Port R
10	4420075	1	Tube, Pressure Line - Lift Valve	
11	4420085	1	Tube, Return Line - Steering Valve	
	339909	1	• O-Ring, -6 ORFS	
12	340062	1	Fitting, 90° 6-8 Straight Thread	
	339909	1	• O-Ring, -6 ORFS	
	339898	1	• O-Ring, -8 ORB	
13	4169021	1	Weight Transfer And Lift Valve	**See 31.1 for Service Parts**
14	4393849	1	Valve, Steering	**See 38.1 for Service Parts**
15	339972	2	Fitting, -4 ORFS x -4 ORB Straight	
	339908	1	• O-Ring, -4 ORFS	
	339896	1	• O-Ring, -4 ORB	
16	4244289	1	Steering Cylinder	**See 32.1 for Service Parts**

> Change from previous revision

https://truckmanualshub.com/

22.1 Front And Rear Motor Hydraulics

Serial No. All

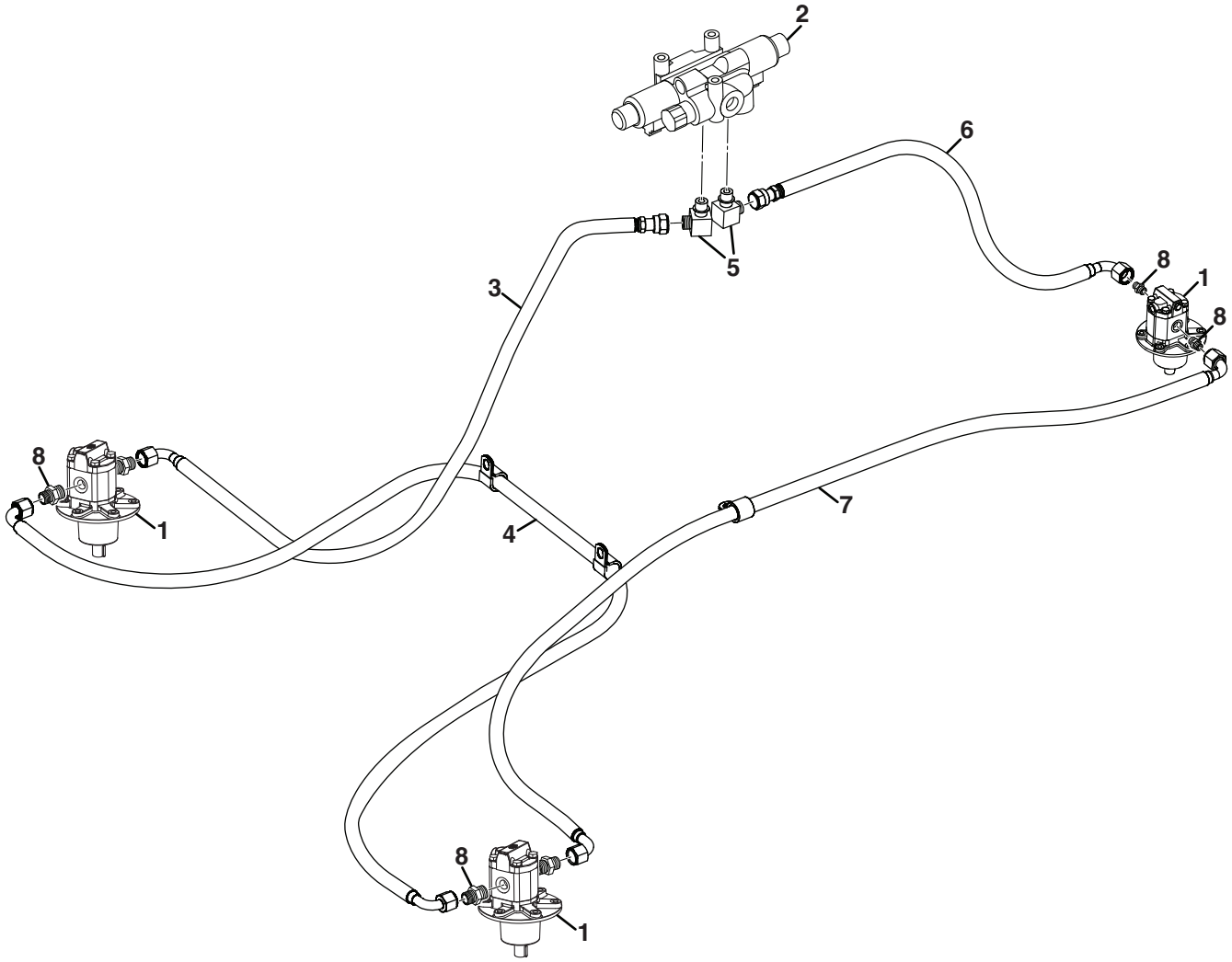

https://truckmanualshub.com/

Item	Part No.	Qty.	Description	Serial Numbers/Notes
1	674685	3	Rotary Motor, 16cc	
2	4287791	1	Solenoid, Roquet	
3	4392141	1	Hose, Pressure Line	LH Cutter Unit
4	4392142	1	Hose, Pressure Line	RH Cutter Unit
5	340066	2	Fitting, 90 Deg	
	339910	1	• O-Ring, -8 ORFS	
	339899	1	• O-Ring, -10 ORB	
6	4392145	1	Hose, Return Line	Rear Cutter Unit
7	4392144	1	Hose, Pressure Line	Rear Cutter Unit
8	339985	6	Fitting, -8 ORFS x -10 ORB Straight	
	339910	1	• O-Ring, -8 ORFS	
	339899	1	• O-Ring, -10 ORB	

> Change from previous revision

https://truckmanualshub.com/

23.1 Front And Rear Lift Hydraulics

Serial No. All

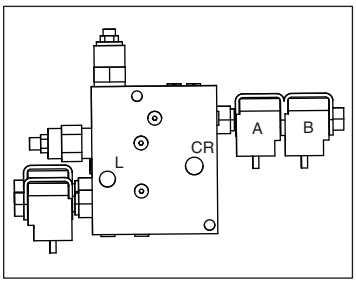

Lift Valve
Viewed From Front

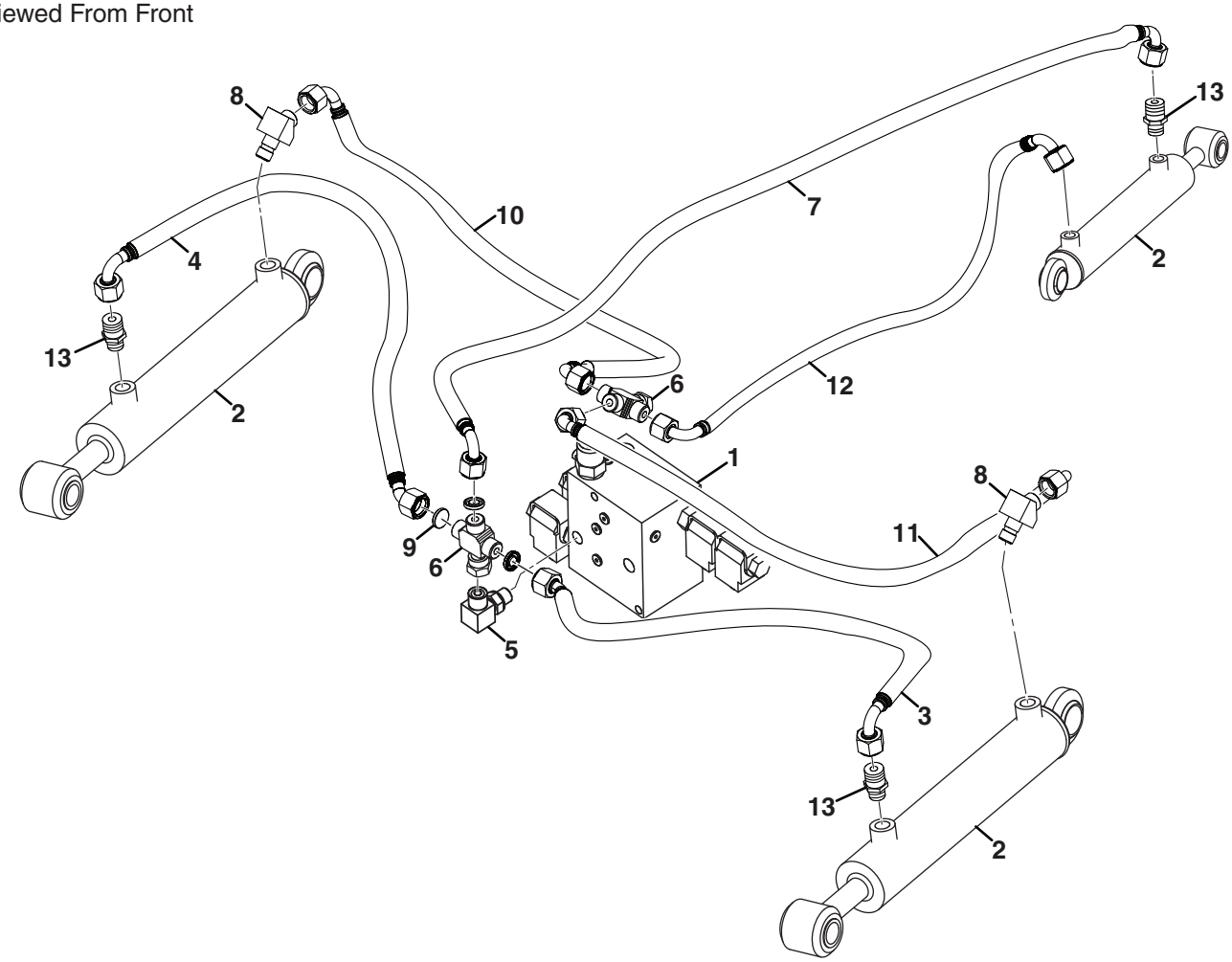

https://truckmanualshub.com/

Item	Part No.	Qty.	Description	Serial Numbers/Notes
1	4169021	1	Weight Transfer And Lift Valve	**See 31.1 for Service Parts**
2	4244304	3	Cylinder, Lift	
3	4392136	1	Hose, Lift	Front LH
4	4392137	1	Hose, Lift	Front RH
5	340061	5	Fitting, -6 ORFS x -6 ORB 90°	
	339909	1	• O-Ring, -6 ORFS	
	339897	1	• O-Ring, -6 ORB	
6	4186000	1	Fitting, 11/16 ORS	
	339909	3	• O-Ring, -6 ORFS	
7	4392135	1	Hose, Lift	Rear Unit
8	340026	3	Fitting, 45 Deg 6-6 Straight Thread	
9	3008392	3	Disk, Orifice (0.029 Dia)	
10	4394507	1	Hose, Return Line	Front RH
11	4420133	1	Hose, Return Line	Front LH
12	4392132	1	Hose, Return Line	Rear Unit
13	339979	3	Fitting, -6 ORFS x -6 ORB Straight	
	339909	1	• O-Ring, -6 ORFS	
	339897	1	• O-Ring, -6 ORB	

> Change from previous revision

https://truckmanualshub.com/

24.1 Drain Hydraulics

Serial No. All

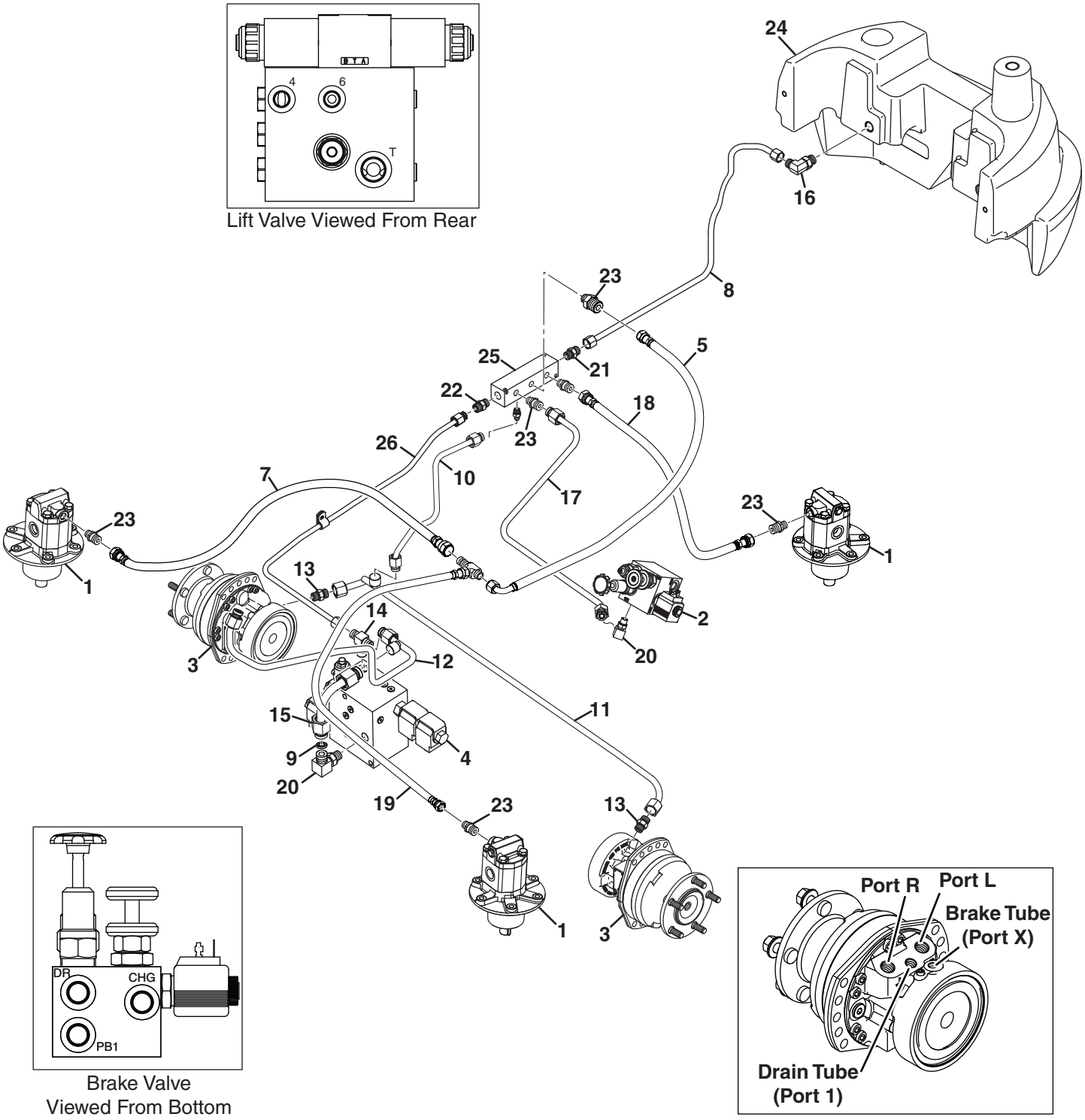

https://truckmanualshub.com/

Item	Part No.	Qty.	Description	Serial Numbers/Notes
1	674685	3	Motor, Rotary	
2	4201021	1	Valve, Brake	**See 30.1 for Service Parts**
3	4379926	2	Wheel Motor, 235cc	**See 8.1**
4	4169021	1	Weight Transfer And Lift Valve	**See 31.1 for Service Parts**
5	671843	1	Hose, Drain Line	Front Cutter Units
6	340263	1	Fitting, 6-6 Straight Thread	
	339909	2	• O-Ring, -6 ORFS	
	339897	1	• O-Ring, -6 ORB	
7	4392139	1	Hose, Drain Line	Front RH Unit
8	4383826	1	Tube, Manifold to Tank	
9	4287314	1	Disk, Orifice (0.070 Dia)	
10	4420033	1	Tube, Front Motor Drain Feeder Line	
11	4390643	1	Tube, Front Motor Drain Line	
	339909	1	• O-Ring, -6 ORFS	
12	4420085	1	Tube, Return Line - Steering Valve	
	339909	1	• O-Ring, -6 ORFS	
13	339980	2	Fitting, -6 ORFS x -8 ORB Straight	
	339909	1	• O-Ring, -6 ORFS	
	339898	1	• O-Ring, -8 ORB	
14	340097	1	Fitting, M-Tee	
	339909	2	• O-Ring, -6 ORFS	
	339898	1	• O-Ring, -8 ORB	
15	4399269	1	Tube, Bypass Line	Lift Valve
16	340067	1	Fitting, -8 ORFS x -10 ORB 90°	Torque to 81 Nm (59.7 ft. lb)
	339910	1	• O-Ring, -8 ORFS	
	339899	1	• O-Ring, -10 ORB	
17	4390640	1	Tube, Brake Valve Drain Line	
18	4392140	1	Hose, Drain Line	Rear Cutter Unit
19	4392138	1	Hose, Drain Line	Front LH Unit
20	340061	2	Fitting, -6 ORFS x -6 ORB 90°	
	339909	1	• O-Ring, -6 ORFS	
	339897	1	• O-Ring, -6 ORB	
21	339984	1	Fitting, -8 ORFS x -8 ORB Straight	
	339910	1	• O-Ring, -8 ORFS	
	339898	1	• O-Ring, -8 ORB	
22	339980	1	Fitting, -6 ORFS x -8 ORB Straight	
	339909	1	• O-Ring, -6 ORFS	
	339898	1	• O-Ring, -8 ORB	
23	339979	5	Fitting, -6 ORFS x -6 ORB Straight	
	339909	1	• O-Ring, -6 ORFS	
	339897	1	• O-Ring, -6 ORB	
24	4354951	1	Tank, Hydraulic	**See 18.1**
25	4394670	1	Header Manifold	
26	4420092	1	Tube, Return Line	Lift Valve

> Change from previous revision

https://truckmanualshub.com/

25.1 Brake Valve and Charge Hydraulics

Serial No. All

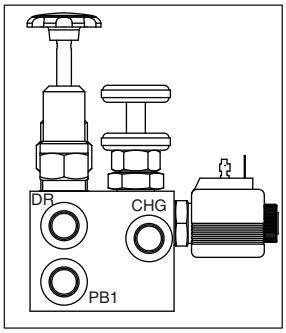

Brake Valve
Viewed From Bottom

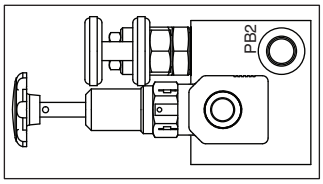

Brake Valve
Viewed From Left

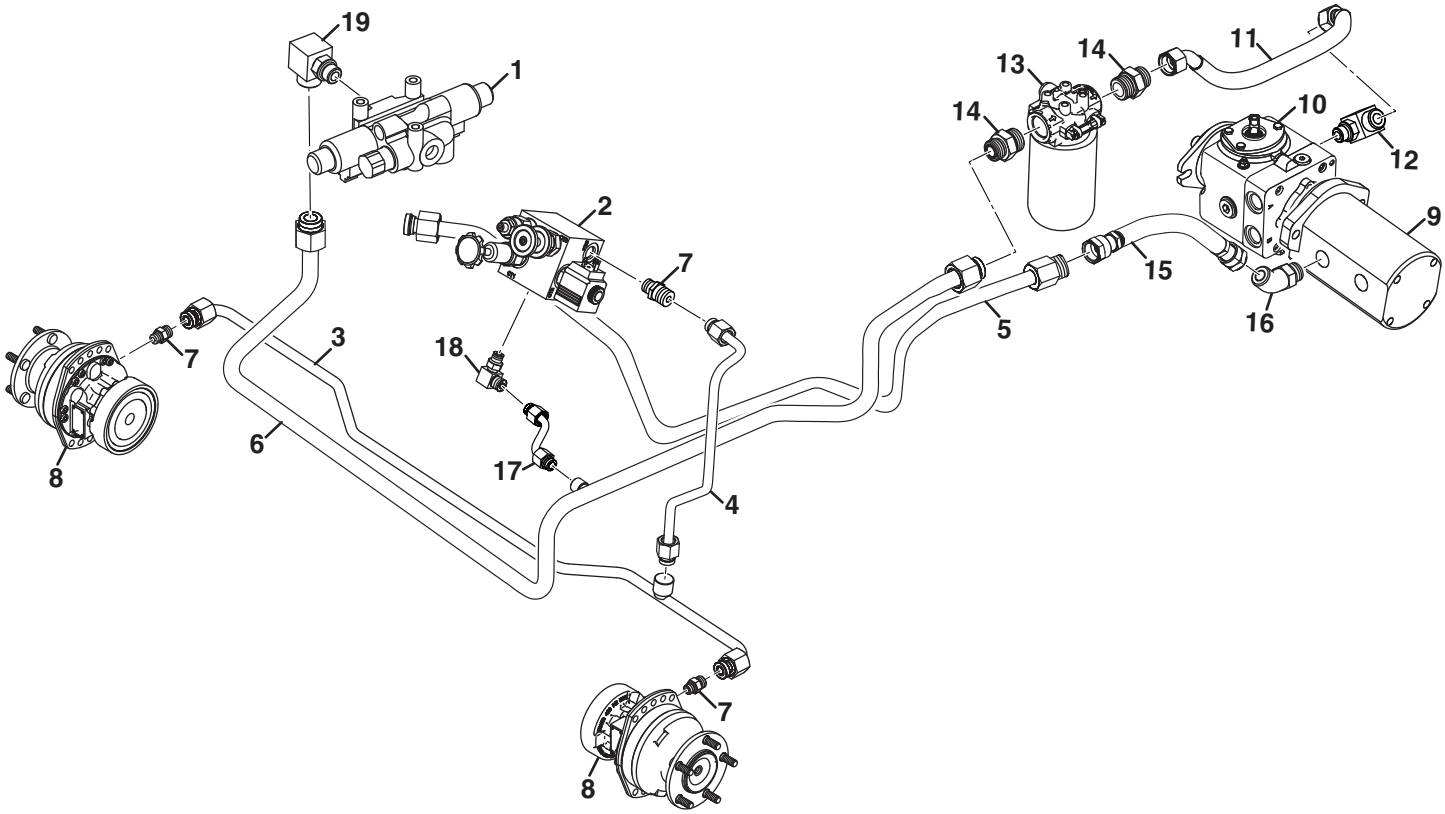

https://truckmanualshub.com/

Item	Part No.	Qty.	Description	Serial Numbers/Notes
1	4287791	1	Solenoid, Roquet	
2	4201021	1	Valve, Brake	**See 30.1 for Service Parts**
3	4391338	1	Tube, Brake Line	LH Front Motor
	339909	1	• O-Ring, -6 ORFS	
4	671265	1	Tube, Brake Pressure Line	
5	670181	1	Tube, Cutter Valve Pressure Line	
	339911	1	• O-Ring, -10 ORFS	
6	670167	1	Tube, Cutter Valve to Charge Filter	
	339909	1	• O-Ring, -6 ORFS	
7	339979	3	Fitting, -6 ORFS x -6 ORB Straight	
	339909	1	• O-Ring, -6 ORFS	
	339897	1	• O-Ring, -6 ORB	
8	4379926	2	Wheel Motor, 235 cc	**See 8.1**
9	4177940	1	Pump, Cutter And Steering	**See 29.1 for Service Parts**
10	4203740	1	Pump, LPV 35 cc Piston	**See 39.1 for Service Parts**
11	4398146	1	Hose, Return Line - Charge Filter	
12	340074	1	Fitting, -12 ORFS x -10 ORB	
	339912	1	• O-Ring, -12 ORFS	
	339900	1	• O-Ring, -12 ORB	
13	4395287	1	Filter, Charge	
	2811255	1	• Cartridge, Filter Element	
	4395269	1	• Filter Head with Indicator	
	4395531	1	• • Indicator, Filter Service	
14	339996	2	Fitting, -12 ORFS x -16 ORB	
	339912	1	• O-Ring, -12 ORFS	
	339901	1	• O-Ring, -16 ORB	
15	4391266	1	Hose, Cutter Valve Pressure Line	
16	340033	1	Fitting, 45 Deg 10-10 Straight Thread	
	339911	1	• O-Ring, -10 ORFS	
	339899	1	• O-Ring, -10 ORB	
17	671273	1	Tube, Return Line Brake Valve	
18	340061	1	Fitting, -6 ORFS x -6 ORB 90°	
	339909	1	• O-Ring, -6 ORFS	
	339897	1	• O-Ring, -6 ORB	
19	340073	1	Fitting, 90 Deg 12-10 Straight Thread	
	339912	1	• O-Ring, -12 ORFS	
	339899	1	• O-Ring, -10 ORB	

> Change from previous revision

https://truckmanualshub.com/

26.1 Oil Cooler Hydraulics

Serial No. All

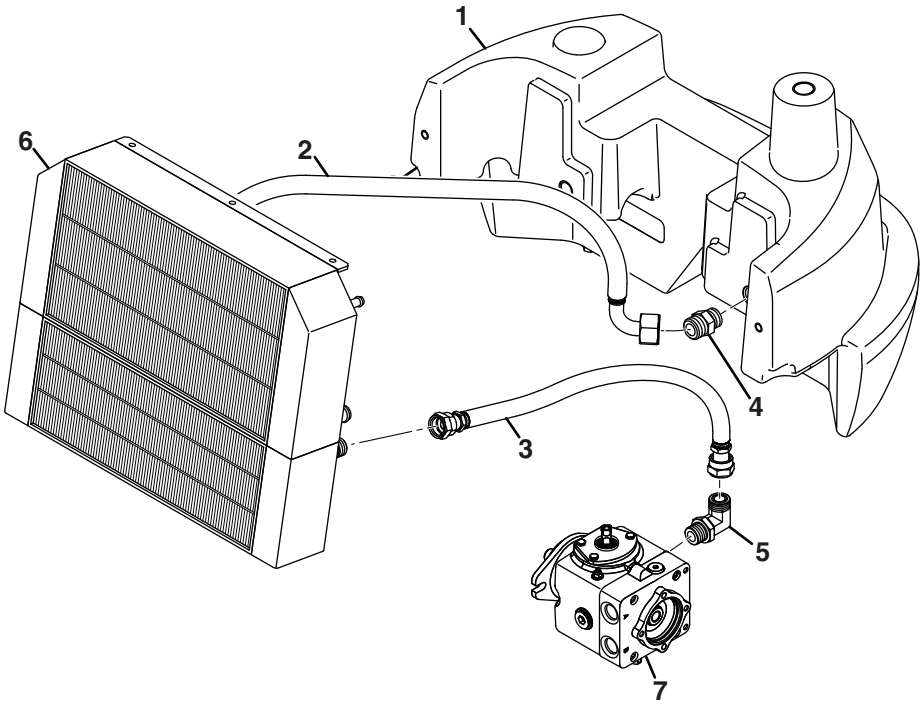

https://truckmanualshub.com/

Item	Part No.	Qty.	Description	Serial Numbers/Notes
1	4354951	1	Tank, Hydraulic	**See 18.1**
2	4391186	1	Hose, Cooler Return Line	
3	4391546	1	Hose, Cooler inlet Line	
4	339994	1	Fitting, 12 - 12 Straight Thread	Torque to 105 Nm (77.4 ft. lb)
	339912	1	• O-Ring, -12 ORFS	
	339900	1	• O-Ring, -12 ORB	
5	340074	1	Fitting, -12 ORFS x -12 ORB 90°	
	339912	1	• O-Ring, -12 ORFS	
	339900	1	• O-Ring, -12 ORB	
6	4376688	1	Radiator and Hydraulic Oil Cooler	
7	4203740	1	Pump, LPV 35 cc Piston	**See 39.1 for Service Parts**

> Change from previous revision

https://truckmanualshub.com/

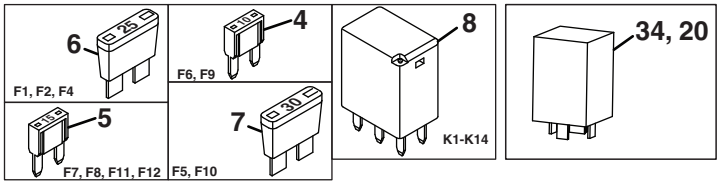

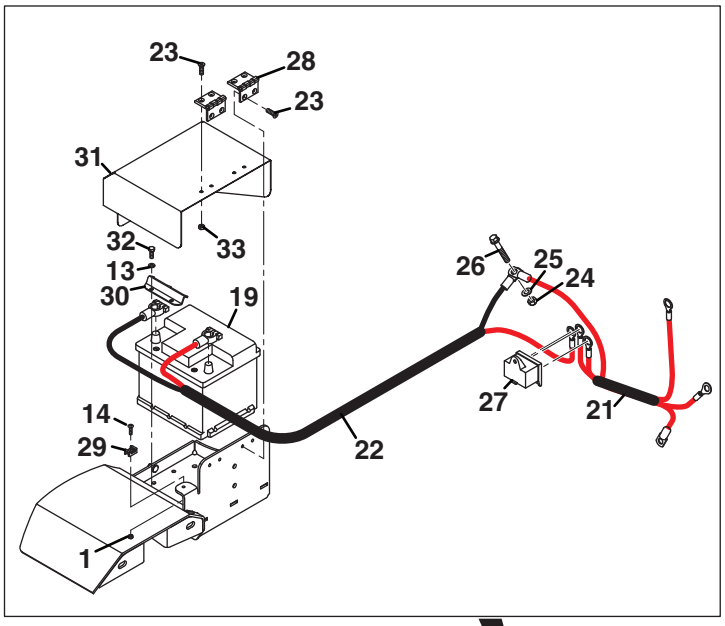

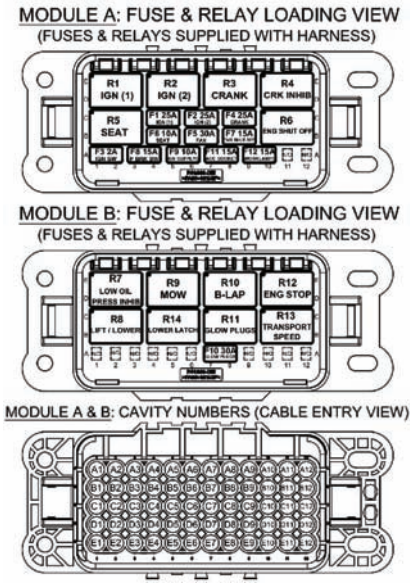

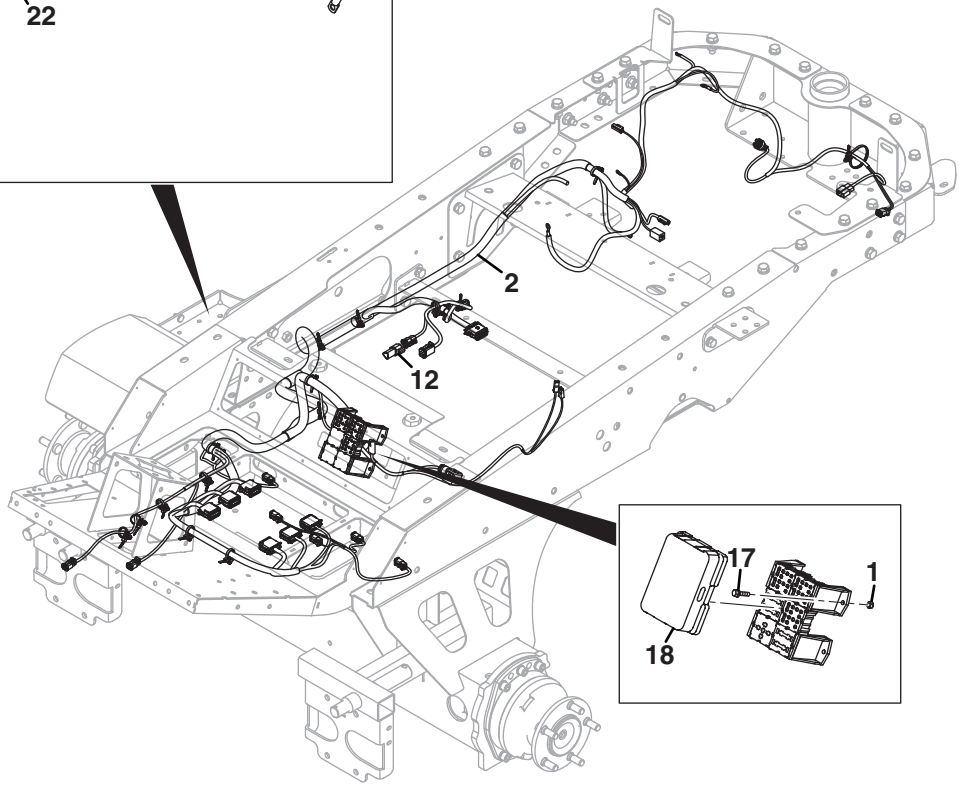

https://truckmanualshub.com/

Item	Part No.	Qty.	Description	Serial Numbers/Notes
1	450376	5	Nut, M5-0.8 Nyloc	
2	4394946	1	Harness, MAR Standard	
3		1	• Fuse, 2 Amp	**REFERENCE F3, See 41.1**
4	4312213	2	• Fuse, 10 Amp Mini	**REFERENCE F6, F9, See 41.1**
5	4312246	4	• Fuse, 15 Amp Mini	**REFERENCE F7, F8, F11, F12 See 41.1**
6	4312217	3	• Fuse, 25 Amp Mini	**REFERENCE F1, F2, F4, See 41.1**
7	4312216	2	• Fuse, 30 Amp	**REFERENCE F5, F10 See 41.1**
8	4329751	14	• Relay, 12V, 35A, 280 Micro	**REFERENCE K1-K14 See 41.1**
9	670576	1	Positive Battery Terminal	**Not Shown**
10	670577	1	250A Fuse Battery Terminal	**Not Shown**
11	670578	1	Positive Battery Terminal Cover	**Not Shown**
12	670579	1	Negative Battery Terminal	**Not Shown**
13	450389	2	Washer, M6 x 12.5 x 1.8	
14	450528	1	Screw, M5-0.8 x 16 mm Pan Head	
15	678454	1	Proximity Switch	**Not Shown**
16	4394952	1	Engine Harness	**Not Shown**
17	452686	4	Screw, M5-0.8 x 16 mm Taptite	
18	4316092	1	Cover, 2 x 3 Dill Blox	
19	4322478	1	Battery, 12V, 45Ah, 425 Amp	**REFERENCE B1, See 41.1**
20	672639	1	Lift Delay Module	
21	669881	1	Harness, Ground Starter Alternator	
22	4394947	1	Harness, Battery Cable	
23	450619	8	Screw, M6-1 x 16 mm CSK	
24	450379	1	Nut, M10-1.5 Hex Nyloc	
25	450391	1	Washer, M10 x 21 x 2.2	
26	452402	1	Screw, M10-1.5 x 50 mm Hex Flange	
27	4309904	1	3 Way Distribution Block	**See 6.1**
28	4321434	2	Hinge, Seat Plate	
29	4395489	1	Saddle Clip, Cable Tie Mount	
30	4395726	1	Clamp, Battery	
31	682584	1	Lid, Battery Box	
32	450170	2	Screw, M6-1 x 16 mm Hex Head	
33	450323	4	Nut, M6-1 Hex	
34	672638	1	Seat Delay Module	

> Change from previous revision

https://truckmanualshub.com/

28.1 Standard Unit Fixing

Serial No.

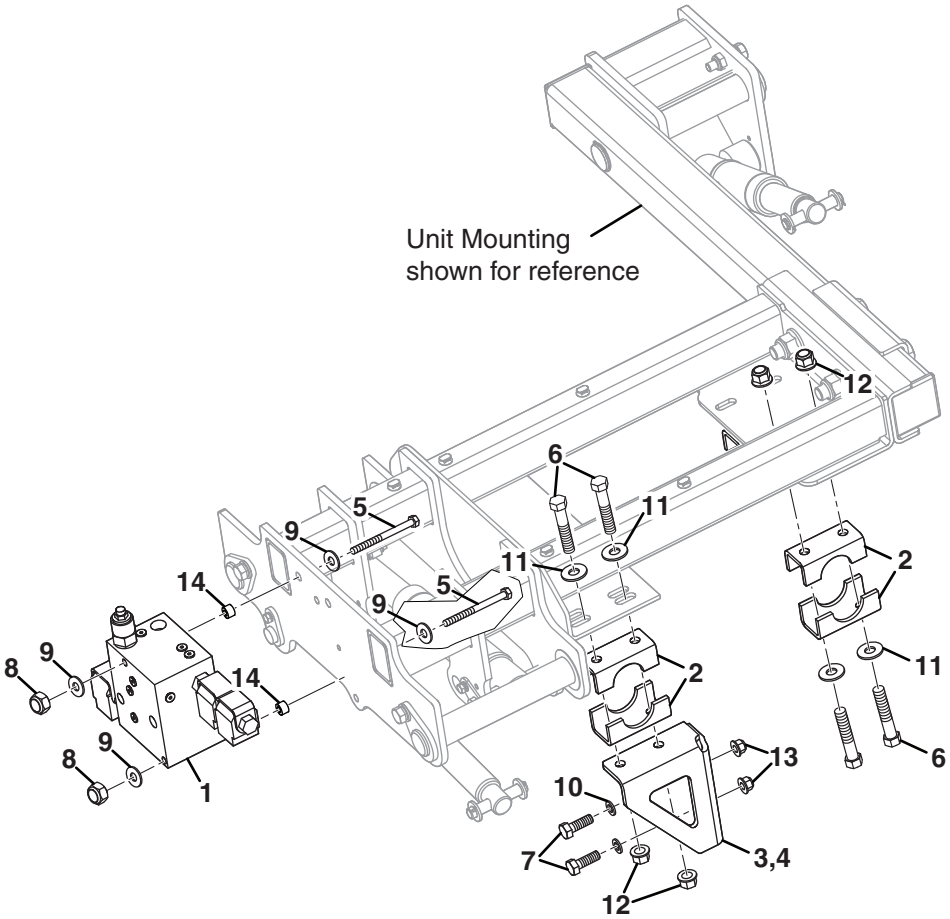

https://truckmanualshub.com/

Item	Part No.	Qty.	Description	Serial Numbers/Notes
1	4169021	1	Valve, Lift	
2	4397268	8	Clamp	Center Unit
3	4397306	1	Unit Mount Brace	RH Bracket
4	4397307	1	Unit Mount Brace	LH Bracket
5	450028	2	Hex Screw	
6	450040	8	Hex Bolt, M10 - 1.5 x 90	Grade 8.8
7	450242	4	Screw, M12-1.75 x 35 mm Hex Head	Grade 8.8
8	450378	2	Nut, M8-1.25 Hex Nyloc	Grade 8
9	450390	4	Washer, M8 x 17 x 1.8	
10	450392	4	Washer, M12 x 24 x 2.7	
11	450401	8	Flat Washer, M10 x 24 x 2.2	
12	452437	8	Nut, M10-1.5 Flange Nyloc	
13	452438	4	Nut, M12-1.75 Flange Nyloc	
14	MBE3454	2	Spacer, 10.5 x 20 x 13	
15	4329226	1	TP Valve	Not Shown

> Change from previous revision

https://truckmanualshub.com/

29.1 Gear Pump

Part Number 4177940

Serial No. All

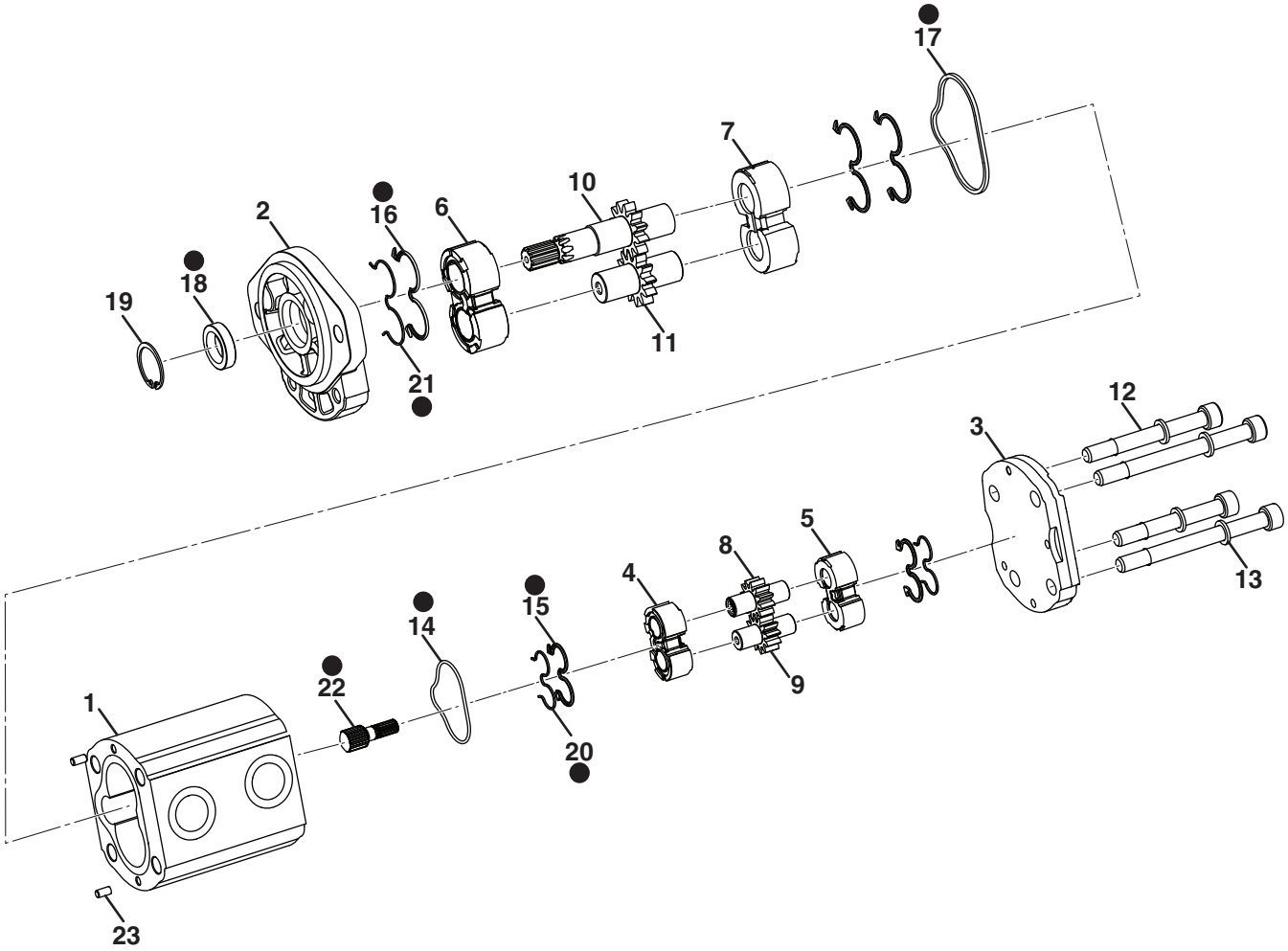

https://truckmanualshub.com/

Item	Part No.	Qty.	Description	Serial Numbers/Notes
1	N/S	1	Body	
2	N/S	1	Front Cover	
3	N/S	1	Twin Rear Cover	
4	N/S	1	Thrust Plate	
5	N/S	1	Thrust Plate	
6	N/S	1	Thrust Plate	
7	N/S	1	Thrust Plate	
8	N/S	1	Drive Gear	
9	N/S	1	Driven Gear	
10	N/S	1	Drive Shaft	
11	N/S	1	Driven Gear	
12	N/S	4	Screw, M10 X 135mm	
13	N/S	4	Washer	
14	N/S	1	O-Ring	Included in seal kit
15	N/S	2	Seal	Included in seal kit
16	N/S	2	Seal	Included in seal kit
17	N/S	1	Seal, Square Section	Included in seal kit
18	N/S	1	Seal, Shaft	Included in seal kit
19	N/S	1	Ring, 30mm	
20	N/S	2	Antiestrusion	Included in seal kit
21	N/S	2	Back-Up Ring	Included in seal kit
22	N/S	1	Hub	
23	N/S	2	Dowel Pin	
	TBD	1	Seal Kit	

> Change from previous revision

https://truckmanualshub.com/

30.1 Brake Valve

Serial No. All

Part Number 4201021

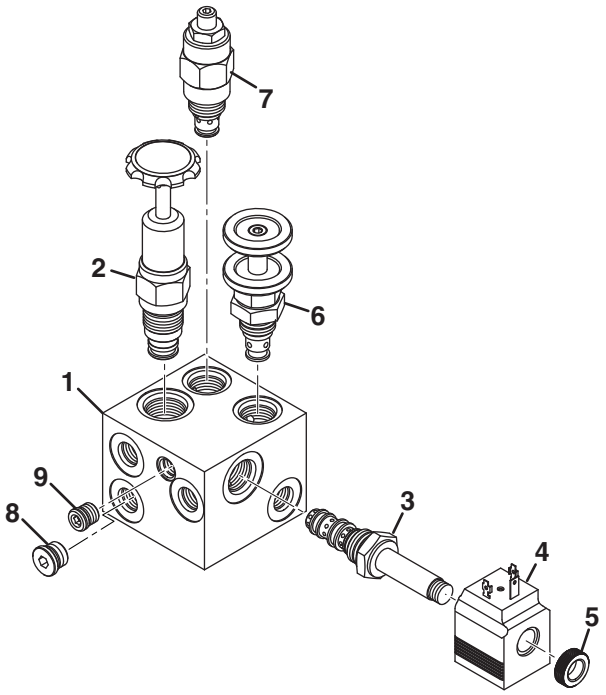

https://truckmanualshub.com/

Item	Part No.	Qty.	Description	Serial Numbers/Notes
1	N/S	1	Block, Manifold	
2	4259424	1	Hand Pump	Torque to 40 Nm (29.5 ft. lb)
	4375543	1	• Seal Kit	Included in seal kit
3	4280751	1	Valve, Solenoid	Torque to 30 Nm (22 ft. lb)
	4375546	1	• Seal Kit	Included in Seal Kit
4	4171444	1	• Coil	**REFERENCE SOL8, See 41.1**
5	4375542	1	• Nut, Coil	Torque to 3.4 Nm (2.5 ft. lb)
6	4280752	1	Valve, Needle	Torque to 20 Nm (14.7 ft. lb)
	4375547	1	• Seal Kit	Included in Seal Kit
7	4369147	1	Valve, 507 psi Relief	Torque to 45 Nm (33 ft. lb)
	4375544	1	• Seal Kit	Included in Seal Kit
	4369350	1	Seal Kit	Included in Seal Kit
8	3010199	1	Plug, -6 ORB	Not included with valve
	339897	1	• O-Ring, -6 ORB	
9	4375646	1	Locknut, Brake Valve	
	4177942	1	Seal Kit	

> Change from previous revision

https://truckmanualshub.com/

31.1 Lift-Weight Transfer Valve

Serial No. All

Part Number 4169021

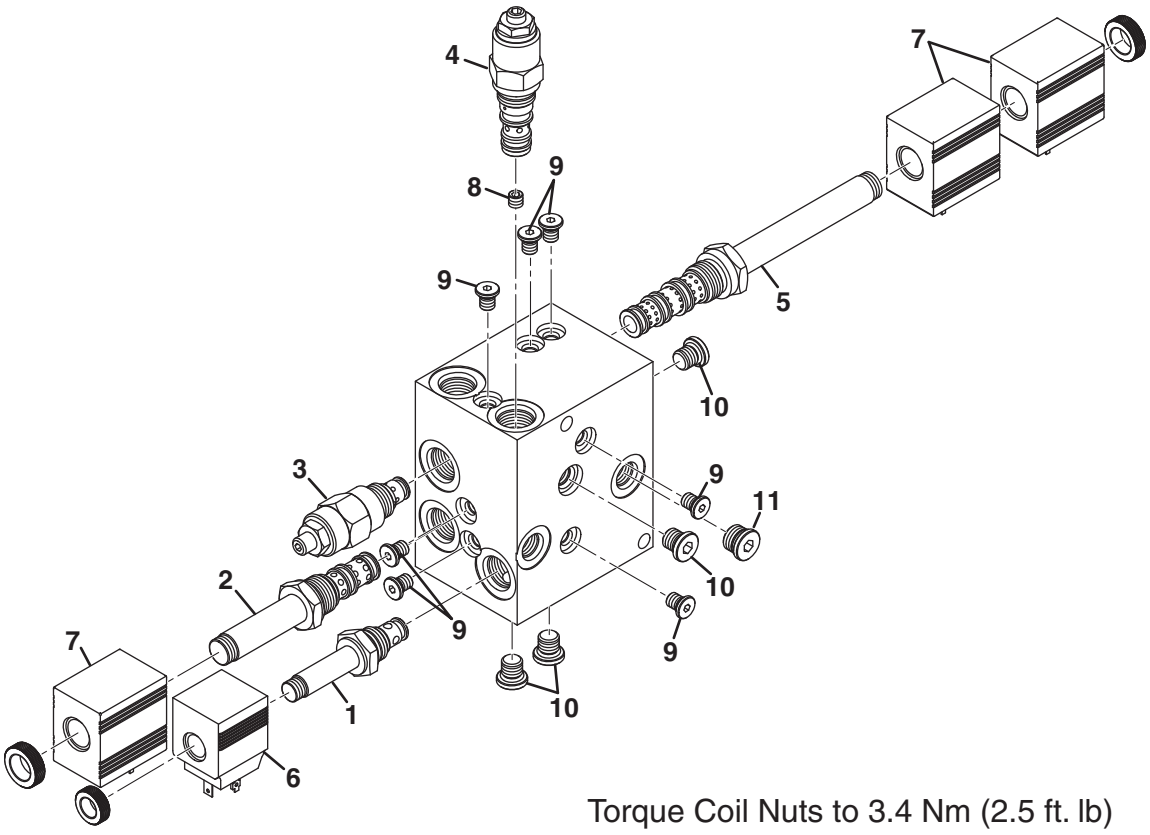

Torque Coil Nuts to 3.4 Nm (2.5 ft. lb)

https://truckmanualshub.com/

Item	Part No.	Qty.	Description	Serial Numbers/Notes
1	4171460	1	Solenoid Valve (CT1)	Includes Coil Nut Torque to 20 Nm (14.7 ft. lb)
	4171365	1	• Seal Kit	
2	4171461	1	Solenoid Valve (CT6)	Includes Coil Nut Torque to 30 Nm (22 ft. lb)
	4171462	1	• Seal Kit	
3	4171463	1	Relief Valve (CT3)	Torque to 45 Nm (33 ft. lb)
	4171464	1	• Seal Kit	
4	4171465	1	Over Center Valve (CT4)	Torque to 45 Nm (33 ft. lb)
	4171466	1	• Seal Kit	
5	4171467	1	Solenoid Valve (CT5)	Includes Coil Nut Torque to 30 Nm (22 ft. lb)
	4171468	1	• Seal Kit	
6	4171444	1	Coil, 12VDC	
7	4171769	3	Coil, 12VDC	
8	4171770	1	Plug, 1.3 mm Orifice	Torque to 2.5 Nm (1.8 ft. lb)
9	4171445	7	Plug, -2 ORB	Torque to 4.5 Nm (3.3 ft. lb)
	459290	1	• O-Ring, -2 ORB	
10	4171446	4	Plug, -4 ORB	Torque to 12.5 Nm (9.2 ft. lb)
	339896	1	• O-Ring, -4 ORB	
11	4171447	1	Plug, -6 ORB	Torque to 20 Nm (14.7 ft. lb)
	339897	1	• O-Ring, -6 ORB	

> Change from previous revision

https://truckmanualshub.com/

32.1 Steering Cylinder

Serial No. All

Part Number 4244289

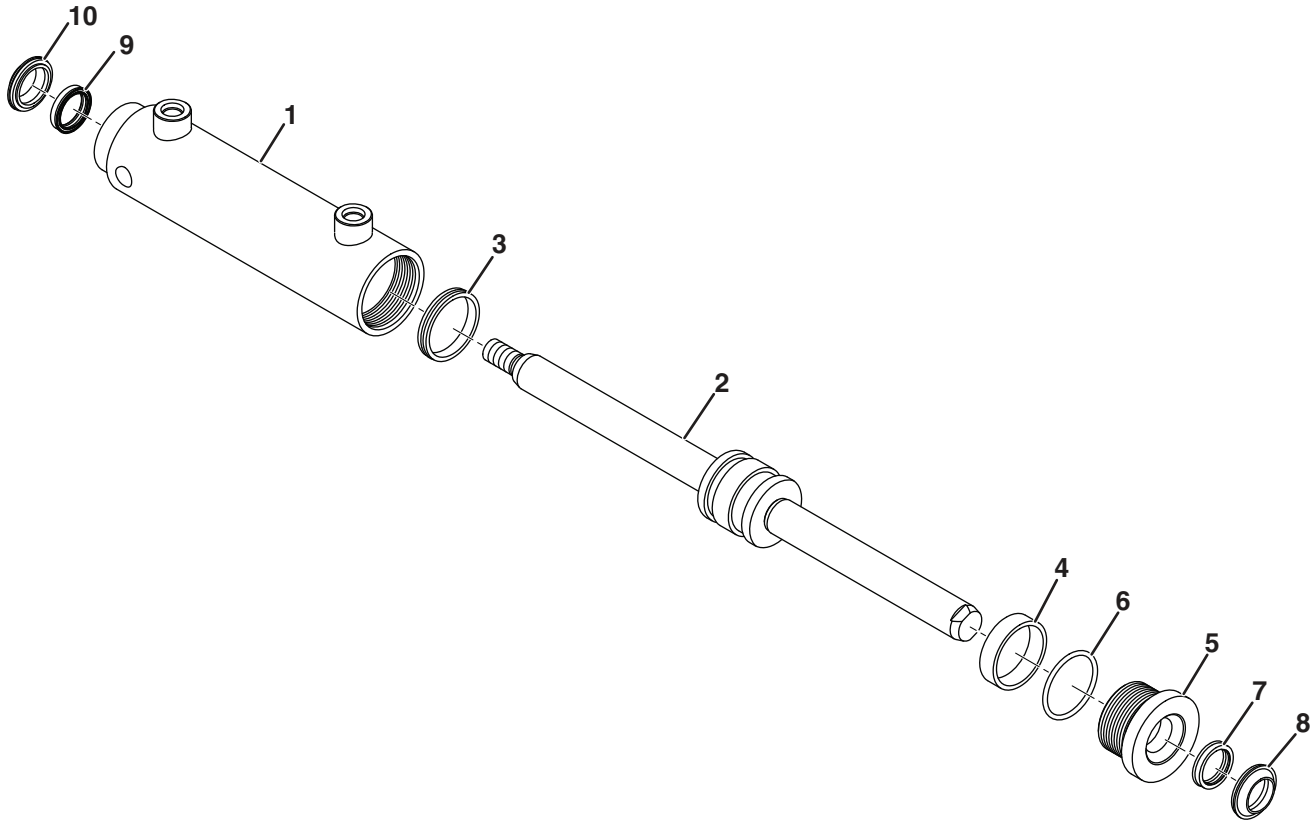

https://truckmanualshub.com/

Item	Part No.	Qty.	Description	Serial Numbers/Notes
1	N/S	1	Tube, Cylinder	
2	N/S	1	Rod and Piston Assembly	
3		1	Seal, Piston	Included in seal kit
4		1	Wiper, Piston	Included in seal kit
5	N/S	1	Gland, Cylinder	
6		1	O-Ring, Gland	Included in seal kit
7		1	Seal, Gland	Included in seal kit
8		2	Wiper Seal	Included in seal kit
9		1	Seal, Tube	Included in seal kit
10		2	Wiper, Tube	Included in seal kit
	4291657	1	Seal Kit	

> Change from previous revision

https://truckmanualshub.com/

33.1 Center, Left and Right Decks

Serial No. All

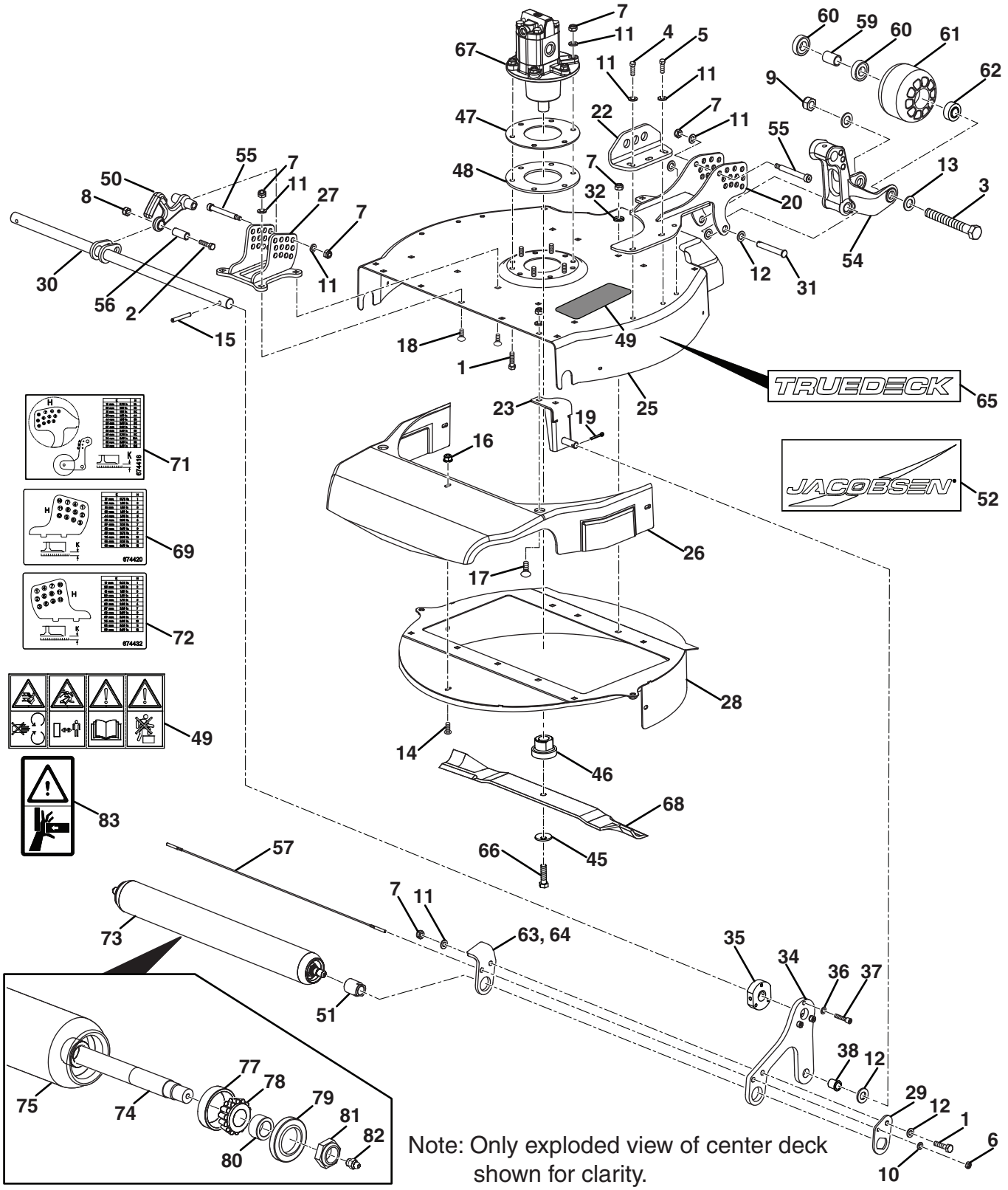

https://truckmanualshub.com/

Item	Part No.	Qty.	Description	Serial Numbers/Notes
1	UK450031	8	Hex Head Bolt, M10 - 1.5 x 45 MM LG	
2	UK450050	1	Hex Head Bolt, M12 - 1.75 x 50 MM LG	
3	UK450104	2	Hex Head Bolt, M20 - 2.5 x 160 MM LG	
4	UK450215	4	Hex Head Screw, M10 - 1.5 x 30 MM LG	
5	UK450216	2	Hex Head Screw, M10 - 1.5 x 35 MM LG	
6	UK450377	2	Hex Nut M6 - 1.0	
7	UK450379	33	Hex Nut M10 - 1.5	
8	UK450380	1	Hex Nut M12 - 1.75	
9	UK450383	2	Hex Nut M20 - 2.5	
10	UK450389	2	Washer, M6 x 12.5 x 1.8	
11	UK450391	35	Washer, M10 x 21 x 2.2	
12	UK450393	12	Washer, M16 x 30 x 3.3	
13	UK450394	4	Washer, M20 x 37 x 3.3	
14	UK450553	3	Pan Head Screw M8 - 1.25 x 25 MM LG	
15	UK451500	2	Spirol Pin, 8 x 60	
16	UK452436	3	Hex Flange Nut, M8	
17	452585	10	Carriage Bolt, M10 - 1.5 x 25 MM LG	
18	452586	8	Carriage Bolt, M10 - 1.5 x 30 MM LG	
19	460050	4	Cotter Pin, 3/16 x 1 - 1/4”	
20	670760	1	HOC Bracket Weldment, LH	
21	670761	1	HOC Bracket Weldment, RH	
22	671266	2	Yoke Bracket	
23	671564	1	Rear Deck Pin Weldment, LH	
24	671565	1	Rear Deck Pin Weldment, RH	
25	673585	1	Stamped Deck Shell, 27”	
26	673608	1	Discharge Chute	
27	673611	1	Rear Hoc Bracket Weldment	
28	673617	1	Baffle Weldment	
29	673807	2	Fab Outer Brace Plate	
30	673844	1	Rear Hoc Bar Weldment	
31	674112	2	Clevis Pin, M16 x 107 MM LG	
32	674211	6	Coach Bolt Spacer	
33	674382	1	Rear Arm Assembly, LH	
34	673609	1	• Rear Arm	
35	674931	1	• Rear Arm Boss	
36	UK450411	3	• Lock Washer, M8 x 12.75 x 2	
37	UK450725	3	• Hex Head Socket Cap Screw, M8 - 1.25 x 30 MM LG	
38	676387	1	• Oilite Bush	
39	674383	1	Rear Arm Assembly, RH	
40	673609	1	• Rear Arm	
41	674931	1	• Rear Arm Boss	
42	UK450411	3	• Lock Washer, M8 x 12.75 x 2	
43	UK450725	3	• Hex Head Socket Cap Screw, M8 - 1.25 x 30 MM LG	
44	676387	1	• Oilite Bush	
45	3007764	1	Blade Washer, 1/2	

> Change from previous revision

https://truckmanualshub.com/

33.1 Center, Left and Right Decks (Cont....)

Serial No. All

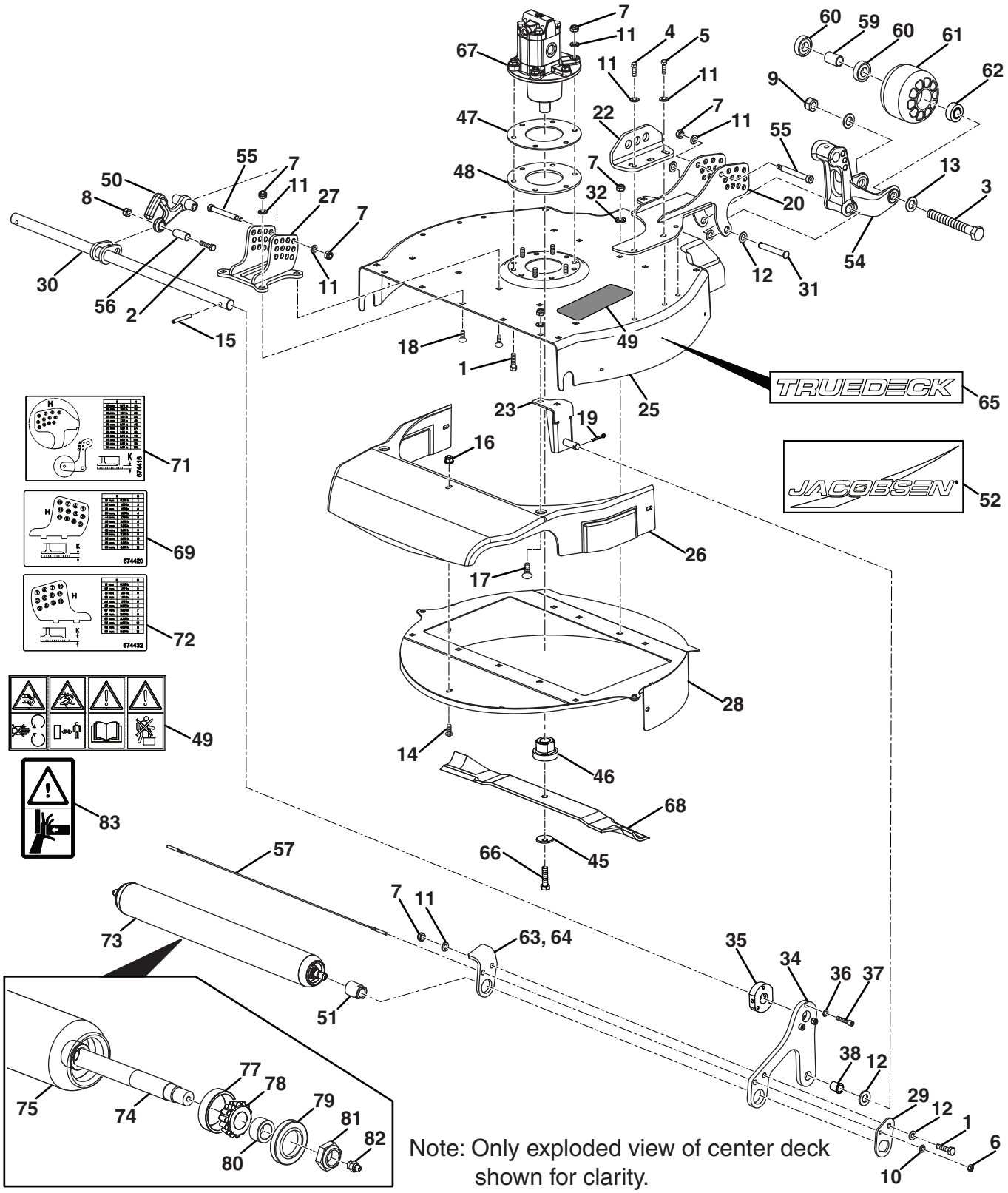

https://truckmanualshub.com/

Item	Part No.	Qty.	Description	Serial Numbers/Notes
46	3008388	1	Blade Adapter	
47	4280110	1	Deck Motor Spacer	
48	4290681	1	Deck Motor Spacer (Black)	
49	4311249	1	Turfcat Decks Warnings Decal	
50	4337208	1	Front HOC Link	
51	4341633	2	Rear Roller Locating Boss	
52	670061	1	Jacobsen Logo Decal	
53	4362867	1	Offset Front Roller Arm, LH	
54	4362869	1	Offset Front Roller Arm, RH	
55	4386983	3	Hex Shouldered Bolt, M12 x 90 MM LG	
56	4394613	1	Collar	
57	4399207	1	Cable Scrapper, 27”	
58	4420535	2	Wheel Assembly	
59	4420537	1	• Inner Sleeve	
60	4420576	2	• Ball Bearing	
61	4420589	1	• Caster Wheel, 5 x 4 MM LG	
62	4420538	4	Outer Collar	
63	674316	1	Fab Inner Brace W/ Flange Plate	For LH and Center Unit
64	674317	1	Fab Inner Brace W/ Flange Plate	For RH and Center Unit
65	4420514	1	Truedeck Decal	
66	401237J	1	Hex Head Screw, 1/2 - 13 x 1.75 MM LG	Torque to 95 Nm
67	674685	1	Motor, 16cc	
68	4139103	1	Blade, 26.38” Highlift	
	4138725	1	Blade, 27 “ L.H	
	4163101	1	Blade, 26.62” Combo	
69	674420	1	27” Rear HOC Decal, RH	
70	673808	1	Fab Inner Brace Plate	
71	674418	1	27” Front HOC Decal	
72	674432	1	27” Rear HOC Decal, LH	
73	4346606	1	Rear Roller, 76 x 669 MM LG	
74	4399528	1	• Roller Shaft	
75	4399546	1	• Roller Body	
76	3001656	2	• Seal Grease	
77	4135151	2	• Roller Bearing Cup	
78	4135152	2	• Roller Bearing Cone	
79	3004882	2	• Excluder Seal	
80	3005156	2	• Sleeve	
81	367029	2	• Lock Nut, 3/4 - 16	
82	002993013	2	• Lubricator - M6	
83	845027	1	Decal, Pinch Point	

> Change from previous revision

https://truckmanualshub.com/

34.1 Deck Valve

Part Number 4287791

Serial No. All

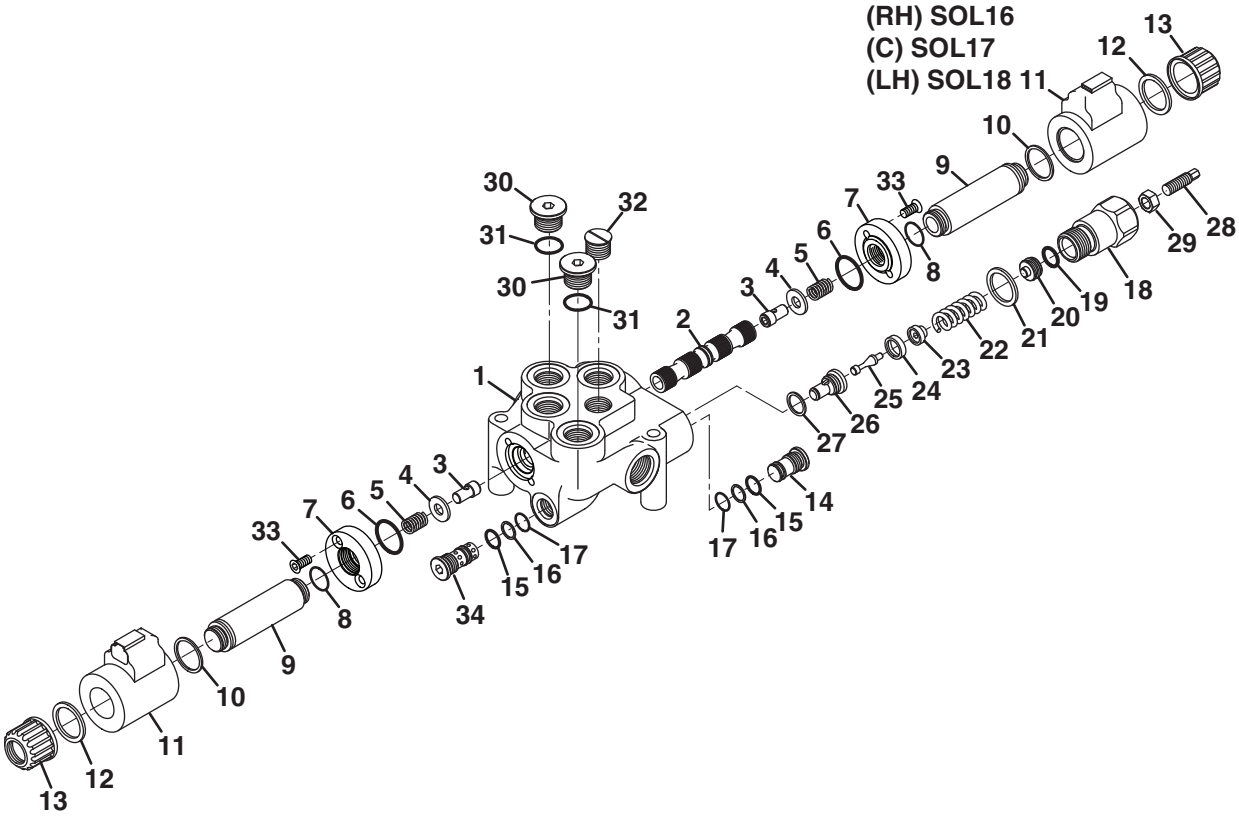

https://truckmanualshub.com/

Item	Part No.	Qty.	Description	Serial Numbers/Notes
1	N/S	1	Body, Valve	
2		1	Spool	2216/80
3		2	Seat, Spool Spring	
4		2	Spacer, Spring	
5		2	Spring, Spool	
6		2	O-Ring	
7		2	Cap, Solenoid	
8		2	O-Ring	
9	4369152	2	Solenoid	
10		2	Seal	
11	4369149	2	Coil, 12V 38W Solenoid	**REFERENCE SOL16, SOL17, SOL18 See See 82.1**
12		2	Seal	
13		2	Nut, Coil	
14		1	Plug, Cavity	2162036
15		2	O-Ring	
16		2	Backup Ring	
17		2	O-Ring	
18		1	Plug, Relief Valve	
19		1	O-Ring	
20		1	Seat, Outer Spring	
21		1	Washer	
22		1	Spring, Relief Valve	
23		1	Seat, Inner Spring	
24		1	Spacer	
25		1	Poppet, Relief Valve	
26		1	Plug	
27		1	Washer	
28		1	Screw, Adjustment	
29		1	Nut, Adjustment	
30	3010199	2	Plug, -8 ORB	
31	339898	2	• O-Ring, -8 ORB	
32		1	Plug	
33		4	Screw, Flat Head	
34		1	Valve, Anticavitation	2425000
	4369151		Seal Kit	
	4369150		Spool Position Kit	2216148003

> Change from previous revision

https://truckmanualshub.com/

35.1 Bump Stop

Serial No. All

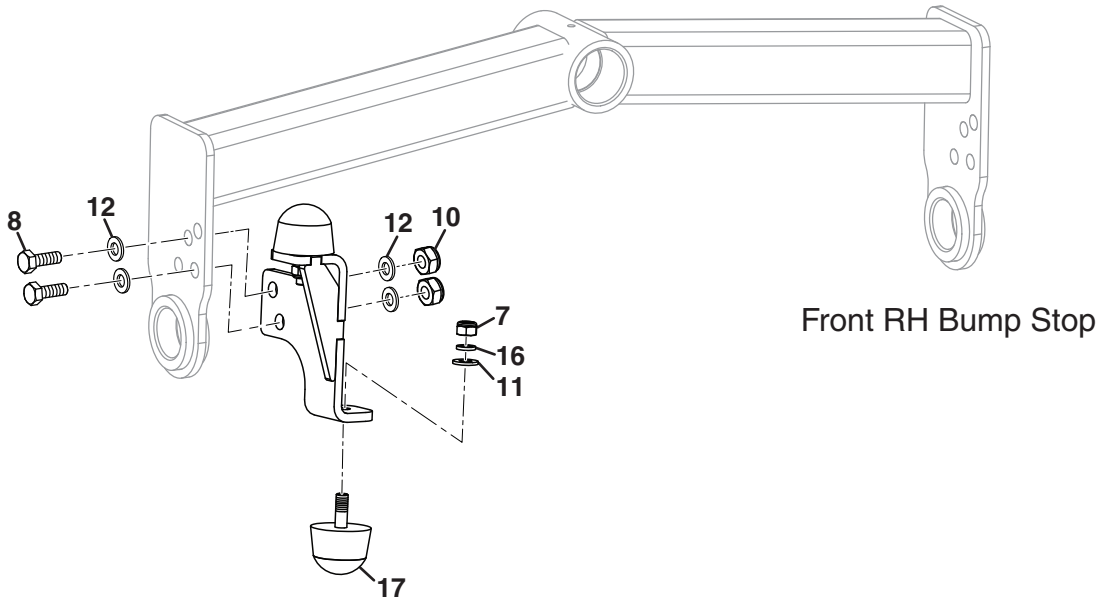

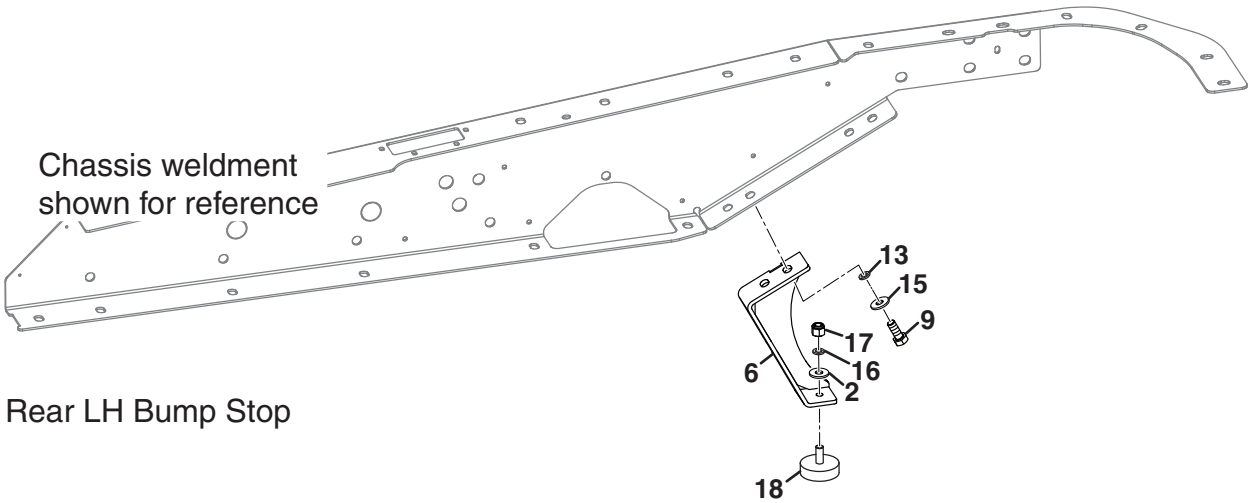

https://truckmanualshub.com/

Item	Part No.	Qty.	Description	Serial Numbers/Notes
1	001393222	4	Hex Head Nut 5/16 - 18	
2	001599264	2	Washer	
3	4389773	1	Bump Stop Bracket Weldment, LH	
4	4389826	1	Bump Stop Bracket Weldment, RH	
5	4420024	1	Centre Unit Stop Weldment, LH	
6	4420041	1	Centre Unit Stop Weldment, RH	
7	450120267	2	Hex Head Nut 3/8 - 16	
8	450215	4	Hex Head Screw M10 - 1.5 x 30 MM LG	
9	450241	4	Hex Head Screw M12 - 1.75 x 30 MM LG	
10	450379	4	Hex Head Nut, M10 - 1.5	
11	450390	4	Washer, M8 x 17 x 1.8	
12	450391	8	Washer, M10 x 21 x 2.2	
13	450392	4	Washer, M12 x 24 x 2.7	
14	450411	4	Lock Washer, M8 x 12.75 x 2	
15	450413	4	Lock Washer, M12 x 17.9 x 2.5	
16	452200134	2	Lock Washer, 3/8 x 0.683 x 0.094	
17	523126	4	Rubber Bumper	
18	J361723	2	Bumper Stop	

> Change from previous revision

https://truckmanualshub.com/

36.1 Lift Arms

Serial No. All

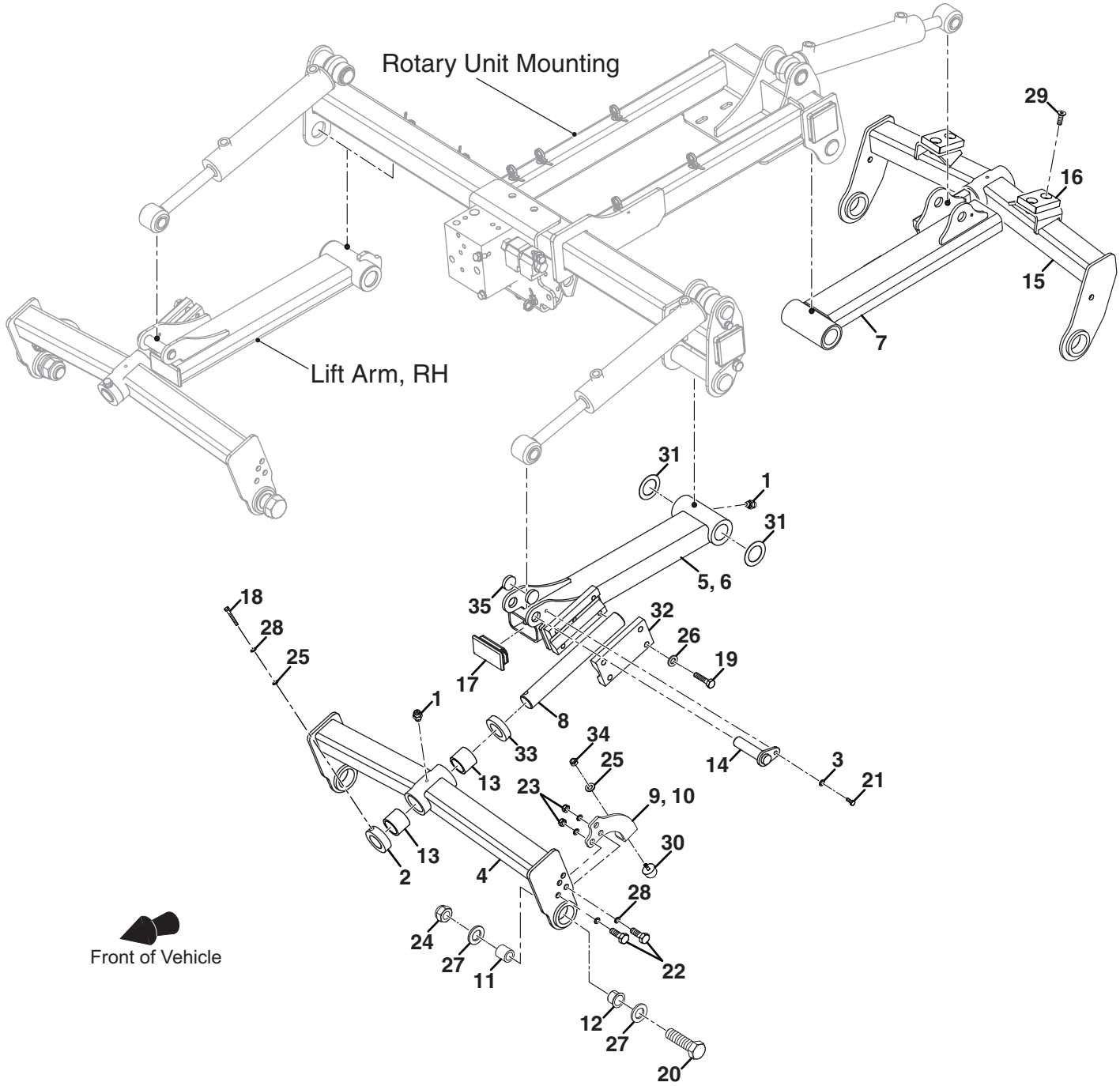

Note: Only exploded view of Lift Arm, LH shown for clarity.

https://truckmanualshub.com/

Item	Part No.	Qty.	Description	Serial Numbers/Notes
1	002993013	6	Lubricator, M6	
2	MBG4592	3	Collar, 30.5 x 50 x 15 MM LG	
3	4313086	3	Washer, 6.5 x 10.8 x 1.8 MM LG	
4	682955	2	Front Yoke Weldment, 27” LG	
5	4363969	1	Front Lift Arm Weldment, LH	
6	4363970	1	Front Lift Arm Weldment, RH	
7	4366626	1	Lift Arm Weldment, Center	
8	4385366	3	Pivot Pin, 30 MM LG	
9	4386151	1	Bump Stop, LH	
10	4386153	2	Bump Stop, RH	
11	4390540	6	Collar, Yoke	
12	4393708	6	Bush	
13	002193318	6	Nylon Bush, 30 x 40 x 40 MM LG	
14	4399530	3	Cylinder Weldment, Pin 3/4”	
15	683014	1	Rear Yoke Weldment, 27”	
16	4399768	2	Centre Deck Buffer	
17	4399870	3	End Cap, 80 x 40 x 2-4 MM LG	
18	450020	3	Hex Head Bolt, M8- 1.25 x 60 MM LG	
19	450031	12	Hex Head Bolt, M10- 1.5 x 45 MM LG	
20	450093	6	Hex Screw, .31 - 24 x 70 MM LG	Grade 5
21	450170	3	Hex Head Screw, M6-1 x 16 MM LG	
22	450215	6	Hex Head Screw, M6-1.5 x 30 MM LG	
23	450379	6	Hex Nut, M10-1.5	
24	450383	6	Hex Nut, M20 - 2.50	
25	450390	6	Washer, M8 x 17 x 1.8	
26	450391	24	Washer, M10 x 21 x 2.2	
27	450394	12	Washer, M24 x 44 x 4.3	
28	450411	3	Lock Washer, M8 x 12.75 x 2	
29	450866	4	Socket Head Screw, M8-1.25 x 25 MM LG	Grade 8
30	523126	3	Rubber Bumper	
31	62464-4A	6	Thrust Washer, 1.25 x 1.937 x 0.03	
32	MBG3772.7	3	Clamp	
33	MBG4592	3	Collar	
34	445802	3	Hex Nut, 5/16 - 18 MM LG	
35	4151937	2	Spacer, 20 x 30 x 5 MM	

> Change from previous revision

https://truckmanualshub.com/

37.1 Rotary Unit Mounting

Serial No. All

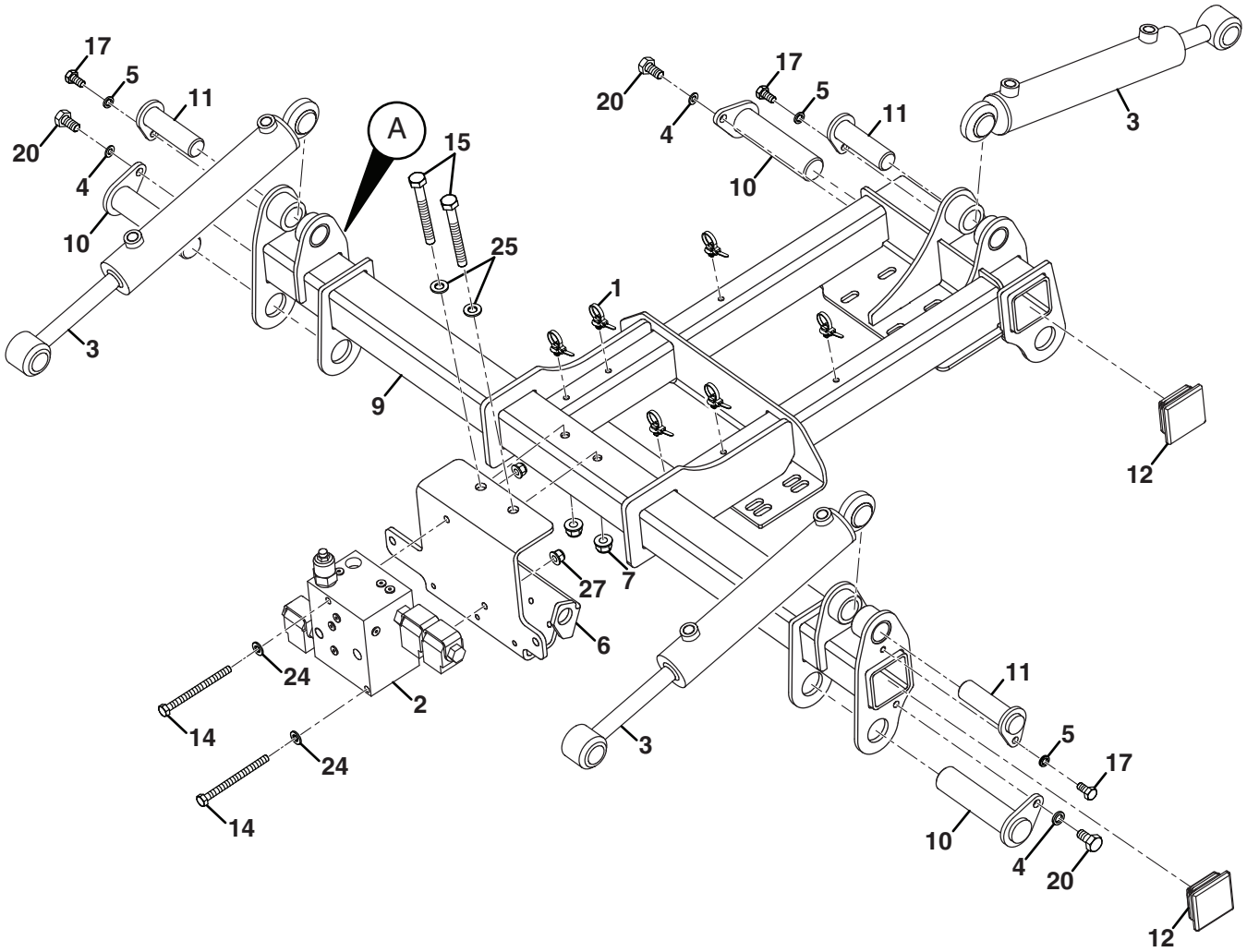

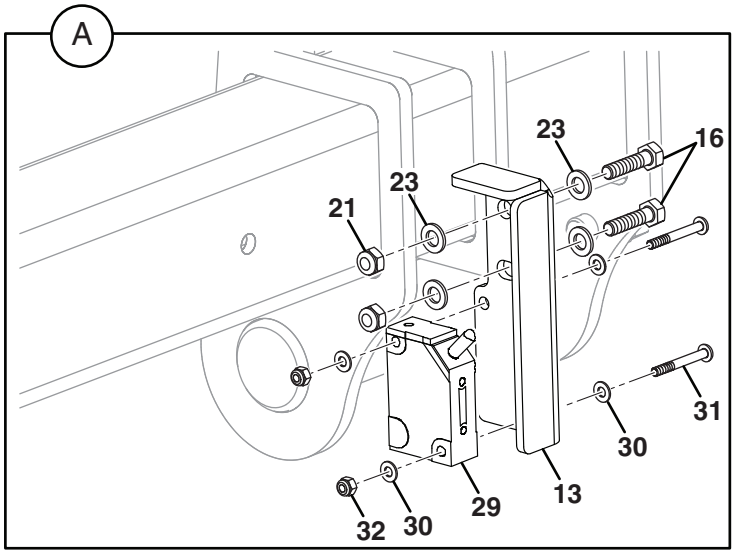

https://truckmanualshub.com/

Item	Part No.	Qty.	Description	Serial Numbers/Notes
1	4167640	12	Fir Tree Cable Tie	
2	4169021	1	Lift Valve	
3	4244304	3	Hydraulic Lift Cylinder, 20 x 203 MM LG	
4	4245590	3	AV Washer, 10.7 x 16.6 x 2.5 MM LG	
5	4258312	3	AV Washer, 8.7 x 13.5 x 2.5 MM LG	
6	4383606	1	Lift Valve Bracket	
7	UK452437	4	Flange Nut, M10	
8	UK452435	2	Hex Head Flange Nut, M6	(Not Illustrated)
9	4396492	1	Lift Arm Weldment	
10	4399432	3	Lift Arm Pin Weldment	
11	4399486	3	Cylinder Pin Weldment	
12	4399631	4	End Cap (Shallow Type), 60 x 60 x 4 MM LG	
13	4399952	1	Sensor Bracket	
14	UK450027	2	Hex Head Bolt, M8 - 1.25 x 100 MM LG	
15	UK450040	2	Hex Head Bolt, M10 - 1.5 x 90 MM LG	
16	UK450152	2	Hex Head Screw, M5 - 0.8 x 20 MM LG	
17	UK450190	3	Hex Head Screw, M8 - 1.25 x 16 MM LG	
18	UK450191	4	Hex Head Screw, M8 - 1.25 x 20 MM LG	
19	UK450192	2	Hex Head Screw, M8 - 1.25 x 25 MM LG	
20	UK450213	3	Hex Head Screw, M8 - 1.5 x 20 MM LG	
21	UK450376	2	Hex Nut, M5 - 0.8	
22	UK450378	2	Hex Nut, M8 - 1.25	
23	UK450388	4	Washer, M5 x 10 x 1.1	
24	UK450390	8	Washer, M8 x 17 x 1.8	
25	UK450391	4	Washer, M10 x 21 x 2.2	
26	UK450411	2	Lock Washer, M8 x 12.75 x 2	
27	UK452436	2	Hex Flange Nut, M8	
28	4392007	1	Proximity Switch Kit	
29	4125831	1	• Proximity Switch	
30	450386	4	• Washer, M3 x 7 x 0.6	
31	UK450511	2	• Pan Head Screw, M3 - 0.5 x 25 MM LG	Grade 4.8
32	452716	2	• Hex Nut, M3 - 0.5	Grade 8
33	671444	3	P - Clip, 22 MM LG	
34	UK450009	2	Hex Head Bolt, M6 - 1.0 x 70 MM LG	(Not Illustrated)
35	UK450215	2	Hex Head Screw, M10 - 1.5 x 30 MM LG	
36	UK450389	2	Washer, M6 x 12.5 x 1.8	
37	674526	1	Strike Plate Bump Stop	

> Change from previous revision

https://truckmanualshub.com/

38.1 Steering Valve

Serial No. All

Part No. 4393849

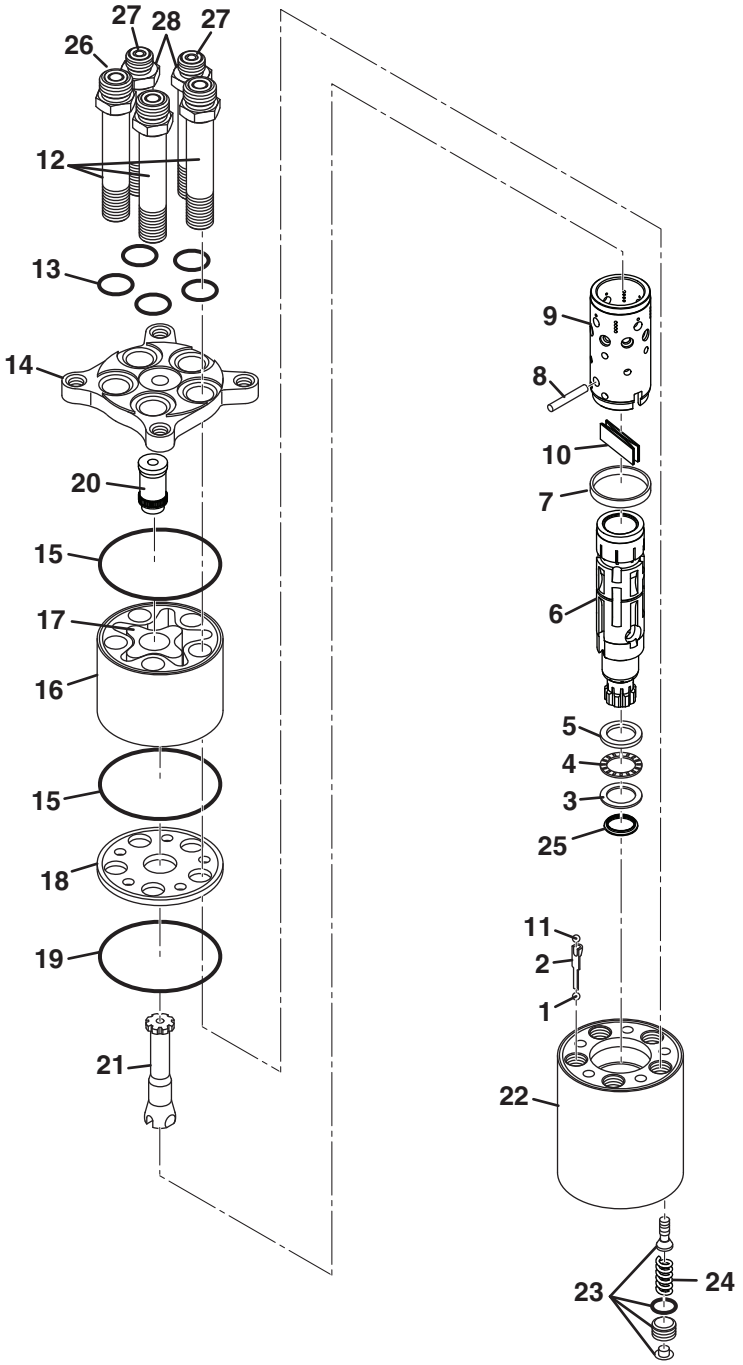

https://truckmanualshub.com/

Item	Part No.	Qty.	Description	Serial Numbers/Notes
1	N/S	1	Ball, Emergency Steering	
2	N/S	1	Stop, Ball	
3	N/S	1	Thin Bearing Race	
4	N/S	1	Bearing	
5	N/S	1	Thick Bearing Race	
6	N/S	1	Spool	
7	N/S	1	Spring Retaining Ring	
8	N/S	1	Cross Pin	
9	N/S	1	Sleeve	
10	N/S	1	Set, Spring	
11	N/S	1	Check Valve, Ball	
12	N/S	3	Screw, Special	
13	N/S	5	O-Ring	Included in seal kit
14	N/S	1	End Cover	
15	N/S	2	O-Ring	Included in seal kit
16	N/S	1	Rim, Gearwheel	
17	N/S	1	Gearwheel	
18	N/S	1	Distributor Plate	
19	N/S	1	O-Ring	Included in seal kit
20	N/S	1	Spacer	
21	N/S	1	Cardan Shaft	
22	N/S	1	Housing	
23	N/S	1	Relief Valve	Adjust the Check Valve to 1500 psi (103 BAR)
24	N/S	1	Spring, Relief Valve	
25	N/S	1	Seal, Shaft	Included in seal kit
26	339909	3	O-Ring, -6 ORFS	
27	339908	2	O-Ring, -4 ORFS	
28	N/S	3	Screw, Special	
	4197940	1	Seal Kit	

> Change from previous revision

https://truckmanualshub.com/

39.1 Traction Pump

Serial No. All

Part Number 4203740

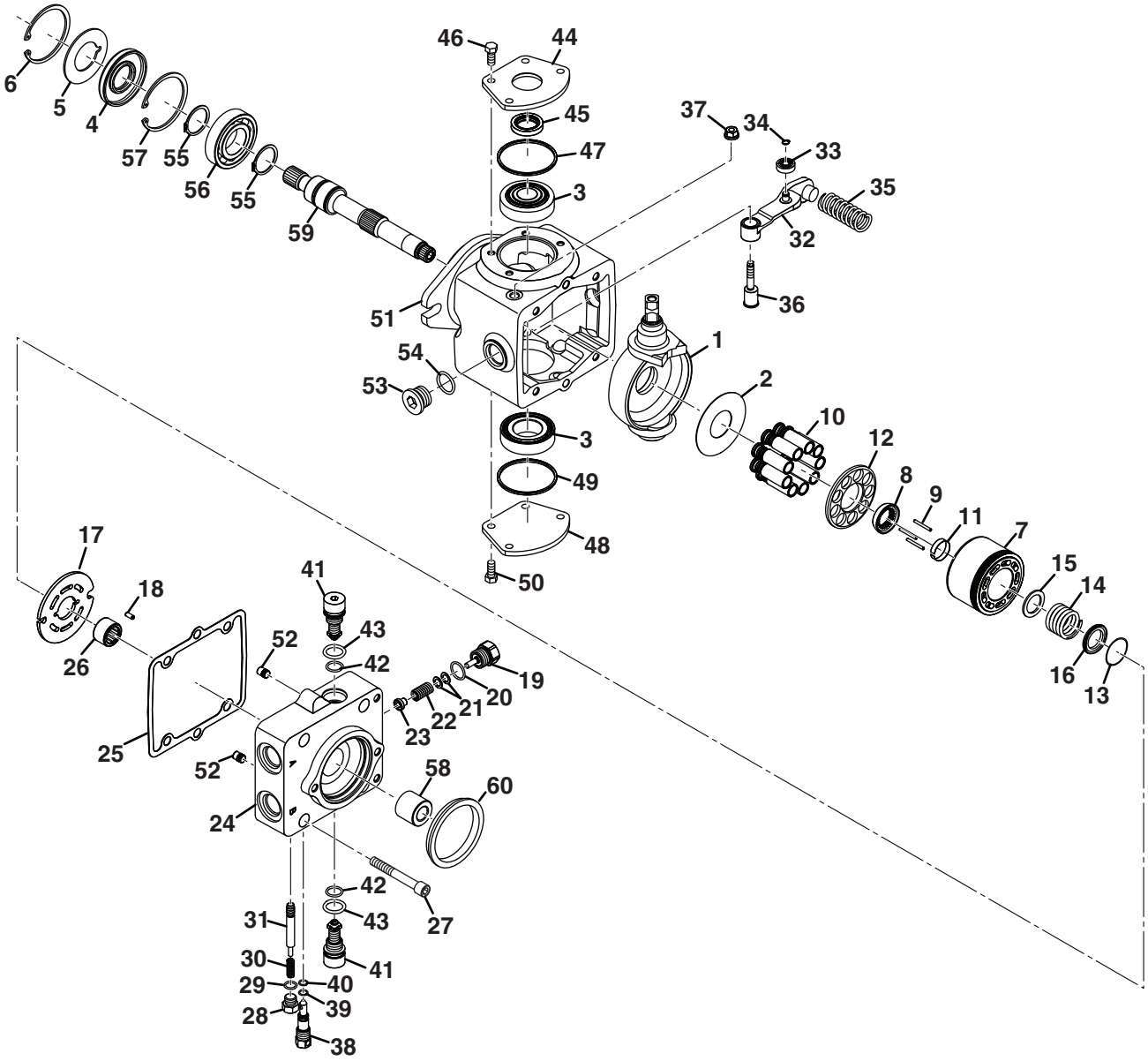

https://truckmanualshub.com/

Item	Part No.	Qty.	Description	Serial Numbers/Notes
1		1	Swashplate	
2		1	Thrust Plate	
3		2	Trunnion BearingKit	
4		1	Seal, Shaft	Included in seal kit
5		1	Washer, Seal Support	
6		1	Retaining Ring, Internal	
7		1	35 cc Cylinder Block Kit	
8		1	• Guide, Slipper Retainer	
9		3	• Pin, Slipper Holddown	
10		9	• Piston Assembly, 35 cc	
11		1	• Retainer, Holddown Pin	
12		1	• Retainer, Slipper	
13		1	• Retaining Ring	
14		1	• Spring, Cylinder Block	
15		1	• Washer	
16		1	• Retainer, Spring	
17		1	Valve Plate	
18		1	Slotted Pin	
19		1	Charge Relief Plug	
20	4224121	1	• O-Ring	
21		1	Shim Kit	
22		1	Spring, Charge Pressure	
23		1	Poppet	
24		1	End Cap w/ loop flushing	
25		1	Gasket, End Cap	Included in seal kit
26		1	Bearing, Needle	
27		4	Screw	
28		1	Plug Assembly	
29		1	• O-Ring	Included in seal kit
30		1	Spring	
31		1	Spool	
32		1	Neutral Return Arm Assembly	
33		1	• Cam Bearing	
34		1	• Retaining Ring	
35		1	• Spring, Neutral Return	
36		1	• Pivot, Neutral Return	
37		1	• Nut, Seal	Included in seal kit
38		1	Bypass Valve Assembly	
39		1	• Back-Up Ring	Included in seal kit
40		1	• O-Ring	Included in seal kit
41		2	SCR Valve, 280 BAR (4060 psi)	
42		1	• O-Ring	Included in seal kit
43		1	• O-Ring	Included in seal kit
44		1	Trunnion Cover Assembly	

> Change from previous revision

https://truckmanualshub.com/

39.1 Traction Pump (Continued)

Part Number 4203740

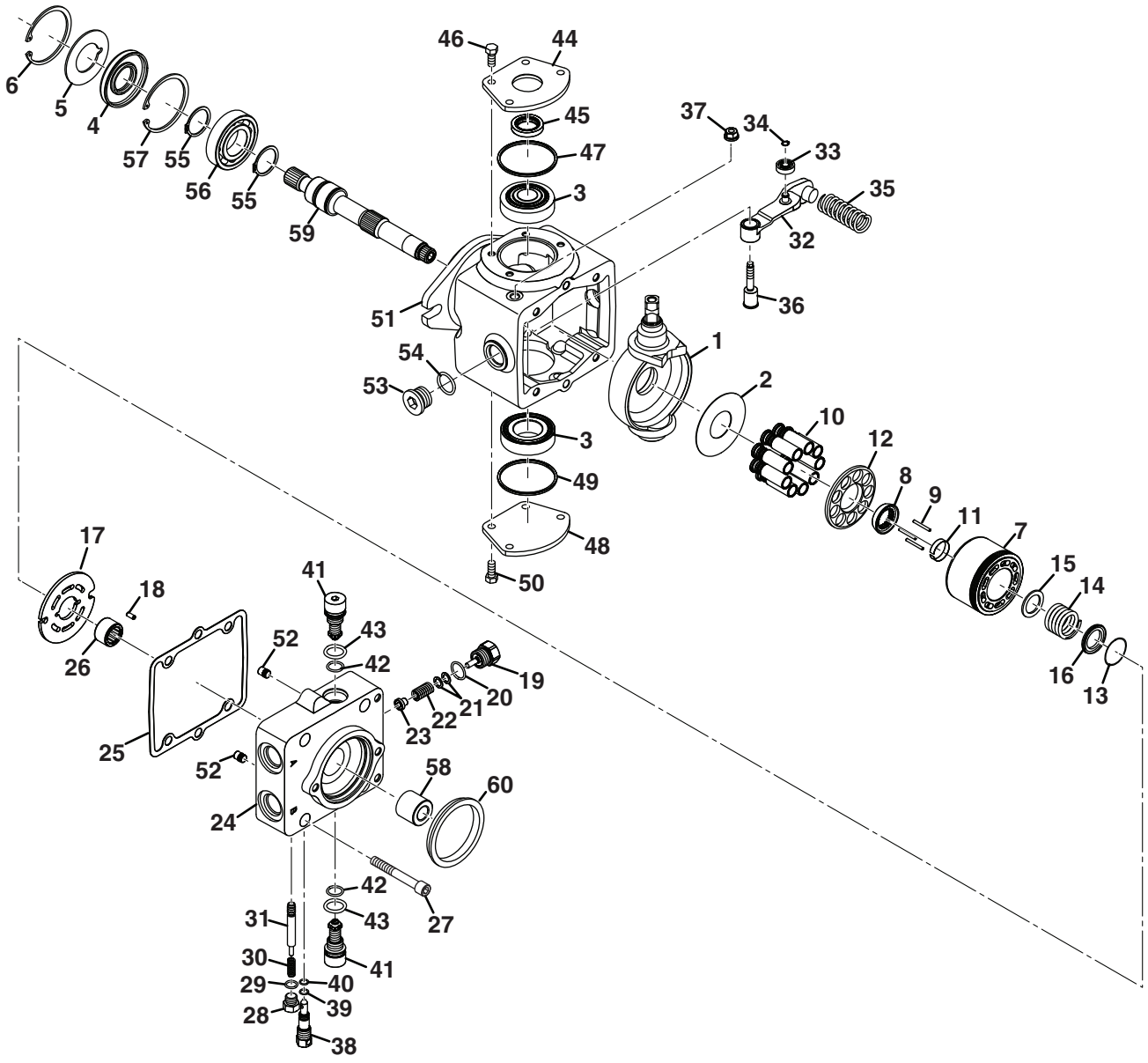

https://truckmanualshub.com/

Item	Part No.	Qty.	Description	Serial Numbers/Notes
45		1	• Seal, Trunnion	Included in seal kit
46		4	Screw	
47		1	O-Ring	Included in seal kit
48		1	Trunnion Cover	
49		1	O-Ring	Included in seal kit
50		4	Screw	
51		1	Housing	
52		2	Dowel Pin	
53		1	Plug Assembly	
54		1	• O-Ring	Included in seal kit
55		2	Retaining Ring, External	
56		1	Ball Bearing	
57		1	Retaining Ring, Internal	
58		1	Coupling, 9 Tooth	
59		1	Shaft, Input	
60		1	Seal, A-Flange	
	4169328	1	Seal Kit	

> Change from previous revision

https://truckmanualshub.com/

40.1 3WD Rear Wheel Motor

Serial No. All

Part Number 4379887

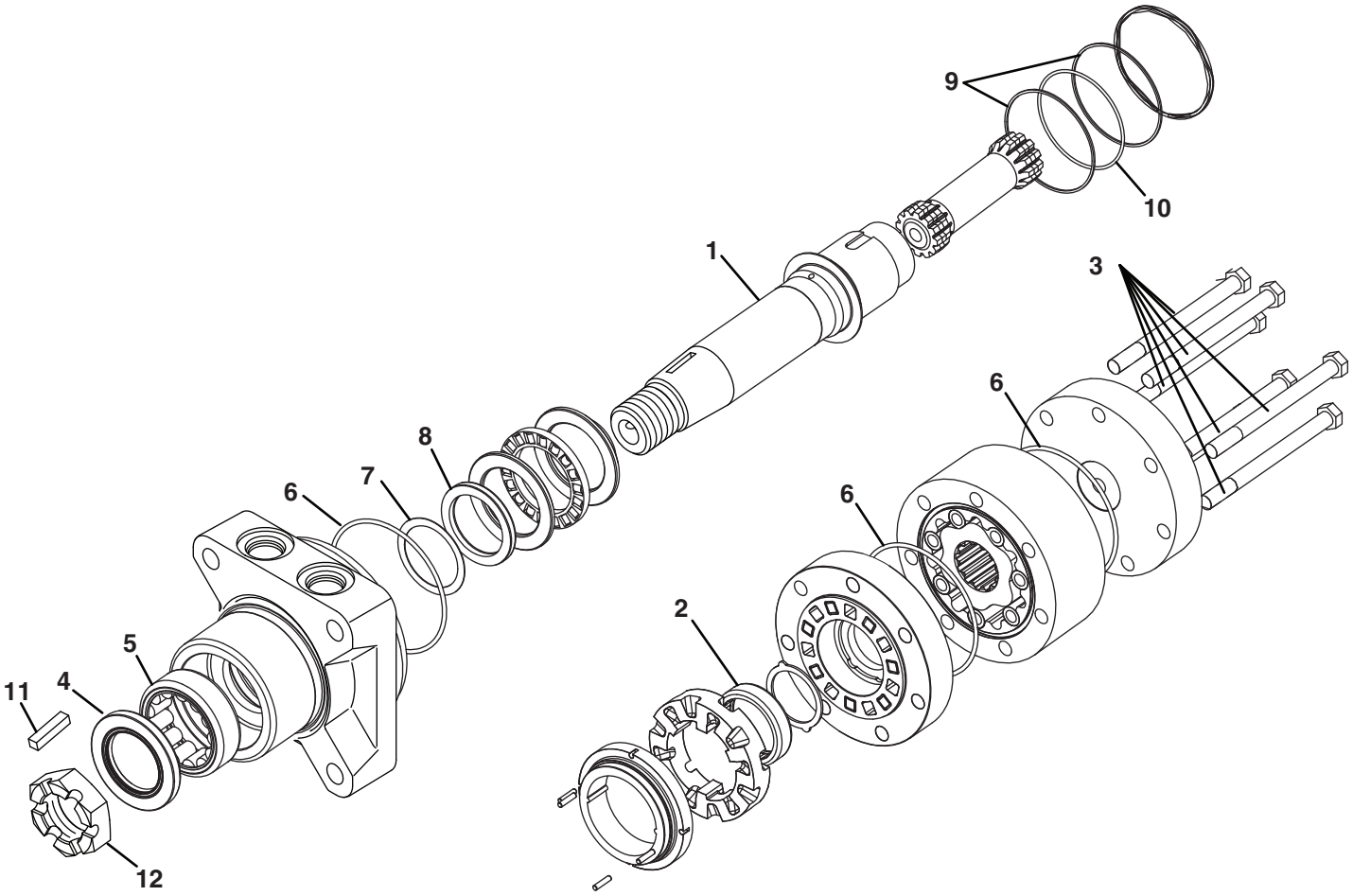

https://truckmanualshub.com/

Item	Part No.	Qty.	Description	Serial Numbers/Notes
1	4304405	1	Output Shaft	
2	4304407	1	Bearing	
3	4399830	7	Screw, Hex Head	
	4304409	1	Seal Kit	
4	N/S	1	• Grease Seal	
5	N/S	1	• Bearing Shell	
6	N/S	3	• O-Ring	
7	N/S	1	• Back-Up Washer	
8	N/S	1	• Shaft Seal	
9	N/S	2	• Back-Up Ring	
10	N/S	1	• O-Ring	
11	554780	1	Key	
12	554779	1	Nut, 1-20 Hex Castle	

> Change from previous revision

https://truckmanualshub.com/

41.1 Electrical Schematic

Serial No. All

Part Number 4394946

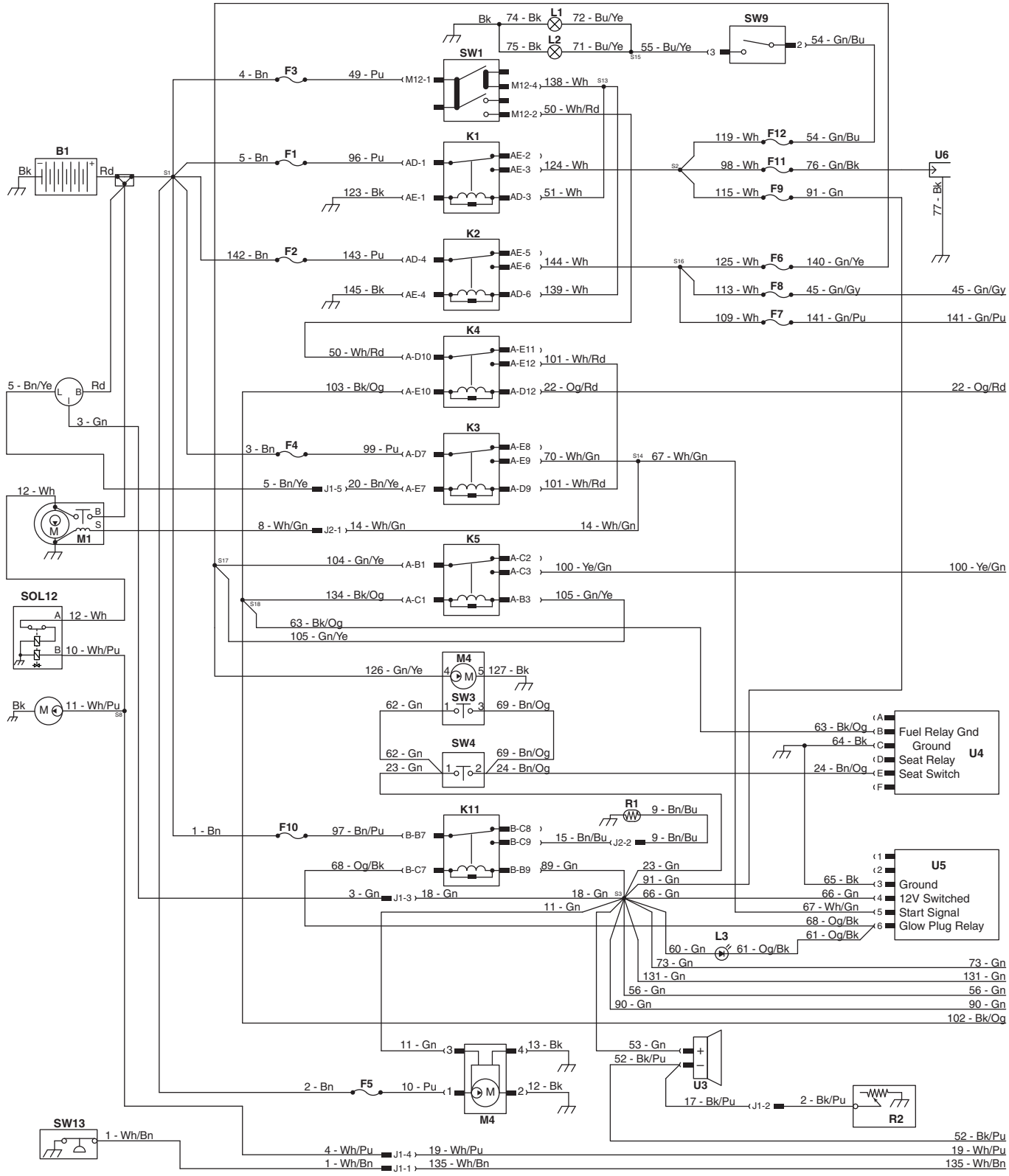

https://truckmanualshub.com/

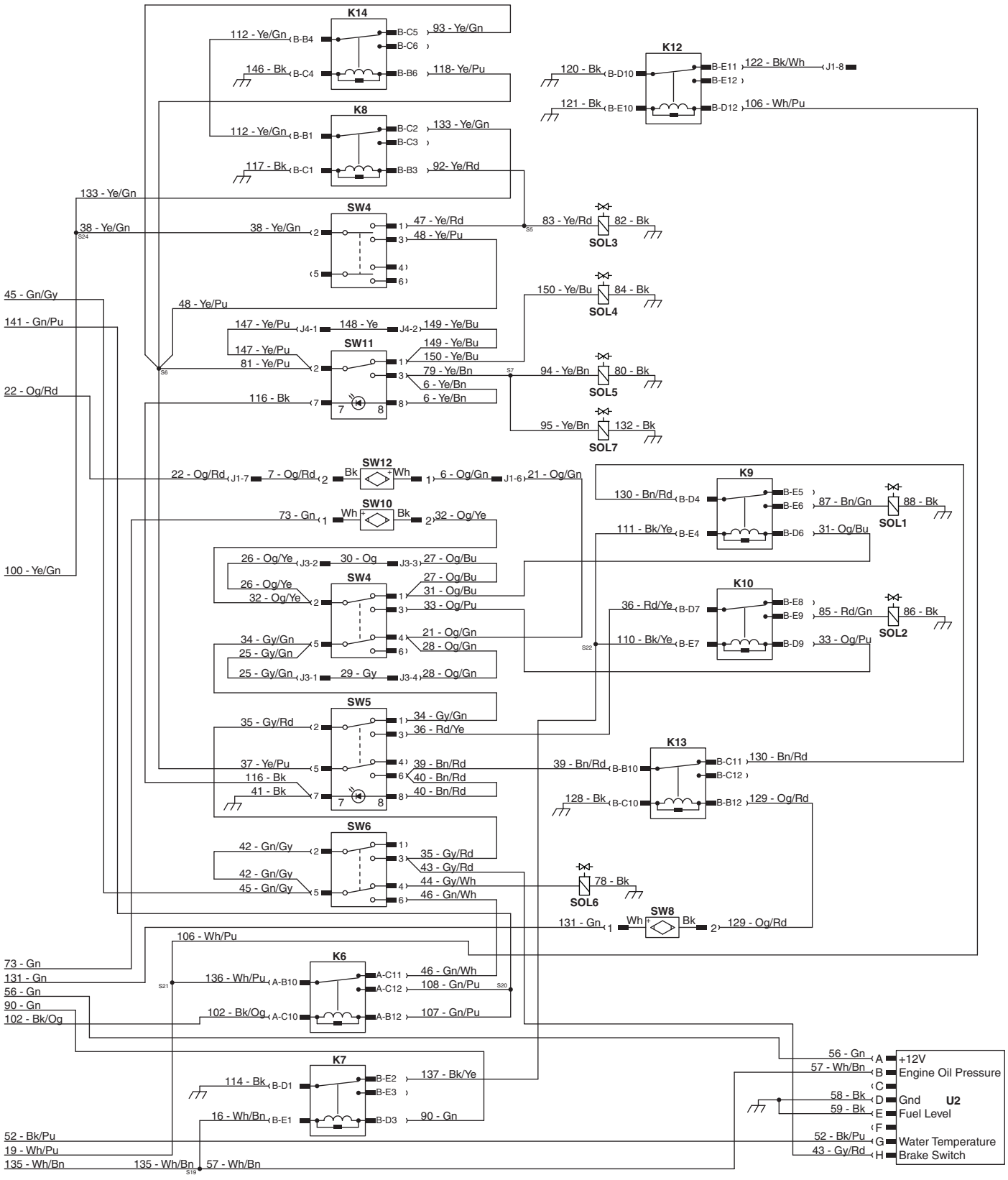

> Change from previous revision

https://truckmanualshub.com/

Item	Reference Illustration	Part Number	Description	Serial Numbers/Notes
B1	See 27.1	N/S	Battery	
F1	See 27.1	4312217	25 Amp Ignition Relay 1 Fuse	
F2	See 27.1	4312217	25 Amp Ignition Relay 2 Fuse	
F3	See 27.1		2 Amp Ignition Switch Fuse	
F4	See 27.1	4312217	25 Amp Crank Relay Fuse	
F5	See 27.1		30 Amp Cooling Fan Fuse	
F6	See 27.1	4312213	10 Amp Seat Relay Fuse	
F7	See 27.1	4312246	15 Amp Engine Shut Off Relay Fuse	
F8	See 27.1	4312246	15 Amp Parking Brake Relay Fuse	
F9	See 27.1	4312213	10 Amp Switch Power Fuse	Must be removed from harness for proper AR321 operation.
F10	See 27.1		30 Amp Glow Plug Fuse	
F11	See 27.1	4312246	15 Amp 12V Accessory Outlet Fuse	
F12	See 27.1	4312246	15 Amp Work Light Fuse	
J1	Not Shown		Engine Harness Connector 1	
J2	Not Shown		Engine Harness Connector 2	Part of optional light kit
J3	Not Shown		Backlap Option Connector	Part of optional light kit
J4	Not Shown		Weight Transfer Option Connector	Part of optional light kit
K1	See 27.1	4329751	Ignition Relay 1	Included with Engine
K2	See 27.1	4329751	Ignition Relay 2	Included with Engine
K3	See 27.1	4329751	Crank Relay	
K4	See 27.1	4329751	Crank Inhibit Relay	
K5	See 27.1	4329751	Seat Relay	Included with Engine
K6	See 27.1	4329751	Engine Shut Off Relay	
K7	See 27.1	4329751	Low Oil Pressure Relay	
K8	See 27.1	4329751	Lift/Lower Relay	
K9	See 27.1	4329751	Mow Relay	
K10	See 27.1	4329751	Backlap Relay	
K11	See 27.1	4329751	Glow Plug Relay	
K12	See 27.1	4329751	Engine Stop Relay	
K13	See 27.1	4329751	Trans Speed Relay	
K14	See 27.1	4329751	Lower Latch Relay	
L1	Not Shown		Left Work Light	
L2	Not Shown		Right Work Light	
L3	See 3.1	15694-65992	Glow Plug Indicator	
M1	Not Shown		Starter	Included with Engine
M2	See 17.1		Fuel Pump	Included with Engine
M3	See 12.1	4348026	Cooling Fan	
M4	Not Shown		Air Ride Seat	
R1	Not Shown		Glow Plugs	
R2	Not Shown		Temperature Sensor	
SOL1			Mow Solenoid	
SOL2			Backlap Solenoid	
SOL3			Lift Solenoid	

https://truckmanualshub.com/

Item	Reference Illustration	Part Number	Description	Serial Numbers/Notes
SOL4			Lower Solenoid	
SOL5	**See 31.1**		Weight Transfer Solenoid	
SOL6			Parking Brake Solenoid	Not used on this mower
SOL7			Weight Transfer Solenoid 2	
SOL8			Fuel Solenoid	Included with Engine
SW1	**Not Shown**		Ignition Switch	
SW2	**Not Shown**		Seat Switch	
SW3	**See 3.1**	4217502	Seat Switch	
SW4	**Not Shown**		Backlap Switch	
SW5	**Not Shown**		Mow Switch	
SW6	**See 3.1**	4139764	Parking Brake Switch	
SW7	**Not Shown**		Lift/Lower Switch	
SW8	**Not Shown**		Transport Speed Switch	
SW9	**Not Shown**		Work Light Switch	
SW10	**Not Shown**		Cross Cut Sensor	
SW11	**Not Shown**		Weight Transfer Switch	
SW12	**Not Shown**		Neutral Switch	
SW13	**Not Shown**		Engine Oil Pressure Switch	Included with Engine
U1	**Not Shown**		Multi Function Gauge	
U2	**Not Shown**		Alternator	Included with Engine
U3	**See 3.1**	4150539	Horn	
U4	**See 3.1**	2188154	Delay Module	
U5	**Not Shown**		Glow Plug Timer	
U6	**See 7.1**		Accessory Socket	

> Change from previous revision

https://truckmanualshub.com/

42.1 Hydraulic Schematic

Serial No. All

3WD Option Schematic

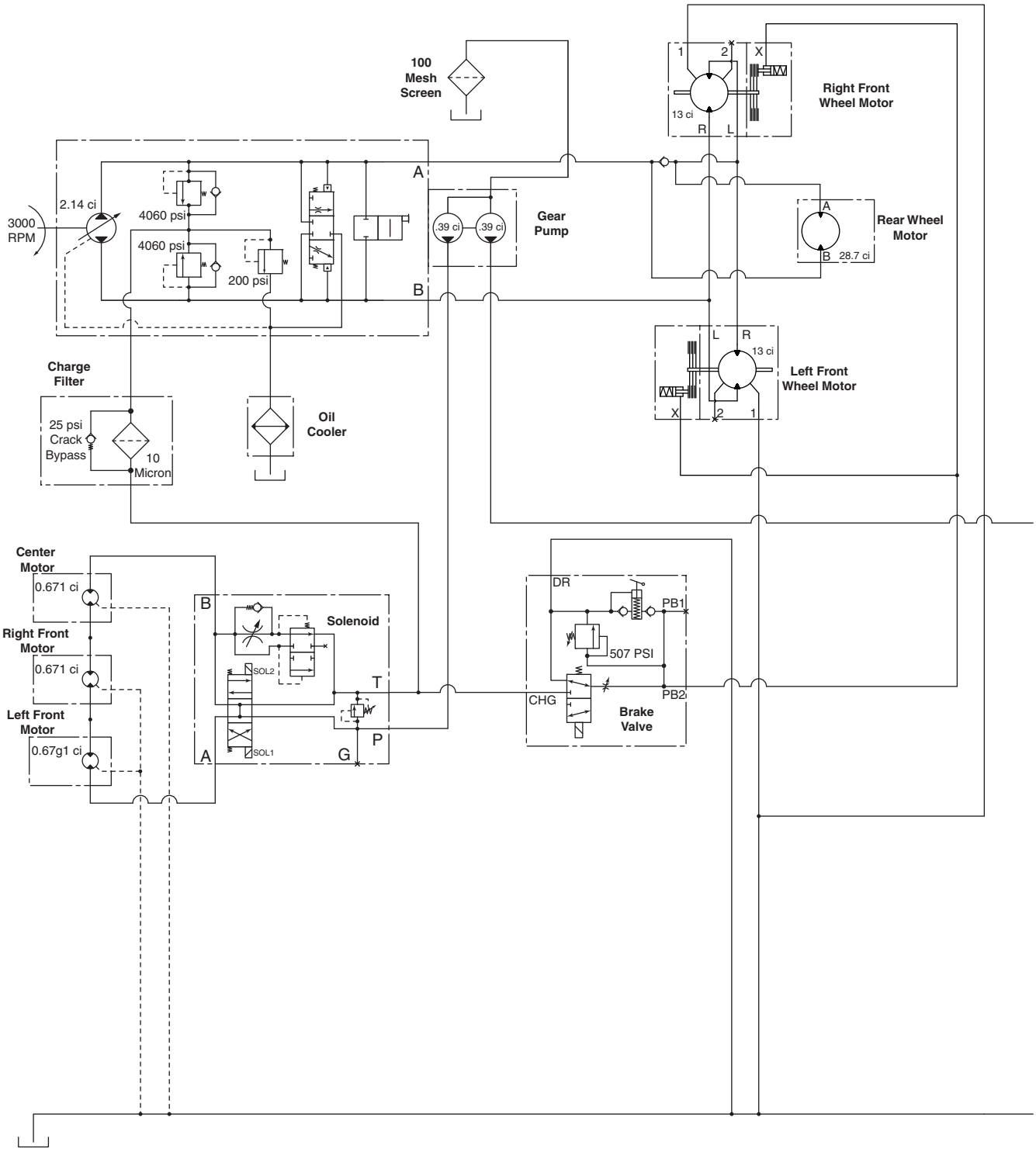

https://truckmanualshub.com/

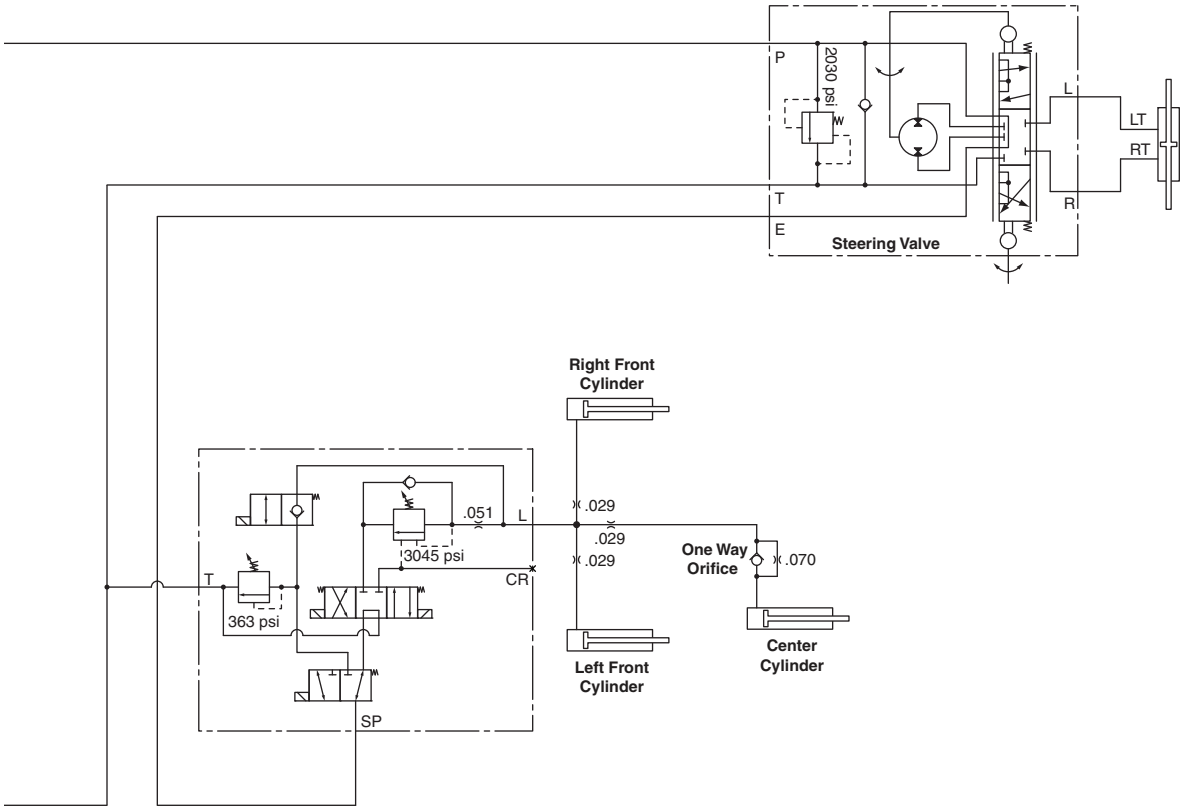

> Change from previous revision

 https://truckmanualshub.com/

Hydraulic Fluid*		
5001405	Two 2-1/2 Gallon Container of ISO VG68 Oil	
5001404	One 5 Gallon Pail of ISO VG68 Oil	
2500548	Two 2-1/2 Gallon Container of 10W30 Oil	
2500546	One 5 Gallon Pail of 10W30 Oil	
503409	Two 2-1/2 Gallon Container of ATF Fluid	
503407	One 5 Gallon Pail of ATF Fluid	
Grease		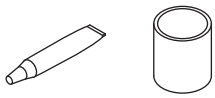
5000067	One 5 Gallon Pail OO-Grease	
5000068	Twenty Four 8 Ounce Tube OO-Grease	
Paint		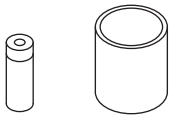
4184140	12 Ounce Orange Aerosol Can	
838140	16 Ounce Ransomes Green Aerosol Can	
4112764	1 Quart Can Ransomes Green	
Lapping Compound		
5002488	One 10 Pound Pail of 80 Grit	
5002490	One 25 Pound Pail of 80 Grit	
5002489	One 10 Pound Pail of 120 Grit	
5002491	One 25 Pound Pail of 120 Grit	
Specialty Compound		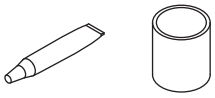
365422	5.3 Ounce Tube of Electrical Insulating Gel	
5001581	14 Ounce Can of Lubriplate Multi Lube A	
Biodegradable Hydraulic Fluid*		
5003102	One 55 Gallon Drum Jacobsen GreensCare 68	
5003103	One 5 Gallon Pail Jacobsen GreensCare 68	
4294332	One 55 Gallon Drum Jacobsen GreensCare 68 Plus	
4219840	One 5 Gallon Pail Jacobsen GreensCare Plus 68	
5003105	One 55 Gallon Drum Jacobsen GreensCare 46	
5003104	One 5 Gallon Pail Jacobsen GreensCare 46	
4294331	One 55 Gallon Drum Jacobsen GreensCare 46 Plus	
4219860	One 5 Gallon Pail Jacobsen GreensCare Plus 46	
4115977	One 5 Gallon Pail Jacobsen Greens Care 32	
4114701	GreensCare Bio-Flush	
5003106	Twenty Four 14 Ounce Tube Greens Care Grease	
O-Ring Kit		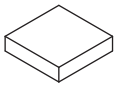
5002452	SAE O-Ring Boss (3/32 ~ 2” Tube O.D.)	
5002453	Common O-Ring Kit	
5002454	O-Ring Face Seal ORFS (-4 ~ -24 ORS Tube Size)	
On-Time Maintenance Kit		
See your local Jacobsen Dealer		

* Refer to the Parts & Maintenance manual for the correct hydraulic oil requirements for your machine.
Jacobsen offers a High Usage Parts Catalog illustrating commonly used Parts through easy to read line Drawings. See your local Jacobsen Dealer for a copy.

https://truckmanualshub.com/

INDEX

001191331 2
001339050 32
001341110 16
001393222 ..... 72, 74
001399032 20
001496150 2
001599264 ..... 36, 72
001925400 24
001925570 22
001990072 32
002036070 18
002143004 20
002211520 30
002497040 34
002953223 ..... 2, 12
002993013 ..... 68, 74
006820550 30
008006260 20
008145256 20
009034770 14
009034880 24
009034900 12
009034920 24
009114100 14
009114380 14
4113986 30
108094-06 24
128079 ..... 8, 10
15694-65992 ..... 6, 85
158065-03 26
2188154 ..... 6, 86
2198084 26
2198112 36
2208139 14
2500546 89
2500548 89
2811255 ..... 38, 50
2811364 38
2811365 38
3001656 68
3002365 22
3003474 8
3003475 8
3004882 68
3005156 68
3007764 66
3008388 68
3008392 46
3008682 2
3010199 ..... 60, 70
339896 ..... 42, 62
339897 ..... 46, 48, 50, 60, 62
339898 ..... 42, 48, 70
339899 ... 40, 44, 48, 50
339900 ..... 40, 50, 52
339901 50
339902 42
339904 ..... 36, 42
339908 42
339909 ..... 26, 42, 46, 48, 50
339910 ..... 26, 44, 48
339911 ..... 40, 50
339912 ..... 40, 50, 52
339914 42
339972 42
339979 ..... 48, 50
339980 48
339984 48
339985 44
339989 40
339993 40
339996 50
339999 42
340001 42
340026 46
340029 42
340033 50
340036 40
340061 ..... 46, 48, 50
340062 42
340066 44
340067 48
340074 ..... 50, 52
340097 48
340122 40
340263 48
363996 6
365422 89
367029 68
400318 30
401237J 68
4111408 36
4112764 89
4113986 26
4114701 89
4115977 89
4122501 14
4123826 24
4123828 24
4125831 ..... 6, 10, 76
4133243 26
4134071 ..... 30, 50
4135151 68
4135152 68
4138725 68
4139045 ..... 12, 30
4139103 68
4139764 ..... 6, 86
4150539 ..... 6, 86
4163101 68
4164280 74
4164580 ..... 12, 14
4164860 36
4167640 76
4169021 ..... 42, 46, 48, 56, 76
4169328 80
4171365 62
4171444 ..... 60, 62
4171445 62
4171446 62
4171447 62
4171460 62
4171461 62
4171462 62
4171463 62
4171464 62
4171465 62
4171466 62
4171467 62
4171468 62
4171769 62
4171770 62
4177942 60
4181865 2
4183560 20
4184140 89
4185740 8
4185741 8
4186000 46
4192800 20
4193341 ..... 4, 6
4193344 ..... 4, 6
4198282 38
4200040 8
4201021 ..... 38, 48, 50
4202462 4
4203220 4
4203740 ..... 10, 30, 40, 50, 52
4204341 4
4205942 4
4212121 6
4217502 ..... 6, 86
4219840 89
4219860 89
4220940 ..... 16, 20
4224121 78
4225220 6
4231340 10
4233963 16
4244289 ..... 20, 42
4244304 ..... 46, 76
4244831 28
4245590 76
4247950 34
4256475 4
4257812 4
4258312 76
4259424 60
4259710 14
4270219 38
4270811 6
4273470 ..... 12, 14, 16, 18, 20
4278451 38
4280110 68
4280351 38
4280751 60
4280752 60
4283232 34
4283269 6
4283652 6
4283653 6
4283654 6
4287174 34
4287314 48
4287791 ..... 14, 44, 50
4290433 6
429068A1 68
4291031 34
4294331 89
4294332 89
4304405 82
4304407 82
4304409 82
4306557 28
4309904 ..... 12, 54
4311249 68
4312213 ..... 54, 85
4312216 54
4312217 ..... 54, 85
4312246 ..... 54, 85
4312406 36
4313086 74
4314427 2
4314429 2
4314430 2
4314627 14
4316092 54
4321434 54
4324674 34
4324707 6
4329226 56
4329751 ..... 54, 85
009114170 2
4337208 68
4341633 68
4343926 6
4344103 34
4346606 68
4348026 ..... 24, 85

https://truckmanualshub.com/

INDEX

4350748 12
4350749 12
4354951 . 36, 42, 48, 52
4354952 34
4356728 36
4358026 28
4359048 28
4359066 24
4359067 24
4359526 74
4362366 6
4362466 12
4362467..... 12
4362867 68
4362869 68
4363146 36
4363969 74
4363970 74
4365086 ..... 12, 24
4366266 6
4366566 20
4366626 74
4368187 10
4369147 60
4369149 70
4369150 70
4369151 70
4369152 70
4369350 60
4370167 28
4370266 14
4370626 6
4370752 36
4370787 20
4371126 42
4371587 12
4374506 6
4374927 16
4375488 16
4375506 12
4375543 60
4375544 60
4375546 60
4375547 60
4375566 12
4375586 38
4375587 38
4375646 60
4376646 ..... 4, 12
4376647 4
4376648 ..... 4, 6
4376688 ..... 24, 52
4377606 30
4377767 28
4377886 8
4378128 32
4378129 32
4378166 22
4378487 24
4378526..... 4
4378646..... 22
4378832 8
4379146 34
4379887 ..... 20, 40
4379926 .....16, 40, 48, 50
4381048 14
4382209 6
4382366 34
4383606 76
4383826 48
4384346 ..... 4, 34
4385186 24
4385366 74
4386151 74
4386153 74
4386486 34
4386646 12
4386741 20
4386927 10
4386983 68
4387056 30
4387057 32
4387306 34
4388026 16
4388428 14
4389773 72
4389826 72
4390462 50
4390540 74
4390640 48
4390643 48
4391026 40
4391085 18
4391106 18
4391186 52
4391206 42
4391256 42
4391257 40
4391258 40
4391266 50
4391327 14
4391338 50
4391546 52
4391566 40
4391886 6
4392007 76
4392132 46
4392138 48
4392139 48
4392140 48
4392141 44
4392142 44
4392144 44
4392145 44
4393088 28
4393167 28
4393546 14
4393708 74
4393846 14
4393849 42
4393946 12
4393948 12
4394346 12
4394471 12
4394507 46
4394613 68
4394670 ..... 38, 48
4394747 2
4394753 38
4394849 ..... 36, 42
4394906 24
4394946 54
4394947 54
4395054 6
4395228 22
4395230 22
4395239 30
4395240 30
4395246 14
4395269 ..... 38, 50
4395287 ..... 38, 50
4395489 ..... 28, 30, 54
4395531 ..... 38, 50
4395663 2
4395665 2
4395666 2
4395667 2
4395726 54
4395869 2
4396209 42
4396226 30
4396366 26
4396492 76
4396546 12
682584 54
4397006 38
4397046 14
4397106 36
4397226 10
4397230 10
4397266 18
4397268 56
4397306 56
4397307 56
4397486 2
4397488 18
4397507 18
4397526 10
4398146 50
4398266 40
4398306 48
4398567 26
4398686 12
4398746 40
4398747 40
4398766 12
4398926 74
4398946 30
4399007 26
4399008 26
4399207 68
4399209 18
4399226 20
4399229 26
4399269 48
4399271 48
4399299 30
4399300 30
4399301 30
4399308 24
4399316 .....26, 30, 32
4399432 76
4399443 24
4399466 38
4399486 76
4399528 68
4399530 74
4399546 68
4399631 76
4399689 74
4399727 28
4399768 74
4399830 82
4399870 74
4399952 76
4400019 40
4400020 40
4400045 14
4420024 72
4420033 48
4420041 72
4420075 42
4420085 42
4420133 46
4420394 2
4420395 2
4420514 68
4420535 68
4420537 68
4420538 68
4420576 68
4420589 68
450000 24

https://truckmanualshub.com/

INDEX

450001 8
450002 10
450003 12
450005 ..... 12, 14, 28
450006 28
450008 24
450014 8
450018 14
450019 10
450020 74
450020231 ..... 8, 10
450020281 20
450020338 38
450028 56
450029 2
450031 74
450040 56
450056 20
450114 74
450120021 4
450120267 72
450168 32
450170 ... 34, 38, 54, 74
450171 ..... 12, 32
450172 .....8, 14, 28, 30, 34, 38
450190 ..... 4, 30
450191 ..... 24, 26
450192 .. ..6, 8, 10, 22, 24, 34
450193 ..... 8, 28, 30
450194 ..... 28, 32, 34
450195 30
450199 8
450200 8
450213 34
450214 .....4, 12, 30, 34, 36
450215 .....12, 14, 20, 72, 74
450216 ..... 18, 32
450239 18
450240 ..... 4, 12
450241 ..... 2, 72
450242 .. ..14, 16, 18, 22, 30, 56
450243 14
450321 14
450323 ..... 24, 30, 54
450324 ..... 8, 24
450331 ..... 6, 26
450333 8
450357 ..... 2, 14, 24
450358 30
450367 6
450369 12
450371 12
450376 .....28, 30, 54
450377 .....8, 10, 12, 28, 38
450378 .....4, 10, 30, 56
450379 .....4, 6, 12, 54, 72, 74
450380 14
450384 74
450386 .....10, 76
450387 .....14, 36
450388 28
450389 .....2, 8, 10, 12, 24, 28, 30, 32, 34, 38, 54
450390 .....4, 6, 8, 10, 24, 26, 28, 30, 32, 34, 56, 72, 74
450391 .....2, 4, 6, 12, 14, 18, 20, 30, 32, 34, 54, 72, 74
450392 .....2, 4, 12, 14, 18, 20, 30, 56, 72
450395 74
450400 10
450401 .....4, 12, 56
450402 14
450410 ...24, 28, 32, 34
450411 .....4, 10, 14, 24, 26, 28, 30, 32, 34, 72, 74
450412 .....4, 12, 14, 30, 34, 36, 38
450413 .....4, 12, 20, 30, 72
450453 6
450454 .....32, 34, 36
450455 20
450471 6
450477 .....6, 36
450511 10
450520 36
450528 .....28, 30, 54
450532 14
450541 .....2, 6
450543 34
450594 14
450619 54
450620 36
450866 74
452000326 38
452000327 34
452200134 72
452402 54
452435 .....8, 28, 30, 34, 38
452436 .....6, 8, 10, 22, 28, 34
452437 .....2, 14, 18, 56
452438 .....2, 12, 14, 18, 22, 56
452585 66
452586 66
452686 54
452716 .....10, 76
452717 36
452751 30
453437 30
456110066 .....14, 38
456110448 30
459290 62
460050 66
469016509 34
48228-06 .....12, 24
48396 28
5000067 89
5000068 89
5000912 22
5000913 .....2, 22
5000914 22
5001404 89
5001405 89
5001581 89
5002452 89
5002453 89
5002454 89
5002488 89
5002489 89
5002490 89
5002491 89
5003102 89
5003103 89
5003104 89
5003105 89
5003106 89
503407 89
503409 89
523126 .....72, 74
553842 30
554779 82
554780 82
62464-4A 74
669323 14
669479 14
669503 14
669813 2
669840 .....28, 36
669881 54
669996 24
670061 68
670156 14
670526 12
670576 54
670577 54
670578 54
670579 54
670760 66
670761 66
670804 8
670806 8
671266 66
671273 50
671357 2
671358 12
671444 76
671556 2
671564 66
671565 66
671585 2
671843 48
671857 36
672014 8
672308 6
672486 26
672550 34
672591 26
672598 26
672638 54
672639 54
672713 20
672715 34
672728 34
672787 34
672788 34
672789 34
672790 34
673581 12
673585 66
673608 66
673609 66
673611 66
673617 66
673618 12
673807 66
673808 68
673844 66
674106 6
674112 66
674211 66
674298 16
674316 68
674317 68
674382 66
674383 66
674418 68
674420 68
674432 68
674526 76

https://truckmanualshub.com/

674685 ..... 44, 48, 68
674931 66
676387 66
819028 22
838140 89
838363 12
843942 14
J361723 72
MBA2397A 18
MBC5942 20
MBC5959A 20
MBE3454 56
MBG3772.7 74
MBG4592 74
MBG6720 36
UK450009 76
UK450027 76
UK450031 66
UK450040 76
UK450050..... 66
UK450055 14
UK450104 66
UK450152 76
UK450190 76
UK450191 76
UK450192 76
UK450213 76
UK450215 .... 16, 66, 76
UK450216 66
UK450376 76
UK450377 66
UK450378 76
UK450379 66
UK450380 66
UK450383 66
UK450388 76
UK450389 ..... 66, 76
UK450390 ..... 14, 76
UK450391 .... 16, 66, 76
UK450393 66
UK450394 66
UK450411 ..... 66, 76
UK450511 76
UK450553 66
UK450725 66
UK451500 66
UK452435 76
UK452436 ..... 66, 76
UK452437 ..... 16, 76

https://truckmanualshub.com/

https://truckmanualshub.com/

World Class Quality, Performance And Support

Equipment from Jacobsen is built to exacting standards ensured by ISO 9001 and ISO 14001 registration at all of our manufacturing locations.

A worldwide dealer network and factory trained technicians backed by Genuine Jacobsen Parts provide reliable, high-quality product support.

JACOBSEN®

When Performance Matters.™

CUSHMAN JACOBSEN RANSOMES

Jacobsen,
1451 Marvin Griffin Road, Augusta,
Georgia 30906 - 3852, USA
www.Jacobsen.com