COMPACT TRACK LOADER

https://truckmanualshub.com/

TAKEUCHI

From World First to World Leader

TL12V2

TAKEUCHI

From World First to World Leader

Takeuchi Mfg. U.S., Ltd.

40th Anniversary

1979 - 2019

Product Features & Specifications

https://truckmanualshub.com/

ENGINE

- U.S. EPA Final Tier 4 Emission Compliant
- Turbocharged and Intercooled
- DOC+DPF+SCR Exhaust After Treatment
- Active Power Control Power Management System
- Working Modes - Power and ECO
- Dial Throttle Control
- Automatic Fuel Bleed System
- High Capacity Radiator, Hydraulic Oil Cooler and Intercooler Mounted Side-by-Side on Swing Out Frame
- Dual Element Air Filter

ELECTRICAL

- 5.7” Color Multi-Informational Display
- Sealed Rocker Switches
- 12 volt System with 80 amp Alternator
- Heavy Duty, Quick Access Battery
- LED Work Lights, Front and Rear
- Back-up Alarm
- Horn

TAKEUCHI FLEET MANAGEMENT

- 2 Year Standard Service
- Downtime Prevention
- Remote Diagnostics
- Utilization Tracking
- Proactive Maintenance
- Control Costs

UNDERCARRIAGE AND FRAME

- 17.7” Quiet Track Design with Flotation Tread
- Long Track Frame
- Fully Welded Frame with Integrated Cross Members
- Rear Bumper Integrated into Frame
- Front and Rear Tie-Down and Lift Points
- Permanently Sealed Track Rollers with Metal Face Seals
- Double Reduction Planetary Track Drives
- Two-Speed Travel

OPERATOR’S STATION

- Pilot Operated Controls
- Deluxe High Back Adjustable Suspension Seat
- Rear Pivoting Seat Bar with Integrated Arm Rests
- Retractable 2” Seat Belt
- ROPS/FOPS Structure
- FOPS Level 2 Window Guard (High Flow Only)
- Polycarbonate Door and Top Guard (High Flow Only)
- Pressurized Cab with Roll-up Door, Air Conditioning, Heat, Defrost, Front Wiper and AM / FM / MP3 Radio with NOAA Weatherband (optional)
- 3” Seat Belt (optional)
- 3 Point Seat Belt (optional)

HYDRAULIC & WORKING EQUIPMENT

- High Lift Vertical Boom Design
- Low Cross Member
- Cushioned Boom Cylinders
- Boom Float with Detent
- Hydraulic Pilot Controls
- Proportional Auxiliary Controls with Detent
- Pressure Relieving Flat Faced Coupler Body
- 14-Pin Connector with Push Button Control
- Hydraulic Self Leveling (ON/OFF)
- Mechanical Quick Coupler
- Hydraulic Quick Coupler
  - Cab - Standard Equipment
  - Canopy - optional
- High Flow Auxiliary Hydraulics 40.4 gpm (optional)
- Secondary Auxiliary Circuit 23.2 gpm (optional with High Flow Only)
- Ride Control (optional)
- Pattern Change Valve (ISO or H) (optional)

Convenient Service and Maintenance Access

Vertical Lift Path for Balance and Stability

TOUGH, POWERFUL, RELIABLE

https://truckmanualshub.com/

Pilot Operated Controls

Battery Access Panel

Lower Cross Member & Step

Oversized Lift Cylinders

Takeuchi's first vertical lift compact track loader, the TL12V2 demonstrates a continuous commitment to product improvement and innovation. It is the largest and most capable track loader available today and delivers best in class rated operating capacity (ROC), a completely redesigned operator's station that features a color multi-information display, convenient rocker switches to control a wide range of functions, and an updated undercarriage design that enhances operator comfort by reducing vibration and noise levels.

The TL12V2 features a powerful 111 horsepower EPA Final Tier 4 emissions compliant engine that includes the very latest in EPA Tier 4 emissions standards while delivering outstanding power and torque for the very best performance in the most demanding applications.

Performance features include massive loader arms, oversized lift cylinders and pins, rear bumper with integrated tie downs, high capacity cooling module, and LED lights on the front and rear of the machine. The TL12V2's interior includes an updated overhead door design, redesigned foot throttle, precision pilot controls, backlit rocker switches, convenient cup holders, and a deluxe high back suspension seat for those long hours on the jobsite.

Spacious operator's station with easy to reach controls and switches.

https://truckmanualshub.com/

OPERATING PERFORMANCE		
Operating Weight - Canopy	12,860 lb	(5,835 kg)
Cab	13,190 lb	(5,985 kg)
Tipping Load	11,737 lb	(5,324 kg)
Rated Operating Capacity @ 35%*	4,107 lb	(1,863 kg)
Operating Load @ 50% of Tip Load	5,868 lb	(2,662 kg)
Bucket Breakout Force	7,874 lb	(3,571 kg)
Lift Arm Breakout Force	7,109 lb	(3,225 kg)
Traction Force	14,010 lb	(6,353 kg)
Ground Pressure	4.8 psi	(33.0 kPa)
Travel Speed		
Low	5.0 mph	(8.1 km/hr)
High	7.3 mph	(11.6 km/hr)

*Rated Operating Capacity for compact track loaders is rated according to SAE J818 at no more than 35% of the tipping load.

HYDRAULIC SYSTEM		
Auxiliary Flow - Primary Circuit	23.2 gpm	(88.0 Lpm)
Auxiliary Flow - High Flow (optional)	40.4 gpm	(153.0 Lpm)
Auxiliary Flow - 2nd Circuit (optional)	23.2 gpm	(88.0 Lpm)
Hydraulic System Pressure	3,481 psi	(24.0 MPa)

ENGINE		
Make / Model	Kubota / V3800-TIF4B	
Engine Displacement	230 cu in	(3.8 L)
Horsepower @ 2,400 rpm	111.3 hp	(83.0 kW)
Maximum Torque @ 1,500 rpm	284 ft-lb	(385.0 Nm)

FLUID CAPACITIES		
Engine Lubrication	13.9 qt	(13.2 L)
Cooling System	19.0 qt	(18.0 L)
DEF Fluid Tank Capacity	4.8 gal	(18.0 L)
Fuel Tank Capacity	31.6 gal	(119.5 L)
Fuel Consumption (65% of Full Load)	3.8 gal / hr	(14.4 L / hr)
Hydraulic Reservoir Capacity	13.2 gal	(50.0 L)
Hydraulic System Capacity	24.8 gal	(94.0 L)

5.7” Color Display

12 volt Accessory Outlet

LED Work Lights

Multi-Function Switch Bank

ATTACHMENTS

Takeuchi now offers attachments for all of your Takeuchi equipment.
See your authorized Takeuchi dealer for additional information and attachment options.

Grapple - Scrap

Dozer Blades

Pallet Forks

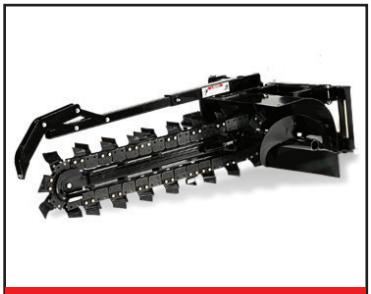
Trenchers

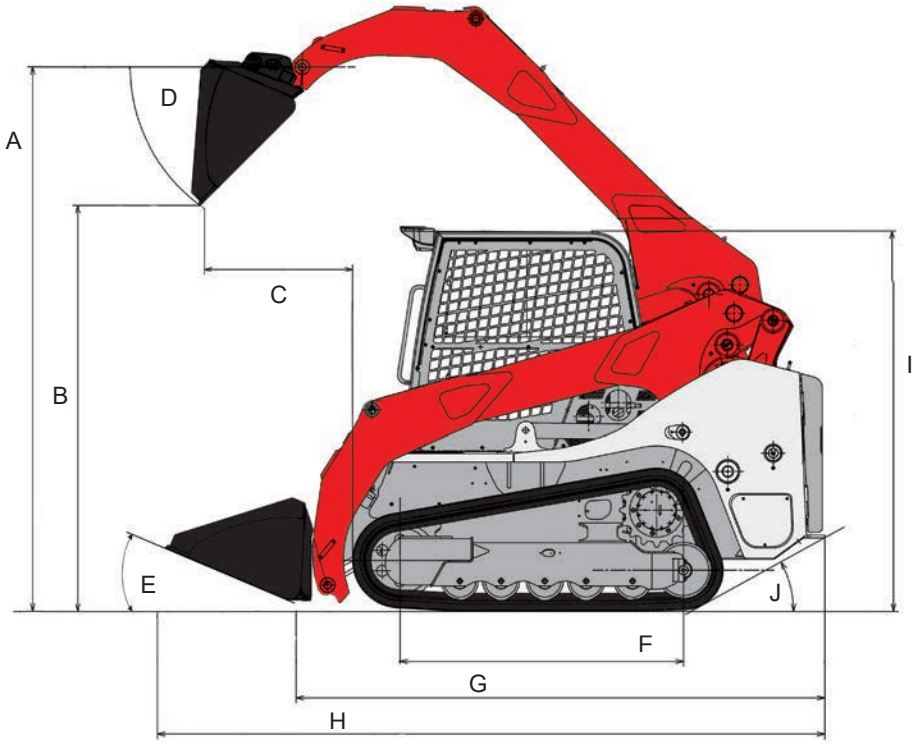

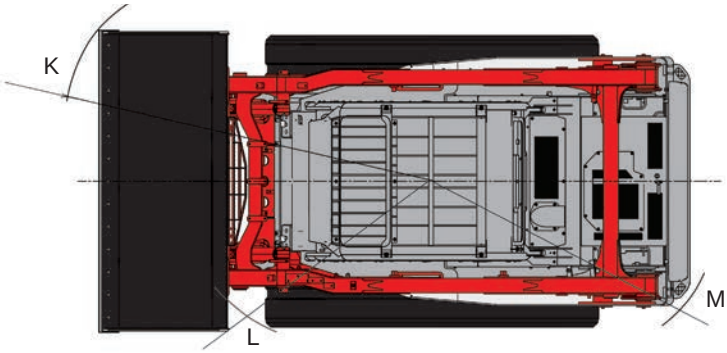

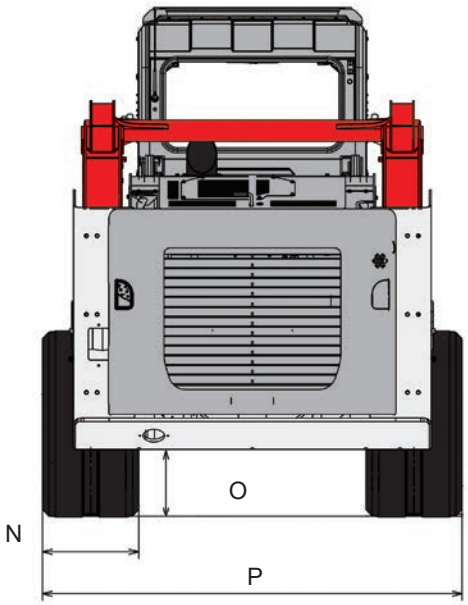

	MACHINE DIMENSIONS		
A	Max. Lift Height to Bucket Pin	10 ft 10 in	3,302 mm
B	Dump Height Fully Raised	8 ft 1.0 in	2,459 mm
C	Dump Reach Fully Raised	3 ft 0.4 in	924 mm
D	Dump Angle	46.8°	
E	Rollback Angle	30°	
F	Track Ground Contact Length	5 ft 7.6 in	1,717 mm
G	Machine Length	10 ft 6.2 in	3,205 mm
H	Transport Length	13 ft 3.3 in	4,045 mm
I	Transport Height	7 ft 7.7 in	2,330 mm
J	Departure Angle	30°	
K	Clearance Circle with Bucket	8 ft 2.6 in	2,505 mm
L	Clearance Circle without Bucket	5 ft 3.4 in	1,610 mm
M	Clearance Circle Rear	6 ft 0.8 in	1,848 mm
N	Track Width	17.7 in	450 mm
O	Ground Clearance	12.6 in	320 mm
P	Overall Width without Bucket	6 ft 5.2 in	1,960 mm

https://truckmanualshub.com/

© 2019 Takeuchi Manufacturing (U.S.), Ltd. All Rights Reserved. Printed in the U.S.A.
In accordance with our established policy of continued improvement, specifications and features are subject to change without notice. Pictures may show options other than standard equipment.
FORM: TL12V2 Track Loader Spec Sheet - Nov. 2019 - (TFM) s/n 412000006 ~

TAKEUCHI
From World First to World Leader