https://truckmanualshub.com/

Kubota

U.S.A. : **KUBOTA TRACTOR CORPORATION**
3401 Del Amo Blvd., Torrance, CA 90503, U.S.A.
Telephone : (310)370-3370
Western Division : 1175 S. Guild Avc., Lodi, CA 95240
Telephone : (209)334-9910
Central Division : 14855 FAA Blvd., Fort Worth, TX 76155
Telephone : (817)571-0900
Northern Division : 6300 at One Kubota Way, Groveport, OH 43125
Telephone : (614)835-1100
Southeast Division : 1025 Northbrook Parkway, Suwanee, GA 30024
Telephone : (770)995-8855
Canada : **KUBOTA CANADA LTD.**
5900 14th Avenue, Markham, Ontario, L3S 4K4, Canada
Telephone : (905)294-7477
France : **KUBOTA EUROPE S.A.S**
19-25, Rue Jules Vercruysse, Z.I. BP88, 95101 Argenteuil Cedex, France
Telephone : (33)1-3426-3434
Italy : **KUBOTA EUROPE S.A.S Italy Branch**
Via Grandi, 29 20068 Peschiera Borrome (MI) Italy
Telephone : (39)02-51650377
Germany : **KUBOTA (DEUTSCHLAND) GmbH**
Senefelder Str. 3-5 63110 Rodgau /Nieder-Roden, Germany
Telephone : (49)6106-873-0
U.K. : **KUBOTA (U.K.) LTD.**
Dormer Road, Thame, Oxfordshire, OX9 3UN, U.K.
Telephone : (44)1844-214500
Spain : **KUBOTA ESPAÑA S.A.**
Avenida Recomba No.5, Poligno Industrial la Laguna, Leganes, 28914 (Madrid) Spain
Telephone : (34)91-508-6442
Australia : **KUBOTA TRACTOR AUSTRALIA PTY LTD.**
25-29 Permas Way, Truganina, VIC 3029, Australia
Telephone : (61)-3-9394-4400
Malaysia : **SIME KUBOTA SDN. BHD.**
No.3 Jalan Sepadu 25/123 Taman Perindustrian Axis,
Seksyen 25, 40400 Shah Alam, Selangor Darul Ehsan Malaysia
Telephone : (60)3-736-1388
Philippines : **KUBOTA PHILIPPINES, INC.**
232 Quirino Highway, Baesa, Quezon City 1106, Philippines
Telephone : (63)2-422-3500
Taiwan : **SHIN TAIWAN AGRICULTURAL MACHINERY CO., LTD.**
16, Fengping 2nd Rd, Taliao Shiang Kaohsiung 83107, Taiwan R.O.C.
Telephone : (886)7-702-2333
Indonesia : **PT KUBOTA MACHINERY INDONESIA**
Tower A at EightyEight@Kasablanka Lantai 16
Jalan Raya Casablanka Kav. 88, Jakarta 12870 Indonesia
Telephone : (62)-21-29568-720
Thailand : **SIAM KUBOTA CORPORATION CO., LTD.**
101/19-24 Moo 20, Navanakorn Industrial Estate, Tambon Khlongnueng, Amphur Khlongluang,
Pathumthani 12120, THAILAND
Telephone : (66)2-909-0300
Korea : **KUBOTA KOREA CO., LTD.**
41-27, Jayumuyeok-gil, Baeksan-myeon, Gimje-si, Jeollabuk-do, Korea
Telephone : (82)-63-544-5822
India : **KUBOTA AGRICULTURAL MACHINERY INDIA PVT. LTD.**
No.15, Medavakkam Road, Sholinganallur, Chennai-600119, T.N., India
Telephone : (91)44-6104-1500
Vietnam : **KUBOTA VIETNAM CO., LTD.**
Lot B-3A2-CN, My Phuoc 3 Industrial Park, Ben Cat District, Binh Duong Province, Vietnam
Telephone : (84)-650-3577-507

KUBOTA Corporation

AU. K. 1-1. -. K

Code No. K2871-7131-1

BX1880.BX2380.BX2680

OPERATOR'S MANUAL

KUBOTA TRACTOR

MODELS BX1880 BX2380 BX2680

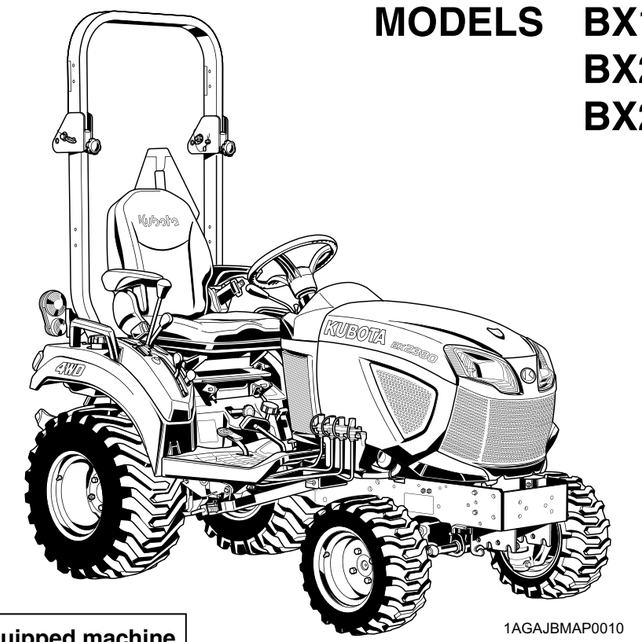

1AGAJBMAP0010

AUX. valve equipped machine

READ AND SAVE THIS MANUAL

Kubota

PRINTED IN U.S.A.

© KUBOTA Corporation 2016

https://truckmanualshub.com/

ABBREVIATION LIST

Abbreviations	Definitions
2WD	2-Wheel Drive
4WD	4-Wheel Drive
API	American Petroleum Institute
ASABE	American Society of Agricultural and Biological Engineers, USA
ASTM	American Society of Testing and Materials, USA
DIN	Deutsches Institut für Normung, GERMANY
DT	Dual Traction [4WD]
fpm	Feet Per Minute
Hi-Lo	High Speed-Low Speed
HST	Hydrostatic Transmission
m/s	Meters Per Second
PTO	Power Take Off
RH/LH	Right-hand and left-hand sides are determined by facing in the direction of forward travel
ROPS	Roll-Over Protective Structures
rpm	Revolutions Per Minute
r/s	Revolutions Per Second
SAE	Society of Automotive Engineers, USA
SMV	Slow Moving Vehicle

California Proposition 65

⚠ WARNING ⚠

Engine exhaust, some of its constituents, certain vehicle components and fluids, contain or emit chemicals known to the State of California to cause cancer and birth defects or other reproductive harm.

IMPORTANT

The engine in this machine is not equipped by the manufacturer with a standard spark arrester. It is a violation of California Public Resource Code Section 4442 to use or operate this engine on or near any forest-covered, brush-covered land, or grass- covered land unless the exhaust system is equipped with a working spark arrester meeting state laws. Other states or federal areas may have similar laws.

Canadian Electromagnetic Compatibility (EMC):
This machine complies with Industry Canada ICES-002.

https://truckmanualshub.com/

UNIVERSAL SYMBOLS

As a guide to the operation of your tractor, various universal symbols have been utilized on the instruments and controls. The symbols are shown below with an indication of their meaning.

- Safety Alert Symbol
- Read Operator's Manual
- Hour meter/Elapsed Operating Hours
- Diesel Fuel
- Fuel-Level
- Empty
- Full
- Engine-Run
- Diesel Preheat/Glow Plugs (Low Temperature Start Aid)
- Starter Control
- Engine-Stop
- Engine Oil-Pressure
- Engine Coolant-Temperature
- Battery Charging Condition
- Electrical Power-accessories
- Hazard Warning Lights
- Turn Signal
- Headlight
- Master Lighting Switch
- Engine Speed Control
- Slow
- Fast
- Brake
- Parking Brake
- 4-Wheel Drive-Off
- 4-Wheel Drive-On
- Speed set-On
- Speed set-Off
- Differential Lock
- Hydraulic Control-Lowered Position
- Hydraulic Control-Raised Position
- 3-Point Lowering Speed Control
- Remote Cylinder-Retract
- Remote Cylinder-Extend
- Mid-PTO
- Mid-Rear-PTO
- Rear-PTO
- Power Take-Off Clutch Control-Off Position
- Power Take-Off Clutch Control-On Position
- Tilt Steering Lever
- Loader Lock Lever Lock Position
- Loader Lock Lever Unlock Position

https://truckmanualshub.com/

FOREWORD

You are now the proud owner of a KUBOTA Tractor. This tractor is a product of KUBOTA's quality engineering and manufacturing. It is made of the excellent materials and under rigid quality control systems. It will give you long, satisfactory service. To obtain the best use of your tractor, please read this manual carefully. It will help you become familiar with the operation of the tractor and contains many helpful hints about tractor maintenance. It is KUBOTA's policy to utilize, as quick as possible, every advance in our research. The immediate use of new techniques in the manufacturing of products may cause some small parts of this manual to become outdated. KUBOTA distributors and dealers will have the most up-to-date information. Please do not hesitate to consult them.

SAFETY FIRST

This symbol, the industry's "Safety Alert Symbol", is used throughout this manual and on labels on the machine itself to warn of the possibility of personal injury. Read these instructions carefully. It is essential that you read the instructions and safety regulations before you attempt to assemble or use this unit.

DANGER : Indicates an imminently hazardous situation which, if not avoided, will result in death or serious injury.

WARNING : Indicates a potentially hazardous situation which, if not avoided, could result in death or serious injury.

CAUTION : Indicates a potentially hazardous situation which, if not avoided, could result in minor or moderate injury.

IMPORTANT : Indicates that equipment or property damage could result if instructions are not followed.

NOTE : Gives helpful information.

https://truckmanualshub.com/

CONTENTS

SAFE OPERATION **5**

SERVICING OF THE TRACTOR **17**
DEALER SERVICE 17
1. Warranty of the tractor 18
2. Scrapping the tractor and its procedure 18

SPECIFICATIONS **19**
SPECIFICATION TABLE 19
TRAVELING SPEEDS TABLE 21

IMPLEMENT LIMITATIONS **22**
IMPLEMENT LIMITATION TABLES 22
FRONT LOADER 26
WEIGHT OF THE IMPLEMENTS AS THE REAR BALLAST 26

INSTRUMENT PANEL AND CONTROLS **27**
INSTRUMENT PANEL, SWITCHES, AND HAND CONTROLS 27
1. Key switch 28
2. Tilt lever [BX2380 and BX2680] 28
3. Head light switch 28
4. Hazard light switch 28
5. Turn signal light switch 28
6. Hood open lever 29
FOOT CONTROLS AND HAND CONTROLS 30
1. Operator's seat 31
2. Seat belt 31
3. Brake pedal and parking brake lock pedal 31
3.1 How to use the parking brake 32
4. Range gear shift lever (Hi-Lo) 32
5. Front wheel drive lever 32
6. Hand accelerator lever 33
7. Speed control pedal 33
8. Speed set device [BX2380 and BX2680] 34
8.1 How to use the speed set device [BX2380 and BX2680] 34
ACCESSORY 34
1. 12 V electric outlet 34
2. Accessory box 35
3. Operator's manual holder [BX1880] 35
4. Glove box [BX2380 and BX2680] 35

PRE-OPERATION CHECK **36**
DAILY CHECK ITEMS BEFORE OPERATION OF THE TRACTOR 36

OPERATING THE ENGINE **37**
STARTING THE ENGINE 37
1. Cold weather starting of the engine 39
2. Block heater (option) 39
STOPPING THE ENGINE 39
WARMING UP OF THE ENGINE 40
1. Warm-up of the engine and transmission oil in the low temperature range 40
JUMP STARTING THE ENGINE 40

OPERATING THE TRACTOR **42**
OPERATING NEW TRACTOR 42
GETTING ON AND OFF THE TRACTOR 42

https://truckmanualshub.com/

OPERATING THE FOLDABLE ROPS 42
1. Folding the ROPS 42
2. Raising the ROPS to upright position 43
3. Adjusting the foldable ROPS 44
STARTING THE TRACTOR 44
STOPPING THE TRACTOR 46
CHECK DURING DRIVING 47
1. Cases to stop the engine immediately 47
2. Check items during driving 47
2.1 Easy Checker™ 47
2.2 Fuel gauge 48
2.3 Coolant temperature gauge 48
2.4 Dealing with the overheated coolant temperature 49
2.5 Hour meter 49
2.6 Tachometer 49
PARKING THE TRACTOR 50
TECHNIQUES FOR OPERATING THE TRACTOR 50
1. Differential lock 50
2. Precautions for operating the tractor on a road 51
3. Precautions for operating the tractor on a slopes and rough terrain 51
4. Precautions for transporting the tractor safely 51
5. Directions for use of the power steering 51

PTO (POWER TAKE-OFF) 52

PTO OPERATION 52
1. PTO select lever 52
2. PTO clutch lever 52
3. PTO shaft cover and PTO shaft cap 53
4. Using stationary PTO 53
5. PTO drive shaft 54
5.1 Adjusting the length of PTO drive shaft 54

3-POINT HITCH AND DRAWBAR 55

OVERVIEW OF 3-POINT HITCH AND DRAWBAR 55
3-POINT HITCH 56
1. Precautions for attaching and detaching the implements to the 3-point hitch 56
2. Adjusting the lifting rod (right) 56
3. Adjusting the top link 56
4. Adjusting the check chains 56
HITCH 56

HYDRAULIC UNIT 58

3-POINT HITCH CONTROL SYSTEM 58
1. Hydraulic control 58
2. Lowering speed of 3-point hitch 58
AUXILIARY HYDRAULICS 59
1. Hydraulic outlet 59
MOWER LIFT LINKAGE SYSTEM 60
1. Cutting height control dial 60
2. Hydraulic control unit use reference chart 61
AUXILIARY HYDRAULIC CONTROL VALVE (IF EQUIPPED) 62
1. Valve lock 62
2. Auxiliary hydraulic ports 62
3. Connecting the auxiliary hydraulic control lever and hydraulic hose to the auxiliary hydraulic port 62
4. Controlling loader (only if equipped with loader) 63

TIRES, WHEELS, AND BALLAST 64

TIRES 64
1. Inflation pressure of tires 64

https://truckmanualshub.com/

2. Dual tires 64
WHEEL TREAD 64
1. Front wheels 65
2. Rear wheels 66
BALLAST 67
1. Front ballast 67
2. Rear ballast 67
MAINTENANCE 69
SERVICE INTERVALS 69
LUBRICANTS, FUEL, AND COOLANT 71
1. Biodiesel fuel (BDF) 73
PERIODIC SERVICE 75
HOW TO OPEN THE HOOD 75
DAILY CHECK 75
1. Walk around inspection 75
2. Checking the fuel gauge and refueling 75
3. Checking the engine oil level 76
4. Checking the transmission fluid level 76
5. Checking the coolant level 77
6. Cleaning the panel and the radiator screen 77
7. Checking the brake pedal 78
8. Checking the gauges, the meters, and the Easy Checker™ 78
9. Checking the head light, hazard light, and so on 78
10. Checking the seat belt and the ROPS 78
11. Checking and cleaning the electrical wiring and the battery cables 78
12. Checking the movable parts 79
SERVICE EVERY 50 HOURS 79
1. Lubricate fittings with grease 79
2. Checking the engine start system 80
3. Checking the OPC (operator presence control) system 80
4. Checking the wheel bolt torque 81
5. Cleaning the lock lever shaft 81
SERVICE EVERY 100 HOURS 82
1. Checking of the battery 82
1.1 Battery charging 82
1.2 Dealing with the battery when storing the tractor for a long period 83
2. Cleaning the air cleaner element 83
3. Checking the fuel filter 84
4. Adjusting the fan belt tension 84
5. Adjusting the HST neutral spring for speed control pedal 85
6. Adjusting the brake pedal 85
SERVICE EVERY 200 HOURS 86
1. Replacing the engine oil filter 86
2. Changing the engine oil 86
3. Replacing the transmission oil filter 87
4. Checking the toe-in 87
4.1 Adjusting the toe-in 88
SERVICE EVERY 400 HOURS 88
1. Adjusting the front axle pivot 88
2. Changing the transmission fluid 88
3. Cleaning the transmission strainer 89
4. Changing the front axle case oil 89
5. Replacing the fuel filter element 90
SERVICE EVERY 800 HOURS 90
1. Adjusting the engine valve clearance 90
SERVICE EVERY 1000 HOURS OR 1 YEAR 90

https://truckmanualshub.com/

1. Replacing of the air cleaner element 90
SERVICE EVERY 1500 HOURS 90
1. Checking the injection pressure of the fuel injection nozzle 90
SERVICE EVERY 2000 HOURS OR 2 YEAR 90
1. Flushing the cooling system and changing the coolant 90
2. Anti-freeze 91
SERVICE EVERY 3000 HOURS 92
1. Checking the injection pump 92
SERVICE EVERY 1 YEAR 92
1. Checking the intake air line 92
2. Checking the radiator hoses and the hose clamps 92
3. Checking the power steering line 93
4. Checking the fuel lines 93
5. Checking the engine breather hose 94
SERVICE EVERY 4 YEAR 94
1. Replacing the radiator hose (water pipes) 94
2. Replacing the fuel hose 94
3. Replacing the power steering hose 94
4. Replacing the intake air line 94
5. Replacing the engine breather hose 94
SERVICE AS REQUIRED 94
1. Bleeding the fuel system 94
2. Replacing the fuse 94
3. Replacing the light bulb 95

STORAGE OF THE TRACTOR 96
STORING THE TRACTOR 96
REMOVING THE TRACTOR FROM STORAGE 96

TROUBLESHOOTING 97
ENGINE TROUBLESHOOTING 97

OPTIONS 98
OPTION ITEMS 98

INDEX 99

SAFE OPERATION

Careful operation is your best insurance against an accident.
Read and understand this manual carefully before operating the tractor.
All operators, no matter how much experience they may have, should read this and other related manuals before operating the tractor or any implement attached to it. It is the owner's obligation to instruct all operators in safe operation.

PRECAUTIONS BEFORE OPERATING THE TRACTOR

Know your equipment and its limitations.
Read this entire manual before attempting to start and operate the tractor.

1. General precautions

- Pay special attention to the safety labels on the tractor.
- Do not operate the tractor or any implement attached to the tractor while under the influence of alcohol, medication, controlled substances, or while you are fatigued.
- Carefully check the vicinity of the tractor before operating it or any implement attached to it. Do not allow any bystander around or near the tractor during operating it.
- Before allowing other people to use your tractor, explain them how to operate it and have them read this manual before operating it.
- Never wear loose, torn, or bulky clothing around the tractor. Loose, torn, or bulky clothing may catch on moving parts or controls, leading to the risk of an accident. Use additional safety items: hard hat, safety boots or shoes, eye and hearing protection, gloves, and so on, as appropriate or required.
- Do not allow passengers to ride on any part of the tractor at anytime. The operator must remain in the tractor seat during operating the tractor.
- Check brakes, clutch, linkage pins, and other mechanical parts for improper adjustment and wear. Replace worn or damaged parts promptly. Check the tightness of all nuts and bolts regularly.
  For further details, see SERVICE INTERVALS on page 69.
- Keep your tractor clean. Buildups of dirt, grease, and trash may contribute to fires and lead to personal injury.
- Use only implements meeting the specifications listed under IMPLEMENT LIMITATION TABLES on page 22, FRONT LOADER on page 26, and WEIGHT OF THE IMPLEMENTS AS THE REAR BALLAST on page 26, or implements approved by KUBOTA.
- Use proper weights on the front or rear of the tractor to reduce the risk of upsets. When using the front loader, put an implement or ballast on the 3-point hitch to improve stability. Follow the safe operating procedures specified in *the implement or attachment manual*.
- Do not modify the tractor. Unauthorized modification may affect the function of the tractor, which may result in personal injury.

2. Precautions for CAB and ROPS

KUBOTA recommends the use of a CAB or roll-over-protective-structures (ROPS), and seat belt in almost all applications. Combination of a CAB or ROPS and seat belt will reduce the risk of serious injury or death if the tractor should be upset.

- Check for overhead clearance which may interfere with a CAB or ROPS.
- Set parking brake and stop engine. Remove any obstructions that may prevent raising or folding the ROPS. Do not allow any bystander. Always perform functions of CAB or ROPS from a stable position at the rear of the tractor. Hold the top of the ROPS securely when raising or folding it. Make sure that all pins are installed and locked.
- If the CAB or ROPS is loosened or removed for any reason, make sure that all parts are reinstalled correctly before operating the tractor.
- Never modify or repair any structural member of a CAB or ROPS because welding, bending, drilling, grinding, or cutting it may weaken the structure.
- If any structural member of the CAB or ROPS is damaged, replace the entire structure at your local KUBOTA Dealer.
- If the tractor is equipped with a foldable ROPS, you may fold down it temporarily only when absolutely necessary to fold down it for areas with constraints on height.
  There is no protection of operator provided by the ROPS in the folded position. For operator safety, you should place the ROPS in the upright and locked position and fasten the seat belt for all other operations.
- Always use the seat belt if the tractor is equipped with a CAB or ROPS.

Do not use the seat belt if a foldable ROPS is down or there is no ROPS. Check the seat belt regularly and replace if frayed or damaged.

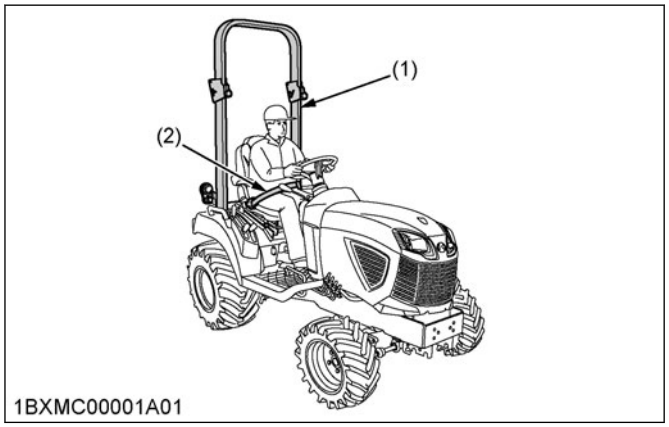

(1) ROPS *(2) Seat belt*

PRECAUTIONS FOR OPERATING THE TRACTOR

Operator safety is a priority. Safe operation, specifically with respect to overturning hazards, entails understanding the equipment and environmental conditions at the time of use. Some prohibited uses which can affect overturning hazards include traveling and turning with implements and loads carried too high, and so on.
This manual sets forth some of the obvious risks, but the list of risks is not exhaustive, and the list of risks cannot be exhaustive. It is the operator's responsibility to be alert for any equipment or environmental condition that could compromise safe operation.

1. Precautions for starting to operate the tractor

- Always sit in the operator's seat when starting the engine or operating levers or controls. Adjust seat per 1. Operator's seat on page 31. Never start the engine while you are standing on the ground.
- Before starting the engine, make sure that all levers including auxiliary control levers are in their **neutral** positions, that the parking brake is engaged, and that the power take-off (PTO) is disengaged or **off**.
  Fasten the seat belt if the tractor is equipped with a CAB, a fixed ROPS, or a foldable ROPS in the upright and locked position.
- Do not start the engine by shorting across starter terminals or bypassing the safety start switch. The tractor may start in gear and move if normal starting circuitry is bypassed.
- Do not operate or idle the engine in a non-ventilated area. Carbon monoxide gas is colorless, odorless, and deadly.
- Check that the operator-presence-control-system (OPC) are functioning correctly before each time you use the tractor. Test safety systems. See 2. Checking the engine start system on page 80 and 3. Checking the OPC (operator presence control) system on page 80.
  Do not operate unless they are functioning correctly.

2. Precautions for working the tractor

- Pull only from the hitch. Never hitch to axle housing or any other point except hitch. Hitching to axle housing or any other point except hitch will increase the risk of serious personal injury or death due to a tractor upset.

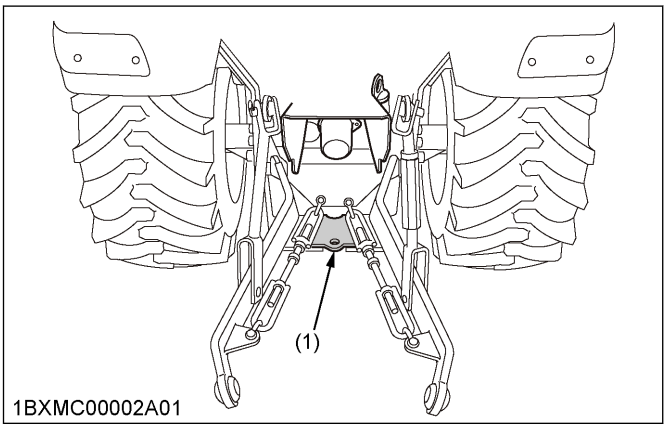

(1) Hitch

- Keep all shields and guards in place. Replace any shield or guard that are missing or damaged.
- Avoid sudden starts. To avoid upsets, slow down when turning, on uneven ground, and before stopping.
- The tractor cannot turn with the differential locked. Do not attempt to turn with the differential locked as it could be dangerous.
- Do not operate near ditches, holes, embankments, or other ground surface features which may collapse under the weight of the tractor. The risk of tractor upset is even higher when the ground is loose or wet. Tall grass can hide obstacles, so walk the area first to be sure.
- Watch where you are going at all times. Watch for and avoid obstacles. Be alert at row ends, near trees, and other obstructions.
- When working in groups, always let the others know what you are going to do before you do it.
- Never try to get on or off a moving tractor.
- Always sit in the operator's seat when you are operating levers or controls.
- Do not stand between the tractor and the implement or trailed vehicle unless parking brake is applied.
- Do not operate or tow at speeds exceeding specific travel speed.

3. Safety for children

Tragedy can occur if the operator is not alert to the presence of children. Children generally are attracted to machines and their work.

- Never assume that children will remain where you last saw them.
- Keep children out of the work area and under the watchful eye of another responsible adult.
- Be alert and shut the tractor down if children enter the work area.
- Never carry children on the tractor. There is no safe place for them to ride. They may fall off and be run over or interfere with your control of the tractor.
- Never allow children to operate the tractor even under adult supervision.
- Never allow children to play on the tractor or on the implement.
- Use extra caution when the tractor is backing up. Before the tractor starts to move, look down and behind to make sure area is clear.

4. Precautions for operating the tractor on slopes

Slopes are a major factor related to loss-of-control and tip-over accidents, which can result in severe injury or death.

All slopes require extra caution.

- To avoid upsets of the tractor, always back it up steep slopes. If you cannot back the tractor up on the slope or if you feel uneasy to back it up on the slope, do not operate on it. Stay off slopes too steep for safe operation.
- Driving forward out of a ditch, mired condition or up a steep slope increases the risk of the tractor to be upset backward. Always back the tractor out of a ditch, mired condition or steep slope. The 4-wheel drive models require extra caution because their increased traction can give the operator false confidence in the ability of the tractor to climb slopes.
- Keep all movement of the tractor on slopes slow and gradual. Do not change speed or direction of the tractor suddenly. Do not apply brake suddenly. Do not move the steering wheel suddenly.
- Avoid changing gears speed when the tractor is climbing or going down a slope. Changing gears to **neutral** on a slope could cause loss of control.
- You should pay special attention to the weight and location of implements and loads because they will affect the stability of the tractor.
- To improve stability of the tractor on slope, follow recommendations for proper ballasting as shown in BALLAST on page 67
- When driving down a slope, make sure that 4-wheel drive is engaged to increase traction if equipped.

5. Precautions for driving the tractor on the road

- Check the front wheel engagement. The braking characteristics are different between 2-wheel drive and 4-wheel drive. Know the difference and use carefully.
- Always slow the tractor down before turning. Turning at high speed may tip the tractor over.
- Make sure that the slow-moving-vehicle (SMV) sign is clean and visible. Use hazard lights and turn signals as required.
- On public roads, use the SMV emblem and hazard lights, if required by local traffic and safety regulations.

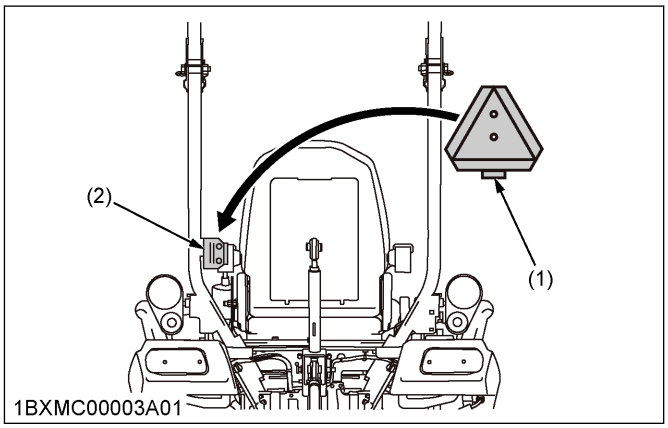

(1) SMV emblem *(2) Bracket*

- Check all local traffic and safety regulations.
- Turn the headlights **on**. Dim the headlights when meeting another vehicle.
- Drive at speeds that allow you to maintain control at all times.
- Do not apply the differential lock while traveling at road speeds. The tractor may run out of control.
- Avoid sudden motions of the steering wheel as they can lead to a dangerous loss of stability. The risk is especially great when the tractor is traveling at road speeds.
- Keep the ROPS in the **up** position and wear the seat belt when driving the tractor on the road. Otherwise, you will not be protected in the event of a tractor roll-over.
- Do not operate an implement while the tractor is on the road. Lock the 3-point hitch in the raised position.
- When towing other equipment, use a safety chain and place an SMV emblem on the equipment as well.

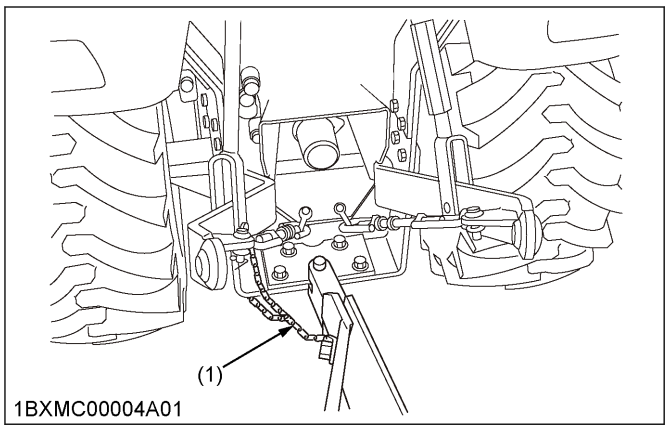

(1) Safety chain

- Set the implement-lowering-speed-knob in the **lock** position to hold the implement in the raised position.

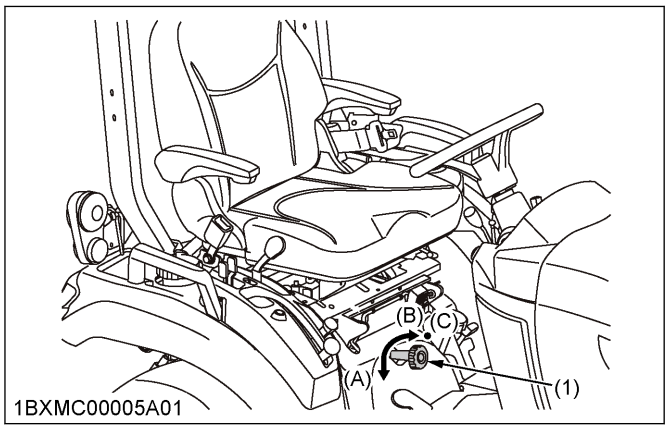

(1) 3-point hitch lowering speed knob
(A) Fast
(B) Slow
(C) Lock

PRECAUTIONS FOR PARKING THE TRACTOR

- Disengage the PTO, lower all implements to the ground, place all control levers in their **neutral** positions, set the parking brake, stop the engine, remove the key from the ignition, and lock the cab door if equipped. Leaving transmission in gear with the engine stopped will not prevent tractor from rolling.

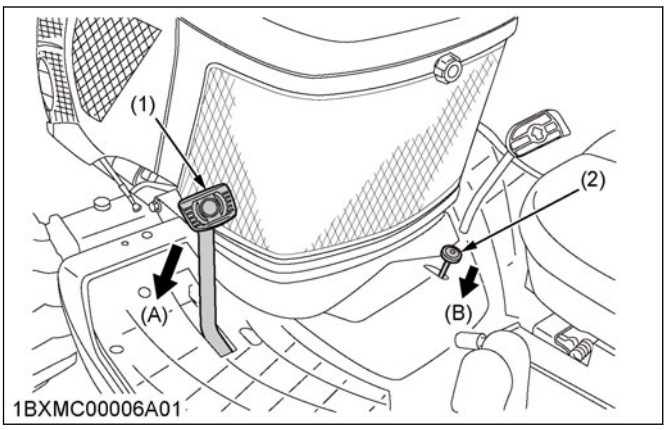

(1) Brake pedal
(2) Parking brake pedal
(A) Depress
(B) Push down parking brake pedal while depressing brake pedal

- Make sure that the tractor has come to a complete stop before dismounting from it.
- Avoid parking on steep slopes. If it is at all possible, park on a firm and level surface. If it is not at all possible to park on a firm and level surface, park across a slope and chock the wheels.
  Failure to comply with this warning may allow the tractor to move and could cause injury or death.

PRECAUTIONS FOR OPERATING THE PTO

- Wait until all moving components have completely stopped before getting off the tractor, connecting, disconnecting, adjusting, cleaning, or servicing any PTO driven equipment.
- Keep the PTO-shaft-cover in place at all times. Replace the PTO-shaft-cap when the shaft is not in use.

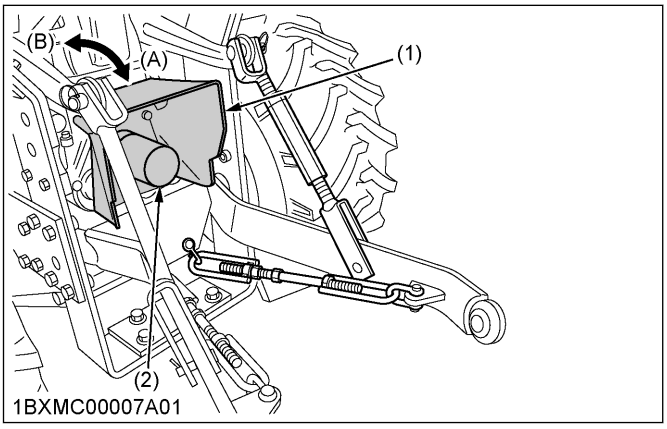

(1) PTO shaft cover
(2) PTO shaft cap
(A) Normal position
(B) Raised position

- Before installing or using PTO-driven-equipment, read *the manufacturer's manual* and review the safety labels attached to the equipment.
- When operating stationary PTO-driven-equipment, always apply the tractor parking brake and place

chocks behind and in front of the rear wheels. Stay clear of all rotating parts. Never step over rotating parts.

PRECAUTIONS FOR USING 3-POINT HITCH

- Use the 3-point hitch only with equipment designed for 3-point hitch usage.
- When using a 3-point-hitch-mounted-implement, be sure to install the proper counterbalance-weight on the front of the tractor.
- When transporting loads on the road, set the implement-lowering-speed-knob in the **lock** position to hold the implement in the raised position.

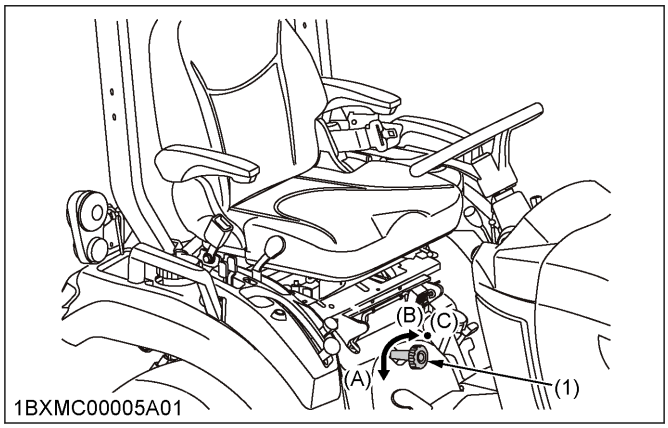

(1) 3-point hitch lowering speed knob
(A) Fast
(B) Slow
(C) Lock

- To avoid injury from separation, do not extend lift rod beyond the groove on the threaded rod.

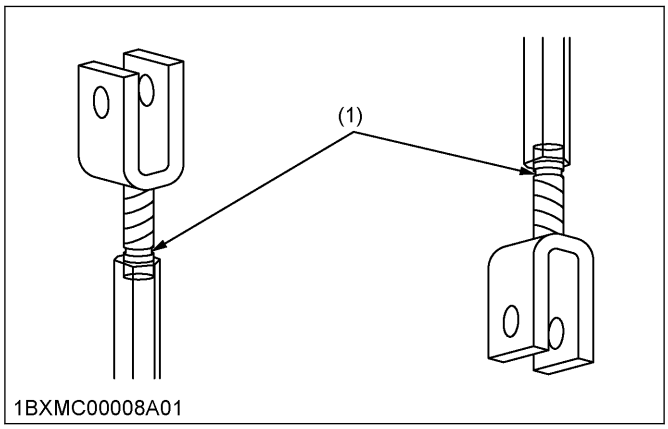

(1) Groove

PRECAUTIONS FOR SERVICING THE TRACTOR

Before servicing the tractor, park it on a firm, flat, and level surface, set the parking brake, lower all implements to the ground, place the gear shift lever in neutral, stop the engine, and remove the key.

- Allow the tractor time to cool off before working on or near the engine, muffler, radiator, and so on.
- Do not remove radiator cap while coolant is hot. When coolant is cool, slowly rotate cap to the first stop and allow sufficient time for excess pressure to escape before removing the cap completely. If the tractor has a coolant recovery tank, add coolant or water to the tank. Do not add coolant to the radiator. See 5. Checking the coolant level on page 77.
- Always stop the engine before refueling. Avoid spills and overfilling.
- Do not smoke when working around battery or when the tractor is refueling. Keep all sparks and flames away from battery and fuel tank. The battery presents an explosive hazard, because it gives off hydrogen and oxygen especially when you are recharging it.
- Before jump starting a dead battery, read and follow all of the instructions. See JUMP STARTING THE ENGINE on page 40.
- Keep first-aid-kit and fire extinguisher handy at all times.
- Disconnect the battery's ground cable before working on or near electric components.
- To avoid the possibility of battery explosion, do not use or charge the refillable type battery if the fluid level is below the lower (lower limit level) mark. Check the fluid level regularly and add distilled water as required so that the fluid level is between the upper and lower levels.
- To avoid sparks from an accidental short circuit, always disconnect the battery's ground cable (-) first and reconnect it last.

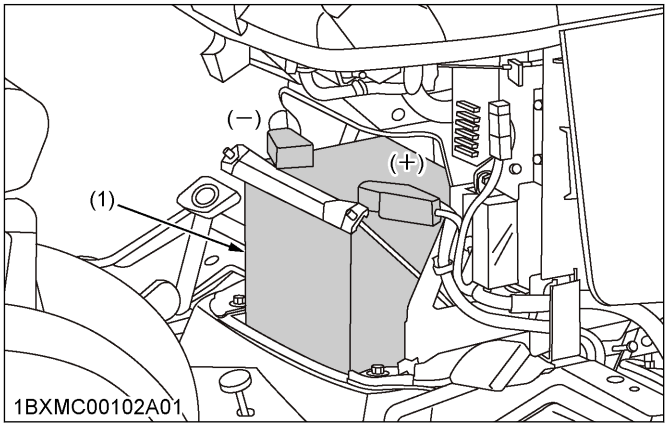

(1) Battery

- Do not attempt to mount a tire on a rim. A qualified person should mount a tire on a rim with the proper equipment.
- Always maintain the correct tire pressure. Do not inflate tires above the recommended pressure shown in 1. Inflation pressure of tires on page 64.

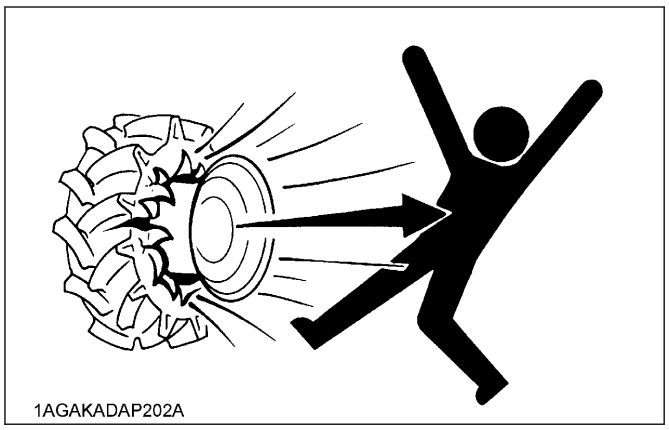

- Securely support the tractor when either changing wheels or adjusting the wheel tread width.
- Make sure that wheel bolts have been tightened to the specified torque. See WHEEL TREAD on page 64.
- Do not work under any hydraulically supported devices. They can settle, suddenly leak down, or be accidentally lowered. If it is necessary to work under the tractor or any machine elements for servicing or adjustment, securely support them with stands or suitable blocking beforehand.
- Escaping hydraulic fluid under pressure has sufficient force to penetrate skin, so escaping hydraulic fluid under pressure can cause serious personal injury. Before disconnecting hydraulic lines, be sure to release all residual pressure. Before applying pressure to the hydraulic system, make sure that all connections are tight and that all lines, pipes, and hoses are free of damage.

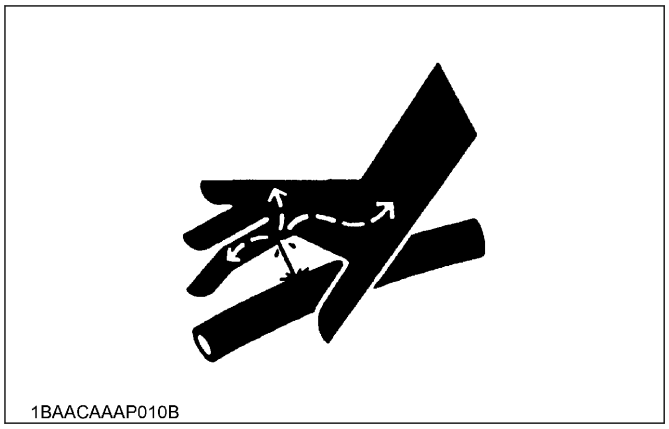

- Fluid escaping from pinholes may be invisible. Do not use hands to search for suspected leaks. Use a piece of cardboard or wood to search for suspected leaks. You should use safety goggles or other eye protection. If injured by escaping fluid, see a medical doctor at once. This fluid will produce gangrene or severe allergic reaction.

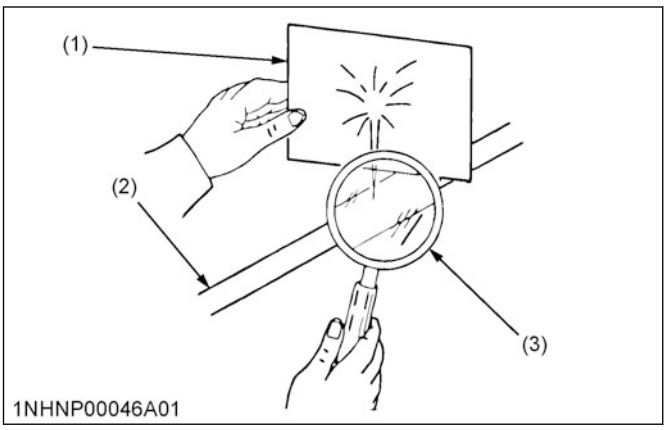

(1) Cardboard
(2) Hydraulic line
(3) Magnifying glass

- Waste products such as used oil, fuel, hydraulic fluid, and batteries, can harm the environment, people, pets, and wildlife. Please dispose properly. See your local recycling center or KUBOTA Dealer to learn how to recycle or get rid of waste products.

SAFETY LABELS

(1) Part No. K2871-6548-1

1AGAJBMAP0460

(2) Part No. K1272-6585-2
Diesel fuel only
No fire

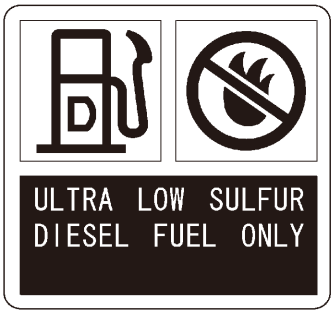

1BDAHAOAP002A

(3) Part No. K2591-6557-2

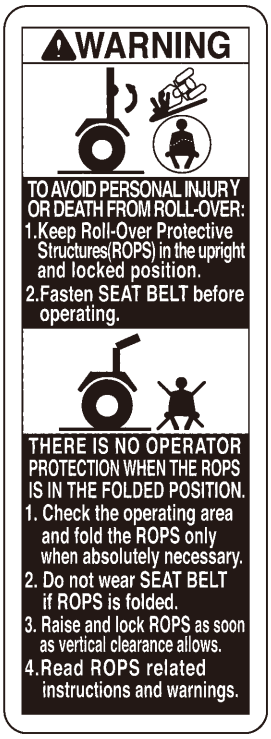

1HNAAACAP0690

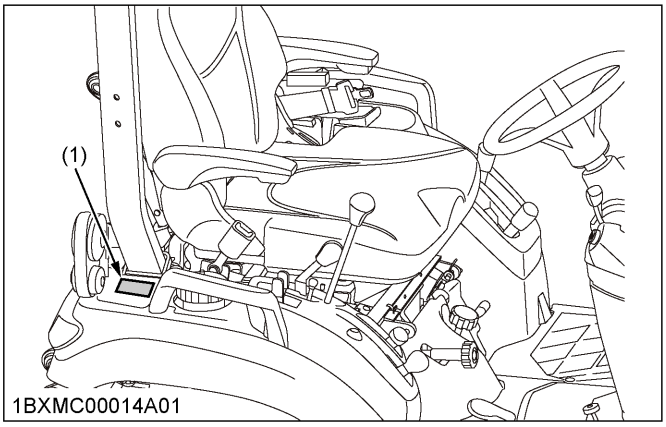

1BXMC00014A01

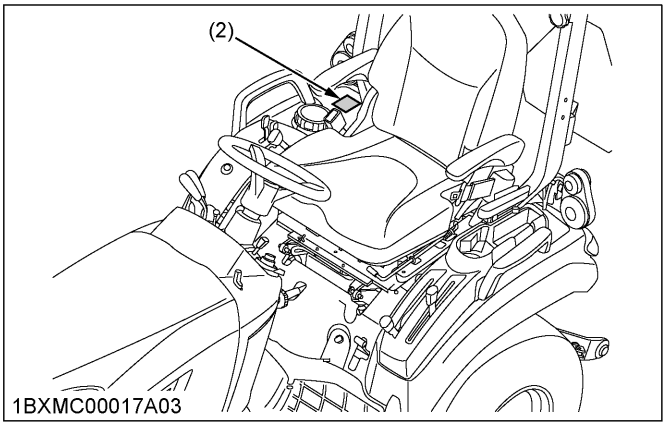

1BXMC00017A03

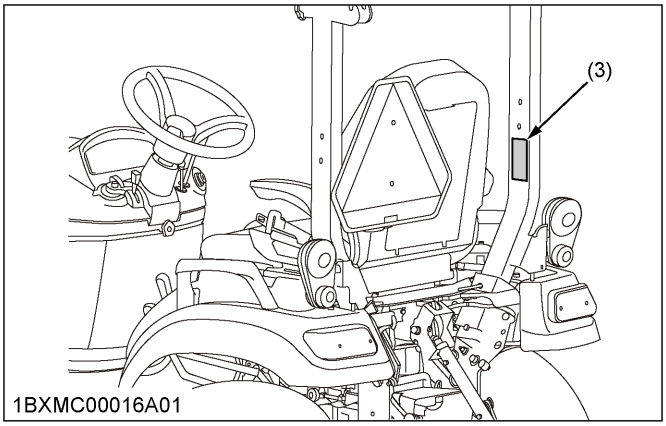

1BXMC00016A01

(1) Part No. K2581-6554-1

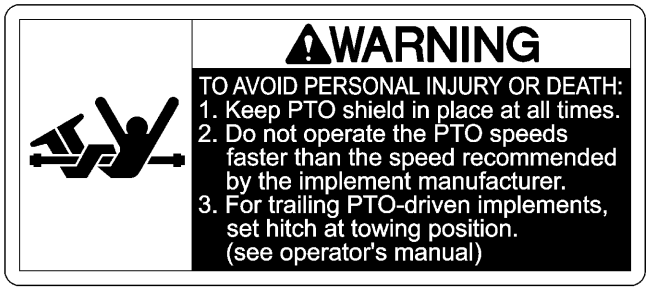

1AGAJBMAP0470

(2) Part No. K2581-6555-1

1AGAJBMAP0480

(3) Part No. K2871-6556-1

1AGAJBMAP0490

(4) Part No. K2871-6552-2

1AGAJBMAP0500

(5) Part No. K2651-6568-1

1AYAACAAP1000

(6) Part No. K2871-6558-1

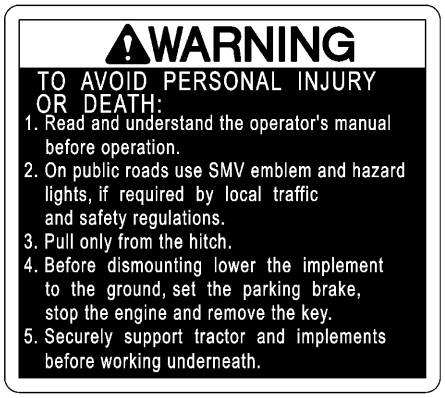

1AGAJBMAP0530

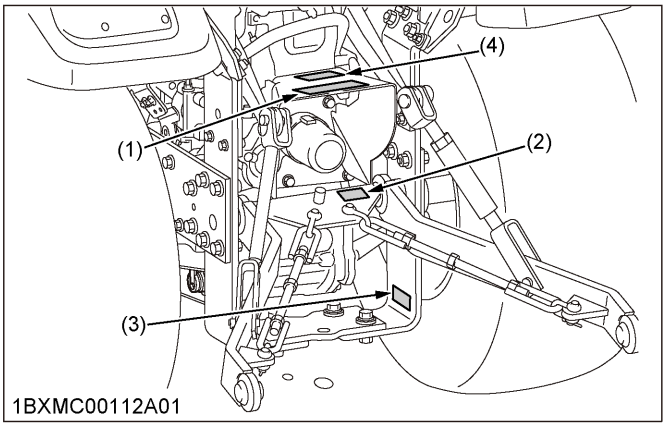

1BXMC00112A01

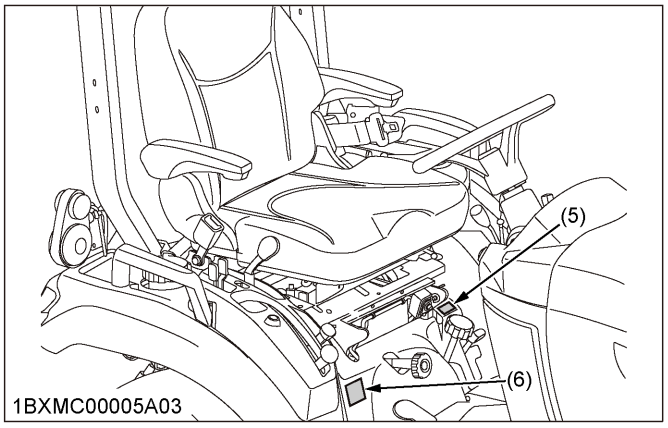

1BXMC00005A03

(1) Part No. K2871-6541-1

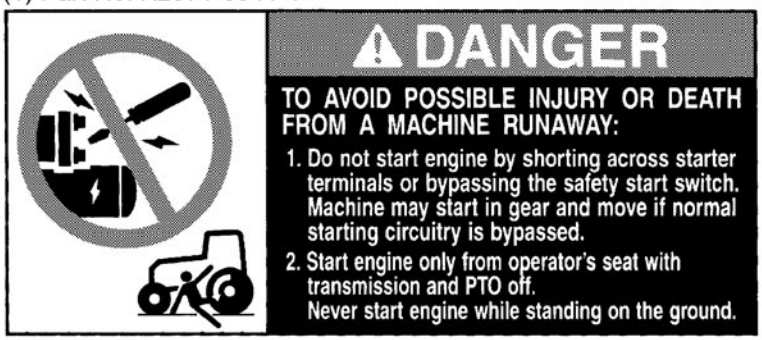

1AGAJAXAP048E

(2) **[BX1880, BX2380]**
Part No. K2581-6547-1
Stay clear of engine fan and fanbelt.

1AGAJAXAP049E

(3) Part No. K2581-6543-1
Stay clear of engine fan and fanbelt.

1AGAJAXAP052E

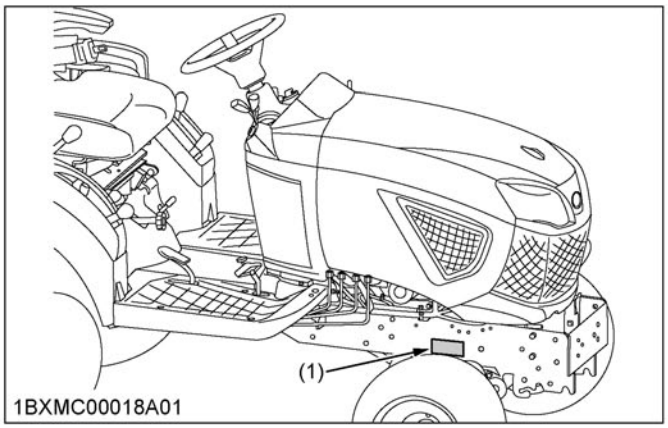

1BXMC00018A01

[BX1880, BX2380]

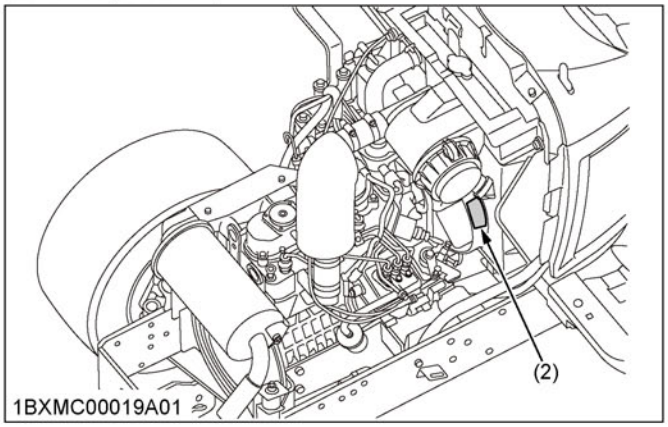

1BXMC00019A01

[BX1800, BX2380]

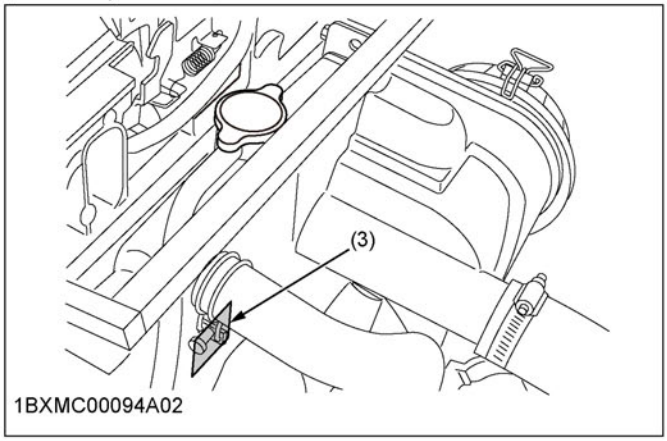

1BXMC00094A02

[BX2680]

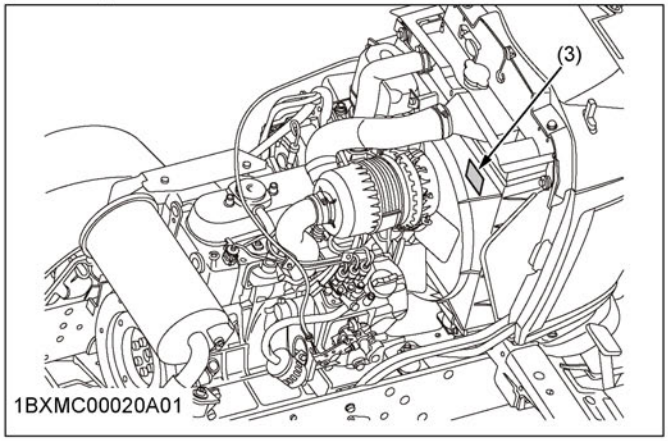

1BXMC00020A01

(1) Part No. K7591-6114-2

1AYAACQAP256A

(2) Part No. K2871-6564-1

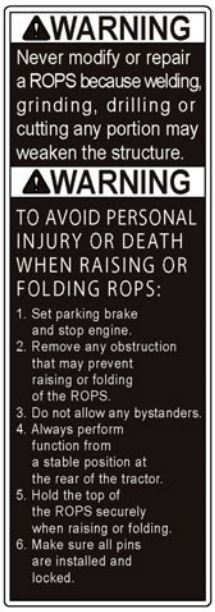

1AGAJBMAP0560

(3) Part No. K2871-6542-1
Do not touch hot surface like muffler, etc.

1AGAJBMAP0520

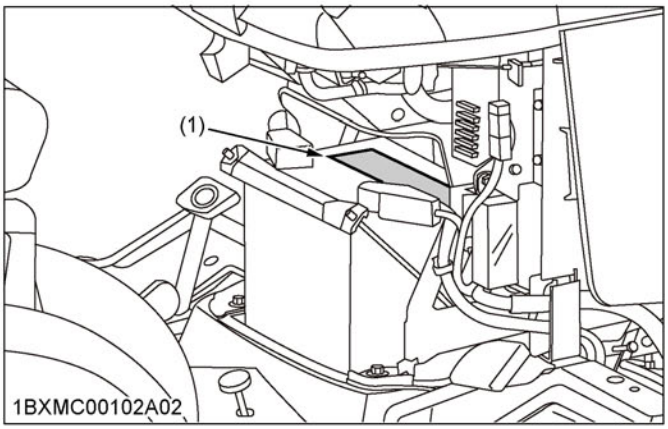

1BXMC00102A02

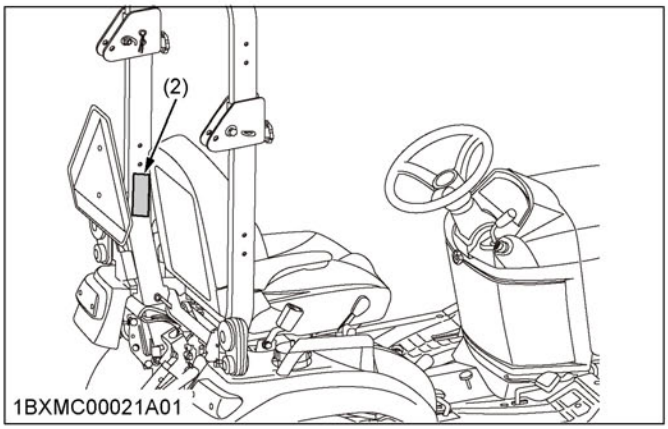

1BXMC00021A01

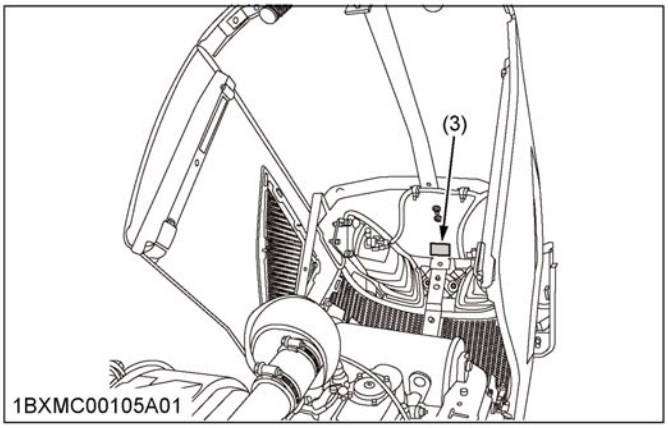

1BXMC00105A01

1. Care for safety labels

- Keep safety labels clean and free from obstructing material.
- Clean safety labels with soap and water, and dry with a soft cloth.
- Replace damaged or missing safety labels with new safety labels from your local KUBOTA Dealer.
- If a component with safety label(s) attached is replaced with new component, make sure that new safety label(s) is (are) attached in the same location(s) as the replaced component.
- Attach new safety labels by applying on a clean, dry surface and pressing any bubbles to outside edge.

https://truckmanualshub.com/

SERVICING OF THE TRACTOR

DEALER SERVICE

Your dealer has knowledge of your new tractor and has the desire to help you get the most value from it.
After reading this manual thoroughly, you will find that you can perform some of the regular maintenance yourself.
However, when your tractor needs parts or major service, be sure to see your KUBOTA Dealer.
For service, contact the KUBOTA Dealership from which you purchased your tractor or your local KUBOTA Dealer. When in need of parts, be prepared to give your dealer the serial numbers of both the tractor and the engine.
Locate the serial numbers now and record them in the space provided.

	Type	Serial No.
Tractor		
ROPS		
Engine		
Date of Purchase		
Name of Dealer		
(To be filled in by purchaser)		

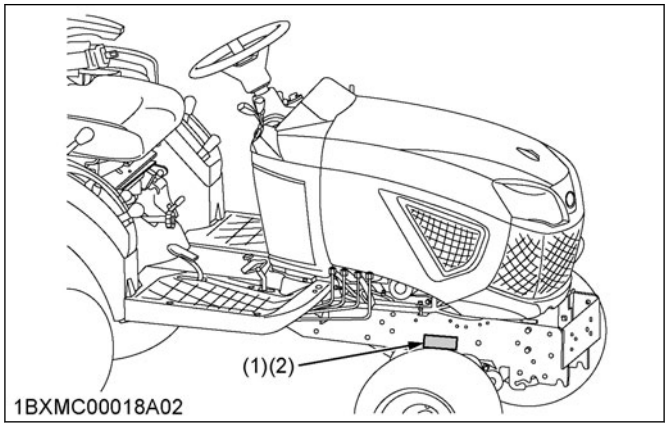

(1) Tractor identification plate (2) Tractor serial number

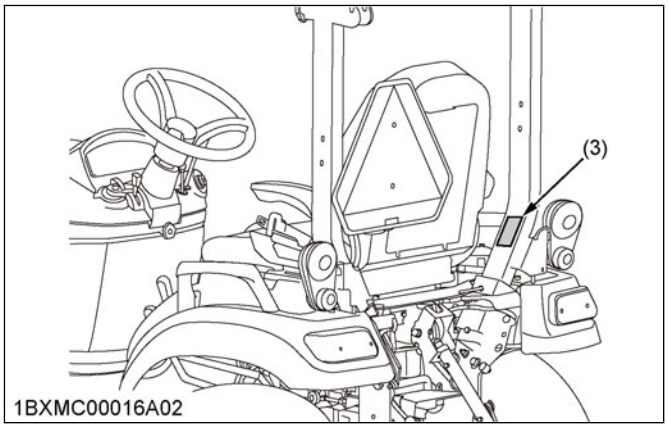

(3) ROPS identification plate (ROPS serial No.)

BX1880

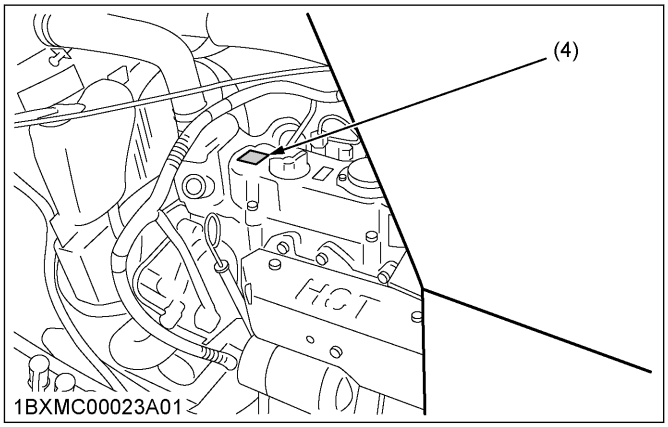

BX2380

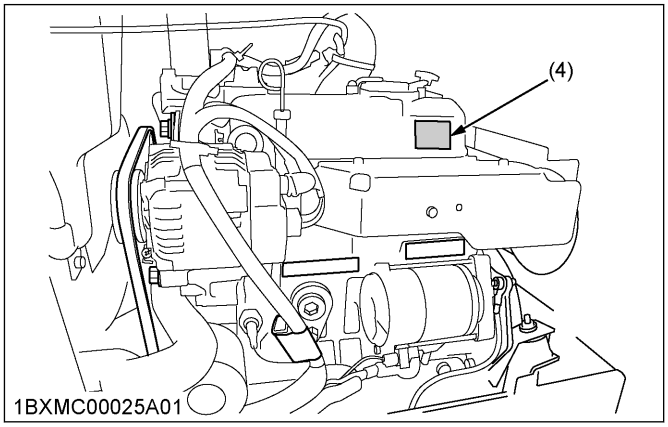

https://truckmanualshub.com/

BX2680

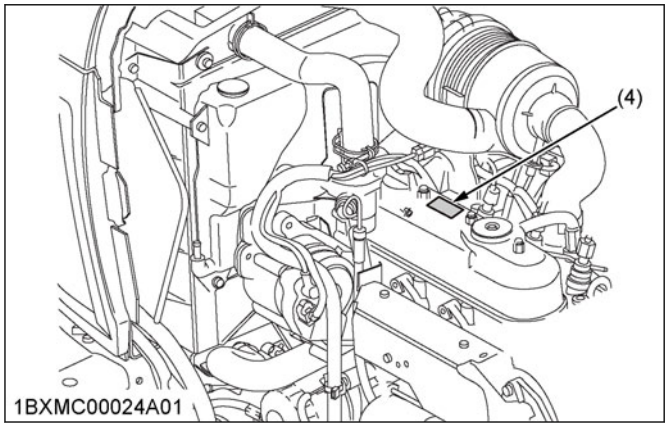

(4) Engine serial number

1. Warranty of the tractor

This tractor is warranted under the KUBOTA Limited Express Warranty, a copy of which may be obtained from your selling dealer.
No warranty shall, however, apply if the tractor has not been used according to the instruction given in the operator's manual even if it is within the warranty period.

2. Scrapping the tractor and its procedure

To put the tractor out of service, correctly follow the local rules and regulations of the country or territory where you scrap it.
If you have questions, consult your local KUBOTA Dealer.

https://truckmanualshub.com/

SPECIFICATIONS

SPECIFICATION TABLE

Model			BX1880	BX2380	BX2680
PTO power*1			10.2 kW (13.7 HP)	13.2 kW (17.7 HP)	14.5 kW (19.5 HP)
Engine	Maker		KUBOTA		
	Model		D722	D902	D1005
	Type		Liquid-cooled, 4-cycle diesel		
	Number of cylinders		3		
	Bore and stroke		67x68 mm (2.64x2.68 in.)	72x73.6 mm (2.83x2.90 in.)	76x73.6 mm (2.99x2.90 in.)
	Total displacement		719 cm^3 (43.9 cu. in.)	898 cm^3 (54.8 cu. in.)	1001 cm^3 (61.1 cu. in.)
	Engine gross power*2		13.4 kW (18.0 HP)	17.1 kW (23.0 HP)	19.0 kW (25.5 HP)
	Rated revolution		55.0 r/s to 57.5 r/s (3300 rpm to 3450 rpm)	55.0 r/s to 58.3 r/s (3300 rpm to 3500 rpm)	
	Low idling revolution		1350 rpm to 1550 rpm		
	Maximum torque		44.9 N·m (33.1 lbf·ft)	56.1 N·m (41.4 lbf·ft)	60.2 N·m (44.4 lbf·ft)
	Battery		12 V, CCA: 560 A, RC: 86 min.		
	Fuel		Diesel fuel No.1 [below -10 ℃ (14 ℉)] Diesel fuel No.2 [above -10 ℃ (14 ℉)]		
Capacities	Fuel tank		25.0 L (6.6 U.S.gals.)		
	Engine crankcase (with filter)		3.0 L (3.2 U.S.qts.)	3.3 L (3.5 U.S.qts.)	4.0 L (4.2 U.S.qts.)
	Engine coolant		2.9 L (3.06 U.S.qts.)	3.1 L (3.3 U.S.qts.)	3.3 L (3.5 U.S.qts.)
	Recovery tank		0.4 L (0.4 U.S.qts.)		
	Transmission case		11.3 L (3.0 U.S.gals.)		
Dimensions	Overall length (without 3p)		2120 mm (83.5 in.)		
	Overall length (with 3p)		2425 mm (95.5 in.)		
	Overall width (min. tread)		1120 mm (44.1 in.)	1145 mm (45.1 in.)	
	Overall height	(with ROPS)	2080 mm (81.9 in.)	2110 mm (83.0 in.)	
			1230 mm (48.4 in.) (Top of seat)	1255 mm (49.4 in.) (Top of seat)	1330 mm (52.4 in.) (Top of seat)

(Continued)

https://truckmanualshub.com/

SPECIFICATIONS

Model			BX1880	BX2380	BX2680
Dimensions	Wheel base		1400 mm (55.1 in.)		
	Min. ground clearance		148 mm (5.8 in.)	166 mm (6.5 in.)	
	Tread	Front	930 mm (36.6 in.)		
		Rear	820 mm (32.2 in.)		
Weight (with ROPS)			606 kg (1336 lbs.)	660 kg (1455 lbs.)	690 kg (1521 lbs.)
Clutch			N/A		
Traveling system	Tire	Front Turf/Bar/ industrial	16x7.50-8	18x8.50-10	
		Rear Turf/Bar/ industrial	24x12.00-12	26x12.00-12	
	Steering		Hydrostatic type power steering		
	Transmission		Main: Hydrostatic transmission, High-Low gear shift (2 forward, 2 reverse)		
	Brake		Wet disk type		
	Min. turning radius		2.3 m (7.5 ft)		
Hydraulic unit	Hydraulic control system		Directional control, auto-return lever system		
	Pump capacity		23.5 L/min. (6.2 gals/min)		
	System pressure		12.3 MPa to 12.8 MPa (126 kgf/cm to 130 kgf/cm) [1790 psi to 1850 psi]		
	3-point hitch		SAE Category 1		
	Max. lift force*3	At lift points	5120 N to 5390 N (1151 lbs. to 1213 lbs.)		
		24in. behind lift points	3040 N (680 lbs.)		
	Remote control valve coupler (rear: Option)	System	2 valves		
		Coupler	ISO 7241-1 series A		
	Remote control valve coupler (front: Option)	System	2 valves		
		Coupler (fitting)	ISO 7241-1 series B		
PTO	Rear PTO		SAE 1-3/8, 6 splines		
		Revolution	STD (540 rpm)		
	Mid PTO		USA No.5 (KUBOTA 10-tooth) involute spline		
		Revolution	STD (2500 rpm)		

The company reserves the right to change the specifications without notice.

*1 Manufacturer's estimate

*2 SAE J1995

*3 See and check IMPLEMENT LIMITATION TABLES on page 22.

https://truckmanualshub.com/

TRAVELING SPEEDS TABLE

Model		BX1880	BX2380 and BX2680
Tire size (Rear)		24x12.00-12	26x12.00-12
Speed control pedal	Range gear shift lever	(At max engine rpm)	
Forward	Low	0 km/h to 5.5 km/h 0 mph to 3.4 mph	0 km/h to 6.0 km/h 0 mph to 3.7 mph
	High	0 km/h to 12.0 km/h 0 mph to 7.5 mph	0 km/h to 13.0 km/h 0 mph to 8.1 mph
Reverse	Low	0 km/h to 4.0 km/h 0 mph to 2.5 mph	0 km/h to 4.5 km/h 0 mph to 2.8 mph
	High	0 km/h to 9.0 km/h 0 mph to 5.6 mph	0 km/h to 10.0 km/h 0 mph to 6.2 mph

The company reserves the right to change the specification without notice.

https://truckmanualshub.com/

IMPLEMENT LIMITATIONS

IMPLEMENT LIMITATION TABLES

IMPORTANT :
The KUBOTA Tractor has been thoroughly tested for proper performance with implements sold or approved by KUBOTA. Do not use the following implements:
- **Implements which are not sold or approved by KUBOTA**
- **Implements which exceed the maximum specifications listed in the following table**
- **Implements which are otherwise unfit for use with the KUBOTA Tractor**

These implements may result in malfunctions or failures of the tractor, damage to other property, and injury to the operator or others.

NOTE :
Any malfunctions or failures of the tractor resulting from use with improper implements are not covered by the warranty.

Model		**BX1880, BX2380, and BX2680**
Tread (max. width)	Front	930 mm (36.6 in.)
	Rear	820 mm (32.2 in.)
Lower link end max. lifting weight W_0		550 kg (1210 lbs.)
Actual figures	Implement weight W_1 and / or size	As in **[Implement weight list]**
	Max. hitch load W_2	250 kg (550 lbs.)
	Trailer loading weight W_3 (Max. capacity)	800 kg (1765 lbs.)
	Total weight W_4	1100 kg (2425 lbs.)

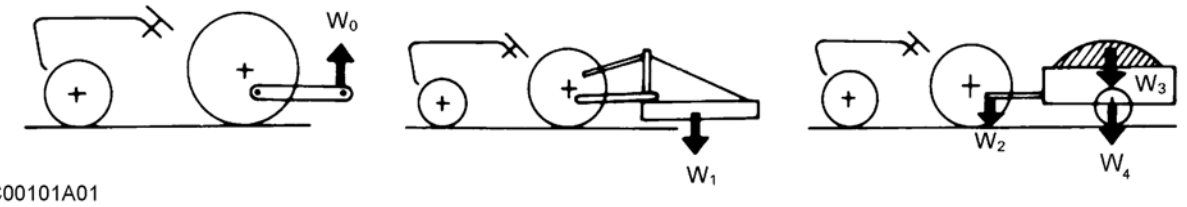

1BXMC00101A01

Lower link end max. lifting weight W_0
The max. allowable load which can be put on the lower link end
Implement weight W_1
The implement's weight which can be put on the lower link
Max. hitch load W_2
The max. loading weight for hitching
Trailer loading weight W_3
The max. loading weight for trailer (without trailer's weight)
Total weight W_4
The max. loading weight for trailer with trailer's weight

NOTE :
- **Implement size may vary depending on soil operating conditions.**
- **Strictly follow the instructions outlined in the operator’s manual of the mounted or trailed machinery or trailer, and do not operate the combination tractor-machine or tractor-trailer unless all instructions have been followed.**

https://truckmanualshub.com/

- **When you use the forestry application, there are following hazards:**
  - **toppling trees, primarily in case a rear-mounted-tree-grab-crane is mounted at the rear of the tractor**
  - **penetrating objects in the operator's enclosure, primarily in case a winch is mounted at the rear of the tractor**

  To deal with these hazards and other related hazards, the tractor requires optional equipments such as OPS (operator-protective-structure), FOPS (falling-object-protective-structure), and so on. These optional equipments, however, are not available for this tractor. Without optional equipments such as OPS and FOPS, the use of the tractor is limited to tractor-specific-applications like transport and stationary work.

https://truckmanualshub.com/

Implement weight list

Implement		Remarks	BX1880	BX2380 and BX2680
Mower	Mid-mount	Max. cutting width	137 cm (54 in.)	152 cm (60 in.)
		Max. weight	95 kg (210 lbs.)	134 kg (295 lbs.)
	Rotary-Cutter (1 Blade)	Max. cutting width	107 cm (42 in.)	122 cm (48 in.)
		Max. weight	159 kg (350 lbs.)	181 kg (400 lbs.)
	Rear-mount (2 or 3 Blade)	Max. cutting width	122 cm (48 in.)	152 cm (60 in.)
		Max. weight	220 kg (486 lbs.)	262 kg (577 lbs.)
	Flail-mower	Max. cutting width	107 cm (42 in.)	107 cm (42 in.)
	Sickle bar	Max. cutting width	122 cm (48 in.)	122 cm (48 in.)
Rotary tiller		Max. tilling width	107 cm (42 in.)	127 cm (50 in.)
		Max. weight	183 kg (404 lbs.)	197 kg (435 lbs.)
Bottom plow		Max. size	12 x 1 in.	14 x 1 in.
Disc plow		Max. size	22 x 1 in.	22 x 1 in.
Cultivator		Max. size	122 cm (48 in.) 1 Row	122 cm (48 in.) 1 Row
Disc harrow		Max. harrowing width	122 cm (48 in.)	122 cm (48 in.)
		Max. weight	191 kg (421 lbs.)	249 kg (549 lbs.)
Sprayer		Max. tank capacity	150 L (40 U.S.gals.)	150 L (40 U.S.gals.)
Front blade		Max. cutting width	137 cm (54 in.)	152 cm (60 in.)
		Sub frame	Necessary	Necessary
Rear blade		Max. cutting width	152 cm (60 in.)	152 cm (60 in.)
		Max. weight	112 kg (248 lbs.)	112 kg (248 lbs.)
Front loader		Max. lifting capacity (Bucket pivot pin, Max. height)	335 kg*1 (739 lbs.)	335 kg*1 (739 lbs.)
		Max. width	122 cm (48 in.)	122 cm (48 in.)
Box blade		Max. cutting width	152 cm (60 in.)	152 cm (60 in.)
		Max. weight	170 kg (375 lbs.)	170 kg (375 lbs.)
Snow blower (Front)		Max. working width	127 cm (50 in.)	127 cm (50 in.)

(Continued)

https://truckmanualshub.com/

Implement	Remarks	BX1880	BX2380 and BX2680
Snow blower (Front)	Max. weight	160 kg (353 lbs.)	160 kg (353 lbs.)
	Sub frame	Necessary	Necessary
Post hole digger	Digging depth	114 cm (45 in.)	114 cm (45 in.)
Rotary broom	Cleaning width	119 cm (47 in.)	119 cm (47 in.)
Trailer	Max. load capacity	800 kg*2 (1765 lbs.)	800 kg*2 (1765 lbs.)
	Max. weight	1100 kg (2425 lbs.)	1100 kg (2425 lbs.)

NOTE :
- **You cannot attach backhoes to the tractor.**
- **Implement size may vary depending on soil operating conditions.**

*1 The valve contains the weight of KUBOTA standard bucket.

*2 Reduce speed and trailer loads when operating in slippery conditions or when operating on slopes and using front wheel drive.

https://truckmanualshub.com/

FRONT LOADER

Check fixation points on the body of the tractor where the front loader must be installed.
Install the front loader frame to the frame of the tractor as shown in the following figures.

Location	Bolt/Nut	Required Torque
Main frames	M14 bolts or nuts	147 N·m (15.0 kgf·m) [108 lbf·ft]

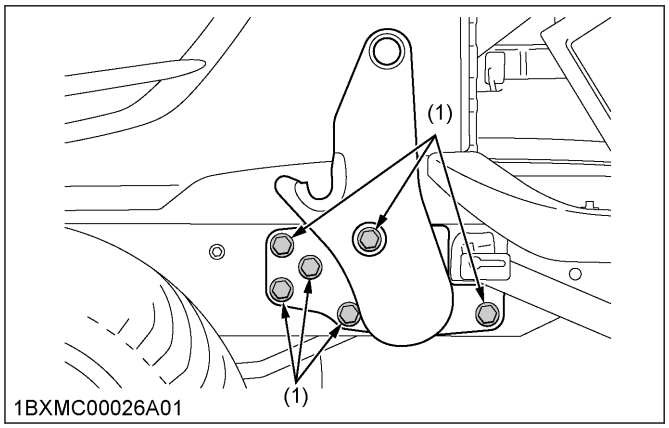

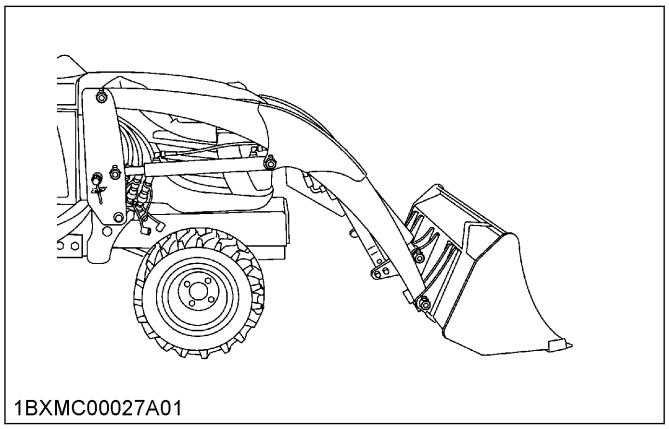

(1) 6-M14 bolts

DANGER

To avoid personal injury or death:

- **Make special attention when lifting the load, keep the bucket correctly positioned to prevent spillages.**

IMPORTANT :

- **Not all risks are listed.**
- **Refer to *the front loader operator's manual.***

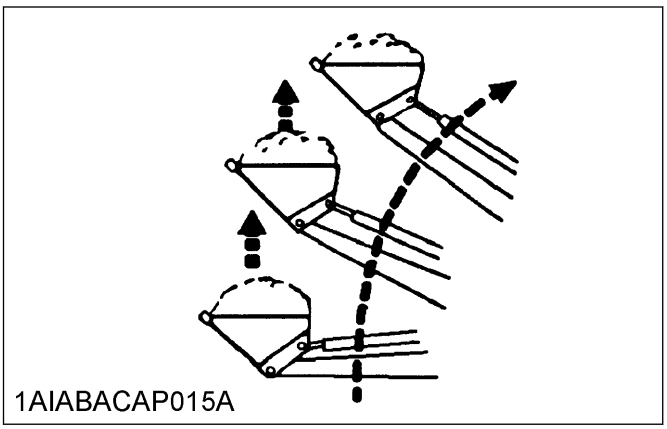

WEIGHT OF THE IMPLEMENTS AS THE REAR BALLAST

WARNING

To avoid serious injury or death:

- **For tractor stability and operator's safety, the rear ballast should be added to the rear of the tractor in the form of 3-point counter weight and the rear wheel ballast. The amount of the rear ballast will depend on the application.**

Implement as Counter Weight	
Box Blade	Approx. 190 kg (420 lbs.)
Rear Blade	
Rotary Tiller	
Ballast Box	

https://truckmanualshub.com/

INSTRUMENT PANEL AND CONTROLS

INSTRUMENT PANEL, SWITCHES, AND HAND CONTROLS

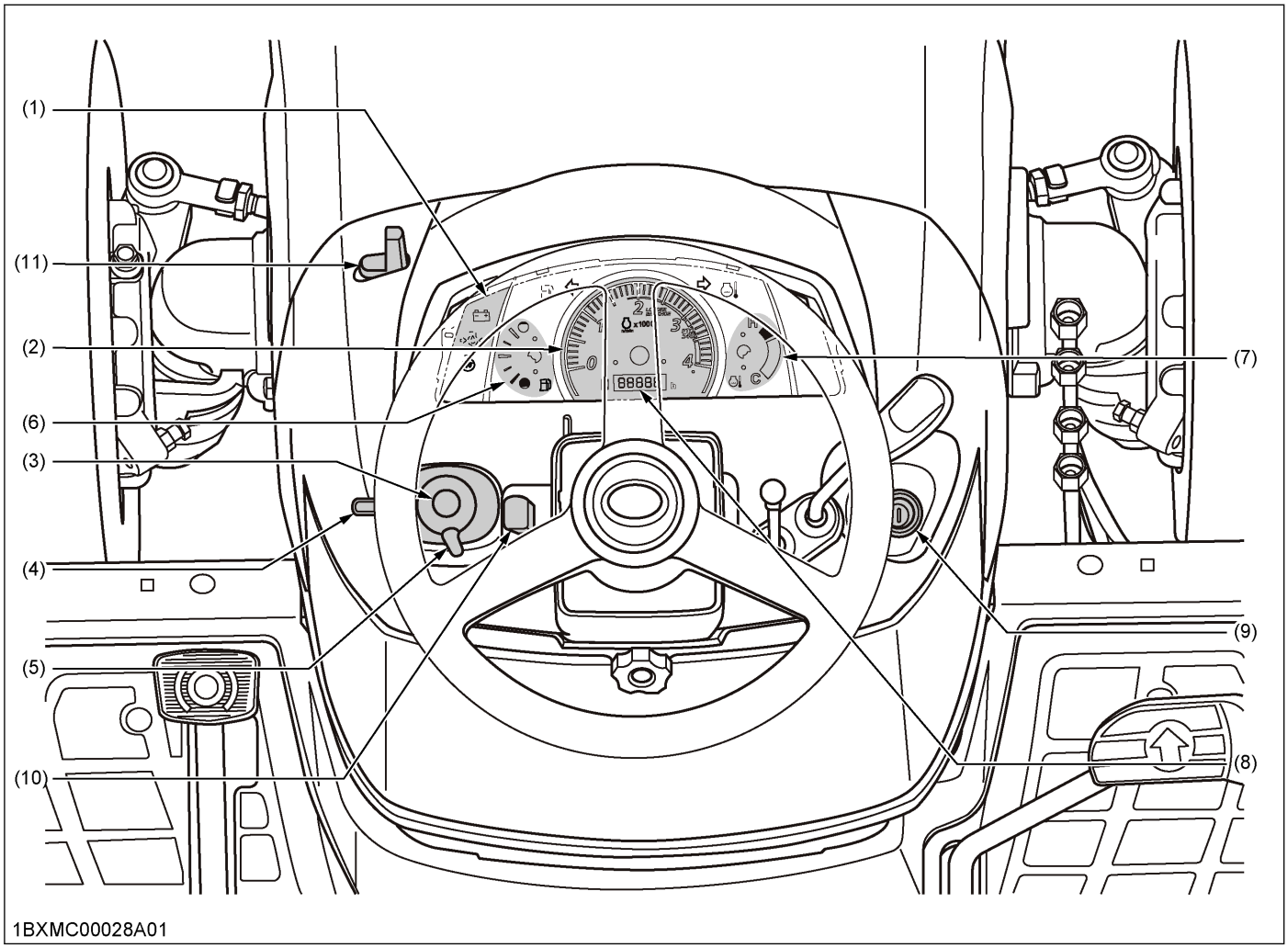

(1) *Easy Checker™…47*
(2) *Tachometer…49*
(3) *Hazard light switch…28*
(4) *Turn signal light switch…28*
(5) *Head light switch…28*
(6) *Fuel gauge…48*
(7) *Coolant temperature gauge…48*
(8) *Hour meter…49*
(9) *Key switch…28*
(10) *Tilt lever [BX2380 and BX2680]…28*
(11) *Hood open lever…29*

https://truckmanualshub.com/

1. Key switch

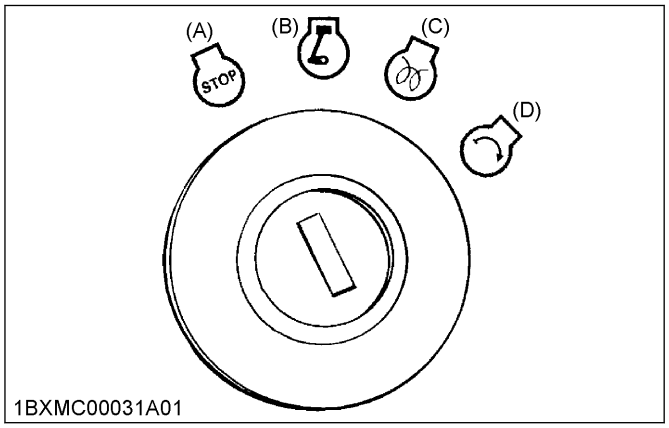

(A) Off *(C) Preheat*
(B) On *(D) Start*

2. Tilt lever [BX2380 and BX2680]

Adjust the steering wheel to proper position. To adjust the steering wheel, pull the tilt lever.

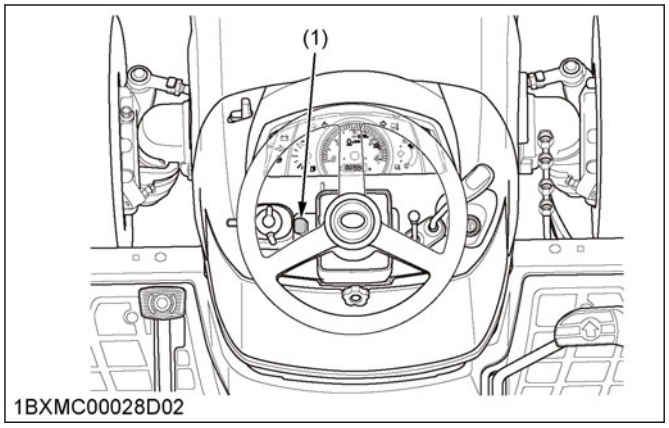

(1) Tilt lever

3. Head light switch

To turn on the head lights, turn the head light switch clockwise. Turn the head light switch counterclockwise to turn off the head lights.

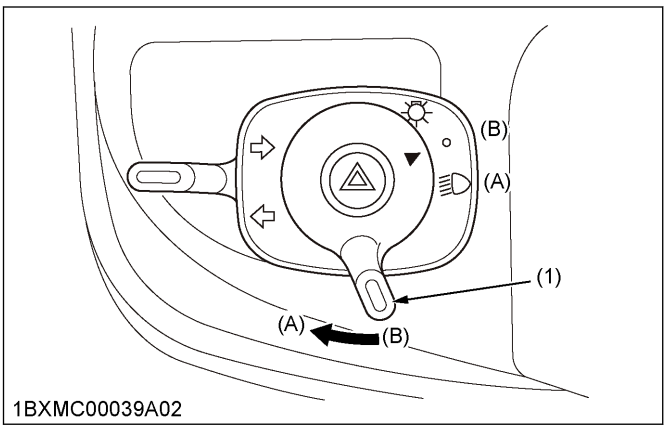

(1) Head light switch *(B) Off*
(A) On

4. Hazard light switch

1. When pressing the hazard-light-switch, the hazard lights flash along with the indicator on the instrument panel.
2. When pressing the hazard-light-switch again, the hazard lights turn off.

NOTE :

- **The hazard-light-switch is operative when the key switch is only on position.**

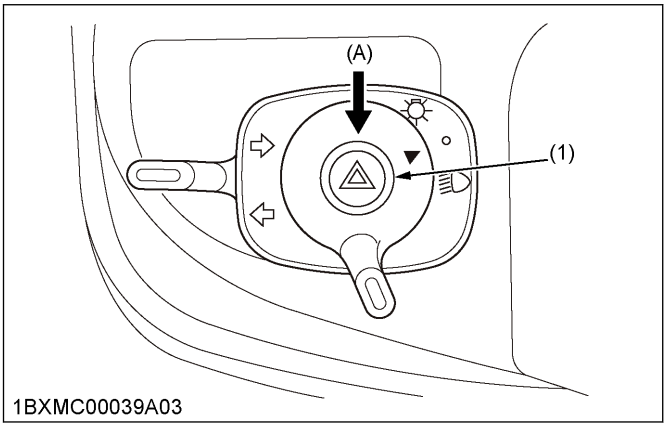

(1) Hazard light switch *(A) Push on-off*

5. Turn signal light switch

To indicate a right turn, turn the turn signal light switch clockwise.
To indicate a left turn, turn the turn signal light switch counterclockwise.
When the left or right turn signal is activated in combination with the hazard lights, the indicated turning light will flash and the other light will stay on.

NOTE :

- **Be sure to return switch to center position after turning.**

https://truckmanualshub.com/

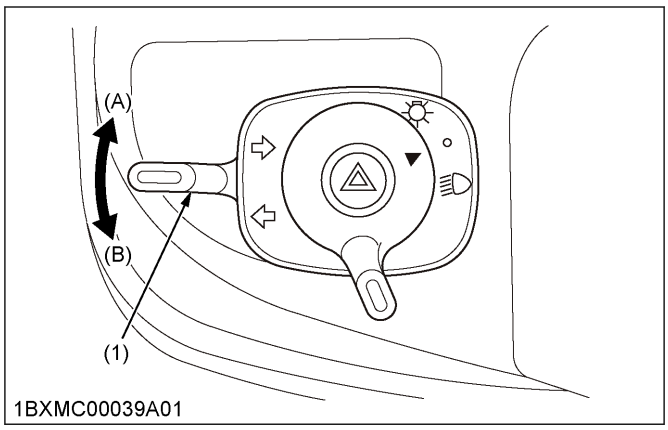

(1) Turn signal light switch *(B) Left turn*
(A) Right turn

6. Hood open lever

The hood-open-lever is the lever to open the hood.
To open the hood, pull the hood-open-lever to release the latch.

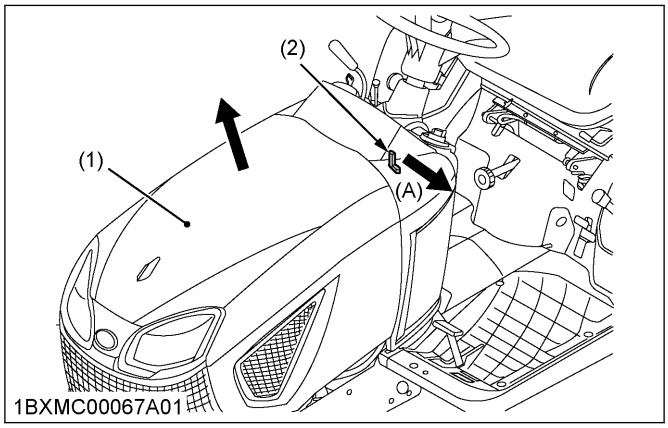

(1) Hood *(A) Pull*
(2) Hood open lever

https://truckmanualshub.com/

FOOT CONTROLS AND HAND CONTROLS

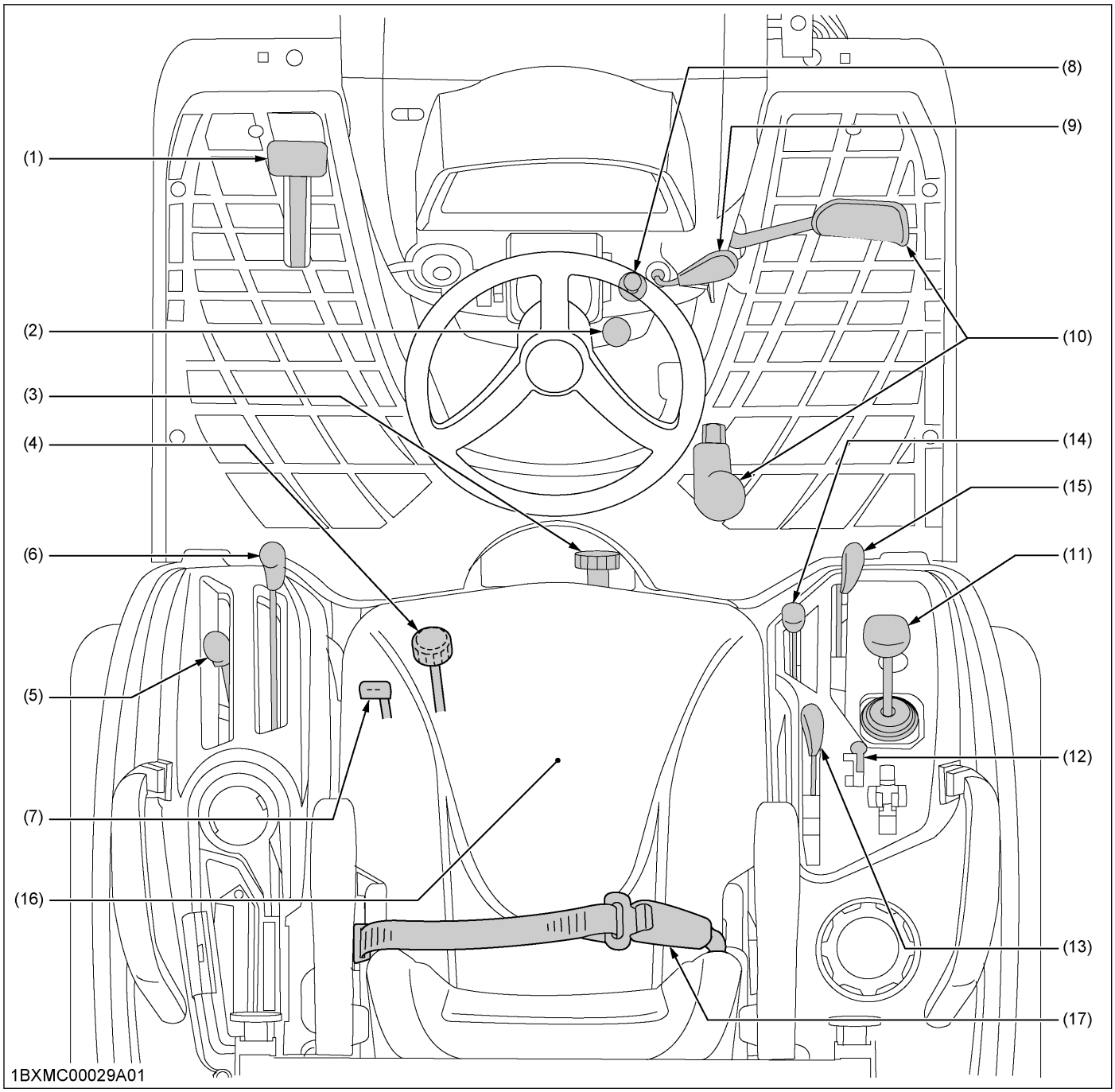

(1) Brake pedal…31, 32
(2) Parking brake lock pedal…31, 32
(3) 3-point hitch lowering speed knob…58
(4) Cutting height control dial…60
(5) PTO select lever…52
(6) PTO clutch lever…52
(7) Differential lock pedal…50
(8) Speed set rod [BX2380 and BX2680]…34, 34
(9) Hand accelerator lever…33
(10) Speed control pedal…33
(11) Auxiliary hydraulic control lever (if equipped)…62
(12) Lock lever (if equipped)…62
(13) Hydraulic control lever…58
(14) Front wheel drive lever…32
(15) Range gear shift lever (Hi-Lo)…32
(16) Operator's seat…31
(17) Seat belt…31

https://truckmanualshub.com/

1. Operator's seat

WARNING

To avoid serious injury or death:

- **Make adjustments to the seat only while the tractor is stopped.**
- **Make sure that the seat is completely secured after each adjustment.**
- **Do not allow any person other than the operator to ride on the tractor.**

[BX1880]

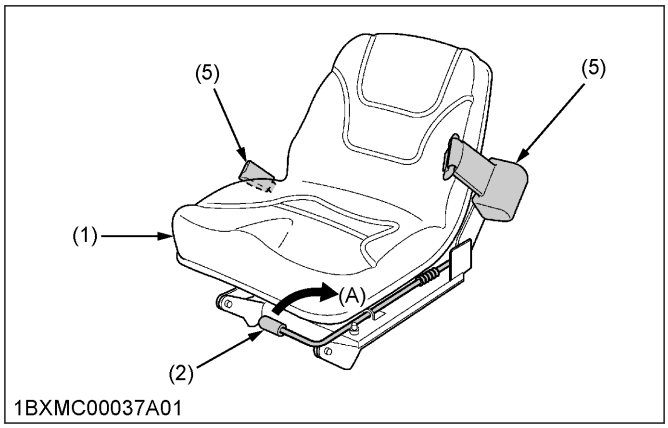

[BX2380 and BX2680]

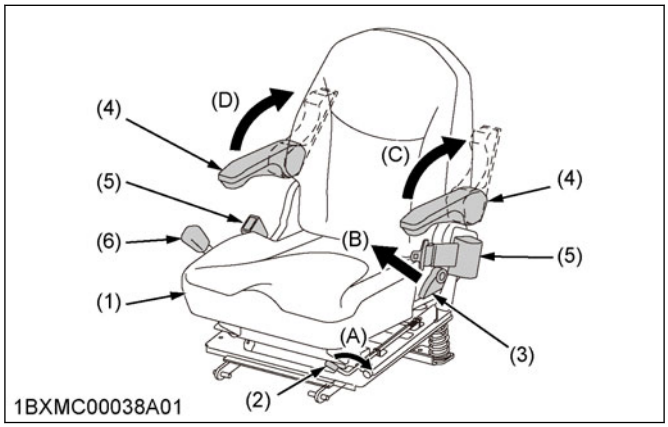

(1)	*Seat*	*(6)*	*Hydraulic control lever*
(2)	*Position adjust lever*	*(A)*	*Pull up*
(3)	*Backrest tilt adjust lever*	*(B)*	*Pull*
(4)	*Arm rest*	*(C)*	*100 deg.*
(5)	*Seat belt*	*(D)*	*130 deg.*

Travel adjustment

Pull up the position-adjust-lever and slide the seat backward or forward, as required. The seat will lock in position when the position-adjust-lever is released.

Tilt adjustment [BX2380 and BX2680]

Pull the backrest-tilt-adjust-lever and tilt the backrest to the desired position.

Arm rest

Arm rest LH opens to 100 deg..
Arm rest RH opens to 130 deg..

When operating hydraulic control lever, open the arm rest RH up to 130 deg.. Opening the arm rest RH up to 130 deg. will prevent your elbow from hitting the arm rest RH.

IMPORTANT :

- **After adjusting the operator's seat, be sure to check that the seat is properly locked.**
- **Be sure the operator's seat is out of contact with the top link.**

2. Seat belt

WARNING

To avoid serious injury or death:

- **Always use the seat belt when the ROPS is installed.**
- **Do not use the seat belt if the tractor is not equipped with ROPS.**

Adjust the seat belt for proper fit and connect the seat to the buckle. The seat belt is auto-locking retractable type.

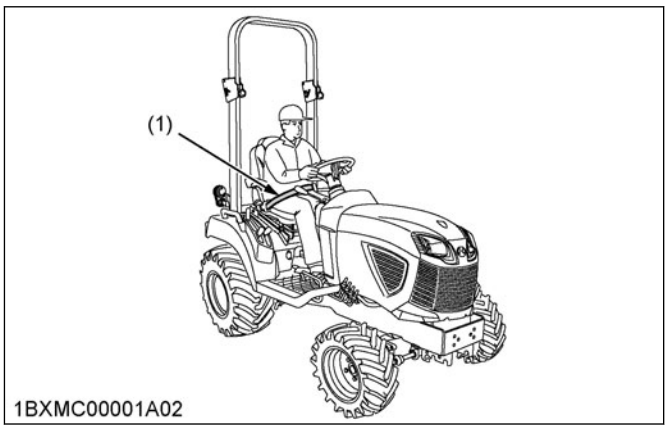

(1) Seat belt

3. Brake pedal and parking brake lock pedal

WARNING

To avoid serious injury or death:

- **Do not brake suddenly.**
  An accident may occur as a result of a heavy towed load shifting forward or loss of control.
- **To avoid skidding and loss of steering control when driving on icy, wet, or loose surfaces, make sure that the tractor is correctly ballasted, operated at reduced speed, and operated with the front wheel drive engaged if equipped.**
- **The braking characteristics are different between 2-wheel drive and 4-wheel drive. Know the difference between 2-wheel drive and 4-wheel drive and use them carefully.**

https://truckmanualshub.com/

- **Engage 4-wheel drive for 4-wheel braking when traveling down a slope.**

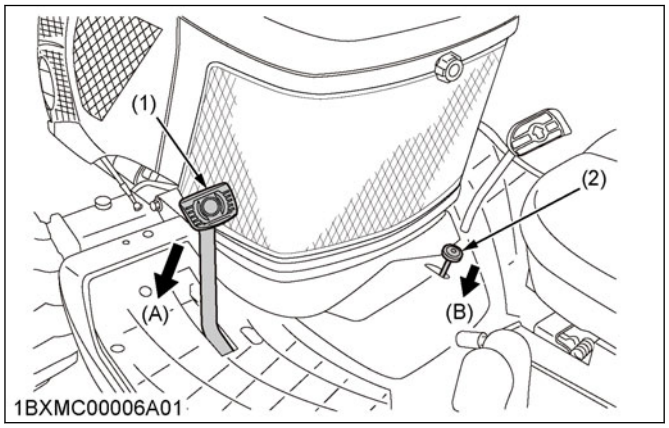

(1) Brake pedal
(2) Parking brake lock pedal
(A) Depress
(B) Push down parking brake lock pedal while depressing brake pedal

3.1 How to use the parking brake

NOTE :
- **It is recommended that the operator practice engaging and disengaging the parking brake on a flat surface without the engine running before operating the tractor for the first time.**

To set the parking brake
1. Depress the brake pedal.
2. Latch the brake pedal on pushing and holding the parking-brake-lock-pedal.
3. Release the brake pedal.

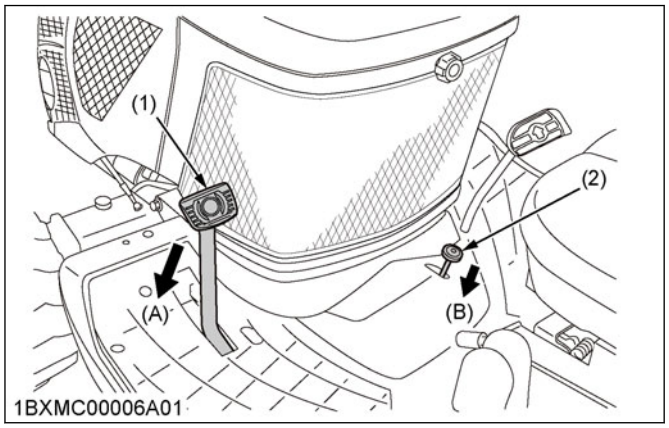

(1) Brake pedal
(2) Parking brake lock pedal
(A) Depress
(B) Push down the parking brake lock pedal while depressing the brake pedal

To release the parking brake
Depress the brake pedal again.

4. Range gear shift lever (Hi-Lo)

You can shift the range gear shift lever only when tractor is completely stopped.

WARNING
To avoid serious injury or death:
- **Make sure that the range-gear-shift-lever is fully engaged into the high position or the low position before climbing or descending a slope.**

IMPORTANT :
Do not force the range-gear-shift-lever.
- **If it is difficult to shift the range-gear-shift-lever into the neutral "N" position, you should attempt the following procedure.**
  1. **Depress the brake pedal firmly for several seconds.**
  2. **Without reducing the brake pedal force, shift the range-gear-shift-lever.**
- **If it is difficult to shift the range-gear-shift-lever into the low position or the high position from the neutral "N" position, you should attempt the following procedure.**
  1. **Slightly depress the speed control pedal to rotate the gears inside of transmission.**
  2. **Release the speed control pedal to the neutral "N" position.**
  3. **Shift the range-gear-shift-lever.**
- **To avoid damage of transmission, stop tractor before shifting between ranges.**

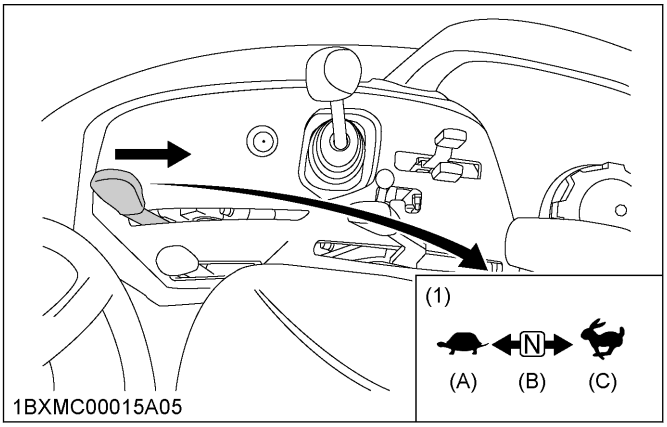

(1) Range gear shift lever (Hi-Lo)
(A) Low
(B) Neutral position
(C) High

5. Front wheel drive lever

Use the lever to engage the front wheels with the tractor stopped.

WARNING
To avoid serious injury or death:

https://truckmanualshub.com/

- **Do not engage the front wheel drive when traveling at road speed.**
- **When driving on icy, wet, or loose surfaces, make sure that the tractor is correctly ballasted to avoid skidding and loss of steering control. Operate the tractor at reduced speed and engage the front wheel drive.**
- **An accident may occur if the tractor is suddenly braked, such as by heavy towed loads shifting forward or loss of control.**
- **The braking characteristics are different between 2-wheel drive and 4-wheel drive. Know the difference and use carefully.**

Shift the lever to the **on** position to engage the front wheel drive.

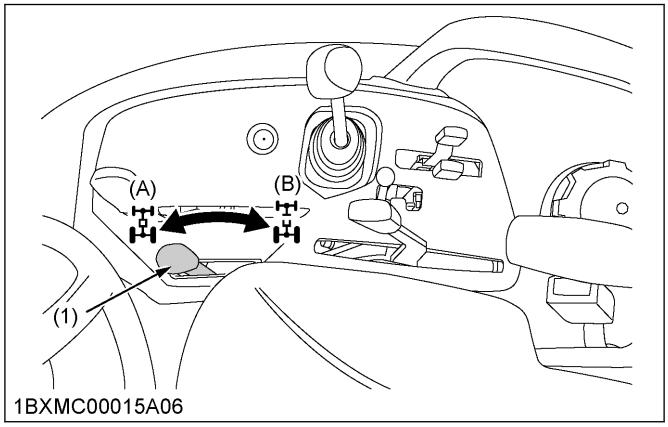

(1) Front wheel drive lever (B) Off
(A) On

IMPORTANT :
- **To avoid damage of transmission, when the front wheel drive lever is not smoothly shifted, slightly depress forward or rearward on the speed control pedal.**
- **Tires will wear quickly if front wheel drive is engaged on paved roads.**

Front wheel drive is effective for the following jobs:
- When greater pulling force is needed, such as working in a wet field, when pulling a trailer, or when working with a front-end-loader
- When working in sandy soil
- When working on a hard soil where a rotary tiller might push the tractor forward
- Additional braking at reduced speed

6. Hand accelerator lever

Pulling the hand-accelerator-lever back (the position) increases engine speed, and pushing it forward (the position) decreases engine speed.

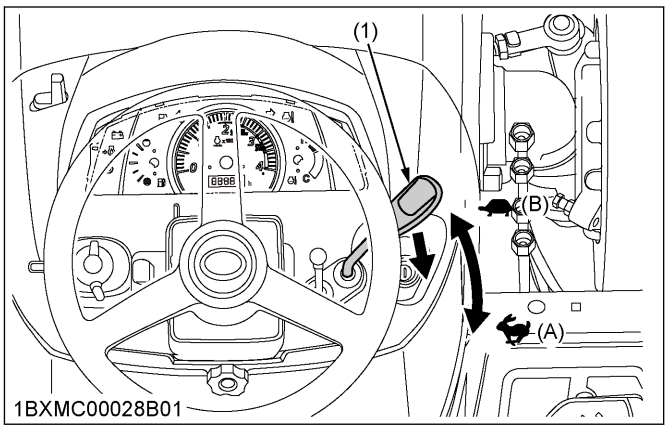

(1) Hand accelerator lever (B) Decrease
(A) Increase

7. Speed control pedal

WARNING

To avoid serious injury or death:
- **Do not operate the tractor if it moves on level ground with your foot off the speed-control-pedal.**

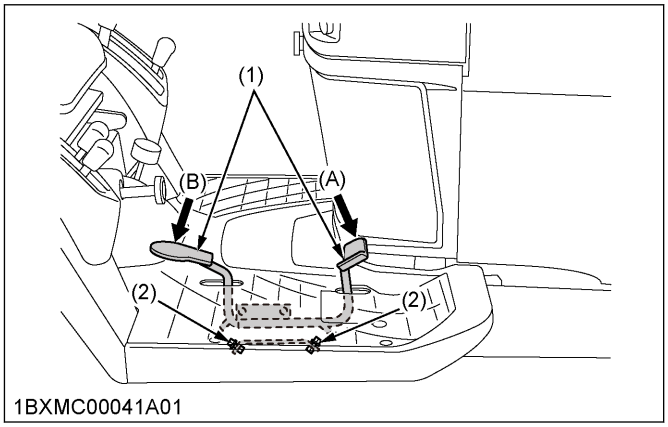

(1) Speed control pedal (A) Forward
(2) Stopper bolts (B) Reverse

IMPORTANT :
- **To prevent serious damage to the HST, do not adjust the stopper bolts.**

Forward pedal	Depress the forward pedal with the toe of your right foot to move forward.
Reverse pedal	Depress the reverse pedal with the heel of your right foot to move backward.

NOTE :
- **When you stand up from the seat with the speed-control-pedal stepped on, the engine will stop regardless of whether the machine is moving or not. This is because the tractor is**

https://truckmanualshub.com/

equipped with the operator-presence-control-system (OPC).

8. Speed set device [BX2380 and BX2680]

The speed-set-device is designed for tractor-operating-efficiency and operator's comfort. This device will provide a constant forward operating speed by mechanically holding the speed-control-pedal at a selected position.

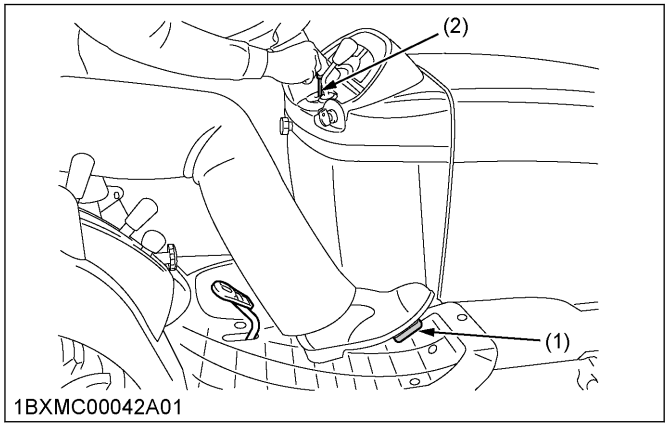

(1) Speed control pedal (2) Speed set rod

8.1 How to use the speed set device [BX2380 and BX2680]

To engage the speed set device

1. Accelerate speed to desired level using the speed-control-pedal.
2. Push and hold the speed-set-rod downward to **on** position.
3. Release the speed-control-pedal.
4. Release the speed-set-rod.
   Desired speed will be maintained.

To disengage the speed set device

1. Depress the brake pedal.

IMPORTANT :

- **To prevent the damage of the speed-set-device, do not depress the reverse pedal when the speed-set-device is engaged.**

NOTE :

- **If you step on the speed-control-pedal on the forward acceleration side, the speed-set-device will disengage.**
- **The speed-set-device will not operate in reverse.**

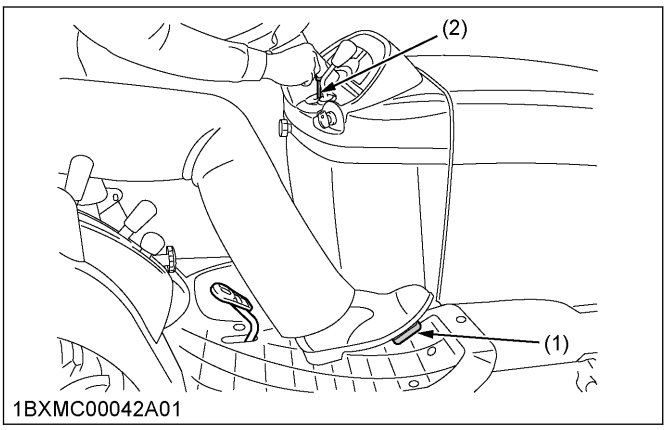

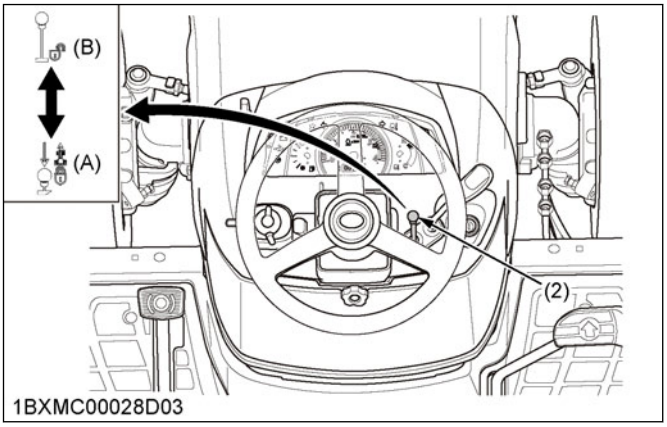

(1) Speed control pedal (A) On
(2) Speed set rod (B) Off

ACCESSORY

1. 12 V electric outlet

You may use the 12 V electric outlet to connect an auxiliary light or other devices.

IMPORTANT :

- **Do not use as a cigarette lighter.**
- **Do not use when wet.**

NOTE :

- **Do not connect a light or other device that draws more than 120 watts to 12 V electric outlet. The battery may discharge very rapidly or the outlet may fail.**

https://truckmanualshub.com/

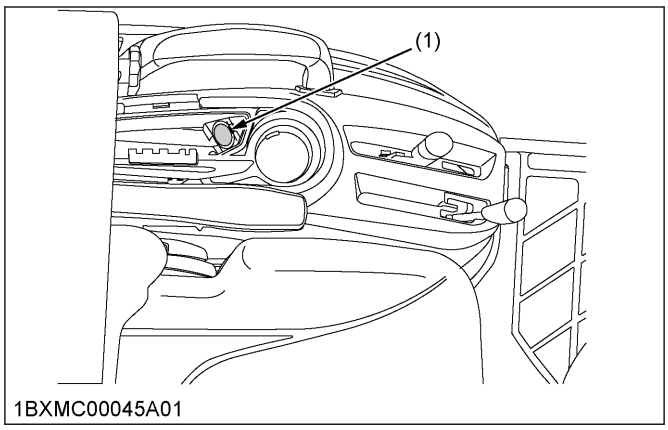

(1) 12V electric outlet

2. Accessory box

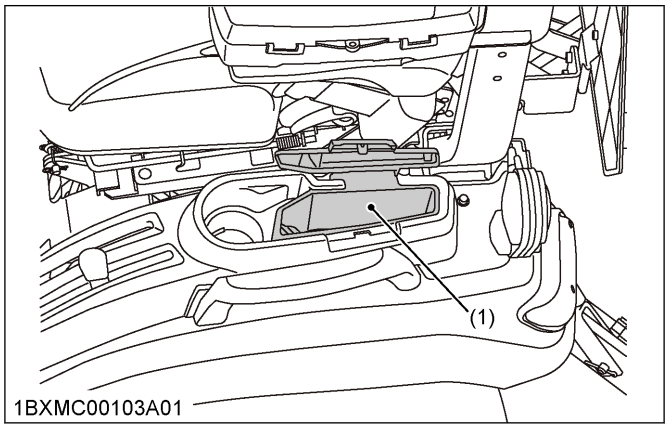

(1) Accessory box

NOTE :

- **The inside of the accessory box is not completely water-proof nor dust-proof.**
  When you keep valuables in the accessory box, be careful not to wet nor dirty it.

3. Operator's manual holder [BX1880]

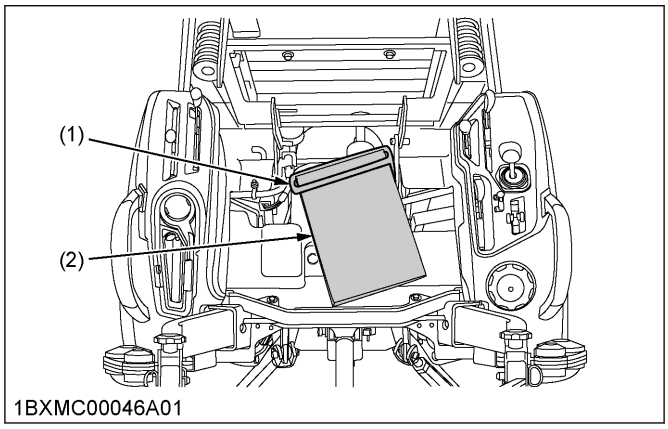

(1) Holder *(2) Bag*

4. Glove box [BX2380 and BX2680]

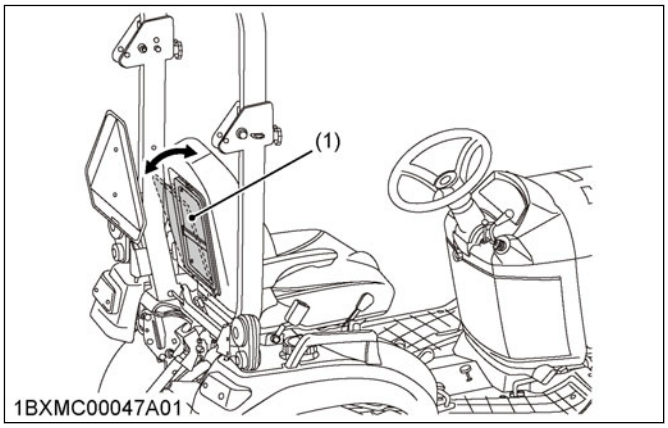

(1) Glove box

https://truckmanualshub.com/

PRE-OPERATION CHECK

DAILY CHECK ITEMS BEFORE OPERATION OF THE TRACTOR

To prevent trouble from occurring, it is important to know the condition of the tractor well.

WARNING

To avoid serious injury or death:

- **Be sure to check and service the tractor on a level surface with the engine shut off and the parking brake on and the implement lowered to the ground.**

Check the condition of the tractor before starting it.

Check items

- Walk around inspection
- Checking the engine oil level
- Checking the transmission oil level
- Checking the coolant level
- Cleaning the grill and the radiator screen
- Checking the air cleaner evacuator valve when used in a dusty place
- Checking the brake pedal
- Checking the indicators, the gauges, and the meter
- Checking the lights
- Checking the wire harness
- Checking the seat belt and ROPS
- Checking the movable parts
- Refuel
  See 2. Checking the fuel gauge and refueling on page 75.)
- Care of safety labels
  See 1. Care for safety labels on page 15.

https://truckmanualshub.com/

OPERATING THE ENGINE

WARNING

To avoid serious injury or death:

- **Read and understand *"Safe operation"* in the front of this manual.**
- **Read and understand the safety labels located on the tractor.**
- **To avoid the danger of exhaust fume poisoning, do not operate the engine in a closed building without proper ventilation.**
- **Never start the engine while standing on ground. Start the engine only from the operator's seat.**
- **Make it a rule to set all shift levers to the neutral positions and to place the PTO lever in the off position before starting the engine.**

See PRECAUTIONS FOR OPERATING THE TRACTOR on page 6, PRECAUTIONS FOR PARKING THE TRACTOR on page 8, and PRECAUTIONS FOR SERVICING THE TRACTOR on page 9.

IMPORTANT :

- **Do not use starting fluid or ether.**
- **To protect the battery and the starter, make sure that the starter is not continuously turned for more than 30 seconds.**

STARTING THE ENGINE

IMPORTANT :

- **Because of safety devices, the engine will not start except when the speed-control-pedal is in neutral position and the PTO-clutch-lever is in the off position respectively.**

1. Make sure that the parking brake is set.
   See 3.1 How to use the parking brake on page 32 if the parking brake is not set.

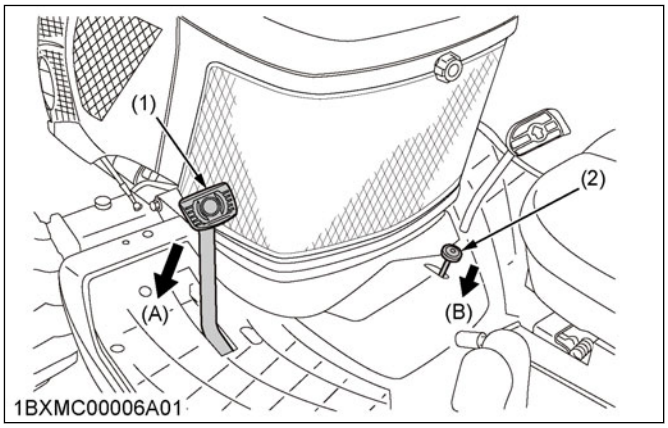

(1) Brake pedal
(2) Parking brake lock pedal
(A) Depress
(B) Push down parking brake lock pedal while depressing brake pedal

2. Place the PTO-clutch-lever in the **off** position.

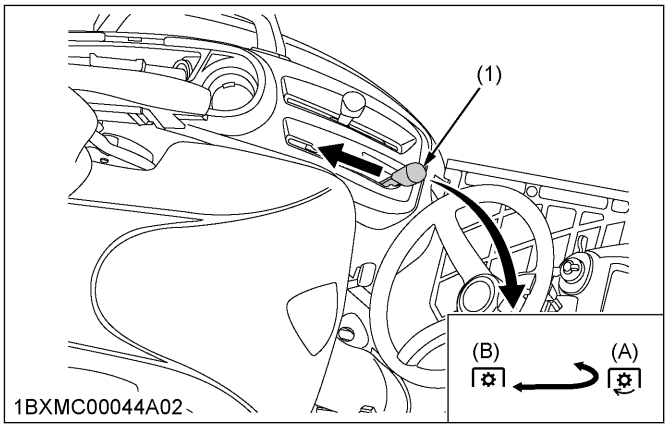

(1) PTO clutch lever
(A) On
(B) Off

3. Place the speed-set-rod in the **off** position **[BX2380 and BX2680]**.

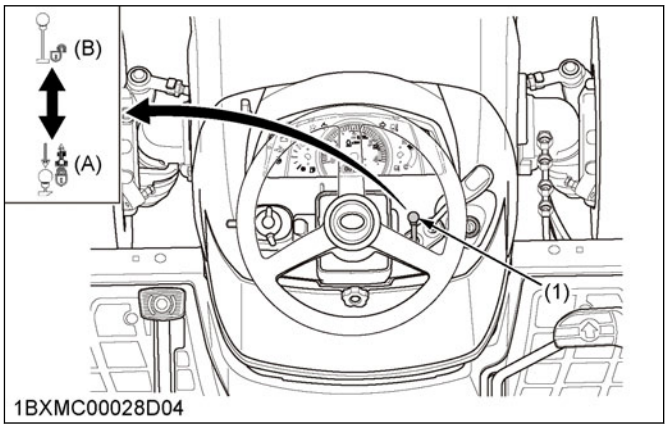

(1) Speed set rod [BX2380 and BX2680]
(A) On
(B) Off

https://truckmanualshub.com/

4. Place the speed-control-pedal in the **neutral** position.

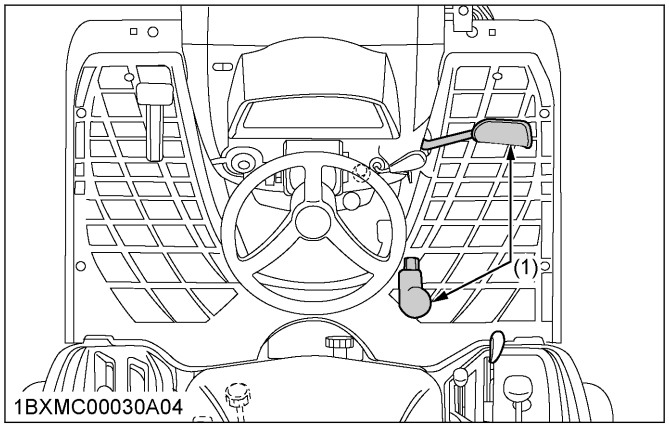

(1) Speed control pedal

NOTE :

- **The speed-control-pedal automatically returns to the neutral position when the operator's foot is released from the pedal.**

5. Place the range-gear-shift-lever (Hi-Lo) in the **neutral** "**N**" position.

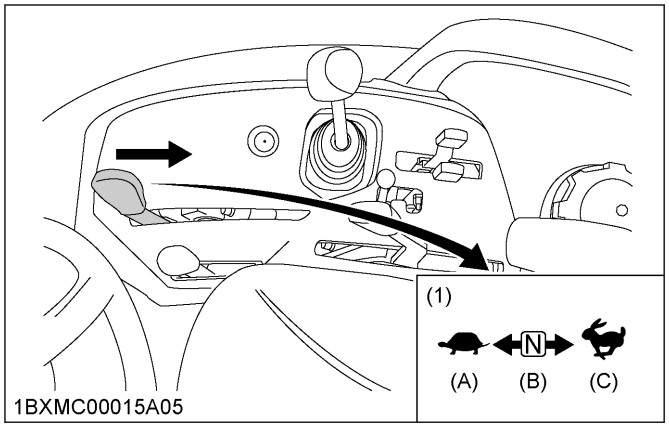

(1) Range gear shift lever (Hi-Lo)
(A) Low
(B) Neutral
(C) High

6. Place the lock lever in the **lock** position to lock the auxiliary-hydraulic-control-lever if the tractor is equipped with the auxiliary-hydraulic-control-lever.

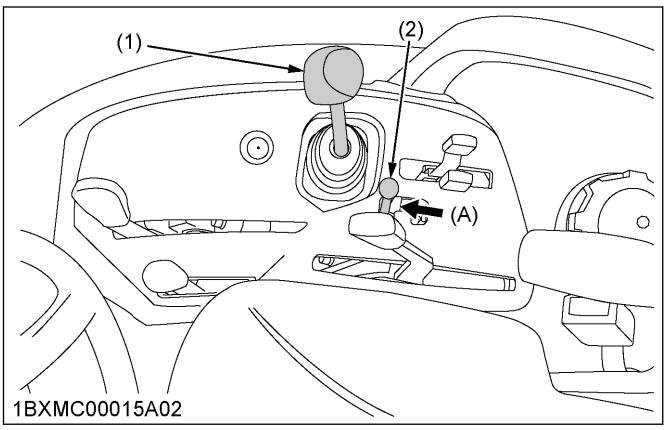

(1) Auxiliary hydraulic control lever
(2) Lock lever
(A) Lock

7. Move the hydraulic control lever forward (**lowered (down)** position) to lower the implement.

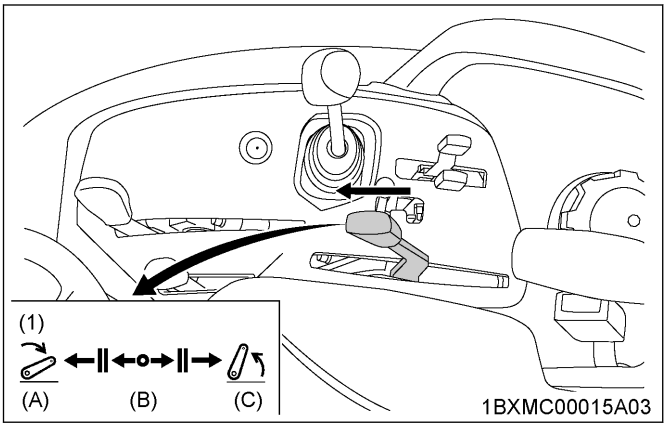

(1) Hydraulic control lever
(A) Lowered
(B) Neutral position
(C) Raised

Check that the implement is down at the lowest position after moving the hydraulic control lever forward.

8. Set the hand-accelerator-lever to about 1/2 way.

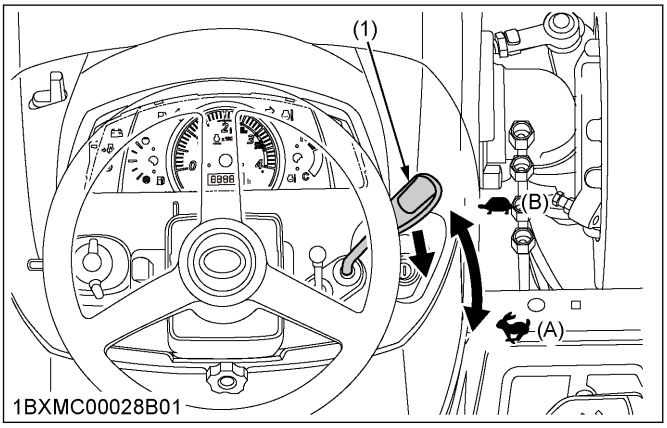

(1) Hand accelerator lever
(A) Increase
(B) Decrease

https://truckmanualshub.com/

9. Insert the key into the key switch and turn the key to the **on** position.

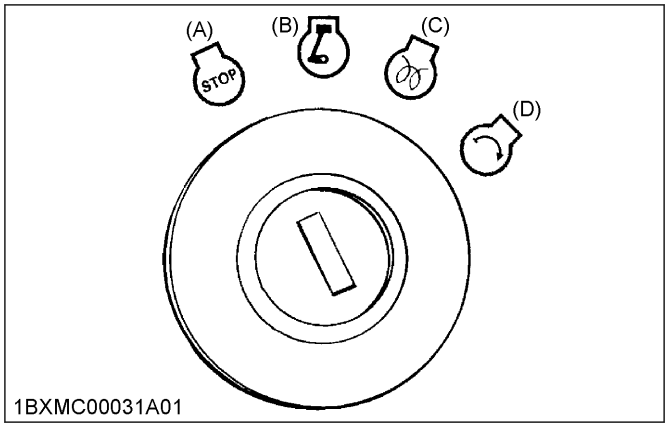

(A) Off
(B) On
(C) Preheat
(D) Start

10. Check the Easy Checker™ lamps.

IMPORTANT :
- **Daily checks with the Easy Checker™ only are not sufficient. Never fail to conduct daily checks carefully by referring to 8. Checking the gauges, the meters, and the Easy Checker™ on page 78.**

When the key is turned to the **on** position, the coolant-temperature-indicator-lamp and the low-fuel-indicator-lamp only should come on and the needles of the fuel gauge, the coolant-temperature-gauge, and the tachometer move up and return.
See 2.1 Easy Checker™ on page 47.

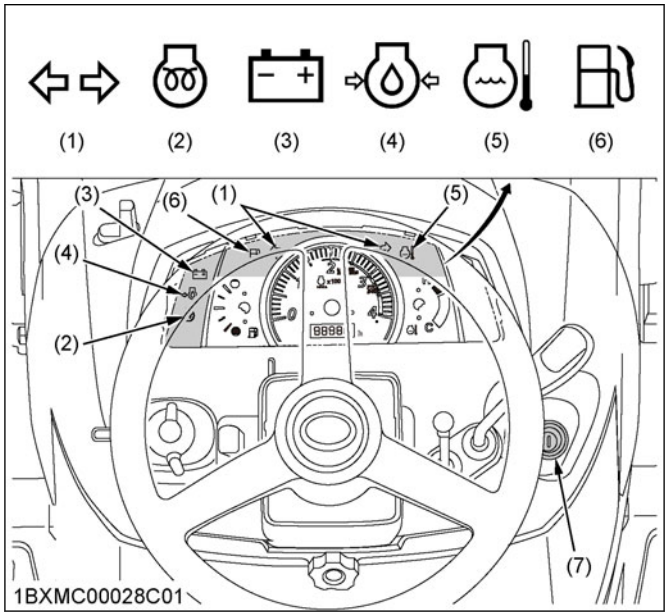

(1) Turn signal/hazard light indicator
(2) Preheat
(3) Electrical charge
(4) Engine oil pressure
(5) Coolant temperature indicator
(6) Low fuel indicator
(7) Key switch

11. Turn the key to the **preheat** position and hold it as follows.
For the appropriate preheating time, refer to the following table.

Temperature	Preheating time
Over 0 ℃ (32 ℉)	2 sec. to 3 sec.
-5 ℃ to 0 ℃ (23 ℉ to 32 ℉)	5 sec.
-15 ℃ to -5 ℃ (5 ℉ to 23 ℉)	10 sec.

NOTE :
- **The preheat indicator lamp in the Easy Checker™ comes on while engine is being preheated.**

12. Turn the key to the **start** position and release it when the engine starts.
In cold weather, if the engine fails to start after 10 seconds, turn off the key for 30 seconds. Then repeat steps 11 and steps 12 (See 1. Cold weather starting of the engine on page 39).
13. Check to see that all the lamps on the Easy Checker™ are **off**.

1. Cold weather starting of the engine

When the ambient temperature is as follows and the engine is very cold, you may fail to start the engine.

Ambient temperature	below -5 ℃ (23 ℉)

To protect the battery and the starter, make sure not to turn the starter continuously for more than following seconds.

Continuous turning limit of the starter	30 seconds

2. Block heater (option)

A block heater is available as an option from your dealer.
The block heater will assist you in starting your tractor when the ambient temperature is as follows.

Ambient temperature	below -15 ℃ (5 ℉)

STOPPING THE ENGINE

1. After slowing the engine to idle, turn the key to the **stop** position.

https://truckmanualshub.com/

2. Remove the key.

NOTE :
- **If the key does not stop the engine, consult your local KUBOTA Dealer.**

WARMING UP OF THE ENGINE

WARNING

To avoid serious injury or death:
- **Be sure to set the parking brake during warm-up of the engine.**
- **Be sure to set all shift levers to the neutral positions and to place the PTO-clutch-lever in the off position during warm-up of the engine.**

For following minutes after the engine start-up, allow the engine to warm up without applying any load. Allowing the engine to warm up is to allow oil to reach every engine-part.

Warming up time	5 minutes

If the load should be applied to the engine without this warm-up period, trouble such as seizure, breakage, or premature wear may develop.

1. Warm-up of the engine and transmission oil in the low temperature range

IMPORTANT :
- **Do not operate the tractor under full load condition until it is sufficiently warmed up.**

Hydraulic oil serves as transmission fluid. In cold weather, the oil may be cold with increased viscosity. The oil with increased viscosity can cause delayed oil circulation or abnormally low hydraulic pressure for some time after engine start-up. Delayed oil circulation or abnormally low hydraulic pressure in turn can result in premature wear in the hydraulic system or malfunctions such as resistance in the speed-control-pedal and difficulty engaging the range-gear-shift-lever. To prevent the premature wear in the hydraulic system or malfunctions of controls, check the following instructions.
Warm up the engine according to the following tables.

rpm of warm-up engine	at about 50% of rated rpm

Ambient temperature	Warm-up time requirement
Above 0 ℃ (32 ℉)	At least 5 minutes
-10 ℃ to 0 ℃ (14 ℉ to 32 ℉)	5 minutes to 10 minutes
-20 ℃ to -10 ℃ (-4 ℉ to 14 ℉)	10 minutes to 15 minutes
Below -20 ℃ (-4 ℉)	More than 15 minutes

JUMP STARTING THE ENGINE

Follow the instructions of jump starting of the engine to safely start the engine.

WARNING

To avoid serious injury or death:
- **Battery gases can explode. Keep cigarettes, sparks, and flames away from battery.**
- **If the tractor battery is frozen, do not jump start the engine.**
- **Do not connect other end of negative (-) jumper cable to negative (-) terminal of the tractor battery.**
- **When taking the dead battery, putting the battery, and fixing the battery, do not allow the positive (+) terminal of the battery to touch other parts.**
- **To prevent short circuit, before connecting jumper cables, make sure to remove the metal-battery-holder.**

IMPORTANT :
- **The tractor has a 12 volt negative (-) ground starting system.**
- **Use only the same voltage for jump starting.**
- **Use of a higher voltage source on the tractors electrical system could result in severe damage to the tractors electrical system.**
  Use only matching voltage source when jump starting in a low battery condition or a dead battery condition.
- **Since the metal-battery-holder can crack, do not tighten it too much.**

Connect cables in numerical order.
Disconnect in reverse order after use.

https://truckmanualshub.com/

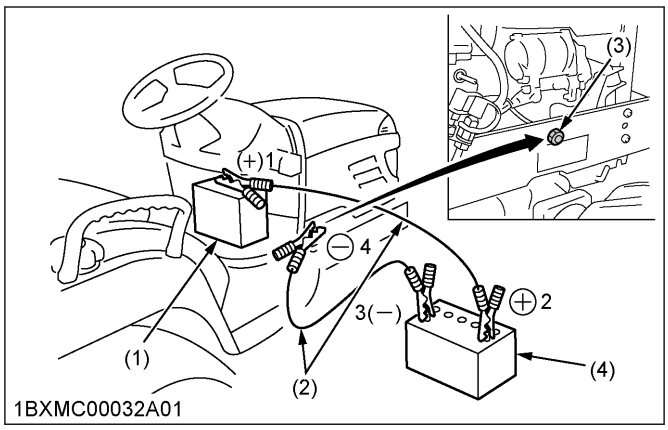

(1) Dead battery
(2) Jumper cables
(3) Engine block or frame
(4) Helper battery

1. Bring the helper vehicle with a battery of the same voltage as the disabled tractor within easy cable reach.

   IMPORTANT :
   - **The helper vehicle must not touch the disabled tractor.**

2. Engage the parking brakes of both vehicles and put the shift levers in the **neutral** position. Shut both engines off.
3. Put on safety goggles and rubber gloves.
4. Take the dead battery out and put it on the step of the tractor.
5. Make sure that the vent caps are securely in place if equipped.
6. Attach the red clamp to the positive (red, (+) or pos.) terminal of the dead battery, and clamp the other end of the same cable to the positive (red, (+) or pos.) terminal of the helper battery.
7. Clamp the other cable to the negative (black, (-) or neg.) terminal of the helper battery.
8. Clamp the other end of the cable, which is clamped to the negative terminal of the helper battery, to the engine block or frame of the disabled tractor as far from the dead battery as possible.
9. Start the helper vehicle and let its engine run for a few moments. Start the disabled tractor.
10. Disconnect the jumper cables in the exact reverse order of attachment.
    See steps in order of step 8., step 7., and step 6..
11. Put the battery back and fix it.

https://truckmanualshub.com/

OPERATING THE TRACTOR

OPERATING NEW TRACTOR

How a new tractor is used and maintained determines the life of the tractor.
A new tractor just off the factory production line has been, of course, tested, but the various parts are not accustomed to each other. So you should take care of the tractor. You should operate the tractor as follows for the first 50 hours until the various parts become broken-in.

- Operate the tractor at a slower speed
- Avoid excessive work or operation of the tractor

The manner which the tractor is used during the breaking-in period greatly affects the life of your tractor. Therefore, to obtain the maximum performance and the longest life of the tractor, it is very important to properly break-in your tractor. In using a new tractor, follow the following precautions.
Do not operate the tractor at full speed for the first 50 hours.

- Do not start the tractor quickly. Do not apply the brakes suddenly.
- In winter, operate the tractor after fully warming up the engine.
- Do not run the engine at speeds faster than necessary.
- On rough roads, slow down to suitable speeds.
  Do not operate the tractor at fast speed.

The preceding precautions are not limited only to new tractors, but to all tractors. But you should especially follow the preceding precautions in the case of new tractors.

Changing lubricating oil for new tractors
The lubricating oil is especially important in the case of a new tractor. If the various parts are not broken-in and are not accustomed to each other, small metal grit may develop during the operation of the tractor. Small metal grit may wear out or damage the parts. Therefore, you should take care of the lubricating oil to change a little earlier than would ordinarily be required.
For further details of change interval hours, see SERVICE INTERVALS on page 69.

GETTING ON AND OFF THE TRACTOR

- Never try to get on or off a moving tractor or to jump off the tractor to exit.
- Face the tractor when getting into or out of the tractor. Do not use the controls as hand-holds to prevent inadvertent machine movements.
- Always keep steps and floor clean to avoid slippery conditions.

OPERATING THE FOLDABLE ROPS

WARNING
To avoid serious injury or death:

- **When raising or folding the ROPS, apply parking brake, stop the engine, and remove the key.**
  Always raise or fold the ROPS from a stable position at the rear of the tractor.
- **Fold the ROPS down only when absolutely necessary and fold it up and lock it again as soon as possible.**
- **Before proceeding to fold ROPS, check for any possible interference with installed implements and attachments. If interference occurs, contact your KUBOTA Dealer.**

1. Folding the ROPS

1. Loosen the holding knob bolts.

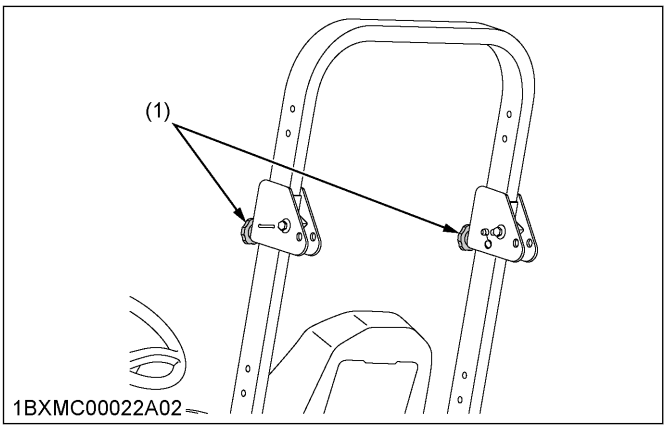

(1) Holding knob bolts

https://truckmanualshub.com/

2. Remove both set pins.

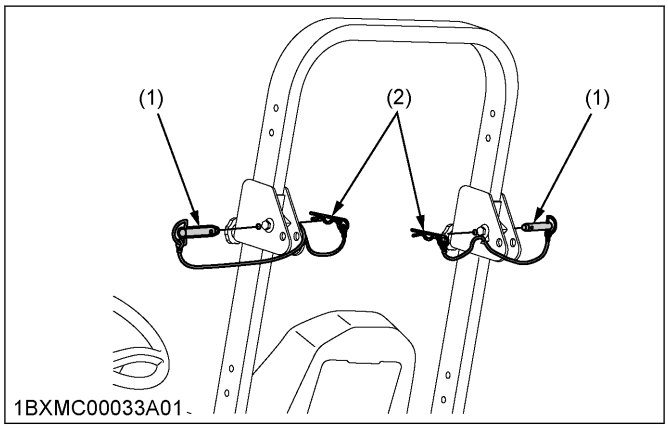

(1) Set pins *(2) Snap pins*

3. Fold the ROPS.

CAUTION

To avoid personal injury:

- **Hold the ROPS tightly with both hands and fold the ROPS slowly and carefully.**

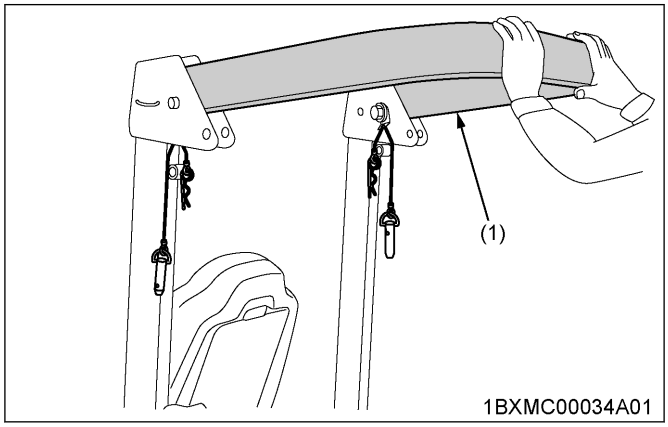

(1) ROPS

4. Align set pin holes and insert both set pins. Secure set pins with the snap pins.

CAUTION

To avoid personal injury:

- **Make sure that both set pins are properly installed and secured with the snap pins.**

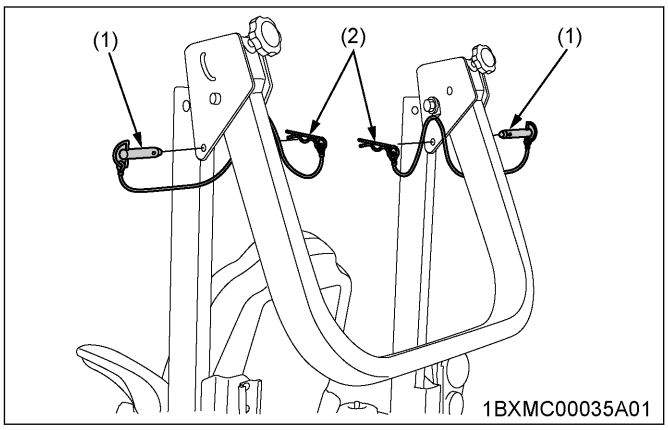

(1) Set pins *(2) Snap pins*

2. Raising the ROPS to upright position

1. Remove both snap pins and set pins.

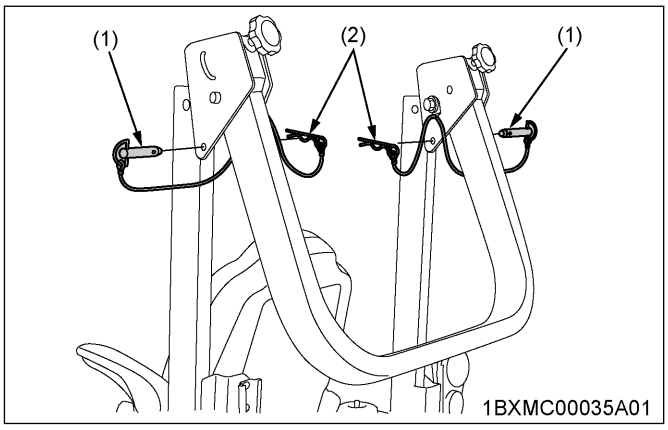

(1) Set pins *(2) Snap pins*

2. Raise the ROPS to the upright position.

CAUTION

To avoid personal injury:

- **Hold the ROPS tightly with both hands and raise the ROPS slowly and carefully.**

https://truckmanualshub.com/

3. Align set pin holes and insert both set pins. Secure set pins with the snap pins.

CAUTION

To avoid personal injury:

- **Make sure that both set pins are properly installed as soon as the ROPS is in the upright position and secured with the snap pins.**

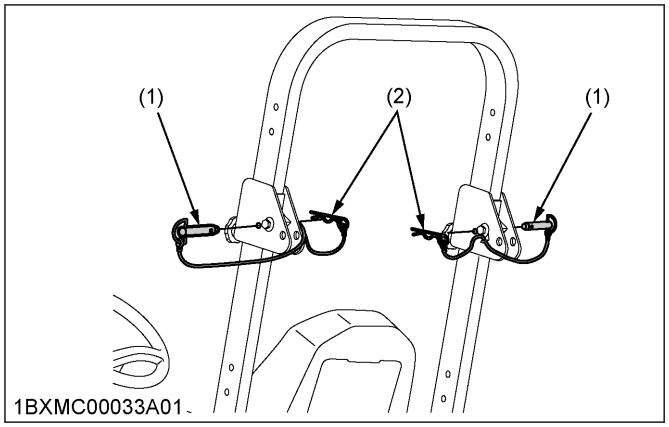

(1) Set pins *(2) Snap pins*

4. Tighten the holding knob bolts.

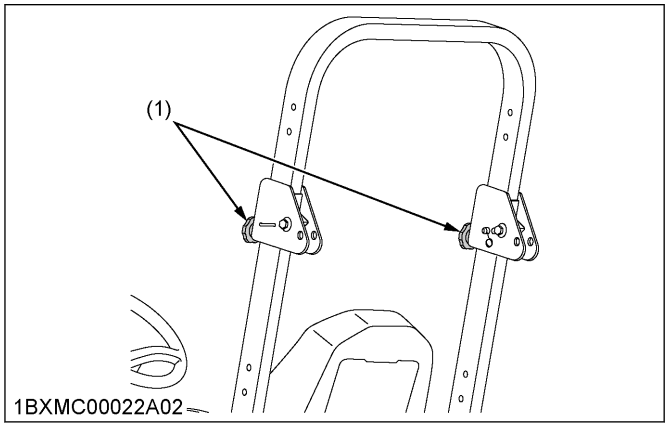

(1) Holding knob bolts

3. Adjusting the foldable ROPS

1. Adjust free fall of the ROPS upper frame regularly.
2. If you feel less friction in folding the ROPS, tighten the nut until you feel the right friction in the movement.

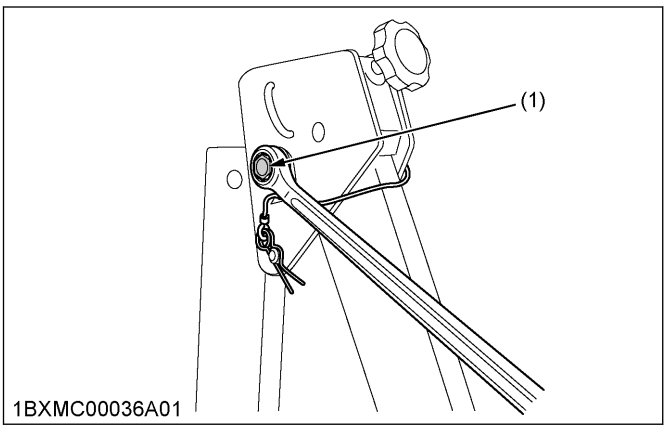

(1) Nut

STARTING THE TRACTOR

1. Adjust the operator's position and engage the seat belt.
   See 1. Operator's seat on page 31 and 2. Seat belt on page 31.

[BX1880]

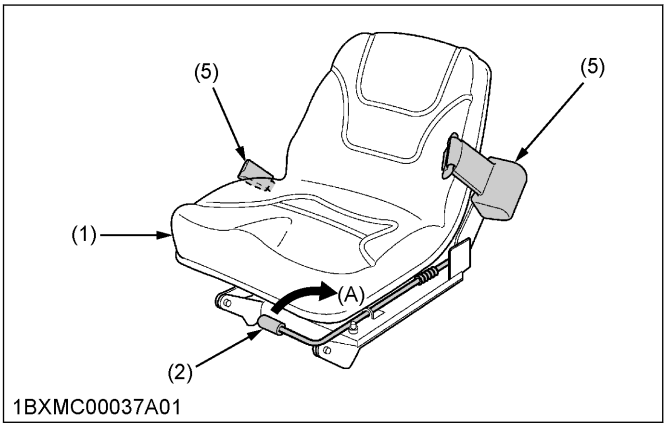

[BX2380 and BX2680]

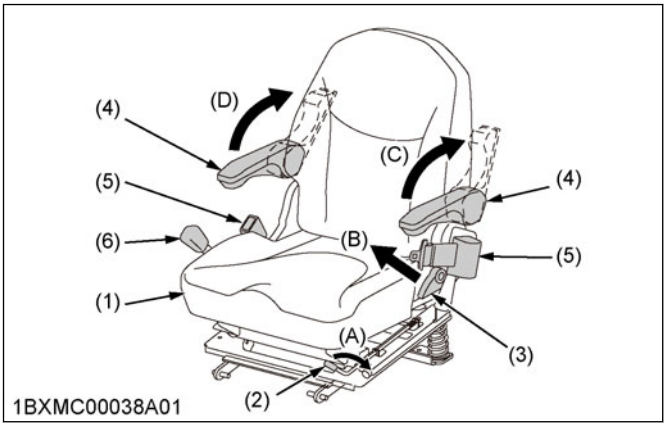

(1) Seat
(2) Position adjust lever
(3) Backrest tilt adjust lever
(4) Arm rest
(5) Seat belt
(A) Pull up
(B) Pull
(C) 100 deg.
(D) 130 deg.

https://truckmanualshub.com/

2. Adjust the steering wheel to proper position **[BX2380 and BX2680]**.

CAUTION

To avoid personal injury:

- **Do not adjust the steering wheel while the tractor is in motion.**

Pull the tilt lever to adjust the steering wheel.

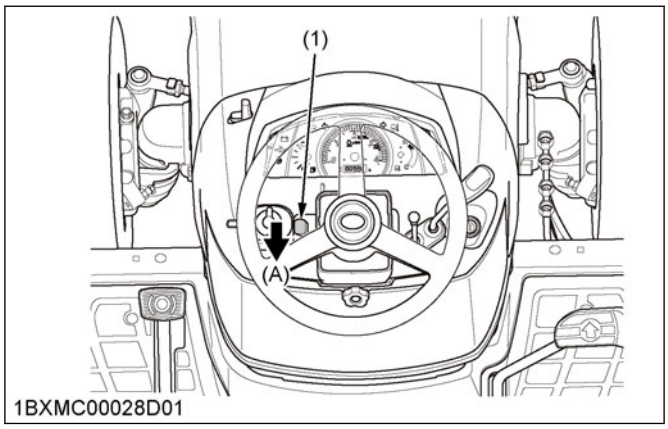

(1) Tilt lever
(A) Pull

3. Select positions of the light switches.
See 3. Head light switch on page 28, 4. Hazard light switch on page 28, and 5. Turn signal light switch on page 28.

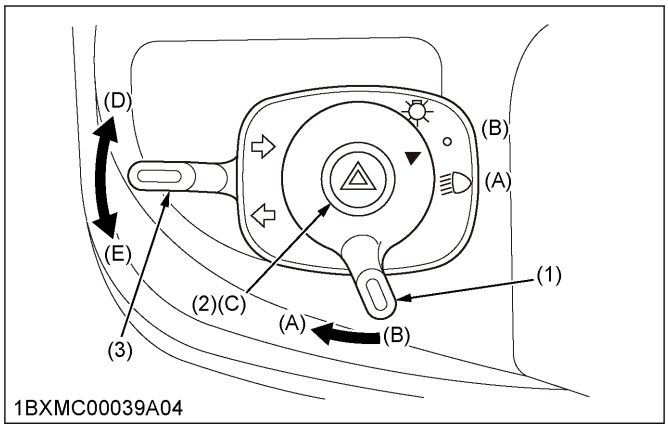

(1) Head light switch
(2) Hazard light switch
(3) Turn signal light switch
(A) On (head light)
(B) Off (head light)
(C) Push on-off (hazard light)
(D) Right turn
(E) Left turn

4. Check the brake pedal.
   a. Depress the brake pedal.
   b. Depress the parking brake lock pedal.
   c. Release the brake pedal.
   Make sure to latch the brake pedal with the parking brake lock pedal. Use both right and left feet for the procedure.
   See 3. Brake pedal and parking brake lock pedal on page 31 and *"To set the parking brake"* in 3.1 How to use the parking brake on page 32.

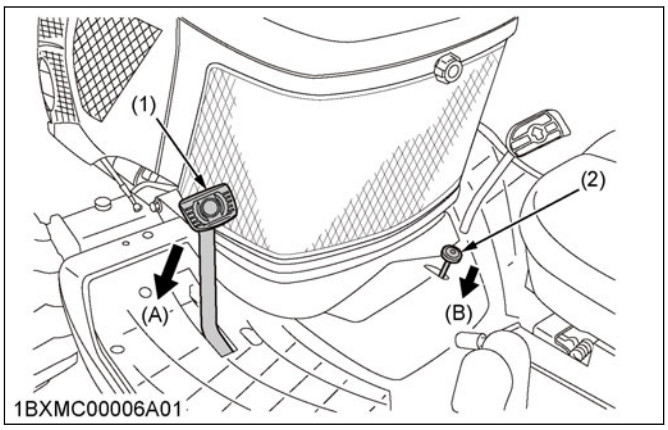

(1) Brake pedal
(2) Parking brake lock pedal
(A) Depress
(B) Push down parking brake lock pedal while depressing brake pedal

5. Start the engine.
See STARTING THE ENGINE on page 37.

WARNING

To avoid serious injury or death:

- **Read and understand *"Safe operation"* in the front of this manual.**
- **Read and understand the safety labels located on the tractor.**
- **To avoid the danger of exhaust fume poisoning, do not operate the engine in a closed building without proper ventilation.**
- **Never start the engine while standing on ground. Start the engine only from the operator's seat.**
- **Make it a rule to set all shift levers to the neutral positions and to place the PTO lever in the off position before starting the engine.**

See PRECAUTIONS FOR OPERATING THE TRACTOR on page 6, PRECAUTIONS FOR PARKING THE TRACTOR on page 8, and PRECAUTIONS FOR SERVICING THE TRACTOR on page 9.

https://truckmanualshub.com/

6. Raise the Implement.
   Move the hydraulic control lever rearward (the **raised (up)** position).
   See 1. Hydraulic control on page 58.

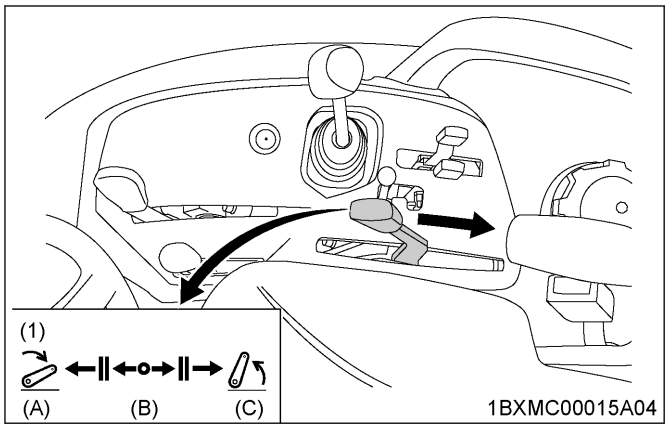

(1) Hydraulic control lever
(A) Lowered
(B) Neutral position
(C) Raised

7. Select the travel speed.
   See 4. Range gear shift lever (Hi-Lo) on page 32 and 5. Front wheel drive lever on page 32.
8. Accelerate the engine.
   See 6. Hand accelerator lever on page 33.
9. Unlock the parking brake.
   See *"To release the parking brake"* in 3.1 How to use the parking brake on page 32.
10. Depress the speed control pedal.
    See 7. Speed control pedal on page 33.

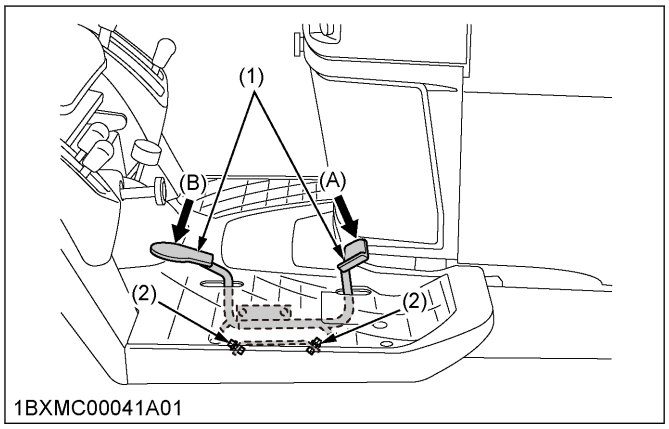

(1) Speed control pedal
(2) Stopper bolts
(A) Forward
(B) Reverse

[BX2380 and BX2680] In addition to the preceding section, see 8. Speed set device [BX2380 and BX2680] on page 34 and 8.1 How to use the speed set device [BX2380 and BX2680] on page 34.

[BX2380 and BX2680]

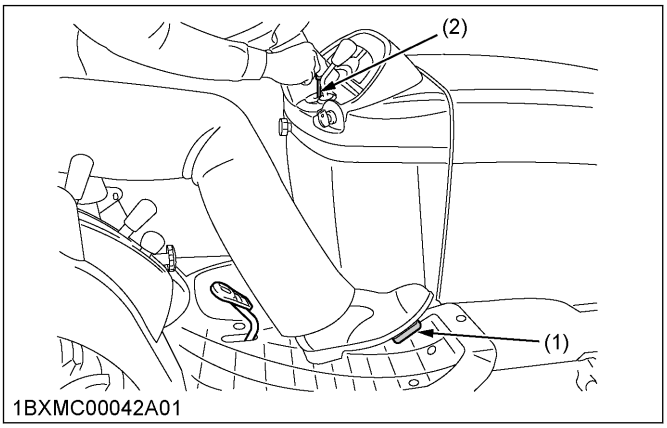

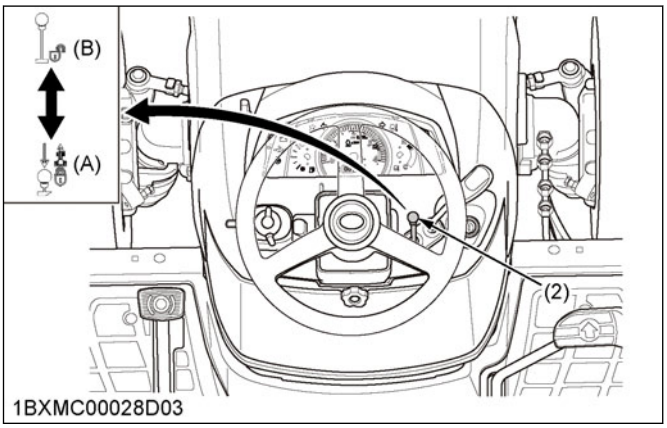

(1) Speed control pedal
(2) Speed set rod
(A) On
(B) Off

STOPPING THE TRACTOR

1. Slow the engine down.
2. Depress the brake pedal.
3. After the tractor has stopped, disengage the PTO clutch.

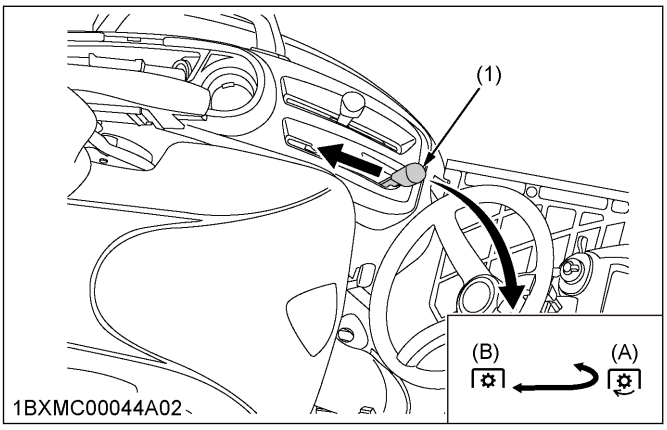

(1) PTO clutch lever
(A) On (engage)
(B) Off (disengage)

https://truckmanualshub.com/

4. Lower the implement to the ground.

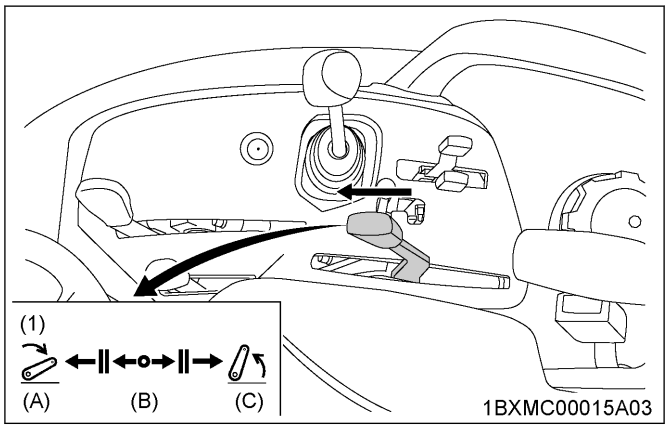

(1) Hydraulic control lever
(A) Lowered
(B) Neutral position
(C) Raised

5. Shift the range-gear-shift-lever to the **neutral** "**N**" position.

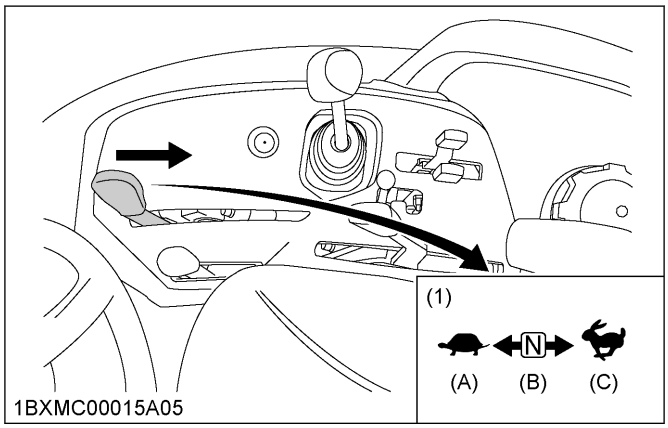

(1) Range gear shift lever (Hi-Lo)
(A) Low
(B) Neutral position
(C) High

6. Set the parking brake.
   See *"To set the parking brake"* in 3.1 How to use the parking brake on page 32.

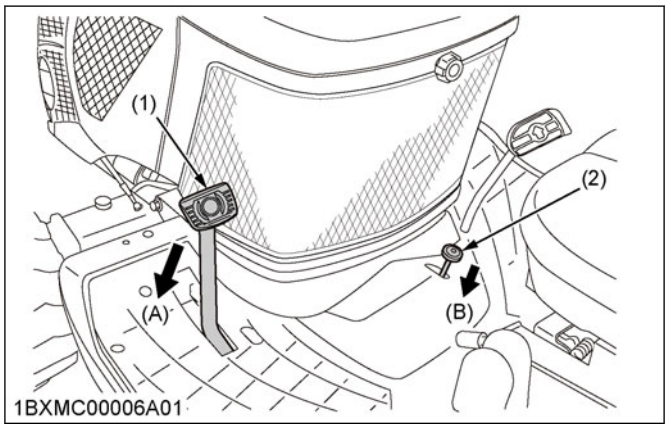

(1) Brake pedal
(2) Parking brake lock pedal
(A) Depress
(B) Push down the parking brake lock pedal while depressing the brake pedal

CHECK DURING DRIVING

1. Cases to stop the engine immediately

Immediately stop the engine if:
- The engine suddenly slows down or accelerates
- Unusual noises suddenly are heard
- Exhaust fumes suddenly become very dark

2. Check items during driving

While driving the tractor, make the following checks to see that all the parts are functioning normally.

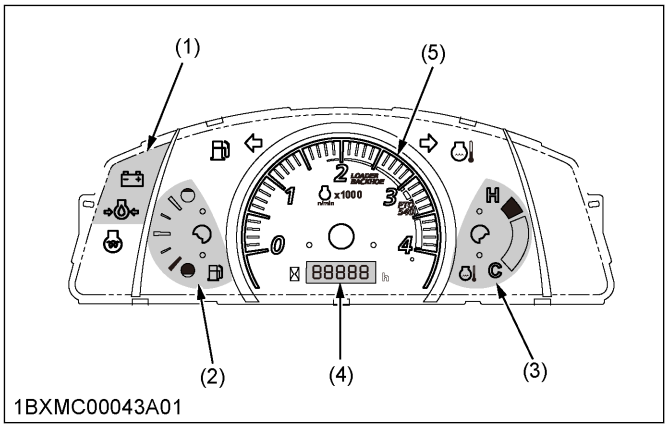

(1) Easy Checker™
(2) Fuel gauge
(3) Coolant temperature gauge
(4) Hour meter
(5) Tachometer

- **Easy Checker™**
  See 2.1 Easy Checker™ on page 47.
- **Fuel gauge**
  See 2.2 Fuel gauge on page 48.
- **Coolant temperature gauge**
  See 2.3 Coolant temperature gauge on page 48.
- **Hour meter**
  See 2.5 Hour meter on page 49.
- **Tachometer**
  See 2.6 Tachometer on page 49.

2.1 Easy Checker™

If trouble should occur at any location while the engine is running, the warning lamp in the Easy Checker™ corresponding to that location comes on.
If the warning lamps in the Easy Checker™ come on during operation of the tractor, immediately stop the engine, and find the cause as the following table.
Never operate the tractor while Easy Checker™ lamp is **on**.

NOTE :
- **For checking and servicing of your tractor, consult your local KUBOTA Dealer for instructions.**

https://truckmanualshub.com/

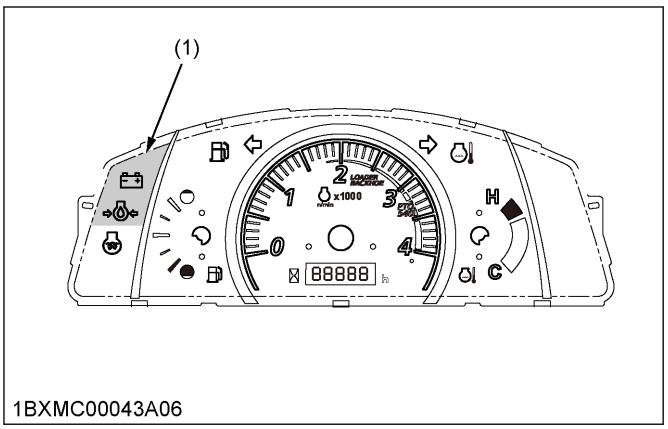

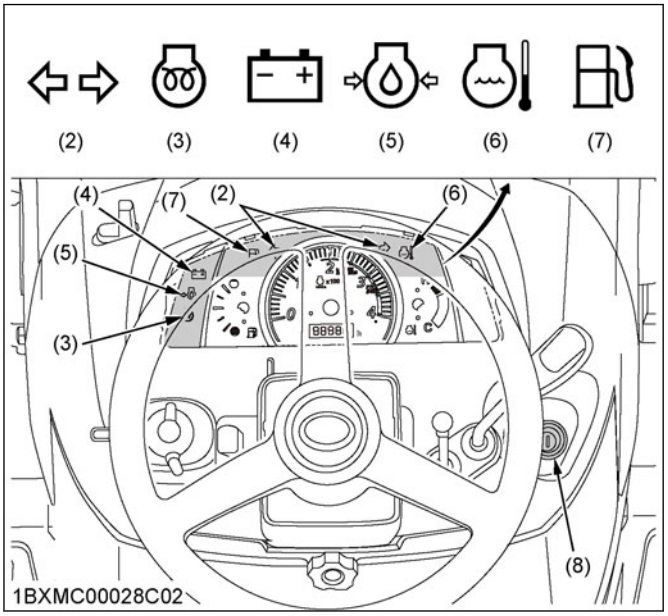

(1) Easy Checker™
(2) Turn signal/hazard light indicator
(3) Preheat
(4) Electrical charge
(5) Engine oil pressure
(6) Coolant temperature indicator
(7) Low fuel indicator
(8) Key switch

Easy Checker™ lamps

Electrical charge	If the alternator is not charging the battery, the electrical charge indicator in the Easy Checker™ will come on. If this warning lamp should come on during operation of the tractor, check the electrical charging system or consult your local KUBOTA Dealer.
Engine oil pressure	If the oil pressure in the engine goes below the prescribed level, the engine oil pressure indicator in the Easy Checker™ will come on. If this warning lamp should come on during operation of the tractor, and this warning lamp does not go off when the engine is accelerated to more than 1000 rpm, check level of engine oil. See 3. Checking the engine oil level on page 76.

2.2 Fuel gauge

The fuel gauge is for the check if the gauge is working.
When the key switch is the **on** position, the fuel gauge indicates the fuel level.
When the fuel is close to empty level as shown in the following figure, the low-fuel-indicator-lamp in the Easy Checker™ comes on.

Low fuel indicator comes on.	remaining amount 6 L

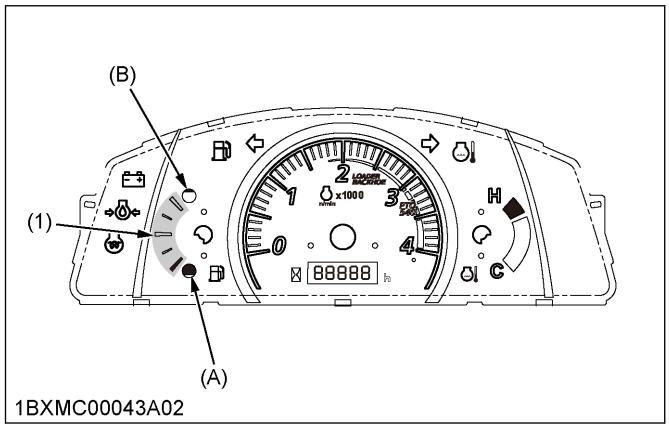

(1) Fuel gauge
(A) Empty
(B) Full

Be careful not to empty the fuel tank. Otherwise air may enter the fuel system.
If air should enter the fuel system, you should bleed it. See 1. Bleeding the fuel system on page 94.

NOTE :

- **In case the fuel gauge system becomes disconnected, the needle will return to the most bottom position. If the needle of the fuel gauge returns to the most bottom position, consult your local KUBOTA Dealer.**
  Once you turn OFF the key switch and when the fuel gauge system gets back to normal, the needle points normal position again.

2.3 Coolant temperature gauge

WARNING

To avoid serious injury or death:

- **Do not remove radiator cap until coolant temperature is well below its boiling point. Then loosen cap slightly to the stop to relieve any pressure before removing cap completely.**

https://truckmanualshub.com/

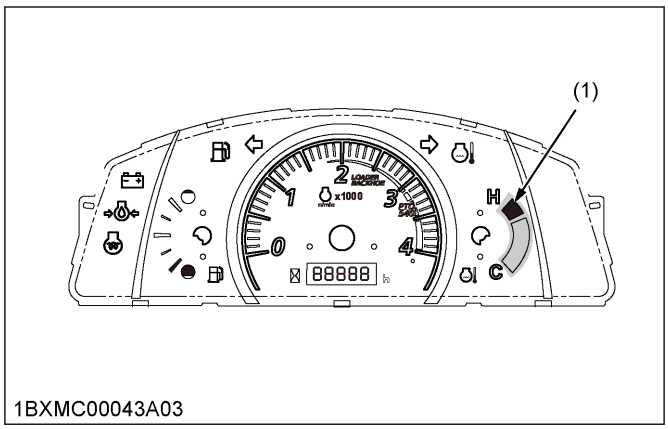

(1) Coolant temperature gauge

NOTE :

- **In case the coolant-temperature-gauge system becomes short, the needle will return to the most bottom position. If the needle of the coolant-temperature-gauge returns to the most bottom position, consult your KUBOTA Dealer. Once you turn OFF and when the coolant-temperature-gauge system gets back to normal, the needle points normal position again.**

2.4 Dealing with the overheated coolant temperature

When the coolant temperature is nearly or more than the boiling point, this temperature is what is called *"overheating"*.

Overheat indication

1. When the coolant temperature stays at 123 ℃ (253.4 ℉), the coolant-temperature-indicator-lamp in the Easy Checker™ comes on.

Reference

Red zone range	123 ℃ to 130 ℃ (254 ℉ to 266 ℉)

2. When the coolant temperature stays below 118 ℃ (244.4 ℉), the coolant-temperature-indicator-lamp turns off.

If the coolant-temperature-indicator-lamp in the Easy Checker™ comes on, take the following actions.

1. Stop operating the tractor in a safe place and keep the engine unloaded idling. Do not stop the engine suddenly.
   a. Place the PTO-clutch-lever in the **off (disengage)** position.
   b. Move the tractor to the level surface, and apply the parking brake.
   c. Place the hand-accelerator-lever in the engine idle position, and operate the engine for about five minutes.
2. Keep yourself well away from the tractor for the following minutes or while the steam blows out.

Keeping yourself away from the tractor	further 10 minutes

3. Check the cooling system after it has sufficient time to cool down.
   Check that there is no danger such as burn. Get rid of the causes of overheating according to ENGINE TROUBLESHOOTING on page 97.
   Check the following items:
   - Shortage or leakage of the coolant
   - Foreign matter on the radiator net
     dust and dirt between the radiator fins
   - Looseness of fan belt
   - Blockage in the radiator tube
     See 2. Checking the radiator hoses and the hose clamps on page 92

2.5 Hour meter

The hour meter indicates in five digits the hours the tractor has been used as the following table.

Tractor operated hours	The step that the display operates
From 0.0 Hr to 9999.9 Hr	every 0.1 Hr step
10000 Hr to 99999 Hr	every 1 Hr step
After 99999 Hr	99999 Hr stays on

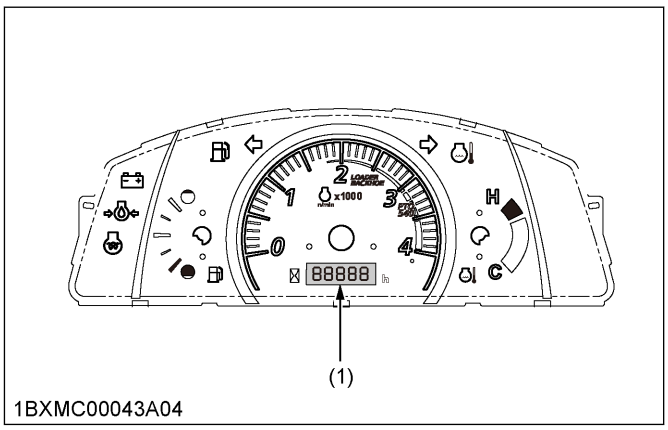

(1) Hour meter

2.6 Tachometer

When the key switch is the **on** position and the engine is **ON**, the tachometer indicates the engine revolution per minute.

NOTE :

- **When the key is turned on, the tachometer should indicate as follows for just a moment.**

Indication of the tachometer	4000 rpm

https://truckmanualshub.com/

Recommended Engine Speed

Implement	Recommended engine speed
PTO 540	Use within yellow range
Loader	Use within orange range

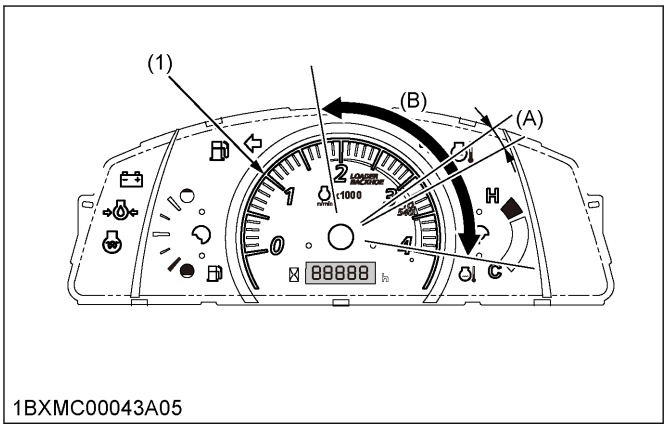

(1) Tachometer
(A) Yellow range
(B) Orange range

PARKING THE TRACTOR

When parking the tractor, be sure to set the parking brake.

WARNING

To avoid serious injury or death:
Before getting off the tractor

- **Always set the parking brake and lower all implements to the ground.**
  Leaving the transmission in gear with the engine stopped will not prevent the tractor from accidental rolling.
- **Stop the engine and remove the key.**

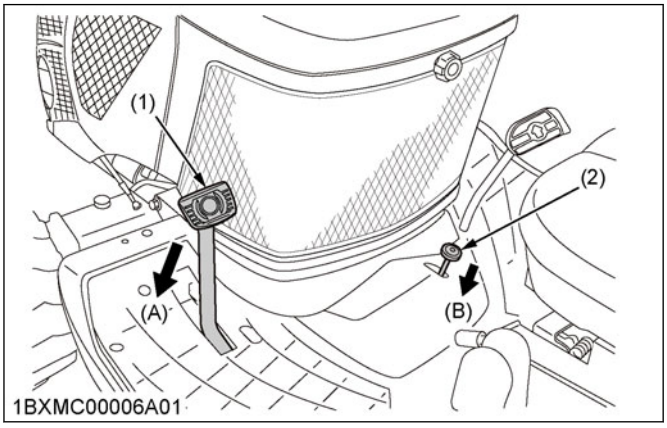

(1) Brake pedal
(2) Parking brake lock pedal
(A) Depress
(B) Push down parking brake lock pedal while depressing brake pedal

Before getting off the tractor, follow the following procedure

1. Disengage the PTO.
2. Lower all implements to the ground.
3. Place all control levers in their **neutral** positions.
4. Set the parking brake.
   See *"To set the parking brake"* in 3.1 How to use the parking brake on page 32.
5. Stop the engine.
6. Remove the key.

If it is necessary to park the tractor on an incline, be sure to chock the wheels to prevent accidental rolling of the tractor.

TECHNIQUES FOR OPERATING THE TRACTOR

1. Differential lock

WARNING

To avoid personal injury or death due to loss of steering control:

- **Do not operate the tractor at high speed with differential lock engaged.**
- **Do not attempt to turn with the differential lock engaged.**
- **Be sure to release the differential lock before making a turn in field conditions.**

If one of the rear wheels should slip, depress the differential lock pedal. Both wheels will then turn together, which reduce slippage of the rear wheels.
The differential lock is maintained only while the differential-lock-pedal is depressed.

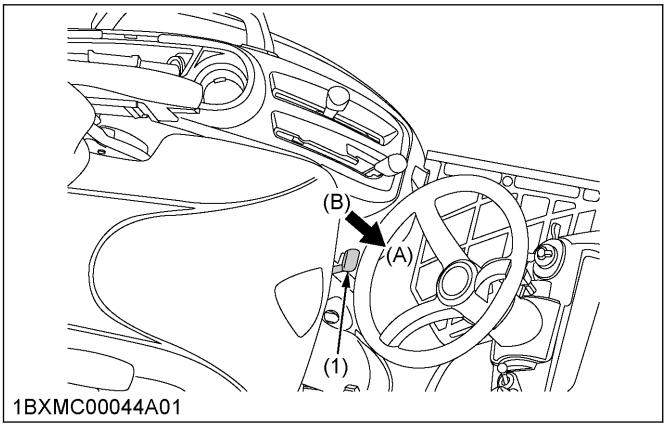

(1) Differential lock pedal
(A) Press to engage
(B) Release to disengage

IMPORTANT :

- **When using the differential lock, always slow the engine down.**
- **To prevent damage to power train, do not engage differential lock when one wheel is spinning and the other is completely stopped.**
- **If the differential lock cannot be released in the preceding manner, alternately press the speed-control-pedal forward and backward slightly.**

https://truckmanualshub.com/

2. Precautions for operating the tractor on a road

WARNING

To avoid serious injury or death:

- **When traveling on road with 3-point hitch mounted implement attached, be sure to have sufficient front weight on the tractor to maintain steering ability.**

Be sure that the SMV emblem and the warning lamps are clean and visible. If towed or rear-mounted equipment obstructs these safety devices, install the slow-moving-vehicle (SMV) emblem and the warning lamps on the equipment.
Consult your local KUBOTA Dealer for further details.

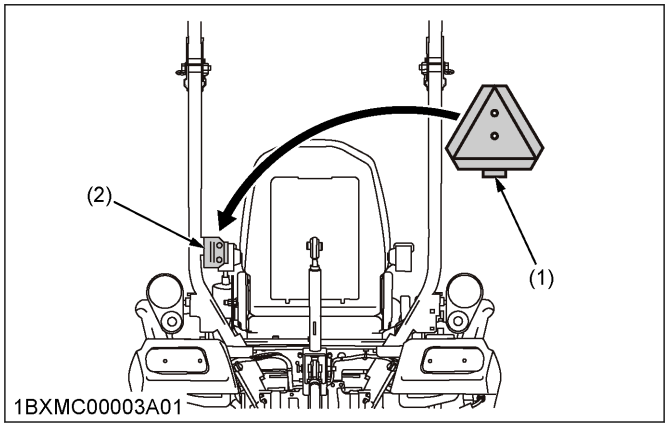

(1) SMV emblem *(2) Bracket*

3. Precautions for operating the tractor on a slopes and rough terrain

WARNING

To avoid serious injury or death:

- **Always back the tractor up when the tractor is going up to a steep slope. Driving forward could cause the tractor to tip over backward. Stay off hills and slopes too steep for safe operation of the tractor.**
- **Avoid changing gears when the tractor is climbing or descending a slope.**
- **If operating the tractor on a slope, never disengage the shift levers to neutral. Disengage the shift levers to neutral could cause loss of control.**
- **Do not drive the tractor close to the edges of ditches or banks which may collapse under the weight of the tractor, especially when the ground is loose or wet.**

- Slow down for slopes, rough ground, and sharp turns, especially when transporting heavy, rear mounted equipment.
- Before descending a slope, shift to a gear low enough to control speed without using brakes.

4. Precautions for transporting the tractor safely

- The tractor, if damaged, must be carried on a truck. Secure the tractor tightly with ropes.
- Follow the instruction as follows when towing the tractor. Otherwise, the tractor's powertrain may get damaged.
  - Set the all shift levers to their **neutral** position.
  - If possible, start the engine and select 2WD. If creep speed is fitted, make sure that creep speed is disengaged.
  - Tow the tractor using its front hitch or drawbar.
  - Never tow the tractor faster than following speed.

Towing speed	10 km/h (6.2 mph)

5. Directions for use of the power steering

- The power steering is activated only while the engine is running. While the engine is stopped, the tractor functions in the same manner as tractors without power steering.
- Turning the steering wheel all the way to the stop activates the relief valve. Do not hold the steering wheel in the stop for a long period of time.
- Avoid turning the steering wheel while the tractor is stopped, or tires may wear out sooner.
- The power-steering-mechanism makes the steering easier. Be careful when driving on a road at high speeds.

https://truckmanualshub.com/

PTO (POWER TAKE-OFF)

PTO OPERATION

WARNING

To avoid serious injury or death:

- **Before operation of PTO, be sure to select the position of the PTO-select-lever (mid , mid/rear , rear).**
- **Disengage PTO, stop the engine, and allow all rotating components to come to a complete stop before connecting, disconnecting, adjusting, or cleaning any PTO driven equipment.**

1. PTO select lever

IMPORTANT :

- **To avoid shock when loading to the PTO, reduce the engine accelerator from full to half speed by pushing up on the engine accelerator when engaging the PTO. Then open the accelerator to the full speed.**
- **To avoid damage of transmission, when the PTO-select-lever is not smoothly shifted, slightly shift the PTO-clutch-lever.**

The tractor has a 540 rpm rear PTO speed and a 2500 rpm mid PTO speed.

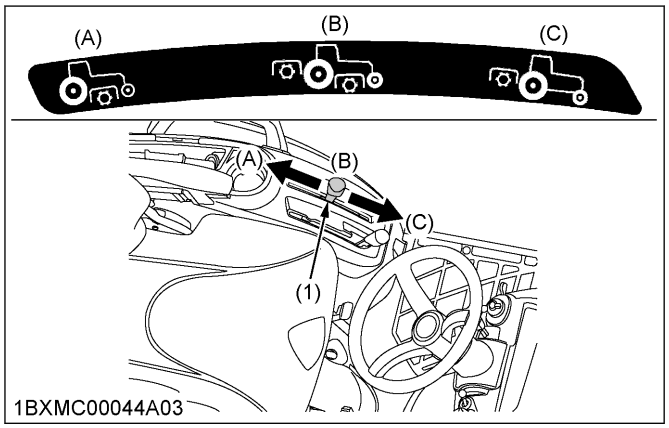

(1) PTO select lever
(A) Mid PTO position
(B) Mid-Rear-PTO position
(C) Rear-PTO position

Mid PTO

To use the mid PTO, shift the PTO-select-lever to the **mid PTO** position and the PTO-clutch-lever to the **on** position. The mid PTO is available for KUBOTA approved implements.

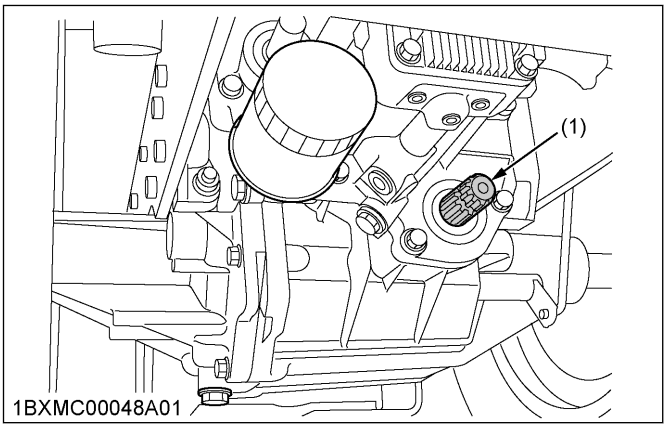

(1) Mid PTO

Mid-Rear PTO

To use the mid PTO and the rear PTO at the same time, shift the PTO-select-lever to the **mid-rear PTO** position and the PTO-clutch-lever to the **on** position.

Rear PTO

To use the rear PTO, shift the PTO-select-lever to the **rear PTO** position and the PTO-clutch-lever to the **on** position.

2. PTO clutch lever

The PTO-clutch-lever engages or disengages the PTO clutch which gives the PTO independent control.

IMPORTANT :

- **To avoid shock when loading to the PTO, reduce the engine accelerator from full to half speed by pushing up on the engine accelerator when engaging the PTO. Then open the accelerator to the full speed.**
- **When you engage the PTO clutch, shift the PTO-clutch-lever slowly to avoid damage to the PTO clutch and implement. Do not keep the PTO-clutch-lever half way.**

Shift the PTO-clutch-lever to the **on** position to engage the PTO clutch. Shift the PTO-clutch-lever to the **off** position to disengage the PTO clutch.

https://truckmanualshub.com/

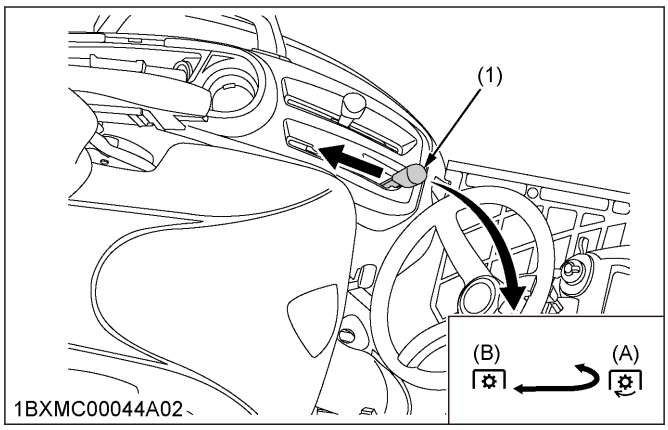

(1) PTO clutch lever *(B) Off (disengage)*
(A) On (engage)

NOTE :

- **The tractor engine will not start if the PTO-clutch-lever is in the engaged ON position.**
- **When you stand up from the seat with the PTO-clutch-lever at the engaged ON position, the engine will stop regardless of the position of the PTO select lever. This is because that the tractor is equipped with operator-presence-control-system (OPC).**

3. PTO shaft cover and PTO shaft cap

WARNING

To avoid serious injury or death:

- **Before connecting or disconnecting a drive shaft to PTO shaft, be sure that the engine is off and raise up the PTO-shaft-cover.**
  Afterward be sure to return the PTO-shaft-cover to the normal position.

IMPORTANT :

- **The universal joint of the PTO-drive-shaft is technically limited in its moving angle. Refer to *the PTO Drive Shaft Instructions* for proper use.**

Keep the PTO-shaft-cover in place at all times. Keep the PTO-shaft-cap when the PTO is not in use.

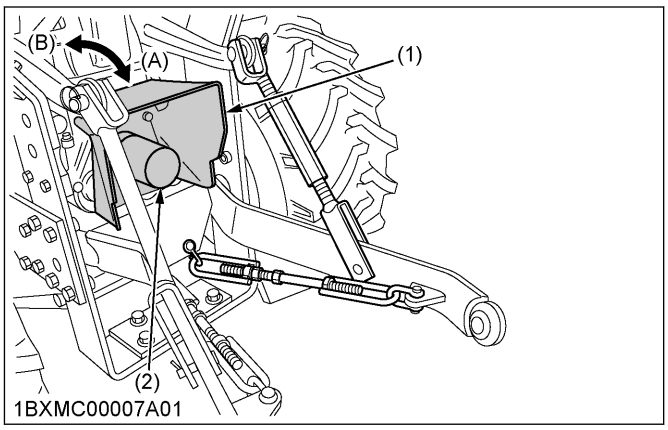

(1) PTO shaft cover *(A) Normal position*
(2) PTO shaft cap *(B) Raised position*

4. Using stationary PTO

To park the tractor and use the PTO system for chipper or pump, for example, start the PTO system in the following steps.

1. Apply the parking brake and place blocks at the tires.
2. Make sure that all shift levers are in their **neutral** position, and start the engine.
3. Set the PTO-select-lever to the **Rear-PTO (Rear only)** position.
4. Get off the seat and tilt up it.
5. Move the seat-lock-lever behind the seat frame in the arrow direction in the following figure to release the seat lock, and lift the seat forward.

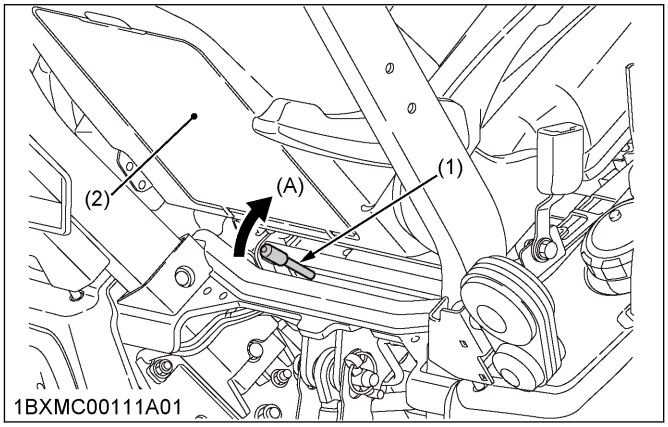

(1) Seat lock lever *(A) Unlock*
(2) Seat

6. Set the PTO-clutch-lever to the **on (engage)** position.
7. Set the engine speed appropriately to provide recommend rear PTO speed.

https://truckmanualshub.com/

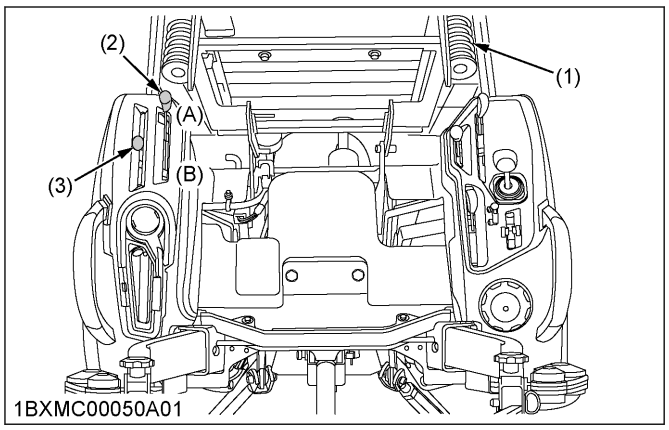

(1) Seat
(2) PTO clutch lever
(3) PTO select lever
(A) On
(B) Off

NOTE :

- **If the PTO clutch lever is shifted to the on (engage) position under the following condition, the engine will stop itself.**
  - **The speed-control-pedal is not in the neutral position.**
  - **The PTO-select-lever is not in the rear PTO position.**
  - **The seat is not tilted forward.**

5. PTO drive shaft

The PTO-drive-shafts are designed for specific machines and power requirement.

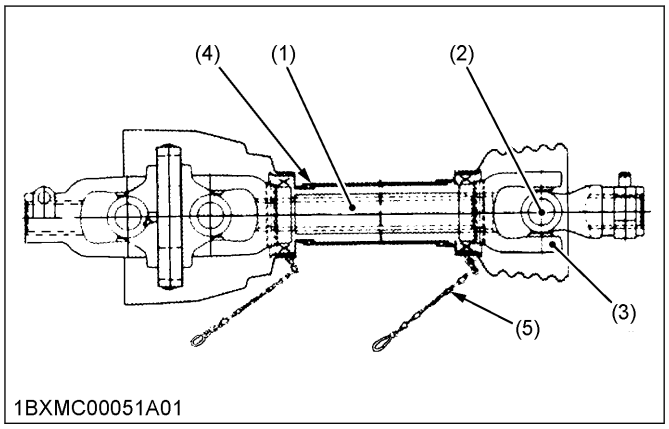

(1) Inner and outer sliding profile tubes
(2) Journal cross assy
(3) Fitting yoke
(4) Safety guard (in, out)
(5) Chain

- When using a PTO-drive-shaft, read *the operator's manual of the implement* before operating the implement.
- If it is necessary for using the PTO-drive-shaft, adjust the length of it.
  See 5.1 Adjusting the length of PTO drive shaft on page 54.
- Make sure that the PTO-drive-shaft is securely connected at both ends before operating it.

5.1 Adjusting the length of PTO drive shaft

To adjust the length of the PTO-drive-shaft, refer to the following instructions.

1. To adjust the inner-and-outer-guard-tubes, hold the half shafts next to each other in the shortest working position, and mark the half shafts in the shortest working position of the inner-and-outer-guard-tubes.
2. Shorten the inner-and-outer-guard-tubes to the marked position equally.
3. Shorten the inner-and-outer-sliding-profile-tubes by the same length as the inner-and-outer-guard-tubes.
4. Round all sharp edges off, remove burrs, and grease sliding profiles.

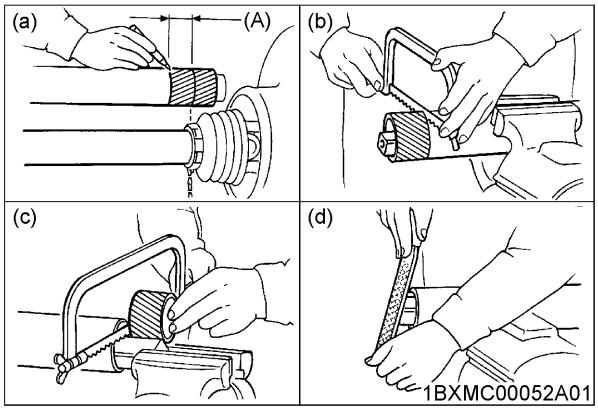

(a) Reference image for step 1.
(b) Reference image for step 2.
(c) Reference image for step 3.
(d) Reference image for step 4.
(A) 40 mm (1.57 in.)

https://truckmanualshub.com/

3-POINT HITCH AND DRAWBAR

OVERVIEW OF 3-POINT HITCH AND DRAWBAR

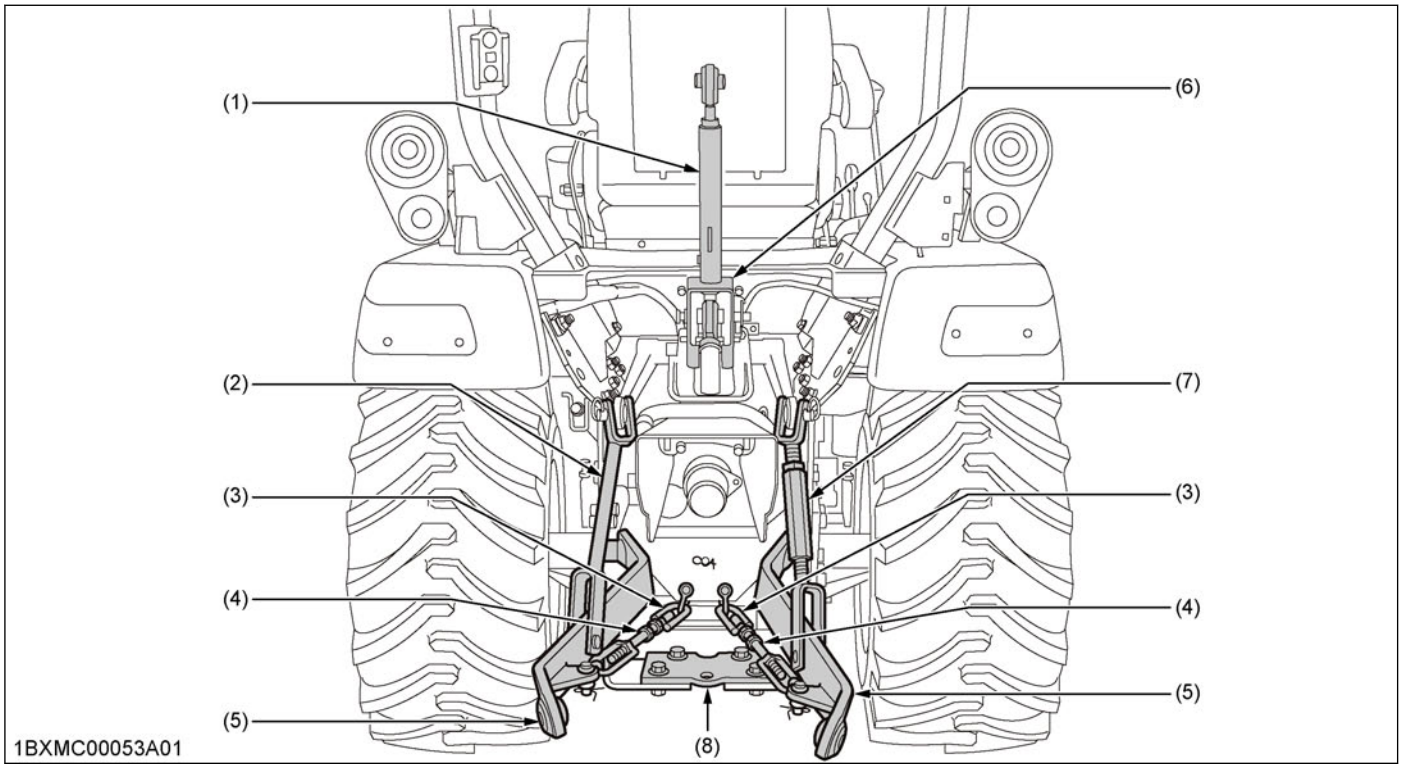

(1) Top link
(2) Lifting rod (left)
(3) Check chains
(4) Turnbuckle
(5) Lower link
(6) Top link holder
(7) Lifting rod (right)
(8) Hitch
(9) Holder plate

Use the holder plate to hold the lower link higher while mowing with mid-mount mower only over uneven terrain.

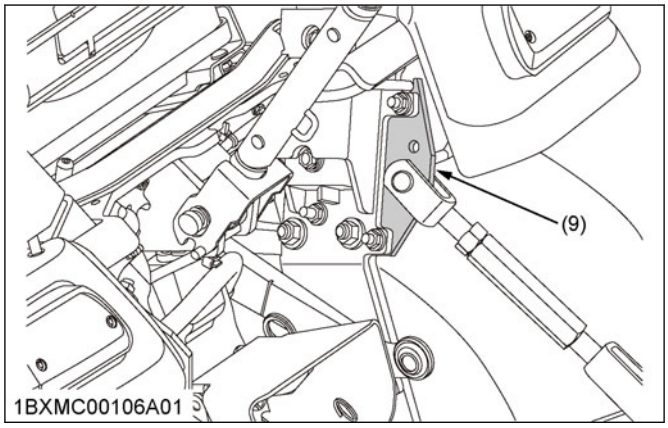

(9) Holder plate

https://truckmanualshub.com/

3-POINT HITCH

1. Precautions for attaching and detaching the implements to the 3-point hitch

WARNING

To avoid serious injury or death:

- **Be sure to stop the engine and remove the key.**
- **Do not stand between the tractor and the implement unless the parking brake is applied.**
- **Before attaching or detaching the implement to the 3-point-hitch, locate the tractor and the implement on a firm, flat, and level surface.**
- **Whenever an implement or other attachment is connected to the tractor by the 3-point-hitch, slowly move the 3-point-hitch through the full range of operation and check for interference, binding, or PTO separation before operating the machine.**

2. Adjusting the lifting rod (right)

WARNING

To avoid personal injury or death:

- **Do not extend lifting rod beyond the groove on the thread rod.**

1. Level a 3-point-mounted implement from side to side by turning the adjusting turnbuckle to shorten or lengthen the adjustable lifting rod with the implement on the ground.
2. After adjustment, tighten the lock nut securely. Do not extend the lift rod beyond the groove on the threaded rod when extending it.

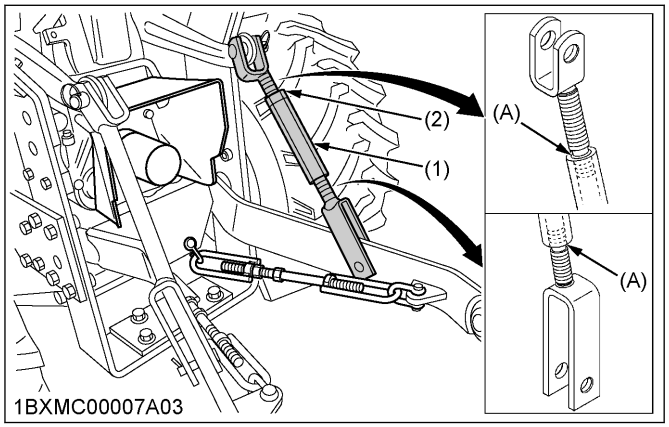

(1) Adjusting turnbuckle *(A) Groove*
(2) Lock nut

3. Adjusting the top link

The proper length of the top link varies according to the type of implement being used.

NOTE :

- **When not using the top link, make it the shortest length and fix it to the top link holder.**

1. Adjust the angle of the implement to the desired position by shortening or lengthening the top link.

4. Adjusting the check chains

1. Make sure that the check chains are installed as the following figure.
2. Adjust the turnbuckle to control horizontal sway of the implement.
3. After adjustment, retighten the lock nut.

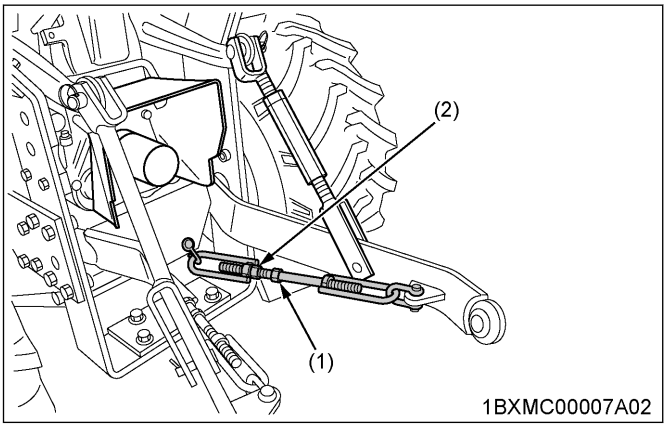

(1) Turnbuckle *(2) Lock nut*

HITCH

WARNING

To avoid serious injury or death:

- **Never pull from the top link, the rear axle, or any point above the hitch. If you pull from the top link, the rear axle, or any point above the hitch, the tractor can tip over rearward causing personal injury or death.**

https://truckmanualshub.com/

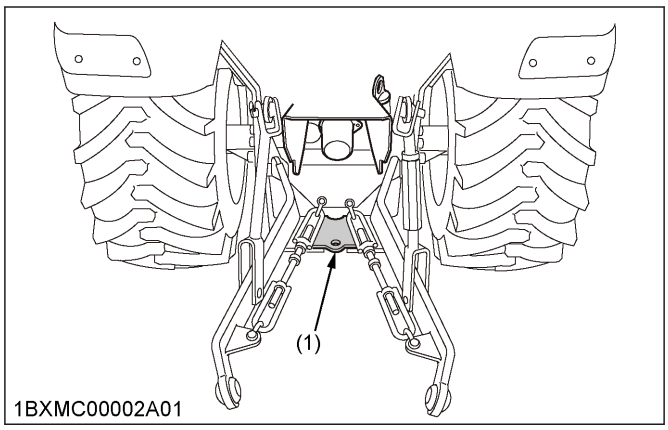

(1) Hitch

https://truckmanualshub.com/

HYDRAULIC UNIT

3-POINT HITCH CONTROL SYSTEM

WARNING

To avoid serious injury or death:

- **Before using the 3-point hitch controls, make sure that no person or object is in the area of the implement or 3-point hitch.**
- **Do not stand on or near the implement or between the implement and tractor when operating the 3-point hitch controls.**

1. Hydraulic control

IMPORTANT :

- **Do not operate until the engine is warmed up. If operation is attempted when the engine is still cold, the hydraulic system may be damaged.**
- **If noises are heard when implement is lifting after the hydraulic control lever has been activated, the hydraulic mechanism is not adjusted properly.**
  If you do not correct the hydraulic control unit, it will be damaged.
  Contact your KUBOTA Dealer for adjustment.

Operating the hydraulic control lever actuates the hydraulic lift arm, which controls the elevation of the 3-point-hitch-mounted implement.
To lower the implement, move the hydraulic control lever forward (the position). To raise the implement, move the hydraulic control lever rearward (the position).
In the **slow down** position and the **slow up** position of the hydraulic control lever in contact with the inner stopper, you can control the valve with ease in the following increments at the lower link end.

Increments at the lower link end	approximately 6.4 mm (0.25 in.)

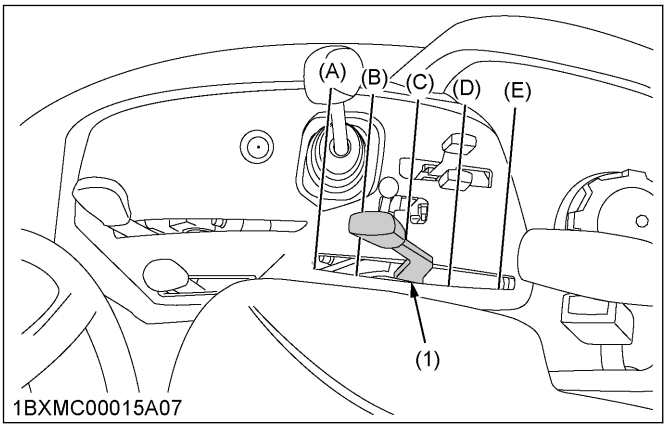

(1) Hydraulic control lever
(A) Down
(B) Slow down
(C) Neutral
(D) Slow up
(E) Up

IMPORTANT :

- **If the 3-point-hitch can not be raised by setting the hydraulic control lever to the up (raised) position after long term storage or when changing the transmission oil, follow the following air bleeding procedures.**
  1. **Stop the engine.**
  2. **Set the hydraulic control lever to the down (lowered) position and start the engine.**
  3. **Operate the engine at low idle speed for the following seconds to bleed air from the system.**

Operating the engine at low idle speed	at least 30 seconds

2. Lowering speed of 3-point hitch

The lowering speed of the 3-point hitch can be controlled or locked in similar fashion to a water faucet.

WARNING

To avoid serious injury or death:

- **Fast lowering speed may cause damage or injury. Lowering speed of implement should be adjusted to two or more seconds.**

Turn toward the **fast** to increase, the **slow** to reduce, and the **lock** firmly to the stop for lock.

https://truckmanualshub.com/

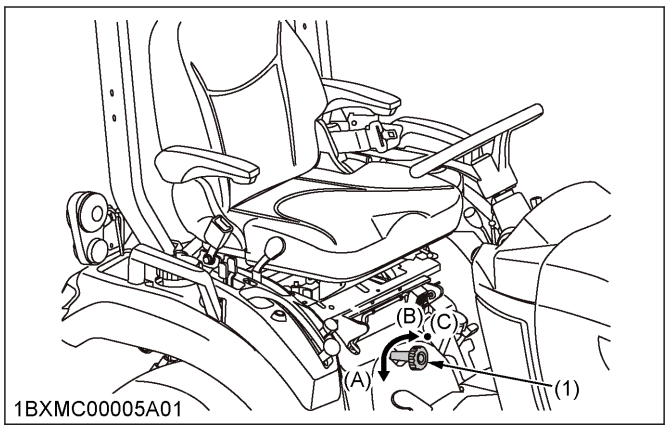

(1) 3-point hitch lowering speed knob
(A) Fast
(B) Slow
(C) Lock

AUXILIARY HYDRAULICS

A hydraulic outlet attaches to the tractor.

WARNING

To avoid serious injury or death:

- **Escaping hydraulic fluid under pressure can have sufficient force to penetrate skin, which cause serious personal injury.**
  Before disconnecting lines, be sure to relieve all pressure.
- **Before applying pressure to the hydraulic system, be sure all connections are tight, and that lines, tubes, and hoses are not damaged.**
- **Fluid escaping from a very small hole can be almost invisible. Use a piece of cardboard or wood, rather than hands to search for suspected leaks.**
- **If someone gets injured by escaping fluid, see a doctor at once. Serious infection or allergic reaction will develop if proper medical treatment is not administered immediately.**

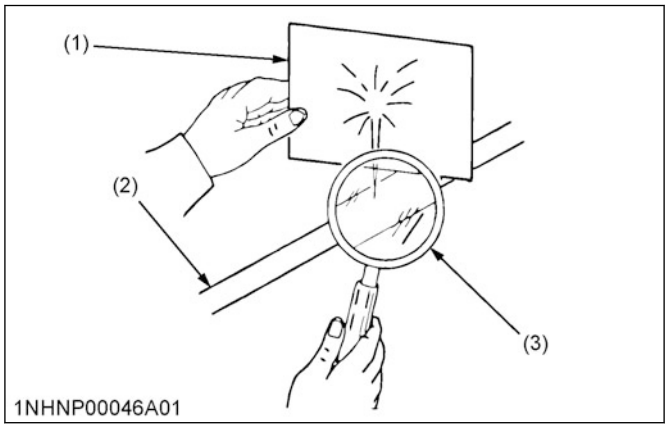

(1) Cardboard
(2) Hydraulic line
(3) Magnifying glass

1. Hydraulic outlet

Hydraulic outlet is useful when adding the hydraulically operated equipment such as front end loader, front blade, and so on.

IMPORTANT :

- **For the hydraulic outlet, be sure to use the control valve of the power-beyond-type with the relief valve. The third line returns to tank for the operation of the hydraulic block.**

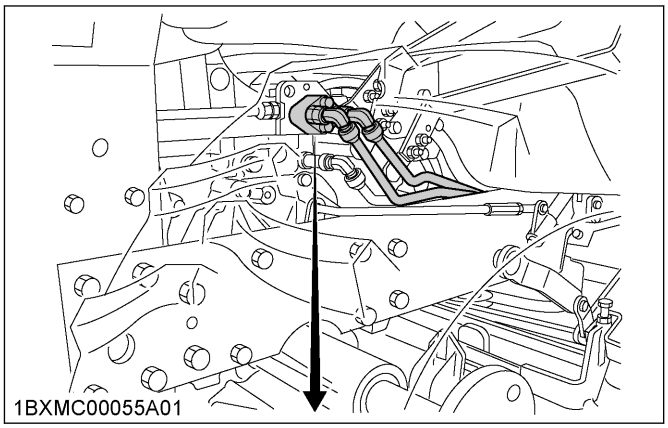

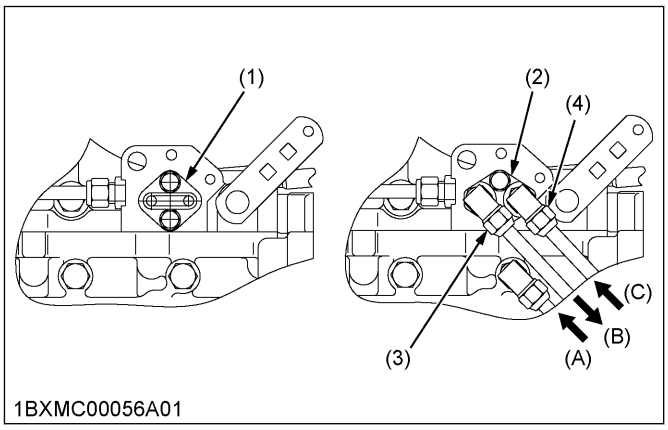

(1) Block cover
(2) Block outlet cover (option)
(3) Outlet
(4) Inlet
(A) Return port
(B) To implement (outlet)
(C) From implement (inlet)

Max. flow of outlet	14 L/min (3.7 U.S.gals./min)
No relief valve in the hydraulic block.	

When implement is attached, follow the following procedure.

1. Remove the block cover.
2. Attach the block outlet cover (option).
   The block outlet cover is standard part for KUBOTA Implements
3. Route the implement inlet, outlet, and return pipes as shown in the figures.

https://truckmanualshub.com/

MOWER LIFT LINKAGE SYSTEM

1. Cutting height control dial

When mounting the Mid-mount mower, turn the cutting-height-control-dial to the desired height.
For further details, refer to the following operator's manuals of rotary mower.

- *RCK60B-23BX*
- *RCK54-23BX*
- *RCK48-18BX*
- *RCK60D-26BX*
- *RCK54D-26BX*.

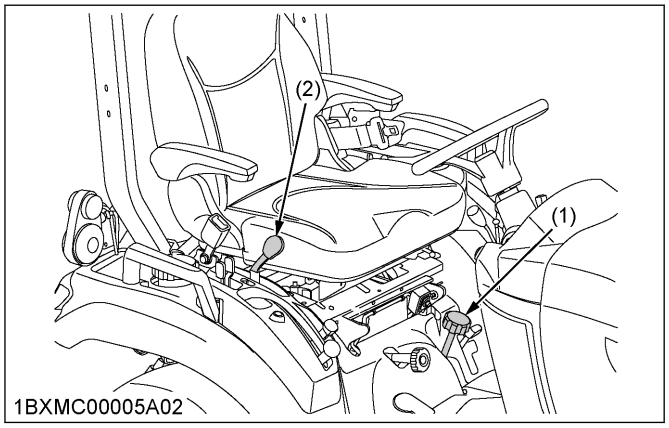

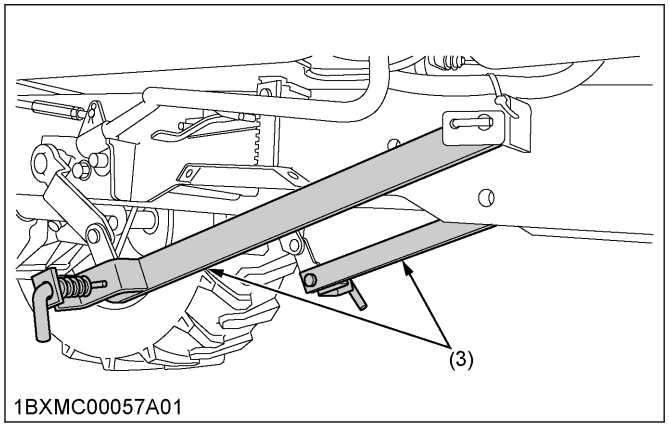

(1) Cutting height control dial
(2) Hydraulic control lever
(3) Mower rear link

IMPORTANT :
When operating the tractor without Mid-mount mower, follow the following procedure.

1. **Move the hydraulic lever rearward (the position) to raise the mower rear links to the highest position.**
2. **Set the cutting-height-control-dial to the top position.**

If you do not follow this procedure, damage of the mower rear link can result.

https://truckmanualshub.com/

2. Hydraulic control unit use reference chart

In order to use the hydraulics properly, the operator must know the following chart. Though this information may not be applicable to all types of implements and soil conditions, it is useful for general conditions.

Implement	1AGAIAZAP122A **Soil condition**	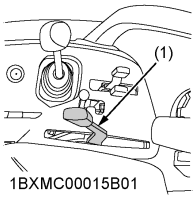 1BXMC00015B01 *(1) Hydraulic control lever*	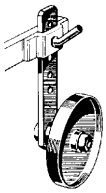 1AGAIAZAP070A **Gauge wheel**	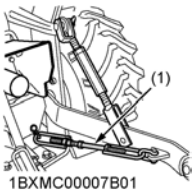 1BXMC00007B01 *(1) Check chains*
Moldboard plow	Light soil, medium soil, heavy soil	Hydraulic control	YES/NO	Loose Adjust the check chains so that the implement can move 5 cm to 6 cm (2.0 in. to 2.4 in.) laterally. The check chains should be tight enough to prevent excessive implement movement when implement is in raised position.
Disc plow	-			
Harrower (spike type, springtooth type, and disc type)				
Sub-soiler				
Weeder, ridger			YES	Tighten
Earthmove, digger scraper, and manure fork rear carrier			YES/NO For implements with gauge wheels, set the hydraulic control lever to the **lowered (down)** position all way.	
Mower (mid-and rear-mount type), hayrake, and tedder				

https://truckmanualshub.com/

AUXILIARY HYDRAULIC CONTROL VALVE (IF EQUIPPED)

WARNING

To avoid serious injury or death:

- **Escaping hydraulic fluid under pressure can have sufficient force to penetrate skin, which cause serious personal injury.**
  Before disconnecting lines, be sure to relieve all pressure.
- **Before applying pressure to the hydraulic system, be sure all connections are tight, and that lines, tubes, and hoses are not damaged.**
- **Fluid escaping from a very small hole can be almost invisible. Use a piece of cardboard or wood, rather than hands to search for suspected leaks.**
- **If someone gets injured by escaping fluid, see a doctor at once. Serious infection or allergic reaction will develop if proper medical treatment is not administered immediately.**

1. Valve lock

The control valve is equipped with a feature of the valve lock.

WARNING

To avoid serious injury or death from crushing:

- **Do not utilize the valve lock for machine maintenance or repair.**
- **The valve lock is to prevent accidental actuation when implement is not in use or during transport.**

The control valve is locked in the **lock** position.

The lock is not intended and will not prevent a leak down of the implement during the period of storage.

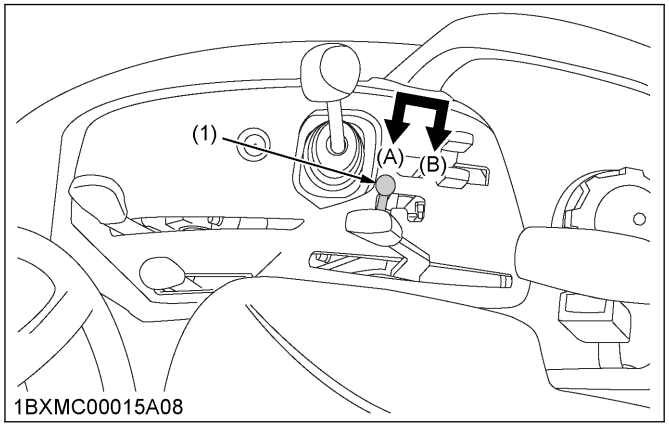

(1) Lock lever
(A) Lock
(B) Unlock

2. Auxiliary hydraulic ports

The auxiliary hydraulic ports are equipped with quick couplers.

If you do not use the auxiliary hydraulic ports, place the dust plugs on the quick couplers ends.

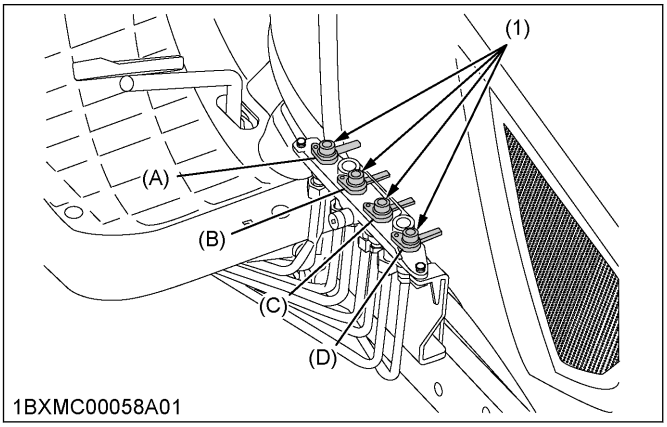

(1) Dust plugs
(A) Left (blue)
(B) Right (red)
(C) Backward (yellow)
(D) Forward (white)

3. Connecting the auxiliary hydraulic control lever and hydraulic hose to the auxiliary hydraulic port

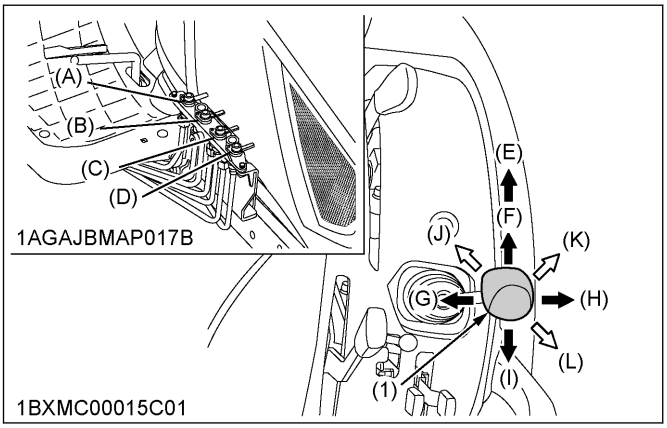

(1) Auxiliary hydraulic control lever (if equipped)
(A) Blue
(B) Red
(C) Yellow
(D) White
(E) Float
(F) Forward
(G) Left
(H) Right
(I) Backward
(J) Forward left
(K) Forward right
(L) Backward right

Hydraulic outlet ports of first segment

Lever		Backward		Forward	
Port	White	In	←	Out	→
	Yellow	Out	→	In	←

→ Pressure

← Returning

https://truckmanualshub.com/

Hydraulic outlet ports of second segment

Lever		Right		Left	
Port	Blue	In	←	Out	→
	Red	Out	→	In	←

→ Pressure

← Returning

1. Connect the auxiliary-hydraulic-control-lever in its specified direction and the hydraulic hoses to their specified ports.
2. Before moving the auxiliary-hydraulic-control-lever, make sure that the hydraulic hoses for attachments are connected.
3. Move the auxiliary-hydraulic-control-lever diagonally (**forward left**, **forward right**, and **backward right** as shown in the figure).
   The first and second segments can be controlled at once.

   IMPORTANT :
   To avoid damage of the attachments:
   - **Do not connect attachments through the hydraulic motor to the blue port and the red port. If the auxiliary-hydraulic-control-lever is moved to the regeneration (right) position, the seals on the hydraulic motor will be damaged.**
   - **This control valve is provided with the regeneration (right) position. When the blue port and the red port are used to take off hydraulic power for the hydraulic cylinder, be sure to connect the blue port to the head-end side port of the hydraulic cylinder.**
   - **Make the following connections when using this control valve to take off hydraulic power for the hydraulic cylinder.**

Colored Coupler	Hydraulic Cylinder port
Blue and yellow	Head-End side
White and red	Rod-End side

   NOTE :
   - **If you move the auxiliary-hydraulic-control-lever to the float position, it will be held there by the detent mechanism. To use the valve as a floating valve with detents, connect the hydraulic hoses to the white port and the yellow port.**

4. Controlling loader (only if equipped with loader)

- When moving the auxiliary-hydraulic-control-lever forward, the loader will go down.
- When moving the auxiliary-hydraulic-control-lever backward, the loader will go up.
- When moving the auxiliary-hydraulic-control-lever to the left, the bucket will roll back.
- When moving the auxiliary-hydraulic-control-lever to the right, the bucket will dump.
- When moving the auxiliary-hydraulic-control-lever diagonally, the loader and bucket will work in the same time.

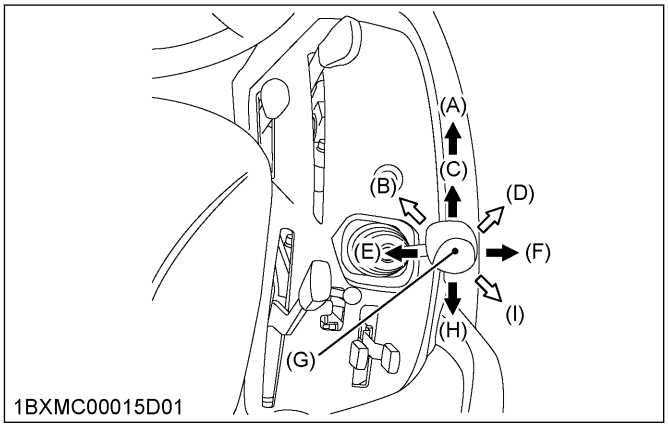

(A) Float
(B) Down and roll back
(C) Down
(D) Dump and down
(E) Roll back
(F) Dump1
(G) Normal position
(H) Up
(I) Up and dump

Lower
Lowering the loader has two stages that operate the loader differently.

- **Down**
  When shifting the auxiliary-hydraulic-control-lever forward, the loader will go down with hydraulic pressure. This lever position is the first stage for lowering the loader.
- **Float**
  When shifting the auxiliary-hydraulic-control-lever further forward until feeling the bump, pressure in the connector lines is released so the loader will go down by its own weight. This lever position after the bump is the second stage. When the operator lets the hand off from the auxiliary-hydraulic-control-lever, it will stay in the second stage position. Shift the auxiliary-hydraulic-control-lever backward to place it to the normal position.

https://truckmanualshub.com/

TIRES, WHEELS, AND BALLAST

TIRES

WARNING

To avoid serious injury or death:

- **Do not attempt to mount a tire on a rim. Only a qualified person with the proper equipment should mount a tire on a rim.**
- **Always maintain the correct tire pressure.**
  Do not inflate the tires above the recommended pressure shown in the *"Inflation pressure of tires"* section.

See 1. Inflation pressure of tires on page 64.

IMPORTANT :

- **Do not use tires other than those approved by KUBOTA.**
- **When you intend to mount different size of tires from equipped ones, consult your dealer about front drive gear ratio for details.**
  Excessive wear of tires may occur due to improper gear ratio.

1. Inflation pressure of tires

Though the tire pressure is factory-set to the prescribed level, it naturally drops slowly in the course of time. Thus, check it everyday and inflate as necessary.

[BX1880]

	Tire sizes	Inflation Pressure
Rear	24x12.00-12 Turf	100 kPa (1.0 kgf/cm^2) [14 psi]
	24x12.00-12 Bar	120 kPa (1.2 kgf/cm^2) [17 psi]
Front	16x7.50-8 Turf	120 kPa (1.2 kgf/cm^2) [17 psi]
	16x7.50-8 Bar	230 kPa (2.3 kgf/cm^2) [34 psi]

[BX2380 and BX2680]

	Tire sizes	Inflation Pressure
Rear	26x12.00-12 Turf	100 kPa (1.0 kgf/cm^2) [14 psi]
	26x12.00-12 Bar	120 kPa (1.2 kgf/cm^2) [17 psi]
	26x12.00-12 Ind.	120 kPa (1.2 kgf/cm^2) [17 psi]
Front	18x8.50-10 Turf	120 kPa (1.2 kgf/cm^2) [17 psi]
	18x8.50-10 Bar	150 kPa (1.5 kgf/cm^2) [22 psi]
	18x8.50-10 Ind.	150 kPa (1.5 kgf/cm^2) [22 psi]

NOTE :

- **Maintain the maximum pressure in front tires, if using a front loader or when equipped with a full load of front weight.**

2. Dual tires

Dual tires are not approved.

WHEEL TREAD

WARNING

To avoid serious injury or death:

- **Support the tractor securely on stands before removing a wheel.**
- **Never operate the tractor with a loose rim, wheel, or axle.**

IMPORTANT :

- **When re-fitting or adjusting a wheel, follow the procedure.**
  1. **tighten the bolts to the torques as shown in the following table.**

https://truckmanualshub.com/

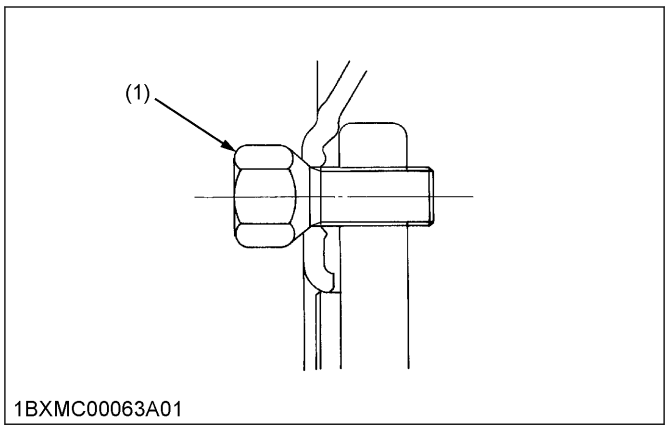

(1) Bolt

	Tightening torques
Front	149.2 N·m to 179.0 N·m (15.2 kgf·m to 18.3 kgf·m) [110 lbf·ft to 132 lbf·ft]
Rear	108.5 N·m to 130.2 N·m (11.1 kgf·m to 13.3 kgf·m) [80 lbf·ft to 96 lbf·ft]

2. **Then recheck as the following table.**
   See SERVICE INTERVALS on page 69.

Timing to recheck the bolts	After driving the tractor 200 m (200 yards), after 1 day (8 hours), and thereafter every 50 hours

NOTE :
- **Use the tapered bolts for wheels with beveled or tapered holes.**

1. Front wheels

IMPORTANT :
- **Do not turn the front discs to obtain wider tread.**
- **Always attach tires as shown in the figures in the following table.**
  If you not attach the front wheel as illustrated in the table, transmission parts may be damaged.

You can not adjust width of the front tread.

Models	BX1880	BX2380 and BX2680
Tire	16x7.50-8 Turf, 16x7.50-8 Bar	18x8.50-10 Turf, 18x8.50-10 Bar, 18x8.50-10 Ind.
Tread	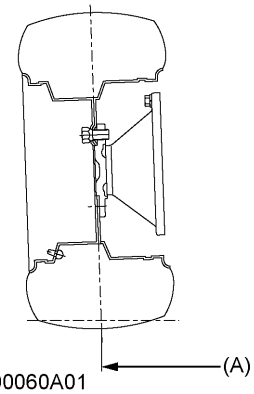 *(A) 930 mm (36.6 in.)*	

How to jack up the front axle

WARNING

To avoid serious injury or death:
- **Before jacking up the tractor, park it on a firm and level ground and chock the rear wheels.**
- **Fix the front axle to keep it from pivoting.**
- **Select jacks that withstand the machine weight and set them up as shown in the following figure.**

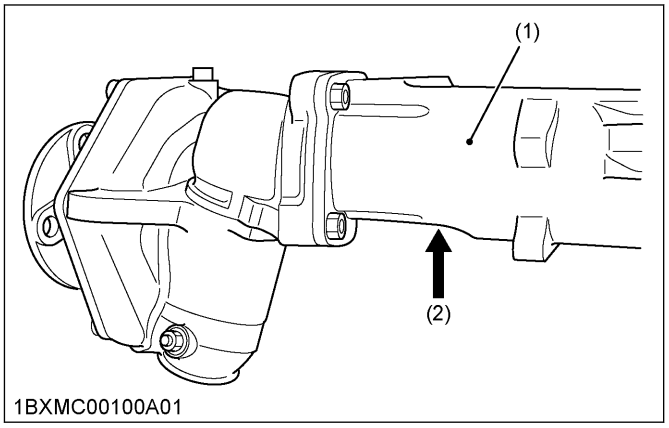

(1) Front axle case *(2) Jack points*

https://truckmanualshub.com/

2. Rear wheels

IMPORTANT :
- **Do not the turn rear discs to obtain wider tread.**
- **Always attach tires as shown in the figures in the following table.**
  If you not attach the rear wheel as illustrated in the table, transmission parts may be damaged.

You can not adjust width of the rear tread.

Models	BX1880	BX2380 and BX2680
Tire	24x12.00-12 Turf, 24x12.00-12 Bar	26x12.00-12 Turf, 26x12.00-12 Bar, 26x12.00-12 Ind.
Tread	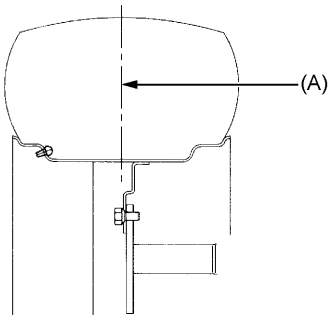 1BXMC00061A01 *(A) 820 mm (32.2 in.)*	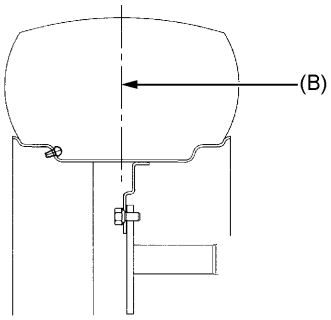 1BXMC00062A01 *(B) 820 mm (32.2 in.)*

How to jack up rear part of the tractor

WARNING

To avoid serious injury or death:
- **Before jacking up the tractor, park it on a firm and level ground and chock the front wheels.**
- **Fix the front axle to keep it from pivoting.**
- **Select jacks that withstand the machine weight and set them up as shown in the following figure.**

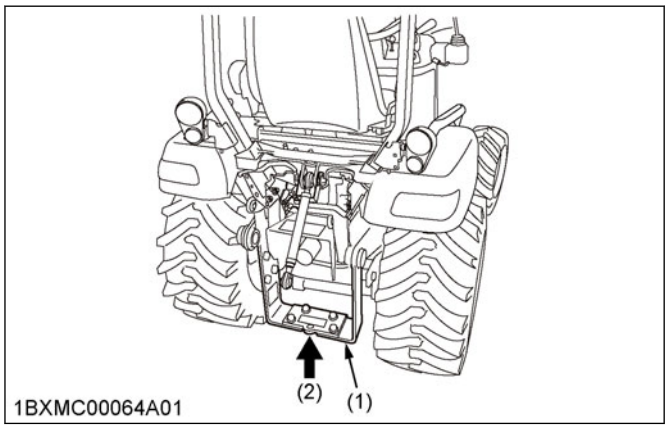

(1) Frame *(2) Jack point*

https://truckmanualshub.com/

BALLAST

WARNING

To avoid serious injury or death:

- **You will need the additional ballast for transporting the heavy implements. When the implement is raised, drive slowly over rough ground, regardless of how much ballast is used.**
- **Do not fill the front wheels with liquid to maintain steering control.**

1. Front ballast

IMPORTANT :

- **Do not overload tires.**
- **Add no more weight than indicated in the following table.**

Maximum weight	125 kg (275 lbs.)

Add weights if needed to improve traction or for stability. Heavy pulling and heavy rear mounted implements tend to lift front wheels. Add enough ballast to maintain steering control and prevent tip over.
Remove weight when no longer needed.

Front end weights (option)

The front end weights can be attached to the bumper.
See your implement operator's manual for required number of weights or consult your local KUBOTA Dealer to use it.

NOTE :

- **Besides the weight, a front weight bracket and mounting bolt kit(s) are required for mounting the weight.**

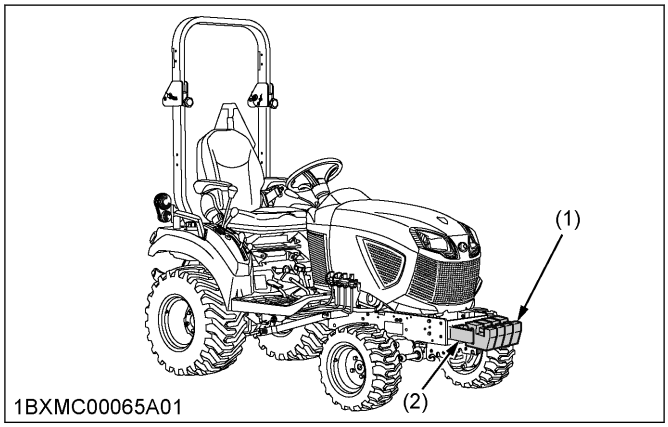

(1) Front end weights (option) *(2) Front weight bracket (option)*

2. Rear ballast

Add weight to rear wheels if needed to improve traction or for stability. The amount of rear ballast should be matched to job and the ballast should be removed when it is not needed.

Liquid ballast in rear tires

The weight should be added to the tractor in the form of liquid ballast.
Water and calcium chloride solution provides safe economical ballast. Using the liquid ballast properly will prevent tires, tubes, or rims from damaging. The addition of calcium chloride is recommended to prevent the water from freezing. The addition of calcium chloride for weighting the wheels has the full approval of the tire companies. See your tire dealer for this service.

Liquid weight per tire (75 percent filled)

Tire sizes	24x12.00-12 [BX1880]	26x12.00-12 [BX2380 and BX2680]
Slush free at -10 ℃ (14 ℉) Solid at -30 ℃ (-22 ℉) [Approx. 1 kg (2 lbs.) $CaCl_2$ per 4 L (1 gal) of water]	35 kg (77 lbs.)	45 kg (99 lbs.)
Slush free at -24 ℃ (-11 ℉) Solid at -47 ℃ (-52 ℉) [Approx. 1.5 kg (3.5 lbs.) $CaCl_2$ per 4 L (1 gal) of water]	38 kg (84 lbs.)	50 kg (110 lbs.)
Slush free at -47 ℃ (-52 ℉) Solid at -52 ℃ (-62 ℉) [Approx. 2.25 kg (5 lbs.) $CaCl_2$ per 4 L (1 gal) of water]	44 kg (97 lbs.)	56 kg (123 lbs.)

IMPORTANT :

- **Do not fill tires with water or solution more than the correct percentage of full capacity as shown in the following table to the level of valve stem at 12 o'clock position.**

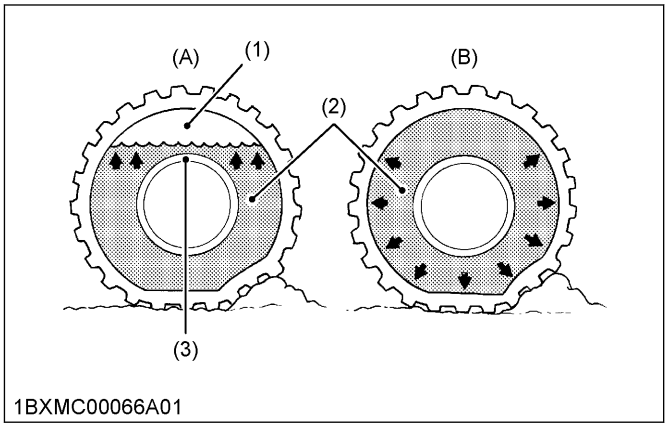

(1) Air
(2) Water
(3) Valve stem
(A) Correct
(B) Incorrect

https://truckmanualshub.com/

	Correct	Incorrect
Amount of water	75% of full capacity of tire	100% of full capacity of tire
Characteristic	Air compresses like a cushion	Water can not be compressed

- **To avoid damage of the transmission, do not use the rear wheel weights and liquid ballast at the same time.**

https://truckmanualshub.com/

MAINTENANCE

SERVICE INTERVALS

No.	Items		Indication on hour meter														Since then	Ref. page		
			50	100	150	200	250	300	350	400	450	500	550	600	650	700				
1	Engine oil	Change	◎			○				○				○			every 200 Hr	86	*1	
2	Engine oil filter	Replace	◎			○				○				○			every 200 Hr	86	*1	
3	Transmission oil filter	Replace	◎			○				○				○			every 200 Hr	87	*1	
4	Transmission fluid	Change	◎							○							every 400 Hr	88		
5	Transmission strainer	Clean	◎							○							every 400 Hr	89		
6	Engine start system	Check	○	○	○	○	○	○	○	○	○	○	○	○	○	○	every 50 Hr	80		
7	OPC system	Check	○	○	○	○	○	○	○	○	○	○	○	○	○	○	every 50 Hr	80		
8	Greasing	-	○	○	○	○	○	○	○	○	○	○	○	○	○	○	every 50 Hr	79		
9	Wheel bolt torque	Check	○	○	○	○	○	○	○	○	○	○	○	○	○	○	every 50 Hr	81		
10	Lock lever	Clean	○	○	○	○	○	○	○	○	○	○	○	○	○	○	every 50 Hr	81		
11	Battery condition	Check		○		○		○		○		○		○		○	every 100 Hr	82	*B	
12	Air cleaner element	Clean		○		○		○		○		○		○		○	every 100 Hr	83	*2	@
		Replace															every 1000 Hr or 1 year	90	*3	
13	Fuel filter element	Check		○		○		○		○		○		○		○	every 100 Hr	84		@
		Replace								○							every 400 Hr	90	*K	
14	Fan belt	Adjust		○		○		○		○		○		○		○	every 100 Hr	84		
15	HST neutral spring	Adjust		○		○		○		○		○		○		○	every 100 Hr	85	*K	
16	Brake pedal	Adjust		○		○		○		○		○		○		○	every 100 Hr	85		
17	Toe-in	Adjust				○				○				○			every 200 Hr	88		
18	Front axle case oil	Change								○							every 400 Hr	89		
19	Front axle pivot	Adjust								○							every 400 Hr	88		
20	Engine valve clearance	Adjust															every 800 Hr	90	*K	
21	Injection pressure of the fuel injection nozzle	Check															every 1500 Hr	90	*K	@
22	Cooling system	Flush															every 2000 Hr or 2 years	90	*4	
23	Coolant	Change															every 2000 Hr or 2 years	90	*4	
24	Injection pump	Check															every 3000 Hr	92	*K	@
25	Radiator hose and clamp	Check															every 1 year	92	*R	
		Replace															every 4 years	94	*K	
26	Power steering oil line	Check															every 1 year	93	*R	
		Replace															every 4 years	94	*K	
27	Fuel line	Check															every 1 year	93	*R	@
		Replace															every 4 years	94	*K	
28	Intake air line	Check															every 1 year	92	*R	@
		Replace															every 4 years	94	*K	

(Continued)

https://truckmanualshub.com/

No.	Items		Indication on hour meter														Since then	Ref. page		
			50	100	150	200	250	300	350	400	450	500	550	600	650	700				
29	Engine breather hose	Check															every 1 year	94	*R *K	
		Replace															every 4 years	94	*K	
30	Fuel system	Bleed															Service as required	94		
31	Fuse	Replace																94		
32	Light bulb	Replace																95		

IMPORTANT :

- **You must do the jobs indicated by ◎ after the first 50 hours of operation.**
- **The items which is @ marked are registered as the emission-related-critical-parts by KUBOTA in the U.S.EPA nonroad emission regulation. As the engine owner, you are responsible for the performance of the required maintenance on the engine according to the preceding instruction.**
  Please see Warranty Statement in detail.

*1 The initial 50 hours should not be a replacement (changing) cycle.
*B When the battery is used for less than 100 hours per year, check the battery condition by reading the indicator annually.
*2 You should clean the air cleaner more often in dusty conditions than in normal conditions.
*3 Every 1,000 hours or every 1 year whichever comes faster.
*K Consult your local KUBOTA Dealer for this service.
*4 Every 2,000 hours or every 2 years whichever comes faster.
*R Replace if any deterioration (crack, hardening, scar, or deformation) or damage occurred.

https://truckmanualshub.com/

LUBRICANTS, FUEL, AND COOLANT

IMPORTANT :

- **To prevent serious damage to hydraulic systems, use only KUBOTA genuine fluid or its equivalent.**

No.	Locations	Capacities			Grade	
		BX1880	BX2380	BX2680		
1	Fuel	25 L (6.6 U.S.gals.)			No. 2-D diesel fuel No. 1-D diesel fuel if temperature is below -10 ℃ (14 ℉)	
2	Coolant with recovery tank	2.9 L (3.06 U.S.qts.)	3.1 L (3.3 U.S.qts.)	3.3 L (3.5 U.S.qts.)	Fresh clean soft water with anti-freeze	
3	Engine crankcase	3.0 L*1 (3.17 U.S.qts.)	3.3 L*1 (3.49 U.S.qts.)	4.0 L*1 (4.23 U.S.qts.)	• **Engine oil** API Service Classification CF or higher	
					Above 25 ℃ (77 ℉)	SAE30, SAE10W-30 or 15W-40
					-10 ℃ to 25 ℃ (14 ℉ to 77 ℉)	SAE20, SAE10W-30, or 15W-40
					Below -10 ℃ (14 ℉)	SAE10W-30
4	Transmission case	11.3 L (2.99 U.S.gals.)			• KUBOTA SUPER UDT-2 fluid*2	
5	Front axle case	3.6 L (3.8 U.S.qts.)			• KUBOTA SUPER UDT-2 fluid *2 or SAE 80-SAE90 gear oil	
6	Greasing	No. of greasing points			Capacity	Type of grease
	Battery terminal	2			moderate amount	Multipurpose EP2 Grease (NLGI Grade No.2)
	Speed control pedal	1			until grease overflow	
	Rear link	4			moderate amount	
	Bonnet lock	1			moderate amount	
	Bonnet guide	1			moderate amount	

*1 Oil amount when the oil level is at the upper level of the oil level gauge.

*2 The product name of KUBOTA genuine UDT fluid may be different from that in the operator's manual depending on countries or territories. Consult your local KUBOTA Dealer for further detail.

Fuel

- Cetane number of 45 is minimum. Cetane number greater than 50 is preferred, especially for the following temperatures or the following elevations.

Temperatures	Below -20 ℃ (-4 ℉)
Elevations	Above 1500 m (5000 ft)

- Diesel fuels specified to EN 590 or ASTM D975 are recommended.
- No.2-D is a distillate fuel of lower volatility for engines in industrial and heavy mobile service (SAE J313 JUN87).

Engine oil

- Oil used in the engine should have an American Petroleum Institute (API) service classification and proper SAE engine oil according to the ambient temperatures as shown in the preceding table.
- Refer to the following table for the suitable API classification engine oil according to the engine type with internal EGR, external EGR, or non-EGR, and the fuel.

Fuel used	Engine oil classification (API classification)	
	Oil class of engines except external EGR	Oil class of engines with external EGR
Ultra low sulfur fuel [<0.0015% (15 ppm)]	CF, CF-4, CG-4, CH-4, or CI-4	CF, or CI-4 You cannot use the class CF-4, CG-4, and CH-4 engine oils on ERG-type-engines.

EGR

Exhaust gas re-circulation

- The CJ-4 engine oil is intended for DPF (diesel-particulate-filter) type engines, and cannot be used on this tractor.

https://truckmanualshub.com/

	except external EGR	with external EGR
Models	BX1880, BX2380, and BX2680	-

Transmission oil

- **KUBOTA Super UDT-2**
  For an enhanced ownership experience, we highly recommend Super UDT-2 to be used instead of standard hydraulic/transmission fluid.
  Super UDT-2 is a proprietary KUBOTA formulation that delivers superior performance and protection in all operating conditions.
  Regular UDT is also permitted for use in this machine.
- Indicated capacities of water and oil are manufacturer's estimate.

https://truckmanualshub.com/

1. Biodiesel fuel (BDF)

B0-B20 biodiesel fuels (BDF)

You can use mixed diesel fuels containing 20% or less biodiesel under the following conditions.

IMPORTANT :

- **Concentrations greater than B5 (5%) are not approved for common rail engines and engines with aftertreatment device. Using concentrations greater than B5 (5%) can cause damage and reduce engine life.**
- **Refuel and use the fuel with caution in order to avoid contact with the fuel and spillage that could create a potential environmental or fire hazard. Wear appropriate protective equipment when refueling.**

Applicable BDF

- You can use blended diesel fuels containing 6% through 20% BDF (B6-B20) which comply with American society for testing and materials (ASTM) D7467 standard, as revised, without adversely affecting the performance and durability of the engine and the components of the fuel system.
- Any mineral-oil-diesel-fuel, if used, must conform to ASTM D975 (or the European EN590) Standard, as revised.
  B100 fuel used to generate biodiesel-blended-fuels must meet ASTM D6751 (or EN14214) Standard, as revised.
  The final blended fuel B20 must conform to ASTM D7467 standard, as revised.
  Straight-vegetable-oil is not allowed in any blended fuel.
- Allowable blended fuel is mineral-oil-diesel-fuel blended with B100 (for example 100% BDF).
  The blended fuel ratio shall be less than 20% B100 and 80% or more diesel fuel.
  Purchase the B100 source used for biodiesel blends from an accredited BQ-9000 marketer or producer.
  You can find more information about qualified marketer(s) and producer(s) at *http://www.bq-9000.org* .

Product warranty, emission, and other precautions

- The engine-emission-control-system was certified according to current regulations based on the use of non-BDF. When using BDF, the owner is advised to check applicable local and federal emission regulations, and comply with all of them.
- BDF may cause restricted or clogged fuel filters during cold weather conditions, resulting in the engine not operating properly.
- BDF encourages the growth of microorganisms which may cause degradation of the fuel. degradation of the fuel may cause corrosion of the fuel line or reduce the fuel filter flow earlier than expected.
- BDF inherently absorbs moisture which may cause degradation of the fuel earlier than expected. To avoid absorbing moisture of BDF, drain the water separator and the fuel-filter-port often.
- Do not use biodiesel whose concentrations higher than 20% (for example, greater than B20).
  Higher concentrated biodiesel will affect engine performance and fuel consumption, and degradation of the fuel system components may occur.
- Do not readjust the engine-fuel-control-system because readjusting it will violate the emission-control-levels for which the equipment was approved.
- Compared with soybean-based and rapeseed-based feedstock, palm-oil-based feedstock has a thicker consistency (for example, higher viscosity) at lower temperatures.
  Consequently, palm-oil-based feedstock may reduce performance of the fuel filter, particularly during cold weather conditions.
- The KUBOTA warranty, as specified in the Owner's Warranty Information Guide, only covers flaws in product materials and workmanship. Accordingly, The KUBOTA warranty do not cover any problems that may arise due to the use of poor quality fuels that fail to meet the preceding requirements, whether biodiesel or mineral-oil-based.

Routine using

- Avoid spilling BDF onto painted surfaces because this may damage the finish. If the fuel is spilled, immediately wipe clean and flush with soapy water to avoid permanent damage.
- When using BDF, you are advised to maintain a full tank of the fuel, especially overnight and during short term storage, to reduce condensation within the tank. Be sure to tighten the fuel cap after refueling to prevent moisture build up within the tank. Water in the biodiesel mixture will damage the fuel filters and may damage the engine components.

Maintenance Requirements when using BDF B0 through B5

Follow the oil-change-intervals recommended by referring to the SERVICE INTERVALS on page 69. Extended oil-change-intervals may result in premature wear or engine damage.

Maintenance Requirements when using BDF B6 through B20

The maintenance interval for fuel related parts changes.

See the following table for the new maintenance interval.

https://truckmanualshub.com/

Items		Interval	Remarks
Fuel filter	Check	Every 50 hr	
	Replace	Every 200 hr	
Fuel hose	Check	Every 6 months	Replace if any deterioration (crack, hardening, scar, or deformation) or damage occurred.
	Replace	Every 2 years	Consult your local KUBOTA Dealer for this service.

Long term storage for B5

- BDF easily deteriorates due to oxygen, water, heat, and foreign substances. Do not store B5 longer than three months.
- When using B5 fuel and storing the machine longer than three months, drain the fuel from the tanks and replace with light-mineral-oil-diesel-fuel. Subsequently, run the engine at least the following minutes to remove all of the biodiesel from the fuel lines.

Running the engine	30 minutes

Long term storage for B6 through B20

- BDF easily deteriorates due to oxygen, water, heat, and foreign substances. Do not store B6 through B20 longer than one month.
- When using B6 through B20 fuel and storing the machine longer than one months, drain the fuel from the tanks and replace with light-mineral-oil-diesel-fuel. Subsequently, run the engine at least the following minutes to remove all of the biodiesel from the fuel lines.

Running the engine	30 minutes

https://truckmanualshub.com/

PERIODIC SERVICE

WARNING

To avoid serious injury or death:

- **Do not work under any hydraulically supported devices. Working under any hydraulically supported devices can settle, suddenly leak down, or be accidentally lowered.**
- **If necessary to work under the tractor or any machine elements for servicing or adjustment, securely support the tractor or any machine elements with stands or suitable blocking beforehand.**

HOW TO OPEN THE HOOD

WARNING

To avoid serious injury or death from contact with moving parts:

- **Never open the hood or engine side cover while the engine is running.**
- **Do not touch the muffler or the exhaust pipes while they are hot.**
  Touching the hot muffler or exhaust pipes could cause severe burns.

Pull the hood-open-lever to release the latch to open the hood, and open the hood.

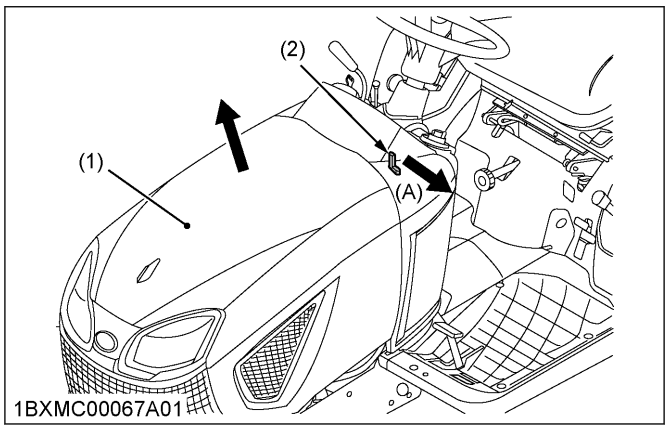

(1) Hood
(2) Hood open lever
(A) Pull

DAILY CHECK

WARNING

To avoid serious injury or death:
Take the following precautions when checking the tractor.

- **Park the machine on firm and level ground.**
- **Set the parking brake.**
- **Lower the implement to the ground.**
- **Release all residual pressure of the hydraulic system.**
- **Stop the engine and remove the key.**

For your own safety and maximum service life of the machine, make a thorough daily inspection before operating the machine or starting the engine.

1. Walk around inspection

Look around and under the tractor for such items as loose bolts, trash build-up, oil or coolant leaks, or broken or worn parts.

2. Checking the fuel gauge and refueling

WARNING

To avoid serious injury or death:

- **Do not smoke while refueling.**
- **Be sure to stop the engine and remove the key before refueling.**

To avoid allergic skin reaction:

- **Wash hands immediately after contact with diesel fuel.**

IMPORTANT :

- **Do not permit dirt, trash, or water to get into the fuel system.**
- **Be careful not to empty the fuel tank, otherwise air will enter the fuel system, necessitating bleeding before next starting the engine.**
- **Be careful not to spill the fuel during refueling. If you should spill, wipe it off at once, or it may cause a fire.**
- **To prevent water condensation and water accumulation in the fuel tank, fill the tank before parking overnight.**

Using fuel

Temperature	fuel
Above -10 ℃ (14 ℉)	Grade No.2-Diesel fuel
Below -10 ℃ (14 ℉)	Grade No.1-Diesel fuel

1. Turn the key switch to the **on** position and check the amount of fuel by the fuel gauge.

https://truckmanualshub.com/

2. Fill the fuel tank with fuel when the fuel gauge shows as follows.

Amount of fuel for refueling	1/4 or less in the fuel tank
Fuel tank capacity	25 L (6.6 U.S.gals.)

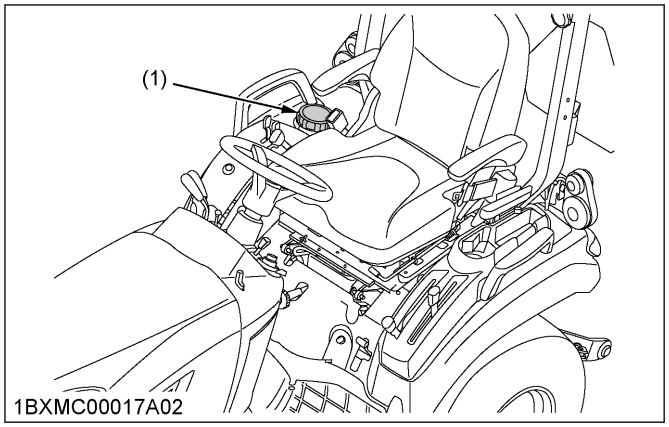

(1) Fuel tank cap

3. Checking the engine oil level

WARNING

To avoid serious injury or death:

- **Be sure to stop the engine before checking the engine oil level.**

IMPORTANT :

- **When using an engine oil of different maker or viscosity from the previous one, remove all of the old oil and oil filter. Never mix two different types of oil.**
- **If the engine oil level is low, do not run the engine.**

1. Park the machine on a firm, flat, and level surface.
2. Check the engine oil before starting the engine, or, after five minutes or more when the engine has been stopped.
3. To check the engine oil level, draw out the dipstick, wipe it clean, replace it, and draw it out again.
4. Check to see that the engine oil level lies between the two notches.
5. If the engine oil level is too low, add new oil to the prescribed level at the oil inlet.
   See LUBRICANTS, FUEL, AND COOLANT on page 71.

BX1880 and BX2380

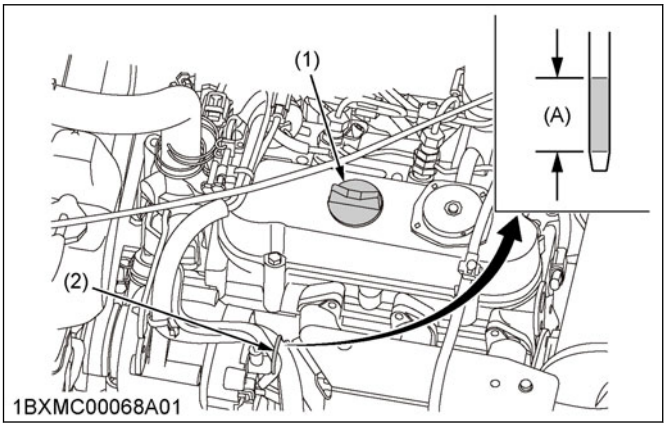

BX2680

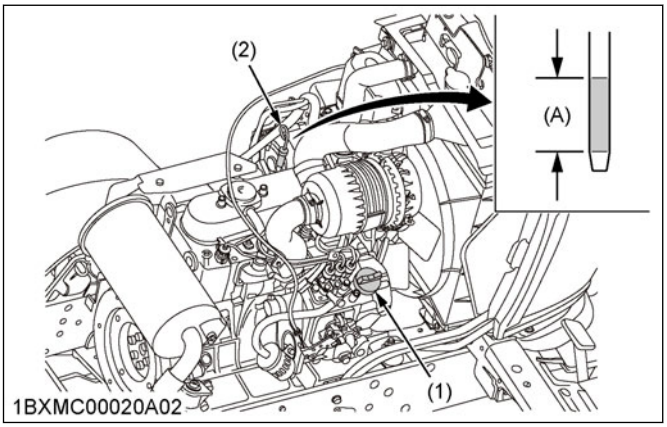

(1) Oil inlet
(2) Dipstick
(A) Engine oil level is acceptable within this range

4. Checking the transmission fluid level

WARNING

To avoid serious injury or death:

- **Park the tractor on a firm, flat, and level surface, lower the implement to the ground, and shut off the engine.**

IMPORTANT :

- **If the transmission fluid level is low, do not run the engine.**

1. To check the transmission fluid level, check the dipstick as the following procedure.
   a. Draw out the dipstick.
   b. Wipe the dipstick clean.
   c. Replace the dipstick.
   d. Draw the dipstick out again.
2. Check to see that the transmission fluid level lies between the two notches.

https://truckmanualshub.com/

3. If the transmission fluid level is too low, add new fluid to the prescribed level at the oil inlet.
   See LUBRICANTS, FUEL, AND COOLANT on page 71.

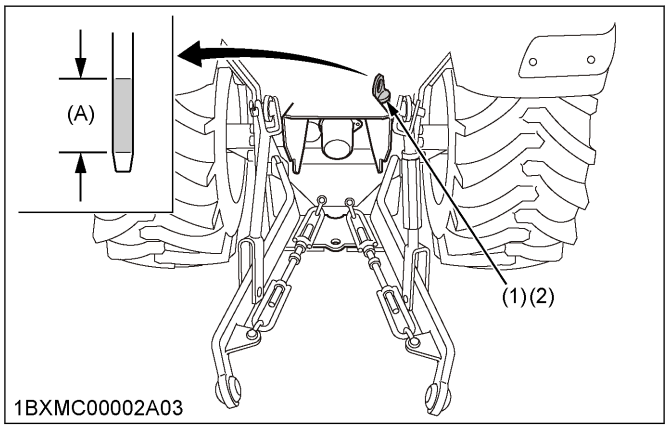

(1) Oil inlet
(2) Dipstick
(A) Transmission fluid level is acceptable within this range

5. Checking the coolant level

WARNING

To avoid serious injury or death:

- **Be sure to stop the engine and remove the key before checking coolant level.**
- **Do not remove the radiator cap while the coolant is hot. When coolant is cool, slowly rotate the radiator cap to the first stop and allow sufficient time for excess pressure to escape before removing the radiator cap completely.**

IMPORTANT :

- **If the radiator cap has to be removed, follow the preceding warning and securely retighten the radiator cap.**
- **Use clean, fresh, soft water and anti-freeze to fill the recovery tank.**
- **If water should leak, consult your local KUBOTA Dealer.**

1. Check to see that the coolant level is between the "**H**" and "**L**" marks of the recovery tank.
2. When the coolant level drops due to evaporation, add soft water only. In case of leakage, add antifreeze and soft water in the specified mixing ratio up to the "**H**" level.
   See 1. Flushing the cooling system and changing the coolant on page 90.

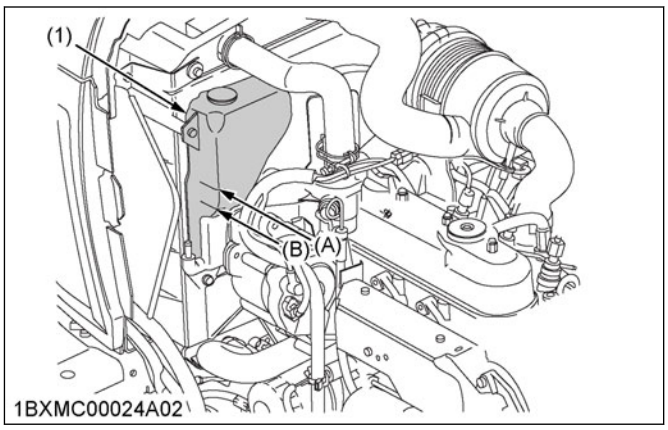

(1) Recovery tank
*(A) "**H**"*
*(B) "**L**"*

6. Cleaning the panel and the radiator screen

WARNING

To avoid serious injury or death:

- **Be sure to stop the engine and remove the key before removing the screen.**
- **Before checking or cleaning the panel, wait long enough until it cools down.**

IMPORTANT :

- **The panel and the radiator screen must be clean from debris to prevent the engine from overheating and to allow good air intake for the air cleaner.**
- **Be sure to reinstall the panel on the pillar completely to prevent the invasion of dust.**
- **Be sure to stop the engine to avoid personal injury and to allow good air intake for air cleaner.**

1. Check the panel and the radiator screen to be sure that they are clean from debris.

https://truckmanualshub.com/

2. Detach the radiator screen, and then remove all the foreign material.

   NOTE :
   - **If the dust or chaff is accumulated in the battery compartment, open the panel and clean completely.**

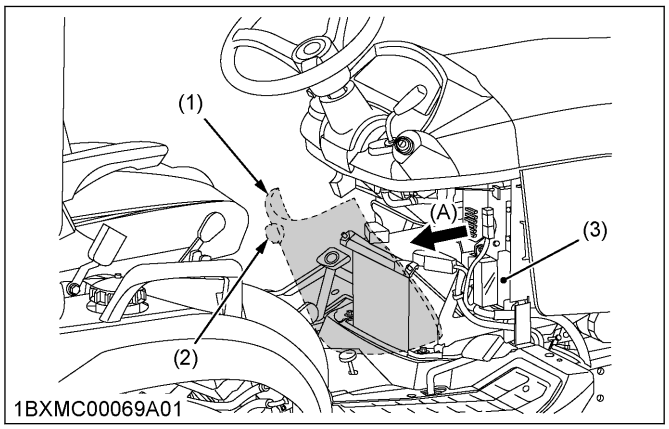

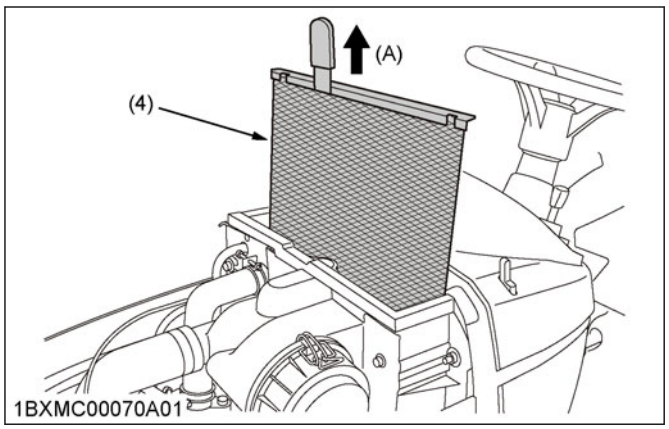

(1) Panel
(2) Knob
(3) Center pillar
(4) Radiator screen
(A) Detach

7. Checking the brake pedal

1. Inspect the brake pedal for free travel, and smooth operation.
2. Adjust the brake pedal if incorrect measurement is found.
   See 6. Adjusting the brake pedal on page 85.

8. Checking the gauges, the meters, and the Easy Checker™

1. Inspect the instrument panel for broken gauge(s), meter(s) and Easy Checker™ lamps.
2. Replace the gauge(s), the meter(s), or the Easy Checker™ if they are broken.

9. Checking the head light, hazard light, and so on

1. Inspect the lights for broken bulbs and lenses.
2. Replace the lights if they are broken.

10. Checking the seat belt and the ROPS

1. Always check condition of the seat belt and the ROPS attaching hardware before operating the tractor.
2. Replace the seat belt or the ROPS if it is damaged.

11. Checking and cleaning the electrical wiring and the battery cables

WARNING

To avoid serious injury or death:
- **A loosened terminal or connector, or damaged wire may affect the performance of the electrical components or cause short circuits. Leakage of electricity could result in a fire hazard, a dead battery, or damage to the electrical components.**
- **Replace the damaged wires or connections promptly.**
- **If a fuse blows soon after replacement, do not use the capacity larger than recommended or bypass the fuse system.**
- **Many wiring connections are protected by waterproof plugs. Plug and unplug these connections carefully and make sure that they are sealed correctly after assembly.**
- **Accumulation of dust, chaff, and deposits of spilled fuel around the battery, electrical wiring, engine, or exhaust system may cause fire hazards.**
  Clean around the battery, electrical wiring, engine or exhaust system before starting to work.
- **To avoid premature electrical malfunctions, do not apply high pressure water directly to the battery, the wiring, the connectors, the electrical components, or the instrument panel.**

Inspect the following check items regularly
- Check the wiring for chafed or cracked insulation.
- Check the wiring harness clamps. Replace them if necessary.
- Check the connectors and the terminals for looseness, contamination, or overheated or discolored connections.
- Check the instrument panel for correct operation of the switches and the gauges.

https://truckmanualshub.com/

Consult your KUBOTA Dealer regarding maintenance, diagnosis, and repair.

12. Checking the movable parts

1. If any of the movable parts, such as levers and pedals, is not smoothly moved because of rust or sticky material, remove the rust or the sticky material, and apply oil or grease on the relevant spot.
   Do not force the movable parts into motion. Otherwise, the machine may get damaged.

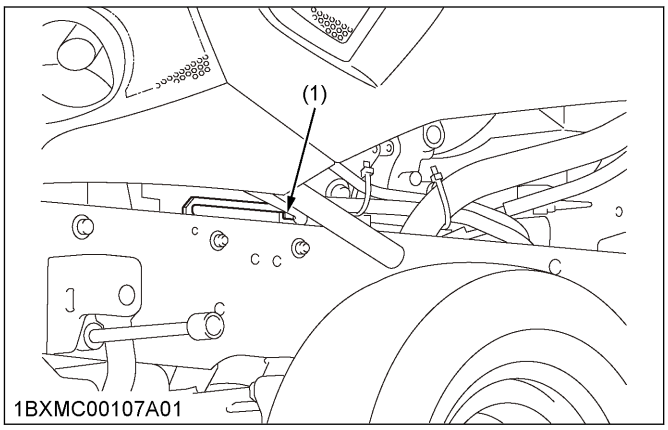

SERVICE EVERY 50 HOURS

1. Lubricate fittings with grease

Apply a small amount of multipurpose grease to the following points every 50 hours.
If you operated the machine in extremely wet and muddy conditions, lubricate grease fittings more often.
Apply grease between rod and hole.

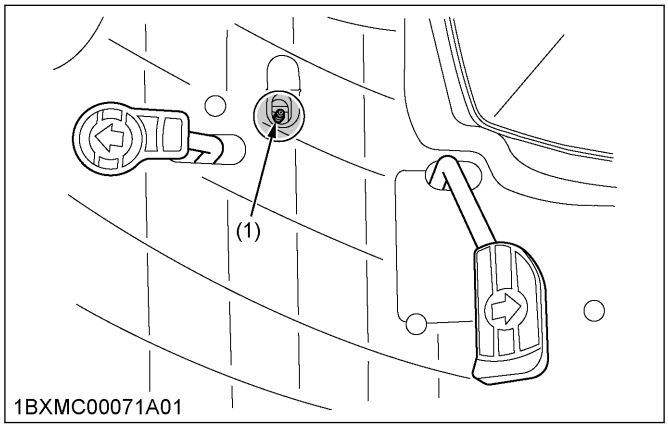

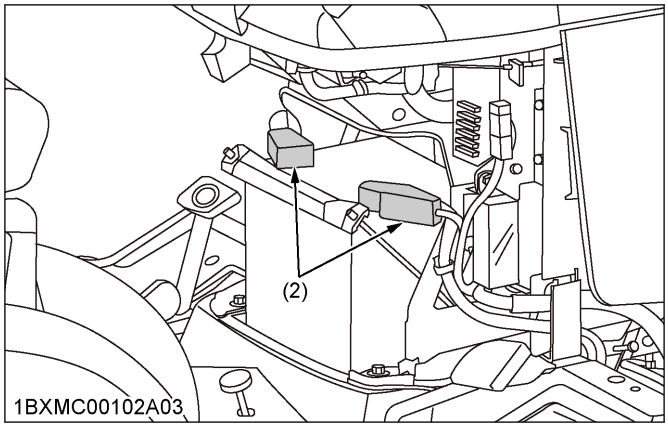

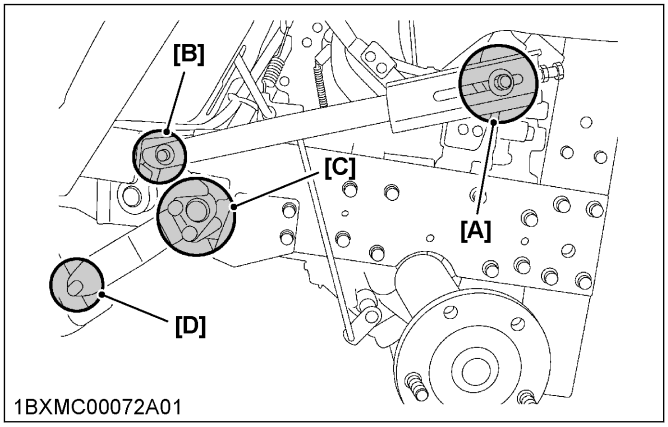

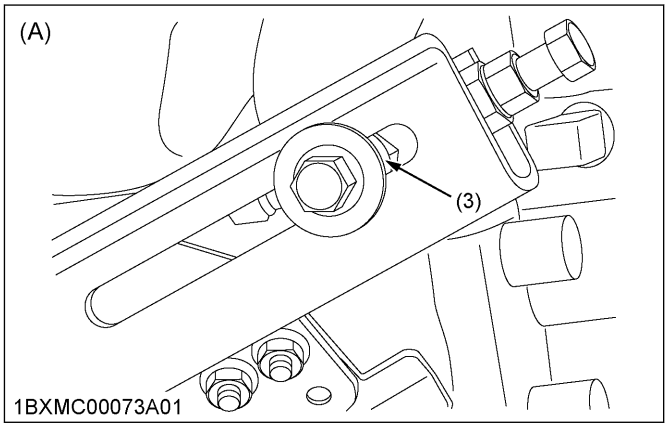

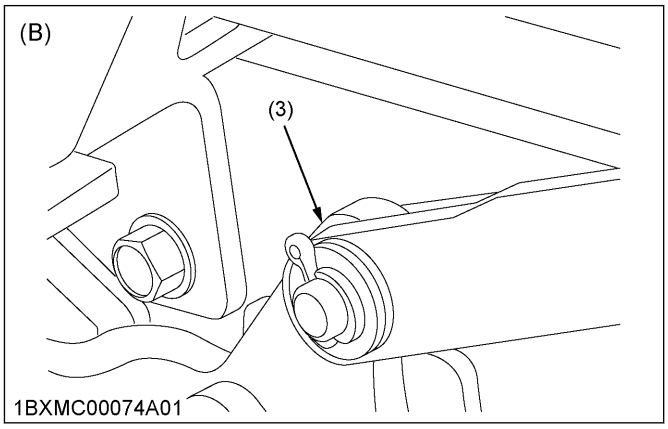

https://truckmanualshub.com/

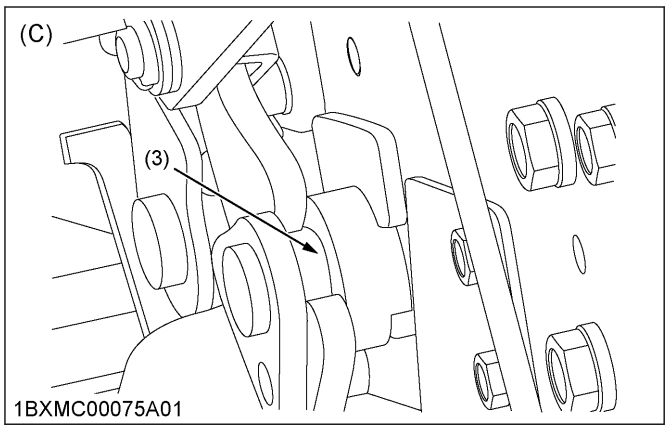

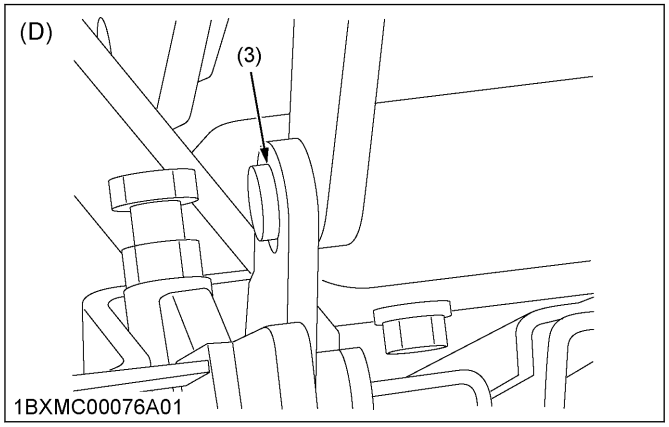

(1)	*Grease fitting for the speed control pedal*	*[A]*	*Figure (A)*
		[B]	*Figure (B)*
(2)	*Battery terminals*	*[C]*	*Figure (C)*
(3)	*Rear link*	*[D]*	*Figure (D)*

Apply grease between stays.

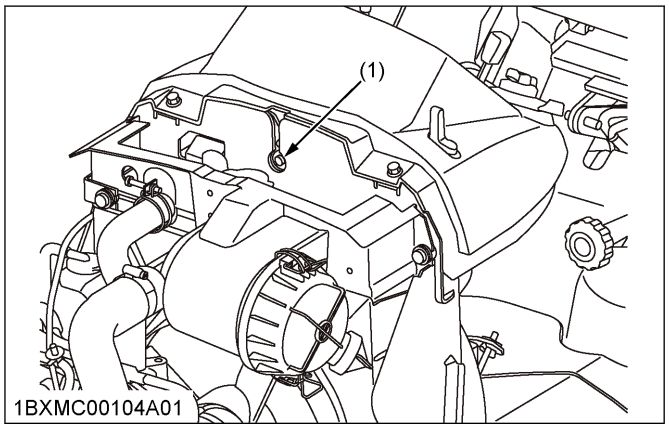

(1) Bonnet lock

2. Checking the engine start system

WARNING

To avoid serious injury or death:

- **Do not allow anyone near the tractor while testing.**
- **If the tractor does not pass the test, do not operate the tractor.**

Preparation before testing

1. **Sit on the operator's seat.**
2. **Set the parking brake and stop the engine.**
3. **Shift the range-gear-shift-lever to the neutral "N" position.**
4. **Check whether the speed-control-pedal is in the neutral position.**
5. **Shift the PTO-clutch-lever to the off position.**

[Test 1] Switch for the speed control pedal

1. Make sure that the range-gear-shift-lever is set in the **neutral** "**N**" position.
2. Depress the speed-control-pedal.
3. Turn the key to the **start** position.

The engine must not crank. If the engine cranks, consult your local KUBOTA Dealer.

[Test 2] Switch for the PTO clutch lever

1. Make sure that the range-gear-shift-lever is set in the **neutral** "**N**" position.
2. Make sure that the speed-control-pedal is set in the **neutral** position.
3. **Shift the PTO-clutch-lever to the on position.**
4. Turn the key to the **start** position.

The engine must not crank. If the engine cranks, consult your local KUBOTA Dealer.

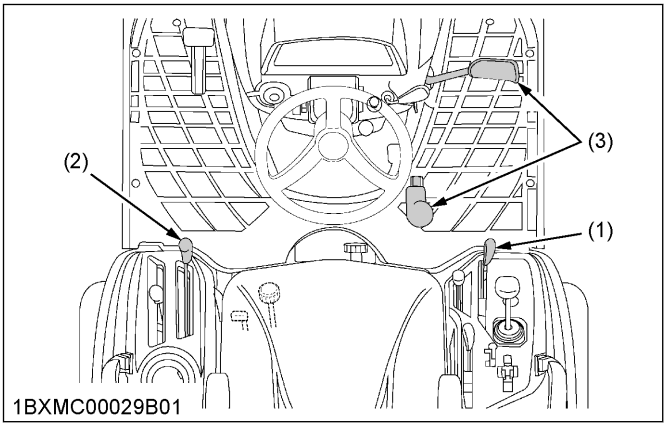

(1)	*Range gear shift lever (Hi-Lo)*	*(2)*	*PTO clutch lever*
		(3)	*Speed control pedal*

3. Checking the OPC (operator presence control) system

WARNING

To avoid serious injury or death:

- **Do not allow anyone near the tractor while testing.**
- **If the tractor does not pass the test, do not operate the tractor.**

Preparation before testing

1. **Sit on the operator's seat.**
2. **Set the parking brake and stop the engine.**

https://truckmanualshub.com/

3. **Shift the range-gear-shift-lever to the neutral "N" position.**
4. **Check whether the speed-control-pedal is in the neutral position.**
5. **Shift the PTO-clutch-lever to the off position.**

[Test 1] Switches for the operator's seat and the speed control pedal

1. Start the engine.
2. Depress the speed-control-pedal.
3. Stand up.
   Do not get off the machine.

The engine must shut off after approximately one second. If it does not stop, consult your local KUBOTA Dealer.

[Test 2] Switches for the operator's seat and the PTO clutch lever

1. Start the engine.
2. Engage the PTO-clutch-lever.
3. Stand up.
   Do not get off the machine.

The engine must shut off after approximately one second. If it does not stop, consult your local KUBOTA Dealer.

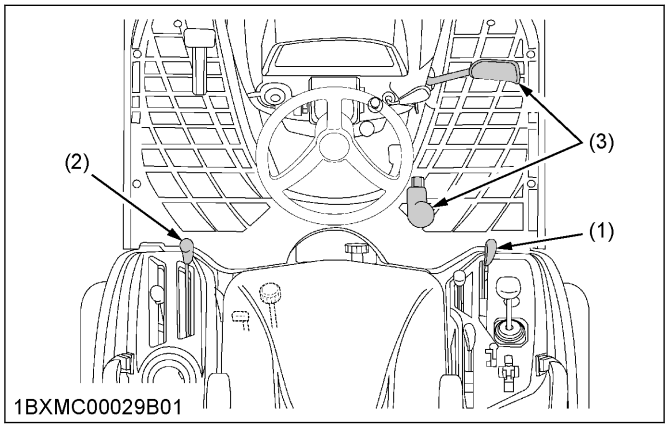

(1) Range gear shift lever (Hi-Lo)
(2) PTO clutch lever
(3) Speed control pedal

4. Checking the wheel bolt torque

WARNING

To avoid serious injury or death:

- **Never operate the tractor with a loose rim, wheel, or axle.**
- **Any time bolts are loosened, retighten to the specified torque.**
- **Check all bolts frequently and keep them tight.**

1. Check the wheel bolts regularly especially when new.
2. If they are loose, tighten them as follows.

Front

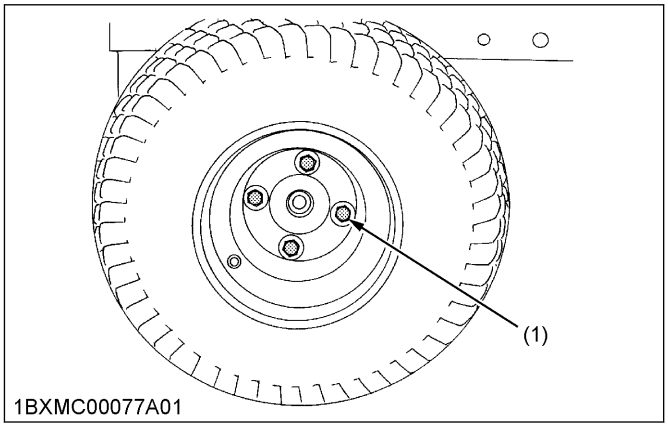

Rear

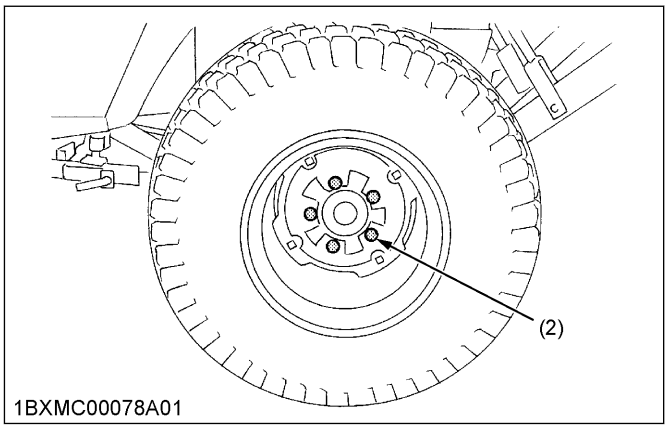

(1) 149.2 N·m to 179.0 N·m (15.2 kgf·m to 18.3 kgf·m) (110 lbf·ft to 132 lbf·ft)
(2) 108.5 N·m to 130.2 N·m (11.1 kgf·m to 13.3 kgf·m) (80 lbf·ft to 96 lbf·ft)

5. Cleaning the lock lever shaft

1. Before you use the lock lever, clean the lever-movable-area (1).

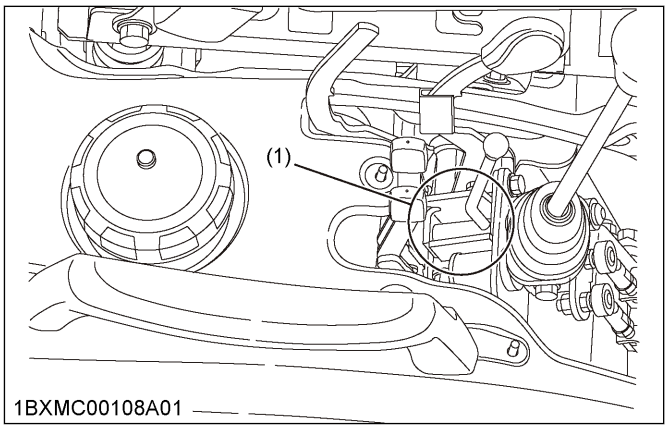

(1) Lever movable area

https://truckmanualshub.com/

SERVICE EVERY 100 HOURS

1. Checking of the battery

DANGER

To avoid the possibility of battery explosion:
For the refillable-type-battery, follow the instructions as follows.

- **Do not use or charge the refillable-type-battery if the fluid level is below the lower-limit-level-mark. Otherwise, the battery component parts may prematurely deteriorate, which may shorten the service life of the battery or cause an explosion.**
- **Check the fluid level regularly and add distilled water as required so that the fluid level is between the upper level and the lower level.**

WARNING

To avoid serious injury or death:

- **Never remove the battery cap while the engine is running.**
- **Keep electrolyte away from eyes, hands, and clothes. If you are spattered with electrolyte, wash it away completely with water immediately and get medical attention.**
- **Keep open sparks and flames away from the battery at all times. Hydrogen gas mixed with oxygen becomes very explosive.**
- **Wear eye protection and rubber gloves when working around battery.**
- **Tighten the battery holder firmly when you re-assemble the battery.**
- **Make sure to put a clamp to the positive cable of the battery.**

IMPORTANT :

- **The factory-installed battery is of non-refillable type. If the battery is weak, charge the battery or replace it with new one.**
- **Mishandling the battery shortens the service life and adds to maintenance costs.**
  The original battery is maintenance free, but needs some servicing.
  If the battery is weak, the engine will be difficult to start and the lights will be dim. It is important to check the battery periodically.
- **When exchanging an old battery for a new one, use the battery of equal specification in the following table.**

Battery type	526RMF
Volts	12 V
Reserve capacity	86 min
Cold cranking amps	560
Normal charging rate	8.6 A

For non-accessible maintenance-free type batteries
Maintenance-free, non-accessible batteries are designed to eliminate the need to add water. Yet the volume of electrolyte above plates may eventually become depleted due to abnormal conditions such as high heat or improper regulator setting. Use a voltmeter to check the state of charge. See the following table to determine if charging is necessary.

Battery voltage	Reference state of charge
12.6	100% (Full charge)
12.4	75%
12.2	50%
12.0	25%
11.8	0%

1.1 Battery charging

WARNING

To avoid serious injury or death:

- **When the battery is being activated, hydrogen and oxygen gases in the battery are extremely explosive. Keep open sparks and flames away from the battery at all times, especially when charging the battery.**
- **When disconnecting the cable from the battery, start with the negative terminal first. When connecting the cable to the battery, start with the positive terminal first.**
- **To prevent short circuit, before charging, make sure to remove the metal-battery-holder.**
- **Never check battery charge by placing a metal object across the posts.**
  Use a voltmeter or hydrometer.

https://truckmanualshub.com/

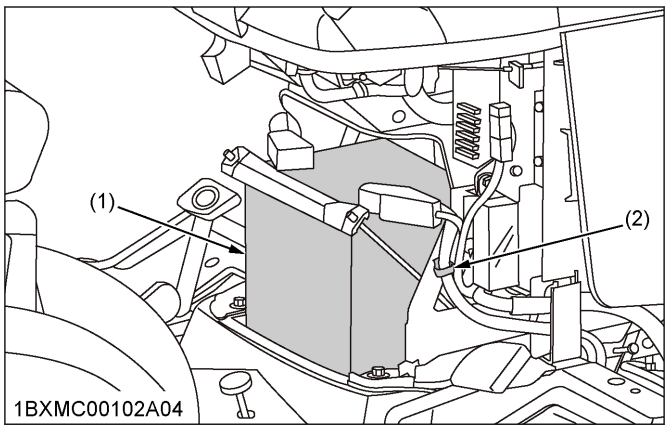

(1) Battery *(2) Clamp*

IMPORTANT :

- **Since the metal-battery-holder can crack, do not tighten it too much.**
- To slow charge the battery, connect the battery positive terminal to the charger positive terminal and the negative to the negative, then charge as follows.

Charging the battery	For at least 1 hour at 6.5 amperes

- A boost charge is only for emergencies. It will partially charge the battery at a high rate and in a short time. When using a boost-charged battery, it is necessary to recharge the battery as early as possible.
  Failure to do this will shorten the battery's service life.
- When the specific gravity of electrolyte is shown in the following table, the charging is completed.

Specific gravity of electrolyte	Between 1.27 and 1.29

1.2 Dealing with the battery when storing the tractor for a long period

1. Remove the battery from the tractor.
2. Adjust the electrolyte to the proper level.
3. Store the battery in a dry place out of direct sunlight.

The battery self-discharges while it is stored.
Recharge the battery once every three months in hot seasons and once every six months in cold seasons.

2. Cleaning the air cleaner element

WARNING

To avoid serious injury or death:

- **Be sure to stop the engine and remove the key before cleaning the air cleaner element.**

IMPORTANT :

- **The air cleaner uses a dry element. Never apply oil to the air cleaner.**
- **Do not run the engine with filter element removed.**
- **Align the arrow marks when reinstalling the cover. If the cover is improperly fitted, dust passes by the baffle and directly adheres to the air cleaner element.**

NOTE :

- **Check to see if the evacuator valve is blocked with dust.**

1. Remove the air cleaner cover and the element.
   a. Undo the hook.
   b. Turn the air cleaner cover clockwise and detach it.
2. Clean the air cleaner element.
   When dry dust adheres to the element, blow compressed air from the inside, turning the element. Pressure of compressed air must be the value shown in the following table.

Pressure of compressed air	Below 205 kPa (2.1 kgf/cm^2, 30 psi)

3. When carbon or oil adheres to the element, follow the following procedure.
   a. Soak the air cleaner element in detergent for the following minutes.

Soaking the air cleaner element in detergent	For 15 minutes

   b. Then wash it several times in water.
   c. Rinse the air cleaner element with clean water.
   d. Dry the air cleaner element naturally.
   e. After the air cleaner element is fully dried, inspect inside of it with a light and check if it is damaged or not.
   Refer to the instructions on the label attached to the case.

https://truckmanualshub.com/

4. Replace the air cleaner element as the following table.

Replacing the air cleaner element	Every 1000 hours or every 1 year whichever comes faster

BX1880 and BX2380

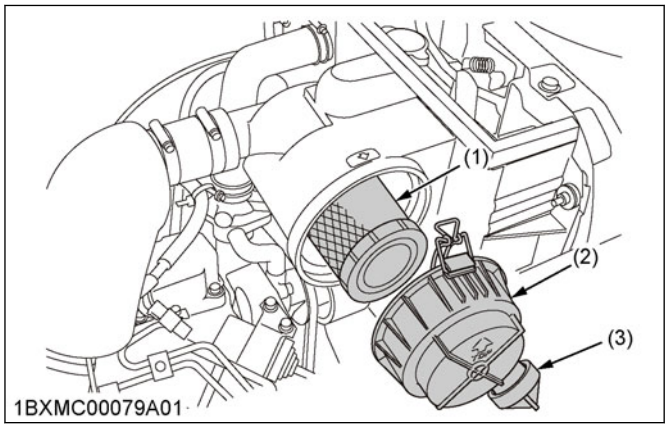

BX2680

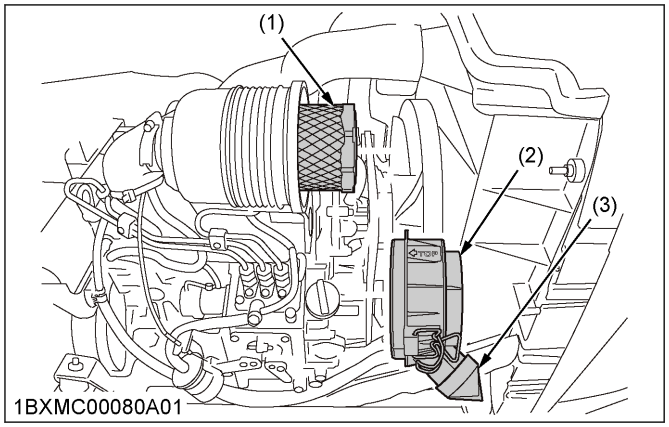

(1) Element
(2) Cover
(3) Evacuator valve

Evacuator valve

Open the evacuator valve once a week under ordinary conditions or daily when used in a dusty place to get rid of large particles of dust and dirt.

3. Checking the fuel filter

WARNING

To avoid serious injury or death:

- **Stop the engine and remove the key before checking the fuel lines and the fuel filter.**
- **Check the fuel lines periodically. The fuel lines are subject to wear and aging. Fuel may leak out onto the running engine, causing a fire.**

IMPORTANT :

- **When the fuel line is disconnected for maintenance or repair, plug both ends of the fuel line with a clean plug of suitable size to prevent dust and dirt from entering. You must take particular care of the fuel filter in order to avoid dust and dirt getting into the fuel system. Entrance of dust and dirt causes malfunction of the fuel pump.**

The fuel line is made of rubber and ages regardless of service period.

1. Inspect the fuel filter.
2. After inspection of the fuel filter, if the fuel line and clamps are found damaged or deteriorated, replace them.
3. Check the fuel filter. If the fuel filter is clogged by debris or contaminated by water, replace it.

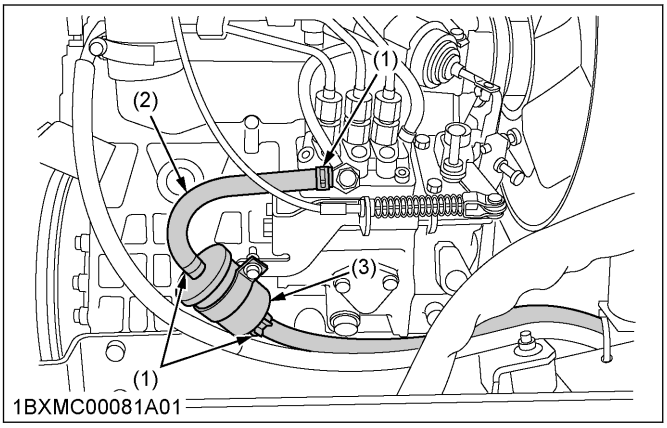

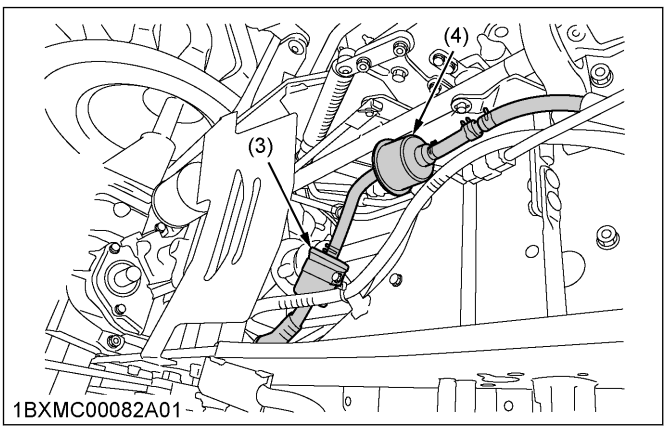

(1) Pipe clamps
(2) Fuel line
(3) Fuel filter
(4) Fuel pump

NOTE :

- **If the fuel line is removed, be sure to properly bleed the fuel system.**
  See 1. Bleeding the fuel system on page 94.

4. Adjusting the fan belt tension

WARNING

To avoid serious injury or death:

https://truckmanualshub.com/

- **Be sure to stop the engine and remove the key before checking the fan belt tension.**

Fan belt tension (deflection)	7 mm to 9 mm (0.28 in. to 0.35 in.) when the belt is pressed in the middle of the span.

1. Stop the engine and remove the key.
2. Apply moderate thumb pressure to belt between pulleys.
3. If tension is incorrect, loosen the alternator mounting bolts and, using a lever placed between the alternator and the engine block, pull the alternator out until the deflection of the belt falls within acceptable limits.
4. Replace fan belt if it is damaged.

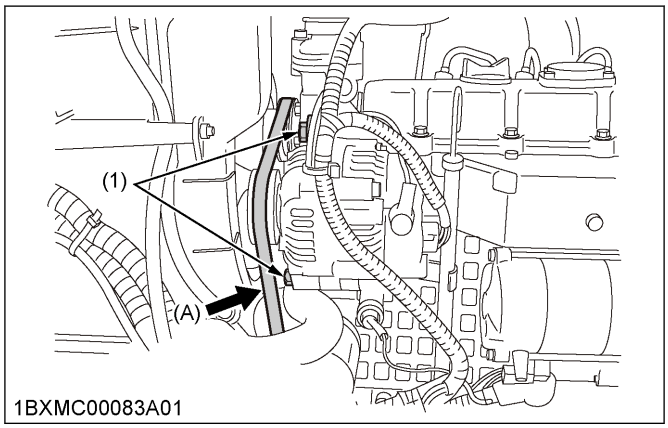

(1) Bolt *(A) Check the belt tension*

5. Adjusting the HST neutral spring for speed control pedal

WARNING

To avoid serious injury or death:

- **Do not operate if the tractor moves on level ground with foot off the speed-control-pedal.**
- **If the tractor moves on level ground with foot off the speed-control-pedal, or, if the pedal is too slow in returning to the neutral position when removing the foot from the pedal, consult your local KUBOTA Dealer.**

The HST-neutral-spring located under the front right side of the fender can adjust returning speed of the speed-control-pedal.

- Consult your local KUBOTA Dealer for service.

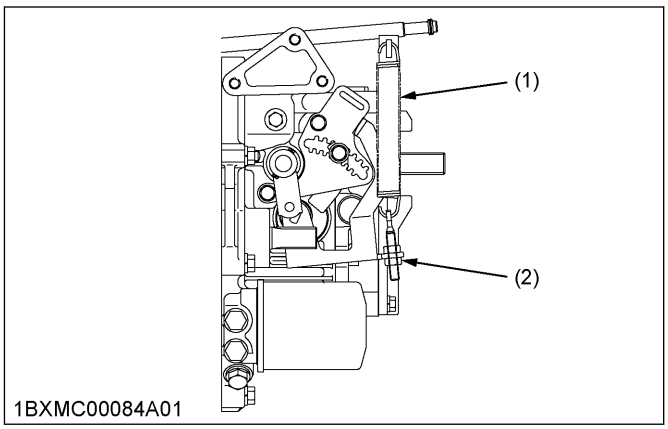

(1) HST neutral spring *(2) Adjusting nut*

6. Adjusting the brake pedal

WARNING

To avoid serious injury or death:

- **Stop the engine, remove the key, lower the implement to the ground, and chock the wheels before checking the brake pedal.**
- **Even if free travel of the brake pedal is within the limitation, adjust the brake pedal.**
- **If you are not able to adjust, consult your local KUBOTA Dealer.**

1. Release the parking brake.
2. Loosen the lock nut and turn the turnbuckle to adjust the rod length so that free travel of the brake pedal is the length shown in the following table.

Free travel of the brake pedal	10 mm (0.4 in.)

3. Extend the turnbuckle one additional turn.
4. Retighten the lock nut.

https://truckmanualshub.com/

5. Depress the brake pedal several times and make sure that free travel of the brake pedal is the length shown in the following table.

Free travel of the brake pedal	25 mm to 35 mm (1.0 in. to 1.4 in.)

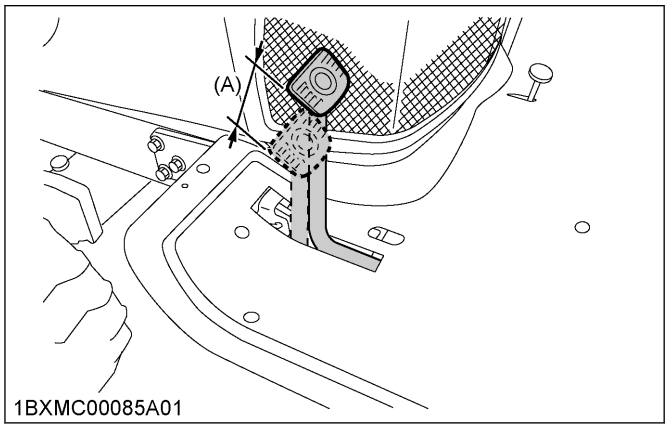

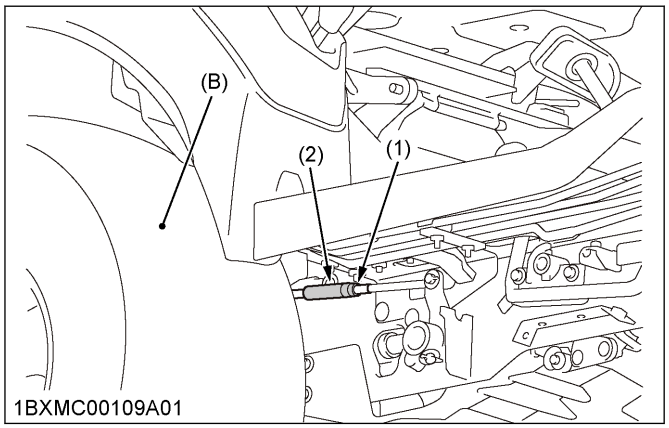

(1) Lock nut
(2) Turnbuckle
(A) Free travel
(B) Right rear tire

SERVICE EVERY 200 HOURS

1. Replacing the engine oil filter

WARNING

To avoid serious injury or death:

- **Be sure to stop the engine before replacing the oil filter cartridge.**
- **Oil can be hot and can burn. Allow the engine to cool down sufficiently.**

IMPORTANT :

- **To prevent serious damage to the engine, use only a KUBOTA genuine filter.**

1. Remove the oil filter.
2. Put a film of the clean engine oil on the rubber seal of the new filter.
3. Tighten the filter quickly until it contacts the mounting surface.
4. Tighten filter by hand an additional 1/2 turn only.
5. After the new filter has been replaced, the engine oil normally decreases a little. Make sure that the engine oil does not leak through the seal and be sure to check the oil level on the dipstick.
6. Fill the engine with the engine oil up to the prescribed level.
7. Properly dispose of the used engine oil.

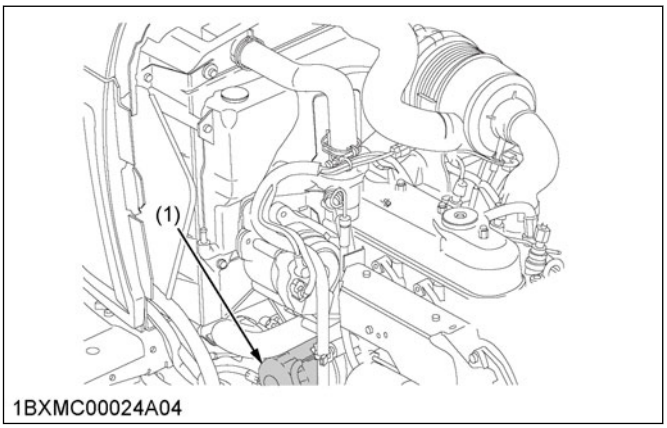

(1) Engine oil filter

2. Changing the engine oil

WARNING

To avoid serious injury or death:

- **Be sure to stop the engine and remove the key before changing the oil.**
- **Oil can be hot and can burn. Allow the engine to cool down sufficiently.**

Oil capacity with filter	BX1880	3.0 L (3.17 U.S.qts.)
	BX2380	3.3 L (3.49 U.S.qts.)
	BX2680	4.0 L (4.23 U.S.qts.)

1. To drain the used engine oil, remove the drain plug at the bottom of the engine, and drain the engine oil completely into the oil pan.
2. After draining of the used engine oil, reinstall the drain plug.
3. Fill the engine with the new engine oil up to the upper notch on the dipstick.
   See LUBRICANTS, FUEL, AND COOLANT on page 71.

https://truckmanualshub.com/

4. Properly dispose of the used engine oil.

BX1880 and BX2380

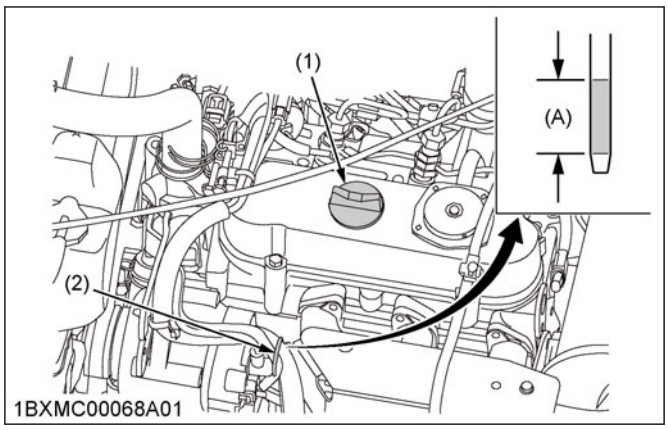

BX2680

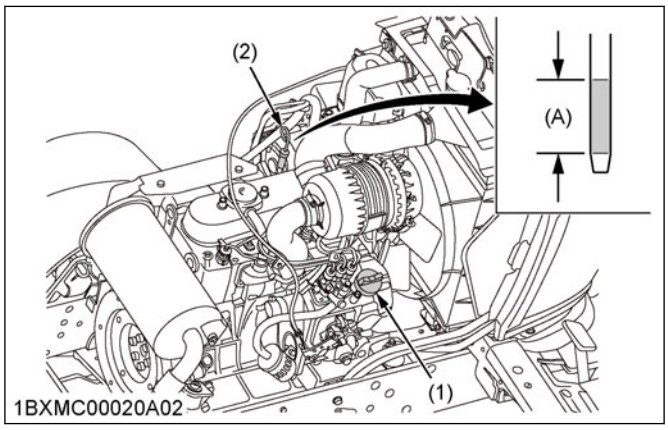

BX1880, BX2380, and BX2680

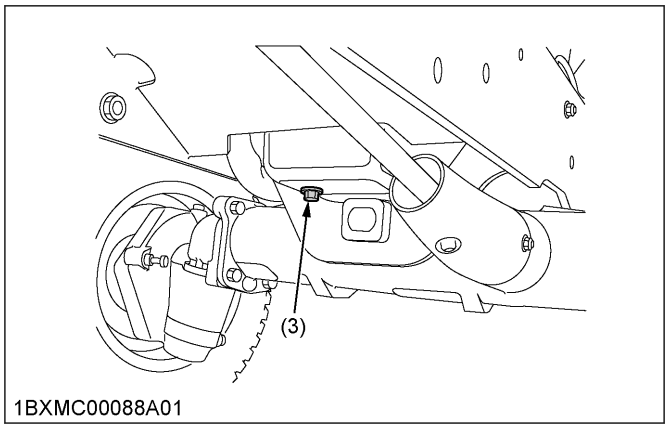

(1) Oil inlet
(2) Dipstick
(3) Drain plug
(A) Oil level is acceptable within this range

3. Replacing the transmission oil filter

WARNING

To avoid serious injury or death:

- **Be sure to stop the engine before changing the transmission oil filter cartridge.**
- **Oil can be hot and can burn. Allow the engine to cool down sufficiently.**

IMPORTANT :

- **To prevent serious damage to the hydraulic system, use only a KUBOTA genuine filter.**

1. Remove the transmission oil filter.
2. Put a film of clean transmission oil on rubber seal of new transmission oil filter.
3. Tighten the transmission oil filter quickly until it contacts the mounting surface.
4. Tighten the transmission oil filter by hand an additional 1/2 turn only.
5. After the new transmission oil filter has been replaced, the transmission fluid level will decrease a little. Make sure that the transmission fluid does not leak through the seal, and check the fluid level.
   Check the dipstick and refill with oil to prescribed level.
6. Properly dispose of used oil.

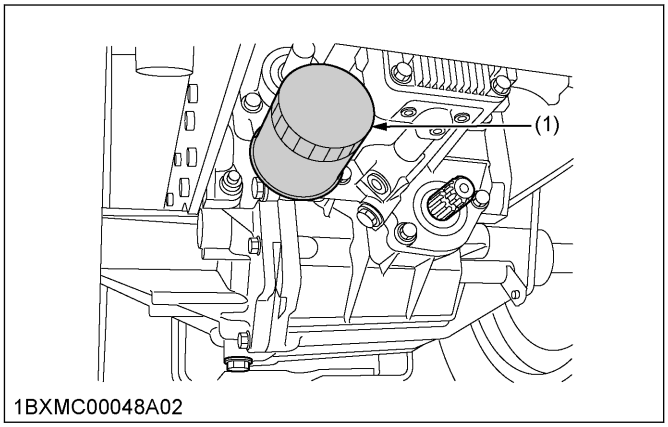

(1) Filter

4. Checking the toe-in

WARNING

To avoid serious injury or death:

- **Park the tractor on a firm, flat, and level place.**
- **Lower the implement to the ground, and apply the parking brake.**
- **Stop the engine and remove the key.**

1. Turn the steering wheel so that the front wheels are in the straight ahead position.
2. Measure the distance between the tire beads at front of the tires, and at the hub heights.
3. Measure the distance between the tire beads at rear of the tires, and at the hub heights.

https://truckmanualshub.com/

4. Front distance should be the length as shown in the following table. If front distance is not proper length, adjust the length of the tie rod.
   To adjust the tie rod, see 4.1 Adjusting the toe-in on page 88.

Front distance	0 mm to 5 mm (0 in. to 0.2 in.) less than rear distance

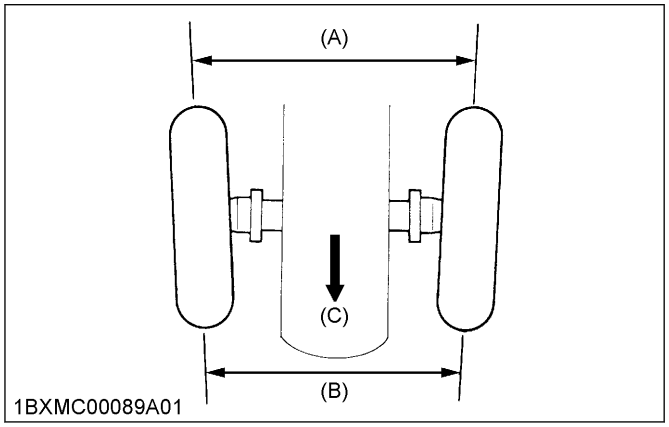

(A) Wheel-to-wheel distance at rear
(B) Wheel-to-wheel distance at front
(C) Front

4.1 Adjusting the toe-in

1. Loosen the lock nut and turn the tie rod to adjust the rod length until the proper toe-in measurement is obtained.

Front distance	0 mm to 5 mm (0 in. to 0.2 in.) less than rear distance

2. Retighten the lock nut.

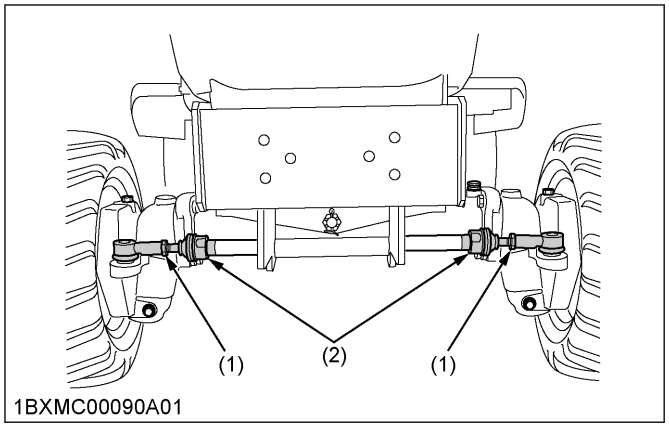

(1) Lock nuts
(2) Tie-rod

SERVICE EVERY 400 HOURS

1. Adjusting the front axle pivot

WARNING

To avoid serious injury or death:

- **Be sure to stop the engine and remove the key before adjusting the front axle pivot.**

If the front axle pivot pin adjustment is not correct, front wheel vibration can occur causing vibration in the steering wheel.

1. Remove the split pin and tighten the adjusting nut.

Tightening torque	20 N·m (2.0 kgf·m) (15 lbf·ft)

2. Make sure that one of the nut slots aligns with the split pin hole.
3. Tighten the nut slightly if necessary when aligning the nut slots with the split pin hole.
4. Replace the split pin.

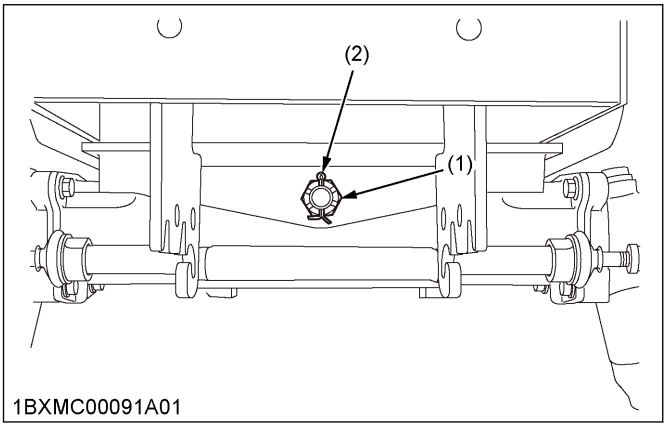

(1) Adjusting nut
(2) Split pin

2. Changing the transmission fluid

WARNING

To avoid serious injury or death:

- **Oil can be hot and can burn. Allow the engine to cool down sufficiently.**

Transmission fluid	KUBOTA SUPER UDT 2
Transmission fluid capacity	11.3 L (3.0 U.S.gals.)

1. To drain the used transmission fluid, remove the drain plug at the bottom of the transmission case and drain the transmission fluid completely into the oil pan.
2. After draining the transmission fluid, reinstall the drain plug.

https://truckmanualshub.com/

3. Clean the transmission strainer.
4. Fill with new transmission fluid up to the upper notch on the dipstick.
   See LUBRICANTS, FUEL, AND COOLANT on page 71 and 4. Checking the transmission fluid level on page 76.
5. After running the engine for a few minutes, stop it and check the transmission fluid level again.
6. If the transmission fluid level is lower than the prescribed level shown in the following figure, add it to the prescribed level.
7. Properly dispose of used transmission fluid.

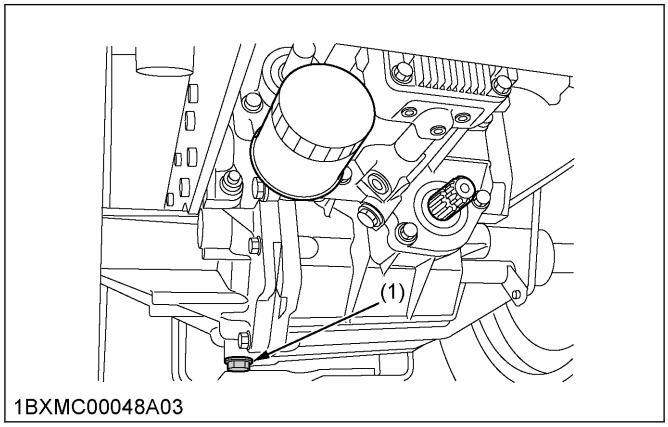

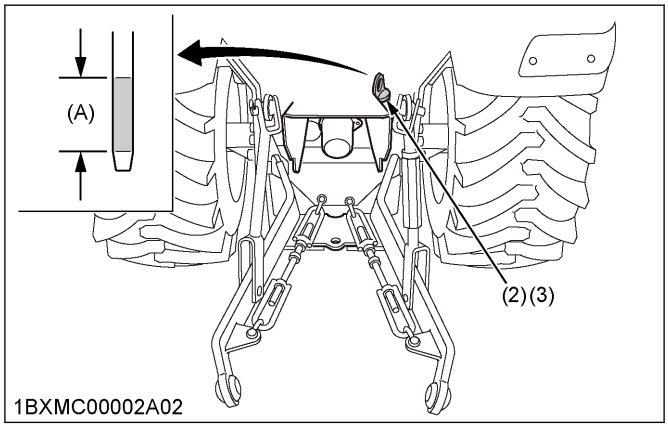

(1) Drain plug
(2) Oil inlet
(3) Dipstick
(A) Transmission fluid level is acceptable within this range

IMPORTANT :

- **Do not operate the tractor immediately after changing the transmission fluid.**
  Run the engine at medium speed for a few minutes to prevent damage to the transmission.

3. Cleaning the transmission strainer

1. When changing the transmission fluid, disassemble and rinse the transmission strainer with nonflammable solvent to completely clean off filings. When reassembling the transmission strainer, be careful not to damage the parts.

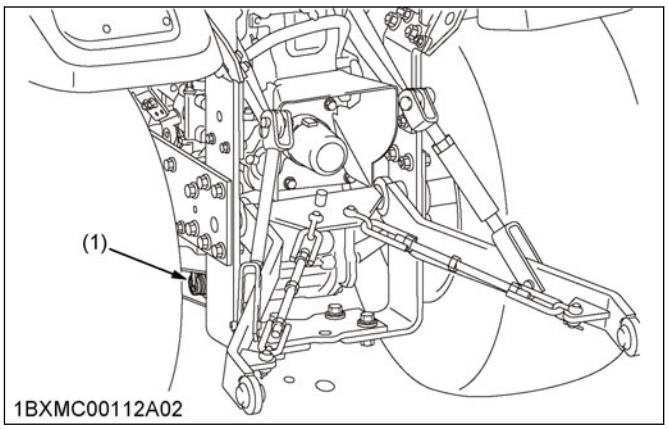

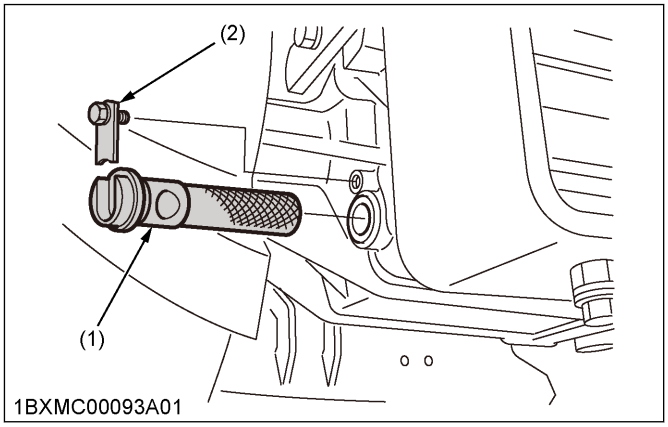

(1) Transmission strainer
(2) Filter plate

NOTE :

- **Since the fine filings in the oil can damage the precision component parts of the hydraulic system, the end of the suction line is provided with an oil strainer.**

4. Changing the front axle case oil

WARNING

To avoid serious injury or death:

- **Be sure to stop the engine and remove the key before changing the front axle case oil.**

Oil capacity	4.7 L (5.0 U.S.qts.)

1. Park the tractor on a firm, flat, and level place.
2. To drain the used front-axle-case-oil, remove the right and left drain plugs and oil gauge at the front axle case.
3. Drain the front-axle-case-oil completely into the oil pan.
4. After draining the front-axle-case-oil, reinstall the drain plugs.
5. Remove the right and left breather plugs.

https://truckmanualshub.com/

6. Fill with new front-axle-case-oil up to the upper notch on the dipstick.
   See LUBRICANTS, FUEL, AND COOLANT on page 71.

   IMPORTANT :
   - **After the following minutes, check the front-axle-case-oil level again. If the front-axle-case-oil level is lower than the prescribed level shown in the following figure, add the front-axle-case-oil to prescribed level.**

Checking the front axle case oil level	10 minutes after filling with new front axle case oil

7. After filling with front-axle-case-oil, reinstall the oil gauge and breather plugs.

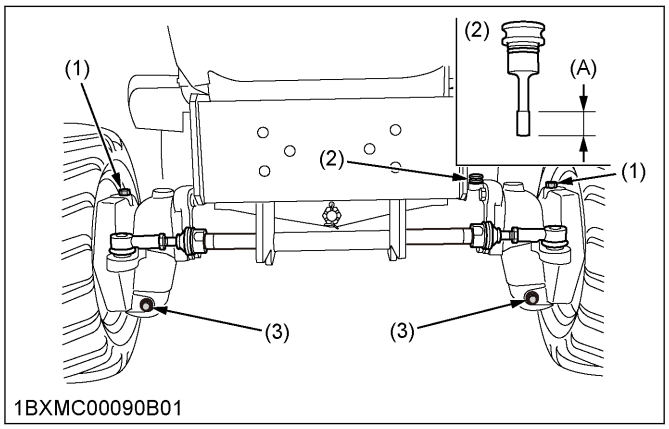

(1) Breather plug
(2) Oil gauge with dipstick
(3) Drain plug
(A) Front axle case oil level is acceptable within this range

5. Replacing the fuel filter element

- Consult your local KUBOTA Dealer for replacing the fuel filter element.

SERVICE EVERY 800 HOURS

1. Adjusting the engine valve clearance

- Consult your local KUBOTA Dealer for adjusting the engine valve clearance.

SERVICE EVERY 1000 HOURS OR 1 YEAR

1. Replacing of the air cleaner element

Replace the air cleaner element every 1000 hours or every 1 year whichever comes faster.
See 2. Cleaning the air cleaner element on page 83.

SERVICE EVERY 1500 HOURS

1. Checking the injection pressure of the fuel injection nozzle

- Consult your local KUBOTA Dealer for checking the injection pressure of the fuel injection nozzle.

SERVICE EVERY 2000 HOURS OR 2 YEAR

1. Flushing the cooling system and changing the coolant

WARNING

To avoid serious injury or death:
- **Do not remove the radiator cap while the coolant is hot. When the coolant is cool, slowly rotate the radiator cap to the first stop and allow sufficient time for excess pressure to escape before removing the radiator cap completely.**

IMPORTANT :
- **Do not start the engine without coolant.**
- **Use clean, fresh soft water and the anti-freeze to fill the radiator and the recovery tank.**
- **When mixing the anti-freeze with water, the anti-freeze mixing ratio is the following percentage.**

Anti-freeze mixing ratio with water	50%

- **Securely tighten the radiator cap. If the radiator cap is loose or improperly fitted, water may leak out and the engine could overheat.**

Be sure to flush the cooling system and to change the coolant once every 2000 hours or every two years whichever comes faster.

Coolant capacity (with recovery tank)	BX1880	2.9 L (3.06 U.S.qts.)
	BX2380	3.1 L (3.3 U.S.qts.)
	BX2680	3.3 L (3.5 U.S.qts.)

1. Stop the engine and let it cool down.
2. To drain the coolant, open the radiator-drain-plug or the engine-drain-plug and remove the radiator cap. The radiator cap must be removed to completely drain the coolant.
3. After all coolant is drained, close the drain plug.
4. Fill the radiator with clean soft water and the cooling-system-cleaner.
5. Follow directions of the instruction of cooling-system-cleaner.

https://truckmanualshub.com/

6. After flushing the radiator, fill it with clean soft water and the anti-freeze until the coolant level is just below the radiator cap.
7. Install the radiator cap securely.
8. Fill the recovery tank with coolant up to the "**H**" mark on the recovery tank.
9. Start and operate the engine for few minutes.
10. Stop the engine and let it cool.
11. Check the coolant level of the recovery tank and add the coolant if necessary.

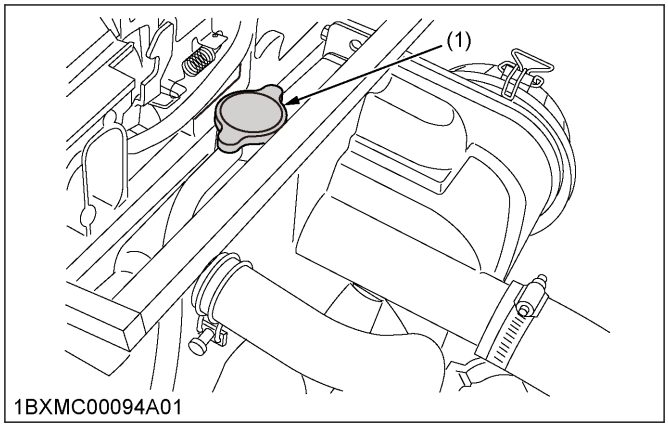

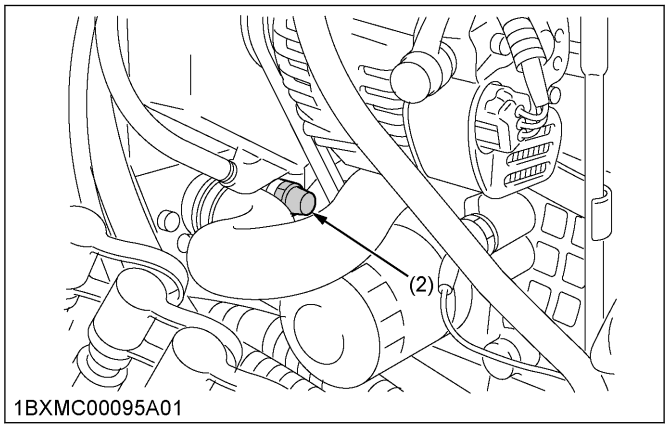

BX1880 and BX2380

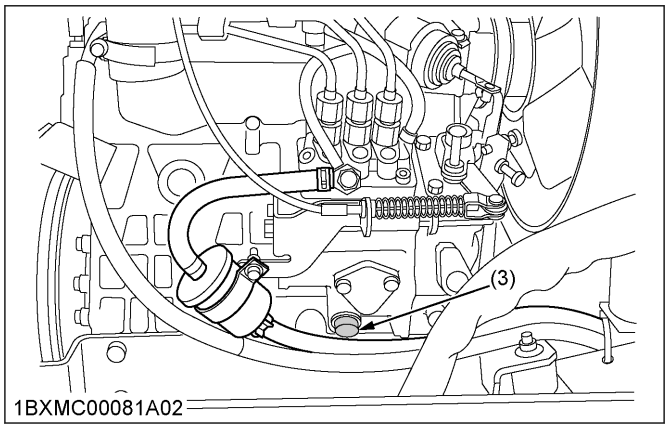

BX2680

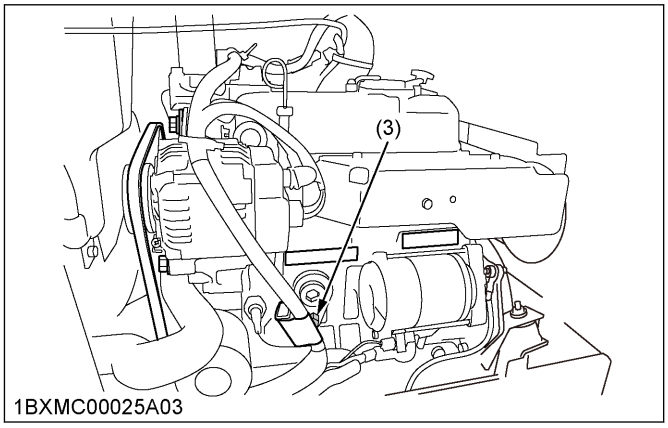

(1) Radiator cap
(2) Radiator drain plug
(3) Engine drain plug

2. Anti-freeze

WARNING

To avoid serious injury or death:

- **When using the anti-freeze, put on some protection such as rubber gloves. The anti-freeze contains poison.**
- **If someone drank anti-freeze, seek immediate medical help. Do not make a person throw up unless told to throw up by poison-control-center or a health care professional. Use standard first aid and CPR for signs of shock or cardiac arrest. Call your local poison control center or your local emergency number for further assistance.**
- **When the anti-freeze comes in contact with the skin or clothing, wash it off immediately.**
- **Do not mix different types of the anti-freeze. The mixture can produce chemical reaction causing harmful substances.**
- **The anti-freeze is extremely flammable and explosive under certain conditions. Keep fire and children away from the anti-freeze.**
- **When draining fluids from the engine, place some container underneath the engine body.**
- **Do not pour waste onto the ground, down a drain, or into any water source.**
- **Also, follow the relevant environmental protection regulations when disposing of the anti-freeze.**

Always use a 50/50 mix of long-life coolant and clean soft water in KUBOTA engines.
Consult your local KUBOTA Dealer concerning coolant for extreme conditions.

https://truckmanualshub.com/

NOTE :

- **The following data represent industry standards that necessitate a minimum glycol content in the concentrated anti-freeze.**

- Long-life coolant (hereafter LLC) comes in several types. Use ethylene glycol (EG) type for this engine.
- Before using LLC-mixed cooling water, fill the radiator with fresh water and empty it again.
  Repeat this procedure two times or three times to clean up the inside.
- Mixing the LLC

Premix	50% LLC with 50% clean soft water.

  When mixing, stir it up well, and then fill into the radiator.
- Adding the LLC
  - Add only water if the mixture reduces in amount by evaporation.
  - If there is a mixture leak, add the LLC of the same manufacturer and type in the same mixture percentage.
    - Never add any long-life coolant of different manufacturer. Different brands may have different additive components, and the engine may fail to perform as specified.
- When the LLC is mixed, do not use any radiator cleaning agent. The LLC contains anticorrosive agent. If mixed with the cleaning agent, sludge may build up, adversely affecting the engine parts.
- KUBOTA's genuine long-life coolant has a service life of two years. Be sure to change the coolant as follows.

Changing the coolant	every 2000 hours or every 2 years whichever comes faster

- The procedure for the mixing of water and the anti-freeze differs according to the make of the anti-freeze and the ambient temperature. Refer to SAE J1034 standard, more specifically also to SAE J814c.

Anti-freeze	Freezing point		Boiling Point*1	
50Vol%	-37 ℃	-34 ℉	108 ℃	226 ℉

*1 At 1.013 x 10^5 Pa (760 mmHg) atmospheric pressure.
A higher boiling point is obtained by using a radiator pressure cap which permits the development of pressure within the cooling system.

SERVICE EVERY 3000 HOURS

1. Checking the injection pump

- Consult your local KUBOTA Dealer for checking the injection pump.

SERVICE EVERY 1 YEAR

1. Checking the intake air line

WARNING

To avoid serious injury or death:

- **Stop the engine and remove the key before checking the intake air line.**

1. Check to see that the hose and the hose clamps are tight and not damaged.
2. If the hose and the clamps are found worn or damaged, replace or repair them at once.

BX1880 and BX2380

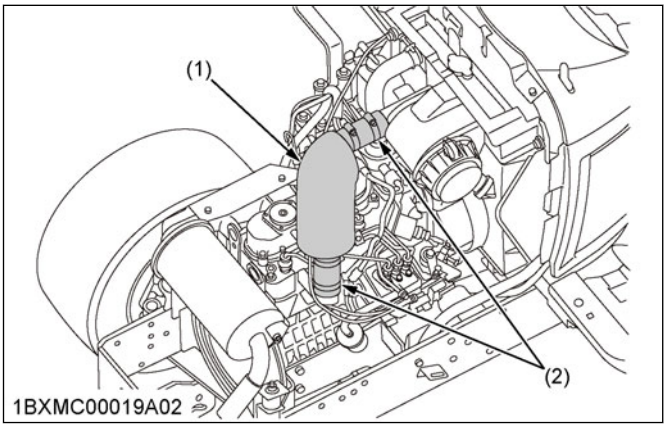

BX2680

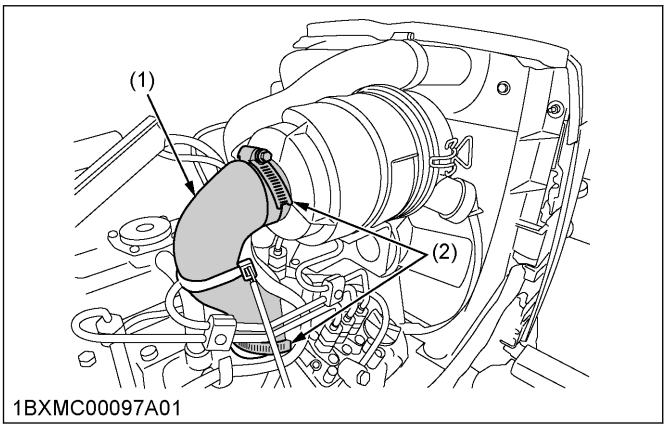

(1) Hose *(2) Hose clamps*

2. Checking the radiator hoses and the hose clamps

WARNING

To avoid serious injury or death:

- **Be sure to stop the engine and remove the key before checking the radiator hose and the hose clamps.**

https://truckmanualshub.com/

1. If the hose clamps are loose or water leaks, tighten them securely.
2. Replace the radiator hoses and tighten the hose clamps securely if you checked and found that the radiator hoses are swollen, hardened, or cracked.
3. Properly dispose of used coolant.

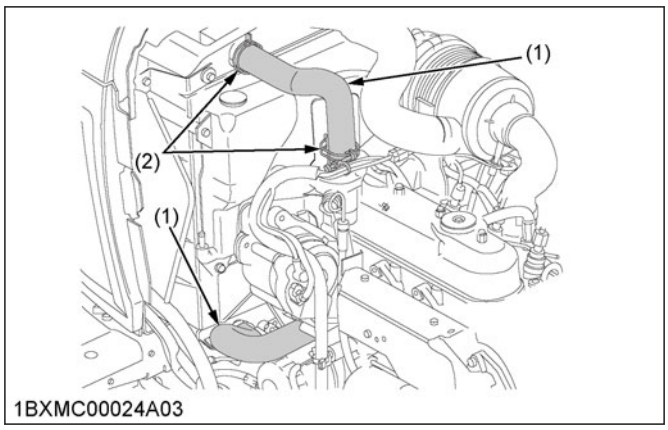

(1) Radiator hoses (2 pcs) *(2) Hose clamps (4 pcs)*

3. Checking the power steering line

WARNING

To avoid serious injury or death:

- **Be sure to stop the engine and remove the key before checking the power steering line.**

1. Check to see that all power steering lines are tight and not damaged.
2. If the power steering pressure hoses are found to be worn or damaged, replace or repair them at once.

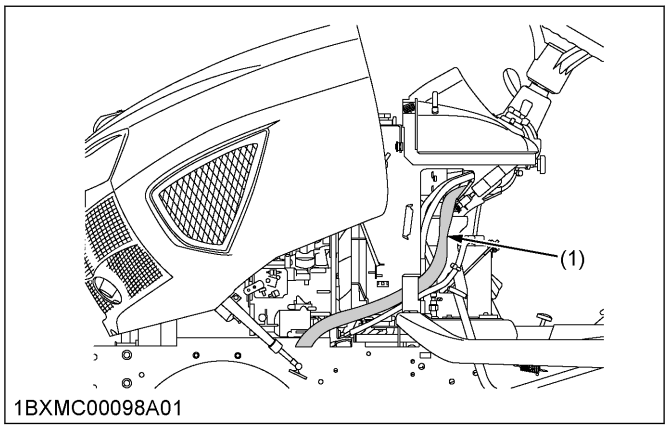

(1) Power steering pressure hose

4. Checking the fuel lines

WARNING

To avoid serious injury or death:

- **Stop the engine and remove the key before checking the fuel lines and fuel filter.**
- **Check the fuel lines periodically. The fuel lines are subject to wear and aging. Fuel may leak out onto the running engine, causing a fire.**

IMPORTANT :

- **When the fuel line is disconnected for maintenance or repair, plug both ends of the fuel line with a clean plug of suitable size to prevent dust and dirt from entering. You must take particular care of the fuel lines in order to avoid dust and dirt getting into the fuel system. Entrance of dust and dirt causes malfunction of the fuel pump.**

The fuel line is made of rubber and ages regardless of service period.

1. Inspect the fuel lines.
2. After inspection, if the fuel lines and clamps are found damaged or deteriorated, replace them.
3. Check the fuel filter. If the fuel filter is clogged by debris or contaminated by water, replace it.

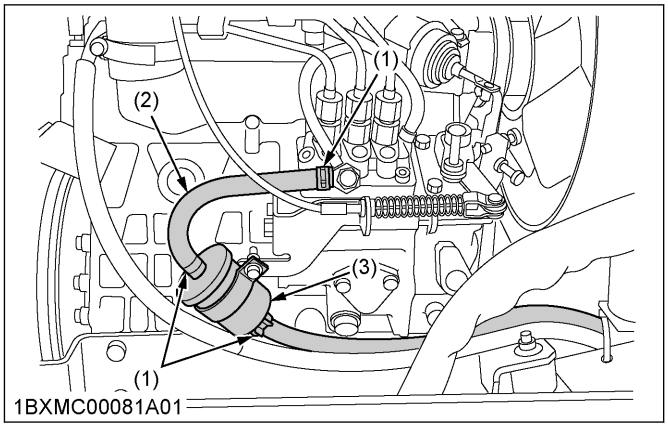

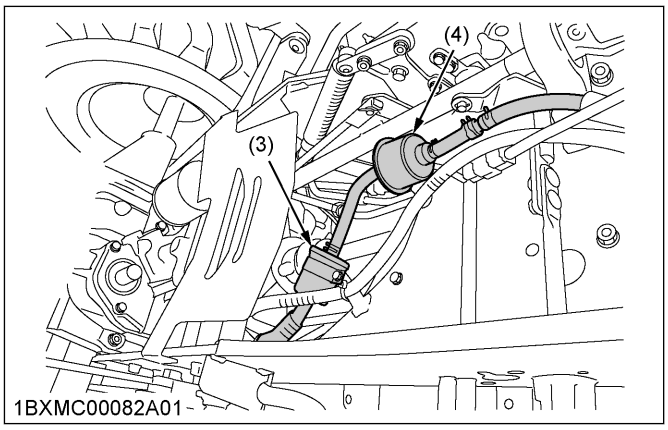

(1) Pipe clamps *(3) Fuel filter*
(2) Fuel line *(4) Fuel pump*

https://truckmanualshub.com/

NOTE :
- **If the fuel line is removed, be sure to properly bleed the fuel system.**
  See 1. Bleeding the fuel system on page 94.

5. Checking the engine breather hose

- Consult your local KUBOTA Dealer for checking the engine breather hose.

SERVICE EVERY 4 YEAR

1. Replacing the radiator hose (water pipes)

1. Replace the radiator hoses and tighten the hose clamps securely.

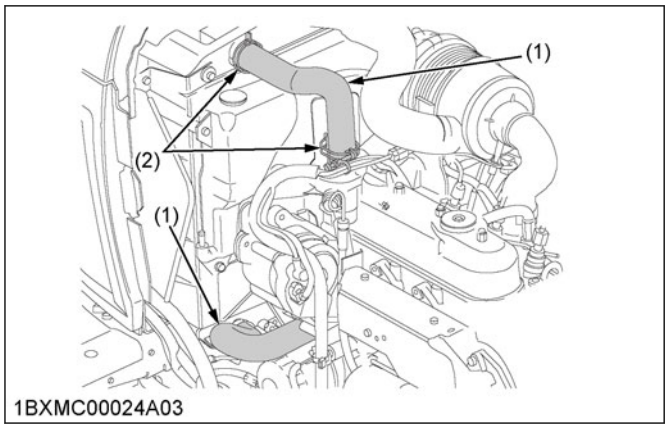

(1) Radiator hoses (2 pcs) *(2) Hose clamps (4 pcs)*

2. Replacing the fuel hose

- Consult your local KUBOTA Dealer for replacing the fuel hose.

3. Replacing the power steering hose

- Consult your local KUBOTA Dealer for replacing the power steering hose.

4. Replacing the intake air line

- Consult your local KUBOTA Dealer for replacing the intake air line.

5. Replacing the engine breather hose

- Consult your local KUBOTA Dealer for replacing the engine breather hose.

SERVICE AS REQUIRED

1. Bleeding the fuel system

Air must be removed:
- When the fuel filter or lines are removed
- When the tank is completely empty
- After the tractor has not been used for a long period of time

Bleeding procedure is as follows

1. Fill the fuel tank with fuel.

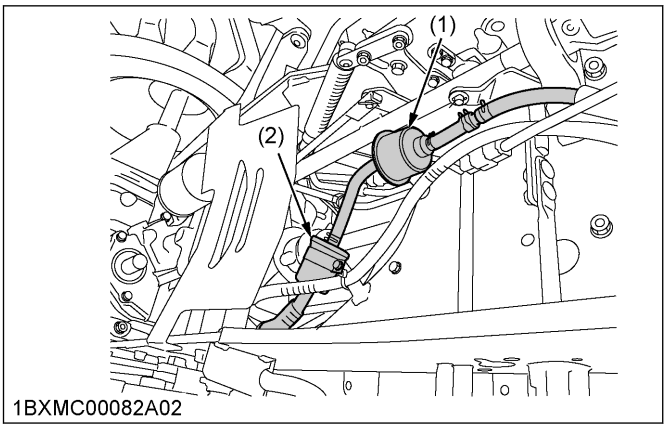

(1) Fuel pump *(2) Fuel filter*

2. Turn the key switch to the **on** position for the following seconds.
   Turning the key to **on** for the following seconds allows fuel pump to work and pump air out of the fuel system.

Turning the key to **on**	About 30 seconds

3. Start the engine and run it for the following seconds, and then stop it.

Running the engine	About 30 seconds

2. Replacing the fuse

The electrical system of the tractor is protected from potential damage by fuses.
A blown fuse indicates that there is an overload or short somewhere in the electrical system.

1. If any of the fuses should blow, replace with a new fuse with the same capacity.

IMPORTANT :
- **Before replacing a blown fuse, determine why the fuse blew and make any necessary repairs. Failure to follow this procedure may result in serious damage to the electrical system of the tractor. Refer to the ENGINE TROUBLESHOOTING on page 97 of this manual or your local KUBOTA Dealer for**

https://truckmanualshub.com/

specific information dealing with electrical problems.

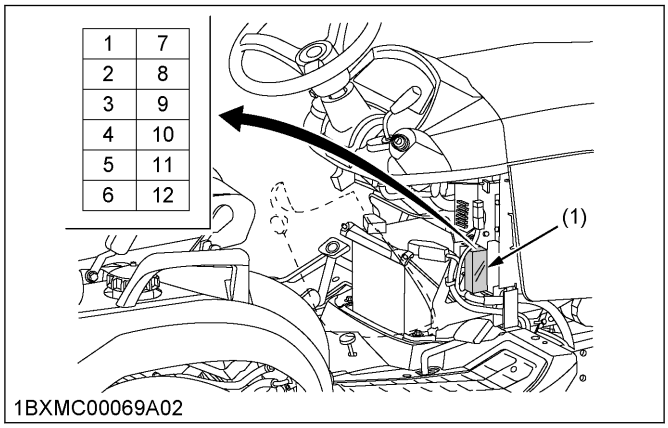

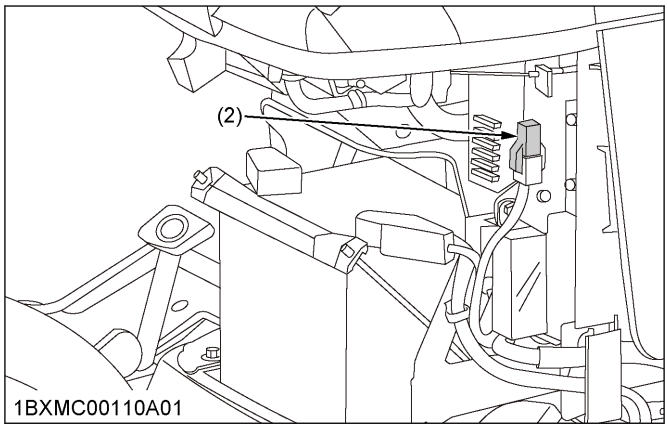

(1) Fuse box *(2) Slow blow fuse*

Protected circuit

[Fuse box]

FUSE no.	Capacity	Protected circuit
1	-	-
2	-	-
3	10 A	Option (3rd-function)
4	10 A	OPC
5	15 A	DC outlet
6	5 A	Fuel pump
7	-	-
8	5 A	Glow indicator
9	5 A	Meter
10	15 A	Stop solenoid
11	20 A	Lamp
12	20 A	Option (work light)

Slow blow fuse

Capacity	Protected circuit
50 A	Check circuit against wrong battery connection

3. Replacing the light bulb

Light	Capacity
Head light	37.5 W×2
Tail light	12.8 W×2
Hazard light	27 W×2

Head light

1. Take the light bulb out of the body of the light and replace with a new one.

Other lights

1. Detach the lens and replace the light bulb.

https://truckmanualshub.com/

STORAGE OF THE TRACTOR

WARNING

To avoid serious injury or death:

- **Do not clean the tractor while the engine is running.**
- **To avoid the danger of exhaust fume poisoning, do not operate the engine in a closed building without proper ventilation.**
- **When storing the tractor, remove the key from the key switch to avoid unauthorized persons from operating the tractor and getting injured.**

STORING THE TRACTOR

IMPORTANT :

- **When washing the tractor, be sure to stop the engine. Allow sufficient time for the engine to cool before washing the tractor.**
- **Cover the tractor after the muffler and the engine have cooled down.**

If you intend to store your tractor for an extended period of time, follow the procedures outlined as follows. These procedures will insure that the tractor is ready to operate with minimum preparation when it is removed from storage.

1. Check the bolts and nuts for looseness, and tighten them if necessary.
2. Apply grease to the areas of the tractor where bare metal will rust and to pivot areas.
3. Detach the weights from the tractor body.
4. Inflate the tires to a pressure a little higher than usual.
5. Change the engine oil and run the engine to circulate oil throughout the engine block and internal moving parts for about five minutes.
6. With all implements lowered to the ground, coat any exposed hydraulic-cylinder-piston-rods with grease.
7. Remove the battery from the tractor. Store the battery following the battery-storage-procedures.
   See 1.2 Dealing with the battery when storing the tractor for a long period on page 83.
8. Keep the tractor in a dry place, where the tractor is sheltered from the elements. Cover the tractor.
9. Store the tractor indoors in a dry area that is protected from sunlight and excessive heat. If the tractor must be stored outdoors, cover it with a waterproof tarpaulin.
   Jack the tractor up and place blocks under the front and rear axles so that all four tires are off the ground. Keep the tires out of direct sunlight and extreme heat.

REMOVING THE TRACTOR FROM STORAGE

1. Check air pressure of the tires and inflate the tires if they are low.
2. Jack the tractor up and remove the support blocks from under the front and rear axles.
3. Before installing the battery, be sure that it is fully charged.
4. Install the battery.
5. Check the fan belt tension.
6. Check all fluid levels:
   - engine oil
   - transmission/ hydraulic oil
   - engine coolant
   - any attached implements
7. Start the engine. Check all gauges. If all gauges are functioning properly and reading normal, move the tractor outside. Once outside, park the tractor and let the engine idle for at least five minutes.
8. Shut the engine off and walk around tractor and make a visual inspection looking for evidence of oil or water leaks.
9. With the engine fully warmed up, release the parking brake and test the brakes for proper adjustment as you move forward. Adjust the brakes if it is necessary for the brakes to be adjusted.

https://truckmanualshub.com/

TROUBLESHOOTING

ENGINE TROUBLESHOOTING

If something is wrong with the engine, refer to the following table for the cause of it and its corrective measure.

Trouble		Cause	Countermeasure
Engine is difficult to start or will not start.		• No fuel flow.	• Check the fuel tank and the fuel filter. Replace the filter if necessary.
		• Air or water is in the fuel system.	• Check to see if the fuel line coupler bolt and nut are tight. • Bleed the fuel system. See 1. Bleeding the fuel system on page 94. • Remove water from the system and replace the fuel filter.
		• In winter, oil viscosity increases, and engine revolution is slow.	• Use oils of different viscosity, depending on ambient temperatures. • Use engine block heater (option).
		• Battery becomes weak and the engine does not turn over quick enough.	• Clean battery cables and terminals. • Charge the battery. • In cold weather, always remove the battery from the engine, charge and store the battery indoors. Install the battery on the tractor only when the tractor is going to be used.
Insufficient engine power.		• Insufficient or dirty fuel.	• Check the fuel system.
		• The air cleaner is clogged.	• Clean or replace the air cleaner element.
Engine stops suddenly.		• Insufficient fuel.	• Refuel. • Bleed the fuel system if necessary.
Exhaust fumes are colored.	Black	• Fuel quality is poor.	• Change the fuel and the fuel filter.
		• Too much oil.	• Check the proper amount of oil.
		• The air cleaner is clogged.	• Clean or replace the air cleaner element.
	Blue white	• The inside of exhaust muffler is damp from fuel.	• Heat the muffler by applying load to the engine.
		• Injection nozzle trouble.	• Check the injection nozzle.
		• Fuel quality is poor.	• Change the fuel and fuel filter.
Engine overheats.		• Engine overloaded.	• Shift to lower gear or reduce load.
		• Low coolant level.	• Fill cooling system to the correct level. Check the radiator and the hoses for loose connections or leaks.
		• Loose or damaged fan belt.	• Adjust or replace the fan belt.
		• Dirty radiator core or grille screens.	• Remove all trash.
		• Coolant flow route corroded.	• Flush the cooling system.
Engine does not stop when key switch is turned off.		• Fuse blown (15 A).	• Replace the fuse.

If you have any questions, consult your local KUBOTA Dealer.

https://truckmanualshub.com/

OPTIONS

OPTION ITEMS

Consult your local KUBOTA Dealer for further details of the following options.

- 16 x 7.5-8 Bar Tire [BX1880]
- 24 x 12.0-12 Bar Tire [BX1880]
- 18 x 8.5-10 Bar Tire [BX2380 and BX2680]
- 26 x 12.0-12 Bar Tire [BX2380 and BX2680]
- 18 x 8.5-10 Ind. Tire [BX2380 and BX2680]
- 26 x 12.0-12 Ind. Tire [BX2380 and BX2680]
- Arm rest [BX1880]
- Speed set device (cruise control) [BX1880]
- Grille guard
- Engine block heater
  For facilitating starting and reducing warm-up-period in cold weather
- Rear work light
  For high visibility for night work
- Front end weights
  For front ballast
- Rear wheel weight
- Sunshade for ROPS
- Dual-double acting remote valve
- Ballast box
- Male quick hitch
- Mid PTO Driveline
  - Chute rotator
  - Chute deflector
  - Sweeper
- Tool box

https://truckmanualshub.com/

INDEX

Symbols

12 V electric outlet....34
3-point hitch
lowering speed....58
overview....55
precautions for attaching and detaching the implements....56
3-point hitch control system.... 58

A

accessory box.... 35
air cleaner element
cleaning....83
replacing....90
anti-freeze.... 91
auxiliary hydraulic control lever
connecting to the auxiliary hydraulic port....62
auxiliary hydraulic ports....62
auxiliary hydraulics....59

B

ballast....67
battery
charging.... 82
checking....82
dealing when storing the tractor for a long period. 83
battery cables
checking and cleaning....78
BDF (biodiesel fuel)....73
biodiesel fuel (BDF)....73
block heater (option).... 39
brake pedal.... 31
adjusting....85
checking....78
BX1880
operator's manual holder.... 35
BX2380
engaging and disengaging speed set device 34
glove box....35
speed set device 34
tilt lever....28
BX2680
engaging and disengaging speed set device 34
glove box....35
speed set device 34
tilt lever....28

C

check chains
adjusting....56
check items during driving....47
controlling loader (only if equipped with loader)....63
coolant....71
changing....90
checking the level....77
coolant temperature gauge.... 48
cooling system
flushing....90
cutting height control dial.... 60

D

daily check.... 75
dealer service....17
differential lock.... 50
drawbar
overview....55
dual tires....64

E

Easy Checker (TM)
checking....78
electrical wiring
checking and cleaning....78
engine
cases to stop immediately....47
jump starting....40
starting.... 37
starting in the cold weather.... 39
stopping....39
warming up....40
warming up in the low temperature range....40
engine breather hose
checking....94
replacing....94
engine oil
changing....86
checking the level....76
engine oil filter
replacing....86
engine start system
checking....80
engine valve clearance
adjusting....90

F

fan belt
adjusting tension.... 84
foldable ROPS
operating.... 42
foot controls....30
front axle case oil
changing....89
front axle pivot
adjusting....88
front ballast....67

https://truckmanualshub.com/

front loader....26
front wheel drive lever....32
front wheels....65
fuel....71
fuel filter
checking....84
fuel filter element
replacing....90
fuel gauge....48
checking....75
fuel hose
replacing....94
fuel injection nozzle
checking the injection pressure....90
fuel line
checking....93
fuel system
bleeding....94
fuse
replacing....94

G

gauges
checking....78
getting off the tractor....42
getting on the tractor....42
glove box [BX2380 and BX2680]....35

H

hand accelerator lever....33
hand controls....27,30
hazard light
checking....78
hazard light switch....28
head light
checking....78
head light switch....28
hitch....56
hood
opening....75
hood open lever....29
hose clamp
checking....92
hour meter....49
HST neutral spring
adjusting for speed control pedal....85
hydraulic control....58
hydraulic control unit use reference char....61
hydraulic hose
connecting to the auxiliary hydraulic port....62
hydraulic outlet....59

I

implement limitation table....22
index1
index2....36,62,87
coolant temperature
overheating....49
injection pump
checking....92
instrument panel....27
intake air line
checking....92
replacing....94

K

key switch....28

L

lifting rod (right)
adjusting....56
light bulb
replacing....95
lock lever shaft
cleaning....81
lubricants....71
lubricate fittings with grease....79

M

meters
checking....78
movable parts
checking....79

O

OPC system
checking....80
operating new tractor....42
operator's manual holder [BX1880]....35
operator's seat....31
option
block heater....39
option items....98

P

panel
cleaning....77
parking brake
setting and releasing....32
parking brake lock pedal....31
parking the tractor....50
power steering
directions for use....51
power steering hose
replacing....94
power steering line
checking....93
precaution
CAB and ROPS....5
driving the tractor on the road....7
general....5

https://truckmanualshub.com/

operating the PTO....8
operating the tractor on a road....51
operating the tractor on a slopes and rough terrain.. 51
operating the tractor on slopes....7
parking the tractor....8
safety for children....7
servicing the tractor....9
starting to operate the tractor....6
transporting the tractor safely....51
using 3-point hitch....9
working the tractor....6
precautions
before operating the tractor....5
operating the tractor....6
procedure of scrapping the tractor....18
PTO
operation....52
PTO clutch lever....52
PTO drive shaft....54
adjusting the length....54
PTO select lever....52
PTO shaft cap....53
PTO shaft cover....53

R

radiator hose
checking....92
replacing....94
radiator screen
cleaning....77
range gear shift lever (Hi-Lo)....32
rear ballast....67
rear wheels....66
refueling....75
removing
tractor from storage....96
ROPS
checking....78

S

safety label....11
safety labels
care....15
scrapping the tractor....18
seat belt....31
checking....78
service intervals....69
specification table....19
speed control pedal....33
speed set device [BX2380 and BX2680]....34
engaging and disengaging....34
starting the tractor....44
stationary PTO....53
stopping the tractor....46
storing
tractor....96
switches....27

T

tachometer....49
the foldable ROPS
adjusting....44
folding....42
raising to upright position....43
tilt lever [BX2380 and BX2680]....28
tires....64
inflation pressure....64
toe-in
adjusting....88
checking....87
top link
adjusting....56
transmission fluid
changing....88
checking the level....76
transmission oil
in the low temperature range....40
transmission strainer
cleaning....89
traveling speeds table....21
troubleshooting
engine....97
turn signal light switch....28

V

valve lock....62

W

walk around inspection....75
warranty of the tractor....18
water pipes
replacing....94
weight
rear ballast....26
wheel bolt torque
checking....81
wheel tread....64

https://truckmanualshub.com/

KUBOTA Corporation is ...

Since its inception in 1890, KUBOTA Corporation has grown to rank as one of the major firms in Japan.

To achieve this status, the company has through the years diversified the range of its products and services to a remarkable extent. 30 plants and 35,000 employees produce over 1,000 different items, large and small.

All these products and all the services which accompany them, however, are unified by one central commitment. KUBOTA makes products which, taken on a national scale, are basic necessities. Products which are indispensable. Products which are intended to help individuals and nations fulfill the potential inherent in their environment. KUBOTA is the Basic Necessities Giant.

This potential includes water supply, food from the soil and from the sea, industrial development, architecture and construction, and transportation.

Thousands of people depend on KUBOTA's know-how, technology, experience and customer service. You too can depend on KUBOTA.