https://truckmanualshub.com/

Kenworth T470 Body Builder Manual

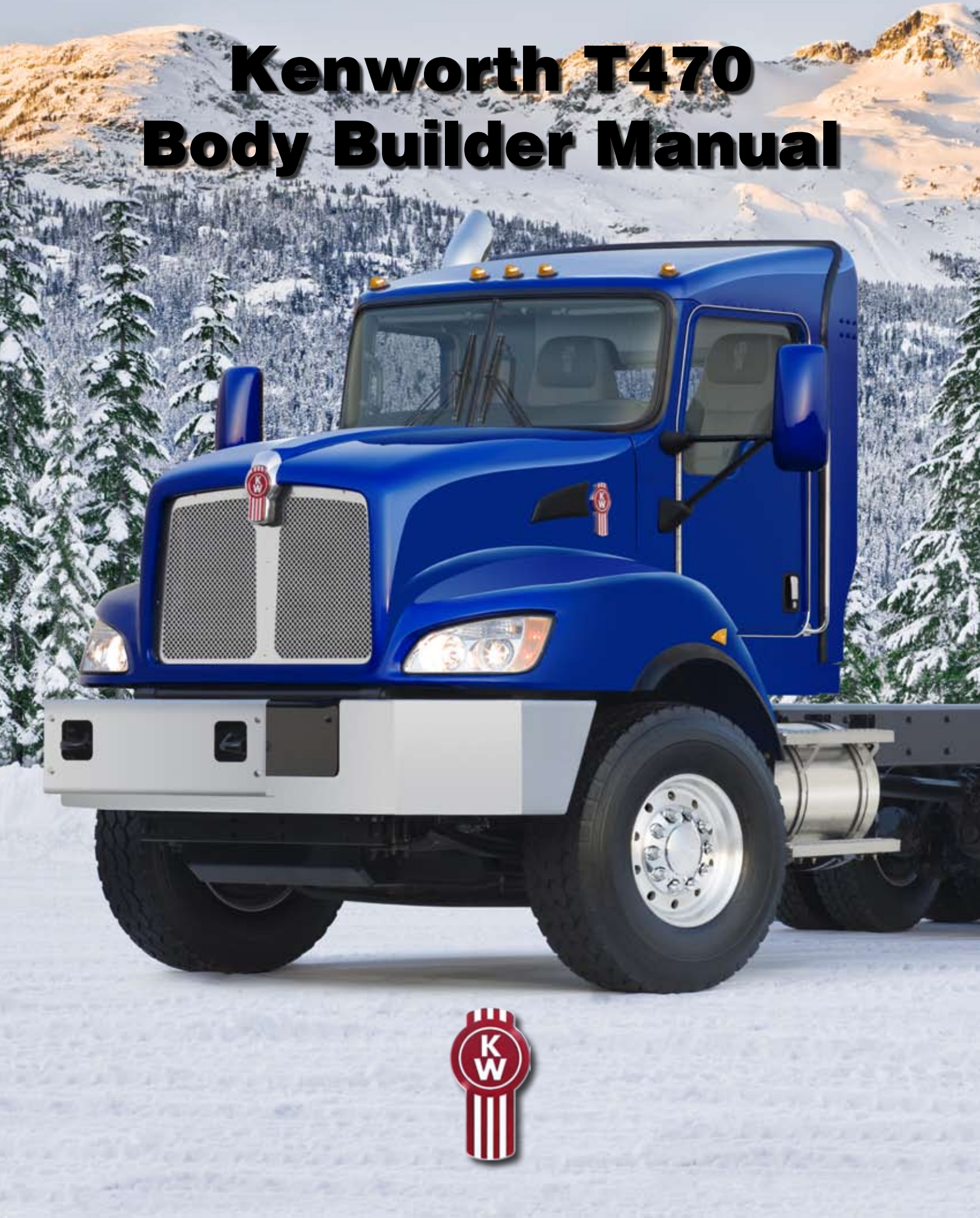

https://truckmanualshub.com/

https://truckmanualshub.com/

Kenworth T470
Body Builder Manual

Body Builder Manual Contents

https://truckmanualshub.com/

SECTION 1: INTRODUCTION **1-1**

SECTION 2: SAFETY AND COMPLIANCE **2-1**
SAFETY SIGNALS . . . 2-1
FEDERAL MOTOR VEHICLE SAFETY STANDARDS COMPLIANCE . . . 2-2

SECTION 3: DIMENSIONS **3-1**
DIMENSIONS . . . 3-1
ABBREVIATIONS . . . 3-1
TURNING RADIUS . . . 3-1
AXLE TRACK AND TIRE WIDTH . . . 3-4
OVERALL DIMENSIONS . . . 3-5
T470 STRAIGHT HOOD . . . 3-6
T470 EXTENDED DAY CAB . . . 3-7
RIDE HEIGHTS . . . 3-8
REAR SUSPENSION LAYOUTS . . . 3-10
REYCO 79KB SINGLE REAR AXLE . . . 3-10
REYCO 102 TANDEM REAR AXLE . . . 3-11
NEWAY AD 123 SINGLE REAR AXLE . . . 3-12
NEWAY AD 246 TANDEM SUSPENSION . . . 3-13
NEWAY AD 369 TRIDEM SUSPENSION . . . 3-18
HENDRICKSON PRIMAAX TANDEM SUSPENSION . . . 3-14
HENDRICKSON HMX TANDEM SUSPENSION . . . 3-15
HENDRICKSON RT TANDEM SUSPENSION . . . 3-16
HENDRICKSON RT TANDEM SUSPENSION . . . 3-17
KENWORTH AG 380 TANDEM SUSPENSION . . . 3-18
KENWORTH AG 400/460 TANDEM SUSPENSION . . . 3-19
KENWORTH AG 400L TANDEM SUSPENSION . . . 3-20
KENWORTH AG 460 60” AXLE SPACING . . . 3-21
CHALMERS 856-46 TANDEM SUSPENSION . . . 3-22
PUSHER AXLES . . . 3-23
GROUND CLEARANCE . . . 3-25
EXHAUST INFORMATION . . . 3-27
PTO CLEARANCES . . . 3-28
FRAME LAYOUTS . . . 3-30
FRAME LAYOUT INDEX . . . 3-31
CHARTS . . . 3-34

SECTION 4: BODY MOUNTING **4-1**
FRONT FRAME DIMENSIONS . . . 4-1
FRAME INFORMATION . . . 4-2
CRITICAL CLEARANCES . . . 4-2
BODY MOUNTING USING BRACKETS . . . 4-3
MOUNTING HOLES . . . 4-5
BODY MOUNTING USING U–BOLTS . . . 4-6
REAR BODY MOUNT . . . 4.8

SECTION 5: FRAME MODIFICATIONS **5-1**
FRAME MODIFICATIONS . . . 5-1
DRILLING RAILS . . . 5-1
MODIFYING FRAME LENGTH . . . 5-2
CHANGING WHEELBASE . . . 5-3
CROSSMEMBERS . . . 5-5
WELDING . . . 5-6
TORQUE REQUIREMENTS . . . 5-7

https://truckmanualshub.com/

SECTION 6: ELECTRICAL **6-1**
ELECTRICAL 6-1
MULTIPLEX INSTRUMENTATION 6-1
INTERIOR IDENTIFICATION 6-2
ACCESSING GAUGES AND SWITCHES 6-9
ACCESSING SWITCHES IN THE UPPER DASH 6-15
TELLTALE SYMBOLS 6-18
ADDITIONAL SPARE CIRCUITS 6-21
MULTIFUNCTION TURN SIGNAL STALK 6-24
REMOTE PTO/THROTTLE HARNESS 6-25

SECTION 7: ROUTINGS **7-1**
DEFINITIONS 7-1
ROUTING REQUIREMENTS 7.2

APPENDIX A: VEHICLE IDENTIFICATION **A-1**
LABELS A-1
COMPONENT IDENTIFICATION A-3

Figures

https://truckmanualshub.com/

FIGURE 2-1. INCOMPLETE VEHICLE CERTIFICATION DOCUMENT 2-2
FIGURE 2-2. LOCATIONS OF CERTIFICATION LABELS - DRIVER'S DOOR AND FRAME 2-2
FIGURE 3-1. PROSPECTER TURN CIRCLE ANALYSIS 3-3
FIGURE 4-1. MINIMUM CLEARANCE BETWEEN TOP OF REAR TIRES AND BODY STRUCTURE OVERHANG. 4-2
FIGURE 4-2. MINIMUM BACK OF CAB CLEARANCE 4-3
FIGURE 4-3. SPACER BETWEEN FRAME SILL AND BODY RAIL - RUBBER OR PLASTIC 4-4
FIGURE 4-4. HIGH COMPRESSION SPRING. 4-4
FIGURE 4-5. RUBBER SPACER BETWEEN BRACKETS BETWEEN THE MOUNTING BOLT AND UPPER BRACKET 4-4
FIGURE 4-6. CROSSMEMBER-GUSSET HOLE PATTERN REQUIREMENTS. [INCH (MM)] 4-5
FIGURE 4-7. ACCEPTABLE U-BOLT MOUNTING WITH WOOD AND FABRICATED SPACERS [INCH (MM)]. 4-6
FIGURE 4-8. CLEARANCE SPACE FOR AIR LINES AND CABLES 4-7
FIGURE 4-9. EXAMPLE OF FISHPLATE BRACKET AT REAR END OF BODY, USED WITH U-BOLTS 4-8
FIGURE 5-1. DETAIL OF FRAME EXTENSION AND JOINT WELDING 5-2
FIGURE 5-2. FRAME INSERT 5-3
FIGURE 5-3. COMPARISON OF ORIGINAL, SHORTENED, AND EXTENDED WHEELBASES. 5-4
FIGURE 5-4. CROSSMEMBER ADDED WHEN DISTANCE EXCEEDS 60 INCHES (1524 MM) 5-5
FIGURE 6-1. CECU LOCATION. 6-2
FIGURE 6-2. INSTRUMENT CLUSTER COMPONENTRY. 6-3
FIGURE 6-3. CVSG GAUGES. 6-5
FIGURE 6-4. MULTIPLEXED INSTRUMENTATION BLOCK DIAGRAM 6-6
FIGURE 6-5. INSTRUMENTATION HARNESS INTERFACE DIAGRAM. 6-7
FIGURE 6-6. FIREWALL AIR JUNCTION BLOCK 6-8
FIGURE 6-7. FUEL FILTER RESTRICTION PRESSURE GAUGE SENSOR LOCATION (TYPICAL) 6-8
FIGURE 6-8. TELLTALE SYMBOL STANDARD CARDS. 6-18
FIGURE 6-9. BLANK TELLTALE CARD 6-18
FIGURE 6-10. TELLTALE ICONS 6-19
FIGURE 6-11. SPARE BULLET CONNECTORS 6-22
FIGURE 6-12. SPARE PIGTAIL CONNECTOR 6-22
FIGURE 6-13. SPARE RELAY CONNECTORS 6-23
FIGURE 7-1. CLAMP AND BUTTERFLY CLAMP 7-1
FIGURE 7-2. BUTTERFLY TIE 7-1
FIGURE 7-3. TIE STRAP. 7-1
FIGURE 7-4. HEAVY DUTY MOUNT 7-2
FIGUER 7-5. DEFINITION OF MEASUREMENTS. 7-4
FIGURE A-1. VEHICLE IDENTIFICATION NUMBER A-3
FIGURE A-4. FRONT AXLE IDENTIFICATION. A-4
FIGURE A-5. AXLE IDENTIFICATION A-5

https://truckmanualshub.com/

Tables

TABLE 3-1. ABBREVIATIONS USED 3-1
TABLE 3-2. TURNING RADIUS 3-1, 3-2
TABLE 3-3. AXLE TRACK 3-3
TABLE 3-4. RIDE HEIGHTS 3-8
TABLE 3-5. REAR SUSPENSION - REYCO 79KB 3-10
TABLE 3-6. REAR SUSPENSION - REYCO 102 3-11
TABLE 3-7. REAR SUSPENSION - NEWAY AD SINGLE 3-12
TABLE 3-8. REAR SUSPENSION - NEWAY AD TANDEM 3-13
TABLE 3-9. REAR SUSPENSION - HENDRICKSON PRIMAAX TANDEM 3-14
TABLE 3-10. REAR SUSPENSION - HENDRICKSON HMX TANDEM 3-15
TABLE 3-11. REAR SUSPENSION - HENDRICKSON RT TANDEM 3-16
TABLE 3-12. REAR SUSPENSION - HENDRICKSON RT TANDEM 3-17
TABLE 3-13. REAR SUSPENSION - KENWORTH AG 380 3-18
TABLE 3-14. REAR SUSPENSION - KENWORTH AG 400/460 3-19
TABLE 3-15. REAR SUSPENSION - KENWORTH AG 400L 3-20
TABLE 3-16. REAR SUSPENSION - KENWORTH AG460 3-21
TABLE 3-17. REAR SUSPENSION - CHALMERS 856-46 3-22
TABLE 3-18. GROUND CLEARANCE 3-25
TABLE 3-19. GROUND CLEARANCE 3-26
TABLE 3-20. TAILPIPE STACK HEIGHT 3-27
TABLE 3-21. UNLADEN STACK HEIGHT 3-27
TABLE 3-22. FRAME LAYOUT DIMENSIONS 3-30
TABLE 3-23. VISUAL INDEX 3-30
TABLE 3-24. FRAME LAYOUT DIMENSIONS 3-34
TABLE 3-25. FRAME LAYOUT DIMENSIONS 3-34
TABLE 3-26. FRAME LAYOUT DIMENSIONS 3-36
TABLE 3-27. FRAME LAYOUT DIMENSIONS 3-37
TABLE 3-28. FRAME LAYOUT DIMENSIONS 3-38
TABLE 3-29. FRAME LAYOUT DIMENSIONS 3-39
TABLE 3-30. FRAME LAYOUT DIMENSIONS 3-40
TABLE 3-31. FRAME LAYOUT DIMENSIONS 3-41
TABLE 3-32. FRAME LAYOUT DIMENSIONS 3-42
TABLE 3-33. FRAME LAYOUT DIMENSIONS 3-43
TABLE 3-34. FRAME LAYOUT DIMENSIONS 3-44
TABLE 4-1. SINGLE STEEL RAILS 4-2
TABLE 4-2. INSERTED STEEL RAILS 4.2
TABLE 5-1. CUSTOMARY GRADE 8 UNF OR UNC. 5-7
TABLE 5-2. U.S. CUSTOMARY – GRADE 8. METRIC CLASS 10.9 5-7
TABLE 6-1. TELLTALES POSITION AND COLOR 6-20
TABLE 6-2. TSM GUIDELINE 6-24
TABLE 6-3. 2007 CUMMINS ISL 6-25
TABLE 7-1. EXHAUST - SYSTEM CLEARANCE 7-4
TABLE A-1. MODEL YEAR DESIGNATIONS 7-5

https://truckmanualshub.com/

https://truckmanualshub.com/

Section 1
Introduction

This manual was created to provide body builders with appropriate information and guidelines useful in the body planning and installation process. This information will be helpful when installing bodies or other associated equipment.

This manual contains appropriate dimensional information, guidelines for mounting bodies, guidelines for modifying frames, electrical wiring information, and other information useful in the body installation process.

The Body Builder Manual can be very useful when specifying a vehicle, particularly when the body builder is involved in the vehicle definition and ordering process. Early in the process, professional body builders can often contribute valuable information that reduces the ultimate cost of the body installation.

In the interest of continuing product development, Kenworth reserves the right to change specifications or products at any time without prior notice. It is the responsibility of the user to ensure that he is working with the latest released information. Check Kenworth.com for the latest released version.

If you require additional information or reference materials, please contact your local Kenworth dealer.

https://truckmanualshub.com/

https://truckmanualshub.com/

SAFETY SIGNALS

We've put a number of alerting messages in this book. Please read and follow them. They are there for your protection and information. These alerting messages can help you avoid injury to yourself or others and help prevent costly damage to the vehicle.

Key symbols and "signal words" are used to indicate what kind of message is going to follow. Pay special attention to comments prefaced by "WARNING", "CAUTION", and "NOTE." Please don't ignore any of these alerts.

Warnings, cautions, and notes

WARNING

When you see this word and symbol, the message that follows is especially vital. It signals a **potentially hazardous situation** which, if not avoided, could result in death or serious injury. This message will tell you what the hazard is, what can happen if you don't heed the warning, and how to avoid it.

Example: **WARNING! Be sure to use a circuit breaker designed to meet liftgate amperage requirements. An incorrectly specified circuit breaker could result in a electrical overload or fire situation. Follow the liftgate installation instructions and use a circuit breaker with the recommended capacity.**

CAUTION

Signals a **potentially hazardous situation** which, if not avoided, could result in minor or moderate injury or damage to the vehicle.

Example: **CAUTION: Never use a torch to make a hole in the rail. Use the appropriate drill bit.**

NOTE

Provides general information: for example, the note could warn you on how to avoid damaging your vehicle or how to drive the vehicle more efficiently.

Example: Note: Be sure to provide maintenance access to the battery box and fuel tank fill neck.

Please take the time to read these messages when you see them, and remember:

WARNING
Indicates a potentially hazardous situation which, if not avoided, could result in death or serious injury.

CAUTION
Signals a potentially hazardous situation which, if not avoided, could result in minor or moderate injury or damage to the vehicle.

NOTE
Useful information that is related to the topic being discussed.

https://truckmanualshub.com/

FEDERAL MOTOR VEHICLE SAFETY STANDARDS COMPLIANCE

As an Original Equipment Manufacturer (OEM), Kenworth Truck Co. ensures that our products comply with all applicable U.S. or Canadian Federal Motor Vehicle Safety Standards. However, the fact that this vehicle has no fifth wheel and that a Body Builder (Intermediate or Final Stage Manufacturer) will be doing additional modifications means that the vehicle was incomplete when it left the build plant. See next section and Appendix A for additional information.

Incomplete Vehicle Certification

An Incomplete Vehicle Document is shipped with the vehicle, certifying that the vehicle is not complete. See Figure 2–1. In addition, affixed to the driver's side door frame or edge is an Incomplete Vehicle Certification label. See Figure 2–2. For further information on Vehicle Certification and Identification, see APPENDIX A "VEHICLE IDENTIFICATION."

NOTE

These documents list the U.S. or Canadian Federal Motor Vehicle Safety Standard regulations that the vehicle complied with when it left the build plant. You should be aware that if you add, modify or alter any of the components or systems covered by these regulations, it is your responsibility as the Intermediate or Final Stage Manufacturer to ensure that the complete vehicle is in compliance with the particular regulations upon completion of the modifications.

FIGURE 2-1. Incomplete Vehicle Certification Document

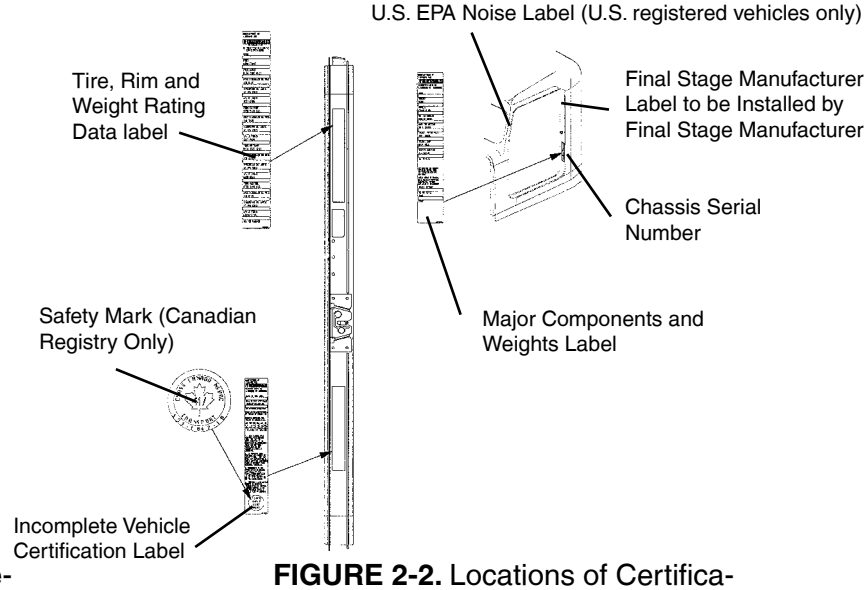

FIGURE 2-2. Locations of Certification Labels - Driver's Door and Frame

As the Intermediate or Final Stage Manufacturer, you should retain the Incomplete Vehicle Document for your records. In addition, you should record and retain the manufacturer and serial number of the tires on the vehicle. Upon completion of the vehicle (installation of the body and any other modifications), you should affix your certification label to the vehicle as required by Federal law. This tag identifies you as the "Intermediate or Final Stage Manufacturer" and certifies that the vehicle complies with Federal Motor Vehicle Safety Standards. (See Figure 2–2.) Be advised that effective September 1, 2006, a new regulation affects the intermediate and final stage manufacturer certification process and documentation.

In part, if the final stage manufacturer can complete and certify the vehicle within the instruction in the incomplete vehicle document (IVD) the certification label would need a statement that reads, "This vehicle has been completed in accordance with the prior manufacturers, IVD where applicable. This vehicle conforms to all applicable Federal Motor Vehicle Safety Standards [and Bumper and Theft Prevention Standards if applicable] in effect in (month, year)."

However, if the vehicle can not be completed and certified with in the guidance provided in the IVD, the final stage manufacturer must ensure the vehicle conforms to all applicable Federal Motor Vehicle Safety Standards (FMVSS). The final stage manufactures certification label would need a statement that reads, "This vehicle conforms to all applicable Federal Motor Vehicle Safety Standards [and Bumper and Theft Prevention Standards if applicable] in effect in (month, year)."

https://truckmanualshub.com/

These statements are just part of the changes to the new certification regulation. Please refer to the February 15, 2005 final rule for all of the details related to this regulation. You can contact NTEA Technical Services Department at 1-800-441-NTEA for a copy of the final rule (DocID 101760).

For Canadian final stage manufacturers see:

http://canadagazette.gc.ca/partII/2002/20020213/html/sor55-e.html and
http://www.tc.gc.ca/acts-regulations/GENERAL/M/mvsa/regulations/mvsrg/toc_mvsrg.htm for the regulations.

Or contact:

Transport Canada
Tower C, Place de Ville, 330 Sparks Street
Ottawa, Ontario K1A 0N5
(613) 990-2309
TTY: 1-888-675-6863

Noise and Emissions Requirements

CAUTION

Kenworth designed the 2007 exhaust system to meet the requirements of the specific engine manufacturer. These designs meet or exceed the EPA emissions requirements for the 2007 engine.

As a first priority Kenworth recommends that the dealer / customer / body builder maintain the system as designed and installed by Kenworth.

**If in certain situations the exhaust systems needs to be revised, it will be the responsibility of the modifying party to follow the guidelines established by the engine manufacturer and to obtain their approval for the revised installation. These guidelines are available from the respective local engine distributor. Be advised that the exhaust systems and requirements are complex and some of the factors that will have to be considered in the modification are: exhaust back pressure, location & structural mounting requirements of the DPF (the
engine manufacturer provides warranty for the DPF) material used for the pipes, leakage requirements, temperature drop, etc. and these modifications will have to be verified and tested by the local engine distributor.**

If the modified system is approved by the engine manufacturer Kenworth will warranty the Kenworth components used.

Installation and workmanship is the responsibility of the modifying party.

https://truckmanualshub.com/

https://truckmanualshub.com/

DIMENSIONS

This section has been designed to provide enough information to successfully layout chassis in the body planning process. Optional equipment may not be depicted. Please contact your local Kenworth dealer if more dimensional information is desired.

ABBREVIATIONS

Throughout this section, and in other sections as well, abbreviations are used to describe certain characteristics on your vehicle. The chart below lists the abbreviated terms used.

TABLE 3-1. Abbreviations Used

CA	BACK OF CAB TO CENTERLINE OF REAR AXLE OR CENTERLINE OF TANDEMS ON TANDEM SUSPENSION
EOF	FRAME RAIL OVERHANG BEHIND REAR AXLE – MEASURED FROM THE CENTERLINE OF TANDEMS
FS	FRONT SUSPENSION HEIGHT
RS	REAR SUSPENSION HEIGHT
WB	WHEELBASE
SOC	SIDE OF CAB
BOC	BACK OF CAB

TURNING RADIUS

Approximate turning radius specifications are listed in the following tables as a general guide. It is important to note that optional components may alter the results.

TABLE 3-2. Turning Radius

Model	Steering Gear	Front Axle	Front Wheel	Front Tire	Rear Suspension	Wheel Base	Est Curb to Curb Turning Radius (ft)
T470	Single TAS 65	Dana Spicer E-1202I 12K	Accuride 28487 22.5 X 8.25	Bridgestone R287 295/75R22.5	Tandem 52” Axle Spacing	181	28
						193	29.5
						201	30.5
						213	32
						220	33
						232	34.5
						240	35.5
						252	37
						260	38
						272	39.5
						280	40.5
						291	42
						303	43.5
						323	46
						331	47

TABLE 3-2 CONTINUES ON NEXT PAGE…

https://truckmanualshub.com/

TABLE 3-2 CONTINUED

Model	Steering Gear	Front Axle	Front Wheel	Front Tire	Rear Suspension	Wheel Base	Est Curb to Curb Turning Radius (ft)
T470	Dual TAS 65	Dana Spicer EFA-20F4 20K Standard Track	Alcoa 82365 22.5 X 12.25	Bridgestone M844 425/65R22.5	Tandem 52” Axle Spacing	181	31.5
						193	33.5
						201	34.5
						213	36.5
						220	37.5
						232	39
						240	40
						252	42
						260	43
						272	45
						280	46
						291	47.5
						303	49.5
						323	52.5
						331	53.5

https://truckmanualshub.com/

Prospector Turn Circle Analysis:

Please see Figure 3-2 as an example of Kenworth's turn circle calculation made in Prospector for your specific chassis. Your local Kenworth dealer can provide this information to you.

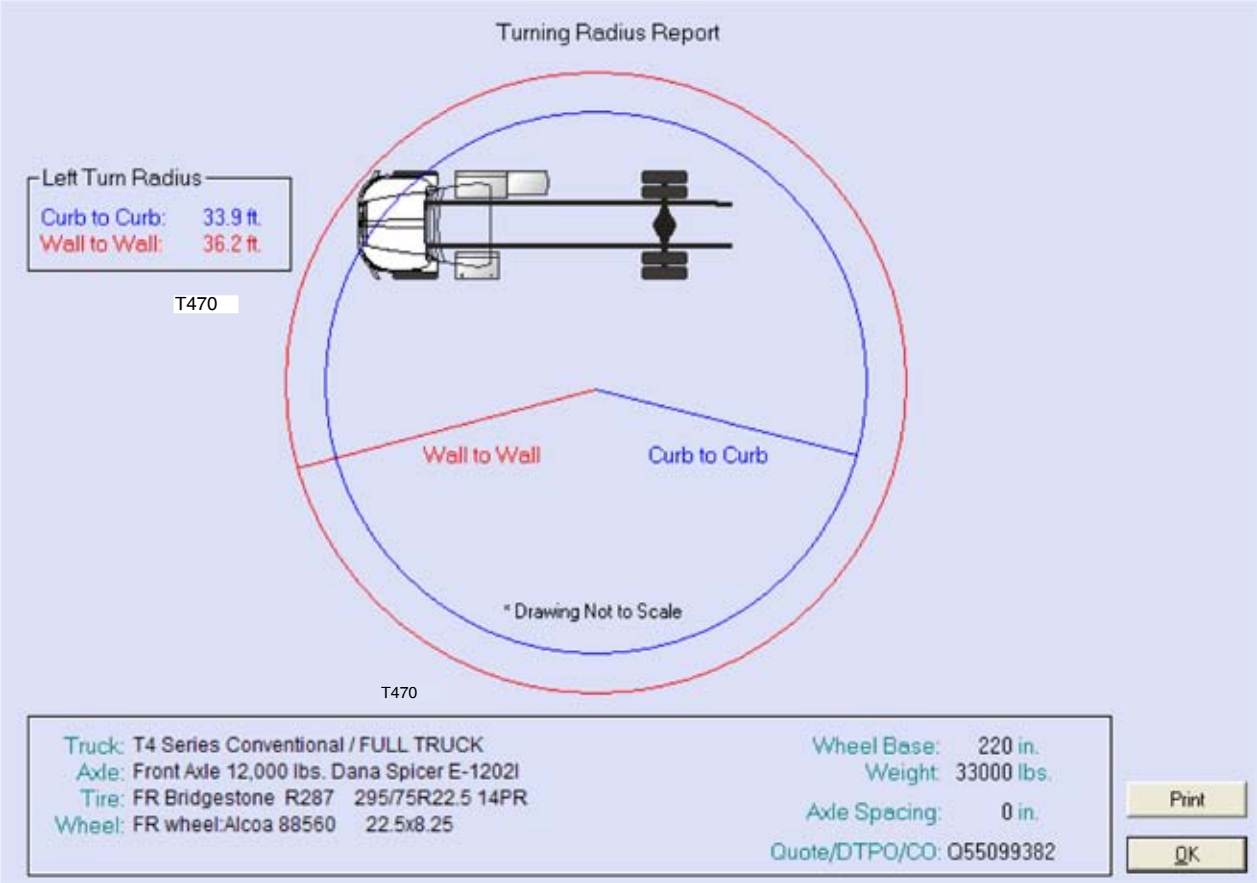

FIGURE 3-1. Prospector Turn Circle Analysis

Please consult your local Kenworth Dealer for this information, as it is chassis specific.

https://truckmanualshub.com/

AXLE TRACK AND TIRE WIDTH

- The dimensions provided in this section are representative of some typical product combinations. The purpose of this section is to demonstrate some of the typical dimensions.
- Axle Track: The distance between the dual tire centerlines on a dual tire arrangement or the distance between the tire centerlines on a single tire arrangement.
- Width: The distance over the outermost tire sidewall to sidewall.

These dimensions may be significant to the following:

- Appearance relative to other tires and chassis mounted equipment.
- Load carrying capacity. Different wheel disc offset can have a positive or negative impact on the axle carrying capacity of the axle.

KENWORTH AXLE TRACK/TIRE WIDTH SUMMARY

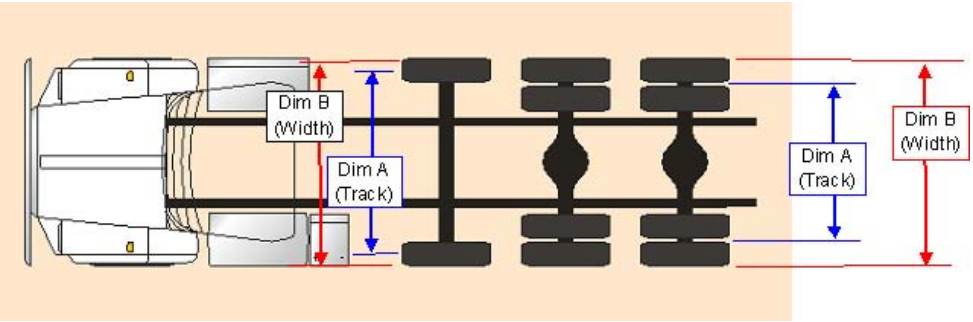

TABLE 3-3. Axle Track

Axle - Drive	Wheel	Tire	Configuration	Track Dim "A"	Overall Width Dim "B"
Dana Spicer D46-170(H)(P) 46K Dual	Alcoa 88364 22.5X8.25	BR M726EL 11R22.5	4-4	73.3"	97.8"
Dana Spicer D46-170(H)(P) 46K Dual	Alcoa 98364 24.5X8.25	BR M726EL 11R24.5	4-4	73.6"	98.0"
Dana Spicer D46-170W(H)(P) 46K Dual Wide Track	Alcoa 88364 22.5X8.25	BR M726EL 11R22.5	4-4	79.2"	103.7"
Dana Spicer D46-170W(H)(P) 46K Dual Wide Track	Alcoa 98364 24.5X8.25	BR M726EL 11R24.5	4-4	79.5"	103.9"
Dana Spicer D46-170(H)(P) 46K Dual	Alcoa 82360 22.5X12.25	BR M844F 425/65R22.5	2-4	72.7"	88.9"
Dana Spicer D46-170W(H)(P) 46K Dual Wide Track	Alcoa 82360 22.5X12.25	BR M844F 425/65R22.5	2-4	78.7"	94.9"

Axle - Steer	Wheel	Tire	Brake Drum Type	Track Dim "A"	Overall Width Dim "B"
Dana Spicer E-1322I 13.2K	Alcoa 98364 24.5X8.25	BR R250F 11R24.5	Cast	80.2"	91.0"
Dana Spicer E-1322W 13.2K	Alcoa 98364 24.5X8.25	BR R250F 11R24.5	Cast	82.2"	93.0"
Dana Spicer D2000 20K	Alcoa 82365 24.5X12.25	BR M844F 425/65R22.5	Cast	86.5"	102.7"
Dana Spicer D2000 20K	Alcoa 82364 24.5X12.25	BR M844F 425/65R22.5	Cast	82.6"	98.8"

Axle - Pusher Non-Steerable	Wheel	Tire	Wheel Orientation	"Track Dim "A"	"Overall Width Dim "B"
NS PSHR: WCAL ATLAS Std Track (72.5"") 16K GAWR	Alcoa 82365 24.5X12.25	BR M844F 425/65R22.5	Default- Same as RR	79.4"	95.6"
NS PSHR: WCAL ATLAS Wide Track (77.5"")	"Alcoa 82365 24.5X12.25	BR M844F 425/65R22.5	Option Same as FR	71.1"	87.3"

https://truckmanualshub.com/

OVERALL DIMENSIONS

This section includes drawings and charts. The Extended Day Cab is also included.

On the pages that follow, detail drawings show particular views of each vehicle, all dimensions are in inches (in). They illustrate important measurements critical to designing bodies of all types. See the “Contents” at the beginning of the manual to locate the drawing that you need.

Note: To determine overall height please locate the chart Table 3-4 on page 3-8 and 3-9 and add that value to the height. All heights are given from the bottom of the frame rail.

Kenworth also offers .dxf files and frame layouts of ordered chassis four weeks prior to build. Please speak with your salesman to request this feature when specifying your chassis.

T470 FIXED GRILLE HOOD W/O EXTENDED FRONT FRAME

The following drawings are shown with standard chassis components and the T470 fixed grille hood.

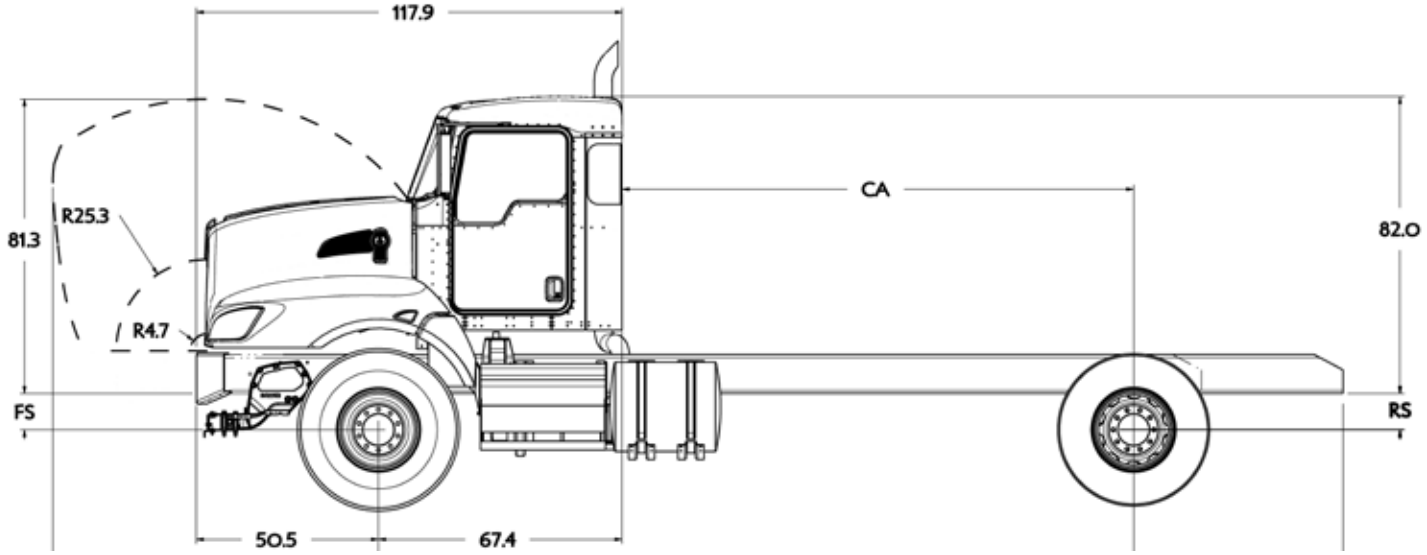

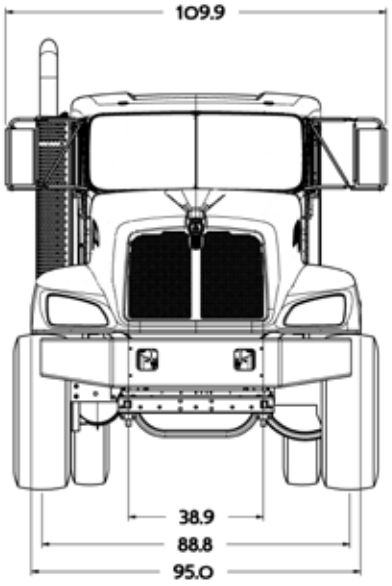

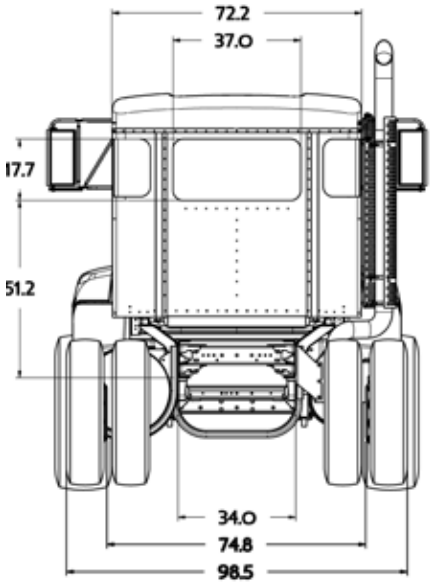

https://truckmanualshub.com/

T470 FIXED GRILLE HOOD WITH EXTENDED FRONT FRAME

The following drawings are of a T470 fixed grille hood with the optional extended front frame. These extended frame rails can be used with or without FEPTO adapters.

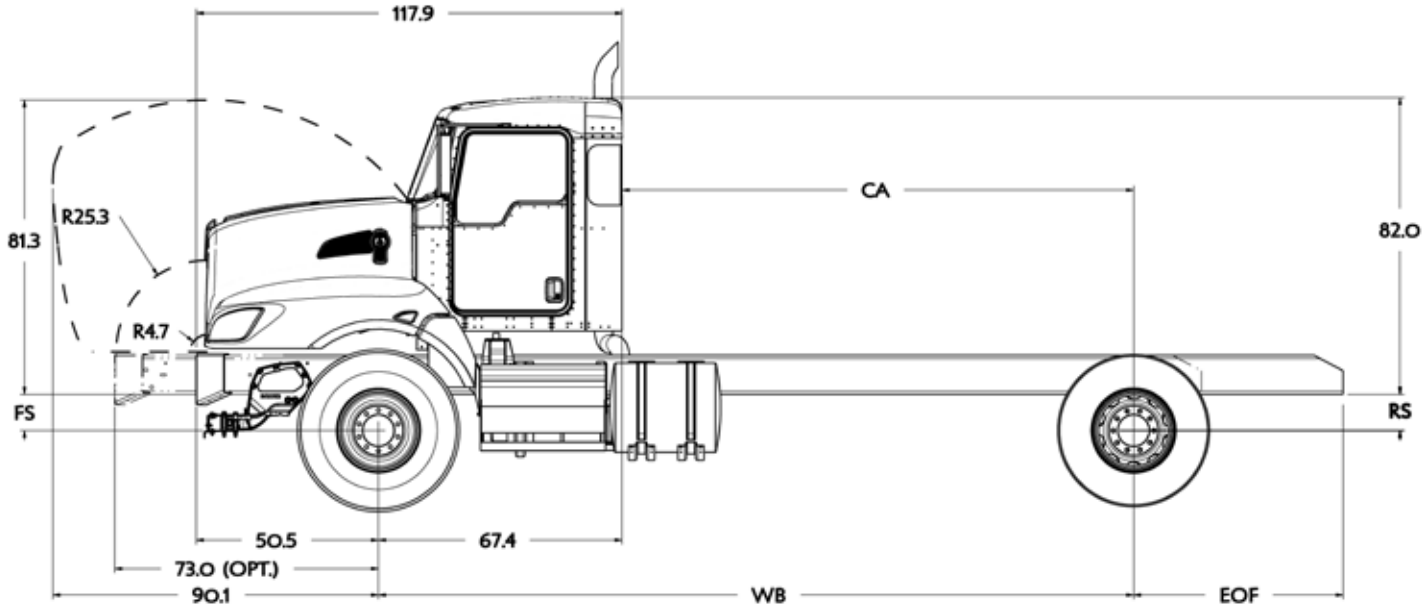

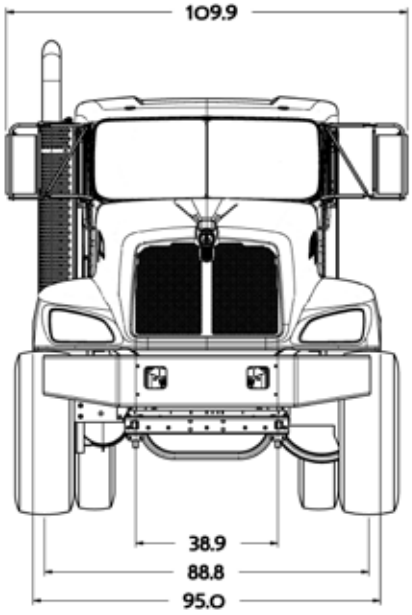

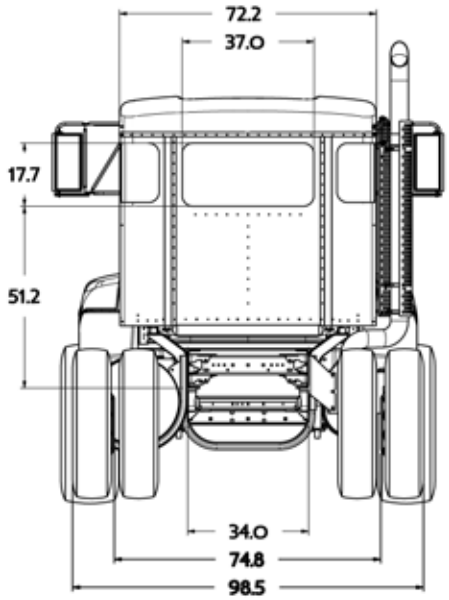

https://truckmanualshub.com/

EXTENDED DAY CAB

It is important to note that the Extended Day Cab will increase any of the models bumper to back of cab dimension and front axle to back of cab dimension by 5.7”. The height (from the bottom of the frame rail) will be 86.9”. Below drawings shown with T470 fixed grille hood.

Suspension heights are measured from the centerlines of the axle spindle to the bottom of the frame rail. Add the tire radius dimension to determine overall height to the bottom of the frame rail. Note: The frame rail height itself will not affect the overall cab height as all components are located from the bottom of the frame rail.

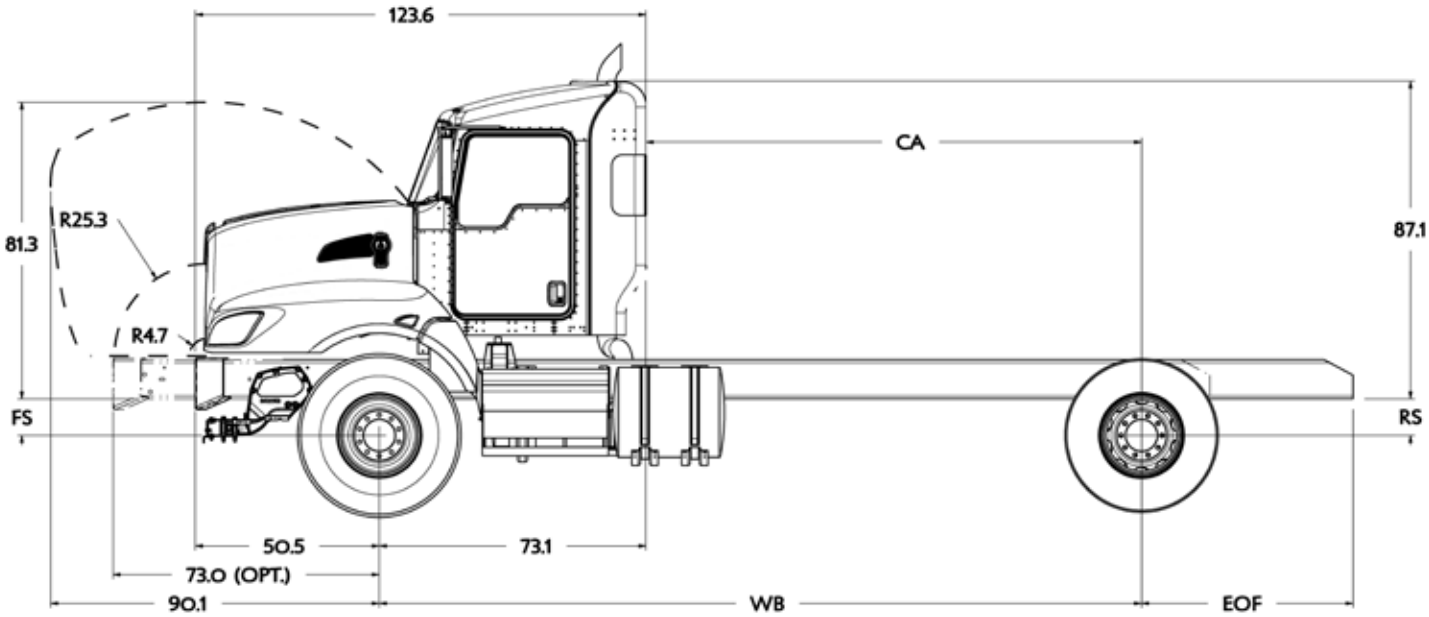

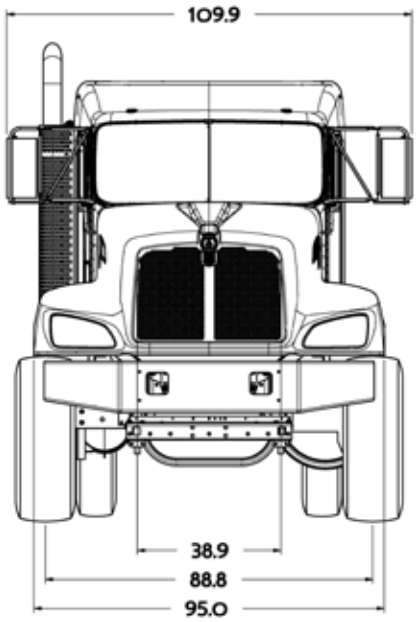

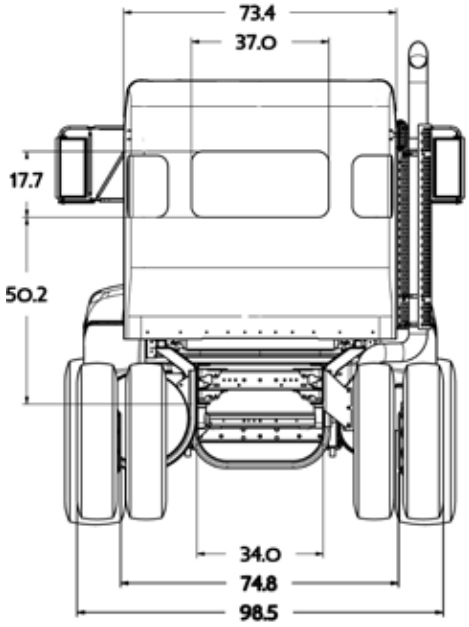

https://truckmanualshub.com/

RIDE HEIGHTS

The front (FS) and rear (RS) suspension ride heights are provided as a basic tool to determine the overall height of the cab, height of exhaust components, and frame heights. The heights are all calculated from the centerlines of the axles, please be sure to include the tire radius dimension to determine overall height. Note: the frame rail height itself will not affect the overall height as all components are located from the bottom of the frame rail.

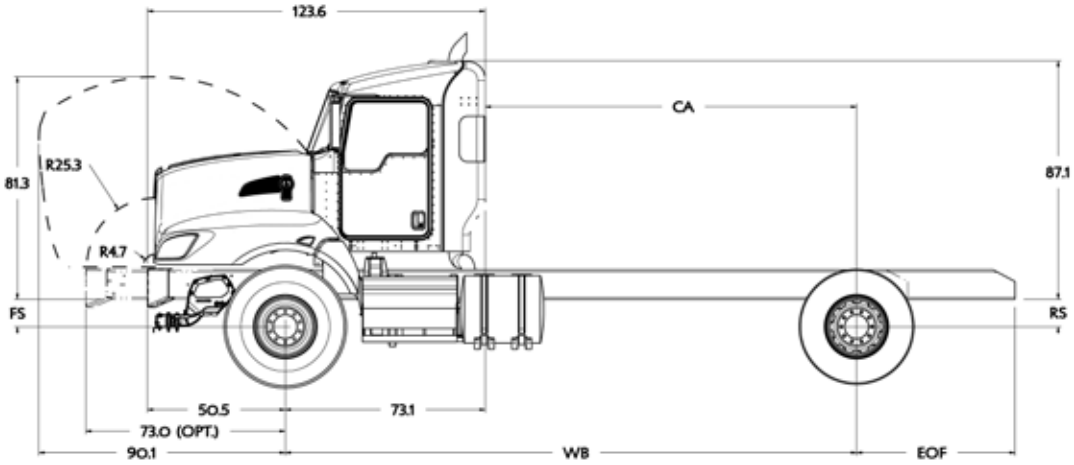

TABLE 3-4. Ride Heights In Inches

Front Suspension	**Laden**	**Unladen**
12K Taperleaf	10.3”	11.5”
13.2K Taperleaf	10.3”	11.5”
14.6K Taperleaf	10.3”	11.7”
16K Taperleaf	10.6”	12.3”
20K Taperleaf	10.4”	11.9”
22K Multi-stage Taperleaf	10.7”	12.7”
Rear Suspensions		
Kenworth AG380	8.5”	8.5”
Kenworth AG400L	8.5”	8.5”
Kenworth AG400	9.0”	9.0”
Kenworth AG460	10.5”	10.5”
Reyco 79KB 21K Rating	6.6”	9.0”
Reyco 79KB 23K Rating	8.3”	10.8”
Reyco 79KB 26K Rating	8.2”	11.3”
Reyco 102 38K Rating	9.2”	10.8”
Reyco 102 40 K Rating	9.2”	10.8”
Chalmers 854-40-L-HS 40K Rating	9.6”	11.0”

https://truckmanualshub.com/

Chalmers 854-40-H-HS	10.9”	12.4”
Chalmers 854-46-L 46K Rating	8.9”	11.3”
Chalmers 854-46-L-HS 46K Rating	9.6”	11.3”
Chalmers 854-46-H 46K Rating	10.1”	12.4”
Chalmers 854-46-H-HS 46K Rating	10.9”	12.5”
Chalmers 860-46-H-HS	10.9”	12.5”
Chalmers 872-46-H-HS	11.0”	12.5”
Hendrickson HAS 230 23K Rating	10.0”	10.0”
Hend HMX460 16.5” Saddle	9.5”	10.6”
Hend HMX460 17.5” Saddle	10.5”	11.6”
Hend HMX460 46K 18.5” Saddle	11.5”	12.6”
Hendrickson Primaax 46K Rating	10.0”	10.0”
Hendrickson RT403 40K Rating	9.7”	10.7”
Hendrickson RT463 6.0” Saddle	10.0”	11.1”
Hendrickson RT463 7.19 Saddle	11.2”	12.5”
Hendrickson RT463 7.94 Saddle	11.9”	13.3”
Neway AD123 23K Rating	10.0”	10.0”
Neway AD126 26K Rating	10.0”	10.0”
Neway AD246 46K Rating	10.0”	10.0”

https://truckmanualshub.com/

REAR SUSPENSION LAYOUTS

The rear suspension layouts are provided as a tool to help layout bodies prior to arrival. Be sure to check the axle spacing that is shown, as alternate spacings may exist and could change some of the dimensions. The dimensions shown below are the most typical installations, in special cases some hole locations will move. If you are planning on using the holes shown for your body installation, please confirm with your local KW dealer that the drawing below will be the installation used on your specific truck. Ensure that proper torque is used to reinstall any suspension components. See Tables 5-1 and 5-2 on page 5-7.

It would be a good idea in this case to order the frame layout of your chassis along with your truck order. This can be done on any Kenworth truck, and will be provided 4 weeks ahead of the build schedule.

If there are hole locations that are not detailed please work with your local Kenworth Dealer to request that information.

Additionally optional axle spacings are shown in the charts, if you would like details on the frame drilling with optional spacings, please contact your local Kenworth dealer.

REYCO 79KB SINGLE REAR AXLE

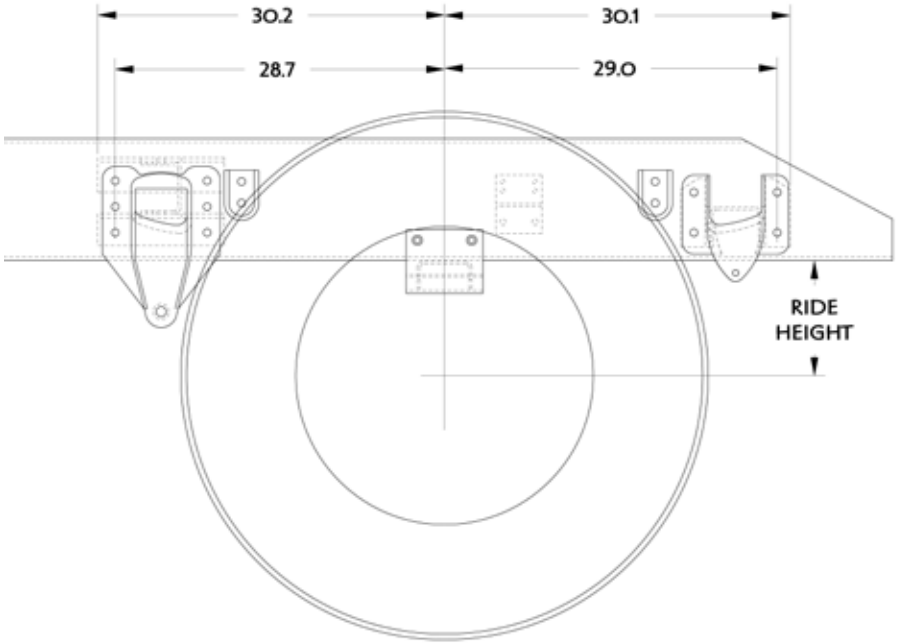

Optional Reyco 79KB Suspensions

TABLE 3-5. Rear Suspension Options

Suspension Type	Rating	Axle Spacing	Laden Ride Height	Unladen Ride Height
Reyco 79KB single	21K	-	8.3”	10.8”
Reyco 79KB single	23K	-	8.3”	10.8”
Reyco 79KB single	26K	-	8.2”	11.3”

https://truckmanualshub.com/

REYCO 102 TANDEM REAR AXLE

Shown with a 52” Axle Spacing

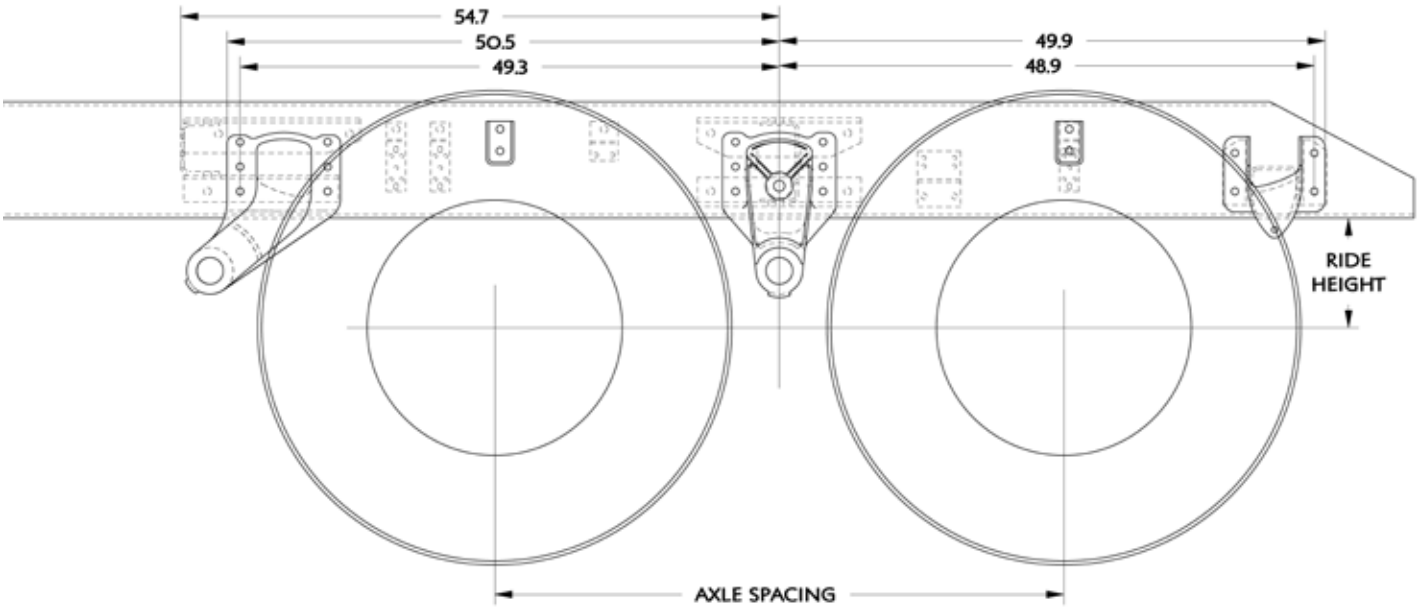

Reyco 102 Suspension Data

TABLE 3-6. Rear Suspension Options

Suspension Type	Rating	Axle Spacing	Laden Ride Height	Unladen Ride Height
Reyco 102 Tandem	38K	52”	9.2”	10.8”
Reyco 102 Tandem	40K	52”	9.2”	10.8”

https://truckmanualshub.com/

NEWAY AD 123 SINGLE REAR AXLE

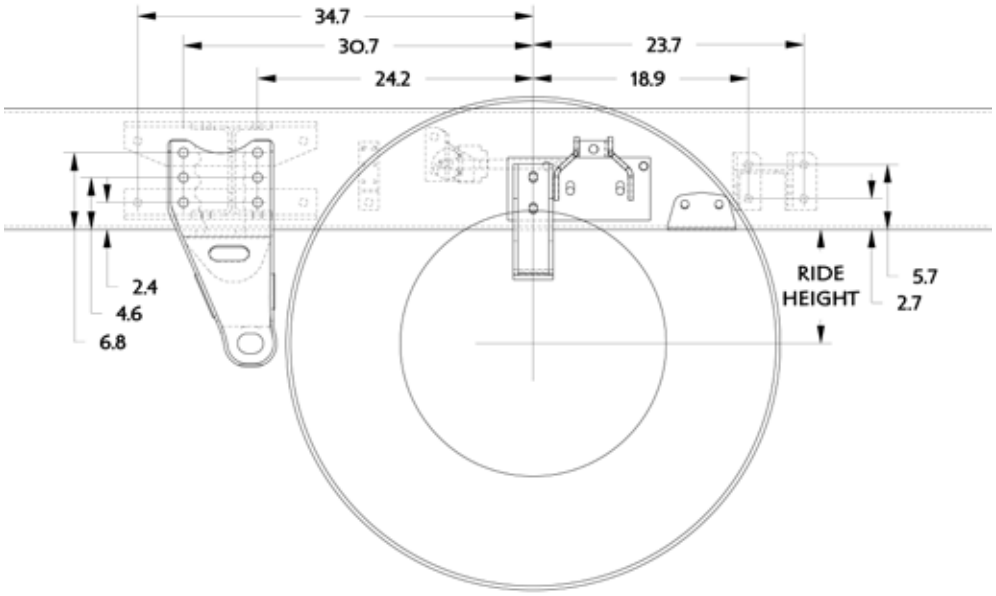

Optional Neway AD Single Suspensions

TABLE 3-7. Rear Suspension Options

Suspension Type	Rating	Axle Spacing	Laden Ride Height	Unladen Ride Height
Neway AD123 single	23K	-	10”	10”
Neway AD126 single	26K	-	10”	10”

https://truckmanualshub.com/

NEWAY AD 246 TANDEM SUSPENSION

Shown with a 54” Axle Spacing

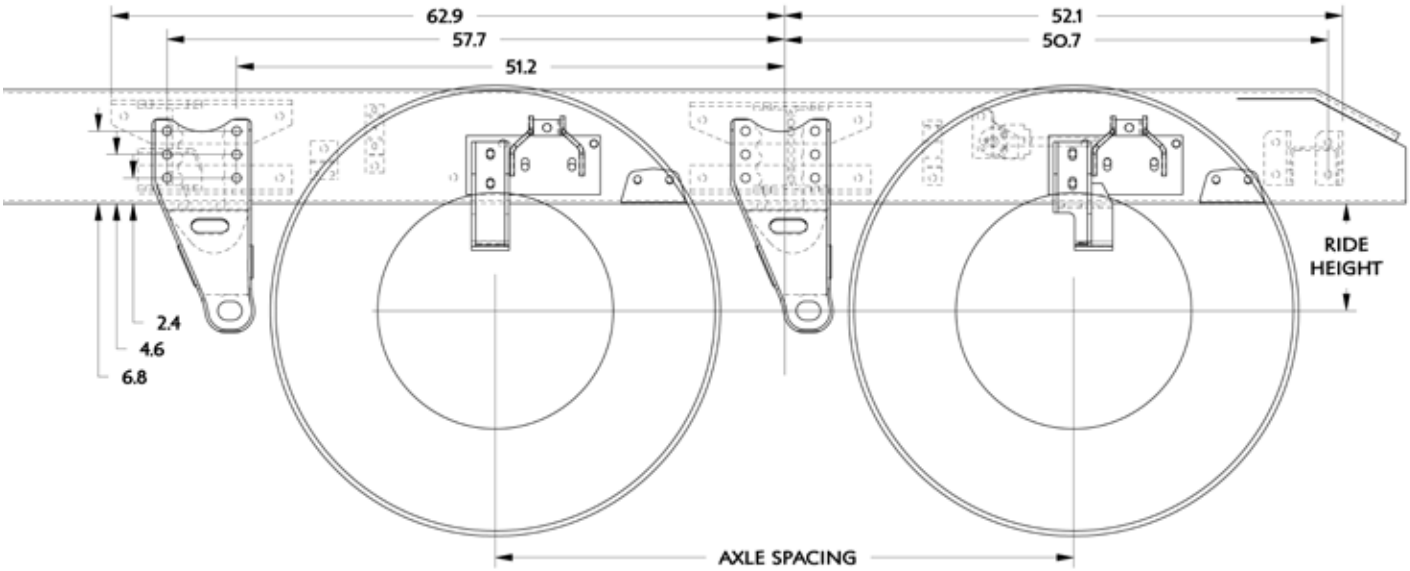

Optional Neway AD Tandem Suspensions

TABLE 3-8. Rear Suspension Options

Suspension Type	Rating	Axle Spacing	Laden Ride Height	Unladen Ride Height
Neway AD246 tandem	46K	54”	10”	10”
Neway AD246 tandem	46K	60”	10”	10”

https://truckmanualshub.com/

HENDRICKSON PRIMAAX TANDEM SUSPENSION

Shown with 54” Axle Spacings

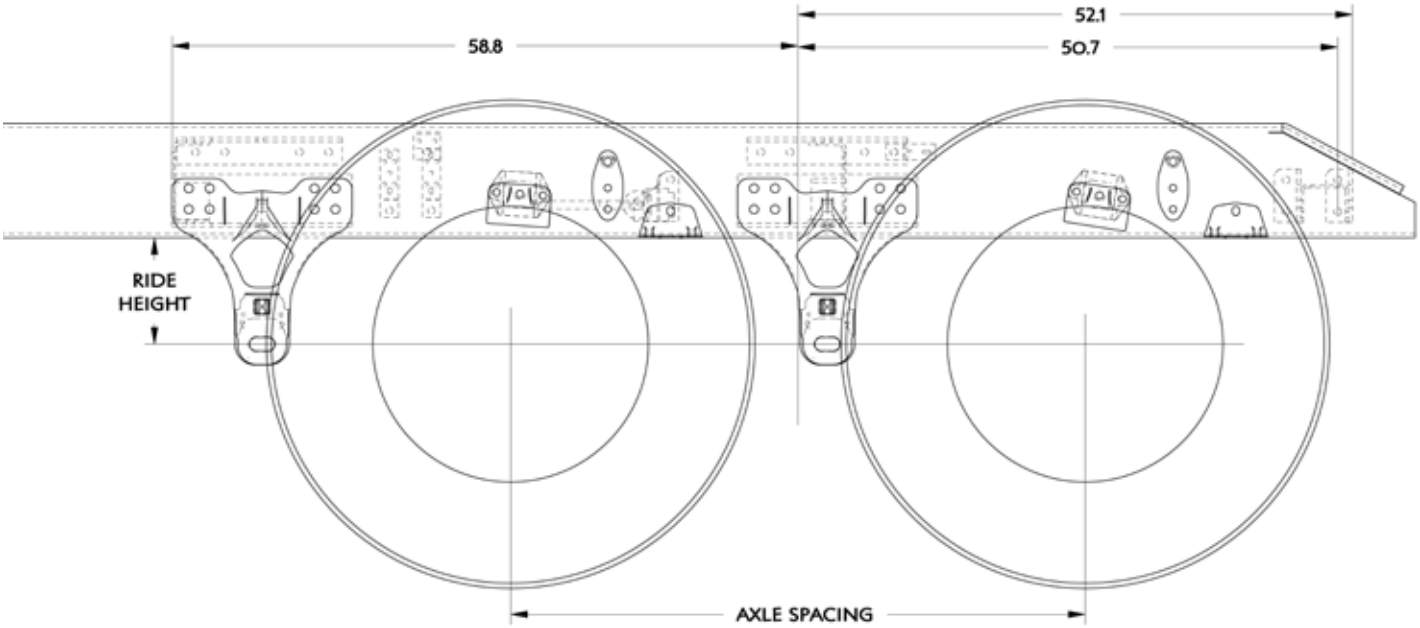

Optional Hendrickson Primaax Tandem Suspensions

TABLE 3-9. Rear Suspension Options

Suspension Type	Rating	Axle Spacing	Laden Ride Height	Unladen Ride Height
Hendrickson Primaax Tandem	46K	54”	10”	10”
Hendrickson Primaax Tandem	46K	60”	10”	10”
Hendrickson Primaax Tandem	46K	72”	10”	10”

https://truckmanualshub.com/

HENDRICKSON HMX TANDEM SUSPENSION

Shown with 54” Axle Spacing

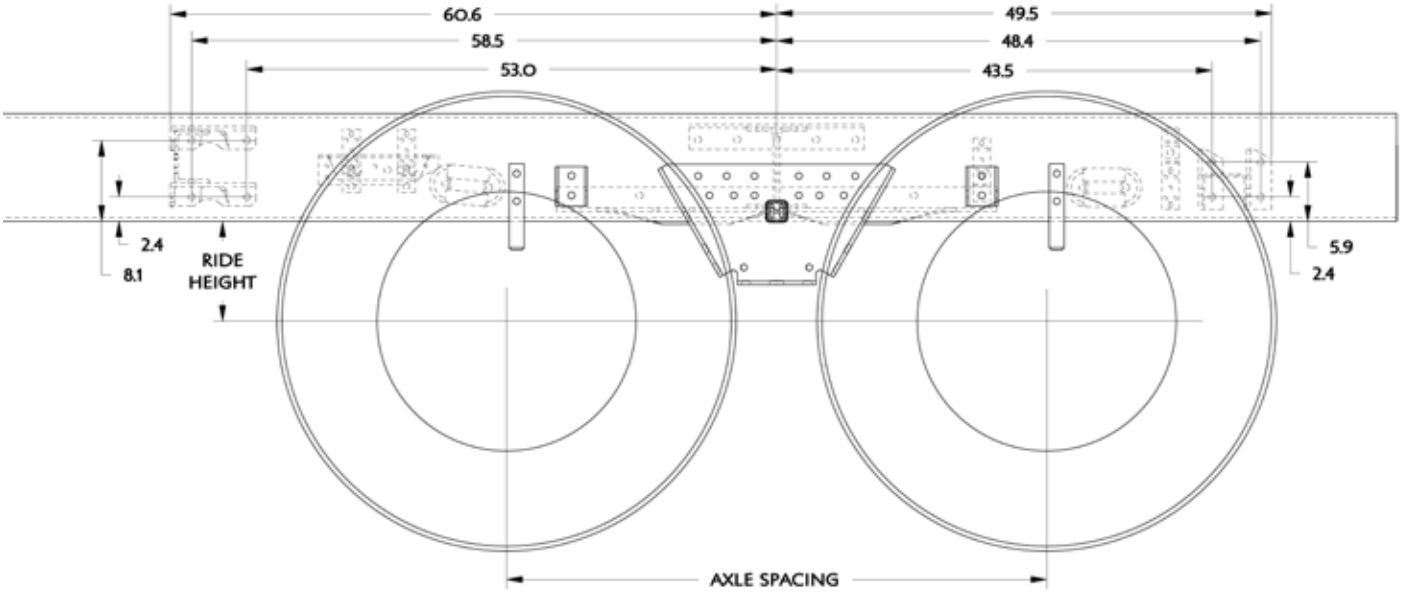

Optional Hendrickson HMX Tandem Suspensions

TABLE 3-10. Rear Suspension Options

Suspension Type	Rating	Axle Spacing	Laden Ride Height	Unladen Ride Height
Hendrickson HMX400 16.5” saddle	40K	54”	9.5”	10.6”
Hendrickson HMX400 17.5” saddle	40K	54”	10.5”	11.6”
Hendrickson HMX460 16.5” saddle	46K	54”	9.5”	10.6”
Hendrickson HMX460 17.5” saddle	46K	54”	10.5”	11.6”
Hendrickson HMX460 18.5” saddle	46K	54”	11.5”	12.6”
Hendrickson HMX460 18.5” saddle	46K	60”	11.5”	12.6”

https://truckmanualshub.com/

HENDRICKSON RT TANDEM SUSPENSION

Shown with a 54” Axle Spacing Without Track Rods

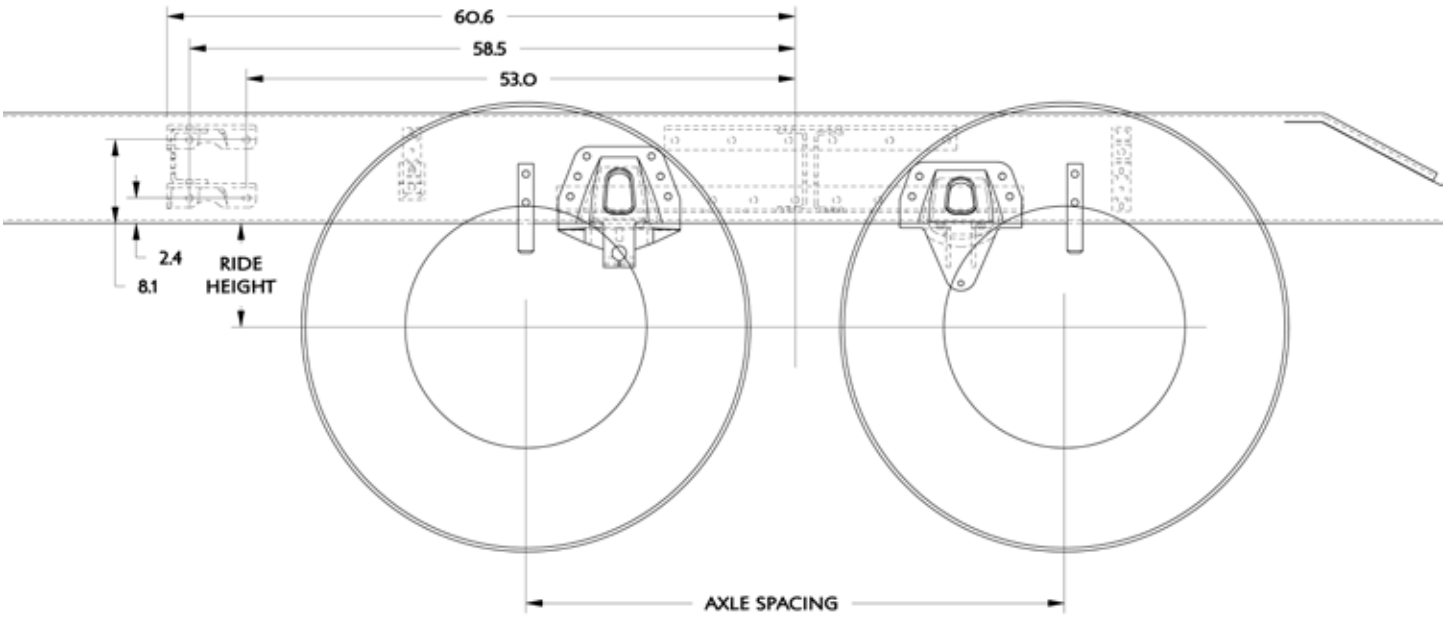

Optional Hendrickson RT Tandem Suspensions

TABLE 3-11. Rear Suspension Options

Suspension Type	Rating	Axle Spacing	Laden Ride Height	Unladen Ride Height
Hendrickson RT463 6” saddle	46K	54”	10.0”	11.1”
Hendrickson RT463 7.19” saddle	46K	54”	11.2”	12.5”
Hendrickson RT463 7.94” saddle	46K	54”	11.9”	13.3”
Hendrickson RT463 6” saddle	46K	60”	10.0”	11.1”
Hendrickson RT403 7.19” saddle	40K	52”	9.7”	10.7”

https://truckmanualshub.com/

HENDRICKSON RT TANDEM SUSPENSION

Shown with a 54” Axle Spacing Without Track Rods

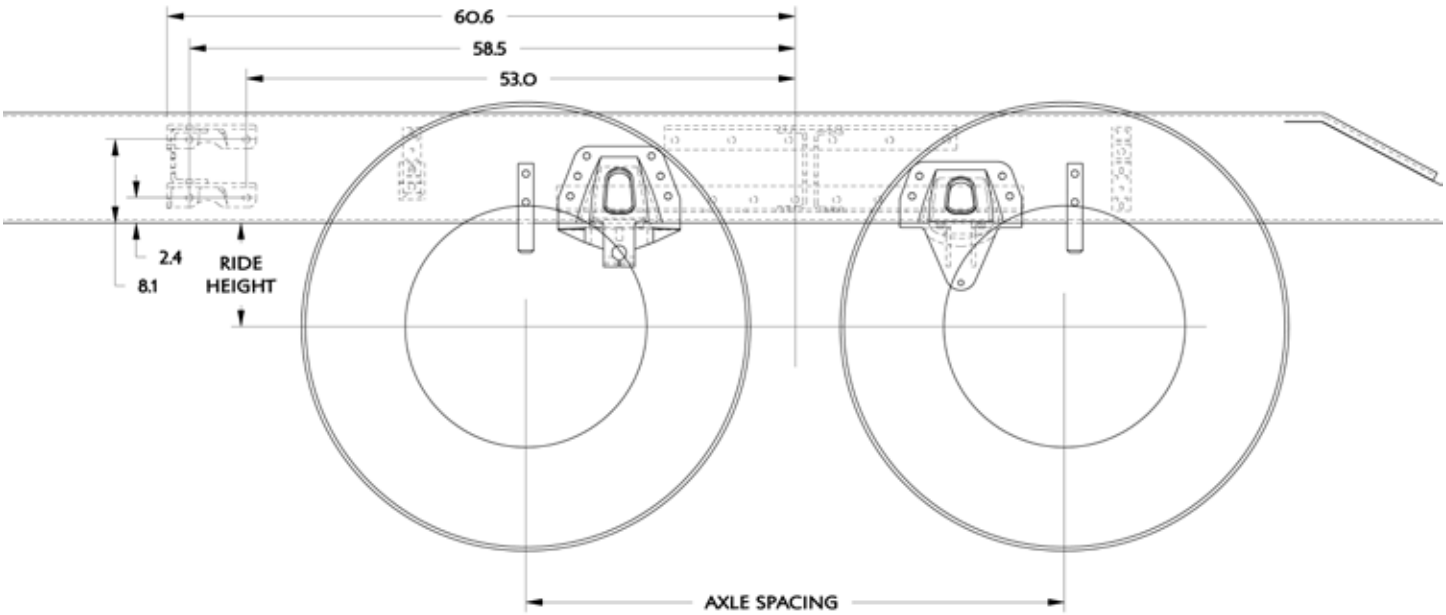

Optional Hendrickson RT Tandem Suspensions

TABLE 3-12. Rear Suspension Options

Suspension Type	Rating	Axle Spacing	Laden Ride Height	Unladen Ride Height
Hendrickson RT403 6” saddle	40K	52”	7.6”	8.6”

https://truckmanualshub.com/

KENWORTH AG 380 TANDEM SUSPENSION

Shown with a 52” Axle Spacing

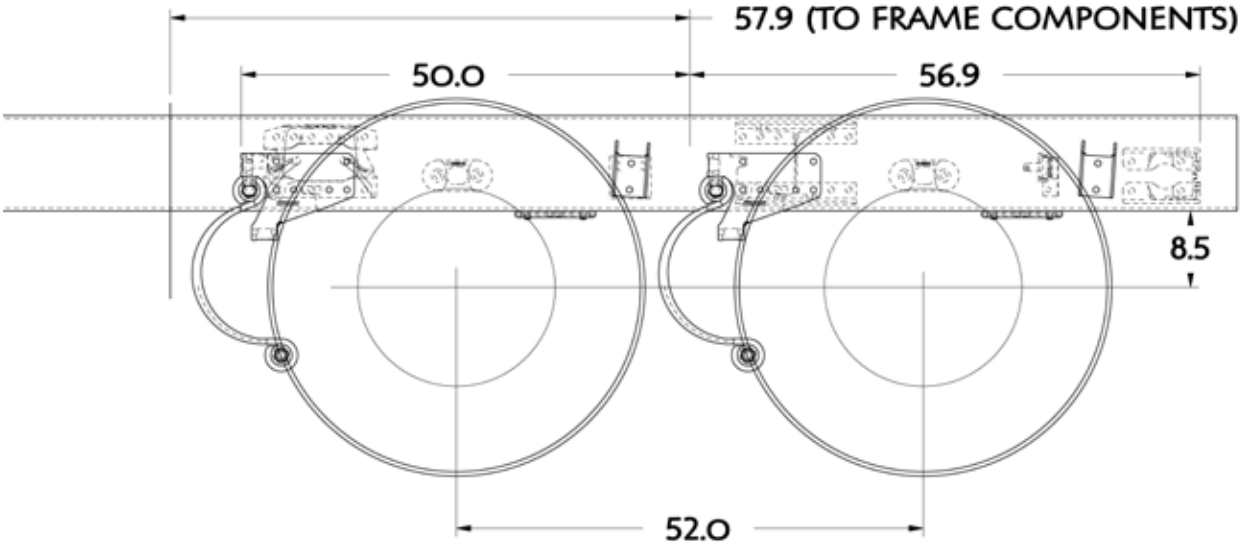

Kenworth AG 380 Suspension Data

TABLE 3-13. Rear Suspension Options

Suspension Type	Rating	Axle Spacing	Laden Ride Height	Unladen Ride Height
AG 380	38K	52”	8.5”	8.5”

https://truckmanualshub.com/

KENWORTH AG 400/460 TANDEM SUSPENSION

Shown with a 52” Axle Spacing

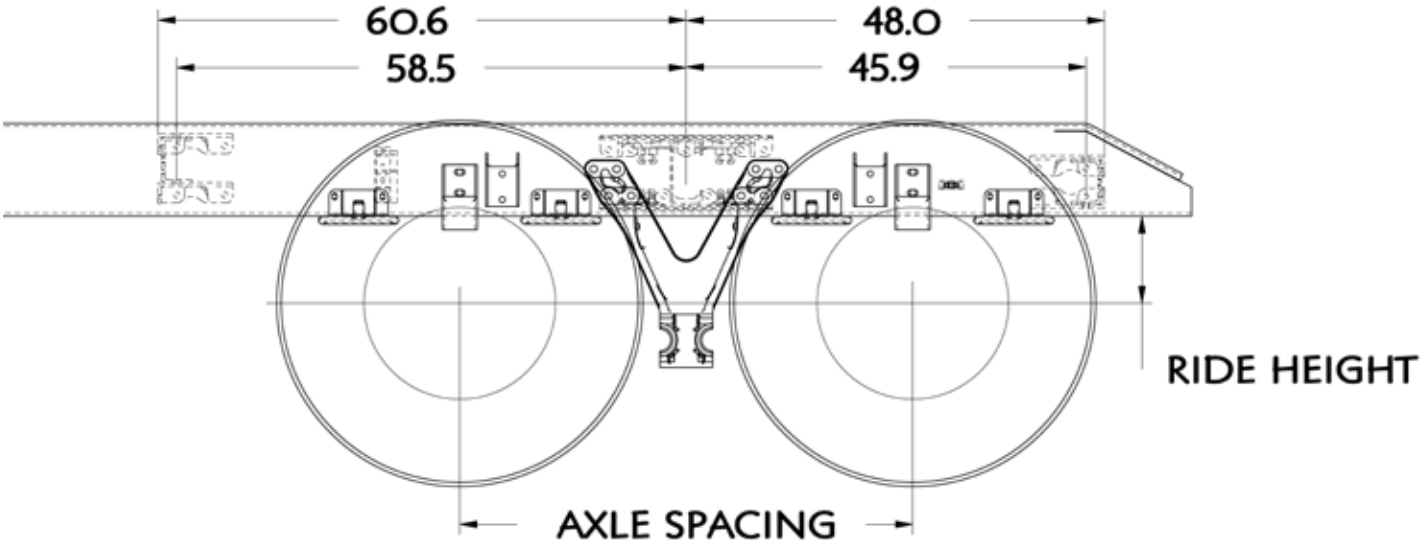

Optional Kenworth Tandem Suspensions

TABLE 3-14. Rear Suspension Options

Suspension Type	Rating	Axle Spacing	Laden Ride Height	Unladen Ride Height
Kenworth AG 400	40K	52”	9”	9”
Kenworth AG 400	40K	54”	9”	9’
Kenworth AG 460	46K	54”	10.5”	10.5”

https://truckmanualshub.com/

KENWORTH AG 400L TANDEM SUSPENSION

Shown with a 52” Axle Spacing

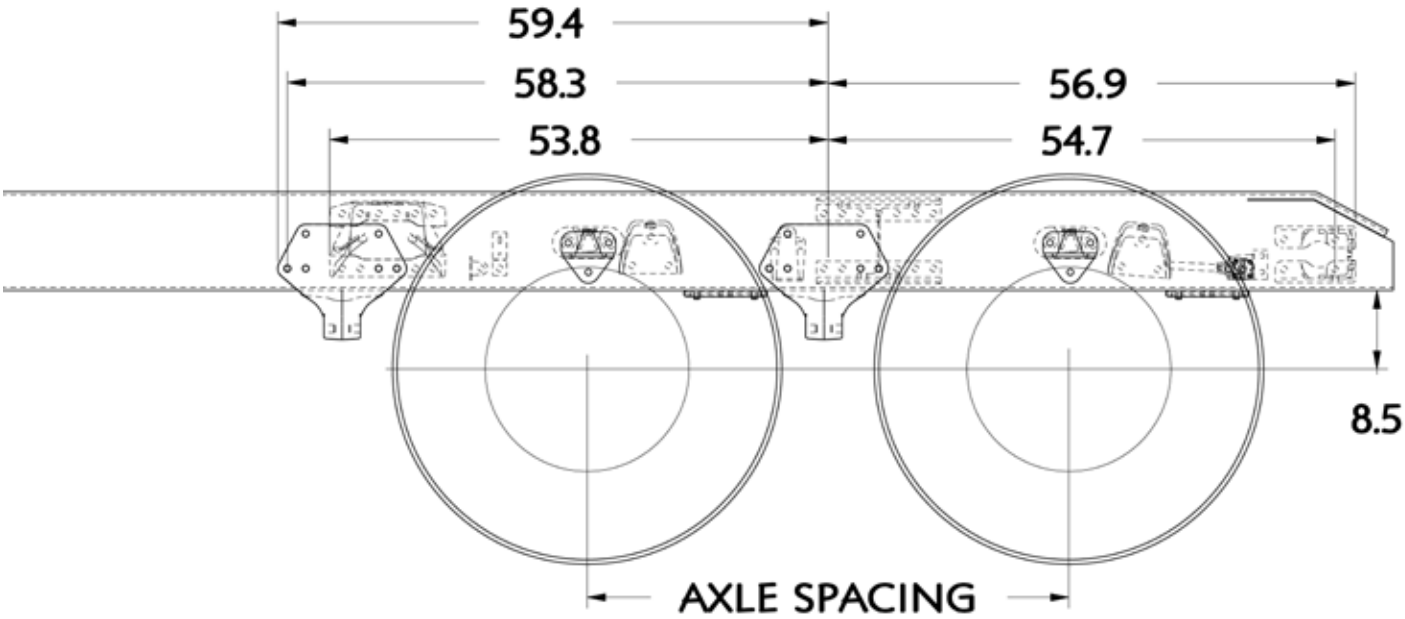

Optional Kenworth Tandem Suspensions

TABLE 3-15. Rear Suspension Options

Suspension Type	Rating	Axle Spacing	Laden Ride Height	Unladen Ride Height
Kenworth AG 400L	40K	52”	8.5”	8.5”
Kenworth AG 400L	40K	54”	8.5”	8.5”

https://truckmanualshub.com/

KENWORTH AG 460 TANDEM SUSPENSION

Shown with a 60” Axle Spacing

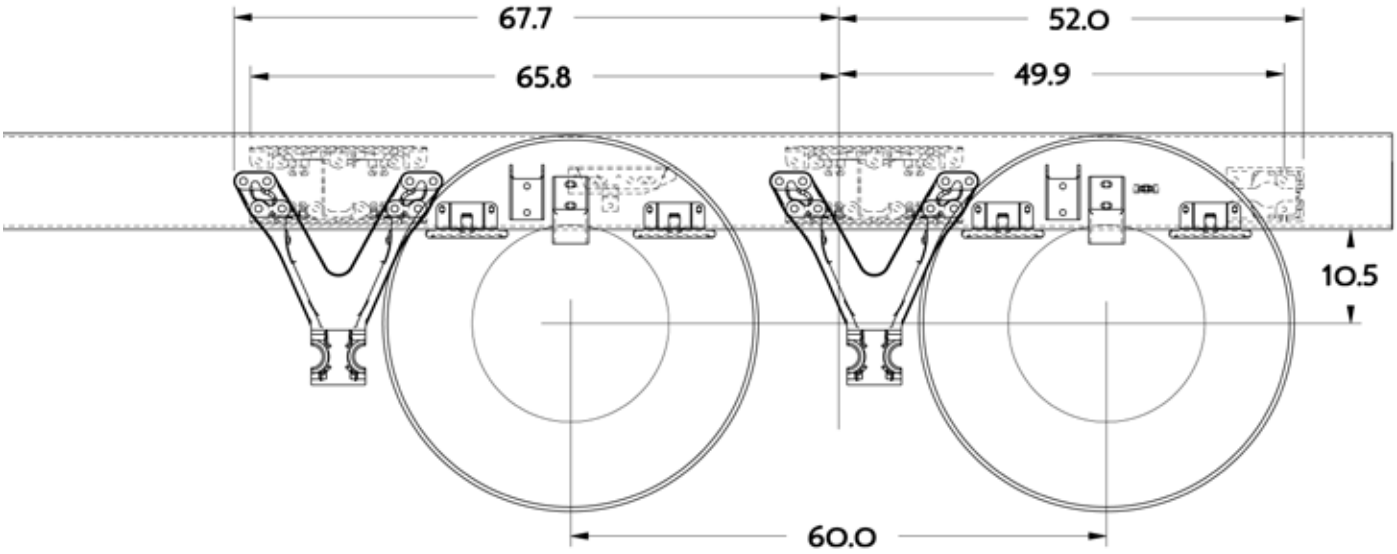

Optional Kenworth Tandem Suspensions

TABLE 3-16. Rear Suspension Options

Suspension Type	Rating	Axle Spacing	Laden Ride Height	Unladen Ride Height
Kenworth AG 460	46K	60”	10.5”	10.5”

https://truckmanualshub.com/

CHALMERS 856-46 TANDEM SUSPENSION

Shown with a 54” Axle Spacing

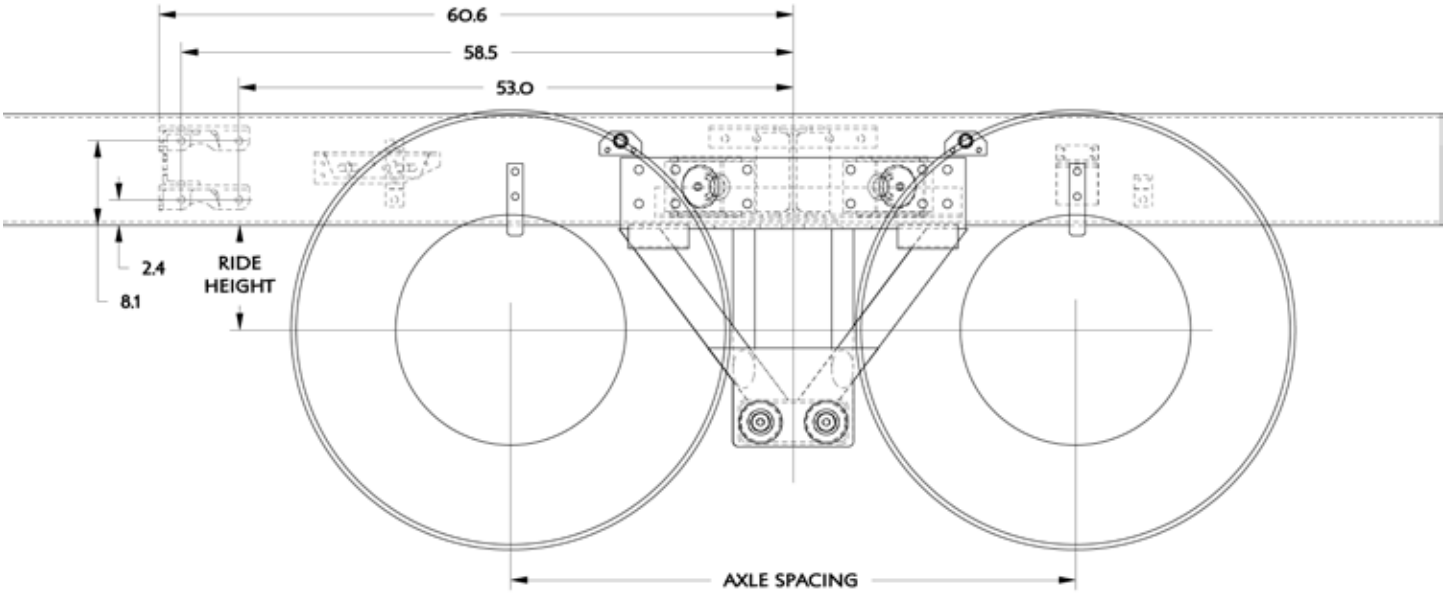

Optional Chalmers Tandem Suspensions

TABLE 3-17. Rear Suspension Options

Suspension Type	Rating	Axle Spacing	Laden Ride Height	Unladen Ride Height
Chalmers 854-40-L-HS	40K	54”	9.6”	11.1”
Chalmers 854-40-H-HS	40K	54”	10.9”	12.4”
Chalmers 854-46-L	46K	54”	8.9”	11.3”
Chalmers 854-46-L-HS	46K	54”	9.6”	11.3”
Chalmers 854-46-H	46K	54”	10.1”	12.5”
Chalmers 854-46-H-HS	46K	54”	10.9”	12.5”
Chalmers 860-46-H-HS	46K	60”	10.9”	12.5”
Chalmers 872-46-H-HS	46K	72”	11.0”	12.5”

https://truckmanualshub.com/

PUSHER AXLES

The rear pusher axle layouts are provided as a tool to help layout bodies prior to arrival. When using the pusher layouts to determine available frame space please be aware that clearances required are not shown. For information that may not be detailed in these drawings work with your local Kenworth Dealer to request that information.

Watson & Chalin Tru Track Alumilite 13.2K Steerable Pusher

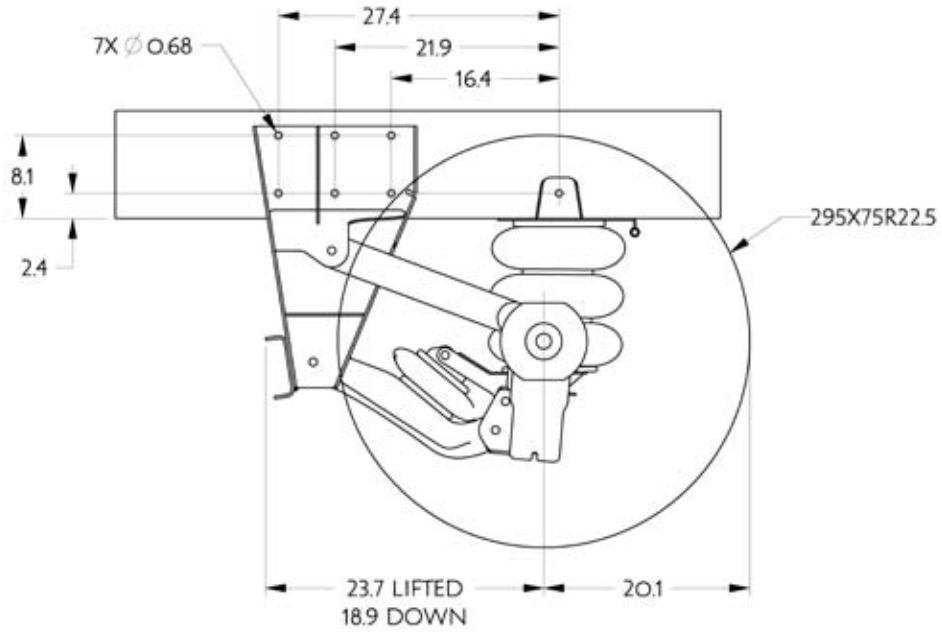

Watson & Chalin Tru Track 20K Steerable Pusher

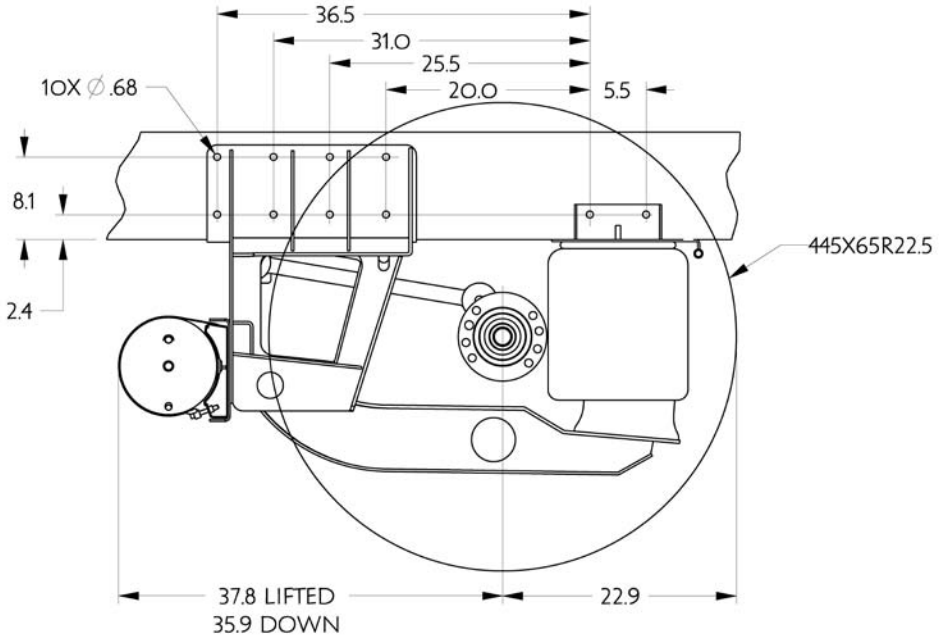

https://truckmanualshub.com/

Watson & Chalin Atlas 22.5K Non-Steerable Pusher

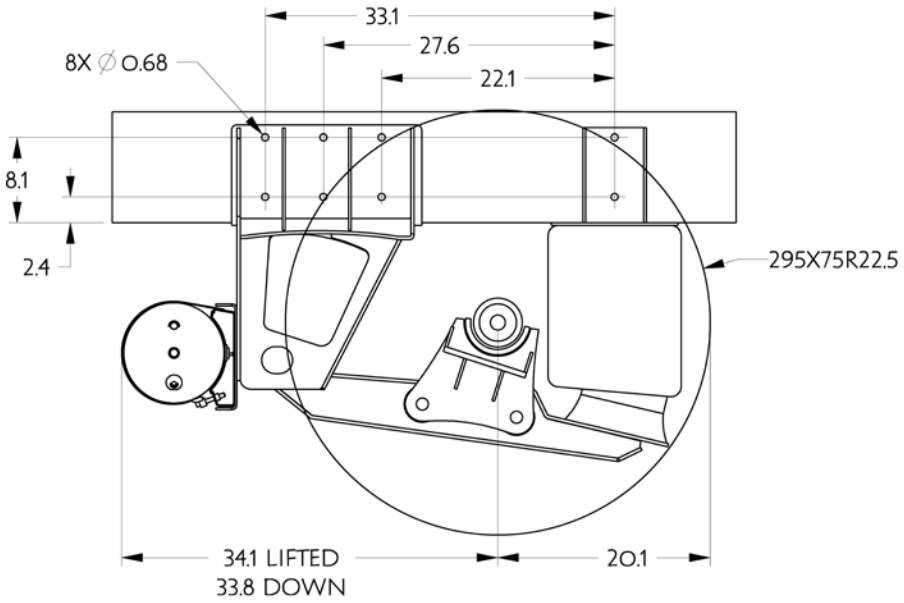

https://truckmanualshub.com/

GROUND CLEARANCE

This information is provided as a reference, not all optional equipment is included. In order to calculate the height on your specific chassis, please use the ride height information provided on page 3-14. For comparison the FS value shown is 11.4” unladen and 10.4” laden.

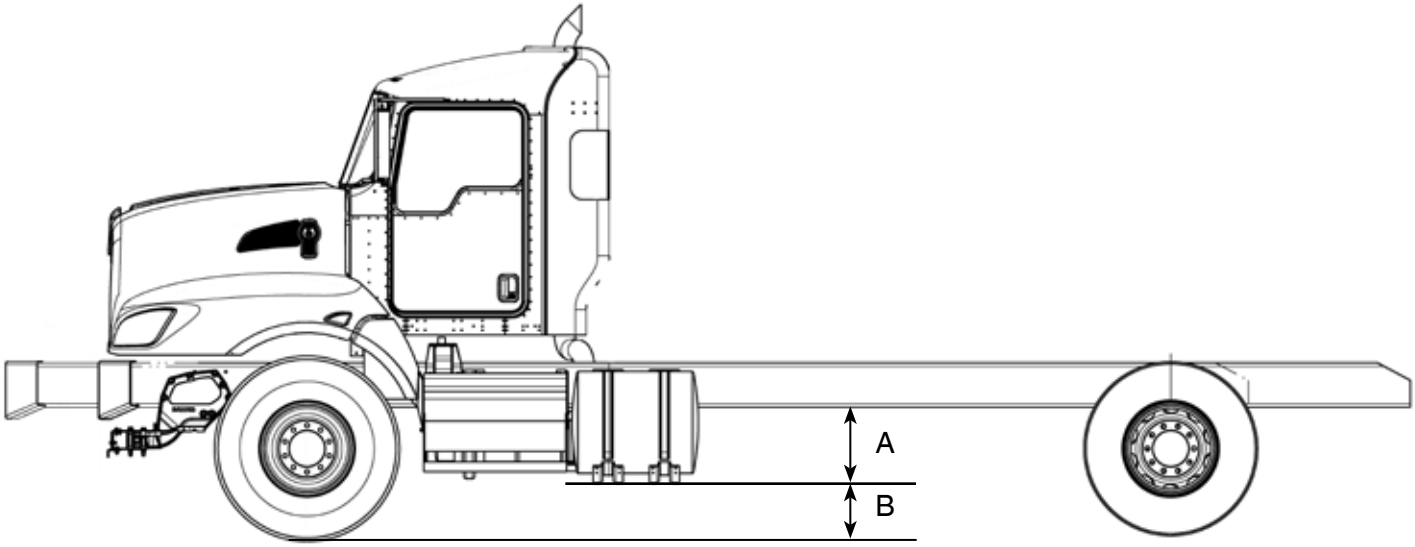

TABLE 3-18. Ground Clearance for Fuel Tanks

Front Suspension	Front Tires	Rear Suspension	Rear Tires	Component	Dimension “A” Distance from Bottom of Frame Rail (in)	Dimension “B” Ground Clearance (in)	
						Unladen	Laden
20K Taper-leaf Spring	M844F 425/65R22.5 Tires	Hendrickson HMX 460 17.5” Saddle Height	M711 11R24.5	22” Fuel Tank	16.3	17.2	14.9
				24.5” Fuel Tank	18.2	15.3	13

https://truckmanualshub.com/

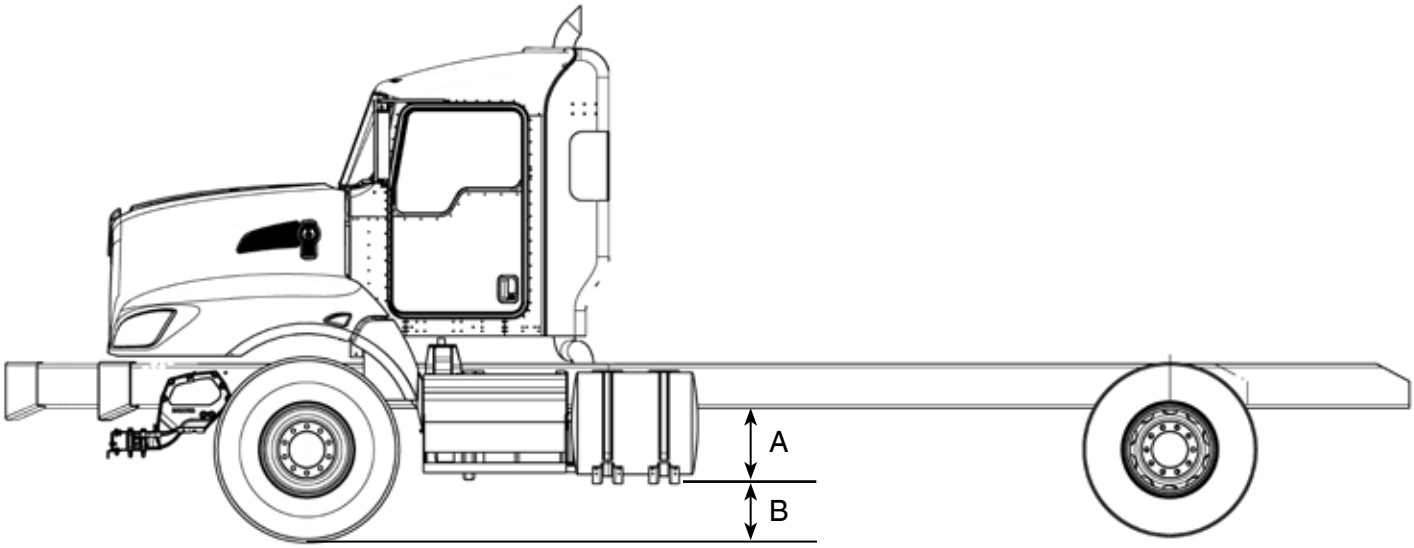

TABLE 3-19. Ground Clearance for Battery Boxes

Front Suspension	Front Tires	Rear Suspension	Rear Tires	Component	Dimension "A" Distance from Bottom of Frame Rail (in)	Dimension "B" Ground Clearance (in)	
						Unladen	Laden
20K Taper-leaf Spring	M844F 425/65R22.5 Tires	Hendrickson HMX 460 17.5" Saddle Height	M711 11R24.5	Battery Box with Air Tanks	17.3	16.2	13.9
				Vocational Battery Box with Air Tanks	17.8	15.7	13.4
				Single DPF Box	15.5	17.9	15.6

https://truckmanualshub.com/

EXHAUST INFORMATION

This section includes information on how to calculate tailpipe heights, and reference information for PTO clearance. Optional equipment is not shown.

Tailpipe Stack Height Calculation

TABLE 3-20. Stack Height

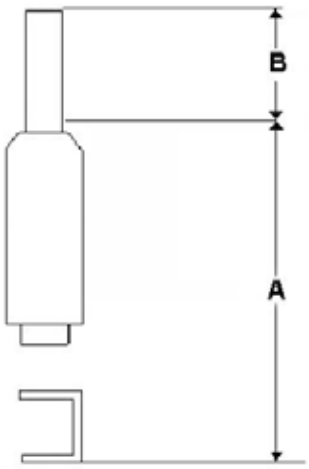

Dimension A	
DPF mounted independent back of cab or sleeper	76.5”
Tailpipes side of cab mount, DPF RH under Tailpipes back of cab mount, DPF RH under	68.0”
DIMENSION “B” IS THE TAILPIPE LENGTH.	

TABLE 3-21. Unladen Stack Height

For approximate unladen stack height (12,000 pound springs) use the following frame heights:

Tire Size	Top of Rail	Ft. Suspension
11R24.5	43.5”	12K
11R22.5	42.5”	12K
285/75R24.5	42”	12K
295/75R22.5	41.5”	12K
425/65R22.5	43.2	20K
385/65R22.5	42.4	20K

*Use Prospector frame heights for more accurate results.

Sample: Tailpipe height 13’6”	=	Desired overall stack height	=	162.0”
	(–)	Prospector frame height	(–)	43.5”
	(+)	Frame rail depth	(+)	10.6”
	(–)	Dimension ‘A’ from chart	(–)	68.6”
	=	Tail pipe length	=	60.5”

https://truckmanualshub.com/

PTO CLEARANCES

The following visuals are provided to help aid in determining PTO locations and clearances. For specific dimensions please work through your local Kenworth dealer. Multiple PTO's are shown for layout purposes only. Power equipment, i.e., drive shafts & power pumps are not included. Body builders should select the appropriate PTO for their application and customer requirements.

Manual Transmission:

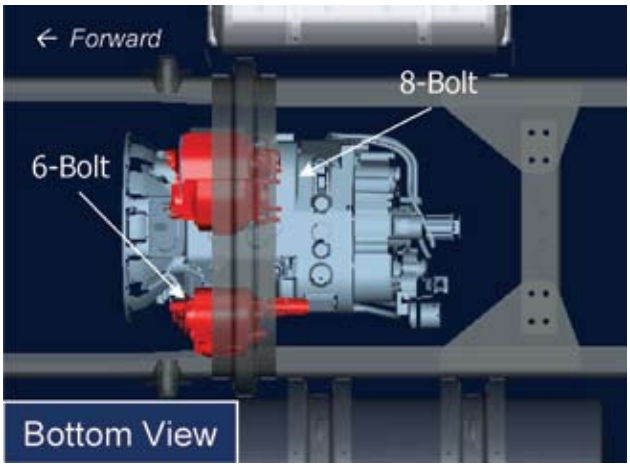

Bottom view from right rear of chassis

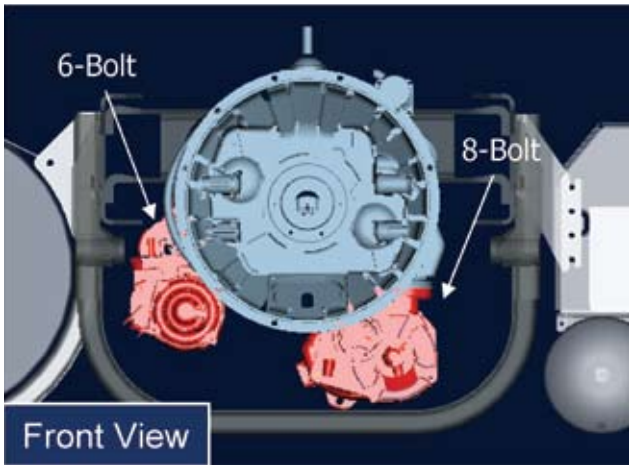

View from Front

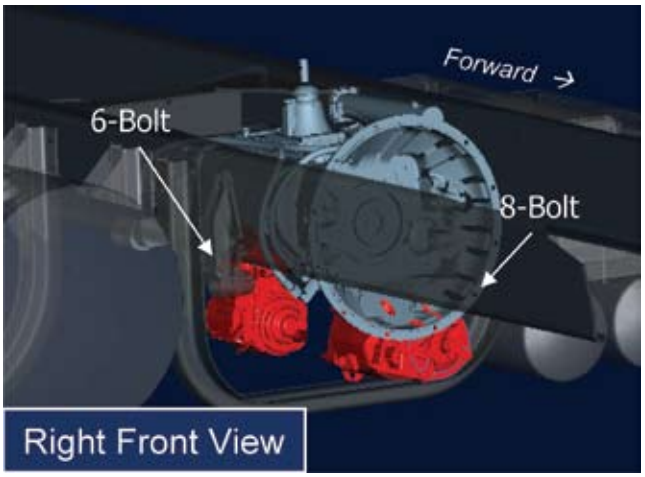

Bottom view from forward right

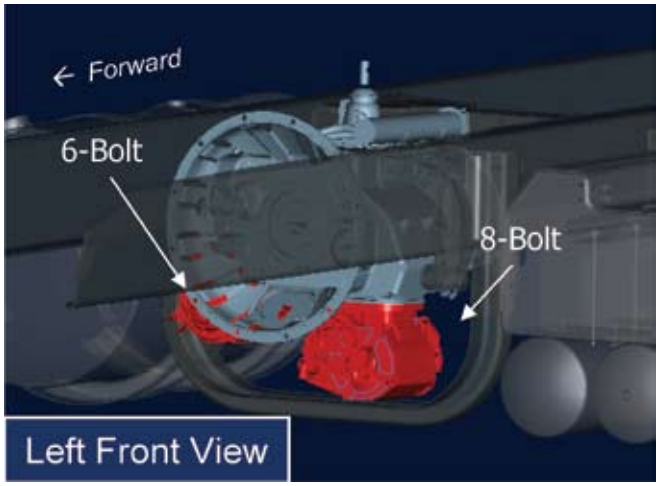

Bottom view from front left under

https://truckmanualshub.com/

Allison Transmission:

Allison transmission are 10 bolt.

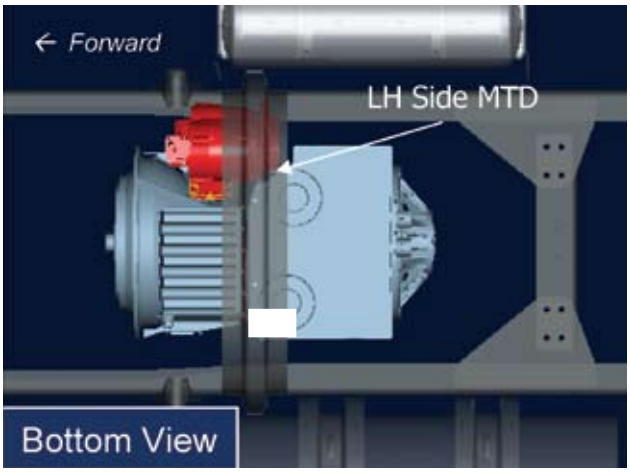

Bottom view

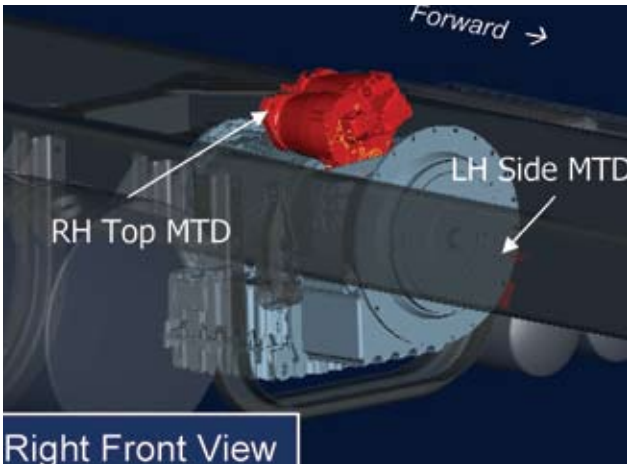

Right front

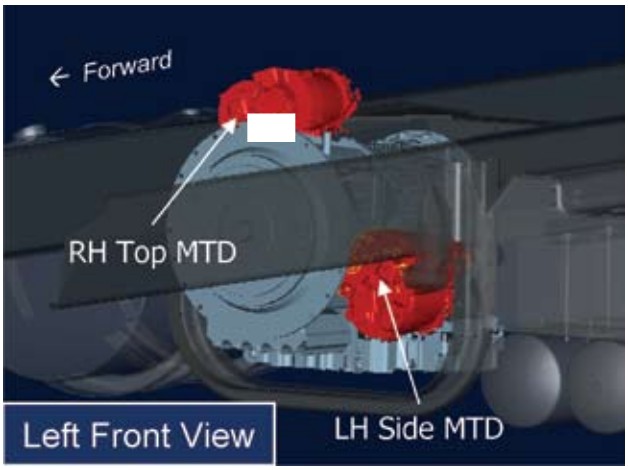

Left view

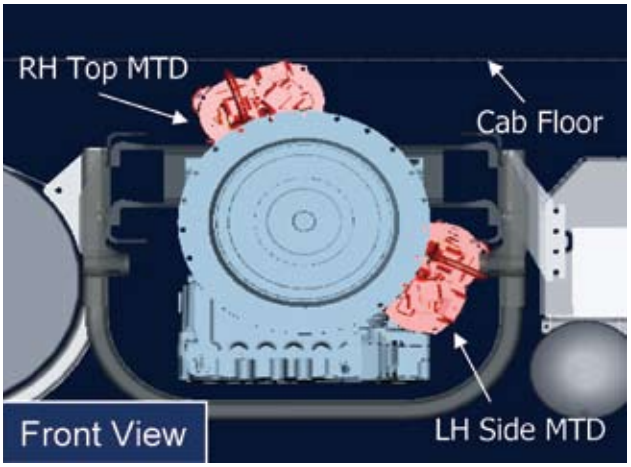

Front view

https://truckmanualshub.com/

FRAME LAYOUTS

The dimensions in the frame layout section are intended to aid in layout of the chassis, and to help determine the best possible combination of fuel tanks, battery boxes, and the diesel particulate filter (DPF). For your application, the layouts focus on the under cab area, with appropriate dimensional information included for pertinent back of cab components. Not all optional equipment is included in this section. Additional components may be placed on the rail behind components show. The Back of Cab components are shown primarily for reference. For more specific requirements please work with your local Kenworth Dealer. Please read the instructions carefully.

The following dimensions are consistent across the entire section to aid in the comparison of one layout option versus another.

TABLE 3-22. Frame Layout Dimensions

Dimension	Location
A	RH Side, Under Cab, Below Rail
B	RH Side, Above Rail
C	LH Side, Under Cab, Below Rail
D	LH Side, Above Rail
E	RH Side, Under Rail Back of Cab
F	LH Side, Under Rail Back of Cab
BOC	Back of Cab

The layouts are organized by type, specifically the arrangement of under cab components. The visual index that follows will give you a quick overview of the layouts that are included. Using the index locate the layout that you are interested in, then turn to the specified pages. The charts that follow are then model specific. It is important that the correct chart is used for accurate dimensional information.

Visual Index

TABLE 3-23. Visual Index

Symbol	Description
DPF	Diesel Particulate Filter
	Vertical Diesel Particulate Filter
Batt	Standard Battery Box
Batt	Vocational Battery Box
Fuel	Fuel Tank
Tailpipe,	Tailpipes (Horizontal, Vertical)

https://truckmanualshub.com/

FRAME LAYOUT INDEX

Day Cab Chassis Layout Options

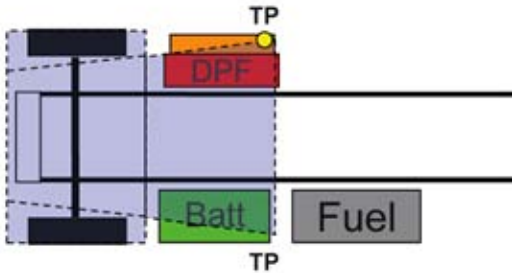

D1 is used for single exhaust located side of cab (SOC) with battery box LH under, DPF RH under and fuel tanks back of cab (BOC). Charts located on pages 3-34.

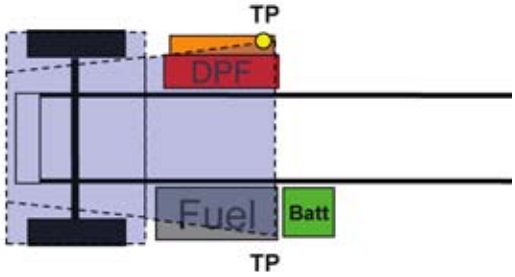

D2 is used for single exhaust located side of cab with the vocational style battery box LH BOC, fuel tank LH under, and DPF RH under. Charts located on pages 3-35.

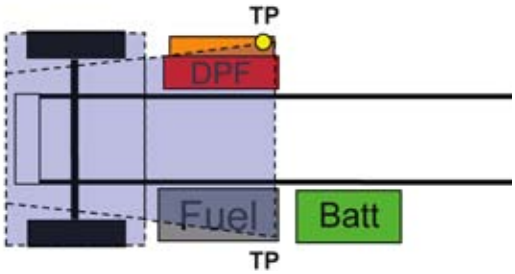

D3 is used for single exhaust located side of cab with fuel tank LH under, DPF RH under and battery box BOC. Note: This layout can be used with a modular sleeper, dimensions will not change. Charts located on pages 3-36.

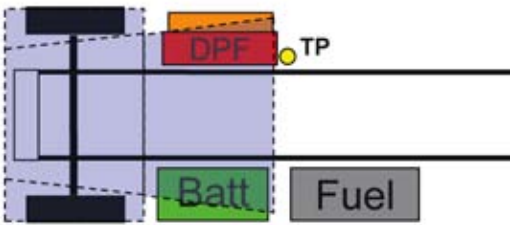

D4 is used for single exhaust right hand (RH) back of cab with battery box LH under, DPF RH under and fuel tanks BOC. Charts located on pages 3-37.

https://truckmanualshub.com/

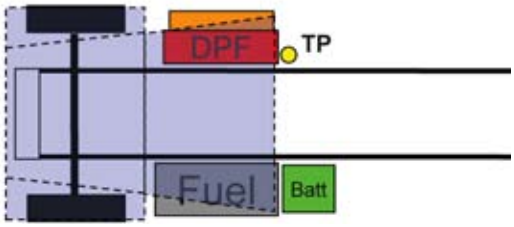

D5 is used for single exhaust RH back of cab with vocational style battery box LH BOC, fuel tank LH under and DPF RH under. Charts located on pages 3-38.

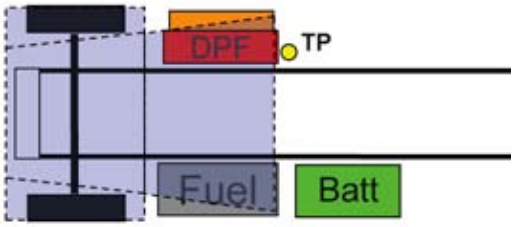

D6 is used for single exhaust RH back of cab with fuel tank LH under, DPF RH under and battery box LH BOC. Charts located on pages 3-39.

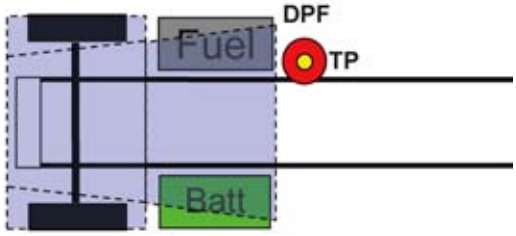

D7 is used for vertical independent exhaust RH back of cab, including DPF, battery box LH under, and fuel tank RH under. Charts located on pages 3-40.

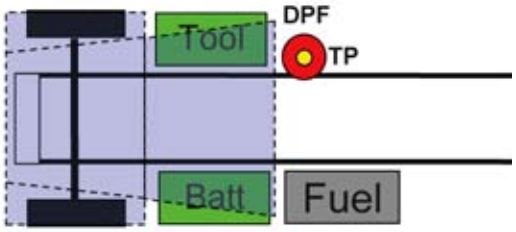

D8 is used for vertical independent exhaust RH back of cab, including DPF, battery box LH under, tool box RH under and fuel tanks located BOC. Charts located on pages 3-41.

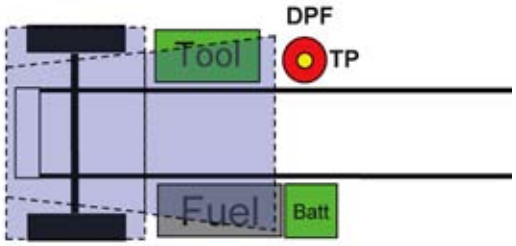

D9 is used for vertical independent exhaust RH back of cab, including DPF, vocational style battery box LH BOC, fuel tank LH under and tool box RH under. Charts located on pages 3-42.

https://truckmanualshub.com/

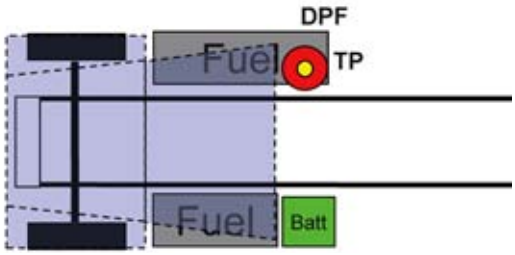

D10 is used for vertical independent exhaust RH back of cab, including DPF, vocational style battery box LH BOC, fuel tank LH under and fuel tank RH under. Charts located on page 3-43.

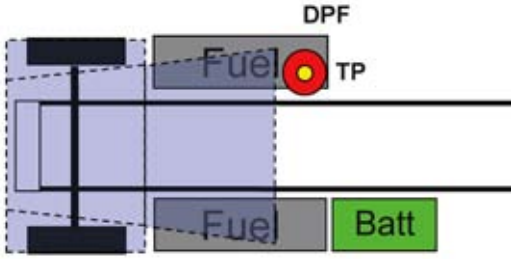

D11 is used for vertical independent exhaust RH back of cab, including DPF, fuel tanks LH and RH under, and battery box LH BOC. Charts located on page 3-44.

https://truckmanualshub.com/

CHARTS

D1

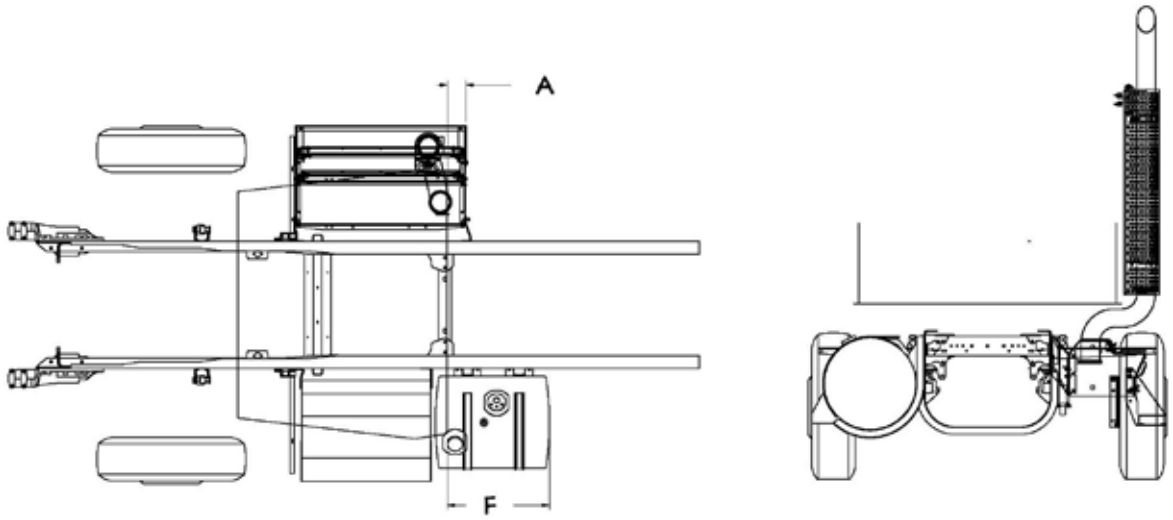

DPF Location: RH Under Cab
Battery Box: LH Under Cab
Fuel Tank: BOC

TABLE 3-24.

Model	Cab Configuration	Tailpipe Configuration	Dimension A DPF to BOC (in.)
T470	Day Cab	Single RH SOC	7.2
	Extended Day Cab	Single RH SOC	1.5

22” Fuel Tank				24.5” Fuel Tank			
Gallons	Tank Length (in.)	Dim. F Day Cab BOC to End of Fuel Tank (in.)	Dim. F Extended Day Cab BOC to End of Fuel Tank (in.)	Gallons	Tank Length (in.)	Dim. F Day Cab BOC to End of Fuel Tank (in.)	Dim. F Extended Day Cab BOC to End of Fuel Tank (in.)
40	25.6	22.5	16.8	45	22.9	19.8	14.1
56	35.5	32.4	26.7	60	30.5	27.4	21.7
60	38.0	34.9	29.2	75	38.5	35.4	29.7
75	47.3	44.2	38.5	90	45.5	42.4	36.7
100	62.2	59.1	53.4	100	50.0	46.9	41.2
120	74.2	71.1	65.4	110	54.9	51.8	46.1
				120	60.5	57.4	51.7
				135	67.2	64.1	58.4
				150	74.5	71.4	65.7

https://truckmanualshub.com/

D2

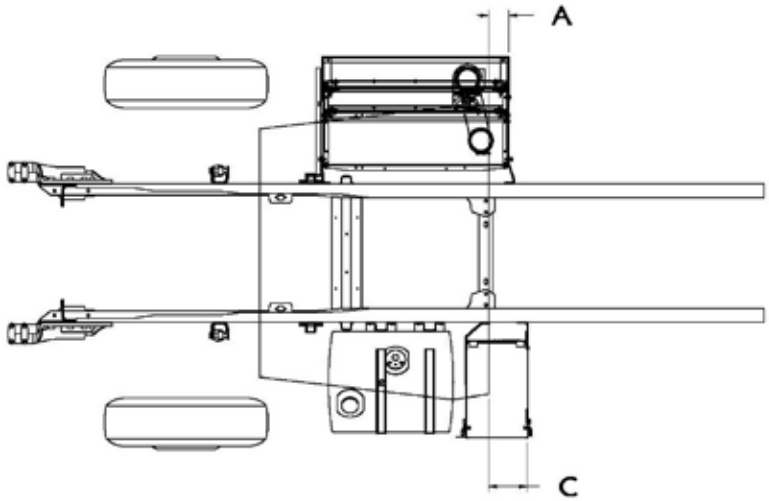

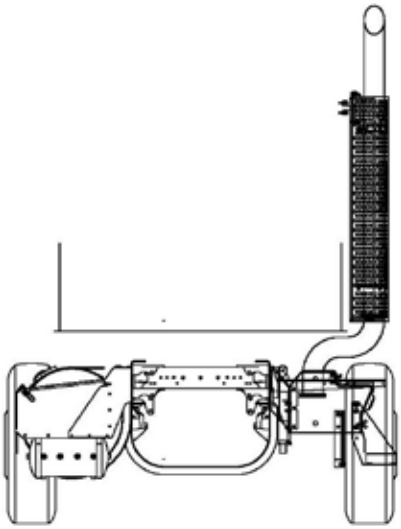

DPF Location: RH Under Cab
Battery Box: Vocational LH BOC
Fuel Tank: LH Under Cab

TABLE 3-25.

Model	Cab Configuration	Tailpipe Configuration	Dimension A DPF to BOC (in.)
T470	Day Cab	Single RH SOC	7.2
	Extended Day Cab	Single RH SOC	1.5

22” Fuel Tank				24.5” Fuel Tank			
Gallons	Tank Length (in.)	Dim. C Day Cab BOC to Batt. Box (in.)	Dim. C Extended Day Cab BOC to Batt. Box (in.)	Gallons	Tank Length (in.)	Dim. C Day Cab BOC to Batt. Box (in.)	Dim. C Extended Day Cab BOC to Batt. Box (in.)
56	35.5	12.6	6.9	60[2]	30.5	7.6	1.9
60	38.0	15.1	9.4	75	38.5	15.6	9.9
75	47.3	24.4	18.7	90	45.5	22.6	16.9
100	62.2	39.3	33.6	100	50.0	27.1	21.4
120	74.2	51.3	45.6	110	54.9	32.0	26.3
				120	60.5	37.6	31.9
				135	67.2	44.3	38.6
				150	74.5	51.6	45.9

https://truckmanualshub.com/

D3

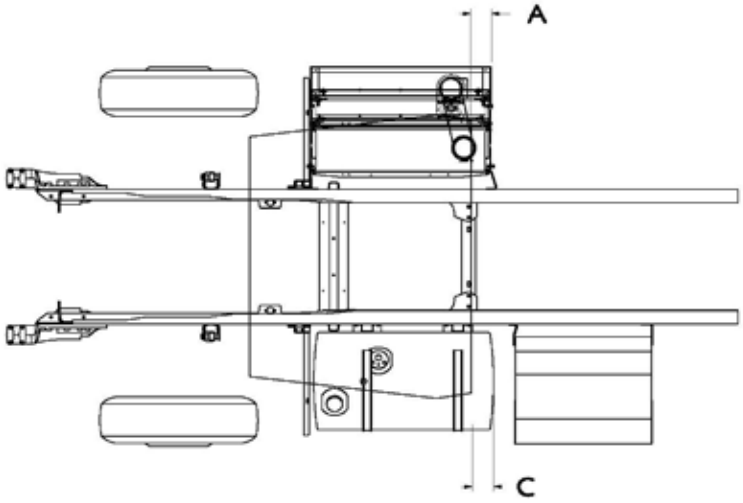

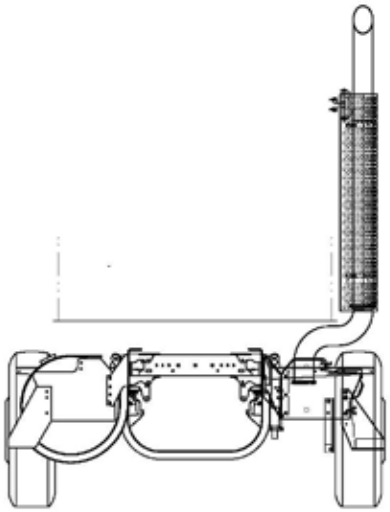

DPF Location: RH Under Cab
Battery Box: BOC
Fuel Tank: LH Under Cab

TABLE 3-26.

Model	Cab Configuration	Tailpipe Configuration	Dimension A DPF to BOC (in.)
T470	Day Cab	Single RH SOC	7.2
	Extended Day Cab	Single RH SOC	1.5

22” Fuel Tank				24.5” Fuel Tank			
Gallons	Tank Length (in.)	Dim. C Day Cab BOC to End of Fuel Tank (in.)	Dim. C Extended Day Cab BOC to End of Fuel Tank (in.)	Gallons	Tank Length (in.)	Dim. C Day Cab BOC to End of Fuel Tank (in.)	Dim. C Extended Day Cab BOC to End of Fuel Tank (in.)
56	35.5	-3.7	-9.4	60	30.5	-8.7	-14.4
60	38.0	-1.2	-6.9	75	38.5	-0.7	-6.4
75[1, 2]	47.3	8.1	2.4	90[1, 2]	45.5	6.3	0.6
100	62.2	23.0	17.3	100	50.0	10.8	5.1
120	74.2	35.0	29.3	110	54.9	15.7	10.0
				120	60.5	21.3	15.6
				135	67.2	28.0	22.3
				150	74.5	35.3	29.6

[1] MAXIMUM DAY CAB FUEL TANK TO MATCH DIMENSION “A”
[2] MAXIMUM EXTENDED DAY CAB FUEL TANK TO MATCH DIMENSION “A”

https://truckmanualshub.com/

D4

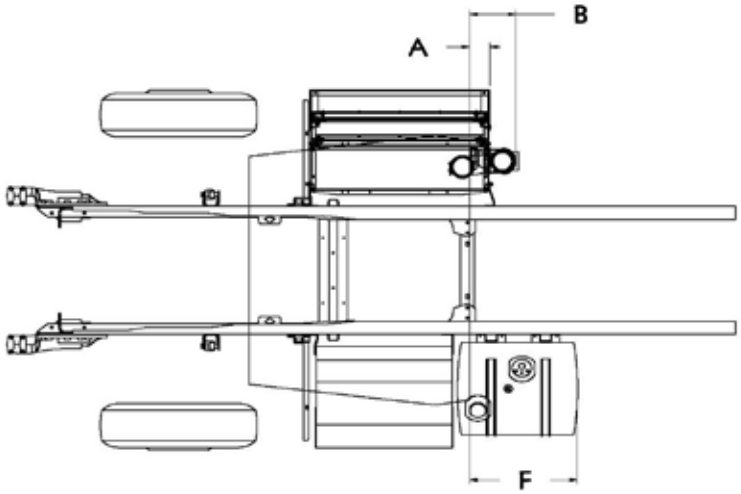

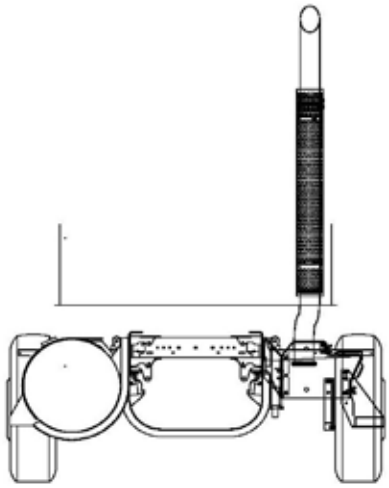

DPF Location: RH Under Cab
Battery Box: LH Under Cab
Fuel Tank: BOC

TABLE 3-27.

Model	Cab Configuration	Tailpipe Configuration	Dimension A DPF to BOC (in.)	Dimension B Max from BOC (in.)
T470	Day Cab	RH BOC	7.2	10.9

22” Fuel Tank			24.5” Fuel Tank		
Gallons	Tank Length (in.)	Dim. F Day Cab BOC to End of Fuel Tank (in.)	Gallons	Tank Length (in.)	Dim. F Day Cab BOC to End of Fuel Tank (in.)
40	25.6	22.5	45	22.9	19.8
56	35.5	32.4	60	30.5	27.4
60	38.0	34.9	75	38.5	35.4
75	47.3	44.2	90	45.5	42.4
100	62.2	59.1	100	50.0	46.9
120	74.2	71.1	110	54.9	51.8
			120	60.5	57.4
			135	67.2	64.1
			150	74.5	71.4

NOTE: DIMENSION “F” IS CALCULATED USING A STANDARD SIZED BATTERY BOX. OPTIONAL EXTENDED BOXES WILL CHANGE DIMENSION “F”.

https://truckmanualshub.com/

D5

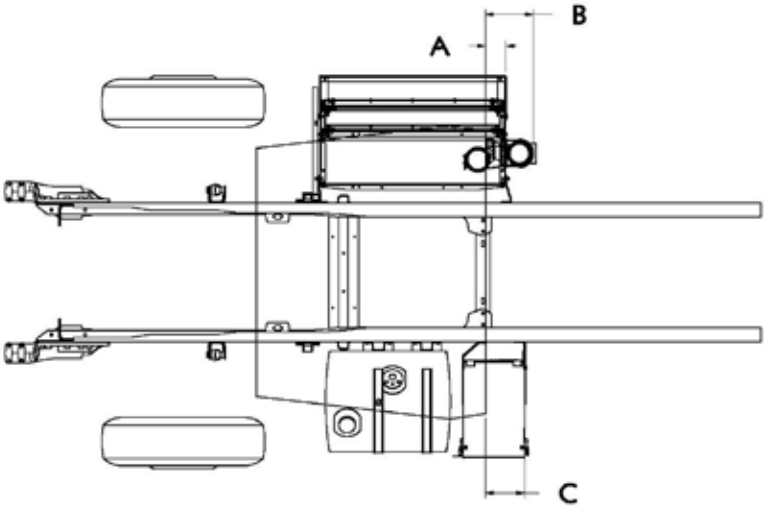

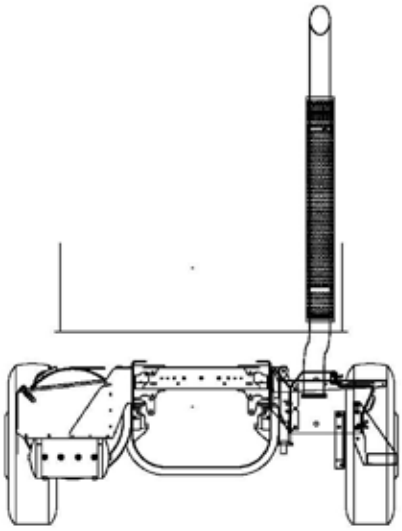

DPF Location: RH Under Cab
Battery Box: Vocational LH BOC
Fuel Tank: LH Under Cab

TABLE 3-28.

Model	Cab Configuration	Tailpipe Configuration	Dimension A DPF to BOC (in.)	Dimension B Max from BOC (in.)
T470	Day Cab	RH BOC	5.4	10.9

22” Fuel Tank			24.5” Fuel Tank		
Gallons	Tank Length (in.)	Dim. C Day Cab BOC to Batt. Box (in.)	Gallons	Tank Length (in.)	Dim. C Day Cab BOC to Batt. Box (in.)
56	35.5	12.7	60[2]	30.5	7.6
60	38.0	15.2	75	38.5	15.7
75	47.3	24.5	90	45.5	22.7
100	62.2	39.4	100	50.0	27.2
120	74.2	51.4	110	54.9	32.1
			120	60.5	37.7
			135	67.2	44.4
			150	74.5	51.7

[1] MAXIMUM DAY CAB FUEL TANK TO MATCH DIMENSION “A”
[2] MAXIMUM DAY CAB FUEL TANK TO MATCH DIMENSION “B”

https://truckmanualshub.com/

D6

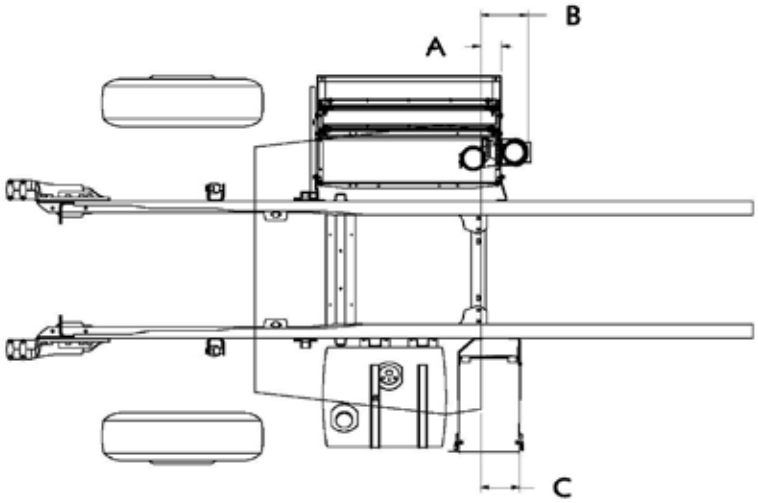

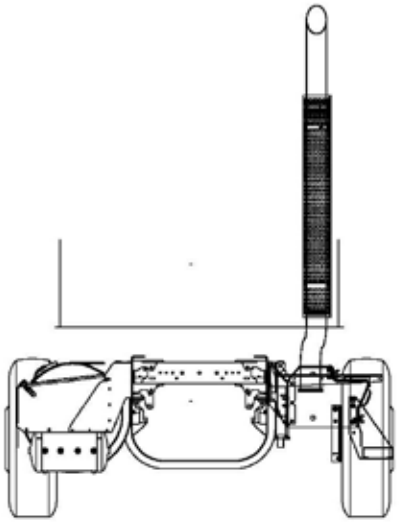

DPF Location: RH Under Cab
Battery Box: Vocational LH BOC
Fuel Tank: LH Under Cab

TABLE 3-29.

Model	Cab Configuration	Tailpipe Configuration	Dimension A DPF to BOC (in.)	Dimension B Max from BOC (in.)
T470	Day Cab	RH BOC	7.2	10.9

22” Fuel Tank			24.5” Fuel Tank		
Gallons	Tank Length (in.)	Dim. C Day Cab BOC to Batt. Box (in.)	Gallons	Tank Length (in.)	Dim. C Day Cab BOC to Batt. Box (in.)
56	35.5	12.6	60[1, 2]	30.5	7.6
60	38.0	15.1	75	38.5	15.6
75	47.3	24.4	90	45.5	22.6
100	62.2	39.3	100	50.0	27.1
120	74.2	51.3	110	54.9	32.0
			120	60.5	37.6
			135	67.2	44.3
			150	74.5	51.6

https://truckmanualshub.com/

D7

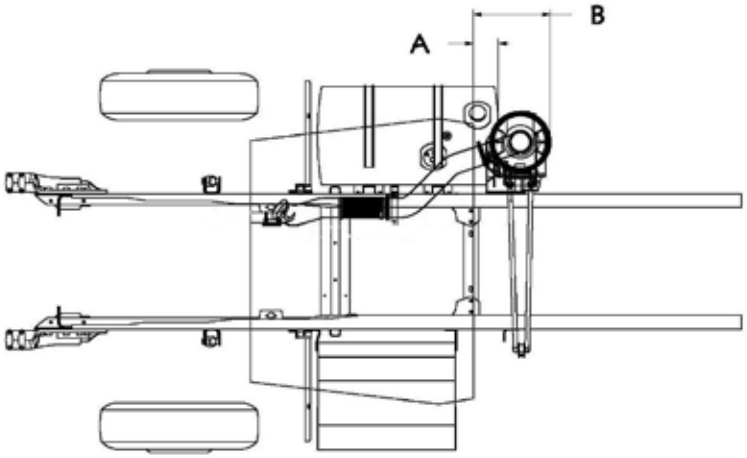

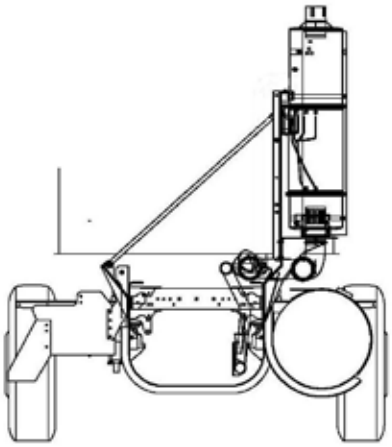

DPF Location: RH Vertical BOC
Battery Box: LH Under Cab
Fuel Tank: RH Under Cab

TABLE 3-30.

Model	Cab Configuration	Tailpipe Configuration	Dimension B Max from BOC (in.)
T470	Day Cab	Vertical	19.8
	Extended Day Cab		

22” Fuel Tank				24.5” Fuel Tank			
Gallons	Tank Length (in.)	Dim. A Day Cab BOC (in.)	Dim. A Extended Day Cab BOC (in.)	Gallons	Tank Length (in.)	Dim. A Day Cab BOC (in.)	Dim. A Extended Day Cab BOC (in.)
56	35.5	-3.7	-9.4	60	30.5	-8.7	-14.4
60	38.0	-1.2	-6.9	75	38.5	-0.7	-6.4
75[1]	47.3	8.1	2.4	90	45.5	6.3	0.6
100[2]	62.2	23.0	17.3	100	50.0	10.8	5.1
120	74.2	35.0	29.3	110[1]	54.9	15.7	10.0
				120[2]	60.5	21.3	15.6
				135	67.2	28.0	22.3
				150	74.5	35.3	29.6

[1] MAXIMUM DAY CAB FUEL TANK TO MATCH DIMENSION “B”
[2] MAXIMUM EXTENDED DAY CAB FUEL TANK TO MATCH DIMENSION “B”

https://truckmanualshub.com/

D8

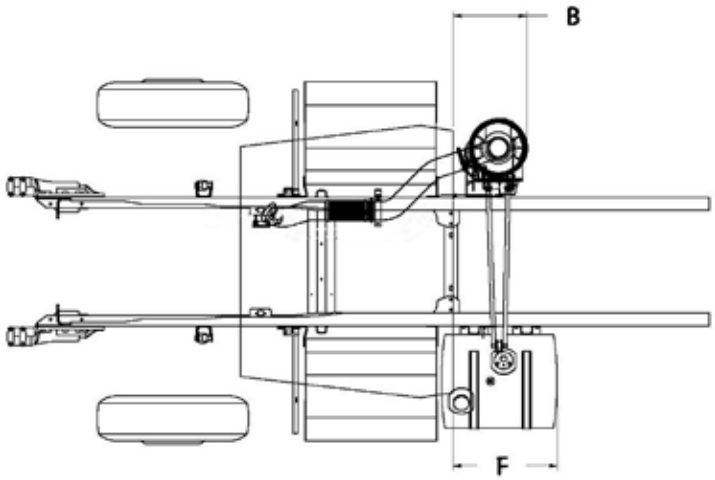

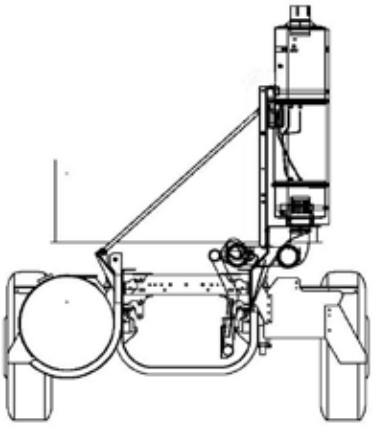

DPF Location: RH Vertical BOC
Battery Box: LH Under Cab
Fuel Tank: BOC

TABLE 3-31.

Model	Cab Configuration	Tailpipe Configuration	Dimension B Max from BOC (in.)
T470	Day Cab	Vertical	19.8
	Extended Day Cab		

22” Fuel Tank				24.5” Fuel Tank			
Gallons	Tank Length (in.)	Dim. F Day Cab BOC to End of Fuel Tank	Dim. F Extended Day Cab BOC to End of Fuel Tank	Gallons	Tank Length (in.)	Dim. F Day Cab BOC to End of Fuel Tank	Dim. F Extended Day Cab BOC to End of Fuel Tank
40	25.6	22.5	16.8	45	22.9	19.8	14.1
56	35.5	32.4	26.7	60	30.5	27.4	21.7
60	38.0	34.9	29.2	75	38.5	35.4	29.7
75	47.3	44.2	38.5	90	45.5	42.4	36.7
100	62.2	59.1	53.4	100	50.0	46.9	41.2
120	74.2	71.1	65.4	110	54.9	51.8	46.1
				120	60.5	57.4	51.7
				135	67.2	64.1	58.4
				150	74.5	71.4	65.7

NOTE: DIMENSION “F” IS CALCULATED USING A STANDARD SIZED BATTERY BOX. OPTIONAL EXTENDED BOXES WILL CHANGE DIMENSION “F”.

https://truckmanualshub.com/

D9

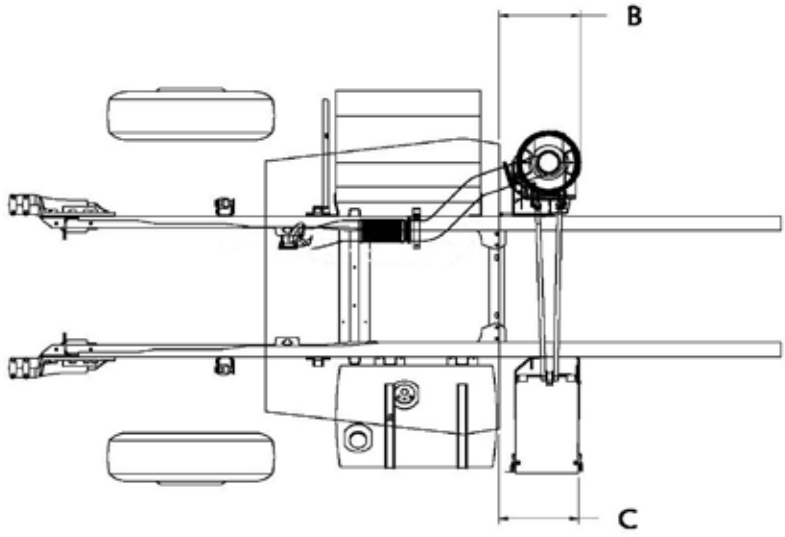

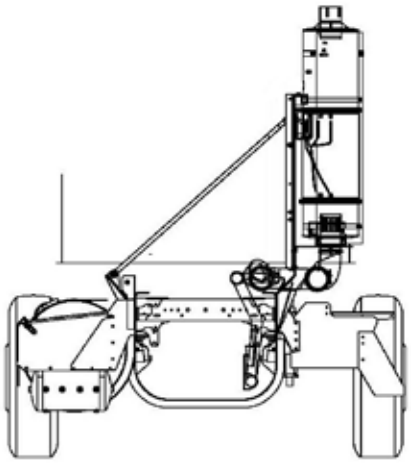

DPF Location: RH Vertical BOC
Battery Box: Vocational LH BOC
Fuel Tank: LH Under Cab

TABLE 3-32.

Model	Cab Configuration	Tailpipe Configuration	Dimension B Max from BOC (in.)
T470	Day Cab	Vertical	19.8
	Extended Day Cab		

22" Fuel Tank				24.5" Fuel Tank			
Gallons	Tank Length (in.)	Dim. C Day Cab BOC to Batt. Box (in.)	Dim. C Extended Day Cab BOC to Batt. Box (in.)	Gallons	Tank Length (in.)	Dim. C Day Cab BOC to Batt. Box (in.)	Dim. C Extended Day Cab BOC to Batt. Box (in.)
56	35.5	12.6	6.9	60	30.5	7.6	1.9
60[1]	38.0	15.1	9.4	75[1]	38.5	15.6	9.9
75[2]	47.3	24.4	18.7	90[2]	45.5	22.6	16.9
100	62.2	39.3	33.6	100	50.0	27.1	21.4
120	74.2	51.3	45.6	110	54.9	32.0	26.3
				120	60.5	37.6	31.9
				135	67.2	44.3	38.6
				150	74.5	51.6	45.9

[1] MAXIMUM DAY CAB FUEL TANK TO MATCH DIMENSION "B"
[2] MAXIMUM EXTENDED DAY CAB FUEL TANK TO MATCH DIMENSION "B"

https://truckmanualshub.com/

D10

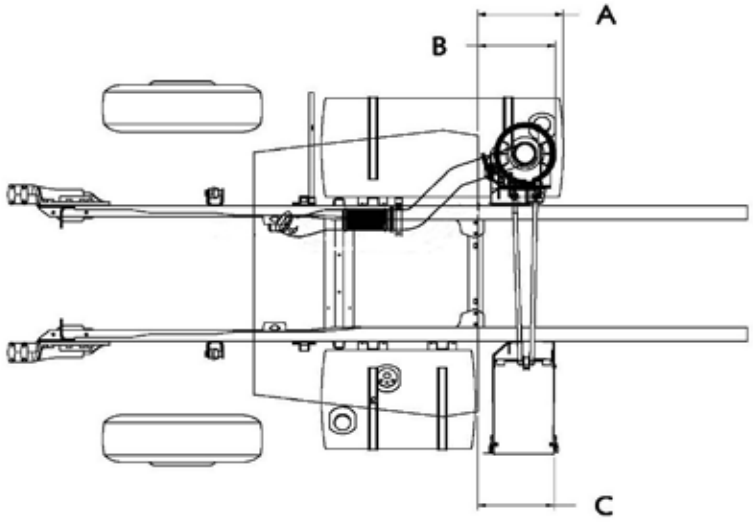

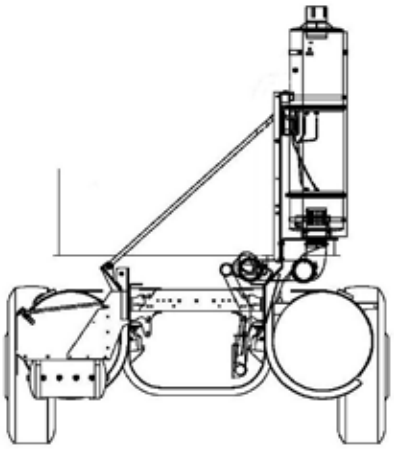

DPF Location: RH Vertical BOC
Battery Box: Vocational LH BOC
Fuel Tank: LH Under Cab
RH Under Cab

TABLE 3-33.

Model	Cab Configuration	Tailpipe Configuration	Dimension B DPF to BOC (in.)
T470	Day Cab	Vertical	19.8

22" Fuel Tank				24.5" Fuel Tank			
Gallons	Tank Length (in.)	Dim. A Day Cab BOC (in.)	Dim. C Day Cab BOC to Batt. Box (in.)	Gallons	Tank Length (in.)	Dim. A Day Cab BOC (in.)	Dim. C Day Cab BOC to Batt. Box (in.)
56	35.5	-3.7	12.6	60	30.5	-8.7	7.6
60[2]	38.0	-1.2	15.1	75[2]	38.5	-0.7	15.6
75[1]	47.3	8.1	24.4	90	45.5	6.3	22.6
100	62.2	23.0	39.3	100	50.0	10.8	27.1
120	74.2	35.0	51.3	110[1]	54.9	15.7	32.0
				120	60.5	21.3	37.6
				135	67.2	28.0	44.3
				150	74.5	35.3	51.6

[1] MAXIMUM RH DAY CAB FUEL TANK TO MATCH DIMENSION "B"
[2] MAXIMUM LH DAY CAB FUEL TANK TO MATCH DIMENSION "B"

https://truckmanualshub.com/

D11

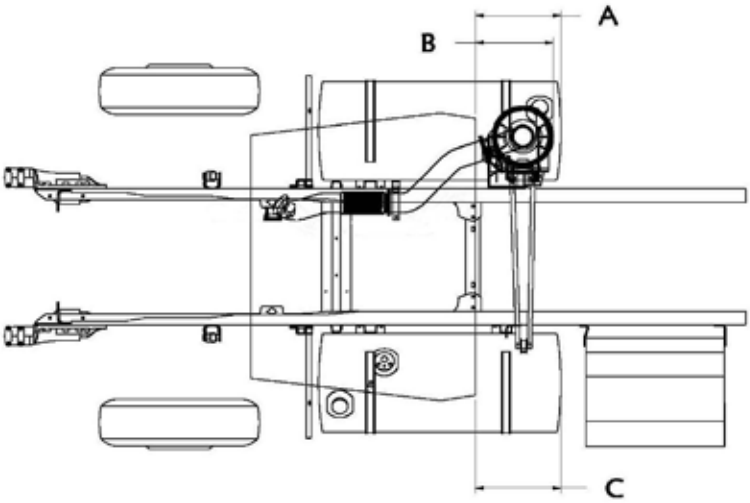

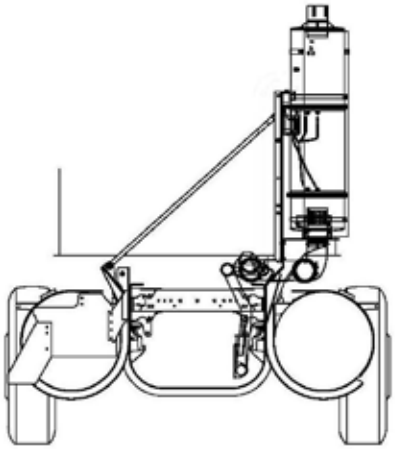

DPF Location: RH Vertical BOC
Battery Box: BOC
Fuel Tank: LH Under Cab
RH Under Cab

TABLE 3-34.

Model	Cab Configuration	Tailpipe Configuration	Dimension B DPF to BOC (in.)
T470	Day Cab	Vertical	19.8
	Extended Day Cab		

22” Fuel Tank				24.5” Fuel Tank			
Gallons	Tank Length (in.)	Dim. A & C Day Cab BOC to Fuel Tank (in.)	Dim. A & C Extended Day Cab BOC to Fuel Tank (in.)	Gallons	Tank Length (in.)	Dim. A & C Day Cab BOC to Fuel Tank (in.)	Dim. A & C Extended Day Cab BOC to Fuel Tank (in.)
56	35.5	-3.7	-9.4	60	30.5	-8.7	-14.4
60	38.0	-1.2	-6.9	75	38.5	-0.7	-6.4
75[1]	47.3	8.1	2.4	90	45.5	6.3	0.6
100[2]	62.2	23.0	17.3	100	50.0	10.8	5.1
120	74.2	35.0	29.3	110[1]	54.9	15.7	10.0
				120[2]	60.5	21.3	15.6
				135	67.2	28.0	22.3
				150	74.5	35.3	29.6

[1] MAXIMUM DAY CAB FUEL TANK TO MATCH DIMENSION “B”
[2] MAXIMUM EXTENDED DAY CAB FUEL TANK TO MATCH DIMENSION “B”

https://truckmanualshub.com/

FRONT FRAME DIMENSIONS

This section includes drawings of the T470 extended front frame (73”) and standard (50.5”) front frame settings. All dimensions are in inches (in). They illustrate measurements useful to the installation of front frame equipment and bumpers. Kenworth also offers .dxf files and frame layouts of ordered chassis four weeks prior to build. Please work with your Kenworth sales representative to request this feature when specifying your chassis.

Extended Front Frame

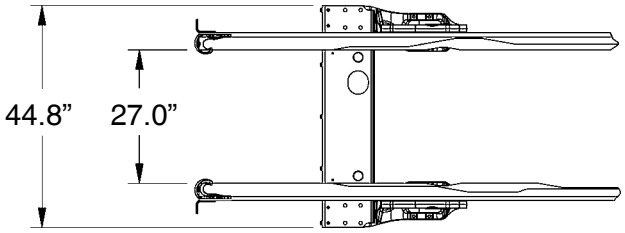

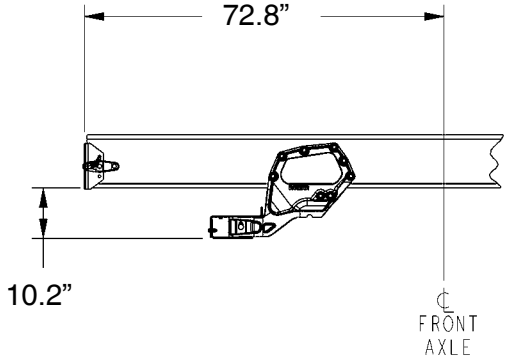

Standard Front Frame

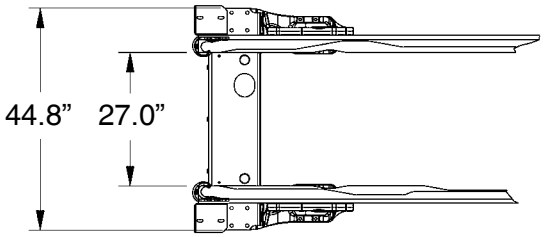

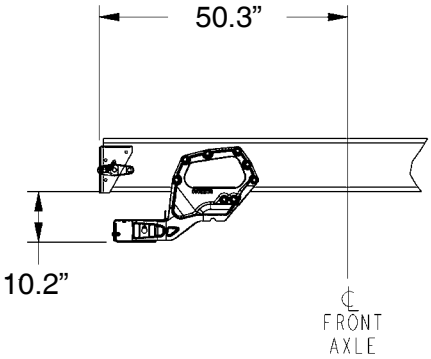

Extended Front Frame

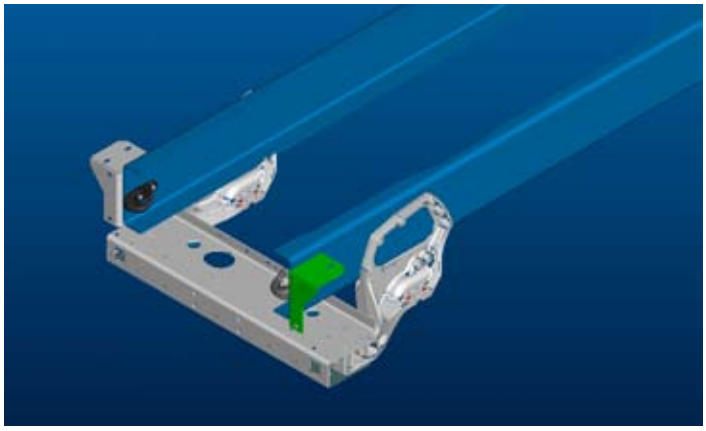

Standard Front Frame

https://truckmanualshub.com/

FRAME INFORMATION

Frame information provided is per rail, some specifications are written for RBM requirements per pair of rails. Make sure to know the requirement before deciding on the frame rail.

TABLE 4-1. Single Steel Rails

Rail Height		Flange Width		Web Thickness	Section Modulus	RBM (in lbs)	Weight (lbs/in)
H		W		T	S	R	W
10 - 5/8”	x	3 -1/2”	x	5/16”	14.80	1,776,000	2.90
10 - 3/4”	x	3 -1/2”	x	3/8”	17.80	2,132,000	3.46
10 -11/16”	x	3 -1/2”	x	1/2”	22.35	2,683,000	4.53

TABLE 4-2. Inserted Steel Rails

Rail Height	Insert Material	Section Modulus	RBM (in lbs)	Weight (lbs/in)
10 - 5/8”	Single 9-7/8”x 2-7/8” x 1/4”	24.37	2,925,000	4.96
10 - 3/4”	Single 9-7/8”x 2-7/8” x 1/4”	27.33	3,280,000	5.53

CRITICAL CLEARANCES

Rear Wheels and Cab

CAUTION:

Insufficient clearance between rear tires and body structure may cause damage to the body during suspension movement. Allow at least 8 inches clearance (See Figure 4–1.)

Normal suspension movement could cause contact between the tires and the body. To prevent this, mount the body so that the minimum clearance between the top of the tire and the bottom of the body is 8 inches (203 mm). This should be measured with the body empty. See Figure 4–1.

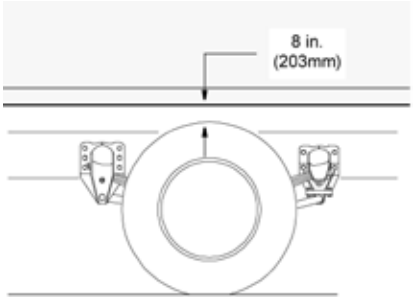

FIGURE 4-1. Minimum Clearance Between Top Of Rear Tires And Body Structure Overhang.

CAUTION:

Maintain adequate clearance between back of cab and the front (leading edge) of mounted body. Failure to comply may result in equipment damage. See Figure 4–2.

Note:

Be sure to provide maintenance access to battery box and fuel tank fill neck.

https://truckmanualshub.com/

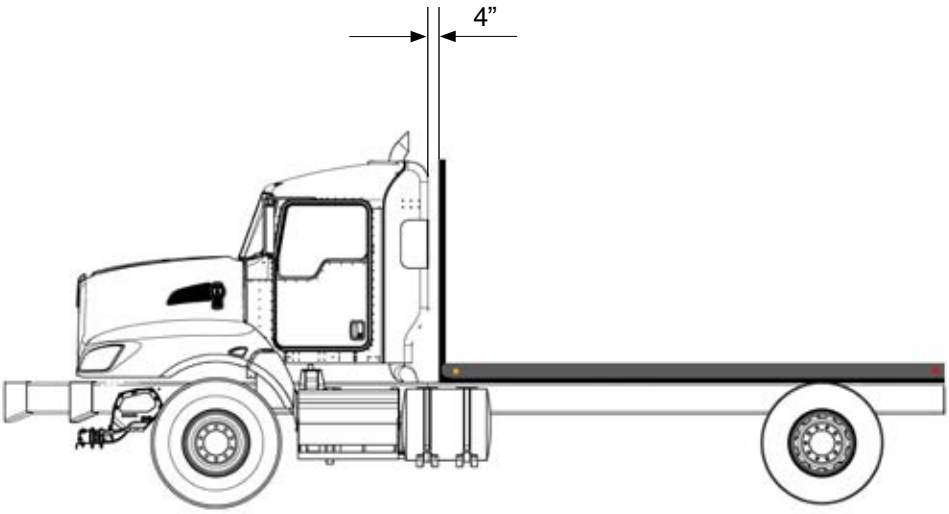

FIGURE 4-2. Minimum Back of Cab Clearance

WARNING:

If the frame rail flanges are modified or damaged, the rail may fail prematurely and cause an accident. When mounting a body to the chassis, DO NOT drill holes in the upper or lower flange of the frame rail. Mount the body using body mounting brackets or U–bolts. Failure to comply may result in personal injury, death, equipment or property damage.

BODY MOUNTING USING BRACKETS

CAUTION:

Always install a spacer between the body subframe and the top flange of the frame rail. Failure to do so may result in corrosion due to dissimilar materials and equipment damage.

Installation of a spacer between the body subframe and the top flange of the frame rail will help prevent premature wear of the components due to chafing or corrosion.

https://truckmanualshub.com/

Frame Sill

If the body is mounted to the frame with brackets, we recommend that the frame sill spacer be made from a strip of rubber or plastic (delrin or nylon). These materials will not undergo large dimensional changes during periods of high or low humidity. The strip will be less likely to fall out during extreme relative motion between body and chassis. See Figure 4–3.

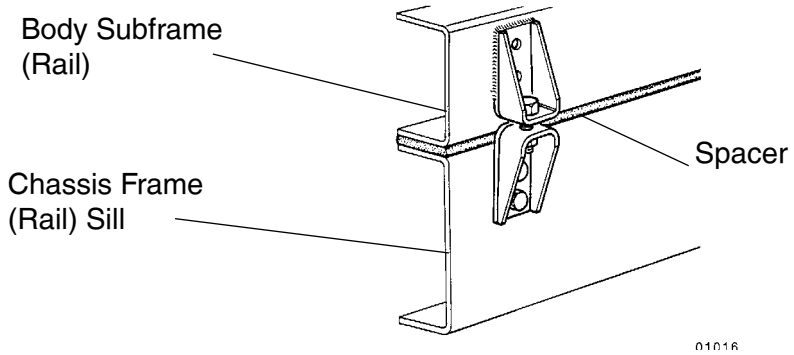

FIGURE 4-3. Spacer Between Frame Sill and Body Rail - Rubber or Plastic

Brackets

When mounting a body to the chassis with brackets, we recommend designs that offer limited amount of relative movement, bolted securely but not too rigid. Brackets should allow for slight movement between the body and the chassis. For instance, Figure 4–4 shows a high compression spring between the bolt and the bracket.

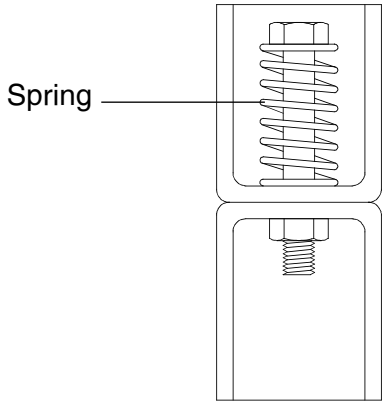

FIGURE 4-4. High Compression Spring Between the Mounting Bolt and Upper Bracket

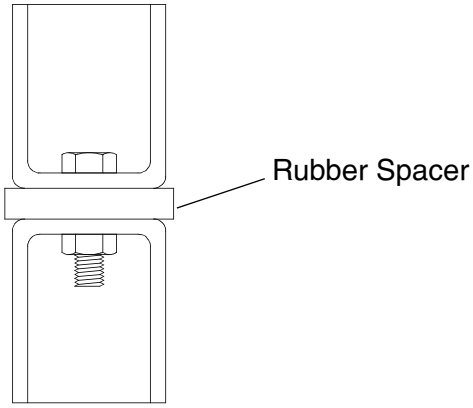

FIGURE 4-5. Rubber Spacer Between Brackets

Another possibility is mounting a rubber spacer between the brackets. See Figure 4–5.

These designs will allow relative movement between the body and the chassis during extreme frame racking situations. Extreme frame racking, and mountings that are too rigid, could cause damage to the body. This is particularly true with tanker installations.

https://truckmanualshub.com/

MOUNTING HOLES

When installing the lower bracket on frame rails the mounting holes in the chassis frame bracket and frame rail must comply with the general spacing and location guidelines illustrated in Figure 4–6. The hole diameter should not exceed the bolt diameter by more than .060 inches (1.5 mm).

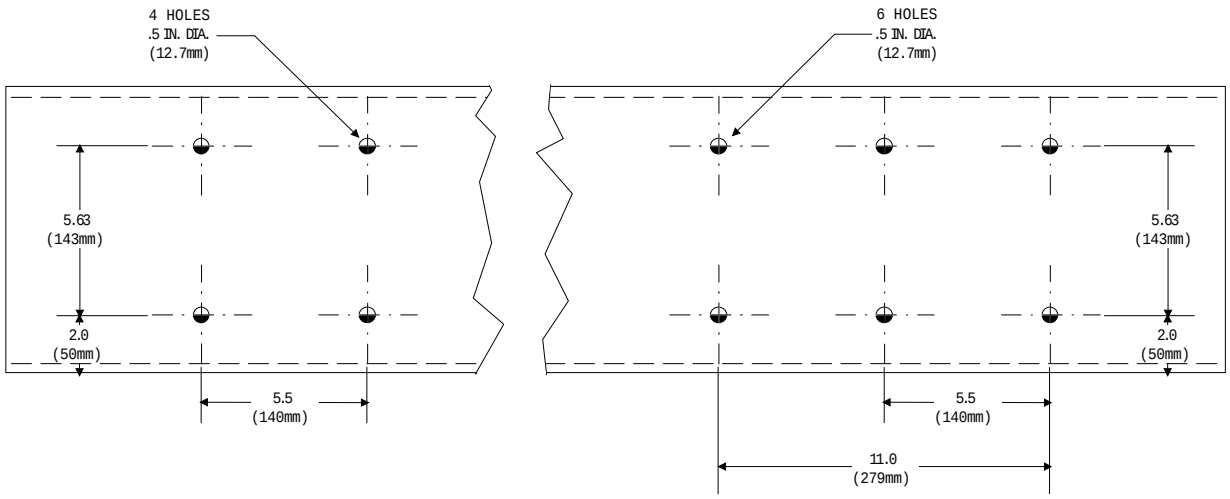

FIGURE 4-6. Crossmember-Gusset Hole Pattern Requirements. [inch (mm)]

Frame Drilling

WARNING:

When mounting a body to the chassis, DO NOT drill holes in the upper or lower flange of the frame rail. If the frame rail flanges are modified or damaged, the rail may fail prematurely. Mount the body using body mounting brackets or U–bolts. Failure to comply may result in personal injury, death, equipment or property damage.

WARNING:

Use care when drilling the frame web so the wires and air lines routed inside the rail are not damaged, failure to do so may cause an inoperable electrical or air system circuit. Failure to comply may result in personal injury, death, equipment or property damage.

WARNING:

Do not drill closely spaced holes in the frame rail. Hole centers of two adjacent holes should be spaced no less than twice the diameter of the largest hole. Closer spacing may induce a failure between the holes. Failure to comply may result in personal injury, death, equipment or property damage.

https://truckmanualshub.com/

BODY MOUNTING USING U–BOLTS

Spacers

If the body is mounted to the frame with U–bolts, use a hardwood sill (minimum 1/2 inch (12 mm) thick) between the frame rail and body frame to protect the top surface of the rail flange.

WARNING: **Do not allow the frame rails or flanges to deform when tightening the U–bolts. It will weaken the frame. Use suitable spacers made of steel or hardwood on the inside of the frame rail to prevent collapse of the frame flanges. Failure to comply may result in personal injury, death, equipment or property damage.**

Use a hardwood spacer between the bottom flange and the U–bolt to prevent the U–bolt from notching the frame flange. See Figure 4–7.

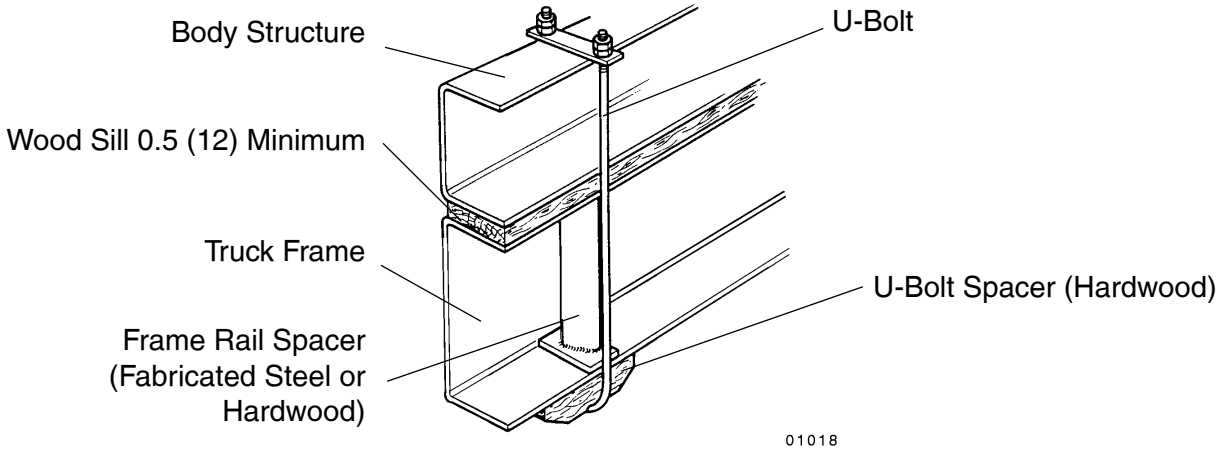

FIGURE 4-7. Acceptable U-Bolt Mounting with Wood and Fabricated Spacers [inch (mm)]

WARNING: **Do not allow spacers and other body mounting parts to interfere with brake lines, fuel lines, or wiring harnesses routed inside the frame rail. Crimped or damaged brake lines, fuel lines, or wiring may result in loss of braking, fuel leaks, electrical overload or a fire. Carefully inspect the installation to ensure adequate clearances for air brake lines, fuel lines, and wiring. Failure to comply may result in personal injury, death, equipment or property damage. See Figure 4–8.**

CAUTION: **Mount U–bolts so they do not chafe on frame rail. Failure to do so may result in premature wear of the U-bolt or frame rail.**

https://truckmanualshub.com/

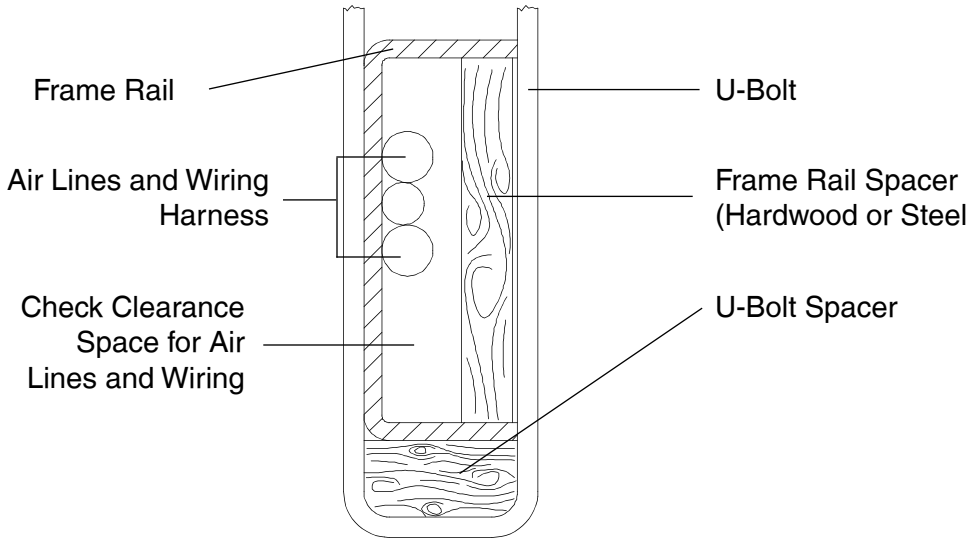

FIGURE 4-8. Clearance Space for Air Lines and Cables

WARNING:

Do not notch frame rail flanges to force a U–bolt fit. Notched or damaged frame flanges may result in premature frame failure. Use a larger size U–bolt. Use a hardwood spacer as shown in Figure 4-7. Failure to comply may result in personal injury, death, equipment or property damage.

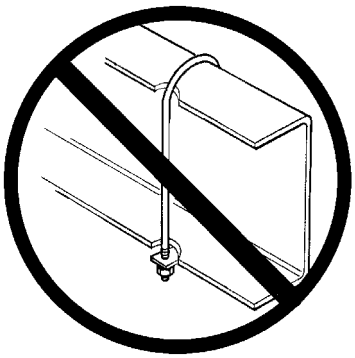

https://truckmanualshub.com/

Rear Body Mount

When U–bolts are used to mount a body we recommend that the last body attachment be made with a “fishplate” bracket. See Figure 4–9. This provides a firm attaching point and helps prevent any relative fore or aft movement between the body and frame.

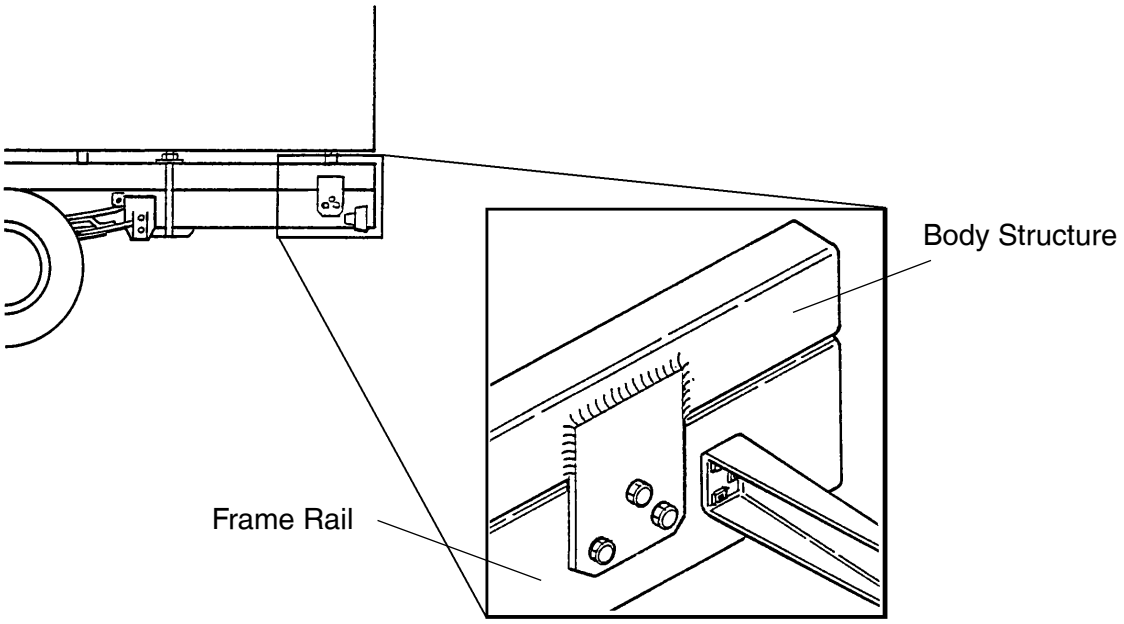

FIGURE 4-9. Example of Fishplate Bracket at Rear End of Body, used with U-Bolts

https://truckmanualshub.com/

FRAME MODIFICATIONS

Introduction

Kenworth offers customer specified wheelbases. So, in most cases frame modifications to produce a certain wheelbase should not be necessary.

However, some installations may require slight modifications, while other installations will require extensive modifications. Sometimes an existing dealer stock chassis may need to have the wheelbase changed to better fit a customer's application. The modifications may be as simple as shortening or lengthening the frame cutoff, or they may be as complex as changing the wheelbase.

DRILLING RAILS

Location and Hole Pattern

If holes need to be drilled to attach anything to the rail, see SECTION 4 "BODY MOUNTING" for more information. Follow the general spacing and hole location guidelines on Page 4–5, Figure 4–6.

WARNING!

When mounting a body to the chassis, DO NOT drill holes in the upper or lower flange of the frame rail. If the frame rail flanges are modified or damaged, the rail may fail prematurely. Mount the body using body mounting brackets or U–bolts. Failure to comply may result in personal injury, death, equipment or property damage.

WARNING!

Do not drill closely spare holes in the web of the frame. Hole centers of two adjacent holes should be spaced no less than twice the diameter of the largest hole. Closer spacing may induce a failure between the holes. Failure to comply may result in personal injury, death, equipment or property damage.

CAUTION:

An appropriately sized bolt and nut must be installed and torqued properly in all unused frame holes. Failure to do so may result in frame crack initiation around the hole and equipment damage.

WARNING!

Use care when drilling the frame web so the wires and air lines routed inside the rail are not damaged, failure to do so may cause an inoperable electrical or air system circuit. Failure to comply may result in personal injury, death, equipment or property damage.

CAUTION:

Never use a torch to make holes in the rail. Use the appropriate diameter drill bit. Heat from a torch will affect the material properties of the frame rail and may result in frame rail cracks and equipment damage.

CAUTION:

Hole diameter should not exceed the bolt diameter by more than .060 inches (1.5 mm). Oversized holes may result in excessive frame wear around the hole and equipment damage.

https://truckmanualshub.com/

MODIFYING FRAME LENGTH

The frame cutoff after the rear axle can be shortened to match a particular body length. Using a torch is acceptable; however, heat from a torch will affect the material characteristics of the frame rail. The affected material will normally be confined to within 1 to 2 inches (25 to 50 mm) of the flame cut and may not adversely affect the strength of the chassis or body installation.

The frame cutoff can be lengthened by adding frame extenders.

When extending 10.5” frame rails, the additional sections can be welded to the existing rails. The joint should be welded and reinforced as illustrated in Figure 5–1.

Note:

See page 5-6 for more information on welding frames.

Frame Insert

A frame insert must be added after welding a frame rail extension to compensate for lost strength. The insert should be of the same material as the frame member, or of steel, and at least equal to the frame rail in thickness. Attachment of the insert to the frame should be made with Ream-Fit heat-treated bolts, 5/8 in. (16 mm) dia. or the next larger size. Both the reinforcement and frame holes should be reamed to provide a fit of from .001 in. to .003 in. (.025 to .076 mm) clearance. Do not weld reinforcing members. The insert should span a distance of at least 24 in. (610 mm) on either side of the joint to insure an even distribution of stresses. Cut the ends of the insert at 45° as shown in Figure 5–2 unless the insert extends to the end of the frame.

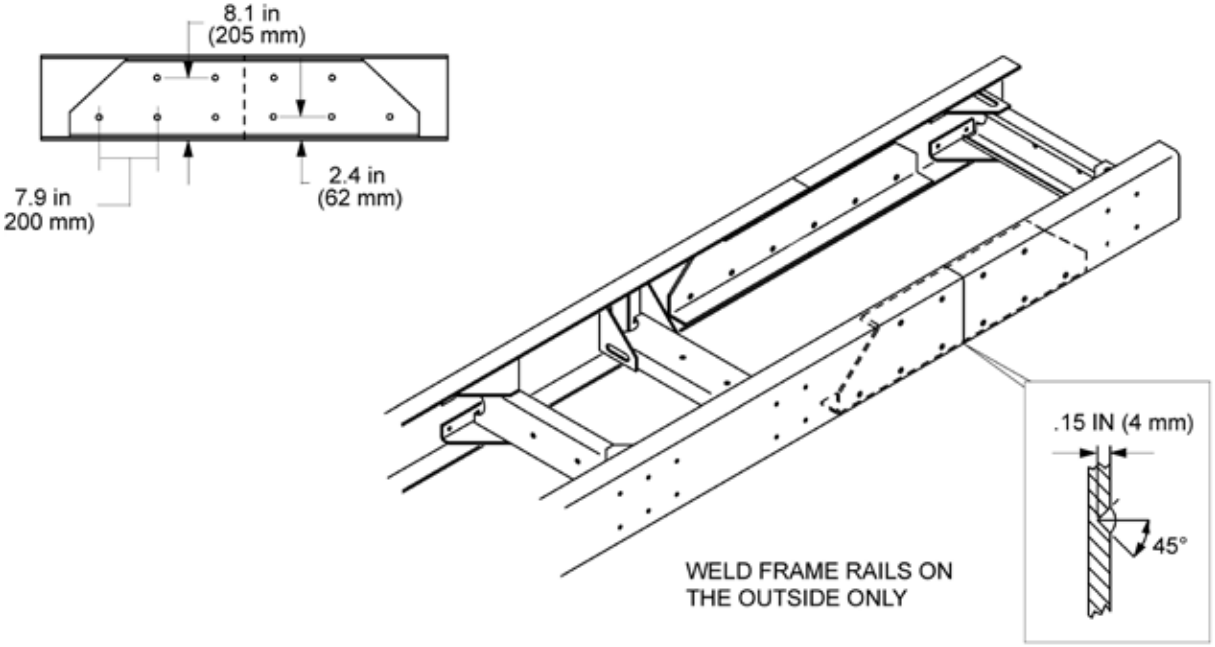

FIGURE 5-1. Detail of Frame Extension and Joint Welding

https://truckmanualshub.com/

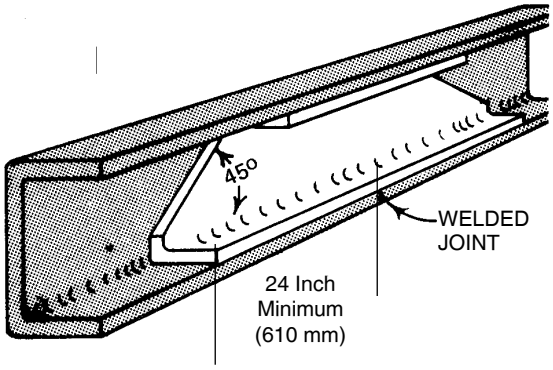

FIGURE 5-2. Frame Insert

Where possible, use existing bolt holes to attach the insert to the frame. Bolt holes must not be located closer to the frame flanges than the present bolt pattern.

If the insert is placed in a section of the main frame where few bolts are located, additional bolts are required. Use the following guideline for locating additional bolt holes.

CHANGING WHEELBASE

We do not recommend modifying the wheelbase. Occasionally, however, a chassis wheelbase will need to be reduced or lengthened. When this needs to be done there are a few guidelines that should to be considered.

WARNING!

When changing the wheelbase, be sure to follow the driveline manufacturer's recommendations for driveline length or angle changes. Incorrectly modified drivelines may fail prematurely due to excessive vibration. Failure to comply may result in personal injury, death, equipment or property damage.

Before changing the wheelbase the driveline angles of the proposed wheelbase need to be examined to ensure that no harmful vibrations are created. Consult the driveline manufacturer for appropriate recommendations.

WARNING!

When changing the wheelbase, a continuous blank frame insert/outsert must be added in the area of the new rear suspension mounting bolts. All new mounting holes must pass through the original rail and the insert/outsert. Failure to do so may cause excessive stress in the original rail due to additional holes. Failure to comply may result in personal injury, death, equipment or property damage.

Before the rear suspension is relocated, check the new location of the spring hanger brackets. The new holes for the spring hanger brackets must not overlap existing holes and should not come any closer than 2 inches (50 mm) to existing holes in the frame.

WARNING!

When relocating a suspension bracket, do not mount it on the extended (added) section of a frame rail. The suspension loading may result in premature failure of the added section splice. Use care when planning the wheelbase so that the rear suspension bracket is always mounted on the original rail section. See Figure 5–3. Failure to comply may result in personal injury, death, equipment or property damage.

https://truckmanualshub.com/

When reducing the wheelbase, we recommend that the suspension be moved forward and relocated on the original rail. The rail behind the suspension can then be cut to achieve the desired frame cutoff. See Figure 5–3.

WARNING!

Do not drill new holes any closer than 2 inches (50 mm) to existing holes. Frame drilling affects the strength of the rails. Failure to comply may result in personal injury, death, equipment or property damage.

Before the rear suspension is relocated, check the new location of the spring hanger brackets. The new holes for the spring hanger brackets must not overlap existing holes and should not come any closer than 2 inches (50 mm) to existing holes.

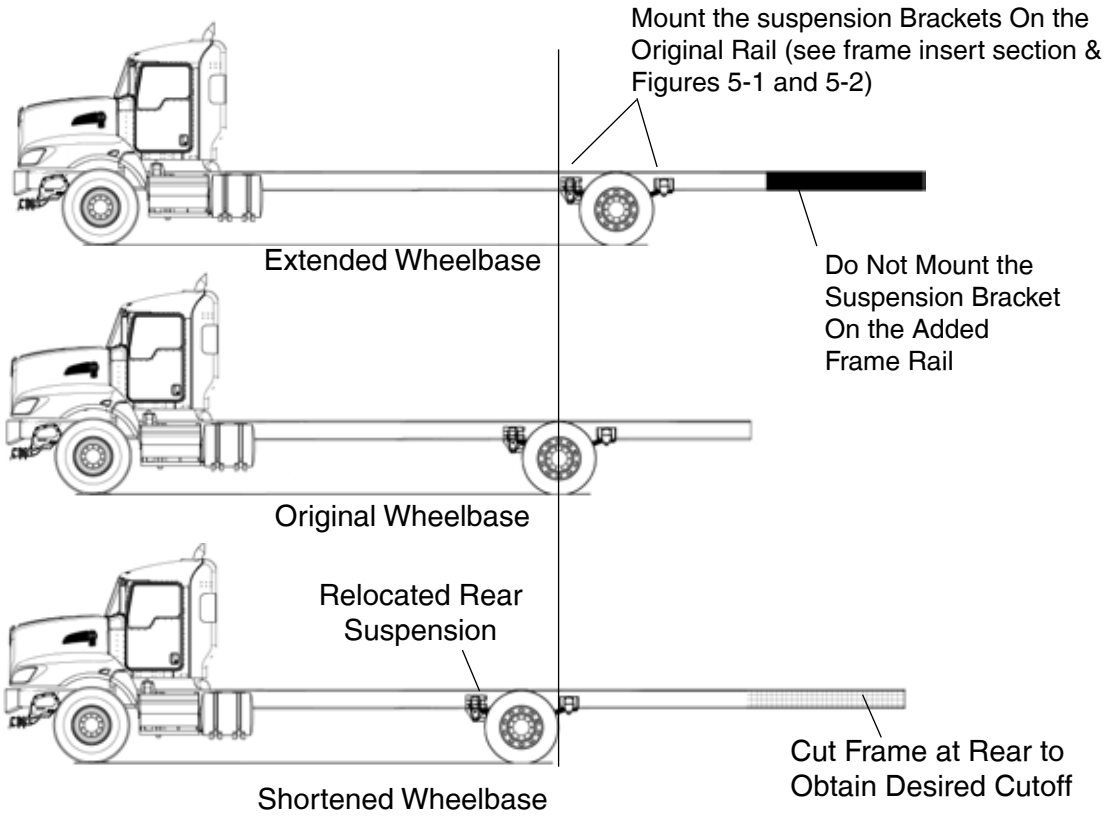

FIGURE 5-3. Comparison of Original, Shortened, and Extended Wheelbases.

https://truckmanualshub.com/

CROSSMEMBERS

After changing a wheelbase, an additional crossmember may be required to maintain the original frame strength. The maximum allowable distance between adjacent crossmembers is 60 inches (1524 mm). If the distance between adjacent crossmembers exceeds this dimension, add a crossmember between them. See Figure 5–4.

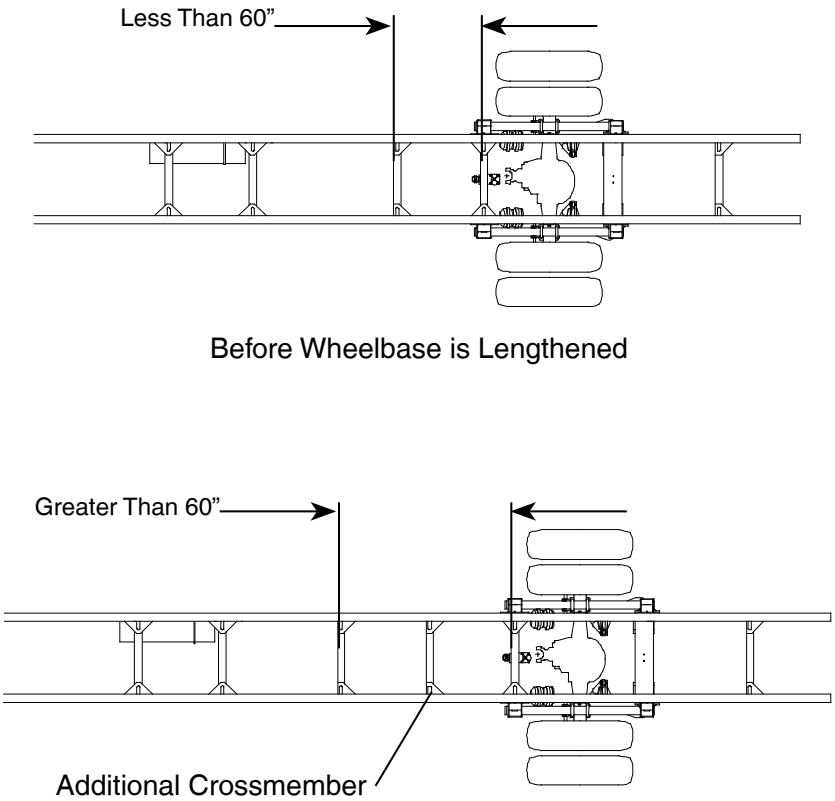

FIGURE 5-4. Crossmember Added When Distance Exceeds 60 Inches (1524 mm)

https://truckmanualshub.com/

WELDING

Kenworth DOES NOT recommend frame welding. The high heat of welding nullifies the special heat treatment of the rails, greatly reducing the tensile strength of the frame rail. If a frame member becomes cracked from overloading, fatigue, surface damage or a collision, the only permanent repair is to replace the damaged frame member with a new part.

The following information is provided (for temporary emergency repair). Prior to welding a cracked frame rail, the area should be beveled (V'd out) to allow for a better weld. To prevent spreading of the crack, a 7 to 9 mm (1/4 in. to 3/8 in.) dia. hole should be drilled at the end of the crack. Widen the crack along its full length by using two hack saw blades together. When welding steel frames use the shielded arc method. When welding aluminum frames use either the tungsten inert gas (TIG) or consumable electrode method. Be sure to obtain full weld penetration along the entire length of the crack.

Precautions

CAUTION:

Before welding, disconnect the negative terminal battery cable. Failure to comply may result in equipment damage.

CAUTION:

Before welding, disconnect the alternator terminals. Failure to do so may result in damage to the voltage regulator and/or alternator.

CAUTION:

To prevent damage to electrical equipment, disconnect battery cables before arc-welding on a truck, and be sure that the welding ground lead is connected to the frame. Bearings and other parts will be damaged if current must pass through them in order to complete the circuit.

Welding Precautions: All Electronic Engines

Before welding on vehicles with electronic engines, the following precautions should be observed.

1. Disconnect all electrical connections to the vehicle batteries.
2. Disconnect all ECM connectors.
3. Do no use the ECM or engine ground stud for the ground of the welding probe.
4. Ensure that the ground connection for the welder is as close to the weld point as possible. This ensures maximum weld current and minimum risk to damage electrical components on the vehicle.
5. Turn off key.

Note:

Bosch ABS and Wabco ABS: Disconnect ECU.

https://truckmanualshub.com/

TORQUE REQUIREMENTS

TABLE 5-1. Customary Grade 8 UNF or UNC.

Fastener	Torque	
Size	Nm	Lb.-Ft
5/16	22–30	16–22
3/8	41–54	30–40
7/16	75–88	55–65
1/2	109–122	80–90
9/16	156–190	115-140
5/8	224–265	165–195
3/4	394–462	290–340
7/8	517–626	380–460
1	952–1129	800–830
1-1/8	1346–1591	990–1170
1-1/4	1877–2217	1380–1630

Torque values apply to fasteners with clean threads, lightly lubricated, with hardened steel washers, and nylon-insert nuts.

TABLE 5-2. U.S. Customary – Grade 8. Metric Class 10.9

	Torque	
Fastener	Nm	Lb-Ft
M6	9–15	7–11
M8	23–31	17–23
M10	33–43	24–32
M12	75–101	55–75
M14	134–164	99–121
M16	163–217	120–160
M20	352–460	260–340

https://truckmanualshub.com/

https://truckmanualshub.com/

ELECTRICAL

Electrical wiring can sometimes be very frustrating. This is especially true when adding circuits to an existing setup. Through the use of optional engine connectors and additional spare circuits, we have tried to reduce the complexity associated with adding common circuits to a body installation.

Information in this section will cover the following topics:

- Overview of Kenworth's multiplex instrumentation
- Access instructions for the dash, gauges, and switches.
- Wiring instructions for telltale (warning light) symbols
- Spare circuits (standard and adding)
- Multifunction turn signal stalk
- Remote PTO/Throttle harness

MULTIPLEX INSTRUMENTATION

Kenworth utilizes Multiplex instrumentation and wiring to improve quality and the capability of our trucks. Multiplexing utilizes the industry standard J1939 data bus to send multiple signals over a single twisted pair of wires instead of individual wires for each function. The advantages are fewer wires, sensors, and connections that provide greater consistency and improved reliability. The following information is provided to increase your awareness about the Kenworth product, it may be useful in installing telltales (warning lights) and gauges.

WARNING!

Don't cut or tap into green/yellow twisted pairs. Only use "T" connectors, and only add approved J1939 components with validated software. Failure to comply may result in personal injury, death, equipment or property damage.

https://truckmanualshub.com/

INTERIOR IDENTIFICATION

All T470 dashes utilize multiplex wiring.

Note:

The information contained in this manual is specific to chassis with 2007 engines.

Functional Description

Cab Electronic Control Unit (CECU)

The heart of the multiplexed instrumentation system is the Cab Electronic Control Unit (CECU). The CECU is located behind the center console. See Figure 6-1.

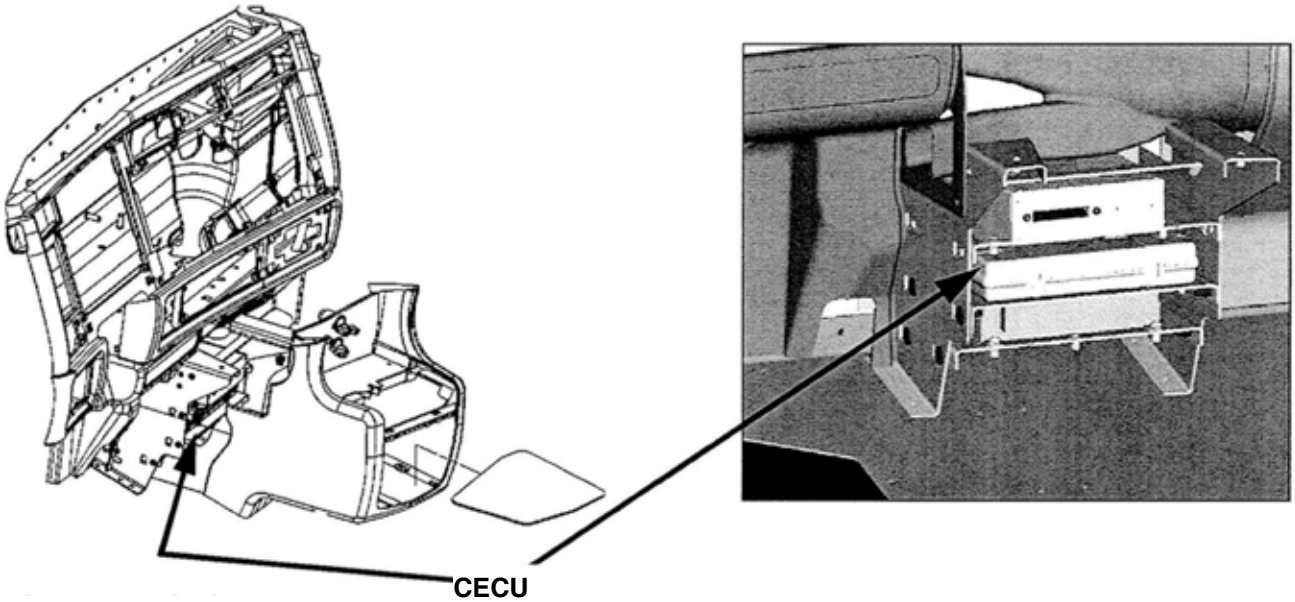

FIGURE 6-1. CECU Location.

Vehicle component inputs are sent to the CECU through the J1939 data bus or conventional wiring. The CECU interprets the various inputs and monitors/controls the functions for each input through the CECU software. Output signals from the CECU provide data for the gauges, warning lamps, audible alarms, and displays inside the cluster.

https://truckmanualshub.com/

Central Instrument Cluster

The central instrument cluster includes the speedometer (including odometer and trip meter) and tachometer (including engine hour meter and outside temperature display), plus pre-installed standard and/or editable warning light symbols called “telltale” cards.

Each “telltale” card slides into the left and right sides of the cluster. The standard cards cover most warning light requirements; editable cards can be used for less common components that also require warning lights.

The central instrument cluster receives input data from the CECU via the “I-CAN” (see Figure 6-6) data bus. When the ignition key is first turned ON, the cluster will perform a calibration “power on self-test”. Please see pages 6-18 through 6-20 for more detailed information on customizing telltails.

Power On Self-Test

- Ignition key turned ON.
- The speedometer and tachometer gauge pointers move from pointing at zero, counter-clockwise to their mechanical limit (approx. -8°), stay there for one second and go back to pointing at zero.
- At the same time, all LED indicators and telltales are switched on together, and then switched off together.
- A “Warning” sound sequence is also activated five times without break.

The warning lamps in the cluster are all activated by the CECU, except for Telltale Position 5 (usually Refrigerator) and Position 11 (editable) which are wired directly to the cluster. The CECU receives direct wire inputs for all warning lamps with the exception of the Low Coolant Level warning and the Traction Control/Stability Control lamp. These lamp inputs are received via the J1939 (Vehicle CAN) data link. The CECU typically receives the Trailer ABS warnings via the J1939 (Vehicle CAN) data link, however it can also be direct wired to the CECU from the ABS unit on the trailer, if required.

Telltale cards pre-installed in slots on both sides of cluster.

Baseline Cluster

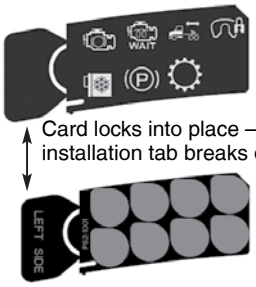

Standard card

Card locks into place – installation tab breaks off

Editable card

Telltale cards

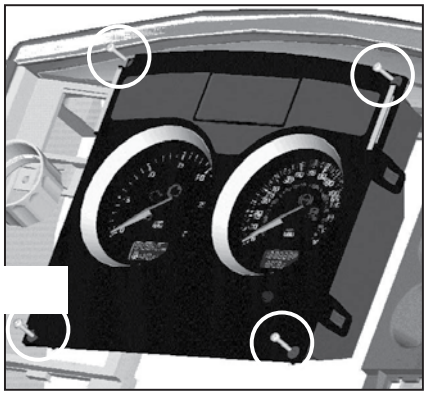

The cluster is installed with four screws

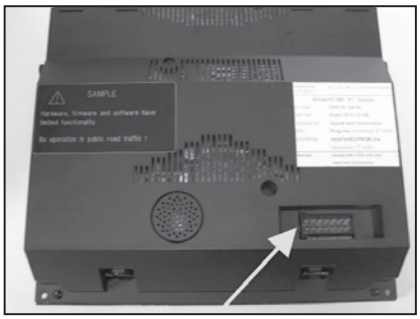

Single electrical connection on back of cluster

FIGURE 6-2. Instrument Cluster Componentry.

https://truckmanualshub.com/

CVSG Gauges

The right and left instrument panel gauges used with the multiplexed instrumentation are commonly referred to as Commercial Vehicle Smart Gauges (CVSG). Like the central instrument cluster, the 2-inch gauges also receive input data directly from the CECU. CVSG's may be either electronic or mechanical. The electronic CVSG's receive digital data from the CECU via the CVSG data bus. The mechanical gauges (i.e. suspension air pressure, etc.) are driven directly by air pressure. Both types of gauges receive backlighting signals from the CECU via a 4-wire "daisy chained" jumper harness that links one gauge to another.

When the ignition key is first turned ON, all the electronic 2-inch gauges will perform a calibration "power on self-test".

Note: The mechanical CVSG do not perform a power on self-test.

Power On Self-Test

- Ignition key turned ON.
- The gauge pointers move from pointing at zero, counter-clockwise to their mechanical limit (approx. -5°), stay there for one second and go back to pointing at zero.
- At the same time, all LED indicators are switched on together, and then switched off together.

Additional CVSG gauge information body builders should be aware of:

- The CECU sends 2-inch electronic gauges information over a data link (blue wire) between the CECU and the gauge.
- 2-inch electronic gauges get their power from the CECU.
  - Yellow = Power wire (9-16 volts)
  - White = Ground (return) wire.
- 4-way jumper harnesses link each 2-inch gauge together.

Pin #	Color	Function
1	Blue	Data, backlighting for Electronic Gauges
2	Brown	Backlighting for Mechanical Gauges
3	White	Return
4	Yellow	Power

- Backlighting for 2-inch electronic gauges is sent from the CECU to the gauges via the data link (blue wire).
- Optional mechanical gauge (i.e. air suspension) needles are driven mechanically with air pressure. There is no red warning lamp and the backlighting is powered through the brown wire from the CECU (a pulse-width modulated signal). The 4-way jumper harness is still used to pass all 4 circuits through the gauge to the next gauge in the chain.
- Specialty CVSG gauges (i.e. clock, PTO hour meter) are stand alone gauges and are independent of the CECU.
- Gauges can be relocated to any position in the dash. To relocate a gauge unhook the connector at the back and move it to the desired position. Plug the jumper wire in. (See page 6-9 for instructions on physically moving the gauge). The connector will require a firm pull to remove it. When reinstalling the connector ensure that it is fully inserted. Both connector sockets on the rear of the gauge are the same, either one can be used.

https://truckmanualshub.com/

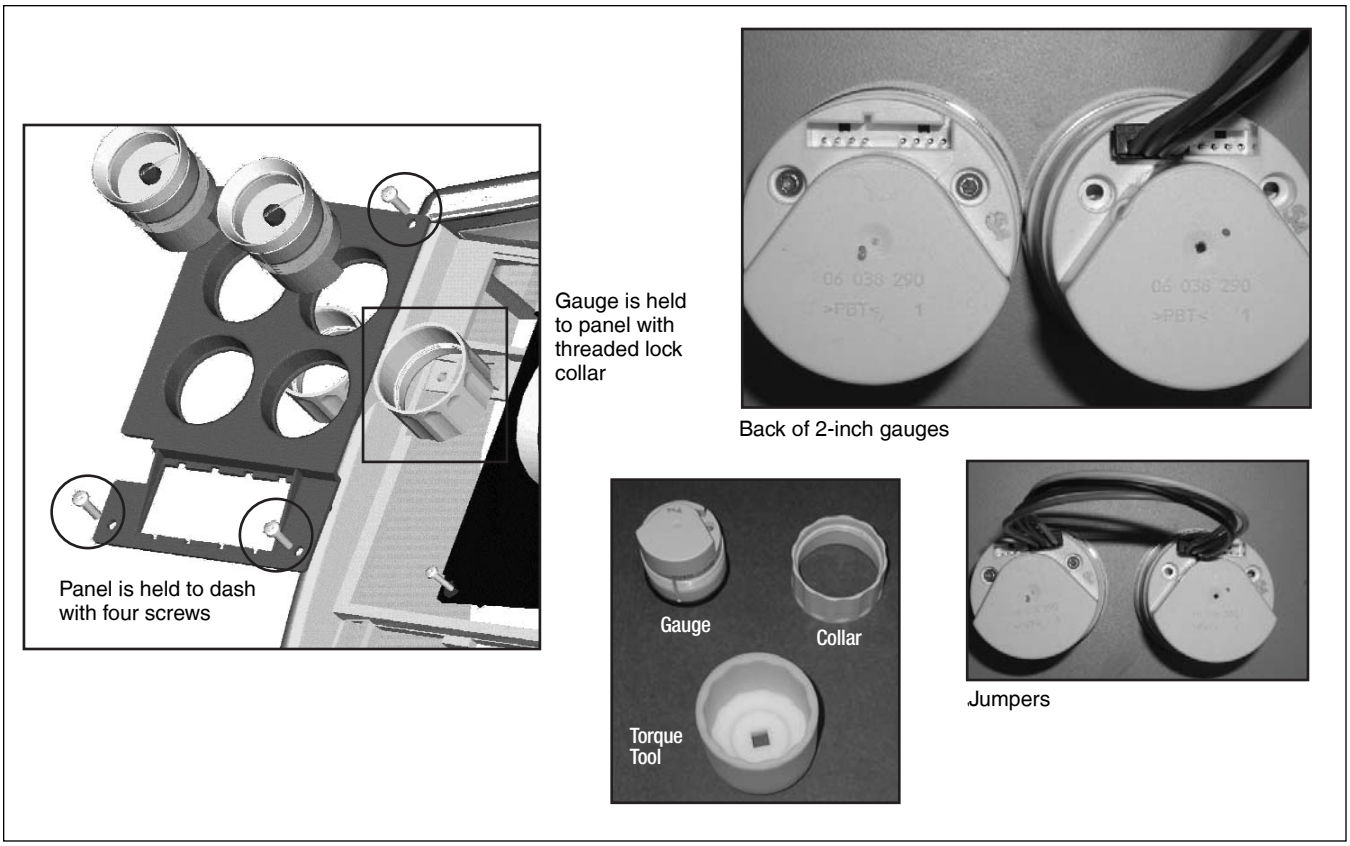

FIGURE 6-3. CVSG Gauges.

Data Bus Communication

The multiplexed instrumentation system uses several different data links to transmit input/output data from other systems to the Cab Electronic Control Unit (CECU), and ultimately to the Central Instrument Cluster and CVSG Gauges. See Figure 4, Multiplexed Instrumentation Block Diagram on page 6-6.

https://truckmanualshub.com/

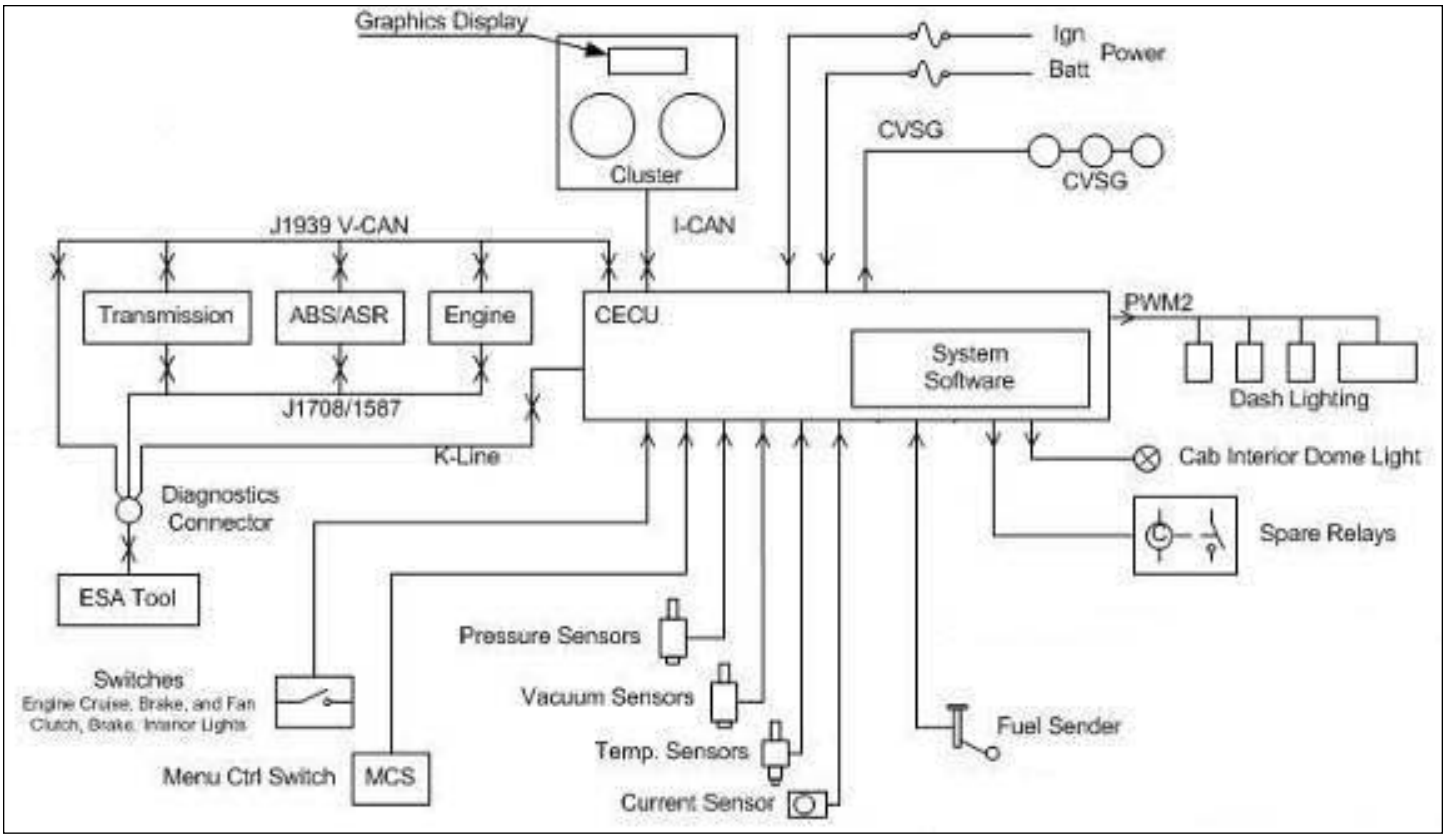

FIGURE 6-4. Multiplexed Instrumentation Block Diagram.

- V-CAN = Vehicle Controller Area Network

  The V-CAN, also referred to as the J1939, is used to transmit data between the transmission, ABS system, engine, etc. to the Cab Electronic Control Unit (CECU).

- I-CAN = Instrumentation Controller Area Network

  The I-CAN provides data link communication from the Cab Electronic Control Unit (CECU) to the Central Instrument Cluster.

- K-Line = Serial Data Bus Line for Diagnostics

  The K-Line interface is used to provide data link communication to and from the Electronic Service Analyst (ESA) hardware/software diagnostic service tool and to and from the Cab Electronic Control Unit (CECU).

- CVSG Bus

  The CVSG bus is a private data bus used to transmit data from the Cab Electronic Control Unit (CECU) to the individual 2-inch gauges. A series of “daisy chained” jumper harnesses link each gauge to another.

https://truckmanualshub.com/

The following diagram shows the locations of standard connectors in the wiring harnesses. This allows you to easily locate connectors to add gauges. To add an electronic gauge install the sensor (available from your local Kenworth dealer) in the noted location, plug in the wiring harness, and then install the gauge in the dash. The gauge will then need to be activated. Your local Kenworth dealer can easily activate the gauge using Kenworth's Electronic Service Analyst (ESA).

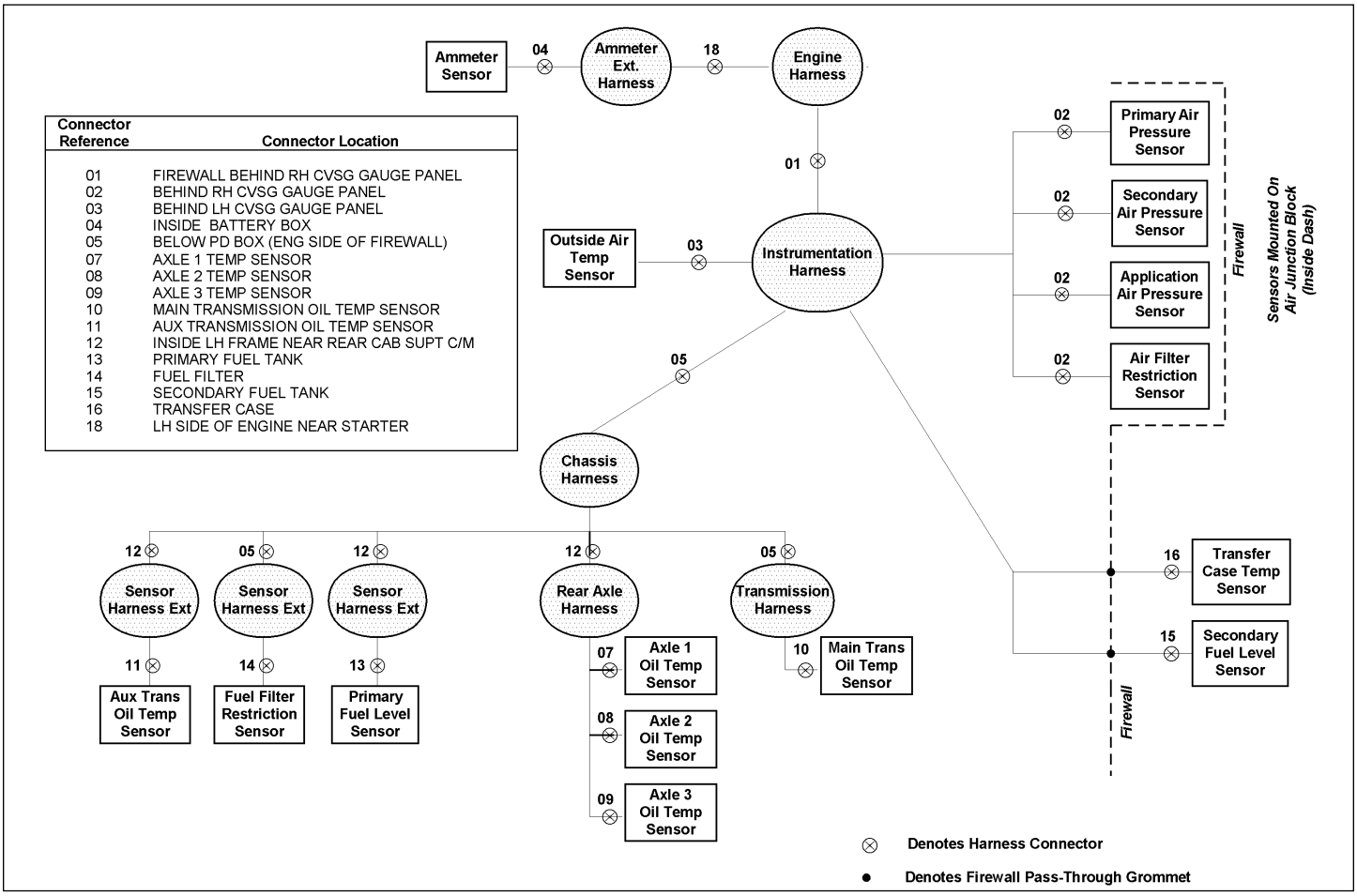

Connector Reference	Connector Location
01	FIREWALL BEHIND RH CVSG GAUGE PANEL
02	BEHIND RH CVSG GAUGE PANEL
03	BEHIND LH CVSG GAUGE PANEL
04	INSIDE BATTERY BOX
05	BELOW PD BOX (ENG SIDE OF FIREWALL)
07	AXLE 1 TEMP SENSOR
08	AXLE 2 TEMP SENSOR
09	AXLE 3 TEMP SENSOR
10	MAIN TRANSMISSION OIL TEMP SENSOR
11	AUX TRANSMISSION OIL TEMP SENSOR
12	INSIDE LH FRAME NEAR REAR CAB SUPT C/M
13	PRIMARY FUEL TANK
14	FUEL FILTER
15	SECONDARY FUEL TANK
16	TRANSFER CASE
18	LH SIDE OF ENGINE NEAR STARTER

FIGURE 6-5. Instrumentation Harness Interface Diagram

https://truckmanualshub.com/

The following diagrams show the location of sensors on the firewall junction block. This is to aid in locating these sensors.

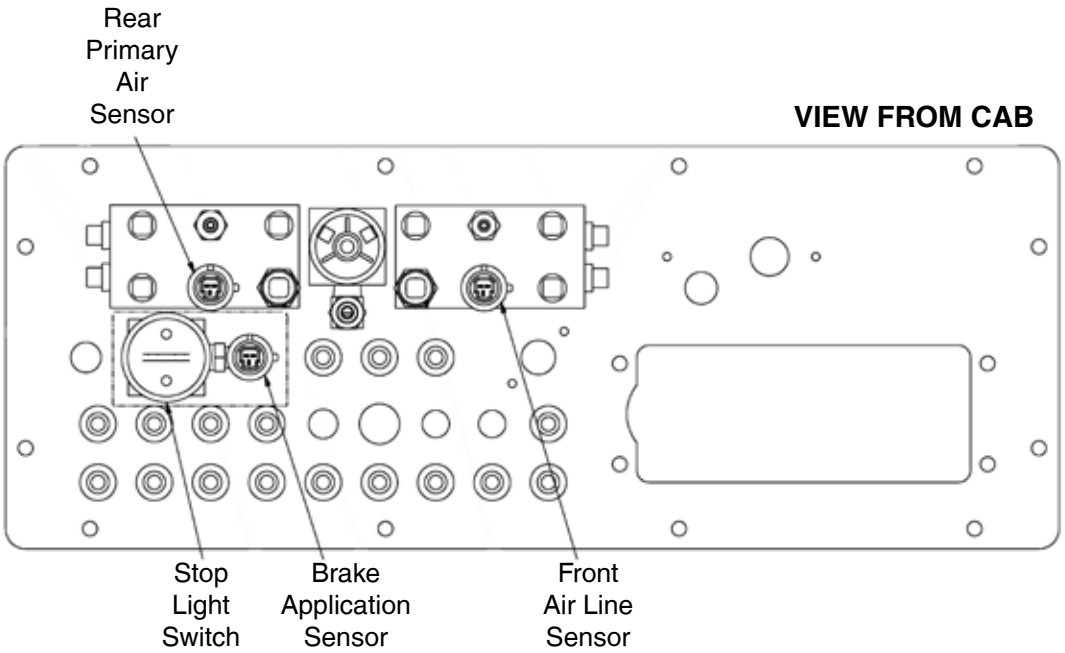

FIGURE 6-6. Firewall Air Junction Block

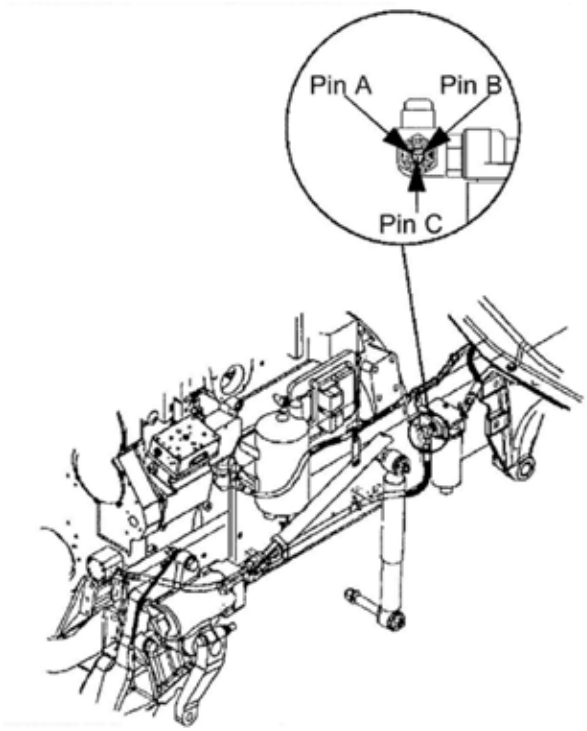

FIGURE 6-7. Fuel Filter Restriction Pressure Gauge Sensor Location (typical)

https://truckmanualshub.com/

ACCESSING GAUGES AND SWITCHES

In order to access and install components described later on in the manual, you will need to know how to correctly remove the dash panels without causing damage.

The T470 comes standard with a accessory dash panel - 7.5” x 5” (193mm x 128mm).

1. Remove trim bezel by prying upward at one of the four pry points. Carefully pry the remaining clips.

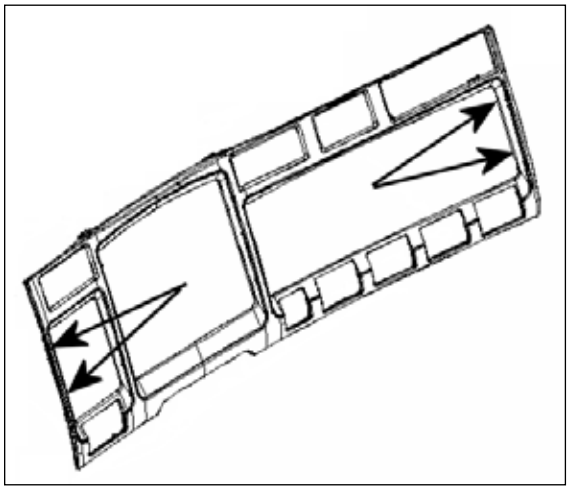

2. Remove (4) screws to remove Speedo - Tach panel.

https://truckmanualshub.com/

3. Unclip harness and remove Speedo - Tach panel.

4. Remove (7) screws to remove right gauge panel.

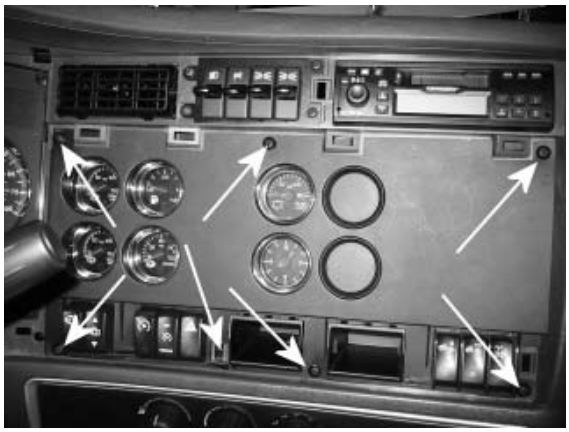

5. Unclip leads to gauges, effort is required to separate the friction lock.

https://truckmanualshub.com/

6. Pinch to unlock connector and remove right gauge panel.

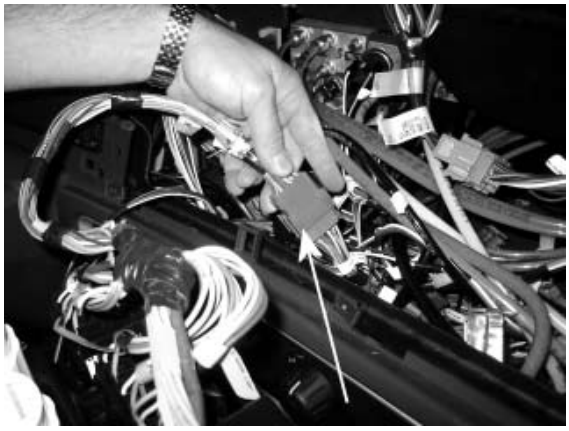

7. Unscrew gauge collar to remove gauge.

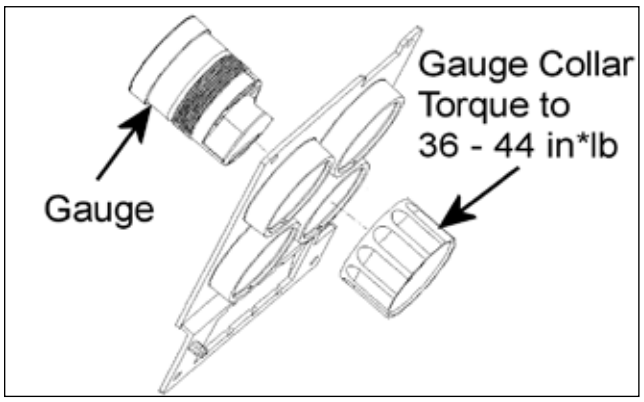

8. To remove switches, push both tabs down...

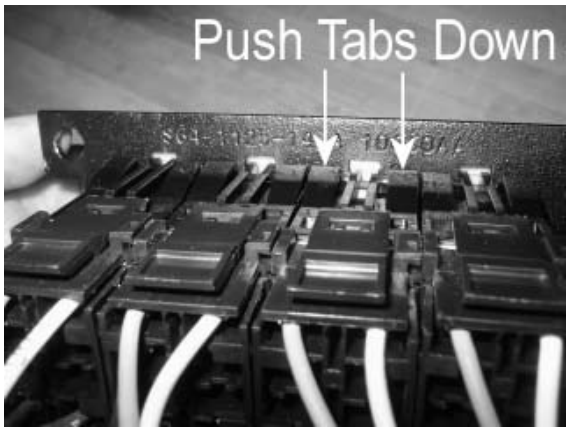

...and then push switch out of plate on top side...

https://truckmanualshub.com/

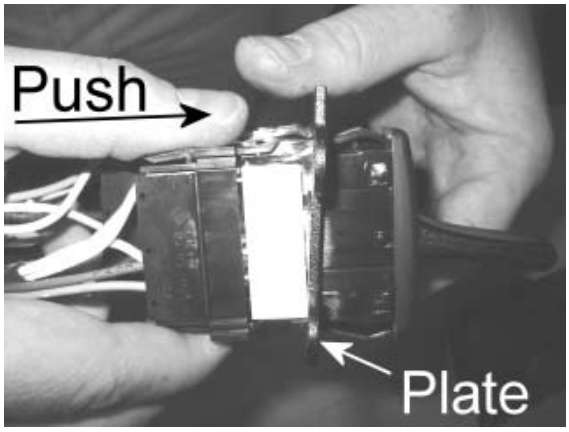

...then flip over and do the same on the bottom side.

9. Push down to unhook connector from switch.

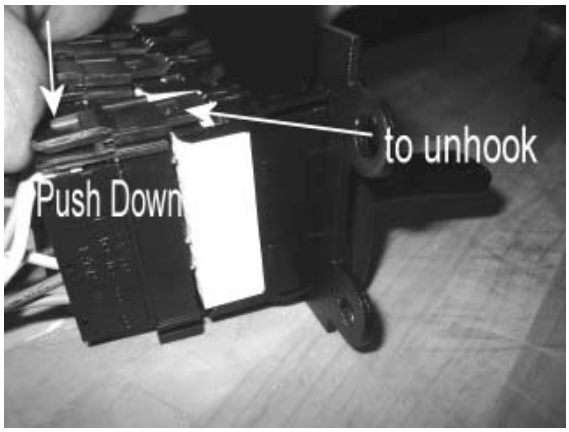

10. Remove (4) screws to remove left gauge panel.

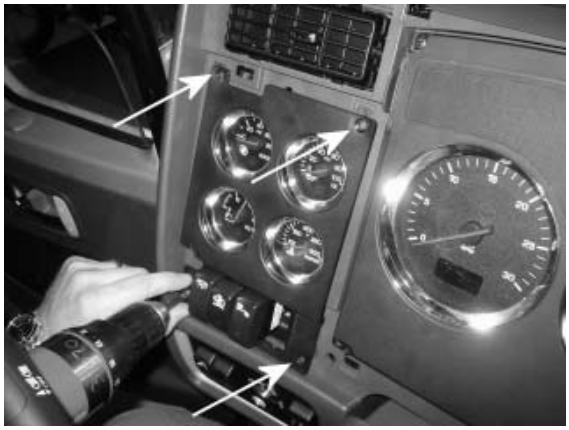

https://truckmanualshub.com/

11. Pinch to unlock connectors from switches.

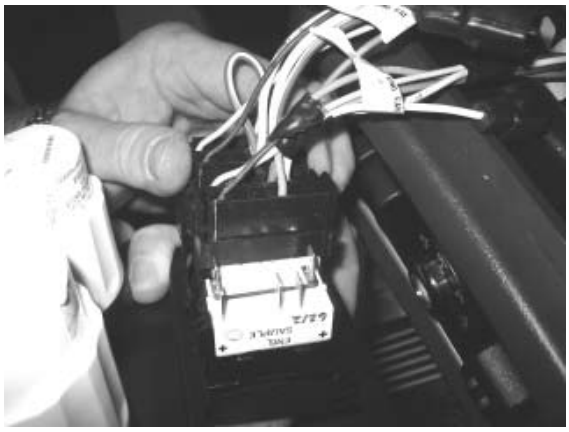

12. Unclip harness and remove left gauge panel.

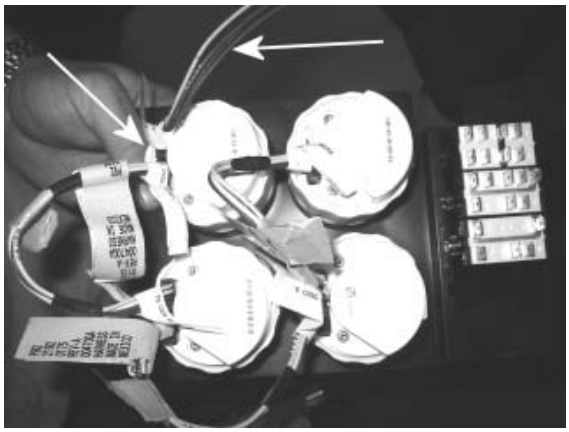

13. Unscrew gauge collar to remove gauge.

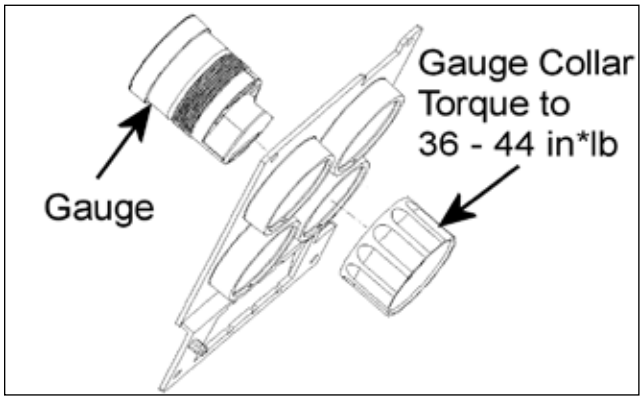

https://truckmanualshub.com/

14. To remove switches, push both tabs down...

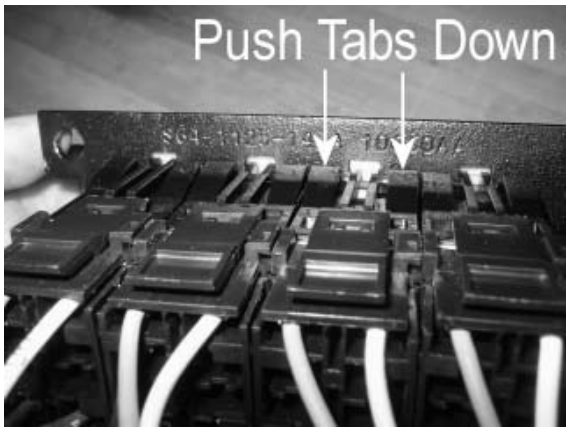

...and then push switch out of plate on top side...

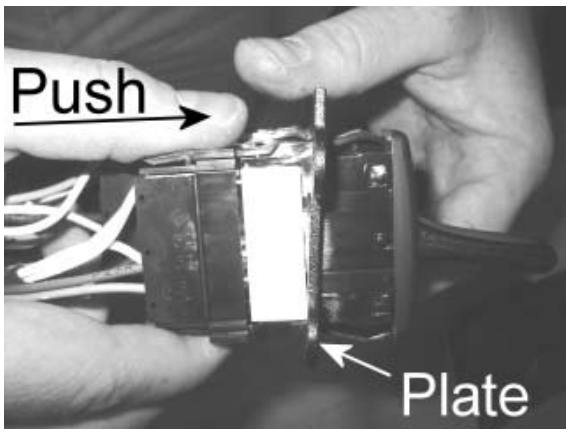

...then flip over and do the same on the bottom side.

15. Push down to unhook connector from switch.

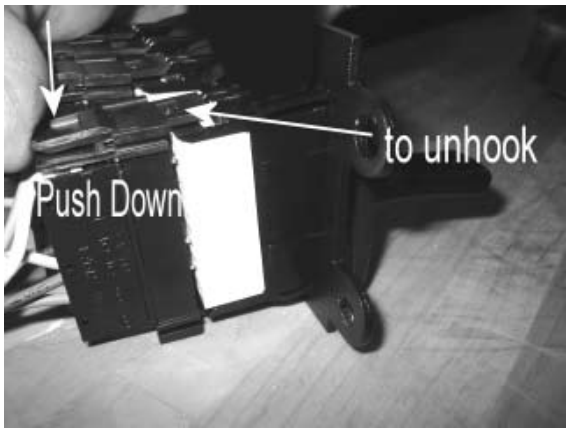

https://truckmanualshub.com/

ACCESSING SWITCHES IN THE UPPER DASH

1. Remove trim bezel by prying upward at one of the four pry points. Carefully unzip the remaining clips

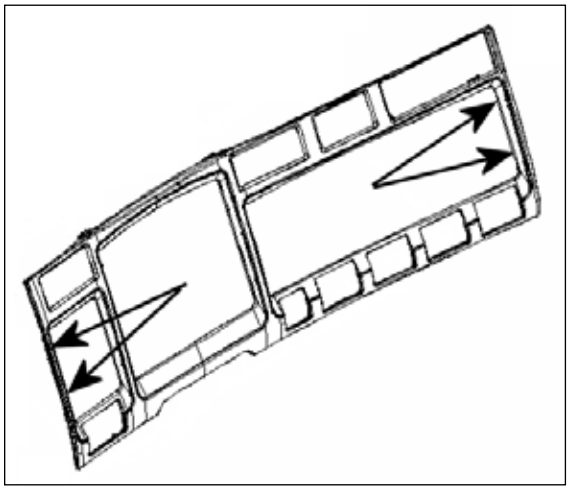

2. Remove (4) screws to remove Upper Switch Cluster.

https://truckmanualshub.com/

3. Pinch to unlock connector and remove Upper Switch Cluster

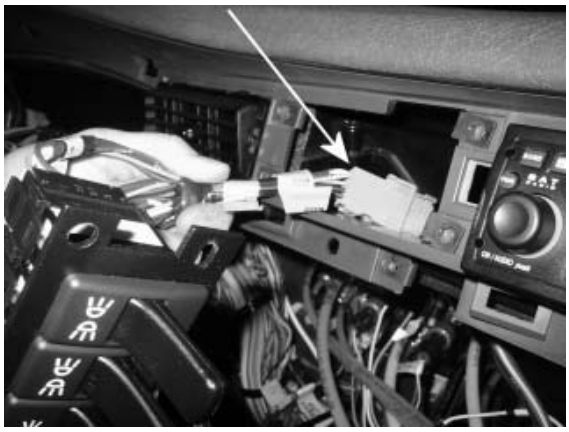

4. To remove switches push both tabs down...

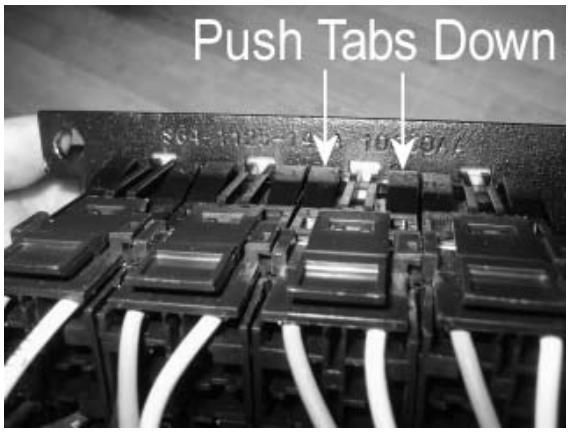

...and then push switch out of plate on top side...

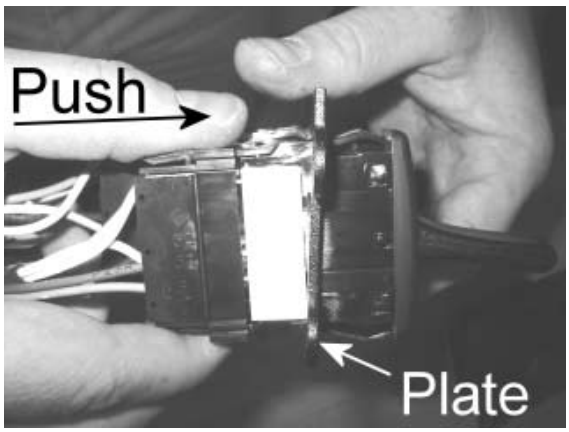

...then flip over and do the same on the bottom side.

https://truckmanualshub.com/

5. Push down to unhook connector from switch

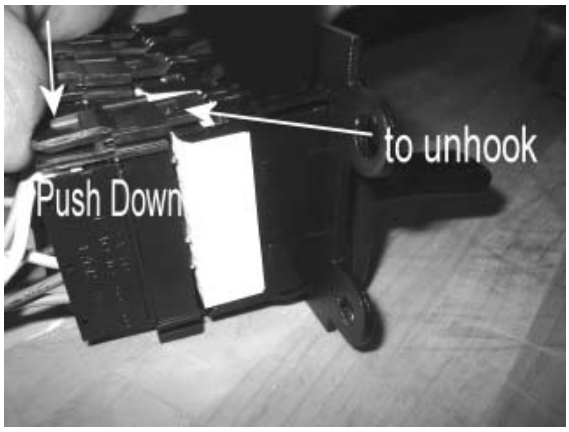

https://truckmanualshub.com/

TELLTALE SYMBOLS

Kenworth's interior allows Body Builders to customize the dash telltale symbols (warning lights). The editable telltale symbols are located on removable cards inside the baseline cluster. This section will describe how to replace and insert editable cards, as well as how to activate the telltale lights.

To remove the editable cards follow steps 1-3 in the instructions for accessing gauges and switches (page 6-9). Remove the rubber access cover on the side of the cluster by pulling by hand. The access cards have a positive lock. To remove the card pry upwards on the lock with a small screwdriver and pull the card out with pliers. See Figure 6-8 below that details the cards. To reinstall a card slide it in either by hand or with pliers. New cards will come with the installation tab (as shown in the figure). After installing the card simply break off the tab by bending.

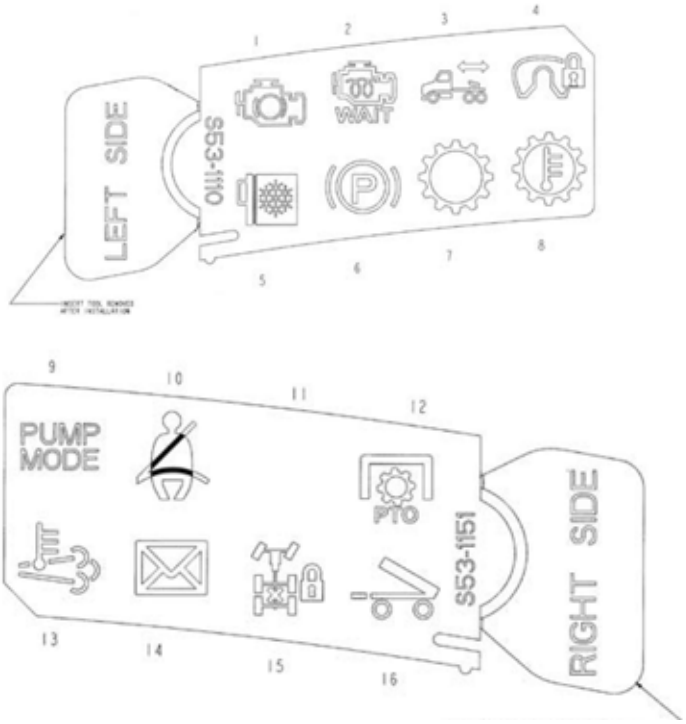

FIGURE 6-8. Telltale Symbol Standard Cards

All clusters come with cards that contain a basic set of optional symbols, even if the chassis you have was not ordered with related components. The standard cards are shown above (in Figure 6-8). Editable cards are also available from your local Kenworth dealer. The left side editable card is shown in Figure 6-9 below.

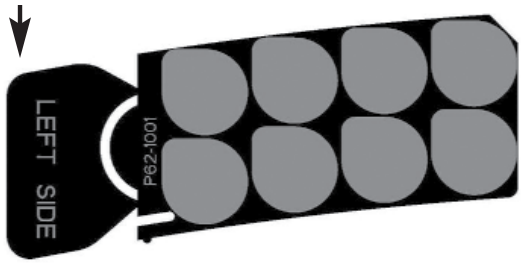

FIGURE 6-9. Blank Telltale Card

https://truckmanualshub.com/

Your local Kenworth dealer will also sell a sheet of telltale light icons to install on the editable card. The symbols that are available are shown in Figure 6-10 below.

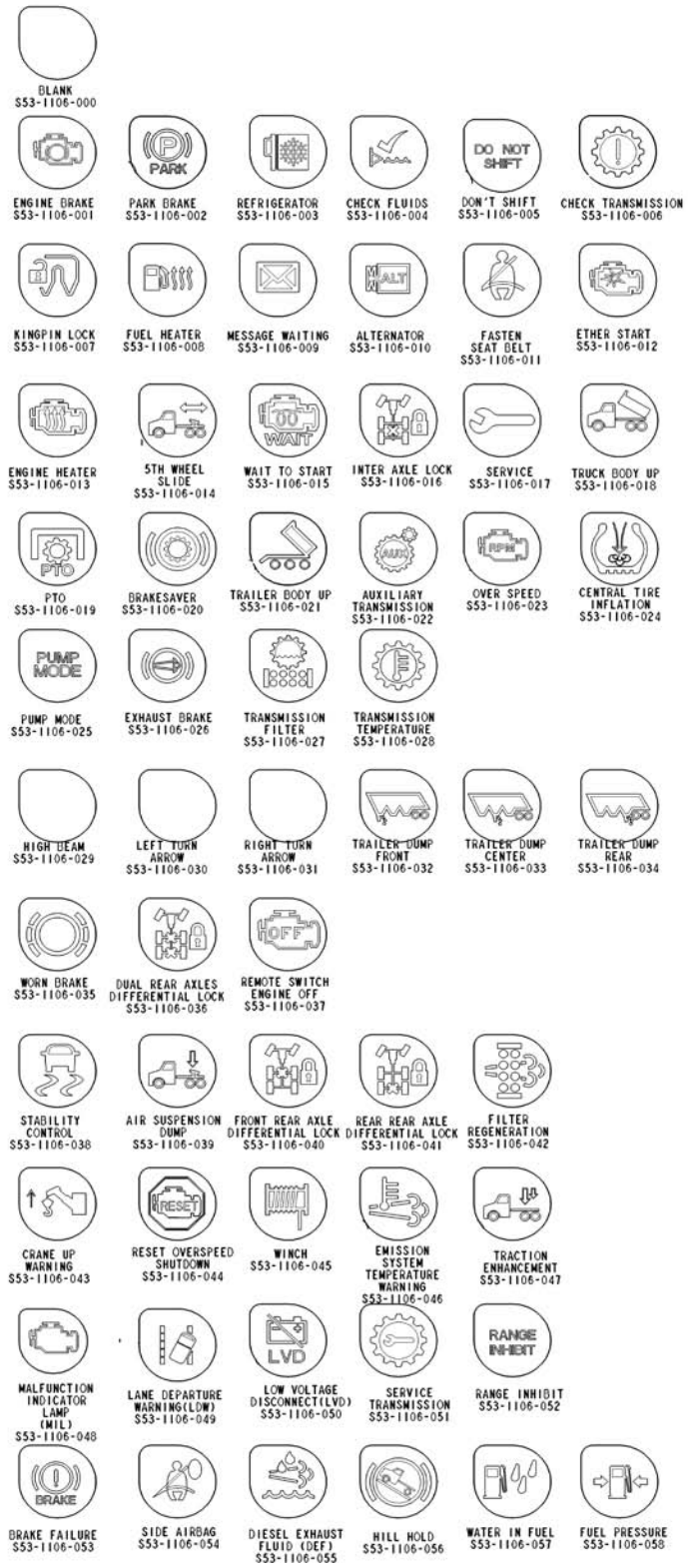

FIGURE 6-10. Telltale Icons

https://truckmanualshub.com/

The telltales can then be peeled off of the sheet and applied directly to the card. The color of the telltale is controlled by the light, all of the icons are clear. Please see Table 6-1 below to determine the position and color of the telltales. (Positions are shown on Figure 6-8)

Table 6-1. Telltales Position and Color

Position	Standard Function	Light Color	Editable or Fixed?
1	Engine Retarder	Green	Fixed
2	Wait To Start	Yellow	Fixed
3	Fifth Wheel Slide	Red	Fixed
4	King Pin Lock	Red	Editable
5	Refrigerator	Green	Fixed
6	Park Brake	Red	Fixed
7	Check Transmission	Red	Editable
8	Transmission Temp	Yellow	Editable
9	Pump Mode	Green	Editable
10	Fasten Seatbelt	Red	Fixed
11	Blank	Yellow	Editable
12	PTO	Yellow	Editable
13	Emission Temp Warning	Yellow	Fixed
14	Message Waiting	Green	Editable
15	Trans Axle Lock	Green	Fixed
16	Trailer Body Up	Red	Fixed

Note:

Only the positions labeled as “editable” in the chart above can be changed. You must apply the standard icons on the editable card on all the positions that read “fixed”.

In order to activate the editable lights (either on the standard card or the editable card) locate the wiring connections on pigtail connectors behind the right hand side gauge panel. The wires will be labeled and tagged with position numbers. The color of the tag corresponds to the color of the light. When these circuits are either grounded or powered the light in the dash will turn on.

https://truckmanualshub.com/

ADDITIONAL SPARE CIRCUITS

Kenworth provides the option of coding for spare switches, however you may want to wire into one of 26 spare circuits we provide. Kenworth also has provisions for flat panel inserts that can be easily modified or removed to add switches or gauges. The small panel is 5” x 5” and the large panel is 7.5” x 5”.

WARNING!

Do not install an electrical circuit that requires more amperage (electrical capacity) than what is available in the specific chassis circuit. An overloaded circuit may cause a fire. Compare the amperage requirements of the new circuit to the electrical current capacity of the existing chassis circuit before adding the body or other equipment. Failure to comply may result in personal injury, death, equipment or property damage.

The central electrical panel (CEP) has a total of 17 spare circuits (3 of which can be connected to spare relays on the CEP).

They include:

- 9 spare battery circuits
- 4 spare accessory circuits
- 4 spare ignition circuits

Note:

Some spare circuits may be used with factory installed options. For specific chassis questions please work with your Kenworth Dealer.

The CEP has two different options available for tapping into spare BATT, ACC, or IGN power. The two options are described in detail on the following pages.

https://truckmanualshub.com/

Adding Spare Switches Option #1: Spare Circuit Bullet Connectors

1. Remove the LH gauge panel above ignition key switch.
2. From behind the gauge panel, locate one of the 20 spare BATT, ACC, or IGN bullet connectors not currently being used. See Figure 6-11.

FIGURE 6-11. Spare Bullet Connectors

3. Plug one end of a K333-127-2 pigtail harness into the appropriate spare circuit bullet connector. See Figure 6-12.

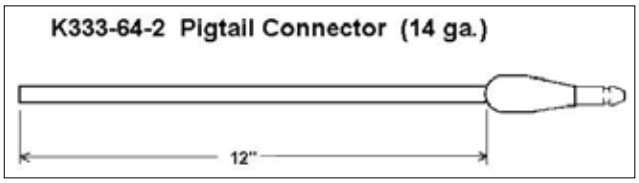

FIGURE 6-12. Spare Pigtail Connector

4. Connect the other end of the pigtail harness to the accessory. If the accessory is to be controlled by a dash switch, connect a ground wire to the switch, then to the accessory.
5. Install the correct rated fuse, or circuit breaker, into the fuse socket that corresponds to the spare circuit selected in step 2.

https://truckmanualshub.com/

Adding Spare Switches Option #2: Spare Circuit Relays (For loads exceeding 20 amps)

1. Remove the LH gauge panel above ignition key switch.
2. From behind the gauge panel, locate one of the spare relay connectors not currently used. See Figure 6-13.

FIGURE 6-13. Spare Relay Connectors

3. Plug one end of a spare relay harness (PN P92-1947-X) into the appropriate spare relay circuit connector.

Note:

Use a P92-1947-1 or -3 harness for a Normally Open (NO) spare relay circuit. Use a P92-1947-2 or -4 harness for a Normally Closed (NC) spare relay circuit.

https://truckmanualshub.com/

MULTIFUNCTION TURN SIGNAL STALK

The information that follows covers the functions of the turn signal stalk, along with guidelines for installing additional lights on chassis.

Exterior Lighting Circuit Limits

The Turn Signal Stalk (TSM) is designed to operate within specific current limits for

- headlamps
- vehicle stop/turn signal lamps
- trailer turn/vehicle forward side facing turn signal lamps

If the current limits for any of these circuits are exceeded, the TSM will default to a protection mode, causing the lamps to not function properly but still providing sufficient lighting for safe operation of the vehicle.

The vehicle can exceed current ratings on a particular circuit in two ways

- Installing too many lamps on a circuit
- Using bulbs of excessive wattage

The following table is a recommended guideline to avoid exceeding the current limits of the TSM.

TABLE 6-2. TSM Guideline

Circuit	TSM Current Limit	General Lamp Limits
Low Beam Headlamp (LH or RH)	6.1A for T470	(1) 65W bulb each side maximum*
High Beam Headlamp (LH or RH)	6.7A for T470	(1) 65W bulb each side maximum*
Left Turn/Left Trailer Turn Lamps	20A combined between left turn and left trailer turn	(9) #1156 or #1157 bulbs on left side of truck and trailer combined**
Right Turn/Right Trailer Turn Lamps	20A combined between right turn and right trailer turn	(9) #1156 or #1157 bulbs on right side of truck and trailer combined**
Left Stop/Turn Combination Lamps	7.8A for left side	(3) #1156 or #1157 bulbs per side**
Right Stop/Turn Combination Lamps	7.8A for right side	(3) #1156 or #1157 bulbs per side**

*A maximum wattage of 65W should not be exceeded for either low or high beam headlamps.

**The maximum number of lamps can be exceeded if LED lamps are used in place of incandescent bulbs. LED type lamps draw far less current, but in any case, all lamps must not exceed the TSM current limits.

https://truckmanualshub.com/

REMOTE PTO/THROTTLE HARNESS

This option provides a connection from the engine ECU for remote control of engine throttle and PTOs. Options that extend the wiring to the end of frame also exist, however controls are not provided. A 12-pin Deutsch connector (Deutsch P/N DT06-12SA-P012) is included. See Table 6-3 and 6-4 below for wiring harness connector pin outs.

Adding Electrical Options

WARNING!

Follow the engine manufacturer's guidelines for use of these circuits. See your engine manufacturer to verify that the engine is programed correctly for the intended applications. Failure to comply may result in personal injury, death, equipment or property damage.

Table 6-3. 2007 Cummins ISL.

Mating View	Contact	Function	Circuit No.
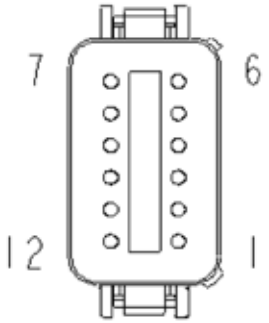	1		
	2		
	3	COMMON RTN #1 (SWITCH)	GRN3115
	4	REMOTE THROTTLE SIGNAL	BLU3144
	5	PTO ON / OFF	GRA3511
	6	REMOTE THROTTLE ENABLE	GRA3143
	7	SWITCHED POWER (IGN)	ORN1229
	8	GROUND	WHT1513
	9	TORQUE LIMIT SWITCH	GRA3149
	10	5V SUPPLY	VIO3115
	11	COMMON RTN #3 (SENSOR)	GRN3117
	12	REMOTE THROTTLE ON/OFF	GRA3143

https://truckmanualshub.com/

ROUTING

Introduction

This section specifies the general requirements for securing hoses and electrical wires to present an orderly appearance, facilitate inspection and maintenance, and prevent potential damage to these lines.

Definitions

Bundle: Two or more air, electrical, fuel, or other lines tied together to form a unitized assembly.

Clamp: A cushioned rigid or semi-rigid, anti-chafing device for containing the bundle and securing it to the frame or other structural support. Standard clamps have a black elastomer lining. High temperature clamps (e.g., those used with compressor discharge hose) have a white or red elastomer lining (most applications for these are called out in the bills of material). An assembly of two clamps fastened together to separate components is referred to as a “butterfly” clamp. Note: the metal portion of clamps shall be stainless steel or otherwise made capable, through plating or other means, of passing a 200 hour salt spray test per ASTM B117 without rusting.

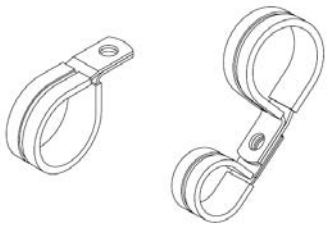

FIGURE 7-1. Clamp and Butterfly Clamp

Butterfly Tie: A tough plastic (nylon or equivalent) locking dual clamp tie strap used to separate bundles or single lines, hoses, etc. These straps must be UV stable. (Tyton DCT11)

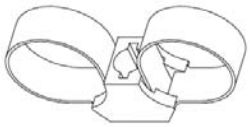

FIGURE 7-2. Butterfly Tie

Tie Strap: A tough plastic (nylon, or equivalent) locking strap used to tie the lines in a bundle together between clamps or to otherwise secure hoses and wires as noted below. These straps must be UV stable.

FIGURE 7-3. Tie Strap

Heavy Duty (HD) Mount: A black rigid device used for securing a tie strap to the frame or other structural support. Mounts are made of impact modified, heat stabilized UV resistant nylon capable of continuous operation between temperatures 220°F (150°) and -40°F (-40°).

https://truckmanualshub.com/

Note: **Heavy duty tie straps 0.50in (12.7mm) wide (Tyton T255ROHIR or similar) shall be used whenever HD mounts are specified, although 0.25in (6.4mm) tie straps may be used in some specified applications.**

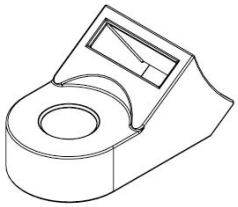

FIGURE 7-4. Heavy Duty (HD) Mount.

Excess of material: More than 3 inches of slack for every 14 inch section of hose routing, except for air conditioner hoses. See section 4.1.3 for air conditioner hose requirements.

Shortness of material: Less than 1 inch of slack on a 14 inch section of hose routing.

ROUTING REQUIREMENTS

Wiring

Electrical ground wire terminals must be securely attached and the complete terminal surface must contact a clean bare metal surface. See R414-558 for grounding wire connection practice. Apply electrical contact corrosion inhibitor Nyogel 759G grease (made by William F. Nye, Inc., New Bedford, MA) per R414-558.

Don't bend wires or use tie straps within 3 inches (75 mm) of (connected) wire connectors or plugs.

Wires in Bundles

Electrical wires (other than the exceptions covered below) running parallel with air or coolant hose bundles, may be included in the bundle if they are isolated from the hoses with a covering of convoluted plastic tubing.

EXCEPTIONS:

Battery cables (including jump start cables) may be bundled with or tied to the charging wire harness. They shall **not** be bundled with or tied directly to any other components, including hoses, wires, or bundles. They shall be separated from other routed components using butterfly ties at intervals not exceeding 14 inches (356 mm). Battery strap (W84-1000) tie down shall be used without exception to secure battery cables to frame mounted or other major component (e.g. engine, tmsn, etc.) mounted standoffs at intervals not exceeding 14 inches (356 mm). The (positive) battery cable shall be covered with convoluted plastic tubing from terminal to terminal.

110/220 volt wires for engine heaters, oil pan heaters, transmission oil heaters and battery pad warmers, shall **not** be included in any hose/wire bundle with a fuel hose. Individual heater wires not in a bundle shall be separated from other components by using butterfly clamps or butterfly ties at intervals not exceeding 14 inches (356 mm). Heater wires with a secondary covering shall be covered with convoluted tubing whether they are in bundles or not.

https://truckmanualshub.com/

Wires Crossing other Components

Electrical wires crossing over other components, such as lines, bolt heads, fittings, engine components lifting eyes, engine block, cylinder head, etc., close enough to rub shall be isolated with a covering of convoluted tubing **and** separated from the component by using butterfly clamps, butterfly ties, or plastic sheathing. 110/220 volt engine heater wiring shall be installed with butterfly ties or butterfly clamps

Piping

Use no street elbows in air brake, water, fuel, or hydraulic systems unless specified on the piping diagram and the build instructions.

Use no elbows in the air brake system unless specified on the air piping diagram and the build instructions.

Hoses Crossing Components

Hoses crossing over other components close enough to rub shall be protected with a secured covering of convoluted plastic tubing (KW part number K344-813), another section of hose, or plastic sheathing (KW part number K213-1312). The usage of butterfly ties, or butterfly clamps are also recommended.

Air Compressor Discharge Hoses

Wires or hoses shall not be tied to the high temperature air compressor discharge hose. Hoses and wires may be routed across the air compressor discharge hose at a distance of 18 inches (457 mm) or greater from the compressor discharge port. In this case the crossing hoses and wires shall be “butterfly” clamped to the air compressor discharge hose and covered with convoluted tubing at the clamp point (use high temperature clamps on the compressor hose).

Bundles

HD mount and tie strap, or clamp shall be located at intervals not to exceed 14 inches (356 mm) along the bundle.

Regular tie straps shall be located at intervals not to exceed 7 inches (178 mm) between HD mount or clamps. Extra tie straps may be used as needed to contain the hoses and wires in the bundle.

Routing of Wires and Hoses near Moving Components

Wires and Hoses shall be routed away from moving components, such as fans, shackle links, drivelines, steering linkages, etc. so that there is at least 0.5 inches (12.7 mm) clearance when the component is operating at its **maximum** travel limits.

A minimum clearance of 1.0 inchs (25.4) shall be maintained between steering axle tires (and associated rotating parts) in all positions and routed components, such as hoses, oil lines, wires, pipes, etc.

https://truckmanualshub.com/

Routing of Wires and Hoses near Exhaust System

TABLE 7-1. Exhaust – System Clearance

Description	Shielded	Unshielded
Coolant hoses, HVAC hoses and tubing, and electrical wires within 15” of the turbo and/or over 15” from the turbo	2” minimum	3” minimum
Fuel hoses		
within 15” of the turbo	n/a	4” minimum
over 15” from the turbo	2” minimum	3” minimum
Fuel tanks and hydraulic tanks		
crossing tank	n/a	2” minimum
parallel to tank	n/a	2” minimum
end of tank	n/a	1” minimum
aluminum/ceramic-coated exhaust pipe crossing tank	n/a	1.5” minimum
Air hose		
nylon	3” minimum	8” minimum
wire braid	2” minimum	3” minimum

CAUTION: **Heat shielding must not be directly mounted or applied to the Diesel Particulate Filter (DPF). Failure to comply may result in excessive heat build up around the DPF resulting in equipment damage.**

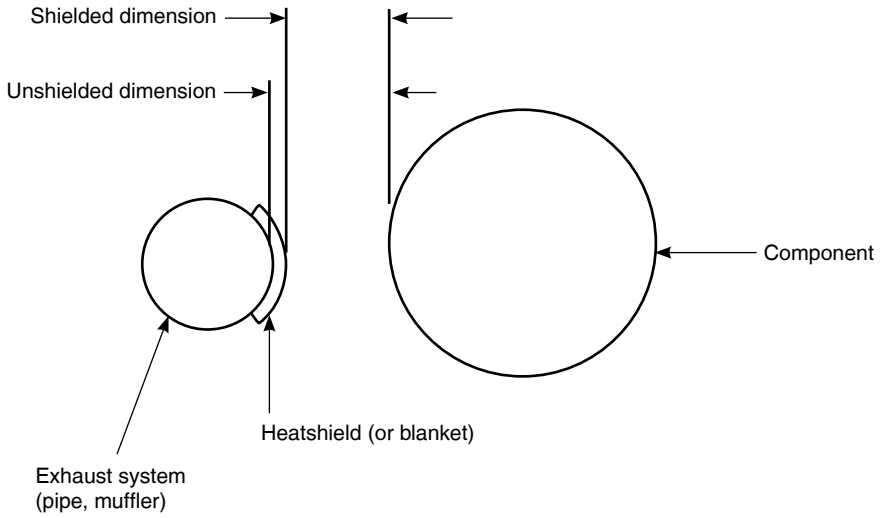

FIGURE 7-5. Definition of measurements.

https://truckmanualshub.com/

VEHICLE IDENTIFICATION NUMBER

A 17–character number (numeral and letter combination) forms the Vehicle Identification Number (VIN) which includes the Chassis Number. It contains among other information, the model year (4), assembly plant (5), and vehicle serial number (6). See Figure A–1

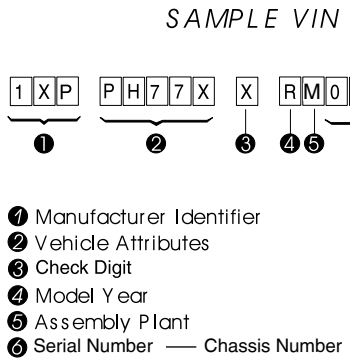

FIGURE A-1. Vehicle Identification Number (VIN).

The model year (4) is designated by an alphanumeric code in the tenth character position in the VIN. See Table A-1 and Figure A–1.

Code	Year
5	2005
6	2006
7	2007
8	2008
9	2009

Code	Year
A	2010
B	2011
C	2012
D	2013

TABLE A-1. Model Year (Code) Designations.

VIN Location

The VIN is marked on the Incomplete Vehicle Certification Label (on trucks). It is located either on the driver's door edge or door frame. See Figure A–2.

Chassis Number Locations

The Chassis Number comprises the last six characters of the VIN.

- The vehicle chassis number is shown in multiple locations.
- Left side of cab, lower right corner of door frame: stamped plate.
- Tire, Rim, and Weight Rating Data label.
- Major Components and Weights label.
- Noise Emission label.
- Paint Identification label.

https://truckmanualshub.com/

VEHICLE IDENTIFICATION LABELS

Vehicle Identification Labels are located on the driver's side door edge or on either the driver's or passenger's side door frames. See Figure A-2. Labels include Vehicle Certification, Components and Weights, Tire/Rim and Weight Rating Data, Noise Emissions, and Paint Identification. Quantity and location of labels may differ based on Complete/Incomplete vehicle, and Single/Dual certification.

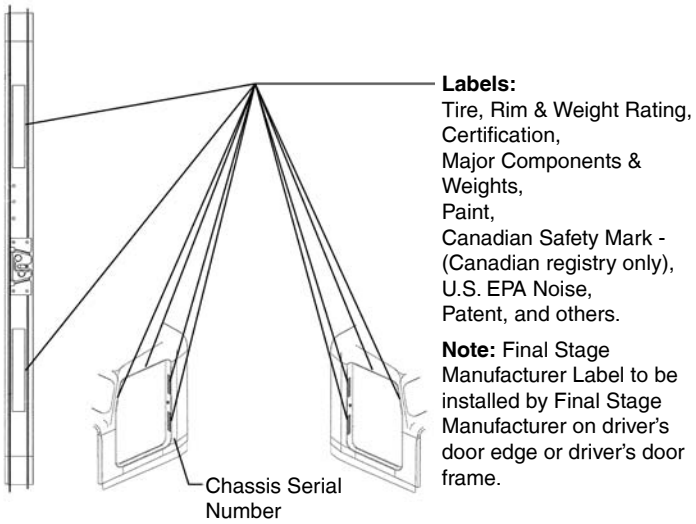

FIGURE A-2. Drivers Door and Door Frame Labels

Tire/Rim and Weight Rating Data Label

The Tire/Rim and Weight Rating Data Label is used in conjunction with the Incomplete Vehicle Certification Label on Incomplete Vehicles. It contains chassis serial number and the following information:

- GVWR — Gross Vehicle Weight Rating
- GAWR FRONT and REAR — Gross Axle Weight Ratings for Front and Rear Axle
- TIRE/RIM SIZES AND INFLATION PRESSURES — Tire/Rim Sizes and Cold Pressure Minimums

Note: **GVWR is the TOTAL WEIGHT the vehicle is designed to carry. This includes the weight of the empty vehicle, loading platform, occupants, fuel, and any load.**

Incomplete Vehicle Certification Label

The Incomplete Vehicle Certification Label contains the chassis VIN, date of manufacture, and listing of applicable motor vehicle safety standards.

Components and Weights Label

The Major Components and Weights Label includes chassis weight and gross weight information, as well as model and serial numbers for the vehicle, engine, transmission, and axles.

https://truckmanualshub.com/

Noise Emission Label

The Noise Emission Label contains the chassis serial number, date of manufacture, and information regarding US noise emission regulations. This label is not provided on Canadian registered vehicles.

Paint Identification Label

The Paint Identification Label contains the paint colors used by the factory to paint the truck. It lists frame, wheels, cab interior and exterior colors. This label is located either underneath the dash to the left of the steering column support, inside the glovebox, or on the passenger's door frame.

COMPONENT IDENTIFICATION

Each of the following components has their own identification label.

Engine Identification

The engine serial number is stamped on a plate located on the left front of the engine. For further information, please refer to the Engine Operation and Maintenance Manual (included in the glove compartment of each vehicle).

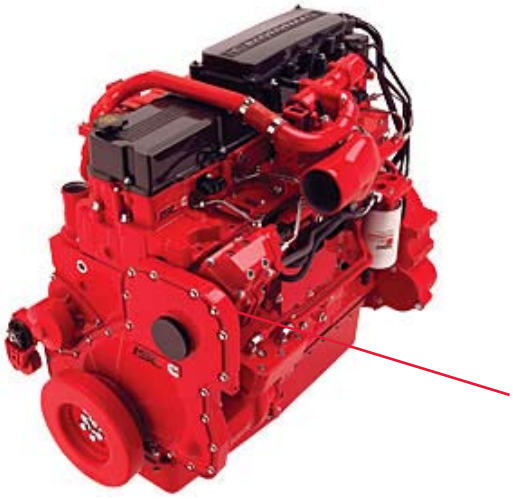

Engine Identification Location (Cummins ISL Shown)

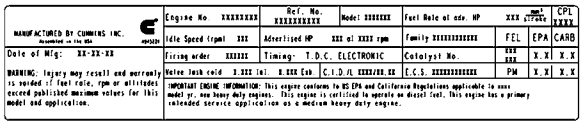

FIGURE A-3. Engine Identification Location

https://truckmanualshub.com/

Transmission Identification

The transmission identification number is stamped on a tag affixed to the right forward side of the transmission case. It includes among other specifications the transmission model, serial number, and part number.

Front Axle Identification

The front axle has an identification tag located on the front axle beam. It includes the axle model, part number and serial number.

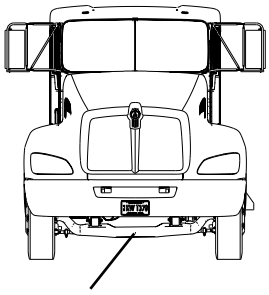

FIGURE A-4. Front Axle Identification

Rear Axle Identification

The rear axle identification numbering system includes two labels or stamps.

1. Axle Housing Number Tag, located on the left forward side of the housing arm. This tag identifies the axle housing.

2. Axle Differential Carrier Identification, located on the top side of the differential carrier. The following information is either stamped, or marked with a metal tag: Model No., Carrier Production Assembly No., Carrier Assembly Serial No., Gear Ratio, Axle Specifications Number and OEM part number and country of origin.

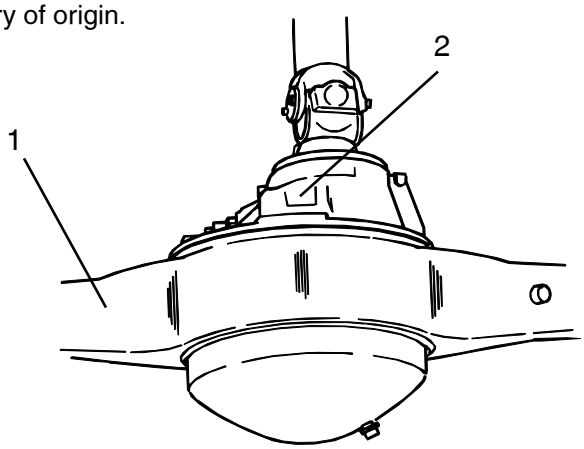

FIGURE A-5. Rear Axle Identification

Note: **Illustrated identification tag locations are typical. Actual locations may vary by axle manufacturer and with single versus tandem axles.**

Index

https://truckmanualshub.com/

A
Abbreviations, dimensions 3-1

B
Body mount, rear 4-6
Body mounting 4-1
Body mounting with U-bolts 4-6
Bolt, torque requirements 5-7
Brackets, body mounting 4-3

C
Cautions 2-1
Certification label 2-2
Charts, frame layout 3-34 through 3-44
Chassis layout options 3-31 through 3-33
Chassis Number A-1
Clearance, air lines and wiring 4-4, 4-8, 7-3, 7-4
Component and weight label A-2
Critical clearances 4-1, 7-3, 7-4
Crossmembers 5-5

D
Dimensions, frame rails 4-1

E
Emissions requirements 2-3
Engine serial number A-3

F
Federal Motor Vehicle Safety Standards 2-2
Final stage manufacturer 2-2
Fishplate bracket 4-68
FMVSS 2-2
Frame, changing length 5-3
Frame Dimensions 4-4
Frame, drilling 5-1
Frame, layouts 3-34 through 3-44
Frame modifications 5-1
Frame, welding 5-1, 5-5
Front axle serial number A-4

G
Ground clearance 3-25 and 3-26

H
Height, Ride 3-18

I
Incomplete vehicle certification 2-2
Incomplete Vehicle Certification Label A-2

M
Mounting holes, frame 4-3
Multiplexed Instrumentation 6-1

N
Noise Emission Label A-3
Noise Requirements 2-3
Notes 2-1

P
Paint identification Label A-3
PTO 6-1

R
Rear axle identification A-4
Rear suspension, relocating 5-3, 5-4
Rear suspension, layouts 3-34 through 3-44
Remote PTO/throttle harness 6-1
Routing 7-1 through 7-4

S
Safety signals 2-1
Scope 1-1
Sill spacer 4-6
Spare Circuits 6-1, 6-21

T
Tire And Rim Data Label A-2
Transmission identification A-4
Turning radius 3-1 through 3-2

V
Vehicle Identification Number A-1

W
Warnings 2-1
Wheelbase, changing 5-3

https://truckmanualshub.com/

https://truckmanualshub.com/

KENWORTH®

A PACCAR COMPANY

Kenworth Truck Company
P.O. Box 1000
Kirkland, WA 98083
(425) 828-5000

08/09