https://truckmanualshub.com/

DETROIT DIESEL

MBE EGR Technician's Guide

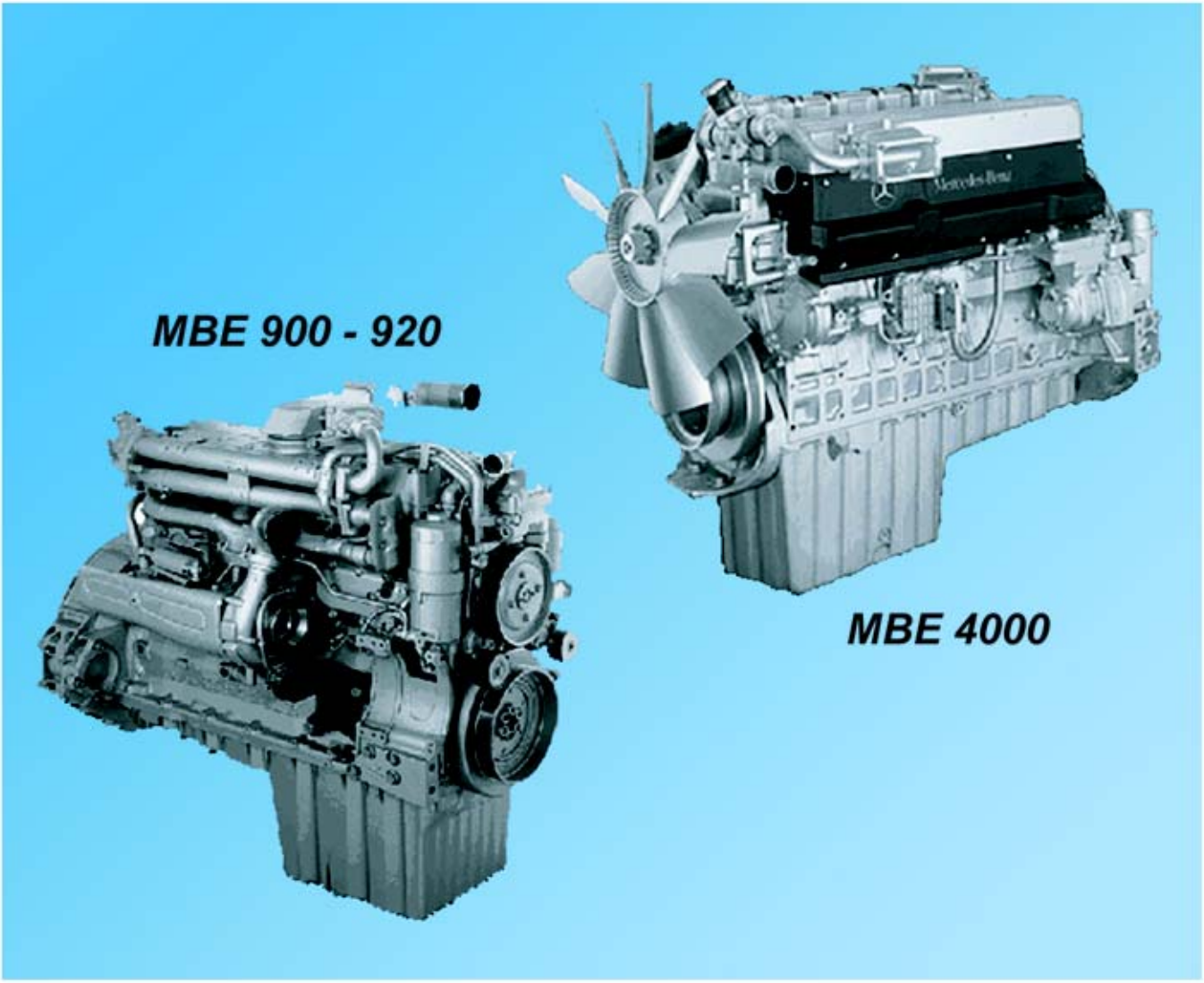

Components **Modes** **Troubleshooting**

https://truckmanualshub.com/

https://truckmanualshub.com/

ATTENTION

The information in this document is accurate as of **May 2005** and is subject to change without notice. This manual is to be used in conjunction with the *MBE Electronic Controls Troubleshooting Guide*, 6SE422.

Detroit Diesel®, DDC®, DDEC® and the spinning arrows design are registered trademarks of Detroit Diesel Corporation. Diagnostic Link® is a registered trademark of the Detroit Diesel Corporation.

https://truckmanualshub.com/

TABLE OF CONTENTS

1 INTRODUCTION 1-1
1.1 VEHICLE INSPECTION 1-2
1.2 OPERATOR INFORMATION 1-3
1.3 TROUBLESHOOTING TIPS 1-4
1.3.1 LOW POWER 1-4
1.3.2 FUEL SYSTEM 1-5
1.3.3 AIR SYSTEM 1-5
1.3.4 CHASSIS DYNAMOMETER TESTING 1-6
1.3.5 EXHAUST SMOKE 1-7
1.3.6 COOLANT LOSS 1-9
1.3.7 INTERMITTENT ISSUES 1-9

2 COMPONENTS 2-1
2.1 MBE 4000 ENGINES WITH EGR SYSTEMS 2-5
2.1.1 TURBOCHARGER AND EXHAUST MANIFOLD 2-9
2.1.2 EXHAUST GAS RECIRCULATION SYSTEM 2-10
2.2 MBE 900 ENGINES WITH EGR SYSTEMS 2-15
2.2.1 TURBOCHARGER AND EXHAUST MANIFOLD 2-20
2.2.2 EXHAUST GAS RECIRCULATION SYSTEM 2-22

3 EGR OPERATION 3-1

4 CODES 4-1
4.1 DIAGNOSTIC TROUBLESHOOTING 4-1
4.1.1 SHUTDOWN-ENGINE PROTECTION FAULT CODE = RED 4-1
4.1.2 DERATE-ENGINE PROTECTION FAULT CODE = BLUE 4-1
4.1.3 PERFORMANCE FAULT CODES = YELLOW 4-1
4.2 CODE DESCRIPTIONS 4-2
4.3 TROUBLESHOOTING OF PERFORMANCE CODES 4-8
4.3.1 DESCRIPTION OF SID 146 4-9
4.3.2 TROUBLESHOOTING SID 146 4-10
4.3.2.1 146/0 — EGR TEMPERATURE ABOVE NORMAL 4-11
4.3.2.2 146/1 — EGR TEMPERATURE BELOW NORMAL 4-13
4.3.2.3 146/2 — ERRATIC DATA 4-15
4.3.2.4 146/7 — EGR VALVE NOT RESPONDING 4-17
4.3.2.5 146/12 — BAD COMPONENT 4-19
4.3.2.6 VERIFYING REPAIRS 4-20
4.4 ENGINE PROTECTION 4-21

5 TESTING 5-1

6 DETROIT DIESEL DIAGNOSTIC LINK/SNAPSHOTS 6-1
6.1 WORKING WITH DDDL SNAPSHOTS 6-1
6.2 USING SNAPSHOT REPLAY CONTROLS 6-5
6.3 E-MAILING SNAPSHOT FILES 6-11

 Copyright © 2005 DETROIT DIESEL CORPORATION

7 SNAPSHOT EXAMPLES 7-1
7.1 NORMAL ENGINE OPERATION SNAPSHOTS 7-2
7.1.1 COLD ENGINE AT IDLE 7-2
7.1.2 WARM ENGINE WITH NO LOAD 7-4
7.1.3 MBE 4000 ENGINE AT VARIABLE SPEEDS AND LOADS 7-6
7.1.4 MBE 900 ENGINE AT VARIABLE SPEEDS AND LOADS 7-7
7.2 PROBLEM ENGINE OPERATION SNAPSHOTS 7-8
7.2.1 ENGINE WITH NO EGR TEMPERATURE READING 7-8
7.2.2 ENGINE WITH ABOVE NORMAL EGR TEMPERATURE READINGS 7-10

APPENDIX A: LIST OF ACRONYMS A-1

APPENDIX B: MBE DDEC WIRING SCHEMATICS B-1

APPENDIX C: SERVICE INFORMATION LETTERS C-1

All information subject to change without notice. (Rev. 5/05)
7SE940 0505 Copyright © 2005 DETROIT DIESEL CORPORATION

1 INTRODUCTION

The *MBE EGR Technician's Guide* was created to provide qualified service technicians with a detailed explanation of the Exhaust Gas Recirculation (EGR) system to facilitate quicker and more effective diagnosing of MBE EGR related issues.

Prerequisites for effective diagnosis include the following topics:

- ☐ Familiarity with the DDC computer software associated with DDC products
- ☐ Knowledge of both the engine and principles of vehicle operation
- ☐ Ability to perform and understand service manual and troubleshooting manual procedures
- ☐ Availability of and the training to use gages and diagnostic test equipment

The most essential tool to properly diagnose and troubleshoot an MBE EGR engine is the Detroit Diesel Diagnostic Link® (DDDL). This tool will provide all the help needed as it contains proper troubleshooting information for all products.

NOTE:
It is absolutely **critical** that you understand the EGR system to be qualified to offer any type of proper diagnostics. Do not **waste time** trying to troubleshoot a DDC product you are not qualified to troubleshoot. Your company may incur wasted labor hours. If you are qualified to perform a troubleshooting task and have spent more than one hour on that task, **STOP**, and contact the Detroit Diesel Customer Support Center at 313-592-5800. Once you have discussed your options with a technical support person, you can perform the required tests and evaluations. Please keep in contact with your technical support person. This allows you to stay on track.

7SE940 0505 Copyright © 2005 DETROIT DIESEL CORPORATION

1.1 VEHICLE INSPECTION

Check the following concerns prior to starting any troubleshooting:

- ☐ Ensure engine serial number on the DDEC Engine Control Unit (DDEC-ECU) matches the engine serial number.
- ☐ Walk around the vehicle and look for obvious problems such as leaks (air or liquid).
- ☐ Check the fuel filters to ensure they are secure and tight.

NOTE:
The MBE 4000 has a water separator and a fuel filter. The MBE 900 has a prefilter and main filter.

- ☐ Check for a restricted air filter.
- ☐ Inspect truck frontal area for airflow restriction through the Charge Air Cooler (CAC) and radiator.
- ☐ Ensure that the fuel tank level is at least 1/4 full.
- ☐ Look for any vehicle damage that could affect vehicle performance or fuel economy.
- ☐ Investigate any prior repairs that could affect vehicle performance.
- ☐ Check for damaged mating of the connector halves or terminals not fully seated in the connector body (backed out terminals).
- ☐ Look for improperly formed or damaged terminals. Carefully inspect all connector terminals in the suspect circuit to determine proper contact tension. Use a mating terminal to test the contact tension.
- ☐ Check for electrical system interference caused by a defective relay, DDEC-ECU driven solenoid, or a switch causing an electrical surge. Look for concerns with the charging system (alternator, etc.). In certain cases, the concern can be made to occur when the faulty component is operated as in the case of a relay.
- ☐ Verify that alternator and battery grounds are clean and making good contact.
- ☐ Wiggle wires and harnesses to try to make the concern active, or reoccur.

All information subject to change without notice. (Rev. 5/05)
7SE940 0505 Copyright © 2005 DETROIT DIESEL CORPORATION

1.2 OPERATOR INFORMATION

This section should serve as a guideline for the technician. Talk to the operator/driver. **Be specific!**

DRIVER QUESTIONNAIRE

Ask the driver to answer the following questions before attempting to repair an intermittent concern, or a concern with symptoms but no diagnostic codes. Use their responses to these general questions as a guideline:

1. How often does the concern occur? (Can the driver operate the vehicle and demonstrate the concern to you in less than 30 minutes? If the concern is repeatable, take the vehicle for a drive with the Detroit Diesel Diagnostic Link (DDDL) connected. Start the snapshot at the beginning of the road test, use the *mark user event space* to track problems, and end the snapshot at the conclusion of the road test. Ensure you can operate the vehicle after correcting the concern without duplicating the symptoms at the operating conditions before releasing the unit to verify the concern is corrected.)
2. Has the vehicle been to other shops for the same concern? (If so, call the other shops and find out what has been done. Avoid replacing the same components again unless absolutely sure they are the source of the concern. It is unlikely the same component will fail again following a recent replacement.)
3. Did the radio, dash gages, or lights momentarily turn OFF when the concern occurred? (If other vehicle devices are affected, this indicates there may be something wrong with the ignition wiring.)
4. Does the concern occur only at specific operating conditions? (Operate the engine under similar load conditions.)
5. Does the concern occur at a specific engine operating temperature? (Operate the engine at this temperature while attempting to duplicate the concern. Use the snapshot feature on the DDDL.)
6. Does the concern occur at a specific engine operating altitude? (If possible, troubleshoot the concern at this altitude.)
7. Does the concern occur only when above or below specific outside temperatures? (If possible, troubleshoot the concern in this temperature range.)
8. Does the concern occur during other conditions, e.g. during or after rain, spray washing, or snow? (If so, thoroughly inspect the connectors for moisture entry.)
9. Did the concern occur at a specific vehicle speed? (If the problem occurs at a specific vehicle speed, check the parameters affecting vehicle speed to verify they are programmed close to the vehicle speed where the problem occurs. Check Vehicle Speed and watch the DDDL {snapshot} for changes to see if the pulse wheel [Vehicle Speed Sensor {VSS} signal] is loose.)
10. Does the concern occur at a specific engine rpm? (If the concern occurs at a specific engine rpm, unplug the oil, coolant, and air temperature sensors, and note any changes to the concern. Gather this data and contact the Detroit Diesel Customer Support Center at 313-592-5800.)

 Copyright © 2005 DETROIT DIESEL CORPORATION

1.3 TROUBLESHOOTING TIPS

This section provides tips on troubleshooting complaints of low power, excessive oil consumption, exhaust smoke, coolant loss, and intermittent concerns. The following lists of questions are only guidelines. The service outlet need not consider every question to resolve the complaint. The questions to consider should depend upon the circumstances surrounding the vehicle symptoms.

The technician should ask the operator questions for these seven basic concerns. They are Low Power, Fuel System, Air System, Oil Consumption, Exhaust Smoke, Coolant Loss, and Intermittent Concerns.

1.3.1 LOW POWER

The basic questions to check for Low Power are:

- ☐ What caused you to suspect low power?
- ☐ When did the low power concern start?
- ☐ Are you aware of any diagnostic or performance codes?
- ☐ Are you running an unusually heavy load?
- ☐ Has the engine been serviced recently? (If yes and the concern occurred after servicing, the servicing outlet should be involved.)
- ☐ Is the air filter clean? (Verify that inlet air is not restricted.)
- ☐ Are the fuel filter and water separator clean? (A plugged filter will restrict fuel flow and result in low power.)
- ☐ How many miles are on the unit? (If mileage is high [several hundred thousand miles], valve lash may need adjusting or nozzles may need replacement.)
- ☐ Is the unit hard starting? (If there is a hard starting issue, there may be a fuel system related concern or low compression.)
- ☐ Are the vehicle fuel tanks vents are open? (Make sure the vents are open. Plugged vents will create a vacuum in the fuel tanks as fuel is consumed and result in a gradual power loss as the vehicle is operated.)
- ☐ Is there a misfire at idle or at no-load speed? (If yes, there may be a fuel or mechanical system concern.)
- ☐ Has there been a history of low power complaints? (Check warranty claim status and prior Remedy tickets.)
- ☐ Is there evidence of white, black, or blue exhaust smoke? (If yes, see smoke troubleshooting guide.)
- ☐ Is the fuel level in the fuel tank low? (If below 1/4 tank, it may result in high fuel temperature above 80 °C (176 °F). High fuel temp can also cause low power.)
- ☐ Is the exhaust flap fully open and are the exhaust system restrictions eliminated?

All information subject to change without notice. (Rev. 5/05)
7SE940 0505 Copyright © 2005 DETROIT DIESEL CORPORATION

- ☐ Are there any active or historic codes? (Record ALL codes in bold.)

NOTE:
If a printer is not available, record all codes with the repair order as they may be required at a later review.

- ☐ Is the boost pressure normal? (See engine performance curve specification.)
- ☐ Are the camshaft and crankshaft sensors installed correctly?
- ☐ Is the valve lash correct? (Verify!)
- ☐ Is the battery holding power? (Verify voltage is correct. Low voltage will result in multiple codes.)
- ☐ Is there a misfire at idle or no load speed? (If yes, run a fuel system inspection according to the procedure listed in the service manual.)
- ☐ For MBE 4000 engines with turbo brake, is the wastegate operating properly? (See Service Information Letter No. 03 **TS**-51.)
- ☐ When the accelerator pedal is in the full throttle position, does the DDDL or minidiag2 sense 100 % throttle?

1.3.2 FUEL SYSTEM

The basic questions to ask for the Fuel System are:

- ☐ Are the correct fuel filter and water separator installed and clean?
- ☐ Is the Fuel System in proper working order? (Inspect the Fuel System. Refer to *MBE 4000 Service Manual*, 6SE412 and *MBE 900 Service Manual*, 6SE414.)
- ☐ Are the overflow valve and fuel pump operating properly?
- ☐ Is the vehicle using fuel with the required specific gravity? (API 34-38 is required for No. 2 diesel fuel.)
- ☐ Inspect the water separator for clogging.

1.3.3 AIR SYSTEM

Inspect the Air System as follows:

- ☐ Check air dryer for system leaks.
- ☐ Check for leaks at all hose clamp locations, and charge air cooler.

 Copyright © 2005 DETROIT DIESEL CORPORATION

WARNING:

PRESSURIZED AIR AND FLYING PARTICLES

To avoid injury to eye or face, wear a face shield or goggles when conducting a pressure test.

NOTICE:

Use proper tools for pressure testing Charge Air Cooler system. Tools not rated for adequate pressure or with improper connections can break free and cause engine damage.

- ☐ Pressure check the air inlet system with 172 kPa (25 psi) regulated shop air. Use liquid soap to identify any leaks. Pressure check from turbo discharge connection to cylinder head noting and correcting leaks at hose clamps and on hoses or air-to-air charge cooler.

NOTE:
If air-to-air charge cooler is leaking from this initial check, pressure check it separately at 207 kPa (30 psi). Pressure must not lose more than 35 kPa (5 psi) in 15 seconds with shop air off.

- ☐ Verify turbocharger is functioning properly.

1.3.4 CHASSIS DYNAMOMETER TESTING

Run the vehicle on a chassis dynamometer and look at the following:

CAUTION:

EXHAUST FUMES

To avoid injury or injury to bystanders from fumes, engine or vehicle fuel system service operations should be performed in a well ventilated area.

NOTE:
Ram air fans in front of vehicles and room ventilation are **required**.

- ☐ Record the following data at 1650, 1500, and 1350 rpm, (Direct drive):
  - ☐ Wheel horsepower with vehicle fan on (Wheel horsepower above 80 % of rated power at the wheels is acceptable. Refer to performance curve.)
  - ☐ Intake Manifold Pressure (If reading is erratic, take a snapshot.)

All information subject to change without notice. (Rev. 5/05)
7SE940 0505 Copyright © 2005 DETROIT DIESEL CORPORATION

- ☐ Fuel Temperature and Pressure (If data is erratic, take a snapshot.)

NOTE:
Record vehicle specifications in the event there is a need to predict vehicle performance using Spec Manager.

- ☐ Record crankcase pressure at high idle. DDC maximum specifications are:
  - ☐ For the MBE 4000 engines, the maximum is 0.37 kPa (1.5 in. H_2O) for non-EGR engines (1998) and 2.0 kPa (8.0 in. H_2O) for EGR engines (2004).
  - ☐ For the MBE 900 engine, the maximum is 0.37 kPa (2.5 in. H_2O) for both non-EGR engines (1998) and EGR engines (2004).

1.3.5 EXHAUST SMOKE

The basic questions to ask for Black Exhaust Smoke are:

NOTE:
Black Smoke is soot from partially oxidized (burned) fuel at high temperatures.

- ☐ Is the air filter restricted? (Reduced air flow = lack of oxygen, incomplete/high temperature combustion and soot)
- ☐ Are exhaust brake devices functioning properly? (Reduced air flow = incomplete combustion and soot)
- ☐ Is the CAC cracked? (Reduced air flow = incomplete combustion and soot)
- ☐ Are the intake air manifold gasket(s) leaking? (Reduced air flow = incomplete combustion and soot)

NOTE:
The MBE 4000 uses multiple air manifold gaskets to cover individual cylinder heads. The MBE 900 uses one gasket for every two adjacent cylinders on a single cylinder head.

- ☐ Are there air bubbles in the coolant? (Head gasket failure = vaporized water in exhaust)
- ☐ Are there air bubbles in the fuel? (Fuel line/pump leak = late fuel injection = raw vaporized fuel in exhaust)
- ☐ Are the valve clearances correct? (Incorrect valve timing = incorrect combustion timing and soot)
- ☐ Is the comparative cylinder compression test result correct/within specifications? (Low compression = incomplete/poor combustion)
- ☐ Has a fuel nozzle failed causing excess fuel delivery? (Excess fuel = incomplete combustion and soot)
- ☐ Is the EGR valve stuck open? (Excess exhaust gas recirculation = insufficient oxygen, incomplete combustion, and soot)

 Copyright © 2005 DETROIT DIESEL CORPORATION

- ☐ Is the Intake Manifold Pressure (IMP) Sensor/Turbocharger Boost Sensor (TBS) working correctly?

The basic questions to ask for Blue Exhaust Smoke are:

NOTE:
Blue Smoke is partially burned lubrication oil that ends up as a raw vaporized oil in the exhaust soot from partially oxidized (burned) fuel at high temperatures.

- ☐ Is the comparative cylinder compression test result correct/within specifications? (Low compression = incomplete/poor combustion)
- ☐ Is the oil level above the maximum level? (Excess oil = poor combustion and raw vaporized oil in the exhaust)
- ☐ Does the oil quality meet the recommended specification? (Poor quality oil = piston ring wear and poor combustion)
- ☐ Is the turbocharger leaking oil into the exhaust? (Oil in exhaust = poor combustion)
- ☐ Are the valve stem seals functioning? (Oil leaking past seal = poor combustion)

The basic questions to ask for White Exhaust Smoke are:

NOTE:
White Smoke is usually partially burned fuel that ends up as raw vaporized fuel in the exhaust. White Smoke can also be the result of a coolant leak that ends up as steam in the exhaust.

- ☐ Is the fuel quality within DDC specification? (Cetane No. minimum: 45, Cetane Index, minimum: 40)
- ☐ Is the air preheater installed and functioning properly? (Cold air = raw vaporized fuel in the exhaust)
- ☐ Are there air bubbles in the coolant? (Suggests a head gasket failure = vaporized water in exhaust)
- ☐ Are there air bubbles in the fuel? (Suggests a fuel line/pump leak = late fuel injection = raw vaporized fuel in exhaust)
- ☐ Are the valve clearances correct? (Incorrect valve timing = incorrect combustion timing)
- ☐ Is the charge air cooler cracked? (Reduced air flow = incomplete combustion and soot)

NOTE:
Refer to Service Information Letter 05 **TS**-01 for service information on cracked charge air coolers. See Figure C-16 and Figure C-17.

- ☐ Is the comparative cylinder compression test result correct/within specifications? (Low compression = incomplete/poor combustion)
- ☐ Has a fuel nozzle failed causing excess fuel delivery? (Excess fuel = incomplete combustion and raw fuel in exhaust)

All information subject to change without notice. (Rev. 5/05)
7SE940 0505 Copyright © 2005 DETROIT DIESEL CORPORATION

- ☐ Is the IMP Sensor/TBS working correctly?

1.3.6 COOLANT LOSS

The basic questions to ask for Coolant Loss are:

- ☐ Has the oil level risen? (If so, it would suggest coolant in the oil and a head gasket failure.)
- ☐ Have you noticed any coolant leaks or coolant puddles under the vehicle?
- ☐ How often do you add coolant?
- ☐ Is the radiator cap on tight and sealing properly?
- ☐ What type of coolant is being used?
- ☐ What type of inhibitor is being used?

1.3.7 INTERMITTENT ISSUES

The basic questions to ask with Intermittent Concerns are:

- ☐ When was the last time the intermittent concern occurred?
- ☐ Does the Amber Warning Lamp (AWL) come on?
- ☐ Does the concern only occur in damp or rainy conditions?
- ☐ Does the concern occur when the vehicle hits a bump or rough road?
- ☐ Does the engine miss, drop to idle, quit running, or exhibit hard starting?
- ☐ Is there any pattern related to trip miles or engine temperature?

 Copyright © 2005 DETROIT DIESEL CORPORATION

https://truckmanualshub.com/

THIS PAGE INTENTIONALLY LEFT BLANK

All information subject to change without notice. (Rev. 5/05)
7SE940 0505 Copyright © 2005 DETROIT DIESEL CORPORATION

2 COMPONENTS

The purpose of the Exhaust Gas Recirculation (EGR) System is to reduce engine emissions in accordance with Environmental Protection Agency (EPA) regulations.

The key components of an MBE EGR system consists of:

- ☐ EGR Valves
- ☐ EGR Cooler
- ☐ Reed Valves
- ☐ EGR Mixer

 Copyright © 2005 DETROIT DIESEL CORPORATION

The MBE engines for NAFTA On-Highway 2004 applications use a liquid-cooled EGR system. Exhaust is routed from the exhaust manifold, through the EGR shutoff valve (MBE 4000 only), the EGR cooler, the EGR control valve, the reed valves (all except the MBE 906), and the EGR mixer in the intake manifold where they are mixed with the charge air. To view the arrangement of these components, see Figure 2-1 for the MBE 4000 engine and Figure 2-2 for the MBE 900 engine.

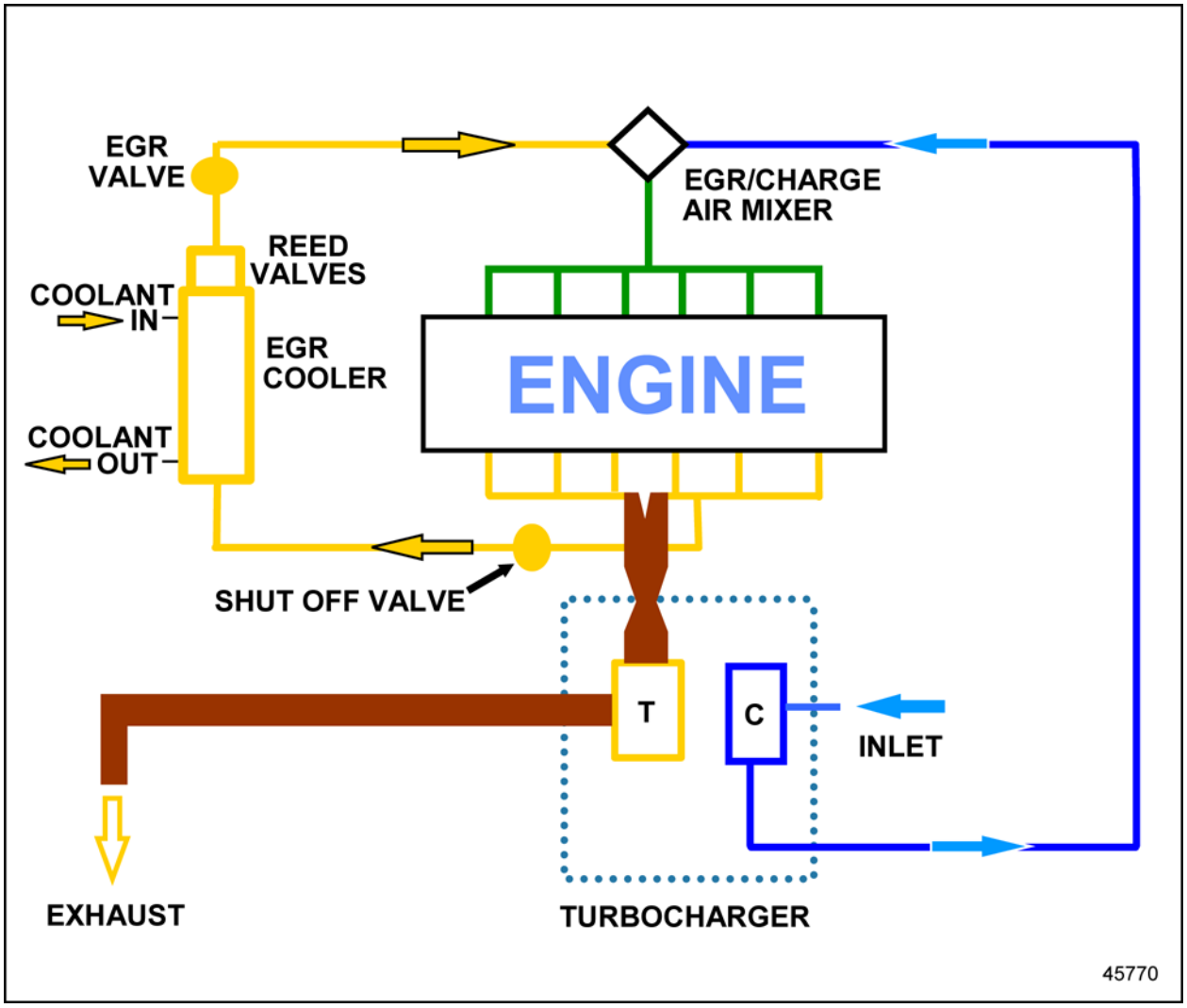

Figure 2-1 Schematic of MBE 4000 EGR System

All information subject to change without notice. (Rev. 5/05)
7SE940 0505 Copyright © 2005 DETROIT DIESEL CORPORATION

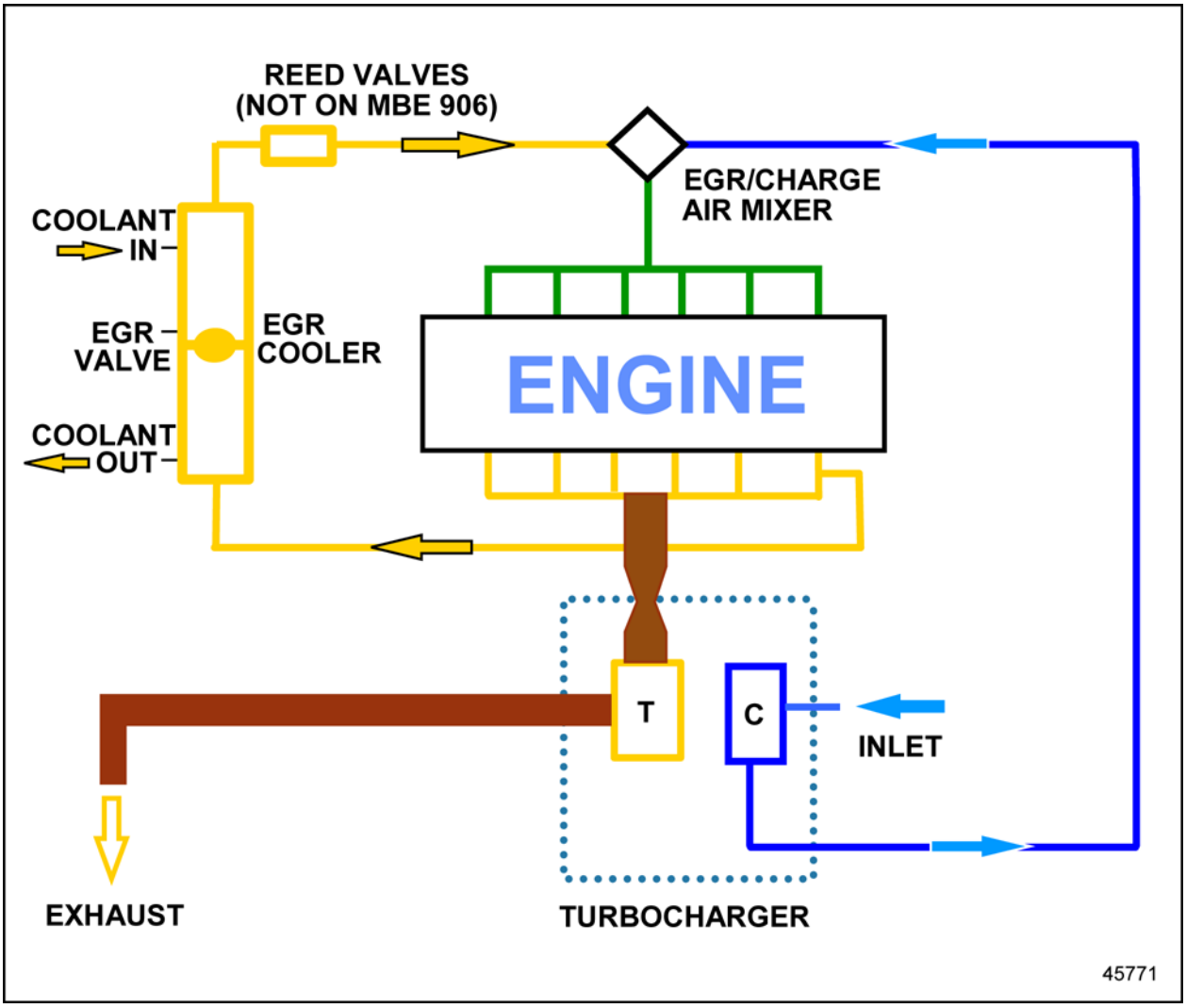

Figure 2-2 Schematic of MBE 900 EGR System

 Copyright © 2005 DETROIT DIESEL CORPORATION

The addition of cooled exhaust gas back into the combustion airflow reduces the peak in cylinder combustion temperature. The formation of Oxides of Nitrogen (NOx) is less at lower combustion temperatures.

Reed valves are employed on all MBE engines except for model 906. In order to drive exhaust gas into the charge air, the pressure in the exhaust manifold must be higher than the pressure in the intake manifold. The pressure in the exhaust manifold changes over time, peaking when exhaust valves open. Exhaust passes through the reed valves during these pressure peaks. The reed valves permit transport of exhaust only during the time when the exhaust pressure is greater than the charge air pressure.

The EGR systems for the MBE 900 and MBE 4000 engines are similar but differ in their specific components. The EGR components are listed in Table 2-1.

Component	MBE 904/924	MBE 906	MBE 926	MBE 4000
Asymmetrical Turbocharger	*	Yes	Yes	Yes
EGR Valve	Yes	Yes	Yes	Yes
Shutoff Valve	—	—	—	Yes
Temperature Sensor	Yes	Yes	Yes	Yes
Reed Valves	Yes	—	Yes	Yes
EGR Mixer	Yes	Yes	Yes	Yes

* Single-Flute Turbine Housing

Table 2-1 EGR Components Featured on the MBE Engines

All information subject to change without notice. (Rev. 5/05)
7SE940 0505 Copyright © 2005 DETROIT DIESEL CORPORATION

2.1 MBE 4000 ENGINES WITH EGR SYSTEMS

The MBE 4000 is a four-stroke, high speed electronically controlled diesel engine. The cylinder block contains a camshaft that actuates two intake valves and two exhaust valves per cylinder, and pressurizes the fuel injection system electronic unit pumps.

The engine is equipped with full-flow oil filter, oil cooler, fuel filter(s), turbocharger, and an electronic engine control system that manages fuel delivery and EGR systems. Air is supplied by the turbocharger to the intake manifold and into the engine cylinders after passing through an air-to-air intercooler mounted in the vehicle ahead of the cooling system radiator. The intercooler cools the pressurized intake air charge coming from the turbocharger compressor before it is mixed with cooled recirculated exhaust gas and distributed to the intake ports by the intake manifold.

The MBE 4000 utilizes electronically controlled fuel injection and cooled exhaust gas recirculation as the primary emission control technologies. The engine's DDEC Engine Control Unit (DDEC-ECU) utilizes algorithms and several sensor inputs for management of the fuel injection and EGR systems. See Figure 2-3 and Figure 2-4 for sensor locations.

 Copyright © 2005 DETROIT DIESEL CORPORATION

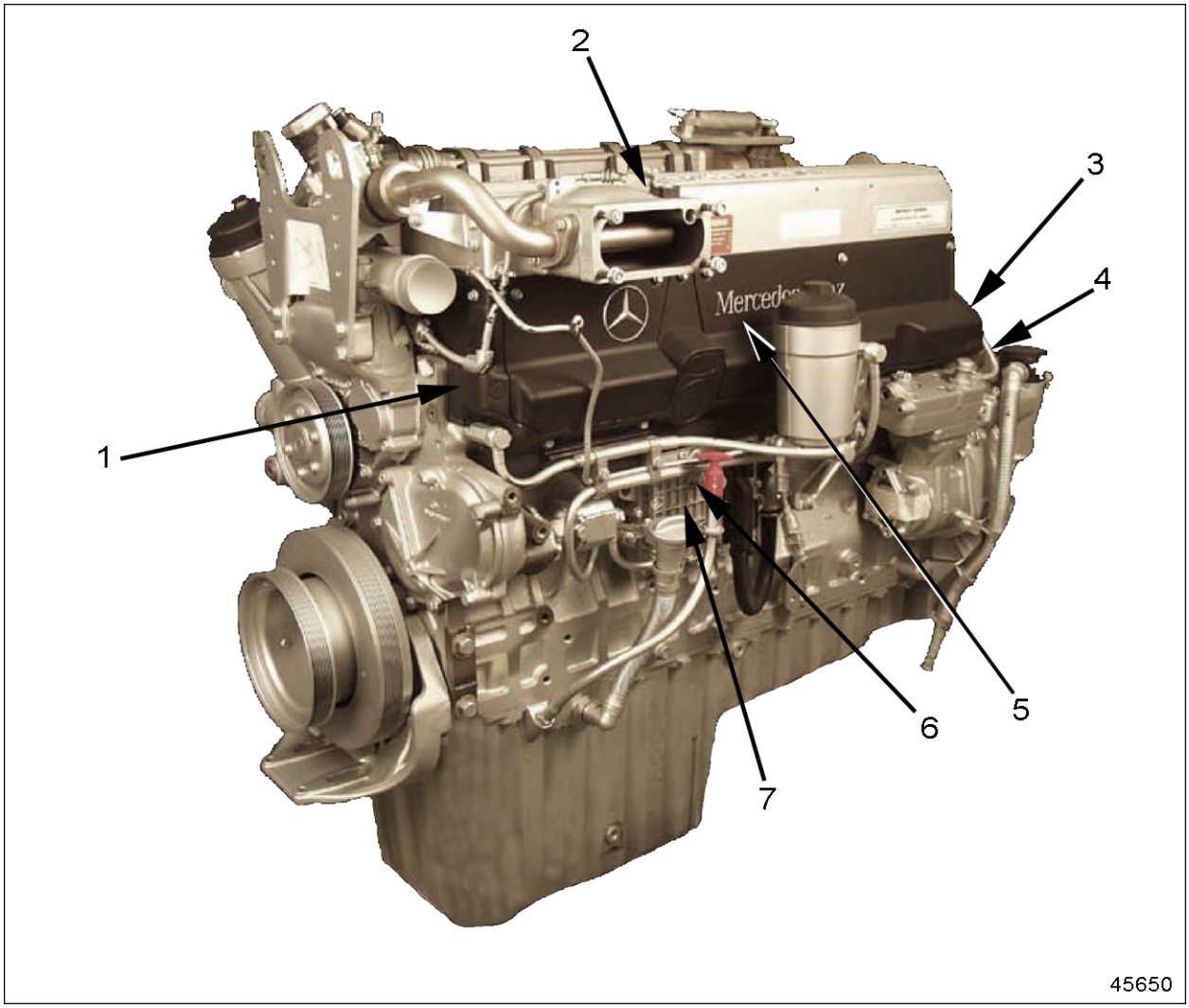

1. Engine Fuel Supply Temperature Sensor
2. Intake Manifold Pressure/Air Temperature Combination Sensor
3. Camshaft Position Sensor
4. Crankshaft Position Sensor
5. Engine Coolant Temperature Sensor
6. Barometric Pressure Sensor (located underneath the DDEC-ECU)
7. DDEC-ECU

Figure 2-3 MBE 4000 EGR Sensor Locations (Left Side)

All information subject to change without notice. (Rev. 5/05)
7SE940 0505 Copyright © 2005 DETROIT DIESEL CORPORATION

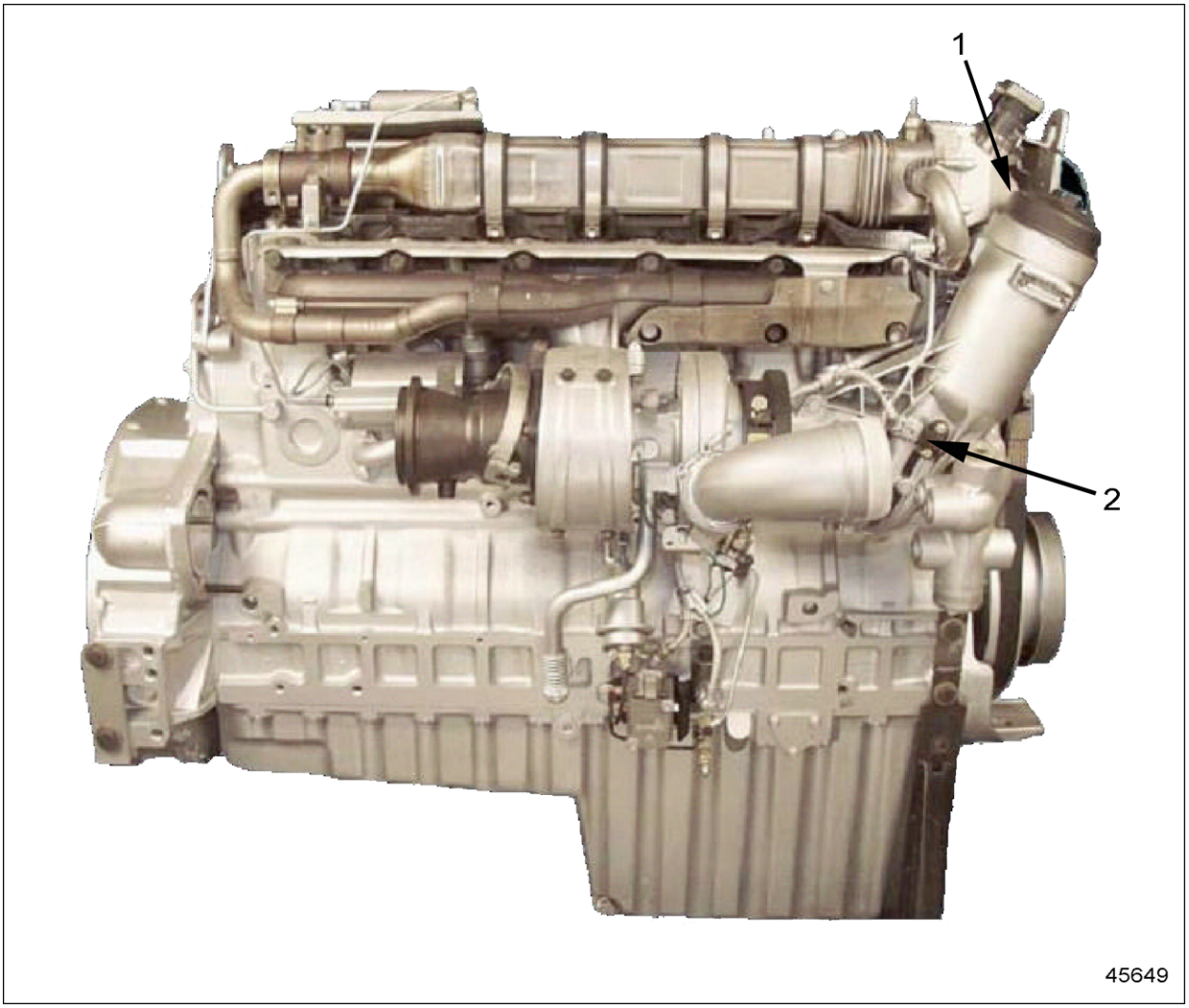

1. EGR Temperature Sensor
2. Engine Oil Pressure and Engine Oil Temperature Combination Sensor

Figure 2-4 MBE 4000 EGR Sensor Locations (Right Side)

 Copyright © 2005 DETROIT DIESEL CORPORATION

The parameters sensed by the DDEC-ECU are as follows:

- ☐ Turbocharger Speed
- ☐ EGR Temperature after EGR-Cooler
- ☐ Charge Air Supply Temperature
- ☐ Intake Manifold Pressure
- ☐ Intake Manifold Air Temperature
- ☐ Fuel Temperature
- ☐ Oil Temperature
- ☐ Oil Pressure
- ☐ Coolant Temperature
- ☐ Crankshaft Position
- ☐ Camshaft Position
- ☐ Barometric Pressure
- ☐ Modulated EGR Valve Functionality

The controlled functions are as follows:

- ☐ Fuel Injection Duration
- ☐ Fuel Injection Timing — Beginning Of Injection (BOI)
- ☐ Modulated EGR Valve Position (downstream from EGR Cooler)
- ☐ EGR Shutoff Valve Position (Upstream of EGR Cooler)
- ☐ Idle Speed Boost Pressure (with Actuation of Optional Engine Brake)

The DDEC-ECU is one of two electronic controllers that make up the “Integrated Electronic System” (IES) that is used in commercial vehicles with the MBE 4000 engine. The separation of functions of each controller is such that the DDEC Vehicle Control Unit (DDEC-VCU) senses and controls the vehicle-influencing parameters such as cruise control, while the DDEC-ECU covers engine operating parameters as described above. The DDEC-ECU is positioned on the left side of the engine and is cooled by means of fuel.

The various sensed parameters and control logic programmed into the DDEC-ECU determines which mode of engine operation will apply. These running engine-operating modes include:

- ☐ Engine Speed Controlled Mode (Including Idle Mode)
- ☐ Torque Controlled Mode
- ☐ Emergency Mode

The MBE 4000 engines for NAFTA On-Highway 2004 applications use a liquid-cooled EGR system. Exhaust from the front three cylinders is routed through the EGR system.

All information subject to change without notice. (Rev. 5/05)
7SE940 0505 Copyright © 2005 DETROIT DIESEL CORPORATION

2.1.1 TURBOCHARGER AND EXHAUST MANIFOLD

The turbocharger used on the MBE 4000 engine features an asymmetrically split double-flow turbine housing. The exhaust flow of cylinders No. 1 through 3 is collected in a manifold separate from cylinders No. 4 through 6, with the flow from each manifold entering the turbine housing through separate inlets having different flow areas. The smaller inlet causes higher exhaust back pressure providing the required level of pressure to drive EGR. The turbocharger design must accommodate operations at elevated compressor wheel speeds because of the need to flow EGR. See Figure 2-5.

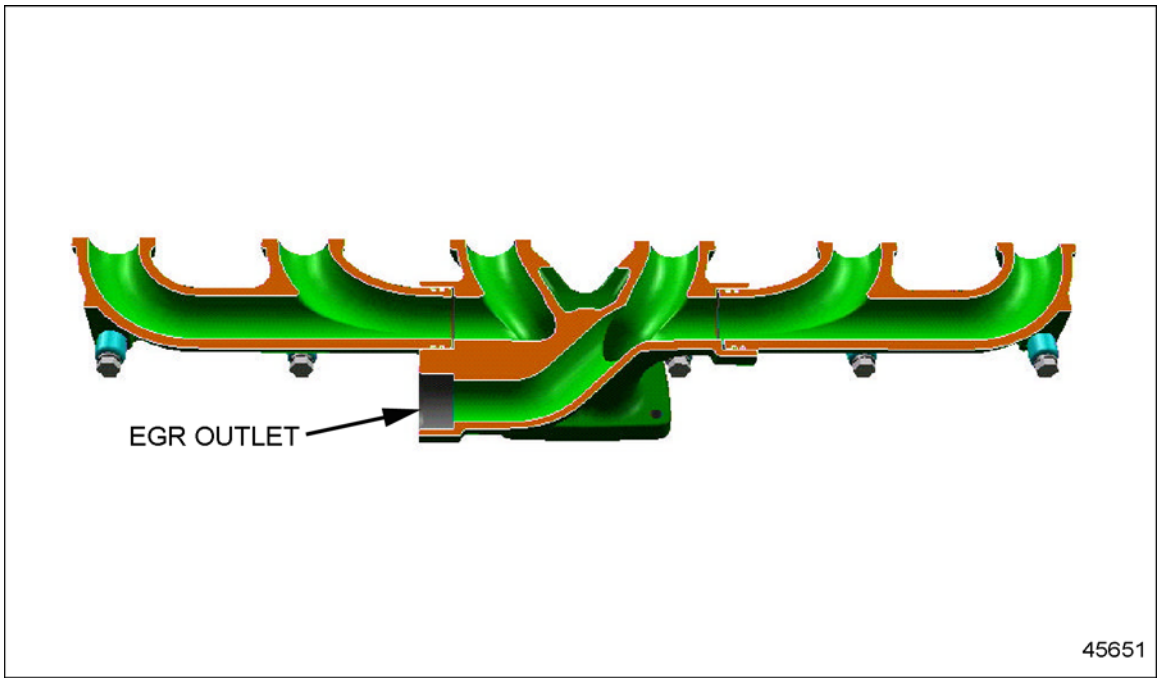

Figure 2-5 Cross Section of MBE 4000 Exhaust Manifold with EGR

Due to the compressor characteristics, it is not possible to use EGR at low engine speeds.

 Copyright © 2005 DETROIT DIESEL CORPORATION

2.1.2 EXHAUST GAS RECIRCULATION SYSTEM

In general, the engine control system modulates the EGR rate of flow using parameters from the various engine sensors to an optimize NOx and particulate levels in balance with the air fuel ratio.

The EGR system utilizes a combination of three EGR valves to control the exhaust gas flow. See Figure 2-6. First there is an EGR shutoff valve on the hot side of the EGR cooler. Secondly, there are reed valves mounted at the outlet of the EGR cooler. The third valve is an electromagnetically actuated EGR control valve located downstream from the reed valves. The system controls EGR flow during steady state and transient modes. EGR control is optimized for maximum NOx control with consideration for particulate emission levels.

All information subject to change without notice. (Rev. 5/05)
7SE940 0505 Copyright © 2005 DETROIT DIESEL CORPORATION

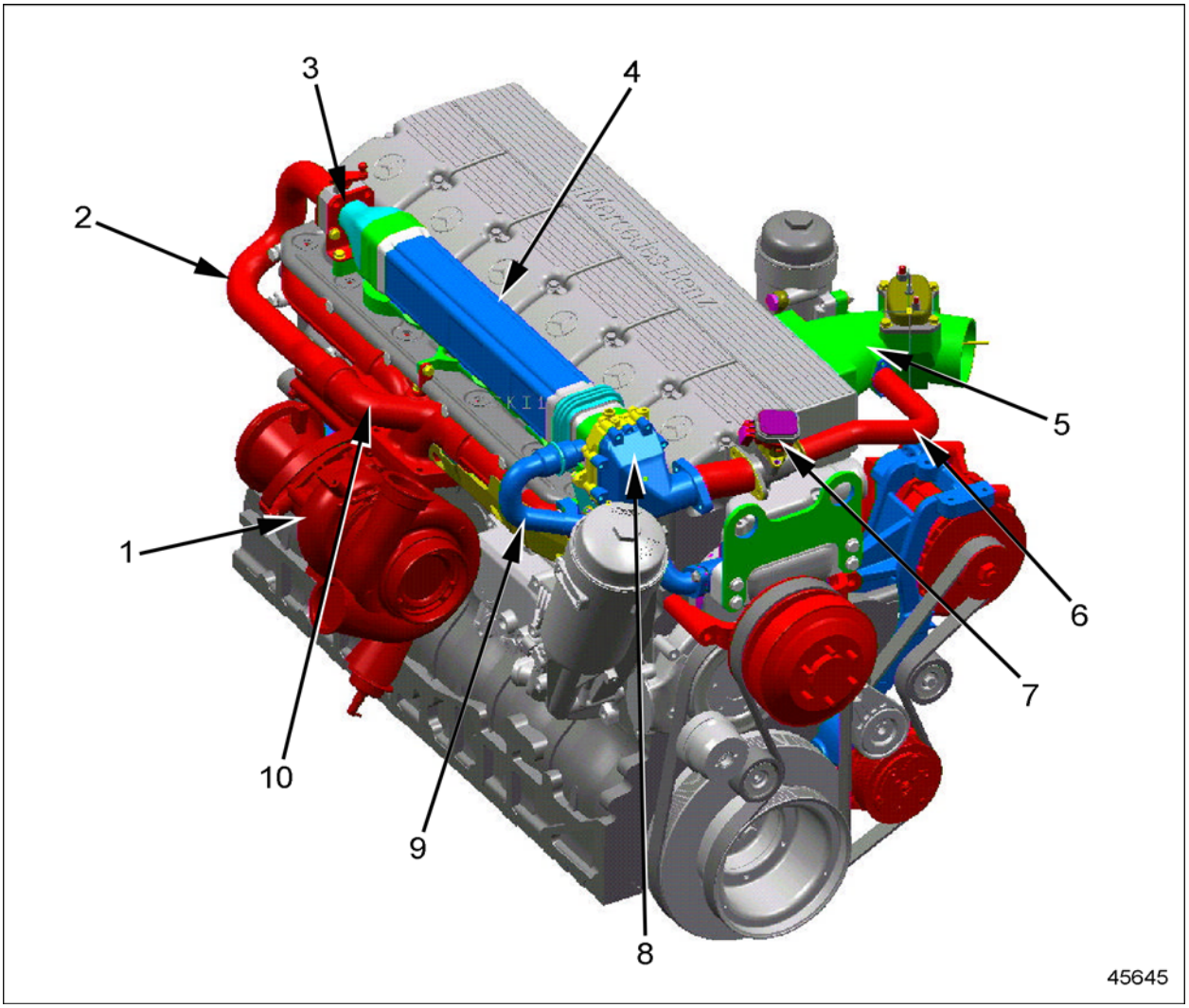

1. Asymmetrical Turbocharger
2. EGR Hot Pipe
3. EGR Shutoff Valve
4. EGR Cooler
5. EGR Mixer
6. EGR Delivery Pipe
7. EGR Control Valve
8. Reed Valves
9. EGR Cooler Coolant Return
10. Exhaust Manifold

Figure 2-6 MBE 4000 EGR System Components

 Copyright © 2005 DETROIT DIESEL CORPORATION

The EGR shutoff valve, located before the EGR cooler, closes the EGR system during the engine braking mode to prevent EGR cooler damage from high exhaust pressures. See Figure 2-7.

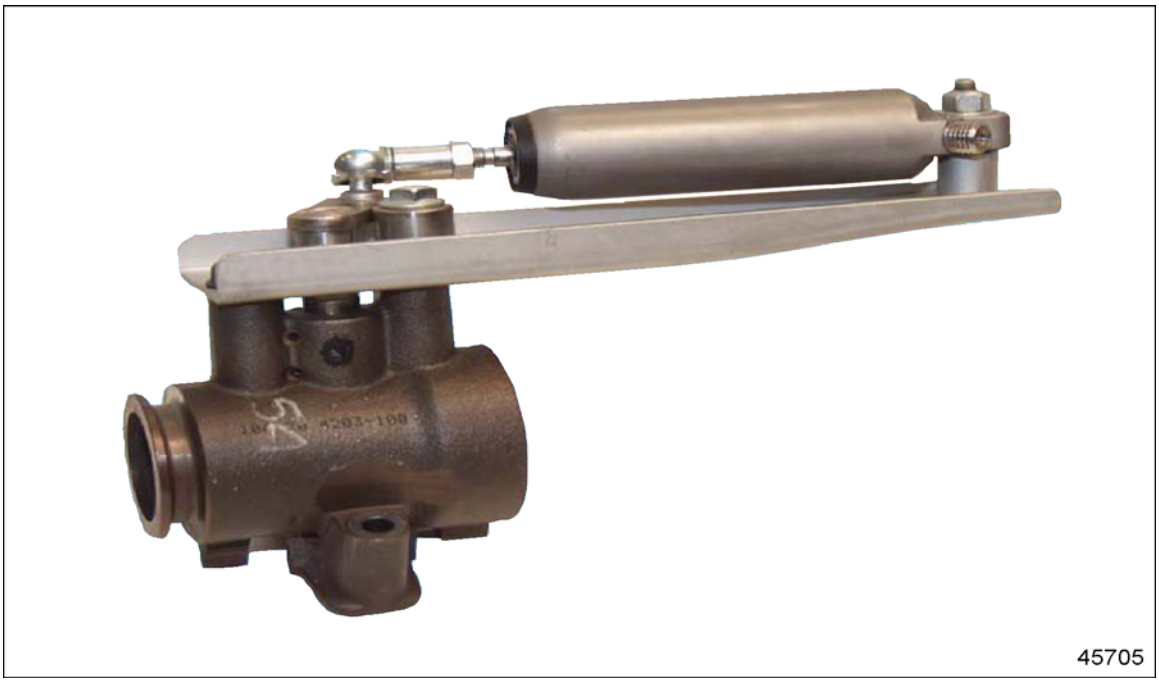

Figure 2-7 MBE 4000 EGR Shutoff Valve

All information subject to change without notice. (Rev. 5/05)
7SE940 0505 Copyright © 2005 DETROIT DIESEL CORPORATION

The reed valves ensure that while the EGR control valve is open, there is no reverse airflow from the intake system into the exhaust manifold. See Figure 2-8. When the exhaust manifold pressure is higher than the intake manifold pressure, flow occurs. When the pressures are reversed, the reed valves prevent flow. Back flow could otherwise occur since the average intake manifold pressure is higher than the average exhaust manifold pressure. See Figure 2-9.

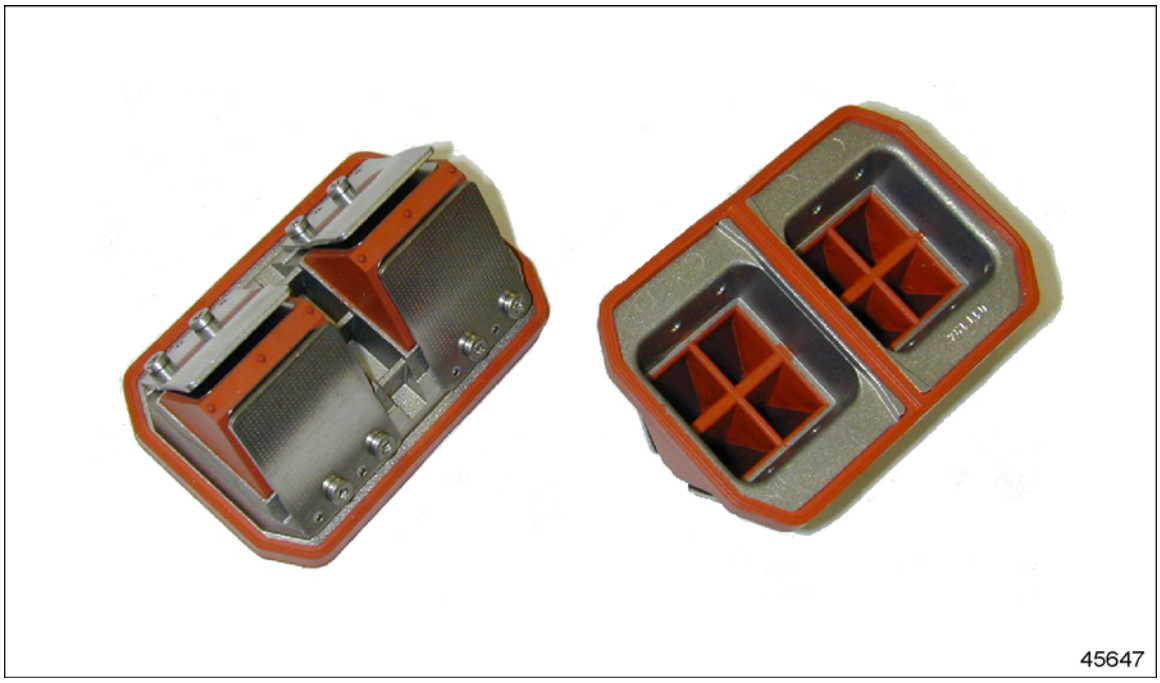

Figure 2-8 Reed Valves

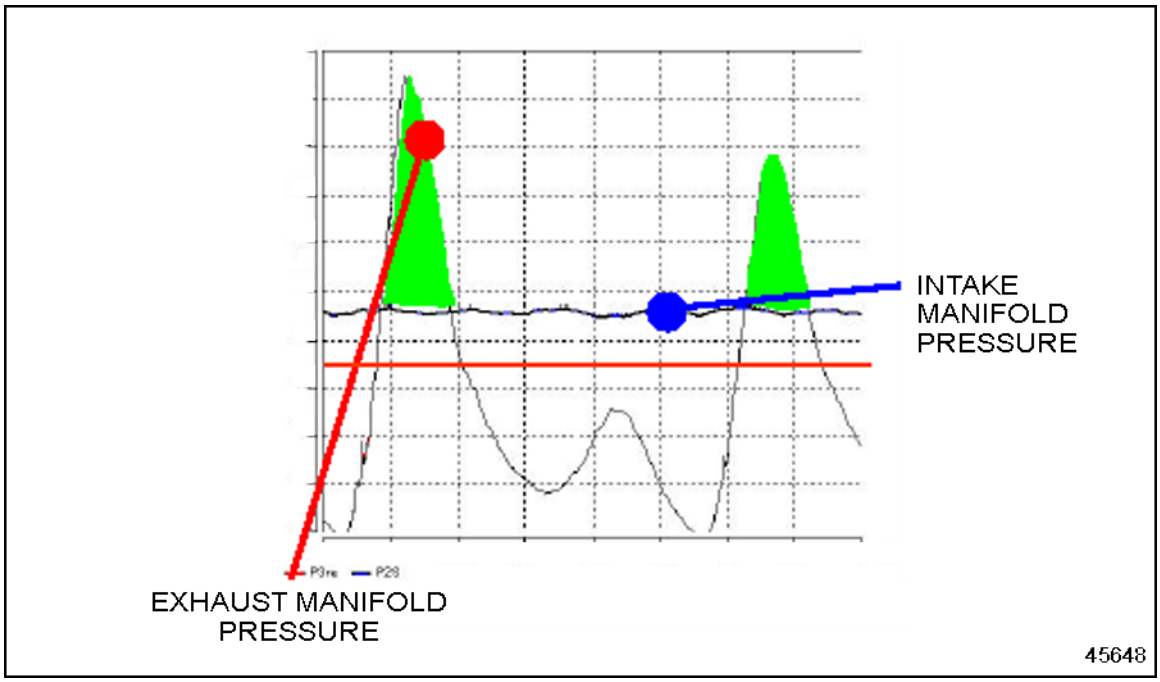

Figure 2-9 MBE EGR System Operating Pressure Characteristics

 Copyright © 2005 DETROIT DIESEL CORPORATION

The EGR control valve meters the exhaust flow into the EGR mixer. The DDEC-ECU controls the actuator position to determine the amount of valve opening. See Figure 2-10.

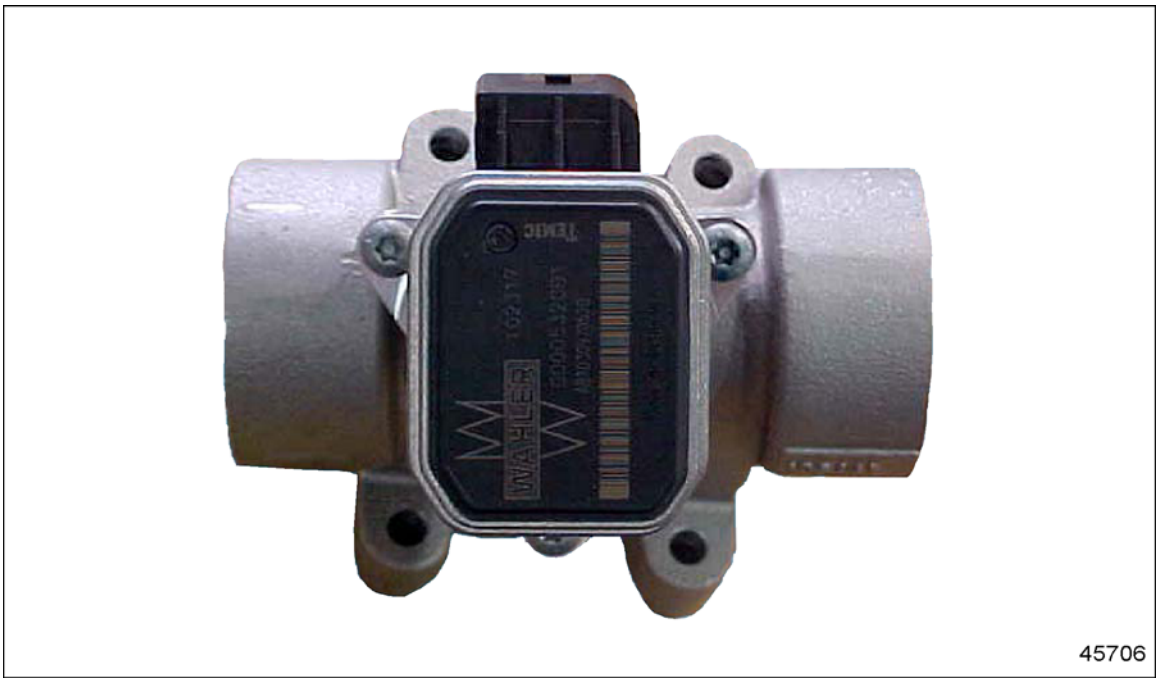

Figure 2-10 MBE 4000 EGR Control Valve

All information subject to change without notice. (Rev. 5/05)
7SE940 0505 Copyright © 2005 DETROIT DIESEL CORPORATION

2.2 MBE 900 ENGINES WITH EGR SYSTEMS

The MBE 900 is a four-stroke, high speed electronically-controlled diesel engine. Key emissions systems components include an EGR system that includes a gas-to-liquid cooler for hot EGR, a divided turbine housing turbocharger design, reed valves to prevent reverse gas flow, and a rotary valve that modulates EGR flow. See Figure 2-11.

NOTE:
The four-cylinder engines, MBE 904 and 924, do not have a divided turbine housing.

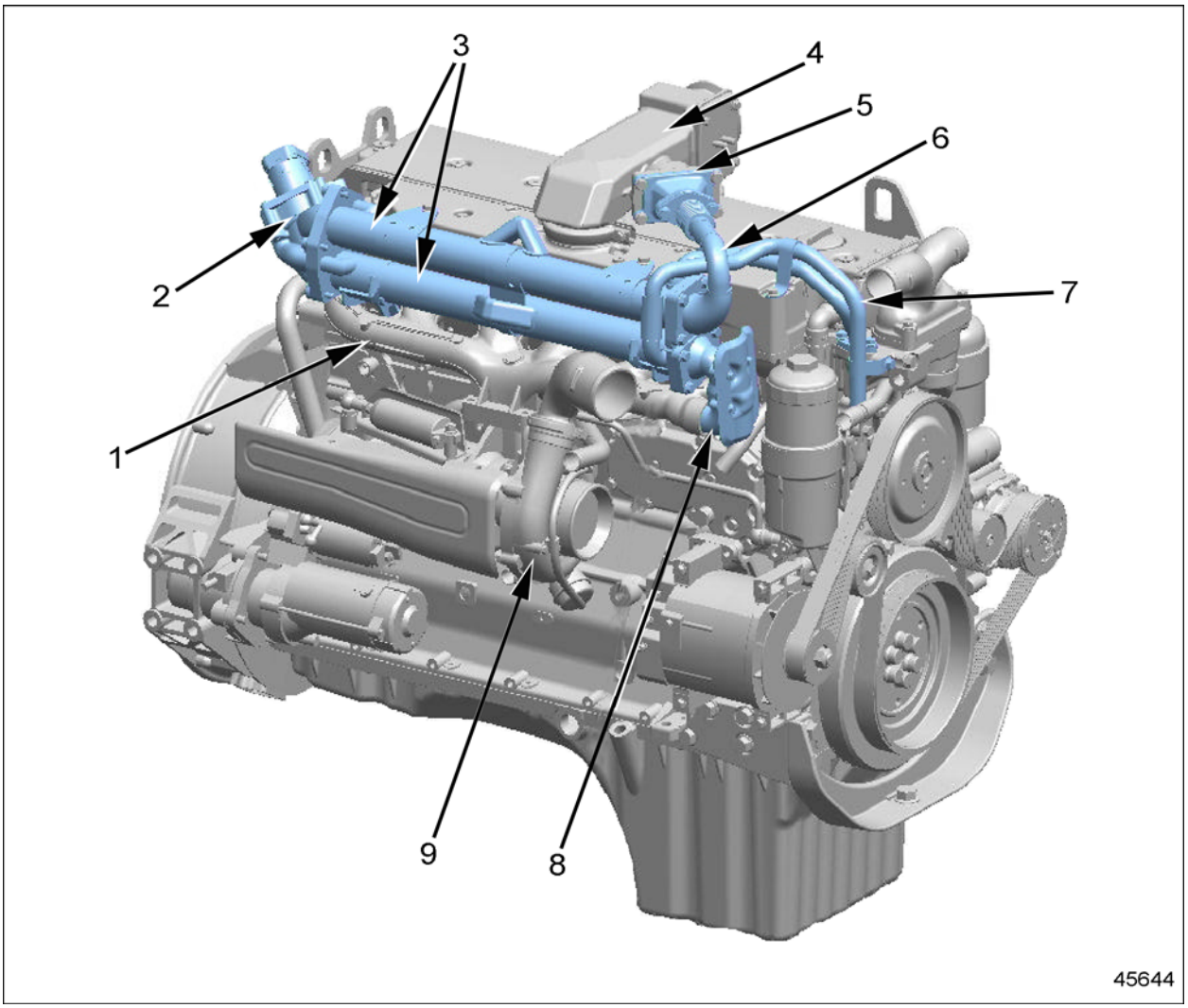

1. Exhaust Manifold
2. EGR Rotary Valve
3. EGR Cooler
4. EGR Mixer
5. Reed Valves
6. EGR Delivery Pipe
7. EGR Cooler Coolant Supply
8. EGR Exhaust Elbow
9. Asymmetrical Turbocharger

Figure 2-11 MBE 900 EGR System Components

 Copyright © 2005 DETROIT DIESEL CORPORATION

The engine is equipped with full-flow oil filters, oil cooler, fuel filter(s), turbocharger, and an electronic engine control system that manages fuel delivery and EGR systems. Air is supplied by the turbocharger to the intake manifold and into the engine cylinders after passing through an air-to-air intercooler mounted in the vehicle ahead of the cooling system radiator. The intercooler cools the pressurized intake air charge coming from the turbocharger compressor before it is mixed with cooled recirculated exhaust gas and distributed to the intake ports by the intake manifold.

All information subject to change without notice. (Rev. 5/05)
7SE940 0505 Copyright © 2005 DETROIT DIESEL CORPORATION

The MBE 900 engine utilizes electronically controlled fuel injection and cooled exhaust gas recirculation as the primary emission control technologies. The engine's DDEC-ECU utilizes algorithms and several sensor inputs for management of the fuel injection and EGR systems. See Figure 2-12 and Figure 2-13 for sensor locations.

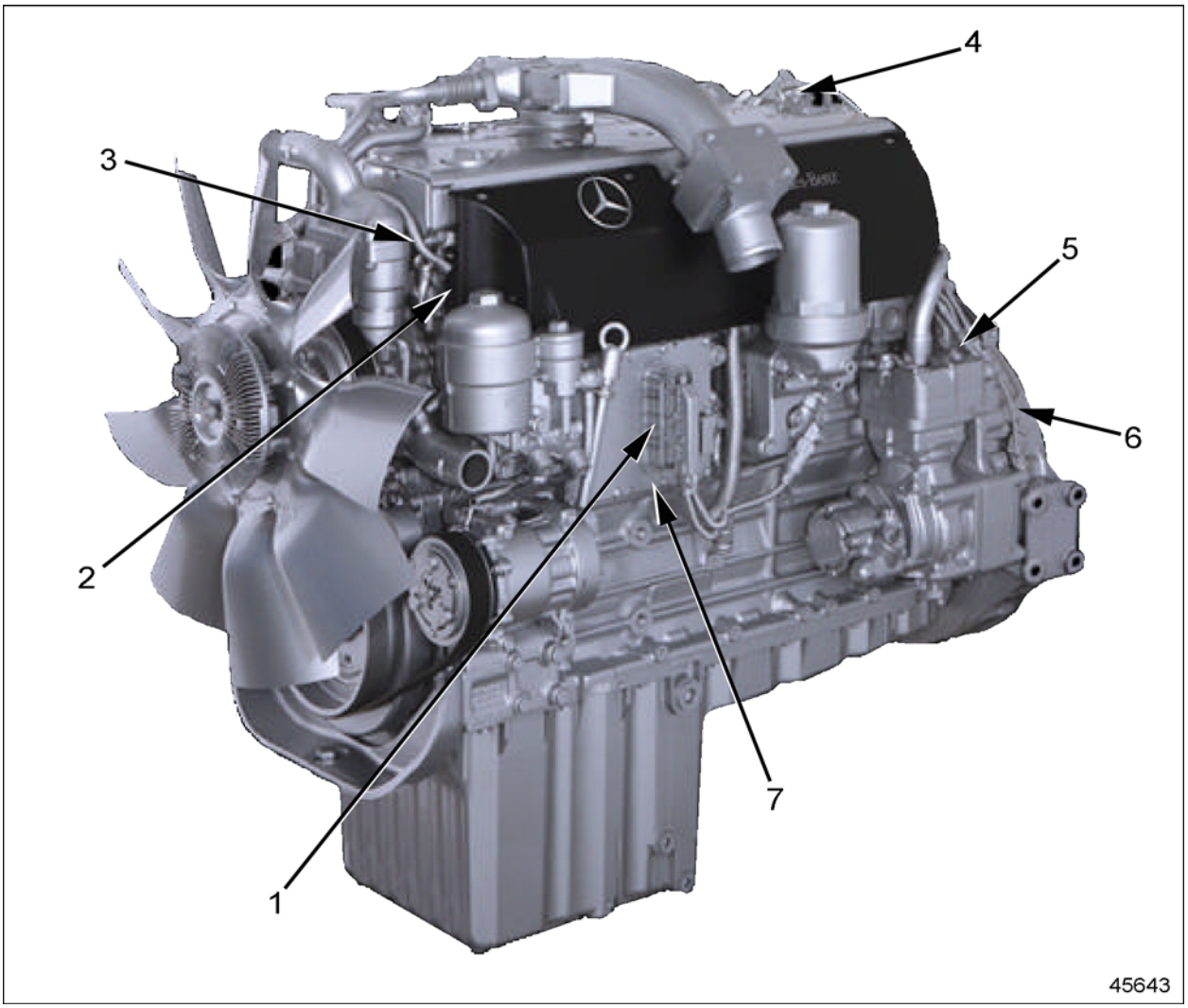

1. Barometric Pressure Sensor (located underneath the DDEC-ECU)
2. Engine Fuel Supply Temperature Sensor
3. Engine Coolant Temperature Sensor
4. Intake Manifold Pressure/Air Temperature Combination Sensor
5. Camshaft Position Sensor
6. Crankshaft Position Sensor
7. DDEC-ECU

Figure 2-12 MBE 900 EGR Sensor Locations (Right Side)

 Copyright © 2005 DETROIT DIESEL CORPORATION

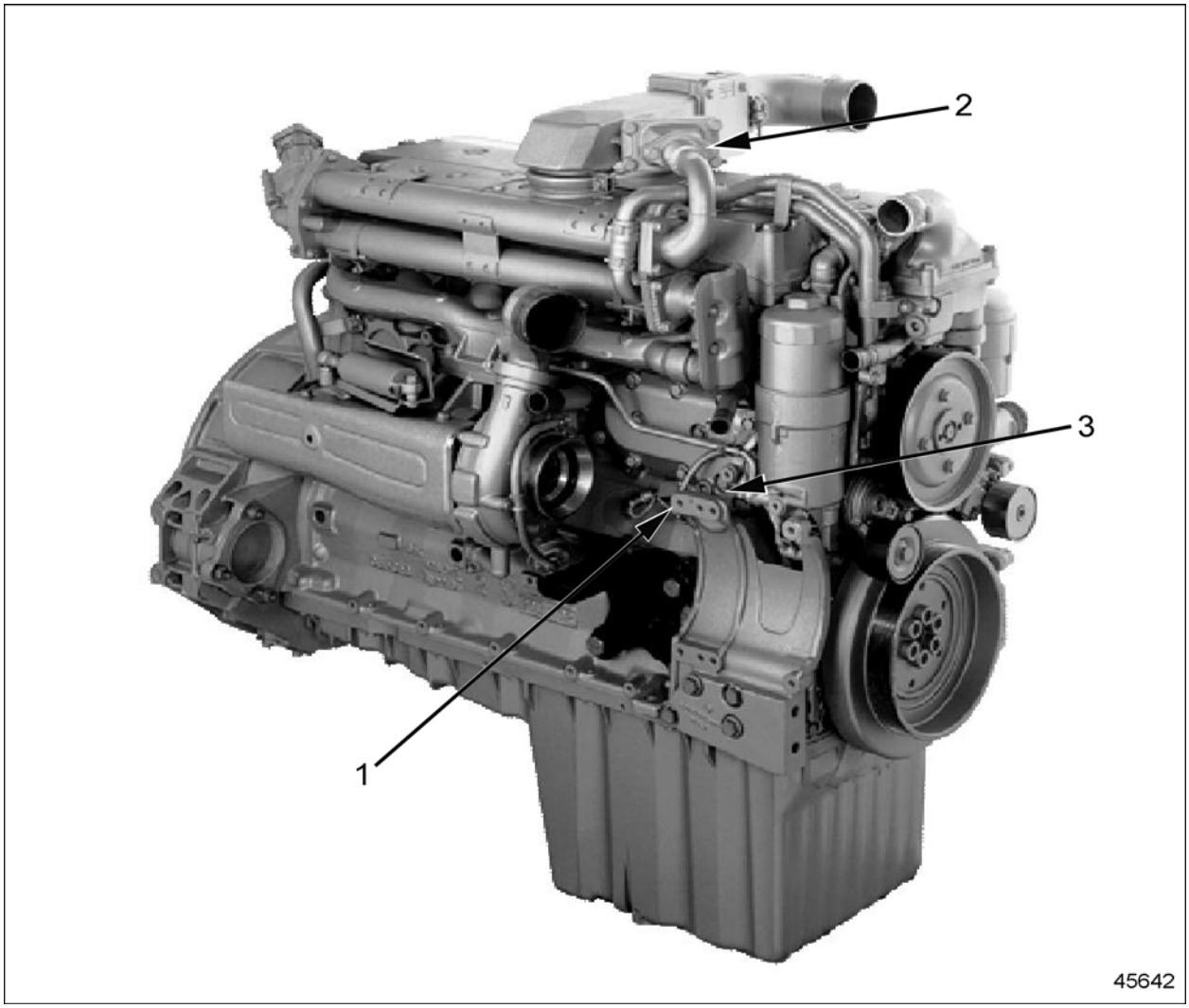

1. Engine Oil Pressure Sensor
2. EGR Temperature Sensor
3. Engine Oil Temperature Sensor

Figure 2-13 MBE 900 EGR Sensor Locations (Left Side)

All information subject to change without notice. (Rev. 5/05)
7SE940 0505 Copyright © 2005 DETROIT DIESEL CORPORATION

The parameters sensed by the electronic control system are as follows:

- ☐ EGR Temperature after EGR Cooler
- ☐ Intake Manifold Pressure
- ☐ Intake Manifold Air Temperature
- ☐ Fuel Temperature
- ☐ Oil Temperature
- ☐ Oil Pressure
- ☐ Coolant Temperature
- ☐ Crankshaft Position
- ☐ Camshaft Position
- ☐ Accelerator Pedal Position
- ☐ Barometric Pressure
- ☐ Modulated EGR Valve Functionality

The controlled functions are as follows:

- ☐ Fuel injection duration
- ☐ Fuel Injection Timing — Beginning of Injection
- ☐ Modulated EGR Valve Position
- ☐ Idle Speed

The DDEC-ECU is one of two electronic controllers that make up the IES that is used in commercial vehicles with the MBE 900 engine. The separation of functions of each controller is such that the DDEC-VCU senses and controls the vehicle-influencing parameters such as cruise control, while the DDEC-ECU covers engine operating parameters as described above.

 Copyright © 2005 DETROIT DIESEL CORPORATION

2.2.1 TURBOCHARGER AND EXHAUST MANIFOLD

The turbocharger used on the MBE 906 and 926 engines features an asymmetrically split double-flow turbine housing. The exhaust manifold on these engines is designed so that exhaust flow from cylinders #1 through #3 is collected separately from exhaust gases for cylinders #4 through #6. The flow from each set of cylinders enters the turbine housing through separate inlets having different flow areas. The smaller inlet, receiving flow from cylinders #1 to #3, causes higher exhaust back pressure increasing the pressure differential driving EGR flow into the intake manifold. See Figure 2-14.

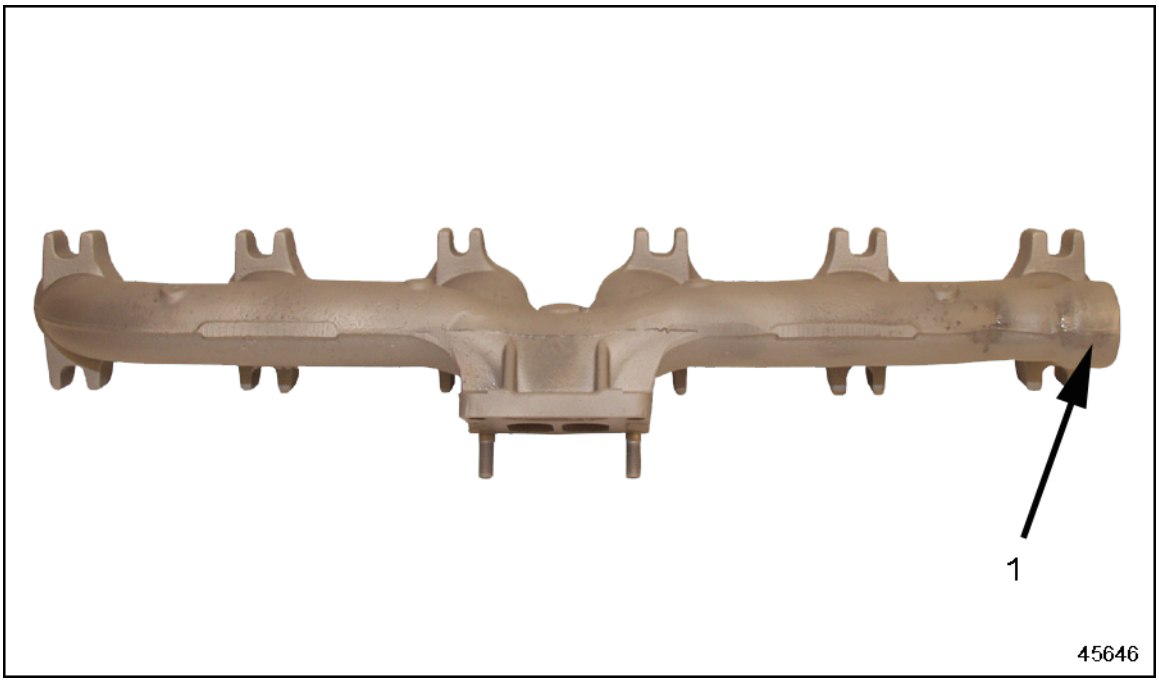

1. EGR Outlet

Figure 2-14 EGR Exhaust Manifold for MBE 906 and 926 Engines

All information subject to change without notice. (Rev. 5/05)
7SE940 0505 Copyright © 2005 DETROIT DIESEL CORPORATION

The turbocharger used on the MBE 904 and 924 engines has a single-flute turbine housing. The exhaust manifold on these engines is designed with one chamber for cylinders #1 through #4 and the EGR outlet is located on the end. See Figure 2-15.

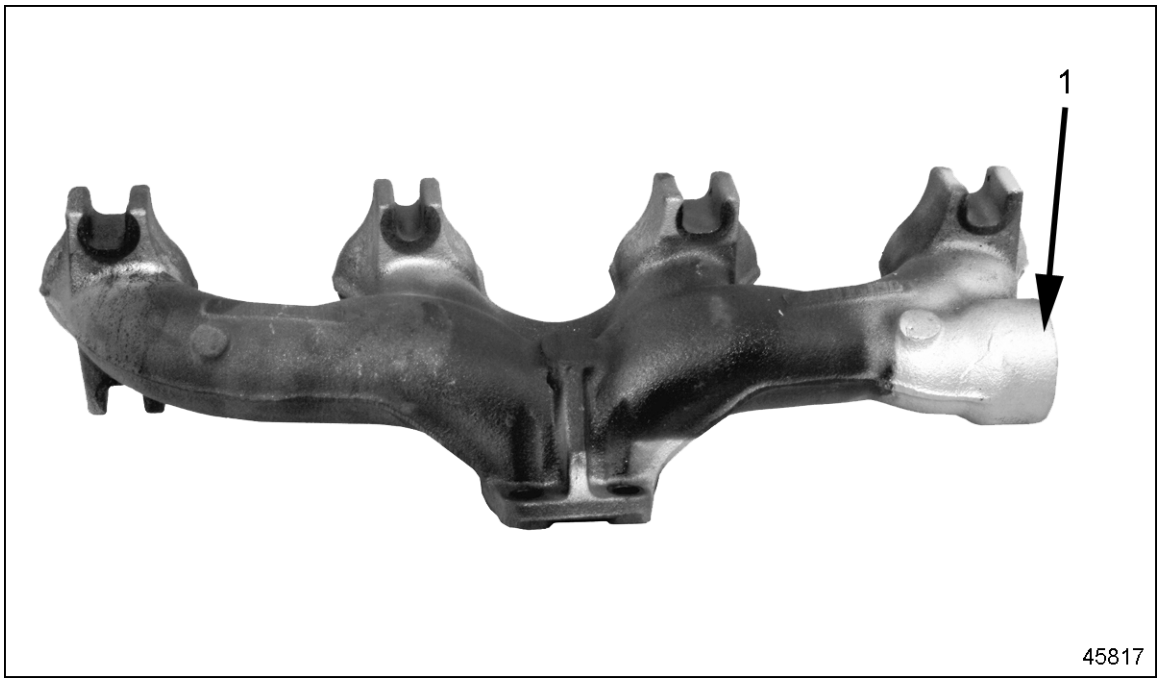

1. EGR Outlet

Figure 2-15 EGR Exhaust Manifold for MBE 904 and 924 Engines

 Copyright © 2005 DETROIT DIESEL CORPORATION

2.2.2 EXHAUST GAS RECIRCULATION SYSTEM

In general, the EGR rate of flow is modulated by the engine control system to optimize NOx and particulate levels in balance with the air fuel ratio using parameters from the various engine sensors.

The MBE 900 EGR system utilizes a combination of two EGR valves to control the exhaust gas flow. The first valve is a rotary plate valve located in the end cover of the EGR cooler. This valve is electro-magnetically actuated to control EGR flow. The actuator angle is determined by a DDEC-ECU-controlled PWM signal. See Figure 2-16.

Figure 2-16 MBE 900 EGR Control Valve

All information subject to change without notice. (Rev. 5/05)
7SE940 0505 Copyright © 2005 DETROIT DIESEL CORPORATION

The second valve, not on the MBE 906, is a reed valve assembly downstream from the EGR cooler. See Figure 2-17. The reed valves ensure that while the EGR control valve is open, there is no reverse airflow from the intake system into the exhaust manifold. When the exhaust manifold pressure is higher than the intake manifold pressure, flow occurs. When the pressures are reversed, the reed valves prevent flow. Back flow could otherwise occur since the average intake manifold pressure is higher than the average exhaust manifold pressure. See Figure 2-18.

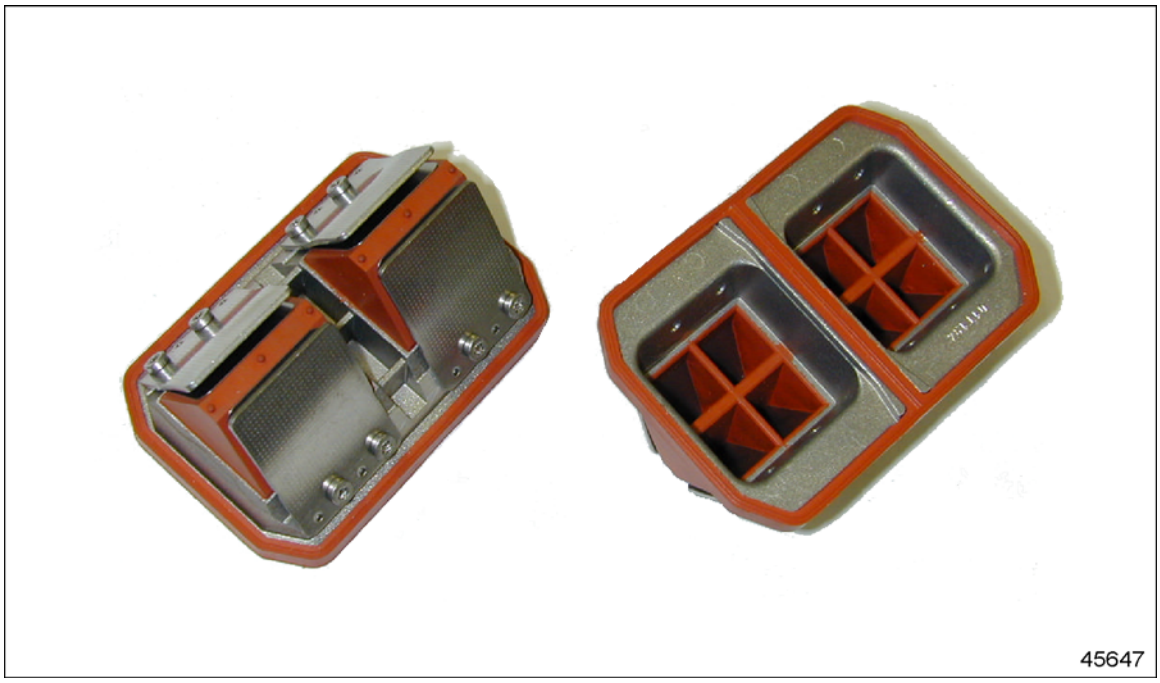

Figure 2-17 Reed Valves

 Copyright © 2005 DETROIT DIESEL CORPORATION

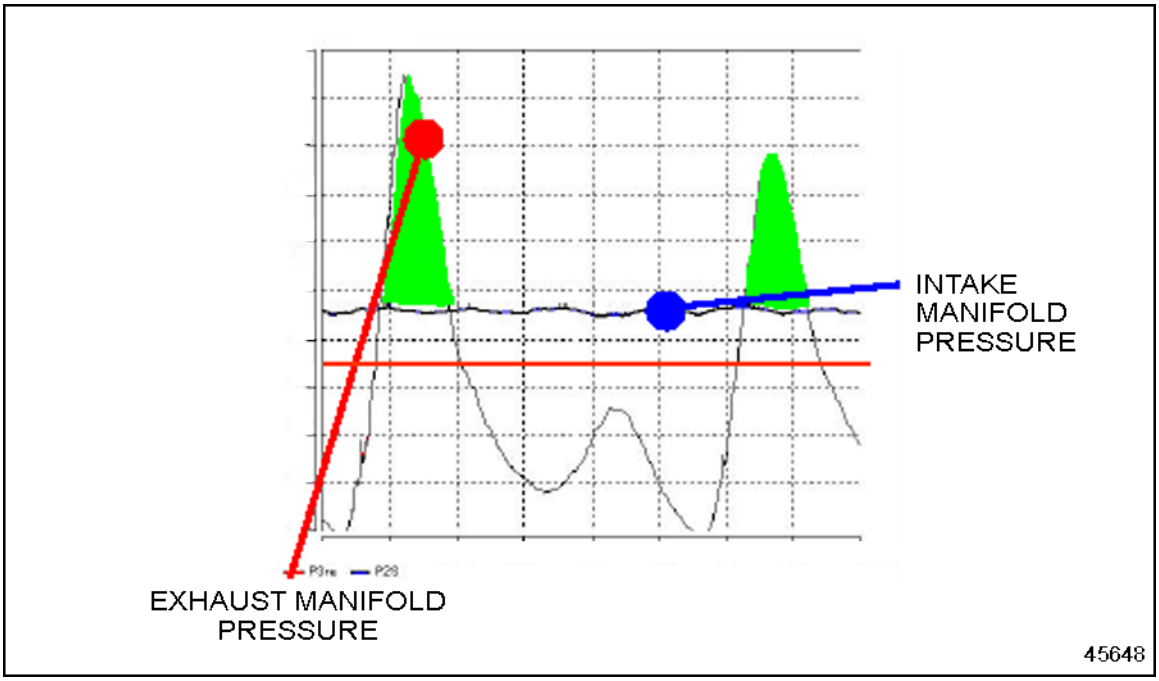

Figure 2-18 MBE EGR System Operating Pressure Characteristics

All information subject to change without notice. (Rev. 5/05)
7SE940 0505 Copyright © 2005 DETROIT DIESEL CORPORATION

3 EGR OPERATION

The EGR is turned off for low engine speeds and high loads. Otherwise, over the broad range of normal operation, the EGR control map values are set at mid-range. The EGR control valve has a practical adjustable range from 5% (closed position) to 85% (position of maximal flow area).

The EGR will operate until conditions are encountered that result in unacceptable operating characteristics. If coolant temperature, barometric pressure, engine speed, and percent torque are below certain limits, the EGR will be disabled. Excessively high charge air temperature will disable the EGR to prevent engine damage.

 Copyright © 2005 DETROIT DIESEL CORPORATION

The following limits apply to the EGR control valve logic:

- ☐ When Engine Coolant Temperature (ECT) is below 18 °C (64 °F), independent of speed and load, the EGR is disabled.
- ☐ When ECT is below 60 °C (140 °F) at low loads, the EGR is disabled to avoid buildup of condensed exhaust products (such as hydrocarbons and soot) in the EGR cooler and other downstream components.
- ☐ When torque is less than 5% of available, the EGR is disabled to avoid diverting exhaust gases when needed for engine braking.
- ☐ When Intake Air Temperatures (IAT) is greater than or equal to 100 °C (212 °F), EGR is disabled.

NOTE:
The engine diagnostics use an IAT greater than or equal to 100 °C (212 °F) as an indication of an EGR cooler failure.

- ☐ At engine speeds lower than 1150 rpm, the EGR is turned off.
- ☐ During starting, the EGR is turned off for better startability.
- ☐ When the air mass flow is insufficient for the speed and load, the EGR is turned off to control smoke.
- ☐ At light loads, the EGR is turned off.
- ☐ The EGR is turned off at about 1740 m (5708 ft).

NOTE:
The DDEC Engine Control Unit uses barometric pressure to estimate altitude. The average barometric pressure for an altitude of 1740 m (5708 ft) is 82.0 kPa (24.2 in. Hg).

- ☐ If the EGR temperature sensor fails, the EGR is shut off.
- ☐ If the self-diagnostics indicate a malfunction of the EGR control valve, the EGR is shut off.

All information subject to change without notice. (Rev. 5/05)
7SE940 0505 Copyright © 2005 DETROIT DIESEL CORPORATION

4 CODES

This section supports the MBE Electronic Controls fault codes recorded during EGR engine operation.

4.1 DIAGNOSTIC TROUBLESHOOTING

A Diagnostic Trouble Code (DTC) is generated when a condition exists that prevents the engine from operating at peak efficiency. The codes can be for engine protection or performance.

4.1.1 SHUTDOWN-ENGINE PROTECTION FAULT CODE = RED

A shutdown-engine protection DTC is activated when a engine operating condition exists that can cause immediate damage to the engine and the engine should be shut down until the condition is corrected to prevent additional damage.

NOTE:
All shutdown-engine protection fault codes must be enabled in the DDEC Vehicle Control Unit (DDEC-VCU) by the user. If not enabled, these codes act as derate-engine protection fault codes.

4.1.2 DERATE-ENGINE PROTECTION FAULT CODE = BLUE

A derate-engine protection DTC is activated when a engine operating condition exists that can cause engine damage if left unattended. The engine slowly looses power so that the operator knows to correct the condition to prevent additional damage. However; if damage is not imminent, the operator can override the shutdown and limp to safety to correct the problem.

4.1.3 PERFORMANCE FAULT CODES = YELLOW

A performance fault code is activated when specific conditions occur within a given amount of time that the calibration determines is not “normal”.

Example: For SID 146, DDEC Engine Control Unit (DDEC-ECU) uses the EGR temperature sensor to monitor EGR temperature.

 Copyright © 2005 DETROIT DIESEL CORPORATION

Conditions that can cause SID 146 include but are not limited to:

- ☐ EGR Temperature above Normal
- ☐ EGR Temperature below Normal
- ☐ Erratic Data
- ☐ EGR Valve not Responding
- ☐ Bad EGR Temperature Sensor

4.2 CODE DESCRIPTIONS

To read codes, use the DDDL. The DDDL will display active and inactive fault codes which are listed in Table 4-1, Table 4-2, Table 4-3, Table 4-4, Table 4-5, and Table 4-6.

- ☐ Red = Shutdown-Engine Protection (When Enabled)
- ☐ Blue = Derate-Engine Protection
- ☐ Yellow= Performance

PID	SID	FMI	Fault Description
45	—	3	Grid Heater — Open Circuit
45	—	4	Grid Heater — Short to Ground
45	—	12	Grid Heater— Defect
45	—	14	Grid Heater — Special Instructions
84	—	0	Vehicle Speed Sensor —Data Valid but Above Normal Range
84	—	1	Vehicle Speed Sensor — Anti-Tamper Fault 1
84	—	2	Vehicle Speed Sensor — Data Erratic
84	—	3	Vehicle Speed Sensor — Open Circuit
84	—	4	Vehicle Speed Sensor — Short to Ground
84	—	5	Vehicle Speed Sensor — Anti-Tamper Fault 2
84	—	6	Vehicle Speed Sensor — Grounded Circuit
84	—	14	Vehicle Speed Sensor — Not Plausible
86	—	14	Adaptive Cruise Control — Special Instructions
91	—	2	Accelerator Pedal — Data Erratic
91	—	3	Accelerator Pedal — Voltage Above Normal or Shorted High
91	—	4	Accelerator Pedal — Voltage Below Normal or Shorted Low

Table 4-1 SAE Codes and Descriptions (Sheet 1 of 6)

All information subject to change without notice. (Rev. 5/05)
7SE940 0505 Copyright © 2005 DETROIT DIESEL CORPORATION

PID	SID	FMI	Fault Description
94	—	0	Fuel Pressure — High
94	—	1	Fuel Pressure — Low
94	—	2	Fuel Pressure Sensor — Data Not Correct
94	—	3	Fuel Pressure Sensor — Open Circuit
94	—	4	Fuel Pressure Sensor — Short to Ground
94	—	14	Fuel Pressure Sensor — Measured Data Not Correct
95	—	0	Fuel Restriction — High
95	—	3	Fuel Restriction — Circuit Failed High
95	—	4	Fuel Restriction — Circuit Failed Low
98	—	0	Engine Oil Level — High
98	—	1	Engine Oil Level — Low
98	—	2	Engine Oil Level — Too High or Too Low
98	—	3	Engine Oil Level — Voltage High
98	—	4	Engine Oil Level — Voltage Low
98	—	5	Engine Oil Level — Open Circuit
98	—	14	Engine Oil Level — Data Valid but Very Low
100	—	1	Engine Oil Pressure — Low
100	—	2	Engine Oil Pressure Sensor — Data Erratic
100	—	3	Engine Oil Pressure Sensor— Open Circuit
100	—	4	Engine Oil Pressure Sensor — Short to Ground
100	—	14	Engine Oil Pressure — Too Low
102	—	0	Intake Manifold Pressure — High
102	—	1	Intake Manifold Pressure — Low
102	—	2	Intake Manifold Pressure Sensor — Data Erratic
102	—	3	Intake Manifold Pressure Sensor — Open Circuit
102	—	4	Intake Manifold Pressure Sensor — Short to Ground
102	—	13	Intake Manifold Pressure — Out of Range
103	—	7	Turbocharger 1 — No Revolution
103	—	14	Turbocharger 2 — No Revolution
105	—	0	Intake Air Temperature — High
105	—	3	Intake Air Temperature Sensor — Open Circuit
105	—	4	Intake Air Temperature Sensor — Short to Ground
107	—	0	Air Filter Restriction — High
107	—	3	Air Filter Sensor — Open Circuit
107	—	4	Air Filter Sensor — Short to Ground
110	—	0	Engine Coolant Temperature — High
110	—	3	Engine Coolant Temperature Sensor — Open Circuit
110	—	4	Engine Coolant Temperature Sensor — Short to Ground
110	—	14	Engine Coolant Temperature — Very High

Table 4-2 SAE Codes and Descriptions (Sheet 2 of 6)

 Copyright © 2005 DETROIT DIESEL CORPORATION

PID	SID	FMI	Description
111	—	1	Engine Coolant Level — Low
111	—	3	Engine Coolant Level Sensor — Open Circuit
111	—	4	Engine Coolant Level Sensor — Short to Ground
111	—	14	Engine Coolant Level — Very Low
148	—	0	Turbo Compressor Outlet Temperature — High
148	—	1	Turbo Compressor Outlet Temperature — Low
158	—	0	Switched Battery Voltage — High System Voltage
158	—	1	Switched Battery Voltage — Low System Voltage
158	—	2	Switched Battery Voltage — Unmatched DDEC-ECU and DDEC-VCU Signals
168	—	3	Battery Voltage — High
168	—	4	Battery Voltage — Low
174	—	3	Supply Fuel Temperature Sensor — Open Circuit
174	—	4	Supply Fuel Temperature Sensor — Short to Ground
175	—	3	Engine Oil Temperature Outside Of Normal Operating Range — Open Circuit
175	—	4	Engine Oil Temperature Outside Of Normal Operating Range — Short to Ground
190	—	0	Engine Speed — High
404	—	0	Turbo Compressor Outlet Temperature — High
404	—	1	Turbo Compressor Outlet Temperature — Low
—	1	3	Injector Cylinder #1 — Shorted High
—	1	4	Injector Cylinder #1 — Short to Ground
—	1	5	Injector Cylinder #1 — Current Below Normal or Open Circuit
—	1	6	Injector Cylinder #1 — Shorted Circuit
—	1	7	Injector Cylinder #1 — No Plunger
—	1	12	Injector Cylinder #1 — Idle Smoothness Governor at Limit
—	1	14	Injector Cylinder #1 — Single Cylinder Correction at Limit
—	2	3	Injector Cylinder #2 — Shorted High
—	2	4	Injector Cylinder #2 — Short to Ground
—	2	5	Injector Cylinder #2 — Current Below Normal or Open Circuit
—	2	6	Injector Cylinder #2 — Shorted Circuit
—	2	7	Injector Cylinder #2 — No Plunger
—	2	12	Injector Cylinder #2 — Idle Smoothness Governor at Limit
—	2	14	Injector Cylinder #2 — Single Cylinder Correction at Limit
—	3	3	Injector Cylinder #3 — Shorted High
—	3	4	Injector Cylinder #3 — Short to Ground
—	3	5	Injector Cylinder #3 — Current Below Normal or Open Circuit
—	3	6	Injector Cylinder #3 — Shorted Circuit
—	3	7	Injector Cylinder #3 — No Plunger

Table 4-3 SAE Codes and Descriptions (Sheet 3 of 6)

All information subject to change without notice. (Rev. 5/05)
7SE940 0505 Copyright © 2005 DETROIT DIESEL CORPORATION

PID	SID	FMI	Description
—	3	12	Injector Cylinder #3 — Idle Smoothness Governor at Limit
—	3	14	Injector Cylinder #3 — Single Cylinder Correction at Limit
—	4	3	Injector Cylinder #4 — Shorted High
—	4	4	Injector Cylinder #4 — Short to Ground
—	4	5	Injector Cylinder #4 — Current Below Normal or Open Circuit
—	4	6	Injector Cylinder #4 — Shorted Circuit
—	4	7	Injector Cylinder #4 — No Plunger
—	4	12	Injector Cylinder #4 — Idle Smoothness Governor at Limit
—	4	14	Injector Cylinder #4 — Single Cylinder Correction at Limit
—	5	3	Injector Cylinder #5 — Shorted High
—	5	4	Injector Cylinder #5 — Short to Ground
—	5	5	Injector Cylinder #5 — Current Below Normal or Open Circuit
—	5	6	Injector Cylinder #5 — Shorted Circuit
—	5	7	Injector Cylinder #5 — No Plunger
—	5	12	Injector Cylinder #5 — Idle Smoothness Governor at Limit
—	5	14	Injector Cylinder #5 — Single Cylinder Correction at Limit
—	6	3	Injector Cylinder #6 — Shorted High
—	6	4	Injector Cylinder #6 — Short to Ground
—	6	5	Injector Cylinder #6 — Current Below Normal or Open Circuit
—	6	6	Injector Cylinder #6 — Shorted Circuit
—	6	7	Injector Cylinder #6 — No Plunger
—	6	12	Injector Cylinder #6 — Idle Smoothness Governor at Limit
—	6	14	Injector Cylinder #6 — Single Cylinder Correction at Limit
—	7	3	Injector Cylinder #7 — Shorted High
—	7	4	Injector Cylinder #7 — Short to Ground
—	7	5	Injector Cylinder #7 — Current Below Normal or Open Circuit
—	7	6	Injector Cylinder #7 — Shorted Circuit
—	7	7	Injector Cylinder #7 — No Plunger
—	7	12	Injector Cylinder #7 — Idle Smoothness Governor at Limit
—	7	14	Injector Cylinder #7 — Single Cylinder Correction at Limit
—	8	3	Injector Cylinder #8 — Shorted High
—	8	4	Injector Cylinder #8 — Short to Ground
—	8	5	Injector Cylinder #8 — Current Below Normal or Open Circuit
—	8	6	Injector Cylinder #8 — Shorted Circuit
—	8	7	Injector Cylinder #8 — No Plunger
—	8	12	Injector Cylinder #8 — Idle Smoothness Governor at Limit
—	8	14	Injector Cylinder #8 — Single Cylinder Correction at Limit

Table 4-4 SAE Codes and Descriptions (Sheet 4 of 6)

 Copyright © 2005 DETROIT DIESEL CORPORATION

PID	SID	FMI	Description
—	21	1	Crankshaft Position Sensor — Signal Voltage Too Low
—	21	3	Crankshaft Position Sensor — Open Circuit
—	21	4	Crankshaft Position Sensor — Short to Ground
—	21	7	Crankshaft Position Sensor — No Match of Camshaft and Crankshaft Signals
—	21	8	Crankshaft Position Sensor — Time Out
—	21	14	Crankshaft Position Sensor — Pins Swapped
—	29	2	Remote Accelerator Pedal — Supply Out of Range
—	29	3	Remote Accelerator Pedal — Supply Open Load
—	29	4	Remote Accelerator Pedal — Short to Ground
—	38	0	Grid Heater — No Increase of Intake Manifold Air Temperature
—	38	1	Grid Heater — Relay Closed
—	38	2	Grid Heater — Relay Open
—	38	3	Grid Heater — Open Circuit
—	38	4	Grid Heater — Short to Ground
—	39	3	Engine Starter Relay — Shorted High
—	39	5	Engine Starter Relay — Open Circuit
—	39	6	Engine Starter Relay — Short to Ground
—	39	7	Engine Starter Relay — Starter Does Not Engage
—	39	14	Engine Starter Relay — Relay Jammed
—	43	3	Gear Output 1 — Open Circuit
—	43	4	Gear Output 1 — Short to Ground
—	44	3	Gear Output 2 — Open Circuit
—	44	4	Gear Output 2 — Short to Ground
—	53	3	Aux PWM Driver #5 — Shorted High
—	53	4	Aux PWM Driver #5 — Short to Ground
—	53	11	Aux PWM Driver #5 — Bank 2 Shorted
—	54	3	Aux PWM Driver #6 — Open Circuit
—	56	3	Accessory Bus Shutdown — Short to Battery
—	56	4	Accessory Bus Shutdown — Open Circuit or Short to Ground
—	57	3	Aux PWM Driver #1 — Shorted High
—	57	4	Aux PWM Driver #1 — Short to Ground
—	57	5	Aux PWM Driver #1 — Open Circuit
—	57	6	Aux PWM Driver #1 — High Side Line Short to Ground
—	58	3	Aux PWM Driver #2 — Shorted High
—	58	5	Aux PWM Driver #2 — Open Circuit
—	58	6	Aux PWM Driver #2 — High Side Line Short to Ground
—	59	3	Aux PWM Driver #3 — Shorted High
—	59	5	Aux PWM Driver #3 — Open Circuit
—	59	6	Aux PWM Driver #3 — High Side Line Short to Ground

Table 4-5 SAE Codes and Descriptions (Sheet 5 of 6)

All information subject to change without notice. (Rev. 5/05)
7SE940 0505 Copyright © 2005 DETROIT DIESEL CORPORATION

PID	SID	FMI	Description
—	60	3	Aux PWM Driver #4 — Shorted High
—	60	5	Aux PWM Driver #4 — Open Circuit
—	60	6	Aux PWM Driver #4 — High Side Line Short to Ground
—	64	3	Camshaft Position Sensor — Open Circuit
—	64	4	Camshaft Position Sensor — Short to Ground
—	64	8	Camshaft Position Sensor — Time Out
—	64	14	Camshaft Position Sensor — Pins Swapped
—	71	5	Grid Heater Valve — Open Circuit
—	71	6	Grid Heater Valve — Short to Ground
—	123	7	Switched Battery Voltage — High
—	146	0	EGR System — Temperature above Normal
—	146	1	EGR System — Temperature below Normal
—	146	2	EGR System — Data Erratic
—	146	7	EGR System — EGR Valve not Responding
—	146	12	EGR System — Bad Component
—	151	4	Oil Separator — Short to Ground
—	151	14	Oil Separator — Defect
—	159	0	Fan Speed— Time Out
—	216	14	Adaptive Cruise Control — Special Instructions
—	230	1	Idle Validation Switch — Wired Backwards
—	230	5	Idle Validation Switch — Open Circuit
—	230	12	Idle Validation Switch — Damaged or Signals Not Matching
—	231	2	J1939 Data Link — Message Missing
—	232	2	Accelerator Pedal Supply Voltage — Data Erratic
—	232	3	Accelerator Pedal Supply Voltage — Above Normal
—	232	3	Accelerator Pedal Supply Voltage — Below Normal
—	233	0	Anti-Theft — Failure or Incorrect Programming
—	233	2	Anti-Theft — No Additional Key Can Be Learned
—	233	9	Anti-Theft — No Transponder Code On Hardwire
—	233	11	Anti-Theft — Calibration Error
—	233	12	DDEC-ECU — Failure or Incorrect Programming
—	233	14	DDEC-ECU — Calibration Error
—	242	12	Cruise Control SET/COAST Switch — Both Contacts Closed at the Same Time
—	243	12	Cruise Control RES/ACC Switch — Both Contacts Closed at the Same Time
—	248	2	Propriety Data Link — No Communication Between DDEC-VCU and DDEC-ECU
—	248	14	Propriety Data Link — Communication Failure
—	253	9	Engine Brake Calibration —Parameters Invalid
—	254	12	DDEC-VCU — Internal Error

Table 4-6 SAE Codes and Descriptions (Sheet 6 of 6)

 Copyright © 2005 DETROIT DIESEL CORPORATION

4.3 TROUBLESHOOTING OF PERFORMANCE CODES

Performance codes indicate the detection of mechanical failures by the DDEC system. The response would be to troubleshoot a PID or SID as follows.

WARNING:

PERSONAL INJURY

To avoid injury, use care when working around moving belts and rotating parts on the engine.

WARNING:

PERSONAL INJURY

Diesel engine exhaust and some of its constituents are known to the State of California to cause cancer, birth defects, and other reproductive harm.

- ☐ **Always start and operate an engine in a well ventilated area.**
- ☐ **If operating an engine in an enclosed area, vent the exhaust to the outside.**
- ☐ **Do not modify or tamper with the exhaust system or emission control system.**

NOTE:
The EGR systems in the MBE 4000 and MBE 900 engines contain fewer components and use simpler control logic than the other series of Detroit Diesel engines. Therefore, using the DTCs should be the **primary** means of solving troubleshooting problems. The Detroit Diesel Diagnostic Link (DDDL) snapshots are not as dynamic on the MBE engines and are usually just used to supplement the DTCs when troubleshooting.

All information subject to change without notice. (Rev. 5/05)
7SE940 0505 Copyright © 2005 DETROIT DIESEL CORPORATION

4.3.1 DESCRIPTION OF SID 146

SID 146 indicates that during engine operation, the DDEC-ECU received EGR system parameters outside their normal range resulting in one or more of the following fault codes:

- ☐ EGR Temperature above Normal (146/0), refer to section 4.3.2.1.
- ☐ EGR Temperature below Normal (146/1), refer to section 4.3.2.2.
- ☐ Data Erratic (146/2), refer to section 4.3.2.3.
- ☐ EGR Valve not Responding (146/7), refer to section 4.3.2.4.
- ☐ Bad Component (146/12), refer to section 4.3.2.5.

 Copyright © 2005 DETROIT DIESEL CORPORATION

4.3.2 TROUBLESHOOTING SID 146

Data for the EGR temperature sensor is routed through pins 28 and 22 of the 55-pin connector. Control of the EGR valve is routed through pins 11, 42, and 50 of the 55-pin connector. See Figure 4-1.

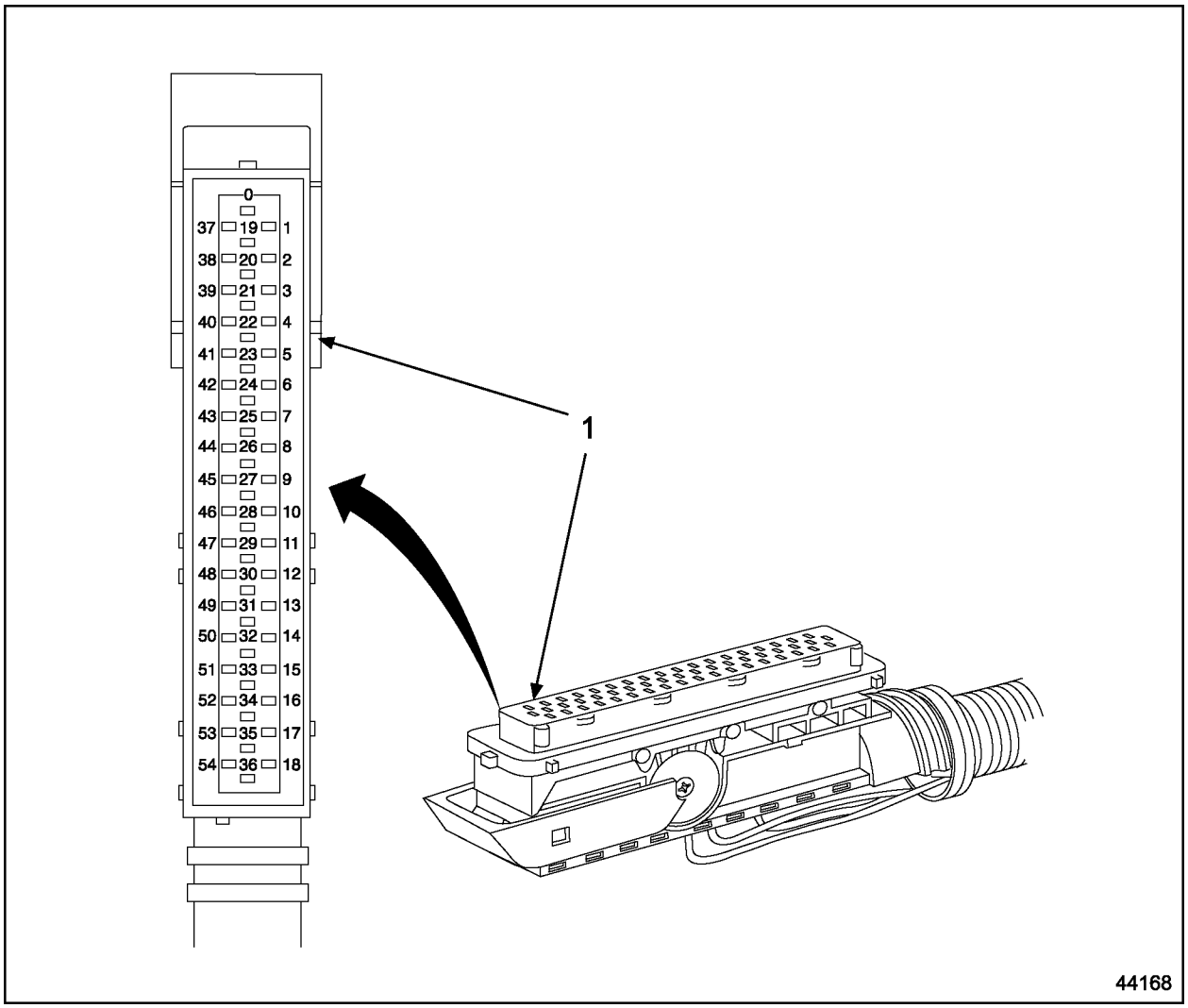

1. 55-Pin Connector

Figure 4-1 Pin Locations on 55-Pin Connector

The following procedures will troubleshoot SID 146.

All information subject to change without notice. (Rev. 5/05)
7SE940 0505 Copyright © 2005 DETROIT DIESEL CORPORATION

4.3.2.1 146/0 — EGR Temperature above Normal

Perform the following steps to troubleshoot EGR temperature above normal:

1. Disconnect the EGR temperature sensor connector and check for active fault codes. See Figure 4-2.

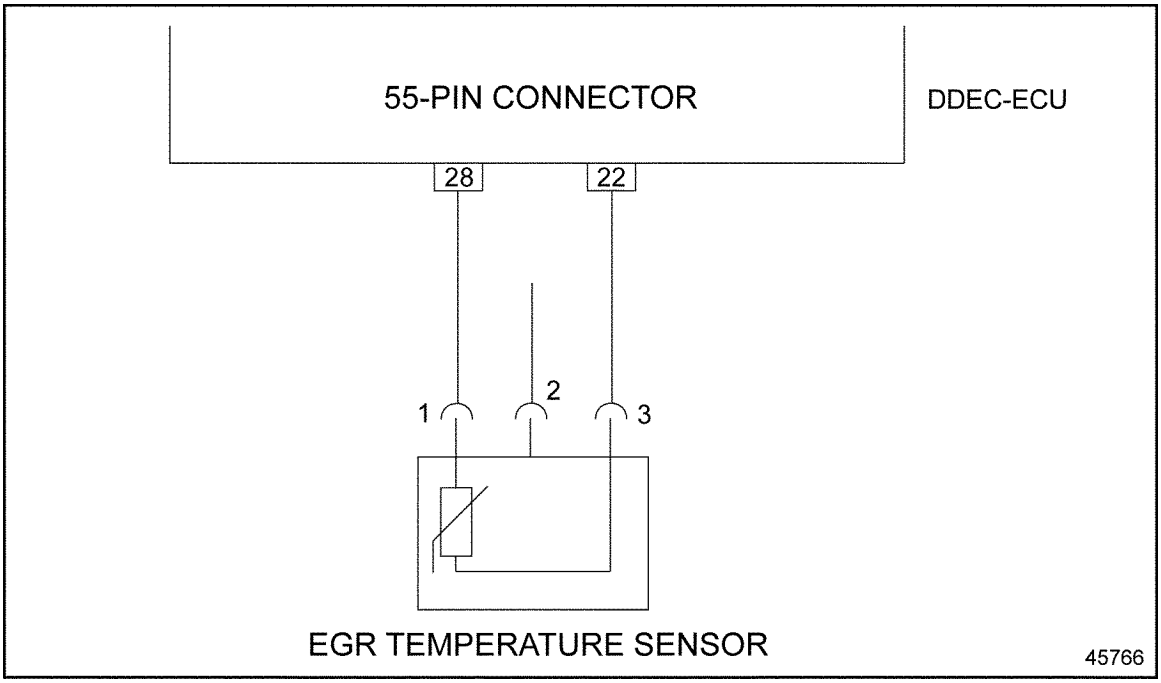

Figure 4-2 EGR Temperature Sensor Pins and 55-Pin Connector Wires

   [a] If fault code s 146/0 is the only active code, repair the short between wires for pins 28 to 1 and pins 22 to 3. Erase the fault code memory and verify repairs. Refer to section 4.3.2.6.

   [b] If fault code s 146/1 is active code, replace the EGR temperature sensor. Erase the fault code memory and verify repairs. Refer to section 4.3.2.6.

   [c] If fault code s 146/0 is still active code, go to step 2.

2. Bridge pin 1 of the EGR temperature sensor connector to ground and check for active fault codes. See Figure 4-2.

   [a] If fault code s 146/0 is active, repair open circuit in wire between pin 28 of the 55-pin connector and pin 1 of sensor connector.

   [b] If fault code s 146/0 is no longer active, erase fault code memory and verify repairs. Refer to section 4.3.2.6.

   [c] If fault code s 146/0 is still active, go to step 3.

 Copyright © 2005 DETROIT DIESEL CORPORATION

3. Measure the resistance between pin 22 of the 55-pin connector and pin 3 of the EGR temperature sensor connector. See Figure 4-2.
   [a] If resistance is greater than 3 Ω, repair open circuit in wire between pin 22 of the 55-pin connector and pin 3 of sensor connector.
   [b] If resistance is less than 3 Ω, check all contacts and connections. If any corrosion is evident, remove it.
   [c] If fault code s 146/0 is no longer active, erase fault code memory and verify repairs. Refer to section 4.3.2.6.
   [d] If fault code s 146/0 is still active, go to step 4.
4. Check coolant usage.
   [a] If coolant usage indicates a leak, perform an *EGR Cooler Inspection.* Refer to appendix C, Service Information Letter 04 **TS** - 38. Clean and replace parts as indicated by inspection. Erase fault code memory and verify repairs. Refer to section 4.3.2.6.
   [b] If coolant usage is normal, go to step 5.
5. Check the following vehicle components for proper function. Repair or replace as required. Refer to the appropriate OEM Vehicle service manual as required.
   [a] Check airflow through the CAC and radiator.
   [b] Check fan belt condition for possible slippage.
   [c] Check the fan shroud for proper position.
   [d] Check the radiator hoses for collapsing.
   [e] Check the viscous fan for proper operation.
   [f] If fault code s 146/0 is no longer active, erase fault code memory and verify repairs. Refer to section 4.3.2.6.
   [g] If fault code s 146/0 is still active, go to step 6.
6. Check for damage to the reed valves as follows:
   [a] Look for open valves (damaged or stuck). Replace valves as required.
   [b] Look for heavy soot deposits on the valves. If necessary, clean valves. Erase fault code memory and verify repairs. Refer to section 4.3.2.6.
   [c] If fault code s 146/0 is still active, contact the Detroit Diesel Customer Support Center at 313-592-5800.

All information subject to change without notice. (Rev. 5/05)
7SE940 0505 Copyright © 2005 DETROIT DIESEL CORPORATION

4.3.2.2 146/1 — EGR Temperature below Normal

Perform the following steps to troubleshoot EGR temperature below normal:

1. Measure the resistance between pins 1 and 3 on the EGR temperature sensor. See Figure 4-3.

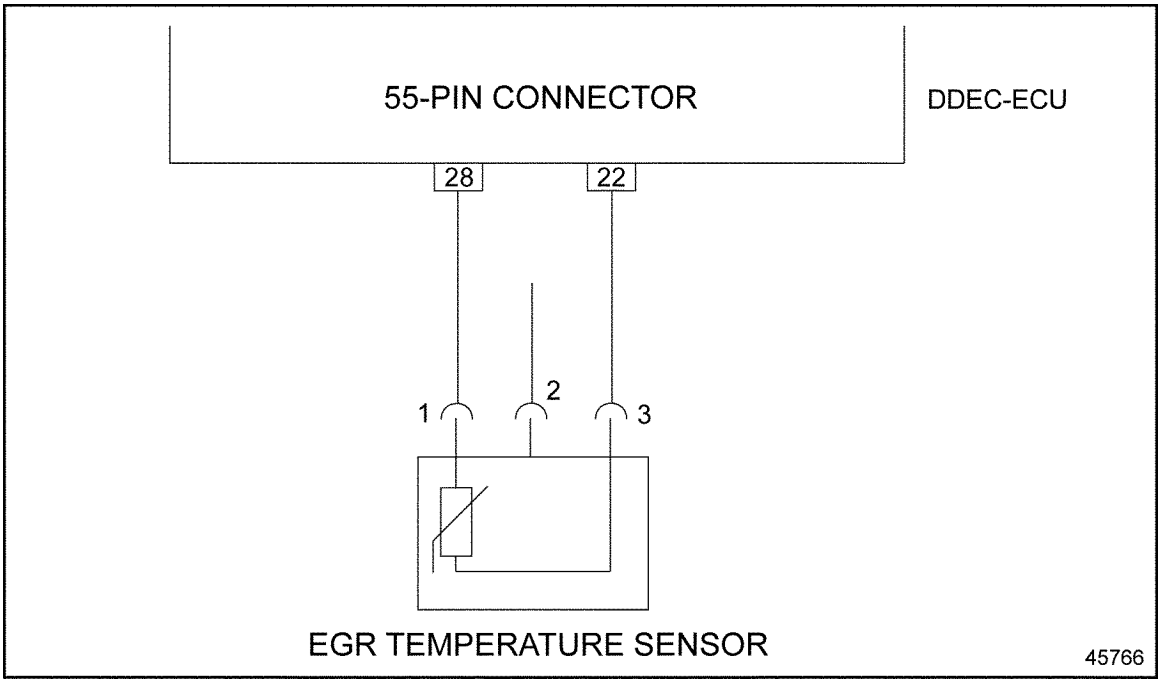

Figure 4-3 EGR Temperature Sensor Pins and 55-Pin Connector Wires

   [a] If resistance is less than 3 Ω, replace the EGR temperature sensor. Erase the fault code memory and verify repairs. Refer to section 4.3.2.6.

   [b] If resistance is greater than 3 Ω, go to step 2.

2. Measure the resistance between pin 28 of the 55-pin connector and pin 1 of the EGR temperature sensor connector. See Figure 4-3.

   [a] If resistance is less than 3 Ω, repair the short in the wire. Erase the fault code memory and verify repairs. Refer to section 4.3.2.6.

   [b] If resistance is greater than 3 Ω, go to step 3.

3. Measure the resistance between pin 22 of the 55-pin connector and pin 3 of the EGR temperature sensor connector. See Figure 4-3.

   [a] If resistance is less than 3 Ω, repair the short in the wire. Erase the fault code memory and verify repairs. Refer to section 4.3.2.6.

   [b] If resistance is greater than 3 Ω, go to step 4.

 Copyright © 2005 DETROIT DIESEL CORPORATION

4. Inspect the EGR control valve for mechanical problems.
   [a] Ensure the valve moves freely between the *open* and *closed* positions. Ensure the springs return the valve to the *closed* position. If required, replace the valve. Erase the fault code memory and verify repairs. Refer to section 4.3.2.6.
   [b] If the valve functions properly, go to step 5 for the MBE 4000 engine and step 6 for the MBE 900 engine.
5. For the MBE 4000 engine, inspect the EGR shutoff valve.
   [a] Ensure the valve moves freely between the *open* and *closed* positions. Ensure the valve stays in the *open* position when no air pressure is applied. If required, replace the valve. Erase the fault code memory and verify repairs. Refer to section 4.3.2.6.
   [b] If the valve functions properly, go to step 6.
6. Check for damage to the reed valves as follows:
   [a] Look for open valves (damaged or stuck). Replace valves as required.
   [b] Look for heavy soot deposits on the valves. If necessary, clean valves. Erase fault code memory and verify repairs. Refer to section 4.3.2.6.
   [c] If the reed valve is undamaged, go to step 7.
7. Visually inspect the EGR cooler for damage or leaking.
   [a] If the cooler is damaged and leaking, repair or replace cooler as required. Erase the fault code memory and verify repairs. Refer to section 4.3.2.6.
   [b] If fault code s 146/1 is still active, contact the Detroit Diesel Customer Support Center at 313-592-5800.

All information subject to change without notice. (Rev. 5/05)
7SE940 0505 Copyright © 2005 DETROIT DIESEL CORPORATION

4.3.2.3 146/2 — Erratic Data

Perform the following steps to resolve erratic EGR data:

1. Check active codes.
   [a] If fault codes s 146/2 and s 146/0 are active at the same time, refer to section 4.3.2.1.
   [b] If fault code s 146/2 is the only active code, go to step 2.
2. Check the resistance between pin 42 of the 55-pin connector and pin 2 of the EGR valve connector. See Figure 4-4.

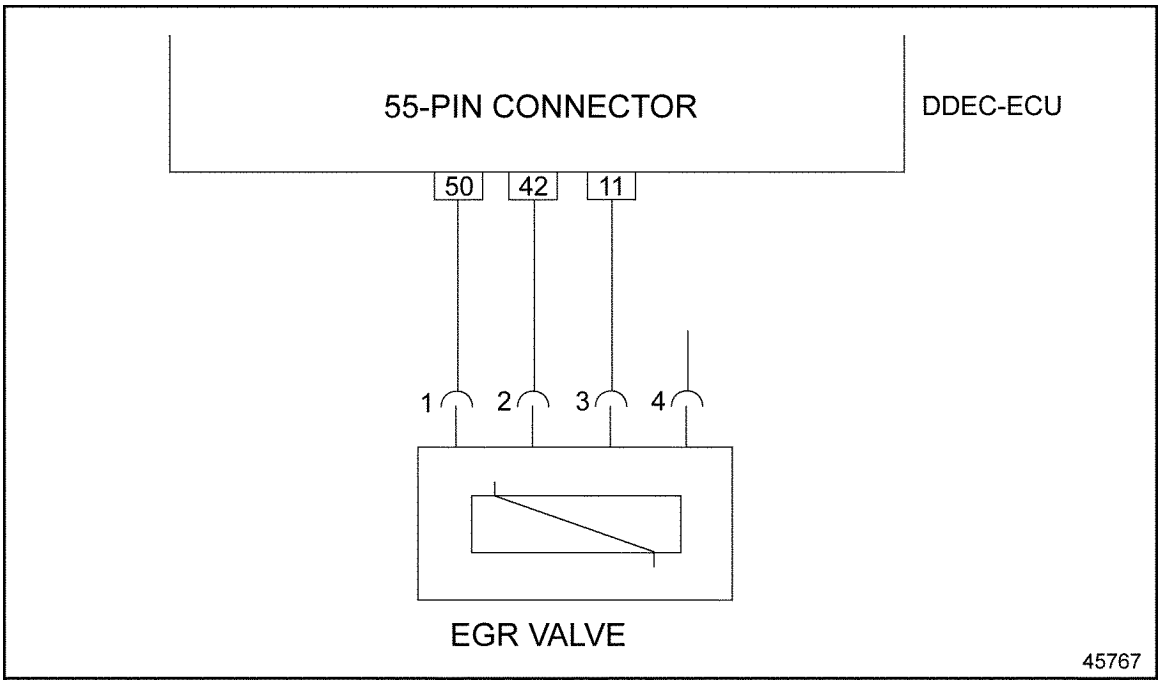

Figure 4-4 EGR Valve Wiring Diagram

   [a] If the resistance is greater than 3 Ω, repair open circuit in wire between pin 42 of the 55-pin connector and pin 2 of the EGR valve connector. Erase fault code memory and verify repairs. Refer to section 4.3.2.6.
   [b] If the resistance is less than 3 Ω, go to step 3.
3. Bridge pin 3 of the EGR valve connector to ground and check for active fault codes. See Figure 4-4.
   [a] If fault code s 146/2 is no longer active, repair open circuit in wire between pin 11 of the 55-pin connector and pin 3 of the EGR valve connector. If fault code s 146/2 is no longer active, erase fault code memory and verify repairs. Refer to section 4.3.2.6.
   [b] If fault code s 146/2 is still active, go to step 4.

 Copyright © 2005 DETROIT DIESEL CORPORATION

4. Check the resistance between pin 50 of the 55-pin connector and pin 1 of the EGR valve connector. See Figure 4-4.

   [a] If the resistance is greater than 3 Ω, repair the open circuit in the wire between pin 50 of the 55-pin connector and pin 1 of the EGR valve connector. If fault code s 146/2 is no longer active, erase fault code memory and verify repairs. Refer to section 4.3.2.6.

   [b] If fault code s 146/2 is still active, go to step 5.

5. Check all contacts and connections. Remove corrosion as required. Check for active fault codes.

   [a] If fault code s 146/2 is no longer active, erase fault code memory and verify repairs. Refer to section 4.3.2.6.

   [b] If fault code s 146/2 is still active, go to step 6.

6. Check coolant usage.

   [a] If coolant usage indicates a leak, perform an *EGR Cooler Inspection.* Refer to appendix C, Service Information Letter 04 **TS** - 38. Clean and replace parts as indicated by inspection. Erase fault code memory and verify repairs. Refer to section 4.3.2.6.

   [b] If coolant usage is normal and fault code s 146/2 is still active, contact the Detroit Diesel Customer Support Center at 313-592-5800.

All information subject to change without notice. (Rev. 5/05)
7SE940 0505 Copyright © 2005 DETROIT DIESEL CORPORATION

4.3.2.4 146/7 — EGR Valve not Responding

Perform the following steps to resolve an EGR valve not responding:

1. Check active fault codes.
   [a] If fault codes s 146/7 and s 146/2 are active at the same time, refer to section 4.3.2.3.
   [b] If only fault code s 146/7 is active, go to step 2.
2. Check the engine harness wiring from the 55-pin connector to the EGR valve connector. See Figure 4-5.

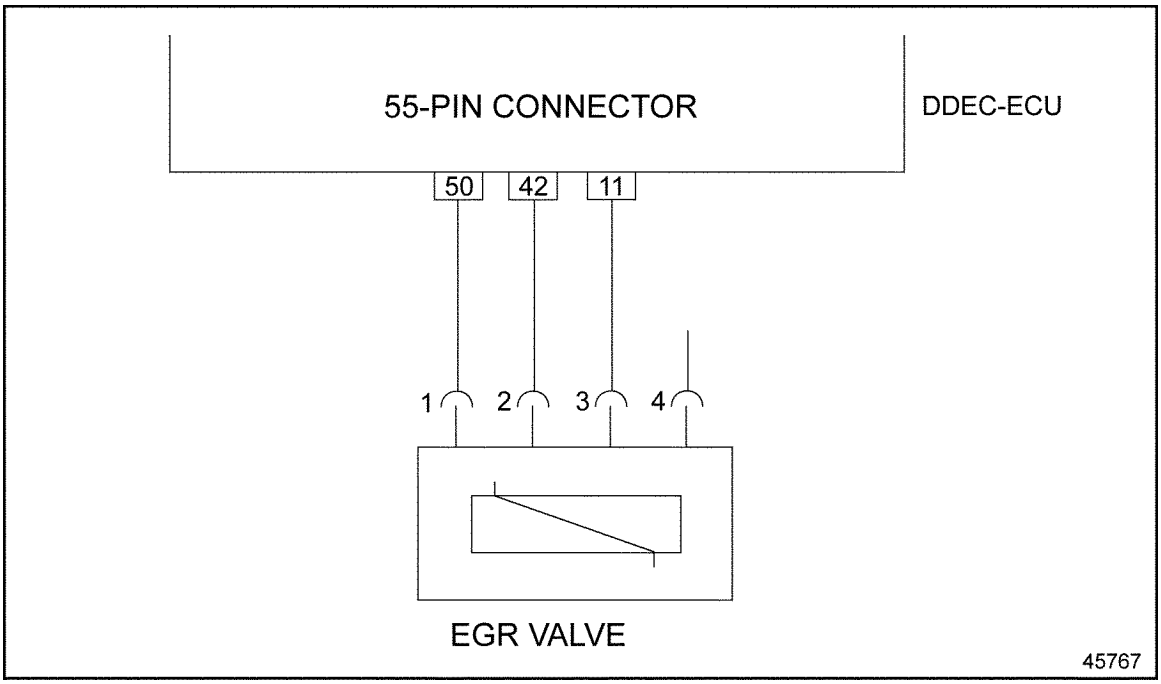

Figure 4-5 EGR Valve Wiring Diagram

[a] If the resistance less than 3 Ω for wires from pins 50 to 1, pins 42 to 2, or pins 11 to 3, then there is a short in the wire. Repair the short and verify repairs. Refer to section 4.3.2.6.

[b] If the resistance is greater than 10 kΩ for wires from pins 50 to 1, pins 42 to 2, or pins 11 to 3, then there is a open circuit in the wire. Repair the open circuit and verify repairs. Refer to section 4.3.2.6.

[c] Check all contacts and connections. Remove corrosion as required. If fault code s 146/7 is still active, go to step 3.

 Copyright © 2005 DETROIT DIESEL CORPORATION

3. Check the EGR temperature sensor. See Figure 4-6.

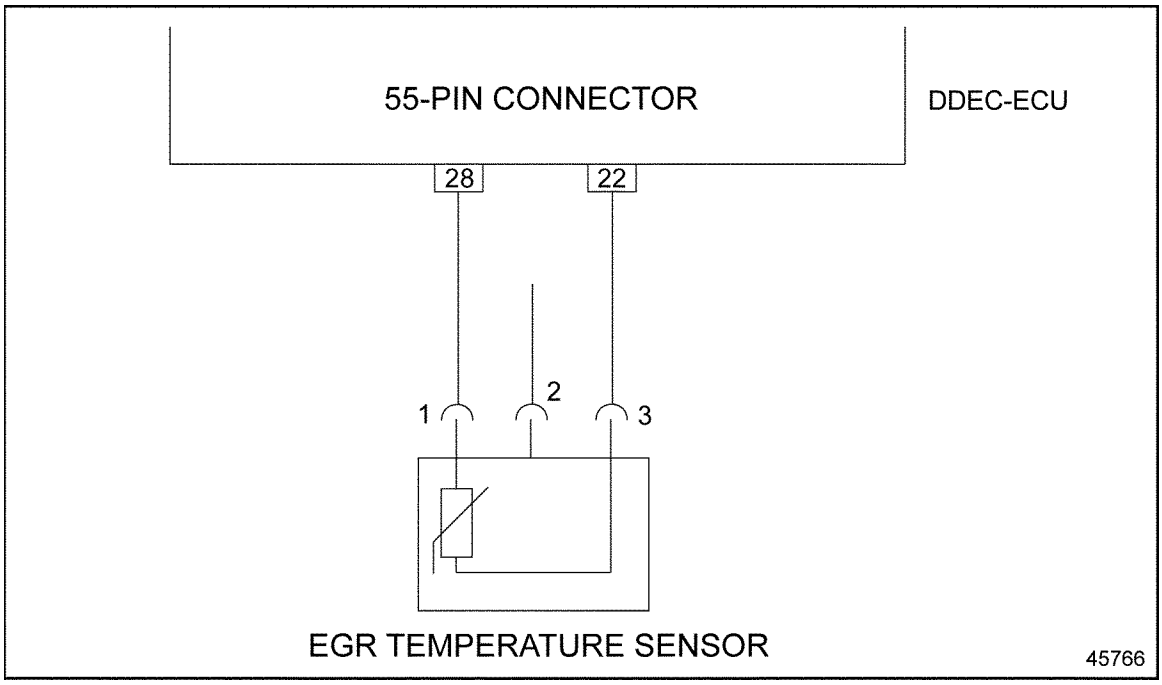

Figure 4-6 EGR Temperature Sensor Pins and 55-Pin Connector Wires

[a] Measure the resistance between pins 1 and 3 on the EGR temperature sensor. If resistance is less than 3 Ω, replace the EGR temperature sensor. Erase the fault code memory and verify repairs. Refer to section 4.3.2.6.

[b] Bridge pins 1 and 3 on the EGR temperature sensor connector and check for active fault codes. If fault code s 146/0 is active, replace the EGR temperature sensor, erase fault code memory, and verify repairs. Refer to section 4.3.2.6.

[c] If fault code s 146/7 is still active, go to step 4.

4. Check coolant usage.

[a] If coolant usage indicates a leak, perform an *EGR Cooler Inspection.* Refer to appendix C, Service Information Letter 04 **TS** - 38. Clean and replace parts as indicated by inspection. Erase fault code memory and verify repairs. Refer to section 4.3.2.6.

[b] If coolant usage is normal and fault code s 146/2 is still active, contact the Detroit Diesel Customer Support Center at 313-592-5800.

All information subject to change without notice. (Rev. 5/05)
7SE940 0505 Copyright © 2005 DETROIT DIESEL CORPORATION

4.3.2.5 146/12 — Bad Component

Perform the following steps to resolve a Bad Component fault code:

1. If fault code s 146/12 is active, check the engine harness wiring from the 55-pin connector to the EGR valve connector. See Figure 4-7.

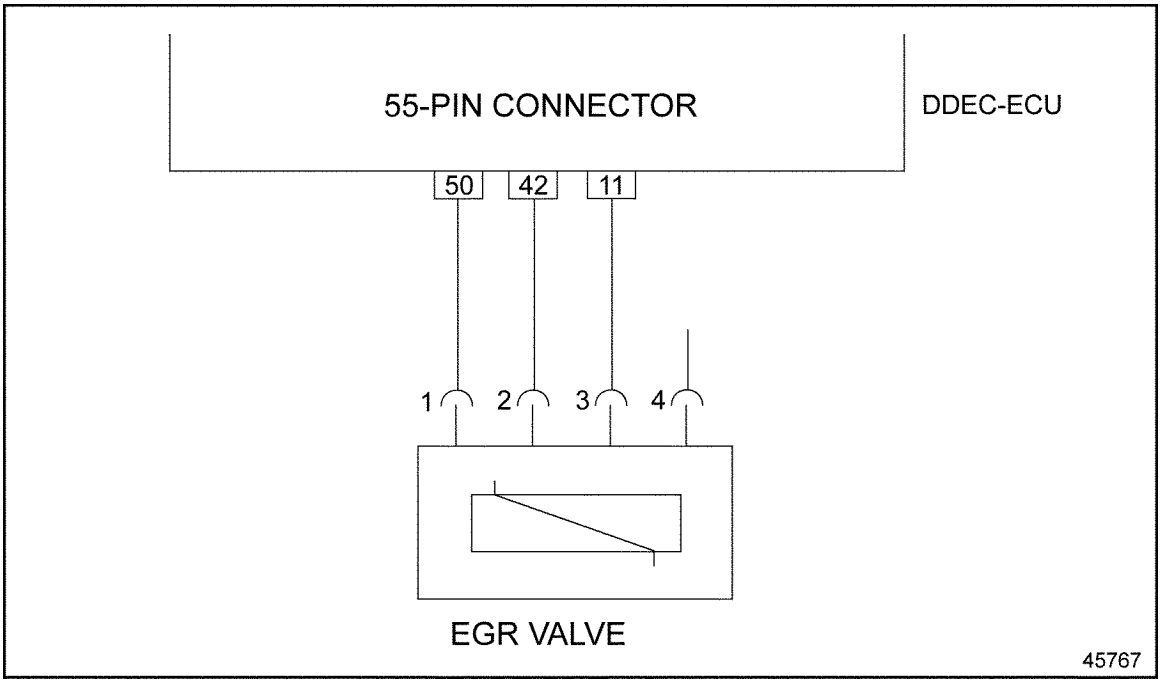

Figure 4-7 EGR Valve Wiring Diagram

[a] If the resistance is less than 3 Ω for wires from pins 50 to 1, pins 42 to 2, or pins 11 to 3, then there is a short in the wire. Repair the short and verify repairs. Refer to section 4.3.2.6.

[b] If the resistance is greater than 10 kΩ for wires from pins 50 to 1, pins 42 to 2, or pins 11 to 3, then there is a open circuit in the wire. Repair the open circuit and verify repairs. Refer to section 4.3.2.6.

[c] If fault code s 146/12 is still active, replace EGR valve. Erase fault code memory and verify repairs. Refer to section 4.3.2.6.

[d] If fault code s 146/12 is still active, go to step 2.

2. Contact the Detroit Diesel Customer Support Center at 313-592-5800.

 Copyright © 2005 DETROIT DIESEL CORPORATION

4.3.2.6 Verifying Repairs

Perform the following steps to verify repairs.

1. Turn ignition OFF.
2. Reconnect all connectors.
3. Turn ignition ON.
4. Start and run the engine for one minute.
5. Stop engine.
6. Check active codes.
   [a] If no codes are displayed, troubleshooting is complete.
   [b] If a fault code other than SID 146 is logged, refer to Detroit Diesel *MBE Electronic Controls Troubleshooting Guide*, 6SE422.
   [c] If a fault code in SID 146 is logged, refer to:
   - ☐ Section 4.3.2.1 for code s 146/0
   - ☐ Section 4.3.2.2 for code s 146/1
   - ☐ Section 4.3.2.3 for code s 146/2
   - ☐ Section 4.3.2.4 for code s 146/7
   - ☐ Section 4.3.2.5 for code s 146/12

All information subject to change without notice. (Rev. 5/05)
7SE940 0505 Copyright © 2005 DETROIT DIESEL CORPORATION

4.4 ENGINE PROTECTION

When the DDEC System on an MBE engine detects a problem PID or SID, it will derate performance or shut down the engine to prevent damage.

The following active fault codes can limit the engine speed:

- ☐ PID 100 indicates that the Engine Oil Pressure reads low or there is a problem with the Engine Oil Pressure sensor data.
- ☐ SID 21 indicates a problem with the Crankshaft Position Sensor data or a mismatch between the Crankshaft Position Sensor and Camshaft Position Sensor signals.

The following active fault codes can limit the engine torque output:

- ☐ PID 105 indicates that the Intake Air Temperature reads high or there is a problem with the Intake Air Temperature data.
- ☐ PID 110 indicates that the Engine Coolant Temperature reads high or very high or there is a problem with the oil pressure sensor data.
- ☐ SID 146 indicates that the EGR Temperature reads too high or too low, that the EGR Valve is not responding; or there is a bad EGR System component.

The following conditions can limit the engine torque output to its current setting:

- ☐ SID 21 indicates a problem with the Crankshaft Position Sensor data or a mismatch between the Crankshaft Position Sensor and Camshaft Position Sensor signals.
- ☐ The DDEC-ECU is reading the EGR Temperature but the EGR Temperature is not enabled in the DDEC-ECU fuel maps.

The following conditions can shut down the engine when enabled in the DDEC-VCU:

- ☐ Shutdown can be *enabled* if Engine Coolant Temperature reads high. The default setting is *enabled*.
- ☐ Shutdown can be *enabled* if Engine Coolant Level reads low. The default is *disabled*.
- ☐ Shutdown can be *enabled* if Engine Oil Pressure reads low. The default is *enabled*.

NOTE:
The Low Engine Oil Level fault cannot be enabled on a DDEC system of a NAFTA MBE engine because the engine oil level sensor is not offered in the NAFTA market.

 Copyright © 2005 DETROIT DIESEL CORPORATION

THIS PAGE INTENTIONALLY LEFT BLANK

All information subject to change without notice. (Rev. 5/05)
7SE940 0505 Copyright © 2005 DETROIT DIESEL CORPORATION

5 TESTING

The following operational events and diagnostic recommendations are based on conditions identified by the Detroit Diesel Customer Support Center. The recommended troubleshooting procedures are accurate as of April 2005.

- ☐ Troubleshooting SID 146: Refer to section 4.3.2:
  - ☐ Fault Code s 146/0 — EGR Temperature above Normal
  - ☐ Fault Code s 146/1 — EGR Temperature below Normal
  - ☐ Fault Code s 146/2 — Data Erratic
  - ☐ Fault Code s 146/7 — EGR Valve not Responding
  - ☐ Fault Code s 146/12 — Bad Component
- ☐ Inspection of EGR Cooler: Refer to appendix C — Service Information Letter 04 **TS**-38, *EGR Cooler Inspection*
- ☐ Inspection of Thermostat Housing: Refer to appendix C — Service Information Letter 04 **TS**-57, *MBE 900 Model Year 2004 EGR Overheat Condition*
- ☐ Verifying DDEC-ECU Parameter Settings: Refer to appendix C — Service Information Letter 04 **TS**-61, *MBE 4000 PLD Parameters*
- ☐ Inspection of Charge Air Cooler: Refer to appendix C — Service Information Letter 05 **TS**-01, *Charge Air Cooler Leaks*

NOTE:
You may also access Service Information **TS** letters after logging into the DDC Extranet by clicking on ***Support, On-Highway, Service Information, Service Information Letters, 2004-to-2006 Service Letters***. To access 18SP documents, click on ***Support, On-Highway, Service Information, Special Publications (18SPs)***.

 Copyright © 2005 DETROIT DIESEL CORPORATION

https://truckmanualshub.com/

THIS PAGE INTENTIONALLY LEFT BLANK

All information subject to change without notice. (Rev. 5/05)
7SE940 0505 Copyright © 2005 DETROIT DIESEL CORPORATION

6 DETROIT DIESEL DIAGNOSTIC LINK/SNAPSHOTS

The Detroit Diesel Diagnostic Link (DDDL) can record snapshots of the electronic controls input and output to resolve the engine operating concerns.

6.1 WORKING WITH DDDL SNAPSHOTS

Create a snapshot using the following procedure:

1. Use the proper steps to open DDDL and connect to the engine.
2. Go to the **Snapshot** drop-down menu and select the **New** option by clicking once with the left mouse button. See Figure 6-1.

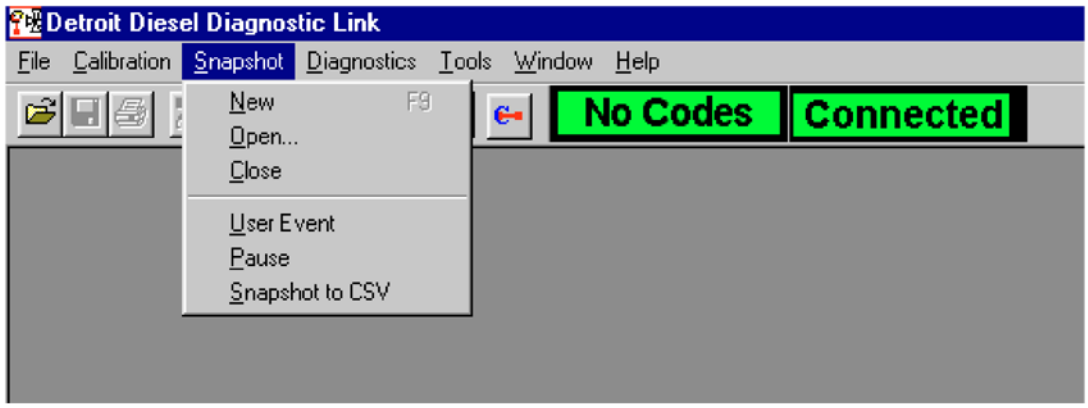

44225

Figure 6-1 Snapshot Drop-Down Menu

3. Upon choosing the **New** option, a **Record Snapshot** box will appear in the upper left section of the screen.
4. The **Record Time** starts counting from the second the **New** option is clicked.

 Copyright © 2005 DETROIT DIESEL CORPORATION

https://truckmanualshub.com/

5. Some important facts to remember about this feature:
   - ☐ All parameters broadcast by the MBE Electronic Controls are recorded.
   - ☐ Any codes that occur during the snapshot are automatically marked.
   - ☐ There is no practical time limit for the snapshot as long as there is enough room on the hard drive to save the file.
   - ☐ To mark an event other than a code, click once with the left mouse button on the **Mark User Event SPACE** box.
   - ☐ To insert additional comments about the snapshot, click once with the left mouse button on the **Annotate** selection (version 4.1 or later).
6. When recording of the desired data is completed, click once with the left mouse button on the **Stop Recording ESC** box. See Figure 6-2.

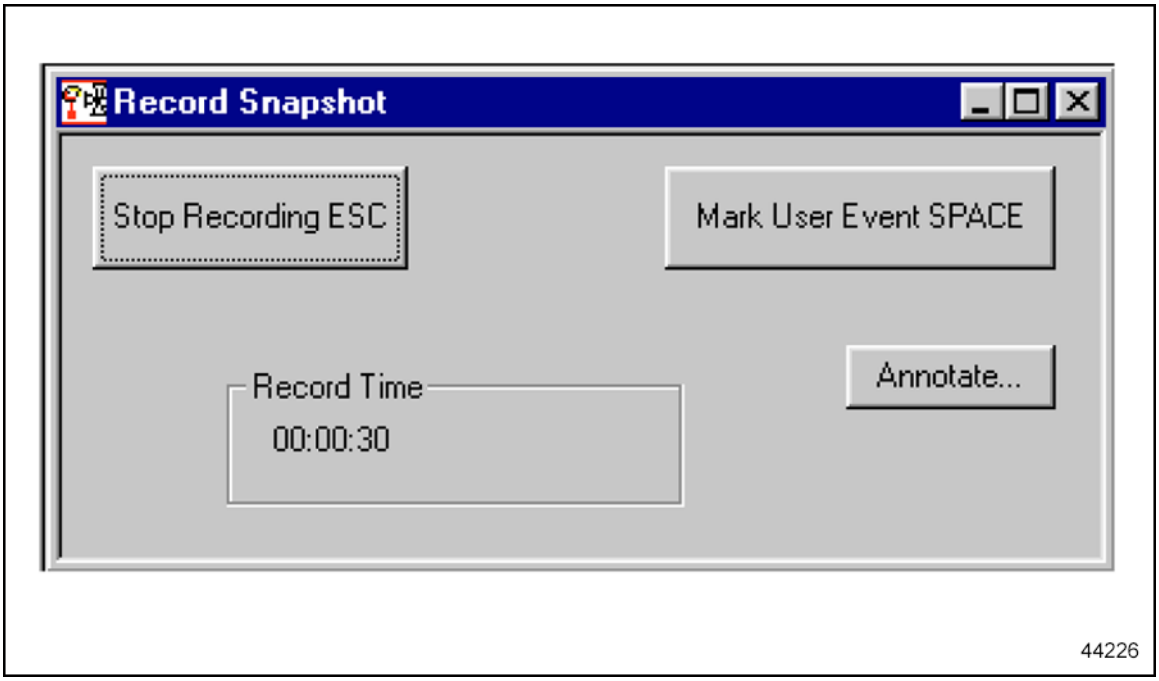

Figure 6-2 Stop Recording ESC Box

All information subject to change without notice. (Rev. 5/05)
7SE940 0505 Copyright © 2005 DETROIT DIESEL CORPORATION

7. Immediately upon selecting the **Stop Recording ESC** option, a dialog box will appear asking to save the changes. To save the recorded data to the hard drive, click once with the left mouse button on the **Yes** option. To discard the data recorded by the snapshot, click on the **NO** option. See Figure 6-3.

Figure 6-3 Stop Recording ESC Options

 Copyright © 2005 DETROIT DIESEL CORPORATION

https://truckmanualshub.com/

8. When the **Yes** option is chosen, the **Save As** dialog box will appear on the screen. A suggested file name will appear outlined in blue in the **File Name** box. See Figure 6-4.

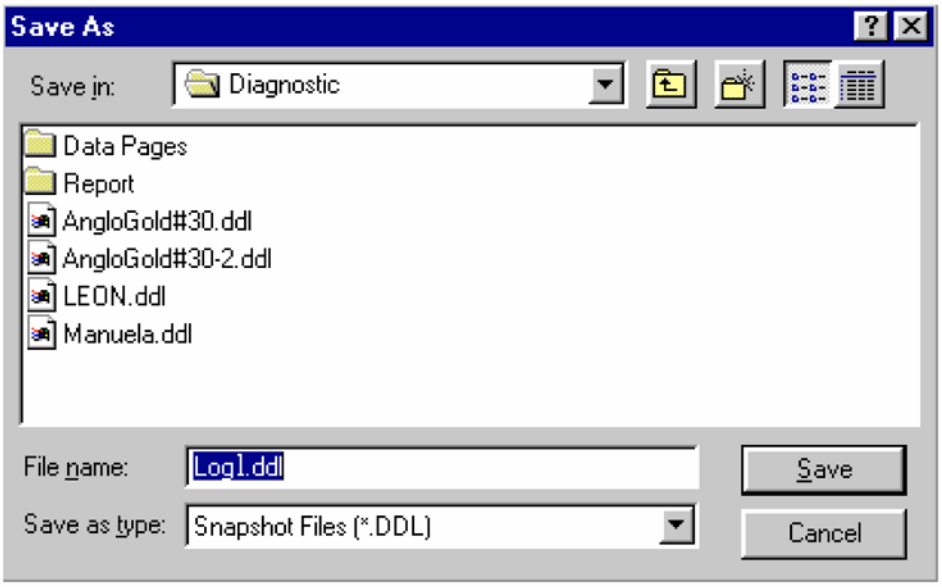

Figure 6-4 File Name Box

9. To accept the suggested name for the file, click once with the left mouse button on the **Save** option box. To replace the suggested name, hit the space bar once to clear the line. Type in the new file name before saving the file. To change the location where the file is saved on the computer, change the location designated in the **Save In** box. For example, the file may be saved to the **A:** drive. Once the file has been saved, the process is complete.

All information subject to change without notice. (Rev. 5/05)
7SE940 0505 Copyright © 2005 DETROIT DIESEL CORPORATION

6.2 USING SNAPSHOT REPLAY CONTROLS

Replay a snapshot using the following procedure:

1. Go to the **Snapshot** drop-down menu and select **Open**. Do not have the computer connected to a vehicle when replaying a snapshot. See Figure 6-5.

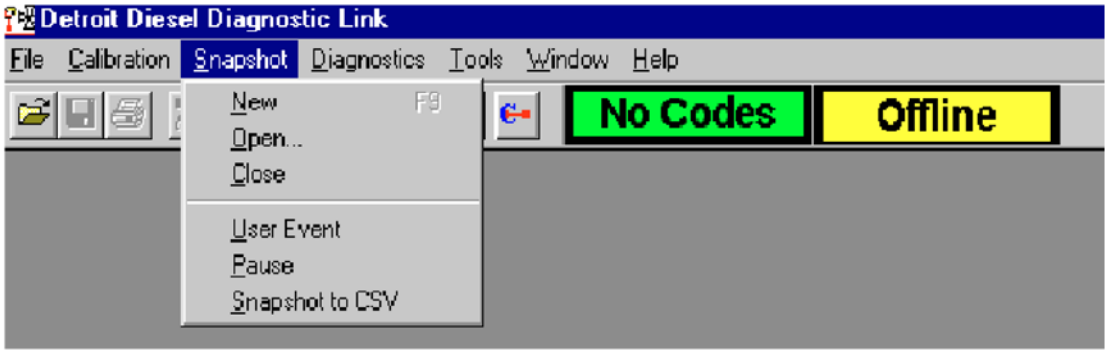

Figure 6-5 Snapshot Drop-Down Menu

 Copyright © 2005 DETROIT DIESEL CORPORATION

https://truckmanualshub.com/

2. A dialog box will appear listing all the available snapshot files. See Figure 6-6.

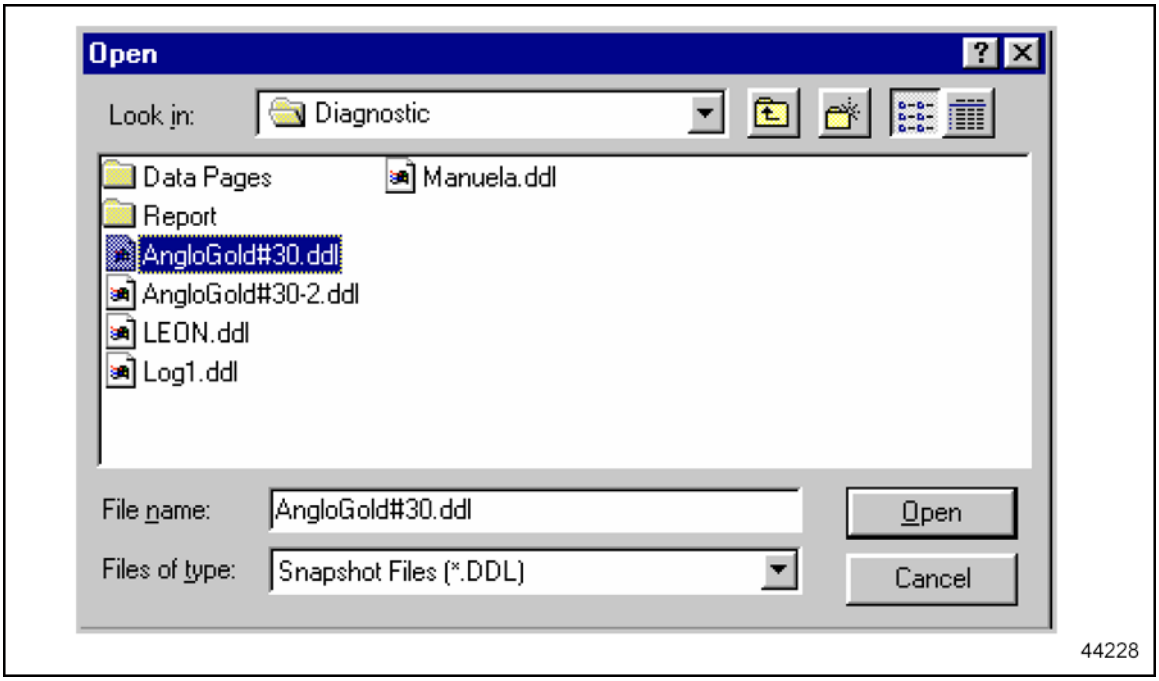

Figure 6-6 Snapshot Dialog Box

NOTE:
The default folder that snapshot files are saved in is **C:***Detroit Diesel\Diagnostic* and the files have an extension of ".ddl".

3. Highlight the desired the file with one click of the left mouse button. The selected file name will now appear in the **File Name** box.
4. Click once with the left mouse button on the **Open** box in the lower right of the dialog box.

All information subject to change without notice. (Rev. 5/05)
7SE940 0505 Copyright © 2005 DETROIT DIESEL CORPORATION

5. When opening a snapshot, replay controls will appear at the bottom of the DDDL window opened. See Figure 6-7.

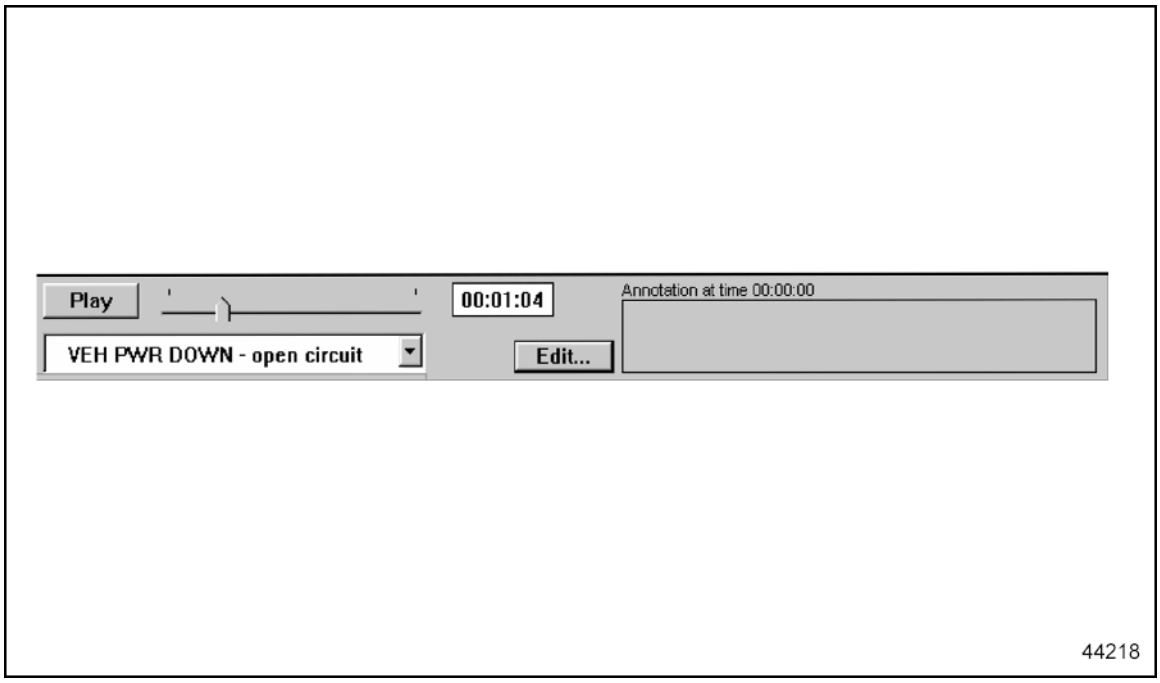

Figure 6-7 Snapshot Replay Controls

6. To start the replay of a snapshot, click on **Play**. The play button changes to **Pause** when a snapshot is replaying. While the snapshot is replaying, the replay slider next to the **Play/Pause** button moves showing the progress of the replay, and the time box next to it shows the time since the beginning of the recording. When clicking on **Play**, the snapshot begins to play from its current position and the instruments show the appropriate readings. The event window also changes during the replay to show the most recent event.
7. To stop the replay at a particular point of interest, click on **Pause**. The instruments will show the values at the time the replay was stopped.

 Copyright © 2005 DETROIT DIESEL CORPORATION

https://truckmanualshub.com/

8. To move to a specific time in the replay, drag the replay slider button. When dragging the slider, the time shown in the time box changes to reflect the position of the slider. See Figure 6-8.

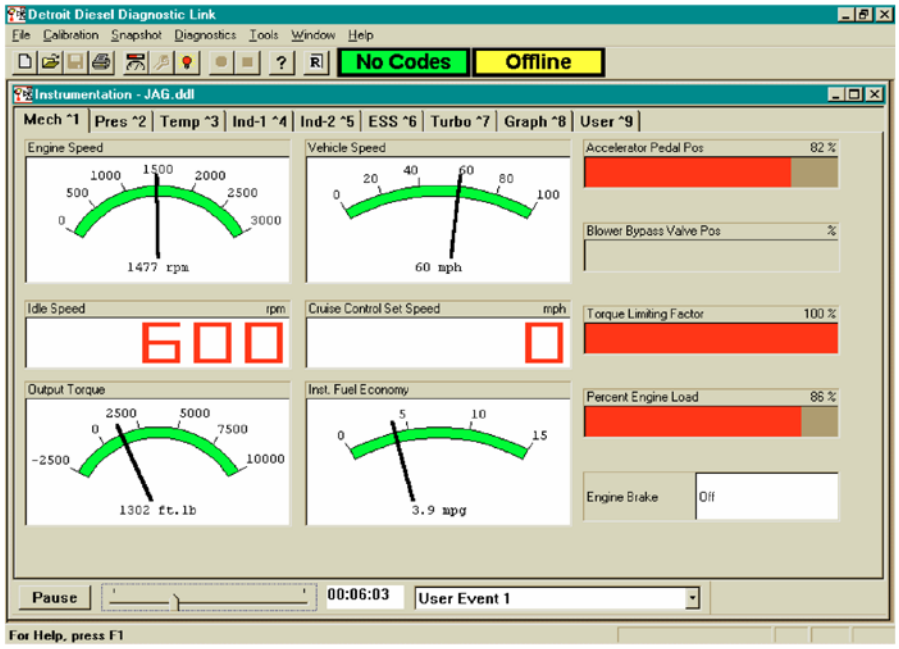

Figure 6-8 Normal Instrumentation Window

NOTE:
Not all DDDL windows can be activated when replaying the snapshot feature. The response time window and the cylinder cutout window are not accessible in the injector in snapshot mode. See Figure 6-9, Figure 6-10, Figure 6-11, and Figure 6-12 for samples of windows that may be activated.

All information subject to change without notice. (Rev. 5/05)
7SE940 0505 Copyright © 2005 DETROIT DIESEL CORPORATION

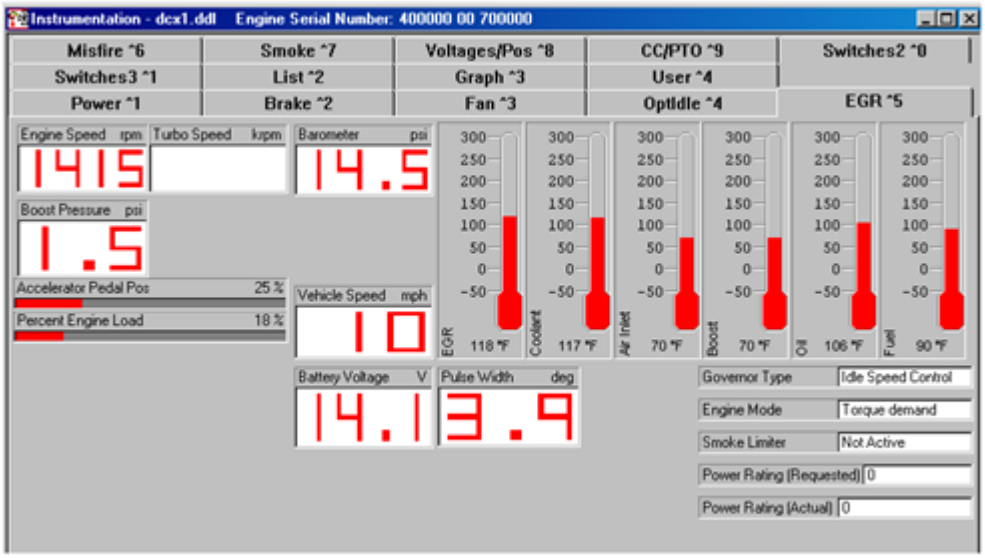

Figure 6-9 Diagnostic Instrumentation Window

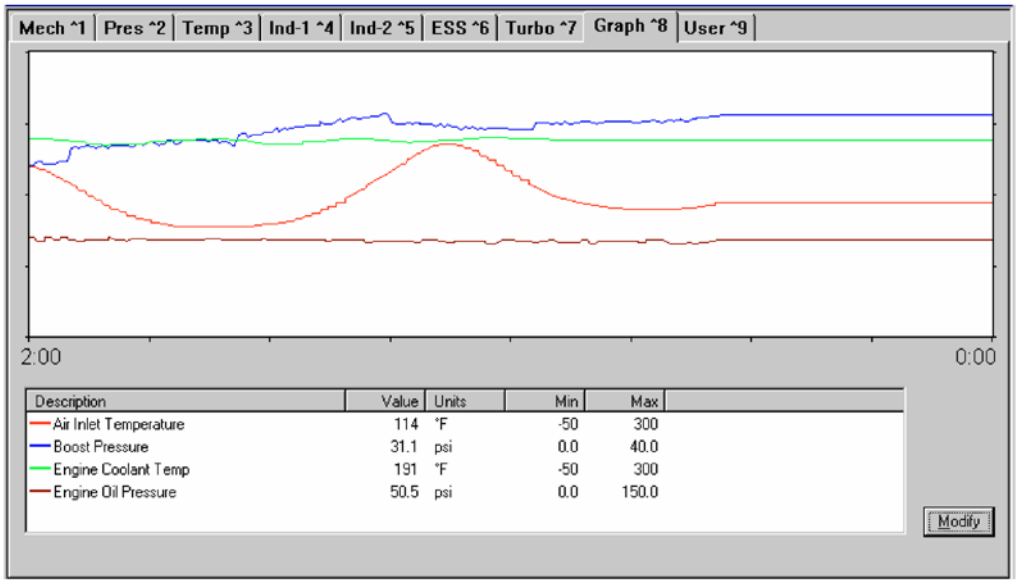

Figure 6-10 Graph Window

https://truckmanualshub.com/

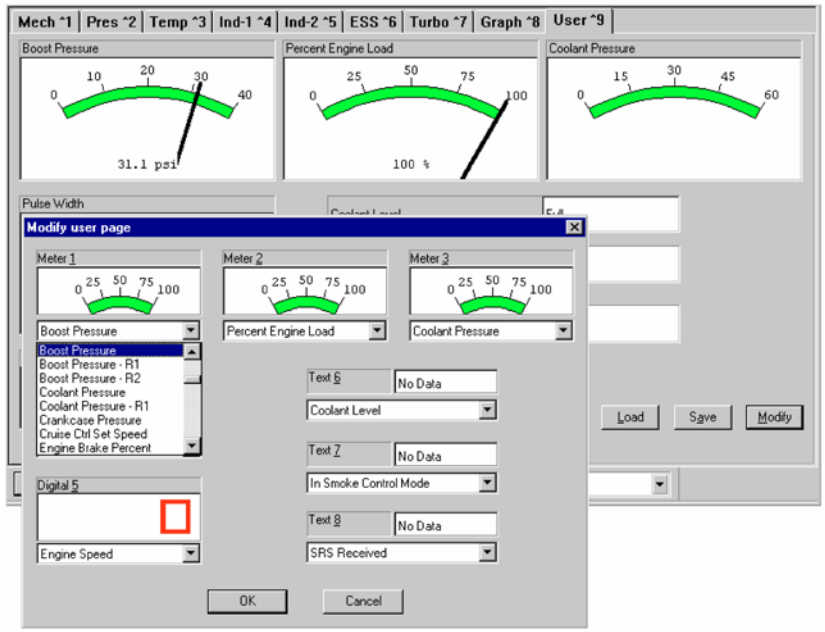

Figure 6-11 User Window

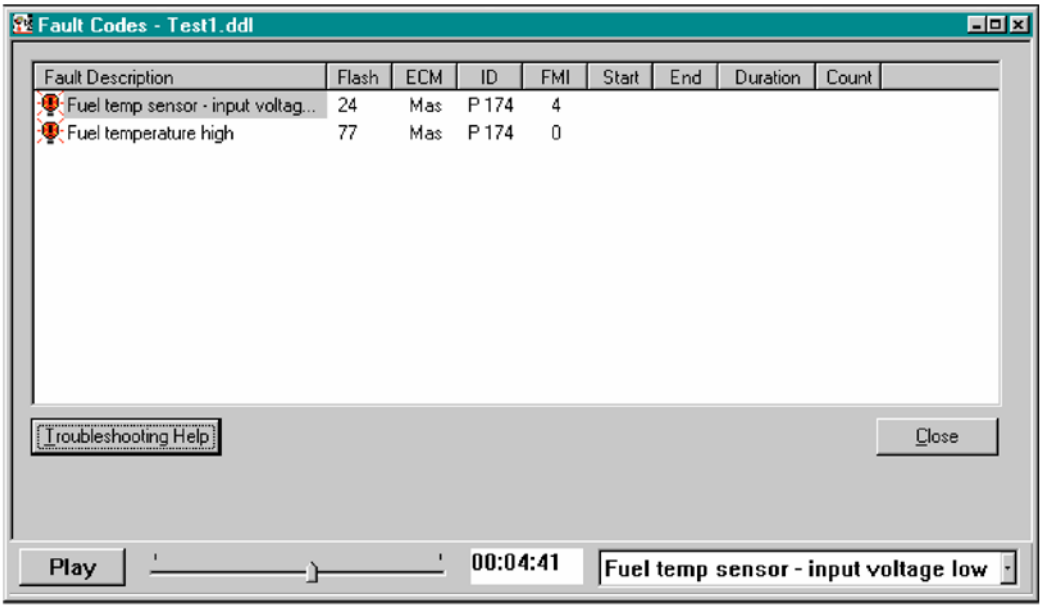

Figure 6-12 Fault Codes Window

All information subject to change without notice. (Rev. 5/05)
7SE940 0505 Copyright © 2005 DETROIT DIESEL CORPORATION

6.3 E-MAILING SNAPSHOT FILES

E-mail a snapshot using the following procedure:

1. Identify the filenames of snapshots to send. Typically the snapshot files a user creates are saved in the *C:\Detroit Diesel\Diagnostic* folder. If this folder was used to store snapshots, view the snapshots available by going to *Diagnostic Link*, opening up the **Snapshot** drop-down menu, and selecting **Open**. See Figure 6-13 and Figure 6-14.

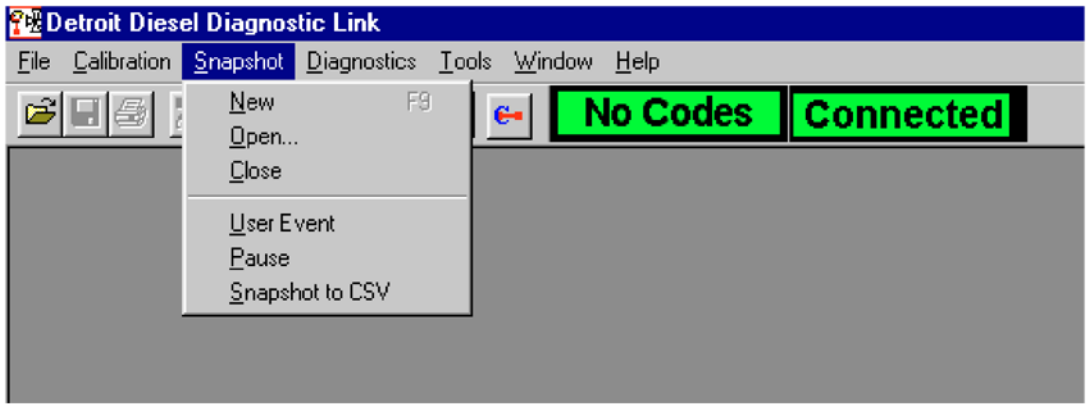

Figure 6-13 Snapshot Drop-Down Menu

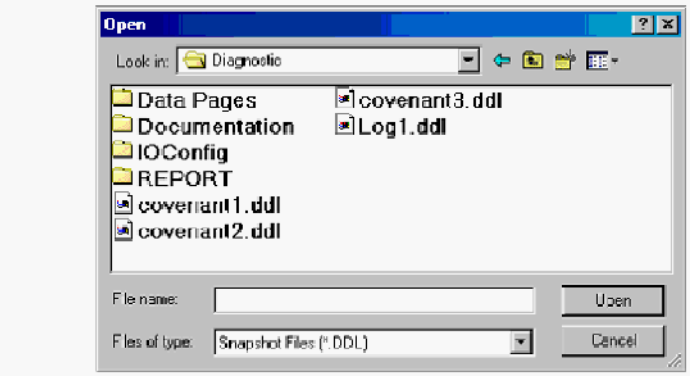

Figure 6-14 Available Snapshot Files from *Diagnostic Link*

2. Write down the names of the files to send and close *Diagnostic Link*.

 Copyright © 2005 DETROIT DIESEL CORPORATION

https://truckmanualshub.com/

3. Open up the file manager on the **C:** drive, and locate the *Detroit Diesel* folder. See Figure 6-15.

NOTE:
The user may choose a different location when the files are created so this location is not always used. The user can also do a search for file names using the snapshot file extension ".ddl" to locate all the snapshots on their computer.

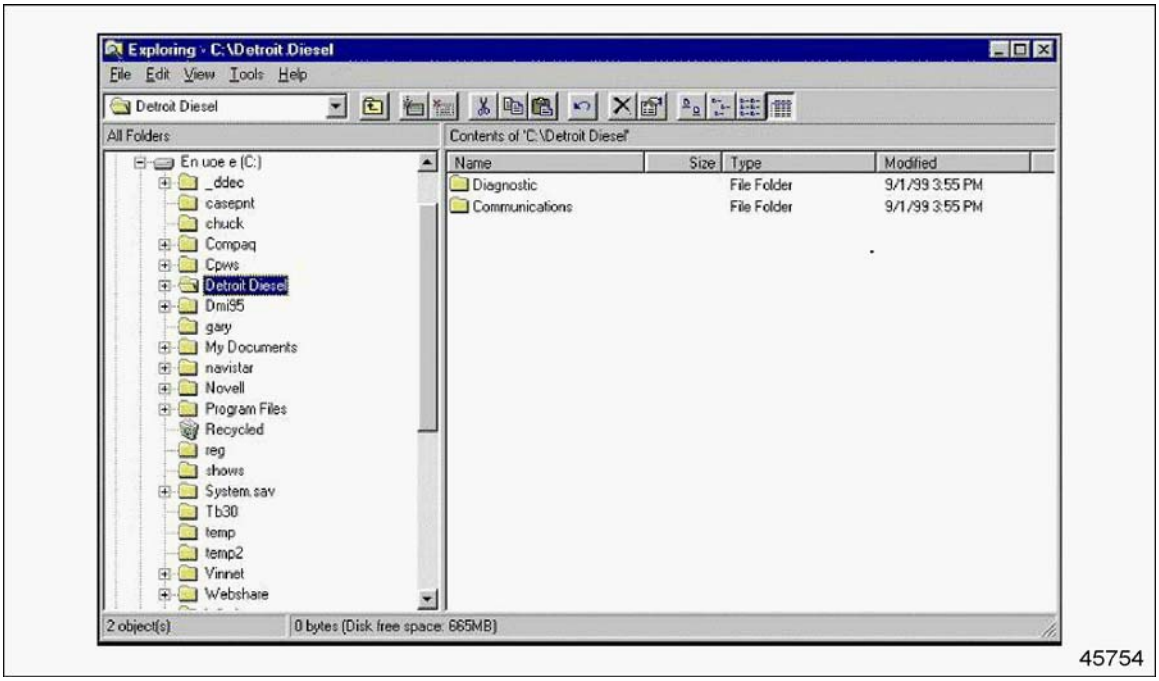

Figure 6-15 Location of the Detroit Diesel Folder on the C:\ Drive

All information subject to change without notice. (Rev. 5/05)
7SE940 0505 Copyright © 2005 DETROIT DIESEL CORPORATION

4. Click on the + sign in front of *Detroit Diesel*. Two more folders appear. Click twice on the *Diagnostic* folder. This folder is the default location of all the snapshot files for *Diagnostic Link*. See Figure 6-16.

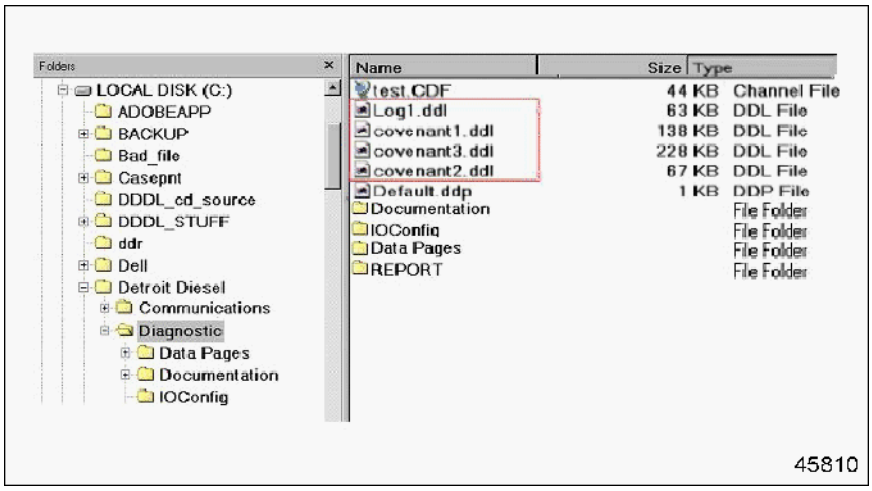

Figure 6-16 Location the Snapshot Files in the *Diagnostic* Folder

5. Select the file or files to attach to the E-mail. If the files are not lined up as shown, go up to the **View** drop-down menu in the file manager and choose **Details** from the list. This view makes it easier to work with them. Click once with the left mouse button to select a file. To select more files, hold down the **Control** key and click once more for each additional file. See Figure 6-17.

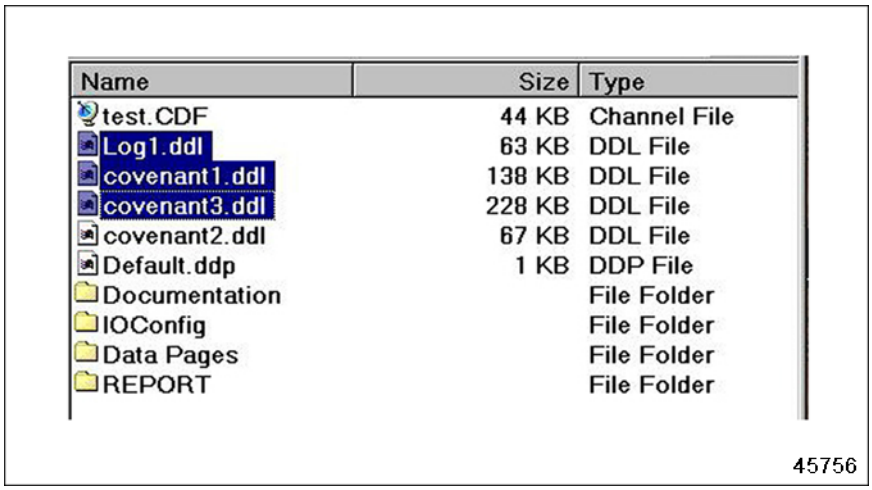

Figure 6-17 Selecting the Snapshot Files on the C:\ Drive

 Copyright © 2005 DETROIT DIESEL CORPORATION

https://truckmanualshub.com/

6. When all the snapshot files are highlighted, click once on one of the highlighted files with the right mouse button and a new menu will appear. Choose **Copy** from the menu. See Figure 6-18. When the operation is complete, the menu will go away. The operations in the file manager are finished.

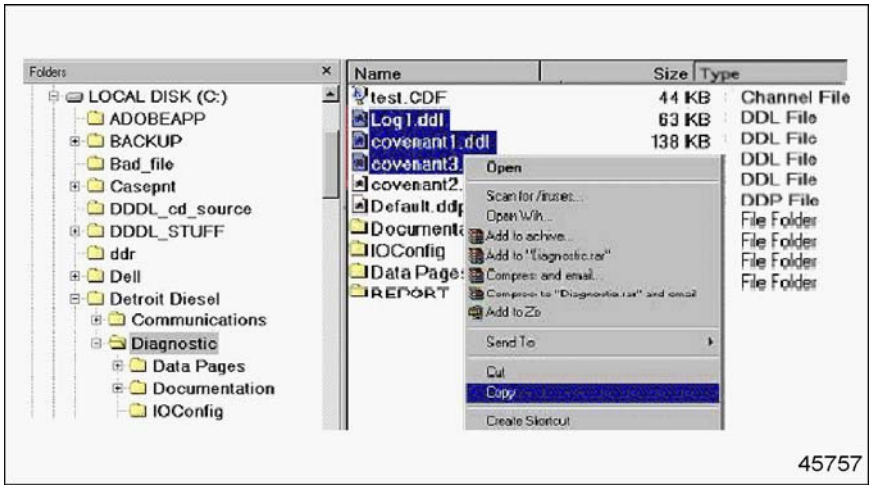

Figure 6-18 Copying the Snapshot Files from the C:\ Drive

7. Open up the E-mail program and create a new E-mail message. Do a right mouse click on a blank area in the body of the E-mail and select **Paste** from the menu. See Figure 6-19.

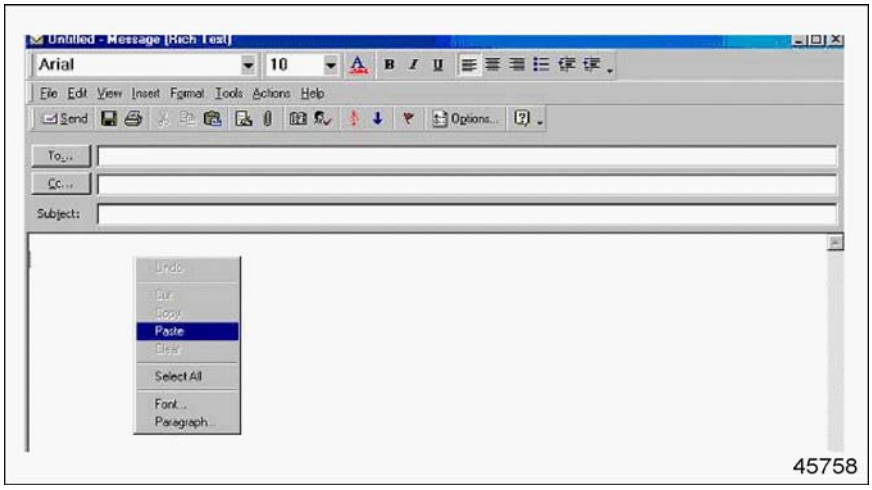

Figure 6-19 Pasting the Files in the E-mail Message

All information subject to change without notice. (Rev. 5/05)
7SE940 0505 Copyright © 2005 DETROIT DIESEL CORPORATION

8. The files are now attached in the body of the E-mail. Finish the message and address the E-mail. The E-mail is now ready to send the files. See Figure 6-20.

NOTE:
The file name is the important thing, the icons associated with the DDL file may vary.

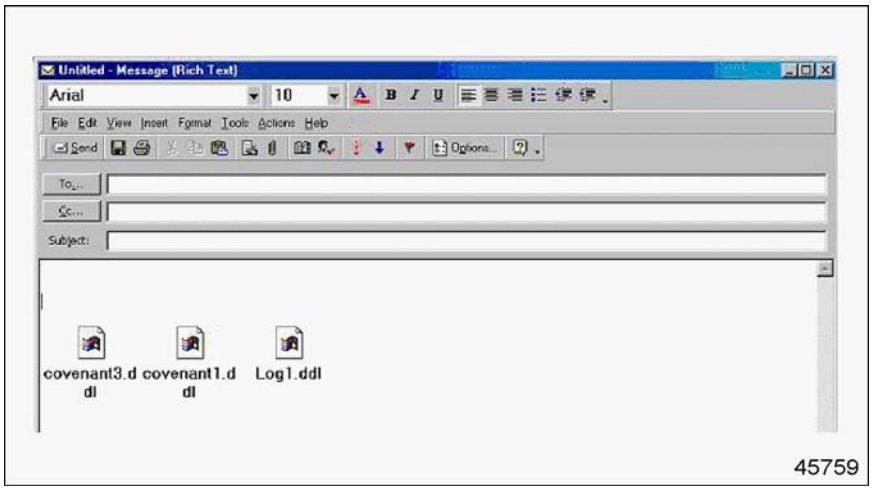

Figure 6-20 Pasting the Snapshot Files into the E-mail

9. The receiver of the files just reverses the process in order to read them with *Diagnostic Link*. See Figure 6-21.

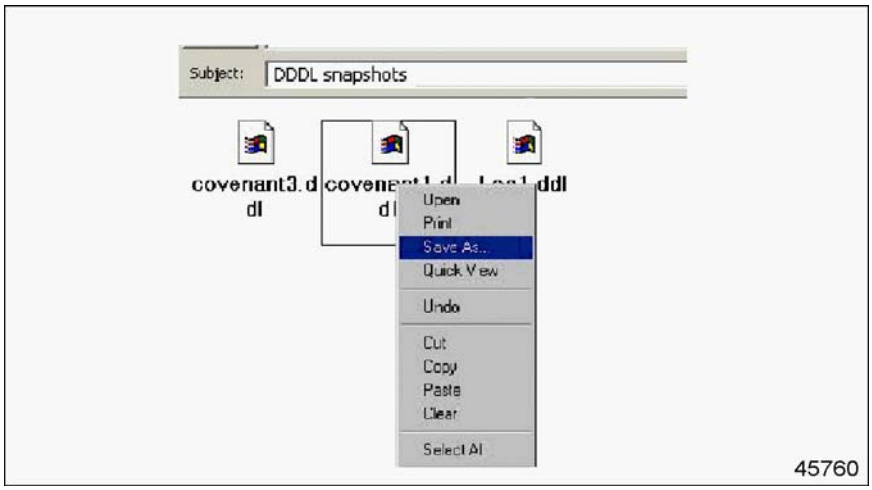

Figure 6-21 Receiving the Snapshot Files from the E-mail Message

10. Do a single right mouse click on each of the attached files and copy them from the E-mail to the **C:***Detroit Diesel\Diagnostic* folder.

11. Open up *Diagnostic Link* and choose the **Open** selection from the **File** drop-down menu. The files recently copied should appear in the list.

 Copyright © 2005 DETROIT DIESEL CORPORATION

https://truckmanualshub.com/

THIS PAGE INTENTIONALLY LEFT BLANK

All information subject to change without notice. (Rev. 5/05)
7SE940 0505 Copyright © 2005 DETROIT DIESEL CORPORATION

7 SNAPSHOT EXAMPLES

The following snapshots are intended to show how to “interpret” the information recorded. Use the examples as a guide to understand normal engine operation. Pay particular attention to EGR temperature since it is the prime indicator of the EGR flow.

NOTE:
The EGR systems in the MBE 4000 and MBE 900 engines contain fewer components and use simpler control logic than the other series of Detroit Diesel engines. Therefore, using the Fault Codes should be the **primary** means of solving troubleshooting problems. The following examples **should not** be used to determine good vs. bad engine operation. They are meant to give the user a good understanding of how the EGR system operates. As more information becomes available, the snapshot examples will be expanded to aid engine diagnosis.

Each snapshot in this chapter was generated under controlled vehicle operation:

- ☐ Cold Engine at Idle — Refer to section 7.1.1.
- ☐ Engine Warming Up With No Load — Refer to section 7.1.2.
- ☐ MBE 900 Engine at Low but Varied Loads and Speeds — Refer to Section 7.1.4.
- ☐ MBE 4000 Engine at Low but Varied Loads and Speeds — Refer to Section 7.1.3.
- ☐ Engine Running with No EGR Temperature Reading — Refer to section 7.2.1.
- ☐ Engine Running with Above Normal EGR Temperature Readings — Refer to section 7.2.2.

 Copyright © 2005 DETROIT DIESEL CORPORATION

7.1 NORMAL ENGINE OPERATION SNAPSHOTS

It is important to understand what **Normal** looks like during normal engine operation, all parameters should have smooth transitions.

Review the snapshots in this section for examples of typical engine operation.

7.1.1 COLD ENGINE AT IDLE

For a cold engine at idle, the EGR valve is closed and the EGR temperature after the EGR cooler is well below the engine coolant temperature. See Figure 7-1 and Figure 7-2 for an MBE 900 engine operating at idle.

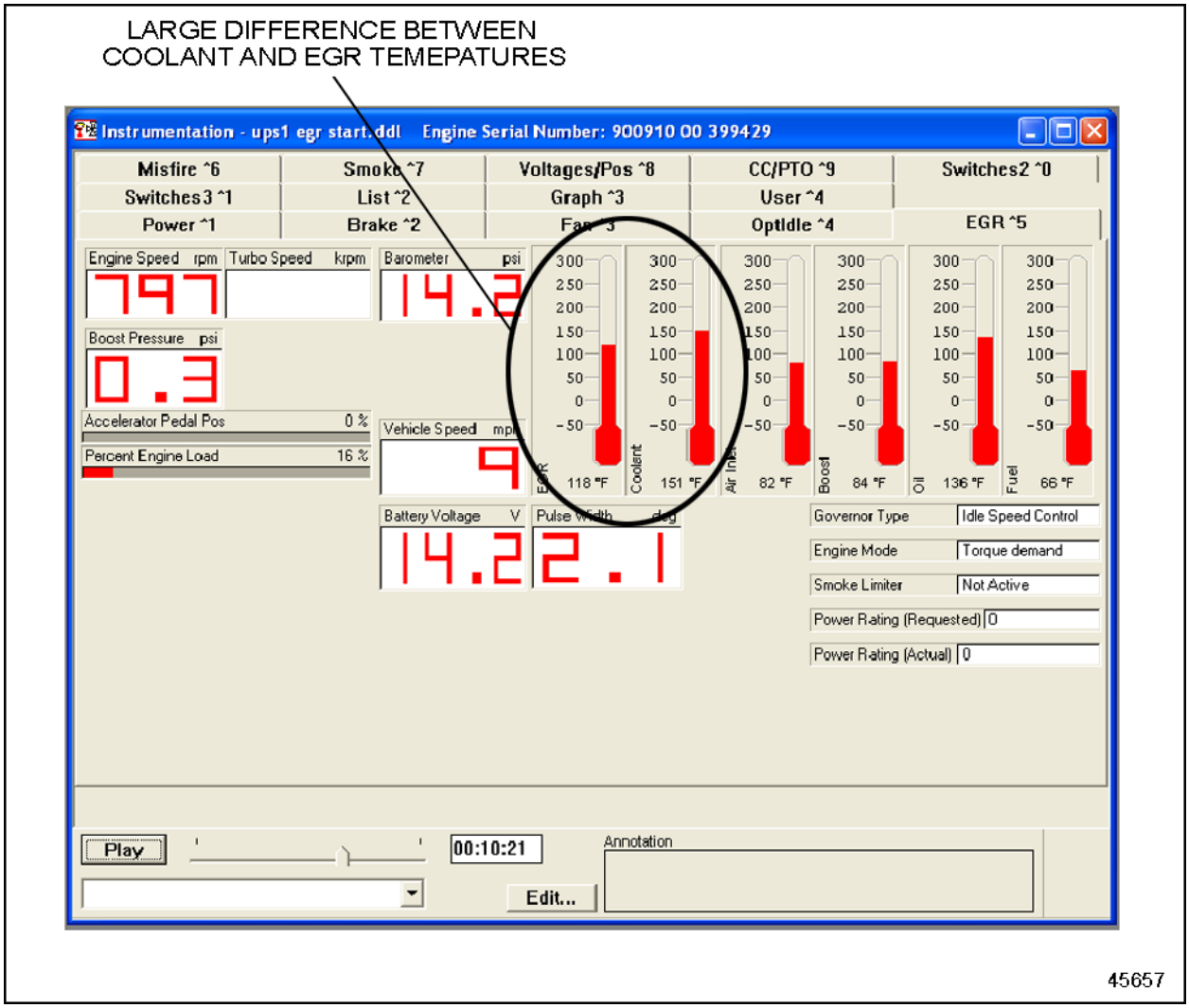

Figure 7-1 Cold MBE 900 Engine at Idle — Diagnostic Instrumentation Window

All information subject to change without notice. (Rev. 5/05)
7SE940 0505 Copyright © 2005 DETROIT DIESEL CORPORATION

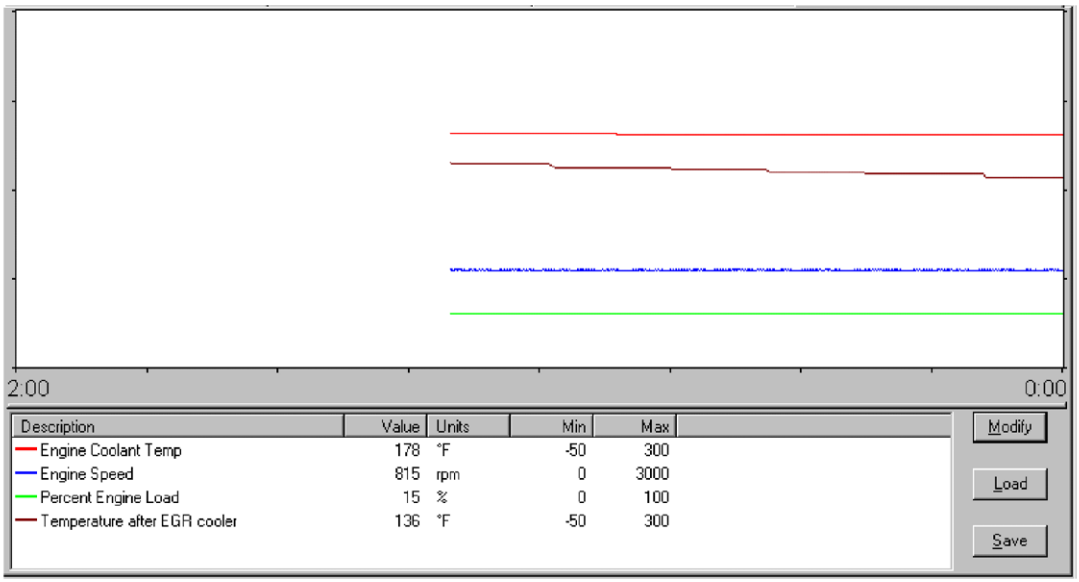

45638

Figure 7-2 Cold MBE 900 Engine at Idle — Graph Window

 Copyright © 2005 DETROIT DIESEL CORPORATION

7.1.2 WARM ENGINE WITH NO LOAD

As the engine warms up, the EGR valve opens and the EGR temperature after the EGR cooler approaches the engine coolant temperature. See Figure 7-3 and Figure 7-4 for an MBE 900 engine warming up with no load.

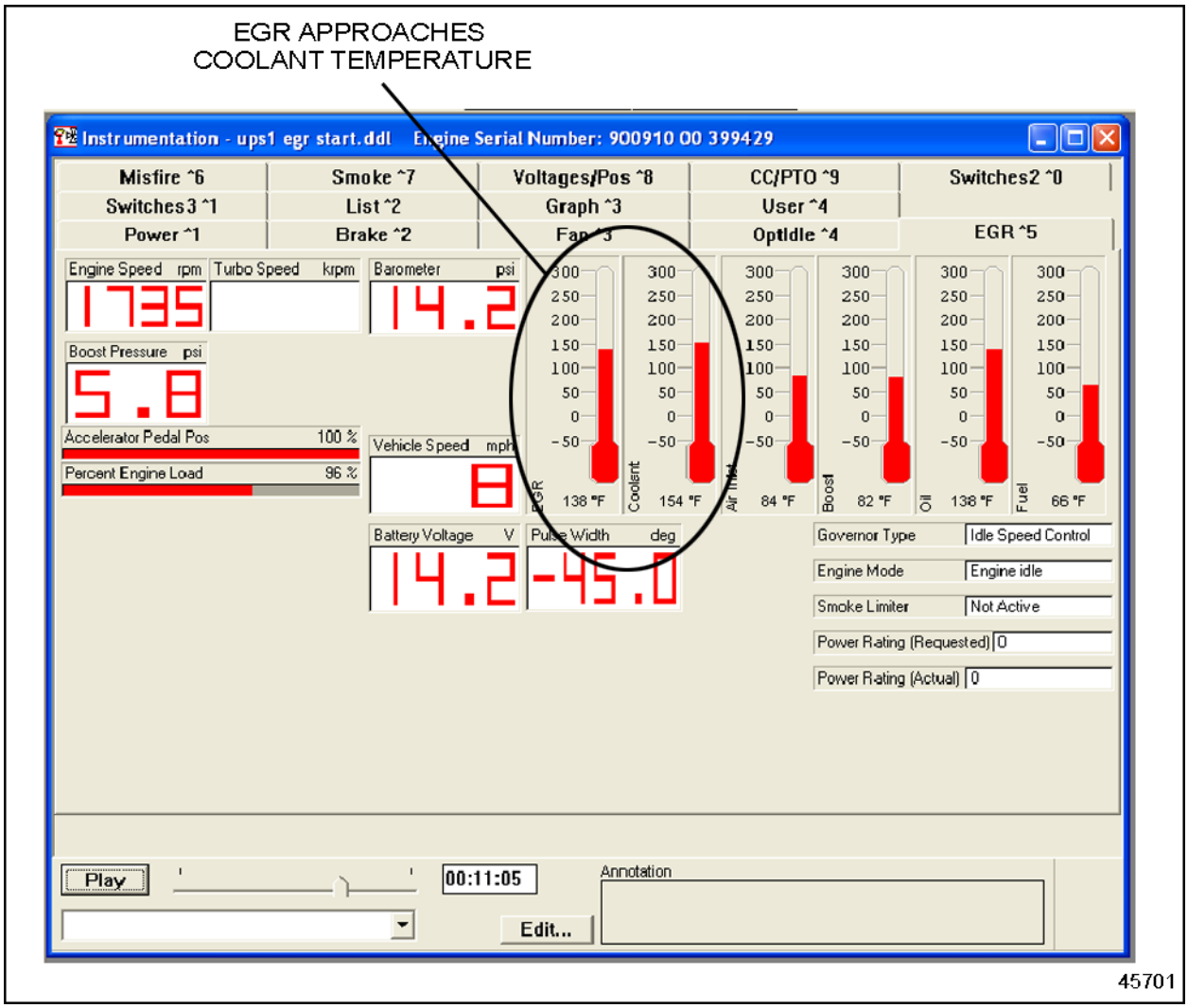

Figure 7-3 MBE 900 Engine Warming up at Intermediate Speeds — Diagnostic Instrumentation Window

All information subject to change without notice. (Rev. 5/05)
7SE940 0505 Copyright © 2005 DETROIT DIESEL CORPORATION

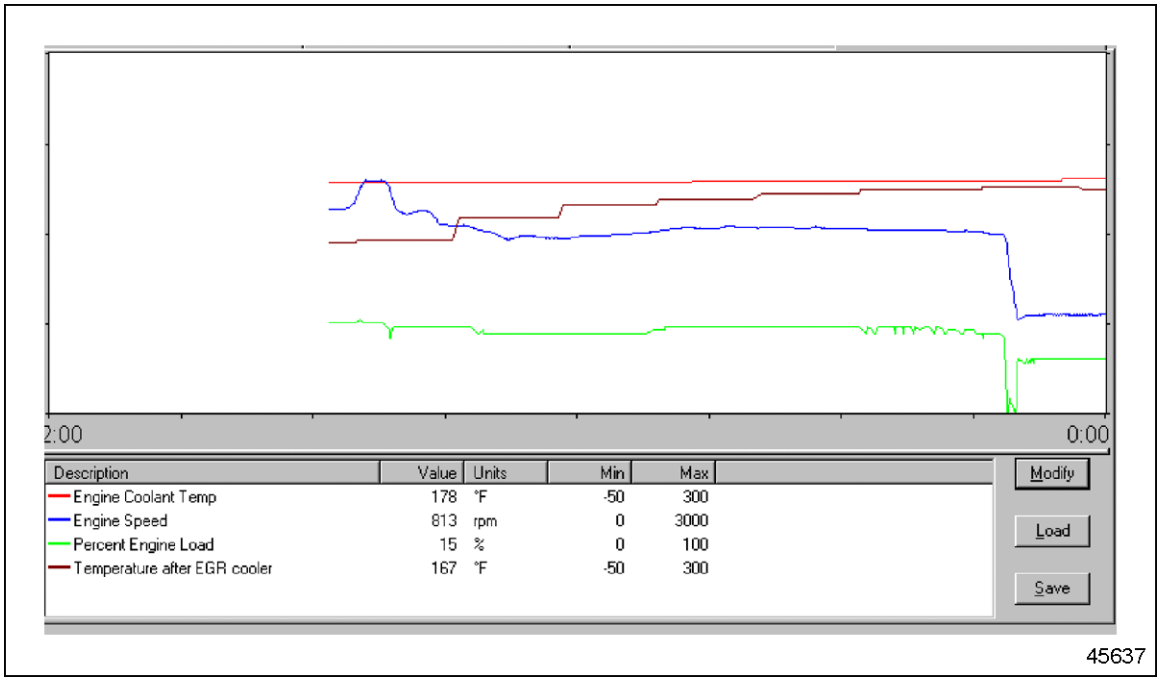

Figure 7-4 MBE 900 Engine Warming up at Intermediate Speeds — Graph Window

 Copyright © 2005 DETROIT DIESEL CORPORATION

7.1.3 MBE 4000 ENGINE AT VARIABLE SPEEDS AND LOADS

This snapshot is an MBE 4000 engine operating at low vehicle speeds but variable engine speeds and loads. In this snapshot, the engine coolant is at operating temperature. See Figure 7-5.

NOTE:
The EGR temperature slowly builds while the coolant temperature remains steady.

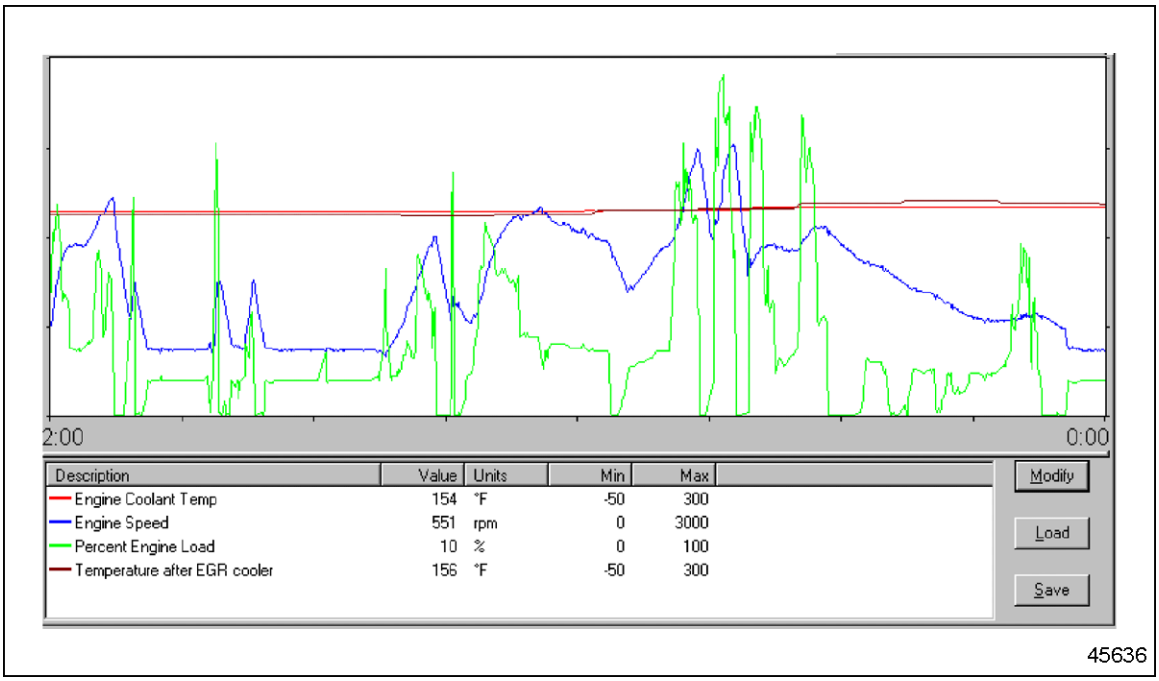

Figure 7-5 MBE 4000 Engine at Low Vehicle Speed

All information subject to change without notice. (Rev. 5/05)
7SE940 0505 Copyright © 2005 DETROIT DIESEL CORPORATION

7.1.4 MBE 900 ENGINE AT VARIABLE SPEEDS AND LOADS

This snapshot is an MBE 900 engine operating at low vehicle speeds but variable engine speeds and loads. In this snapshot, the engine coolant is at operating temperature. See Figure 7-6.

NOTE:
The EGR temperature slowly builds while the coolant temperature remains steady.

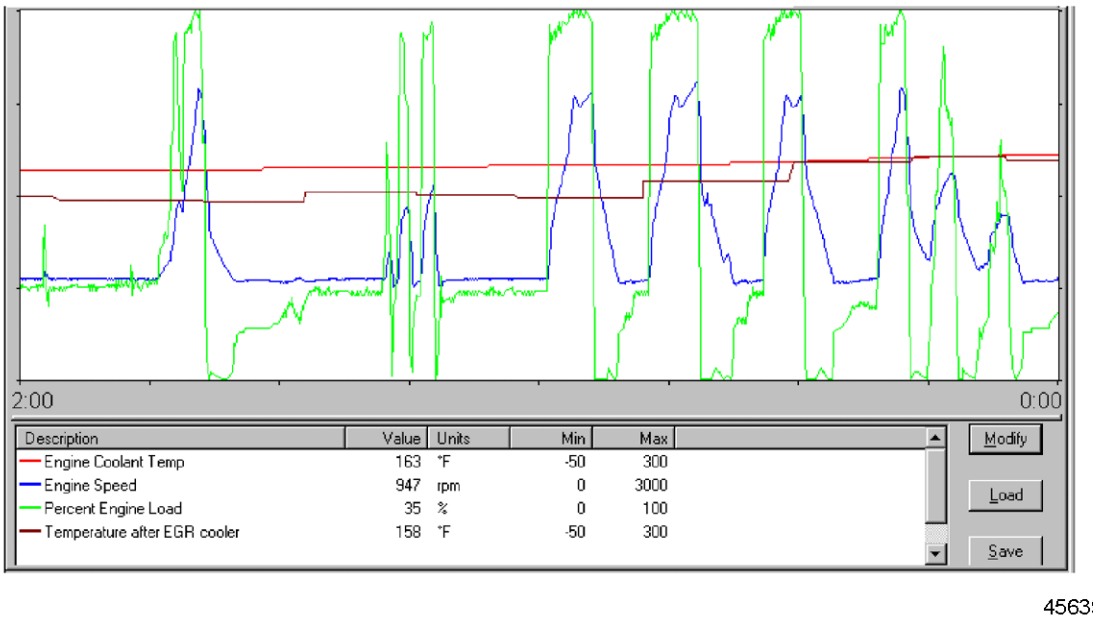

Figure 7-6 MBE 900 Engine at Low Vehicle Speed

 Copyright © 2005 DETROIT DIESEL CORPORATION

7.2 PROBLEM ENGINE OPERATION SNAPSHOTS

It is important to understand what a typical snapshot looks like during engine operation with a problem. In this section, some abnormal engine running conditions are illustrated.

Review these snapshots for examples of various types of engine operation problems.

7.2.1 ENGINE WITH NO EGR TEMPERATURE READING

If an engine runs with no EGR temperature reading, such as a bad EGR temperature sensor or open EGR temperature circuit; then there will be no value for EGR temperature after cooler. See Figure 7-7 and Figure 7-8 for an MBE 900 engine with no EGR temperature reading.

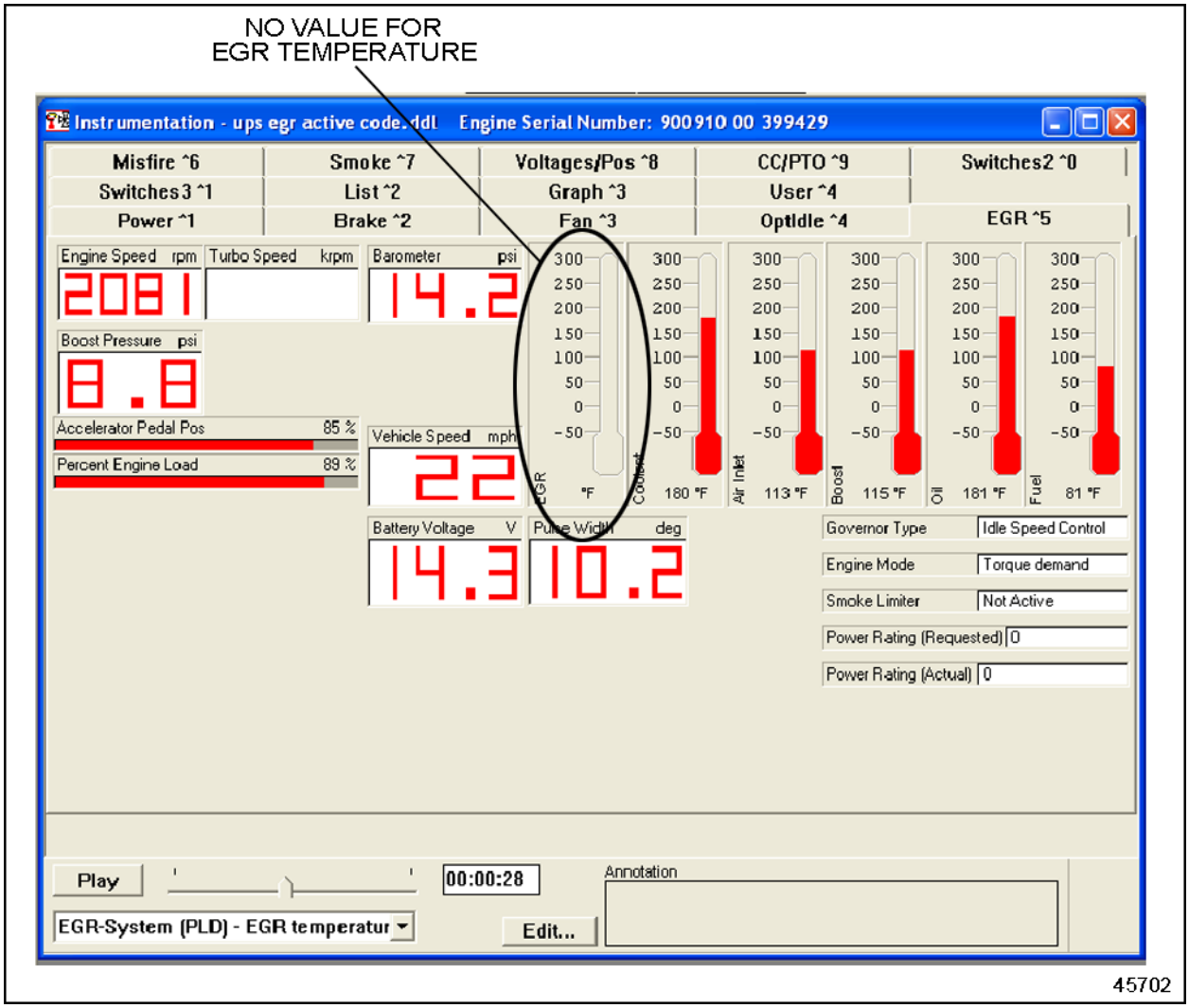

Figure 7-7 MBE 900 Engine Running with No EGR Temperature Reading — Diagnostic Instrumentation Window

All information subject to change without notice. (Rev. 5/05)
7SE940 0505 Copyright © 2005 DETROIT DIESEL CORPORATION

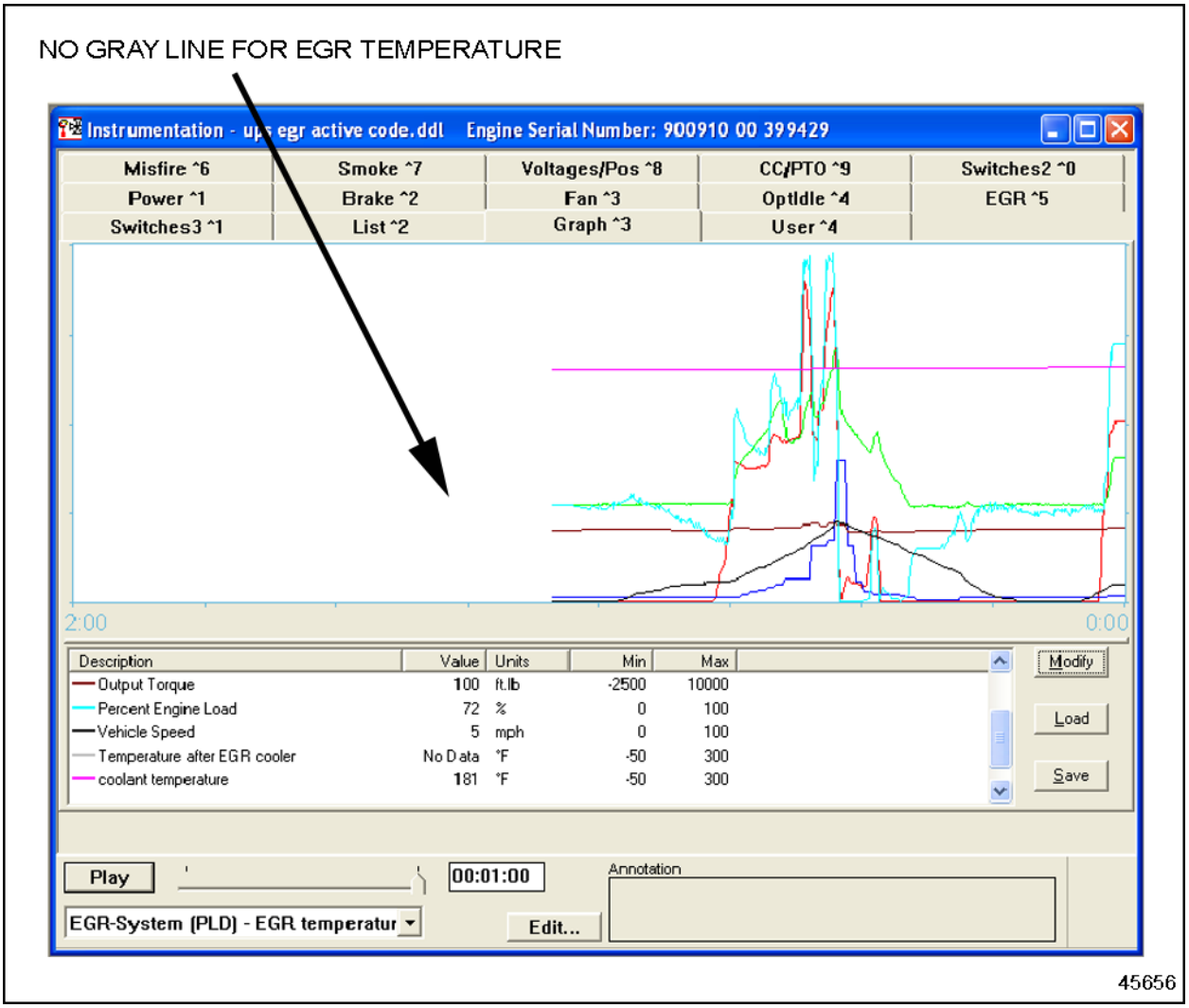

Figure 7-8 MBE 900 Engine Running with No EGR Temperature Reading — Graph Window

 Copyright © 2005 DETROIT DIESEL CORPORATION

7.2.2 ENGINE WITH ABOVE NORMAL EGR TEMPERATURE READINGS

If an engine runs with above normal EGR temperature reading, such as a bad EGR temperature sensor or open EGR temperature circuit; then the fault description, fault ID (SID or PID), and FMI will appear in the fault codes window. See Figure 7-9.

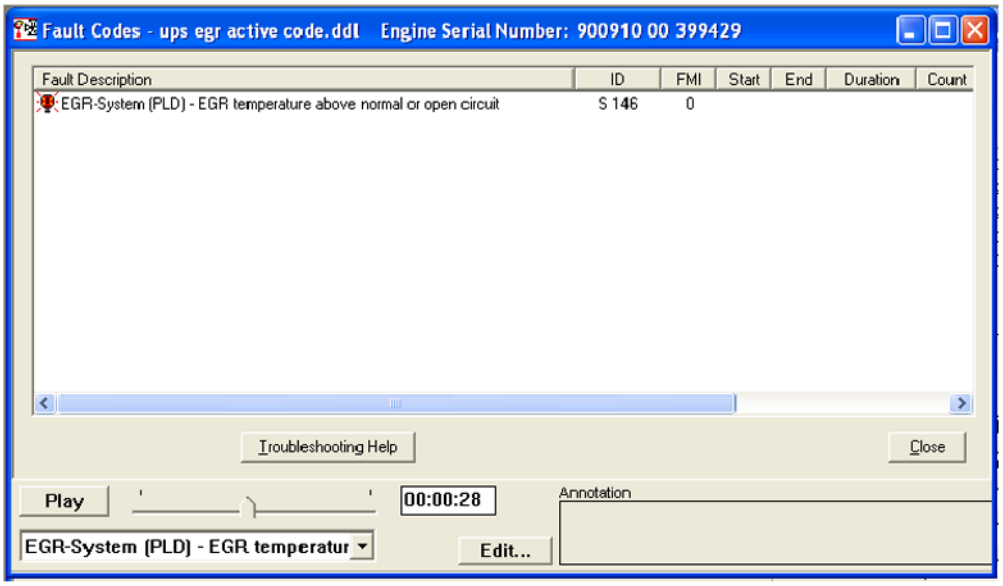

45700

Figure 7-9 MBE 900 Engine Running with Above Normal EGR Temperature — Fault Codes Window

All information subject to change without notice. (Rev. 5/05)
7SE940 0505 Copyright © 2005 DETROIT DIESEL CORPORATION

APPENDIX A: LIST OF ACRONYMS

AKA	Also Known As
API	American Petroleum Institute
AWL	Amber Warning Lamp (aka CEL)
BOI	Beginning Of Injection
CAC	Charge Air Cooler
CEL	Check Engine Light (aka AWL)
CKP Sensor	Crankshaft Position Sensor
CMP Sensor	Camshaft Position Sensor
DDDL	Detroit Diesel Diagnostic Link
DDEC	Detroit Diesel Electronic Controls
DDEC-ECU	DDEC Electronic Control Unit (aka PLD)
DDEC-VCU	DDEC Vehicle Control Unit
DTC	Diagnostic Trouble Code
ECT	Engine Coolant Temperature
EGR	Exhaust Gas Recirculation
EPA	Environmental Protection Agency
ESC	Abbreviation on a Computer Keyboard for 'Escape'
FMI	Failure Mode Indentifier
IAT	Intake Air Temperature
IES	Integrated Electronic System
IMAT Sensor	Intake Manifold Air Temperature Sensor
IMP Sensor	Intake Manifold Pressure Sensor (aka TBS)
kPa	Kilopascals
NAFTA	North American Free Trade Agreement/Area
NOx	Oxides of Nitrogen
OEM	Original Equipment Manufacturer
PID	Parameter Identification
PLD	Engine Control Module (Pump and Nozzle Control Unit, aka DDEC-ECU)
PSI	Pounds per Square Inch
PTO	Power Take Off
PWM	Pulse Width Modulation
RPM	Revolutions per Minute
RSL	Red Stop Lamp (aka SEL)

 Copyright © 2005 DETROIT DIESEL CORPORATION

SAE	Society of Automotive Engineers
SEL	Stop Engine Light (aka RSL)
SID	System Identification
TBS	Turbocharger Boost Sensor (aka IMP Sensor)
VSS	Vehicle Speed Sensor

All information subject to change without notice. (Rev. 5/05)
7SE940 0505 Copyright © 2005 DETROIT DIESEL CORPORATION

APPENDIX B: MBE DDEC WIRING SCHEMATICS

- ☐ MBE 900/4000 DDEC Vehicle Interface Wiring Diagram — See Figure B-1.
- ☐ MBE 4000 DDEC-ECU Engine Wiring Diagram — See Figure B-2.
- ☐ MBE 900 DDEC-ECU Engine Wiring Diagram — See Figure B-3.

 Copyright © 2005 DETROIT DIESEL CORPORATION

https://truckmanualshub.com/

All information subject to change without notice. (Rev. 5/05)
7SE940 0505 Copyright © 2005 DETROIT DIESEL CORPORATION

15-PIN CONNECTOR

15/1 TRANS NEUTRAL Sw
15/2 DUAL SPEED AXLE
15/3 VSS +
15/4 VSS -
15/5 NOT USED
15/6 NOT USED
15/7 ENGINE COOLANT LEVEL SENSOR
15/8 NOT USED
15/9 AGS2 BACKUP LAMP OUTPUT/ COOLANT LEVEL LOW LAMP
15/10 GRID HEATER
15/11 OI ACTIVE LAMP
15/12 STARTER LOCKOUT / OI ALARM
15/13 MBE PROPRIETARY CAN (+)
15/14 MBE PROPRIETARY CAN SHIELD
15/15 MBE PROPRIETARY CAN (-)

18-PIN CONNECTOR

18/1 VEHICLE POWER SHUTDOWN
18/2 CLUTCH SWITCH 1
18/3 IDLE VALIDATION GROUND
18/4 CRUISE CONTROL, SET/COAST
18/5 CRUISE CONTROL, RES/ACCEL
18/6 CRUISE CONTROL, ON/OFF
18/7 REMOTE ACCELERATOR SELECT SWITCH
18/8 ENGINE BRAKE LOW
18/9 ENGINE BRAKE HIGH
18/10 REMOTE PTO SWITCH
18/11 LIMITER 0
18/12 LIMITER 1
18/13 ENGINE SHUTDOWN OVERRIDE
18/14 AIR CONDITION STATUS
18/15 FAN OVERRIDE
18/16 THROTTLE INHIBIT
18/17 REMOTE THROTTLE +5V SUPPLY
18/18 REMOTE THROTTLE SIGNAL

12-PIN CONNECTOR

12/1 ENGINE START
12/2 NOT USED
12/3 OIL PRESSURE GAUGE/WARNING LAMP/FRS
12/4 OI THERMOSTAT/AGS2 CHECK TRANS LIGHT
12/5 AGS2 TRANS TEMP LIGHT
12/6 TACH OUT
12/7 NOT USED
12/8 OI HOOD TILT SWITCH
12/9 NOT USED
12/10 NOT USED
12/11 ENGINE STOP
12/12 NOT USED

21-PIN CONNECTOR

21/1 BATTERY VOLTAGE
21/2 IGNITION (+12V)
21/3 BATTERY GROUND
21/4 NOT USED
21/5 RED STOP LAMP
21/6 AMBER WARNING LAMP
21/7 WAIT TO START LAMP
21/8 NOT USED
21/9 THROTTLE PEDAL POWER +5V SUPPLY
21/10 PLUG (NOT USED, MUST BE PLUGGED)
21/11 THROTTLE PEDAL SIGNAL
21/12 VALIDATION 2 (THROTTLE ACTIVE)
21/13 IDLE VALIDATION 1 (IDLE ACTIVE)
21/14 THROTTLE PEDAL SENSOR RETURN
21/15 SERVICE BRAKE SWITCH
21/16 PARK BRAKE SWITCH
21/17 J1708 A (+)
21/18 J1708 B (-)
21/19 SAE J1939 (+)
21/20 J1939 SHIELD
21/21 SAE K1939 (-)

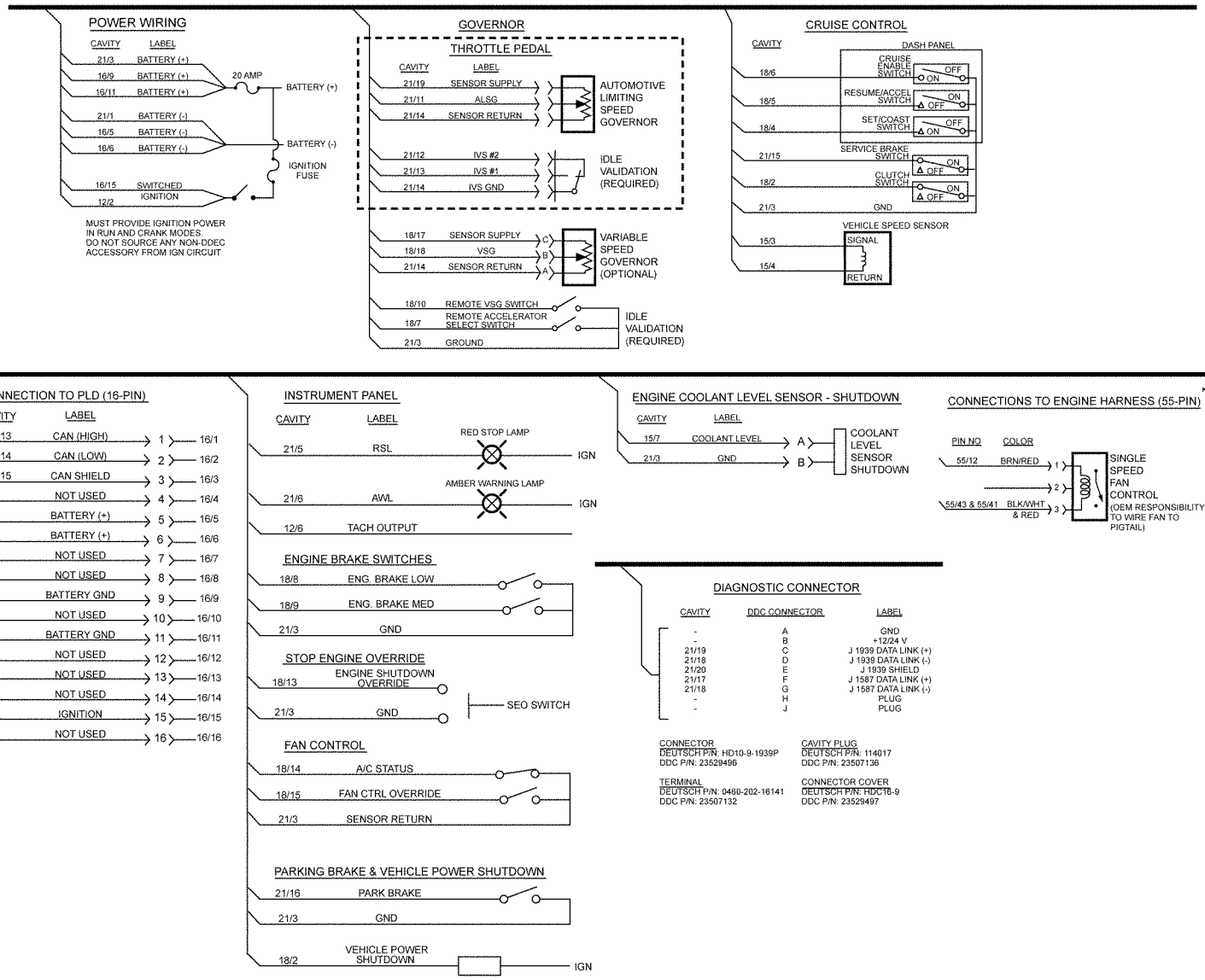

DDEC FOR MBE (MBE 900/4000) VEHICLE INTERFACE HARNESS

45377

https://truckmanualshub.com/

All information subject to change without notice. (Rev. 12/04)
7SA821 0412 Copyright © 2004 DETROIT DIESEL CORPORATION

DDEC-ECU WIRING DIAGRAM

DDC RESPONSIBILITY

PIN NO.	WIRE COLOR	DESCRIPTION
55/0	--	NOT USED
55/1	BLK/YEL	CMP (–)
55/2	BLK/VIOL	CKP (–)
55/3	WHT/YEL	COOLANT TEMP RETURN
55/4	BRN/GRN	FUEL TEMP
55/5	GRN/WHT	SENSOR RETURN
55/6	WHT/BLK	OIL PRESSURE SENSOR SUPPLY
55/7	GRN	BOOST PRESS SENSOR SUPPLY
55/8	--	NOT USED
55/9	RED/BLU	INJECTOR VALVES (BANK 2)
55/10	--	OIL PRESSURE SENSOR RETURN
55/11	GRA/VIOL	PV GROUND
55/12	BRN/RED	PV BANK 1-4
55/13	--	NOT USED
55/14	--	NOT USED
55/15	GRA/YEL	OIL TEMP RETURN
55/16	RED/GRN	INJECTOR VALVES (BANK 1)
55/17	--	NOT USED
55/18	--	STARTER HIGHSIDE CONTROL
55/19	BRN/VIOL	CKP (+)
55/20	BRN/YEL	CMP (+)
55/21	--	INTAKE MANIFOLD TEMP RETURN
55/22	BLK	EGR TEMP SENSOR RETURN
55/23	BLU	BOOST PRESS SENSOR RETURN
55/24	GRN/VIOL	TURBO SPEED SIGNAL
55/25	--	NOT USED
55/26	--	NOT USED
55/27	BRN/BLK	PV5 - CONSTANT THROTTLE VALVE
55/28	WHT/VIOL	EGR TEMP SIGNAL
55/29	VIOL	INTAKE MANIFOLD PRESS SIGNAL
55/30	--	--
55/31	--	NOT USED
55/32	BRN/GRA	OIL PRESSURE SIGNAL
55/33	WHT	OIL LEVEL SIGNAL
55/34	RED/YEL	COOLANT TEMP SIGNAL
55/35	--	NOT USED
55/36	BRN/BLU	FUEL TEMP SIGNAL
55/37	--	NOT USED
55/38	GRA/YEL	INJ/SOLENOID VALVE 4 (F)
55/39	GRA/BRN	OIL TEMP SIGNAL
55/40	RED/WHT	PV6
55/41	RED	PV3 FAN CONTROL
55/42	BLU/BLK	PV SUPPLY
55/43	BLK/WHT	PV4
55/44	WHT/BLU	INJ/SOLENOID VALVE 6 (D)
55/45	GRA/GRN	INJ/SOLENOID VALVE 5 (B)
55/46	--	NOT USED
55/47	GRA/VIOL	INJ/SOLENOID VALVE 2 (E)
55/48	BRN	INTAKE MANIFOLD TEMP SIGNAL
55/49	YEL	OIL LEVEL SENSOR RETURN
55/50	YEL	PV2 CONTROL
55/51	WHT/RED	PV1 CONTROL
55/52	--	PV2 SUPPLY
55/53	GRA/BLU	INJ/SOLENOID VALVE 3 (C)
55/54	GRA/BLK	INJ/SOLENOID VALVE 1 (A)

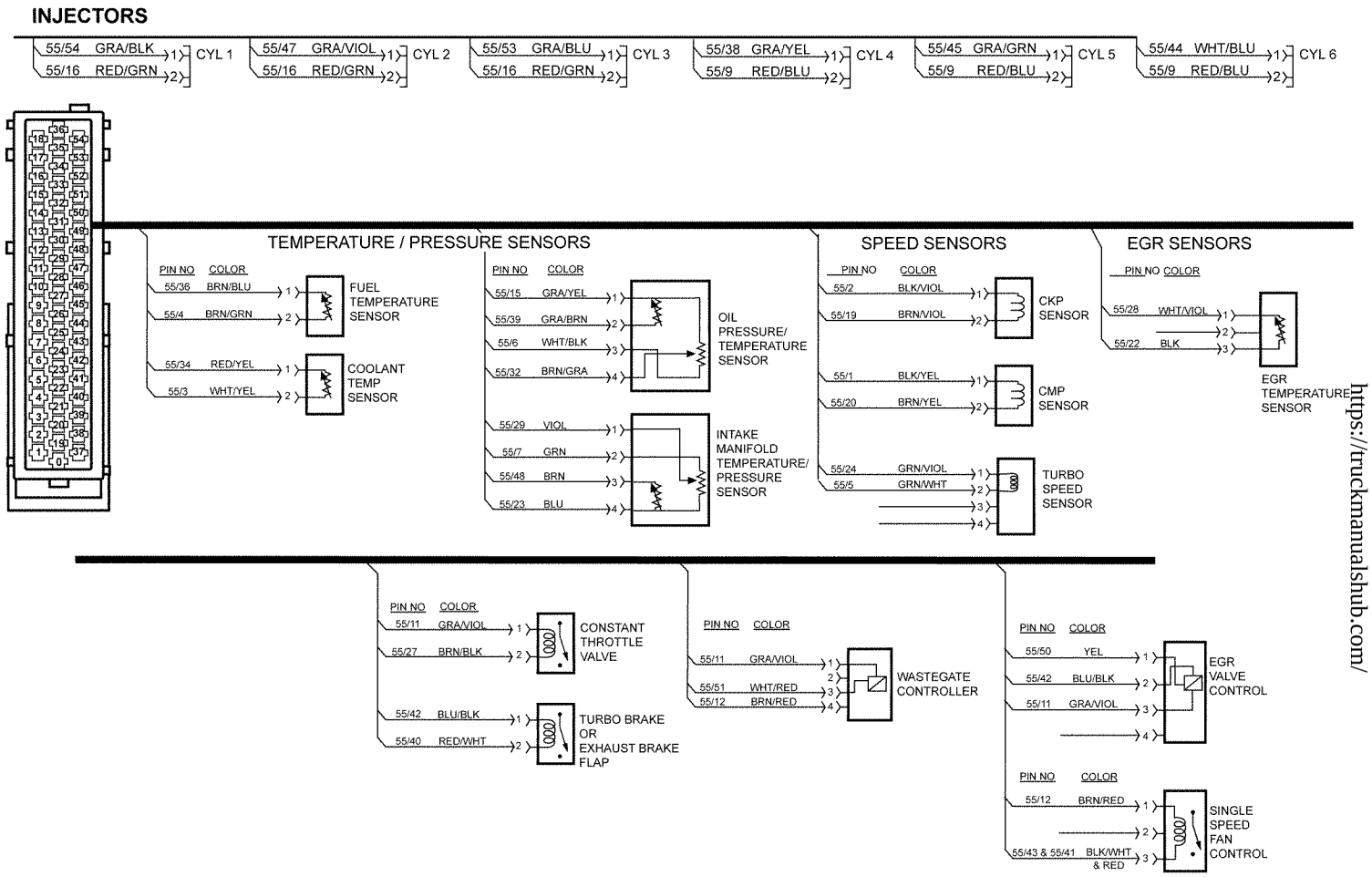

MBE 4000 (EPA04) DDEC-ECU EGR ENGINE HARNESS

https://truckmanualshub.com/

All information subject to change without notice. (Rev. 4/05)
7SA825 0504 Copyright © 2005 DETROIT DIESEL CORPORATION.

DDEC-ECU WIRING DIAGRAM

DDC RESPONSIBILITY

PIN NO.	WIRE COLOR	DESCRIPTION
55/0	--	NOT USED
55/1	BLK/YEL	CMP (–)
55/2	BLK/VIOL	CKP (–)
55/3	WHT/YEL	COOLANT TEMP RETURN
55/4	BRN/GRN	FUEL TEMP
55/5	GRN/WHT	SENSOR RETURN
55/6	BRN/GRA	OIL PRESSURE SENSOR SUPPLY
55/7	GRN	BOOST PRESS SENSOR SUPPLY
55/8	–	NOT USED
55/9	RED/BLU	INJECTOR VALVES (BANK 2)
55/10	GRA/YEL	OIL PRESSURE SENSOR RETURN
55/11	BLK	PV GROUND
55/12	RED/BLK	PV BANK 1-4
55/13	–	NOT USED
55/14	–	NOT USED
55/15	BRN/WHT	OIL TEMP RETURN
55/16	RED/GRN	INJECTOR VALVES (BANK 1)
55/17	–	NOT USED
55/18	–	STARTER HIGHSIDE CONTROL
55/19	BRN/VIOL	CKP (+)
55/20	BRN/YEL	CMP (+)
55/21	GRN/YEL	INTAKE MANIFOLD TEMP RETURN
55/22	BLU	EGR TEMP SENSOR RETURN
55/23	--	BOOST PRESS SENSOR RETURN
55/24	–	TURBO SPEED SIGNAL
55/25	–	NOT USED
55/26	–	NOT USED
55/27	BRN/RED	PV5 - CONSTANT THROTTLE VALVE
55/28	GRA	EGR TEMP SIGNAL
55/29	VIOL	INTAKE MANIFOLD PRESS SIGNAL
55/30	--	--
55/31	–	NOT USED
55/32	GRN/BLU	OIL PRESSURE SIGNAL
55/33	WHT	OIL LEVEL SIGNAL
55/34	RED/YEL	COOLANT TEMP SIGNAL
55/35	–	NOT USED
55/36	BRN/BLU	FUEL TEMP SIGNAL
55/37	–	NOT USED
55/38	WHT/BLU	INJ/SOLENOID VALVE 4 (F)
55/39	GRA/BRN	OIL TEMP SIGNAL
55/40	BLU/WHT	PV6
55/41	BLU/WHT	PV3 FAN CONTROL
55/42	GRN/WHT	PV SUPPLY
55/43	BLU/RED	PV4
55/44	GRA/YEL	INJ/SOLENOID VALVE 6 (D)
55/45	GRA/VIOL	INJ/SOLENOID VALVE 5 (B)
55/46	–	NOT USED
55/47	GRA/BLU	INJ/SOLENOID VALVE 2 (E)
55/48	BRN	INTAKE MANIFOLD TEMP SIGNAL
55/49	YEL	OIL LEVEL SENSOR RETURN
55/50	WHT/BLK	PV2 CONTROL
55/51	RED/WHT	PV1 CONTROL
55/52	–	PV2 SUPPLY
55/53	GRA/GRN	INJ/SOLENOID VALVE 3 (C)
55/54	GRA/BLK	INJ/SOLENOID VALVE 1 (A)

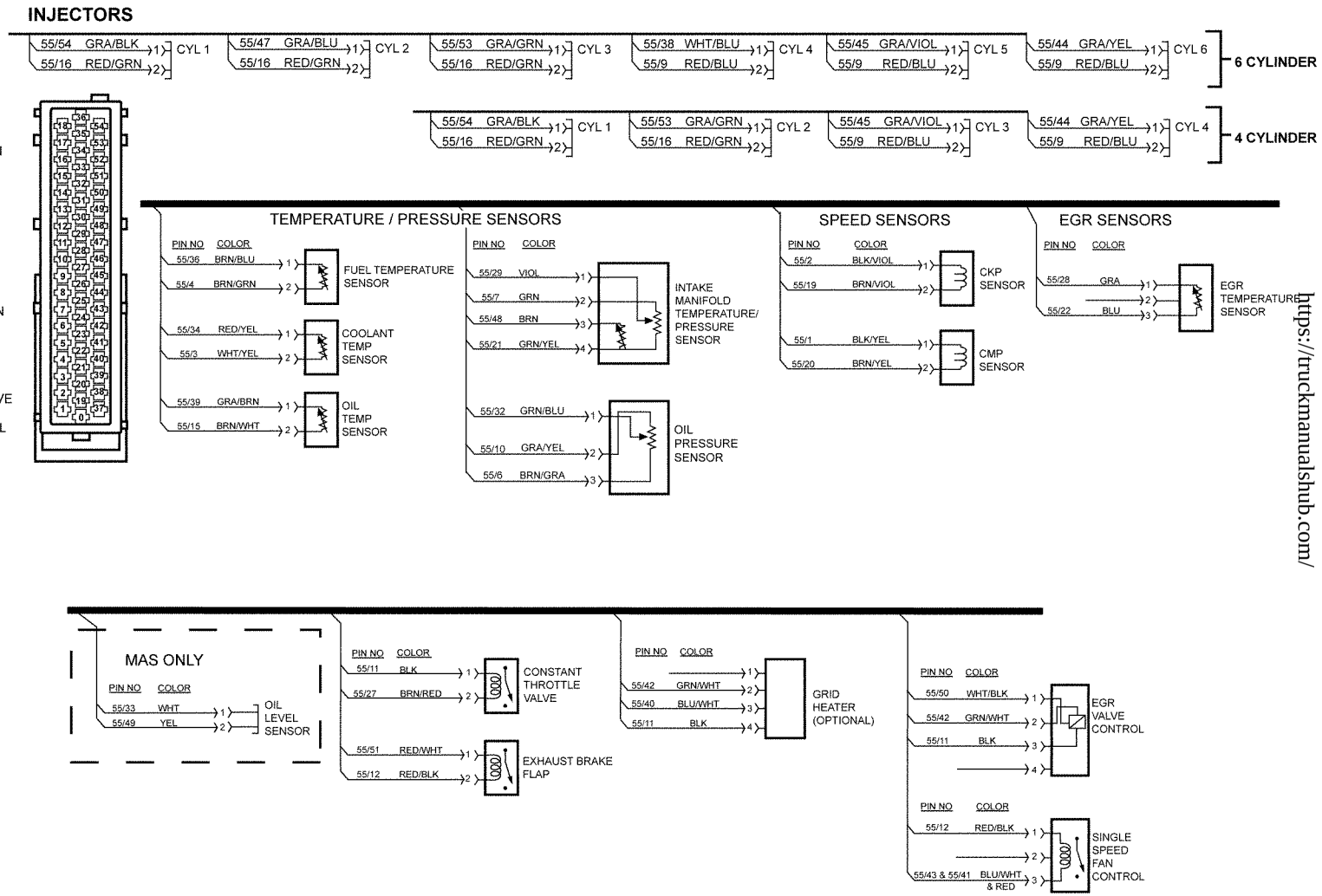

https://truckmanualshub.com/

MBE 900 (EPA04) DDEC-ECU EGR ENGINE HARNESS

All information subject to change without notice. (Rev. 5/05)
7SA825 0505 Copyright © 2005 DETROIT DIESEL CORPORATION.

45117

https://truckmanualshub.com/

APPENDIX C: SERVICE INFORMATION LETTERS

- ☐ Service Information Letter 91 **TS**-02,
  Subject: *Extreme Cold Ambient Operation*
  See Figure C-1.
- ☐ Service Information Letter 04 **TS**-38,
  Subject: *MBE 4000 EGR System — EGR Cooler Inspection*
  See Figure C-2, Figure C-3, Figure C-4, Figure C-5, and Figure C-6.
- ☐ Service Information Letter 04 **TS**-57,
  Subject: *MBE 900 Model Year 2004 EGR Overheat Condition*
  See Figure C-7 and Figure C-8.
- ☐ Service Information Letter 04 **TS**-61,
  Subject: *MBE 4000 — PLD Parameter Settings*
  See Figure C-9, Figure C-10, Figure C-11, Figure C-12, Figure C-13, Figure C-14, and Figure C-15.
- ☐ Service Information Letter 05 **TS**-01,
  Subject: *Charge Air Cooler Leaks*
  See Figure C-16 and Figure C-17.

 Copyright © 2005 DETROIT DIESEL CORPORATION

https://truckmanualshub.com/

All information subject to change without notice. (Rev. 5/05)
7SE940 0505 Copyright © 2005 DETROIT DIESEL CORPORATION

https://truckmanualshub.com/

DETROIT DIESEL
CORPORATION

91TS-02

February 25, 1991

TO: All Distributors - US and Canada

FROM: C.O. Henriksen

ATTN: **Service Managers**

SUBJECT: **EXTREME COLD AMBIENT OPERATION**

The use of winterfronts on Detroit Diesel engines has not been recommended for the following two basic reasons:

- The cooling system would be unable to dissipate the full power heat load and engine overtemperature conditions would occur.
- Air flow across the charge air cooler is required to insure adequate temperature drop. Certain conditions could cause improper turbocharger operation and result in engine misfire.

Under normal North winter conditions, the rapid warm-up cooling system with full blocking thermostats are sufficient to allow the engine to reach normal operating conditions. SIB 12/60/89 coverers this subject and is attached for reference.

In extreme cold conditions, below 10 degrees F (-12 degrees C), winterfront may be required to help maintain engine temperature. The use of a winterfront with an approximate one square foot opening may be used in these conditions. With extreme conditions of cold, snow and ice, a belly tarp may also be required to maintain adequate engine temperature.

In light load, extended idle, PTO operation or severe cold, it may be necessary to completely close up the winterfront. Caution must be used under these conditions, as it must be opened if:

- The fan cycles on and off at anytime.
- Prior to driving the vehicle in a loaded condition.
- Any popping noise coming from the turbocharger/air cleaner system, the winterfront must be opened further.

Please ensure this information is passed on to dealers and appropriate customers in your area.

AUTHOR: C.O. Henriksen

AUTHOR'S TITLE: Manager, Technical Service

https://truckmanualshub.com/

All information subject to change without notice. (Rev. 5/05)
7SE940 0505 Copyright © 2005 DETROIT DIESEL CORPORATION

https://truckmanualshub.com/

DETROIT DIESEL

A DaimlerChrysler Company

No.: 04 TS - 38
July 14, 2004

TO: All Distributors/Dealers and Their Branches
U.S., Canada and Mexico

ATTN.: Service Managers

FROM: Evandro Silva

SUBJECT: **MBE4000 – EGR System – EGR Cooler Inspection**

In continuation to provide assist to distributors/dealers technicians servicing EPA04 certified MBE4000 equipped with EGR Technology, we are releasing an inspection/troubleshooting procedure for the EGR cooler.

This procedure is part of the troubleshooting for the EGR System applied to the MBE4000 engine. Additional information and tooling will be released in the coming fall.

If you have any questions, please free to contact the Technical Support Team

Evandro Silva
MBE4000 Technical Support

https://truckmanualshub.com/

All information subject to change without notice. (Rev. 5/05)
7SE940 0505 Copyright © 2005 DETROIT DIESEL CORPORATION

https://truckmanualshub.com/

EGR Cooler Inspection

In the event there is a suspect EGR cooler leak, inspect the engine for the following symptoms:

- CEL for low coolant level. Excessive coolant consumption.
- Black traces of a liquid on the rear RH side of engine block, near the shutoff valve.
- Black soot on the inside surface of the heat shield and the mount bracket for the EGR shutoff valve.
- Water/coolant traces around EGR Valve, EGR outlet pipe and EGR shutoff valve - see figure1.

NOTE:

Water condensation can generate water/coolant traces around EGR components. Water condensation does not imply there is a component failure. In case of a leaking EGR cooler, the water/coolant traces in the EGR components is always associated with coolant consumption (CEL for low coolant level).

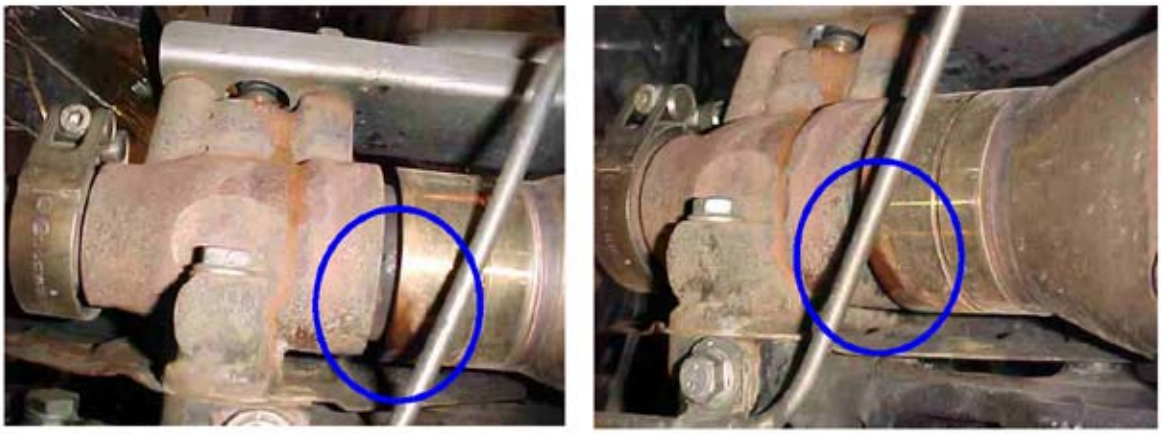

Figure 1 – traces of water/coolant around the shutoff valve

EGR Cooler - Troubleshooting

Refer to the flow chart in the next page for the EGR Cooler troubleshooting tree.

NOTE:

This troubleshooting tree must be applied in units with excessive lost of coolant or CEL for low coolant level complaint.

https://truckmanualshub.com/

Troubleshooting Tree

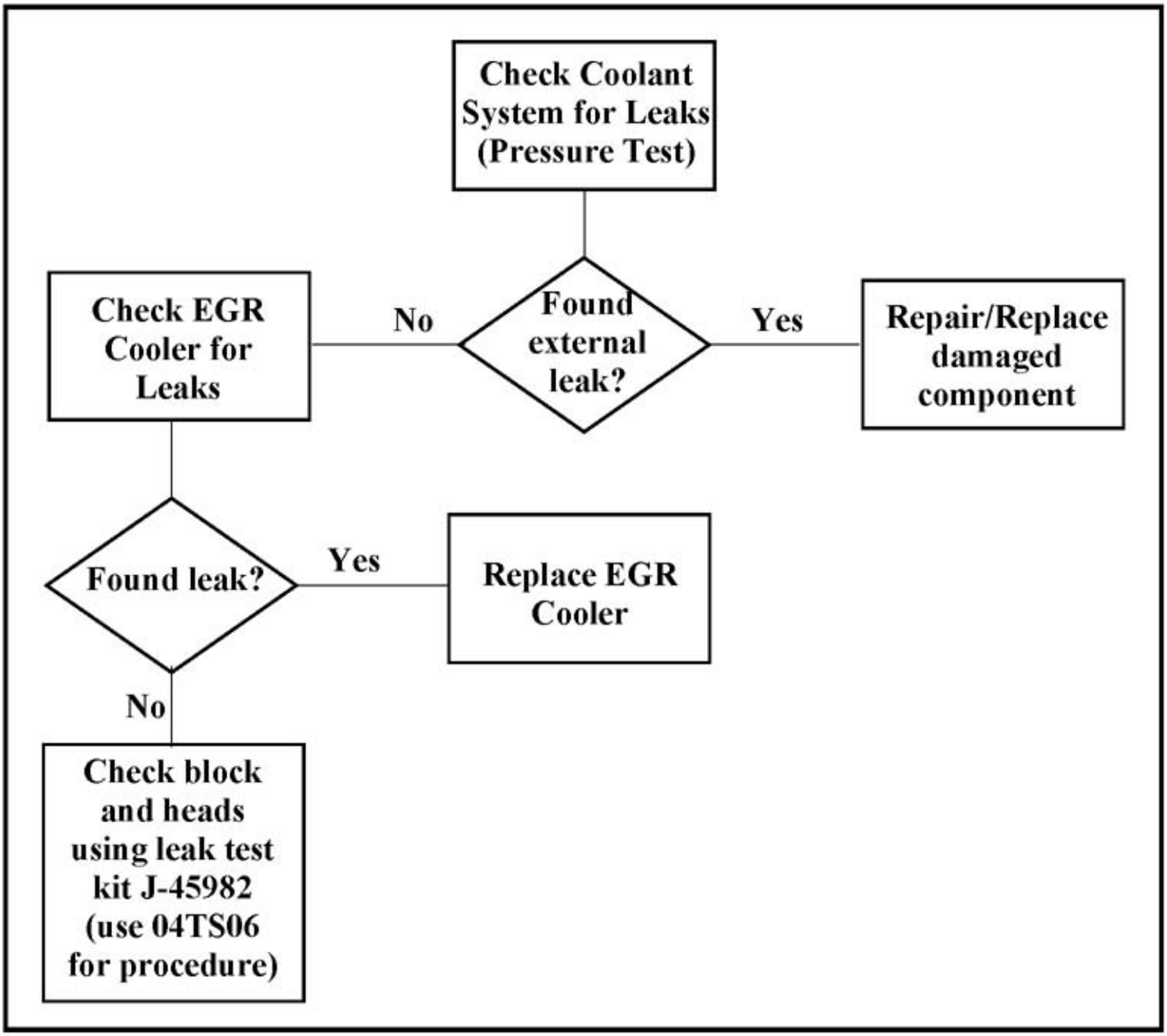

NOTE:
New coolant pipes have been added to the coolant system (EGR cooler supply and return lines). Make sure that they are inspected for leaks during the coolant system pressure test.

https://truckmanualshub.com/

EGR Cooler- Leak Test

NOTE:
For additional safety precautions, refer to the MBE4000 Service Manual (6SE412EGR) – General Information – page 20.

1. Short-circuit or plug the coolant ports at the EGR cooler. See figures 2 and 3 for details (a test kit is under development and will be available next fall).

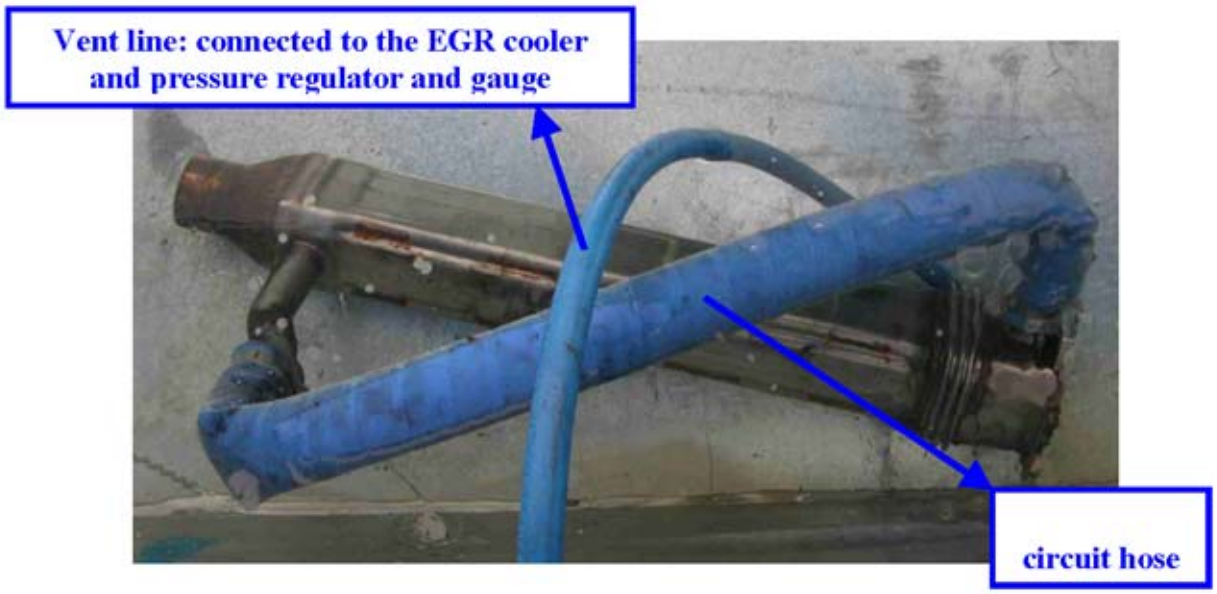

Figure 2 - EGR cooler ports: short-circuited

Figure 3 - EGR cooler ports: plugged

2. Connect a pressure regulator and a pressure gauge to the EGR cooler vent line.

https://truckmanualshub.com/

CAUTION:
To avoid injury from flying debris when using compressed air, wear adequate eye protection (face shield or safety goggles) and do not exceed 40 PSI (2.7 bar) air pressure.

3. Pressurize the EGR cooler applying 13 PSI. When adjusting the pressure, do not exceed 15 PSI.
4. Submerge the EGR cooler completely in a hot water tank. Tip one end of the cooler up so the air bubbles will quickly escape.
5. Leave the EGR cooler under the water for 5 minutes.
6. In the event of a failed EGR cooler, a steady stream of small air bubbles will come out of the higher port of the EGR cooler. See figure 4.

Figure 4 – Stream of air bubbles coming out of the pressurized EGR Cooler

7. Replace the EGR cooler.

https://truckmanualshub.com/

No.: 04 TS – 57 (Rev.)
November 29, 2004

TO: All Distributors, Dealers, and their Branches – U.S. & Canada

ATTN.: General Manager, Service Manager

FROM: Technical Service

SUBJECT: **MBE 900 Model Year 2004 EGR Overheat Condition**

Technical Service has recorded a field concern at several customer locations regarding the MBE 900 model year 2004 EGR units. The reported Code 110 00 (Engine Coolant Temperature High) will cause the engine to de-rate during normal engine operation.

Thermostat failures were found as a result of investigating the high engine coolant temperature. The primary cause for the failures has been attributed to the lower thermostat housing being manufactured to the non-EGR specification with a 15 mm restrictor hole instead of the 30 mm restrictor hole required for EGR engines. See Figure 1.

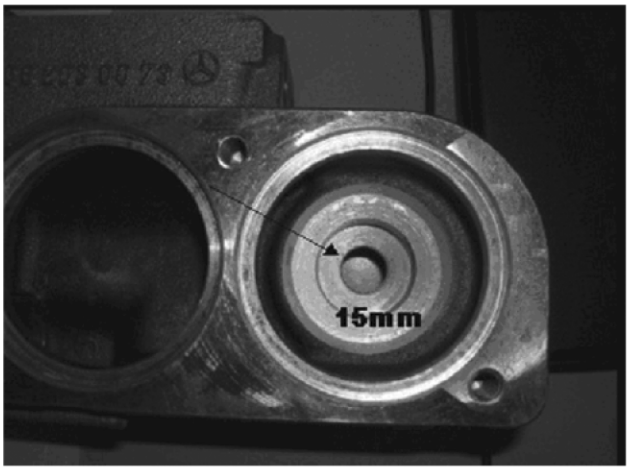

45356

Figure 1 Restrictor Hole of Lower Thermostat Housing

The 2004 model year EGR units incorporate a high-output water pump that requires the lower thermostat housing to have a 30 mm bore. The increased dimension from 15 mm to 30 mm allows the engine to maintain a constant coolant temperature and reduces stress to the associated cooling system components.

The corrective action plan will be to replace the lower thermostat housing.

https://truckmanualshub.com/

Distributors and Dealers should submit a Warranty Claim Type 1. Effected units can be any MBE 900 2004 model year EGR engine installed in a vehicle between January 1, 2004 through October 31, 2004.

The parts required to perform the task are listed in Table 1.

PART NUMBER	QUANTITY	DESCRIPTION
005 203 5975	2	Thermostat
020 997 1148	2	O-Ring
R906 203 0073	1	Lower Thermostat Housing
906 203 0180	1	Gasket – Housing to Cylinder Block
027 997 6048	1	O-Ring - EGR Coolant Return Tube (Optional)
917 003 022 003	1	Gasket - EGR Coolant Supply Tube (Optional)

Table 1 Parts requirements

The incorrect lower thermostat housing must be returned to a Detroit Diesel Remanufacturing facility per the usual core return process. Strip the housing of any unused parts and pack carefully for shipment to protect the machined surfaces. Please ship the thermostat housings in a timely manner to ensure an adequate supply of the remanufactured parts.

Replacement procedures can be found in *MBE 900 Service Manual* (6SE414).

NOTE: The Rocker cover must be removed in order to properly remove the lower thermostat housing. Failure to remove the rocker cover may result in damage to the lower thermostat housing.

Please contact the DDC Customer Support Center at 313-592-5800 if you have any questions.

https://truckmanualshub.com/

No.: 04 TS - 61
December 9, 2004

TO: All Distributors, Dealers and Their Branches - U.S., Canada and Mexico

ATTN.: General Manager, Service Manager

FROM: Technical Service

SUBJECT: **MBE 4000 – PLD Parameter Settings**

In the event of a PLD replacement or while troubleshooting, check the PLD parameters list first, before starting any repair procedure to eliminate unnecessary work.

The following tables, grouped by software and application, provide all possible combinations for PLD settings applied to the MBE 4000.

Table 1: MBE 4000 (non-EGR) - PLD Software 56 – **Diagnostic tool: MBE Reprogramming Station** – List of parameters for:

- **Freightliner Trucks**, Non-Turbo Brake, One-stage engine brake or two-stage engine brake.

Table 2: MBE 4000 (non-EGR) - PLD Software 56 – **Diagnostic tool: MBE Reprogramming Station** – List of parameters for:

- **Sterling and Western Star Trucks**, Non-Turbo Brake, Two-stage engine brake.
- **All Truck models,** Turbo Brake.

Table 3: MBE 4000 (non-EGR) - PLD Software 56 – **Diagnostic tool: minidiag2** – List of parameters for:

- **Freightliner Trucks**, Non-Turbo Brake, One-stage engine brake or two-stage engine brake.
- **Sterling and Western Star Trucks,** Non-Turbo Brake, two-stage engine brake.
- **All Truck models,** Turbo Brake.

Table 4: MBE 4000 (EGR) – DDEC-ECU/PLD Software 60 – **Diagnostic tool: MBE Reprogramming Station** – List of parameters for:

- **All Truck models**, Non-Turbo Brake.
- **All Truck models**, Turbo Brake.

https://truckmanualshub.com/

Table 5: MBE 4000 (EGR) - DDEC-ECU/PLD Software 60 – **Diagnostic tool: minidiag2** – List of parameters for:

- **All Truck models**, Non-Turbo Brake.
- **All Truck models**, Turbo Brake.

Please contact the DDC Customer Support Center at 313-592-5800 if you have any questions.

Table 1 - PLD Configuration - MBE4000 (Non-EGR) - Software 56

MBE Reprogramming Station list of parameters

Parameter Data		Freightliner Non-Turbo Brake	
Parameter Group	**Parameter**	**One-Stage Engine Brake**	**Two-Stage Engine Brake**
001 Engine identification	1 engine number	460.XXX-00-XXXXXX	
	2 manual / automatic transmission	Check transmission installed on the truck (see transmission type table)	
	3 starter type (control over PLD or externally)	1: starter directly activated via terminal 50 (KB)	1: starter directly activated via terminal 50 (KB)
	5 boost-pressure sensor characteristic line	1: characteristic line 2 (4 bar sensor).	1: characteristic line 2 (4 bar sensor)
002 CAN configuration	1 engine control via CAN	1: switched on (default)	1: switched on (default)
	2 CAN one wire capability	1: active (default)	1: active (default)
003 Proportional valves	1 proportional valve 1 (PV1)	3 = exhaust flap enabled	3 = exhaust flap enabled
	2 proportional valve 2 (PV2)	0 = no function (def.)	3 = decompression valve (constant throttle)
	3 proportional valve 3 (PV3)	1 = fan step 1	1 = fan step 1
	4 proportional valve 4 (PV4)	1 = fan step 2	1 = fan step 2
	5 proportional valve 5 (PV5)	0 = no function (def.)	0 = no function (def.)
	6 proportional valve 6 (PV6)	0 = no function (def.)	0 = no function (def.)
004 Fan	1 fan type	4: Horton; Freightl. /1-stage	4: Horton; Freightl. /1-stage
	2 switch on threshold on coolant temp. speed 1	96	96
	3 switch on threshold on intake air temp. speed 1	75	75
	4 switch on threshold on coolant temp. speed 2	96	96
	5 switch on threshold on intake air temp. speed 2	75	75
	6 diff. threshold fan 1	0	0
	7 switch on thresh. intake air temp. speed 1/eng. brake	75	75
	8 switch on thresh. intake air temp. speed 2/eng. brake	75	75
	9 diff. threshold intake air temp / engine brake	0	0
006 Oil	1 oil temperature sensor	1 = oil temperature sensor enabled	1 = oil temperature sensor enabled
	2 oil level measurement	0: no function (default)	0: no function (default)
	3 select oil pan type	0	0
	4 oil pressure sensor type	0 = active absolute pressure sensor	0 = active absolute pressure sensor
	5 oil pressure switch or sensor	0: oil pressure sensor blocked (default)	0: oil pressure sensor blocked (default)
008 Other factors	2 scale factor engine start	1	1
	3 torque temp. compensation	1: torque temp. compensation (default)	1: torque temp. compensation (default)

https://truckmanualshub.com/

Table 2 - PLD Configuration - MBE4000 (Non-EGR) - Software 56

MBE Reprogramming Station list of parameters

Parameter Data		Sterling and Western Star Non-Turbo Brake	Turbo Brake
Parameter Group	**Parameter**	**Two-Stage Engine Brake**	
001 Engine identification	1 engine number	460.XXX-00-XXXXXX	
	2 manual / automatic transmission	Check transmission installed on the truck (see transmission type table)	
	3 starter type (control over PLD or externally)	1: starter directly activated via terminal 50 (KB)	1: starter directly activated via terminal 50 (KB)
	5 boost-pressure sensor characteristic line	1: characteristic line 2 (4 bar sensor)	1: characteristic line 2 (4 bar sensor)
002 CAN configuration	1 engine control via CAN	1: switched on (default)	1: switched on (default)
	2 CAN one wire capability	1: active (default)	1: active (default)
003 Proportional valves	1 proportional valve 1 (PV1)	3 = exhaust flap enabled	1 = boost control
	2 proportional valve 2 (PV2)	3 = decompression valve (constant throttle)	3 = decompression valve (constant throttle)
	3 proportional valve 3 (PV3)	1 = fan step 1	1 = fan step 1
	4 proportional valve 4 (PV4)	1 = fan step 2	1 = fan step 2
	5 proportional valve 5 (PV5)	0 = no function (def.)	0 = no function (def.)
	6 proportional valve 6 (PV6)	0 = no function (def.)	3 = exhaust flap enable
004 Fan	1 fan type	4: Horton; Freightl. /1-stage	4: Horton; Freightl. /1-stage
	2 switch on threshold on coolant temp. speed 1	96	96
	3 switch on threshold on intake air temp. speed 1	75	75
	4 switch on threshold on coolant temp. speed 2	96	96
	5 switch on threshold on intake air temp. speed 2	75	75
	6 diff. threshold fan 1	0	0
	7 switch on thresh. intake air temp. speed 1/eng. brake	75	75
	8 switch on thresh. intake air temp. speed 2/eng. brake	75	75
	9 diff. threshold intake air temp / engine brake	0	0
006 Oil	1 oil temperature sensor	1 = oil temperature sensor enabled	1 = oil temperature sensor enabled
	2 oil level measurement	0: no function (default)	0: no function (default)
	3 select oil pan type	0	0
	4 oil pressure sensor type	0 = active absolute pressure sensor	0 = active absolute pressure sensor
	5 oil pressure switch or sensor	0: oil pressure sensor blocked (default)	0: oil pressure sensor blocked (default)
008 Other factors	2 scale factor engine start	1	1
	3 torque temp. compensation	1: torque temp. compensation (default)	1: torque temp. compensation (default)

https://trucknanualshub.com/

Table 3 - PLD Configuration - MBE4000 (Non-EGR) - Software 56

minidiag2 list of parameters

Parameter Data		Freightliner Non-Turbo Brake		Sterling and Western Star Non-Turbo Brake	Turbo Brake
Parameter Group	Parameter	One-Stage Engine Brake	Two-Stage Engine Brake	Two-Stage Engine Brake	
001 Engine identification	1 engine number	460.XXX-00-XXXXXX			
	2 manual / automatic transmission	Check transmission installed on the truck (see transmission type table)			
	3 starter type (control over PLD or externally)	1	1	1	1
	5 boost-pressure sensor characteristic line	1	1	1	1
002 CAN configuration	1 engine control via CAN	1	1	1	1
	2 CAN one wire capability	1	1	1	1
003 Proportional valves	1 proportional valve 1 (PV1)	3	3	3	1
	2 proportional valve 2 (PV2)	0	3	3	3
	3 proportional valve 3 (PV3)	1	1	1	1
	4 proportional valve 4 (PV4)	1	1	1	1
	5 proportional valve 5 (PV5)	0	0	0	0
	6 proportional valve 6 (PV6)	0	0	0	3
004 Fan	1 fan type	4	4	4	4
	2 switch on threshold on coolant temp. speed 1	96	96	96	96
	3 switch on threshold on intake air temp. speed 1 (note 1)	75	75	75	75
	4 switch on threshold on coolant temp. speed 2	96	96	96	96
	5 switch on threshold on intake air temp. speed 2 (note 1)	75	75	75	75
	6 diff. threshold fan 1	0	0	0	0
	7 switch on thresh. intake air temp. speed 1/eng. brake	75	75	75	75
	8 switch on thresh. intake air temp. speed 2/eng. brake	75	75	75	75
	9 diff. threshold intake air temp / engine brake	0	0	0	0
006 Oil	1 oil temperature sensor	1	1	1	1
	2 oil level measurement	0	0	0	0
	3 select oil pan type	0	0	0	0
	4 oil pressure sensor type	0	0	0	0
	5 oil pressure switch or sensor	0	0	0	0
008 Other factors	2 scale factor engine start	1	1	1	1
	3 torque temp. compensation	1	1	1	1

https://trucknanualshub.com/

Table 4 - PLD Configuration - MBE4000 (EGR) - Software 60

MBE Reprogramming Station list of parameters

Parameter Data		Non-Turbo Brake (Two-Stage Engine Brake - Low/High)	Turbo Brake (Three-Stage Engine Brake - Low/Med/High)
Parameter Group	**Parameter**		
001 Engine identification	2 manual / automatic transmission	**Check transmission installed on the truck (see transmission type table)**	
	3 starter type (control over PLD or externally)	1: starter directly activated via terminal 50 (KB)	1: starter directly activated via terminal 50 (KB)
	5 boost-pressure sensor characteristic line	1: characteristic line 2 (4 bar sensor)	1: characteristic line 2 (4 bar sensor)
	6 charge air temperature sensor after compressor	0: no sensor installed	0: no sensor installed
002 CAN configuration	1 engine control via CAN	1: switched on (default)	1: switched on (default)
	2 CAN one wire capability	1: active (default)	1: active (default)
003 Proportional valves	1 proportional valve 1 (PV1)	0 = no function (def.)	1 = boost control
	2 proportional valve 2 (PV2)	1 = EGR valve	1 = EGR valve
	3 proportional valve 3 (PV3)	1 = fan step 1	1 = fan step 1
	4 proportional valve 4 (PV4)	1 = fan step 2	1 = fan step 2
	5 proportional valve 5 (PV5)	3 = engine brake (CTV) installed	3 = engine brake (CTV) installed
	6 proportional valve 6 (PV6)	3 = turbo brake sleeve or exhaust flap	3 = turbo brake sleeve or exhaust flap
004 Fan	1 fan type	4: Horton; Freightl. /1-stage	4: Horton; Freightl. /1-stage
	2 switch on threshold on coolant temp. speed 1	96	96
	3 switch on threshold on intake air temp. speed 1	65	65
	4 switch on threshold on coolant temp. speed 2	96	96
	5 switch on threshold on intake air temp. speed 2	65	65
	6 diff. threshold fan 1	0	0
	7 switch on thresh. intake air temp. speed 1/eng. brake	65	65
	8 switch on thresh. intake air temp. speed 2/eng. brake	65	65
	9 diff. threshold intake air temp / engine brake	0	0
006 Oil	1 oil temperature sensor	1 = oil temperature sensor enabled	1 = oil temperature sensor enabled
	2 oil level measurement	0: no function (default)	0: no function (default)
	3 select oil pan type	0	0
	4 oil pressure sensor type	0 = active absolute pressure sensor	0 = active absolute pressure sensor
	5 oil pressure switch or sensor	0: oil pressure sensor blocked (default)	0: oil pressure sensor blocked (default)
008 Other factors	2 scale factor engine start	1	1
	3 torque temp. compensation	1: torque temp. compensation (default)	1: torque temp. compensation (default)

https://truckmanualshub.com/

Table 5 - PLD Configuration - MBE4000 (EGR) - Software 60

minidiag2 list of parameters

Parameter Data		Non-Turbo Brake (Two-Stage Engine Brake - Low/High)	Turbo Brake (Three-Stage Engine Brake - Low/Med/High)
Parameter Group	**Parameter**		
001 Engine identification	2 manual / automatic transmission	**Check transmission installed on the truck (see transmission type table)**	
	3 starter type (control over PLD or externally)	1	1
	5 boost-pressure sensor characteristic line	1	1
	6 charge air temperature sensor after compressor	0	0
002 CAN configuration	1 engine control via CAN	1	1
	2 CAN one wire capability	1	1
003 Proportional valves	1 proportional valve 1 (PV1)	0	1
	2 proportional valve 2 (PV2)	1	1
	3 proportional valve 3 (PV3)	1	1
	4 proportional valve 4 (PV4)	1	1
	5 proportional valve 5 (PV5)	3	3
	6 proportional valve 6 (PV6)	3	3
004 Fan	1 fan type	4	4
	2 switch on threshold on coolant temp. speed 1	96	96
	3 switch on threshold on intake air temp. speed 1 (note 1)	65	65
	4 switch on threshold on coolant temp. speed 2	96	96
	5 switch on threshold on intake air temp. speed 2 (note 1)	65	65
	6 diff. threshold fan 1	0	0
	7 switch on thresh. intake air temp. speed 1/eng. brake	65	65
	8 switch on thresh. intake air temp. speed 2/eng. brake	65	65
	9 diff. threshold intake air temp / engine brake	0	0
006 Oil	1 oil temperature sensor	1	1
	2 oil level measurement	0	0
	3 select oil pan type	0	0
	4 oil pressure sensor type	0	0
	5 oil pressure switch or sensor	0	0
008 Other factors	2 scale factor engine start	1	1
	3 torque temp. compensation	1	1

https://trucknanualshub.com/

https://truckmanualshub.com/

All information subject to change without notice. (Rev. 5/05)
7SE940 0505 Copyright © 2005 DETROIT DIESEL CORPORATION

https://truckmanualshub.com/

DETROIT DIESEL

A DaimlerChrysler Company

No.: 05 TS – 01
January 6, 2005

TO: All Distributors, Dealers, and their Branches – U.S. & Canada

ATTN.: General Manager, Service Manager

FROM: Technical Service

SUBJECT: **Charge Air Cooler Leaks**

The Charge Air Cooler (CAC) is part of a highly developed air intake system that is used to reduce the temperature of the compressed air leaving the turbocharger before it reaches the intake manifold. This permits a more dense charge of air to be delivered to the engine, resulting in improved engine performance, fuel economy, and lower emissions. Ductwork is used to transfer the air from the turbocharger outlet to the CAC, and then to the intake manifold. Flexible rubber couplings and hose clamps are used to secure the ductwork to the turbocharger, the CAC inlet and outlet, and the intake manifold. Proper inspection and maintenance of the components is required to insure continued efficiency of the CAC.

Leaks in the air-to-air cooling system result in a loss of boost pressure than can cause low power, excessive smoke, high exhaust temperatures, and elevated oil soot levels. Recently, several extreme cases have been noted where high exhaust temperatures have warped the turbocharger mounting flange (requiring replacement of the turbocharger), and high soot levels caused serious lubrication oil degradation and subsequent damage to the engine.

The CAC system *MUST* be routinely inspected for broken hoses, loose clamps and dirty, obstructed, or failed coolers. For on-highway vehicles, the *Series 60 Operator's Guide* (6SE484) states that the CAC must be inspected every 30,000 miles or 12 months, whichever comes first, and the ductwork be inspected every 15,000 miles or 6 months. Damage to any of these components requires immediate repairs. Large CAC leaks can possibly be found visually, while small leaks will have to be found using a pressure loss leak test. The *Series 60 Service Manual* (6SE483) contains information on how to pressurize the CAC system to check for leaks. SIB #12-60-03 published June 17, 2003, also contains this information. See Figures 1 and 2 for examples of leaking Series 60 charge air coolers.

Please contact the DDC Customer Support Center at 313-592-5800 if you have any questions.

https://truckmanualshub.com/

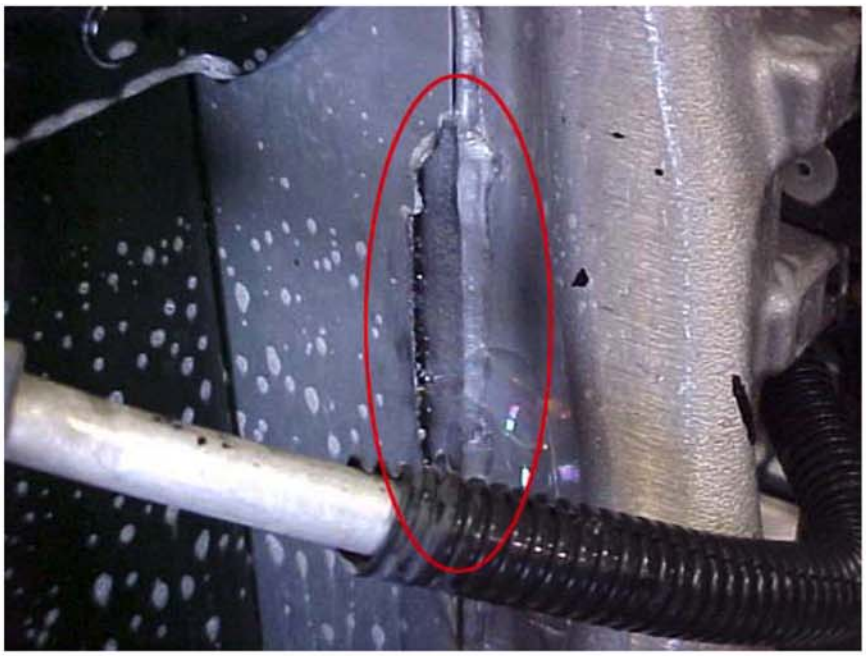

Figure 1 **Cracked Charge Air Cooler Housing**

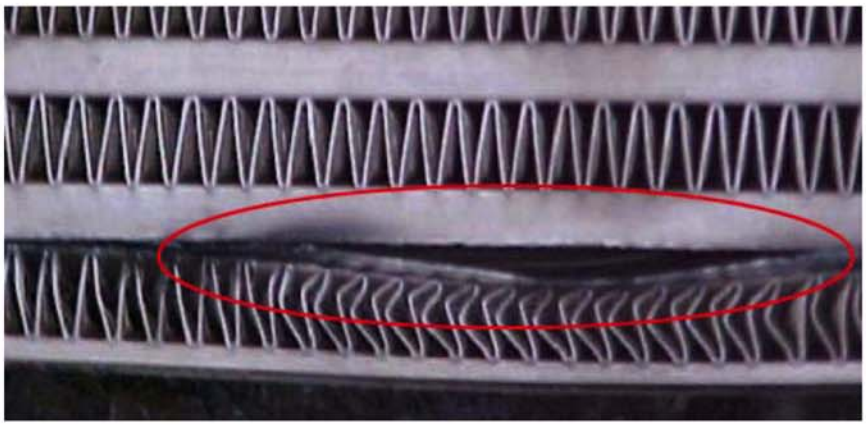

Figure 2 **Failed Charge Air Cooler Core**