https://truckmanualshub.com/

C 300 H
C 300 HI
C 300 H x4
C 300 HI x4
C 350 H
C 350 HI
C 350 H x4
C 350 HI x4

OPERATOR'S MANUAL

ENGLISH
ORIGINAL MANUAL

Downloaded from www.Manualslib.com manuals search engine

https://truckmanualshub.com/

Downloaded from www.Manualslib.com manuals search engine

https://truckmanualshub.com/

AUSA

C 300 H
C 300 HI
C 300 H x4
C 300 HI x4
C 350 H
C 350 HI
C 350 H x4
C 350 HI x4

Above chassis number 57168202

ORIGINAL MANUAL

Downloaded from www.Manualslib.com manuals search engine

https://truckmanualshub.com/

Downloaded from www.Manualslib.com manuals search engine

https://truckmanualshub.com/

Foreword

Thank you for choosing this AUSA forklift truck (hereinafter forklift). The purpose of this Operators and Safety Manual is to provide you, the user, with instructions concerning the productive, safe and efficient use of this forklift. You should read and understand this manual before operating the forklift. The Manual contains safety messages concerning the use of the forklift. Remember that “you” are the key to safety.

The preservation of these qualities over a long period of time is in your hands. The correct use of your forklift will allow you to make the most of the resultant benefits.

The Operator’s and Safety Manual also contains instructions for some adjustments and for maintenance of this fork-lift. Follow these instructions carefully while performing routine maintenance checks and keep a record of all maintenance. As wide variations in operating conditions may be experienced, you are urged to contact your AUSA Distributor to resolve any operational or service problems.

Please have all operators of this forklift read and understand this Operator’s and Safety Manual.

Any damage resulting from the incorrect use of the forklift shall not be considered to be the responsibility of AUSA. In the event of query, complaint or to place an order for spares, please contact your Official AUSA Dealer.

This forklift is designed and intended for off highway use. If it is temporarily operated on any public street or highway, the state and local laws governing speed, size, weight, brakes and lighting must be complied with.

For further information you may write, FAX or E-mail to:

AUSA Center, S.L.U.
Apartado P.O.B. 194
08243 MANRESA (Barcelona) SPAIN
Tel. 34-93 874 75 52 / 93 874 73 11
Fax 34-93 873 61 39 / 93 874 12 11 / 93 874 12 55
E-mail: ausa@ausa.com
Web: http://www.ausa.com

AUSA is continuously trying to improve the efficiency, productivity and safety of its products and reserves the right to make such improvements without incurring any obligation to make changes to forklifts previously sold. Because of this policy of striving for constant product improvement, the specifications and operating instructions shown in this Operator’s and Safety Manual may be different from prior forklift models. As such, we will not accept claims that are based on the data, illustrations or descriptions included in these instructions.

Only original AUSA spare parts should be used. This is the only way to guarantee that AUSA machinery has the same operational level as at the time of delivery. No alterations should be made to the forklift without the prior authorization of the manufacturer.

When not in use keep it stored on the forklift in the Manual holder box in the engine’s compartment in the control valve support **(fig. 1)**.

(fig. 1)

Downloaded from www.Manualslib.com manuals search engine

https://truckmanualshub.com/

Index

Uses and improper uses of the forklift 5

Identification of the forklift components 6

Vehicle Identification and Serial Numbers 7

Technical Specifications 8

Controls and instruments 64

Instrument Panel and controls 67

Operating the forklift 73

Special procedures 78

Special Safety Messages 81

Parking the machine 89

Transporting the machine 90

Maintenance Chart 95

Periodic Maintenance Operations 97

Electric circuit
- C300H / C300HI 121
- C300H x4 / C300HI x4 / C350H / C350HI / C350H x4 / C350HI x4 126

Hydraulic diagram (Hydraulic appliances) 131

Hydraulic diagram (Transmission) 132
- C300H / C300HI 132
- C300H x4 / C300HI x4 / C350H / C350HI / C350H x4 / C350HI x4 133

Transmission Troubleshooting 134

EC Declaration of conformity 135

Downloaded from www.Manualslib.com manuals search engine

https://truckmanualshub.com/

Uses and improper Uses of the forklift

■ Uses for which the forklift is designed

Forklifts C300H-HI / C300H-HI x4 / C350H-HI / C350H-HI x4 have been designed and manufactured for lifting, handling and transporting loads on rough ground and industrial use. The safety of individuals and of the loads carried must be ensured through the use of forks or other accessories and equipment.

ROUGH TERRAIN USE (C300H / C350H)

This forklift truck is designed for transporting and lifting loads on grounds not in good condition, roughly flat, not too steep slopes and small obstacles, so that the stability conditions are not optimal.

INDUSTRIAL USE (C300HI / C350HI)

This forklift truck is designed for transporting and lifting loads on good condition floors, that means flat, levelled and paved ground, so that there are optimal stability conditions.

Any use other than that described above shall be considered inappropriate and therefore improper.
Strict adherence to the operating, maintenance and repair conditions specified by the manufacturer are essential in order to maintain the forklift in good working order.
Driving, maintenance and repair of the forklift should only be carried out by suitably qualified personnel, with the necessary tools and knowledge of the control and safety procedures relative to the forklift. When handling loads or carrying out maintenance and/or repair work, the occupational health and safety regulations, together with those relative to accident prevention, should be observed.
When driving with the forklift on public highways, special care should be taken to ensure compliance with the current legislation for this type of vehicle (Highway Code).
AUSA does not assume responsibility for any damage resulting from modifications made to the forklift without express authorization.

❀ The texts following this symbol provide information on recycling and protecting the environment.

■ Improper use

Improper use is understood to mean the use of the forklift in a manner not in keeping with the criteria and instructions given in this Operator's and Safety Manual and in a way which might cause damage to persons or objects.
Some of the more common and dangerous examples of improper use are given below:

- Carrying persons other than the operator on the forklift.
- Not strictly observing the instructions for use and maintenance given in this Operator's and Safety Manual.
- Exceeding the limits for load and centre of gravity given in the relevant load charts.
- Working on unstable, unshared grounds or at the edges of trenches and ditches.
- Working on excessively steep slopes.
- The use of accessories or equipment for purposes other than those for which they have been designed.
- The use of accessories or equipment not manufactured or authorized by AUSA.

Downloaded from www.Manualslib.com manuals search engine

https://truckmanualshub.com/

Identification of the forklift components

■ Term such as right, left, front and rear when used in this Operator's and Safety Manual indicate the right and left sides of the machine, the front and back of the machine, as viewed from the operators seat looking forward.

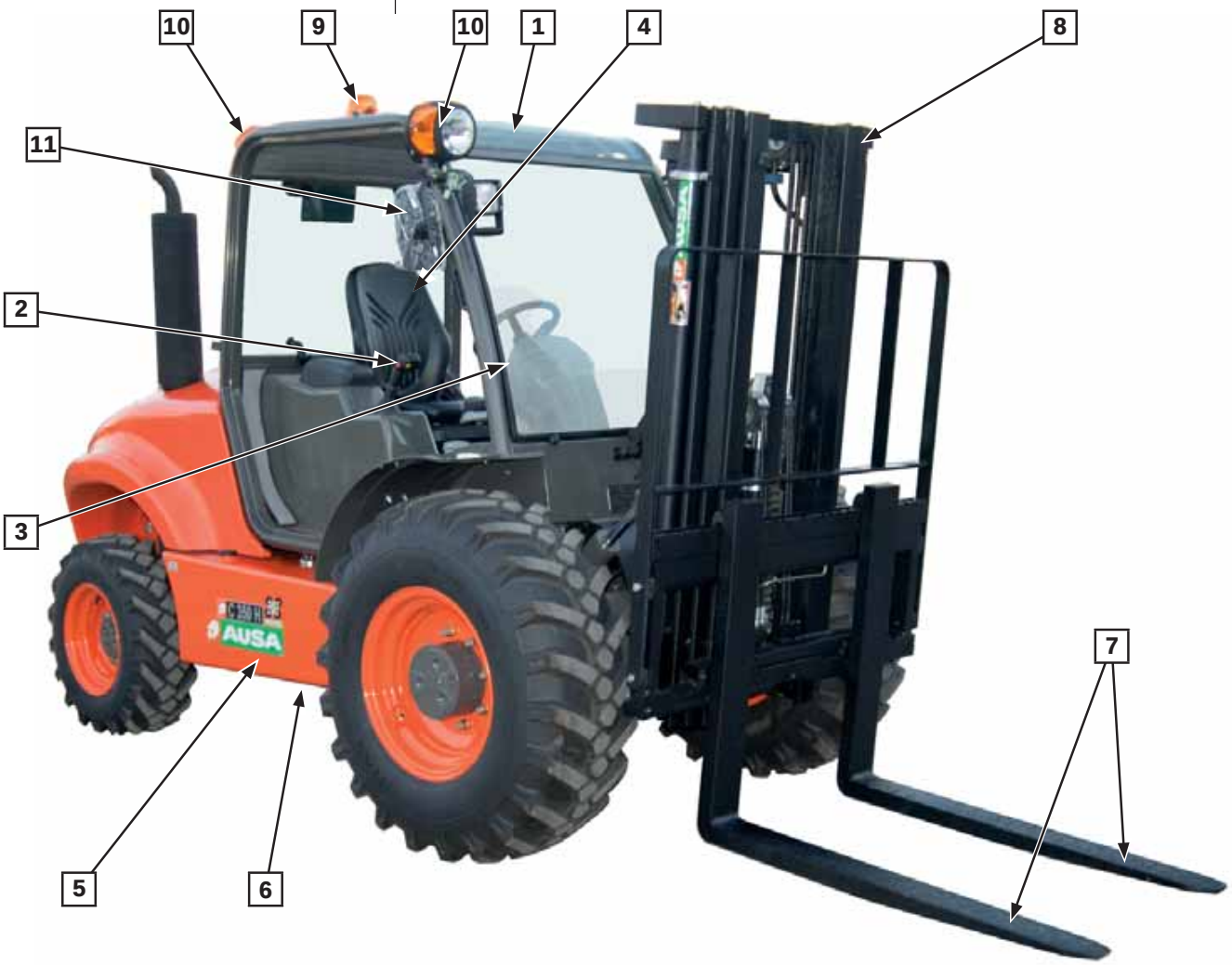

■ **Identification components**

1- Overhead guard.
2- Driving and load control (Joystick)
3- Parking brake switch.
4- Driver seat with seat belt.
5- Diesel tank.
6- Hydraulic tank.
7- Forks.
8- Lifting mast.
9- Rotating beacon.
10- Lighting equipment (¬).
11- Rear-view mirror.

Downloaded from www.Manualslib.com manuals search engine

https://truckmanualshub.com/

Vehicle Identification and Serial Numbers

■ **¡Important!** Write your machine Model number, date of sale, chassis and engine serial number in the spaces provided below. Give this information to your AUSA dealer when you need parts or information for your machine. Make a record of these numbers in your files.

Model number: .....

Date of sale: .....

Chassis serial number: .....

Engine serial number: .....

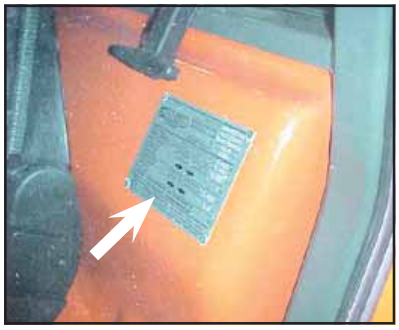

(fig. 1)

■ **The Vehicle Identification Plate**
Is located at the left of the operators seat **(fig. 1)**.

(fig. 2)

■ **The Chassis Serial Number**
Is located on the right side of the chassis **(fig. 2)**.

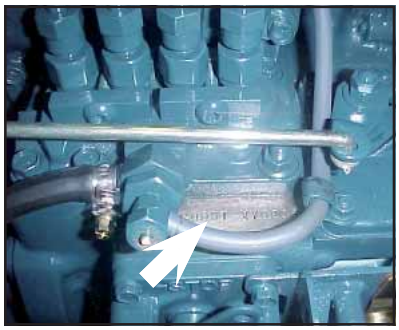

(fig. 3)

■ **The Engine Serial Number**
Is located on the left side of the engine **(fig. 3, 4)**.

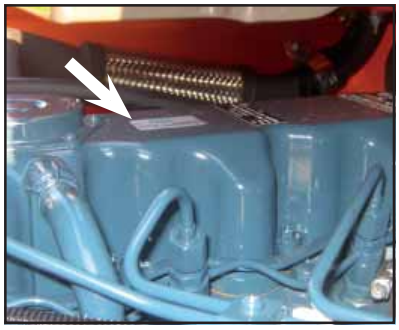

(fig. 4)

■ **Principals components of identification plates**
The plates of every components not built directly by AUSA, (for example: engines, pumps, etc.) are directly applied on the same components, in points where the respective makers put them origi

Downloaded from www.Manualslib.com manuals search engine

https://truckmanualshub.com/

Technical Specifications

Dimensions (in)

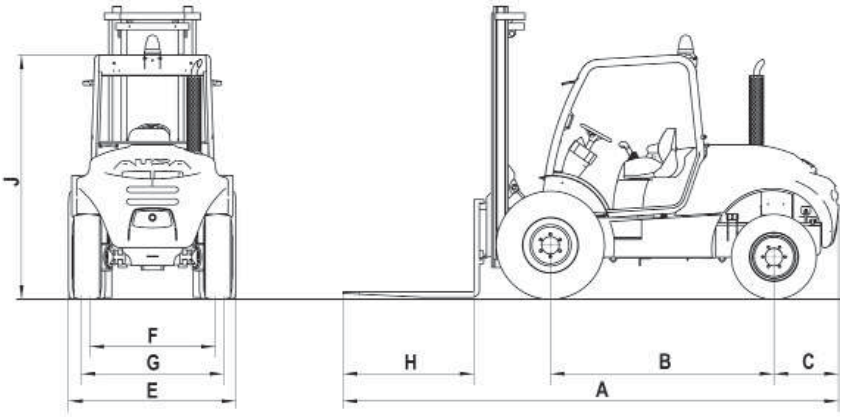

DIMENSIONS	C300H	C300HI	C300H x4	C300HI x4	C350H	C350HI	C350H x4	C350HI x4
A	7ft 2in	7ft 2in	7ft 2in	7ft 2in	7ft 4in	7ft 4in	7ft 4in	7ft 4in
B	9in	9in	8in	8in	9in	9in	8in	8in
C	1ft	1ft	1ft	1ft	1ft 2in	1ft 2in	1ft 2in	1ft 2in
D	4ft 9in	4ft 9in	4ft 9in	4ft 9in	4ft 9in	4ft 9in	4ft 9in	4ft 9in
E (narrow axle)	5ft	5ft	5ft	5ft	5ft 9in	5ft 9in	5ft 9in	5ft 9in
E (wide axle)	6ft 1in	-	6ft 1in	-	6ft 3in	-	6ft 3in	-
F	11ft 5in	11ft 5in	15ft 5in	15ft 5in	11ft 5in	11ft 5in	15ft 5in	15ft 5in
G	9ft 4in	9ft 4in	9ft 10in	9ft 10in	9ft 4in	9ft 4in	9ft 10in	9ft 10in
I	4,1in	4,1in	4,1in	4,1in	4,1in	4,1in	4,1in	4,1in
J	1,1in	1,1in	1,1in	1,1in	1,1in	1,1in	1,1in	1,1in
K	2ft 5in	2ft 5in	2ft 5in	2ft 5in	2ft 5in	2ft 5in	2ft 5in	2ft 5in
L	14ft 9in	14ft 9in	14ft 9in	14ft 9in	14ft 9in	14ft 9in	14ft 9in	14ft 9in
M	1ft 11in	1ft 11in	1ft 11in	1ft 11in	1ft 11in	1ft 11in	1ft 11in	1ft 11in
N	6ft 4in	6ft 4in	6ft 4in	6ft 4in	6ft 4in	6ft 4in	6ft 4in	6ft 4in
O	3ft 11in	3ft 11in	3ft 11in	3ft 11in	3ft 11in	3ft 11in	3ft 11in	3ft 11in
P	51ft 11in	51ft 11in	22ft 3in	22ft 3in	51ft 11in	51ft 11in	22ft 3in	22ft 3in

Dimensions (mm)

DIMENSIONS	C300H	C300HI	C300H x4	C300HI x4	C350H	C350HI	C350H x4	C350HI x4
A	2200	2200	2200	2200	2240	2240	2240	2240
B	250	250	220	220	250	250	220	220
C	325	325	325	325	380	380	380	380
D	1460	1460	1460	1460	1460	1460	1460	1460
E (narrow axle)	1540	1540	1540	1540	1770	1770	1770	1770
E (wide axle)	1870	-	1870	-	1910	-	1910	-
F	3500	3500	4700	4700	3500	3500	4700	4700
G	2850	2850	3005	3005	2850	2850	3005	3005
I	120	120	120	120	120	120	120	120
J	50	50	50	50	50	50	50	50
K	750	750	750	750	750	750	750	750
L	4500	4500	4500	4500	4500	4500	4500	4500
M	600	600	600	600	600	600	600	600
N	1950	1950	1950	1950	1950	1950	1950	1950
O	1200	1200	1200	1200	1200	1200	1200	1200
P	5600	5600	6805	6805	5600	5600	6805	6805

Downloaded from www.Manualslib.com manuals search engine

https://truckmanualshub.com/

Technical Specifications

Mast chart (in)

Type of mast	Maximum lifting height (mm)	Front axle	Free lift (mm)	Machine height with mast retracted (mm)			
				C300H C300HI	C350H C350HI	C300Hx4	C350Hx4
Dúplex (Std.)	10ft 10in	Narrow / Wide (op.)	4,1in	21ft 11in	8ft 9in	21ft 11in	8ft 9in
Dúplex	13ft 1in	Narrow / Wide (op.)	4,1in	9ft 9in	9ft 9,1in	9ft 9in	9ft 9,1in
Triplex (free lift)	12ft 1in	Narrow / Wide (op.)	3ft 11in	6ft 10in	6ft 10in	6ft 10in	6ft 10in
Triplex (free lift)	17ft 8in	Wide	5ft 6in	5ft 6in	5ft 7in	5ft 6in	5ft 7in
Triplex (free lift)	22ft 2in	Wide	7ft 6in	-	10ft 6in	-	10ft 6in

Type of mast	Machine height with mast extended (mm)		Load (Kg) at max. height					
	C300H C300HI C300H x4	C350H C350HI C350H x4	(a) C300H C300H x4 (narrow axle)	(b) C300HI (narrow axle)	(a) C300H C300H x4 (wide axle)	(b) C350H C350H x4 (narrow axle)	(a) C350HI (narrow axle)	(b) C350H C350H x4 (wide axle)
Dúplex (Std.)	14ft 9in	14ft 9in	9ft 11in	9ft 11in	9ft 11in	11ft 5in	11ft 5in	11ft 5in
Dúplex	17ft 1in	17ft 1in	7ft 5in	8ft 5in	7ft 5in	9ft 11in	9ft 11in	11ft 5in
Triplex (free lift)	16ft 1in	16ft 1in	7ft 11in	5ft 7in	7ft 11in	10ft 6in	10ft 6in	11ft 5in
Triplex (free lift)	61ft 11in	61ft 11in	-	4ft 3in	4ft 11in	--	4ft 11in	11ft 11in
Triplex (free lift)	-	25ft 7in	-	3ft 4in	-		3ft 11in	1ft 11in

Mast chart (mm)

Type of mast	Maximum lifting height (mm)	Front axle	Free lift (mm)	Machine height with mast retracted (mm)			
				C300H C300HI	C350H C350HI	C300Hx4	C350Hx4
Dúplex (Std.)	3300	Narrow / Wide (op.)	120	2600	2670	2600	2670
Dúplex	4000	Narrow / Wide (op.)	120	2950	2990	2950	2990
Triplex (free lift)	3700	Narrow / Wide (op.)	1200	2090	2130	2090	2130
Triplex (free lift)	5400	Wide	1680	2660	2700	2660	2700
Triplex (free lift)	6780	Wide	2280	-	3220	-	3220

Type of mast	Machine height with mast extended (mm)		Load (Kg) at max. height					
	C300H C300HI C300H x4	C350H C350HI C350H x4	(a) C300H C300H x4 (narrow axle)	(b) C300HI (narrow axle)	(a) C300H C300H x4 (wide axle)	(b) C350H C350H x4 (narrow axle)	(a) C350HI (narrow axle)	(b) C350H C350H x4 (wide axle)
Dúplex (Std.)	4500	4500	3000	3000	3000	3500	3500	3500
Dúplex	5200	5200	2250	2550	2250	3000	3000	3500
Triplex (free lift)	4900	4900	2400	2700	2400	3200	3200	3500
Triplex (free lift)	6600	6600	-	1300	1500	--	1500	1600
Triplex (free lift)	-	7820	-	1000	-		1200	600

Downloaded from www.Manualslib.com manuals search engine

https://truckmanualshub.com/

Technical Specifications

■ **Diesel engine**
Four cylinders, four strokes, water-cooled. Electric starter. Mixed radiator (water/oil).

C300H / C300HI:
KUBOTA V2403-M – E3B
Power 49.6 HP (36.5 kw at 2,600 rpm in accordance with SAE J 1995 Norm).

C300H x4 / C300HI x4 / C350H / C350HI / C350H x4 / C350HI x4:
KUBOTA V3600T – E3B.
Power 66 CV (48.6 kw at 2,600 rpm in accordance with SAE J 1995 Norm).

See the engine instructions handbook.

■ **Transmission**
Hydrostatic system, with variable flow pump and inching function. Hydrostatic motor with variable flow.

Maximum operating pressure: 6092 psi. (420 bar).

4WD FullGrip® system on-demand with immediate engagement and disengagement device.

■ **Directional control**
The selection of the drive (forwards/ backwards) is made using a switch on the lower part of the joystick. A lamp in the shape of an arrow lights up on the top of it when a movement mode is selected.

■ **Steering**
Hydraulic powered with one double acting hydraulic cylinder on the rear axle.

Working pressure (all models): 2175 PSI (150 bar).

■ **External turning circle**

C300H: 11ft 5in (3500 mm)	**C350H:** 11ft 5in (3500 mm)
C300HI: 11ft 5in (3500 mm)	**C350HI:** 11ft 5in (3500 mm)
C300H x4: 15ft 5in (4700 mm)	**C350H x4:** 15ft 5in (4700 mm)
C300HI x4: 15ft 5in (4700 mm)	**C350HI x4:** 15ft 5in (4700 mm)

Downloaded from www.Manualslib.com manuals search engine

https://truckmanualshub.com/

Technical Specifications

■ Wheels

Dimensions:

Dimensions		
	Front wheels	**Rear wheels**
C300H	12.5/80 - 18” (16PR)	27x10 - 12” (14PR)
C300HI	12.5/80 - 18” (16PR)	27x10 - 12” (14PR)
C300H x4	12.5/80 - 18” (16PR)	10.0/75 - 15,3” (18PR)
C300HI x4	12.5/80 - 18” (16PR)	10.0/75 - 15,3” (18PR)
C350H	16/70 - 20” (14PR)	27x10 - 12” (14PR)
C350HI	16/70 - 20” (14PR)	27x10 - 12” (14PR)
C350H x4	16/70 - 20” (14PR)	10.0/75 - 15,3” (18PR)
C350HI x4	16/70 - 20” (14PR)	10.0/75 - 15,3” (18PR)

Pressures:

Pressures		
	Front wheels	**Rear wheels**
C300H	5 ± 0,5 bar	6,5 ± 0,7 bar
C300HI	5 ± 0,5 bar	6,5 ± 0,7 bar
C300H x4	5 ± 0,5 bar	5 ± 0,5 bar
C300HI x4	5 ± 0,5 bar	6 ± 0,7 bar
C350H	3,5 ± 0,4 bar	6,5 ± 0,7 bar
C350HI	3,5 ± 0,4 bar	6,5 ± 0,7 bar
C350H x4	3,5 ± 0,4 bar	5 ± 0,5 bar
C350HI x4	3,5 ± 0,4 bar	5 ± 0,5 bar

■ Brakes

Service brake. Multidisc sealed hydraulic brake.
Parking brake. Multidisc sealed brake spring applied, hydraulically released.

■ Hydraulic circuit

Activated by double gear pump; one gear for the drive circuit and one for the hydraulic steering, connected to the hydrostatic pump of the transmission.

Pump flows:

Pump flows	
C300H	36/12 l/min a 1500 rpm
C300HI	
C300H x4	45/12 l/min a 1500 rpm
C300HI x4	
C350H	
C350HI	
C350H x4	
C350HI x4	

Monoblock control valve with two spools and selectable solenoid for side-shift.
Restrictor valve to control the speed of the mast lowering with load.

Oil tank capacity: 22 US Gal (85 l.)

■ Working temperature

From 5ºF to 104F. (From -15ºC to 40ºC)

Downloaded from www.Manualslib.com manuals search engine

https://truckmanualshub.com/

Technical Specifications

■ Vibration and noise levels

Sound power level:
Warrantee sound power (according to 2000/14/EC sound emissions in the environment by machinery for outdoor use):
- Lwa = 104 dB (A)

Sound pressure level on the operator's site:
A weighted sound pressure in the operator's ear measured (following norms EN 12053 and ISO 4871):
- Kubota V2403-M - E3B: Lpa = 82 dB (A)
- Kubota V3600T - E3B: Lpa = 84 dB (A)

Measurement uncertainty: 2,5 dB (A)

Vibration level produced by the machine:
Root-mean-square frequency-weighted, hand-arm vibration acceleration value:
$< 2,5\ m/s^2$
Root-mean-square frequency-weighted, whole body vibration acceleration value:
$< 0,5\ m/s^2$

■ Electrical equipment

Starter motor: Pre-heating spark plugs. Electrical starter 2,0 Kw. (V2403M-E3B engine) and 3.0 kW (V3600T-E3B engine).

480W alternator and regulator (V2403M-E3B engine) and 720W (V3600T-E3B engine). engine).

Battery: 12V / 110Ah (motor V2403M-E3B) y 12V / 92 Ah / 760A (V3600T-E3B engine).

Rotating beacon, horn, back-up alarm, engine oil pressure alarm, hydraulic oil level alarm, coolant temperature alarm.

■ Weights

Unladen weight (with full tanks):
C 300 H-HI: 12566 lb. (5700 kg.)
C 350 H-HI: 13228 lb. (6000 kg.)
C 300 H-HI x4: 12566 lb. (5700 kg.)
C 350 H-HI x4: 13228 lb. (6000 kg.)

Fully laden weight:
C 300 H-HI: 19180 lb. (8700 kg.)
C 350 H-HI: 20944 lb. (9500 kg.)
C 300 H-HI x4: 19180 lb. (8700 kg.)
C 350 H-HI x4: 20944 lb. (9500 kg.)

■ Load Capacity

With the load center of the load at 19,6 inches (500 mm) (see **LOAD CHARTS** In this manual)
C300H-HI / C300H-HI x4: 6614 lb. (3000 Kg.)
C350H-HI / C350H-HI x4: 7716 lb. (3500 Kg.)

With the load center at 24 inches (600 mm) (see **LOAD CHARTS** In this manual)
C300H-HI / C300H-HI x4: 6614 lb. (3000 Kg.)
C350H-HI / C350H-HI x4: 7716 lb. (3500 Kg.)

Downloaded from www.Manualslib.com manuals search engine

https://truckmanualshub.com/

Technical Specifications

■ Standard mast

Side-shift 3ft 11in. (1200 mm) width
Lifting height: 10ft. 10in. (3300 mm).
Free litf: 4 in. (120 mm).
Forks length: 3ft 11in. (1200 mm).

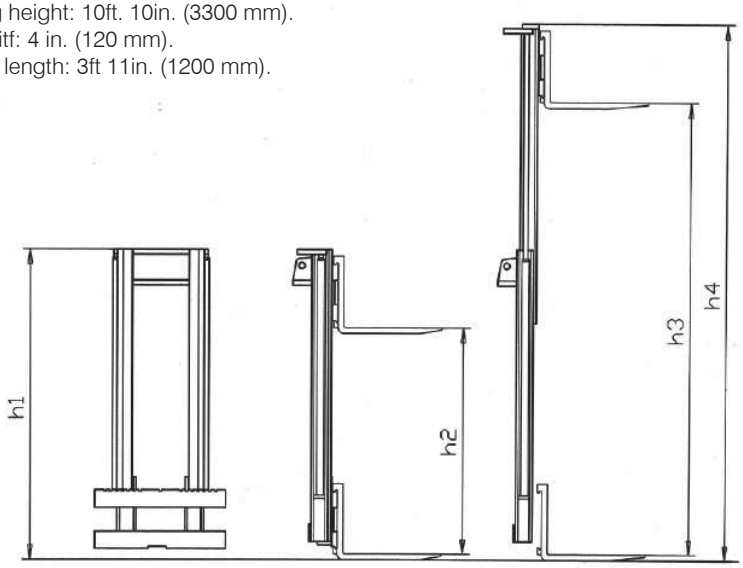

C300H / C300HI / C300H x4 / C300HI x4					
MAST	**Lift height (mm)**	**h1 (mm)**	**h2 (mm)**	**h3 (mm)**	**h4 (mm)**
DUPLEX	3300	2480	≥120	3250	≥4500
	4000	2830	≥120	3950	≥5200
TRIPLEX	3700	2130	≥1200	3650	≥4900
	5400	2698	≥1680	5350	≥6600

C300H / C300HI / C300H x4 / C300HI x4					
MAST	**Lift height (in)**	**h1 (in)**	**h2 (in)**	**h3 (in)**	**h4 (in)**
DUPLEX	10ft 10in	7ft 11in	≥4in	10ft 7in	≥14ft 9in
	13ft 1in	9ft 3in	≥4in	12ft 11in	≥17ft
TRIPLEX	12ft 2in	6ft 11in	≥3ft 11in	11ft 11in	≥16ft
	17ft 8in	8ft 10in	≥5ft 6in	17ft 6in	≥21ft 7in

C350H / C350HI / C350H x4 / C350HI x4					
MAST	**Lift height (mm)**	**h1 (mm)**	**h2 (mm)**	**h3 (mm)**	**h4 (mm)**
DUPLEX	3300	2480	≥120	3250	≥4500
	4000	2830	≥120	3950	≥5200
TRIPLEX	3700	2130	≥1200	3650	≥4900
	5400	2698	≥1680	5350	≥6600
	6850	3180	2200	6800	7780

C350H / C350HI / C350H x4 / C350HI x4					
MAST	**Lift height (in)**	**h1 (in)**	**h2 (in)**	**h3 (in)**	**h4 (in)**
DUPLEX	10ft 10in	7ft 11in	≥4in	10ft 7in	≥14ft 9in
	13ft 1in	9ft 3in	≥4in	12ft 11in	≥17ft
TRIPLEX	12ft 2in	6ft 11in	≥3ft 11in	11ft 11in	≥16ft
	17ft 8in	8ft 10in	≥5ft 6in	17ft 6in	≥21ft 7in
	22ft 5in	10ft 5in	7ft 2in	22ft 3in	25ft 6in

■ Fork carriage

Clase FEM III.

■ Lifting speed

C300H	Without load: 0,42 m/sec. With load: 0,4 m/sec.
C300HI	Without load: 8 ft/min. With load: 7 ft/min
C300H x4	Without load: 0,48 m/sec. With load: 0,48 m/sec. Without load: 7 ft/min. With load: 7 ft/min
C300HI x4	
C350H	
C350HI	
C350H x4	
C350HI x4	

Downloaded from www.Manualslib.com manuals search engine

https://truckmanualshub.com/

Technical Specifications

■ **Lowering speed**

C300H	Without load: 21 m/min. With load: 32,2 m/min Without load: 6 ft/min. With load: 10 ft/min
C300HI	
C300H x4	Without load: 21,6 m/min. With load: 34,8 m/min Without load: 7 ft/min. With load: 11 ft/min
C300HI x4	
C350H	
C350HI	
C350H x4	
C350HI x4	

WARNING

This forklift is not designed to travel with elevated load or with the mast tilted forward.
Do not tilt forward the mast with the forks elevated except to pick up or deposit the load.

■ **Control panel**

The controls, switches and warning lights are integrated in the steering column and below the joystick.

■ **Lighting (∗)**

Work lighting equipment, steering indicators, parking lights and warning.

■ **Overhead guard**

Manufactured according with ISO 6055.

WARNING

The operator is protected by an overhead guard which complies with the ISO 3449 and ISO 3471 / ASME B56.6 standards. It provides protection against falling objects and together with the mast, provides protection should the forklift overturn. The seat belt is an important part of the safety system and should always be fastened before starting to operate the forklift. In the event of the forklift overturning, if the seat belt is not fastened the operator may suffer serious injury or even loss of life as a result of crushing from the forklift or even the overhead guard itself.

■ **Aisle widths**

See graph.

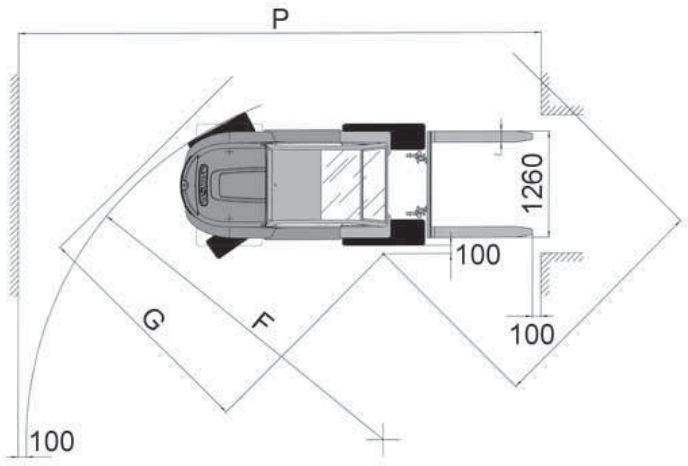

Downloaded from www.Manualslib.com manuals search engine

https://truckmanualshub.com/

ROUGH TERRAIN USE (C300H / C350H)

This forklift truck is designed for transporting and lifting loads on grounds not in good condition, roughly flat, not too steep slopes and small obstacles, so that the stability conditions are not optimal.

Load charts for C300H / C300H x4 front wide axle (500 mm. load centre)

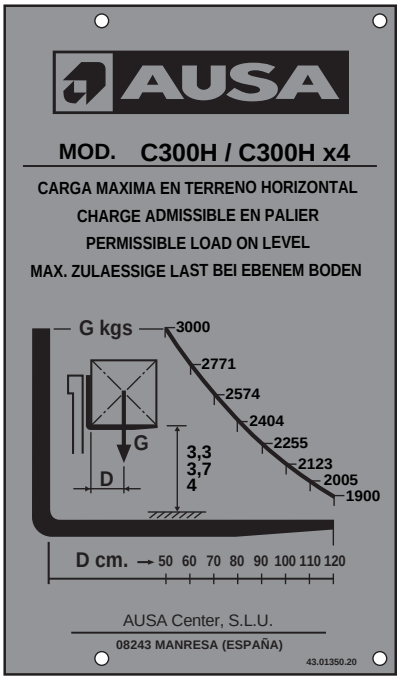

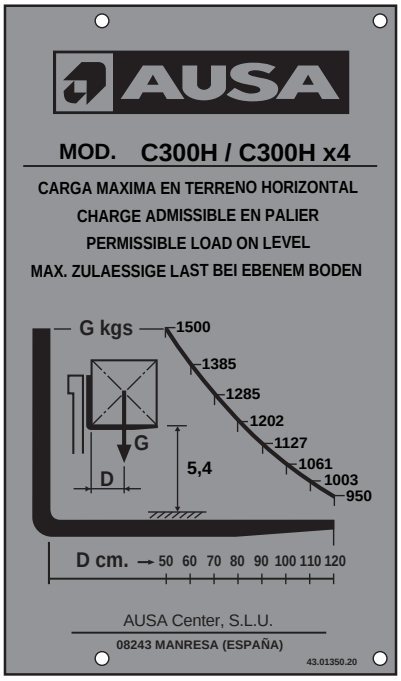

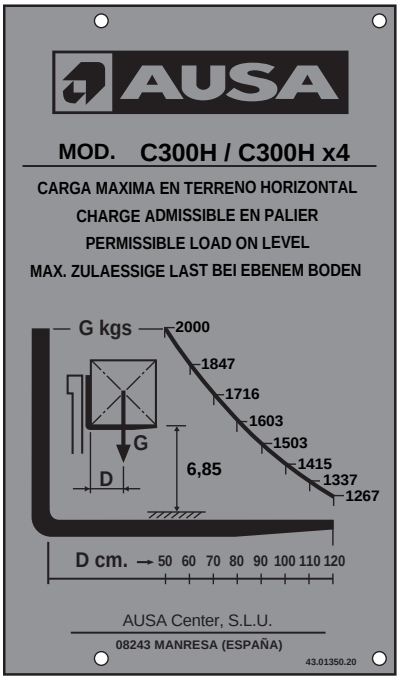

Load charts for C300H / C300H x4 front wide axle(600 mm. load centre)

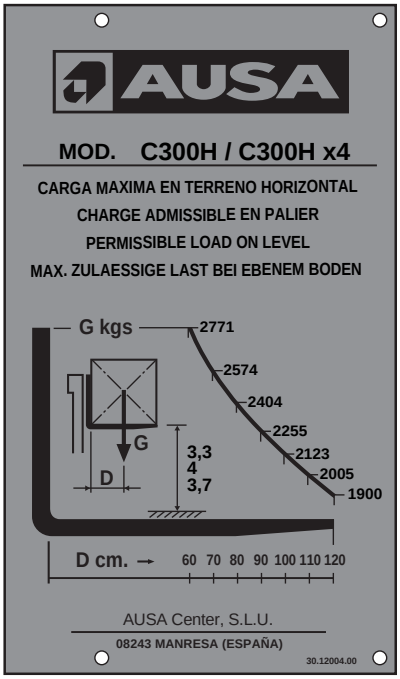

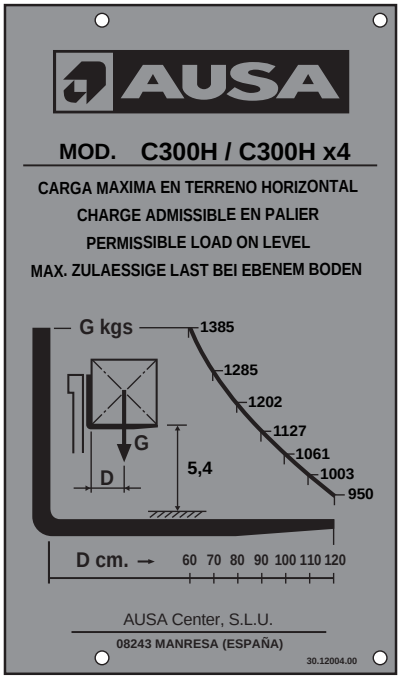

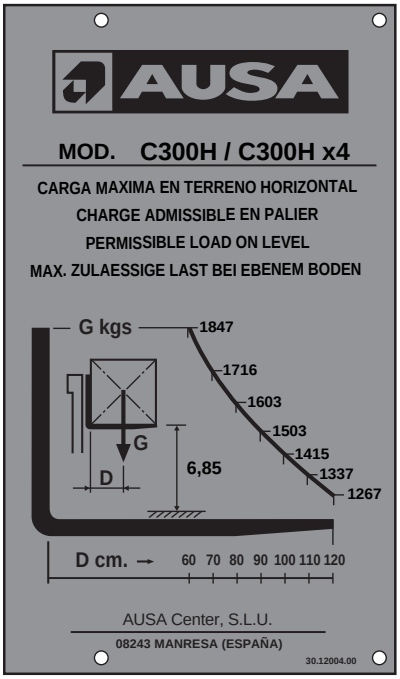

Downloaded from www.Manualslib.com manuals search engine

https://truckmanualshub.com/

Load charts for C300H / C300H x4 front wide axle (24 in. load centre)

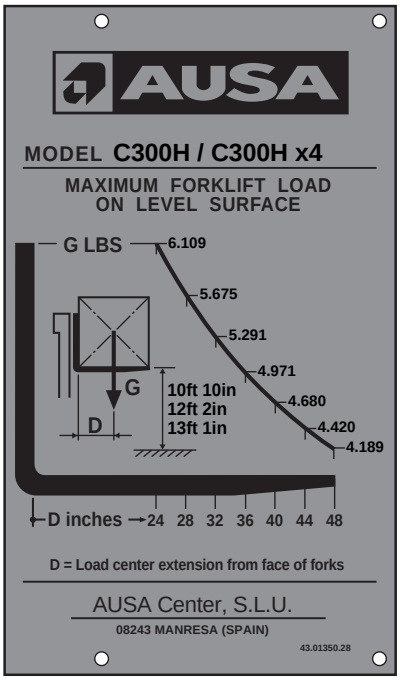

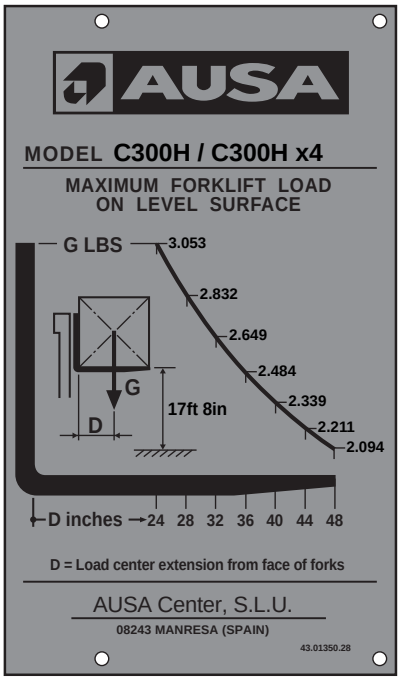

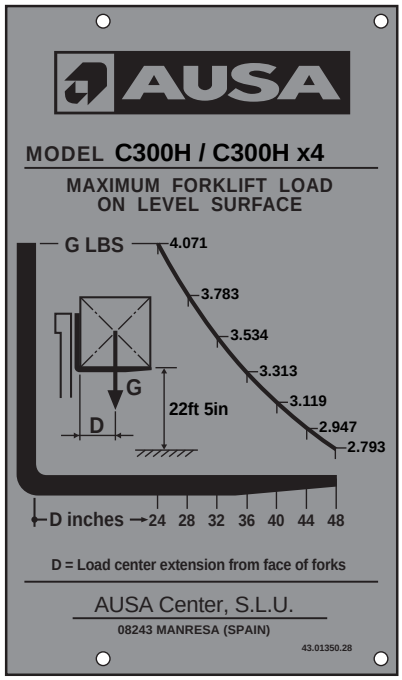

Downloaded from www.Manualslib.com manuals search engine

https://truckmanualshub.com/

Load charts for C300H / C300H x4 wide front axle and quick attach fork carriage (500 mm. load centre)

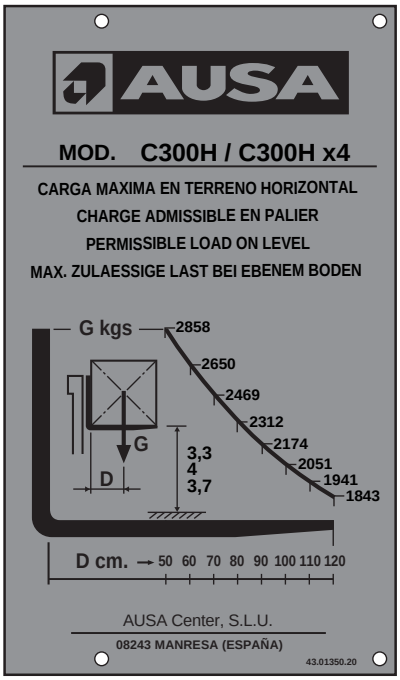

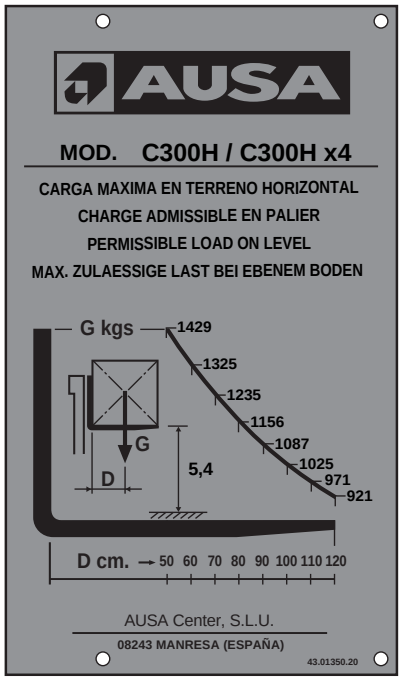

Load charts for C300H / C300H x4 wide front axle and quick attach fork carriage (600 mm. load centre)

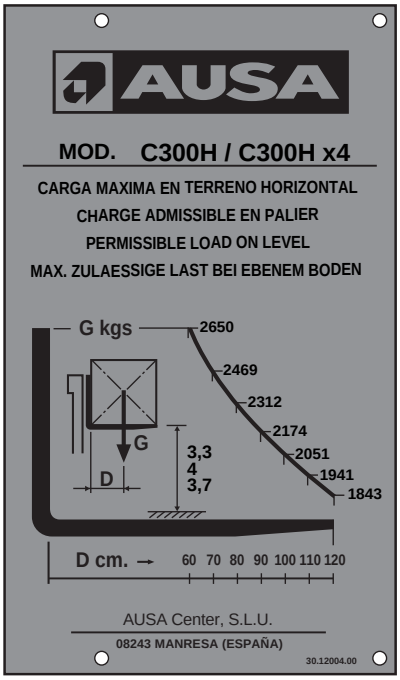

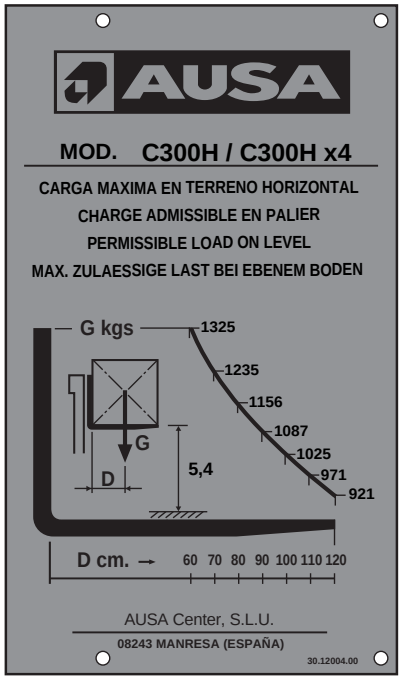

Downloaded from www.Manualslib.com manuals search engine

https://truckmanualshub.com/

Load charts for C300H / C300H x4 wide front axle and quick attach fork carriage (24 in. load centre)

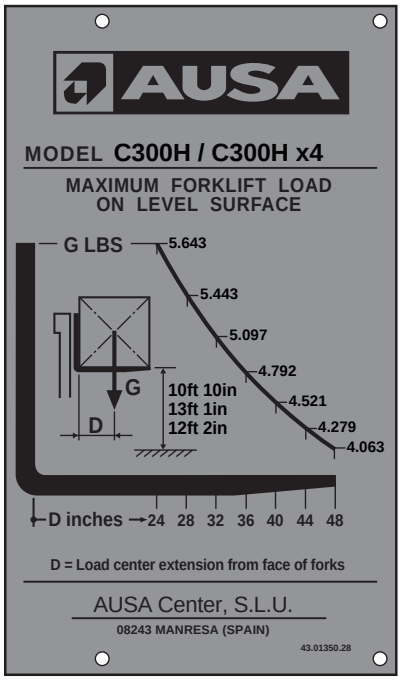

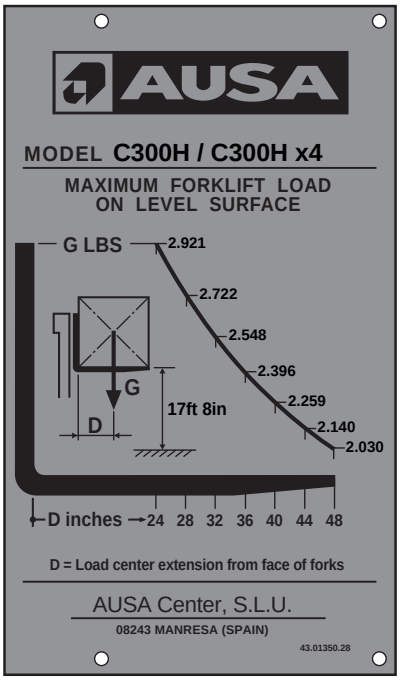

Downloaded from www.Manualslib.com manuals search engine

https://truckmanualshub.com/

Load charts for C300H / C300H x4 front narrow axle (500 mm. load centre)

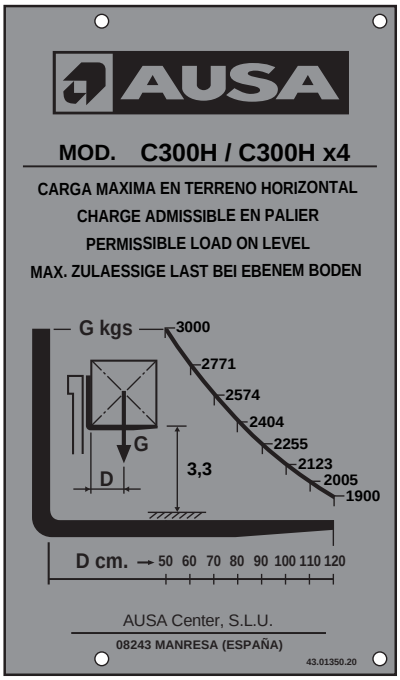

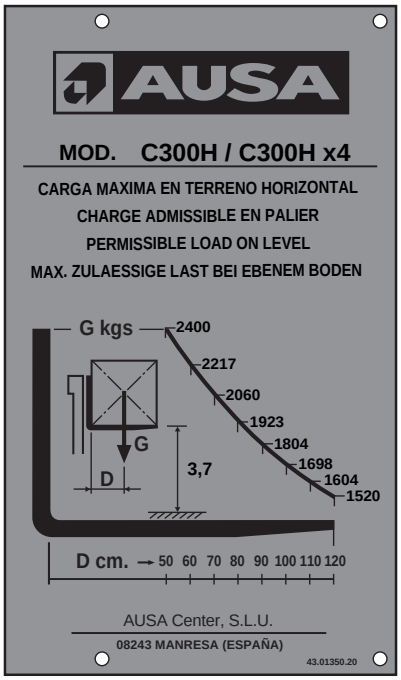

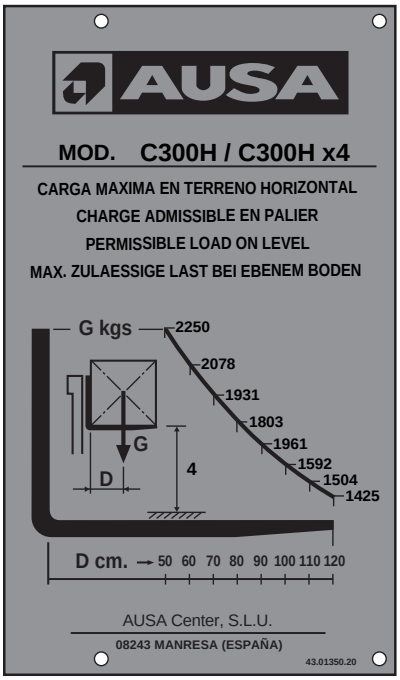

Load charts for C300H / C300H x4 front narrow axle(600 mm. load centre)

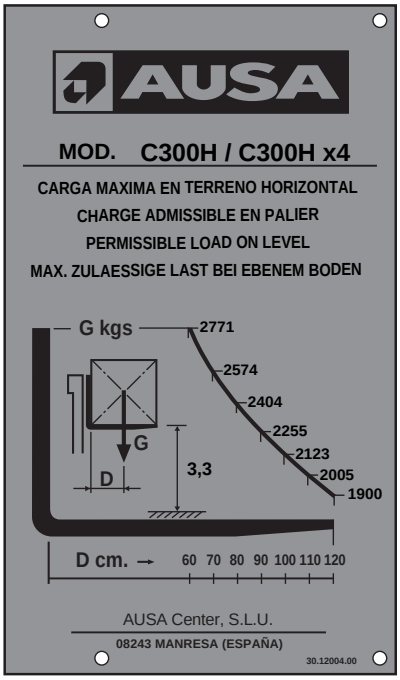

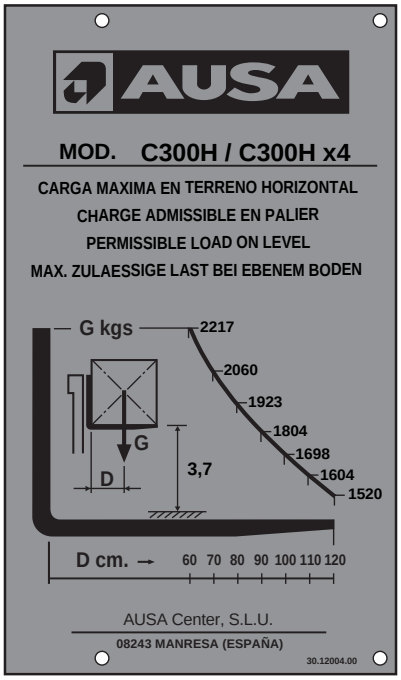

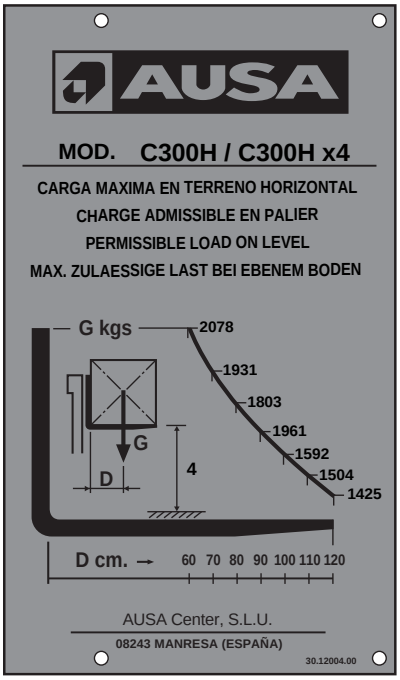

Downloaded from www.Manualslib.com manuals search engine

https://truckmanualshub.com/

Load charts for C300H / C300H x4 front narrow axle (24 in. load centre)

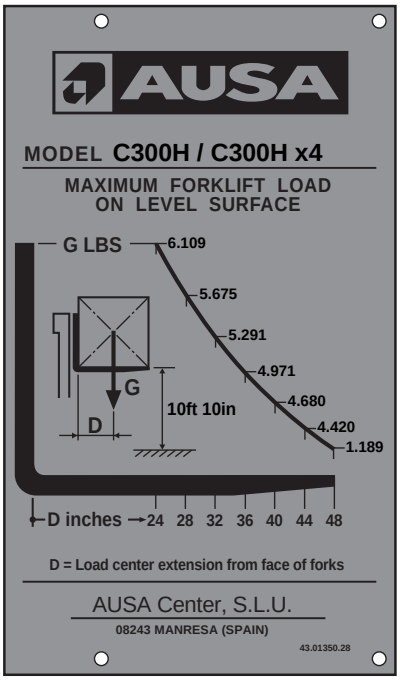

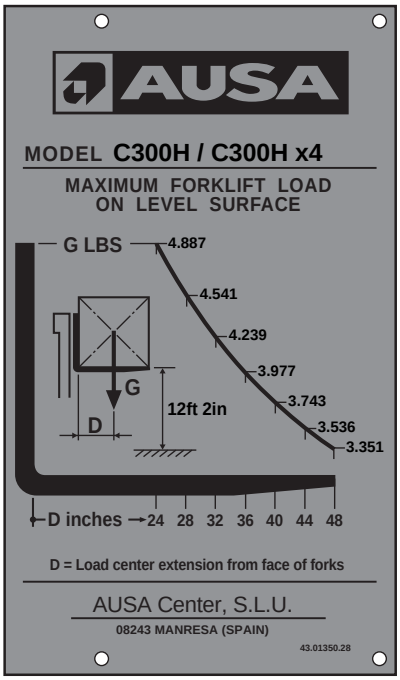

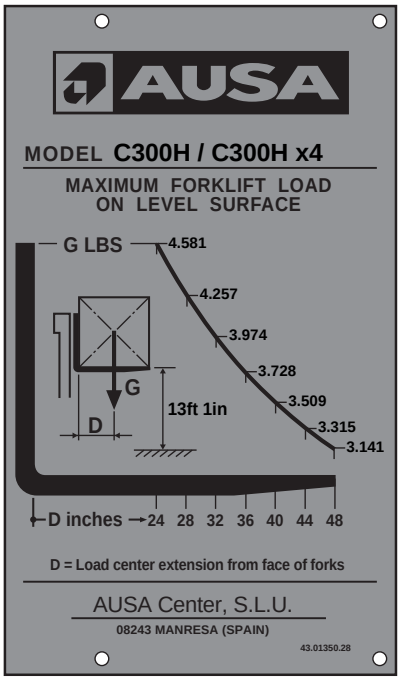

Downloaded from www.Manualslib.com manuals search engine

https://truckmanualshub.com/

Load charts for C300H / C300H x4 front narrow axle and and quick attach fork carriage (500 mm. load centre)

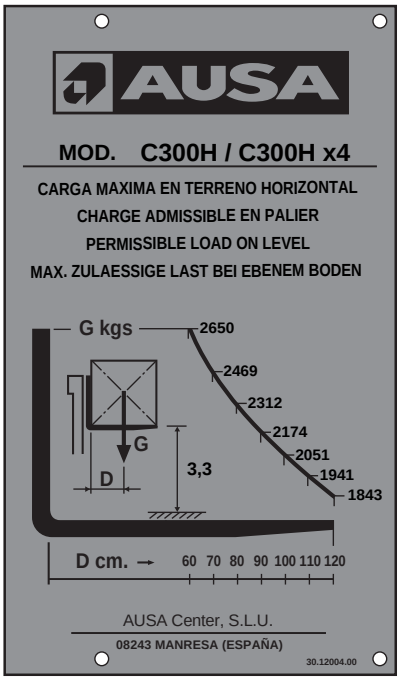

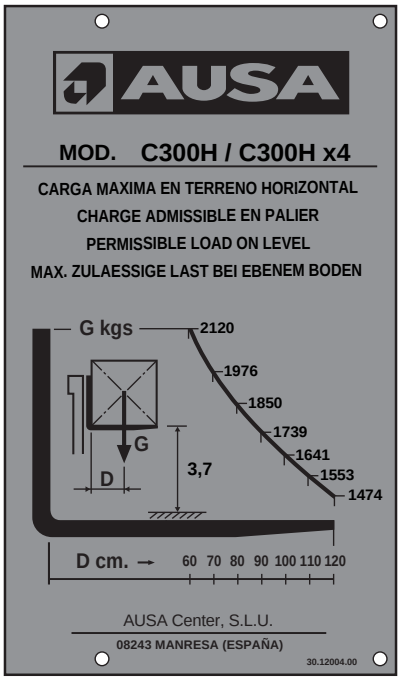

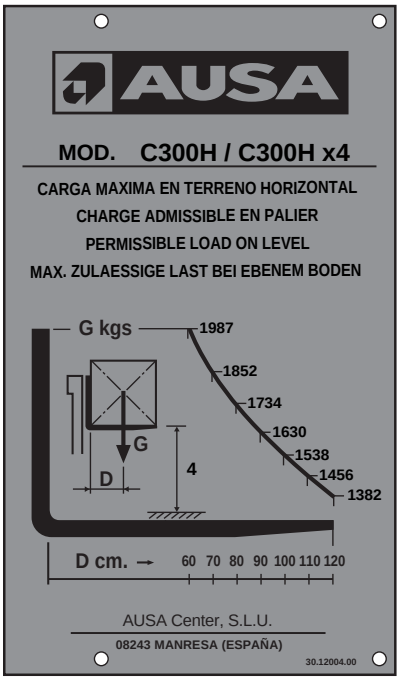

Load charts for C300H / C300H x4 front narrow axle and and quick attach fork carriage (600 mm. load centre)

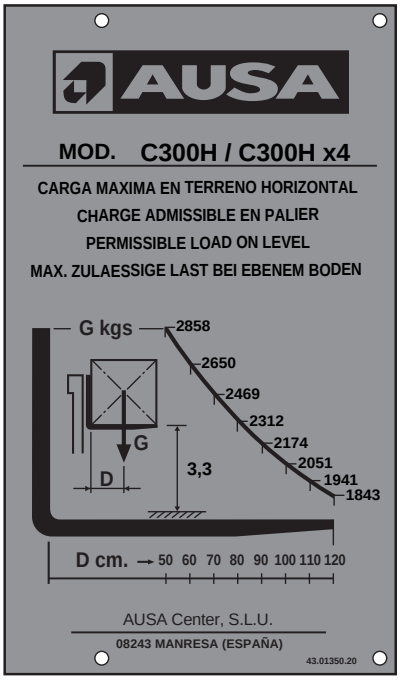

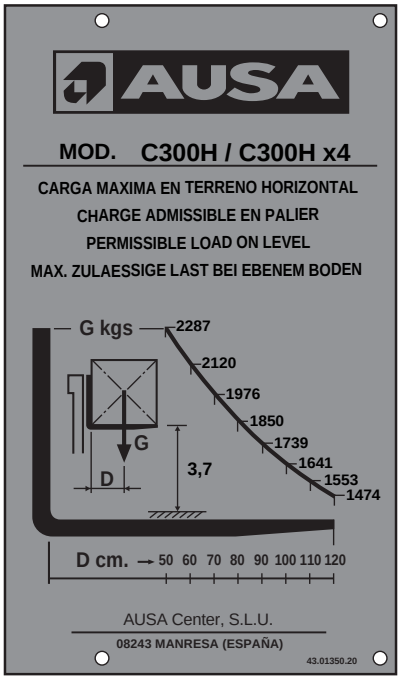

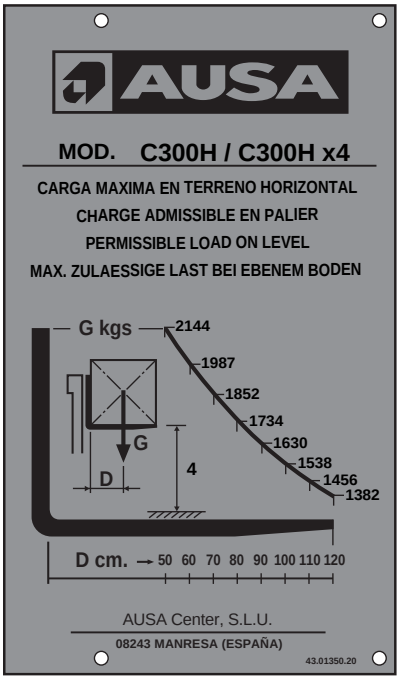

Downloaded from www.Manualslib.com manuals search engine

https://truckmanualshub.com/

Load charts for C300H / C300H x4 front narrow axle and and quick attach fork carriage (24 in. load centre)

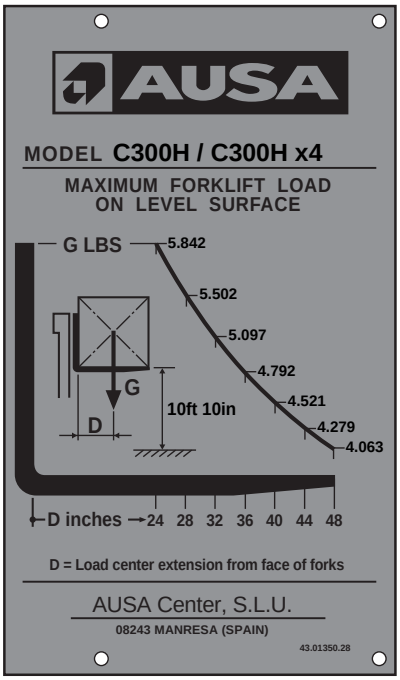

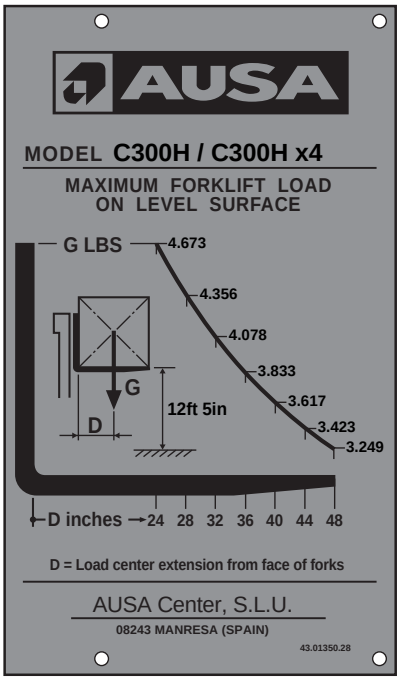

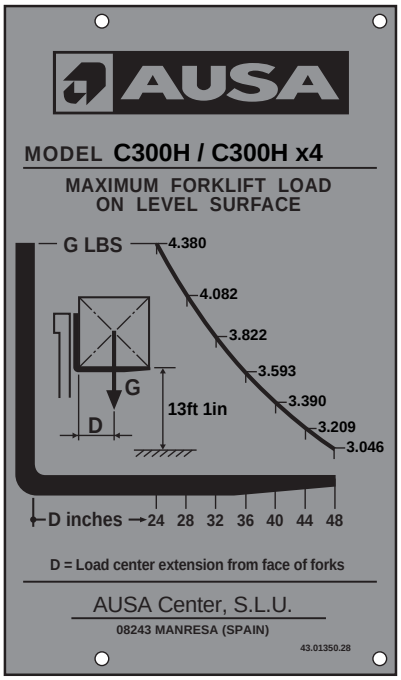

Downloaded from www.Manualslib.com manuals search engine

https://truckmanualshub.com/

Load charts for C350H / C350H x4 front narrow axle (500 mm. load centre)

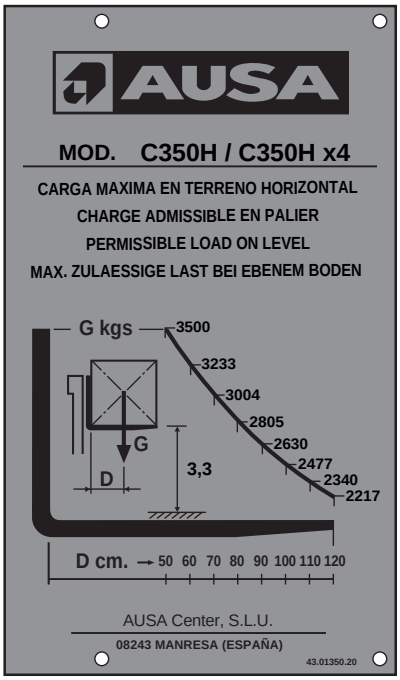

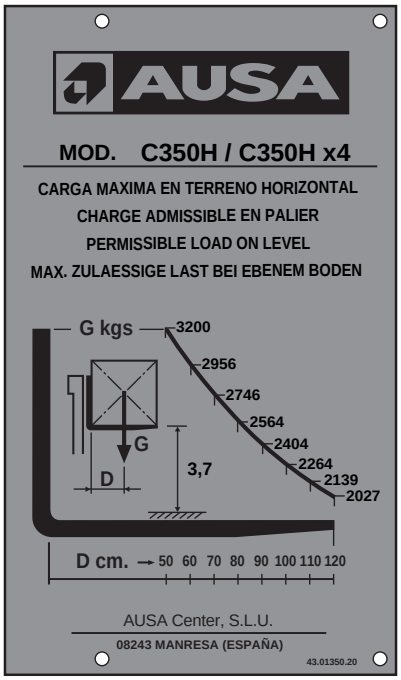

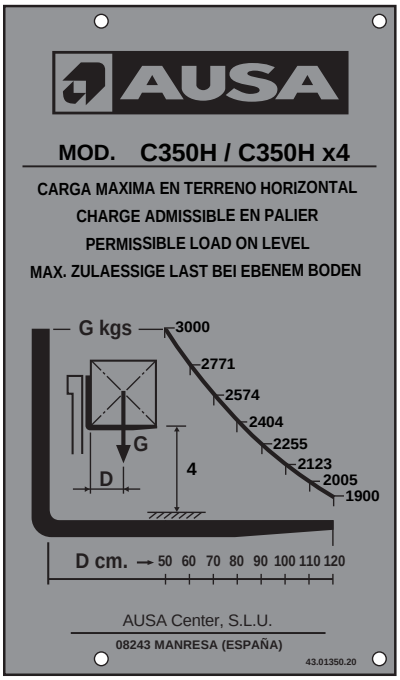

Load charts for C350H / C350H x4 front narrow axle (600 mm. load centre)

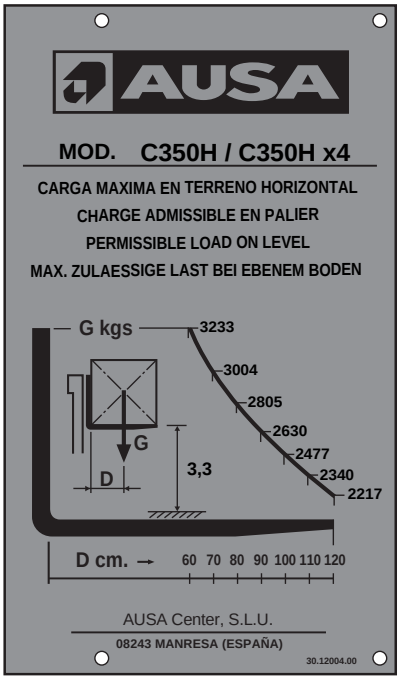

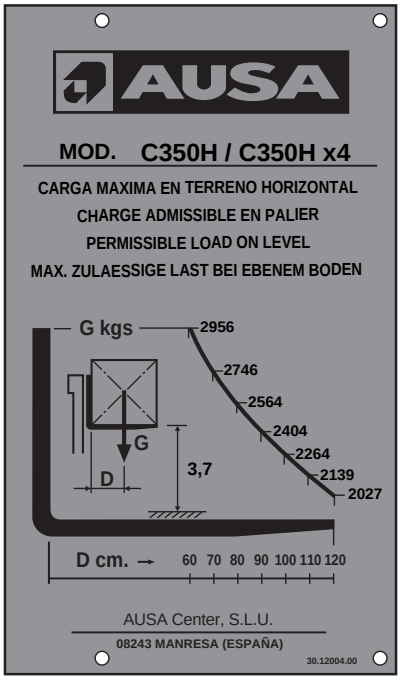

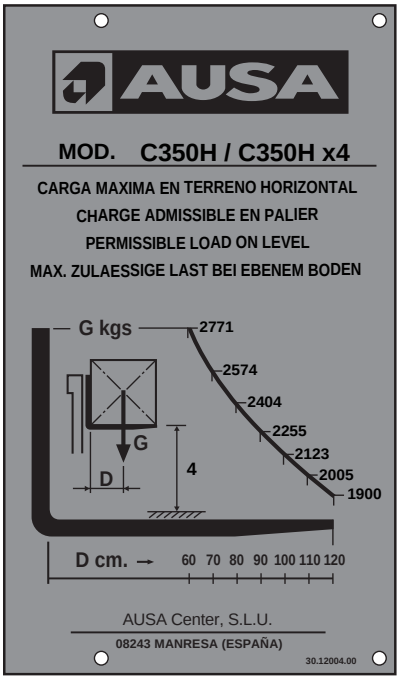

Downloaded from www.Manualslib.com manuals search engine

https://truckmanualshub.com/

Load charts for C350H / C350H x4 front narrow axle (24 in. load centre)

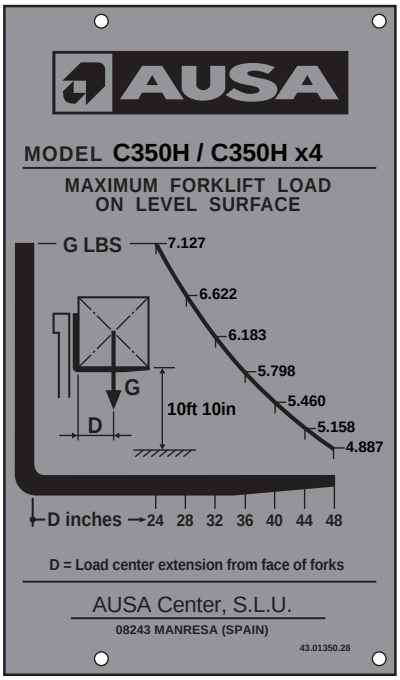

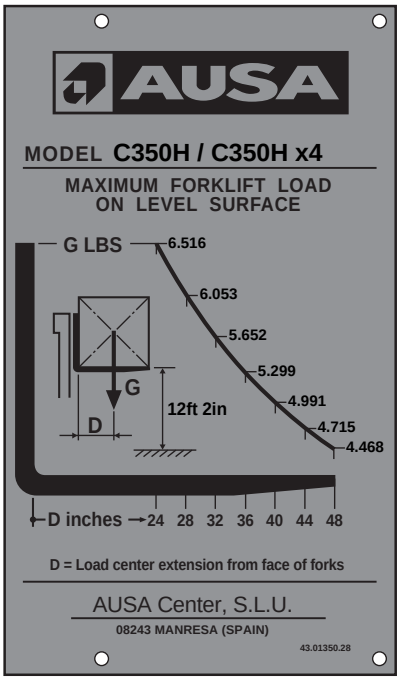

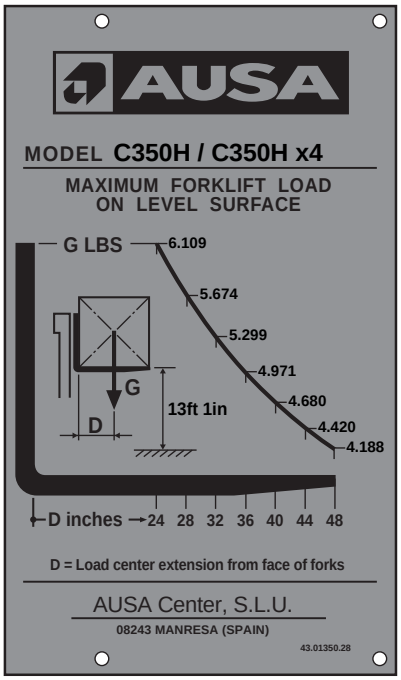

Downloaded from www.Manualslib.com manuals search engine

https://truckmanualshub.com/

Load charts for C350H / C350H x4 front narrow axle and and quick attach fork carriage (500 mm. load centre)

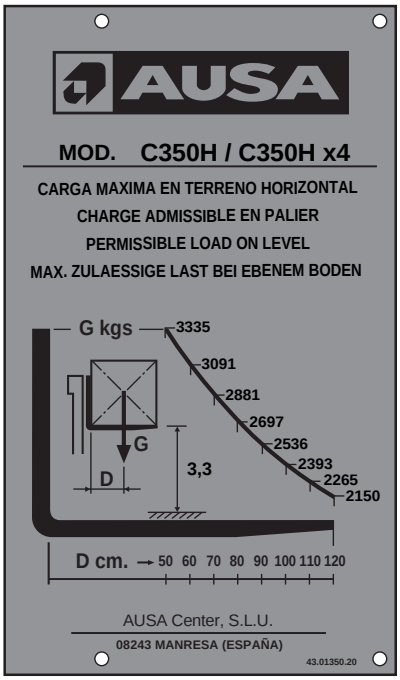

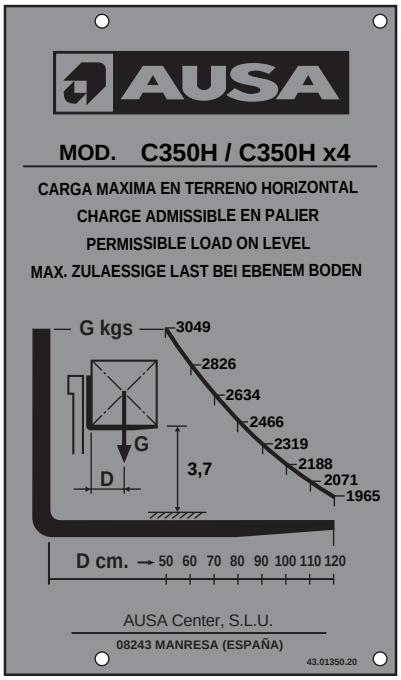

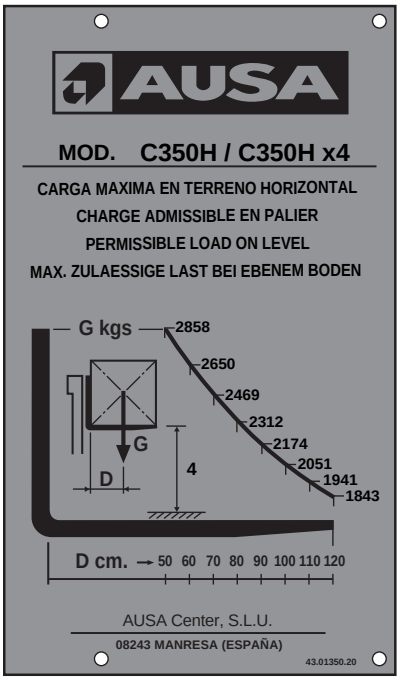

Load charts for C350H / C350H x4 front narrow axle and and quick attach fork carriage (600 mm. load centre)

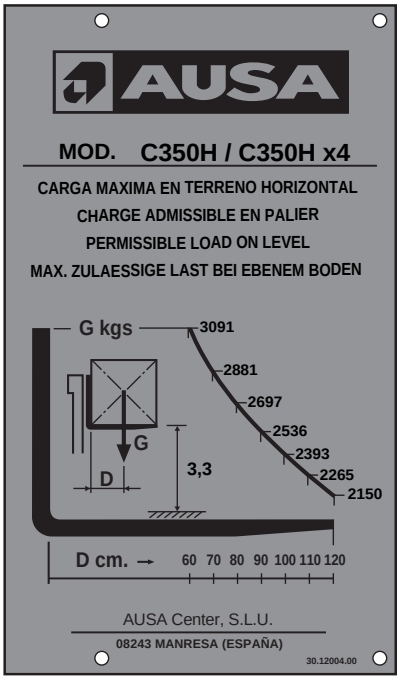

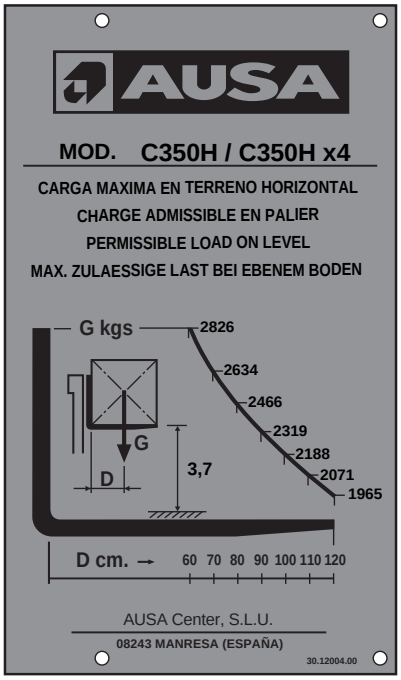

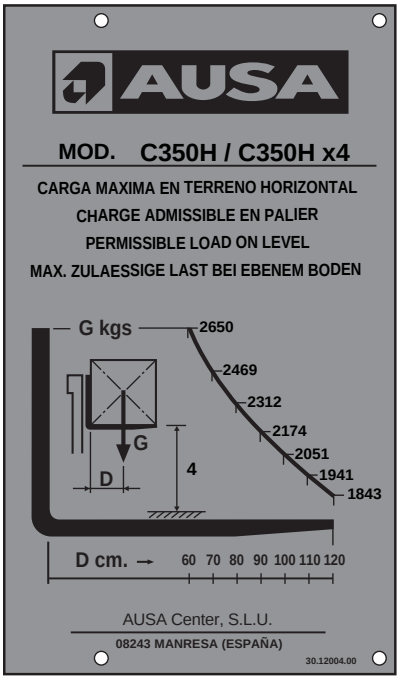

Downloaded from www.Manualslib.com manuals search engine

https://truckmanualshub.com/

Load charts for C350H / C350H x4 front narrow axle and and quick attach fork carriage (24 in. load centre)

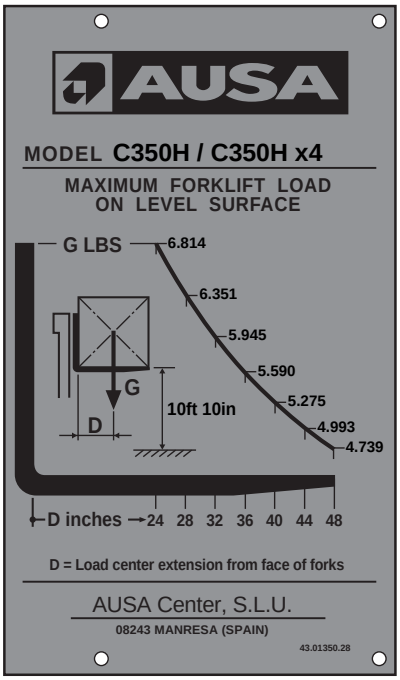

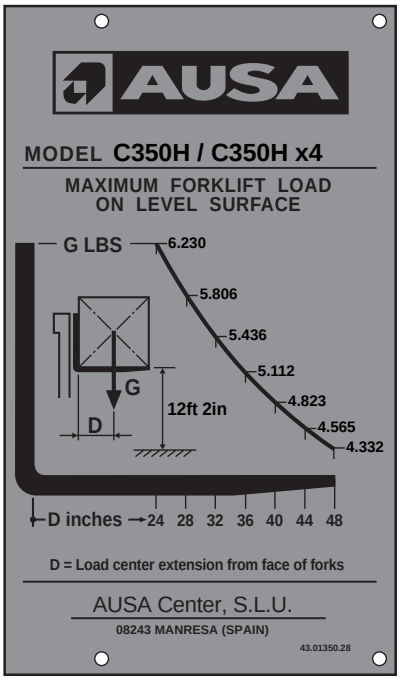

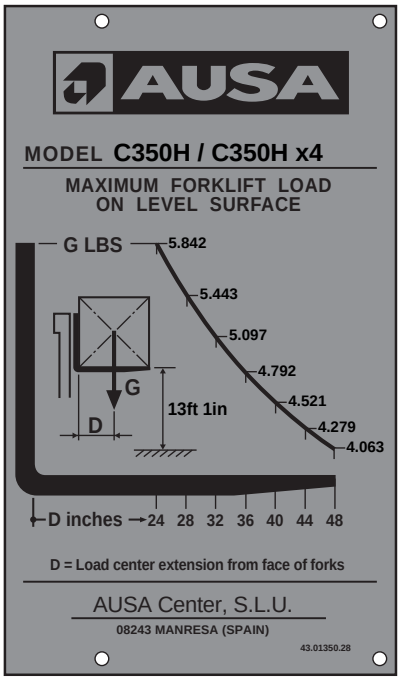

Downloaded from www.Manualslib.com manuals search engine

https://truckmanualshub.com/

Load charts for C350H / C350H x4 wide axle (500 mm. load centre)

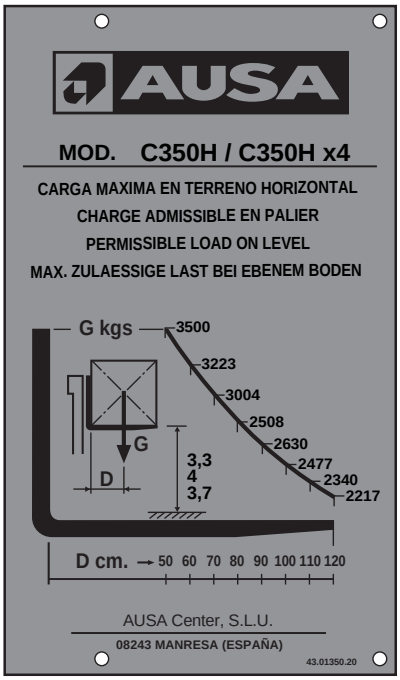

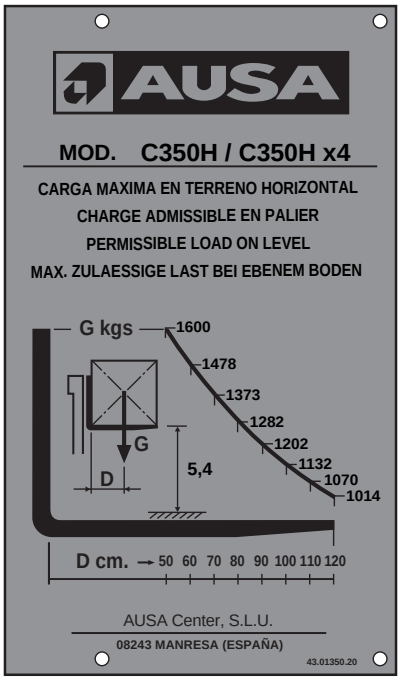

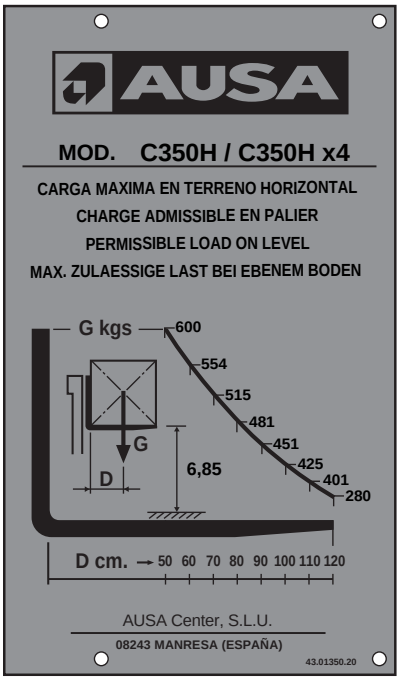

Load charts for C350H / C350H x4 wide axle (600 mm. load centre)

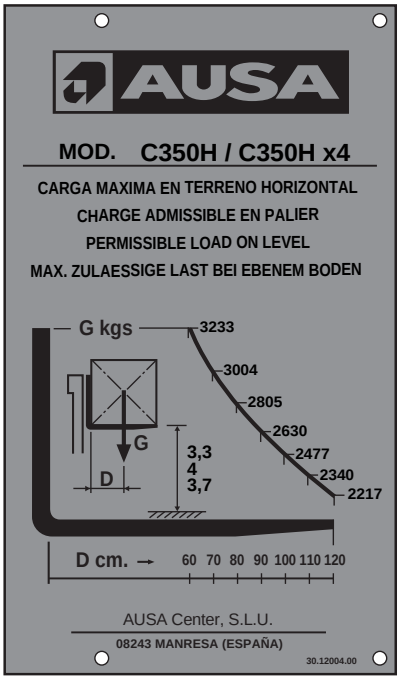

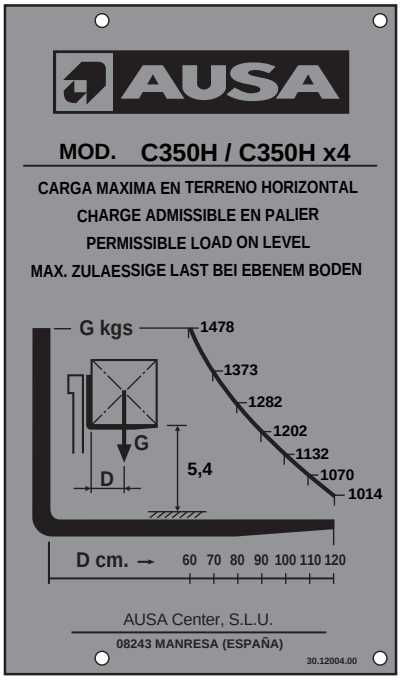

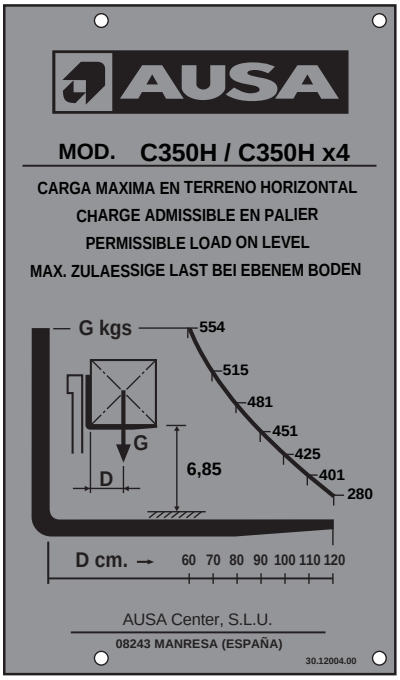

Downloaded from www.Manualslib.com manuals search engine

https://truckmanualshub.com/

Load charts for C350H / C350H x4 wide axle (24 in. load centre)

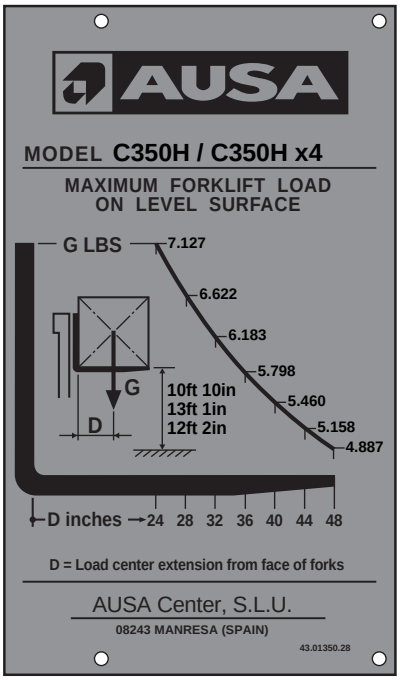

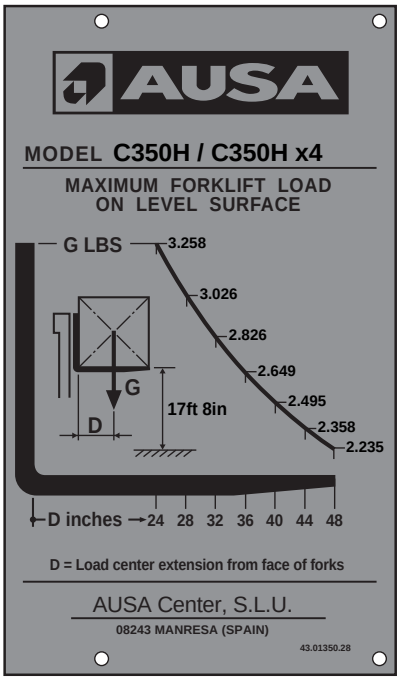

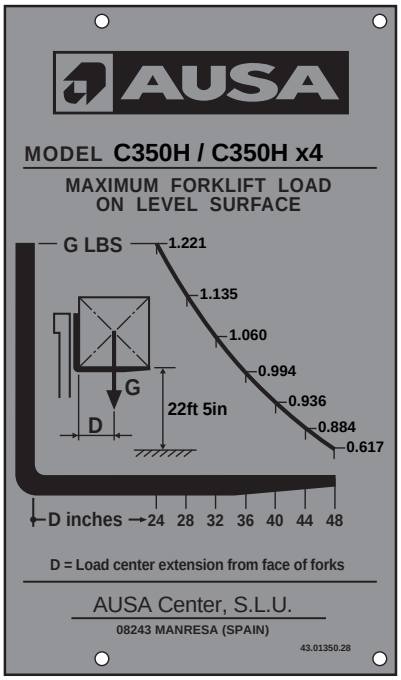

Downloaded from www.Manualslib.com manuals search engine

https://truckmanualshub.com/

Load charts for C350H / C350H x4 front wide axle and and quick attach fork carriage (500 mm. load centre)

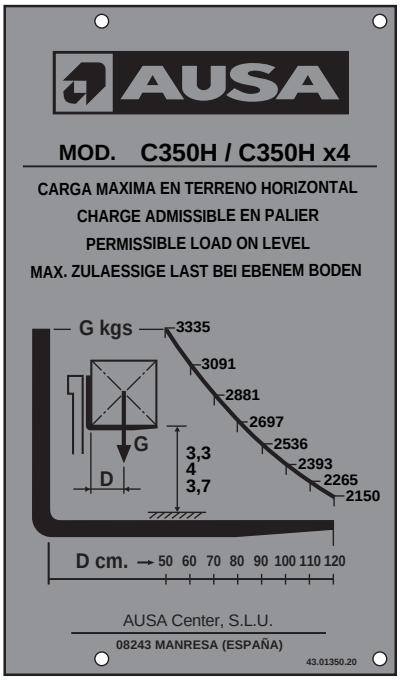

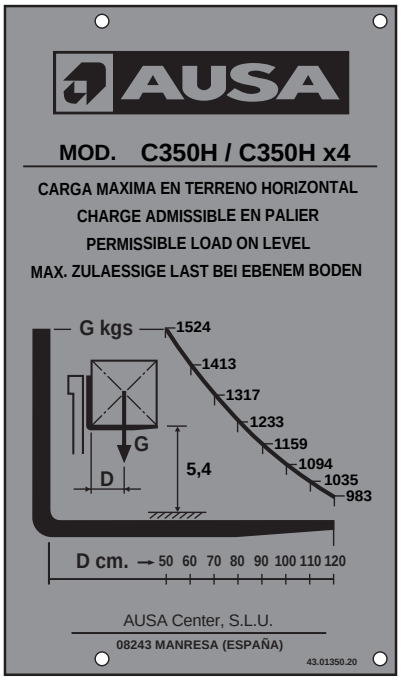

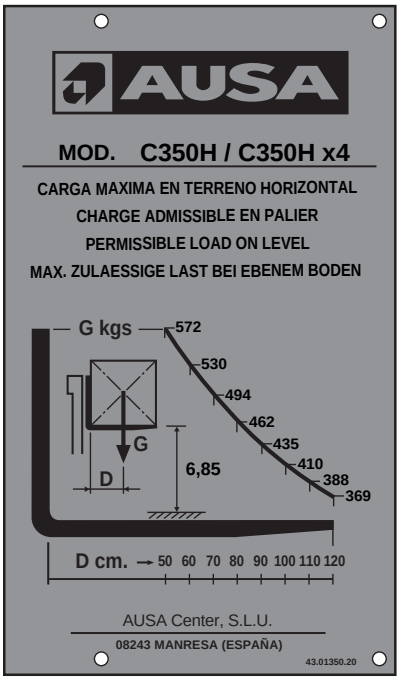

Load charts for C350H / C350H x4 front wide axle and and quick attach fork carriage (600 mm. load centre)

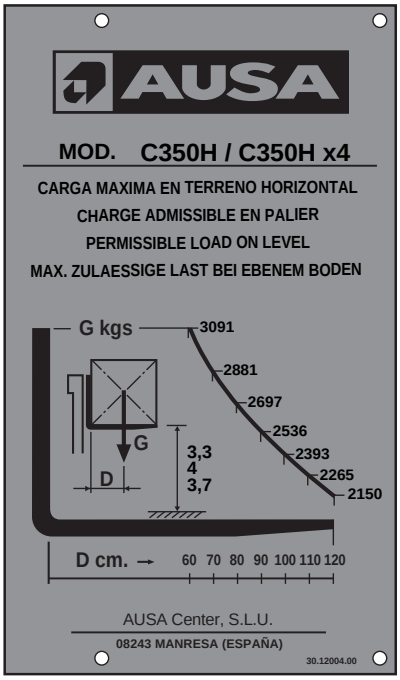

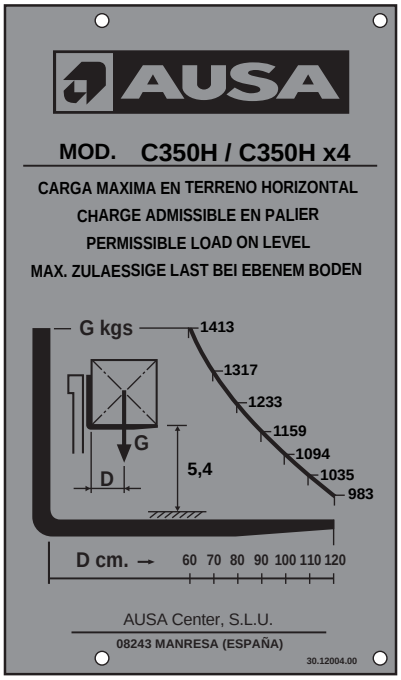

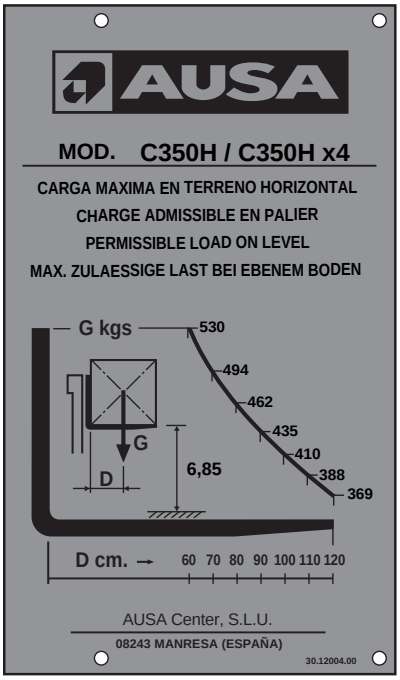

Downloaded from www.Manualslib.com manuals search engine

https://truckmanualshub.com/

Load charts for C350H / C350H x4 front wide axle and and quick attach fork carriage (24 in. load centre)

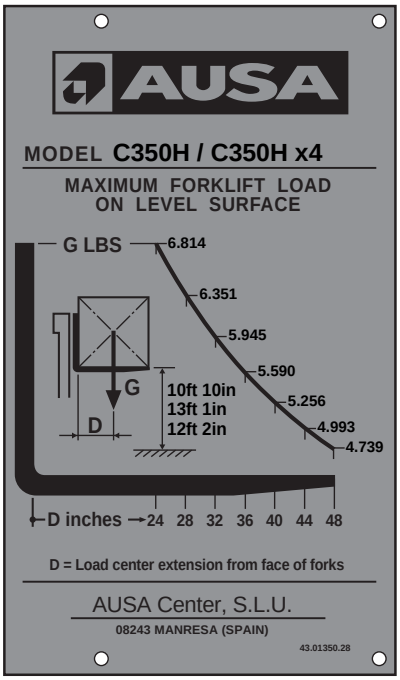

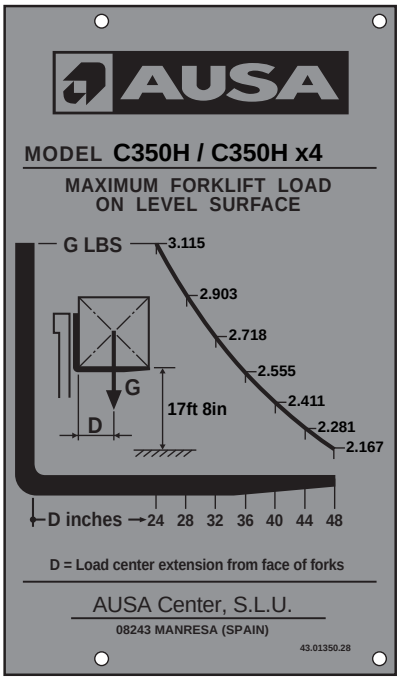

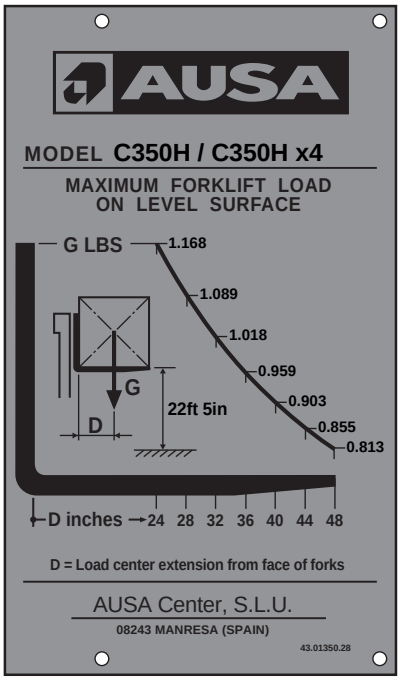

Downloaded from www.Manualslib.com manuals search engine

https://truckmanualshub.com/

INDUSTRIAL USE (C300HI / C350HI)

This forklift truck is designed for transporting and lifting loads on good condition floors, that means flat, levelled and paved ground, so that there are optimal stability conditions.

Load charts for C300HI narrow axle (500 mm. load centre)

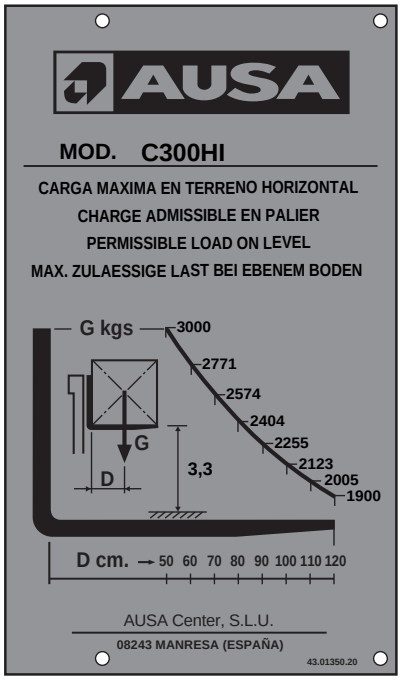

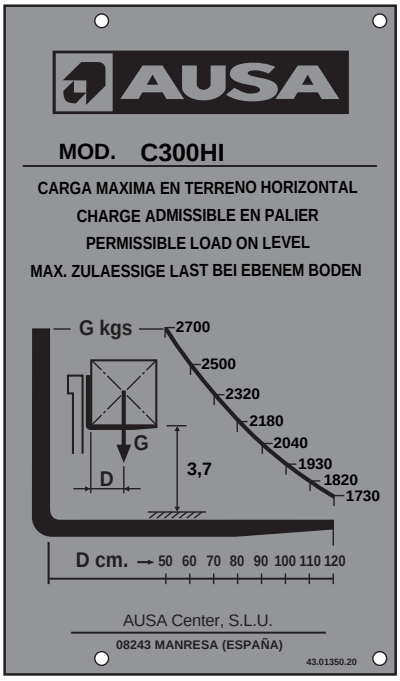

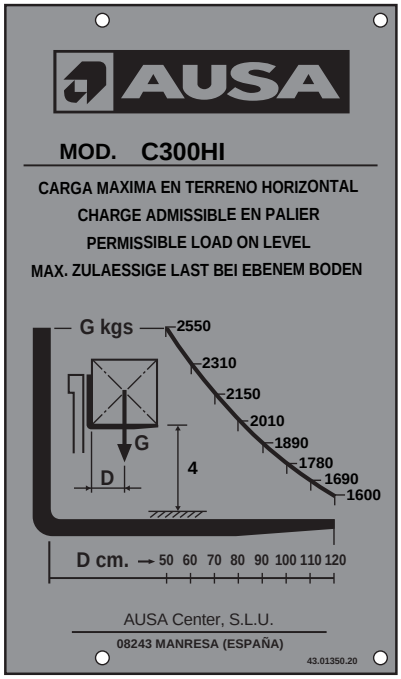

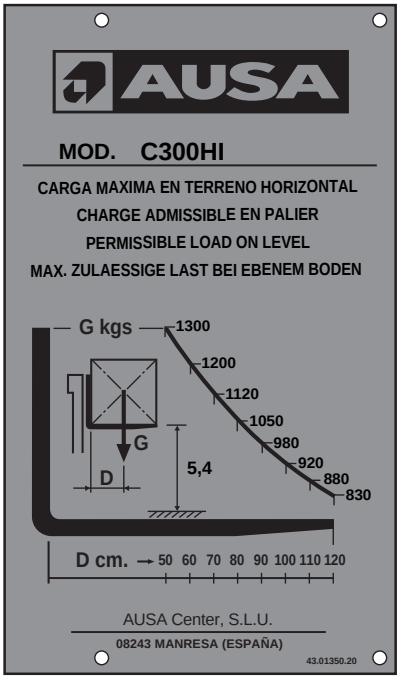

Downloaded from www.Manualslib.com manuals search engine

https://truckmanualshub.com/

Load charts for C300HI narrow axle (600 mm. load centre)

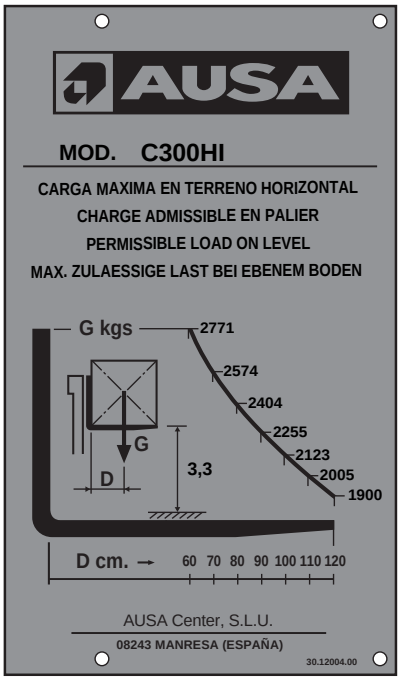

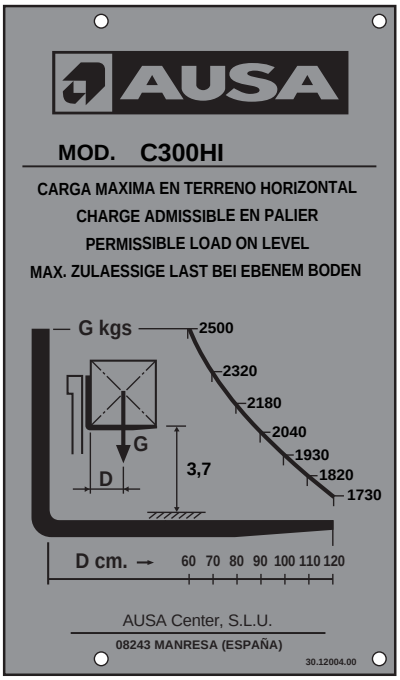

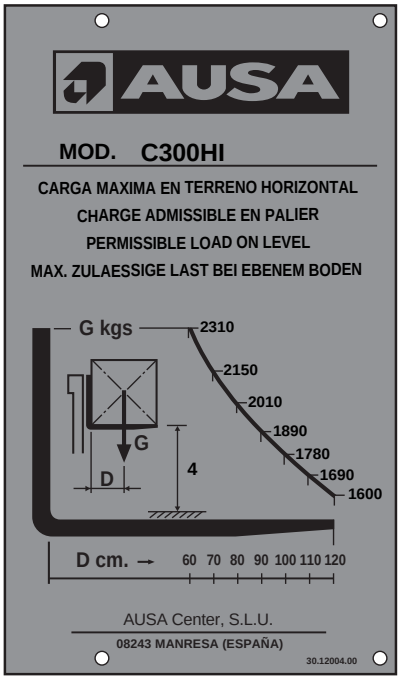

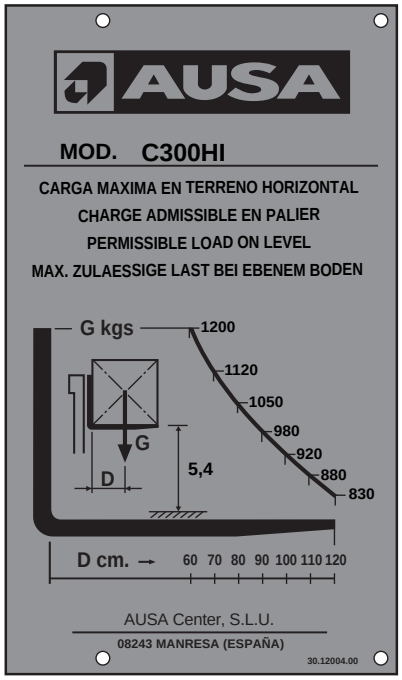

Downloaded from www.Manualslib.com manuals search engine

https://truckmanualshub.com/

Load charts for C300HI narrow axle (24 in. load centre)

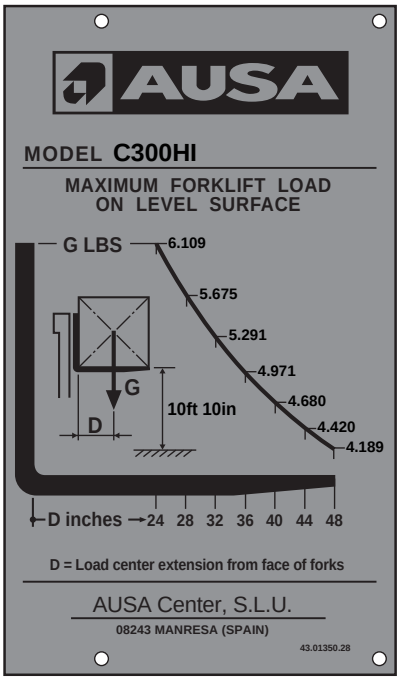

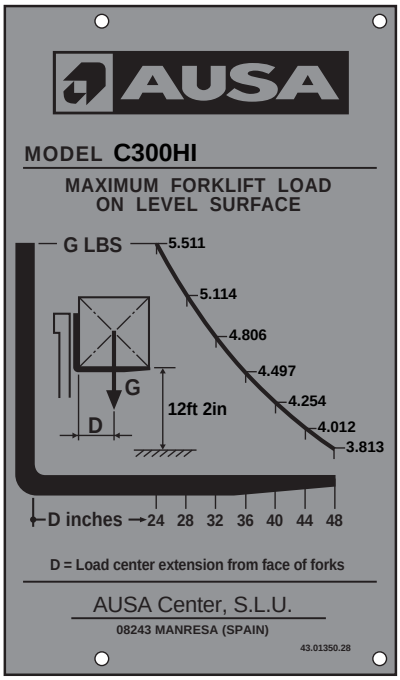

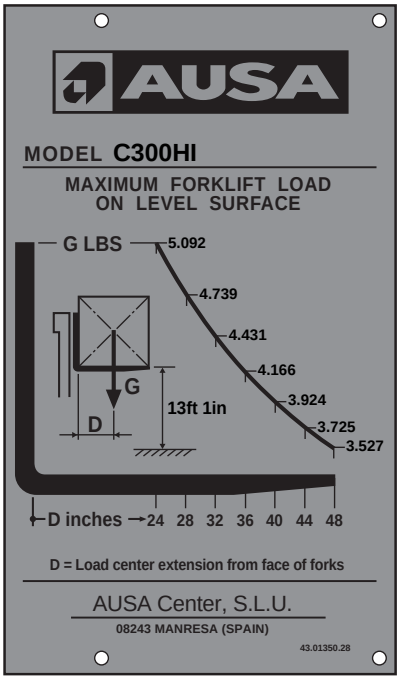

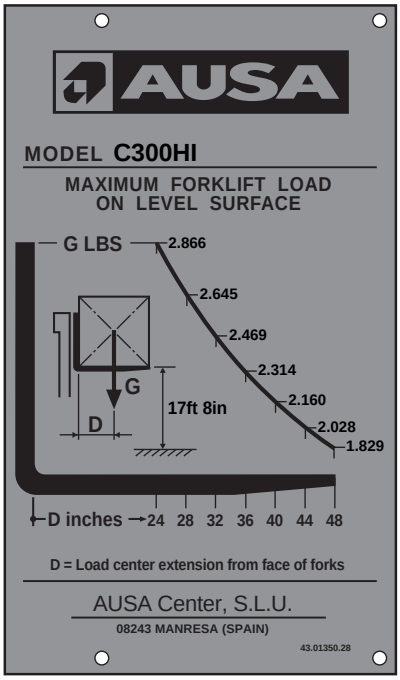

Downloaded from www.Manualslib.com manuals search engine

https://truckmanualshub.com/

Load charts for C350HI / C350HI x4 wide axle (500 mm. load centre)

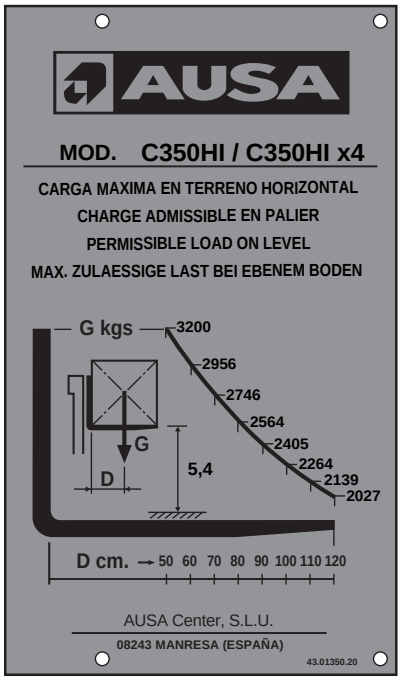

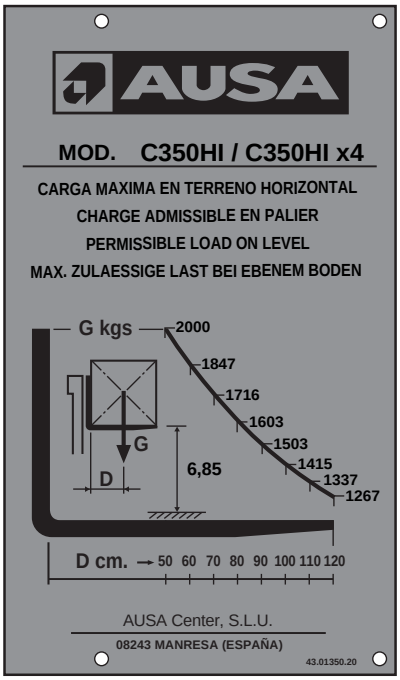

Load charts for C350HI / C350HI x4 wide axle (600 mm. load centre)

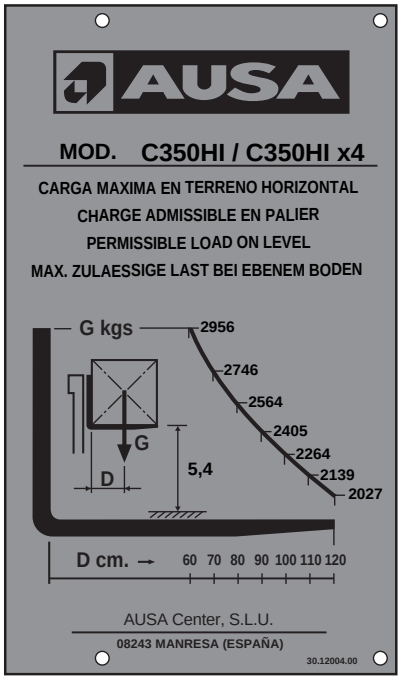

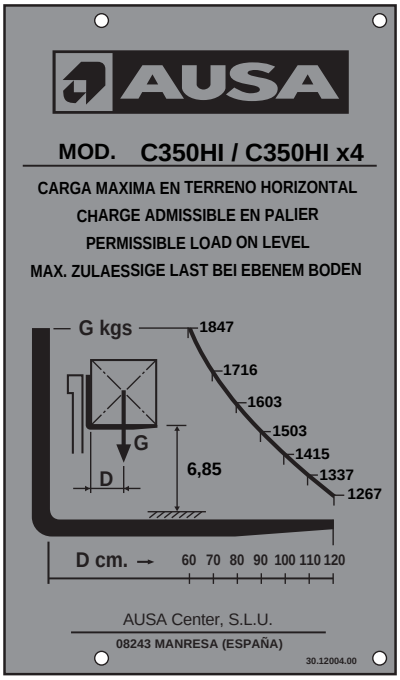

Downloaded from www.Manualslib.com manuals search engine

https://truckmanualshub.com/

Load charts for C350HI / C350HI x4 wide axle (24 in. load centre)

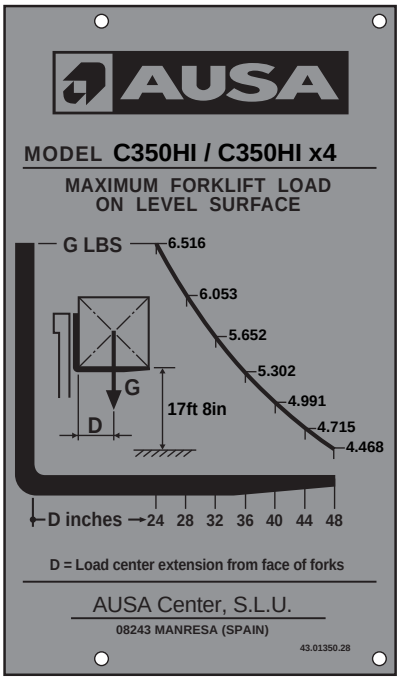

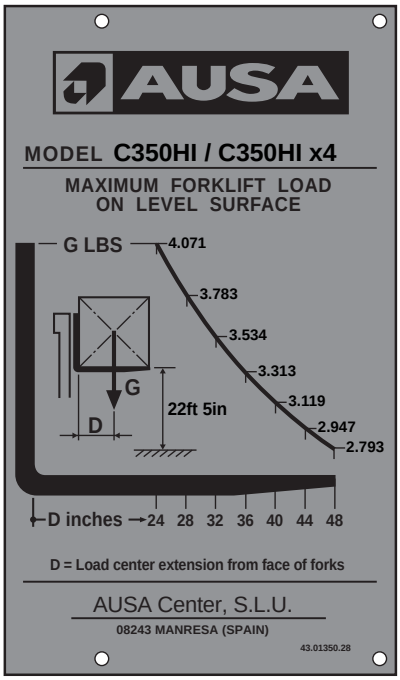

Downloaded from www.Manualslib.com manuals search engine

https://truckmanualshub.com/

Load charts for C350HI narrow axle (500 mm. load centre)

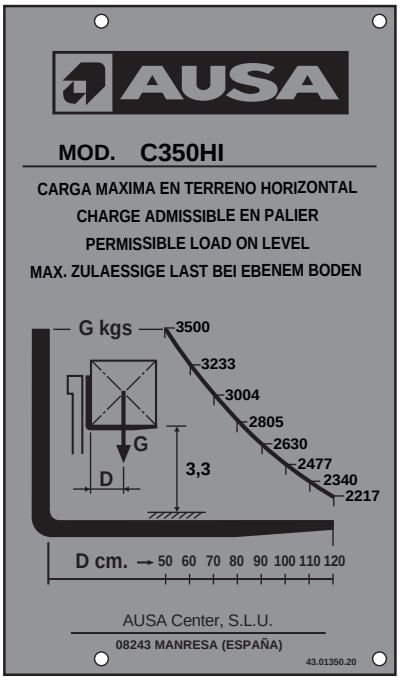

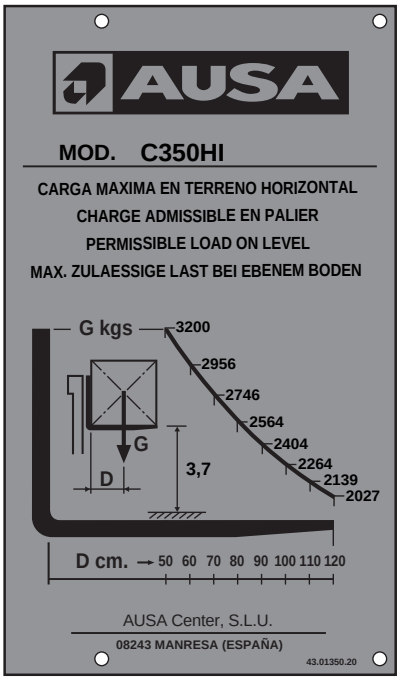

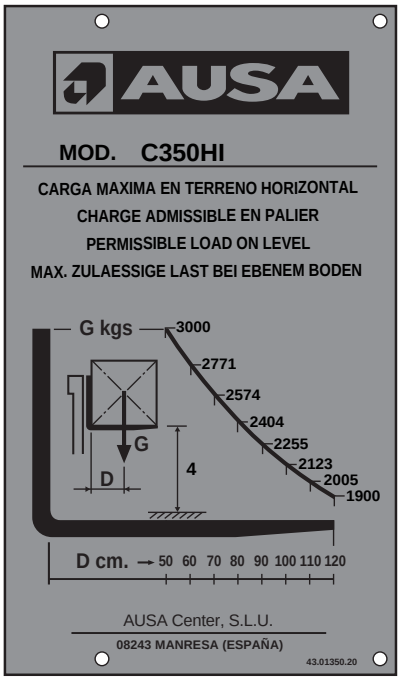

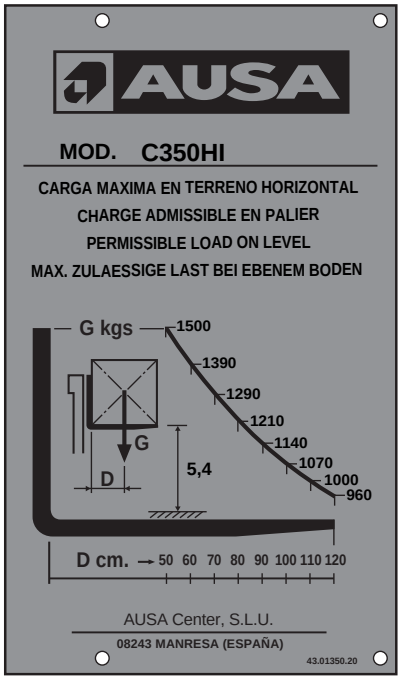

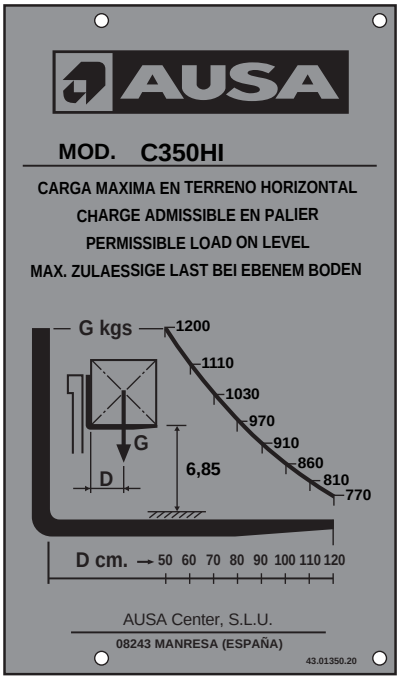

Downloaded from www.Manualslib.com manuals search engine

https://truckmanualshub.com/

Load charts for C350HI narrow axle (600 mm. load centre)

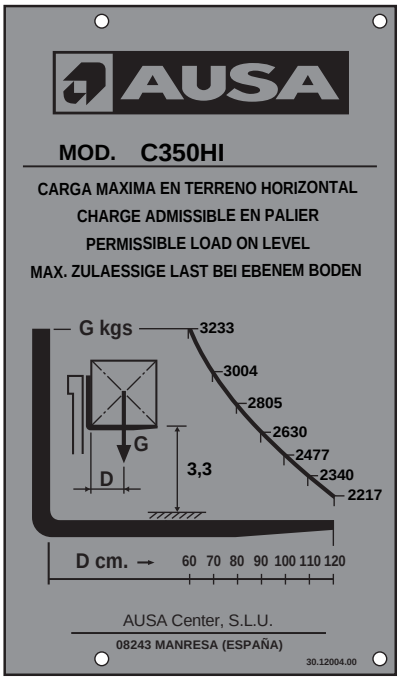

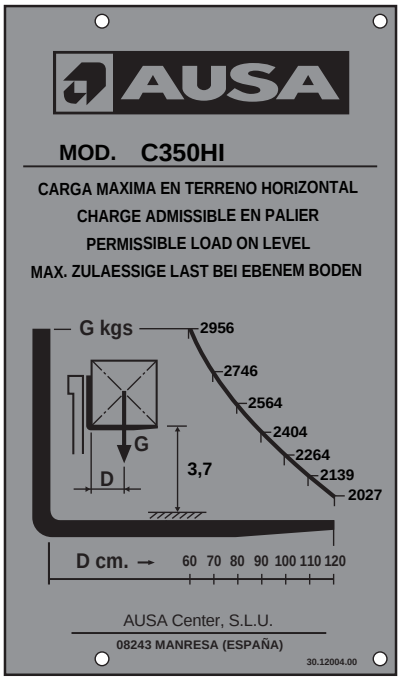

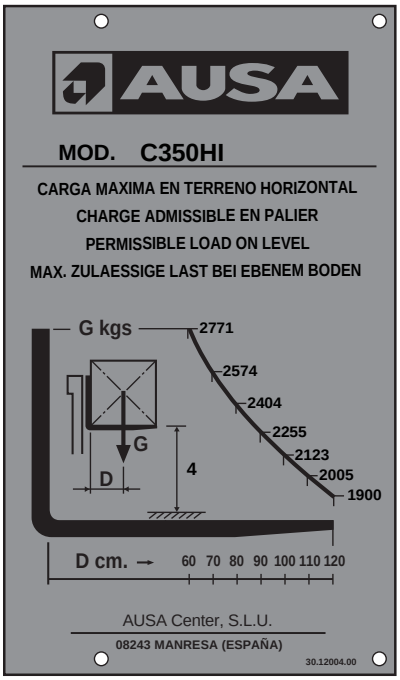

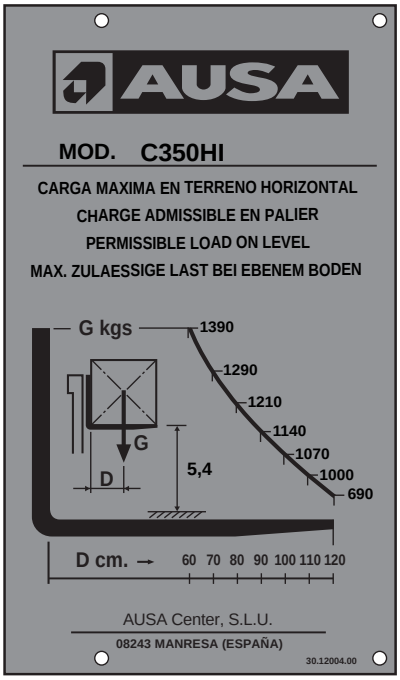

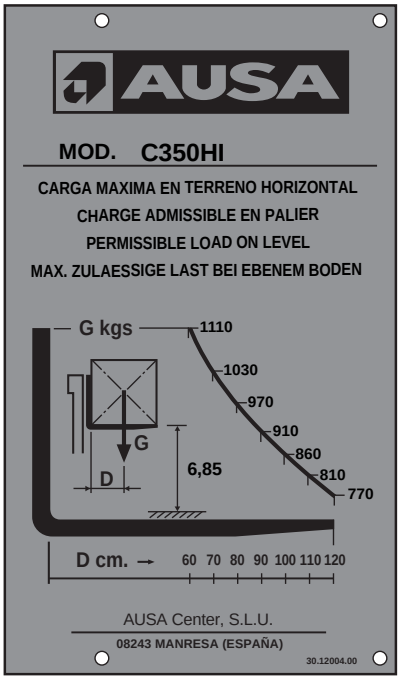

Downloaded from www.Manualslib.com manuals search engine

https://truckmanualshub.com/

Load charts for C350HI narrow axle (24 in. load centre)

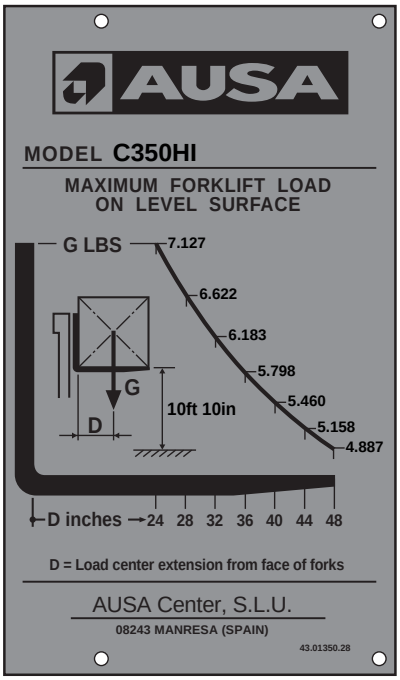

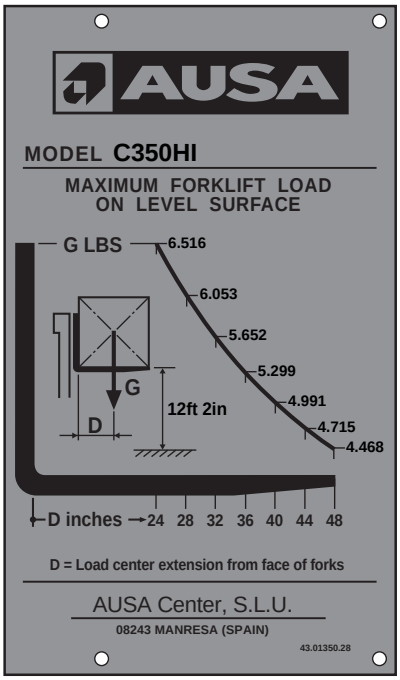

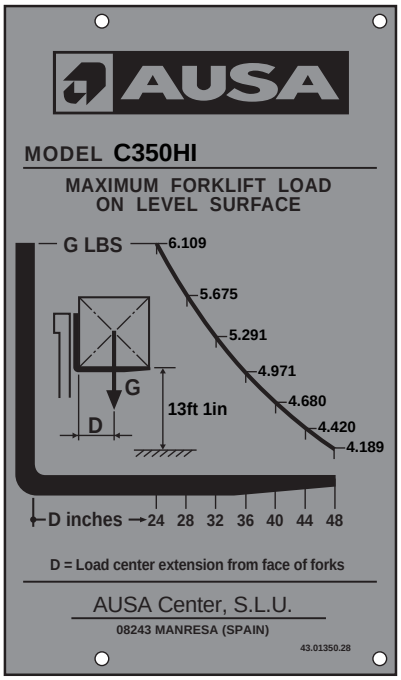

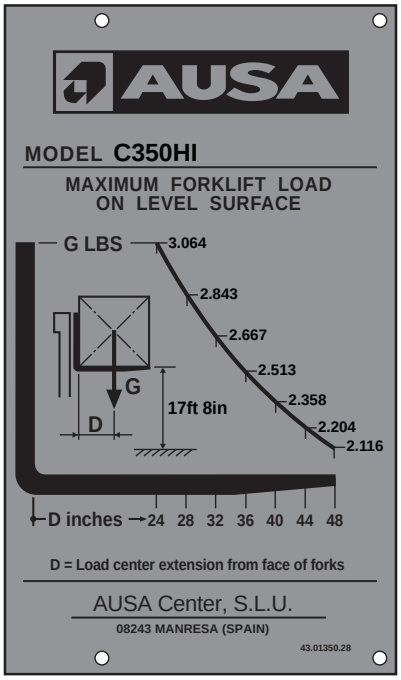

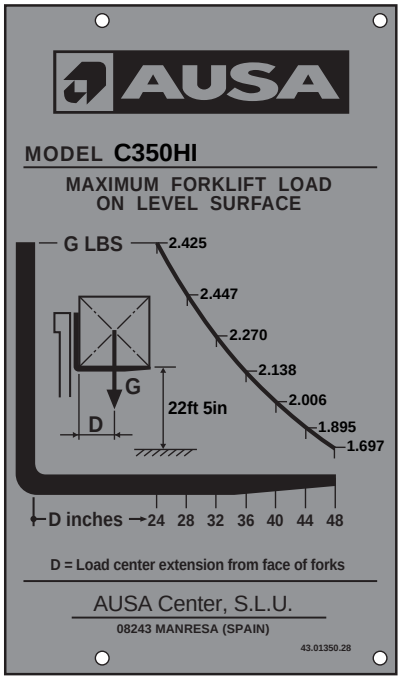

Downloaded from www.Manualslib.com manuals search engine

https://truckmanualshub.com/

Technical Specifications

■ **Optional equipment**

Optional equipment is marked with an asterisk **(✶)**. Optional equipment is only supplied at the express wish of the customer, for certain versions of forklift or even only in certain countries.

- 4000 mm. maximum height Duplex Mast
- 3700 mm, 5400 mm and 6780 mm maximum height Triplex mast (free lift)
- Load back-rest
- Wheels: solid, super-elastic and extra wide
- Oxi-catalytic exhaust purifier
- Exhaust Spark arrestor
- Partially closed or close cab with heating
- 600, 800 and 1000 l. hydraulic shovels
- Extra hydraulic connection for attachments
- Lightning equipment
- Front laminated windshield with wiper
- Rear windshield
- 1870mm. width front axle for C300H / C300HI / C300H x4 / C300HI x4
- Fuel filter with water separator

Where the forklift comes equipped with accessories mounted at factory, please read the relevant Instruction Manual for each accessory carefully before use. Each accessory has its own Instruction Manual issued by the manufacturer, and this is provided with the forklift Operator's and Safety Manual.

Where accessories and equipment are fitted to the basic chassis or fork carriage plate at a later date by companies other than the manufacturer, the specifications and limitations of the forklift with respect to weight and dimensions, the adjustment and effectiveness of the lighting system, the protective system requirements, or any additional systems required to guarantee vehicle safety should be taken into consideration.

Downloaded from www.Manualslib.com manuals search engine

https://truckmanualshub.com/

Decals / labels / identification plates all markets (except USA)

STICKER:
JOYSTICK FUNCTION

REFERENCE:	DESCRIPTION:	QUANTITY:
10.15003.01	INDICATIVE STICKER 60X75	1

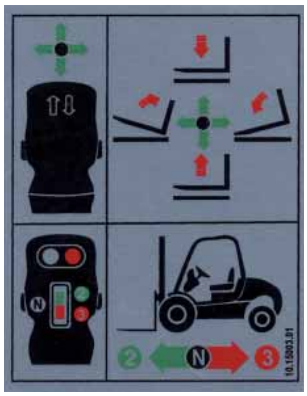

POSITION:
Stuck on the inside of the right front fender, in the top center position. Just above sticker ref. 10.15005.01, at 0.1969 in.

STICKER:
JOYSTICK FUNCTION BUTTONS

REFERENCE:	DESCRIPTION:	QUANTITY:
10.15005.01	INDICATIVE STICKER MAST SIDE SHIFT	1

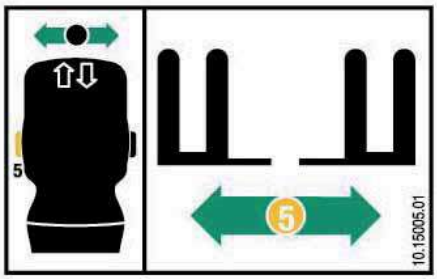

POSITION:
Stuck on the inside of the right front fender, in the top center position. Just above sticker ref. 10.15003.01, at 0.1969 in.

STICKER:
JOYSTICK FUNCTION BUTTONS

REFERENCE:	DESCRIPTION:	QUANTITY:
10.15009.00	INDICATIVE STICKER AUXILIAR HYDRAULIC LINE **(✶)**	1

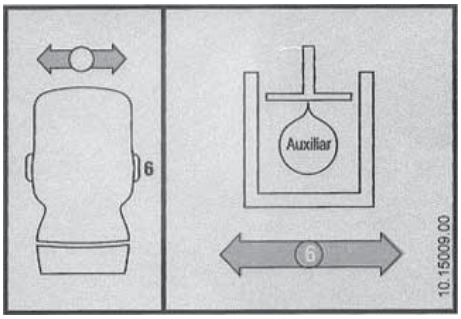

POSITION:
Stuck on the inside of the right front fender, in the top center position. Just above sticker ref. 10.15005.01, at 0.1969 in.

Downloaded from www.Manualslib.com manuals search engine

https://truckmanualshub.com/

Decals / labels / identification plates all markets (except USA)

STICKER:
JOYSTICK FUNCTION BUTTONS

REFERENCE:	DESCRIPTION:	QUANTITY:
10.15011.00	INDICATIVE STICKER 4WD CONNECTION **(✶)**	1

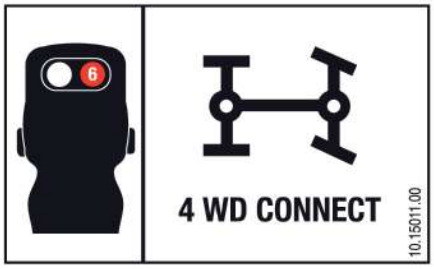

POSITION:
Stuck on the inside of the right front fender, in the top center position. Just above sticker ref. 10.15005.01 o 10.15009.00, at 0.1969 in.

STICKER:
DANGEROUS AREA

REFERENCE:	DESCRIPTION:	QUANTITY:
45.01352.00	INDICATIVE STICKER	2

POSITION:
On both sides of the mast, above the beam, with its upper side aligned at 4ft 92 in from the ground, below the sticker ref. 13.12136.00 “AUSA Make”, and 0.3937 in away from it.

STICKER:
TO HOIST MACHINE

REFERENCE:	DESCRIPTION:	QUANTITY:
58.01353.01	INDICATIVE STICKER 105X100	2

POSITION:
On the left side of the machine, at the lower exterior part of the front fender, aligned on its upper side with sticker 45.19101.00 “EC mark”.

Downloaded from www.Manualslib.com manuals search engine

https://truckmanualshub.com/

Decals / labels / identification plates all markets (except USA)

STICKER:
AUSA

REFERENCE:	DESCRIPTION:	QUANTITY:
13.12136.00	AUSA STICKER	2

POSITION:
On both sides of the machine, at a distance of 0.984 in and a height of 1.969 in from the lower rear corner of each tank, aligned with the bottom of the tank.

STICKER:
FRONT AXLE WHEELS INFLATED PRESSURE (modelos C350H / C350HI / C350H x4 / C350HI x4)

REFERENCE:	DESCRIPTION:	QUANTITY:
01.12103.00	INDICATIVE STICKER 3,5 BAR / 51 PSI	2

POSITION:
On both sides of the machine, above the fenders of the front wheels, at the front outer end of the fenders, aligned with the outer edge.

STICKER:
FRONT AXLE WHEELS INFLATED PRESSURE (modelos C300H / C300HI / C300H x4 / C300HI x4)

REFERENCE:	DESCRIPTION:	QUANTITY:
01.12106.00	INDICATIVE STICKER 5 BAR / 74 PSI	2

POSITION:
On both sides of the machine, above the fenders of the front wheels, at the front outer end of the fenders, aligned with the outer edge.

Downloaded from www.Manualslib.com manuals search engine

https://truckmanualshub.com/

Decals / labels / identification plates all markets (except USA)

STICKER:
REAR AXLE WHEELS INFLATED PRESSURE (C300H x4 / C350H x4 / C350HI x4)

REFERENCE:	DESCRIPTION:	QUANTITY:
01.12106.00	INDICATIVE STICKER 5 BAR / 74 PSI	2

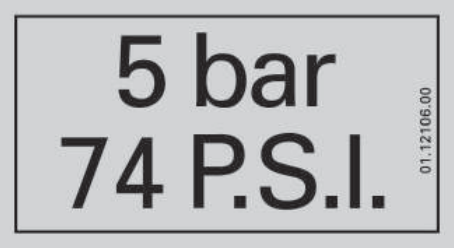

POSITION:
On both sides of the machine, on top of the vertical face, in the upper rear position of each tank, aligned with the bottom of the tank.

STICKER:
REAR AXLE WHEELS INFLATED PRESSURE (C300HI x4)

REFERENCE:	DESCRIPTION:	QUANTITY:
32.12102.00	INDICATIVE STICKER 6 BAR / 89 PSI	2

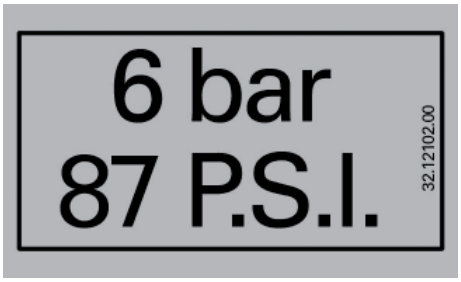

POSITION:
On both sides of the machine, on top of the vertical face, in the upper rear position of each tank, aligned with the bottom of the tank.

STICKER:
REAR AXLE WHEELS INFLATED PRESSURE (C300H / C300HI / C350H / C350HI x4)

REFERENCE:	DESCRIPTION:	QUANTITY:
01.12107.01	INDICATIVE STICKER 6,5 BAR / 96 PSI	2

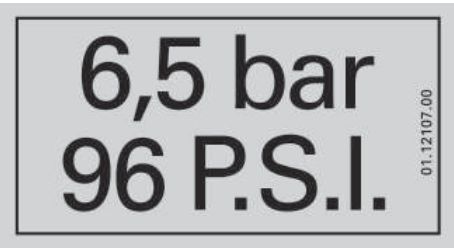

POSITION:
On both sides of the machine, on top of the vertical face, in the upper rear position of each tank, aligned with the bottom of the tank.

Downloaded from www.Manualslib.com manuals search engine

https://truckmanualshub.com/

Decals / labels / identification plates all markets (except USA)

STICKER:
FUEL TYPE INDICATION

REFERENCE:	DESCRIPTION:	QUANTITY:
43.01356.00	INDICATIVE STICKER 90x45 FUEL	1

POSITION:
On the right tank of the machine, next to the fuel cap, aligned with the vertical outer wall of the tank.

STICKER:
EC INDICATION

REFERENCE:	DESCRIPTION:	QUANTITY:
45.19101.00	INDICATIVE STICKER 70x70	2

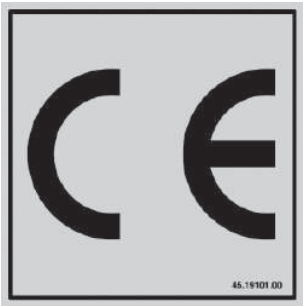

POSITION:
On the left side of the machine, at the bottom inner side of the front fenders, aligned on its upper side with mark id 58.01353.01 “To hoist machine”.

STICKER:
HYDRAULIC OIL TYPE

REFERENCE:	DESCRIPTION:	QUANTITY:
43.01352.20	INDICATIVE STICKER 70x32 HYDRAULIC OIL	1

POSITION:
On the left-hand side tank, below the filler cap, aligned with the inner edge of the tank, and centered with the cap.

Downloaded from www.Manualslib.com manuals search engine

https://truckmanualshub.com/

Decals / labels / identification plates all markets (except USA)

STICKER:
ENGINE OIL TYPE

REFERENCE:	DESCRIPTION:	QUANTITY:
43.01170.02	INDICATIVE STICKER 90x45	1

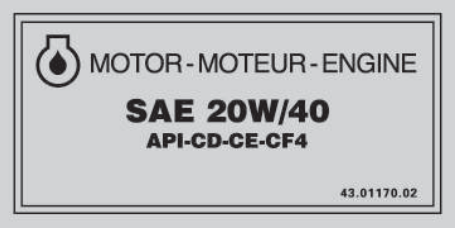

POSITION:
On the inner cab lock, easily legible with the cab raised.

STICKER:
MACHINE MODEL INDICATION (C300H - C300H x4)

REFERENCE:	DESCRIPTION:	QUANTITY:
57.12001.00	INDICATIVE STICKER 68x267 MODEL C300H / HI	2

POSITION:
On both sides of the machine, at a distance of 0.984 in and a height of 5.906 in from the lower rear corner of each tank, aligned with the bottom of the tank.

STICKER:
MACHINE MODEL INDICATION (C350H - C350H x4)

REFERENCE:	DESCRIPTION:	QUANTITY:
57.12002.00	INDICATIVE STICKER 68x267 MODEL C350H / HI	2

POSITION:
On both sides of the machine, at a distance of 1.969 in and a height of 5.906 in from the lower rear corner of each tank, aligned with the bottom of the tank.

Downloaded from www.Manualslib.com manuals search engine

https://truckmanualshub.com/

Decals / labels / identification plates all markets (except USA)

STICKER:
CHARACTERISTICS PLATE

REFERENCE:	DESCRIPTION:	QUANTITY:
01.00779.26	PLATE CHARACTERISTICS 100x130	1

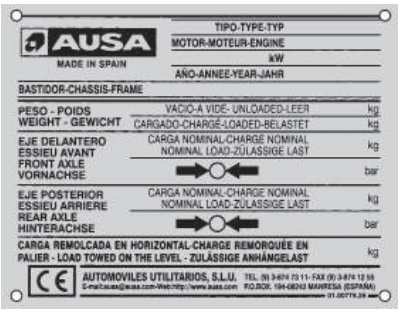

POSITION:

Riveted on top of the engine bulkhead, on its rear upper left-hand side (in forward direction of machine), in the holes prepared. Etched according to assembly instruction.

STICKER:
AUSA ANAGRAM

REFERENCE:	DESCRIPTION:	QUANTITY:
46.08099.00	AUSA ANAGRAM	1

POSITION:

Embedded in the cab front panel, on its outer side, in the upper left-hand part (in forward direction of machine).

STICKER:
WARNING IN CASE OF OVERTURNING THE MACHINE

REFERENCE:	DESCRIPTION:	QUANTITY:
12.12010.00	SAFETY STICKER	1

POSITION:

Top left-hand corner of the dashboard, under sticker ref. 02.00774.00 “Do not use” and aligned with this on its left side.

Downloaded from www.Manualslib.com manuals search engine

https://truckmanualshub.com/

Decals / labels / identification plates all markets (except USA)

STICKER:
ACOUSTIC OPERATOR PROTECTION

REFERENCE:	DESCRIPTION:	QUANTITY:
01.00757.00	INDICATIVE STICKER D40	1

POSITION:
Top left-hand corner of the instrument panel, under sticker 02.00774.00 “Do not use”, aligned with this on its right side and centered with sticker ref. 12.12010.00.

STICKER:
POINT HOISTED MACHINE

REFERENCE:	DESCRIPTION:	QUANTITY:
09.15720.00	INDICATIVE STICKER 35x35	4

POSITION:
Above each of the four eyebolts at the bottom of the frame for lifting the machine.

STICKER:
MAXIMUM SOUND LEVEL

REFERENCE:	DESCRIPTION:	QUANTITY:
09.12014.00	STICKER NOISE 104 DB	1

POSITION:
On the inside of the right front wheel arch, aligned with the cab floor.

Downloaded from www.Manualslib.com manuals search engine

https://truckmanualshub.com/

Decals / labels / identification plates all markets (except USA)

STICKER:
FullGrip® System

REFERENCE:	DESCRIPTION:	QUANTITY:
43.00397.00	INDICATIVE STICKER 110x110	2

POSITION:
On both sides of the machine, next to the AUSA sticker (ref. 13.12136.00) and aligned on the right side.

STICKER:
MAST TILTING FORWARD MARKER (MACHINES WITH SEMI-CLOSED AND FULL CAB)

REFERENCE:	DESCRIPTION:	QUANTITY:
57.12010.00	INDICATIVE STICKER LOWERING MAST	1

POSITION:
Into the cabin, on the left side of the engine's cover next to the handle that releases the cabin latch.

STICKER:
NON MOVEMENTS WITH LOAD OFFCENTERED (MASTS OF MORE THAN 3,7M / 12ft 2 in)

REFERENCE:	DESCRIPTION:	QUANTITY:
43.02187.02	INDICATIVE STICKER 70x210 ENGLISH	1

POSITION:
In the upper part of the dashboard, next to the sticker ref. 02.00777.00 "Do not use" aligned with this on its upper side.

* In heated enclosed cab, position at the bottom left-hand side of the window 0.3937 in away from the edge (bottom left side).

* Heated cab

Downloaded from www.Manualslib.com manuals search engine

https://truckmanualshub.com/

Decals / labels / identification plates all markets (except USA)

STICKER:
AUSA STICKER

REFERENCE:	DESCRIPTION:	QUANTITY:
13.12136.00	AUSA STICKER	2

POSITION:
On both sides of the mast, above the beam, with its lower side aligned at 4ft 95 in from the ground, above the sticker ref. 45.01352.00 “Dangerous area”, and 0.3937 in away from it.

STICKER:
INDICATION TRANSFER BOX OIL.

REFERENCE:	DESCRIPTION:	QUANTITY:
43.00396.02	INDICATIVE STICKER 60x95	1

POSITION:
Into the engine compartment on the external face of the joystick control valve support, above “Brake fluid indication” sticker.

STICKER:
NOT USE WITHOUT AUTHORIZATION

REFERENCE:	DESCRIPTION:	QUANTITY:
02.00777.00	INDICATIVE STICKER 50x120 ENGLISH	1

POSITION:
Top left-hand corner of the dashboard, aligned on its left side with sticker nº 12.12010.00 “Safety warning”.

Downloaded from www.Manualslib.com manuals search engine

https://truckmanualshub.com/

Decals / labels / identification plates all markets (except USA)

STICKER:
BRAKE FLUID INDICATION

REFERENCE:	DESCRIPTION:	QUANTITY:
43.70780.01	INDICATIVE STICKER 60x100 BRAKE	1

POSITION:
Into the engine compartment on the external face of the joystick control valve support, below “Transfer box oil” sticker.

STICKER:
HOT PARTS INDICATION

REFERENCE:	DESCRIPTION:	QUANTITY:
02.00765.00	INDICATIVE STICKER 40x80 ENGLISH	1

POSITION:
Inside the counterweight, near the exhaust manifold, easily readable when trying to work on the engine.

STICKER:
LOAD CHART PLATE

REFERENCE:	DESCRIPTION:	QUANTITY:
43.01350.28 / 30.12004.00	INDICATIVE PLATE 91x156 LOAD CHARTS	1

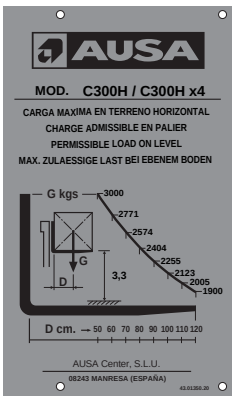

POSITION:
Riveting in 4 holes provided, in the central outer part the left-hand front fender. Etched according to assembly instruction.
* Add another unit at the top in the event of installing a mast higher than 12ft 14 in.

Downloaded from www.Manualslib.com manuals search engine

https://truckmanualshub.com/

Decals / labels / identification plates all markets (USA Market)

STICKER:
JOYSTICK FUNCTION. SUBSTITUTE REF. 10.15003.01

REFERENCE:	DESCRIPTION:	QUANTITY:
10.15006.01	INDICATIVE STICKER 60X75	1

POSITION:
Stuck on the inside of the right front fender, in the top center position. Just above sticker ref. 10.15008.01, at 0.1969 in.

STICKER:
JOYSTICK FUNCTION . SUBSTITUTE REF. 10.15005.01

REFERENCE:	DESCRIPTION:	QUANTITY:
10.15008.01	INDICATIVE STICKER MAST SIDE-SHIFT (USA)	1

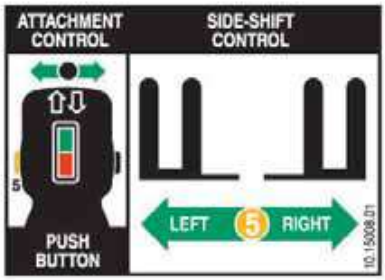

POSITION:
Stuck on the inside of the right front fender, in the top center position. Just above sticker ref. 10.15006.01, at 0.1969 in.

STICKER:
JOYSTICK FUNCTION BUTTONS

REFERENCE:	DESCRIPTION:	QUANTITY:
10.15009.00	INDICATIVE STICKER AUXILIAR HYDRAULIC LINE (✶)	1

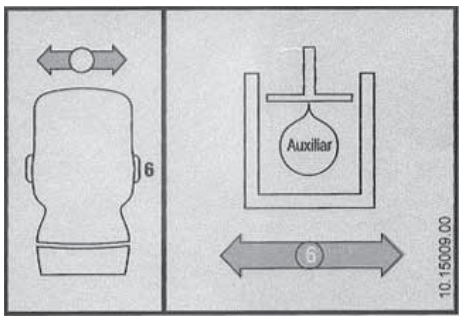

POSITION:
Stuck on the inside of the right front fender, in the top center position. Just above sticker ref. 10.15005.01, at 0.1969 in.

Downloaded from www.Manualslib.com manuals search engine

https://truckmanualshub.com/

Decals / labels / identification plates all markets (USA Market)

STICKER:
JOYSTICK FUNCTION BUTTONS

REFERENCE:	DESCRIPTION:	QUANTITY:
10.15011.00	INDICATIVE STICKER 4WD CONNECTION (✶)	1

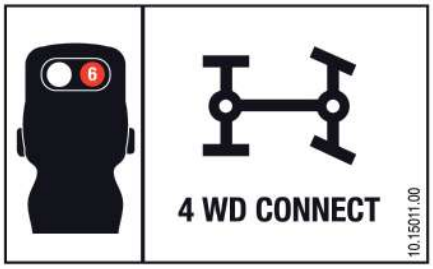

POSITION:
Stuck on the inside of the right front fender, in the top center position. Just above sticker ref. 10.15005.01 o 10.15009.00, at 0.1969 in.

STICKER:
DANGEROUS AREA.. SUBSTITUTE REF. 45.01352.00

REFERENCE:	DESCRIPTION:	QUANTITY:
45.01352.01	INDICATIVE STICKER	2

POSITION:
On both sides of the mast, above the beam, with its upper side aligned at 4ft 92 in from the ground, below the sticker ref. 13.12136.00 “AUSA Make”, and 0.3937 in away from it.

STICKER:
TO HOIST MACHINE

REFERENCE:	DESCRIPTION:	QUANTITY:
58.01353.01	INDICATIVE STICKER 105X100	2

POSITION:
On the left side of the machine, at the lower exterior part of the front fender, aligned on its upper side with sticker 45.19101.00 “EC mark”.

Downloaded from www.Manualslib.com manuals search engine

https://truckmanualshub.com/

Decals / labels / identification plates all markets (USA Market)

STICKER:
AUSA

REFERENCE:	DESCRIPTION:	QUANTITY:
13.12136.00	AUSA STICKER	2

POSITION:
On both sides of the machine, at a distance of 0.984 in and a height of 1.969 in from the lower rear corner of each tank, aligned with the bottom of the tank.

STICKER:
FRONT AXLE WHEELS INFLATED PRESSURE (modelos C350H / C350HI / C350H x4 / C350HI x4)

REFERENCE:	DESCRIPTION:	QUANTITY:
01.12103.00	INDICATIVE STICKER 3,5 BAR / 51 PSI	2

POSITION:
On both sides of the machine, above the fenders of the front wheels, at the front outer end of the fenders, aligned with the outer edge.

STICKER:
FRONT AXLE WHEELS INFLATED PRESSURE (modelos C300H / C300HI / C300H x4 / C300HI x4)

REFERENCE:	DESCRIPTION:	QUANTITY:
01.12106.00	INDICATIVE STICKER 5 BAR / 74 PSI	2

POSITION:
On both sides of the machine, above the fenders of the front wheels, at the front outer end of the fenders, aligned with the outer edge.

Downloaded from www.Manualslib.com manuals search engine

https://truckmanualshub.com/

Decals / labels / identification plates all markets (USA Market)

STICKER:
REAR AXLE WHEELS INFLATED PRESSURE (C300H x4 / C350H x4 / C350HI x4)

REFERENCE:	DESCRIPTION:	QUANTITY:
01.12106.00	INDICATIVE STICKER 5 BAR / 74 PSI	2

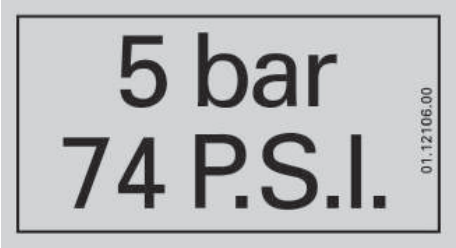

POSITION:
On both sides of the machine, on top of the vertical face, in the upper rear position of each tank, aligned with the bottom of the tank.

STICKER:
REAR AXLE WHEELS INFLATED PRESSURE (C300HI x4)

REFERENCE:	DESCRIPTION:	QUANTITY:
32.12102.00	INDICATIVE STICKER 6 BAR / 89 PSI	2

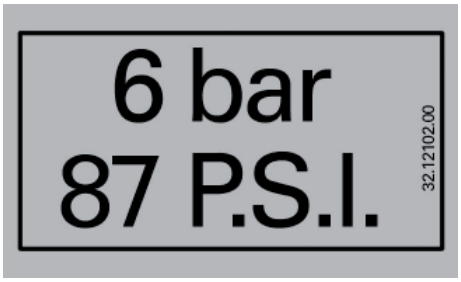

POSITION:
On both sides of the machine, on top of the vertical face, in the upper rear position of each tank, aligned with the bottom of the tank.

STICKER:
REAR AXLE WHEELS INFLATED PRESSURE (C300H / C300HI / C350H / C350HI x4)

REFERENCE:	DESCRIPTION:	QUANTITY:
01.12107.01	INDICATIVE STICKER 6,5 BAR / 96 PSI	2

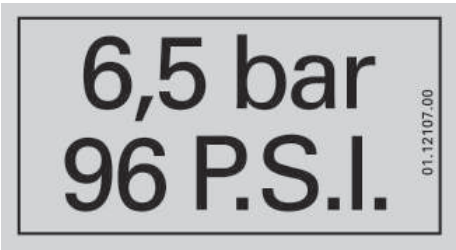

POSITION:
On both sides of the machine, on top of the vertical face, in the upper rear position of each tank, aligned with the bottom of the tank.

Downloaded from www.Manualslib.com manuals search engine

https://truckmanualshub.com/

Decals / labels / identification plates all markets (USA Market)

STICKER:
FUEL TYPE INDICATION

REFERENCE:	DESCRIPTION:	QUANTITY:
43.01356.00	INDICATIVE STICKER 90x45 FUEL	1

POSITION:
On the right tank of the machine, next to the fuel cap, aligned with the vertical outer wall of the tank.

STICKER:
HYDRAULIC OIL TYPE (USA). SUBSTITUTE REF. 43.01352.20

REFERENCE:	DESCRIPTION:	QUANTITY:
60.01352.01	INDICATIVE STICKER 70x32 HYDRAULIC OIL	1

POSITION:
On the left-hand side tank, below the filler cap, aligned with the inner edge of the tank, and centered with the cap.

STICKER:
ENGINE OIL TYPE. SUBSTITUTE REF. 43.01170.02

REFERENCE:	DESCRIPTION:	QUANTITY:
43.01170.03	INDICATIVE STICKER 90x45	1

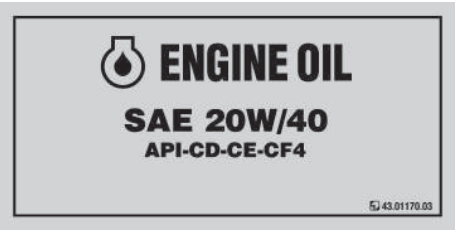

POSITION:
On the inner cab lock, easily legible with the cab raised.

Downloaded from www.Manualslib.com manuals search engine

https://truckmanualshub.com/

Decals / labels / identification plates all markets (USA Market)

STICKER:
MACHINE MODEL INDICATION (C300H - C300H x4)

REFERENCE:	DESCRIPTION:	QUANTITY:
57.12001.00	INDICATIVE STICKER 68x267	2

POSITION:
On both sides of the machine, at a distance of 0.984 in and a height of 5.906 in from the lower rear corner of each tank, aligned with the bottom of the tank.

STICKER:
MACHINE MODEL INDICATION (C350H - C350H x4)

REFERENCE:	DESCRIPTION:	QUANTITY:
57.12002.00	INDICATIVE STICKER 68x267 MODEL C350H / HI	2

POSITION:
On both sides of the machine, at a distance of 1.969 in and a height of 5.906 in from the lower rear corner of each tank, aligned with the bottom of the tank.

STICKER:
CHARACTERISTICS PLATE. SUBSTITUTE 01.00779.26

REFERENCE:	DESCRIPTION:	QUANTITY:
01.00779.23	PLATE CHARACTERISTICS 100x130	1

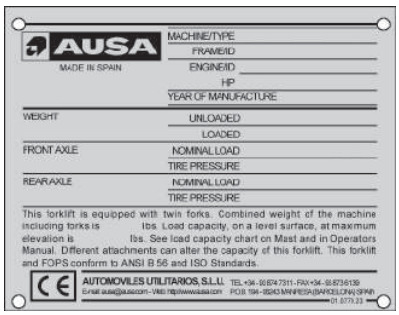

POSITION:
Riveted on top of the engine bulkhead, on its rear upper left-hand side (in forward direction of machine), in the holes prepared. Etched according to assembly instruction.

Downloaded from www.Manualslib.com manuals search engine

https://truckmanualshub.com/

Decals / labels / identification plates all markets (USA Market)

STICKER:
AUSA ANAGRAM

REFERENCE:	DESCRIPTION:	QUANTITY:
46.08099.00	AUSA ANAGRAM	1

POSITION:
Embedded in the cab front panel, on its outer side, in the upper left-hand part (in forward direction of machine).

STICKER:
WARNING IN CASE OF OVERTURNING THE MACHINE

REFERENCE:	DESCRIPTION:	QUANTITY:
12.12010.00	SAFETY STICKER	1

POSITION:
Top left-hand corner of the dashboard, under sticker ref. 02.00774.00 “Do not use” and aligned with this on its left side.

STICKER:
ACOUSTIC OPERATOR PROTECTION

REFERENCE:	DESCRIPTION:	QUANTITY:
01.00757.00	INDICATIVE STICKER D40	1

POSITION:
Top left-hand corner of the instrument panel, under sticker 02.00774.00 “Do not use”, aligned with this on its right side and centered with sticker ref. 12.12010.00.

Downloaded from www.Manualslib.com manuals search engine

https://truckmanualshub.com/

Decals / labels / identification plates all markets (USA Market)

STICKER:
POINT HOISTED MACHINE

REFERENCE:	DESCRIPTION:	QUANTITY:
09.15720.00	INDICATIVE STICKER 35x35	4

POSITION:
Above each of the four eyebolts at the bottom of the frame for lifting the machine.

STICKER:
MAXIMUM SOUND LEVEL

REFERENCE:	DESCRIPTION:	QUANTITY:
09.12014.00	STICKER NOISE 104 DB	1

POSITION:
On the inside of the right front wheel arch, aligned with the cab floor.

STICKER:
FullGrip® System

REFERENCE:	DESCRIPTION:	QUANTITY:
43.00397.00	INDICATIVE STICKER 110x110	2

POSITION:
On both sides of the machine, next to the AUSA sticker (ref. 13.12136.00) and aligned on the right side.

Downloaded from www.Manualslib.com manuals search engine

https://truckmanualshub.com/

Decals / labels / identification plates all markets (USA Market)

STICKER:

MAST TILTING FORWARD MARKER (MACHINES WITH SEMI-CLOSED AND FULL CAB)

REFERENCE:	DESCRIPTION:	QUANTITY:
57.12010.00	INDICATIVE STICKER LOWERING MAST	1

POSITION:

Into the cabin, on the left side of the engine's cover next to the handle that releases the cabin latch.

STICKER:

NON MOVEMENTS WITH LOAD OFFCENTERED (MASTS OF MORE THAN 3,7M / 12ft 2 in)

REFERENCE:	DESCRIPTION:	QUANTITY:
43.02187.02	INDICATIVE STICKER 70x210 ENGLISH	1

POSITION:

In the upper part of the dashboard, next to the sticker ref. 02.00777.00 "Do not use" aligned with this on its upper side.

* In heated enclosed cab, position at the bottom left-hand side of the window 0.3937 in away from the edge (bottom left side).

* Heated cab

Downloaded from www.Manualslib.com manuals search engine

https://truckmanualshub.com/

Decals / labels / identification plates all markets (USA Market)

STICKER:
AUSA STICKER

REFERENCE:	DESCRIPTION:	QUANTITY:
13.12136.00	AUSA STICKER	2

POSITION:

On both sides of the mast, above the beam, with its lower side aligned at 4ft 95 in from the ground, above the sticker ref. 45.01352.00 “Dangerous area”, and 0.3937 in away from it.

STICKER:
INDICATION TRANSFER BOX OIL.

REFERENCE:	DESCRIPTION:	QUANTITY:
43.00396.02	INDICATIVE STICKER 60x95	1

POSITION:

Into the engine compartment on the external face of the joystick control valve support, above “Brake fluid indication” sticker.

STICKER:
NOT USE WITHOUT AUTHORIZATION. SUBSTITUTE REF. 02.00777.00

REFERENCE:	DESCRIPTION:	QUANTITY:
02.00777.04	INDICATIVE STICKER 50x120	1

POSITION:

On top of the vertical face of the engine cover, easily readable before accessing the forklift, aligned with the cab floor.

Downloaded from www.Manualslib.com manuals search engine

https://truckmanualshub.com/

Decals / labels / identification plates all markets (USA Market)

STICKER:
BRAKE FLUID INDICATION

REFERENCE:	DESCRIPTION:	QUANTITY:
43.70780.01	INDICATIVE STICKER 60x100 BRAKE	1

POSITION:
Into the engine compartment on the external face of the joystick control valve support, below “Transfer box oil” sticker.

STICKER:
HOT PARTS INDICATION

REFERENCE:	DESCRIPTION:	QUANTITY:
02.00765.00	INDICATIVE STICKER 40x80 ENGLISH	1

POSITION:
Inside the counterweight, near the exhaust manifold, easily readable when trying to work on the engine.

STICKER:
LOAD CHART PLATE

REFERENCE:	DESCRIPTION:	QUANTITY:
43.01350.28 / 30.12004.00	INDICATIVE PLATE 91x156 LOAD CHARTS	1

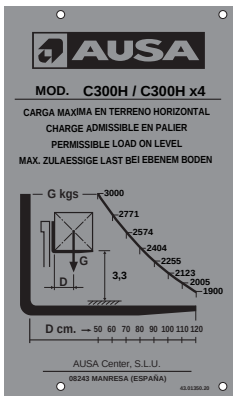

POSITION:
Riveting in 4 holes provided, in the central outer part the left-hand front fender. Etched according to assembly instruction.
* Add another unit at the top in the event of installing a mast higher than 12ft 14 in.

Downloaded from www.Manualslib.com manuals search engine

https://truckmanualshub.com/

Decals / labels / identification plates all markets (USA Market)

STICKER:
REFLECTIVE TRIANGLE WITH PLATE. (MACHINE WITH OPEN CAB) (USA)

REFERENCE:	DESCRIPTION:	QUANTITY:
10.15120.00	INDICATIVE STICKER 350x400	1

POSITION:
Fixed at the bottom edge of the cab rear opening, centered horizontally, aligned with the lower edge of the cab opening.

STICKER:
REFLECTIVE TRIANGLE (MACHINES WITH SEMI-CLOSED AND FULL CAB)) (USA)

REFERENCE:	DESCRIPTION:	QUANTITY:
10.15122.00	INDICATIVE STICKER 356x356	1

POSITION:
On the cab rear window, centered horizontally on the glass, aligned with the lower edge 0.3937 in away from it.

STICKER:
NOT TO TOUCH INDICATION

REFERENCE:	DESCRIPTION:	QUANTITY:
02.00766.00	INDICATIVE STICKER 40x80 USA	1

POSITION:
On the top of the radiator fan guard.

Downloaded from www.Manualslib.com manuals search engine

https://truckmanualshub.com/

Decals / labels / identification plates all markets (USA Market)

STICKER:
PROTECTION STRUCTURE INDICATION

REFERENCE:	DESCRIPTION:	QUANTITY:
10.01414.01	INDICATIVE STICKER 60x125 USA	1

POSITION:

In the upper left-hand corner of the dashboard, aligned at the left with the adhesive ref. 10.01414.01 “Warning Security”.

STICKER:
CALIFORNIA INDICATION (USA)

REFERENCE:	DESCRIPTION:	QUANTITY:
43.01171.00	INDICATIVE STICKER 42x77	1

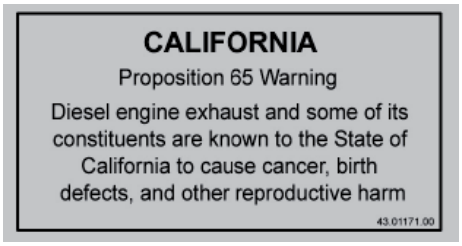

POSITION:

In the upper right-hand corner of the dashboard, aligned at the top with the bend in the dashboard.

Downloaded from www.Manualslib.com manuals search engine

https://truckmanualshub.com/

Controls and instruments

■ **Pedals (fig. 1)**

a- Inching pedal.
When the pedal is depressed the machine stops, allowing the engine to accelerate for faster operation of the mast. When the pedal is slowly released the machine will start to move again.

WARNING

The inching pedal also acts on the parking brake when it is kept fully depressed.

b- Service brake pedal.
Acts on a pump located below the pedal.

c- Accelerator pedal.
Acts on the engine through a cable

■ **Emergency brake**
In the event of emergency use the inching pedal.

■ **Parking brake (fig. 2)**
The parking brake is operated electronically using the switch **(d)**. It is also operated electronically when the inching pedal is kept fully depressed.

■ **Joystick (fig. 3)**
Forward and backward directional travel control (FNR control)
The direction of travel is changed using the electric switch **(e)** located on the lower part of the joystick. In each case the corresponding arrow showing the direction of travel lights up.
When the direction arrows are not lit, the direction of travel control is at the stop position (neutral). By pressing the front of the switch the machine travels forwards and by pressing the rear of the switch the machine travels backwards.

Safety: When the parking brake is not on and/or the operator is not sitting in the driver's seat, the direction arrows are also switched off and the direction of travel control is disconnected.

■ **Back-up alarm**
It sounds when reverse is selected.

WARNING

If the forklift is equipped with lighting, the back-up alarm is disconnected when the lights are switched on. However, the rear white reversing lights continue to work.

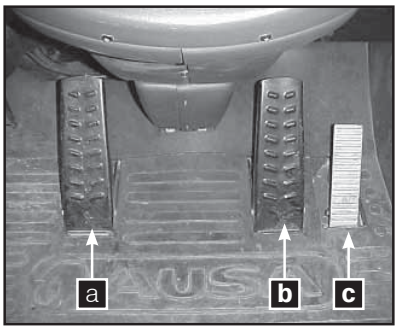

(fig. 1)

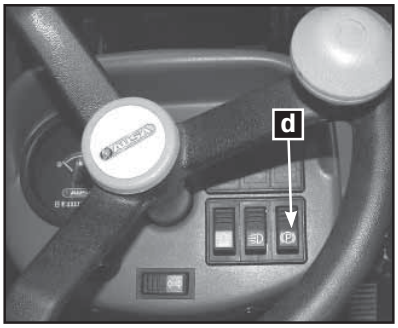

(fig. 2)

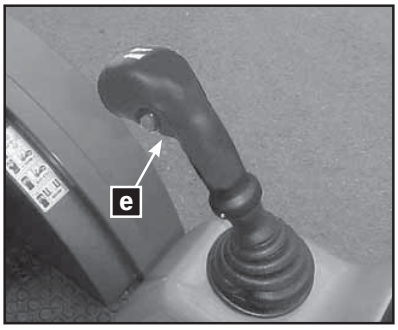

(fig. 3)

Downloaded from www.Manualslib.com manuals search engine

https://truckmanualshub.com/

Controls and instruments

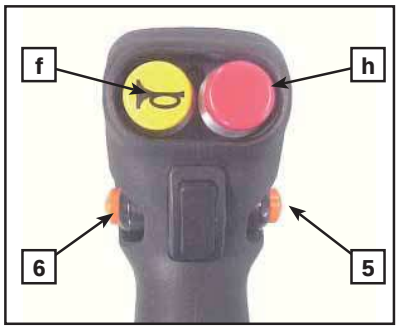

(fig. 1)

(fig. 2)

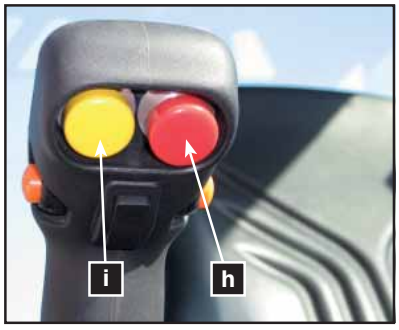

(fig. 3)

■ **Horn (fig. 1, 2)**

C300H / C300HI / C350H / C350HI
The horn is operated using the button **(f)** located on the right of the joystick.

C300H x4 / C300HI x4 / C350H x4 / C350HI x4
The horn is operated using the button **(g)** located on the upper right switch of the instrument panel.

■ **4x4 connection (FullGrip® System) (fig.3)**

Connecting the 4x4
The 4x4 connects by pressing yellow switch **(i)** located underneath the joystick at the right side.

Disconnecting the 4x4
The 4x4 disconnects just leaving yellow switch **(i)** on its rest position.

TO DRIVE WITH FULLGRIP® 4x4 TRACTION
* Connect the FULLGRIP only if you drive on slippery surfaces.
* To connect the FULLGRIP, you don't need to stop the vehicle.
* Disconnect the FULLGRIP if you don't need 4x4 traction.

CAUTION
Do not connect the 4x4 traction at high speed

REMARK: Moreover, some models may differ from **(fig. 3)** and assemble a plastic plug instead of red switch **(h)**.

Downloaded from www.Manualslib.com manuals search engine

https://truckmanualshub.com/

Controls and instruments

(fig. 1)

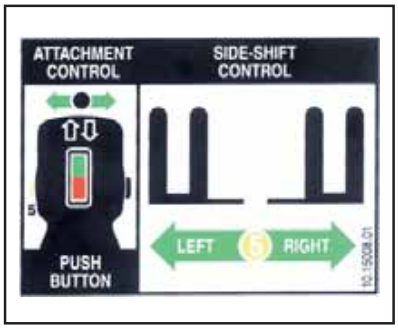

(fig. 2)

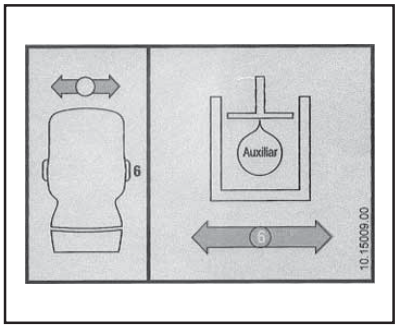

(fig. 3)

■ **Load handling controls (fig. 1)**
The mast and the load are moved by using the joystick.

Raising and lowering the mast.
If the joystick is pulled backwards the mast and the forks lift and if pushed forwards the mast and the forks lower.

Tilting the forks.
If the joystick is pulled to the left, the mast forks tilt backwards (forks lift) and if pushed to the right, they tilt forward (forks lower).

Side-shift (fig. 2).
By holding down button **(5)** on the joystick and pulling the joystick to the left, the forks move to the left.
By holding down button **(5)** and pushing the joystick to the right the forks move to the right.
Always centre the carriage when in transit or when transporting a load.

Additional hydraulic control for attachments (✶) (fig. 3).
By holding down button **(6)** of the joystick and pulling it to the left (towards the operator), or pushing it to the right, pressure is supplied to the quick hydraulic

WARNING

The fork positioner allows the operator to set the forks with a variable gap matching different pallet size without removing the forks manually.
Be aware this attachment is NOT foreseen for lateral pushing operation (similar to an hydraulic clamp).
This type of operation is forbidden, it could be dangerous for the persons and it is considered a misuse, consequently, the manufacturer does not accept any claim for damages caused in this way.

Downloaded from www.Manualslib.com manuals search engine

https://truckmanualshub.com/

Instrument Panel and controls

■ **Starter switch (fig. 1)**
See section **STARTING THE ENGINE**

a- In this position the ignition and the engine are disconnected.
b- Ignition on. The engine pre-heating system and the lamp on the control panel are activated for a few seconds.
c- Starter. Turning the key to position **(c)** starts the engine.

Before re-starting the engine, the key should first be switched to position **(a)**.

■ **Fuse box (fig. 2)**
This is located at the right of the steering column, next to the starter switch.
See the section **ELECTRIC CIRCUIT** in this Operator's and Safety Manual to identify the number and function of each fuse.

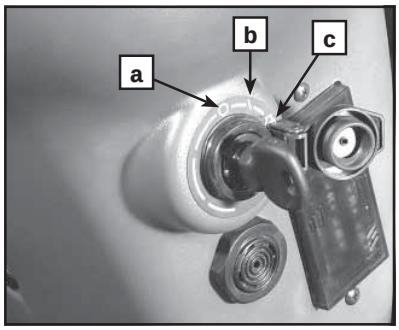

(fig. 1)

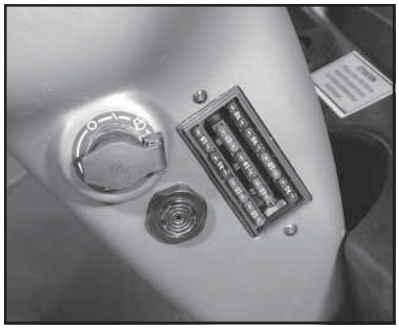
(fig. 2)

Downloaded from www.Manualslib.com manuals search engine

https://truckmanualshub.com/

Instrument Panel and controls

NOTE

For ease of understanding, the picture shows the panel with the steering wheel removed.

■ **C300H / C300HI / C350H / C350HI instrument panel: Components and Operation (fig. 1)**

1- **Multi-function instrument.** See the section Multi-function instrument.
2- **Light switch.** This switch has two positions, the first switches on the low beam and the second switches on the high beam.
3- **Heating switch (✶).** This has two positions to give two fan speeds.
4- **Working light switch (✶).** To connect the front lights switch turn on the switch.
5- **Parking brake.** To activate the forklift parking brake, press the switch.
6- **Windscreen wiper switch (✶).** To switch on the windscreen wiper, press the switch. To activate the windscreen wiper washer pump, press the same switch again.
7- **Rotating beacon switch.** To switch on, press the button and it will light up. To switch off, press the button again.
8- **Indicators switch (✶).** The turning indicators are switched on by pressing the switch to the left or to the right.
9- **Hazard lights switch (✶).** To switch on, press the button and it will blink. To switch off, press the button again.

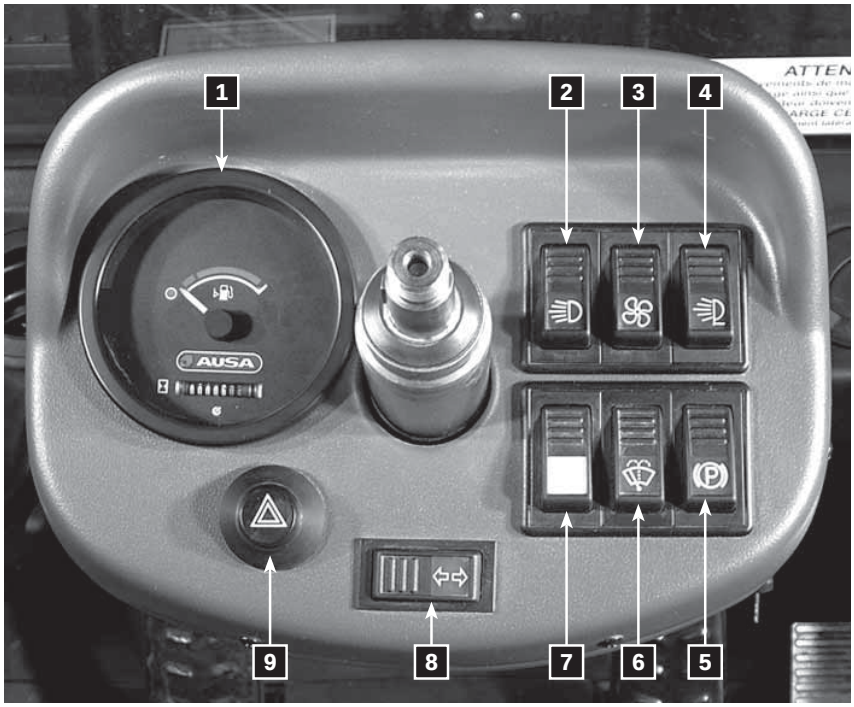

(fig. 1)

Downloaded from www.Manualslib.com manuals search engine

https://truckmanualshub.com/

Instrument Panel and controls

■ **C300H x4 / C300HI x4 / C350H x4 / C350HI x4 instrument panel (✶): Components and Operation (fig. 1)**

1- **Multi-function instrument.** See the section Multi-function instrument.
2- **Light switch.** This switch has two positions, the first switches on the low beam and the second switches on the high beam.
3- **Heating switch (✶).** This has two positions to give two fan speeds.
4- **Horn switch.** To activate the horn, press the switch.
5- **Parking brake.** To activate the forklift parking brake, press the switch.
6- **Windscreen wiper switch (✶).** To switch on the windscreen wiper, press the switch. To activate the windscreen wiper washer pump, press the same switch again.
7- **Rotating beacon switch.** To switch on, press the button and it will light up. To switch off, press the button again.
8- **Indicators switch (✶).** The turning indicators are switched on by pressing the switch to the left or to the right.
9- **Working light switch (✶).** To connect the front lights switch turn on the switch.
10- **Hazard lights switch (✶).** To switch on, press the button and it will blink. To switch off, press the button again.

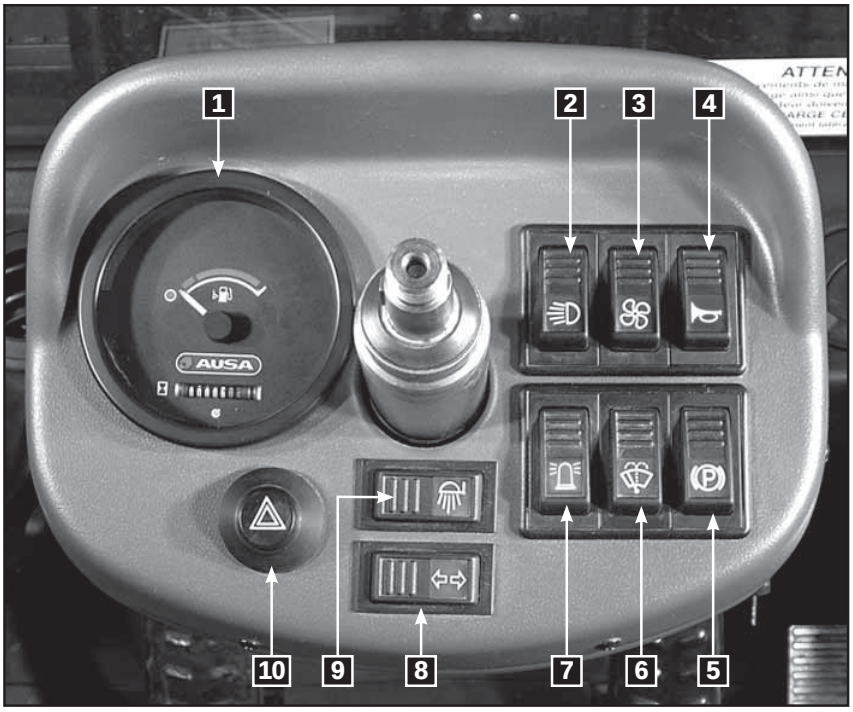

(fig. 1)

Downloaded from www.Manualslib.com manuals search engine

https://truckmanualshub.com/

Instrument Panel and controls

■ **Multifunction instrument (fig. 1)**

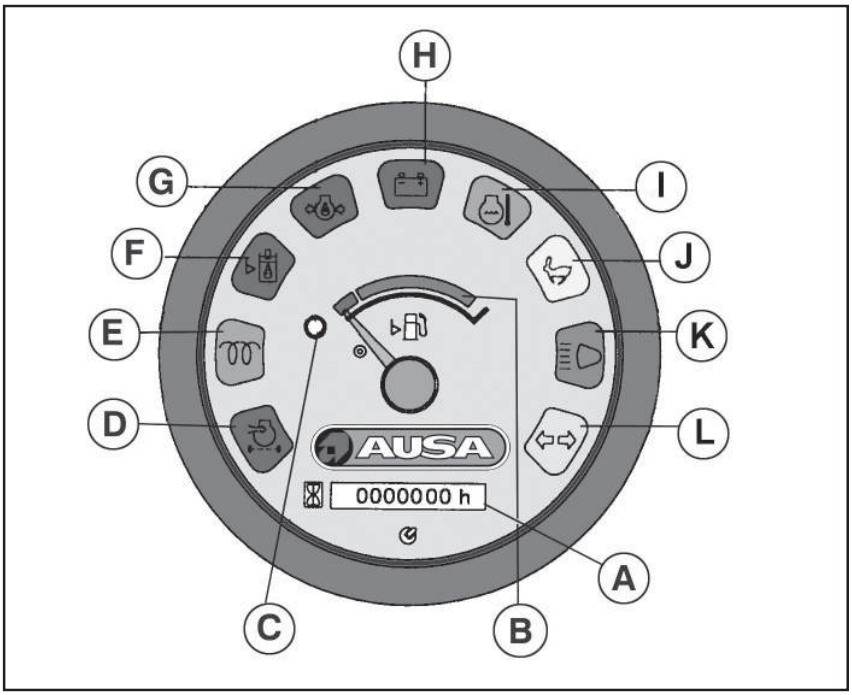

(fig. 1)

A- Hourmeter. This gauge indicates the total running time of the forklift engine to enable servicing of the engine at proper intervals. (See **MAINTENANCE CHART** for servicing frequency).

B- Fuel level. This gauge indicates the diesel fuel level in the tank.

C- Fuel reserve indicator lamp. This lights up when the level of fuel in the tank falls into reserve.

D- Air filter warning lamp. When the air filter of the diesel engine becomes clogged with dirt, this lamp will light. The air filter should be immediately cleaned or serviced.

E- Engine pre-heat indicator lamp. When this lamp glows it indicates that the engine pre-heat plugs are in operation and heating the combustion chamber the temperature required to start the engine.

F- Hydraulic oil level warning lamp. This lights up and emits an audible warning when the hydraulic oil level is at the minimum level. Oil should be added to top up the level to the correct level

G- Engine oil pressure warning lamp. When the ignition is on, this lamp lit and turns off when the engine is running. If this lamp turns on emits an audible warning while the engine is running, the engine must be stopped immediately to prevent damages. Check the level and add oil if necessary.

H- Battery charge warning lamp. This lamp shows the condition of the battery and indicates if the battery charge is too low or if the alternator is not charging properly. Once the engine starts to run, this red lamp turns off If it remains lit, stop the engine and determine the cause.

I- Engine temperature warning lamp. This gauge shows the temperature of the coolant in the engine cooling system. When this lamp glows emits an audible warning means that the engine is operating at high temperature which could damage the engine. The engine should be stopped immediately to determine the cause of the high temperature. It could be low coolant, debris in the radiator or a thermostat, which does not operate correctly.

J- No application in this model

K- High beam indicator lamp (with lighting equipment) (✶). This lamp is lit when high beams are selected.

L- Turn signal indicator lamp (with lighting equipment) (✶). This lamp will blink indicating turn signals are operating.

Downloaded from www.Manualslib.com manuals search engine

https://truckmanualshub.com/

Instrument Panel and controls

■ **Fuel**

The current regulations of exhaust emissions, require that, for the whole life of the machine, the level on the different components of these emissions, are under the maximum figures stated on the regulations.
As a consequence of that, the maintenance plan of the engine has to be followed up carefully, giving special attention to the quality and pureness of the fuel, the cleanliness of the filters and, in general, to the general maintenance of the fuel circuit.

Handling

- Only use the fuel type authorized by AUSA. Do not use fuel mixed with oil, other fuels or unsuitable additives.
- The correct fuel for the forklift is diesel. For further details regarding fuel type and required specifications see the section FLUIDS AND LUBRICANTS.
- Do not allow the fuel to come into contact with the skin and avoid inhaling the fumes, which are toxic. High concentrations of fuel vapour may cause sickness, loss of consciousness or even loss of life in the event of prolonged exposure. If you experience symptoms such as sickness or loss of consciousness seek medical advice immediately.
- Do not store fuel in closed places. The fuel vapours will alter the atmosphere of the enclosure and may cause a fire or explosion.
- Use suitable impermeable clothing, safety glasses and gloves when handling fuel. When refuelling from a tank, bucket or barrel using a siphon, the following precautions should be taken.
- If refuelling is by gravity, from a raised tank, open the fuel output valve of the tank slowly.
- If the tank or barrel does not have an output valve use a suitable vacuum pump.

WARNING

Never suck the fuel into the pipe by mouth to start the siphoning. Fuel and its vapours are highly toxic.

- In the event of fuel spillage, please inform the supervisor, mark the area suitably and cover the spillage with absorbent material.
- Take suitable measures to avoid risk until the remains of the fuel have been completely removed.

Downloaded from www.Manualslib.com manuals search engine

https://truckmanualshub.com/

Instrument Panel and controls

■ **Refuelling**

WARNING

Smoking, naked flames or sparks are not permitted in the refuelling area. Fuel vapours can be explosive.

- Refuel in a well-ventilated area.
- Position the forklift as close as possible to the fuel pump so that the filler hose reaches the opening of the tank comfortably.
- Apply the parking brake, switch off the engine and lights, including the rotating beacon.

NOTE

If the fuel pump is equipped with a vehicle earth connection, connect this to a non-isolated metal component of the forklift.

- Clean the fuel cap and surrounding area with a cloth if they have been dirtied. Do not allow dust, water, or any other substance to enter the tank.
- Open the fuel cap using the key and turning to the left.
- Fill the tank without exceeding the volume specified for the forklift. Take care not to spill fuel outside the tank. If you do, clean immediately and dry the surface well.
- Close the tank using the key and remove it from the cap. Check that the cap is correctly closed.

Downloaded from www.Manualslib.com manuals search engine

https://truckmanualshub.com/

Operating the forklift

WARNING

Before each period of operation, check the forklift for correct operation of the steering, brakes, hydraulic controls, instruments and safety equipment. Check the neutral position of the FNR switch. A machine that runs correctly is more efficient and can prevent accidents. Make all necessary adjustments or repairs before you operate the machine.

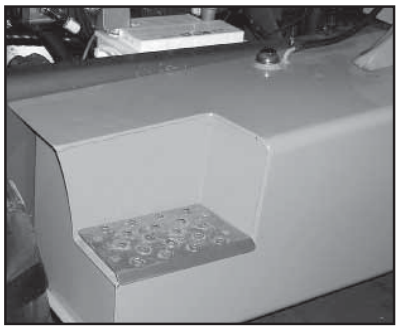

(fig. 1)

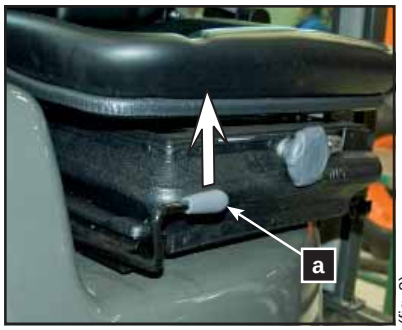

(fig. 2)

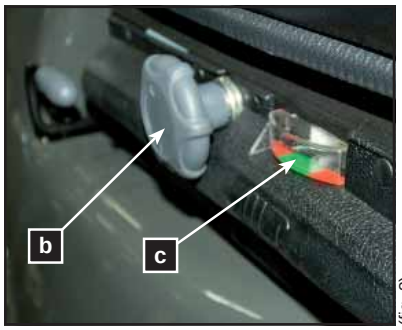

(fig. 3)

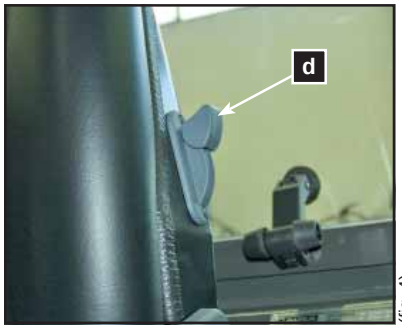

(fig. 4)

■ **Entering and leaving the operator cabin (fig. 1)**

Don't hold and pull of the steering wheel to come in/out the forklift, use the handles located on the overhead guard and always place your foot on the rough bands of the step, to prevent any downfall when you come in or come out.

■ **Standard seat adjustment (fig. 2, 3, 4)**

Each day, before operating the dumper, adjust your seat to a position in which you feel comfortable.
Pull the lever **(a)** to up to unlock the seat. Slide the seat forward or backwards to reach the desired position.
Releasing the leaver the seat locks.
The damping of the seat can be adjusted between 50 and 130 Kg, depending upon the operator's weight; to do so turn knob **(b)** clockwise or counter-clockwise in order to adjust properly the seat damping.
For correct adjustment of the damping, with the operator sitting the needle **(c)** should remain within the range of green scale into the gauge.
Using the lever **(d)** located on the left side of the seat backrest, the backrest inclination can be changed. Pulling down the lever the backrest unlocks. Adjust the backrest and release the leaver to lock again.
Ensure that you fasten your seatbelt.

Downloaded from www.Manualslib.com manuals search engine

https://truckmanualshub.com/

Operating the forklift

■ **Adjusting the seat and the steering wheel (figs. 2, 3, 4, 5)**

Before using the forklift adjust the seat and the steering wheel to a comfortable driving position.

On all machines the operator is able to adjust the seat in the fore-aft direction by lifting knob **(a)** and sliding seat to the desired position, then releasing the knob to lock the seat into position.

The seat suspension may be adjusted from 132 to 264 lb. (60 to120 Kg) for driver's weight by turning knob **(b)**. Turning clockwise the weight decreases and turning counter-clockwise it increases. Seats normally leave the factory adjusted for a driver weighting 198 lb. (90 Kg).

It is also possible to adjust the seat backrest angle. The seat backrest tilts forward or backwards by turning knob **(c)**.

WARNING

Securely fasten the seat belt.

The position of the steering wheel is adjusted by tilting forward/backwards the steering column. Loose the lever **(d)** and release the steering column. Adjust it to the most comfortable position. Tight lever **(d)** to lock it again.

(fig. 1)

(fig. 2)

(fig. 3)

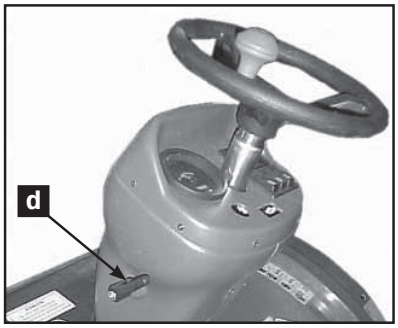

(fig. 4)

Downloaded from www.Manualslib.com manuals search engine

https://truckmanualshub.com/

Operating the forklift

■ Starting the engine (fig. 2)

Starting engine when the operator is seated:

1. Directional travel control in NEUTRAL position:
   the park brake switch may be in any position (ON / OFF)
2. Directional travel control in FORWARD / REVERSE:
   the park brake must be in position ON

Starting engine when the operator is not seated:
The FNR control switch o the parking brake switch can be in any position.

WARNING

For safety reasons, when starting the engine the driver should be seated, directional control switch in neutral, seatbelt fastened and the parking brake applied.

Then proceed as follows:

- Place the key in the ignition switch and turn to position **(b)** ignition. Wait a few moments until the engine preheating light goes out.
- Press the accelerator pedal 1/4 of the way and turn the key to position **(c)** to start the engine. Do not hold the key in this position for more than 15 seconds.
- If the engine does not start, repeat the above steps and wait 30 seconds between each attempt. Before re starting the engine, the key should first be switched to position **(a)**.

CAUTION

With ambient temperatures lower than 0ºC (32ºF), AUSA recommends to run the engine at idle speed for 3 minutes before starting to work with the forklift in order to reach the appropriate fluency on the engine and hydraulic oil

■ Checks

With the engine running at idle and the forklift is warming-up, carry out the following tests:

- Check the instrument panel controls.
- Check the steering by turning it gently to the left and right.
- Lift the forks off the ground 6 in (15 cm).
- Check the parking brake.
- Check that the brake pedal action is firm.

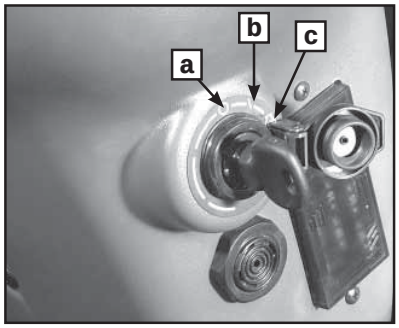

(fig. 1)

Downloaded from www.Manualslib.com manuals search engine

https://truckmanualshub.com/

Operating the forklift

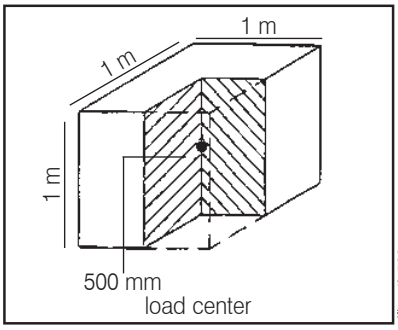

(fig. 1) 500mm

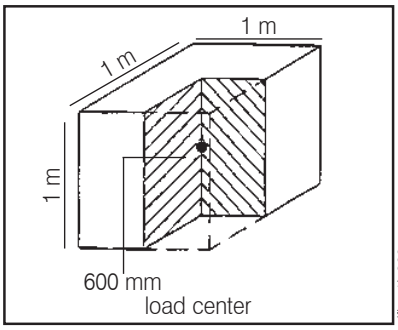

(fig. 1) 600mm

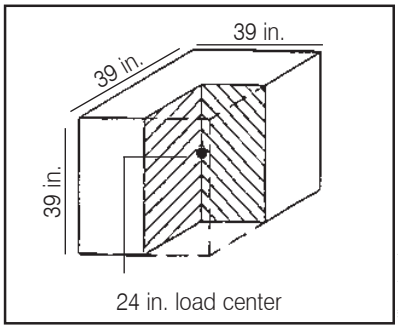

(fig. 1) 24in

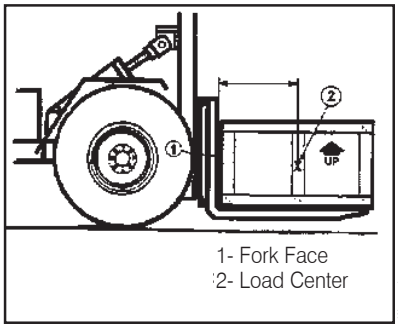

(fig. 2)

■ Forklift nominal load (fig. 1)

The Rated Capacity of this forklift is the weight the machine is capable of lifting under safe operating conditions. The lifting capacity of a forklift is determined by the height and weight limits of the load. Poor ground conditions as well as shape of the load may reduce the weight that can be safely lifted. Overloading the forks can make the forklift unstable, hard to handle, and may be in danger of tipping over.
Inspect the load you intend to lift and make certain it is within the limits of the Load Capacity Chart located on the left hand side mudguard.

■ Load Center (fig. 1, 2)

To rate the lifting capacity of forklifts manufacturers have standardized on a certain size of load. The rated capacity of this forklift is based on a cube measuring 39in (1 m.), in all three dimensions with the center of gravity in the center of this cube. This is known as 24in (600 mm) or 20in (500 mm) load center from both the vertical face of the mast and from the lifting surface of the forks. It is important to keep load center in mind for as the load center increases the lifting capacity of the forklift decreases.

■ Load Capacity

Rough terrain use:

- With load center at 20in (500 mm) from vertical face of the forks, the C300H / C300H x4 has a rated capacity of 6614lbs (3000 kg)
- With load center at 24in (600 mm) from vertical face of the forks, the C300H / C300H x4 has a rated capacity of 6172lbs (2800 kg)
- With load center at 20in (500 mm) from vertical face of the forks, the C350H / C350H x4 has a rated capacity of 7716lbs (3500 kg)
- With load center at 24in (600 mm) from vertical face of the forks, the C350H / C350H x4 has a rated capacity of 7165lbs (3250 kg)

Industrial use:

- With load center at 20in (500 mm) from vertical face of the forks, the C300HI / C300HI x4 has a rated capacity of 6614lbs (3000 kg)
- With load center at 24in (600 mm) from vertical face of the forks, the C300HI / C300HI x4 has a rated capacity of 6172lbs (2800 kg)
- With load center at 20in (500 mm) from vertical face of the forks, the C350HI / C350HI x4 has a rated capacity of 7716lbs (3500 kg)
- With load center at 24in (600 mm) from vertical face of the forks, the C350HI / C350HI x4 has a rated capacity of 7165lbs (3250 kg)

If the load is too heavy split it and re-stack it. Use of attachments other than the pallet forks that came with this machine may reduce lifting capacity and affect other machine handling characteristics.

Reproduced copies of the Load Charts are included in the section **TECNICAL SPECIFICATIONS** on this Operator's and Safety Manual. Study the Load Capacity Chart of your machine carefully and make certain you understand it before lifting loads on the forks

Downloaded from www.Manualslib.com manuals search engine

https://truckmanualshub.com/

Operating the forklift

■ Alteration to the forklift / load relation

The relationship between the forklift and the load is altered by changes in:

- Removable attachments (see LOAD CHARTS in this manual).
- Height of the forks.
- Changes in the motion of the machine and the grade of the ground on which it is moving.
- Smoothness and stability of the ground.
- Machine stability must be maintained while these factors change constantly during forklift operation.

This requires careful judgement on the part of the operator.

■ Lifting Capacity

Machine stability is maintained only when the forklift handles loads within its rated lifting capacity. The Load Capacity Charts are included in the section **TECHNICAL SPECIFICATIONS** on this Operator's and Safety Manual. The lifting capacity of the machine is determined by the safe height and weight limits of the load. An overload on the forks makes the forklift unstable, hard to handle, and will present the danger of tipping over.

■ Load charts (fig. 1, 2)

The charts you can see in the section **TECHNICAL SPECIFICATIONS** on this Operator's and Safety Manual shows how much your forklift can lift as the load centre increases out to 4in (100 mm) load center from the 20in (500 mm) or 24 in (600 mm) (depending on models and market). Note how the lift capacity decreases as the load centre increases. This chart is reproduced as a machine decal and is located on both the right and the left side of the mast and at the driver seat for ease of reference during machine operation.
The charts you can see in the section **TECHNICAL SPECIFICATIONS** on this Operator's and Safety Manual represents the load that can be lifted on a level surface, with the load evenly displaced (like a square box with the weight centred), at certain lift height (depending on the mast height and use) .
The horizontal axis **"D"** (often referred to as the **"X"** axis), represents the distance in inches that the load centre is moved forward from the face of the forks.
The vertical axis **"G"** (often referred to as the "Y" axis), shows the load weight in pounds o kilos.

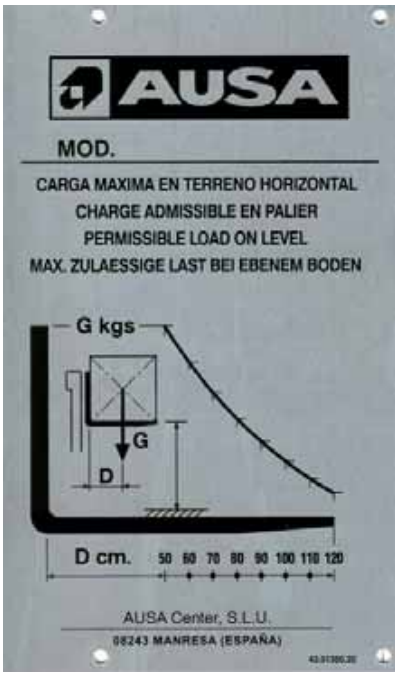

(fig. 1)

Downloaded from www.Manualslib.com manuals search engine

https://truckmanualshub.com/

Special procedures

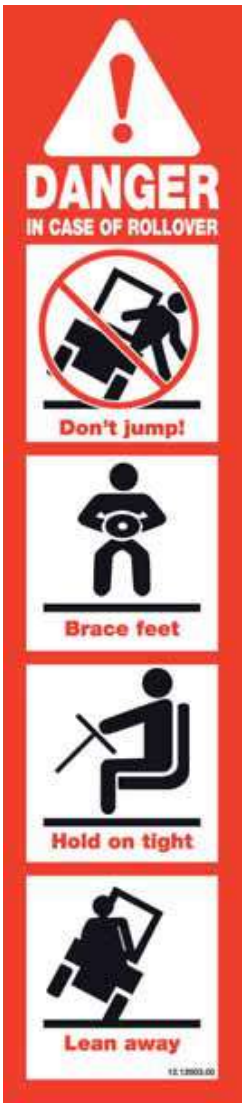

(fig. 1)

■ **Engine overheating**

If the engine overheats and the engine temperature warning light on the control panel lights up, try the following:

- Check and clean the radiator coolant blades. See the section **PERIODIC MAINTENANCE OPERATIONS** in this Operator's and Safety Manual.
- Slow down the speed but keep the forklift moving in order to allow air to circulate around the radiator.
- If the engine is still overheating after approximately one minute, stop driving the forklift, set the forward / backwards directional travel control switch to neutral, apply the parking brake and stop the engine.

WARNING

The radiator may be extremely hot. Use gloves before touching the radiator.

- Allow the engine to cool down. Check the coolant level and refill if necessary.
- If the engine continues to overheated, pls. contact to an authorized AUSA dealer as soon as possible.

■ **After-use care**

When the forklift is used in salt water areas (beach areas, etc.), rinse the machine with fresh water to protect the forklift and its components from rust. We recommend lubricating the metal components. This should be carried out at the end of every day after using the forklift.
When the forklift has been working in muddy areas, it should be washed with fresh water to protect the forklift and keep the lights clean.

Note: Never use high-pressure water to clean the forklift. ONLY USE LOW-PRESSURE WATER. High-pressure water may cause electrical and mechanical damage.

■ **Rolling over (fig. 1)**

In the event of the machine rolling over it is important that the driver avoids being caught between the machine and the ground.
To prevent this we recommend:

1. Try to remain within the seated operator area / cabin.
2. Grasp the steering wheel firmly.
3. Push feet, firmly, against the ground floor of the cabin.
4. Try to keep as far away from the point of impact as possible.

Downloaded from www.Manualslib.com manuals search engine

https://truckmanualshub.com/

Special procedures

When the forklift overturns or is knocked onto one side, restore it to normal operating position (on all four wheels).

WARNING

DO NOT TRY TO START THE FORKLIFT without first checking with an authorized AUSA dealer.

- Remove the four glow plugs.
- Turn the key in the ignition to position **(c)**. Hold the key in position until the oil has come out of the combustion chamber.

WARNING

The oil will come out of the combustion chambers at high pressure and may cause injury.

- Re-assemble the four glow plugs.
- Check the engine oil level and refill if necessary.
- If the engine oil pressure warning light remains lit after starting the engine, stop immediately to prevent internal damages and refer contact to an authorized AUSA dealer as soon as possible.

■ Immersion of the forklift

If the forklift becomes submerged under water, it will be necessary to take it to an authorized AUSA dealer as soon as possible.

CAUTION

DO NOT START THE ENGINE. Immersion of the forklift may cause serious damage to the engine if the start-up procedures are not followed correctly.

- Arrange for an authorized AUSA dealer to carefully inspect the supply system as shown in the **MAINTENANCE CHART**.

■ Storage and pre-parking preparation.

When the forklift is not to be used for more than a month it should be stored correctly. When the forklift is brought out for use again after a period of storage, special preparation is required. Ask an authorized AUSA dealer about the appropriate procedures.

Downloaded from www.Manualslib.com manuals search engine

https://truckmanualshub.com/

Special procedures

■ **Tilting the mast while the engine is stopped (emergency movement)**

It is possible to tilt the mast of the forklift (emergency movement) forwards with the ignition off. To do so, proceed as follows:

- Locate the emergency movement connector under the dash panel, next to the steering column (fig. 1)
- Remove the protective cover from the connector by lifting the locking tab and moving it forwards.
- With the help of an external battery supply the connector with + 12V DC and earth (-) as follows:
  Connector, contact 1: + 12V DC
  Connector, contact 2: earth (-)
- Push the joystick to the right in order to tilt the mast.

NOTE

To help this movement, we recommend applying a small load on the end of the forks.

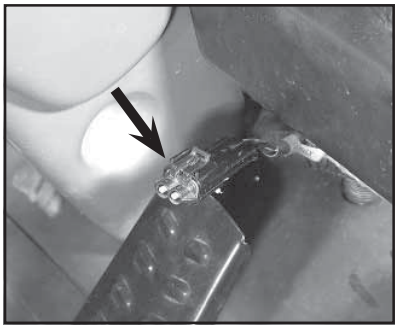

(fig. 1)

Downloaded from www.Manualslib.com manuals search engine

https://truckmanualshub.com/

Special Safety Messages

WARNING

Do not operate this machine unless you have read and understand the safety and operational instructions contained in this Operator's and Safety Manual and have been instructed and trained in the safe operation of this Forklift. REMEMBER THAT "YOU" ARE THE KEY TO SAFETY.

■ General comments

Operator responsibilities

Before using the forklift that is initially unfamiliar, you should read the Operator's and Safety Manual carefully and resolve any doubts with a supervisor **(fig. 1)**. It is your responsibility to read and understand this Operator's and Safety Manual before operating any rough terrain forklift. This Operator's and Safety Manual takes you step by step through your working day.

In order to help you better understand the text, graphics have been provided in this Operator's and Safety Manual.

It's important that you know and apply all applicable laws and rules including OSHA requirements for operator training and certification.

The forklift must only be used by authorized and correctly trained personnel

AUSA manufactures its forklifts in accordance with ASME B56.6 and the corresponding International Standards.

The Occupational Safety and Health Administration (OSHA) enforces federal laws that apply to safety of operation, application and maintenance of equipment on a worksite. Because it is an employer's responsibility to apply these laws, an OSHA representative may periodically inspect a worksite to see that these laws are being followed. There may also be local or state/provincial laws that apply to this equipment and its use along with specific worksite or employer rules. It is important that you know and apply all applicable laws and rules.

Any danger resulting from improper use, not complying with these provisions or others which are specifically provided with the machinery, shall be the responsibility of the user and not of AUSA.

This section provides instructions on the use of the forklift, in accordance with that established by ASME B56.6, 2006/42/EC standard and OSHA documents.

Description of a forklift truck

A forklift truck is a powered vehicle used for transporting or handling loads with the aid of tools specific to the task to be carried out. The forklift is able to lift loads. It consists of a resistant chassis resting upon two axles. The front axle is the drive axle and the rear axle the steering axle, although versions exist in which both axles are driving axles.

At the front of the forklift there is a mast, along it moves the front carriage. The unit formed by both is designed to lift and tilt the load forwards and backwards, making handling easier

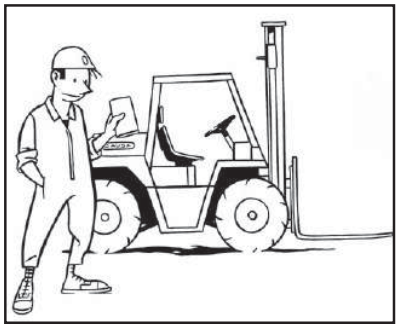

(fig. 1)

Downloaded from www.Manualslib.com manuals search engine

https://truckmanualshub.com/

Special Safety Messages

General recommendations for driving a forklift truck

Basic information for starting up a forklift truck
Entering and leaving the operator cabin, do not hold or pull the steering wheel to enter the driver cabin, use the handles provided on the front structure of the overhead guard. Always place one foot on the tread of the sill to prevent slipping when climbing in or out **(fig. 1)**.
Never start or operate any of the controls unless seated on the driver's seat.
Keep the driver's cab free of objects and tools. These may move around, block a control or a pedal, and prevent a manoeuvre or stop the forklift.
Before starting to work with the forklift, clean any oil or fuel spills, clean and remove grease from hands and the soles of shoes **(fig. 2)**. Do not forget to carry out the operations and daily checks listed in the **MAINTENANCE CHART** on this Operator's and Safety Manual.
Check the correct position and fastening of all the guards, caps and safety stops.
Check that all the controls are operating correctly.
Check that informative and safety plates on the forklift are clean and in good condition. If they are not in good condition, replace them.
Wear suitable protective that will protect you in the working environment. This may include a helmet, ear plugs, protective goggles or reflective clothing **(fig. 3)**. Do not wear loose clothing or jewellery or long hair as these could become entangled in the controls, in moving parts or edges of the machine and prove dangerous.
If working in an enclosed area make certain there is sufficient ventilation to prevent excessive build-up of exhaust fumes. Under this conditions always stop this engine when not in use.
Before starting the forklift be certain to check or test the following items:

- Check for any leaks in the fuel, hydraulic or cooling system.
- Clean any oil or fuel leaks that may exist on the forklift controls or operating area.
- Check tire conditions and pressures.
- Re-tight wheel nuts if necessary.
- Check that all controls are working correctly.
- Check the operator seat belt and its attachments.

Ensure seat belt is properly latched. Inspect carefully the condition of this security system with special attention to:

- cuts or damages in the belt.
- wear or damages in the metallic parts including the anchorage elements.
- badly functioning of the buckle.
- seams or free points of sewing.

Check brake pedal travel and effectiveness.
Check the following fluid levels:

- Fuel
- Braking fluid
- Hydraulic fluid
- Cooling system fluid
- Engine oil

Check the horn.
Check that lighting and signalling systems are clean and work correctly. If they do not work check the corresponding fuses and bulbs as shown in **MAINTENANCE OPERATIONS** on this Operator's and Safety Manual.

Jumping on or off the forklift can cause serious injury. Always face the machine and use rails and steps to slowly get on and slowly get off the forklift.
Adjust seat position so you are comfortable and can easily reach all the controls. Now fasten your seat belt.
Always stop the engine and do not smoke when fuelling the machine. **(fig. 4)** Follow the instructions given in the section "Fuel" on this Operator's and Safety Manual.

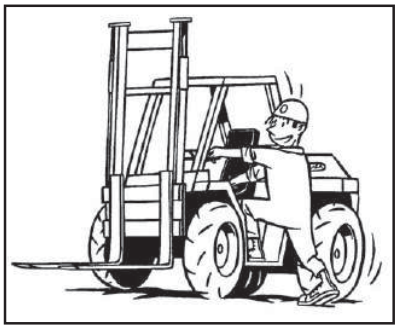
(fig. 1)

(fig. 2)

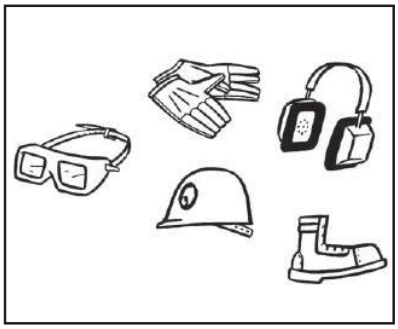
(fig. 3)

(fig. 4)

Downloaded from www.Manualslib.com manuals search engine

https://truckmanualshub.com/

Special Safety Messages

Before starting and operating the forklift

- Stay alert. Concentrate fully on your work. Your safety and that of others depends on the care you take when operating this forklift.
- Remember that you are the key to safety. Good safety practices not only protect you but also the people around you.

The surrounding area

Be careful around any pedestrians in the surrounding area
This forklift was designed to lift loads not people. Never transport people on any part of the forklift. Do not let people ride on the forks **(fig. 1)**.
Do not let people stand or walk under raised forks, loaded or unloaded **(fig. 2)**.
Give way to the right to pedestrians found in your path.
Do not drive rapidly. Driving too fast is dangerous to the driver and to the load. The speed at which the forklift is operated should always be suited to the working conditions and to the space available for manoeuvring.
Always drive smoothly and not in a jerky fashion.
Never put any part of your body between the fork mast and the forklift body. **(fig. 3)**.
Be careful around any load edges, pressure zones or revolving movements and extensions.
Be certain you have good visibility at all times. It is important that you can see clearly both forward and backward when operating the forklift. If the load does not allow clear forward visibility, then drive with caution in reverse. **(fig. 4)**.
This forklift is not designed to be used as a tow truck or tow vehicle. However if the forklift is to be towed to or from work location, see the section **TOWING THE FORKLIFT** on this Operator's and Safety Manual.

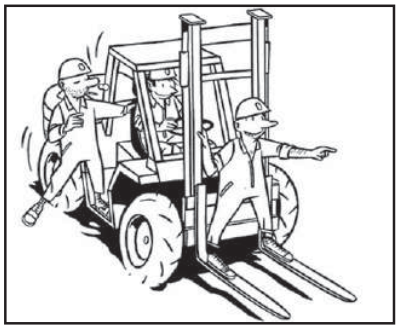
(fig. 1)

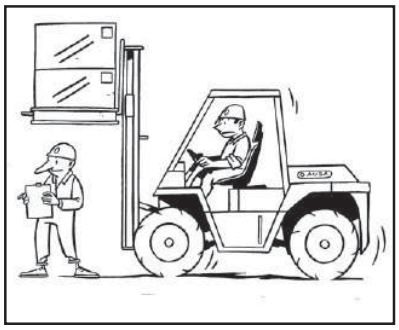
(fig. 2)

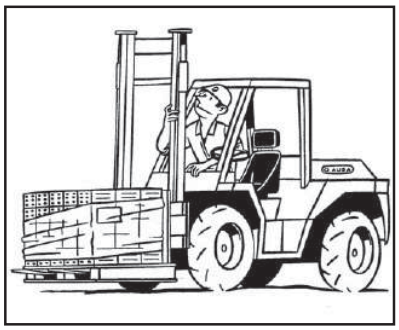
(fig. 3)

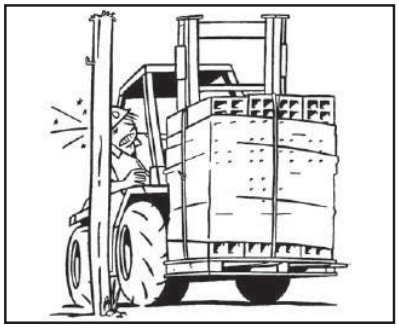
(fig. 4)

Work circuit

The movement of loads within an installation or enclosure must be carried out following certain instructions concerning the circulation of forklifts and pedestrians. If you are not aware of these regulations, please check with your supervisor. Study the movements of the forklift to avoid making manoeuvres which are unnecessary, or involve risk to the surrounding areas. Find out which paths are suited to the type of vehicle you are driving and the load carried. If it is necessary to drive along public highways, first check that the forklift complies with current regulations of the country. Highway use of this off-road equipment may be restricted or prohibited by the laws of a State or Province.

Work cycle

If it is necessary to move loads continuously and repeatedly, try to do so with the minimum number of movements necessary, where possible. Reducing the number of movements saves fuel and reduces the emission of exhaust fumes.
If the work is very intense, remember to check the instrument panel from time to time, especially in extreme climates, as the engine will be working in particularly hard conditions.

Forklift truck circulation

When approaching a junction with poor visibility, reduce speed, emit acoustic warnings and proceed slowly according to the available visibility.
The speed of the forklift should at all times be adapted to the working conditions and the surrounding area. Systematically driving at the maximum speed permitted by the machine may put the operator and the surrounding area at risk.

Downloaded from www.Manualslib.com manuals search engine

https://truckmanualshub.com/

Special Safety Messages

Driving in reverse
Ensure good visibility of the path to be taken. If the load being carried obstructs visibility, drive in reverse with the utmost of caution.
Before reversing, the operator should ensure that this does not involve risks for the forklift, people or objects in the surrounding area **(fig. 1)**.

Driving on gradients
Special care should be taken when driving on gradients: move slowly, avoid placing the machine across the gradient and do not work on higher gradients than those recommended.
The maximum permitted gradient does not imply that it is possible to manoeuvre here in absolute safety under full load, ground and operating conditions.
Gradients should be descended in reverse, with the load facing the direction of greatest stability **(fig. 2)**.

Rudiments of static equilibrium
In order that the forklift is able to handle loads in a stable and safe manner, certain equilibrium conditions must exist and be maintained between the load and the machinery. Therefore, the forklift is fitted with counterweights at the rear. These are designed to compensate for the weight of the load being carried, as long as the centre of gravity of the load and the forklift are within certain established limits. In order to calculate the values of the transportable weight and the position of the centre of gravity permitted for the forklift see the Load Charts in the section **OPERATING THE MACHINE** on this Operator's and Safety Manual .

Rudiments of dynamic equilibrium
While the forklift is moving, and as it gains speed, the equilibrium conditions of the load-forklift unit are modified as the centre of gravity shifts. This is accentuated on lifting loads, turning, braking, etc. In these conditions it is necessary to take the utmost care to ensure that the centre of gravity of the load is maintained within the specifications showed on the load chart plate.

Static equilibrium of a conventional forklift
The forklift counterweight produces a situation of imbalance when the forklift is unloaded. The centre of gravity is maintained low and close to the rear of the forklift. When the load is collected, the imbalance is corrected and the centre of gravity shifts forward. If the load is within the margins given on the load chart, equilibrium is maintained. As the load is lifted, the centre of gravity also rises, shifting upwards. At the moment that the centre of gravity shifts beyond the forklift, the equilibrium is lost and the forklift becomes unstable. Therefore, the forklift should not move while the load is raised.

Stability
Do not carry unstable or loose loads, or loads which are oversized with respect to the forklift. If very large or wide loads must be carried, every precaution must be taken to prevent bumps or other possible accidents.
When carrying out lifting manoeuvres, particularly at height, ensure that the forklift is on stable ground as levelled as possible.
Do not drive over objects which may endanger the stability of the machine.

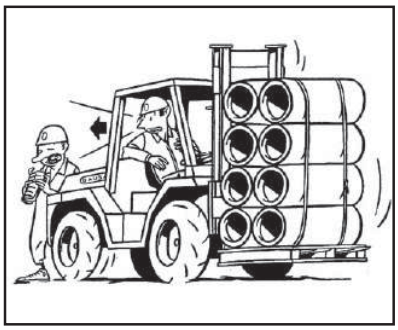
(fig. 1)

(fig. 2)

Downloaded from www.Manualslib.com manuals search engine

https://truckmanualshub.com/

Special Safety Messages

The triangle of horizontal stability
To prevent the loads which are being transported from falling, it is necessary to consider the triangle of horizontal stability **(fig. 1)**. This is an imaginary inverted triangle, with the lower end located on the centre of the rear axle and the two upper vertices on each of the front wheels. Stability is guaranteed when the centre of gravity of the combination load **(c)**+ machine **(m)** remains within the limits of this imaginary triangle.

Longitudinal stabilization
The risk of longitudinal overturning increases if the forklift is driven while the load is raised. Sharp braking and accelerating or rapid tilting movements decrease stability.

Transversal stability
The risk of overturning sideways increases on turning at incorrect speeds, while the forklift is unloaded or when the load is raised. Rough ground, sharp braking or accelerating or shifts in the load make these conditions worse.

Centre of gravity and the capacity of the forklift truck
Do not overload the forklift or handle loads which shift the centre of gravity beyond that for which it is designed. Manoeuvre slowly, especially when changing direction on slippery ground .
Do not handle loads that are unstable, loose or disproportionate to the size of the forks and the forklift machine itself. Make certain that long or wide loads are fastened together so as to be stable and secure.

The load and counterweight
The load should be lifted and lowered with the mast in vertical position or slightly tilted backwards. The raised load should only be tilted forwards when it is about to be unloaded.
Tilting the load forwards or backwards (swinging) is very useful for collecting or positioning the load, but affects the longitudinal and lateral stability. Therefore, when handling raised loads, do not swing the mast more than is absolutely essential.
The forklift may tip forwards when carrying a raised load with the mast tilted forwards, or in the event of sudden braking or accelerating while the load is raised.
If using an accessory, attachment or tool, first check the permitted load. The combination of the weight of the forklift plus the weight of the accessory or attachment reduces the nominal load.

WARNING

WARNING
This forklift is not designed to travel with elevated load or with the mast tilted forward.
Do not tilt forward the mast with the forks elevated except to pick up or deposit the load.
The fully forward tilting mast angle is only intended to transport the forklift on a truck bed, always without load.
For operating with load do not exceed 10º for the forward tilting mast angle.

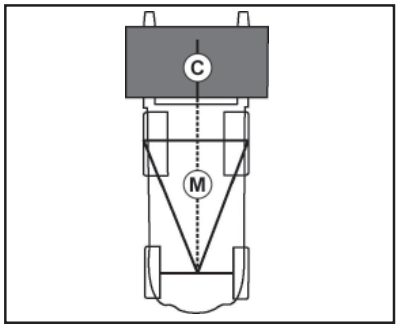

(fig. 1)

Downloaded from www.Manualslib.com manuals search engine

https://truckmanualshub.com/

Special Safety Messages

■ **Load handling**

- Know the lifting capacity of your forklift and operate within those limits.
  See the Load Limit Charts shown in the section **TECHNICAL SPECIFICATIONS** on this Operator's Safety Manual and shown in a plate on the left mudguard.
- Never transport loads with the forks raised -keep them as low as possible to attain maximum stability-. The risk of overturning increases when the forklift is driven with the load raised. Keep it low when in transit. **(fig. 1, 2)**
- Do not drive on surfaces that could affect the stability of the machine.
- Only raise the forks when the machine is on a level, flat surface.
- If necessary to temporarily operate the forklift in rough, unimproved areas, be very careful when operating near an open trench, a high bank or an overhang that can fall and cause a roll over with the potential of serious injury or death. You must make a careful judgement whether you and your forklift can be safely operated near any of these areas.
- Stay off steep inclines and slopes. Hillside operation can be very dangerous due to the constant potential of rollovers.
- When operating on modest inclines or slopes:
  - Move very carefully and slowly.
  - Keep the forks and load low.
  - Keep the forks facing uphill at all times. This means driving in backwards down a slope to maintain maximum load stability.
  - Always travels directly up or down the slope.
  - Do not travel across an incline.
  - Never position the forklift sideways on a slope.
- Forks should only be raised on level stable ground. You must be the judge whether ground conditions will permit the safe operation of the forklift. Operation on an incline can be very dangerous.
  Rain, snow, loose gravel or soft ground can be factors which may prevent the use of the forklift.
- Keep the forks and the loads away from overhead obstructions.
- Never operate the forklift near or close to overhead power lines.
- If the forklift is operated in an enclosed area, use ventilation systems to replace the exhaust fumes with fresh air.
- Use ventilation systems to remove any flammable dust or steam in the working area.
- Do not overload the forklift and do not allow the load centre to move. Always manoeuvre slowly and smoothly especially when changing direction.
- Keep the forks facing uphill at all times. This means reversing backwards down a slope to maintain maximum load stability.
- When depositing a load to a height, tilt the mast forward just enough to leave the load on a shelf or pile. When taking a load from a shelf, tilt the mast back just enough to stabilise the load on the forks.
- Always operate the fork tilt lever slowly and smoothly. **(fig. 2)**.
- Always drive with the forks in the low position and with the mast tilted slightly back.
- Make certain that long or wide loads are fastened together so as to be stable and secure.

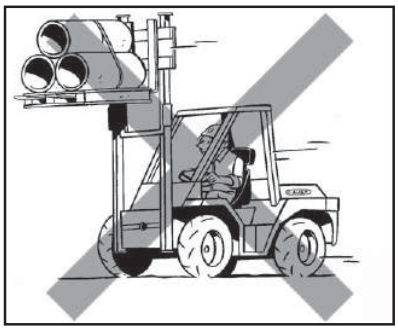

(fig. 1)

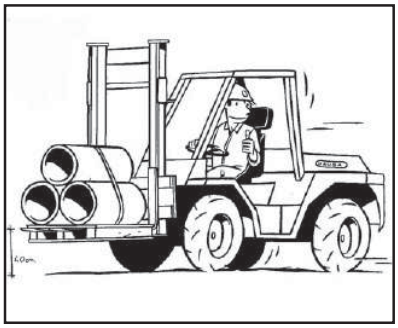

(fig. 2)

Downloaded from www.Manualslib.com manuals search engine

https://truckmanualshub.com/

Special Safety Messages

■ **Critical speed**

The speed at which the forklift moves affects its stability. When turning, braking, or accelerating, the centre of gravity shifts within the triangle of stability. Sharp turns, sudden braking or accelerating cause the centre of gravity to shift sharply and it may fall outside the triangle. This is the moment when the stability of the forklift and the load are not guaranteed and there is a risk of accident.
When manoeuvring reduce the speed of the forklift and avoid turning the steering wheel sharply.
Do not drive the forklift at a fast speed and then attempt a turn as the forklift may tip over. Always drive slowly when making a turn and keep the forks low when turning **(fig. 1)**.

■ **Accesses and doors**

Make sure that the passages and doors along the route are sufficiently high to allow all the forklift to pass.
When carrying out lifting manoeuvres, pay special attention to the height of the roof, lighting and other overhead installations.

■ **Ground surface**

Check that the ground is strong enough to bear the forklift when loaded, especially when approaching bridges, the edges of embankments, concrete floors elevators, etc. **(fig. 2)**.

■ **Lighting**

The forklift working area should be adequately lit to prevent the risk of accident, running over persons or colliding with obstacles. As soon as the daylight fades, the forklift lighting system should be switched on. If the forklift is not equipped with lighting, make sure that the working area is adequately lit. If this is not possible, do not continue working with the forklift, this may result in an accident.

■ **Loading bay. Communication. Shelving and installations. The load**

The loading bay or area where the loads are handled should be correctly equipped and signposted. The operating area of the forklift should be free of obstacles and pedestrians, however if their presence is necessary, the pedestrians should move in areas which have been duly marked as such and they should be easily distinguished, for example, by wearing reflective jackets.
If the area is closed it should be well-ventilated and the forklift must be equipped with lighting and exhaust gas purifier systems. The forklift operator should be able to communicate normally with pedestrians. If the surrounding area is excessively noisy, pedestrians should refrain from walking in the immediate vicinity. If this is unavoidable, the utmost care should be taken. Radio communication equipment should not be handled while driving the forklift. If it is necessary to use the radio, pull over to one side and signal the position of the forklift, using the lights or hazard warning lights.
Shelving for the loads have a series of marked passageways. The width of these should be at least the width of the forklift plus 40 in (1 m). If the passageway is two-way, the width must be sufficient to allow two forklifts to pass plus an additional 55 in (1,5 m).
Before using the forklift to handle loads check the load and ensure that the weight does not exceed the forklift capacity. At the same time, check that the load is stabilized and correctly secured, to ensure that no part of the load falls off during transportation.

(fig. 1)

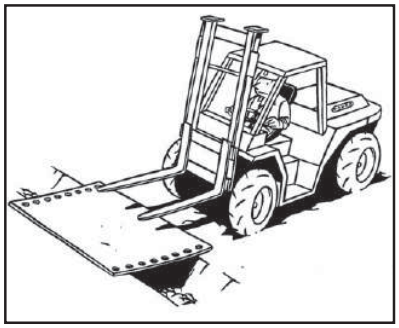

(fig. 2)

Downloaded from www.Manualslib.com manuals search engine

https://truckmanualshub.com/

Special Safety Messages

■ **Order and cleanliness**

Carrying out a series of checks before starting the forklift and keeping the operator cab clean help to make the work safer.
To do so, follow the **MAINTENANCE CHART** given in this Operator's and Safety Manual strictly, and keep the operator cab clean and free of earth, gravel, mud, oil or other objects which may cause falls.
Do not carry objects in the operator cab. These may injure the operator or accidentally activate the forklift controls.

■ **Overhead Guard**

WARNING

You are protected by an overhead guard which complies with the provisions of ISO 3449 and ISO 3471 / ASME B56.6. It protects the operator against falling objects and, together with the mast, gives protection to the operator in the event of an accidental tip over. The seat belt is an important part of this safety system and must always be fastened before operating the forklift.
Failure to wear the seat belt in the event of an accidental tip over could result serious injury or death as you could be crushed by the machine or by the overhead guard.

The above decal is located on the side of the machine. Overhead Guard must be weekly inspected for excessive damage cracks permanent deformation or signs of potential cracks. If these incidents appear, structure must not be repaired but replaced for a new one.

■ **When leaving / parking the forklift (fig. 1, 2, 3)**

A poorly parked forklift truck is a risk.
Park the forklift in the areas provided for this purpose, without obstructing the passage of others, exits or entrances to stairs and emergency equipment.

- Place the forks or attachment in the fully lowered position.
- Set all the controls in the "0" neutral position.
- Apply the parking brake.
- Do not park the forklift on a slope. If it is necessary to park the forklift on a gradient, in addition to using the parking brake, place chocks against the wheels.
- Stop the engine and cut the ignition circuit. Remove the ignition key.
- Lock all mechanisms to prevent any unauthorised person from using the machine.
- Remember that you are the key to safety. Good safety practices not only protect you but also the people around you.

(fig. 1)

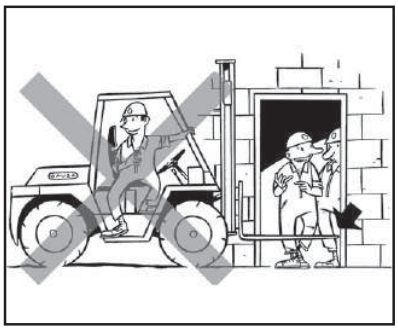
(fig. 2)

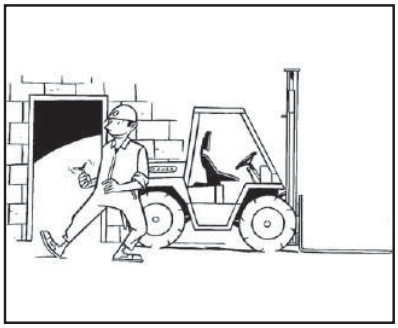
(fig. 3)

Downloaded from www.Manualslib.com manuals search engine

https://truckmanualshub.com/

Parking the machine

■ **Parking the machine and stopping the engine**

Make certain that the forklift is parked on level ground when leaving it overnight. Also park it on level ground before any scheduled maintenance is attempted.

- Lower the forks to the ground, lock the park brake and push directional switch to NEUTRAL.
- Apply the parking brake
- If it is necessary to park the forklift on a gradient, in addition to using the park brake, place chocks against the wheels.
- If the engine has been working at full load, run the engine at idle for 1 minute - as this procedure will cool the engine components evenly.
- To stop the engine, turn the ignition switch key in a counter-clockwise motion.
- Remove the key from the ignition switch and take it with you. Never leave the key in a parked machine.
- Lock all mechanisms to prevent any unauthorised person from using the forklift
- Remember that you are the key to safety. Good safety practices not only protect you but also the people around you.

■ **Be careful with the environment**

At the end of the operating life of the machine, bring it to a recycling center or an scrap-dealer.
It is absolutely forbidden to leave the materials in public places.

When changing the engine oil or other fluids, use a big collecting trough. Make sure not to pollute the environment with emerging oil and other waste products (coolant, batteries, etc.) bring them to the corresponding recycling centre.
In case that substances escape from the machine that are harmful to the environment and/or to the people, take remedial measures inmediately, (eg.: if hydraulic oil emerges; apply oil bonding agent, put a collecting vessel underneath, tighten leakage, remove and dispose of contaminated earth, if required).
At the end of the life cycle of the machine, bring it to the specialised and recognised recycling centres.

Downloaded from www.Manualslib.com manuals search engine

https://truckmanualshub.com/

Transporting the machine

■ **Fastening the forklift to a lorry or trailer bed. (fig. 1, 2)**

When transporting the forklift on a trailer or truck bed, carefully follow the instructions in the Caution Decal. Move slowly and carefully up (or down) the loading ramps. Once on the trailer make certain the forks are lowered, handbrake applied and the forks and tires are blocked. Lastly make certain the forklift is securely tied down.
After the machine has been positioned on the Lorry/Trailer bed, put chocks at the front and rear of the forklift tires.
Firmly fast the forklift to the trailer or truck bed with chains, cable or tie-down straps to prevent any movement in the position shown in the picture 1.

Use the four eyes welded on to the chassis of the forklift purpose **(fig. 2)**

WARNING

Before you put the forklift on a trailer or truck bed, make certain that the ramp is strong enough to support the load and that the parking surface is fee of debris, oil, grease or ice.
- Do not transport the forklift with a full diesel fuel tank.
- Make certain your seat belt is properly fastened.
- Move the forklift slowly and carefully up the ramp onto the trailer.
- Shift the directional control lever to neutral.
- Apply the parking brake.
- In transit position lower the forks to their lowest level.
- Stop the engine and remove the key.
- Put blocks under the tips of each fork and tilt the mast slightly forward.
- Choks must be placed on all four wheels.
- Fast the forklift to the lorry chassis using chains, straps or sling cables of sufficiente strengh.

■ **Loading onto a trailer by crane (fig. 3)**

If a sling and crane are used to load the forklift onto a trailer or truck, attach the sling as shown in the next figure.
Before lifting check that the sling cable is firmly attached. While lifting the forklift do not permit riders on the forklift or by standers within 15ft (5m).

To lift the machine with a crane, bear in mind the following advice:
- Front slings must not be shorter than 8ft (2,5 meters).
- Always raise the machine in a balanced position.
- Keep the angle of inclination of the front sling approximately the same as the angle of inclination of the mast.

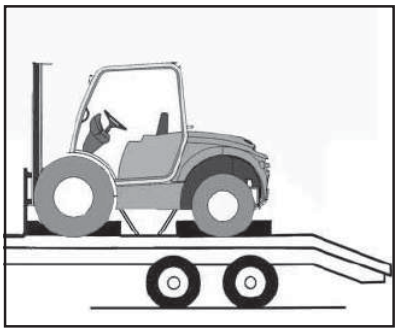
(fig. 1)

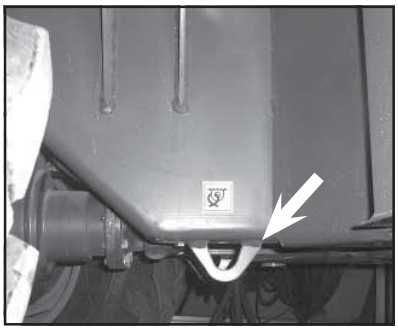
(fig. 2)

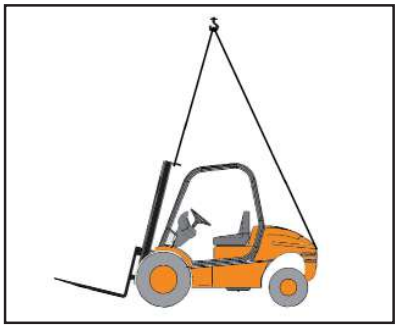
(fig. 3)

Downloaded from www.Manualslib.com manuals search engine

https://truckmanualshub.com/

Transporting the machine

■ **Towing the machine**

If the machine must be towed for short distances, only do so with a solid tow-bar to prevent any lateral sway. Attach the tow bar to the bolt at the rear of the counter weight **(fig. 1)**. Drive slowly and carefully at a speed not exceeding 6 mph (10 Km/h) and of maximum for a duration not exceeding 3 minutes.. Comply with all state laws governing the operation / towing of an off-highway machine on public roads and highways.

■ **Before towing the machine:**

Release the parking brake (fig. 2, 3, 4, 5)

In the event that the parking brake is blocked, due, for example, to a loss of brake fluid, or because the engine does not start, proceed as follows to release it.

- Remove the bleeder **(a)** from the brake.
- Screw on the nipple **(b)**supplied in the forklift tool box.
- Remove handbrake release pressure hose and plug in the fitting with a M12 x 1,5 mm. thread plug **(c)**.
- Using a hand pump lubricator **(d)** insert grease until the internal pressure manages to release the parking brake.
- To finally release the parking brake, unscrew the nipple **(b)**. The grease will come out of the brake thanks to the operation of the internal springs.
- Re-assemble the bleeder **(a)**.
- Disassemble plug **(c)** and connect handbrake hose again.

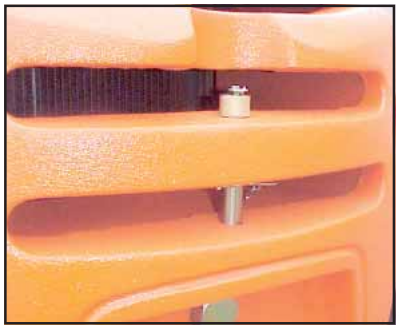

(fig. 1)

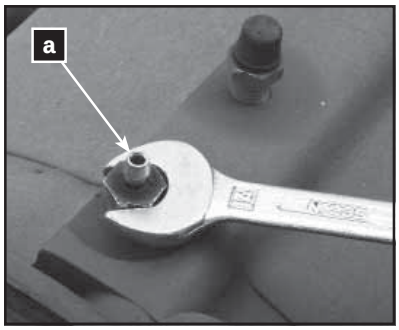

(fig. 2)

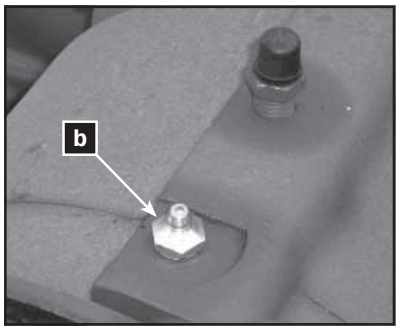

(fig. 3)

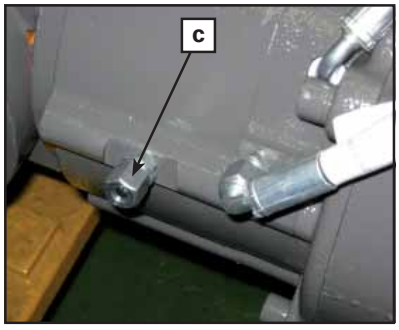

(fig. 4)

WARNING

Any repair to the brake system should be carried out by an authorized AUSA dealer.

CAUTION

Not plugging in handbrake hose fitting before inserting grease into the brake unit can lead to a hydrostatic pump damage. Contact your nearest AUSA dealer if you have any doubt.

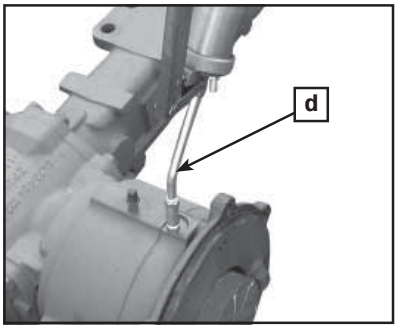

(fig. 5)

Downloaded from www.Manualslib.com manuals search engine

https://truckmanualshub.com/

Transporting the machine

■ **By-passing the hydrostatic pump (fig. 1)**

The forklift towing is only recommended when there is no other option during a break-down so the hydrostatic transmission can be seriously damaged. Whenever is possible it is recommended fixing in the place where is stopped. Otherwise, towing should only occur over short distances and at low speed. Comply with all state laws governing the operation / towing of an off-highway machine on public roads and highways.

CAUTION

It is possible to damage the drive motor by operating in bypass mode without charge pressure. Move the forklift at a speed not more than 20% of maximum for a duration not exceeding 3 minutes.

Use this procedure to bypass the pump to allow moving the forklift short distances when you cannot start the engine.

To open the by-pass valves, screw-in (but not over-tight them) the centre screws of he hydrostatic pump safety relief valves. To do so, loose the counter-nuts.

Once the machine is fixed, screw-out again the hydrostatic pump safety relief valves tight the counter-nuts again.

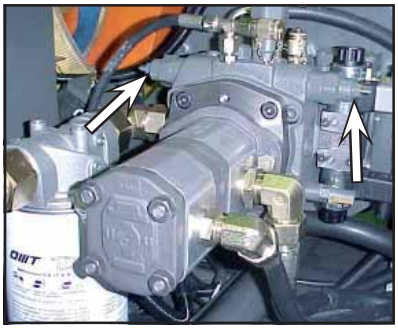

(fig. 1)

Downloaded from www.Manualslib.com manuals search engine

https://truckmanualshub.com/

Recommended fluids and lubricants

This section specifies the recommended liquid and lubricants. See the MAINTENANCE CHART on this Manual for the recommended change / service intervals.					
FLUID OR LUBRICANT	**SPECIFICATION**	**REMARKS**	**AUSA P/N**	**CAPACITY (Litres)**	**CAPACITY (US Gal.)**
FUEL	Usar gasoil limpio tipo automoción (clase A), preferentemente conforme a la Directiva 98/70/CEE modificada por la directiva 2003/17 o a la Norma EN 590 equivalente a las mismas. En España corresponde al RD 1728/1999. Para el mercado USA, debe ser conforme			80	21.1
KUBOTA V2403-M ENGINE OIL	Engine oil in accordance with MIL- 2104C / API CD or higher	See section **ENGINE OIL** in this section	461.00099.01	8.4	2.2
KUBOTA V3600T ENGINE OIL	Engine oil in accordance with MIL- 2104C / API CD or higher	See section **ENGINE OIL** in this section	461.00099.01	13.2	3.5
KUBOTA V2403-M ENGINE COOLANT	Ethylene glycol antifreeze with corrosion inhibitors for aluminum engines with internal combustion. 40% glycol / 60% distilled water in Standard machine.	See section **ENGINE COOLANT** in this section	45.00075.01	10	2.6
KUBOTA V3600T ENGINE COOLANT	Ethylene glycol antifreeze with corrosion inhibitors for aluminum engines with internal combustion. 40% glycol / 60% distilled water in Standard machine.	See section **ENGINE COOLANT** in this section	45.00075.01	13	3.4
HYDRAULIC CIRCUIT	Hydraulic oil ISO Grade VG-46 in accordance with ISO 6743/4 HV DIN 51524 Part 3 - class HVLP	See section **HYDRAULIC CIRCUIT OIL** in this section	461.00099.06	85	22.4
C300H FRONT AXLE DIFFERENTIAL	Transmission oil SAE 90 in accordance with API GL5 / MIL L-2105D with additive, LIMITED SLIP	See section **OIL FOR FullGrip AND FRONT AXLE** in this section	461.00099.09	4	1.8
C300H FINAL DRIVE ON THE FRONT AXLE	Transmission oil SAE 90 in accordance with API GL5 / MIL L-2105D with additive, LIMITED SLIP	See section **OIL FOR FullGrip AND FRONT AXLE** in this section	461.00099.09	0.4	0.1
C350H FRONT AXLE DIFFERENTIAL	Transmission oil SAE 90 in accordance with API GL5 / MIL L-2105D with additive, LIMITED SLIP	See section **OIL FOR FullGrip AND FRONT AXLE** in this section	461.00016.00	6	1.5
C350H FINAL DRIVE ON THE FRONT AXLE	Transmission oil SAE 90 in accordance with API GL5 / MIL L-2105D with additive, LIMITED SLIP	See section **OIL FOR FullGrip AND FRONT AXLE** in this section	461.00004.01	0.7	0.18
REAR AXLE DIFFERENTIAL x4	Aceite para transmisiones SAE 90 según API GL5 / MIL-L-2105B		461.00004.01	3.3	0.8
FINAL DRIVE ON THE REAR AXLE x4	Aceite para transmisiones SAE 90 según API GL5 / MIL-L-2105B		461.00004.01	0.3	0.08
TRANSFER BOX x2	Transmission oil SAE 90 in accordance with API GL5 / MIL L- 2105B		461.00004.01	3.25	0.9
TRANSFER BOX x4 (FullGrip)	Transmission oil SAE 90 in accordance with API GL5 / MIL L- 2105B	See section **OIL FOR FullGrip AND FRONT AXLE** in this section	461.00016.00	2.75	0.7
BRAKE FLUID AND INCHING	SAE 10W Hydraulic Oil or ATF fluid in accordance with CAT TO-4 / TO-2 o ALLISON C-4 / C-3.	See section **BRAKE FLUID AND INCHING** in this section	461.00015.00	1	0.26
WINDSCREEN WIPER WASHER		Freezing point temperature: - 20ºC	465.00016.00	1.5	0.4
BATTERY ELECTROLYTE	Distilled Water	See section **BATTERY ELECTROLYTE** in this section			
GREASING POINTS	Calcic grease NLGI-3 consistency	See section **LUBRICATION POINTS** in this Operator's Manual	461.00009.00		

Downloaded from www.Manualslib.com manuals search engine

https://truckmanualshub.com/

Recommended fluids and lubricants

■ **Engine oil (fig. 1)**

Use oil for 4-stroke engines in accordance with MIL-L-2104C / API CD or superior.
Always check the API quality on the oil container label to ensure that it is the required quality.
Your machine leaves the factory with SAE 15W40 viscosity. However, depending on the environment temperatures, refer to the following chart (fig. 1) to select the proper viscosity.
If oils of different brand names are used, ensure that you completely empty the crankcase before adding the new oil.

AUSA recommends oil REPSOL AUSA EFFICIENT for Diesel engines p/n 461.00099.01

■ **Hydraulic Oil**

- VG 32 for environment temperatures usually below 50ºF (10ºC)
- VG 46 for environment temperatures between 50F to 120ºF (10ºC to 40ºC)
- VG 68 for environment temperatures above 120ºF (40ºC)

AUSA recommends oil REPSOL AUSA EFFICIENT hydraulics p/n 461.00099.06

■ **Coolant**

Always use ethyiene-glycol antifreeze containing corrosion inhibitors especially for internal combustion aluminium engines. The cooling systems must be filled with distilled water and antifreeze solution (70 water, 30 antifreeze in a standard machine for temperatures ranging from -17 °C to 127 °C) (50 water, 50 antifreeze for temperatures ranging from -35 °C to 145 "C).

■ **Oil for FullGrip® System and front axle**

Oil AUSA COMPEN EFFICIENT p/n 461.00099.09 with the following characteristics:

- Friction coefficient modifying additives
- "Extreme pressure" and anti-wear capacity
- Good antirust and anticorrosion characteristics
- Excellent thermal stability
- Avoids vibrations and noises

■ **Brake and inching fluid**

Only use only SAE 10W or ATF oil in accordance with CAT TO-4 / TO-2 or ALLISON C-4 / C-3.

AUSA recommends oil REPSOL AUSA EFFICIENT TRANSMISSIONS p/n 461.00099.07

CAUTION:

To avoid serious damage to the brake system or clutch system do not use fluids other than the recommended one, or mix different fluids for topping up.

■ **Battery electrolyte**

This vehicle is equipped with a battery that requires maintenance.
Add distilled water if necessary.

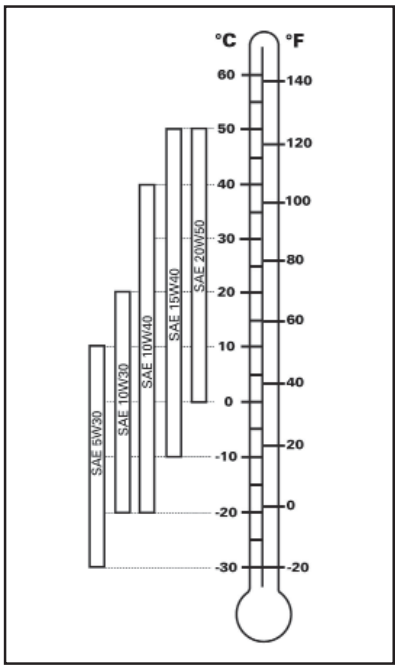

(fig. 1)

Downloaded from www.Manualslib.com manuals search engine

https://truckmanualshub.com/

Maintenance Chart

I: Inspect, verify, clean, lubricate, replace if necessary **C:** Clean **L:** Lubricate **R:** Replace	EVERY													To be performed by
	Initial inspection (50 h)	Every 100 h.	Every 200 h.	Every 400 h.	Every 500 h.	Every 800 h.	Every 1000 h	Every 1500 h.	Every 3000 h.	Every week	Every month	Every year	Every 2 years	
MOTOR														
Oil and oil filter (1)	R		R									R		CUSTOMER
Alternator belt (1)	I	I			R								R	DEALER
Valve clearance							I							DEALER
Compression of the cylinders							I							DEALER
FUEL SYSTEM														
Air filter element (4)		C			R(5)							R		CUSTOMER
Intake air			I										R	CUSTOMER
Fuel pipes and clamps										I			R(2)	CUSTOMER
Fuel filter cartridge				R										CUSTOMER
Fuel prefilter (1)	R			R										CUSTOMER
Fuel tank					C									CUSTOMER
Fuel injection nozzle injection pressure (2)								I						DEALER
Injection pump (timing) (2)								I	I					DEALER
Fuel injection timer									I					DEALER
COOLING SYSTEM														
Radiator hoses and clamp bands			I										R	CUSTOMER
Cooling system pressure test										I				CUSTOMER
Water jacket (radiator interior)						C								DEALER
Coolant										I		R	R	CUSTOMER
ELECTRICAL SYSTEM														
Battery electrolyte	I	I												CUSTOMER
Battery connections										I				CUSTOMER
Dash panel indicators / Warning lights (3)										I				CUSTOMER
Battery											I		R	CUSTOMER
Electric harness and loose connections												I		CUSTOMER
HYDRAULIC CIRCUIT														
Oil and suction strainer (3)	R						R			I				CUSTOMER
Hydraulic cartridge	R						R							CUSTOMER
Mast functions (3)										I				CUSTOMER
Pipes, hoses and fittings damages or leaks			I											CUSTOMER
Hoses										I				CUSTOMER
Steering (3)	REPLACE EVERY 6 YEARS													DEALER

(1) Initial inspection. The initial maintenance is very important and must not be neglected.
(2) To be performed by an authorized AUSA dealer.
(3) Daily inspection item.
(4) More often under severe use such dusty areas, sand, snow, wet or muddy conditions.
(5) Or at least once a year.
(6) ….or six times after clean.

Downloaded from www.Manualslib.com manuals search engine

https://truckmanualshub.com/

Maintenance Chart

I: Inspect, verify, clean, lubricate, replace if necessary **C:** Clean **L:** Lubricate **R:** Replace	EVERY													To be performed by
	Initial inspection (50 h)	Every 100 h.	Every 200 h.	Every 400 h.	Every 500 h.	Every 800 h.	Every 1000 h	Every 1500 h.	Every 3000 h.	Every week	Every month	Every year	Every 2 years	
GREASING POINTS														
Masts guides										L				CUSTOMER
Nipples (see section "Greasing points" in this Manual)										L				CUSTOMER
Cables and articulations (throttle, lifting rams...)										L				CUSTOMER
TRANSFER-BOX														
Oil (1)	R				R					I		R		CUSTOMER
Oil leaks										I				CUSTOMER
Screws and nuts torque										I				CUSTOMER
AXLES (FRONT AND REAR)														
Oil (1)	R				R					I		R		CUSTOMER
Oil leaks										I				CUSTOMER
Fixation wheel nuts torque										I				CUSTOMER
Chassis fixation screws (torque)						I								DEALER
Cardan joint fixation screws (torque)											I			DEALER
Flange fixation nut (torque)											I			DEALER
Condition of tires and pressures										I				CUSTOMER
BRAKES														
Brake fluid (3)							R			I			R	CUSTOMER
Foot brake adjustment (3)	I									I				CUSTOMER
BODY / FRAME														
Cabin										I				CUSTOMER
Seat belt (3)										I				CUSTOMER
Foot plate, access steps and handles (3)										I/C				CUSTOMER
Guards and covers (3)										I				CUSTOMER
Plates and decals (3)										I/C				CUSTOMER
Tipped cabin safety latch										I				CUSTOMER
Cabin lock										I				CUSTOMER

(1) Initial inspection. The initial maintenance is very important and must not be neglected.
(2) To be performed by an authorized AUSA dealer.
(3) Daily inspection item.
(4) More often under severe use such dusty areas, sand, snow, wet or muddy conditions.
(5) Or at least once a year.
(6) ….or six times after clean.

Downloaded from www.Manualslib.com manuals search engine

https://truckmanualshub.com/

Periodic Maintenance Operations

■ General comments

Only original AUSA spare parts should be used during maintenance operations. This is the only way to guarantee that the AUSA machinery will have the same operational level that it had upon delivery.

This forklift, as with any machine, contains parts and systems which are subject to wear or require re-adjusting, and which may affect the reliability of the machine and the safety of the operator, the environment and the surrounding area, such as for example, exhaust gas emissions. The necessary maintenance should be carried out regularly in order to ensure similar conditions to those existing on leaving the factory.

All repair and maintenance operations should be made while the forklift is unloaded, the parking brake applied and the wheels blocked in order to keep the forklift stationary. Disconnect the battery **(fig. 1)** before carrying out any work on the electrical system. Never use a flame to check fluid levels.

❀ Respect the environment

When changing oil or other fluids use a suitable container to collect the old fluid. Take care not to cause damage to the environment and take all the replaced materials (batteries, coolant, etc) to the appropriate recycling centres.

In the event of leaks of substances which may be harmful to persons or to the environment, immediately take the necessary measures to reduce their impact, for example in the case of oil leaks, plug the leak, use a recipient to collect the oil, sprinkle absorbent material or collect up and remove the contaminated soil if necessary.

■ Access for maintenance

The engine, the transmission and filters are located under the cabin floor **(fig.2)**. To access them, you have to proceed as follows:

- Start the forklift and tilt the mast forwards (the operator remains seated in the driver's cabin).
- Stop the engine and remove the key from the ignition.
- Move the joystick to the right until reaching the maximum forward tilt.
- Stop the engine and remove the key from the ignition.
- Get down from the driver's cabin.
- Pull the handle **(a)** located at the left side of the seat (fig. 3) to unlock the cabin latch.
- The cabin will tip up, allowing access in order to carry out the maintenance operations.

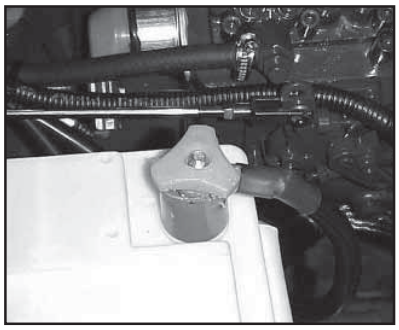
(fig. 1)

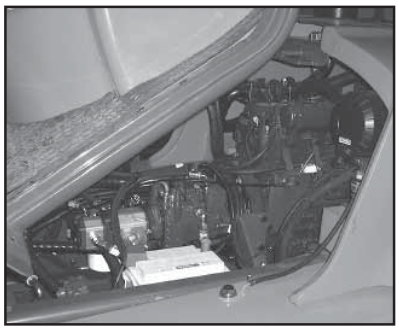
(fig. 2)

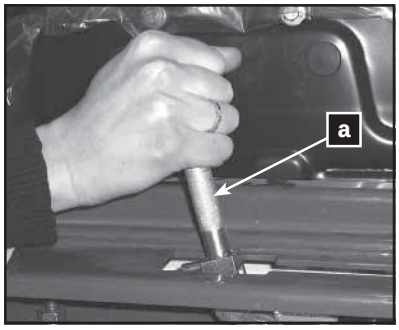

(fig. 3)

Downloaded from www.Manualslib.com manuals search engine

https://truckmanualshub.com/

Periodic Maintenance Operations

- After lifting up the cabin, it should be secured using the safety lock

- CAB SAFETY PROP STOWED AWAY (fig. 1)
- CAB SAFETY PROP LOWERED INTO POSITION (fig. 2)

WARNING

Whenever the cabin is raised, the safety lock must be on. This prevents the cabin from causing an accident on descending.

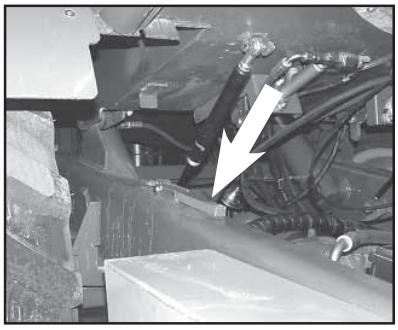
(fig. 1)

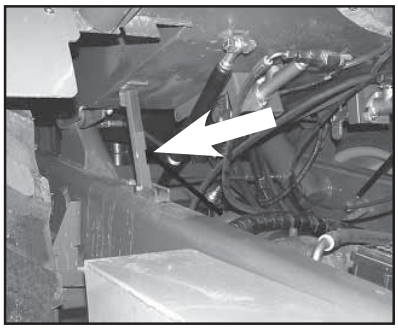
(fig. 2)

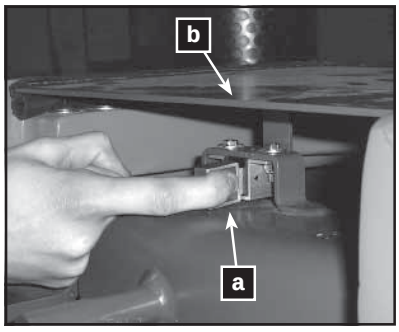

(fig. 3)

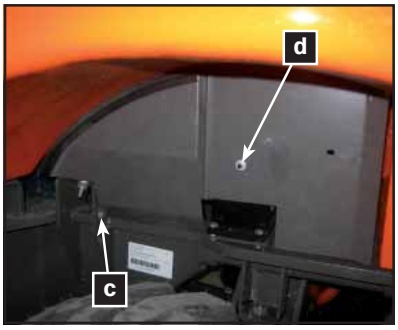

(fig. 4)

To access the upper part of the engine, after raising and securing the operator cabin, lift the inspection cover **(fig. 3)(a)** by pulling on the lock **(fig. 3)(b)**.

To access the sides of the engine, undo the bolt **(fig. 4)(c)** and nut **(fig. 4)(d)** and remove the rear wheel cover. There is a wheel cover on each side of the machine.

■ **Daily checks**
- Before starting to work with the forklift, clean any oil or fuel spills, clean and remove grease from hands and the soles of shoes and do not forget to make the following checks:
- Condition of the lifting chains
- Tyre pressure and condition of the tread.
- Brakes.
- Leaks in the hydraulic, coolant, fuel circuits, etc.
- Check the correct position and fastening of all the guards, caps and safety stops.
- Absence of cracks or other structural defects visible at first glance.
- Check that all the controls are operating correctly.
- Check fluid levels:
- fuel.
- brake fluid.
- hydraulic circuit fluid.
- coolant circuit fluid.
- Check that alarm and signalling devices are operating correctly (for example: acoustic warning, air intake filter blocked warning, etc.)
- Check that informative and safety plates on the forklift are clean and in good condition.
- Clean and check lighting and signalling system are operating correctly.
- Check electrical battery connections and level of electrolyte.
- Adjust the seat to your build.
- Carefully inspect the condition of the seatbelt, paying special attention to:
- Cuts or fraying on the belt.
- Wear or damage to the fastenings including the anchorage points.
- Poor functioning of the buckle or automatic reel device.
- Loose stitching.

Correct any problems before using the forklift.
Where necessary, refer the problem to an authorized AUSA dealer.

Downloaded from www.Manualslib.com manuals search engine

https://truckmanualshub.com/

Periodic Maintenance Operations

■ **Machine cleaning**

During the clean operations, not to direct pressure water on the intake (air filter), the steering column, battery, alternator and other electric devices because can deteriorate their components.

■ **Breakdown in road (fig.1)**

In case of breakdown when driving on public roads, warn other users of the road with the hazard warning triangles (). They could be stored under the cabin; raising it.

■ **Engine**

For operating instructions, list of spare parts and general maintenance, see the engine handbooks or the **MAINTENANCE CHART**.

■ **Alternator belt**

Check the tension of the alternator belt regularly. Also check for cracks or other damage. Refer to an authorized AUSA dealer for the replacement of the alternator belt.

■ **Engine oil (fig. 2, 3)**

Oil level: Checking

With the forklift on a level surface, while the engine is cold and switched off, check the oil level as follows:

- Pull out the dipstick **(d)** and clean on a clean cloth.
- Replace the dipstick in its casing.
- Remove again and check the oil level. This should be at the upper level.

a- Full
b- Add oil
c- Operating range

- Add oil until the level reaches the upper level.

Oil level: Correct

- Remove the dipstick and place a funnel in the opening of the oil filler neck located above the rocker arm cover.

CAUTION

Do not exceed the maximum level mark. Starting the engine with incorrect oil levels may cause serious damage. Clean up any spillage. Check the oil level often and top up where necessary.

- Top up with oil gradually until the level is correct.

(fig. 1)

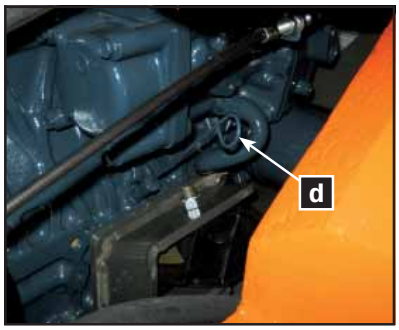

(fig. 2)

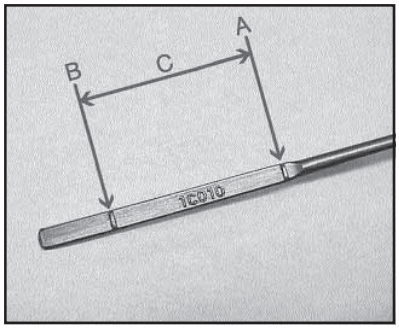

(fig. 3)

Downloaded from www.Manualslib.com manuals search engine

https://truckmanualshub.com/

Periodic Maintenance Operations

(fig. 1) Kubota 2403-M

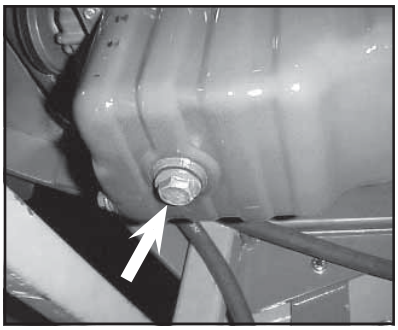
(fig. 2) Kubota V3600

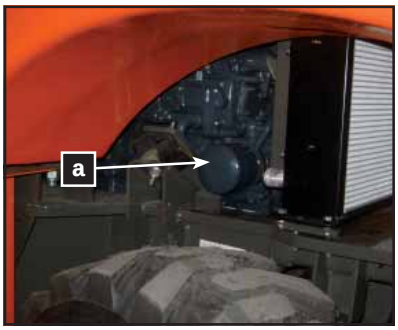

(fig. 3) Kubota 2403-M

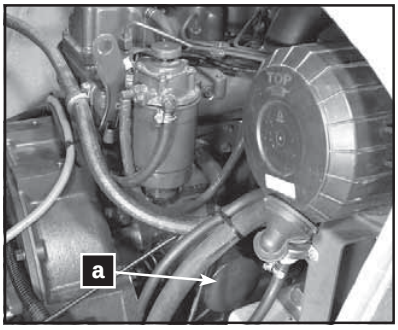

(fig. 4) Kubota V3600

Engine oil: Draining (fig. 1, 2)

The oil change should be made when the oil is warm.

WARNING

The engine oil may be very hot. To avoid the risk of burns, do not remove the drain plug or unscrew the filter if the engine is hot. Wait until the engine oil is cooler.

- Make sure the forklift is on level ground.
- Remove the dipstick.
- Clean the area around the oil drain plug.
- Place a container below the oil drain plug.
- Unscrew the oil drain plug.
- Allow all the oil to drain from the engine.
- Clean the oil sump drain plug and replace the plug with a new plug.
- Screw on the plug by hand and tighten it.

Oil filter cartridge: Replacing (fig. 3, 4)

The oil filter cartridge **(a)** is located on the left-hand side of the engine.

- Unscrew the oil filter cartridge by turning to the left.
- Clean the base of the filter and oil the seal of the new filter element.
- Screw on the new filter element and tighten by hand, without using mechanical means.

❀ Dispose of the used oil filter cartridge in an authorized centre for this purpose.

Downloaded from www.Manualslib.com manuals search engine

https://truckmanualshub.com/

Periodic Maintenance Operations

Engine oil: Filling up

- Remove the dipstick **(b)** and place a funnel in the opening of the oil filler neck located above the rocker arm cover.
- Fill the engine to the recommended oil level. See the **TABLE OF FLUIDS AND LUBRICANTS** (references and capacities) in this Operator's manual for oil type and capacity.
- Start the engine and leave idling for a few minutes. Check the areas around the oil filter and oil drain plug for leaks.
- Switch off the engine.

Wait a few seconds to allow the oil to flow towards the engine oil pan and then check the level.

- Top up if necessary.

CAUTION
Do not exceed the maximum level mark. Starting the engine with incorrect oil levels may cause serious damage. Clean up any spillage. Check the oil level often and top up where necessary.

❀ Dispose of used oil in authorized centres.

Downloaded from www.Manualslib.com manuals search engine

https://truckmanualshub.com/

Periodic Maintenance Operations

■ **Coolant system (fig. 1, 2)**
Level of coolant: Checking

WARNING

Never remove the coolant reservoir cap while the engine is hot. Wait until the engine has cooled down.

The level of coolant should be between the “MIN” and “MAX” marks on the coolant reservoir **.**

If the coolant level is below the “MIN” mark, top up the coolant reservoir with coolant. Check the engine, hoses and radiator for possible coolant leaks.

C300H / C300HI Model
If the coolant level is below the “MIN” mark, top up with coolant through the coolant reservoir cap **(a)** placed under the counterweight’s top cover. Check the engine, hoses and radiator for possible coolant leaks

C300H x4 / C300HI x4 / C350H / C350HI / C350H x4 / C350HI x4 Model
If the coolant level is below the “MIN” mark, top up with coolant through the coolant reservoir cap **(b)**. Check the engine, hoses and radiator for possible coolant leaks

Coolant circuit: Draining

The coolant should be changed according to **TABLE OF FLUIDS AND LUBRICANTS** (references and capacities), or when the circuit is drained for repair purposes. To do so, proceed as follows:

- Place a container below the radiator.
- Disconnect the lower radiator hose in order to drain the radiator here.

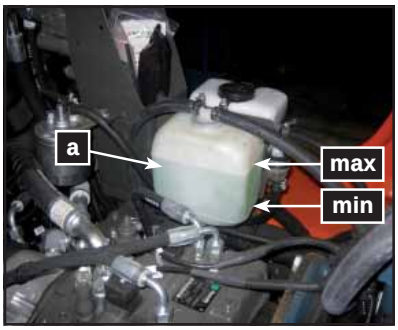

(fig. 1) Kubota 2403-M

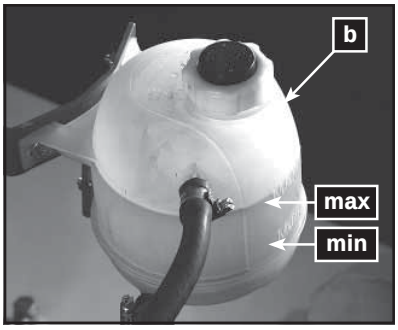

(fig. 2) Kubota V3600

Downloaded from www.Manualslib.com manuals search engine

https://truckmanualshub.com/

Periodic Maintenance Operations

Coolant circuit: Filling and bleeding

- Before filling the circuit, re-connect the lower radiator hose.

Modelos C300H / C300HI (fig. 1)

- The circuit is filled through the filling cap **(a)** located under the top cover of the counterweight.

Modelos C300H x4 / C300HI x4 / C350H / C350HI / C350H x4 / C350HI x4 (fig. 2)

- The circuit is filled through the filling cap**(b)** of the coolant reservoir.

Proportions of coolant and distilled water:

Temperatures from 1.4º F to 260.6 ºF (-17 ºC to 127 ºC): 40 % glycol and 60 % distilled water.
Temperatures from -35º F to 293 ºF (-35 ºC to 145 ºC): 50 % glycol and 50 % distilled water.

- Start the engine until the thermostat opens.
- Then, when the engine is cold, check the level of coolant in the coolant reservoir.
- If necessary, bleed the coolant air circuit using the bleeder located on the radiator hose **(fig. 3)**.

NOTE

Although the cooling system is equipped with a self-bleeding system, refer to an authorized AUSA dealer for the replenishment of the coolant after draining it.

❀ Dispose of used coolant in authorized centres.

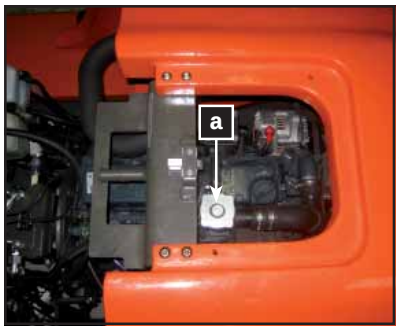

(fig. 1) Kubota 2403-M

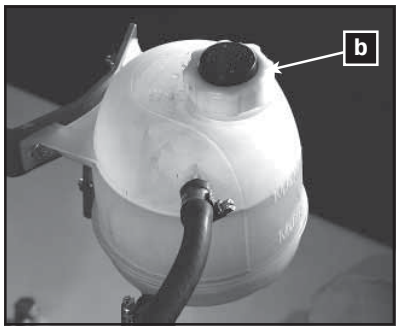

(fig. 2) Kubota V3600

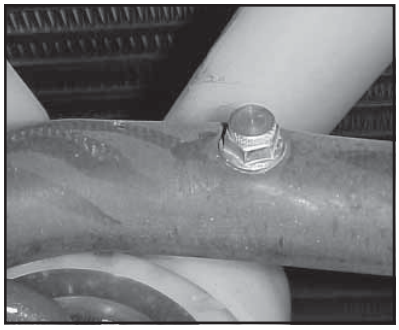

(fig. 3)

Downloaded from www.Manualslib.com manuals search engine

https://truckmanualshub.com/

Periodic Maintenance Operations

■ Air filter (fig. 1, 2, 3)

Replacing

The air intake in the engine is through a dry filter **(fig. 2, 3)** with double element. The life of the engine and its performance largely depend on the correct maintenance of this filter.
The filters should be changed and cleaned as shown in the **MAINTENANCE CHART**.
If the forklift is working in a dusty atmosphere the filter element should be replaced more often than that specified.

NOTE

The intake filter includes a filter blocked clogged indicator. If the warning light on the control panel lights up and the acoustic warning is heard, the filter element should be cleaned or replaced as soon as possible.

CAUTION

Do not start the engine when there is water inside the air filter casing. When there are fluids or dirt inside the casing, the filter cartridges should be inspected, drained or replaced.

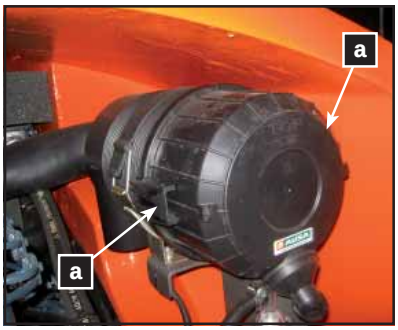

(fig. 1)

- Undo the left and right-hand staples of the filter cover **(a)** and remove the cover.
- To clean the filter element, blow high-pressure air maximum 5 bar / 60 PSI) through the element from the inside to the outside while turning.
- Also clean the interior of the filter casing.

CAUTION

The inner filter element is not reusable. Just be removed to be replaced

(fig. 2)

Air filter blocked warning light. check the working.

- Disconnect the wiring from the air filter clogged indicator.
- Make a bridge between the connector contacts using, for example, a small diameter piece of electrical cable.
- The air filter blocked warning light on the multi-function instrument should light up.

If the warning light does not light up, contact a AUSA dealer.

(fig. 3)

Downloaded from www.Manualslib.com manuals search engine

https://truckmanualshub.com/

Periodic Maintenance Operations

■ Fuel pre-filter (fig. 1)

Replacing
The fuel pre-filter is located next to the fuel tank, on the inside of the chassis.

CAUTION

Always replace this component. Never try to clean it.

a- Brackets
b- Fuel pre-filter

- Remove the fastening brackets and the filter.
- Make sure that the new filter is fitted in the correct direction as shown by the arrow on the body of the filter.

❀ Dispose of remains of fuel in authorized centres.

■ Fuel filter (fig. 2, 3)

On models **C300H / C300HI** the filter is located on the right side of the engine, beside the joystick's support.
On models **C300H x4 / x4 C300HI / C350H / C350HI / C350H x4 / x4 C350HI** the filter is located on the left side of the engine, beside the air filter ..

- Unscrew, by turning to the left, the cartridge **(c)** of the fuel filter and remove it from its support.
- Clean the base and oil the seal of the new filter.
- Screw on the new filter element and tighten by hand, without using mechanical means.

❀ Dispose of remains of fuel in authorized centres.

CAUTION

Take care to correctly tighten the filter element otherwise the circuit may suction air from the outside, causing faults in the supply to the engine.

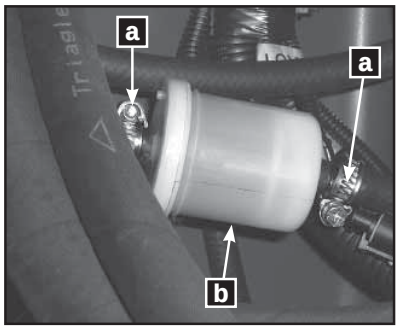

(fig. 1)

(fig. 2) Kubota 2403-M

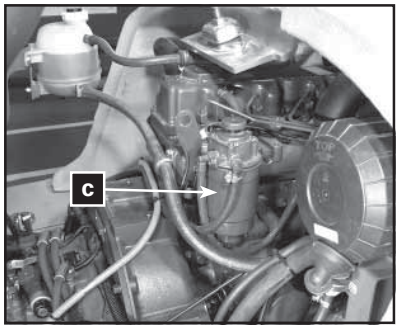

(fig. 3) Kubota V3600

Downloaded from www.Manualslib.com manuals search engine

https://truckmanualshub.com/

Periodic Maintenance Operations

■ **Drain the water from the fuel filter (fig. 1)**

In models C300H x4 / C300HI x4 / C350H / C350HI / C350H x4 / C350HI x4

The fuel used may contain water which is deposited on the lower part of the filter element. To protect the fuel injection system it is essential to drain the water from the filter element regularly as shown in the **MAINTENANCE CHART**.

- Unscrew the drainage cap **(a)** located on the lower part of the filter element.
- Wait until all the water in the filter has drained off.
- Tighten the drainage cap **(a)**.

ATTENTION

Take care to correctly tighten the drainage cap. If it is loose, unwanted air may enter the injection system and cause the engine to operate incorrectly.

❀ Dispose of remains of fuel in authorized centres.

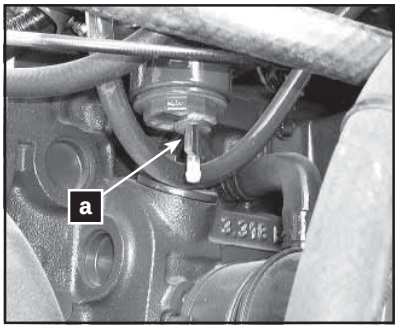

(fig. 1)

Downloaded from www.Manualslib.com manuals search engine

https://truckmanualshub.com/

Periodic Maintenance Operations

■ **Parking brake**

Oil: Replacing
If the brake pedal lowers excessively, refer to the authorized AUSA dealer for adjusting, bleeding or replacement of the inner discs.

Releasing the parking brake while the engine is stopped:

- This operation should be carried out following the instructions given in TOWING THE FORKLIFT in this Operator's and Safety Manual.

NOTE

The brake that incorporates this machine requires no maintenance. If the brake pedal lowers excessively, refer to the authorized AUSA dealer for adjusting, bleeding or replacement of the inner discs.

■ **Service brake**

Adjusting (fig. 1)

If the pedal has excessive free play, this can be corrected using the push rod **(a)** of the pedal which operates the brake pump. This has a system of nut and locknut. Allow the push rod to have a free play of between 1 to 1'5 mm (0'04 and 0'06 in.), making sure that the pump is free of internal pressure.
If, on applying the service brake, the pedal lowers too much it should be adjusted. To do so, contact an AUSA authorized dealer.

NOTE

The brake that incorporates this machine requires no maintenance. If the brake pedal lowers excessively, refer to the authorized AUSA dealer for adjusting, bleeding or replacement of the inner discs.

Brake and inching fluid: Checking the level (fig. 2).

With the forklift parked on a level surface, the level of the brake fluid in the tank should lie between the marks MIN. and MAX.

If necessary, top up the brake fluid in the tank:

- Unscrew the filler cap and use a funnel to prevent spillage.
- Top up with fluid until the level reaches the MAX. mark.
- Close the filler cap by screwing it on again.

Note: While topping up, do not exceed the MAX. mark.

WARNING

If it becomes necessary to top up the brake fluid frequently, it is possible that the brake system has a leak. Park the forklift correctly (See the section **PARKING THE FORKLIFT TRUCK**) and consult an authorized AUSA dealer.

Brake an inching fluid: Replacing

The replacement of brake fluid or any repair to the brake system should be carried out by an authorized AUSA dealer.

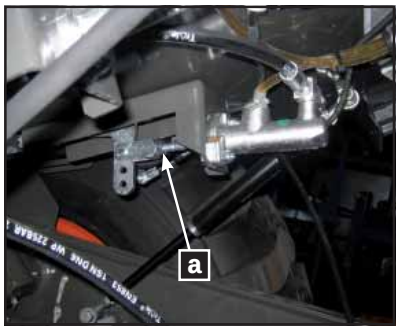

(fig. 1)

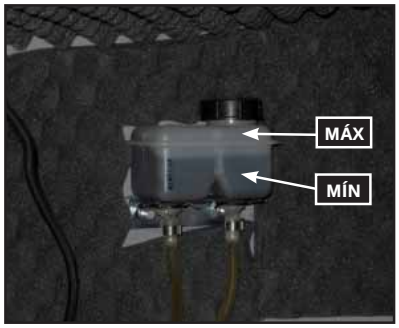

(fig. 2)

Downloaded from www.Manualslib.com manuals search engine

https://truckmanualshub.com/

Periodic Maintenance Operations

■ **Transfer box oil level (fig. 1, 2).**

Checking

- To check the oil level unscrew the cap **(b)**

Draining

- To drain the oil, unscrew the plug **(c)** located on the lower part.

Topping up

- Top up with the specified oil through the filler cap **(a)** located on the upper part. See the **FLUIDS AND LUBRICANTS CHART** in this Operator's and Safety Manual for oil specs. and capacity.

❀ Dispose of used oil in authorized centres.

■ **Oil level in the rear axles differential (4WD models) (fig. 3)**

Checking

- To check the oil level unscrew the cap **(b)**. The oil should be at the level of the casing.

Draining

- To drain the oil, unscrew the plug **(c)** located on the lower part.

Topping up

- To fill or top up the rear axle with oil use opening **(b)** of the level.
- Fill with the specified oil through the opening of the plug **(b)**. See the **FLUIDS AND LUBRICANTS CHART** (references and capacities) in this Operator's manual for oil specs and capacity.

❀ Dispose of used oil in authorized centres.

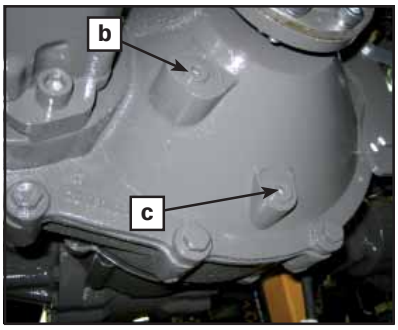

(fig. 1)

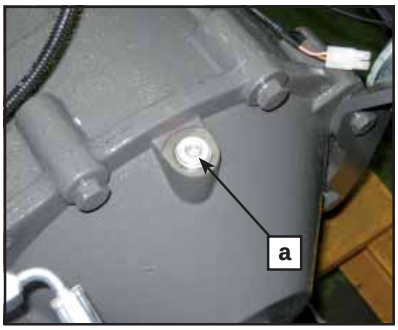

(fig. 2)

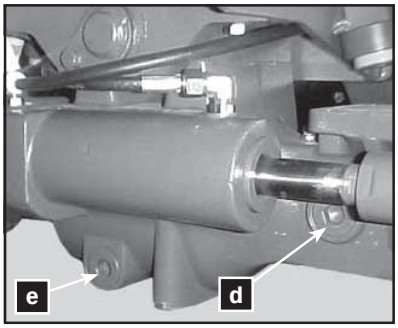

(fig. 3)

Downloaded from www.Manualslib.com manuals search engine

https://truckmanualshub.com/

Periodic Maintenance Operations

■ **Oil level on front axle (fig. 1)**

This should be checked while the forklift is on flat ground. The oil of the differentials and the reducers is connected internally.

Differential: Checking the level

- To check the oil level in the differentials use the cap **(b)**.

Differential: Draining

- To drain the oil, unscrew the plug **(c)** located on the lower part.

❀ Dispose of used oil in authorized centres.

Differential: Topping up

- Fill with the specified oil through the opening of the plug **(b)**. See the **FLUIDS AND LUBRICANTS CHART** (references and capacities) in this Operator's manual for oil specs and capacity.

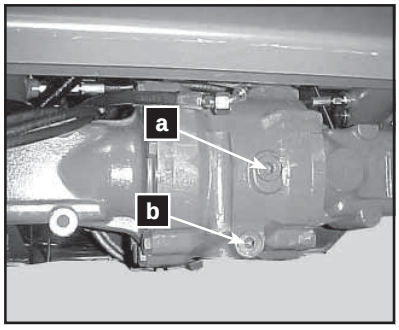

(fig. 1)

Downloaded from www.Manualslib.com manuals search engine

https://truckmanualshub.com/

Periodic Maintenance Operations

■ **Oil level in final drives on front axle (all models) and rear axle (only 4WD models) (fig. 1, 2)**

WARNING

Never remove the drain plug of the final drives when the oil is hot. The gases formed in the interior may cause injury.

Final drives: Checking the level

- Turn the wheel until the mark "Oil Stand Level" on the wheel hub is horizontal.
- To check the oil level in the final drives use the cap **(a)**.

Final drives: Draining

- Remove the wheel.

WARNING

If is necessary to remove the drain plug while the oil is still hot, place it on the upper part of the wheel hub, and remove the plug carefully covering it with a cloth or similar.

- To drain the oil, turn the wheel hub until plug **(a)** is located on the lower part of it.

❀ Dispose of used oil in authorized centres.

Final drives: Topping up

- Turn the wheel until the mark "Oil Stand Level" on the wheel hub is horizontal.
- Fill with the specified oil through the opening of the plug **(a)**. See the **FLUIDS AND LUBRICANTS CHART** (references and capacities) in this Operator's manual for oil specs and capacity.

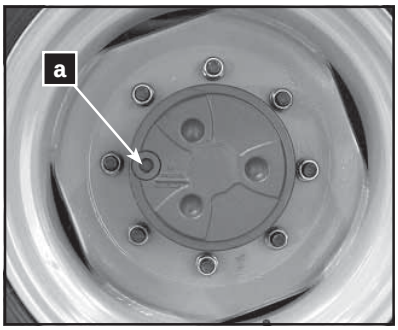

(fig. 1)

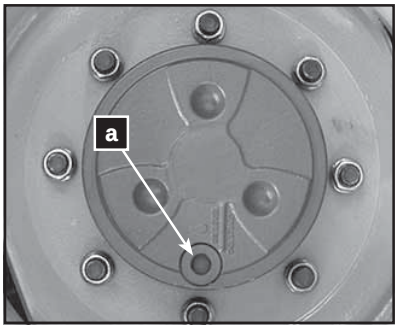

(fig. 2)

Downloaded from www.Manualslib.com manuals search engine

https://truckmanualshub.com/

Periodic Maintenance Operations

■ Hydraulic oil (fig. 1, 2, 3)

Level: checking

This should be checked while the forklift is on flat ground, the forks are lowered to rest position and the engine is switched off.

NOTE

The oil tank is equipped with an oil level low warning light. When this level is reached, the light on the multi-function instrument lights up and an acoustic warning is emitted. Add oil immediately to prevent damage to the hydraulic pumps.

- Loosen the dipstick **(a)**
- Check whether the oil level reaches the upper mark.
- If necessary, top up with oil through the plug hole.

Draining

- The tank is drained through plug **(b)** on the lower part of the tank.

❀ Dispose of used oil in authorized centres.

Topping up

Fill with the specified oil through the plug hole **(a)**. See **FLUIDS AND LUBRICANTS CHART** (references and capacities) in this Operator's and Safety Manual for oil specs. and capacity.

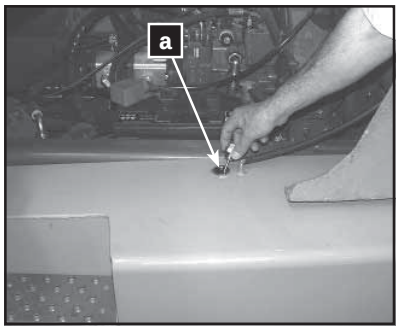

(fig. 1)

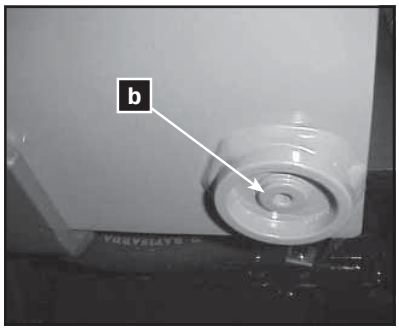

(fig. 2)

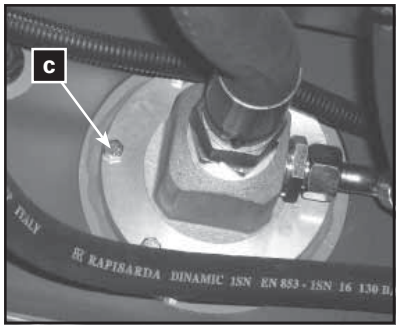

(fig. 3)

Clean the hydraulic oil strainer

There is an oil strainer filter located on the interior of the tank in the hydraulic circuit. This is a metal filter which should be cleaned every time the hydraulic oil is drained.

- To do so, remove the 6 screws **(c)** from the plate.
- Before assembling, check the condition of the seal and replace if necessary.

■ Hydraulic hoses

All the hydraulic hoses should be replaced at least every 6 years.

Downloaded from www.Manualslib.com manuals search engine

https://truckmanualshub.com/

Periodic Maintenance Operations

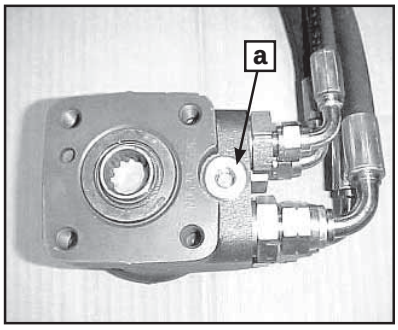

(fig. 1)

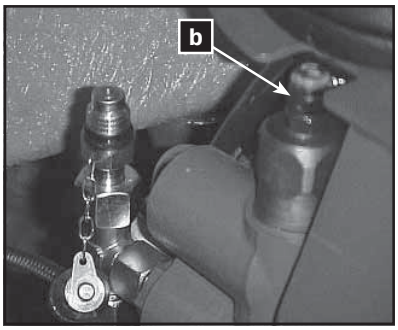

(fig. 2)

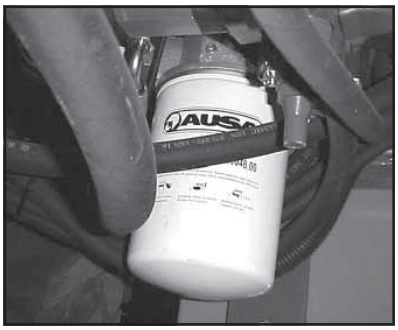
(fig. 3)

(fig. 4)

■ Hydraulic system safety valves: trimming

There are two safety valves for preventing overpressure: one on the steering circuit and one on the mast operating circuit. The first is located on the hydraulic steering **(fig. 1)** and the second on the control valve **(fig. 2)**. These valves are set to the correct pressure in the factory, but their trim should be checked regularly and adjusted accordingly.
The trimming should be carried out by personnel with a good knowledge of hydraulics and suitable tools. The pressures should never exceed those given in the section **TECHNICAL SPECIFICATIONS** in this Operator's and Safety Manual.

Hydraulic steering valve

- Remove the plug **(a)**.
- To increase the hydraulic pressure, turn the interior screw clockwise using a screwdriver. To reduce the pressure, turn the interior screw in the opposite direction.

Control valve

- Remove the seal.
- Remove the plastic cover.
- Unscrew the metal cap **(b)** and loosen the locknut.
- To increase the hydraulic pressure turn the screw clockwise using an allen key. To reduce the pressure, turn the interior screw in the opposite direction.

■ Hydrostatic transmission filter: Replacing (fig. 3)

The hydrostatic circuit has a cartridge filter which should be replaced regularly (See **MAINTENANCE CHART**).

- Undo the cartridge filter by turning it to the left.
- Clean the base of the filter and oil the seal of the new filter element.
- Screw on the new filter element and tighten by hand, without using mechanical tools.

Check whether the filter needs replacing (vacuometer) (fig. 4).

The filter support has a filter clogged indicator. When the engine is running the needle should lie in the green zone, or at a maximum, in the yellow zone. If the needle approaches or lies in the red zone, replace the cartridge filter as soon as possible.

CAUTION

Take care to correctly tighten the filter element otherwise the circuit may suction air from the outside, causing faults in the transmission.

Downloaded from www.Manualslib.com manuals search engine

https://truckmanualshub.com/

Periodic Maintenance Operations

Wheels

WARNING

Unless it is imperative for the work to be carried out, given that the machine does not have suspension, the use of solid tyres is not recommended, as this increases the effect of impacts on the transmission and the operator.

Tyre pressure: Checking
If possible, the tyres should be inflated by specialised personnel.
The following operations are recommended, in particular for the front wheels:

Checking and inflating tyres: Safety measures

WARNING

The tyre pressures of the forklift are very high. Inflating the wheels could be dangerous if not performed with care.

- Inflate the forklift tyres when cold to the pressure given by AUSA before starting the day's work (See the section **TECHNICAL SPECIFICATIONS** in this Operator's and Safety Manual).
- Checking tyre pressures and inflation should be carried out with a manometer in good condition fitted with a nozzle with safety clip. The safety clip is essential for preventing the manometer nozzle from coming off the tyre valve during inflation, which could cause serious injury to the operator.
- Use gloves to protect hands.

Wheel mounted on the machine

This should be checked while the forklift is on flat ground, the forks are lowered to rest position and the engine is switched off.

Wheel dismounted

- Place the tyre in a cage or other device suitable for inflating tyres of this nature.

Wheel nuts: Tightening torque

The tightening torque of the wheel nuts should be checked every week. The exact values of the wheel nut torques are given in the attached table.

- Use a torque wrench in good condition to check the tightening torque of the wheel nuts.

Downloaded from www.Manualslib.com manuals search engine

https://truckmanualshub.com/

Periodic Maintenance Operations

- If pneumatic wrenches have been used, the torques should still be checked using a torque wrench.
- Do not force the torque wrench by using extensions (pipes or similar).

Tightening Torques (Nm)		
	Front wheels	Rear wheels
C300H	350 ± 50	250 ± 30
C300HI	350 ± 50	250 ± 30
C300H x4	350 ± 50	350 ± 50
C300HI x4	350 ± 50	350 ± 50
C350H	460 ± 50	250 ± 30
C350HI	460 ± 50	250 ± 30
C350H x4	460 ± 50	350 ± 50
C350HI x4	460 ± 50	350 ± 50

Tightening Torques (lbf·ft)		
	Front wheels	Rear wheels
C300H	258 ± 37	184 ± 22
C300HI	258 ± 37	184 ± 22
C300H x4	258 ± 37	258 ± 37
C300HI x4	258 ± 37	258 ± 37
C350H	339 ± 37	184 ± 22
C350HI	339 ± 37	184 ± 22
C350H x4	339 ± 37	258 ± 37
C350HI x4	339 ± 37	258 ± 37

■ Mast: tension and length of mast chains (fig. 1)

The tension and length of the mast chains should be checked regularly. They stretch gradually due to the strain applied to them.
The mast chains should be replaced when their nominal length has increased by 3%.
Length can be checked by counting the links in one meter of 5/8” chain. Nominally there should be the length of 61 links. The change should be made when there is the length of 62.5 links, or a maximum of 63.
The chain is tensioned by turning the stop nut **(a)** of the tensioning rods.

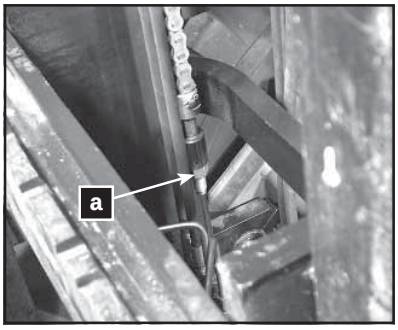

(fig. 1)

Downloaded from www.Manualslib.com manuals search engine

https://truckmanualshub.com/

Periodic Maintenance Operations

■ Lubrication

Rear axle

C300H-HI / C350H-HI

1 nipple on the central articulation of the axle **(fig. 1)**.
2 nipples, one on each wheel pivot **(fig. 2)**.
2 nipples, one on hydraulic cylinder pin **(fig. 3)**

C300H-HI x4 / C350H-HI x4

1 nipples on the central articulation of the axle **(fig. 4)**.
4 nipples, two on each wheel reduction joint **(fig. 5)**.

Rear Axle cardan shafts

C300H-HI x4 / C350H-HI x4

2 nipples, one on each cross **(fig. 6)**.
1 nipple on the grooving **(fig. 6)**.

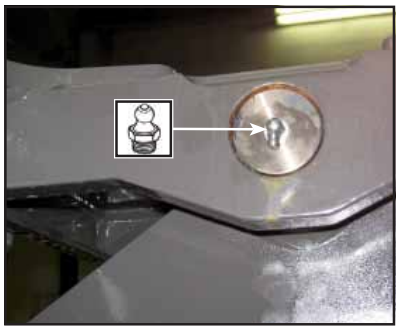
(fig. 1)

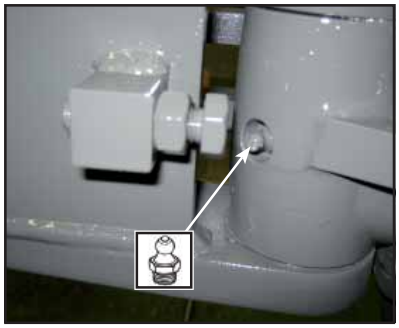
(fig. 2)

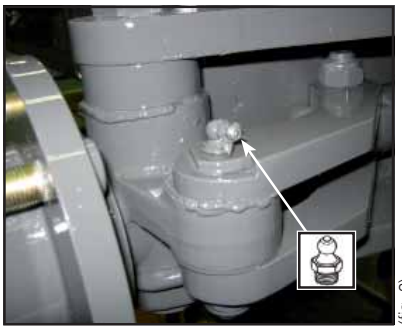
(fig. 3)

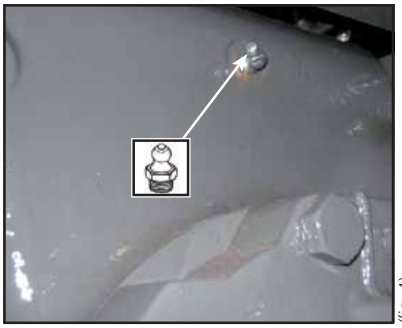
(fig. 4)

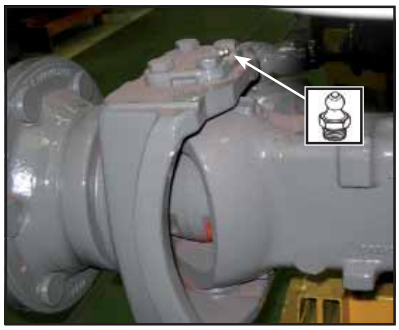
(fig. 5)

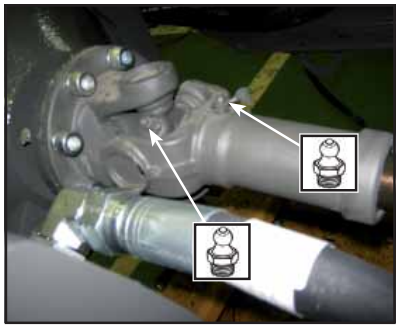
(fig. 6)

Downloaded from www.Manualslib.com manuals search engine

https://truckmanualshub.com/

Periodic Maintenance Operations

Control valve joints (fig. 1)
3 nipples, 1 on each joint.

Mast articulation supports (fig. 2)
2 nipples, one on each pin of the mast articulation.

Mast articulation tilting cylinder (fig. 2)
2 nipples, one on each support of the articulation.

Tilting cylinder articulation with the chassis (fig. 2)
2 nipples, one on each support.

Articulations of the controls (fig. 3)
Inching pedal.
Brake pedal.

Mast inner profiles (fig. 4)

Fork carriage side-shift (fig. 5)

(fig. 1)

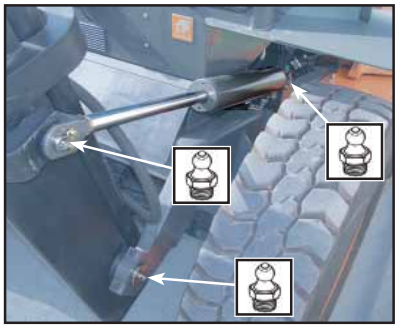
(fig. 2)

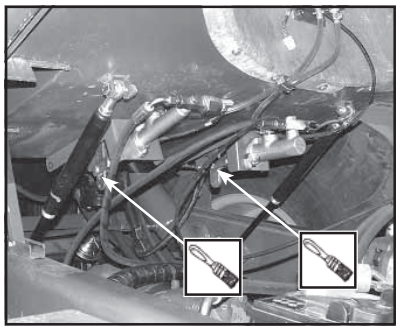
(fig. 3)

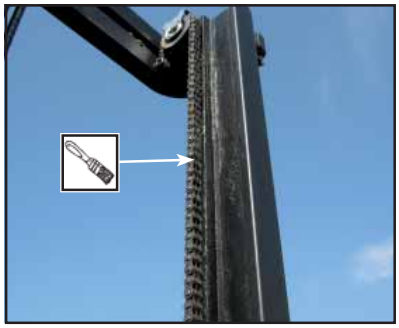
(fig. 4)

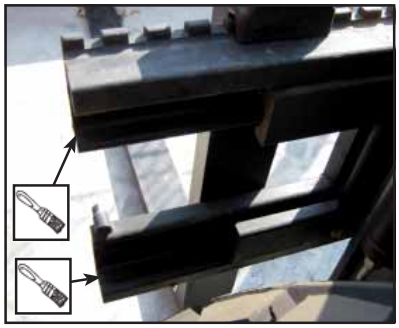
(fig. 5)

Downloaded from www.Manualslib.com manuals search engine

https://truckmanualshub.com/

Periodic Maintenance Operations

■ **Lighting and signaling system (✶)**

Indicator, parking, reverse, left and right side light bulbs: replacing (fig. 1).

- Undo bolts **(a)** and remove the lens.
- Remove the bulb by pressing it gently inwards and turning it to the left at the same time in order to release it from the lamp holder.
- Replace the bulb with a new bulb of the same type and power.

Operating beacon bulbs: replacing (fig. 2).

- Undo bolts **(b)** and remove the rear housing of the operating beacon.

Operating beacon bulb:

- Remove the connector from the bulb.
- Undo the clip fastening the bulb by pressing it inwards and to the right at the same time.
- Replace the bulb with a new bulb of the same type and power.

CAUTION

Do not touch the surface of the glass of the bulb. If it is dirty wipe gently using a clean dry cloth.

- Secure the clip again by pressing it inwards and to the left at the same time.

Indicator bulb:

- Remove the connector from the bulb.
- Remove the bulb by pressing it gently inwards and turning it to the left at the same time in order to release it from the lamp holder.
- Replace the bulb with a new bulb of the same type and power.

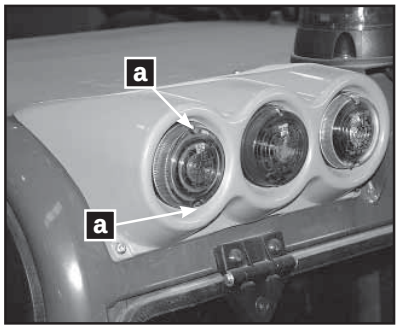

(fig. 1)

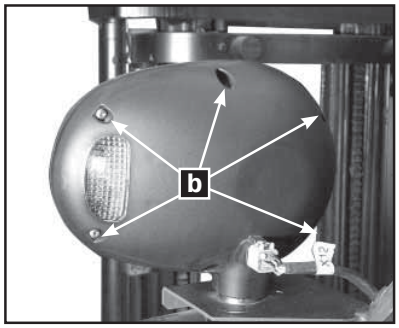

(fig. 2)

Downloaded from www.Manualslib.com manuals search engine

https://truckmanualshub.com/

Periodic Maintenance Operations

Rotating beacon bulb: replacing (fig. 1, 2)

- Turn the amber cover **(a)** of the rotary beacon to the left and remove.
- Unhook the plate **(b)** holding the bulb by pressing it inwards and to the left at the same time.
- Replace the bulb with a new bulb of the same type and power.

CAUTION

Do not touch the surface of the glass of the bulb. If it is dirty wipe gently using a clean dry cloth.

- Fasten the plate holding the bulb by pressing it inwards and to the right at the same time.

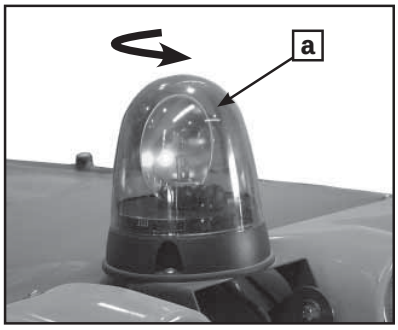

(fig. 1)

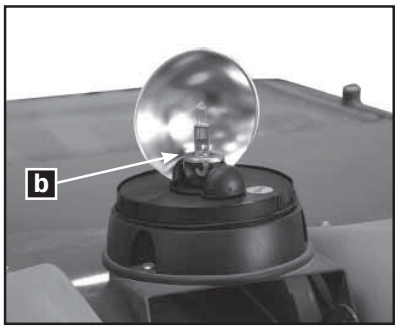

(fig. 2)

■ Electrical system

Steering column fuses: checking (fig. 3)

- Switch off the ignition.
- Remove the protective cover from the fuses by pulling it outwards.
- The burnt fuse can be recognised as the metal strip which is visible in the centre of each fuse will have melted (viewing window).
- Remove the burnt fuse and replace with a new fuse of the same type.

CAUTION

Do not use fuses of a higher value, this could cause major damage.

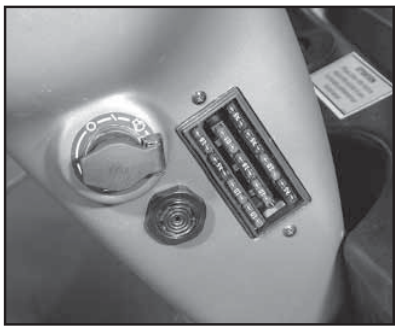
(fig. 3)

Battery fuses: checking (fig. 4)

- Switch off the ignition.
- Remove the protective cover from the fuses **(c)**.
- The burnt fuse can be recognised as the metal strip which is visible in the centre of each fuse will have melted (viewing window).
- Remove the burnt fuse and replace with a new fuse of the same type.

CAUTION

Do not use fuses of a higher value, this could cause major damage.

(fig. 4)

Downloaded from www.Manualslib.com manuals search engine

https://truckmanualshub.com/

Periodic Maintenance Operations

■ **Windscreen wiper blade (✶): replacing (fig. 1)**

- Loosen screws **(a)** to remove the blade from the windscreen wiper arm.
- Replace blade.
- Check that the screws **(a)** hold the blade tightly to the wiper arm.

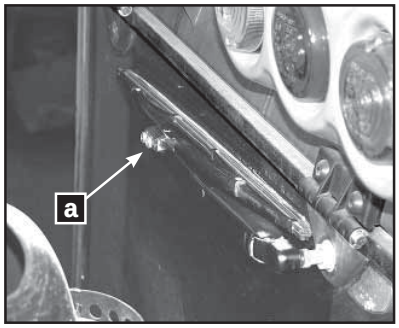

(fig. 1)

Downloaded from www.Manualslib.com manuals search engine

https://truckmanualshub.com/

Electric circuit

CABLE COLOURS	
A	Light Blue
B	White
C	Orange
G	Yellow
H	Grey
L	Blue
M	Brown
N	Black
R	Red
S	Pink
V	Green
Z	Violet

Remark: In the bicolor cables, the longitudinal or traverse shape of the marks on the protective coating are to indicate the color. For example:

G - V: Yellow and Green with traverse marks
G / V : Yellow / Green with longitudinal marks

Downloaded from www.Manualslib.com manuals search engine

https://truckmanualshub.com/

Electric circuit
C300H / C300HI

H1

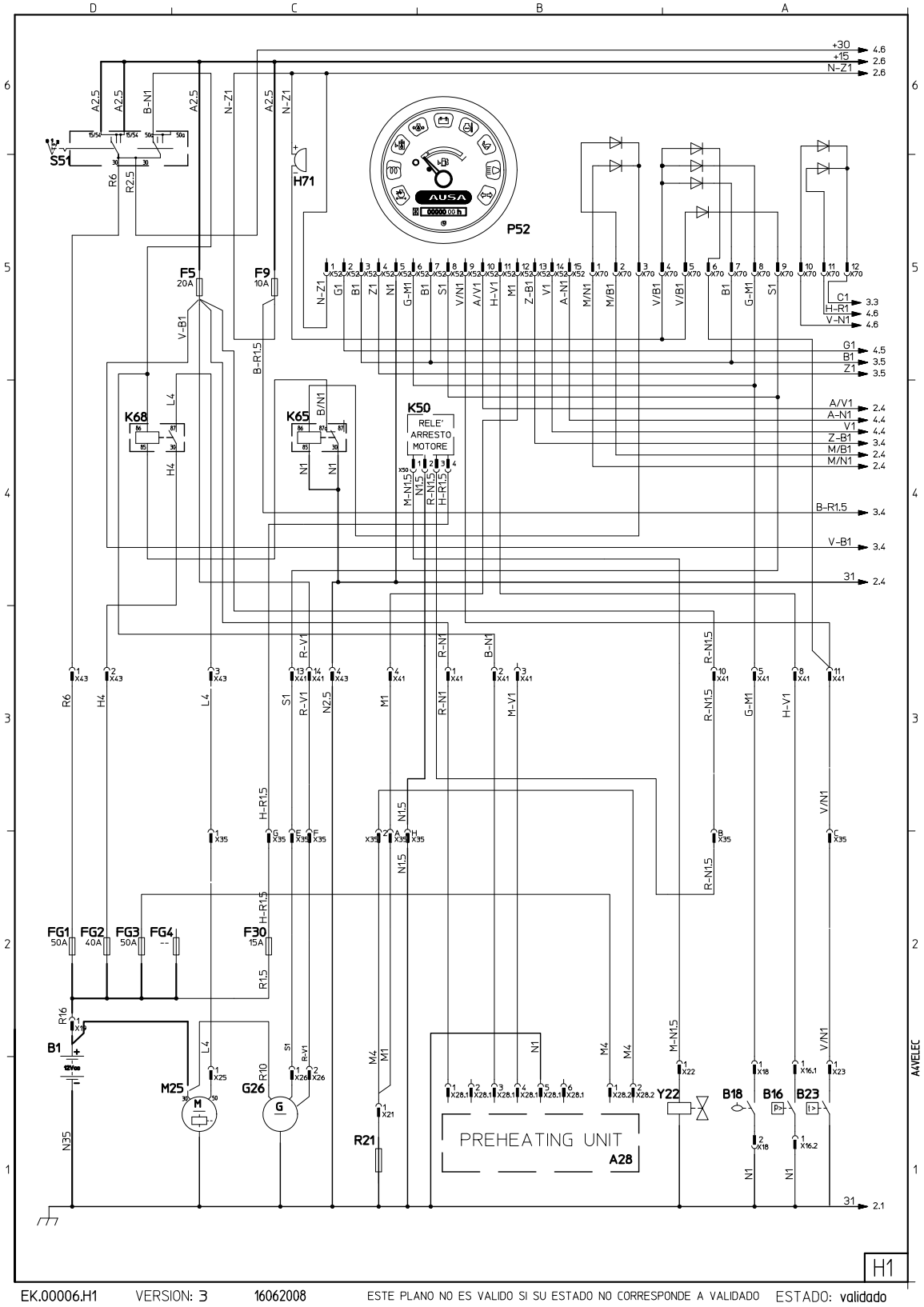

EK.00006.H1 VERSION: 3 16062008 ESTE PLANO NO ES VALIDO SI SU ESTADO NO CORRESPONDE A VALIDADO ESTADO: validado

Downloaded from www.Manualslib.com manuals search engine

https://truckmanualshub.com/

Electric circuit
C300H / C300HI

H2

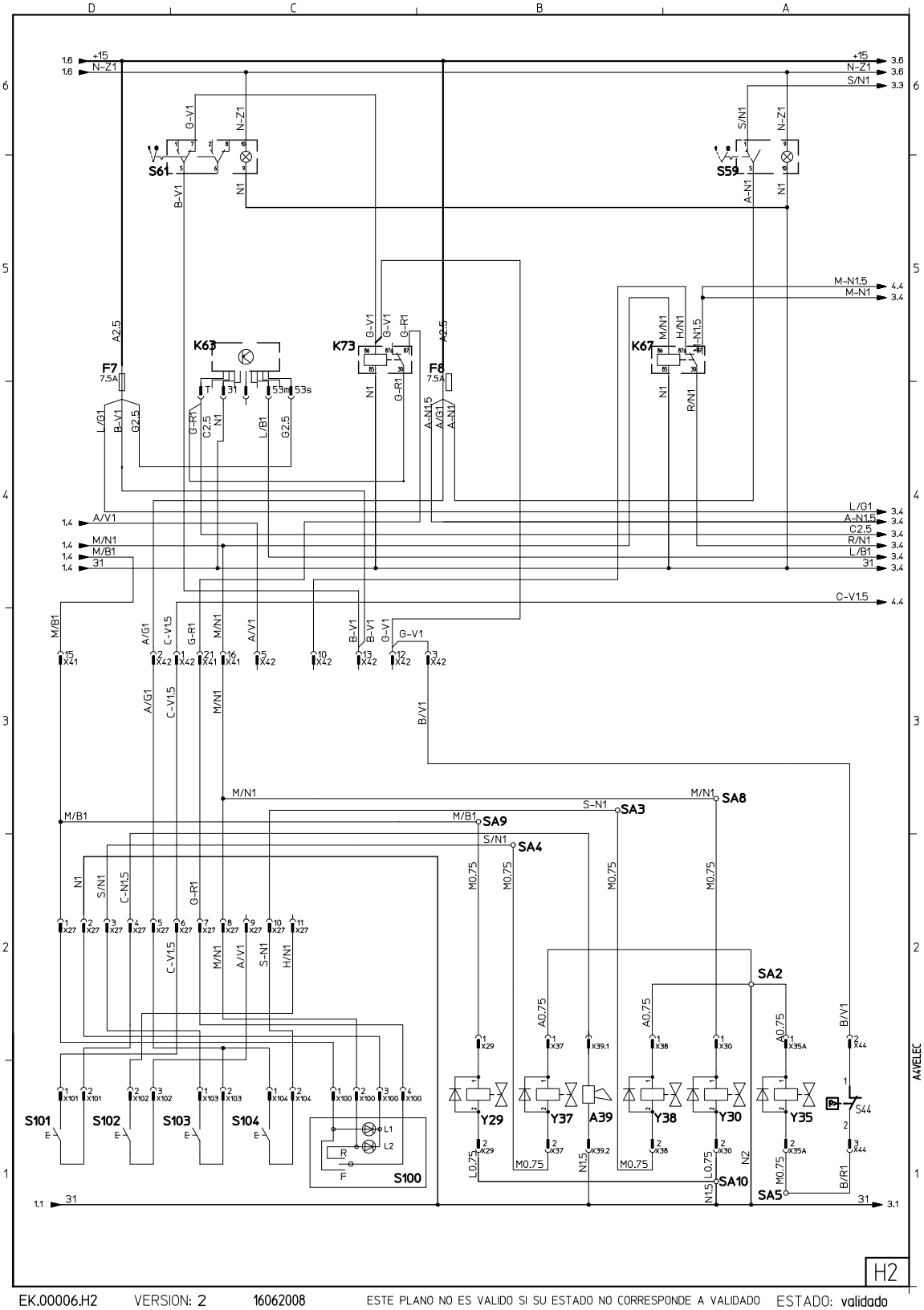

EK.00006.H2 VERSION: 2 16062008 ESTE PLANO NO ES VALIDO SI SU ESTADO NO CORRESPONDE A VALIDADO ESTADO: validado

Downloaded from www.Manualslib.com manuals search engine

https://truckmanualshub.com/

Electric circuit C300H / C300HI

H3

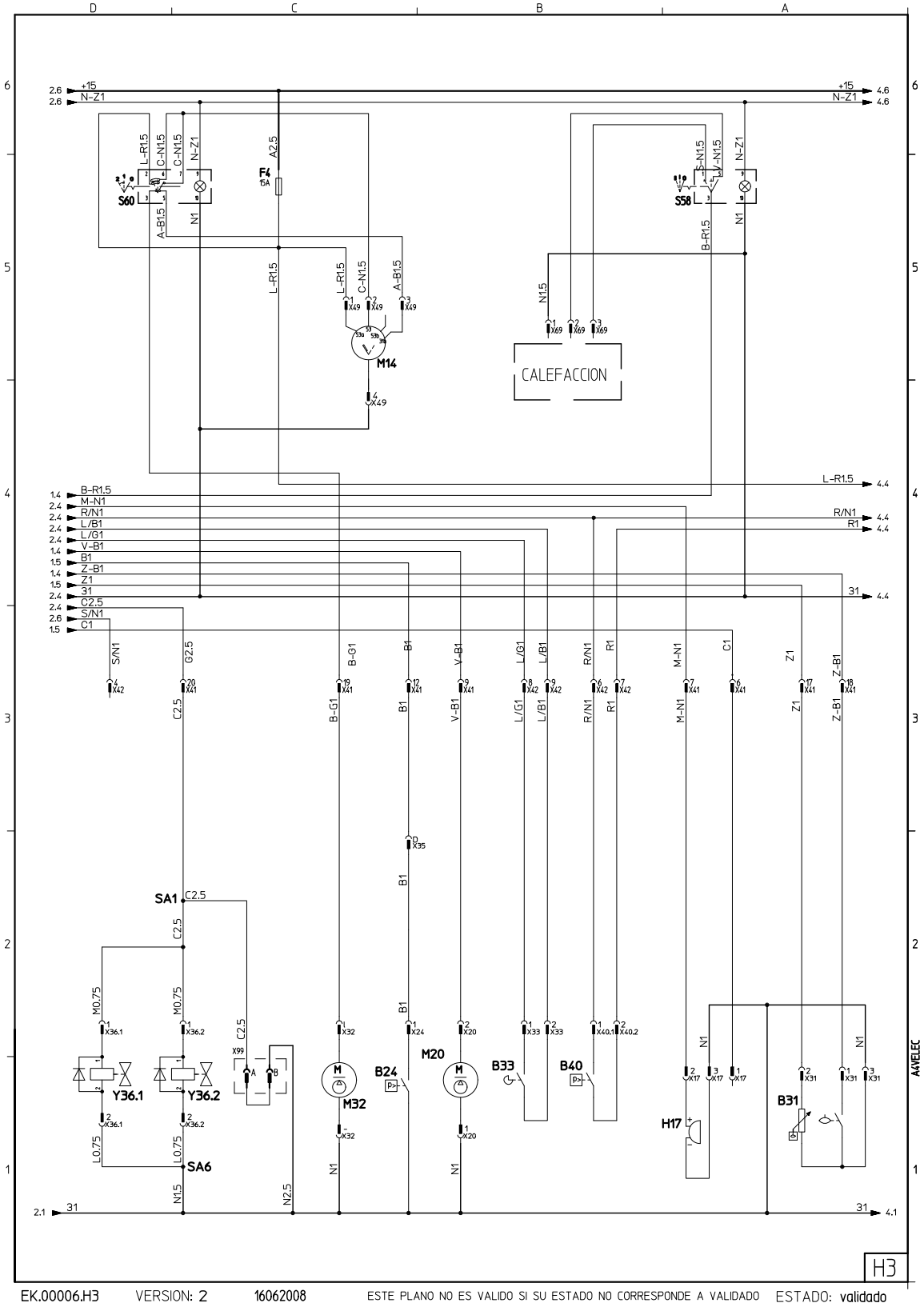

EK.00006.H3 VERSION: 2 16062008 ESTE PLANO NO ES VALIDO SI SU ESTADO NO CORRESPONDE A VALIDADO ESTADO: validado

Downloaded from www.Manualslib.com manuals search engine

https://truckmanualshub.com/

Electric circuit
C300H / C300HI

H4

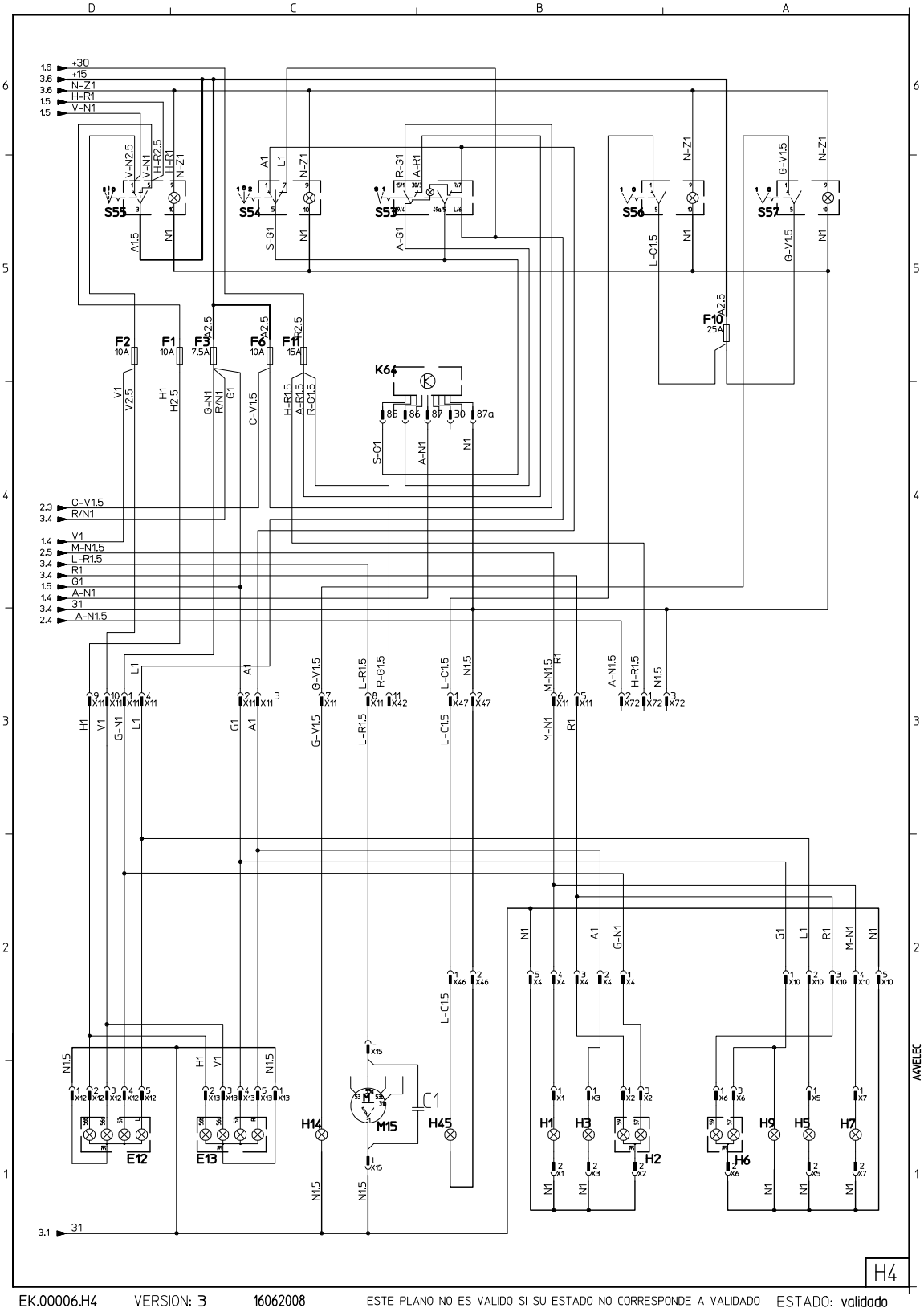

Downloaded from www.Manualslib.com manuals search engine

https://truckmanualshub.com/

Electric circuit
C300H / C300HI

Item	Description	Sh.
A28	Pre-heat relay	1
A39	Horn	2
B1	Battery	1
B16	Air filter blockage indicator	1
B18	Hydraulic oil level sensor	1
B23	Coolant temperature warning switch	1
B24	Engine oil pressure switch	3
B31	Fuel tank gauge	3
B33	Seat switch	3
B40	Brake lights switch	3
C2	Condensator	4
E12	Left hand headlight	4
E13	Right hand headlight	4
F1	Low beam fuse (10A)	4
F2	High Beam fuse (10A)	4
F3	Side lights / brake lights / reverse relay fuse (7'5A)	4
F4	Front windscreen wiper fuse (15A)	3
F5	Ignition feed stop solenoid / fuel pump / pre-heating / alternator fuse (7'5A)	1
F6	Ignition feed warning lights / horn fuse (10A)	4
F7	Seat switch / handbrake switch / timer relay fuse (7'5A)	2
F8	4x4 (not used)/3rd.and 4rth.service solenoids (sideshift or attachments) fuse (7'5A)	2
F9	Dash panel lights / heater motor fuse (10A)	1
F10	Flashing / rotating beacon and working lights fuse (25A)	4
F11	Permanent live warning lights switch (15A)	4
F30	Starter motor solenoid fuse	1
FG1	Permanent live main fuse (50A)	1
FG2	Starter motor relay main fuse (50A)	1
FG3	Pre-heat relay main fuse (50A)	1
FG4	Battery main fuse (200A)	1
G26	Alternator	1
H1	Right hand reverse light	4
H2	Brake and tail lights right hand side	4
H3	Rear right hand indicator	4
H5	Rear left hand indicator	4
H6	Brake and tail lights left hand side	4
H7	Left hand reverse light	4
H9	Number plate light	4
H14	Work lights	4
H17	Reverse alarm	3

Item	Description	Sh.
H45	Rotating / Flashing beacon	4
H71	Dash panel buzzer (warning lights)	1
K63	Seat switch timer relay	2
K64	Flasher relay	4
K65	Neutral start relay	1
K67	Reverse lights and alarm relay	2
K68	Starter motor relay	1
K73	FNR switch disconnection relay (handbrake on)	2
M14	Front wiper motor	3
M15	Rear wiper motor	4
M20	Electric fuel pump	3
M25	Starter motor	1
M32	Windscreen washer motor	3
P52	Instrument panel	1
R21	Pre-heater plugs	1
S44	Inching pedal switch	2
S51	Ignition barrel	1
S53	Hazard light switch	4
S54	Indicator switch	4
S55	Headlight / sidelight switch	4
S56	Rotating / Flashing beacon switch	4
S57	Worklight switch	4
S58	Heater motor switch	3
S59	4x4 switch (not used)	2
S60	Front windscreen wiper switch	3
S61	Handbrake switch	2
S100	Forward and Reverse switch (joystick)	2
S101	Horn switch (joystick)	2
S102	2 Speed selector switch (joystick) (not used)	2
S103	3rd. service switch (side shift) (joystick)	2
S104	4rd. service switch (attachments) (joystick)	2
Y22	Engine stop solenoid	1
Y29	Forward solenoid	2
Y30	Reverse solenoid	2
Y35	Handbrake solenoid	2
Y36	Joystick spool valve lock unit (1)	3
Y36A	Joystick spool valve lock unit (2)	3
Y37	3rd. service solenoid (side shift)	2
Y38	4rd. service solenoid (attachments)	2
X99	Joystick spool valve lock connector	3

Downloaded from www.Manualslib.com manuals search engine

https://truckmanualshub.com/

Electric circuit H1

C300H x4 / C300HI x4 / C350H / C350HI / C350H x4 / C350HI x4

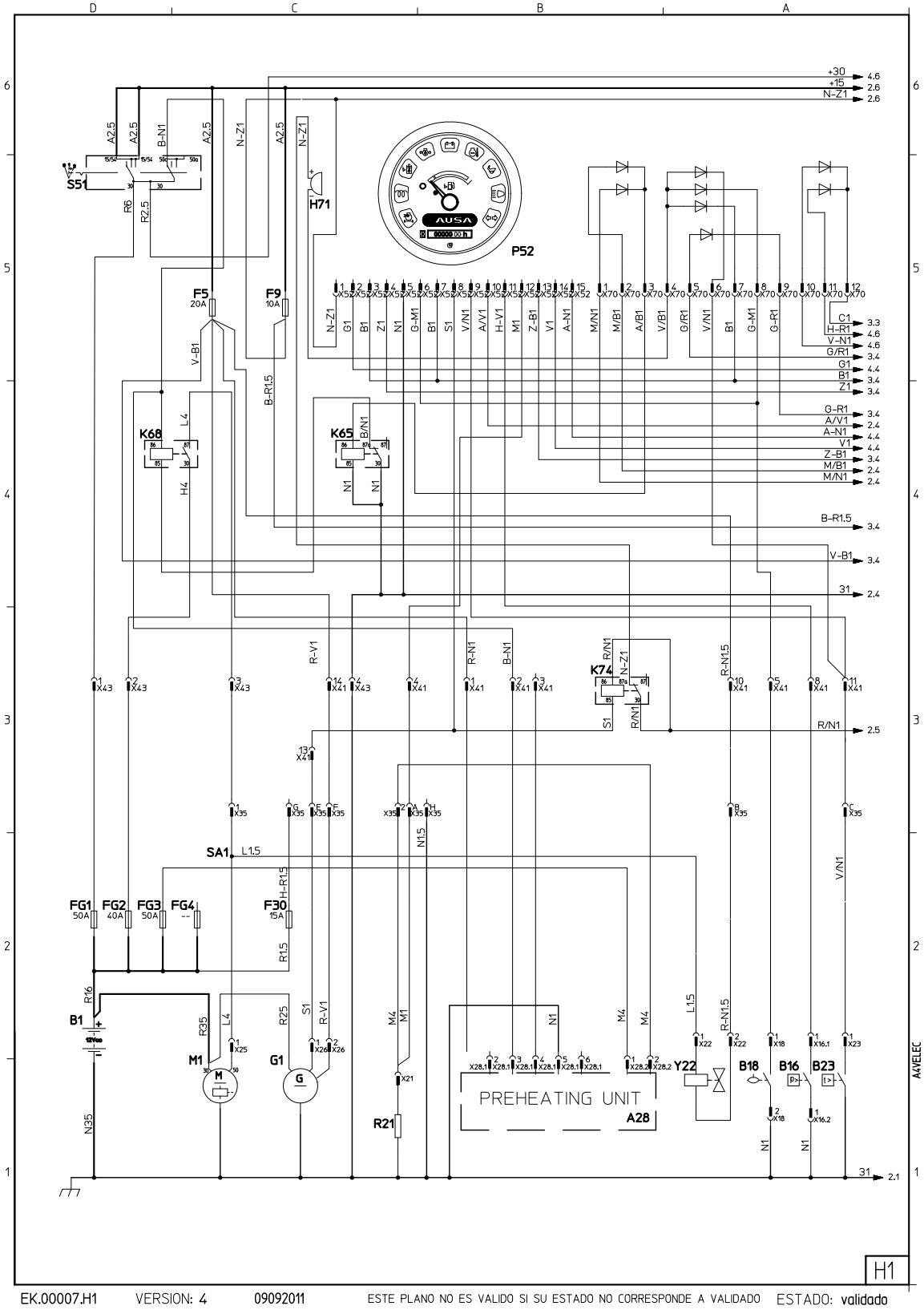

EK.00007.H1 VERSION: 4 09092011 ESTE PLANO NO ES VALIDO SI SU ESTADO NO CORRESPONDE A VALIDADO ESTADO: validado

Downloaded from www.Manualslib.com manuals search engine

https://truckmanualshub.com/

Electric circuit H2

C300H x4 / C300HI x4 / C350H / C350HI / C350H x4 / C350HI x4

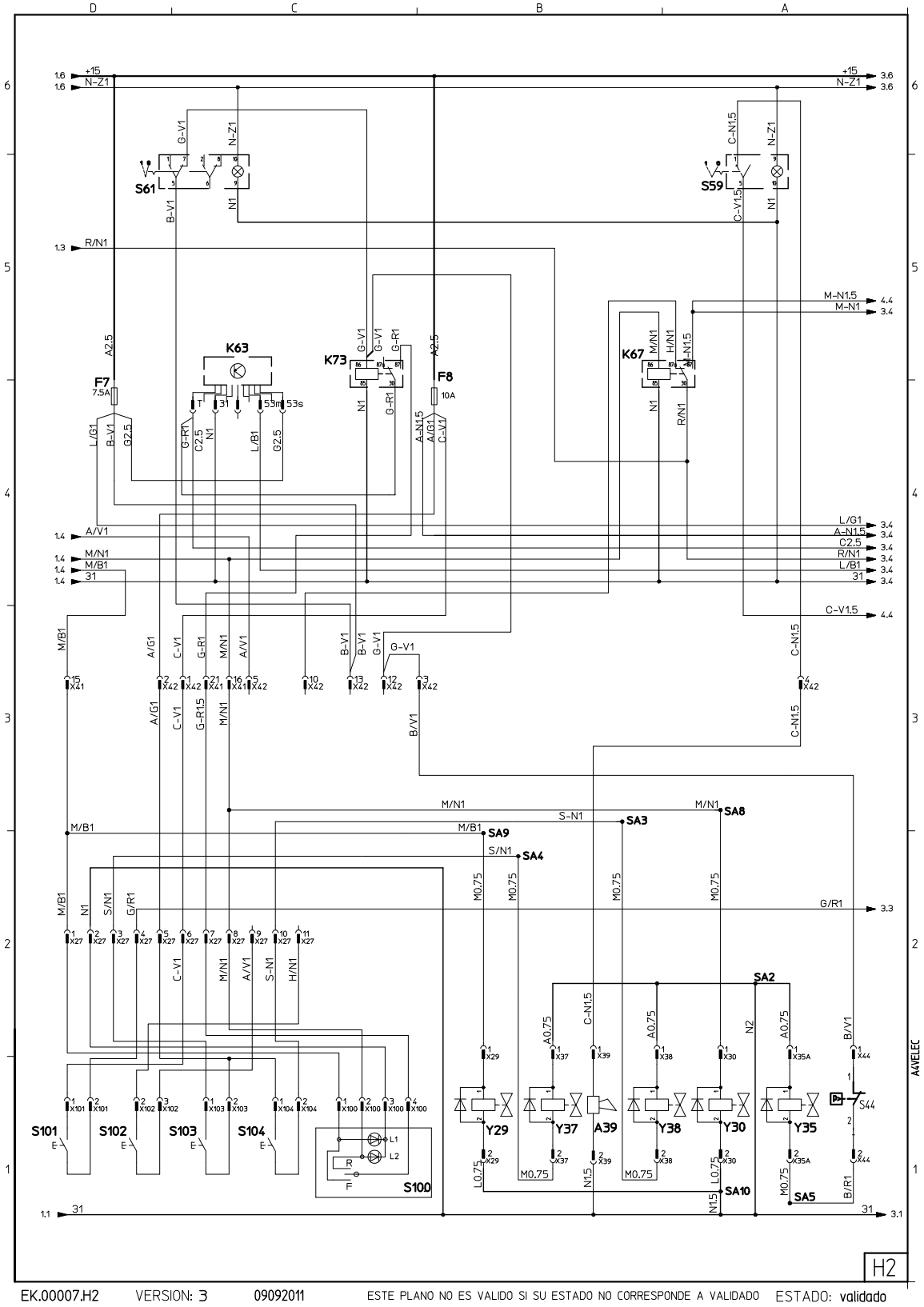

Downloaded from www.Manualslib.com manuals search engine

https://truckmanualshub.com/

Electric circuit H3

C300H x4 / C300HI x4 / C350H / C350HI / C350H x4 / C350HI x4

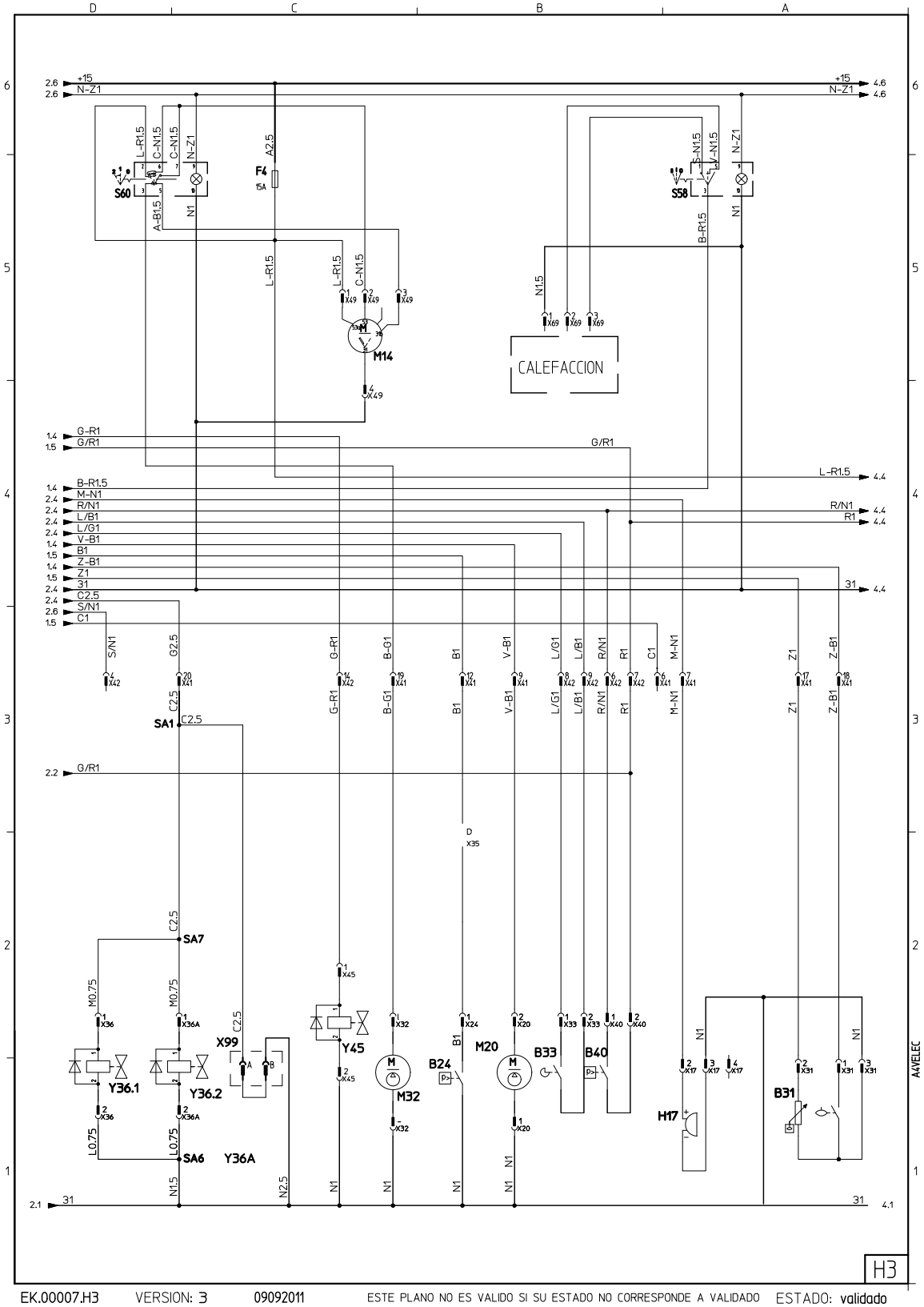

EK.00007.H3 VERSION: 3 09092011 ESTE PLANO NO ES VALIDO SI SU ESTADO NO CORRESPONDE A VALIDADO ESTADO: validado

Downloaded from www.Manualslib.com manuals search engine

https://truckmanualshub.com/

Electric circuit H4

C300H x4 / C300HI x4 / C350H / C350HI / C350H x4 / C350HI x4

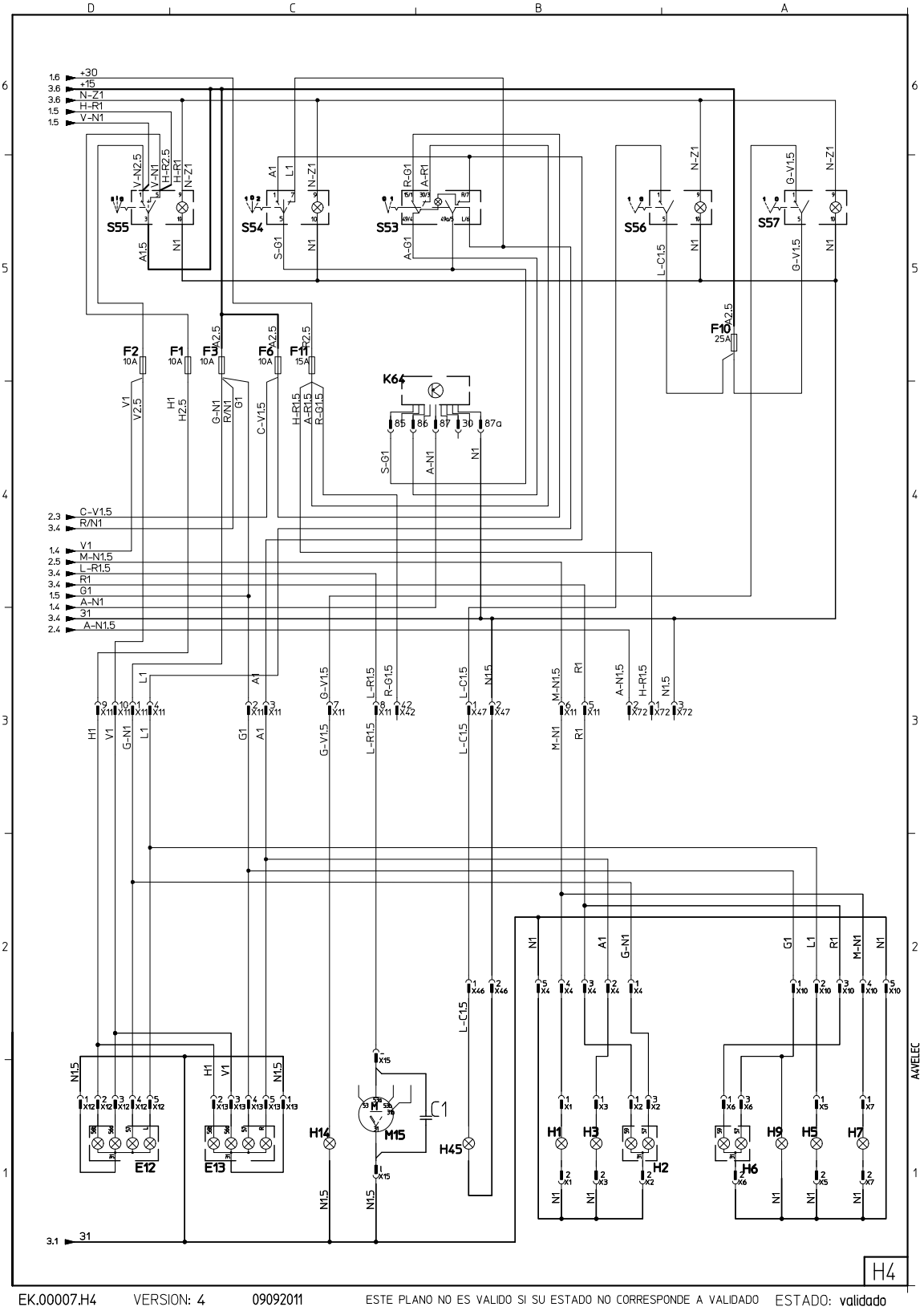

Downloaded from www.Manualslib.com manuals search engine

https://truckmanualshub.com/

Electric circuit
C300H x4 / C300HI x4 / C350H / C350HI / C350H x4 / C350HI x4

Item	Description	Sheet
A28	Pre-heat relay	1
A39	Horn	2
B1	Battery	1
B16	Air filter blockage indicator	1
B18	Hydraulic oil level sensor	1
B23	Coolant temperature warning switch	1
B24	Engine oil pressure switch	3
B31	Fuel tank gauge	3
B33	Seat switch	3
B40	Brake lights switch	3
C2	Condensator	4
E12	Left hand headlight	4
E13	Right hand headlight	4
F1	Low beam fuse (10A)	4
F2	High Beam fuse (10A)	4
F3	Side lights / brake lights / reverse relay fuse (7'5A)	4
F4	Front windscreen wiper fuse (15A)	3
F5	Ignition feed stop solenoid / fuel pump / pre-heating / alternator fuse (7'5A)	1
F6	Ignition feed warning lights / horn fuse (10A)	4
F7	Seat switch / handbrake switch / timer relay fuse (7'5A)	2
F8	4x4 (not used)/3rd.and 4rth.service solenoids (sideshift or attachments) fuse (7'5A)	2
F9	Dash panel lights / heater motor fuse (10A)	1
F10	Flashing / rotating beacon and working lights fuse (25A)	4
F11	Permanent live warning lights switch (15A)	4
F30	Starter motor solenoid fuse	1
FG1	Permanent live main fuse (50A)	1
FG2	Starter motor relay main fuse (50A)	1
FG3	Pre-heat relay main fuse (50A)	1
FG4	Battery main fuse (200A)	1
G26	Alternator	1
H1	Right hand reverse light	4
H2	Brake and tail lights right hand side	4
H3	Rear right hand indicator	4
H5	Rear left hand indicator	4
H6	Brake and tail lights left hand side	4
H7	Left hand reverse light	4
H9	Number plate light	4
H14	Work lights	4
H17	Reverse alarm	3
H45	Rotating / Flashing beacon	4

Item	Description	Sheet
H71	Dash panel buzzer (warning lights)	1
K63	Seat switch timer relay	2
K64	Flasher relay	4
K65	Neutral start relay	1
K67	Reverse lights and alarm relay	2
K68	Starter motor relay	1
K73	FNR switch disconnection relay (handbrake ON)	2
K74	Disable alarm buzzer relay (engine ON)	1
M14	Front wiper motor	3
M15	Rear wiper motor	4
M20	Electric fuel pump	3
M25	Starter motor	1
M32	Windscreen washer motor	3
P52	Instrument panel	1
R21	Pre-heater plugs	1
S44	Inching pedal switch	2
S51	Ignition barrel	1
S53	Hazard light switch	4
S54	Indicator switch	4
S55	Headlight / sidelight switch	4
S56	Rotating / Flashing beacon switch	4
S57	Worklight switch	4
S58	Heater motor switch	3
S59	4x4 switch (not used)	2
S60	Front windscreen wiper switch	3
S61	Handbrake switch	2
S100	Forward and Reverse switch (joystick)	2
S101	Horn switch (joystick)	2
S102	2 Speed selector switch (joystick) (not used)	2
S103	3rd. service switch (side shift) (joystick)	2
S104	4rd. service switch (attachments) (joystick)	2
Y22	Engine stop solenoid	1
Y29	Forward solenoid	2
Y30	Reverse solenoid	2
Y35	Handbrake solenoid	2
Y36	Joystick spool valve lock unit (1)	3
Y36A	Joystick spool valve lock unit (2)	3
Y37	3rd. service solenoid (side shift)	2
Y38	4rd. service solenoid (attachments)	2
Y45	Full grip solenoid (4x4)	3
X99	Joystick spool valve lock connector	3

Downloaded from www.Manualslib.com manuals search engine

https://truckmanualshub.com/

Hydraulic diagram (Hydraulic appliances)

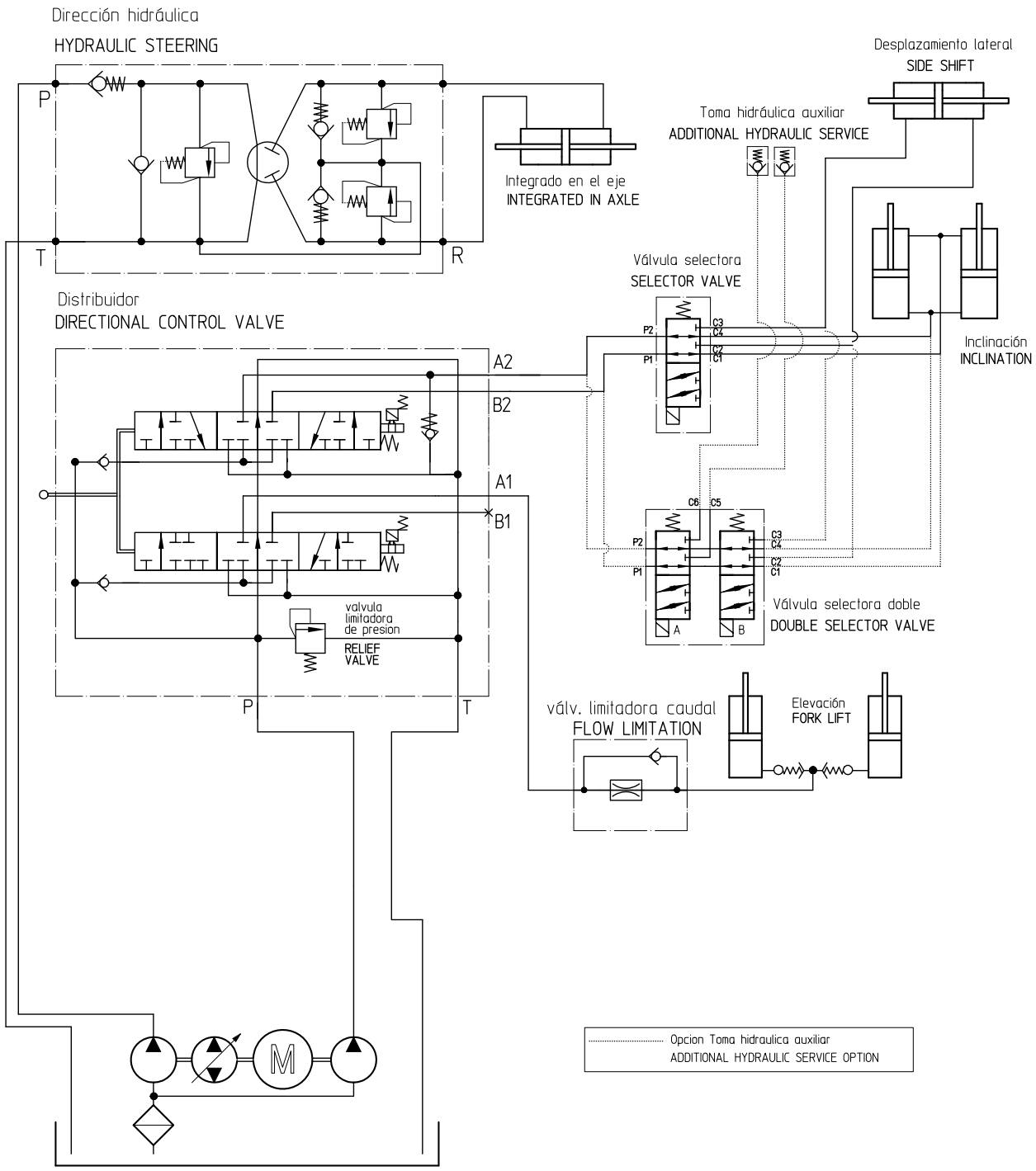

Downloaded from www.Manualslib.com manuals search engine

https://truckmanualshub.com/

Hydraulic diagram (Transmission)
C300H / C300HI

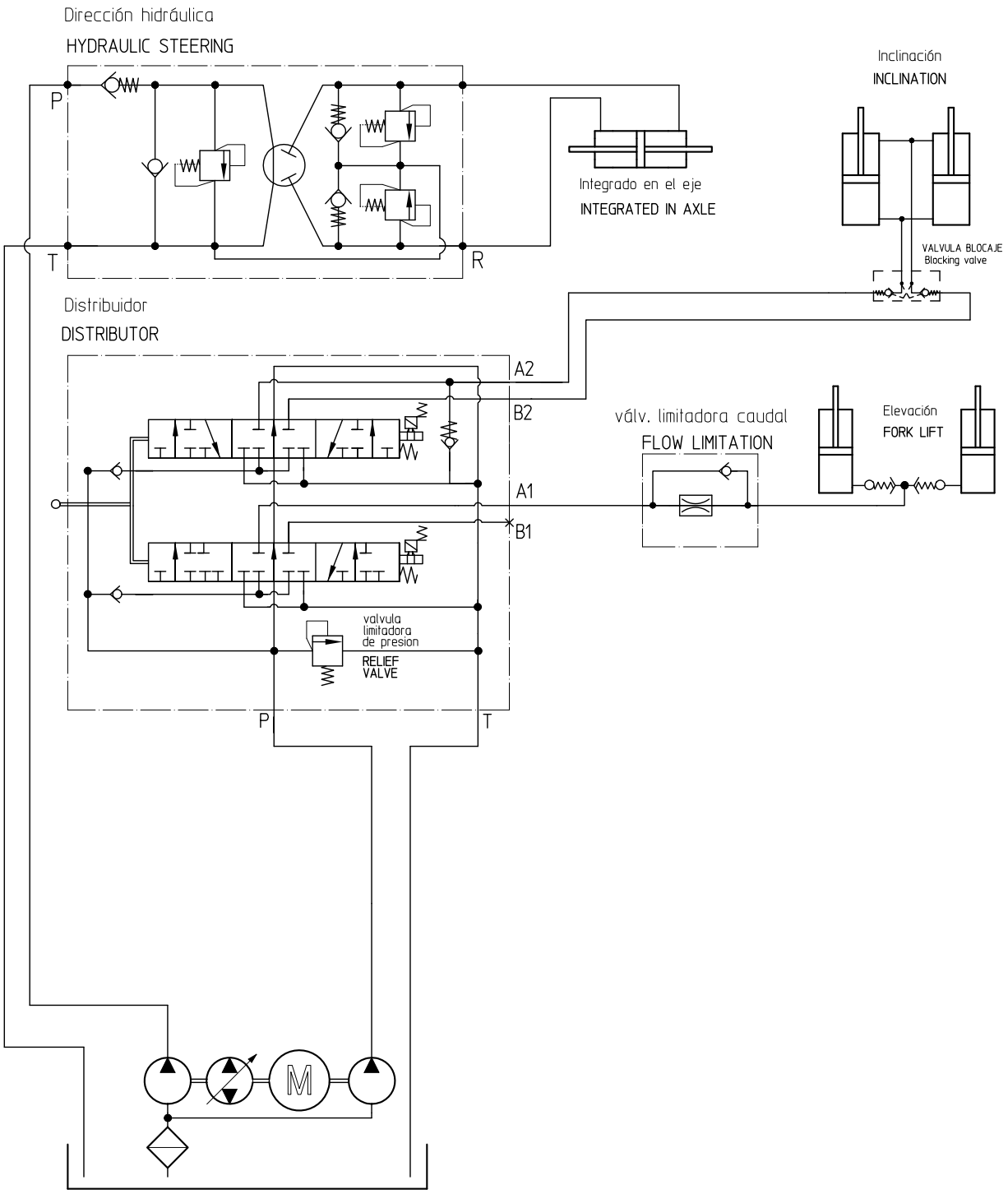

Downloaded from www.Manualslib.com manuals search engine

https://truckmanualshub.com/

Hydraulic diagram (Transmission)
C300H x4 / C300HI x4 / C350H / C350HI / C350H x4 / C350HI x4

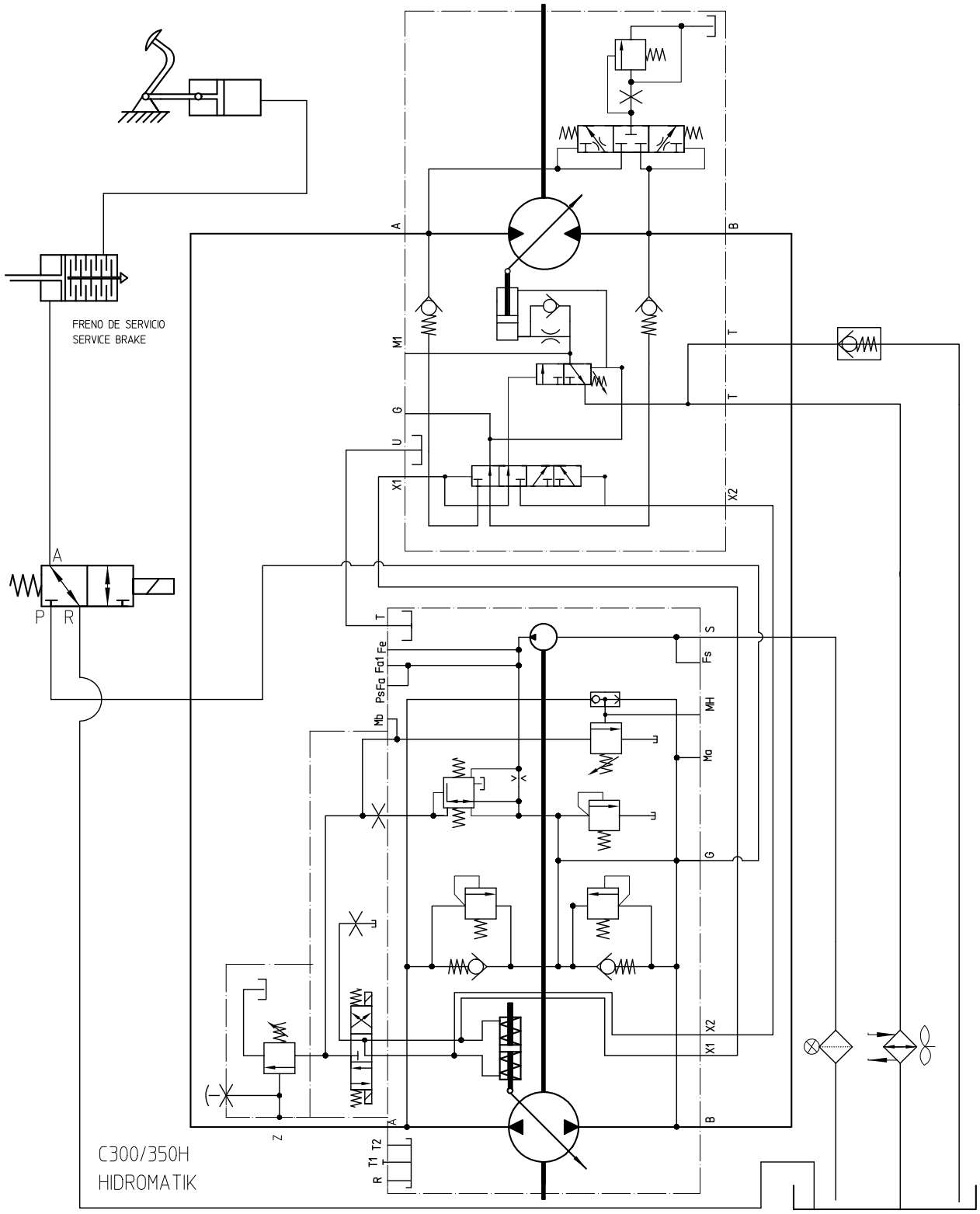

Downloaded from www.Manualslib.com manuals search engine

https://truckmanualshub.com/

Transmission Troubleshooting

FAILURES	POSSIBLE CAUSE	CHECK	LOCATION	CORRECT VALUES
The machine does not move neither forward nor reserve	Oil Level is low	Oil level	Oil tank	
	Suction hose is bent or squashed		Suction hose	
	Hydraulic oil cartridge is clogged	Depressor marked in vacuum gauge	Suction filter	< 0,3 bar
	Faulty coupling		Motor or pump coupling	
	Pre-load pump turns counter wise to engine	Load pressure	Pressure intake with a gauge on pump sport M3 (SAUER GROUP) or S (BOSCH REXROTH GROUP)	20 ÷ 24 bar
	Faulty pre-load pump			
	Faulty oil motor			
	Directional solenoid does not work	Resistance and voltage Control box (SAUER)	Directional solenoids in pump	
	Inching is seized, disconnected or badly set (SAUER)	Throw and connections	Pedal and electric connections	
	Faulty oil strainer	Faulty oil suction Seadling of tubes connectors and suction	Oil connections	
Non instant motion response, abnormal	Oil is air emulsified or Oil level is low	Oil level seating of pipes / hoses, fittings	Oil tank, fittings	
	Vacuum filter is clogged	Depressor marked in vacuum gauge	Vacuum filter	< 0,3 bar
	Inching is seized, disco meeted or badly connected (SAUER)	Potentiometer, linkage and connections	Pedal and electric connections	
Engine is overloaded	Low engine power or faulty engine	Engine does not accelerate at max. Load	Engine	85 ÷ 95 % max rpm. of engine
	High pressure limit is set too low	Working pressure	Working pressure ports in pump	Recommended max. Pressure 345 or 410 bar.
	Inching is seized (SAUER)	Potentiometer / linkage	Pedal	< 0,3 bar
Low traction power	Engine does not work at nominal level or it's over	Haul of accelerator lever	Engine	85 ÷ 95 % max rpm. of engine
	Low load pressure	Load pressure	Pressure intake with a gauge on pump sport M3 (SAUER GROUP) or S (BOSCH REXROTH GROUP)	20 ÷ 24 bar.
	Inching is seized (SAUER)	Potentiometer / linkage	Pedal	
	M4, M5 (SAUER) or Xa, Xb (BOSCH REXROTH) Piloting hoses of hydrostatic motor are reversed.	Hydraulic chart	Connections	
	Hydraulic Oil overheating	Dirt in radiator	Radiator oil	
Hydraulic oil overheating	Low oil level	Oil level	Oil tank	
	Faulty oil	Oil degradation an pollution		
	Suction line is not sealed	Sealing for hoses, fittings and cartridge	Oil connections	
	Faulty high pressure relief valves	Working pressure	Working pressure ports in pump	Recommended max. Pressures 345 or 410 bar.
	Radiator is dogged	Dirt in radiator		
Transmission over speed	Max. Engine RPM is higher than recommended	Max. RPM on the engine	Engine	
	Faulty hydrostatic motor. Does not move to max. flow.			
Irregular running	M4, M5 (SAUER) or Xa, Xb (BOSCH REXROTH) Piloting hoses of hydrostatic motor are reversed.	Hydraulic Chart	Oil connections	
Insufficient acceleration	Low engine power	Haul of accelerator lever	Engine	
	M4, M5 (SAUER) or Xa, Xb (BOSCH REXROTH) Piloting hoses of hydrostatic motor are reversed.	Hydraulic Chart	Oil connections	

Downloaded from www.Manualslib.com manuals search engine

https://truckmanualshub.com/

EC DECLARATION OF CONFORMITY

The manufacturer **AUSA Center, S.L.U.,** established on Ctra. De Vic, km 2.8, 08243 – Manresa – Barcelona – Spain, declares that the machine assigned below:

Generic denomination: **ENGINE DRIVEN COUNTERBALANCED FORKLIFT TRUCK**

Model/Type : **C XXX X**

Serial number: **XXXXXXXX**

fulfils all relevant provisions of the machinery Directive 2006/42/EC

and it conforms with the next European Directives:

Electromagnetic Compatibility Directive 2004/108/EC

Sound level Directives of machinery used outdoors, 2000/14/EC and 2005/88/EC

Exhaust emissions Directives, 97/68 and 2004/26

and also it conforms with the following harmonized European Standards:

EN 1726-1 – Safety of industrial trucks – Self-propelled trucks up to and including 10.000 kg capacity and industrial tractors with a drawbar pull up to and including 20.000 N.

The certification procedure has been carried out in accordance with the provisions relating to non-dangerous machinery in the above mentioned Directives.

Name and address of the person authorized to compile the technical file:

Mr Antoni Tachó Figuerola

Ctra. De Vic, km 2.8, 08243, Manresa, Barcelona, Spain

Signed by Mr Antoni Tachó Figuerola

Given at Manresa on

AUSA Center, S.L.U.
Cra. de Vic, Km. 2,8 - P.O.B. 194
08243 MANRESA (Barcelona) España

Tel. 34-93 87 47 311
Fax 34-93 874 12 11
Web: http://www.ausa.com

Downloaded from www.Manualslib.com manuals search engine

https://truckmanualshub.com/

Downloaded from www.Manualslib.com manuals search engine

https://truckmanualshub.com/

AUSA

09.099G2.01

Downloaded from www.Manualslib.com manuals search engine

https://truckmanualshub.com/

Downloaded from www.Manualslib.com manuals search engine