https://truckmanualshub.com/

YARD-MAN by MTD

OPERATOR'S MANUAL

AutoDrive™ Garden Tractor
Model 804

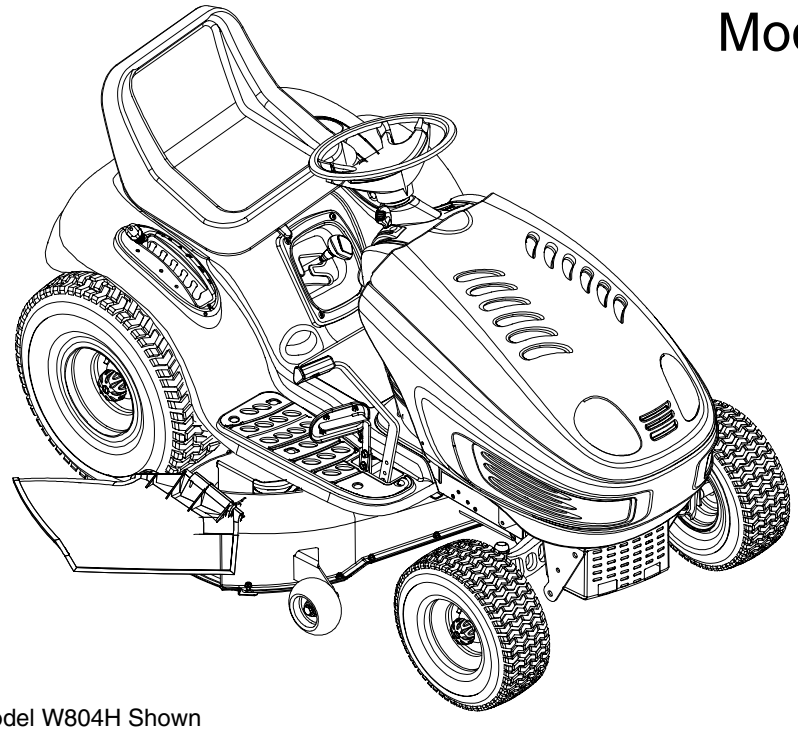

Model W804H Shown

MTD For A Growing World.™

IMPORTANT: READ SAFETY RULES AND INSTRUCTIONS CAREFULLY

Warning: This unit is equipped with an internal combustion engine and should not be used on or near any unimproved forest-covered, brush-covered or grass-covered land unless the engine's exhaust system is equipped with a spark arrester meeting applicable local or state laws (if any). If a spark arrester is used, it should be maintained in effective working order by the operator. In the State of California the above is required by law (Section 4442 of the California Public Resources Code). Other states may have similar laws. Federal laws apply on federal lands. A spark arrester for the muffler is available through your nearest engine authorized service dealer or contact the service department, P.O. Box 368022 Cleveland, Ohio 44136-9722.

MTD PRODUCTS INC. P.O. BOX 368022 CLEVELAND, OHIO 44136-9722

PRINTED IN U.S.A.

FORM NO. 770-10237A
(9/99)

https://truckmanualshub.com/

SECTION 1: TABLE OF CONTENTS

	PAGE
FINDING YOUR MODEL NUMBER	2
CALLING CUSTOMER SUPPORT	2
IMPORTANT SAFE OPERATION PRACTICES	3
SAFETY LABLES FOUND ON YOUR UNIT	5
SLOPE GUAGE	6
ATTACHMENTS & ACCESSORIES	7
TRACTOR SET-UP	7
CONTROLS	9
OPERATION	12
ADJUSTMENTS	15
MAINTENANCE	18
LUBRICATION	25
TROUBLESHOOTING CHART	26
PARTS LIST	28
WARRANY INFORMATION	Back Cover

SECTION 2: FINDING YOUR MODEL NUMBER

This Operator's Manual is an important part of your new rider. It will help you assemble, prepare and maintain your rider. Please read and understand what it says.

Before you start to prepare your tractor for its first use, please locate the model plate and copy the information from it in this Operator's Manual. The information on the model plate is very important if you need help from your dealer or the MTD Customer Support Department.

- Every tractor has a model plate. You can locate it by lifting the seat and looking at the seat bracket.
- An example of what the model plate will look like is shown below.

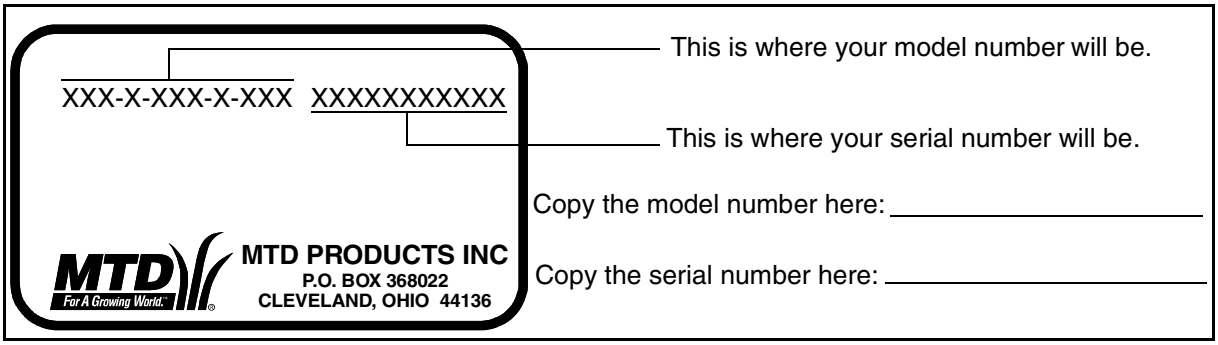

SECTION 3: CALLING CUSTOMER SUPPORT

- **LOCATE YOUR MODEL NUMBER AND SERIAL NUMBER —** Record this information in the space provided. To find your unit's specific model number and serial number, see SECTION 2: FINDING YOUR MODEL NUMBER.
- If you are having difficulty assembling this product or if you have any questions regarding the controls, operation or maintenance of this unit, please call the Customer Support Department.
- Customer Support can be reached by dialing: **1- (330) 220-4MTD (4683)**
  or
  1- (800)-800-7310
- Please have your model number and serial number ready when you call.
- Although both numbers are important, you will be asked to enter only your ***serial*** number before your call can be processed.

https://truckmanualshub.com/

SECTION 4: IMPORTANT SAFE OPERATION PRACTICES

WARNING: THIS SYMBOL POINTS OUT IMPORTANT SAFETY INSTRUCTIONS WHICH, IF NOT FOLLOWED, COULD ENDANGER THE PERSONAL SAFETY AND/OR PROPERTY OF YOURSELF AND OTHERS. READ AND FOLLOW ALL INSTRUCTIONS IN THIS MANUAL BEFORE ATTEMPTING TO OPERATE YOUR LAWN MOWER. FAILURE TO COMPLY WITH THESE INSTRUCTIONS MAY RESULT IN PERSONAL INJURY. WHEN YOU SEE THIS SYMBOL, HEED ITS WARNING.

WARNING: The Engine Exhaust from this product contains chemicals known to the State of California to cause cancer, birth defects or other reproductive harm.

DANGER: Your lawn mower was built to be operated according to the rules for safe operation in this manual. As with any type of power equipment, carelessness or error on the part of the operator can result in serious injury. This lawn mower is capable of amputating hands and feet and throwing objects. Failure to observe the following safety instructions could result in serious injury or death.

1. GENERAL OPERATION

- Read, understand, and follow all instructions in the operator's manual and on the machine before starting. Keep this manual in a safe place for future and regular reference and for ordering replacement parts.
- Only allow responsible individuals familiar with the instructions to operate the machine. Know controls and how to stop the machine quickly.
- Do not put hands or feet under cutting deck or near rotating parts.
- Clear the area of objects such as rocks, toys, wire, etc., which could be picked up and thrown by the blade. A small object may have been overlooked and could be accidentally thrown by the mower in any direction and cause injury to you or a bystander. To help avoid a thrown objects injury, keep children, bystanders and helpers at least 75 feet from the mower while it is in operation. Always wear safety glasses or safety goggles during operation or while performing an adjustment or repair, to protect eyes from foreign objects. Stop the blade(s) when crossing gravel drives, walks or roads.
- Be sure the area is clear of other people before mowing. Stop machine if anyone enters the area.
- Never carry passengers.
- Disengage blade(s) before shifting into reverse and backing up. Always look down and behind before and while backing.
- Be aware of the mower and attachment discharge direction and do not point it at anyone. Do not operate the mower without either the entire grass catcher or the chute guard in place.
- Slow down before turning. Operate the machine smoothly. Avoid erratic operation and excessive speed.
- Never leave a running machine unattended. Always turn off blade(s), place transmission in neutral, set park brake, stop engine and remove key before dismounting.
- Turn off blade(s) when not mowing.
- Stop engine and wait until blade(s) comes to a complete stop before (a) removing grass catcher or unclogging chute, or (b) making any repairs, adjusting or removing any grass or debris.
- Mow only in daylight or good artificial light.
- Do not operate the machine while under the influence of alcohol or drugs.
- Watch for traffic when operating near or crossing roadways.
- Use extra care when loading or unloading the machine into a trailer or truck. This unit should not be driven up or down a ramp onto a trailer or truck under power, because the unit could tip over, causing serious personal injury. The unit must be pushed manually on a ramp to load or unload properly.
- Never make a cutting height adjustment while engine is running if operator must dismount to do so.
- Wear sturdy, rough-soled work shoes and close-fitting slacks and shirts. Do not wear loose fitting clothes or jewelry. They can be caught in moving parts. Never operate a unit in bare feet, sandals, or sneakers.
- Check overhead clearance carefully before driving under power lines, wires, bridges or low hanging tree branches, before entering or leaving buildings, or in any other situation where the operator may be struck or pulled from the unit, which could result in serious injury.

https://truckmanualshub.com/

- Disengage all attachment clutches, thoroughly depress the brake pedal, and shift into neutral before attempting to start engine.
- Your mower is designed to cut normal residential grass of a height no more than 10". Do not attempt to mow through unusually tall, dry grass (e.g., pasture) or piles of dry leaves. Debris may build up on the mower deck or contact the engine exhaust presenting a potential fire hazard.

2. SLOPE OPERATION

Slopes are a major factor related to loss of control and tip-over accidents which can result in severe injury or death. All slopes require extra caution. If you cannot back up the slope or if you feel uneasy on it, do not mow it.
For your safety, use the slope gauge included as part of this manual to measure slopes before operating this unit on a sloped or hilly area. If the slope is greater than 15° as shown on the slope gauge, do not operate this unit on that area or serious injury could result.

DO:

- Mow up and down slopes, not across.
- Remove obstacles such as rocks, limbs, etc.
- Watch for holes, ruts or bumps. Uneven terrain could overturn the machine. Tall grass can hide obstacles.
- Use slow speed. Always keep machine in gear when going down slopes to take advantage of engine braking action.
- Follow the manufacturer's recommendations for wheel weights or counterweights to improve stability.
- Use extra care with grass catchers or other attachments. These can change the stability of the machine.
- Keep all movement on the slopes slow and gradual. Do not make sudden changes in speed or direction. Rapid engagement or braking could cause the front of the machine to lift and rapidly flip over backwards which could cause serious injury.
- Avoid starting or stopping on a slope. If tires lose traction, disengage the blade(s) and proceed slowly straight down the slope.

DO NOT:

- Do not turn on slopes unless necessary; then, turn slowly and gradually downhill, if possible.
- Do not mow near drop-offs, ditches or embankments. The mower could suddenly turn over if a wheel is over the edge of a cliff or ditch, or if an edge caves in.
- Do not mow on wet grass. Reduced traction could cause sliding.
- Do not try to stabilize the machine by putting your foot on the ground.
- Do not use grass catcher on steep slopes.

3. CHILDREN

Tragic accidents can occur if the operator is not alert to the presence of children. Children are often attracted to the machine and the mowing activity. Never assume that children will remain where you last saw them.

- Keep children out of the mowing area and in watchful care of an adult other than the operator.
- Be alert and turn machine off if children enter the area.
- Before and when backing, look behind and down for small children.
- Never carry children, even with the blades off. They may fall off and be seriously injured or interfere with the safe machine operation.
- Never allow children under 14 years old to operate the machine. Children 14 years and over should only operate machine under close parental supervision and proper instruction.
- Remove key when machine is unattended to prevent unauthorized operation.
- Use extra care when approaching blind corners, shrubs, trees or other objects that may obscure your vision of a child or other hazard.

4. SERVICE

- Use extreme care in handling gasoline and other fuels. They are extremely flammable and the vapors are explosive.
- Use only an approved container.
- Never remove fuel cap or add fuel with the engine running. Allow engine to cool at least two minutes before refueling.
- Replace fuel cap securely and wipe off any spilled fuel before starting the engine as it may cause a fire or explosion.
- Extinguish all cigarettes, cigars, pipes and other sources of ignition.
- Never refuel the machine indoors because fuel vapors will accumulate in the area.
- Never store the fuel container or machine inside where there is an open flame or spark, such as a gas hot water heater, space heater or furnace.
- Never run a machine inside a closed area.
- To reduce fire hazard, keep the machine free of grass, leaves or other debris build-up. Clean up oil or fuel spillage. Allow machine to cool at least 5 minutes before storing.
- Before cleaning, repairing or inspecting, make certain the blade and all moving parts have stopped. Disconnect the spark plug wire, and keep the wire away from the spark plug to prevent accidental starting.
- Check the blade and engine mounting bolts at frequent intervals for proper tightness. Also, visually inspect blade for damage (e.g., excessive wear, bent, cracked). Replace with blade which meets original equipment specifications.

https://truckmanualshub.com/

- Keep all nuts, bolts and screws tight to be sure the equipment is in safe working condition.
- Never tamper with safety devices. Check their proper operation regularly. Use all guards as instructed in this manual.
- After striking a foreign object, stop the engine, remove the wire from the spark plug and thoroughly inspect the mower for any damage. Repair the damage before restarting and operating the mower.
- Grass catcher components are subject to wear, damage and deterioration, which could expose moving parts or allow objects to be thrown. For your safety protection, frequently check components and replace with manufacturer's recommended parts when necessary.
- Mower blades are sharp and can cut. Wrap the blade(s) or wear gloves and use extra caution when servicing blade(s).
- Check brake operation frequently. Adjust and service as required.
- Muffler, engine and belt guards become hot during operation and can cause a burn. Allow to cool down before touching.
- Do not change the engine governor settings or overspeed the engine. Excessive engine speeds are dangerous.
- Observe proper disposal laws and regulations. Improper disposal of fluids and materials can harm the environment and the ecology.
- Prior to disposal, determine the proper method to dispose of waste from your local Environmental Protection Agency. Recycling centers are established to properly dispose of materials in an environmentally safe fashion.
- Use proper containers when draining fluids. Do not use food or beverage containers that may mislead someone into drinking from them. Properly dispose of the containers immediately following the draining of fluids.
- DO NOT pour oil or other fluids into the ground, down a drain or into a stream, pond, lake or other body of water. Observe Environmental Protection Agency regulations when disposing of oil, fuel, coolant, brake fluid, filters, batteries, tires and other harmful waste.

WARNING - YOUR RESPONSIBILITY: Restrict the use of this power machine to persons who read, understand and follow the warnings and instructions in this manual and on the machine.

Figure 1 Safety Labels found on your unit

Slope Gauge

USE THIS PAGE AS A GUIDE TO DETERMINE SLOPES WHERE YOU MAY NOT OPERATE SAFELY.

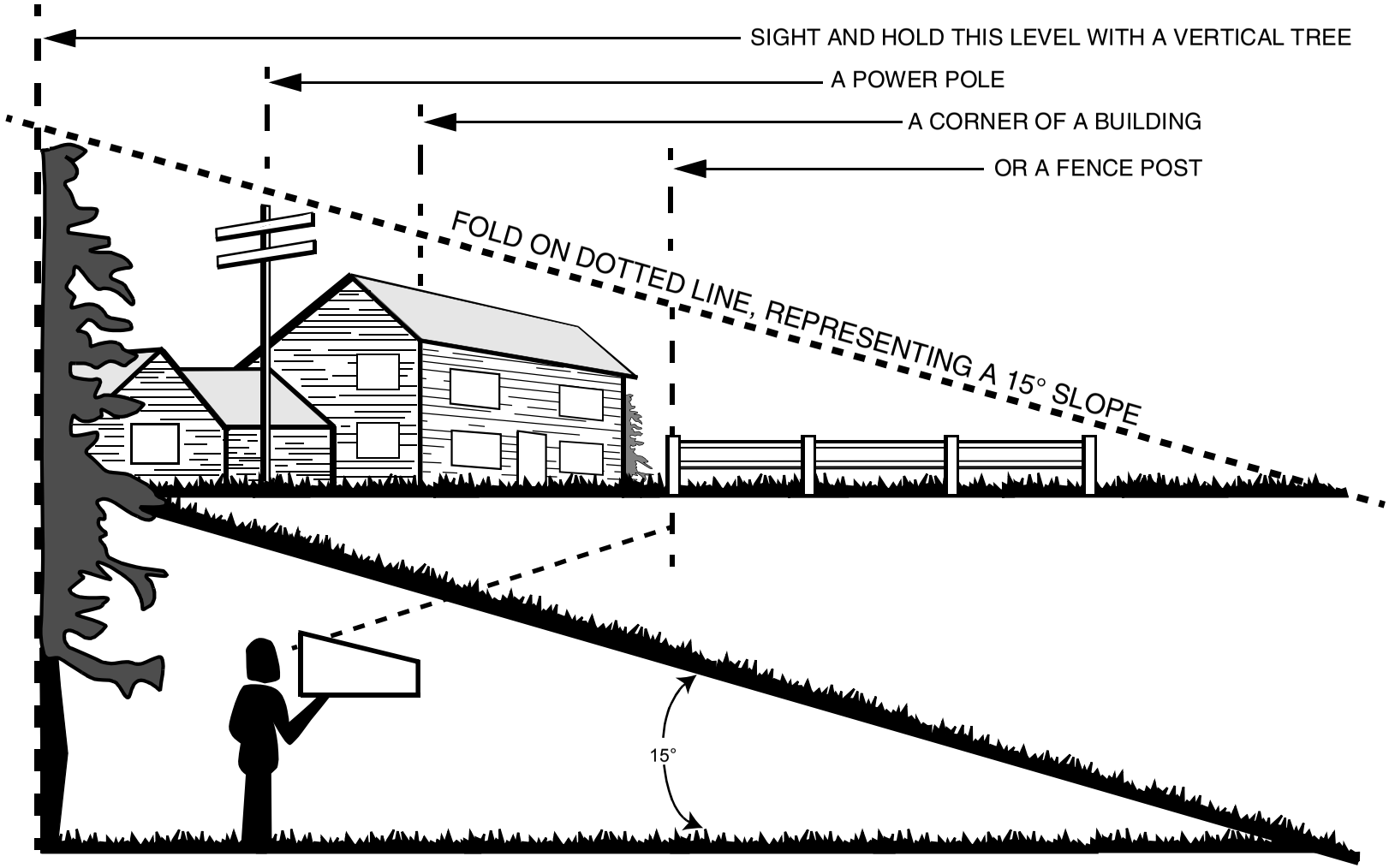

WARNING

Do not mow on inclines with a slope in excess of 15 degrees (a rise of approximately 2-1/2 feet every 10 feet). A riding mower could overturn and cause serious injury. If operating a walk-behind mower on such a slope, it is extremely difficult to maintain your footing and you could slip, resulting in serious injury.
Operate RIDING mowers up and down slopes, never across the face of slopes.
Operate WALK-BEHIND mowers across the face of slopes, never up and down slopes.

https://truckmanualshub.com/

https://truckmanualshub.com/

SECTION 5: ATTACHMENTS & ACCESSORIES

MODEL NUMBER	DESCRIPTION
OEM-190-118	Mulch Kit (For 46-inch Decks Only)
OEM-190-603	Grille Guard™ (Mounts On Front Of Tractor)
OEM-190-604	TracPac™ Storage Container (Mounts On Rear Of Tractor)
OEM-190-821	FastAttach™ Triple Bagger Grass Collector (For 46-inch Decks Only)
OEM-190-822	FastAttach™ 46-inch Front Dozer Blade
OEM-190-823	42-inch Two-stage Snowthrower
OEM-190-824	Sleeve Hitch with Electric Lift
	SLEEVE HITCH ATTACHMENTS
OEM-190-825	30-inch Tiller*
OEM-190-984	Row Crop Cultivator*
OEM-190-980	Single-disc Harrow*
OEM-190-978	10-inch Mulboard Plow*
OEM-190-804	42-inch Heavy Duty Rear Blade*

*OEM-190-824 required for use of this attachment

SECTION 6: TRACTOR SET-UP

ATTACHING THE BATTERY CABLES

NOTE: *The positive battery terminal is marked Pos. (+). The negative battery terminal is marked Neg. (–).*

- The positive cable (heavy red wire) is secured to the positive battery terminal (+) with hex bolt and hex nut at the factory. Make certain that the rubber boot covers the terminal to help protect it from corrosion.
- Remove the hex bolt and wing nut from the negative cable. Attach the negative cable (heavy black wire) to the negative battery terminal (–) with the bolt and wing nut.
- Place the hold-down strap in position over the battery to secure it in place. See Figure 2.

NOTE: *If battery is put into service after date shown on top of battery, charge for minimum of one hour at 6-10 amps.*

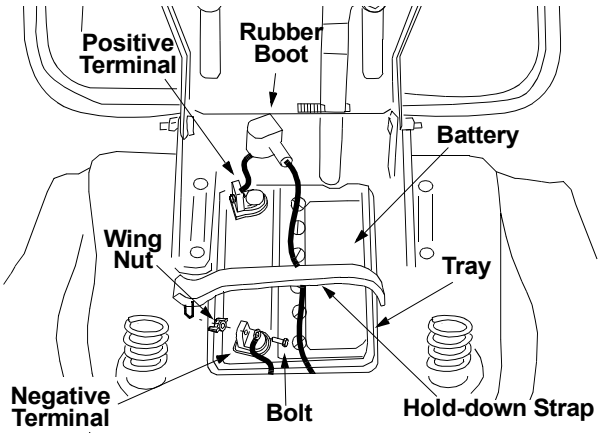

Figure 2

GAS AND OIL FILL-UP

Check oil level and add if necessary. Service the engine with gasoline as instructed in the separate engine manual packed with your tractor. Read instructions carefully.

IMPORTANT: *Your tractor is shipped with oil; however, you **MUST** check the oil level before operating.*

IMPORTANT: *Do NOT to overfill the engine with oil. Overfilling may cause the engine to smoke. This will result in poor engine performance and could cause permanant engine damage.*

The gasoline tank is located under the hood and has a capacity of approximately three gallons. Do not overfill.

WARNING: Never fill fuel tank indoors, while engine is running or while engine is hot. Always fill the fuel tank in a well ventilated area to avoid inhalation of gasoline fumes. Do not fill closer than 1/2 inch from the top of the fuel tank to prevent spills and to allow for fuel expansion. If gasoline is accidently spilled, move tractor away from area of spill. Avoid creating any source of ignition until gasoline vapors have disappeared.

WARNING: Never smoke while filling the fuel tank.

https://truckmanualshub.com/

ATTACHING THE CUTTING DECK
(Units Equipped with a 50-inch Deck)

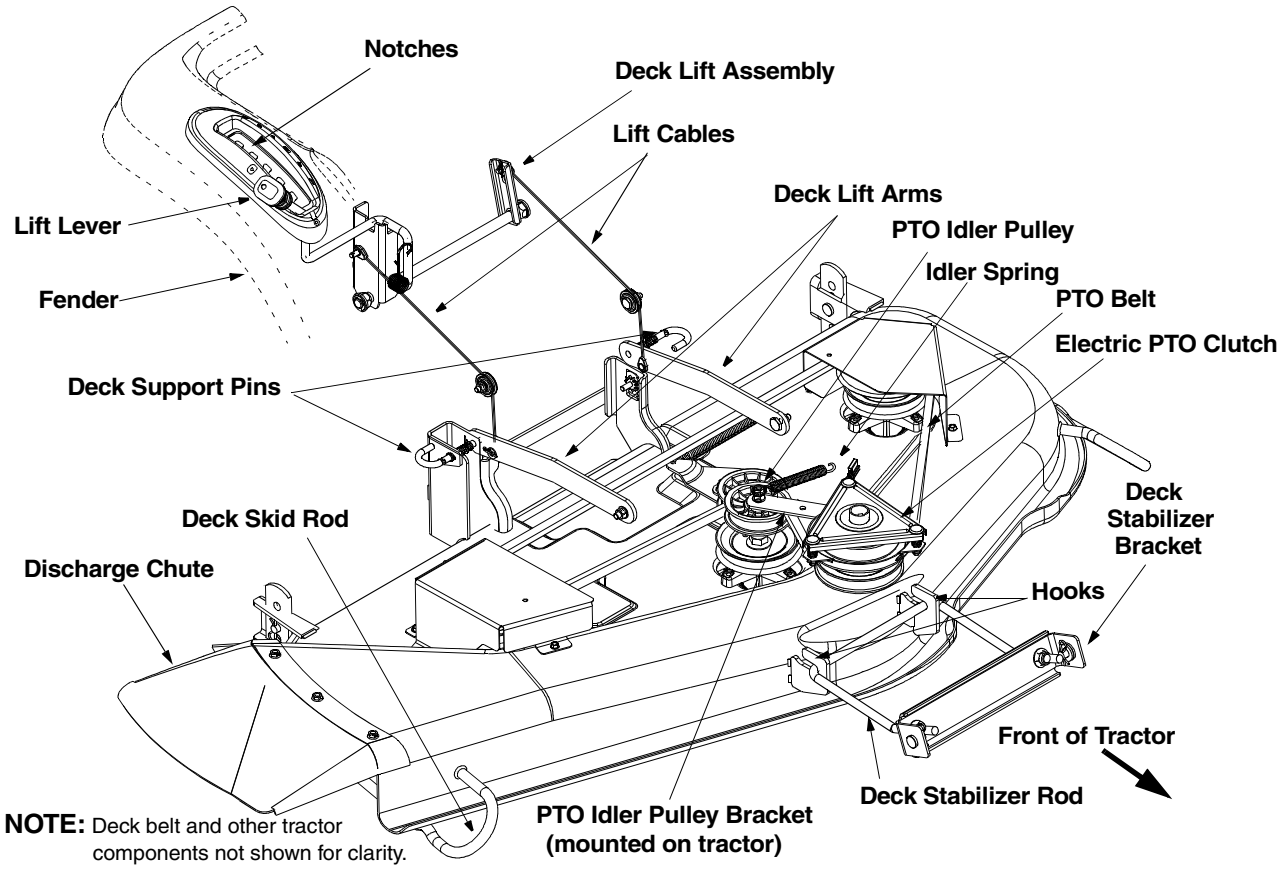

Figure 3

WARNING: Before attaching the cutting deck, engage the parking brake, turn the ignition key to the OFF position and remove the key from the switch to avoid accidental starting.

- Raise the deck lift arms up and out of the way by placing the lift lever in the top notch on the right fender.
- Gently slide the cutting deck beneath the tractor from the right side.
- Move the cutting deck into position so that the the hooks found on the front end of the deck fit snuggly around the deck stabilizer rod as shown in Figure 3.

NOTE: *The stabilizer rod may be secured to the tractor frame with a plastic cable tie for shipping reasons. If so, cut the cable tie before mounting the front of the cutting deck.*

- Lower the deck lift arms by placing the lift lever in the bottom notch on the right fender.
- Raise the left side of the cutting deck by grasping the deck skid rod and lifting upward. Pull the deck support pin (on the left side of the deck) outward and align it with the hole on the rear of the left deck lift arm before releasing the pin to lock it in place as shown in Figure 3. Repeat on the right side.
- Route the PTO belt around the electric PTO clutch as shown in Figure 3.
- Grasp the PTO idler pulley bracket and pull it towards the discharge chute, then route the belt around the PTO idler pulley as shown in Figure 3.

IMPORTANT: *Be certain that the FLAT side of the PTO belt is the side coming in contact with the PTO idler pulley.*

- If not already attached, hook the idler spring to the stud found on the left side of the tractor frame.

IMPORTANT: *After mounting the cutting deck, refer to Leveling the Deck in the ADJUSTMENTS section of this manual. Perform any adjustments, if necessary, prior to operating the tractor*

https://truckmanualshub.com/

SECTION 7: CONTROLS

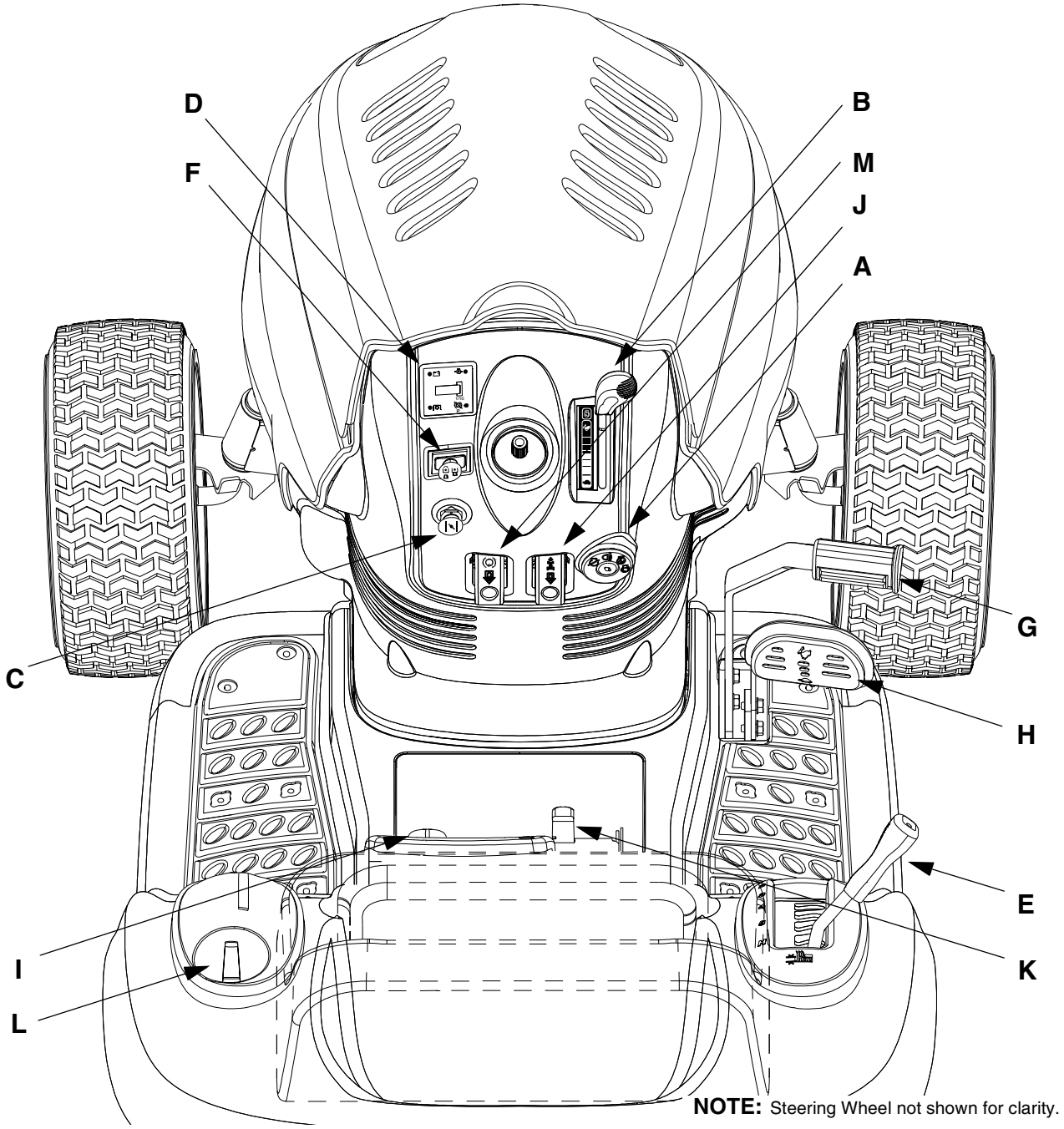

Figure 4

A	Ignition Switch	H	AutoDrive™ Pedal
B	Throttle Control Lever	I	Shift Lever
C	Choke Control (if so equipped)	J	Cruise Control Button
D	Indicator Monitor/Hour Meter	K	Seat Adjustment Lever
E	Lift Lever	L	Cup Holder
F	PTO (Power Take-Off) Knob	M	Parking Brake Button
G	Brake Pedal		

NOTE: *Any reference in this manual to the RIGHT or LEFT side of the tractor is observed from operator's position.*

https://truckmanualshub.com/

IGNITION SWITCH

To start the engine, insert key into the ignition switch and turn clockwise to the **START** position. Release key to the **ON** position once engine has fired. See Figure 5. Refer to STARTING THE ENGINE in the OPERATION section of this manual for detailed starting instructions. The ignition switch is also used to operate the headlights. Refer to OPERATING THE HEADLIGHTS in the OPERATION section of this manual for detailed instructions

WARNING: Remove the key from the tractor when the tractor is not in use to prevent accidental starting.

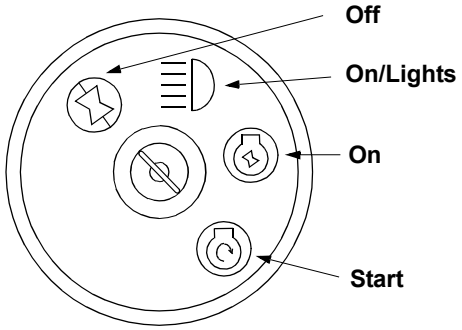

Figure 5

THROTTLE CONTROL LEVER

The throttle lever is located on the right side of the tractor's dash panel. This lever controls the speed of the engine, and on some units the choke control also. When set in a given position, the throttle will maintain a uniform engine speed. See Figure 6.

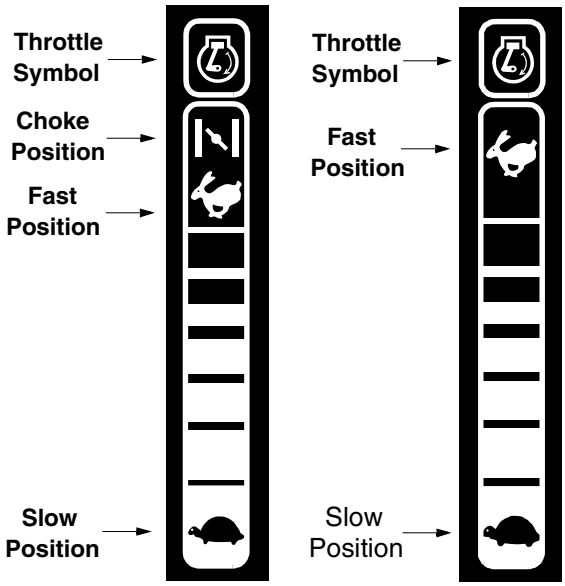

Figure 6

IMPORTANT: *When using PTO operated equipment such as the cutting deck or other attachments, always operate the tractor with the throttle lever in the FAST (rabbit) position.*

CHOKE CONTROL

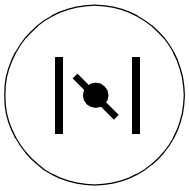

On some units, moving the throttle lever all the way forward activates the engine's choke control. On all other units, the choke control can be found on the left side of the dash panel and is activated by pulling the knob outward. Activating the choke control closes the choke plate on the carburetor and aids in starting the engine. Refer to STARTING THE ENGINE in the OPERATION section of this manual for detailed starting instructions.

INDICATOR MONITOR / HOUR METER

Your tractor is equipped with four indicator lights and an hour meter located on the left side of the dash panel. See Figure 7.

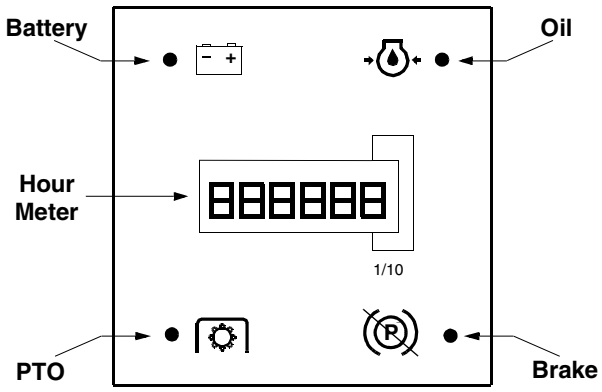

Figure 7

If a light illuminates when attempting to start the unit, proceed as follows:

BRAKE — Depress the brake pedal.

PTO — Move PTO knob into the disengaged (OFF) position.

OIL— Check the crankcase oil level, and add oil as required.

The BATTERY indicator light will illuminate any time the ignition key is the On position and the engine is not running. If it illuminate's while the engine is running, it indicates that the battery is in need of a charge. Refer to the MAINTENANCE section of this manual for the proper battery charging procedure.

The hour meter operates whenever the ignition key is in the On or On/Lights position and records the actual hours of tractor operation.

https://truckmanualshub.com/

LIFT LEVER

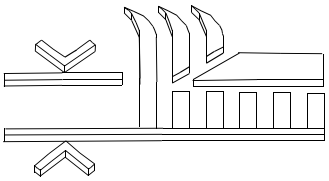

The lift lever is used to change the operating position (height) of the cutting deck. To operate, move the lever to the left, then place in the notch best suited for your application.

ELECTRIC PTO (POWER TAKE-OFF) KNOB

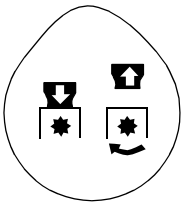

To engage the power to the cutting deck or other attachments, pull outward on the PTO knob. Push the PTO knob inward to disengage the power to the attachments.

NOTE: T*he PTO knob* ***must*** *be in the disengaged (OFF) position when starting the engine, when shifting into reverse and if the operator leaves the seat.*

AUTODRIVE™ PEDAL

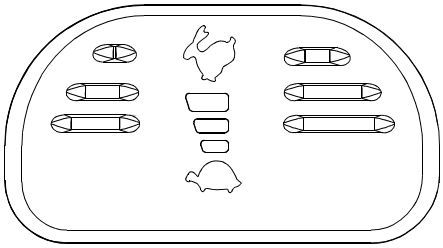

The AutoDrive™ pedal is located below the brake pedal on the right front side of the tractor along the running board. Depress the AutoDrive™ pedal with your right foot when the tractor shift lever is in either Forward—Hi, Forward—Lo or Reverse to cause the tractor to move. Ground speed is also controlled with the AutoDrive™ pedal. The further down the AutoDrive™ pedal is depressed, the faster the tractor will travel. The AutoDrive™ pedal will return to its original position when it's not depressed.

IMPORTANT: *Always set the parking brake when leaving the tractor unattended.*

BRAKE PEDAL

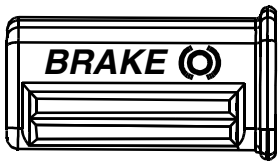

The brake pedal is located on the right front side of the tractor above the AutoDrive™ pedal along the running board. The brake pedal can be used for sudden stops or setting the parking brake.

NOTE: *The brake pedal must be fully depressed to activate the safety interlock switch when starting the tractor***.**

PARKING BRAKE BUTTON

To set the parking brake, fully depress the brake pedal and push the parking brake button in. Hold the button in while taking your foot off the brake pedal. Both the parking button and the brake pedal will then stay depressed. To release the parking brake, depress the brake pedal slightly. The parking brake button will then return to its original position.

NOTE: *The parking brake must be set if the operator leaves the seat with the engine running or the engine will automatically shut off.*

SHIFT LEVER

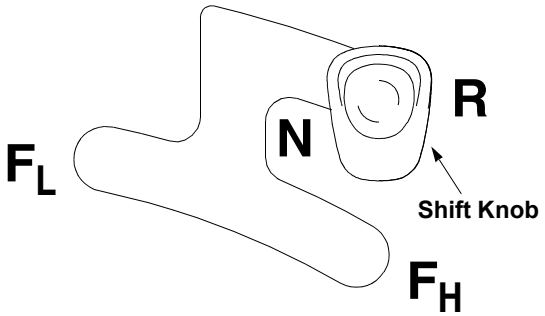

The shift lever is located on the front of the fender between the operator's legs and has four positions, FORWARD—HI, FORWARD—LO, NEUTRAL and REVERSE. The brake pedal must be depressed and the tractor must not be in motion when moving the shift lever. Always bring the tractor to a complete stop prior to moving the shift lever from FORWARD—HI to FORWARD—LO or vice-versa.

IMPORTANT: *Never force the shift lever. Doing so may result in serious damage to the tractor's transmission.*

https://truckmanualshub.com/

CRUISE CONTROL BUTTON

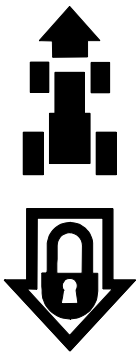

The cruise control button is located on the tractor dash panel to the left of the ignition switch. Push the cruise control button while traveling forward at a desired speed. WHILE HOLDING THE BUTTON IN, release pressure from the AutoDrive™ pedal. This will engage the cruise control and allow the tractor to remain at that speed without applying pressure to the AutoDrive™ pedal. Depress the brake pedal or the AutoDrive™ pedal to deactivate cruise control. Refer to the OPERATION section of this manual for detailed instructions regarding the cruise control feature.

SEAT ADJUSTMENT LEVER

To adjust the seat forward or backward, slide the seat adjustment lever to the left and reposition the seat to the desired position. Once a comfortable position is found, release the seat adjustment lever to lock the seat in place. Refer to the ADJUSTMENTS section of this manual for more detailed instructions.

CUP HOLDER

The tractor's cup holder is located on the fender to the left of the seat.

WARNING: Never operate the tractor under the influence of alcoholic beverages or drugs. Doing so can result in serious personal injury or death.

SECTION 8: OPERATION

SAFETY INTERLOCK SWITCHES

This tractor is equipped with a safety interlock system for the protection of the operator. If the interlock system should ever malfunction, do not operate the tractor. Contact an authorized *MTD* Service Dealer in your area. The safety interlock system prevents the engine from cranking or starting unless the brake pedal is fully depressed, and the PTO knob is in the disengaged (OFF) position.

- The safety interlock system will automatically shut off the engine if the operator leaves the seat before engaging the brake lock.
- The safety interlock system will automatically shut off the engine if the operator leaves the seat with the PTO knob in the engaged (ON) position, regardless of whether the brake lock is engaged. The PTO knob must be in the disengaged (OFF) position to restart the engine.
- The safety interlock system will automatically shut off the electric PTO clutch if the PTO knob is moved into the engaged (ON) position with the shift lever in the REVERSE position.

WARNING: Do NOT attempt to bypass or disconnect the tractor's safety interlock. Doing so could result in serious personal injury or death.

IMPORTANT: *Tampering with or attempting to bypass the tractors Safety Interlock Switches in any way WILL void your warranty.*

WARNING

AVOID SERIOUS INJURY OR DEATH

- GO UP AND DOWN SLOPES, NOT ACROSS.
- AVOID SUDDEN TURNS.
- DO NOT OPERATE THE UNIT WHERE IT COULD SLIP OR TIP.
- IF MACHINE STOPS GOING UPHILL, STOP BLADE(S) AND BACK DOWNHILL SLOWLY.
- DO NOT MOW WHEN CHILDREN OR OTHERS ARE AROUND.
- NEVER CARRY CHILDREN.
- LOOK DOWN AND BEHIND BEFORE AND WHILE BACKING.
- KEEP SAFETY DEVICES (GUARDS, SHIELDS, AND SWITCHES) IN PLACE AND WORKING.
- REMOVE OBJECTS THAT COULD BE THROWN BY THE BLADE(S).
- KNOW LOCATION AND FUNCTION OF ALL CONTROLS.
- BE SURE BLADE(S) AND ENGINE ARE STOPPED BEFORE PLACING HANDS OR FEET NEAR BLADE(S).
- BEFORE LEAVING OPERATOR'S POSITION, DISENGAGE BLADE(S), PLACE THE SHIFT LEVER IN NEUTRAL, ENGAGE BRAKE LOCK, SHUT ENGINE OFF AND REMOVE KEY.

READ OPERATOR'S MANUAL

https://truckmanualshub.com/

SETTING THE CUTTING HEIGHT

Select the height position of the cutting deck by placing the deck lift lever in any of the six different cutting height notches on the right side of the fender. Then adjust the deck wheels, or rollers (on units equipped with a 50" deck) so that they are at least 1/4 inch to 1/2 inch above the ground when the tractor is on a smooth, flat surface such as a driveway.

WARNING: Keep hands and feet away from the discharge chute opening of the cutting deck.

NOTE: *The deck wheels (on units equipped with a 46-inch deck) are an anti-scalp feature of the deck and are not designed to support the weight of the free-floating cutting deck.*
Refer to the ADJUSTMENTS section of this manual for more detailed instructions regarding various deck adjustments.

STARTING THE ENGINE

NOTE: *Refer to the TRACTOR SET-UP section of this manual for Gasoline and Oil fill up instructions.*

- Insert the tractor key into the ignition switch.
- Place the PTO knob into the disengaged (OFF) position.
- Depress the brake pedal and set the parking brake.
- Move the shift lever into the NEUTRAL position.
- Move the throttle control lever into the FAST (rabbit), or CHOKE position, if so equipped.
- Pull out the choke control knob, if so equipped A warm engine may not require choking.
- Turn the ignition key clockwise to the START position. After the engine starts, release the key. It will return to the ON position.

IMPORTANT: *Do NOT hold the key in the START position for longer than ten seconds at a time. Doing so may cause damage to your engine's starter.*

NOTE: *If starting problems are encountered, refer to the* TROUBLESHOOTING *section of this manual.*

After the engine starts, slowly release the brake pedal. As the engine warms up, gradually push the choke control knob inward (or move the throttle control lever out of the CHOKE position into the FAST position) to open up the choke plate on the engine's carburetor.

NOTE: *Do NOT leave the choke control out while operating the tractor. Doing so will result in a "rich" fuel mixture and cause the engine to run poorly.*

STOPPING THE ENGINE

- Place the PTO knob into the disengaged (OFF) position
- Move the throttle control into the SLOW position and allow the engine to "idle down" for ten seconds, then turn the ignition key counterclockwise to the OFF position.
- Remove the key from the ignition switch to prevent accidental starting.

IMPORTANT: *If you think you've struck a foreign object, stop the engine immediately. Remove the wire(s) from the spark plug(s), thoroughly inspect the unit for any damage, and repair the damage before restarting and operating the tractor.*

DRIVING THE TRACTOR

WARNING: Avoid sudden starts, excessive speed and sudden stops.

WARNING: Do not leave the seat of the tractor without first placing the PTO knob in the disengaged (OFF) position, depressing the brake pedal and engaging the parking brake. If leaving the tractor unattended, also turn the ignition key off and remove the key.

- Depress the brake pedal to release the parking brake and let the pedal up. Move the throttle lever into the FAST (rabbit) position.

IMPORTANT: *Do NOT use the shift lever to change the direction of travel or the speed range when the tractor is in motion. Use the brake pedal to bring the tractor to a complete stop before shifting.*

- To move forward, move the shift lever into the FORWARD—Hi or FORWARD—Lo position, then slowly depress the AutoDrive™ pedal until the desired speed is achieved.

NOTE: *Operate the tractor with the shift lever in the FORWARD—Lo position for towing, climbing and other heavy load applications. Operate the tractor with the shift lever in the FORWARD—Hi position for all other applications.*

- To move in reverse, move the shift lever into the REVERSE position, check that the area behind is clear then slowly depress the AutoDrive™ pedal.

https://truckmanualshub.com/

SETTING THE CRUISE CONTROL

NOTE: *The cruise control feature should only be utilized in the forward direction.*

- Move the shift lever into either the FORWARD—Hi or FORWARD—Lo position, then slowly depress the AutoDrive™ pedal until the desired speed is achieved.
- Lightly push the cruise control button downward.
- While continuing to hold the cruise button down, lift your foot from the AutoDrive™ pedal (you should feel the cruise latch engage).
- If properly engaged, the cruise control button and the AutoDrive™ pedal should lock in the down position, and the tractor will maintain the same forward speed.
- Disengage the cruise control using one of the following methods:
  - Depress the brake pedal to disengage the cruise control and stop the tractor.
  - Lightly depress the AutoDrive™ pedal.

To change to the reverse direction when operating with cruise control, depress the brake pedal to disengage the cruise control and bring the tractor to a complete stop. Then move the shift lever into the REVERSE position and depress the AutoDrive™ pedal.

DRIVING ON SLOPES

Refer to the SLOPE GAUGE on page 6 to help determine slopes where you may not operate safely.

WARNING: Do not mow on inclines with a slope in excess of 15 degrees (a rise of approximately 2-1/2 feet every 10 feet). The tractor could overturn and cause serious injury.

Operate the tractor up and down slopes, never across slopes. Do not drive so that the tractor may tip over sideways.

Before operating the tractor on any slope, walk the slope to look for possible hazards such as rocks. mounds, ruts, stumps or other surface irregularities which could cause the tractor to be upset.

Avoid turns when driving on a slope. If a turn must be made, turn down the slope. Turning up a slope greatly increases the chance of a roll over.

Avoid stopping when driving up a slope. If it is necessary to stop while driving up a slope, start up smoothly and carefully to reduce the possibility of flipping the tractor over backward.

OPERATING THE HEADLIGHTS

To turn the tractor's headlights on:

- Start the engine following the instructions earlier in this section.
- Turn the key one notch counterclockwise into the On/Lights position of the ignition switch. Refer to Figure 5.

To turn the tractor's headlights off:

- Turn the key into either the On position (to leave the engine running) or the Off position (to shut the engine off). Refer to Figure 5.

IMPORTANT: *Never move the key into the Start position while the engine is running. Doing so may cause damage to your engine's starter.*

STOPPING THE ENGINE

- Place the PTO knob into the disengaged (OFF) position.
- Move the throttle control into the SLOW (turtle) position and allow the engine to "idle down" for ten seconds, then turn the ignition key counterclockwise to the OFF position.
- Remove the key from the ignition switch to prevent accidental starting.

IMPORTANT: *If you think you've struck a foreign object, stop the engine immediately. Remove the wire(s) from the spark plug(s), thoroughly inspect the unit for any damage, and repair the damage before restarting and operating the mower.*

USING THE LIFT LEVER

To raise the cutting deck, move the lift lever to the left, then place it in the notch best suited for your application. Refer to SETTING THE CUTTING HEIGHT earlier in this section.

ENGAGING THE ELECTRIC PTO (POWER TAKE-OFF) KNOB

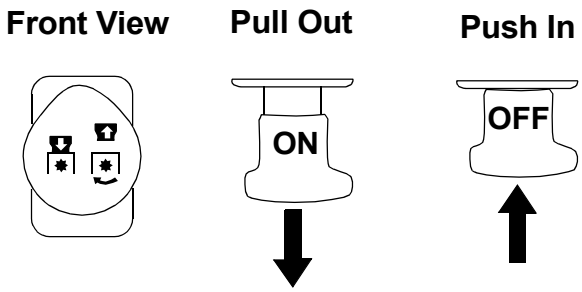

Figure 8

- Move the throttle control lever to the FAST (rabbit) position.

https://truckmanualshub.com/

- Pull the PTO knob outward into the engaged (ON) position. See Figure 8.
- Keep the throttle lever in the FAST (rabbit) position for the most efficient use of the cutting deck and other attachments.
- The operator must remain in the tractor seat at all times. If the operator should leave the seat without pushing the PTO knob inward into the disengaged (OFF) position, the tractor's engine will shut off.

IMPORTANT: *The PTO knob cannot be in the engaged (ON) position when the tractor is driving in the reverse direction. The PTO knob must be in the disengaged (OFF) position when the shift lever is in REVERSE or the PTO will automatically shut off. Refer to* SAFETY INTERLOCK SWITCHES *in this section.*

MOWING

This tractor is equipped with one of *MTD*'s high quality cutting decks. The following information will be helpful when using the cutting deck with your tractor.

WARNING: To avoid possible injury, do not allow anyone in the area of the tractor while mowing. Even if the area to be mowed has been cleared of foreign objects, small objects may be picked up and discharged by the mower.

WARNING: Never direct the discharge of material toward bystanders or allow anyone near the machine while in operation.

- For best results it is recommended that the first two laps should be cut with the discharge thrown towards the center. After the first two laps, reverse the direction to throw the discharge to the outside for the balance of cutting. This will give a better appearance to the lawn.
- Do not cut the grass too short. Short grass invites weed growth and yellows quickly in dry weather.
- Mowing should always be done with the engine at full throttle.
- Do not mow at high ground speed, especially if a mulch kit or grass collector is installed.
- Under heavier conditions it may be necessary to go back over the cut area a second time to get a clean cut.
- Do NOT attempt to mow heavy brush and weeds and extremely tall grass. Your tractor is designed to mow lawns, NOT clear brush.
- Keep the blades sharp and replace the blades when worn. Refer to the MAINTENANCE section of this manual for proper blade sharpening instructions.

SECTION 9: ADJUSTMENTS

LEVELING THE DECK

WARNING: Cutting blades are sharp. Always protect your hands by wearing heavy leather work gloves to grasp blades.

NOTE: *Check the tractor's tire pressure before performing any deck leveling adjustments. Refer to TIRES in the maintenance section of this manual for further information regarding tire pressure.*

Front to Rear

The front of the cutting deck is supported by a stabilizer bar that can adjusted to level the deck from front to rear. The front of the deck should be 1/4" to 3/8" lower than the rear of the deck. Adjust if necessary as follows:

WARNING: Turn the tractor's engine off, remove the key from the ignition switch and apply the tractor's parking brake before making any adjustments to the cutting deck.

- With the tractor parked on a firm, level surface, place the lift lever in the top notch (highest position) and rotate the blade nearest the discharge chute so that it's parallel with the tractor.
- Measure the distance from the front of the blade tip to the ground and the distance from the rear of the blade tip to the ground. The first measurement taken should be between 1/4" and 3/8" less than the second measurement. Determine the approximate distance necessary for proper adjustment and proceed, if necessary, to the next step.

https://truckmanualshub.com/

- Loosen the two jam nuts on the rear side of the deck stabilizer bracket. See Figure 9A.
- Locate the two lock nuts on the opposite side of the stabilizer bracket. See Figure 9A. Tighten the lock nuts to raise the front of the deck; loosen the lock nuts to lower the front of the deck.
- Retighten the two jam nuts loosened earlier when proper adjustment is achieved.

Side to Side

If the cutting deck appears to be mowing unevenly, a side to side adjustment can be performed. Adjust if necessary as follows:

WARNING: Turn the tractor's engine off, remove the key from the ignition switch and apply the tractor's parking brake before making any adjustments to the cutting deck.

- With the tractor parked on a firm, level surface, place the lift lever in the top notch (highest position) and rotate the blades so that they are perpendicular with the tractor.
- Measure the distance from the outside of the left blade tip to the ground and the distance from the outside of the right blade tip to the ground. Both measurements taken should be equal. If they're not, proceed to the next step.
- Loosen, but do NOT remove, the hex cap screw on the left deck hanger bracket. See Figure 9B.
- Balance the deck so that both blade tip measurements taken earlier are equal.
- Retighten the hex cap screw on the left deck hanger bracket when proper adjustment is achieved.

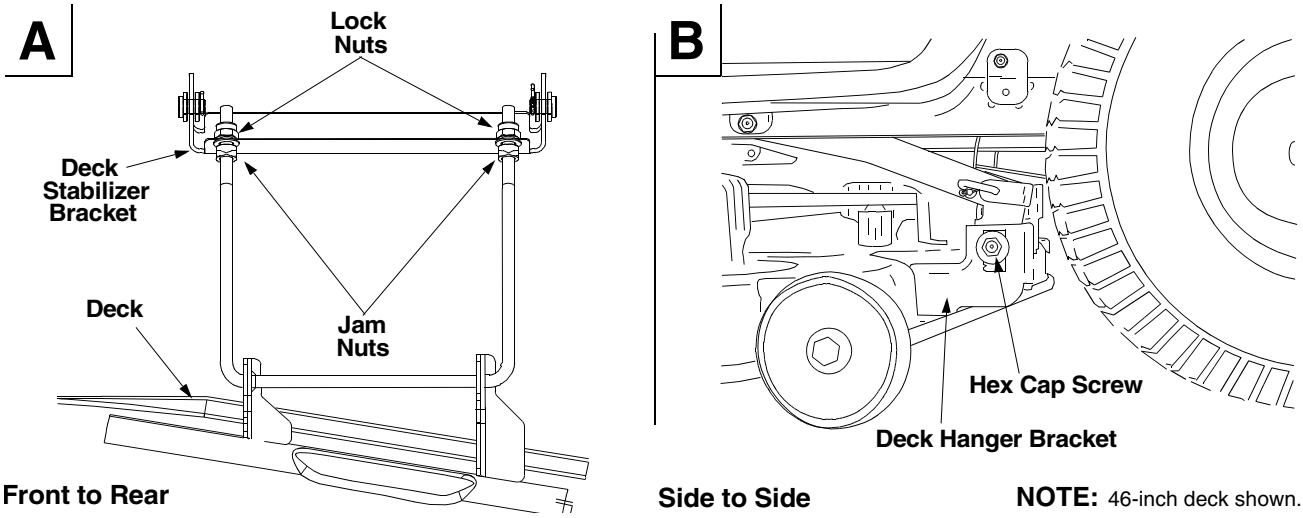

NOTE: 46-inch deck shown.

Figure 9

DECK ROLLER HEIGHT ADJUSTMENT (Units with 50-inch Decks)

To adjust the height of the rollers on the rear of the mowing deck, proceed as follows:

- Place the lift lever in the bottom notch (lowest position).
- Remove the clevis pins and hairpin clips from the deck roller brackets on the left and right sides of the cutting deck. See Figure 10.
- Position the deck roller brackets up or down through the slots on the rear of the deck until desired position is reached, then re-attach with the clevis pins and hairpin clips just removed. See Figure 10.

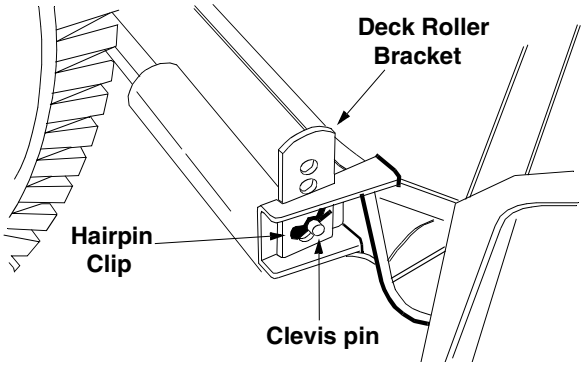

Figure 10

https://truckmanualshub.com/

NOTE: *Be certain that the left roller bracket and the right roller bracket are set in the same position.*

SEAT ADJUSTMENT

To adjust the position of the seat, move the seat adjustment lever (located under the seat) to the left and slide the seat forward or backwards. See Figure 11. Make sure seat is locked into one of the six adjustment positions before operating the tractor.

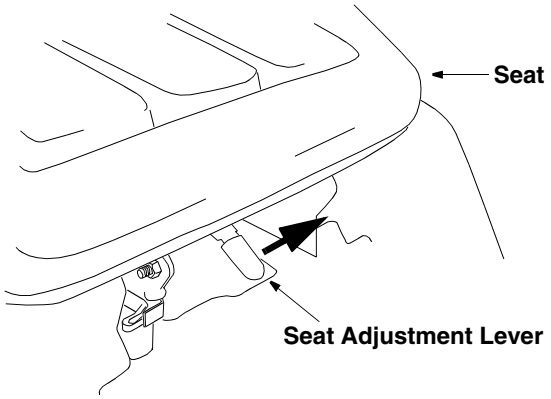

Figure 11

STEERING ADJUSTMENT

If the tractor turns tighter in one direction than the other, or if the ball joints or drag links are being replaced due to damage or wear, the steering drag links may need to be adjusted.

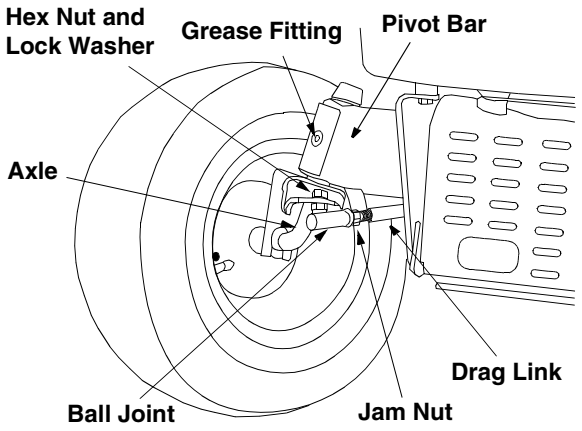

Figure 12

Adjust the drag links so that equal lengths are threaded into the ball joint on the left side and the ball joint on the right side:

- Loosen the jam nut found on the drag link at the rear of the ball joint. See Figure 12.
- Remove the hex nut and lock washer on the top of ball joint. See Figure 12.
- Thread the ball joint toward the jam nut to shorten the drag link. Thread the ball joint away from the jam nut to lengthen the drag link.
- Replace hex nut and lock washer and retighten the jam nut after proper adjustment is achieved.

NOTE: *Threading the ball joints too far onto the drag links will cause the front tires to"toe-in" too far. Proper toe-in is between 1/16" and 5/16".*

Front tire toe-in can be measured as follows:

- Place the steering wheel in position for straight ahead travel. Insert a 1/4" dowel up through aligning holes in both the steering gear and support plate. See Figure 13.

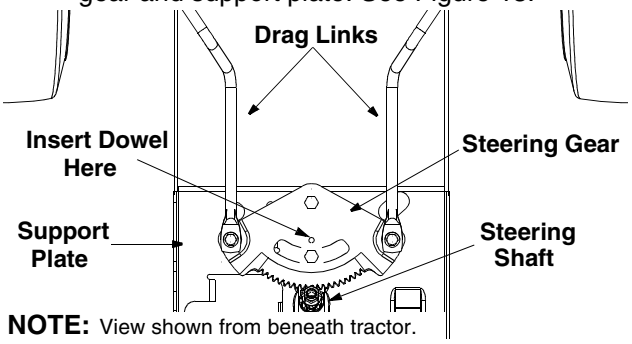

Figure 13

- In front of the axle, measure the distance horizontally from the inside of the left rim to the inside of the right rim. Note the distance.
- Behind the axle, measure the distance horizontally from the inside of the left rim to the inside of the right rim. Note the distance.
- The measurement taken in front of the axle should be between 1/16" and 5/16" less than the measurement taken behind the axle.
- Adjust if necessary.

CARBURETOR ADJUSTMENT

WARNING: If any adjustments are made to the engine while the engine is running (e.g. carburetor), disengage all clutches and blades. Keep clear of all moving parts.

Refer to separate engine manual packed with your unit for carburetor adjustment information or see an authorized engine service dealer.

NOTE: *A dirty air cleaner will cause an engine to run rough and may result in permanent engine damage. Be certain that the air cleaner is clean and attached to the carburetor before attempting to adjust the carburetor.*

https://truckmanualshub.com/

BRAKE ADJUSTMENT

If the tractor does not come to a complete stop when the brake pedal is completely depressed, or if the tractor's rear wheels can roll with the parking brake applied, the brake is in need of adjustment.
The brake disc can be found on the right side of the transmission in the rear of the tractor. Adjust if necessary as follows:

- Looking at the brake disc from the right side of the tractor, locate the compression spring and brake disc.
- Loosen, but do NOT remove the hex nut found on the right side of the brake assembly. See Figure 14.
- Using a feeler gauge, set the gap between the brake disc and the brake puck at .011".
- Re-tighten the hex nut loosened earlier.

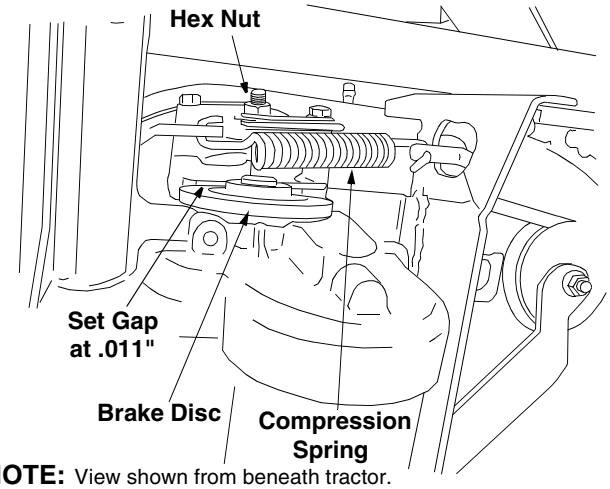

NOTE: View shown from beneath tractor.

Figure 14

SECTION 10: MAINTENANCE

WARNING: Disconnect the spark plug wire(s) and ground against the engine before performing any adjustments, repairs or maintenance.

ENGINE

Refer to the separate engine manual for engine maintenance instructions.

Check **engine oil level** before each use as instructed in the separate engine manual packed with your unit. **Read and follow instructions carefully.**

Changing Engine Oil

- Unscrew oil fill cap and remove dipstick from the oil fill tube. See Figure 15.

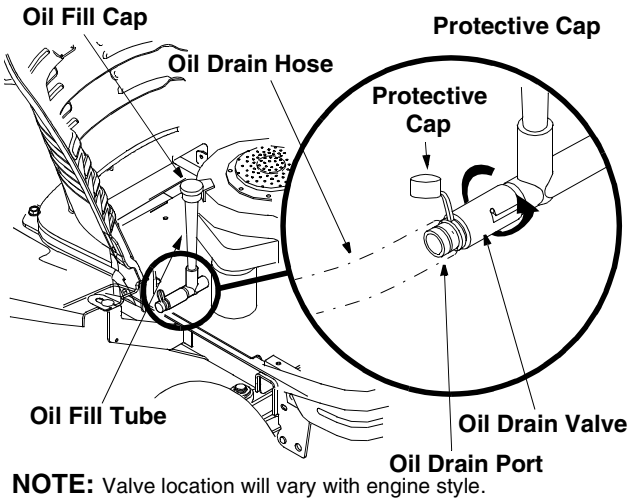

NOTE: Valve location will vary with engine style.

Figure 15

- Pop open the protective cap on the end of the oil drain valve to expose the oil drain port. See Figure 15.
- Push oil drain hose (packed with unit) onto the oil drain port. Route the opposite end of the hose into an appropriate oil collection container with a capacity great enough to collect the used oil.
- Push the oil drain valve in slightly, then rotate counterclockwise and pull outward to begin draining oil. See Figure 15.
- Service the **oil filter** (if so equipped) as instructed in the separate engine manual packed with your unit.

Perform the above steps in the opposite order after oil has finished draining.

- Refill the engine with oil.

IMPORTANT: *Refill the engine with the proper capacity and weight of motor oil as instructed in the separate engine manual.*

Service **air cleaner** every 25 hours under normal conditions. Clean every few hours under extremely dusty condition. To service the air cleaner, refer to the separate engine manual packed with your unit.

The **spark plug(s)** should be cleaned and the gap reset once a season. Spark plug replacement is recommended at the start of each mowing season; check engine manual for correct plug type and gap specifications.

https://truckmanualshub.com/

CLEANING THE ENGINE AND DECK

Any fuel or oil spilled on the machine should be wiped off promptly. Do NOT allow grass, leaves, and dirt to accumulate around the cooling fins of the engine or on any other part of the machine, especially the pulleys and other moving parts.
Clean the underside of the deck with a wisk broom, putty knife or forced air after each mowing.

IMPORTANT: *The use a pressure washer or garden hose to clean your tractor is NOT recommended. It may cause damage to electrical components, spindles, pulleys, bearings or the engine. The use of water will result in a shortened life of the tractor and reduce its serviceability.*

CUTTING DECK REMOVAL (46-inch deck shown)

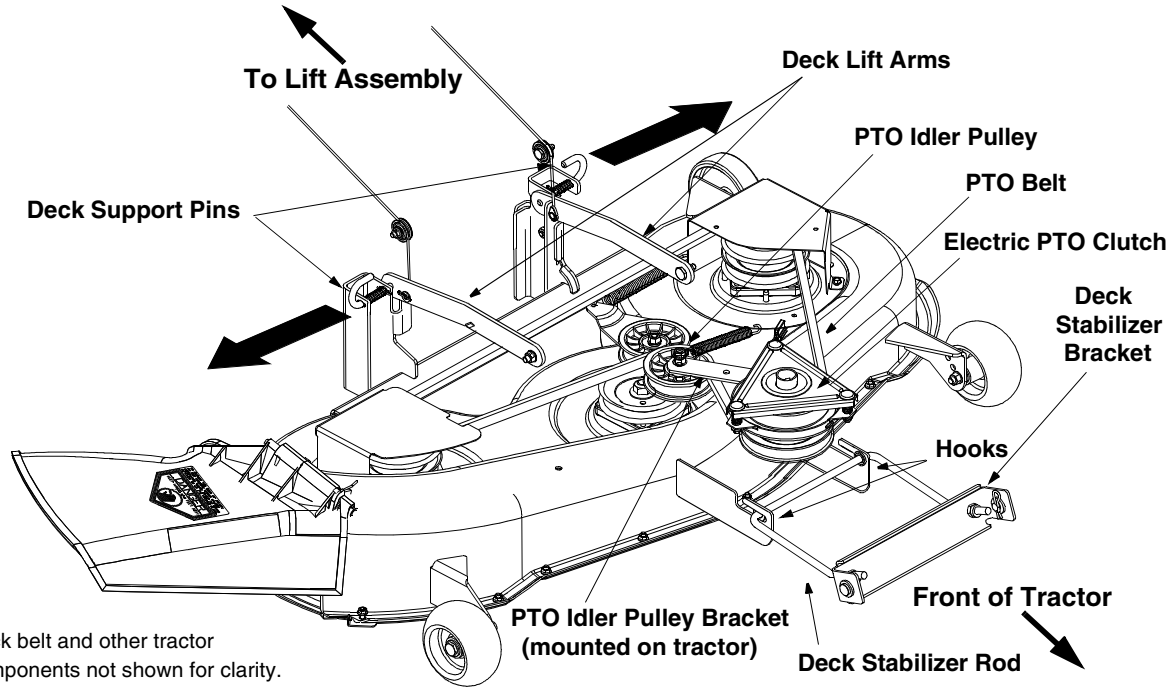

NOTE: Deck belt and other tractor components not shown for clarity.

Figure 16

WARNING: Before performing any maintenance, place the PTO knob into the disengaged (OFF) position, engage the parking brake, turn the ignition key to the OFF position and remove the key from the switch to avoid accidental starting.

Several attachments are available for your tractor. To mount some of these attachments and in order to perform certain maintenance procedures, the deck must be removed from the tractor.
In order to properly remove either a 46-inch or 50-inch cutting deck from beneath the tractor, proceed as follows:

WARNING: Do NOT remove deck immediately after operating the tractor. Allow the engine and other moving parts ample time to cool down prior to performing the following procedure.

- Place the PTO knob into the disengaged (OFF) position and engage the parking brake.
- Lower the deck by moving the lift lever into the bottom notch on the right fender.
- Grasp the PTO idler pulley bracket and pivot it toward the discharge chute to relieve tension on the belt. Remove the deck belt from the bottom portion of the engine pulley and from around the PTO idler pulley.
- Looking at the cutting deck from the right side of the tractor, locate the deck support pin on the rear right side of the deck.
- Pull the deck support pin outward to release the deck from the deck lift arm. See Figure 16.
- Rotate the pin slightly toward the rear of the tractor and release the pin into the hole provided.
- Repeat the above steps on the left side of the tractor.

https://truckmanualshub.com/

- Move the lift lever into the top notch on the right fender to raise the deck lift arms out of the way.
- Gently slide the cutting deck toward the front of the tractor allowing the hooks on the deck to release themselves from the deck stabilizer rod. Do NOT let the deck fall to the ground.
- Gently slide the cutting deck (from the right side) out from underneath the tractor.

NOTE: *To properly remount the cutting deck, perform the above steps in reverse order. Having a second person assist you will ease this procedure.*

CHANGING THE DECK BELTS (46-inch deck shown)

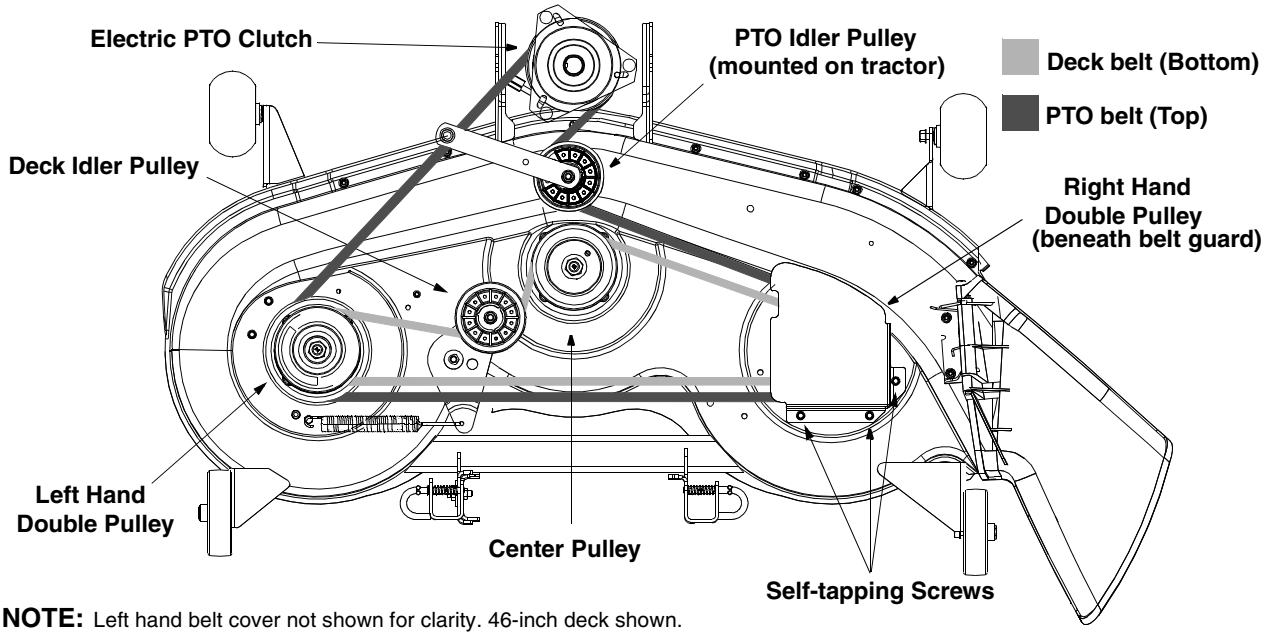

NOTE: Left hand belt cover not shown for clarity. 46-inch deck shown.

Figure 17

All belts on your tractor are subject to wear and should be replaced if any signs of cracking, shredding or rotting are present.

IMPORTANT: *The V-belts found on your tractor are specially designed to engage and disengage safely. A substitute (non-OEM) V-belt can be dangerous by not disengaging completely. For a proper working machine, use factory approved belts.*

To change or replace the PTO belt and deck belt on your tractor, proceed as follows:

NOTE: *Removing the deck from the tractor as instructed earlier in this section will ease the following steps, but is not necessary.*

46-inch and 50-inch decks

- Lower the deck by moving the lift lever into the bottom notch on the right fender.
- Remove the belt guards by removing the three self-tapping screws that fasten them to the deck top.
- Remove and discard old belt(s).

NOTE: *It's recommended that both the PTO belt and the deck belt be replaced at the same time.*

- Route the new belt(s) as shown in Figure 17. OEM belt part numbers shown in the table below.
- Remount the belt guards just removed.

	46-inch Deck	50-inch Deck
PTO Belt	754-0476	754-0475
Deck Belt	754-0349	754-0291A

https://truckmanualshub.com/

CHANGING THE TRANSMISSION DRIVE BELTS

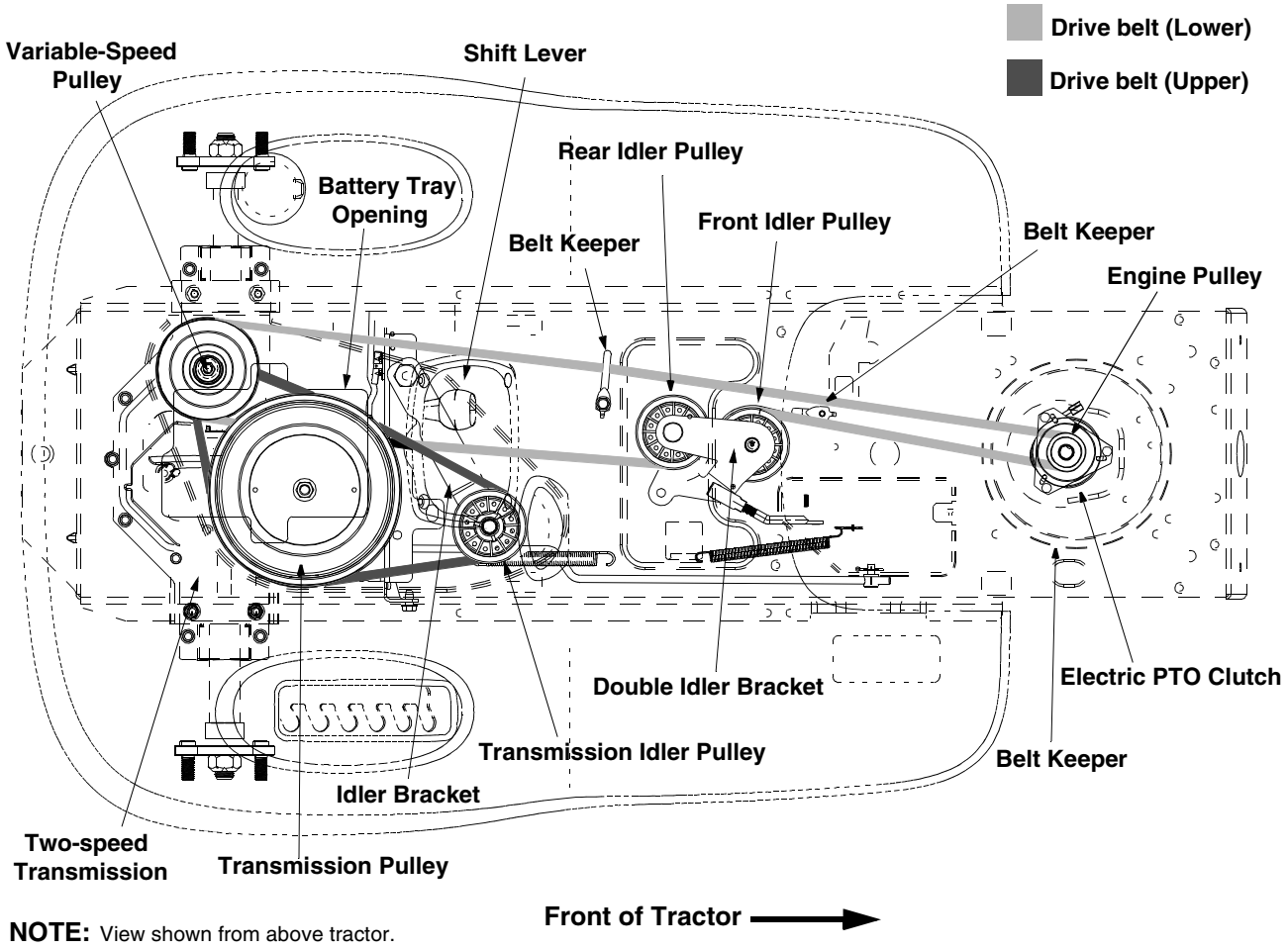

NOTE: View shown from above tractor.

Figure 18

All belts on your tractor are subject to wear and should be replaced if any signs of cracking, shredding or rotting are present.

IMPORTANT: *The V-belts found on your tractor are specially designed to engage and disengage safely. A substitute (non-OEM) V-belt can be dangerous by not disengaging completely. For a proper working machine, use factory approved belts.*

To change or replace the drive belt(s) on your tractor, proceed as follows:

NOTE: *It's recommended that both drive belts be replaced at the same time.*

- Remove the cutting deck as instructed earlier in this section.
- After disconnecting the battery cables, remove the battery and battery tray from beneath the seat.

IMPORTANT: *When removing the battery, disconnect the NEGATIVE (Black) wire from it's terminal first, followed by the POSITIVE (Red) wire.*

NOTE: *Refer to Figure 2 in the* TRACTOR SET-UP *section of this manual for instructions regarding battery hook-up.*

https://truckmanualshub.com/

Upper Drive Belt

- Locate the transmission idler pulley on the upper drive belt by looking through the battery tray opening. See Figure 18.
- Pivot the transmission idler pulley toward the rear of the tractor to release tension on the upper drive belt.
- Remove the belt from around the transmission idler pulley.
- Remove the upper drive belt from around the transmission pulley and the variable-speed pulley.

NOTE: *In order to remove the belt from around the variable-speed pulley, slowly rotate the pulley counterclockwise while rolling the belt off of it.*

- Remove the upper drive belt by pulling it up through the battery tray opening.
- Reroute the new upper drive belt as shown in Figure 18 unless proceeding with the lower drive belt removal.

Lower Drive Belt

NOTE: *Proper removal of the lower drive belt requires the removal of several tractor components. Read through the following procedure prior to attempting it to determine if you feel you could successfully complete it. If you don't, see an authorized MTD service dealer to have the belt changed.*

IMPORTANT: *Note the routing of the lower drive belt around both the pulleys and the belt keepers BEFORE performing the following steps.*

- Remove the upper drive belt following the instructions above.
- Locate the variable-speed pulley by looking through the battery tray opening. See Figure 18. Remove the variable-speed pulley by loosening the hex bolt that affixes the pulley to the variable-speed bracket.
- Slide the belt off of the variable-speed pulley as you lift the pulley up and out through the battery tray opening.

NOTE: *Jacking the rear of the tractor up off the ground at this point in the procedure will ease the following steps, but is not necessary. Remove the rear idler pulley from the double idler bracket while unrouting the belt from around both the rear and the front idler pulley. Refer to Figure 18.*

- Remove the rear idler pulley from the double-idler bracket while unrouting the belt from around both the rear and the front idler pulley. Refer to Figure 18.
- Carefully unplug the tractor's wire harness from the connector on the electric PTO clutch. See Figure 19.

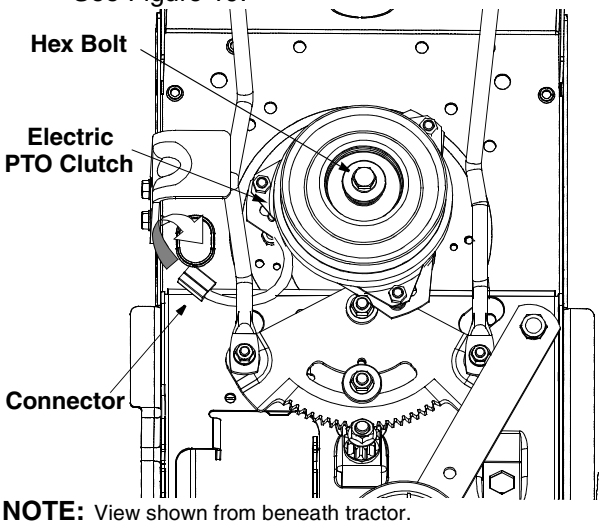

NOTE: View shown from beneath tractor.

Figure 19

- Remove the hex bolt from the center of the electric PTO clutch and gently lower the electric PTO clutch off of the engine crankshaft. Be careful not to lose any flat washers which may be found on top of the electric PTO clutch. See Figure 19.
- The engine pulley is located directly above the electric PTO clutch. Lower the engine pulley far enough to be able to remove the upper drive belt from around it.

IMPORTANT: *When remounting the electric PTO clutch, torque the center hex bolt to between 38 foot-pounds and 50 foot-pounds.*

- Remove the drive belt by feeding it from both ends toward the front idler pulley on the double-idler bracket. See Figure 18.

NOTE: *It IS necessary to remove the shift cover on the front of the fender and feed the belt through and around the shift lever to remove the belt.*

- Reassemble by following the above steps in reverse order.
- Reroute the new belt (part # 754-0467) around the pulleys and belt keepers EXACTLY as the old one was routed. Refer to Figure 18.

https://truckmanualshub.com/

The AutoDrive™ pedal is properly adjusted when the hole found in the double idler bracket has approximately 1-3/8" of travel with ten pounds of pressure applied to the AutoDrive™ pedal. See Figure 20.

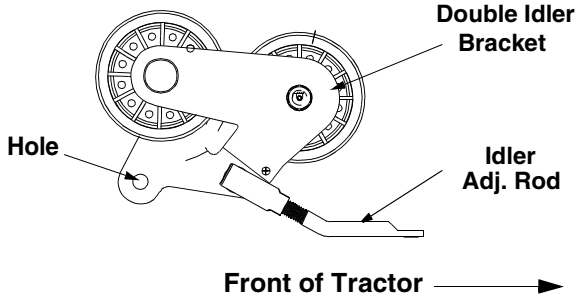

NOTE: View shown from above tractor.

Figure 20

Adjust the AutoDrive™ pedal after replacing the drive belts on your tractor, if necessary, as follows:

- Locate the speed control assembly on the underside of the steering support bracket. See Figure 21.

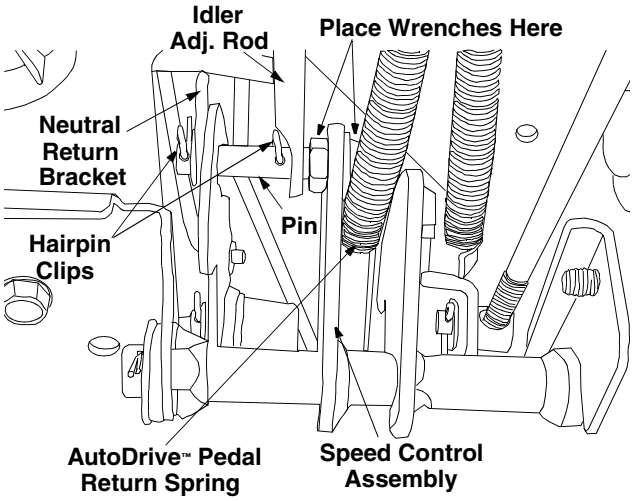

Figure 21

- Remove both hairpin clips from the pin which is fastened to the speed control assembly (be careful not to lose the small flat washers found on the pin). See Figure 21.
- Remove the AutoDrive™ pedal return spring.
- Using two 9/16" wrenches, remove the pin from the speed control assembly. See Figure 21.

Thread the idler adjustment rod inward or outward to lengthen or shorten the travel of the double idler bracket until proper adjustment is achieved.

- Reassemble by following the above steps in reverse order.

BATTERY

The battery is sealed and is maintenance-free. Acid levels cannot be checked.

- Always keep the battery cables and terminals clean and free of corrosive build-up.
- After cleaning the battery and terminals, apply a light coat of petroleum jelly or grease to the terminals and over the positive terminal boot.
- Always keep the boot positioned over the positive terminal to prevent shorting.

IMPORTANT: *If removing the battery for any reason, disconnect the NEGATIVE (Black) wire from it's terminal first, followed by the POSITIVE (Red) wire. When re-installing the battery, always connect the POSITIVE (Red) wire its terminal first, followed by the NEGATIVE (Black) wire. Be certain that the wires are connected to the correct terminals. reversing them could change the polarity and cause damage to your engine's alternating system.*

Charging

If the unit has not been put into use for an extended period of time, charge the battery with a 12-volt automotive-type charger at six amps for a minimum of one hour (or until fully charged).

WARNING: Batteries give off an explosive gas during and for some time after charging. Charge battery in a well ventilated area and do not allow a spark or an open flame near the battery.

FUSE

A fuse is installed in your tractor's wiring harness to protect the tractor's electrical system from damage caused by excessive amperage. Always use the same capacity fuse for replacement. If the electrical system does not function, or your tractor's engine will not crank, first check to be certain that the fuse has not blown.

It can be found under the hood mounted behind the top of dash panel on the support bar. Pull the fuse from its holder and compare it with Figure 22 to determine if it is good or bad.

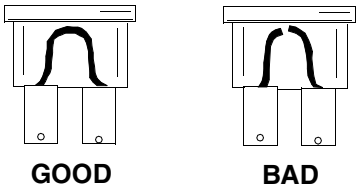

Figure 22

https://truckmanualshub.com/

TIRES

The recommended operating tire pressure is approximately 10 psi for the rear tires and 14 psi for the front tires. Refer to the tire sidewall for exact tire manufacturer's recommended psi. Do not overinflate. Uneven tire pressure could cause the cutting deck to mow unevenly.

CUTTING BLADES

WARNING: Cutting blades are sharp. Always protect your hands by wearing heavy leather work gloves to grasp blades.

The blades may be removed for sharpening or replacement as follows.

- Remove the deck from beneath the tractor, (refer to DECK REMOVAL earlier in this section for detailed instructions) then gently flip the deck over to expose its underside.
- Place a block of wood between the center deck housing baffle and the cutting blade to act as a stabilizer. See Figure 23.

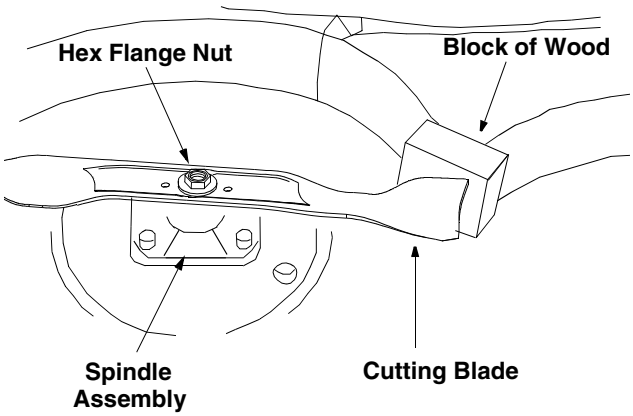

Figure 23

- Use a 15/16" wrench to remove the hex flange nut that secures the blade to the spindle assembly. See Figure 23.

NOTE: *The hex flange nut has a right-handed (normal) thread pattern. Do NOT attempt to force the nut in the incorrect direction. Doing so may damage the nut and create a safety hazard.*

To properly sharpen the cutting blades, remove equal amounts of metal from both ends of the blades along the cutting edges. See Figure 24.

Sharpen the cutting edge straight across, parallel to the trailing edge, at a 25° to 30° angle. See Figure 24.

IMPORTANT: *If the cutting edge of the blade has already been sharpened to within 5/8" of the wind wing radius, or if any metal separation is present, replace the worn blades with new ones. See Figure 24.*

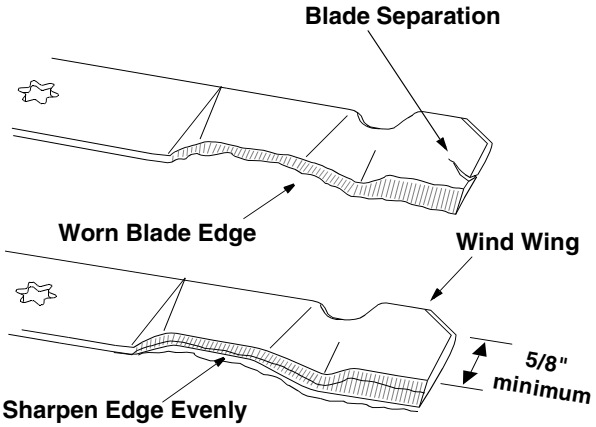

Figure 24

It is extremely important that each cutting blade edge be ground equally to maintain proper blade balance. An unbalanced blade will cause excessive vibration when rotating at high speeds, may cause damage to the tractor and result in personal injury. The blade can be tested by balancing it on a round shaft screwdriver. Grind metal from the heavy side until it balances evenly.

When replacing the blade, be sure to install the blade with the side of the blade marked ''Bottom'' (or with a part number stamped in it) facing the ground when the mower is in the operating position.

IMPORTANT: *Use a torque wrench to tighten the blade spindle hex flange nut to between 70 foot-pounds and 90 foot-pounds.*

https://truckmanualshub.com/

SECTION 11: LUBRICATION

WARNING: Always stop the engine and disconnect the spark plug wire(s) and ground against the engine before performing any adjustments, repairs or maintenance.

ENGINE

Lubricate the engine with motor oil as instructed in the separate engine manual packed with your unit.

PIVOT POINTS

Lubricate all pivot points (AutoDrive™ pedal, brake pedal, etc.) at least once a season with light oil.

STEERING SHAFT

Lubricate the steering shaft at least once a season with light oil.

STEERING GEAR

Lubricate the teeth of the steering gear with an all-purpose automotive grease every 25 hours of operation or once a season. Refer to Figure 13.

LINKAGE

Lubricate all the pivot points on the drive, brake and lift linkage at least once a season with SAE 30 engine oil.

WHEELS

Both the front wheels and the rear wheels should be removed from the axles once a season. Lubricate the axles and the rims well with an all-purpose automotive grease before re-installing them.

FRONT AXLES

Your tractor is equipped with grease fittings on both ends of the front pivot bar, in front of the both the left and the right axles. Refer to Figure 12. Lubricate at least once a season with a grease gun.

https://truckmanualshub.com/

SECTION 12: TROUBLESHOOTING GUIDE

Trouble	Possible Cause(s)	Corrective Action
Engine will not crank	Safety switch button not depressed.	There is one safety switch in the starting circuit of your unit: the brake pedal switch. Make certain the actuator is fully depressing the button on this switch. The Operator must be seated on the tractor in order to start the engine, also.
	Battery installed incorrectly.	The battery must be installed with negative terminal attached to black ground wire. Negative terminal is identified at the post by “NEG”, “N” or “-”. The positive terminal, identified by “POS”, “P” or “+”, must be attached to the thick red wire which goes to the solenoid.
	Battery is dead or weak.	Charge at six amps with a 12-volt automotive-type battery charger for one hour or until fully charged.
	Blown fuse	Refer to operator’s manual for fuse location. Replace fuse with automotive type fuse of the proper amperage. Fuses seldom fail without a reason. The problem must be corrected. Check for loose connections in the fuse holder. Replace fuse holder if necessary. A dead short may be in the cranking or charging circuit where the insulation may have rubbed through and exposed the bare wire. Replace the wire or repair with electrician's tape if the wire strands have not been damaged. Note: Look for a wire pinched between body panels, burned by the exhaust pipe or muffler or rubbed against a moving part.
Engine cranks but will not start	Throttle or choke not in starting position.	Refer to the OPERATION section of this manual for the correct position of the throttle control and choke for starting.
	No fuel to the carburetor.	Gasoline tank empty. Fill. Fuel line or in-line fuel filter plugged. Remove and clean fuel line. Replace fuel filter (if so equipped) if necessary.
	No spark to spark plug(s).	Spark plug lead disconnected. Connect lead. Using a spark tester, check for spark. If no spark is present, have engine’s magneto serviced by an authorized engine dealer.
	Dirty aircleaner.	If the air cleaner is dirty, the engine may not start. Refer to the engine manual packed with your unit.
Engine smokes	Engine oil has been overfilled.	Check oil level.
	Engine loses crankcase vacuum.	Dipstick not seated or broken. Replace defective part. Engine breather defective. Replace.
Excessive vibration	Bent blade or damaged pulley.	Stop engine immediately. Check all pulleys, blade adapters, keys and bolts for tightness and spindle damage. Tighten or replace any loose or damaged parts. Always replace damaged blade. Only use original equipment blades.
Mower won’t discharge grass or leaves uncut strips	Engine speed low.	Throttle must be set at full throttle.
	Speed selection.	Use lower ground speed. The slower your ground speed, the better the quality of cut.
	Cutting height set too low.	Raise deck.
	Blades dull.	Sharpen or replace blades (uncut strip problem only).

https://truckmanualshub.com/

https://truckmanualshub.com/

Model 804

Briggs & Stratton Intek Twin

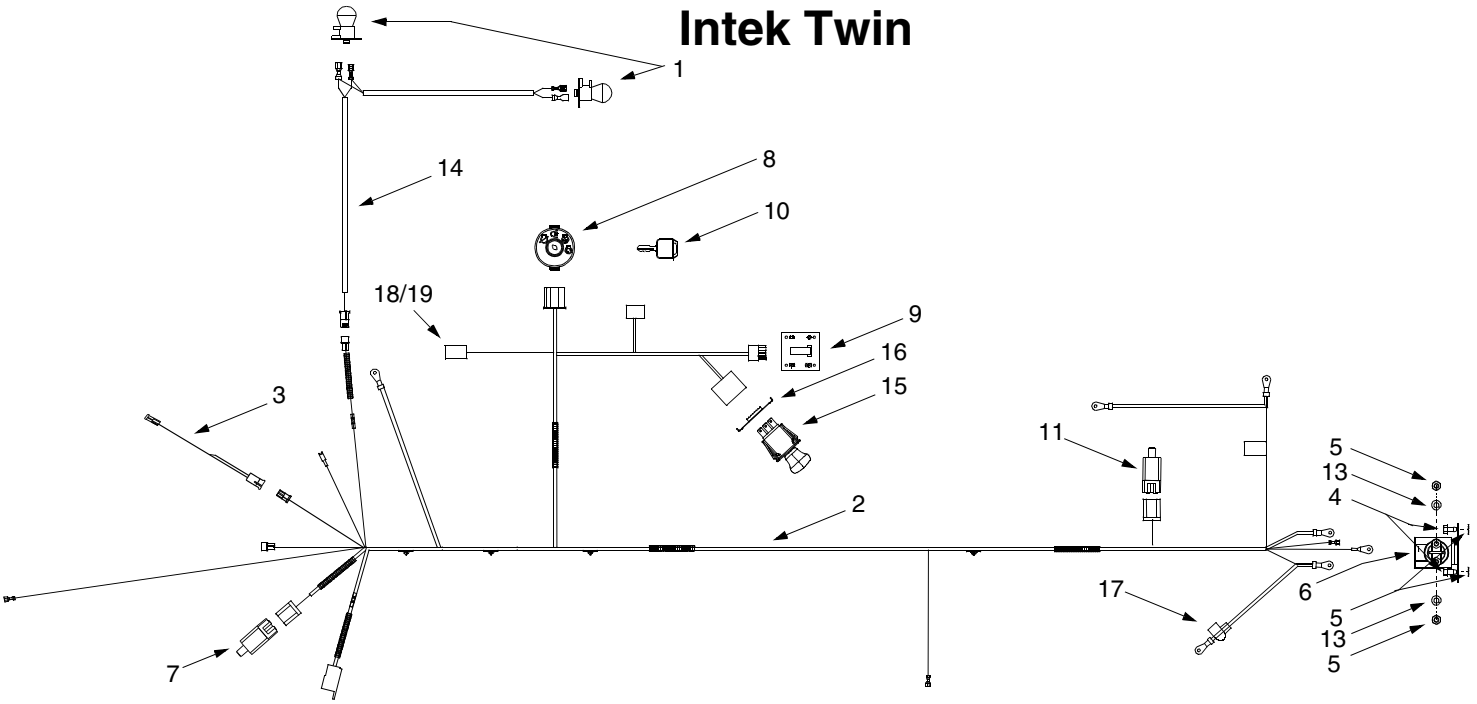

Kohler Twin

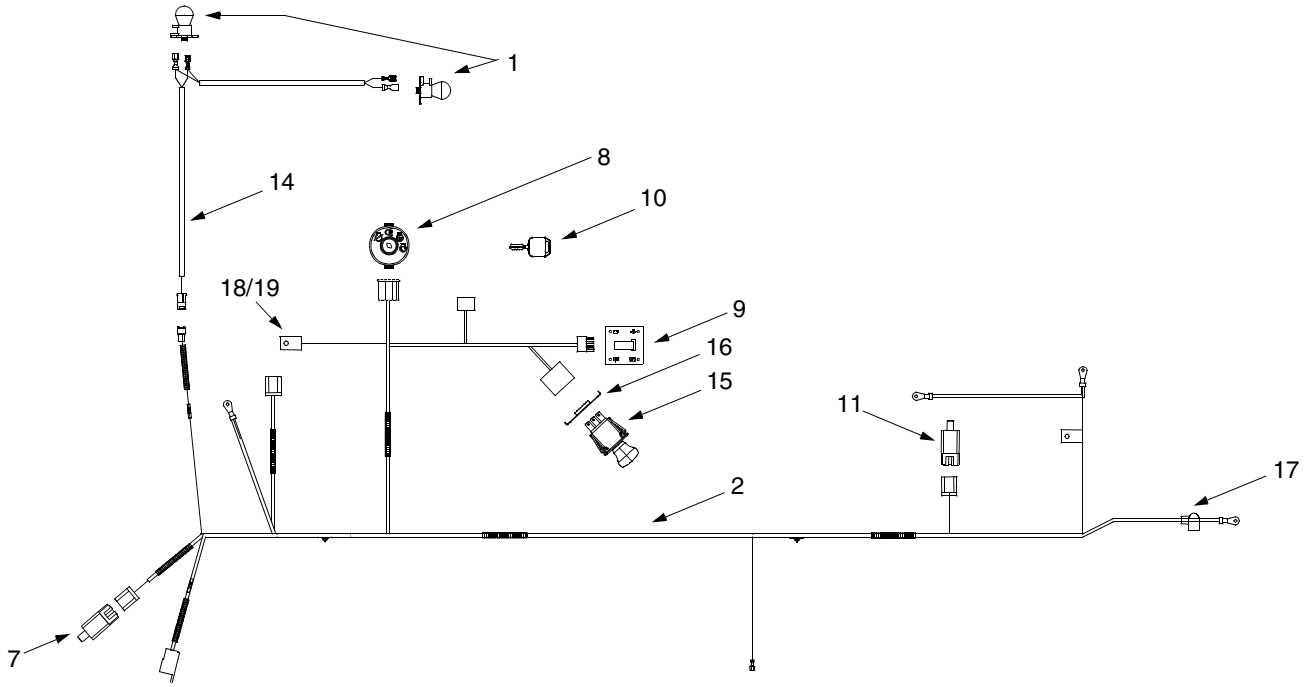

https://truckmanualshub.com/

Electrical System

REF. NO.	PART NO.	DESCRIPTION
1	625-0051	Bulb/Socket Headlight Assembly
2	629-0939	Wiring Harness w/o Ref. 14 (units w/ B&S Intek Twin)
	629-0941	Wiring Harness w/o Ref. 14 (units w/ Kohler Twin)
3	629-0126	Harness Adapter, #18 x 5
4	710-0599	Self Tapping Screw, 1/4-20 x .5
5	712-3006	Hex Nut, 1/4-20
6	725-1426	Solenoid, 12-volt, 100 Amp
7	725-1657A	Snap Mount Safety Interlock Switch (Brake)
8	725-1741	Ignition Switch
9	725-1743	Indicator Monitor / Hour Meter
10	725-1745	Ignition Key
11	725-1747	Safety Plunger Switch (Seat)
12	736-0222	External Lock Washer, 1/4
13	736-0329	Lock Washer, 1/4
14	629-0309	Headlight Harness
15	725-1752	Electric PTO Switch
16	783-0462	Retainer Bracket
17	725-3007A	Positive Terminal Cover (Boot)
18	729-0357	Fuse Holder
19	725-1381	20-amp Fuse

https://truckmanualshub.com/

Model 804

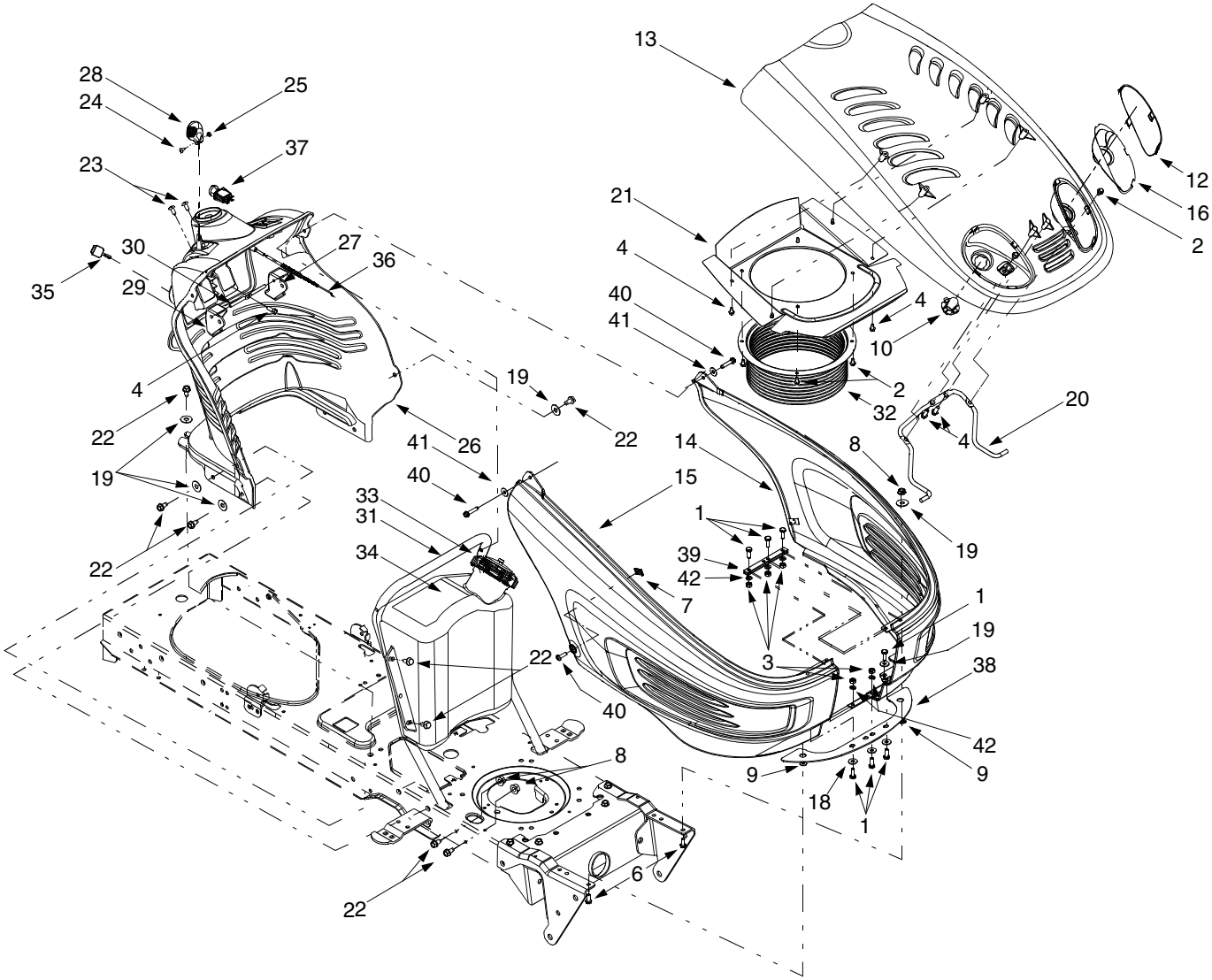

https://truckmanualshub.com/

Tractor Body

REF. NO.	PART NO.	DESCRIPTION
1	710-3015	Hex Cap Screw, 1/4-20 x .75
2	710-0599	Self-tapping Screw, 1/4-20 x .5
3	712-3006	Hex Nut, 1/4-20
4	710-0895	Self-tapping Screw, 1/4-15 x .75
5	710-0924	Pan Phillips Screw, 1/4-20 x .75
6	710-0528	Hex Cap Screw, 5/16-18 x 1.25
7	712-0292	U-type Speed Nut, 1/4-20
8	712-3004A	Flange Lock Nut, 5/16-18
9	726-0201	Speed Nut
10	725-1649	Head Lamp Socket
11	731-1978	RH Head Light Lens
12	731-1979	LH Head Light Lens
13	731-1980	Hood, 4-style (Yellow)
14	731-1981A	LH Side Panel, 4-style (Yellow)
15	731-1982A	RH Side Panel, 4-style (Yellow)
16	731-1995	LH Head Light Reflector
17	731-1996	RH Head Light Reflector
18	736-0173	Flat Washer, .28 x .74 x .063
19	736-3078	Flat Washer, .349 x 1.0 x .063
20	747-1132A	Hood Support Rod
21	783-0808	Heat Shield, 4-style
22	710-0604A	Self-tapping Screw, 5/16-18 x .625

REF. NO.	PART NO.	DESCRIPTION
23	710-1017	Torx Self-tapping Screw, 1/4-14 x .625
24	710-3217	Torx Screw, #8-32 x .375
25	712-0142	Hex Nut, 8-32
26	731-0071	Dash Panel, 4-style
27	731-0072	Parking Brake Button
28	731-1857	Throttle Control Lever
29	731-2106	Cruise Control Button
30	747-1155	Brake/Cruise Pivot Rod
31	749-1087	Dash Support Tube
32	731-2234	Intake Bellow
33	751-0603	Fuel Cap
34	751-0658A	Fuel Tank (three gallon)
35	725-1745	Ignition Key w/ plastic cover
	725-1744	Ignition Key w/o plastic cover
36	746-1085	Choke Cable
37	725-1752	Electric PTO Switch
38	731-2272	Heat Shield
39	783-1000	Grille Support Bracket
40	710-0809	Self-tapping Screw, 1/4-20 x 1.25
41	736-0342	Flat Washer, .283 x .75 x .030
42	736-0329	Lock Washer, 1/4

NOTE: For **painted parts**, please refer to the list of color codes below. Please add the applicable color code, wherever needed, to the part number to order a replacement part. For instance, if a part numbered 700-xxxx is painted Yard-Man Green, the part number to order would be 700-xxxx-0665.

Yard-Man Green: 0665
Yard-Man Yellow: 0674
Powder Black: 0637

https://truckmanualshub.com/

Model 804

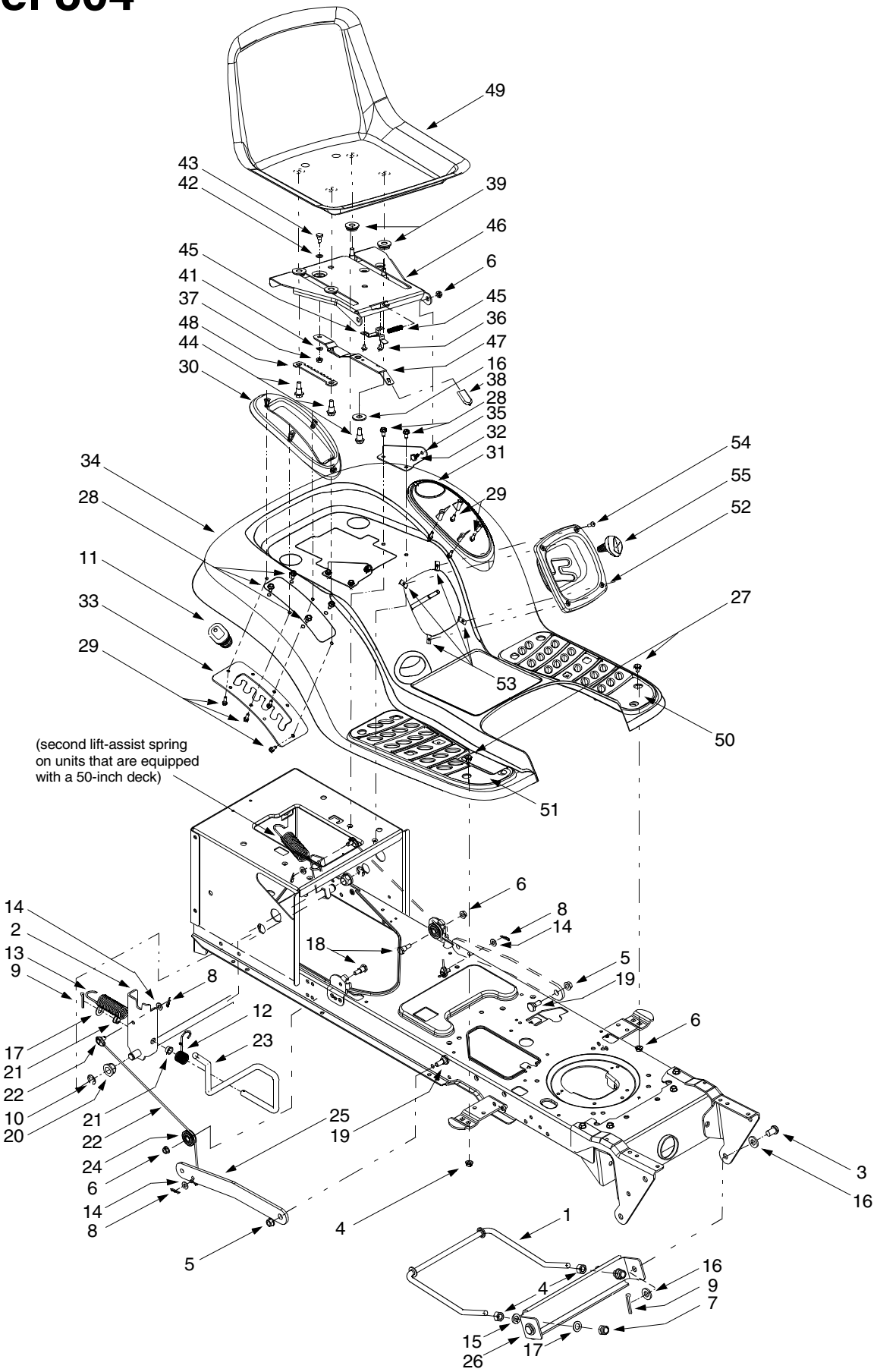

https://truckmanualshub.com/

Lift Assembly

REF. NO.	PART NO.	DESCRIPTION
1	747-1130	Deck Stabilizer Rod
2	683-0197	Lift Shaft Assembly
3	711-0332	Clevis Pin, .5 x .78
4	712-0206	Hex Nut, 1/2-13
5	712-0431	Flange Lock Nut, 3/8-16
6	712-3004A	Flange Lock Nut, 5/16-18
7	712-3083	Hex Nut, 1/2-13
8	714-0104	Internal Cotter Pin
9	714-0111	Cotter Pin
10	716-0106	E-ring
11	720-0311	Handle Grip
12	732-0874	Torsion Spring
13	732-0934	Lift-assist Spring, 1.15 x 5.99
14	736-0275	Flat Washer, 5/16
15	736-0921	Lock Washer, 1/2
16	736-3019	Flat Washer, .31 x 1.062 x .134
17	736-3084	Flat Washer, .51 x 1.12 x .06
18	738-0138	Hex Cap Screw, 5/16-18 x .62
19	738-0380	Shoulder Screw, .5 x .27, 3/8-16
20	741-0225	Hex Flange Bearing
21	741-0715	Snap Flange Bearing
22	746-0968	Lift Cable, 16.16
23	747-1111	Lift Handle
24	756-1154	Roller Pulley
25	783-0678	Arm Lift
26	783-0720A	Deck Stabilizer Bracket
27	710-0260	Carriage Bolt, 5/16 x .62
28	710-0604	Self Tapping Screw, 5/16-18 x .625

REF. NO.	PART NO.	DESCRIPTION
29	710-0895	Self Tapping Screw, 1/4-15 x .75
30	731-1990	Lift Lever Cover
31	731-1993	Cover w/ Cup Holder
32	738-0155	Shoulder Screw, .437 x 1.62
33	783-0677	Lift Adjustment Bracket
34	783-0763A	Fender
35	783-0715	Seat Mounting Bracket
36	710-1268	Screw, #10-16 x .375
37	712-3027	Hex Flange Lock Nut, 1/4-20
38	720-0309A	Seat Adjuster Grip
39	731-1989	Spacer
40	732-0499	Compression Spring, .41 x 1.5
41	736-0175	Spring Washer, .265 x .562 x .025
42	736-0204	Flat Washer, .344 x .62 x .03
43	738-0137A	Shoulder Screw, .340 x .285,1/4-20
44	738-1007	Shoulder Screw, .50 x .50, 3/8-16
45	783-0611	Seat Stop
46	783-0738	Seat Pivot Bracket
47	783-0739	Seat Adjustment Lever
48	783-0753	Seat Adjustment Selector
49	757-0372	Seat, Radiant Yellow w/ Drain Holes
50	735-0657	LH Foot Pad
51	735-0656	RH Foot Pad
	726-3046	Foot Pad Clips (Not Shown)
52	731-2107	Shift Cover
53	712-0292	Speed Nut, 1/4-20
54	710-0924	Phillips Screw, 1/4-20 x .75
55	631-0009	Shift Knob

NOTE: For **painted parts**, please refer to the list of color codes below. Please add the applicable color code, wherever needed, to the part number to order a replacement part. For instance, if a part numbered 700-xxxx is painted Yard-Man Green, the part number to order would be 700-xxxx-0665.

Yard-Man Green: 0665
Yard-Man Yellow: 0674
Powder Black: 0637

https://truckmanualshub.com/

Model 804

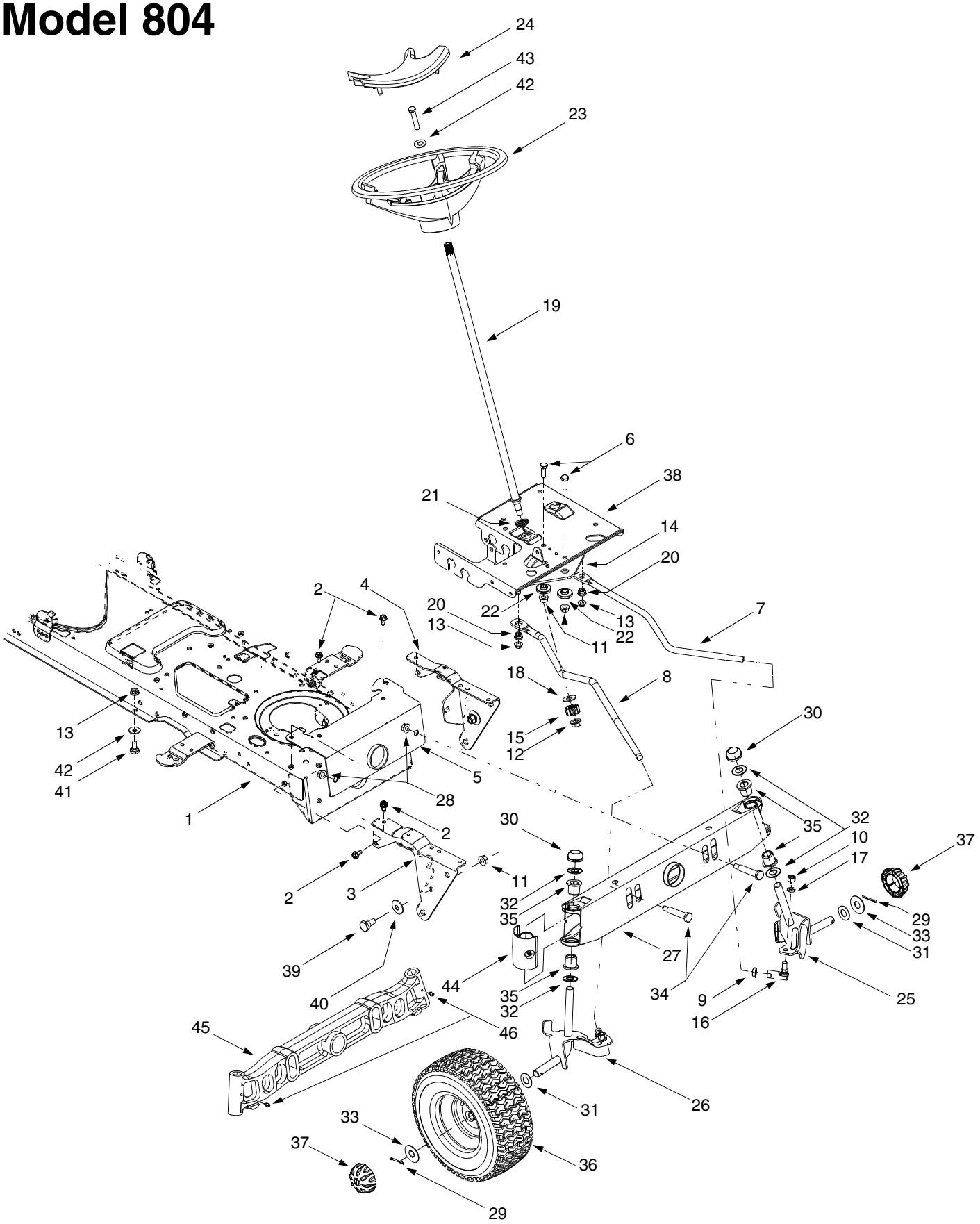

https://truckmanualshub.com/

Steering Assembly

REF. NO.	PART NO.	DESCRIPTION
1	683-0304	Lower Frame Assembly
2	710-0604A	Self-tapping Screw, 16-18 x .625
3	783-0726A	RH Pivot Support Bracket
4	783-0727	LH Pivot Support Bracket
5	783-0728	Pivot Bar Bracket
6	710-0514	Hex Cap Screw, 3/8-16 x 1 (Grade 5)
7	711-1409	LH Drag Link
8	711-1408	RH Drag Link
9	712-0240	Jam Nut, 7/16-20 (Grade 2)
10	712-0241	Hex Nut, 3/8-24 (Grade 2)
11	712-0431	Flange Lock Nut, 3/8-16
12	712-0459	Flange Lock Nut, 7/16-20
13	712-3004A	Flange Lock Nut, 5/16-18
14	717-1550A	Steering Gear, 11/90 Ratio
15	717-1554	Steering Pinion Gear
16	723-0448A	Ball Joint, 7/16-20
17	736-0169	Lock Washer, 3/8
18	736-3084	Flat Washer, .51 x 1.12 x .06
19	738-1001	Steering Shaft, .625 OD x 24.4
20	741-0475	Plastic Bushing, .38 ID
21	741-0656	Hex Flange Bearing, 5/8
22	738-0372	Shoulder Spacer, .38 ID
23	731-1869	Steering Wheel
24	731-1904	Steering Wheel Cap w/ Icon
25	638-0017	LH Axle Assembly, .750 Diameter
26	638-0018	RH Axle Assembly, .750 Diameter
27	683-0128A	Pivot Bar
28	712-0431	Flange Lock Nut, 3/8-16
29	714-0470	Cotter Pin
30	726-0341	Push Cap, .750
31	736-0162	Flat Washer, .64 x 1.0 x .12
32	736-0187	Flat Washer, .64 x 1.24 x .06
	736-0316	Flat Washer, .78 x 1.59 x .06
33	736-0285	Flat Washer, .635 x 1.589 x .06
34	738-1011	Shoulder Screw, .5 x 2.2, 3/8-16
35	741-0660	Flange Bearing, .760 ID x .937 OD
36	634-0183	Wheel Assembly Complete, 16 x 6.5 x 8
	634-0182	Rim Only
	734-0255	Air Valve (Not Shown)
	734-1727	Tire Only, Square Shoulder
	741-0516	Plastic Flange (Not Shown)
	741-0990	Plastic Flange w/ Fitting (Not Shown)
37	734-2290	Hub Cap
38	783-0653B	Steering Support Bracket
39	738-0143	Shoulder Screw, 3/8-16
40	736-0331	Bell Washer, .39 x 1.13 x .062
41	738-0140	Shoulder Screw, .435 x .178, 5/16 x .56
42	736-0242	Bell Washer, .34 x .872
43	710-0643	Hex Bolt, 5/16-18 X 1
44	731-1291A	Pivot Bar End Cap
45	719-0525A	Cast Iron Pivot Bar (if so equipped)
46	737-3000	Lube Fitting, 3/16 (if so equipped)
47	710-1260A	Self-tapping Screw, 5/16-18 x .750

NOTE: For **painted parts**, please refer to the list of color codes below. Please add the applicable color code, wherever needed, to the part number to order a replacement part. For instance, if a part numbered 700-xxxx is painted Yard-Man Green, the part number to order would be 700-xxxx-0665.

Yard-Man Green: 0665
Yard-Man Yellow: 0674
Powder Black: 0637

https://truckmanualshub.com/

Model 804

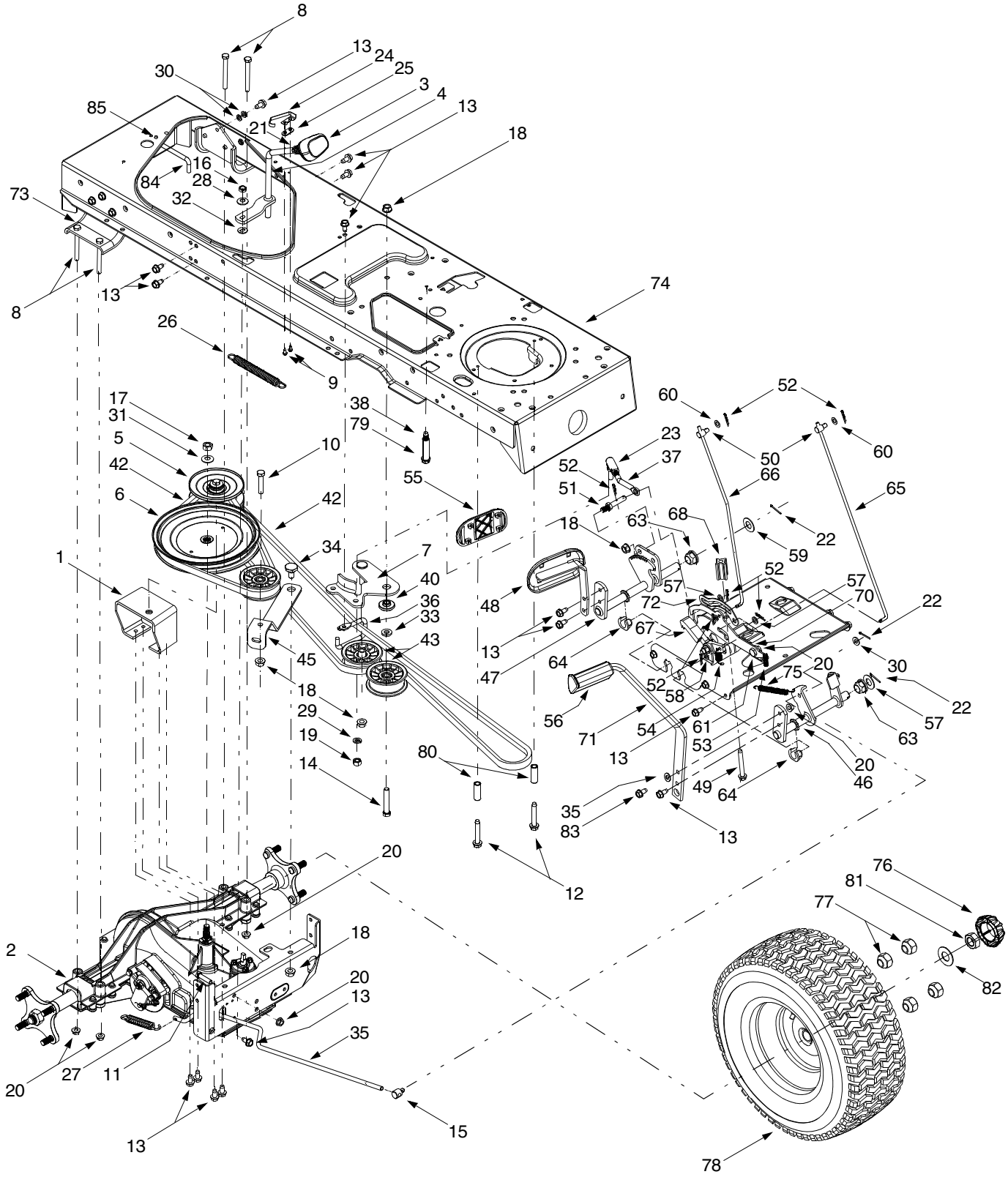

https://truckmanualshub.com/

Drive System

REF. NO.	PART NO.	DESCRIPTION
1	618-0375	Variable-speed Bracket Assembly
2	618-0376	Two-speed Transmission Assembly
3	631-0009	Shfter Knob
4	647-0037	Shift Lever
5	656-0050	Variable-speed Pulley Assembly
6	656-0051	Transmission Pulley, 8.5 x .5 - 36
7	683-0251	Double-idler Bracket
8	710-0189	Hex Cap Screw, 5/16-18 x 3
9	710-0227	Self Tapping Screw, #8-18 x .5
10	710-0347	Hex Cap Screw, 3/8-16 x 1.75
11	710-0528	Hex Cap Scerw, 5/16-18 x 1.25
12	710-0778	Self-tapping Screw, 1/4-20 x 1.5
13	710-0604A	Self Tapping Screw, 5/16-18 x .625
14	710-3011	Hex Cap Screw, 3/8-16 x 2.25
15	711-0677	Ferrule, 5/16 x .312 Dia.
16	712-0181	Hex Jam Nut, 3/8-16
17	712-0378	Hex Nut, 7/16-20
18	712-0431	Flange Lock Nut, 3/8-16
19	712-0798	Hex Nut, 3/8-16
20	712-3004A	Flange Lock Nut, 5/16-18
21	712-3008	Hex Jam Nut, 3/8-16
22	714-0111	Cotter Pin
23	723-3018	Ball Joint, 3/8-24
24	725-1713	Spring Switch
25	726-0320	Insulator Nut Plate
26	732-0384	Extension Spring, .62 Dia. x 6.12
27	732-0716	Extension Spring, .59 OD x 4.0
28	736-0105	Bell Washer, .401 x .870 x .063
29	736-0169	Lock Washer, 3/8
30	736-0275	Flat Washer, 5/16
31	736-0407	Bell Washer, .45 x 1.0 x .062
32	736-0642	Flat Washer, .44 x .75 x .06
33	736-3010	Flat Washer, .407 x .812 x .135
34	738-0322	Shoulder Screw, .625 Dia. x .21
35	747-1122	Brake Rod
36	747-1123A	Belt Guard
37	747-1127	Idler Adjustment Rod, 3/8
38	710-1026	Self-tapping Screw, 1/4-20 x 1.75
39	747-1185	Transmission Belt Guard Rod
40	748-0416	Shoulder Spacer, .380 ID
41	754-0467	Variable-speed Belt
42	754-0468	Drive Belt
43	756-0981	Flat Idler, 2.75 OD
44	783-0667	Transmission Torque Bracket
45	783-0669	Idler Bracket
46	647-0031	Brake Control Shaft Assembly
47	647-0032	Speed Control Shaft Assembly
48	683-0266	AutoDrive™ Pedal Assembly
49	710-1135	Self Tapping Screw, 5/16-18 x 2.5
50	711-0736	Ferrule, 1/4-20
51	711-1363	Pin, 3/8-16 x 2.43
52	714-0104	Cotter Pin
53	732-0437	Compression Spring, .34 OD x 1.0
54	732-0955	Extension Spring, .5 OD x 1.41
55	735-0662	AutoDrive™ Pedal Pad
56	735-3049	Brake Pedal Pad
57	736-0140	Flat Washer, .281 x .5 x .0625
58	736-0142	Flat Washer, 9/32 x 1/2 x 1/16
59	736-0187	Flat Washer, .64 x 1.24 x .06
60	736-0204	Flat Washer, .344 x .062 x .03
61	738-0155	Shoulder Screw, .437 x 1.62
62	738-0507B	Shoulder Screw, .5 x .434
63	741-0225	Hex Flange Bearing
64	741-3065A	Split Hex Flange Bearing
65	747-1137	Cruise Control Rod
66	747-1138	Brake Lock Control Rod
67	748-0413	Cruise Latch
68	748-0415A	Spacer, 5/16 x 1.54
69	783-0653B	Steering Support Bracket
70	783-0732	AutoDrive™ Lockout Bracket
71	783-0773	Brake Pedal
72	783-0780A	Neutral Return Bracket
73	783-0693	Axle Bracket
74	683-0304	Lower Frame Assembly
75	732-0963	Extension Spring, .5 OD x 6.37
76	731-2290	Hub Cap
77	712-3050	Lug Nut, 7/16-14
78	634-0132	Wheel Assembly Complete, 23 x 9.5 x 12
	634-0194	Rim Only
	734-0255	Air Valve
	734-1728	Tire Only, Square Shoulder
79	750-0768	Split Spacer, .25 x .37 x 1.32
80	750-0566	Spacer, .372 x .26 x 1.03
81	712-3026	Jam Nut, 3/4-16
82	736-0316	Flat Washer, .78 x 1.59 x .06
83	710-1260A	Hex Screw, 5/16-18 x .75
84	747-1185	Transmission Belt Guard Rod
85	710-0599	Self Tapping Screw,1/4-20 x .5

https://truckmanualshub.com/

Model 804

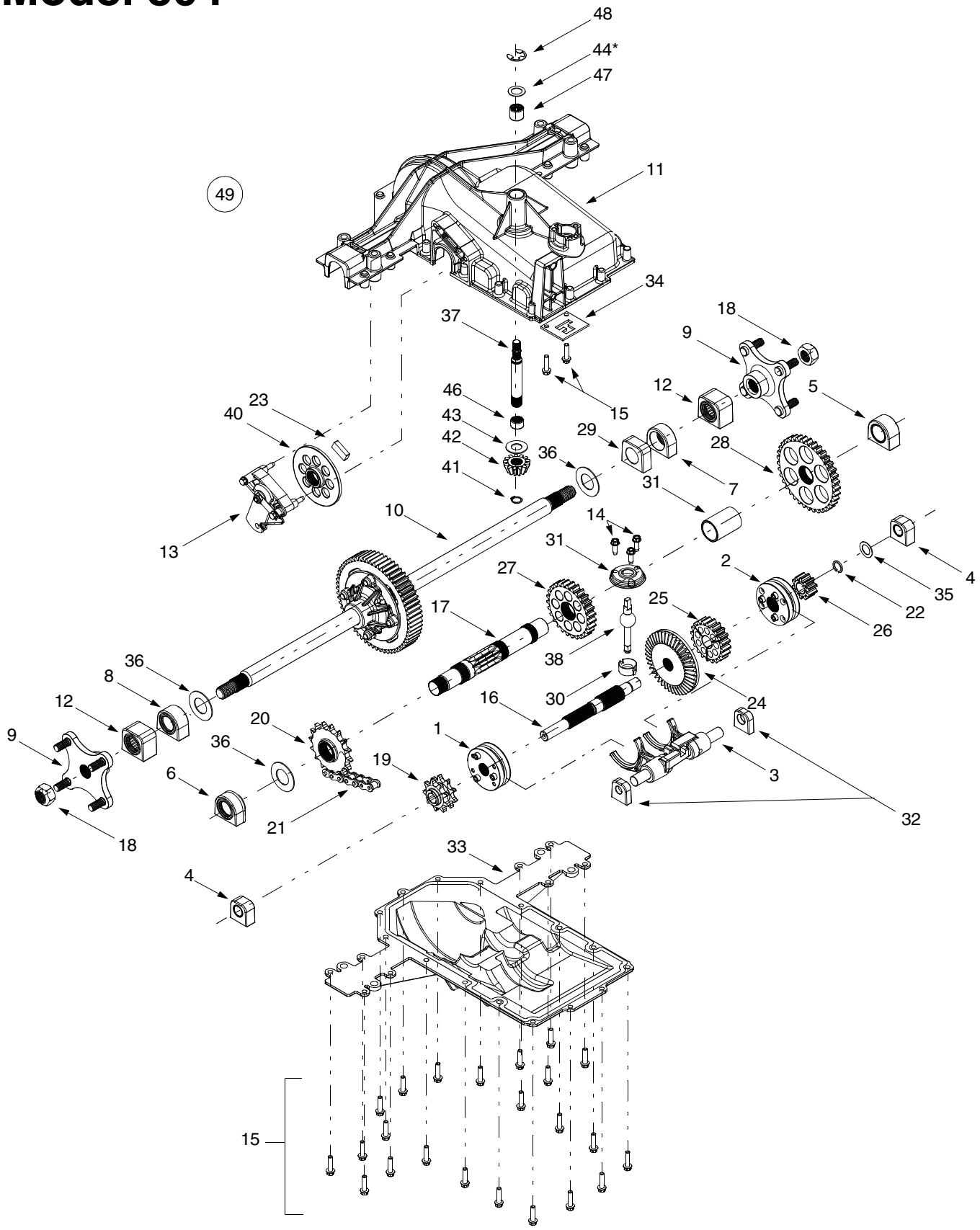

https://truckmanualshub.com/

Two-speed Transmission

REF. NO.	PART NO.	DESCRIPTION
1	618-0225	Reverse Collar Assembly
2	618-0226	Hi-Lo Collar Assembly
3	618-0227A	Shift Fork Assembly
4	618-0284	Detent Block Assembly
5	618-0285	Output Bearing Block Assembly
6	618-0286	Output Seal Bearing Block Assembly
7	618-0287	Inboard Sealed Axle Block Assembly
8	618-0302	Inboard Sealed Axle Block Assembly
9	618-0365	Wheel Hub Assembly
10	618-0368	Differential Axle Assembly
11	719-0379A	Upper Housing
12	641-0002A	Axle Bearing Block Assembly
13	661-0012	Brake Assembly
14	710-0642	Self-tapping Screw, 1/4-20 x .75
15	710-0788	Self-tapping Screw, 1/4-20 x 1.0
16	711-1051A	Drive Shaft
17	711-1216	Output Shaft
18	712-1329	Nut, 3/4-16
19	713-0446	9-tooth Sprocket
20	713-0447	16-tooth Sprocket
21	713-0448	22-link Chain, .625
22	716-0131	External Snap Ring
23	717-0678	Brake Pad
24	717-1438	41-tooth Bevel Gear
25	717-1439	20-tooth Spur Gear
26	717-1440	10-tooth Spur Gear
27	717-1441	27-tooth Spur Gear
28	717-1442	37-tooth Spur Gear
29	718-0500	Inner Axle Bearing Block
30	718-0504	Shifter Insert
31	718-0505	Shifter Cover
32	718-0537	Shifter Bearing Block
33	719-0385	Lower Housing
34	718-0540	Lockout Plate
35	736-0337	Flat Washer, 5/8 x 1.0
36	736-3046A	Flat Washer, 1.01 x 1.86 x .060
37	711-1235	Input Shaft
38	747-1140	Shift Lever
39	750-1033A	Spacer, 1.13 x 1.38 x 1.968
40	761-0215	Disc Brake
41	716-0114	Retaining Ring, .56
42	717-1463	13-tooth Bevel Gear
43	736-0335	Flat Washer
44	736-0336	Flat Washer, 5/8 x 1.0 x .030*
	736-0337	Flat Washer, 5/8 x 1.0 x ..040*
	736-0349	Falt Washer,5/8 x 1.0 x .020*
46	741-0335	Needle Bearing
47	741-0696	Needle Bearing
48	716-0231	E-ring, .75
49	618-0376	Transmisssion Assembly Complete

NOTE: Transmission has a grease capacity of 32 oz. Order part number 737-0148.

NOTE: Upon reassembling transmission input shaft for any reason, refill its cavity with approximately 2/3 oz. of grease. Order part number 737-0289.

*Use appropriate flat washer in this application allowing no more than .012 maximum end play

https://truckmanualshub.com/

Model 804

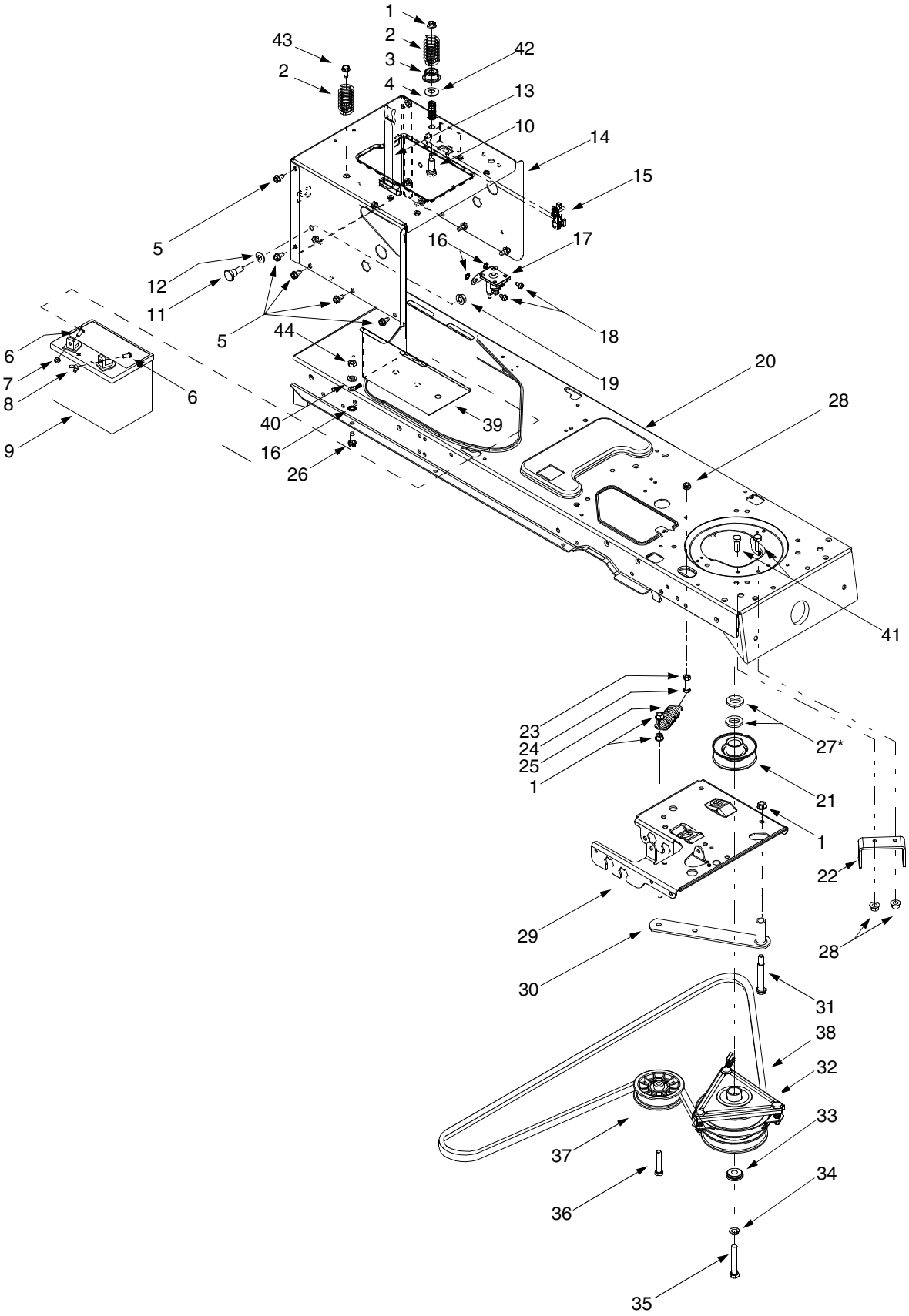

https://truckmanualshub.com/

Power Take-off Systems

REF. NO.	PART NO.	DESCRIPTION
1	712-0431	Flange Lock Nut, 3/8-16
2	732-0735	Compression Spring, 1.318 x 2.37
3	783-0733	Spacer Cup, 1.5 OD
4	732-0956	Compression Spring, .66 OD x 1.5
5	710-0604A	Self-tapping Screw, 5/16-18 x .625
6	710-0751	Hex Cap Screw, 1/4-20 x .62
7	712-0271	Hex Sems Nut, 1/4-20
8	712-3044	Wing Nut, 1/4-20
9	725-1706	12-volt Battery, 270 CCA
10	738-1014	Shoulder Screw, .5 x 1.25, 3/8-16
11	738-1020	Shoulder Screw, .625 x .5, 7/16-20
12	736-0407	Bell Washer, .45 x 1.0 x .062
13	723-0444	Battery Strap
14	783-1033	Hitch Plate
15	725-1747	Safety Interlock Plunger Switch
16	736-0222	Lock Washer, 1/4
17	725-1426	Solenoid, 12-Volt, 100 Amp
18	710-0599	Self-tapping Screw, 1/4-20 x .5
19	712-0459	Flange Lock Nut, 7/16-20
20	683-0304	Lower Frame Assembly
21	756-0639A	Engine Pulley, 3.56 OD
22	783-1003	Electric Clutch Anti-rotation bracket
23	712-3010	Hex Nut, 5/16-18
24	710-3180	Hex Cap Screw, 5/16-18 x 1.75 (Grade 5)
25	732-0978	Extension Spring, 1.2 OD x 3.638
26	710-0642	Self-tapping Screw, 1/4-20 x .750
27	736-0277	Flat Washer, 1.031 x 1.62 x .095*
28	712-3004A	Flange Lock Nut, 5/16-18
29	783-0653B	Steering Support Bracket
30	683-0294	Idler Bracket Assembly
31	738-3056	Shoulder Screw, 1/2 Diameter x 2.5
32	717-1708	Electric PTO Clutch
33	738--0785	Shoulder Spacer, 1.38 x .445 x .36
34	736-0171	Lock Washer, 7/16
35	710-3157	Hex Cap Screw, 7/16-20 x 3.25 (Grade 5)
	710-0561	Hex Cap Screw, 7/16-20 x 2.5 (Grade 5)*
36	710-3011	Hex Cap Screw, 3/8-16 x 2.25 (Grade 5)
37	756-0627	Flat Idler Pulley, 3.5 OD
38	754-0476	PTO Belt (46-inch Decks)
	754-0475	PTO Belt (50-inch Decks)
39	783-0349	Battery Tray
40	736-0119	Lock Washer, 5/16
41	710-3025	Hex Cap Screw, 5/16-18 x .625
42	736-0105	Bell Washer, .401 x .870 x .063
43	710-1650	Self-tapping Screw, 5/16-18 x .875
44	712-3006	Hex Nut, 1/4-20

*Found on units equipped with a Kohler engine ONLY.

NOTE: For **painted parts**, please refer to the list of color codes below. Please add the applicable color code, wherever needed, to the part number to order a replacement part. For instance, if a part numbered 700-xxxx is painted Yard-Man Green, the part number to order would be 700-xxxx-0665.

Yard-Man Green: 0665
Yard-Man Yellow: 0674
Powder Black: 0637

https://truckmanualshub.com/

Model 804

46-inch Deck

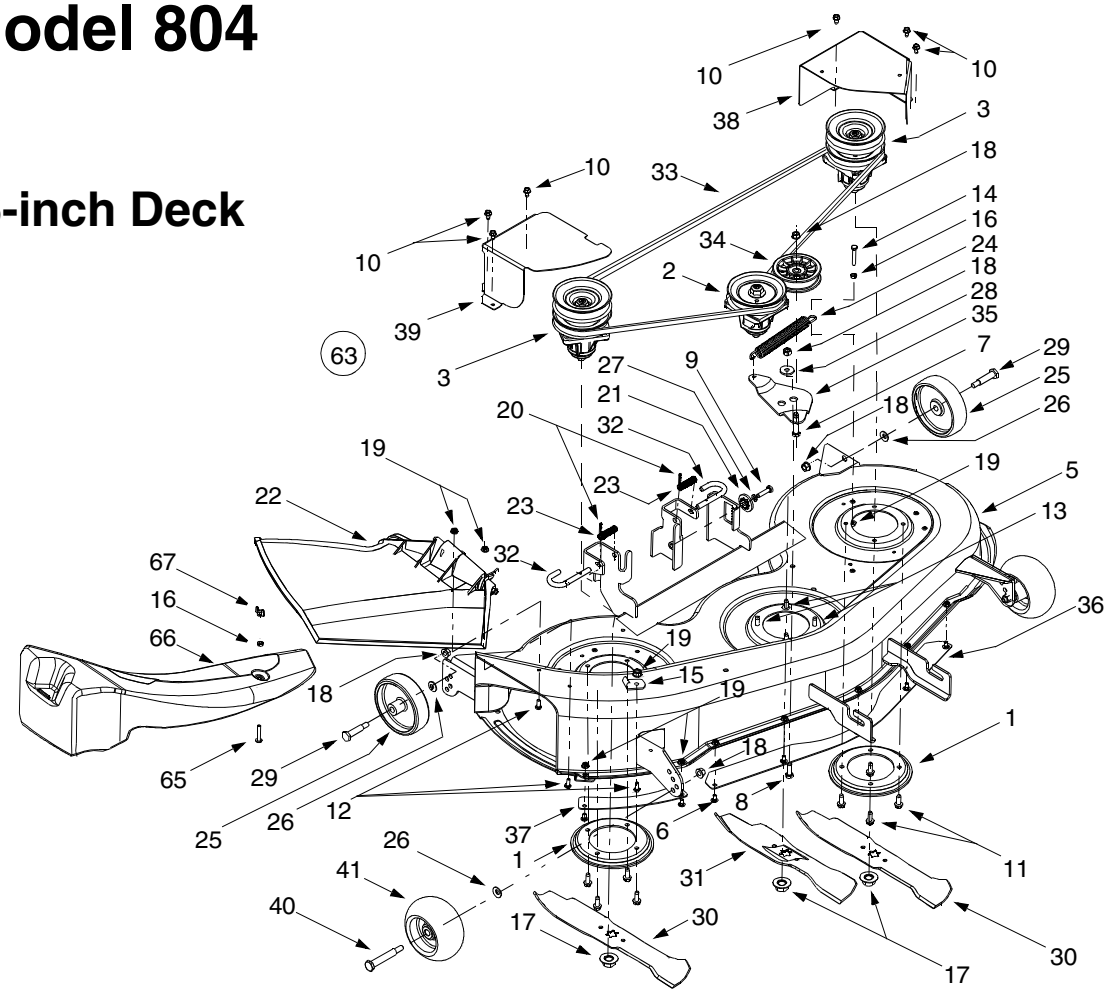

50-inch Deck

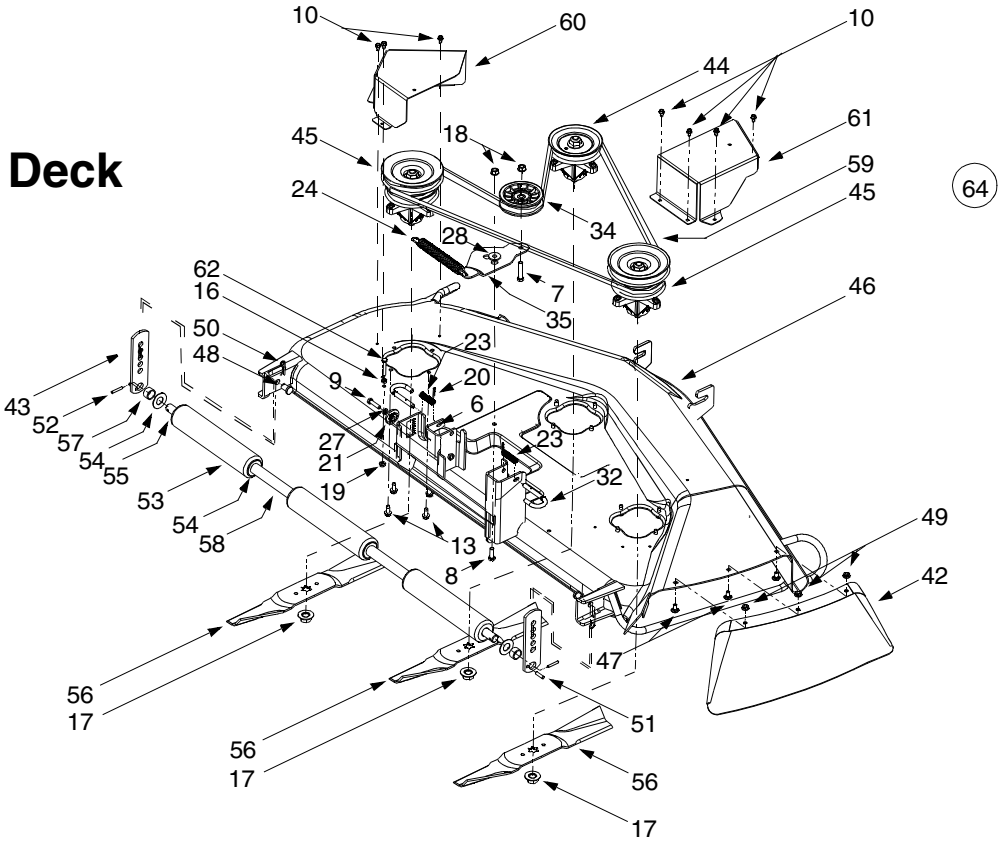

https://truckmanualshub.com/

Cutting Decks

REF. NO.	PART NO.	DESCRIPTION
1	17982	Reinforcement Spindle Plate
2	618-0240	Center Spindle Assembly, 5 Dia.
	756-0959	Pulley Only
3	618-0241	Double Pulley Spindle Assembly
	756-0603	Double Pulley Only
4	683-0254	Deck Adjustment Bracket w/ Weld Nut
5	683-0199B	46-inch Deck Shell
6	710-0167	Carriage Screw, 1/4-20 x .5
7	710-0347	Hex Cap Screw, 3/8-16 x 1.75
8	710-0514	Hex Cap Screw, 3/8-16 x 1.0
9	710-0528	Hex Cap Screw, 5/16-18 x 1.25
10	710-0599	Self Tapping Screw,1/4-20 x .5
11	710-0650	Self Tapping Screw, 5/16-18 x .875
12	710-0751	Hex Cap Screw, 1/4-20 x .62
13	710-1260A	Self Tapping Screw, 5/16-18 x .75
14	712-0106	Hex Cap Screw, 1/4-20 x 1.25 (Grade 5)
15	16606	Retainer Hook
16	712-0291	Center Lock Nut, 1/4-20
17	712-0417A	Hex Flange Nut, 5/8-18
18	712-0431	Flange Lock Nut, 3/8-16
19	712-3027	Hex Flange Lock Nut, 1/4-20
20	714-0104	Internal Cotter Pin, .072 x 1.12
21	717-1553A	Deck Adjustment Gear
22	731-1032B	Side Discharge Chute Assembly
23	732-0306	Compression Spring, .406 x .531 x 1.75
24	732-0594A	Extension Spring, .91 x 7.33
25	734-0973	Deck Wheel, 5 x 1.38
26	736-0105	Bell Washer, .401 x .87 x .063
27	736-0119	Lock Washer, 5/16
28	738-0347	Shoulder Spacer, .625 x .169
29	738-0373	Shoulder Spacer, .498 x 1.53
30	742-0611	Three-in-one Blade, Star Center, 16.28
31	742-0612	Three-in-one Blade, Star Center, 14.88
32	747-1116	Deck Release Pin
33	754-0474	Deck Belt

REF. NO.	PART NO.	DESCRIPTION
34	756-0627	Flat Idler Pulley, 3.5 OD
35	783-0139	Idler Bracket
36	783-0141	Center Deck Skirt
37	783-0142	RH Deck Skirt
38	783-0747	LH Belt Cover
39	783-0805A	RH Belt Cover
40	738-3056	Shoulder Screw, .5 x 2.5
41	734-30586	Deck Wheel, 5
42	12649	Chute Guard
43	12650	Height Adjustment Bracket
44	618-0268	Center Spindle Assembly, 5 Dia.
45	618-0269	Double Pulley Spindle Assembly
46	683-0196	50-inch Deck Shell
47	710-0260	Carriage Bolt, 5/16-18 x .62
48	711-0332	Clevis Pin, .50 Dia. x .78
49	712-3004A	Hex Flange Lock Nut, 5/16-18 (Grade 5)
50	714-0145	Click Pin, .092 x 1.64
51	715-0108	Spring Pin, 1/4 Dia. x 1
52	715-0246	Spring Pin, 3/16 x 1.25
53	731-0335	Deck Roller
54	736-0316	Flat Washer, .78 x 1.59 x .06
55	738-0295	Deck Roller Shaft, .75 Dia. x 47.12
56	742-0623	Blade, Star Center, 17.3
57	750-0212	Spacer, .752 x 1.0 x .53
58	750-0288	Spacer, .82 x 1.0 x 5.75
59	754-0291A	Deck Belt
60	783-0746	Belt Cover, L.H.
61	783-0793	Belt Cover, R.H.
62	710-3288	Hex Cap Screw, 1/4-20 x 1.62
63	753-0875	46-inch Deck Assembly Complete
64	753-0877	50-inch Deck Assembly Complete
65	710-0578	Screw, 1/4-20 x 1.5 (if so equipped)
66	731-1636	Mulch Plug, 46-inch Decks (if so equipped
67	712-3087	Wing Nut, 1/4-20 (if so equipped)

NOTE: For **painted parts**, please refer to the list of color codes below. Please add the applicable color code, wherever needed, to the part number to order a replacement part. For instance, if a part numbered 700-xxxx is painted Yard-Man Green, the part number to order would be 700-xxxx-0665.

Yard-Man Green: 0665
Yard-Man Yellow: 0674
Powder Black: 0637

https://truckmanualshub.com/

Model 804

Briggs & Stratton Intek Twin

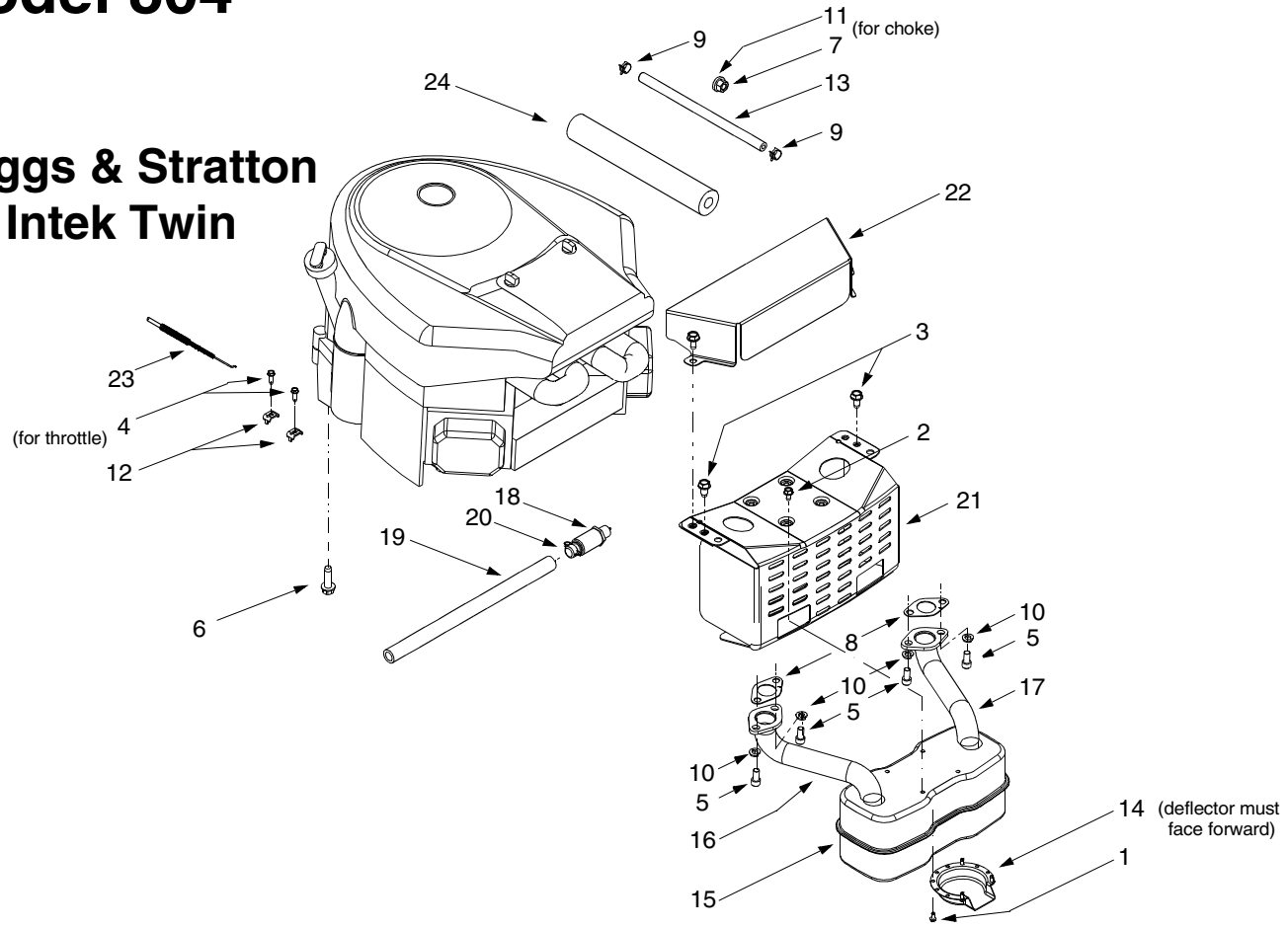

Kohler Twin-cylinder

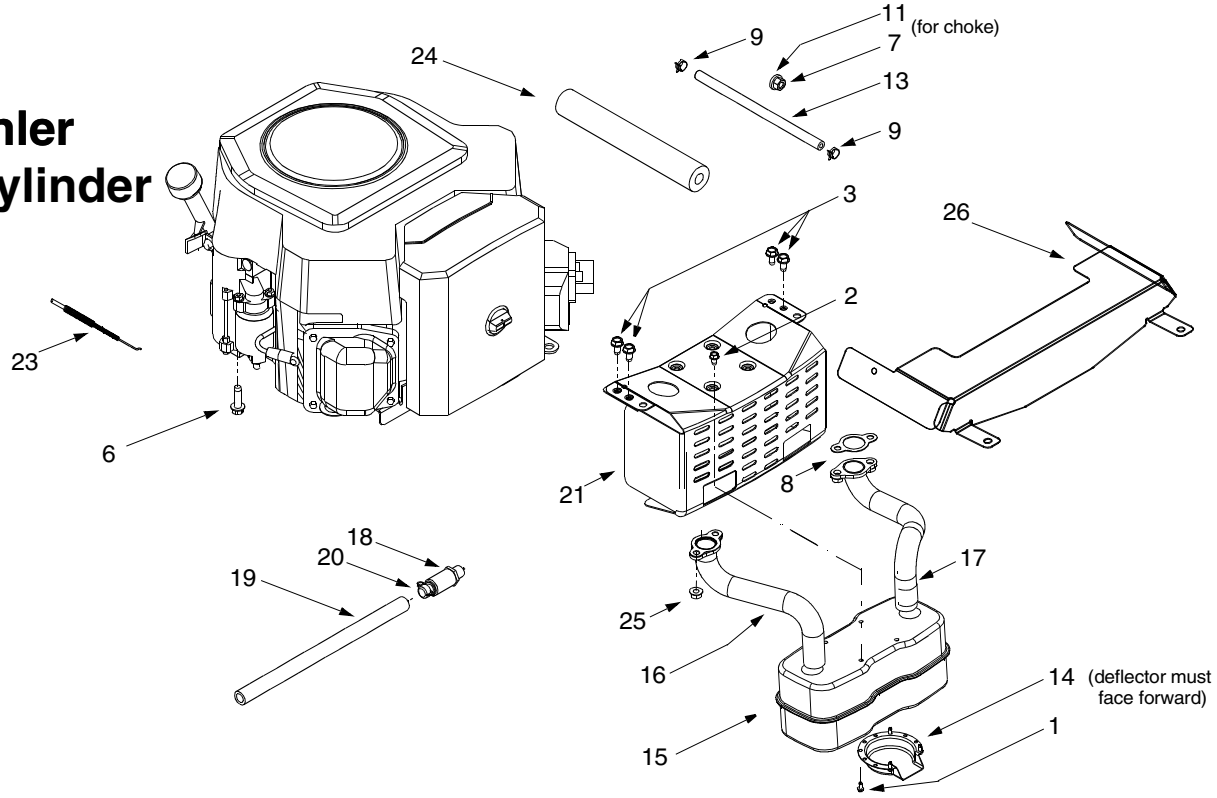

https://truckmanualshub.com/

Engine Accessories

REF. NO.	PART NO.	DESCRIPTION
1	710-0148	Self Tapping Screw, #8-32 x .375
2	710-0599	Self Tapping Screw, 1/4-20 x .5
3	710-0604A	Self Tapping Screw, 5/16-18 x .625
4	710-1237	Screw, #10-32 x .625
5	710-1314	Socket Cap Screw, 5/16-18 x .625
6	710-1315	Self Tapping Screw, 3/8-16 x 1.25
7	712-3017	Hex Nut, 3/8-16
8	721-0460	Exhaust Gasket (Intek Twin)
	721-0377	Exhaust Gasket (Kohler Twin)
9	726-0205	Hose Clamp
10	736-0119	Lock Washer, 5/16
11	736-0300	Flat Washer, .406 x .875 x .059
12	751B221535	Casing Clamp
13	751-0535	Fuel Line Hose
14	751-0564	Muffler Deflector
15	751-0616	Muffler (Intek Twin)
	751-0805	Muffler (Kohler Twin)
16	751-0650	RH Exhaust Pipe (Intek Twin)
	751-0645	RH Exhaust Pipe (Kohler Twin)
17	751-0651	LH Exhaust Pipe (Intek Twin)
	751-0644A	LH Exhaust Pipe (Kohler Twin)
18	751-3140	Oil Drain Valve
19	751-3141-12	Oil Drain Hose
20	751-3142	Oil Drain Cap
21	783-0615	Muffler Heat Shield
22	783-0625B	Engine Heat Shield (Intek Twin)
23	746-1086	Throttle Cable (Intek Twin & Kohler Twin)
24	722-0263	Foam (fits over fuel line)
25	712-3086	Flange Nut, M8 x 1.25-6
26	783-0881	Heat Shield (Kohler Twin) (Mounts to Grille Front)

NOTE: For **painted parts**, please refer to the list of color codes below. Please add the applicable color code, wherever needed, to the part number to order a replacement part. For instance, if a part numbered 700-xxxx is painted Yard-Man Green, the part number to order would be 700-xxxx-0665.

Yard-Man Green: 0665
Yard-Man Yellow: 0674
Powder Black: 0637

https://truckmanualshub.com/

Notes

https://truckmanualshub.com/

Notes

https://truckmanualshub.com/

MANUFACTURER'S LIMITED WARRANTY FOR:

YARD-MAN™ by MTD®

The limited warranty set forth below is given by MTD PRODUCTS INC ("MTD") with respect to new merchandise purchased and used in the United States, its possessions and territories.

MTD warrants this product against defects in material and workmanship for a period of two (2) years commencing on the date of original purchase and will, at its option, repair or replace, free of charge, any part found to be defective in material or workmanship. This limited warranty shall only apply if this product has been operated and maintained in accordance with the Operator's Manual furnished with the product, and has not been subject to misuse, abuse, commercial use, neglect, accident, improper maintenance, alteration, vandalism, theft, fire, water or damage because of other peril or natural disaster. Damage resulting from the installation or use of any accessory or attachment not approved by MTD Products Inc. for use with the product(s) covered by this manual will void your warranty as to any resulting damages.

Normal wear parts or components thereof are subject to separate terms as follows: All normal wear part or component failures will be covered on the product for a period of 90 days regardless of cause. After 90 days, but within the two year period, normal wear part failures will be covered ONLY IF caused by defects in material or workmanship of OTHER component parts. Normal wear parts and components include, but are not limited to, belts, blades, blade adapters, grass bags, rider deck wheels, seats, snow thrower skid shoes, shave plates and tires. Batteries are covered by a 90-day limited replacement warranty.

HOW TO OBTAIN SERVICE: Warranty service is available, WITH PROOF OF PURCHASE THROUGH YOUR LOCAL AUTHORIZED SERVICE DEALER. To locate the dealer in your area, please check for a listing in the Yellow Pages or contact the Customer Service Department of MTD PRODUCTS INC by calling 1-800-800-7310 or writing to P.O. Box 368022, Cleveland, Ohio 44136-9722.

This limited warranty does not provide coverage in the following cases:

a. The engine or component parts thereof. These items carry a separate manufacturer's warranty. Please refer to the applicable manufacturer's warranty on these items.
b. Log splitter pumps, valves and cylinders have a separate one year warranty.
c. Routine maintenance items such as lubricants, filters, blade sharpening and tune-ups, or adjustments such as brake adjustments, clutch adjustments or deck adjustments; and normal deterioration of the exterior finish due to use or exposure.
d. MTD does not extend any warranty for products sold or exported outside of the United States of America, its possessions and territories, except those sold through MTD's authorized channels of export distribution.

No implied warranty, including any implied warranty of merchantability or fitness for a particular purpose, applies after the applicable period of express written warranty above as to the parts as identified. No other express warranty or guaranty, whether written or oral, except as mentioned above, given by any person or entity, including a dealer or retailer, with respect to any product shall bind MTD. During the period of the Warranty, the exclusive remedy is repair or replacement of the product as set forth above. (Some states do not allow limitations on how long an implied warranty lasts, so the above limitation may not apply to you.)

The provisions as set forth in this Warranty provide the sole and exclusive remedy arising from the sales. MTD shall not be liable for incidental or consequential loss or damages including, without limitation, expenses incurred for substitute or replacement lawn care services, for transportation or for related expenses, or for rental expenses to temporarily replace a warranted product. (Some states do not allow the exclusion or limitation of incidental or consequential damages, so the above exclusion or limitation may not apply to you.)

In no event shall recovery of any kind be greater than the amount of the purchase price of the product sold. Alteration of the safety features of the product shall void this Warranty. You assume the risk and liability for loss, damage, or injury to you and your property and/or to others and their property arising out of the use or misuse or inability to use the product.

This limited warranty shall not extend to anyone other than the original purchaser, original lessee or the person for whom it was purchased as a gift.

How State Law Relates to this Warranty: This limited warranty gives you specific legal rights, and you may also have other rights which vary from state to state.