https://truckmanualshub.com/

PREFACE

1. This Parts Catalog is the 1st edition of Yanmar crawler backhoe B7Σ(B7-5) for Europe.

Pub.No. : 000Y00S4190
Published : May , 2003

2. Model name

	Column	Model name	M/#	Manufactured
Ⅰ(Vehicle)	(A)	B7-5	50621～	2003/03～
Ⅱ(Engine)	(A)	4TNE98-EBVA	21049～	2003/02～

3. Your understanding is asking that this parts catalog is not a technical data manual setting forth as servicing procedures, This parts catalog is using simplified illustration.
Be sure to use Yanmar Genuine Parts in your maintenance servicing of Yanmar products.
Be careful not to use the simple parts available in the market; otherwise their use in repairing causes such as an early breakage, for instance.

How to read this Parts Catalog.

1.Parts mentioned in Parts Catalog may not necessarily be standard equipping parts
2.Parts change may be made without prior notice.
3.Form of this Parts Catalog.

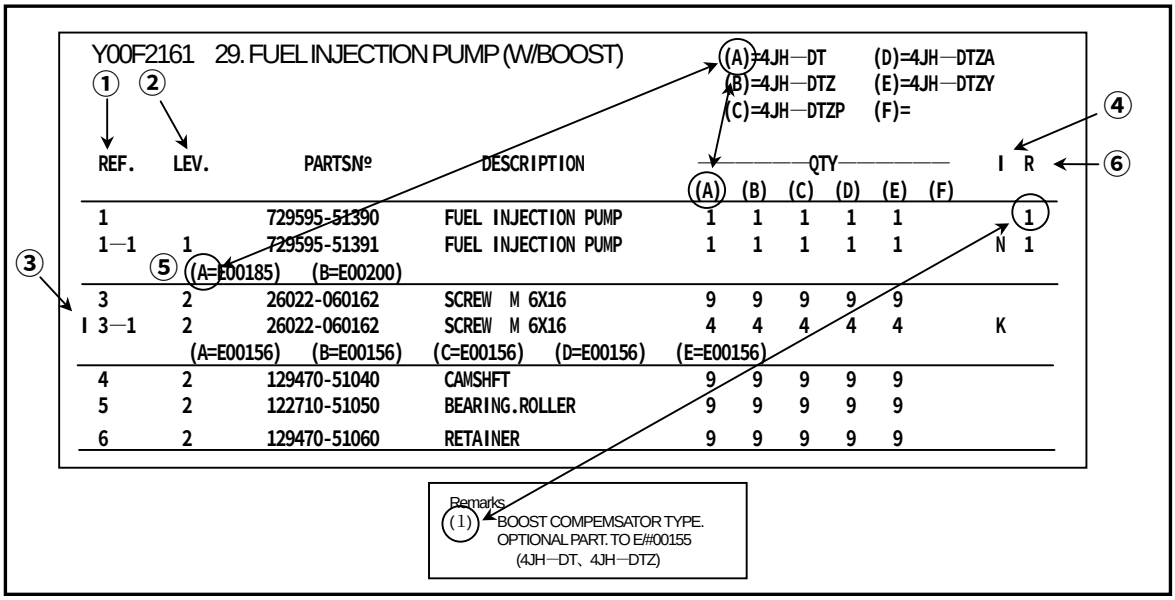

①Ref. No,

The Ref. No, in the list may not be in accordance with the Ref. No, on illustration.

(Ex.) illustration No, List heed No,

1 1 (Before change) → 1 1 (After change)

When interchangeable symbol N, and k, illustrations for the new parts are sometimes omitted.

②Lev. (Level)

Indication and Meaning of Level

Level Hereunder is given the relation among the number of number (1,2,3) the level and the nominal parent-child relationship.

1 ----- Parent parts (Assembly parts)
2 ----- Child parts included in " 1 " (Semi-Assembly parts, component parts of Assembly parts.)
3 ----- Child parts included in " 2 ", Grand-child parts in terms of " 1 ".
(Component parts of Semi-Assembly parts.)

Note) A parts of non-sale parts are illustrated but not listed.

③Change Mark

Change Mark " I " is given to the part for which a design change was made at this time.
The design change was not shown in the last published Parts Catalog.

④Interchangeability Mark

In the case where a part change took place, one of the following interchangeability marks is indicated for that part

Symbol	Interchangeability	Contents note
N	Old ○→ ×← New	New Part is interchangeable for Old Part but not interchangeable conversely.
Q	Old ×→ ○← New	New Part is not interchangeable for Old Part but interchangeable conversely.
R	Old ○→ ○← New	New Part is interchangeable for Old Part and vice versa.
S	Old ×→ ×← New	New Part is not interchangeable for Old Part and vice versa.
W		Part newly added.
Z		Part discontinued.
F		Not interchangeable single part but interchangeable by set of the related parts.
K		Changed only in quantity used.

⑤Effective Machine No,

When a part is changed, Effective Machine No, of a Model for which the part is applicable is indication
In each column of (A)-(F).

Product Symbol	Product No,	Product Symbol	Product No,
C	Clutch No, Compressor No,	M	Machine No,
D	Drive No,	T	Tractor No,
E	Engine No,	Note 1)※	Date

Note 1) Date may follow the symbol in some cases.(Ex.) ※1996.01
Note 2) As far as engine models shown by " XXX " are concerned, the modification of the parts could not be Predicted or the engine models themselves could not be identified.
Note 3) (A=E/#00185) means that the design change on the part has been effective for the model at the, column (A) (in the case, for 4JH-DT) on and from E/#(Engine Serial Number) 00185

⑥Remarks Mark

Figures or alphabets (Symbols) are entered in the remark column.
The comments (remarks) on the pertinent parts are indicated in the lower part of the list by the same symbols a those stated above.

https://truckmanualshub.com/

VEHICLE PAINTED COLOR

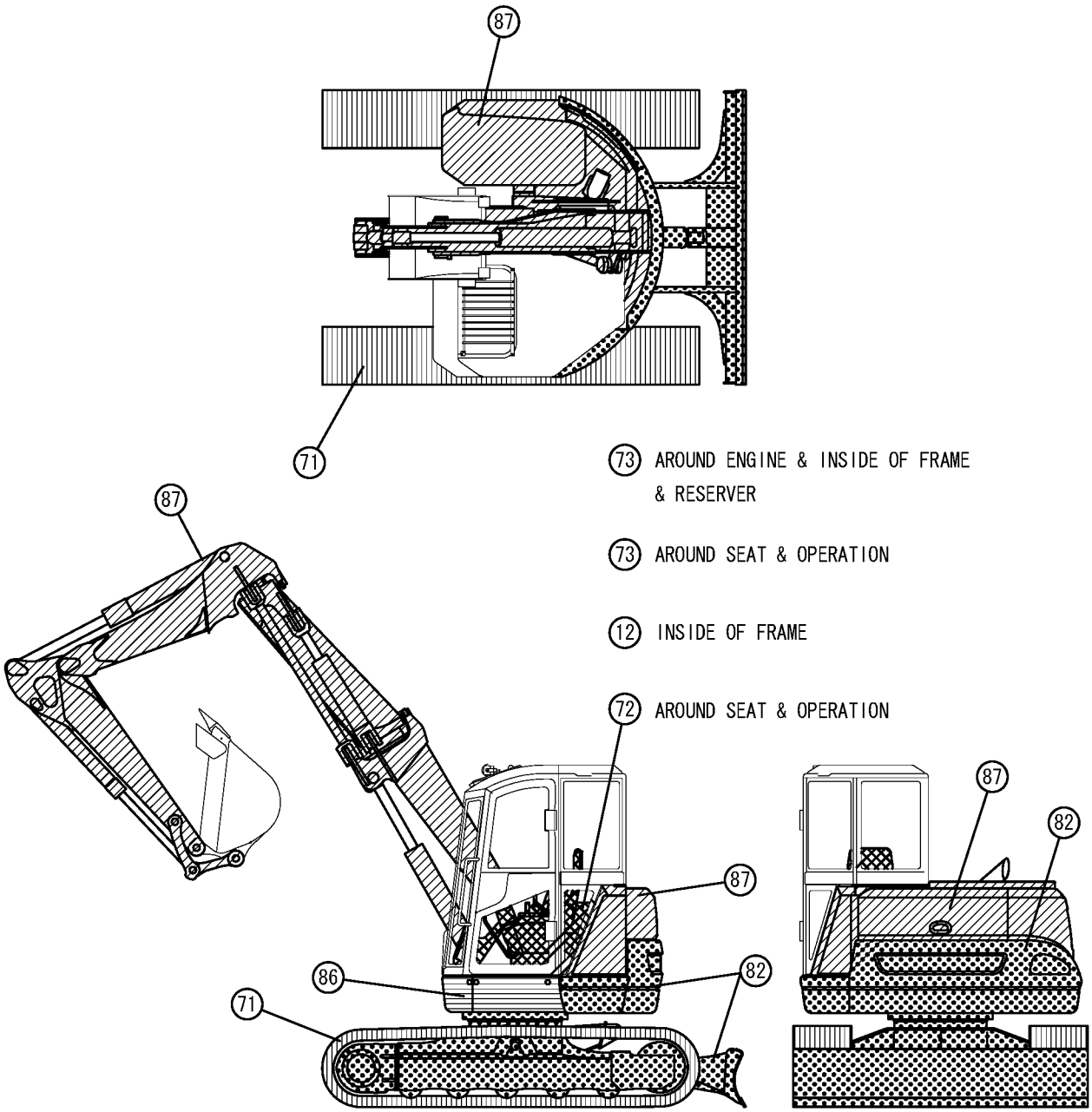

Color Code	Desc-ription	Painted Color	Munsel No.	Paint Part No.		
				16L Can	4L Can	SPRAY
87		YANMAR New Permanent Yellow	5.15Y8.45/10.81	981101-09519	977620-40870	977620-30871
86		YANMAR New Grayish Green	2.62BG4.76/2.87	981101-09616	977620-40860	977620-30861
82		YANMAR Deep Green	6.39BG2.13/1.73	981101-09517	977620-40820	977620-30N31
72		YANMAR Dark Olive Gray	7.21Y2.92/0.79	-------	977620-40720	TOR-90460003
71		YANMAR Charcoal Gray	N-1.80	981101-09516	977620-40710	977620-30371
73		YANMAR Warm Gray	5.52Y4.9/1.09	-------	-------	TOR-90450003
12		YANMAR Black	4.90PB0.08/0.41	-------	TOR-91220001	TOR-90220003

https://truckmanualshub.com/

WIRING DIAGRAM

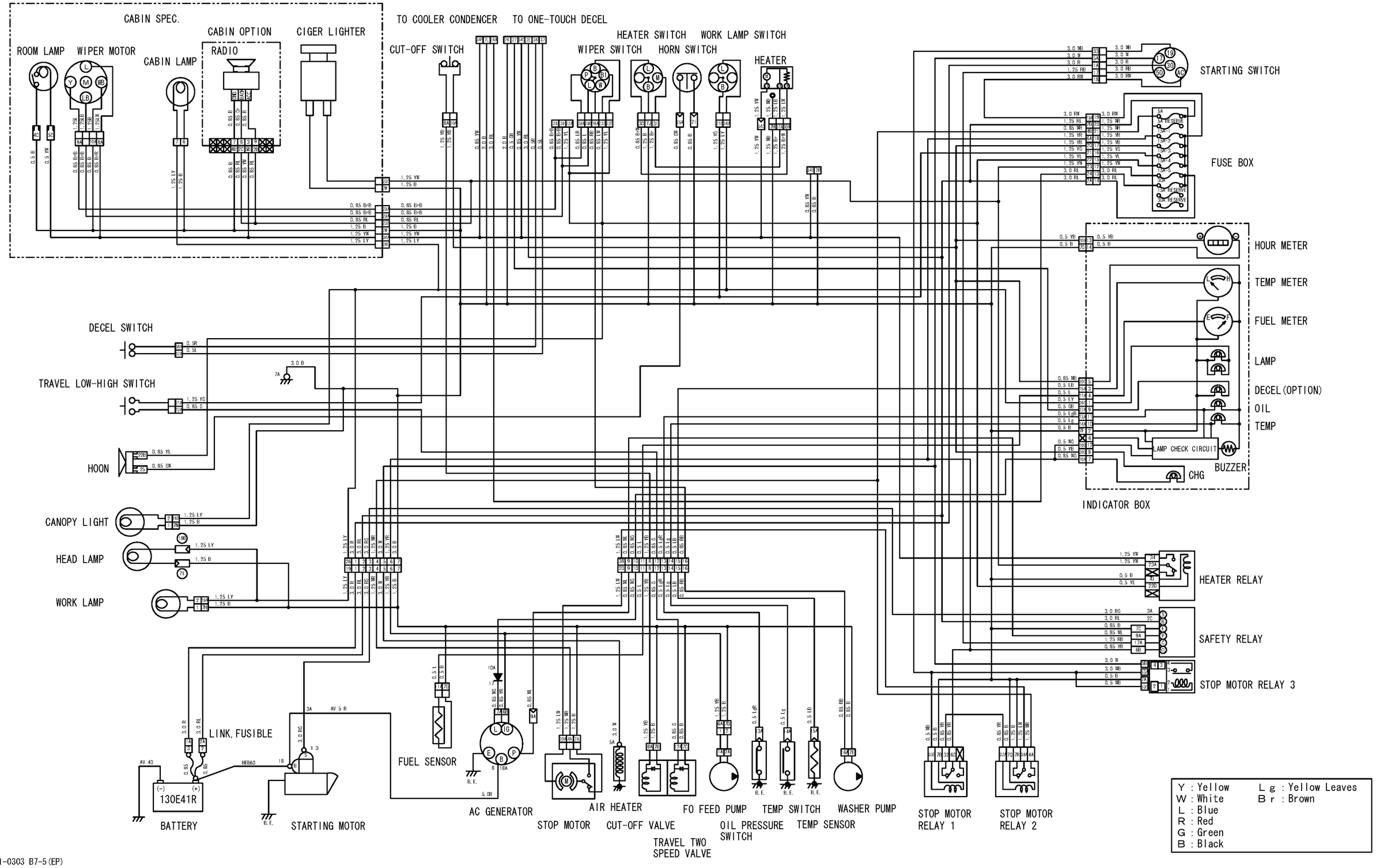

Y00S4190Z1-0303 B7-5(EP)

https://truckmanualshub.com/

PICTURESQUE INDEX(1) ・・・MAIN PARTS

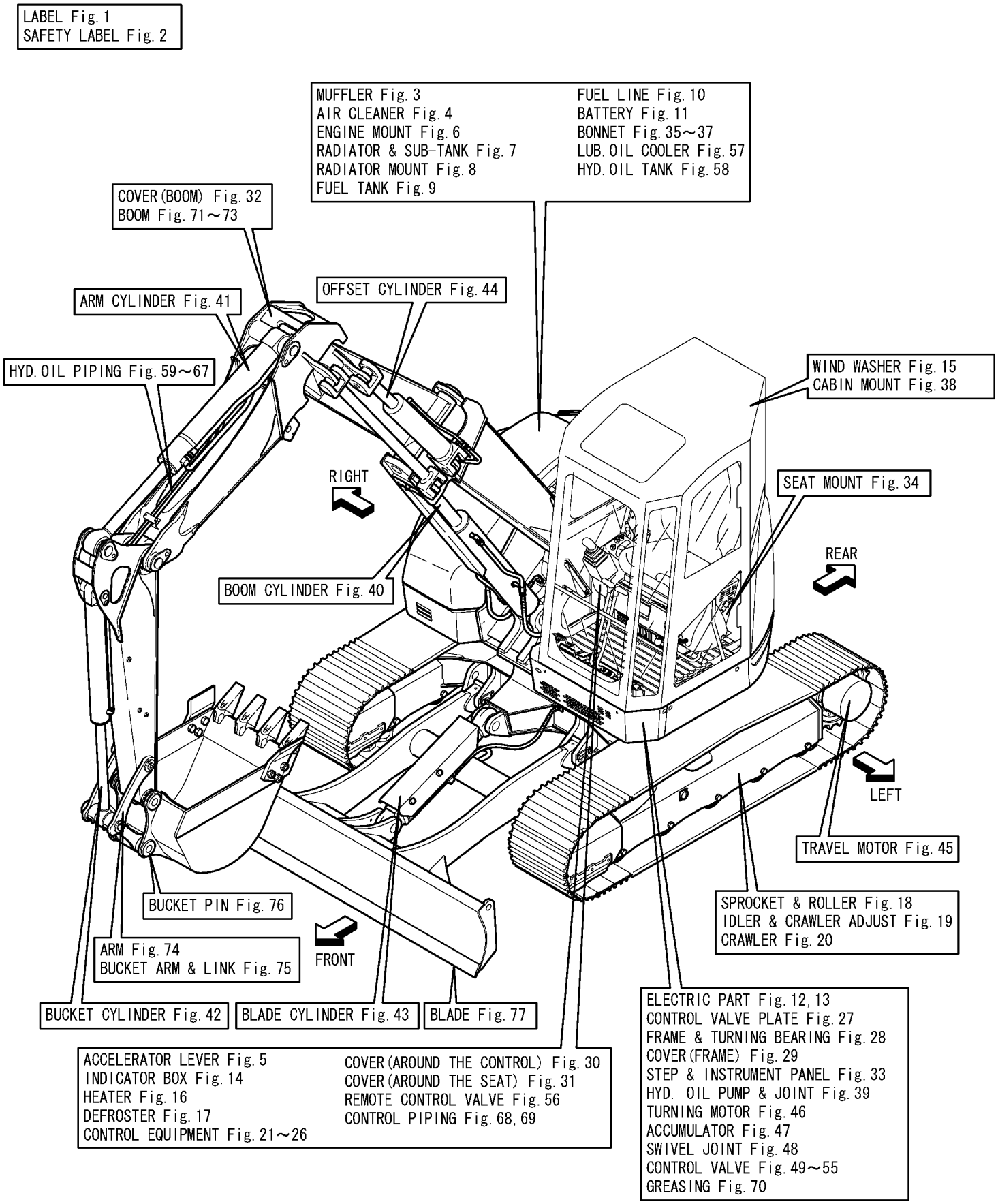

https://truckmanualshub.com/

PICTURESQUE INDEX(2) ・・・HYDRAULIC SECTION

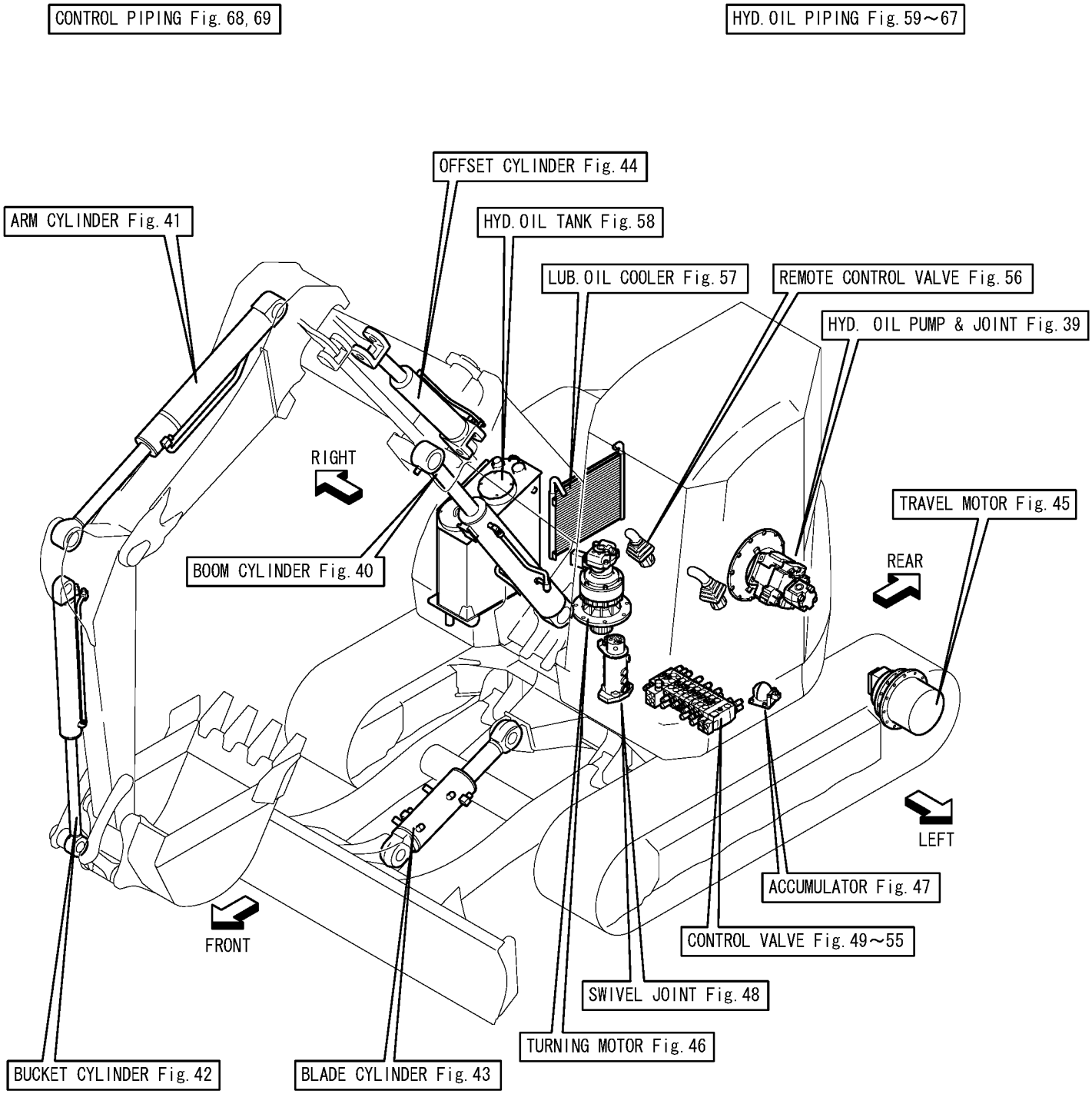

https://truckmanualshub.com/

PICTURESQUE INDEX(3) ・・・FIGURE

Fig. 1 LABEL

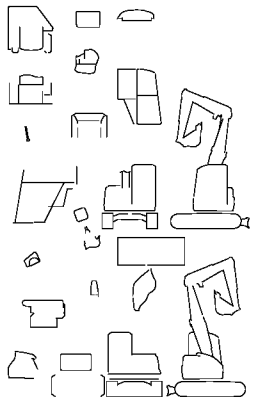

Fig. 2 SAFETY LABEL

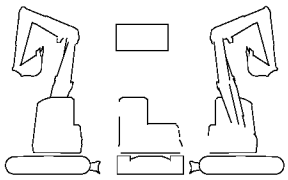

Fig. 3 MUFFLER

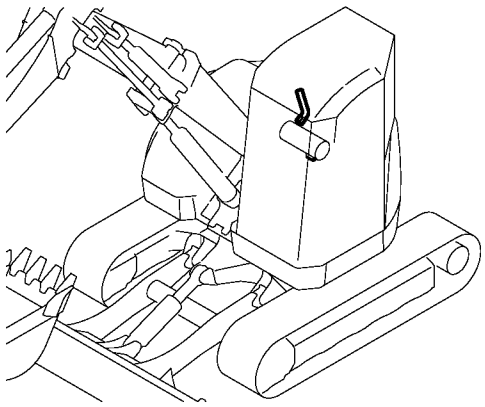

Fig. 4 AIR CLEANER

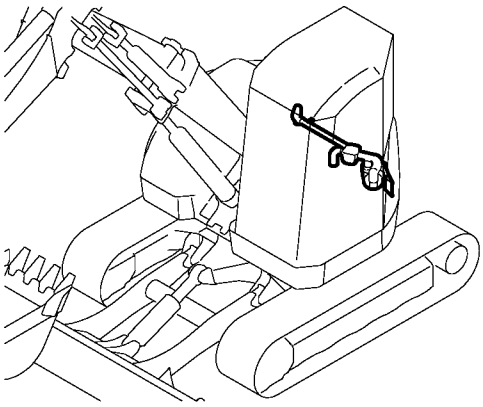

Fig. 5 ACCELERATOR LEVER

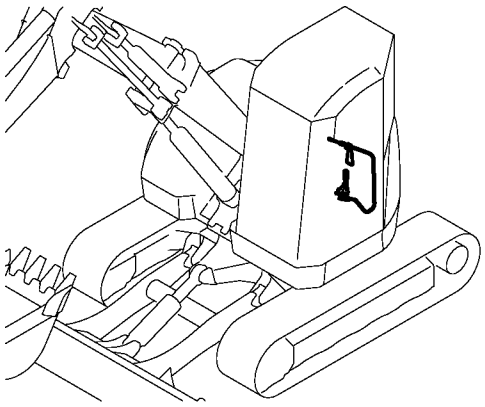

Fig. 6 ENGINE MOUNT

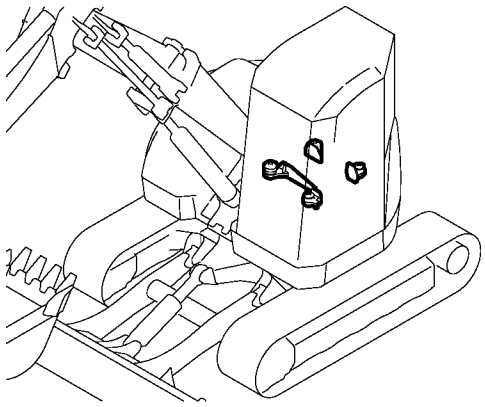

Fig. 7 RADIATOR & SUB-TANK

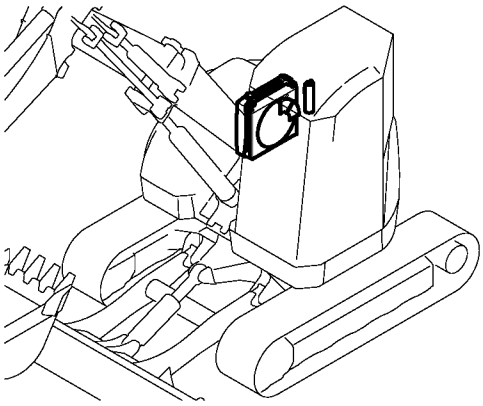

Fig. 8 RADIATOR MOUNT

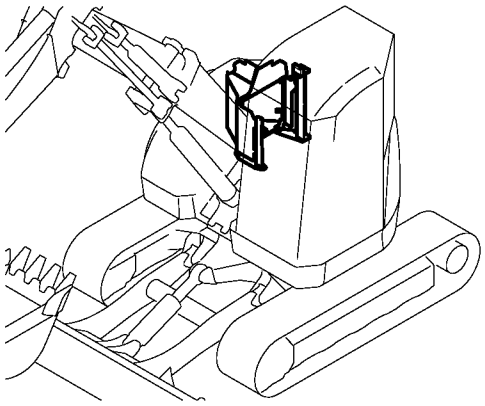

Fig. 9 FUEL TANK

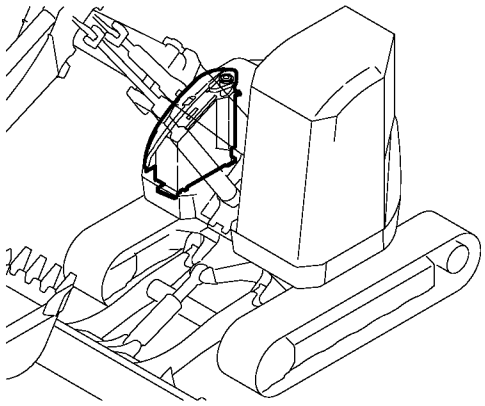

Fig. 10 FUEL LINE

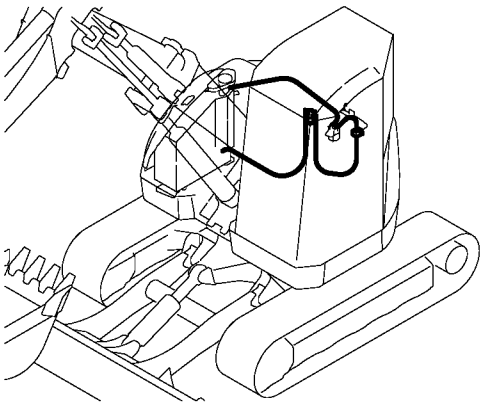

Fig. 11 BATTERY

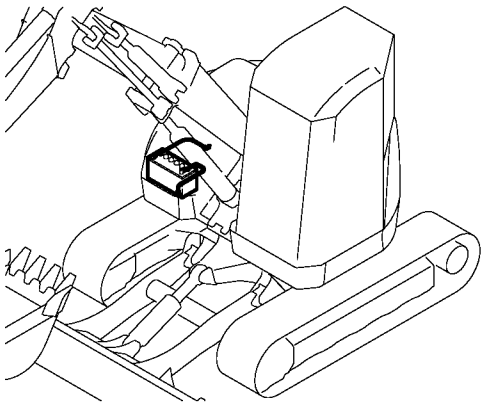

Fig. 12 ELECTRIC PART(WIRING)

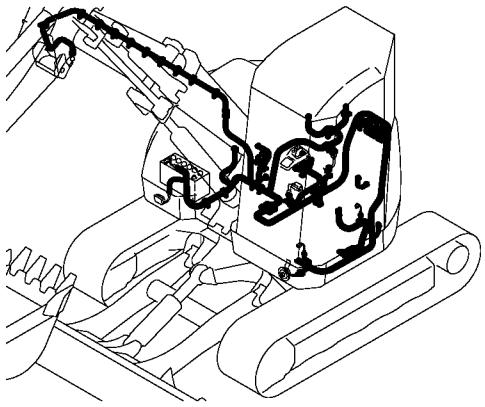

https://truckmanualshub.com/

PICTURESQUE INDEX(3) ・・・FIGURE

Fig. 13 ELECTRIC PART(EQUIPMENT)

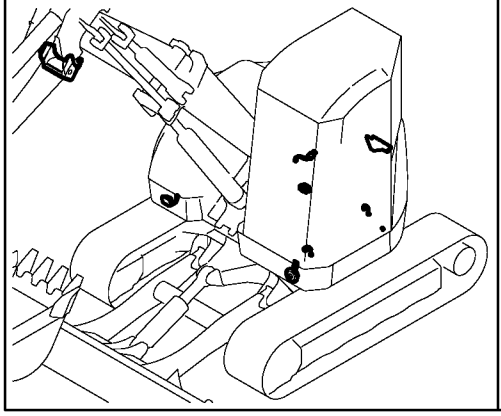

Fig. 14 INDICATOR BOX

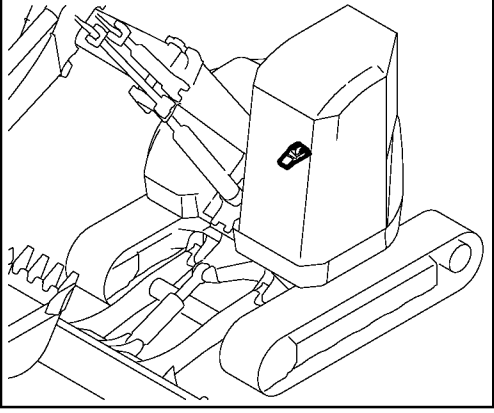

Fig. 15 WIND WASHER

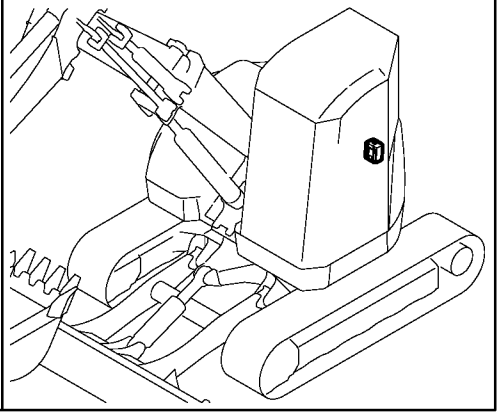

Fig. 16 HEATER

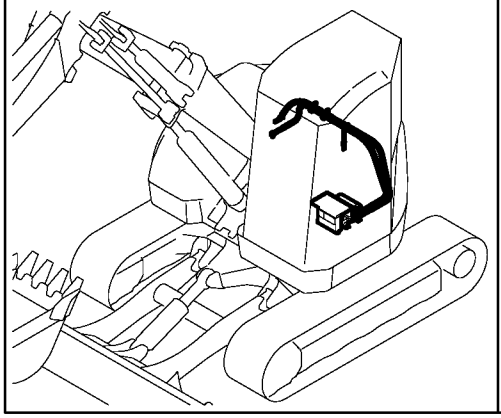

Fig. 17 DEFROSTER

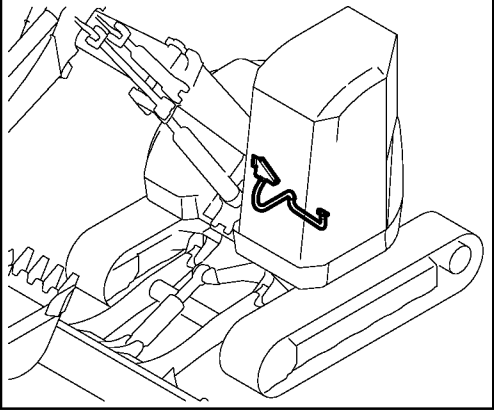

Fig. 18 SPROCKET & ROLLER

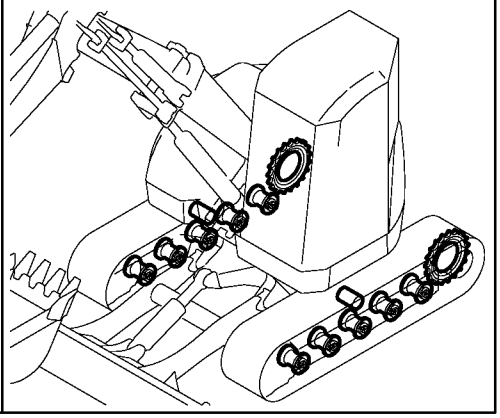

Fig. 19 IDLER & CRAWLER ADJUST

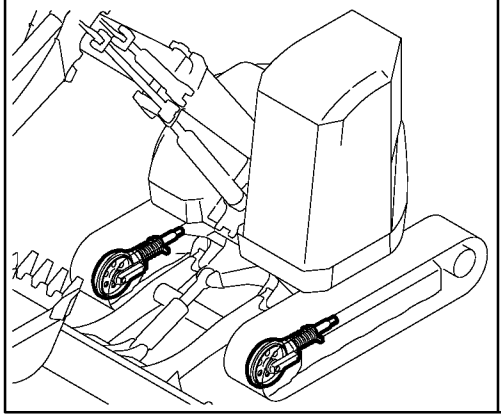

Fig. 20 CRAWLER

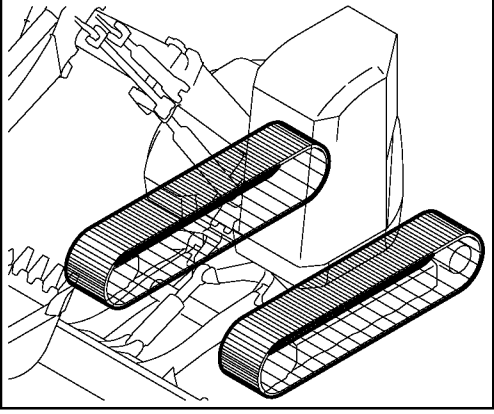

Fig. 21 CONTROL EQUIPMENT (LOCK LEVER & STAND)

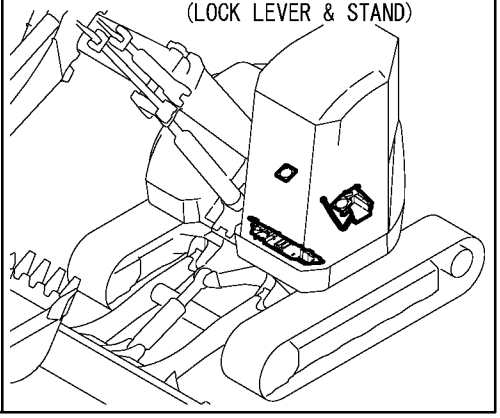

Fig. 22 CONTROL EQUIPMENT(TRAVEL)

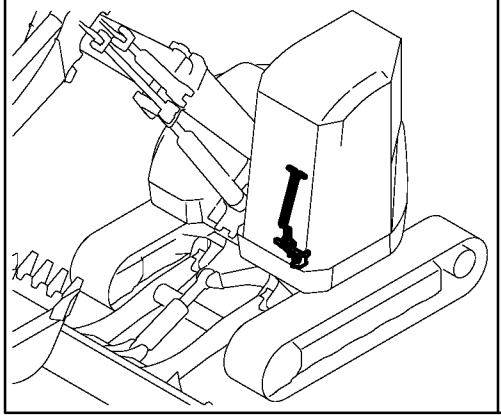

Fig. 23 CONTROL EQUIPMENT(BLADE)

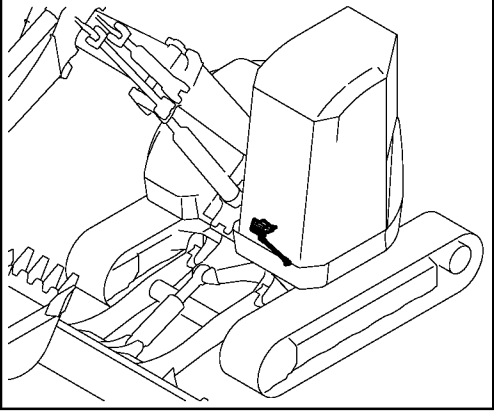

Fig. 24 CONTROL EQUIPMENT(OFFSET)

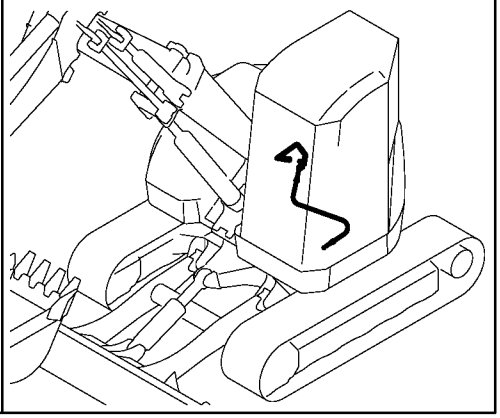

https://truckmanualshub.com/

PICTURESQUE INDEX(3) ・・・FIGURE

Fig. 25 CONTROL EQUIPMENT(LOW-HIGH PEDAL)

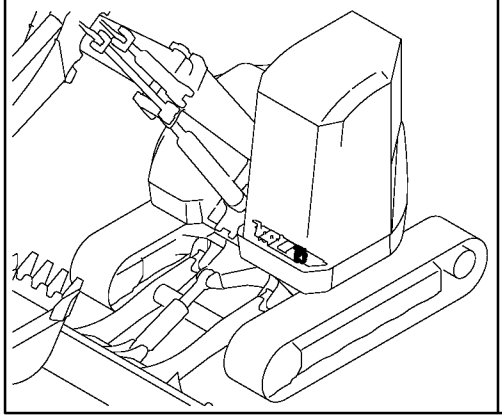

Fig. 26 CONTROL EQUIPMENT(P.T.O.PEDAL)

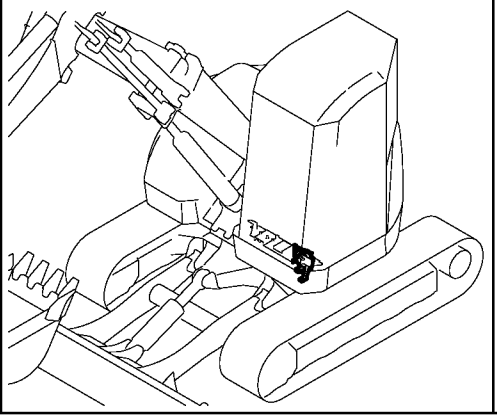

Fig. 27 CONTROL VALVE PLATE

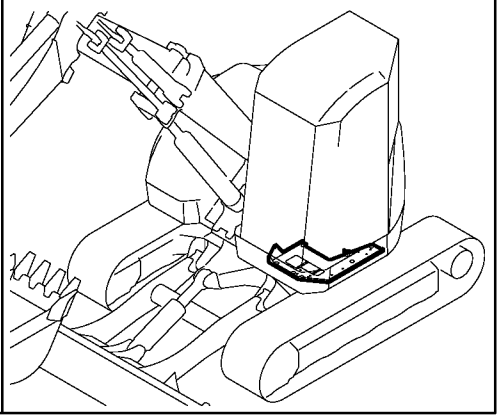

Fig. 28 FRAME & TURNING BEARING

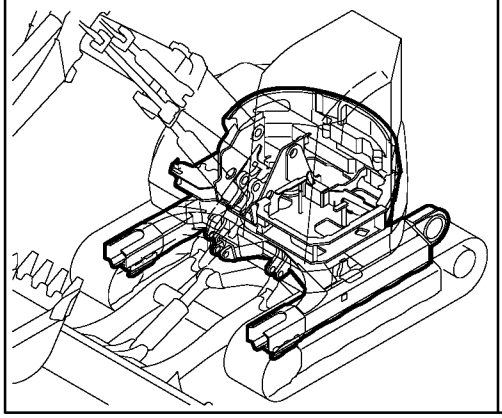

Fig. 29 COVER(FRAME)

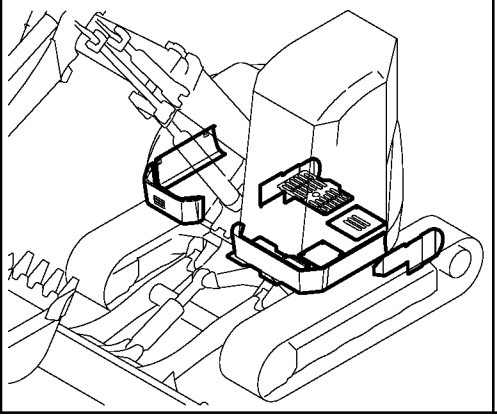

Fig. 30 COVER(AROUND THE CONTROL)

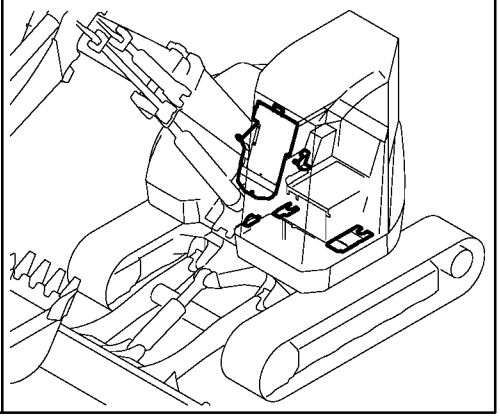

Fig. 31 COVER(AROUND THE SEAT)

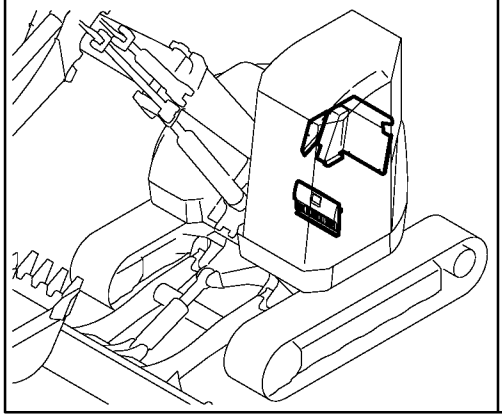

Fig. 32 COVER(BOOM)

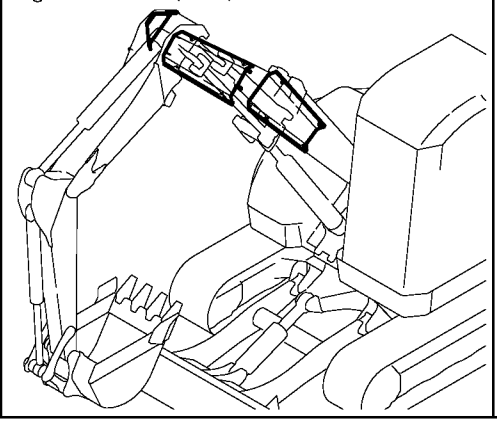

Fig. 33 STEP & INSTRUMENT PANEL

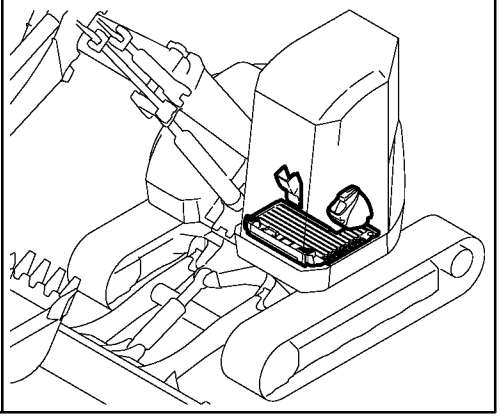

Fig. 34 SEAT MOUNT

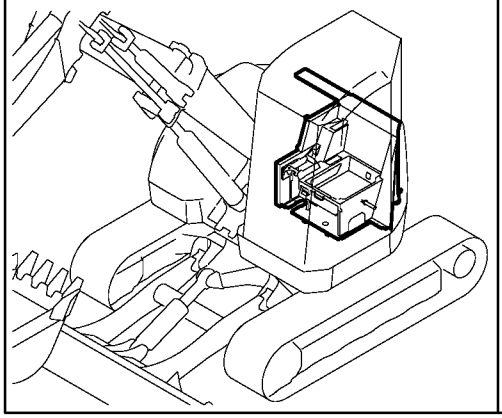

Fig. 35 BONNET(BODY)

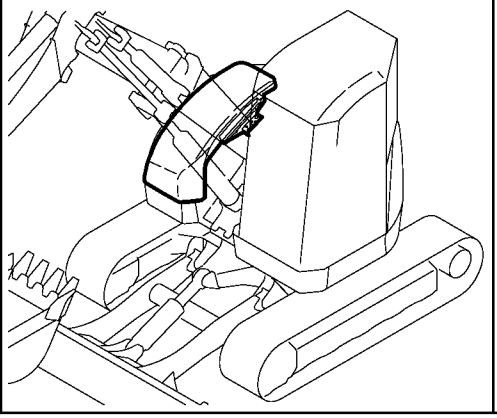

Fig. 36 BONNET(UPPER COVER)

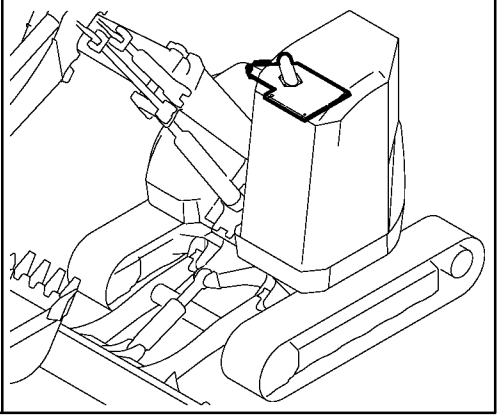

https://truckmanualshub.com/

PICTURESQUE INDEX(3) ・・・FIGURE

Fig. 37 BONNET(SIDE & REAR COVER)

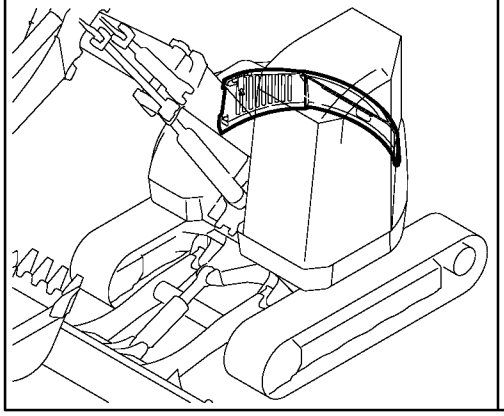

Fig. 38 CABIN(MOUNT)

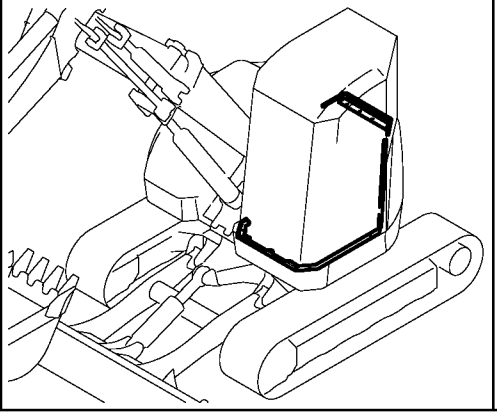

Fig. 39 HYD.OIL PUMP & JOINT

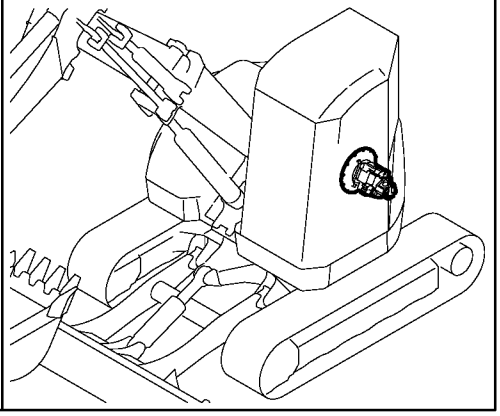

Fig. 40 BOOM CYLINDER

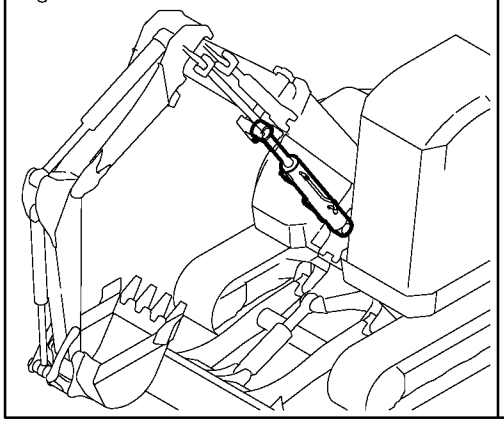

Fig. 41 ARM CYLINDER

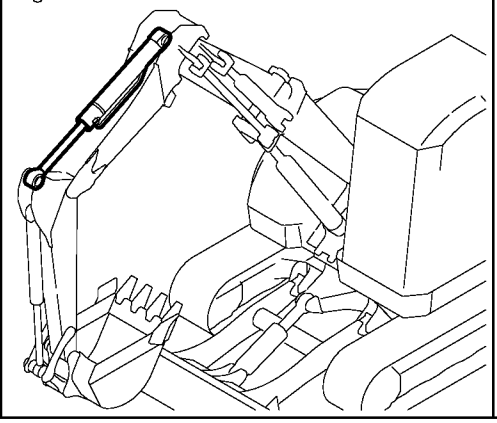

Fig. 42 BUCKET CYLINDER

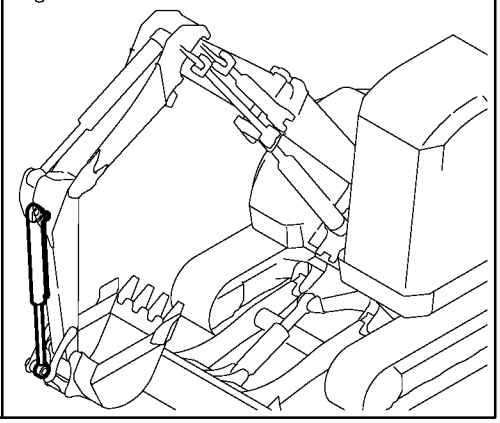

Fig. 43 BLADE CYLINDER

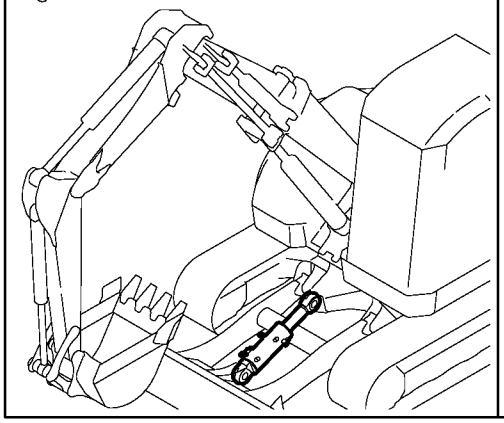

Fig. 44 OFFSET CYLINDER

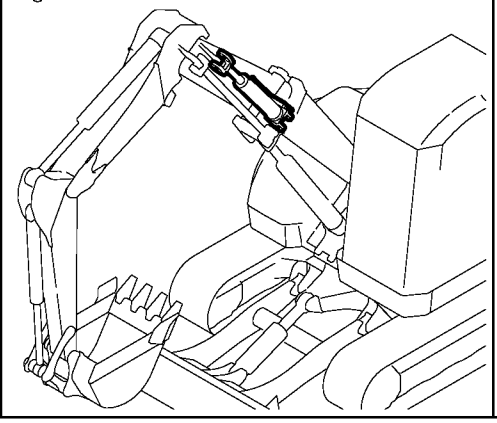

Fig. 45 TRAVEL MOTOR

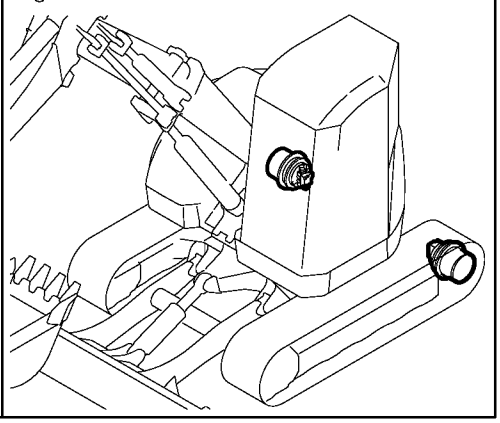

Fig. 46 TURNING MOTOR

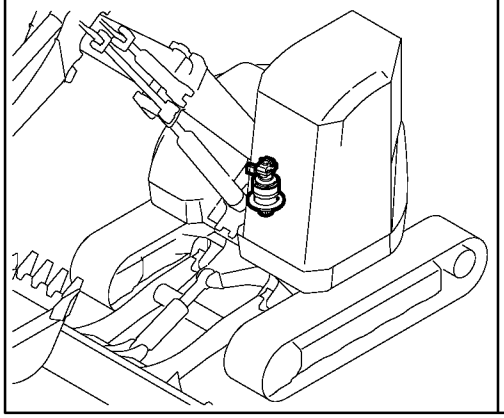

Fig. 47 ACCUMULATOR

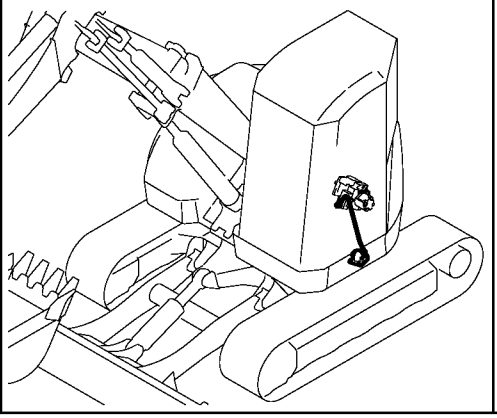

Fig. 48 SWIVEL JOINT

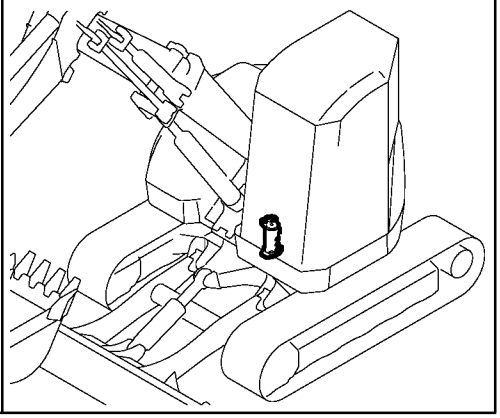

https://truckmanualshub.com/

PICTURESQUE INDEX(3) ・・・FIGURE

Fig. 49 CONTROL VALVE(1/7)

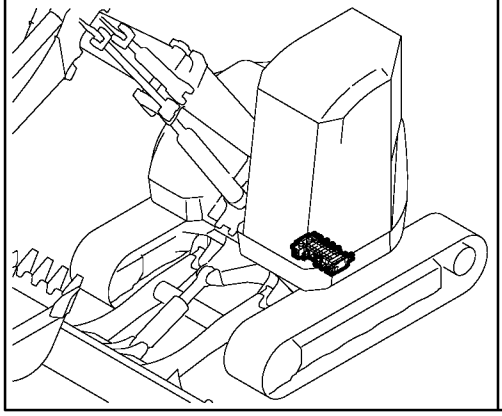

Fig. 50 CONTROL VALVE(2/7)

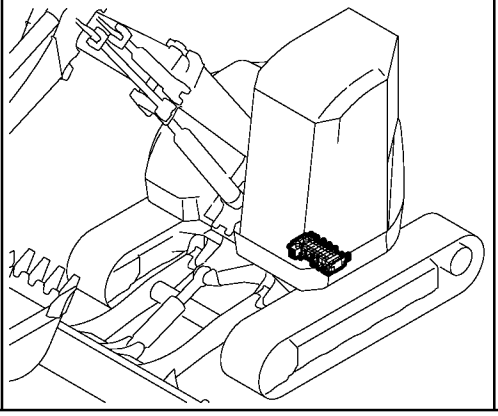

Fig. 51 CONTROL VALVE(3/7)

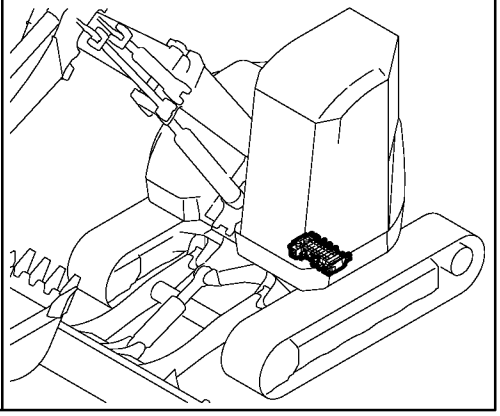

Fig. 52 CONTROL VALVE(4/7)

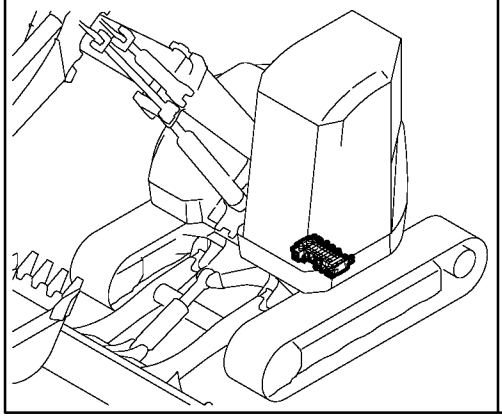

Fig. 53 CONTROL VALVE(5/7)

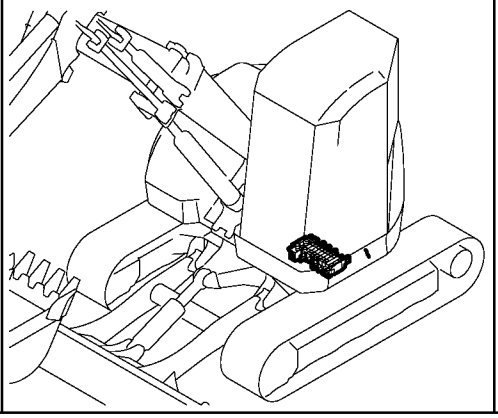

Fig. 54 CONTROL VALVE(6/7)

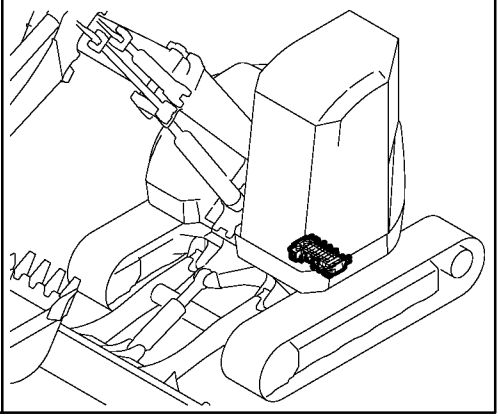

Fig. 55 CONTROL VALVE(7/7)

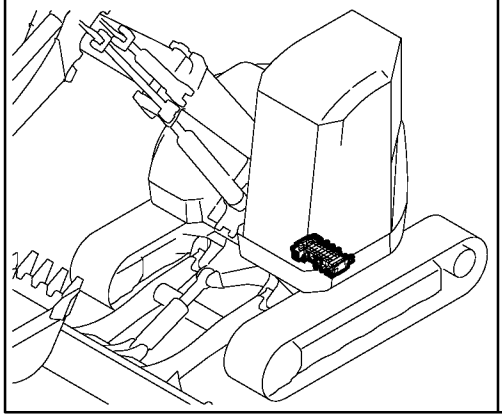

Fig. 56 REMOTE CONTROL VALVE

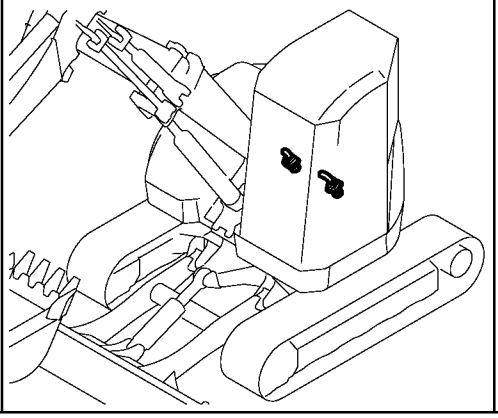

Fig. 57 LUB. OIL COOLER

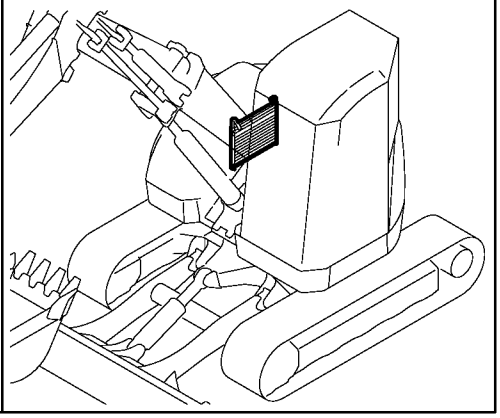

Fig. 58 HYD. OIL TANK

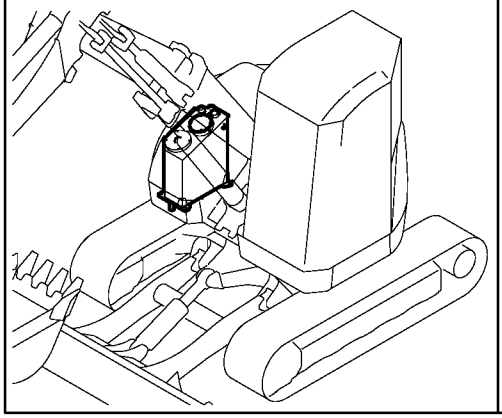

Fig. 59 HYD. OIL PIPING(TANK～PUMP～VALVE)

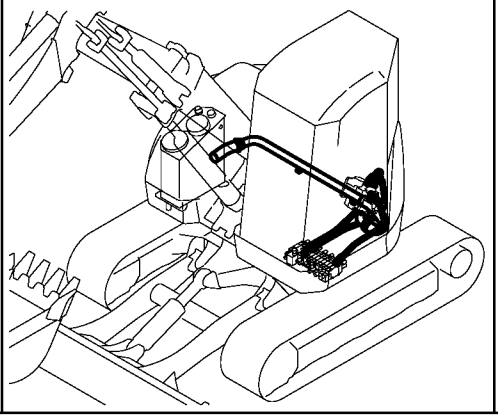

Fig. 60 HYD. OIL PIPING
(PUMP, VALVE～MOTOR, BOOM)

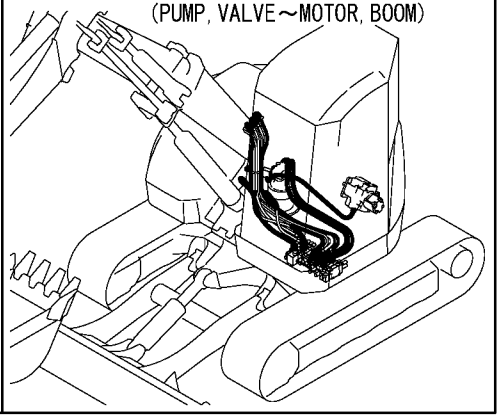

https://truckmanualshub.com/

PICTURESQUE INDEX(3) ・・・FIGURE

Fig. 61 HYD. OIL PIPING (PUMP, VALVE～SWIVEL)

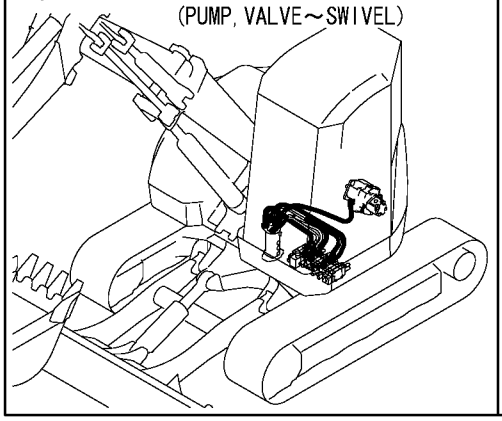

Fig. 62 HYD. OIL PIPING (RETURN 1)

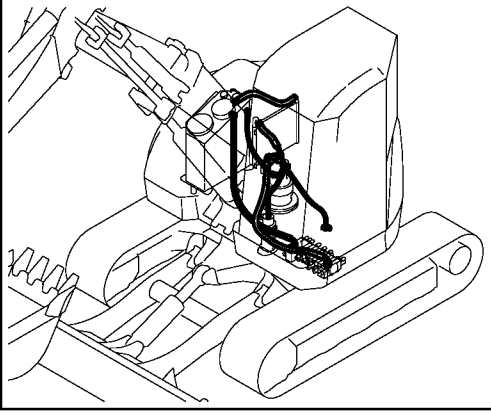

Fig. 63 HYD. OIL PIPING (RETURN 2)

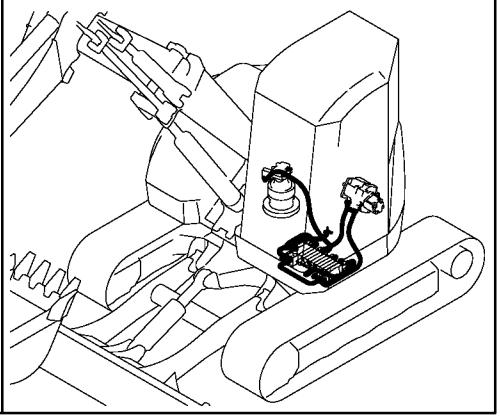

Fig. 64 HYD. OIL PIPING (P. T. O. :FRAME END)

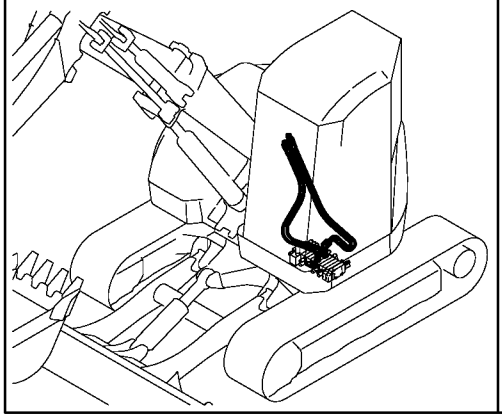

Fig. 65 HYD. OIL PIPING (TRACK FRAME)

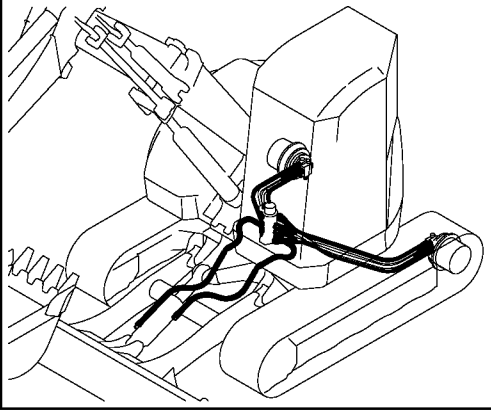

Fig. 66 HYD. OIL PIPING (BOOM)

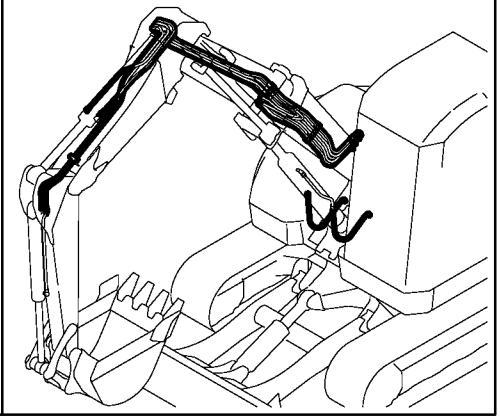

Fig. 67 HYD. OIL PIPING (P. T. O. :BOOM END)

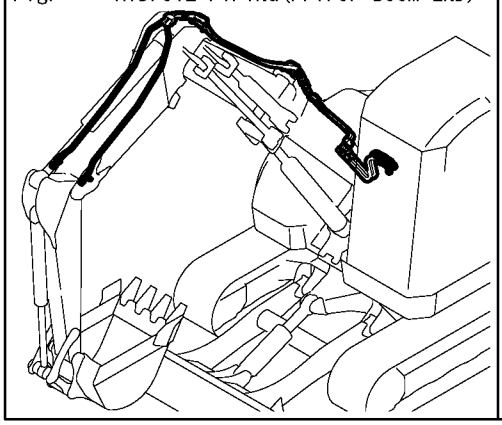

Fig. 68 CONTROL PIPING (PUMP～ REMOTE CONTROL V. ～RETURN)

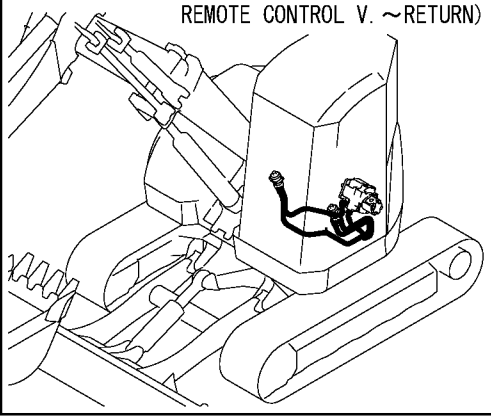

Fig. 69 CONTROL PIPING (REMOTE CONTROL V. ～CONTROL V.)

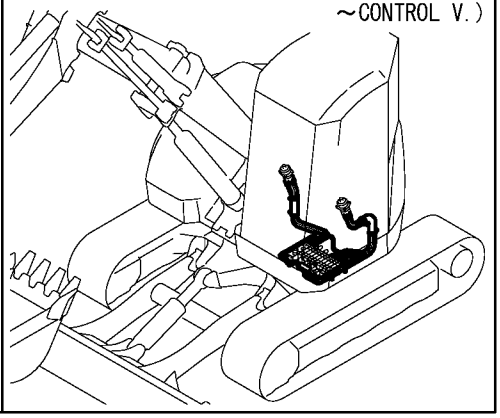

Fig. 70 GREASING

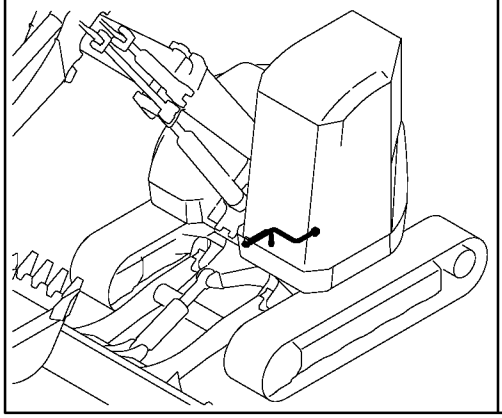

Fig. 71 BOOM-A

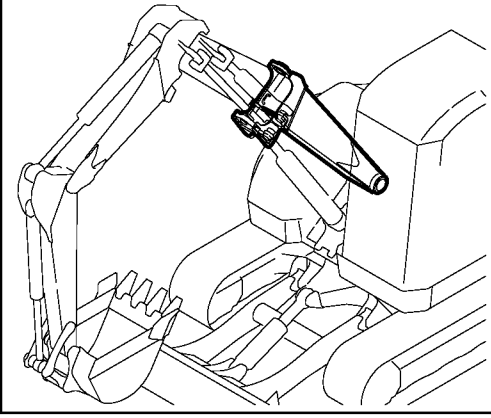

Fig. 72 BOOM-B

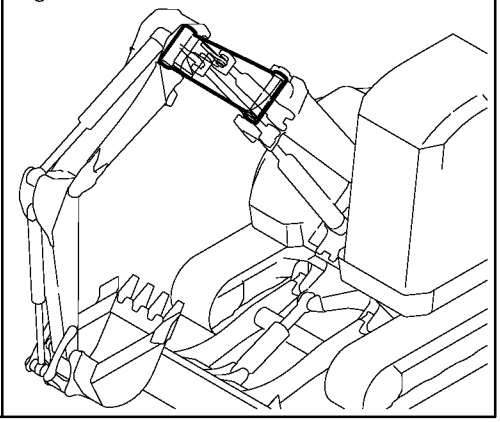

https://truckmanualshub.com/

PICTURESQUE INDEX(3) ・・・FIGURE

Fig. 73 BOOM-C

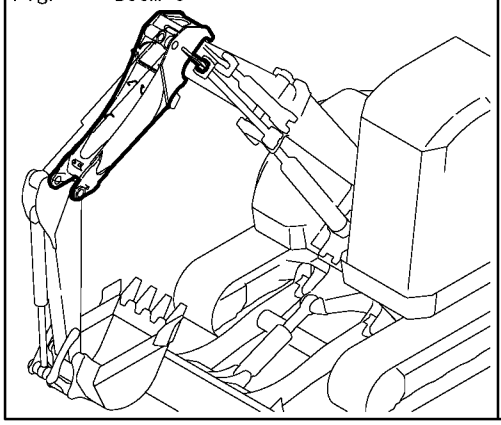

Fig. 74 ARM

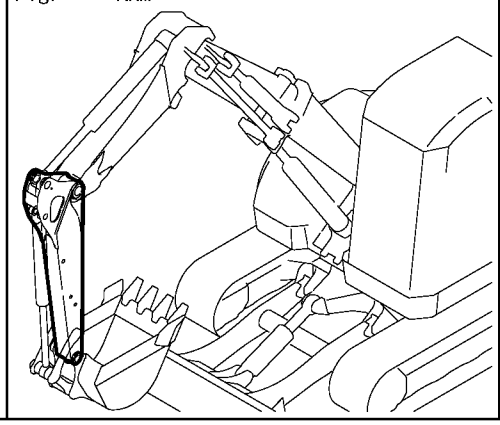

Fig. 75 BUCKET ARM & LINK

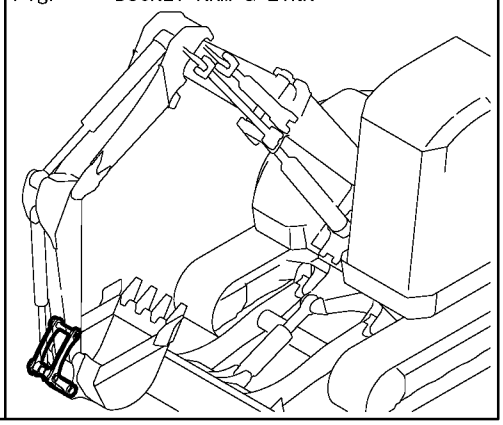

Fig. 76 BUCKET PIN

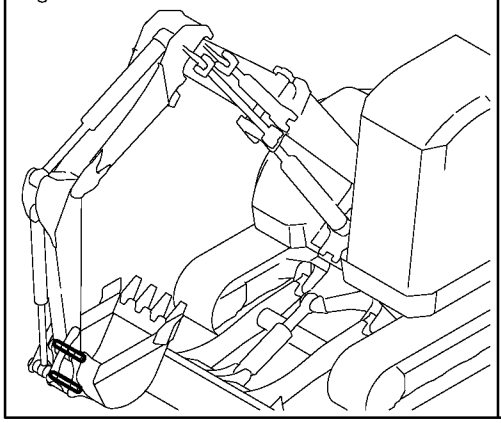

Fig. 77 BLADE

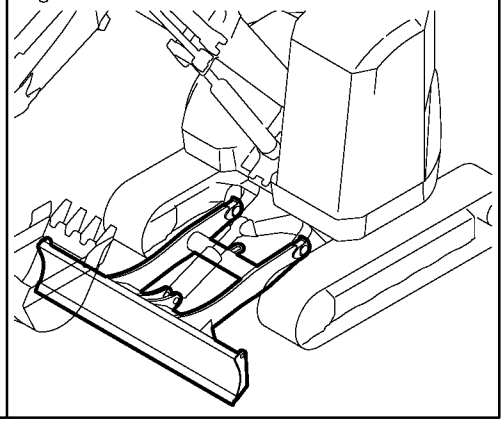

https://truckmanualshub.com/

```
1,1,,772489-03200,,"LABEL SET,B7-5 EP",1,,,,,,,,,,,,,,,,,
2,2,,172478-03160,,"LABEL,REAR",1,,,,,,,,,,,,,,,,,
3,2,,172488-03170,,LABEL,1,,,,,,,,,,,,,,,,,
4,2,,172458-03220,,"LABEL,ACCELERATOR",1,,,,,,,,,,,,,,,,,
5,2,,172165-03231,,"LABEL, P.T.O.",1,,,,,,,,,,,,,,,,,
6,2,,172458-03240,,"LABEL,LOCK",1,,,,,,,,,,,,,,,,,
7,2,,172183-03280,,"LABEL,LOCK",1,,,,,,,,,,,,,,,,,
8,2,,172438-03300,,LABEL,1,,,,,,,,,,,,,,,,,
9,2,,172463-03310,,"LABEL, MODEL L LW.US",1,,,,,,,,,,,,,,,,,
10,2,,172141-03360,,"LABEL, START SWITCH",1,,,,,,,,,,,,,,,,,
11,2,,172171-03420,,"CAUTION PLATE ASSY",1,,,,,,,,,,,,,,,,,
12,2,,172488-03440,,"LABEL,B7 US",2,,,,,,,,,,,,,,,,,
13,2,,172151-03451,,"LABEL, BOOM",2,,,,,,,,,,,,,,,,,
14,2,,172437-03510,,"LABEL,HOOK",3,,,,,,,,,,,,,,,,,
15,2,,172478-03520,,"LABEL, NOISE",1,,,,,,,,,,,,,,,,,
16,2,,172488-03400,,"LABEL,PATTERN A",1,,,,,,,,,,,,,,,,,
17,2,,172478-03460,,"LABEL,ADJUST CRAWLER",1,,,,,,,,,,,,,,,,,
```

https://truckmanualshub.com/

1 inc. 2~17

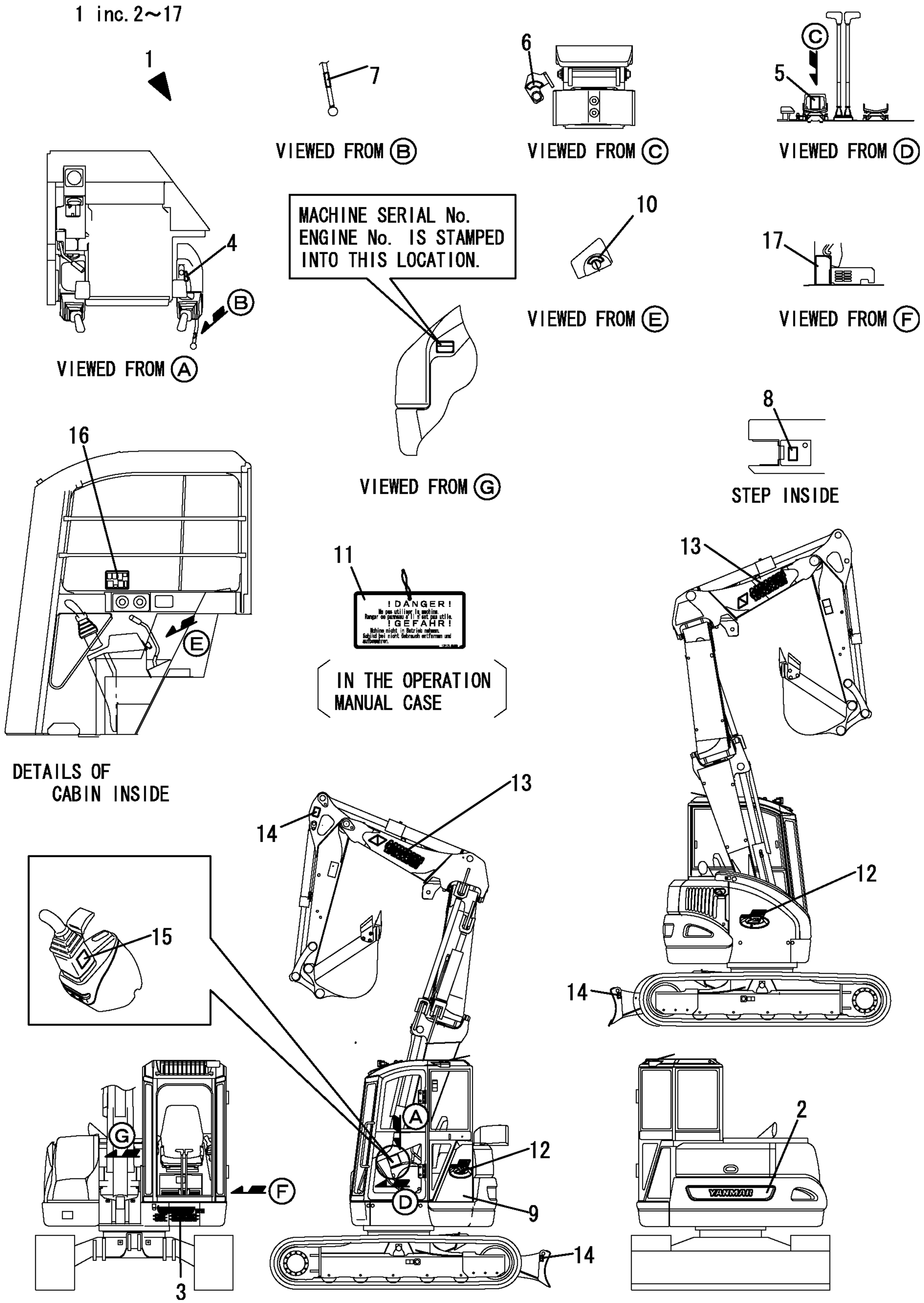

https://truckmanualshub.com/

1,1,,172171-03420,,"CAUTION PLATE ASSY",1,,,,,,,,,,,,,,,,,,

https://truckmanualshub.com/

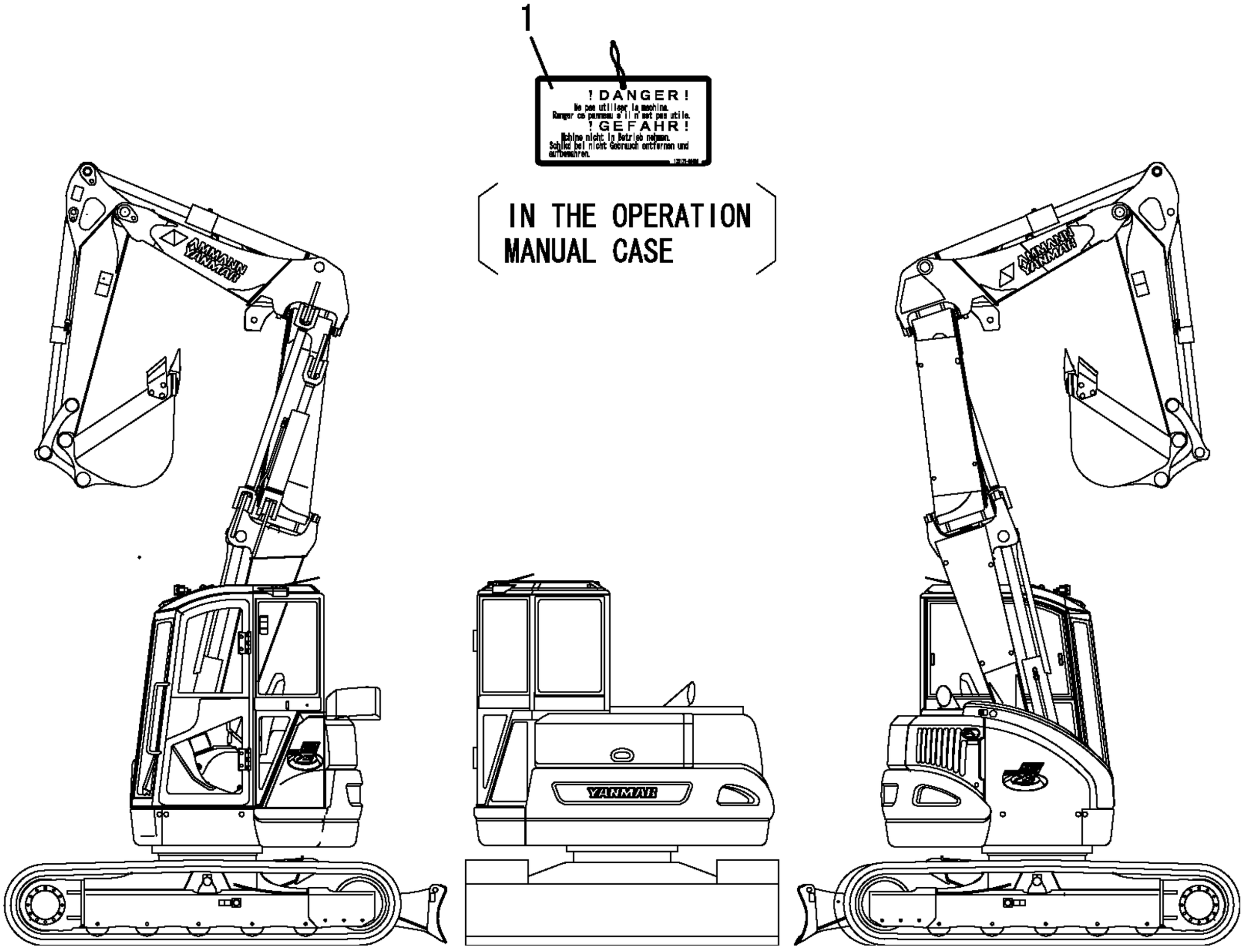

https://truckmanualshub.com/

```
1,1,,172478-11300,,"PIPE,EXH",1,,,,,,,,,,,,,,,,,
2,1,,172478-11500,,"COVER,MANIFOLD",1,,,,,,,,,,,,,,,,,,
4,2,,172478-11520,,"GLASS WOOL,A",1,,,,,,,,,,,,,,,,,,
5,2,,172478-11530,,"GLASS WOOL,B",1,,,,,,,,,,,,,,,,,,
6,2,,172478-11540,,"GLASS WOOL,C",1,,,,,,,,,,,,,,,,,,
7,2,,172478-11550,,"GLASS WOOL,D",1,,,,,,,,,,,,,,,,,,
8,1,,121120-13580,,CLAMP,1,,,,,,,,,,,,,,,,,
9,1,,172519-63240,,"BOLT  8X 16",2,,,,,,,,,,,,,,,,,,
10,1,,22117-100000,,"WASHER 10",1,,,,,,,,,,,,,,,,,,
11,1,,22217-100000,,"SPRING WASHER 10",1,,,,,,,,,,,,,,,,,,
12,1,,26106-100652,,"BOLT M10X 65 PLATED",1,,,,,,,,,,,,,,,,,,
13,1,,26706-100002,,"NUT M10",1,,,,,,,,,,,,,,,,,,
```

https://truckmanualshub.com/

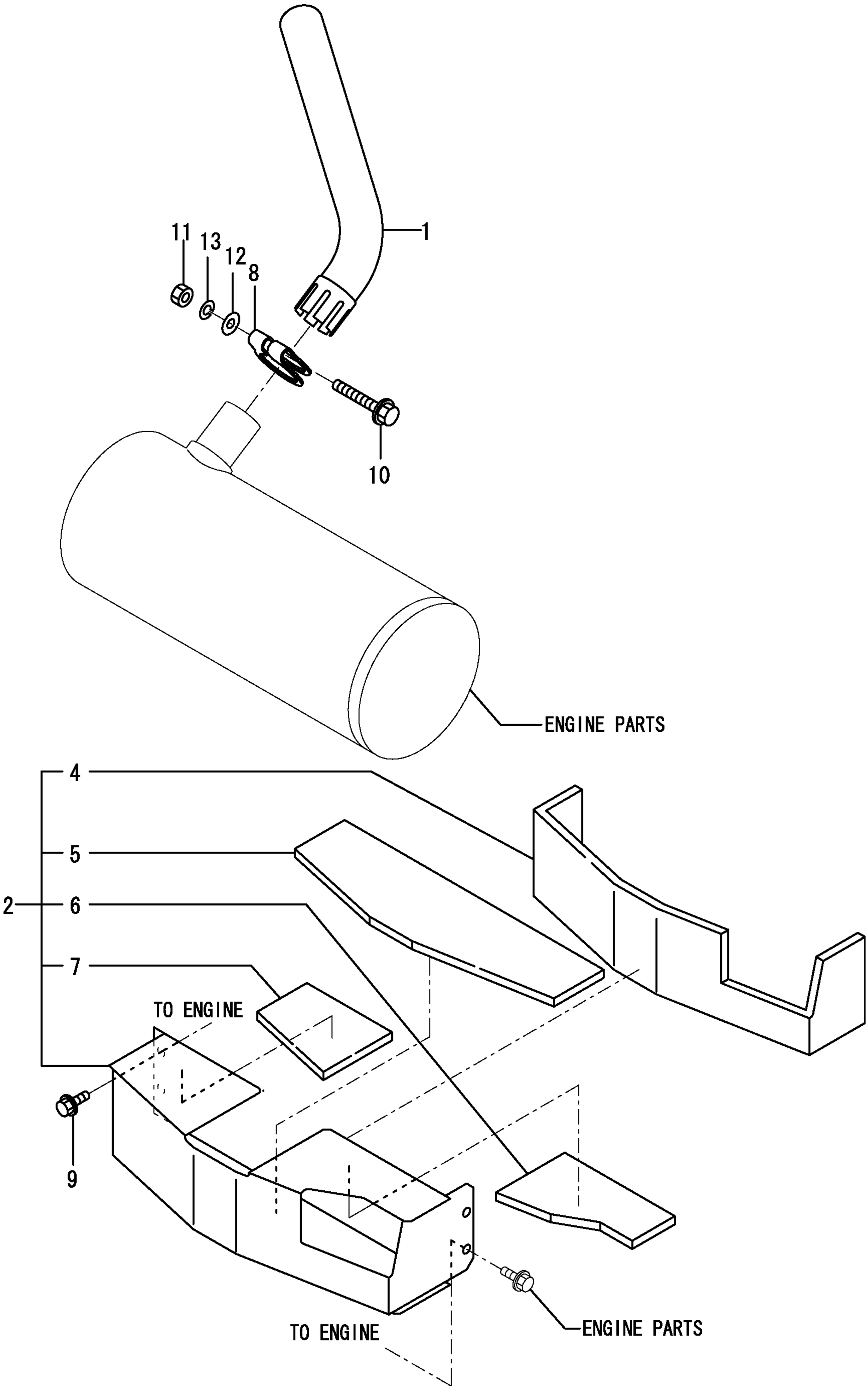

https://truckmanualshub.com/

```
1,1,,172455-11500,,"AIR CLEANER ASSY",1,,,,,,,,,,,,,,,,,
2,2,,172455-11650,,"BODY ASSY",1,,,,,,,,,,,,,,,,,
3,2,,119808-12540,,"VALVE, UNLOADER",1,,,,,,,,,,,,,,,,,
4,2,,129062-12560,,ELEMENT,1,,,,,,,,,,,,,,,,,
5,2,,129062-12570,,COVER-ASSY,1,,,,,,,,,,,,,,,,,
6,1,,172455-11510,,"HOSE ASSY, SUC.",1,,,,,,,,,,,,,,,,,
7,2,,172455-11520,,"HOSE, SUC. A",1,,,,,,,,,,,,,,,,,
8,2,,172455-11530,,"HOSE, SUC. B",1,,,,,,,,,,,,,,,,,
9,2,,119160-12060,,"SILENCER, INLET",1,,,,,,,,,,,,,,,,,
10,2,,23000-080000,,"CLAMP 80",2,,,,,,,,,,,,,,,,,
11,1,,172455-11540,,"HOSE, SUC. C",1,,,,,,,,,,,,,,,,,
12,1,,172455-11550,,"PIPE, SUC.",1,,,,,,,,,,,,,,,,,
13,1,,172455-11580,,HOSE,1,,,,,,,,,,,,,,,,,
14,1,,172455-11601,,"BRACKET, AIR CLEANER",1,,,,,,,,,,,,,,,,,
15,1,,172183-16560,,"CLIP 400,HOSE",1,,,,,,,,,,,,,,,,,
16,1,,23000-070000,,"CLAMP 70",2,,,,,,,,,,,,,,,,,
17,1,,23000-080000,,"CLAMP 80",3,,,,,,,,,,,,,,,,,
18,1,,26013-080202,,"BOLT W/WASHER M8X20",2,,,,,,,,,,,,,,,,,
19,1,,26013-100202,,"BOLT W/WASHER M10X20",2,,,,,,,,,,,,,,,,,
20,1,,26013-100252,,"BOLT W/WASHER M10X25",2,,,,,,,,,,,,,,,,,
```

https://truckmanualshub.com/

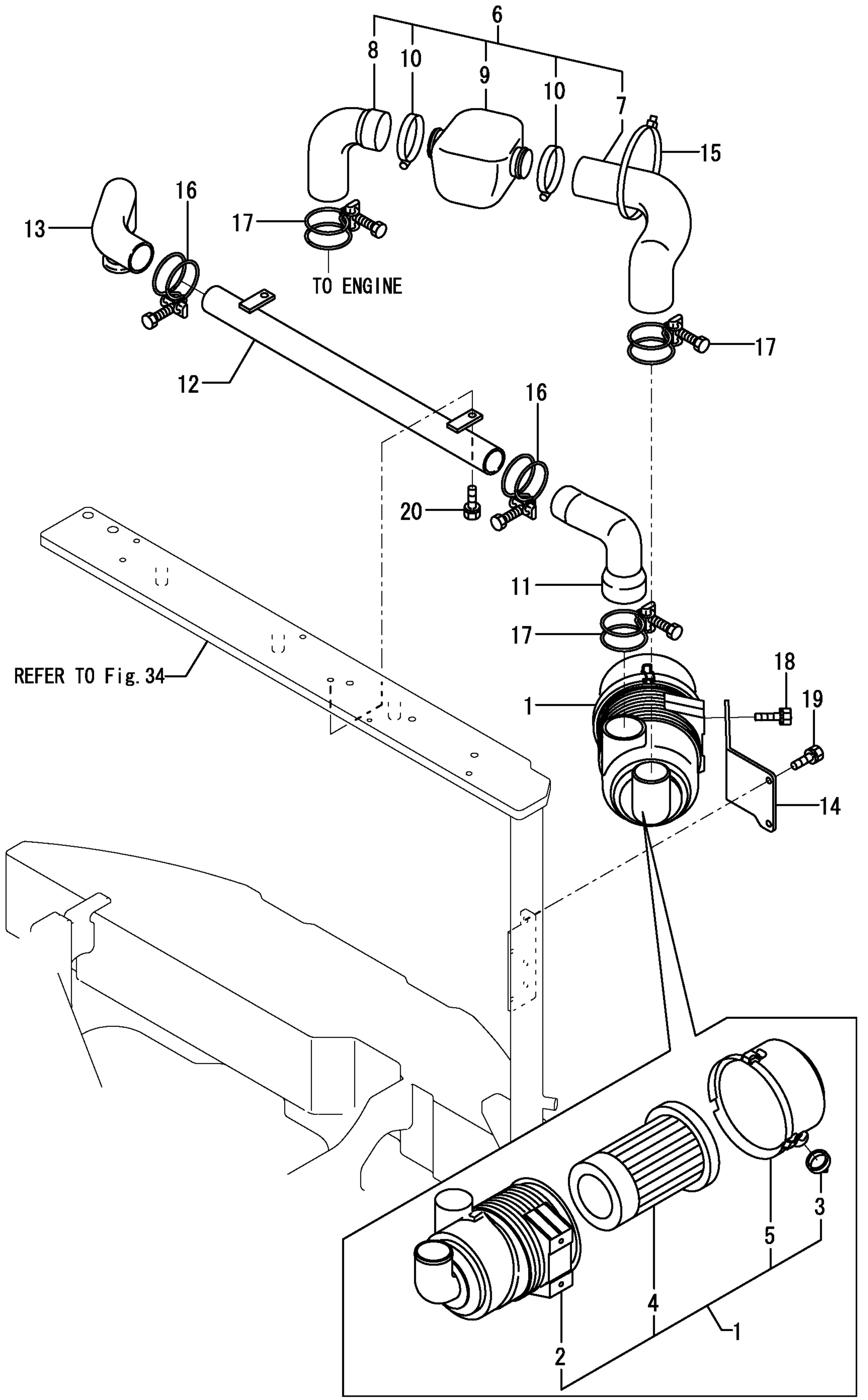

https://truckmanualshub.com/

```
1,1,,172458-12100,,"LEVER,ACCELERATOR",1,,,,,,,,,,,,,,,,,
2,1,,172455-12140,,GROMMET,2,,,,,,,,,,,,,,,,,
3,1,,172187-12200,,"BASE CMP",1,,,,,,,,,,,,,,,,,
5,2,,24550-014200,,"BUSH 14X20",1,,,,,,,,,,,,,,,,,
6,1,,172187-12260,,"LINK A",1,,,,,,,,,,,,,,,,,
7,1,,172137-12270,,"JOINT, CABLE",1,,,,,,,,,,,,,,,,,
8,1,,172187-12280,,"LINK B",1,,,,,,,,,,,,,,,,,
10,2,,24550-014200,,"BUSH 14X20",1,,,,,,,,,,,,,,,,,
11,1,,172187-12320,,"SHAFT, DESEL",1,,,,,,,,,,,,,,,,,
12,1,,172187-12340,,"SPRING, RETURN",1,,,,,,,,,,,,,,,,,
13,1,,172187-12350,,CABLE,1,,,,,,,,,,,,,,,,,
14,1,,172478-12360,,"CABLE, ACCEL.",1,,,,,,,,,,,,,,,,,
15,1,,172175-12370,,PLATE,1,,,,,,,,,,,,,,,,,
16,1,,172455-16170,,HARNESS,1,,,,,,,,,,,,,,,,,
17,1,,172126-16540,,"CLAMP 10X70",1,,,,,,,,,,,,,,,,,
18,1,,172190-17220,,"RELEY, TIMER",1,,,,,,,,,,,,,,,,,
19,1,,172187-17900,,"SOLENOID B",1,,,,,,,,,,,,,,,,,
20,1,,1C6281-52310,,"PIN 6,COME-OFF SNAP",2,,,,,,,,,,,,,,,,,
21,1,,1C6281-52310,,"PIN 6,COME-OFF SNAP",4,,,,,,,,,,,,,,,,,
22,1,,1A1040-56900,,"PIN  6X 17",2,,,,,,,,,,,,,,,,,
23,1,,1A3809-56915,,"PIN 6X 20",1,,,,,,,,,,,,,,,,,
24,1,,119620-66820,,JOINT,1,,,,,,,,,,,,,,,,,
25,1,,22137-060000,,"WASHER 6, POLISHED",2,,,,,,,,,,,,,,,,,
26,1,,22137-060000,,"WASHER 6, POLISHED",5,,,,,,,,,,,,,,,,,
27,1,,22217-100000,,"SPRING WASHER 10",1,,,,,,,,,,,,,,,,,
28,1,,22351-040025,,"PIN 4X25,SPRING",1,,,,,,,,,,,,,,,,,
29,1,,24311-000210,,"O-RING 1A P-21.0",4,,,,,,,,,,,,,,,,,
30,1,,26013-060162,,"BOLT M 6X 16",2,,,,,,,,,,,,,,,,,
31,1,,26013-060252,,"BOLT M 6X 25",2,,,,,,,,,,,,,,,,,
32,1,,26013-100162,,"BOLT M10X 16",2,,,,,,,,,,,,,,,,,
33,1,,26013-100252,,"BOLT W/WASHER M10X25",2,,,,,,,,,,,,,,,,,,
34,1,,26116-100162,,"BOLT M10X 16 PLATED",1,,,,,,,,,,,,,,,,,,
35,1,,26716-060002,,"NUT 6",1,,,,,,,,,,,,,,,,,
36,1,,933166-17730,,"WASHER 10.5X30",1,,,,,,,,,,,,,,,,,,
37,1,,933168-55770,,"BAND 146",2,,,,,,,,,,,,,,,,,
38,1,,933168-55770,,"BAND 146",5,,,,,,,,,,,,,,,,,
```

https://truckmanualshub.com/

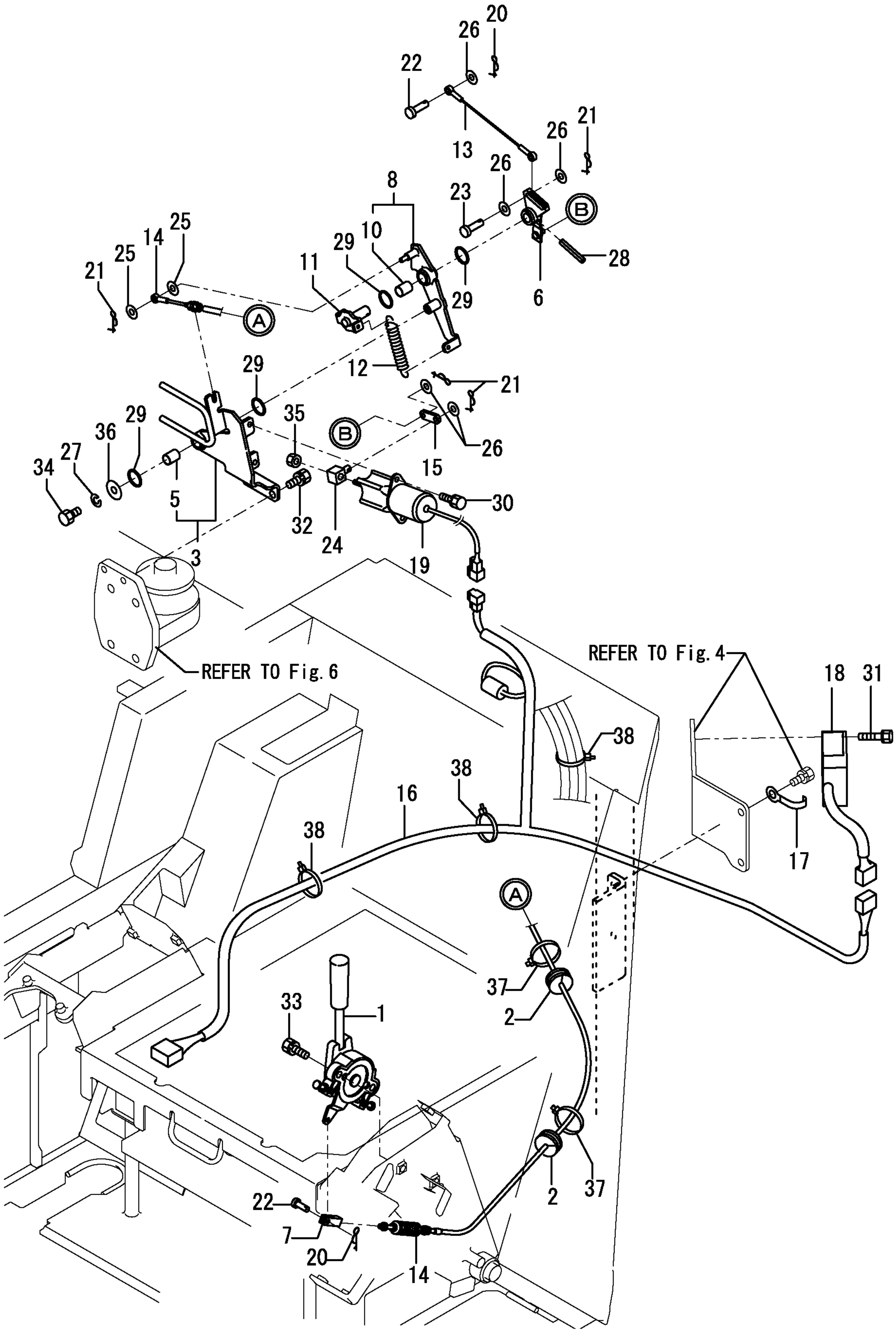

https://truckmanualshub.com/

```
1,1,,172455-13101,,"BRACKET RR",1,,,,,,,,,,,,,,,,,,
2,1,,172455-13131,,"BRACKET FR",1,,,,,,,,,,,,,,,,,,
3,1,,172455-13151,,"BRACKET LR",1,,,,,,,,,,,,,,,,,,
4,1,,172162-13170,,WASHER,2,,,,,,,,,,,,,,,,,,,,,,
5,1,,172162-13180,,"MOUNT,ENGINE",8,,,,,,,,,,,,,,,,,,,,
6,1,,172165-13220,,WASHER,8,,,,,,,,,,,,,,,,,,,,,,
7,1,,172187-13731,,"BRACKET RF",1,,,,,,,,,,,,,,,,,,,,
8,1,,172187-13830,,STOPPER,2,,,,,,,,,,,,,,,,,,,,,,
9,1,,1E6480-16920,,"BOLT 10*35 11T",12,,,,,,,,,,,,,,,,,,,,
10,1,,172137-46040,,"SEAT, SPRING",12,,,,,,,,,,,,,,,,,,,,
11,1,,22217-100000,,"SPRING WASHER 10",12,,,,,,,,,,,,,,,,,,,,,,
12,1,,22217-120000,,"SPRING WASHER",8,,,,,,,,,,,,,,,,,,,,,,
13,1,,22217-160000,,"SPRING WASHER 16",4,,,,,,,,,,,,,,,,,,,,,,
14,1,,26076-120352,,"BOLT M12X 35",8,,,,,,,,,,,,,,,,,,,,,,
15,1,,26076-161302,,"BOLT 16*130",4,,,,,,,,,,,,,,,,,,,,,,
```

https://truckmanualshub.com/

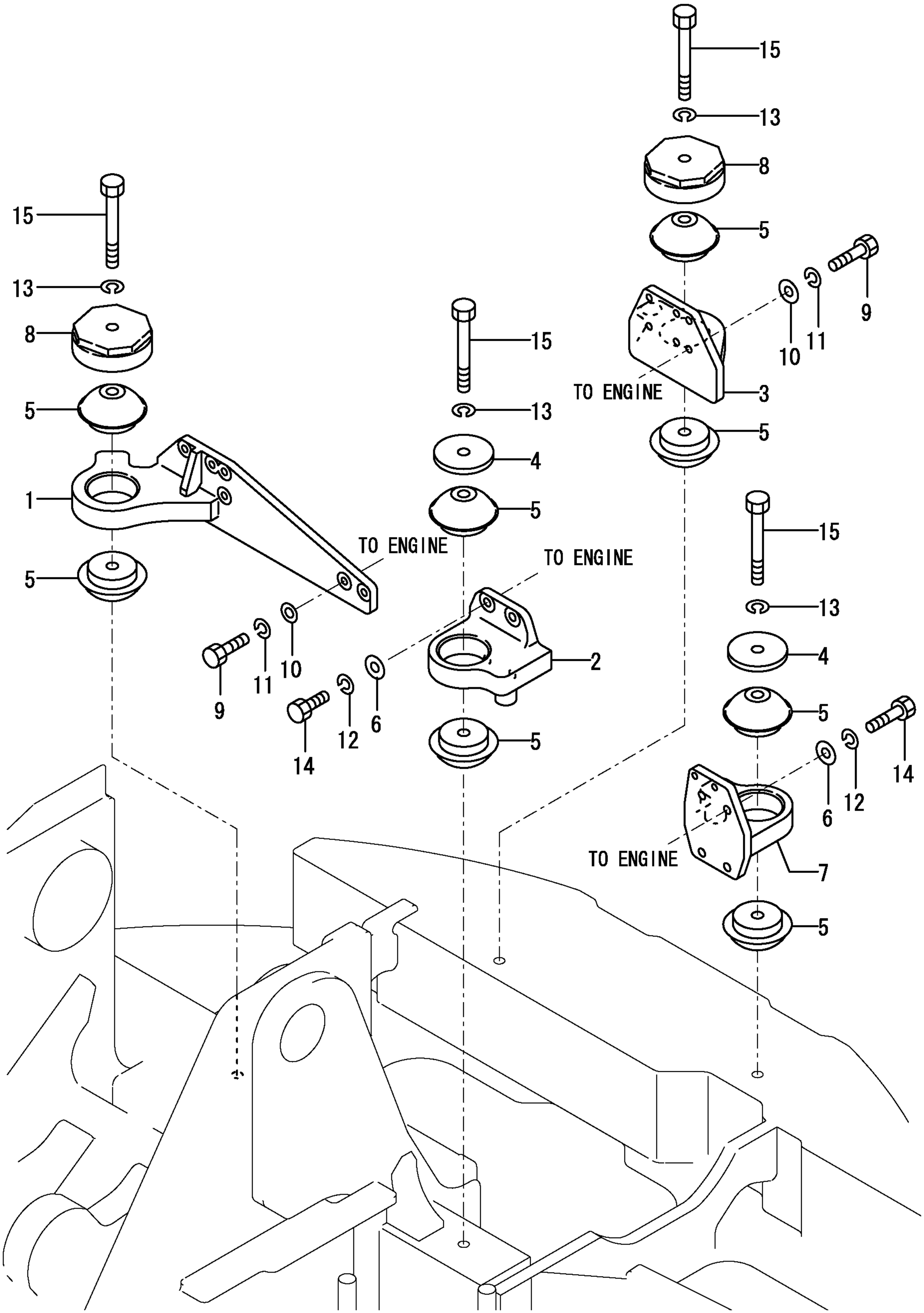

https://truckmanualshub.com/

```
1,1,,172444-13210,,"COCK ASSY,2-WAY",1,,,,,,,,,,,,,,,,,
2,2,,172444-13220,,BODY,1,,,,,,,,,,,,,,,,,
3,2,,121250-49121,,PLUG,1,,,,,,,,,,,,,,,,,
4,2,,24311-000160,,"O-RING 1A P-16.0",1,,,,,,,,,,,,,,,,,
5,1,,172187-13261,,SHURAUD,1,,,,,,,,,,,,,,,,,
6,1,,172187-13300,,"HOSE A, RADIATOR",1,,,,,,,,,,,,,,,,,
7,1,,172478-13300,,"RADIATOR CMP",1,,,,,,,,,,,,,,,,,
9,2,,172187-13921,,"HOSE, RUBBER",1,,,,,,,,,,,,,,,,,
10,2,,119259-44570,,"CAP, RADIATOR",1,,,,,,,,,,,,,,,,,
11,2,,121250-44590,,CLAMP,2,,,,,,,,,,,,,,,,,
12,1,,172187-13310,,"HOSE B, RADIATOR",1,,,,,,,,,,,,,,,,,
13,1,,172187-13360,,SEAL,1,,,,,,,,,,,,,,,,,
14,1,,172187-13370,,SEAL,1,,,,,,,,,,,,,,,,,
15,1,,172122-13381,,HOSE,1,,,,,,,,,,,,,,,,,
16,1,,172187-13480,,"SEAL 560",1,,,,,,,,,,,,,,,,,
17,1,,172187-13501,,WIRE,1,,,,,,,,,,,,,,,,,
18,1,,171064-44510,,"SUB-TANK ASSY",1,,,,,,,,,,,,,,,,,
20,2,,121450-44531,,CAP,1,,,,,,,,,,,,,,,,,
21,2,,124450-44560,,CLAMP,1,,,,,,,,,,,,,,,,,
22,2,,121470-44581,,GASKET,1,,,,,,,,,,,,,,,,,
23,2,,23065-070225,,"HOSE,  7 X  225",1,,,,,,,,,,,,,,,,,
24,1,,124450-44550,,"CLAMP, SUB-TANK",1,,,,,,,,,,,,,,,,,
25,1,,121256-44600,,"BRACKET, SUB-TANK",1,,,,,,,,,,,,,,,,,
26,1,,124766-59050,,"CLAMP 12",2,,,,,,,,,,,,,,,,,
27,1,,172162-62540,,"SEAL,STEP L",1,,,,,,,,,,,,,,,,,
28,1,,23010-050000,,"CLAMP 50",4,,,,,,,,,,,,,,,,,
29,1,,26013-080162,,"BOLT W/WASHER M8X16",3,,,,,,,,,,,,,,,,,
30,1,,26013-080162,,"BOLT W/WASHER M8X16",2,,,,,,,,,,,,,,,,,
31,1,,26013-080252,,"BOLT M 8X 25",2,,,,,,,,,,,,,,,,,
32,1,,26022-080162,,"SCREW M 8X 16",2,,,,,,,,,,,,,,,,,
```

https://truckmanualshub.com/

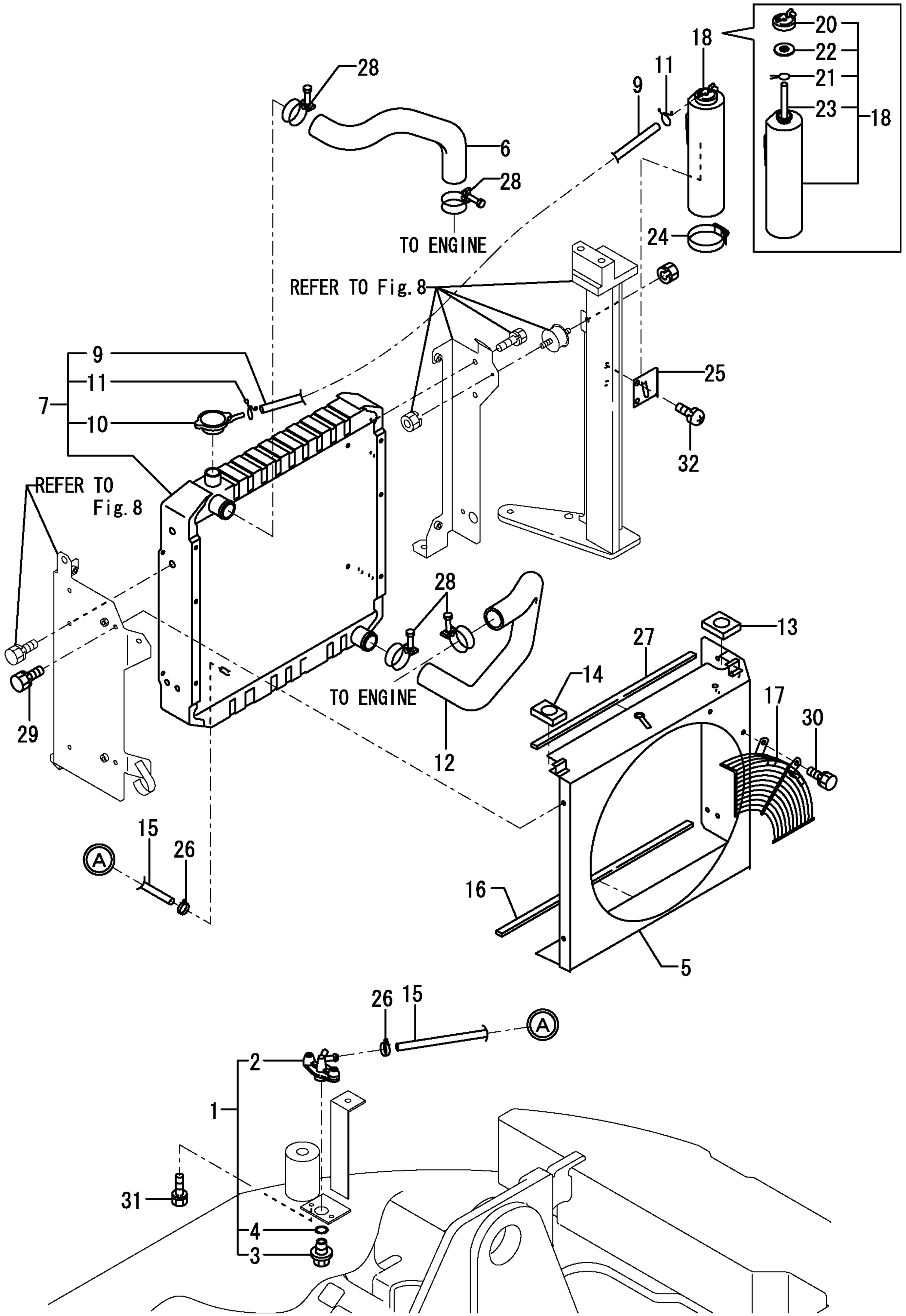

https://truckmanualshub.com/

```
1,1,,172455-13301,,"BRACKET R ASSY",1,,,,,,,,,,,,,,,,,,
2,1,,172122-13310,,"MOUNT, RADIATOR",2,,,,,,,,,,,,,,,,,,
3,1,,172455-13361,,"PLATE ASSY",1,,,,,,,,,,,,,,,,,,
4,1,,172455-13400,,"MOUNT L ASSY",1,,,,,,,,,,,,,,,,,,
6,2,,172187-13530,,"SEAL A, RADIATOR",1,,,,,,,,,,,,,,,,,,
7,2,,172187-13540,,"SEAL B, RADIATOR",1,,,,,,,,,,,,,,,,,,
8,1,,172187-13420,,"BRACKET L",1,,,,,,,,,,,,,,,,,,
9,1,,172455-13430,,"MOUNT R ASSY",1,,,,,,,,,,,,,,,,,,
11,2,,172187-13530,,"SEAL A, RADIATOR",1,,,,,,,,,,,,,,,,,,
12,2,,172187-13540,,"SEAL B, RADIATOR",1,,,,,,,,,,,,,,,,,,
13,1,,172455-13601-1,,"GRILLE,DUCT(GREEN:82",1,,,,,,,,,,,,,,,,,,
14,1,,172478-13600,,"DUCT,RADIATOR",1,,,,,,,,,,,,,,,,,,
15,2,,172183-13480,,"RUBBER,SEAL",1,,,,,,,,,,,,,,,,,,
16,2,,172164-13520,,"RUBBER, SEAL",2,,,,,,,,,,,,,,,,,,
17,2,,172455-13610,,"RUBBER, SEAL 160",1,,,,,,,,,,,,,,,,,,
19,2,,172455-13620,,"RUBBER, SEAL 480",1,,,,,,,,,,,,,,,,,,
20,2,,172455-13630,,"SEAL A, DUCT",1,,,,,,,,,,,,,,,,,,
21,2,,172455-13640,,"SEAL B, DUCT",1,,,,,,,,,,,,,,,,,,
26,2,,172162-61120,,"SEAL,COVER B",1,,,,,,,,,,,,,,,,,,
27,2,,172164-61250,,"RUBBER, SEAL",1,,,,,,,,,,,,,,,,,,
28,2,,172171-65850,,"RUBBER,SEAL K",1,,,,,,,,,,,,,,,,,,
29,1,,172478-13700-1,,"COVER,DUCT(GREEN:82)",1,,,,,,,,,,,,,,,,,,
32,1,,172162-13780,,"MOUNT 42-87,EVAPORTR",2,,,,,,,,,,,,,,,,,,
33,1,,172162-13780,,"MOUNT 42-87,EVAPORTR",1,,,,,,,,,,,,,,,,,,
34,1,,172168-46760,,"BOLT M10X20",3,,,,,,,,,,,,,,,,,,
35,1,,172168-46760,,"BOLT M10X20",2,,,,,,,,,,,,,,,,,,
36,1,,172168-46760,,"BOLT M10X20",4,,,,,,,,,,,,,,,,,,
37,1,,172165-53490,,"BOLT M16X 40",3,,,,,,,,,,,,,,,,,,
38,1,,172519-63240,,"BOLT  8X 16",1,,,,,,,,,,,,,,,,,,
39,1,,172187-64800,,CAP,1,,,,,,,,,,,,,,,,,,
40,1,,22137-100000,,"WASHER 10,POLISHED",1,,,,,,,,,,,,,,,,,,
41,1,,22157-100000,,"WASHER 10",2,,,,,,,,,,,,,,,,,,
42,1,,22217-160000,,"SPRING WASHER 16",3,,,,,,,,,,,,,,,,,,
43,1,,26013-080162,,"BOLT W/WASHER M8X16",6,,,,,,,,,,,,,,,,,,
44,1,,26013-100202,,"BOLT W/WASHER M10X20",2,,,,,,,,,,,,,,,,,,
45,1,,26013-100252,,"BOLT W/WASHER M10X25",2,,,,,,,,,,,,,,,,,,
46,1,,26051-080002,,"NUT M 8",4,,,,,,,,,,,,,,,,,,
47,1,,26051-100002,,"NUT M10",6,,,,,,,,,,,,,,,,,,
```

https://truckmanualshub.com/

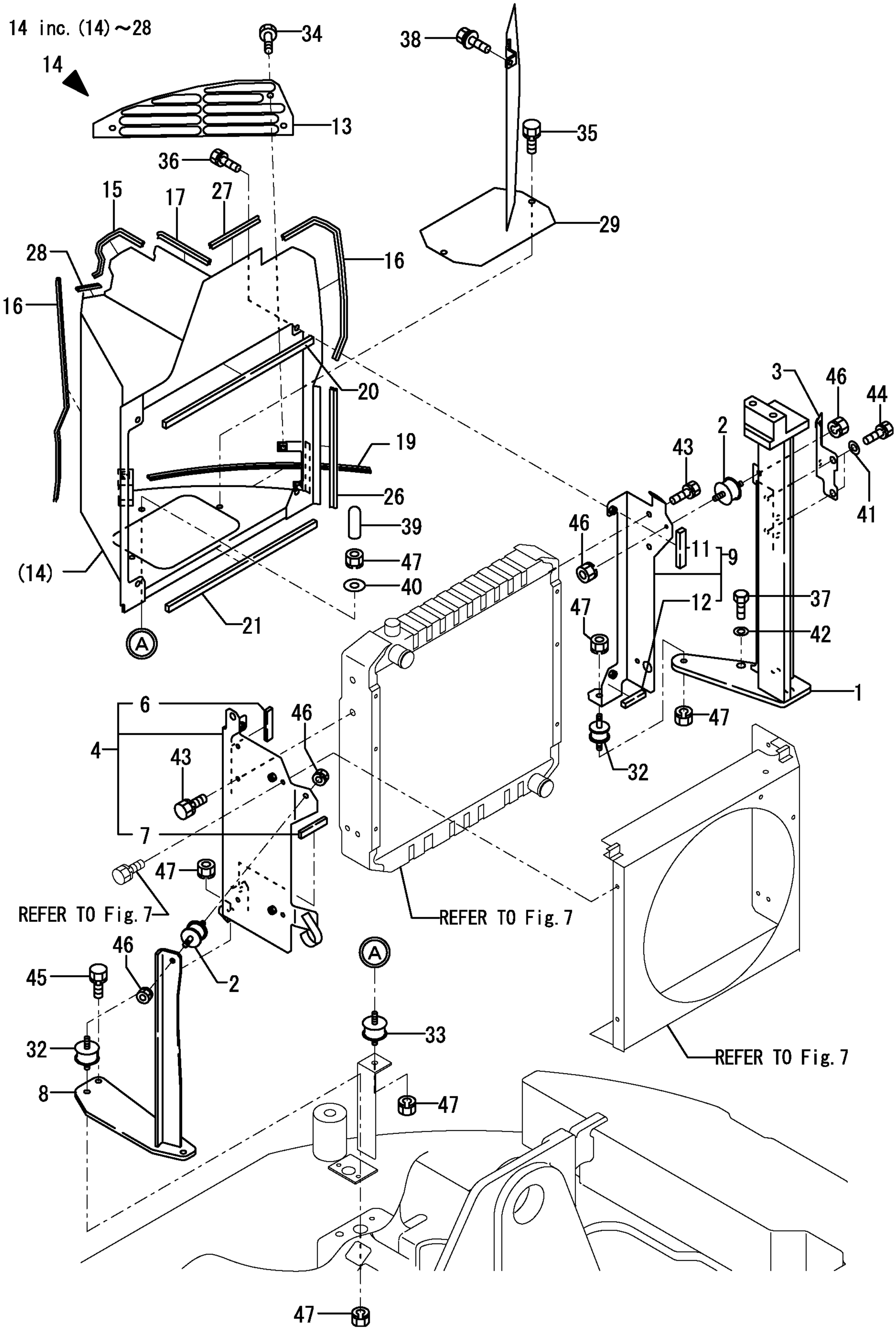

https://truckmanualshub.com/

```
1,1,,772455-14101-1,,"FUEL TANK ASSY  (87)",1,,,,,,,,,,,,,,,,,,
2,2,,104200-11920,,COCK,1,,,,,,,,,,,,,,,,,
4,2,,172162-14200,,GASKET,1,,,,,,,,,,,,,,,,,
5,2,,172187-14220,,GAUGE,1,,,,,,,,,,,,,,,,,
6,2,,172455-14240,,"HOSE, FO GAUGE",1,,,,,,,,,,,,,,,,,
7,2,,172141-14260,,FLOAT,1,,,,,,,,,,,,,,,,,
8,2,,172187-14290,,"FUEL INLET NET",1,,,,,,,,,,,,,,,,,
9,2,,172455-14340,,"CAP ASSY, FUEL TANK",1,,,,,,,,,,,,,,,,,,
10,3,,172187-14320,,GASKET,1,,,,,,,,,,,,,,,,,
11,2,,172455-14400,,"HOSE 9.5X1530",1,,,,,,,,,,,,,,,,,,
12,2,,172444-14410,,HOSE,1,,,,,,,,,,,,,,,,,
13,2,,172455-14500,,"FUEL CATCH",1,,,,,,,,,,,,,,,,,
14,2,,172122-55061,,"BRACKET, GREASE PUMP",2,,,,,,,,,,,,,,,,,
15,2,,22217-050000,,"SPRING WASHER  5",5,,,,,,,,,,,,,,,,,
16,2,,23010-014000,,"CLAMP 14",2,,,,,,,,,,,,,,,,,
17,2,,23010-014000,,"CLAMP 14",1,,,,,,,,,,,,,,,,,
18,2,,23080-013000,,"CLAMP 13,HOSE",1,,,,,,,,,,,,,,,,,
19,2,,26013-060102,,"BOLT M 6X 10",4,,,,,,,,,,,,,,,,,
20,2,,26022-050122,,"SCREW M 5X 12",5,,,,,,,,,,,,,,,,,
21,1,,22137-160000,,"WASHER 16,POLISHED",4,,,,,,,,,,,,,,,,,
22,1,,22217-160000,,"SPRING WASHER 16",4,,,,,,,,,,,,,,,,,
23,1,,26116-160452,,"BOLT M16X 45 PLATED",4,,,,,,,,,,,,,,,,,
```

https://truckmanualshub.com/

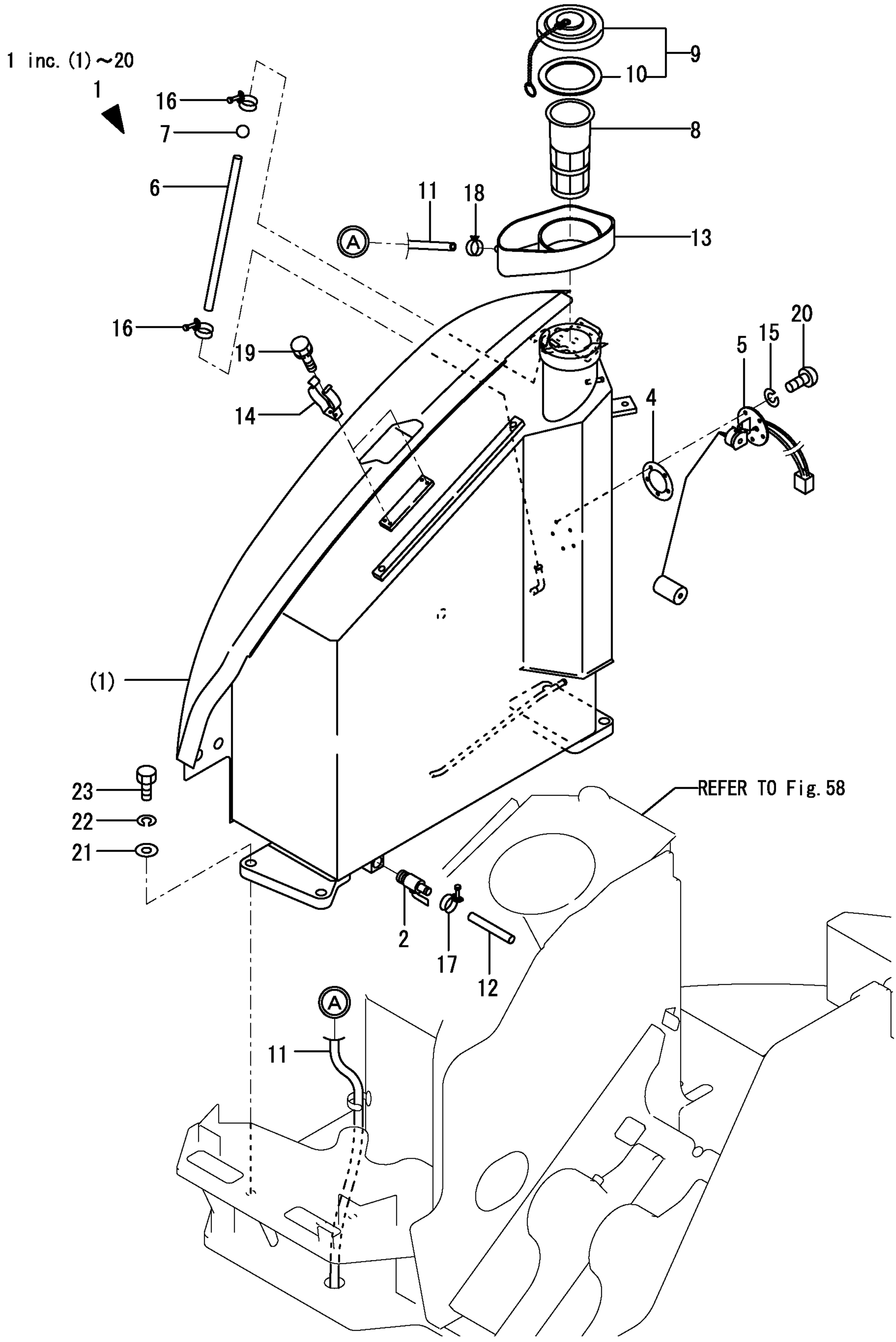

https://truckmanualshub.com/

```
1,1,,172126-11510,,"BAND 300",1,,,,,,,,,,,,,,,,,
2,1,,172187-14430,,HOSE,1,,,,,,,,,,,,,,,,,
3,1,,172187-14460,,CLAMP,1,,,,,,,,,,,,,,,,,
4,1,,172187-14470,,HOSE,1,,,,,,,,,,,,,,,,,
5,1,,172171-14610,,"HOSE 260,FUEL",1,,,,,,,,,,,,,,,,,
6,1,,172463-14610,,"BRACKET, W.S.",1,,,,,,,,,,,,,,,,,
7,1,,172463-14650,,"HOSE,FO 1350",1,,,,,,,,,,,,,,,,,
8,1,,172112-16650,,CLAMP(B),1,,,,,,,,,,,,,,,,,
9,1,,129412-52100,,"PUMP ASSY,FUEL FEED",1,,,,,,,,,,,,,,,,,,
10,1,,129335-55705,,"SEPARATOR,WATER",1,,,,,,,,,,,,,,,,,
11,2,,104200-55321,,"VALVE, TAPER",1,,,,,,,,,,,,,,,,,
12,2,,104200-55330,,"SPRING, TAPER VALVE",1,,,,,,,,,,,,,,,,,,
13,2,,104200-55341,,"HANDLE, COCK",1,,,,,,,,,,,,,,,,,
14,2,,121254-55510,,"CUP, STRAINER",1,,,,,,,,,,,,,,,,,
15,2,,102103-55520,,O-RING,1,,,,,,,,,,,,,,,,,
16,2,,110250-55610,,"RING, RETAINING",1,,,,,,,,,,,,,,,,,
17,2,,121850-55710,,SCREEN,1,,,,,,,,,,,,,,,,,
18,2,,121257-55720,,"SPRING, SCREEN",1,,,,,,,,,,,,,,,,,
19,2,,121257-55731,,FLOAT,1,,,,,,,,,,,,,,,,,
21,2,,101720-55750,,"PLUG, 6",2,,,,,,,,,,,,,,,,,
22,2,,104200-55750,,"SCREW M 4",1,,,,,,,,,,,,,,,,,
23,2,,23418-060000,,"GASKET 6, NYLON",2,,,,,,,,,,,,,,,,,
24,2,,24311-240100,,"O-RING 1A P-10A",1,,,,,,,,,,,,,,,,,
25,1,,124766-59050,,"CLAMP 12",8,,,,,,,,,,,,,,,,,
26,1,,1A1380-59480,,"CLAMP A,SM.&DYN.CORD",2,,,,,,,,,,,,,,,,,,
27,1,,22137-060000,,"WASHER 6, POLISHED",2,,,,,,,,,,,,,,,,,
28,1,,22137-080000,,"WASHER 8, POLISHED",1,,,,,,,,,,,,,,,,,
29,1,,22217-080000,,"SPRING WASHER  8",1,,,,,,,,,,,,,,,,,
30,1,,22217-080000,,"SPRING WASHER  8",2,,,,,,,,,,,,,,,,,
31,1,,22217-100000,,"SPRING WASHER 10",1,,,,,,,,,,,,,,,,,
32,1,,26013-060162,,"BOLT M 6X 16",2,,,,,,,,,,,,,,,,,
33,1,,26013-100162,,"BOLT M10X 16",1,,,,,,,,,,,,,,,,,
34,1,,26013-100162,,"BOLT M10X 16",1,,,,,,,,,,,,,,,,,
35,1,,26116-080162,,"BOLT 8X16",2,,,,,,,,,,,,,,,,,
36,1,,26116-080652,,"BOLT M 8X 65 PLATED",1,,,,,,,,,,,,,,,,,
37,1,,26116-100162,,"BOLT M10X 16 PLATED",1,,,,,,,,,,,,,,,,,
38,1,,933168-55770,,"BAND 146",1,,,,,,,,,,,,,,,,,
```

https://truckmanualshub.com/

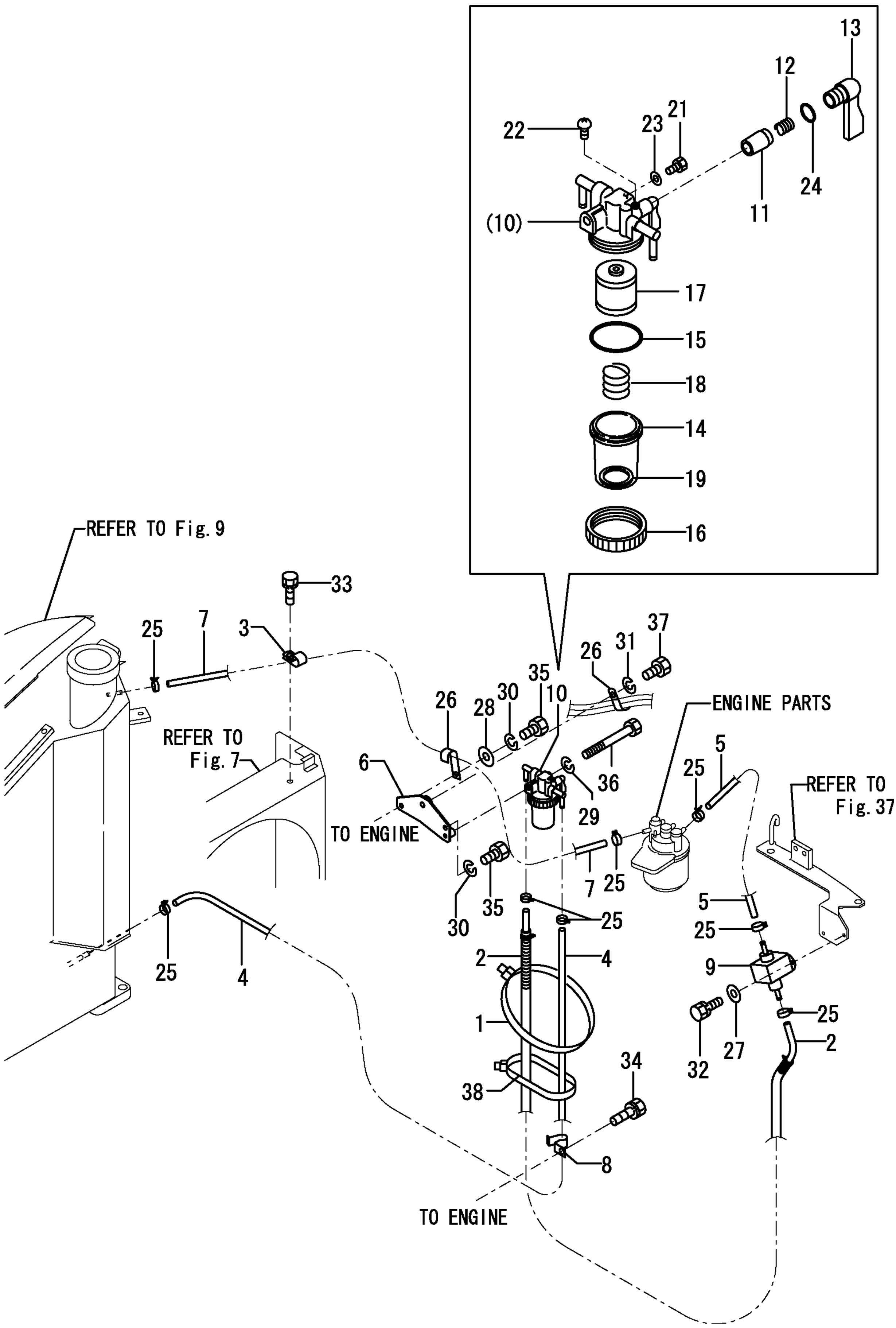

https://truckmanualshub.com/

```
1,1,,172455-16100,,"CORD(+),BATTERY ASSY",1,,,,,,,,,,,,,,,,,,
2,2,,172455-16110,,"CORD(+),BATTERY",1,,,,,,,,,,,,,,,,,,
3,2,,172187-16130,,"WIRE, FUSIBLE",1,,,,,,,,,,,,,,,,,,
4,1,,172187-16110,,"CODE, BATTERY -",1,,,,,,,,,,,,,,,,,,
5,1,,172187-16150,,BATTERY,1,,,,,,,,,,,,,,,,,,
6,1,,22217-080000,,"SPRING WASHER  8",1,,,,,,,,,,,,,,,,,,
7,1,,22217-100000,,"SPRING WASHER 10",1,,,,,,,,,,,,,,,,,,
8,1,,26116-100162,,"BOLT M10X 16 PLATED",1,,,,,,,,,,,,,,,,,,
9,1,,26716-080002,,"NUT M 8",1,,,,,,,,,,,,,,,,,,
10,1,,172112-16201,,"RETAINER, BATTERY",1,,,,,,,,,,,,,,,,,,
11,1,,172164-16370,,ROD,2,,,,,,,,,,,,,,,,,,
12,1,,22157-080000,,"WASHER  8",2,,,,,,,,,,,,,,,,,,
13,1,,26716-080002,,"NUT M 8",4,,,,,,,,,,,,,,,,,,
```

https://truckmanualshub.com/

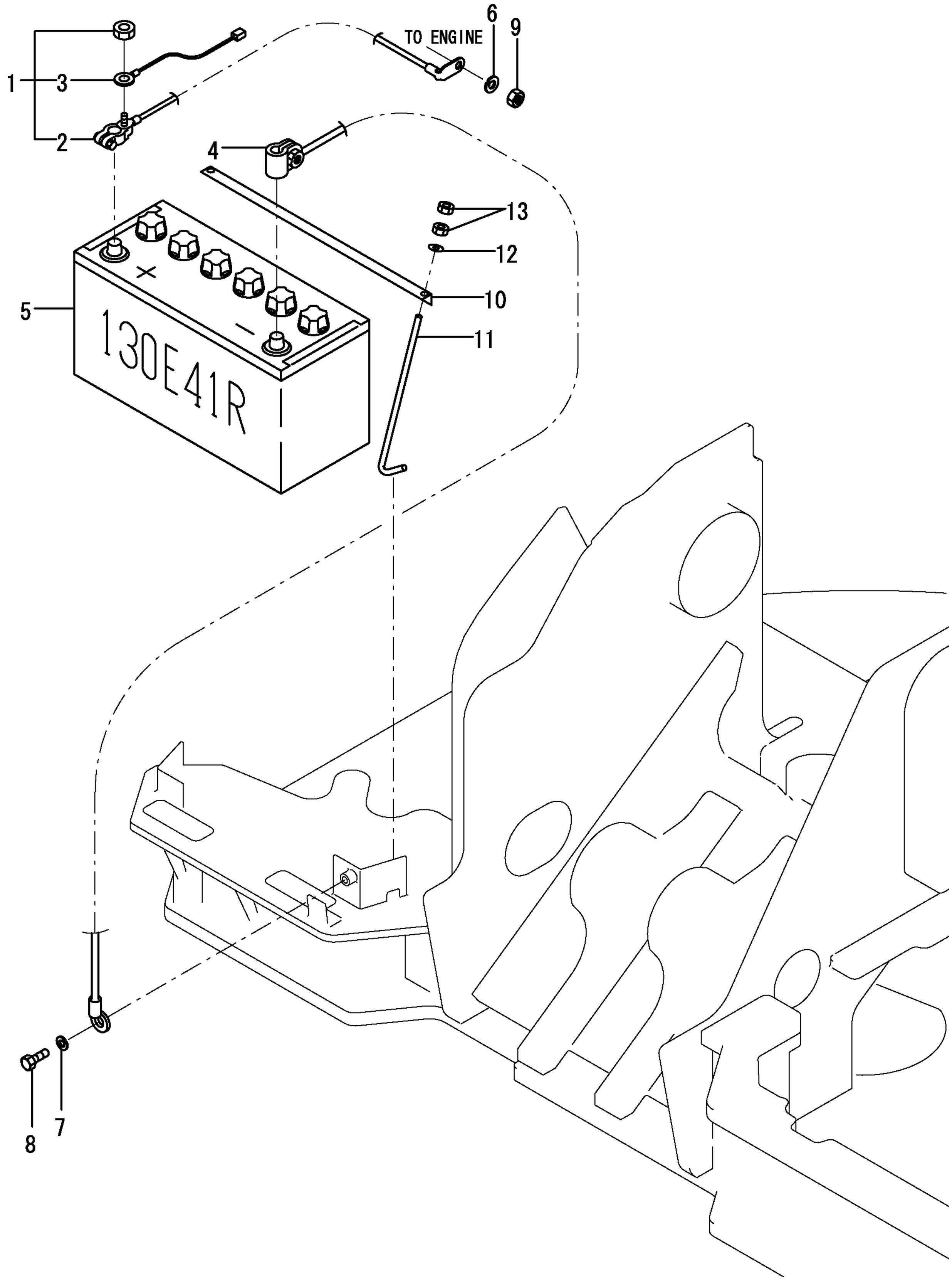

https://truckmanualshub.com/

```
1,1,,172126-11510,,"BAND 300",1,,,,,,,,,,,,,,,,
2,1,,172463-16520,,"HARNESS A ,US",1,,,,,,,,,,,,,,,,,
3,2,,172648-16600,,DIODE,1,,,,,,,,,,,,,,,,
4,1,,172463-16532,,"HARNESS B(US",1,,,,,,,,,,,,,,,,,
5,1,,172126-16540,,"CLAMP 10X70",1,,,,,,,,,,,,,,,,
6,1,,172455-16540,,"HARNESS, BOOM LAMP",1,,,,,,,,,,,,,,,,,
7,1,,172183-16560,,"CLIP 400,HOSE",1,,,,,,,,,,,,,,,,
8,1,,172187-16600,,"CODE, ENGINE EARTH",1,,,,,,,,,,,,,,,,,
9,1,,172112-16650,,CLAMP(B),1,,,,,,,,,,,,,,,,
10,1,,194440-51620,,"CLAMP, WIRE HARNESS",1,,,,,,,,,,,,,,,,,
11,1,,172187-78580,,CLAMP,11,,,,,,,,,,,,,,,,
12,1,,22137-080000,,"WASHER 8, POLISHED",1,,,,,,,,,,,,,,,,
13,1,,22137-100000,,"WASHER 10,POLISHED",2,,,,,,,,,,,,,,,,
14,1,,22217-050000,,"SPRING WASHER  5",1,,,,,,,,,,,,,,,,
15,1,,22217-080000,,"SPRING WASHER  8",1,,,,,,,,,,,,,,,,
16,1,,22217-080000,,"SPRING WASHER  8",1,,,,,,,,,,,,,,,,
17,1,,22217-100000,,"SPRING WASHER 10",2,,,,,,,,,,,,,,,,
18,1,,22217-100000,,"SPRING WASHER 10",1,,,,,,,,,,,,,,,,
19,1,,26013-100162,,"BOLT M10X 16",1,,,,,,,,,,,,,,,,
20,1,,26116-080162,,"BOLT 8X16",1,,,,,,,,,,,,,,,,
21,1,,26116-080162,,"BOLT 8X16",1,,,,,,,,,,,,,,,,
22,1,,26116-100162,,"BOLT M10X 16 PLATED",2,,,,,,,,,,,,,,,,
23,1,,26116-100162,,"BOLT M10X 16 PLATED",1,,,,,,,,,,,,,,,,
24,1,,26716-050002,,"NUT M 5",1,,,,,,,,,,,,,,,,
25,1,,933152-09280,,"BAND 170",8,,,,,,,,,,,,,,,,
```

https://truckmanualshub.com/

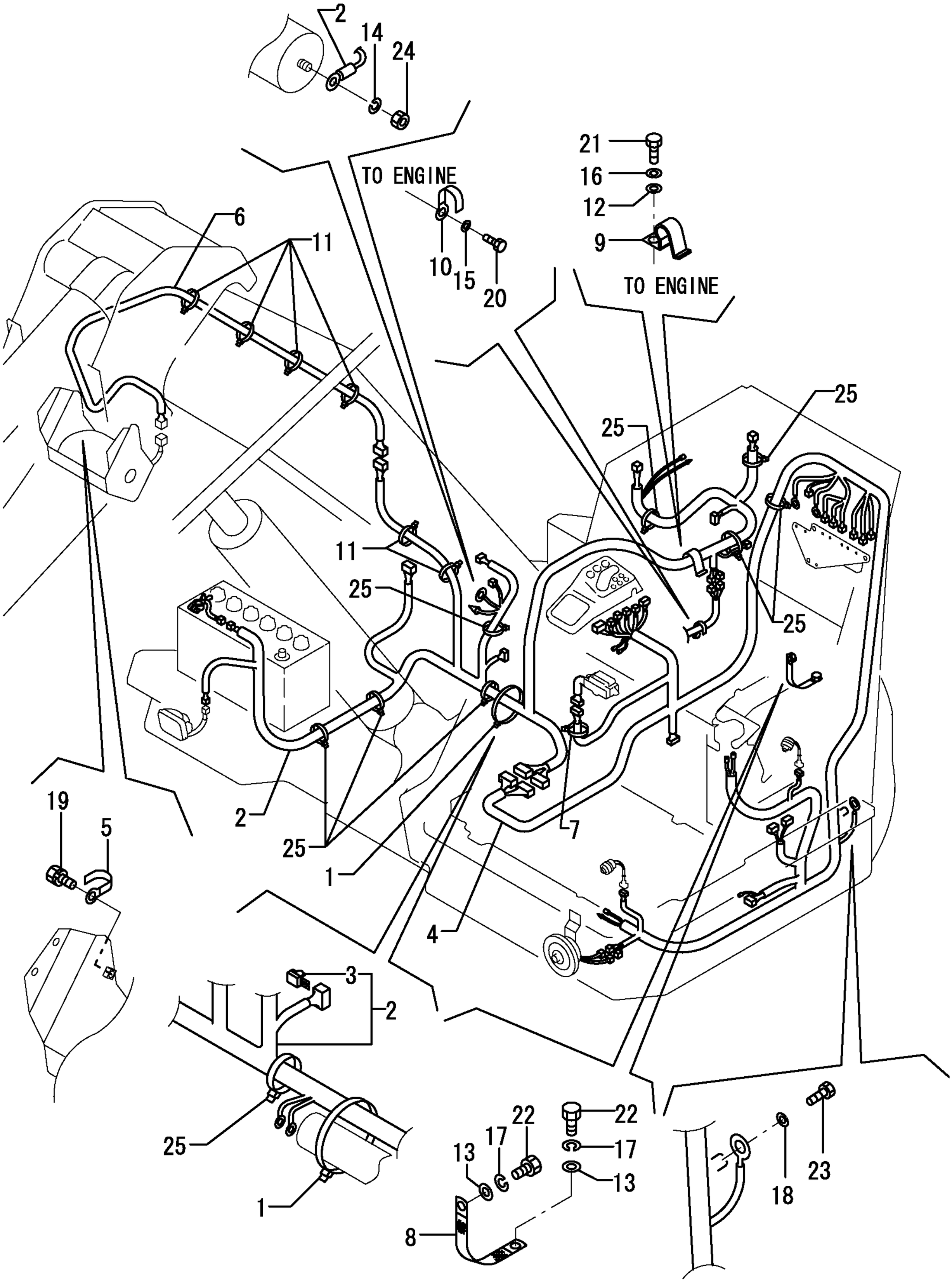

https://truckmanualshub.com/

```
1,1,,172187-17100,,"SWITCH, START",1,,,,,,,,,,,,,,,,,
2,2,,172187-17070,,CODE,1,,,,,,,,,,,,,,,,,
3,2,,172187-17080,,"COVER M5",3,,,,,,,,,,,,,,,,,
4,2,,172187-17090,,"COVER M4",2,,,,,,,,,,,,,,,,,
6,2,,933110-00301,,"KEY ASSY",1,,,,,,,,,,,,,,,,,
7,1,,172455-17110,,"BRACKET, RELAY",1,,,,,,,,,,,,,,,,,,
8,1,,172187-17200,,"BOX, FUSE",1,,,,,,,,,,,,,,,,,
9,2,,172175-17120,,PULLER,1,,,,,,,,,,,,,,,,,
11,2,,172187-17220,,COVER,1,,,,,,,,,,,,,,,,,
12,2,,29420-050000,,HUSE,2,,,,,,,,,,,,,,,,,
13,2,,29420-150000,,HUSE,6,,,,,,,,,,,,,,,,,
14,2,,29420-300000,,"FUSE B30",2,,,,,,,,,,,,,,,,,
15,1,,172162-17400,,"LAMP COMP.,WORKING",1,,,,,,,,,,,,,,,,,
16,2,,172141-17211,,"BULB 12V55W",1,,,,,,,,,,,,,,,,,
17,1,,172162-17410,,"LAMP ASSY, HEADLIGHT",1,,,,,,,,,,,,,,,,,,
18,2,,29220-788200,,BULB,1,,,,,,,,,,,,,,,,,
19,1,,172455-17500-1,,"COVER, B LAMP   (87)",1,,,,,,,,,,,,,,,,,,
20,1,,194464-52190,,"SWITCH, SAFETY START",2,,,,,,,,,,,,,,,,,
21,1,,194151-57100,,HORN,1,,,,,,,,,,,,,,,,,
22,1,,172146-61370,,"RUBBER, SEAL",1,,,,,,,,,,,,,,,,,
23,1,,172455-61600,,"PLUG 28X3.2",2,,,,,,,,,,,,,,,,,
24,1,,172173-76690,,"COLLAR 9>12>24",1,,,,,,,,,,,,,,,,,
25,1,,119247-77100,,"RELAY, SAFETY",3,,,,,,,,,,,,,,,,,
26,1,,129136-77200,,"RELAY, SAFETY",1,,,,,,,,,,,,,,,,,
27,1,,119650-77910,,"RELAY, GROW",1,,,,,,,,,,,,,,,,,
30,1,,172183-81160,,"TREE CLIP",3,,,,,,,,,,,,,,,,,
31,1,,22157-060000,,"WASHER  6",3,,,,,,,,,,,,,,,,,
32,1,,22217-100000,,"SPRING WASHER 10",3,,,,,,,,,,,,,,,,,
33,1,,26013-060122,,"BOLT M 6X 12",2,,,,,,,,,,,,,,,,,
34,1,,26013-060122,,"BOLT M 6X 12",1,,,,,,,,,,,,,,,,,
35,1,,26013-060162,,"BOLT M 6X 16",2,,,,,,,,,,,,,,,,,
36,1,,26013-060202,,"BOLT M 6X 20",2,,,,,,,,,,,,,,,,,
37,1,,26013-060202,,"BOLT M 6X 20",2,,,,,,,,,,,,,,,,,
38,1,,26013-060452,,"BOLT M 6X 45",1,,,,,,,,,,,,,,,,,
39,1,,26013-080162,,"BOLT W/WASHER M8X16",2,,,,,,,,,,,,,,,,,,
40,1,,26013-100162,,"BOLT M10X 16",4,,,,,,,,,,,,,,,,,
41,1,,26116-100162,,"BOLT M10X 16 PLATED",3,,,,,,,,,,,,,,,,,,
42,1,,26776-180002,,"NUT M18,LOCK",2,,,,,,,,,,,,,,,,,
```

https://truckmanualshub.com/

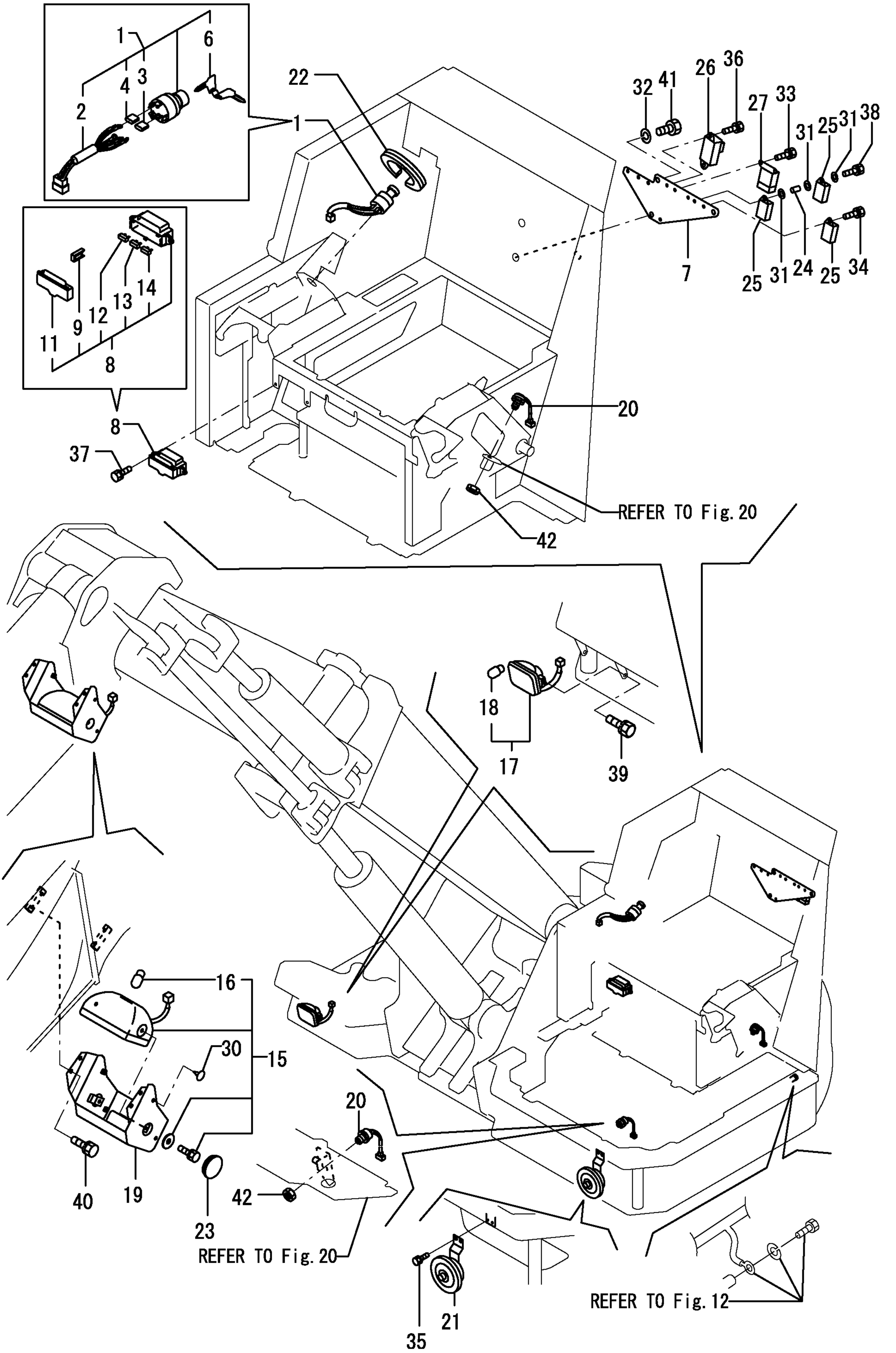

https://truckmanualshub.com/

```
1,1,,172472-17350,,"INDICATOR BOX (CABIN",1,,,,,,,,,,,,,,,,,,
4,2,,172187-17280,,"SWITCH ASSY, LIGHT",1,,,,,,,,,,,,,,,,,,
5,2,,172187-17290,,"SWITCH, HEATER",1,,,,,,,,,,,,,,,,,,
6,2,,172472-17300,,"SWITCH ASSY,WASHER",1,,,,,,,,,,,,,,,,,,
10,2,,172187-17341,,"GAUGE ASSY",1,,,,,,,,,,,,,,,,,,
11,2,,172187-17350,,"METER ASSY, HOUR",1,,,,,,,,,,,,,,,,,,
14,2,,172187-17380,,"BULB,T6.5-13.5V-2W",4,,,,,,,,,,,,,,,,,,
19,2,,172187-17480,,"BULB,T5-14V-2W",2,,,,,,,,,,,,,,,,,,
20,1,,172458-46720,,"BOLT 8X20",2,,,,,,,,,,,,,,,,,,
21,1,,172519-63240,,"BOLT  8X 16",2,,,,,,,,,,,,,,,,,,
```

https://truckmanualshub.com/

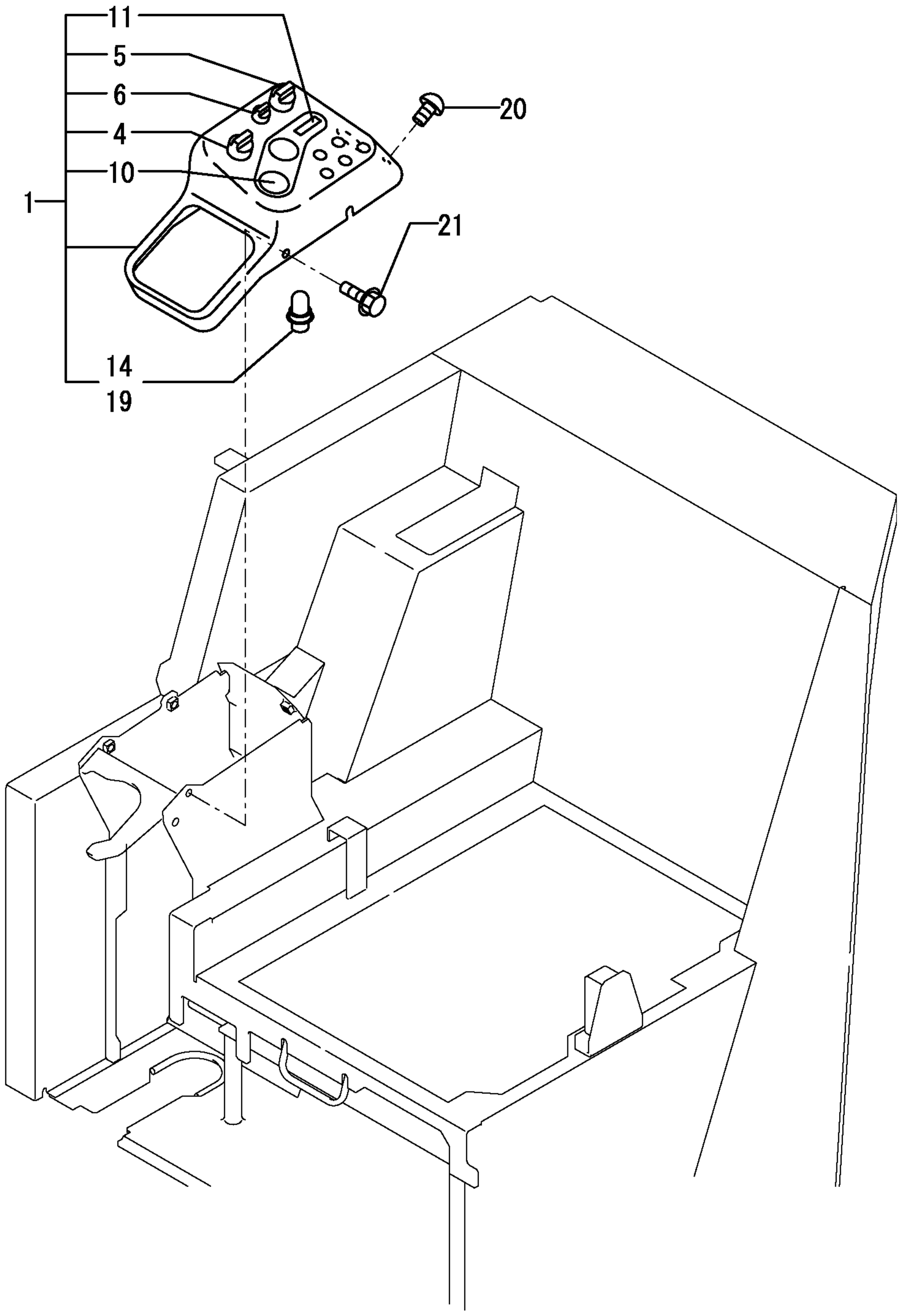

https://truckmanualshub.com/

```
1,1,,172478-16610,,"HARNESS F",1,,,,,,,,,,,,,,,,,
2,1,,172478-17600,,"BRACKET,WASHER",1,,,,,,,,,,,,,,,,,
3,1,,172472-17610,,"WASHER TANK ASSY",1,,,,,,,,,,,,,,,,,
6,2,,172472-17650,,BRACKET,1,,,,,,,,,,,,,,,,,
7,2,,22137-060000,,"WASHER 6, POLISHED",1,,,,,,,,,,,,,,,,,
8,2,,22217-060000,,"SPRING WASHER  6",2,,,,,,,,,,,,,,,,,
9,2,,26116-060162,,"BOLT 6X16",2,,,,,,,,,,,,,,,,,
10,1,,198127-86540,,"JOINT,W PIPE",1,,,,,,,,,,,,,,,,,
11,1,,26013-100162,,"BOLT M10X 16",2,,,,,,,,,,,,,,,,,
```

https://truckmanualshub.com/

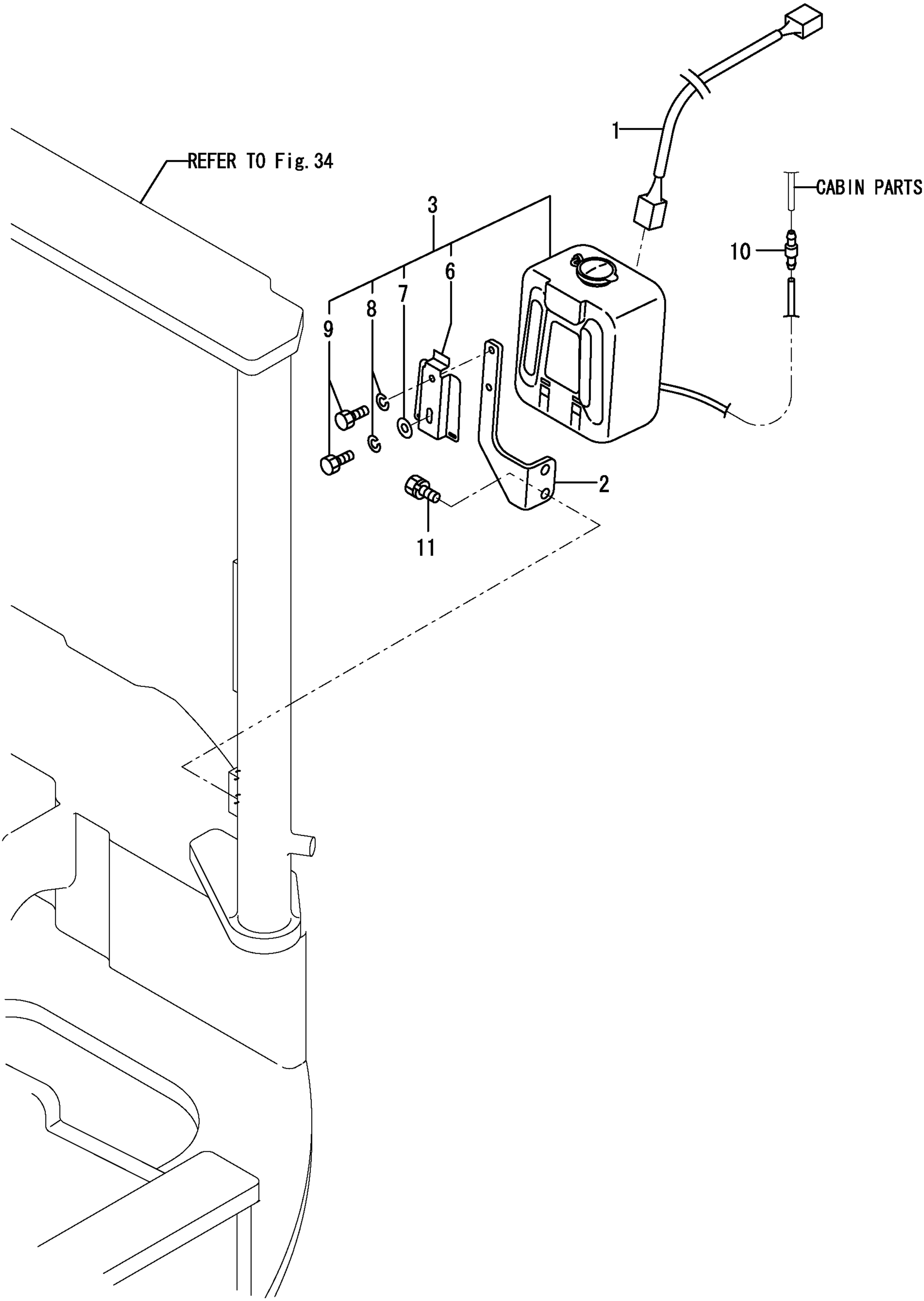

https://truckmanualshub.com/

```
1,1,,172126-11510,,"BAND 300",2,,,,,,,,,,,,,,,,,
2,1,,172162-17602,,HEATER,1,,,,,,,,,,,,,,,,,
3,1,,172455-17601,,"GUIDE ASSY, HOSE",1,,,,,,,,,,,,,,,,,
4,1,,172425-17630,,"VALVE ASSY, HEATER",1,,,,,,,,,,,,,,,,,
5,1,,172124-17640,,"JOINT 3/8",1,,,,,,,,,,,,,,,,,
6,1,,172175-17730,,"HOSE (A), HEATER",2,,,,,,,,,,,,,,,,,
9,1,,172455-64910,,"DUCT ASSY, HEATER",1,,,,,,,,,,,,,,,,,
10,2,,172455-64110,,"SEAL A, HEATER",4,,,,,,,,,,,,,,,,,
11,2,,172455-64120,,"SEAL B, HEATER",2,,,,,,,,,,,,,,,,,
12,2,,172455-64130,,"SEAL C, HEATER",2,,,,,,,,,,,,,,,,,
14,1,,172168-79520,,ELBOW,1,,,,,,,,,,,,,,,,,
15,1,,22137-100000,,"WASHER 10,POLISHED",4,,,,,,,,,,,,,,,,,
16,1,,23001-022000,,"HOSE CLAMP  22",4,,,,,,,,,,,,,,,,,
17,1,,26013-080162,,"BOLT W/WASHER M8X16",2,,,,,,,,,,,,,,,,,
18,1,,26013-100202,,"BOLT W/WASHER M10X20",4,,,,,,,,,,,,,,,,,
19,1,,26013-100202,,"BOLT W/WASHER M10X20",2,,,,,,,,,,,,,,,,,
20,1,,933152-09280,,"BAND 170",1,,,,,,,,,,,,,,,,,
21,1,,933171-15680,,"GROMMET 40X13",2,,,,,,,,,,,,,,,,,
```

https://truckmanualshub.com/

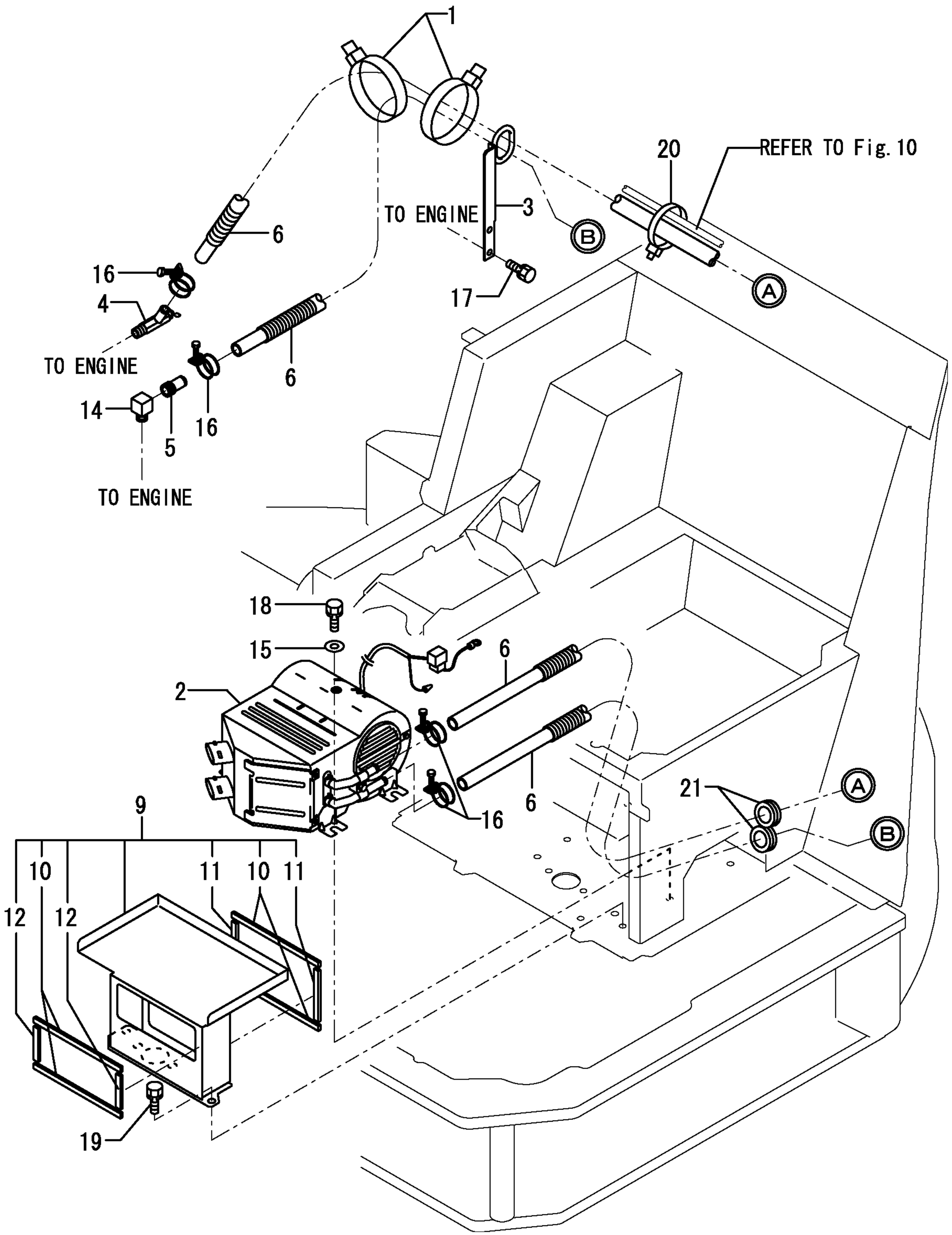

https://truckmanualshub.com/

```
1,1,,172455-17310,,"PIPE, DEFROSTER",1,,,,,,,,,,,,,,,,,
2,1,,172175-17860,,"HOSE (A), DEFROSTER",1,,,,,,,,,,,,,,,,,,
3,1,,26013-100202,,"BOLT W/WASHER M10X20",2,,,,,,,,,,,,,,,,,,,
4,1,,933110-58400,,"GROMMET 43",1,,,,,,,,,,,,,,,,,,
```

https://truckmanualshub.com/

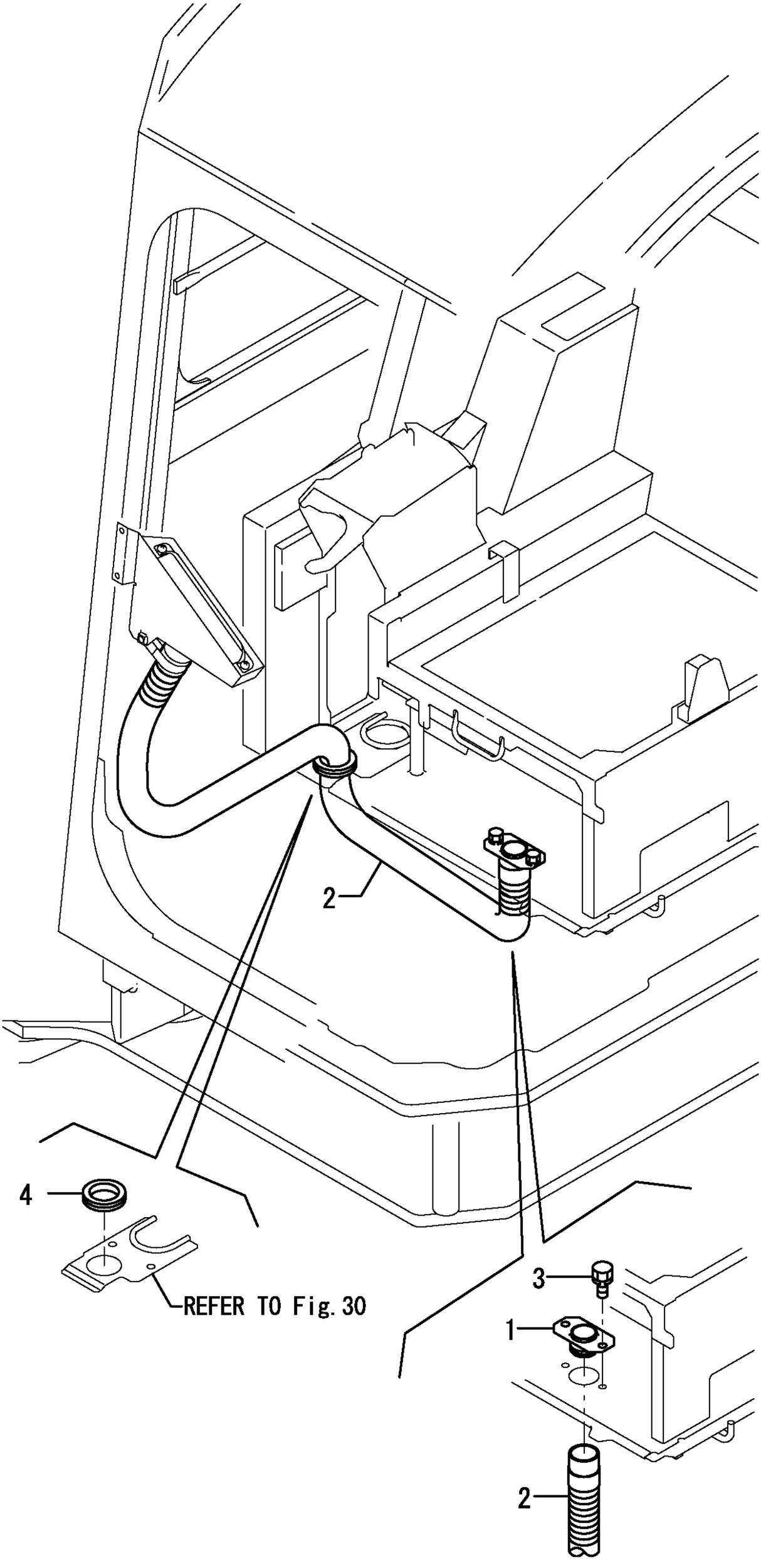

https://truckmanualshub.com/

```
1,1,,172187-29101-2,,"SPROCKET  (GREEN:82)",2,,,,,,,,,,,,,,,,,
2,1,,172455-29140,,"BOLT 14X35",24,,,,,,,,,,,,,,,,,
3,1,,172455-29150,,"WASHER 14X35",24,,,,,,,,,,,,,,,,,
4,1,,172478-37300-1,,"ROLLER,LOWER(GREEN82",10,,,,,,,,,,,,,,,,,,,
6,3,,182900-55790,,BUSHING,20,,,,,,,,,,,,,,,,,
7,2,,172478-37350,,SHAFT,10,,,,,,,,,,,,,,,,,
8,2,,172478-37360,,"SEAL COVER A",10,,,,,,,,,,,,,,,,,
9,2,,172478-37370,,"SEAL COVER B",10,,,,,,,,,,,,,,,,,
10,2,,172478-37380,,"FLOATING SEAL",20,,,,,,,,,,,,,,,,,,
11,2,,22242-000320,,"CIRCLIP   32",10,,,,,,,,,,,,,,,,,
12,2,,24311-000380,,"O-RING 1A P-38.0",10,,,,,,,,,,,,,,,,,,
13,2,,933171-13691,,"PLUG PT1/8",10,,,,,,,,,,,,,,,,,
14,1,,22217-200000,,"SPRING WASHER 20",20,,,,,,,,,,,,,,,,,,
15,1,,26116-200402,,"BOLT M20X40",20,,,,,,,,,,,,,,,,,
16,1,,172478-37500-1,,"ROLLER,CARRIER  (82)",2,,,,,,,,,,,,,,,,,,,
19,2,,172478-37530,,"SEAL,CARRIER ROLLER",2,,,,,,,,,,,,,,,,,,
20,2,,172478-37540,,"CAP, CARRIER ROLLER",2,,,,,,,,,,,,,,,,,,
21,2,,172478-37550,,"WASHER, CARRIER",2,,,,,,,,,,,,,,,,,,
22,2,,22242-000300,,"CIRCLIP   30",2,,,,,,,,,,,,,,,,,,
23,2,,22252-000621,,"RING,   62",2,,,,,,,,,,,,,,,,,,
24,2,,24105-062064,,"BALL BEARING",4,,,,,,,,,,,,,,,,,,
25,2,,933171-13691,,"PLUG PT1/8",2,,,,,,,,,,,,,,,,,,
26,1,,22217-160000,,"SPRING WASHER 16",2,,,,,,,,,,,,,,,,,,,
27,1,,26116-160852,,"BOLT M16X 85 PLATED",2,,,,,,,,,,,,,,,,,,,
28,1,,26716-160002,,"NUT M16",2,,,,,,,,,,,,,,,,,,
```

https://truckmanualshub.com/

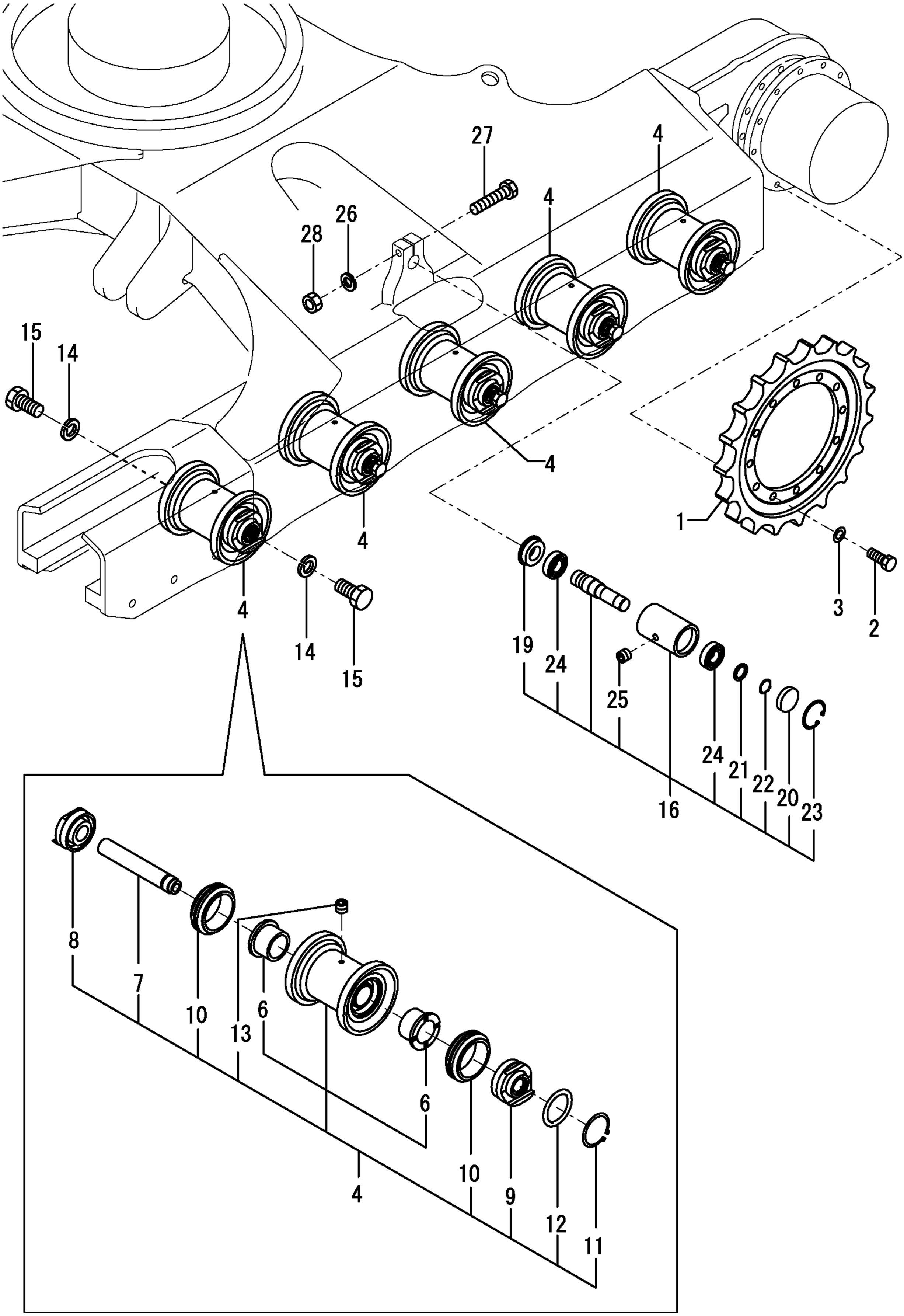

https://truckmanualshub.com/

```
1,1,,772478-37101,,"IDLER ASSY(GREEN:82)",2,,,,,,,,,,,,,,,,,,
2,2,,172478-37100-1,,"IDLER ,375(GREEN:82)",2,,,,,,,,,,,,,,,,,,,
4,3,,182900-57380,,BUSHING,4,,,,,,,,,,,,,,,,,,
5,2,,172478-37140,,"IDLER SEAL COVER,A",2,,,,,,,,,,,,,,,,,,,
6,2,,172478-37150,,"IDLER SEAL COVER,B",2,,,,,,,,,,,,,,,,,,,
7,2,,172455-37160,,"FLOATING SEAL",4,,,,,,,,,,,,,,,,,,,
8,2,,172455-37170,,SHAFT,2,,,,,,,,,,,,,,,,,,,
9,2,,172455-37180,,"SP PIN 10AWX70",2,,,,,,,,,,,,,,,,,,,
10,2,,22242-000400,,"CIRCLIP   40",2,,,,,,,,,,,,,,,,,,,
11,2,,24311-000380,,"O-RING 1A P-38.0",4,,,,,,,,,,,,,,,,,,,,
12,2,,933171-13691,,"PLUG PT1/8",2,,,,,,,,,,,,,,,,,,,
13,1,,198072-17440,,"O-RING 55.0",2,,,,,,,,,,,,,,,,,,,
14,1,,172187-37700-2,,"ADJUST, CRAWLER (82)",2,,,,,,,,,,,,,,,,,,,,
15,1,,172478-37710,,"RING 55,BACKUP",2,,,,,,,,,,,,,,,,,,,
16,1,,172162-37770,,"TUBE COMP.,ADJUSTER",2,,,,,,,,,,,,,,,,,,,
17,1,,172162-37800,,PISTON,2,,,,,,,,,,,,,,,,,,,
18,1,,172162-37810,,"PLATE,ADJUSTER",2,,,,,,,,,,,,,,,,,,,
19,1,,172122-37844,,"VALVE ASSY, NIPPLE",2,,,,,,,,,,,,,,,,,,,
20,2,,24315-000140,,"O-RING 1B P-14.0",2,,,,,,,,,,,,,,,,,,,
21,2,,24761-020000,,"NIPPLE PT1/8,GREASE",2,,,,,,,,,,,,,,,,,,,
22,1,,22217-140000,,"SPRING WASHER 14",8,,,,,,,,,,,,,,,,,,,
23,1,,26116-140602,,"BOLT M14X 60 PLATED",8,,,,,,,,,,,,,,,,,,,
24,1,,933126-50500,,"SEAL 5569811, DKB",2,,,,,,,,,,,,,,,,,,,
```

https://truckmanualshub.com/

When constructing Idler Assy,The direction of cutting mark of idler seal cover A & B is the opposite side concerning rubber crawler & iron crawler.

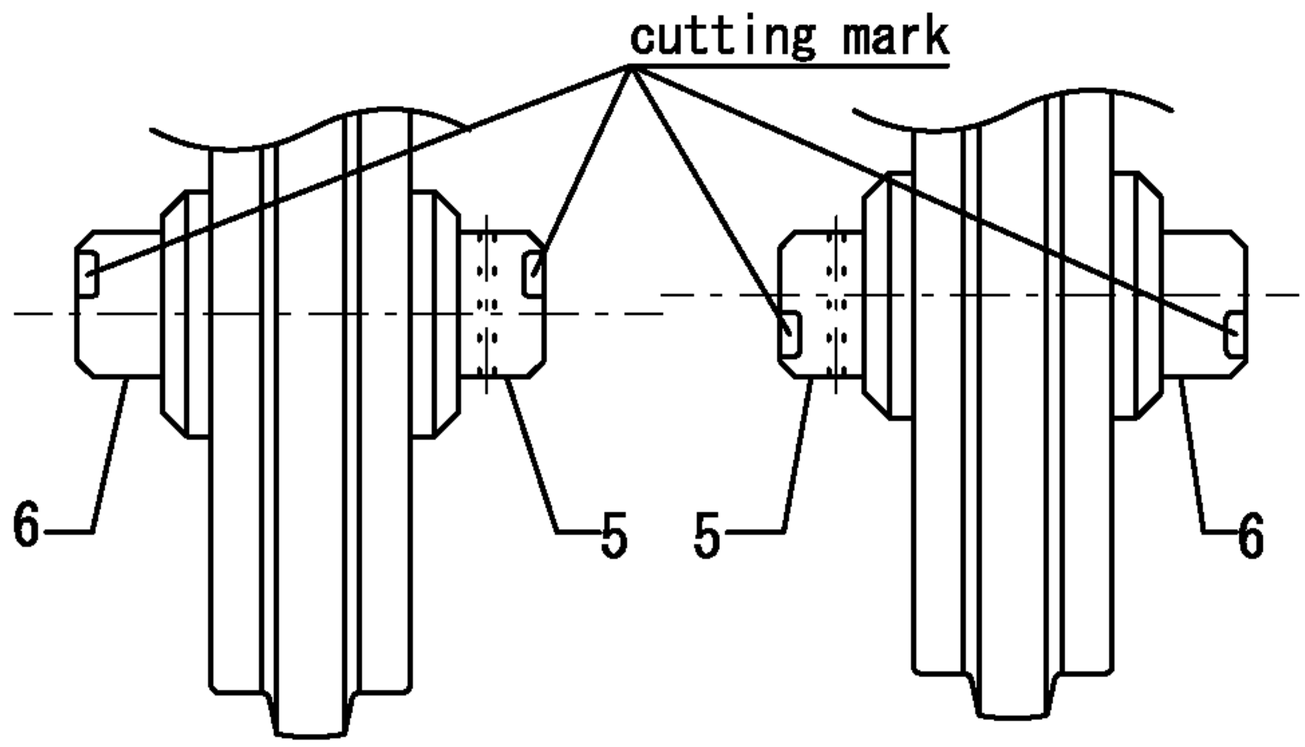

VIEWED FROM Ⓐ

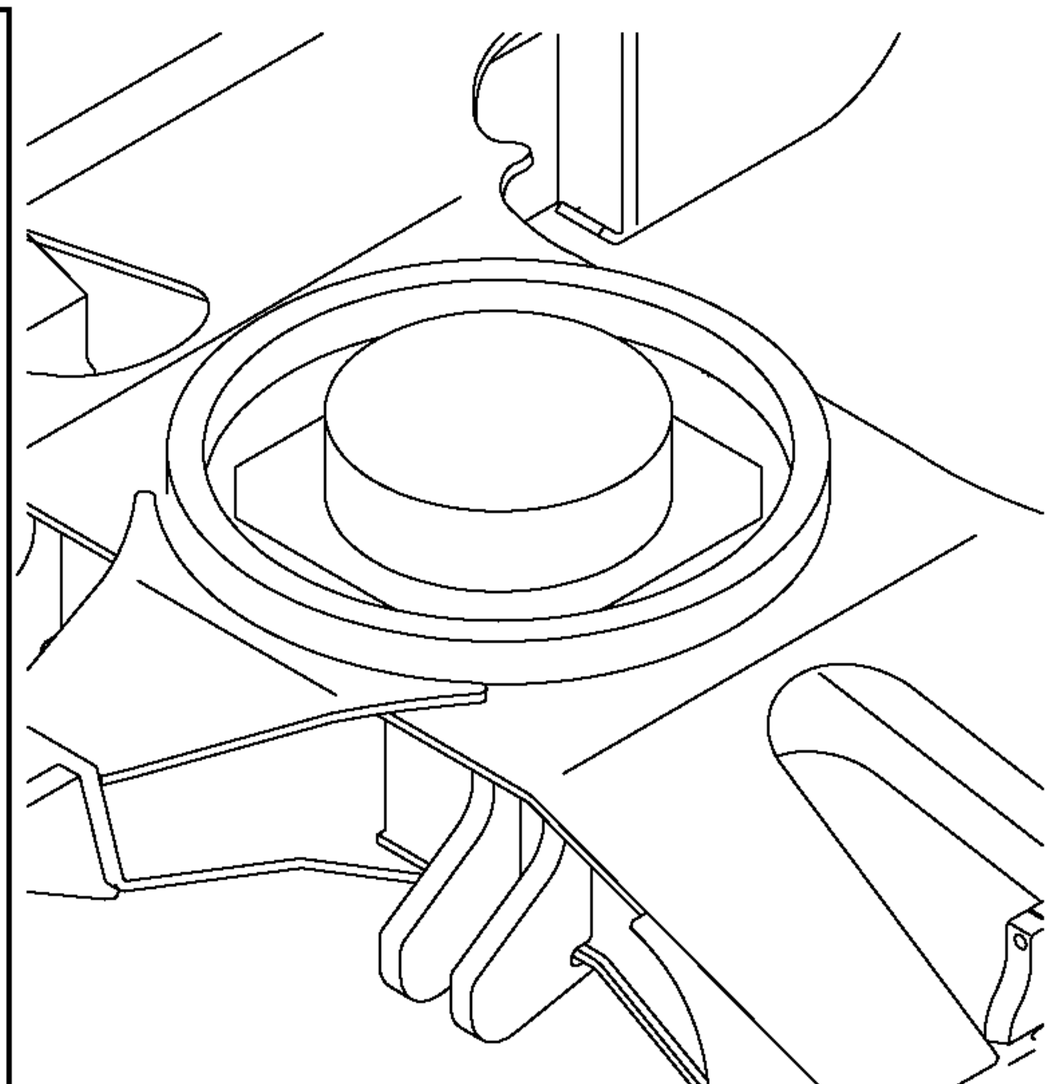

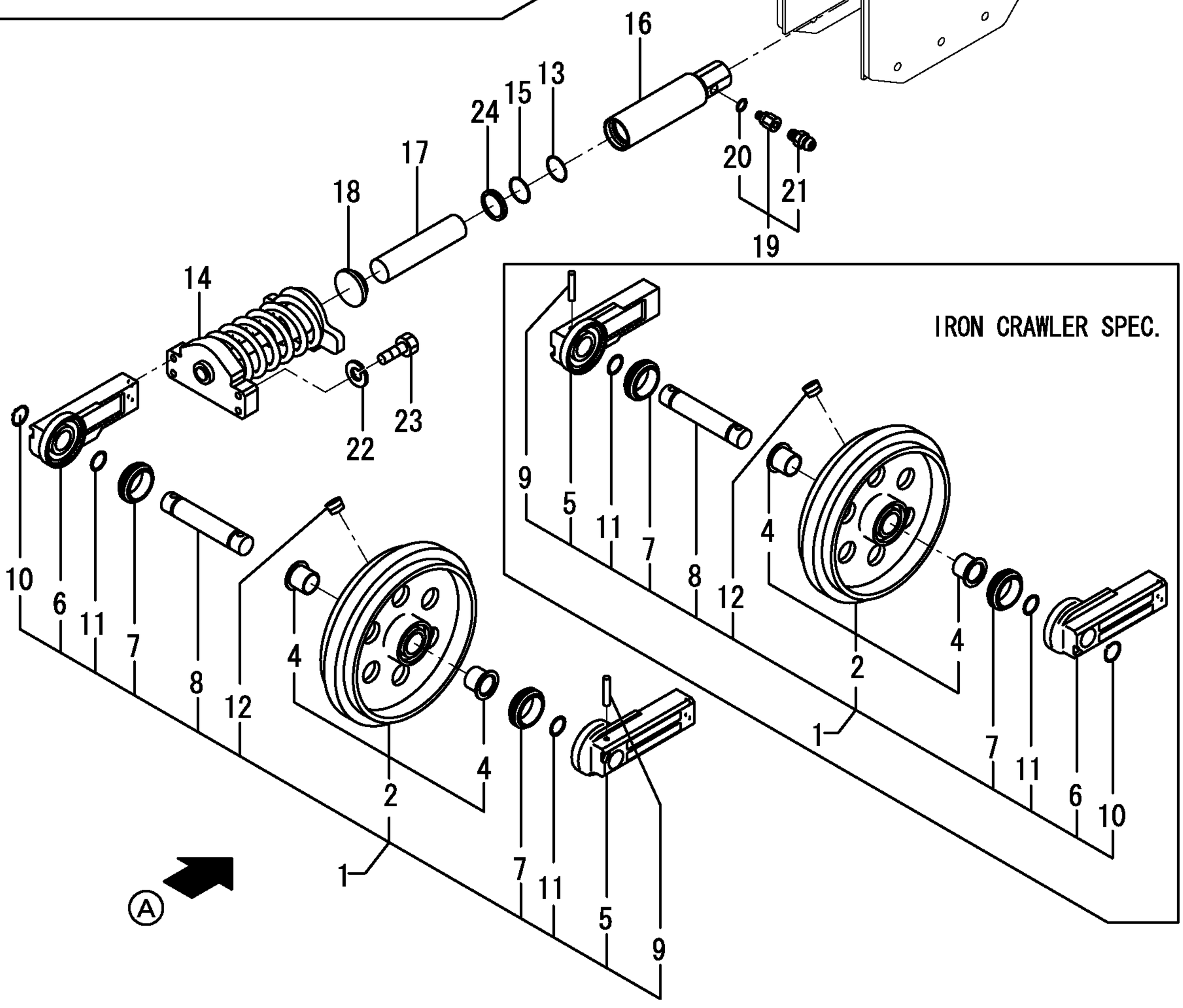

```
1,1,,172455-38100-1,,"TRACK SHOE 450L ASSY",1,,,,,,,,,,,,,,,,,
2,2,,172455-38120,,"LINK ASSY",1,,,,,,,,,,,,,,,,
7,3,,172455-38220,,"BUSH, TRACK",38,,,,,,,,,,,,,,,,,
8,3,,172455-38230,,"PIN, TRACK",38,,,,,,,,,,,,,,,,,
9,3,,172455-38240,,"BUSH, MASTER",1,,,,,,,,,,,,,,,,,
10,3,,172455-38250,,"PIN, MASTER",1,,,,,,,,,,,,,,,,,
11,3,,172455-38260,,COLLER,2,,,,,,,,,,,,,,,,
12,3,,172455-38270,,"COTTER PIN",1,,,,,,,,,,,,,,,,,
13,3,,172455-38280,,SEAL,76,,,,,,,,,,,,,,,,,
14,2,,172455-38130-1,,"TRACK SHOE 450L (71)",39,,,,,,,,,,,,,,,,,,
15,2,,172455-38160,,NUT,78,,,,,,,,,,,,,,,,,
16,2,,172455-38160,,NUT,78,,,,,,,,,,,,,,,,,
17,2,,172455-38170,,BOLT,78,,,,,,,,,,,,,,,,,
18,2,,172455-38170,,BOLT,78,,,,,,,,,,,,,,,,,
19,1,,172455-38110-1,,"TRACK SHOE 450R ASSY",1,,,,,,,,,,,,,,,,,,
20,2,,172455-38120,,"LINK ASSY",1,,,,,,,,,,,,,,,,
25,3,,172455-38220,,"BUSH, TRACK",38,,,,,,,,,,,,,,,,,
26,3,,172455-38230,,"PIN, TRACK",38,,,,,,,,,,,,,,,,,
27,3,,172455-38240,,"BUSH, MASTER",1,,,,,,,,,,,,,,,,,
28,3,,172455-38250,,"PIN, MASTER",1,,,,,,,,,,,,,,,,,
29,3,,172455-38260,,COLLER,2,,,,,,,,,,,,,,,,
30,3,,172455-38270,,"COTTER PIN",1,,,,,,,,,,,,,,,,,
31,3,,172455-38280,,SEAL,76,,,,,,,,,,,,,,,,,
32,2,,172455-38140-1,,"TRACK SHOE 450R (71)",39,,,,,,,,,,,,,,,,,,
33,2,,172455-38160,,NUT,78,,,,,,,,,,,,,,,,,
34,2,,172455-38160,,NUT,78,,,,,,,,,,,,,,,,,
35,2,,172455-38170,,BOLT,78,,,,,,,,,,,,,,,,,
36,2,,172455-38170,,BOLT,78,,,,,,,,,,,,,,,,,
37,1,,172488-38600,,"BUBBER CRAWLER",2,,,,,,,,,,,,,,,,,,
38,1,,172455-38300-1,,"MASTER
TRACK450L(71)",1,,,,,,W,,24780170,*2003.09,,,,,,,,,,I
39,2,,172455-38130-1,,"TRACK SHOE 450L
(71)",1,,,,,,W,,24780170,*2003.09,,,,,,,,,,I
40,2,,172455-38160,,NUT,4,,,,,,W,,24780170,*2003.09,,,,,,,,,,I
41,2,,172455-38170,,BOLT,4,,,,,,W,,24780170,*2003.09,,,,,,,,,,I
44,3,,172455-38240,,"BUSH, MASTER",1,,,,,,W,,24780170,*2003.09,,,,,,,,,,I
45,1,,172455-38310-1,,"MASTER
TRACK450R(71)",1,,,,,,W,,24780170,*2003.09,,,,,,,,,,I
46,2,,172455-38140-1,,"TRACK SHOE 450R
(71)",1,,,,,,W,,24780170,*2003.09,,,,,,,,,,I
47,2,,172455-38160,,NUT,4,,,,,,W,,24780170,*2003.09,,,,,,,,,,I
48,2,,172455-38170,,BOLT,4,,,,,,W,,24780170,*2003.09,,,,,,,,,,I
51,3,,172455-38240,,"BUSH, MASTER",1,,,,,,W,,24780170,*2003.09,,,,,,,,,,I
```

https://truckmanualshub.com/

P/C NEWS No:Y00S4190-1
PUBLISHED:2003/09

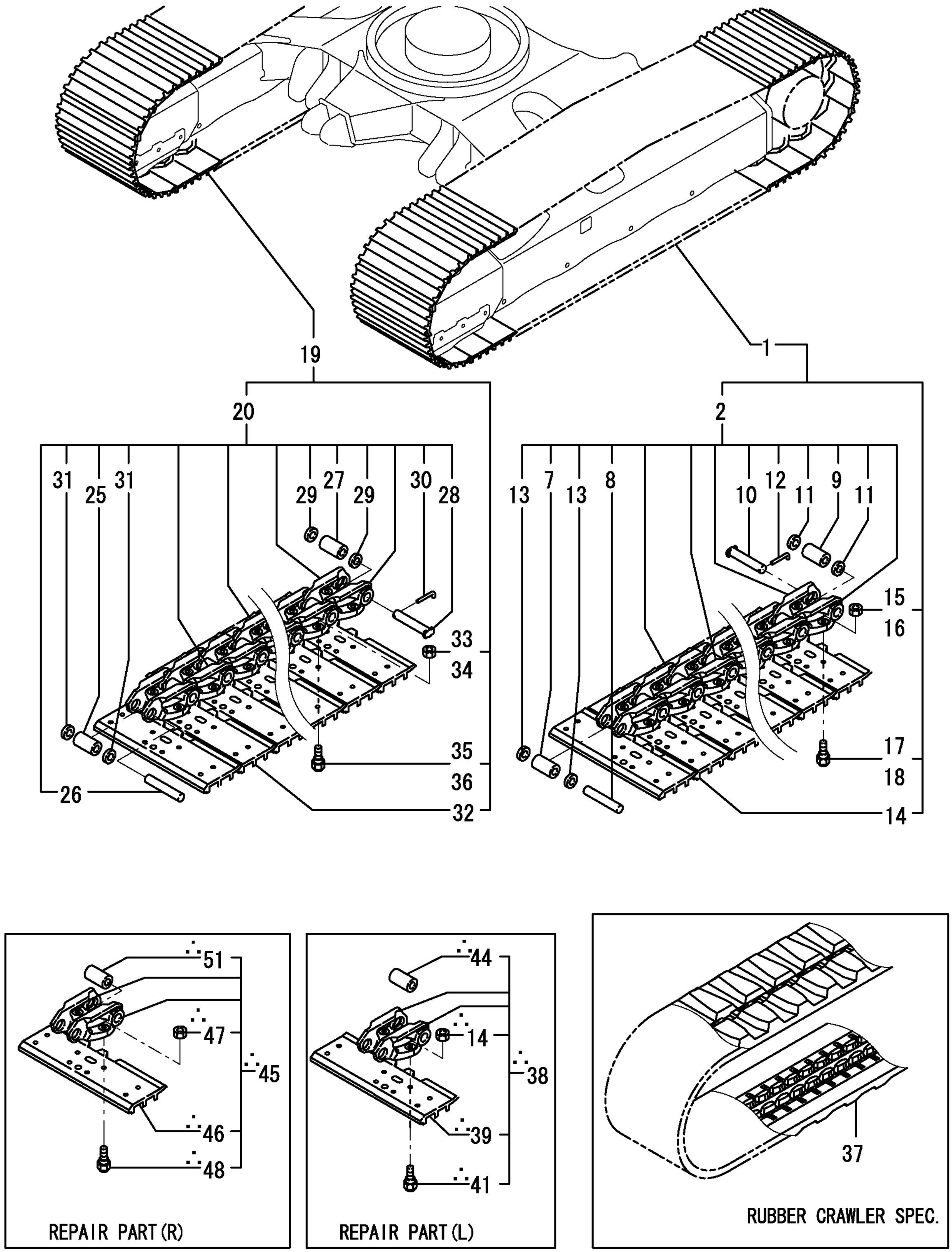

∴MARKED PART HAS BEEN CHANGED(ADDED).

```
1,1,,1D4070-23580,,"GRIP,RED ROUND",1,,,,,,,,,,,,,,,,,
2,1,,172478-45400,,"STAND,LINK(BLACK:12)",1,,,,,,,,,,,,,,,,,
3,1,,172455-45520,,"BRACKET,BOOT    (12)",1,,,,,,,,,,,,,,,,,
4,1,,172458-45850,,"GUIDE L,HOSE(GRAY:73",1,,,,,,,,,,,,,,,,,
5,1,,172124-46200,,"O-RING 27X5.7",2,,,,,,,,,,,,,,,,,
6,1,,172472-46210,,"BRACKET ASSY,R  (73)",1,,,,,,,,,,,,,,,,,
7,1,,172472-46220,,"BRACKET ASSY,L  (73)",1,,,,,,,,,,,,,,,,,
8,1,,172472-46600,,"LEVER STAND L   (73)",1,,,,,,,,,,,,,,,,,
9,2,,172141-41370,,"BUSH 2015",2,,,,,,,,,,,,,,,,,
11,2,,24550-025150,,"BUSH 25X15",2,,,,,,,,,,,,,,,,,
12,1,,172162-46690,,SPRING,1,,,,,,,,,,,,,,,,,
13,1,,172455-46890,,"SPRING,GAS",1,,,,,,,,,,,,,,,,,
14,1,,172455-46950,,"BRACKET, SWITCH",1,,,,,,,,,,,,,,,,,
15,1,,172165-47550,,BUSH,1,,,,,,,,,,,,,,,,,
16,1,,172478-47600,,"GUIDE L,LOCK(GRAY:72",1,,,,,,,,,,,,,,,,,
17,1,,172478-47620,,"LEVER L,LOCK(GRAY:72",1,,,,,,,,,,,,,,,,,
18,1,,172458-47640-4,,"ROD,SPRING (GRAY:72)",1,,,,,,,,,,,,,,,,,
19,1,,172165-47980,,"SHIM 42X25.5X0.5",2,,,,,,,,,,,,,,,,,
20,1,,172165-47990,,"WASHER 25.5X42",1,,,,,,,,,,,,,,,,,
21,1,,22137-080000,,"WASHER 8, POLISHED",2,,,,,,,,,,,,,,,,,
22,1,,22137-080000,,"WASHER 8, POLISHED",2,,,,,,,,,,,,,,,,,
23,1,,22137-080000,,"WASHER 8, POLISHED",2,,,,,,,,,,,,,,,,,
24,1,,22242-000250,,"CIRCLIP 25S",1,,,,,,,,,,,,,,,,,
25,1,,22272-000070,,"CIRCLIP E- 7",1,,,,,,,,,,,,,,,,,
26,1,,22351-035040,,"SPRING PIN 3.5X40",1,,,,,,,,,,,,,,,,,
27,1,,22351-060040,,"SPRING PIN 6X40",1,,,,,,,,,,,,,,,,,
28,1,,22417-200200,,"COTTER PIN 2.0X20",2,,,,,,,,,,,,,,,,,
29,1,,24311-000340,,"O-RING 1A P-34.0",2,,,,,,,,,,,,,,,,,
30,1,,24761-050000,,"NIPPLE C,GREASE",2,,,,,,,,,,,,,,,,,
31,1,,26013-080162,,"BOLT W/WASHER M8X16",2,,,,,,,,,,,,,,,,,
32,1,,26013-080162,,"BOLT W/WASHER M8X16",2,,,,,,,,,,,,,,,,,
33,1,,26013-080202,,"BOLT W/WASHER M8X20",2,,,,,,,,,,,,,,,,,
34,1,,26013-080202,,"BOLT W/WASHER M8X20",6,,,,,,,,,,,,,,,,,
35,1,,26013-100202,,"BOLT W/WASHER M10X20",6,,,,,,,,,,,,,,,,,
36,1,,26013-100202,,"BOLT W/WASHER M10X20",2,,,,,,,,,,,,,,,,,
```

https://truckmanualshub.com/

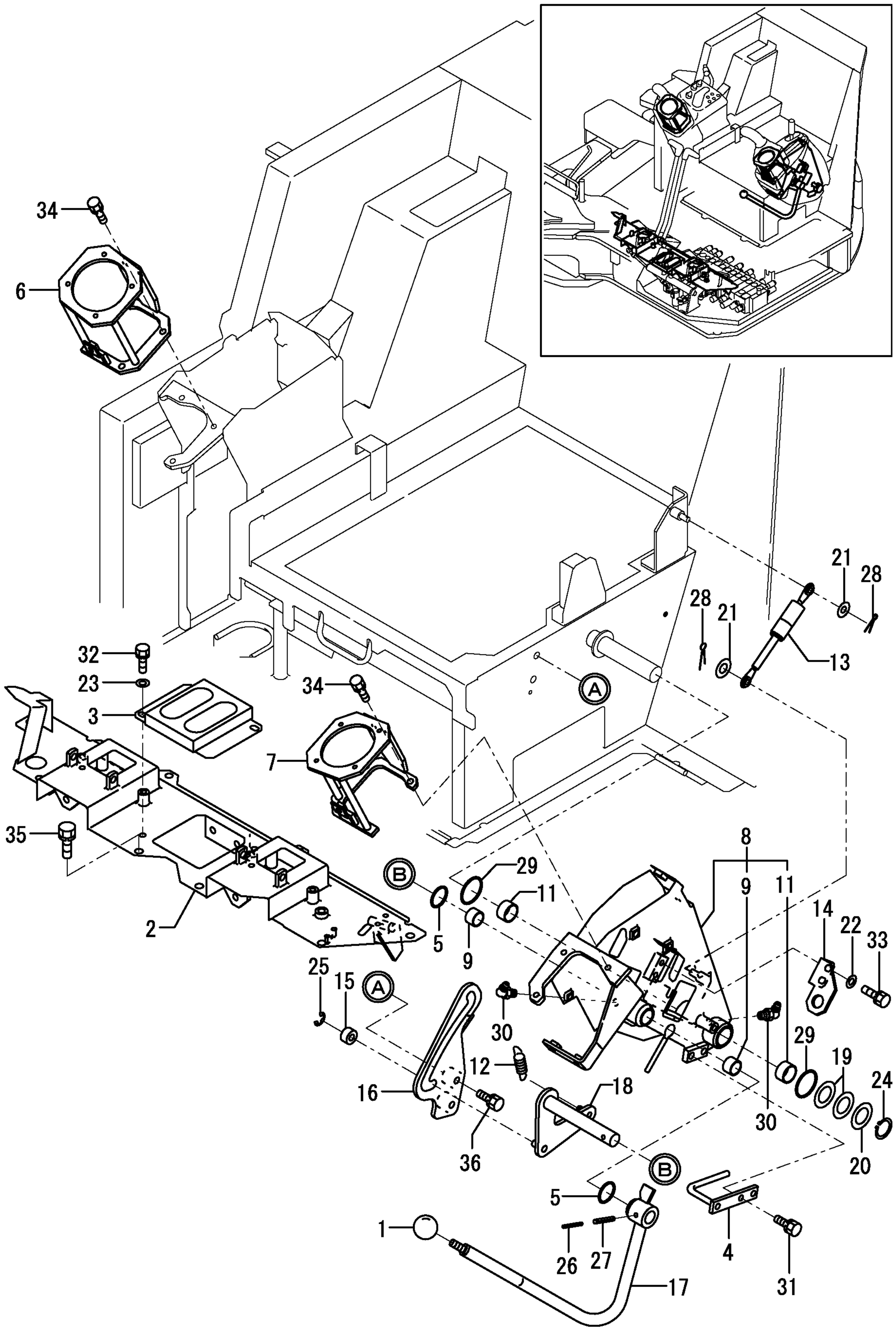

https://truckmanualshub.com/

```
1,1,,172141-41340,,BOOTS,2,,,,,,,,,,,,,,,,,,
2,1,,172455-45101,,"LEVER L ASSY, TRACK",1,,,,,,,,,,,,,,,,,,
3,2,,172141-41370,,"BUSH 2015",2,,,,,,,,,,,,,,,,,,
5,1,,172455-45131,,"LEVER R ASSY, TRACK",1,,,,,,,,,,,,,,,,,,
6,2,,172141-41370,,"BUSH 2015",2,,,,,,,,,,,,,,,,,,
8,1,,172187-45870,,"GRIP L, DRIVE",1,,,,,,,,,,,,,,,,,,
9,1,,172187-45880,,"GRIP R, DRIVE",1,,,,,,,,,,,,,,,,,,
10,1,,172124-46200,,"O-RING 27X5.7",3,,,,,,,,,,,,,,,,,,
11,1,,22117-040000,,"WASHER  4",2,,,,,,,,,,,,,,,,,,
12,1,,24761-020000,,"NIPPLE PT1/8,GREASE",2,,,,,,,,,,,,,,,,,,
13,1,,26116-100504,,"BOLT M10X 50 PLATED",4,,,,,,,,,,,,,,,,,,
14,1,,26587-040122,,"SCREW M 4X 12",2,,,,,,,,,,,,,,,,,,
15,1,,26716-100002,,"NUT 10",4,,,,,,,,,,,,,,,,,,
16,1,,172455-45151,,"SHAFT ASSY, TRACK",1,,,,,,,,,,,,,,,,,,
17,1,,26013-100252,,"BOLT W/WASHER M10X25",2,,,,,,,,,,,,,,,,,,
18,1,,172187-45220-1,,"PEDALL CMP (GRAY:72)",1,,,,,,,,,,,,,,,,,,
19,1,,172187-45250,,"PEDAL PAD L",1,,,,,,,,,,,,,,,,,,
20,1,,172187-45260-1,,"PEDAL R CMP(GRAY:72)",1,,,,,,,,,,,,,,,,,,
21,1,,172187-45280,,"PEDAL PAD R",1,,,,,,,,,,,,,,,,,,
22,1,,26013-060302,,"BOLT M 6X 30",4,,,,,,,,,,,,,,,,,,
23,1,,172162-46210,,"ROD 98.5",2,,,,,,,,,,,,,,,,,,
24,1,,172122-46590,,"ELBALL 8",2,,,,,,,,,,,,,,,,,,
25,1,,22137-080000,,"WASHER 8, POLISHED",2,,,,,,,,,,,,,,,,,,
26,1,,22417-160160,,"COTTER PIN 1.6X16",2,,,,,,,,,,,,,,,,,,
27,1,,26051-080002,,"NUT M 8",4,,,,,,,,,,,,,,,,,,
28,1,,933110-54100,,"PIN 4.75X14",2,,,,,,,,,,,,,,,,,,
```

https://truckmanualshub.com/

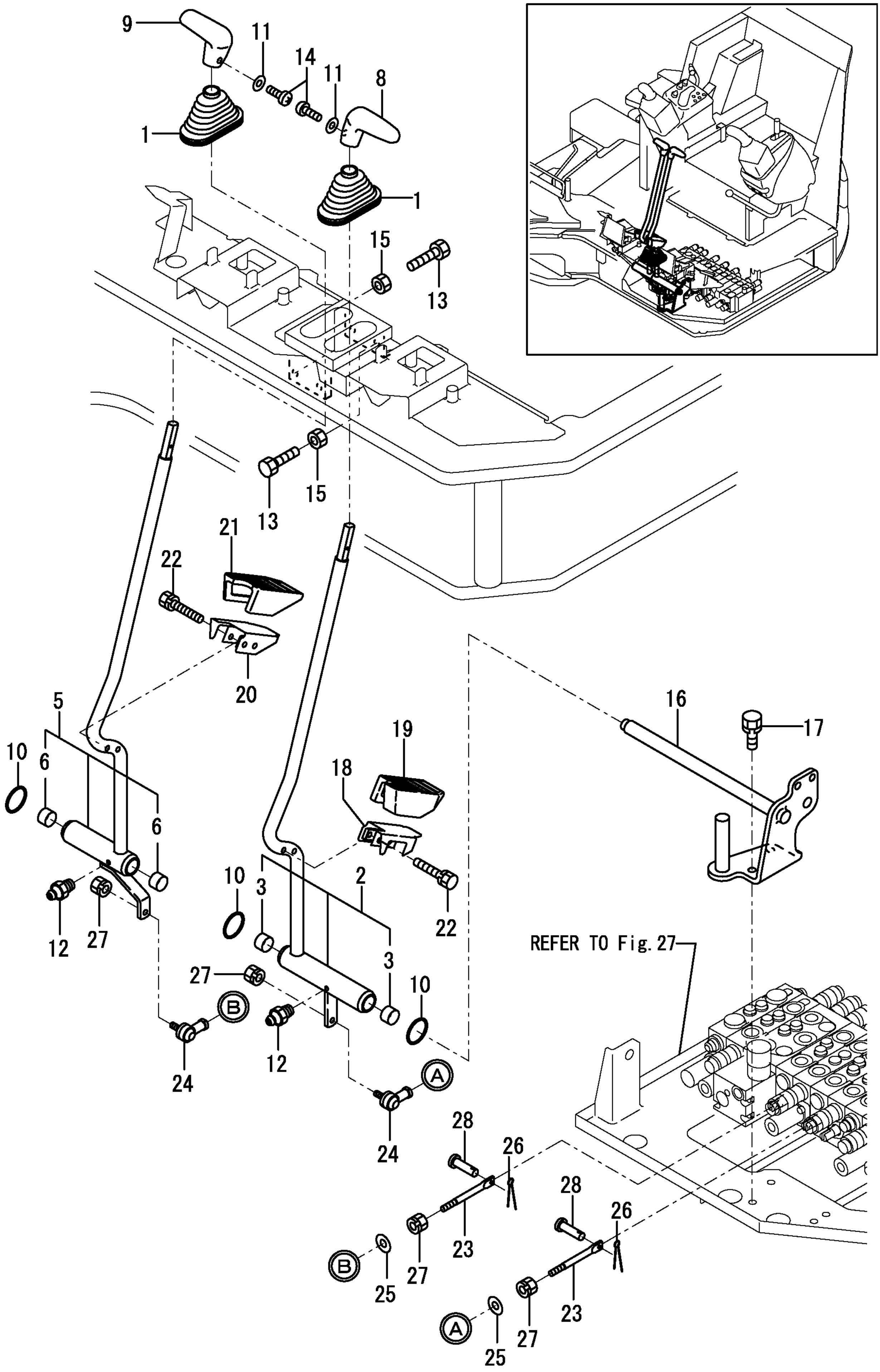

https://truckmanualshub.com/

```
1,1,,172964-12140,,GRIP(BLACK,1,,,,,,,,,,,,,,,,,
2,1,,172478-45100,,"LEVER,BLADE(GRAY:72)",1,,,,,,,,,,,,,,,,,
3,1,,26116-100354,,"BOLT M10X 35 PLATED",2,,,,,,,,,,,,,,,,,
4,1,,26716-100002,,"NUT 10",2,,,,,,,,,,,,,,,,,
5,1,,1A1040-43900,,"SPRING WASHER",1,,,,,,,,,,,,,,,,,
6,1,,22217-080000,,"SPRING WASHER  8",1,,,,,,,,,,,,,,,,,
7,1,,24311-000210,,"O-RING 1A P-21.0",2,,,,,,,,,,,,,,,,,
8,1,,26116-080202,,"BOLT M 8X 20 PLATED",1,,,,,,,,,,,,,,,,,
9,1,,172455-45800,,"CABLE, BLADE",1,,,,,,,,,,,,,,,,,
10,1,,22417-160160,,"COTTER PIN 1.6X16",1,,,,,,,,,,,,,,,,,
11,1,,26051-080002,,"NUT M 8",1,,,,,,,,,,,,,,,,,
12,1,,933110-54100,,"PIN 4.75X14",1,,,,,,,,,,,,,,,,,
```

https://truckmanualshub.com/

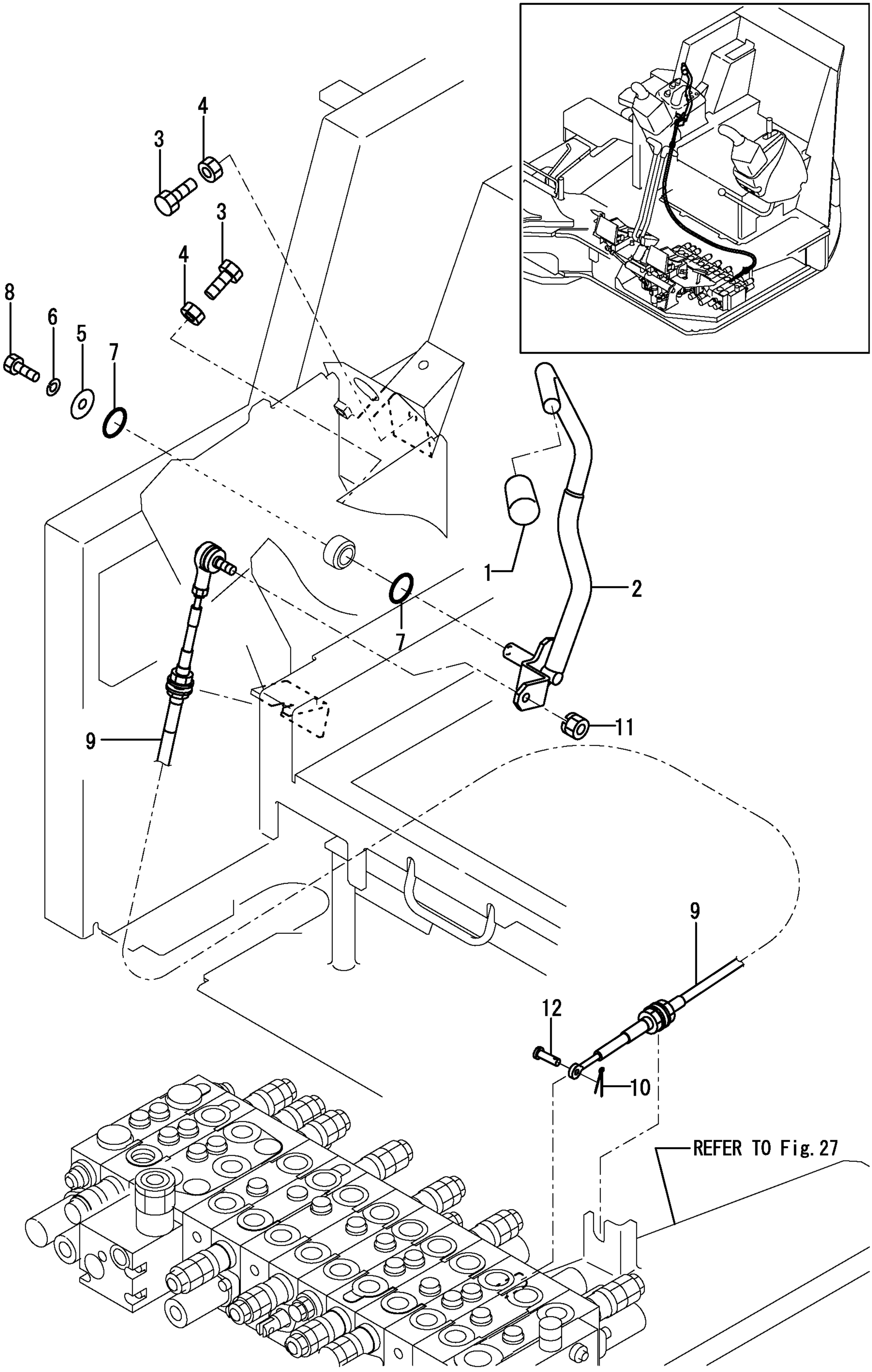

```
1,1,,172455-45170,,"LINK ASSY, SWING",1,,,,,,,,,,,,,,,,,
2,2,,172141-41370,,"BUSH 2015",2,,,,,,,,,,,,,,,,,
4,1,,172445-45550,,"LINK,PEDAL",1,,,,,,,,,,,,,,,,,
5,2,,172141-41360,,"BUSH 1415",2,,,,,,,,,,,,,,,,,
7,1,,172444-45850,,SHAFT,1,,,,,,,,,,,,,,,,,
8,1,,1A1040-45890,,"WASHER 10 36 4.5",1,,,,,,,,,,,,,,,,,
9,1,,172124-46200,,"O-RING 27X5.7",2,,,,,,,,,,,,,,,,,
10,1,,22217-100000,,"SPRING WASHER 10",1,,,,,,,,,,,,,,,,,
11,1,,24311-000210,,"O-RING 1A P-21.0",2,,,,,,,,,,,,,,,,,
12,1,,24761-040000,,"NIPPLE B,GREASE",1,,,,,,,,,,,,,,,,,
13,1,,24761-050000,,"NIPPLE C,GREASE",1,,,,,,,,,,,,,,,,,
14,1,,26013-080162,,"BOLT W/WASHER M8X16",2,,,,,,,,,,,,,,,,,
15,1,,26116-080254,,"BOLT M 8X 25 PLATED",2,,,,,,,,,,,,,,,,,
16,1,,26116-100202,,"BOLT M10X 20 PLATED",1,,,,,,,,,,,,,,,,,
17,1,,26716-080002,,"NUT M 8",2,,,,,,,,,,,,,,,,,
18,1,,172187-45500-4,,"PEDAL,SWING(GRAY:72)",1,,,,,,,,,,,,,,,,,
19,1,,172187-45651,,"SHAFT, PEDAL COVER",1,,,,,,,,,,,,,,,,,
20,1,,172187-45720-4,,"COVER,PEDAL(GRAY:72)",1,,,,,,,,,,,,,,,,,
21,1,,172187-45760,,"COVER PAD",1,,,,,,,,,,,,,,,,,
22,1,,172157-45990,,"BOOTS, PEDAL",1,,,,,,,,,,,,,,,,,
23,1,,172165-46340,,BOLT,2,,,,,,,,,,,,,,,,,
24,1,,22137-100000,,"WASHER 10,POLISHED",1,,,,,,,,,,,,,,,,,
25,1,,22417-250200,,"COTTER PIN 2.5X20",1,,,,,,,,,,,,,,,,,
26,1,,194200-37780,,"LS-NUT 8",1,,,,,,,,,,,,,,,,,
27,1,,172734-41300,,"LINK BALL 8L",1,,,,,,,,,,,,,,,,,
28,1,,172142-43540,,"ROD 140",1,,,,,,,,,,,,,,,,,
29,1,,172455-45550,,"ROD 250 M8LR",1,,,,,,,,,,,,,,,,,
30,1,,172122-46590,,"ELBALL 8",2,,,,,,,,,,,,,,,,,
31,1,,22137-080000,,"WASHER 8, POLISHED",3,,,,,,,,,,,,,,,,,
32,1,,22217-080000,,"SPRING WASHER  8",1,,,,,,,,,,,,,,,,,
33,1,,22417-160160,,"COTTER PIN 1.6X16",1,,,,,,,,,,,,,,,,,
34,1,,26051-080002,,"NUT M 8",5,,,,,,,,,,,,,,,,,
35,1,,933110-54100,,"PIN 4.75X14",1,,,,,,,,,,,,,,,,,
```

https://truckmanualshub.com/

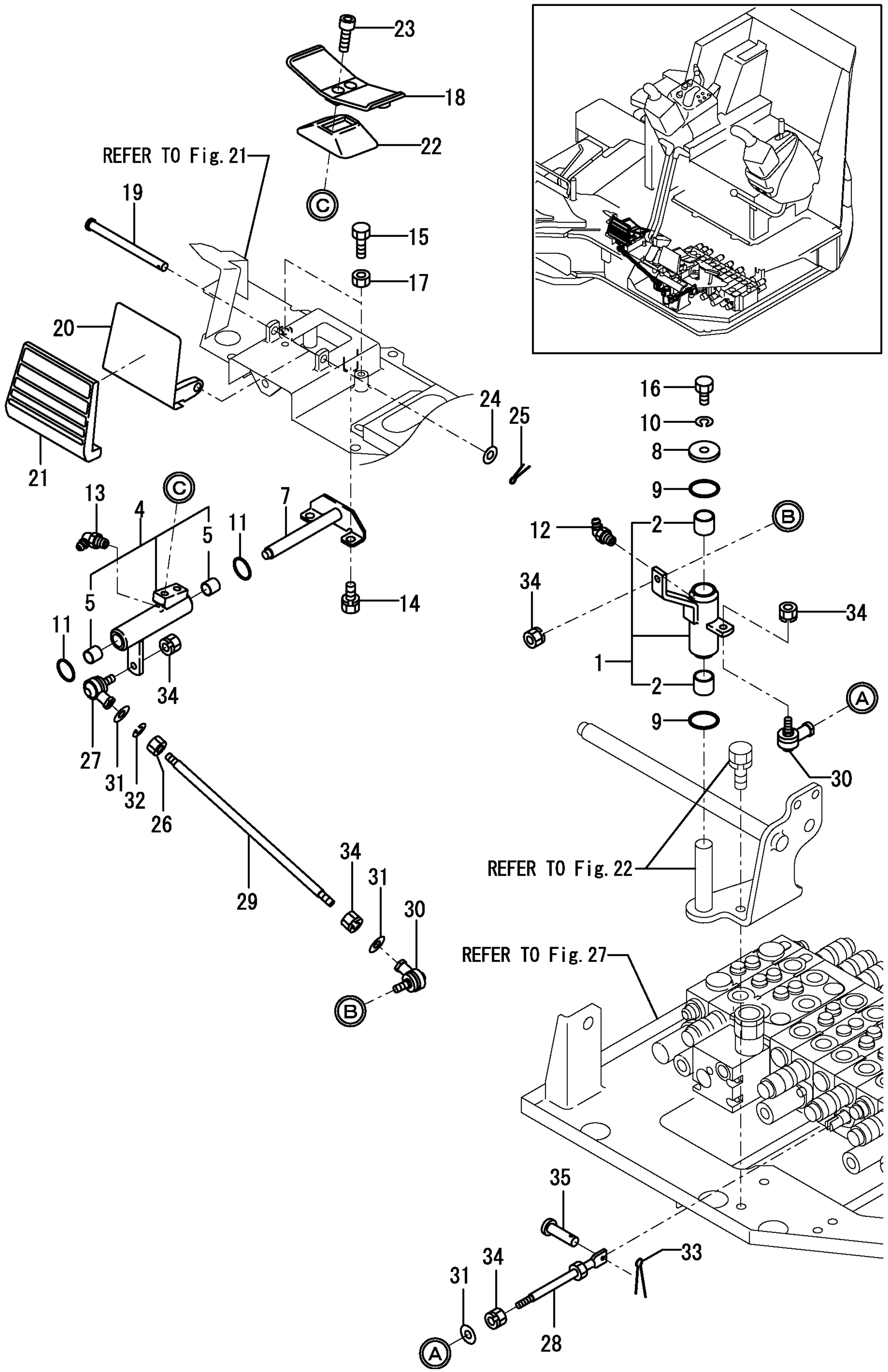

https://truckmanualshub.com/

```
1,1,,172162-12480,,"SPRING,RETURN",1,,,,,,,,,,,,,,,,,
2,1,,1A1040-43900,,"SPRING WASHER",1,,,,,,,,,,,,,,,,,
3,1,,172487-45900,,"PEDAL,LO-HI(GRAY:72)",1,,,,,,,,,,,,,,,,,,
4,1,,172458-45920,,"BRACKET,PEDAL(GRAY72",1,,,,,,,,,,,,,,,,,,
5,2,,172141-41360,,"BUSH 1415",2,,,,,,,,,,,,,,,,,
7,1,,172458-45950,,"PAD,PEDAL",1,,,,,,,,,,,,,,,,,
8,1,,24311-000210,,"O-RING 1A P-21.0",2,,,,,,,,,,,,,,,,,
9,1,,26013-080162,,"BOLT W/WASHER M8X16",2,,,,,,,,,,,,,,,,,
10,1,,26013-080202,,"BOLT W/WASHER M8X20",1,,,,,,,,,,,,,,,,,,
```

https://truckmanualshub.com/

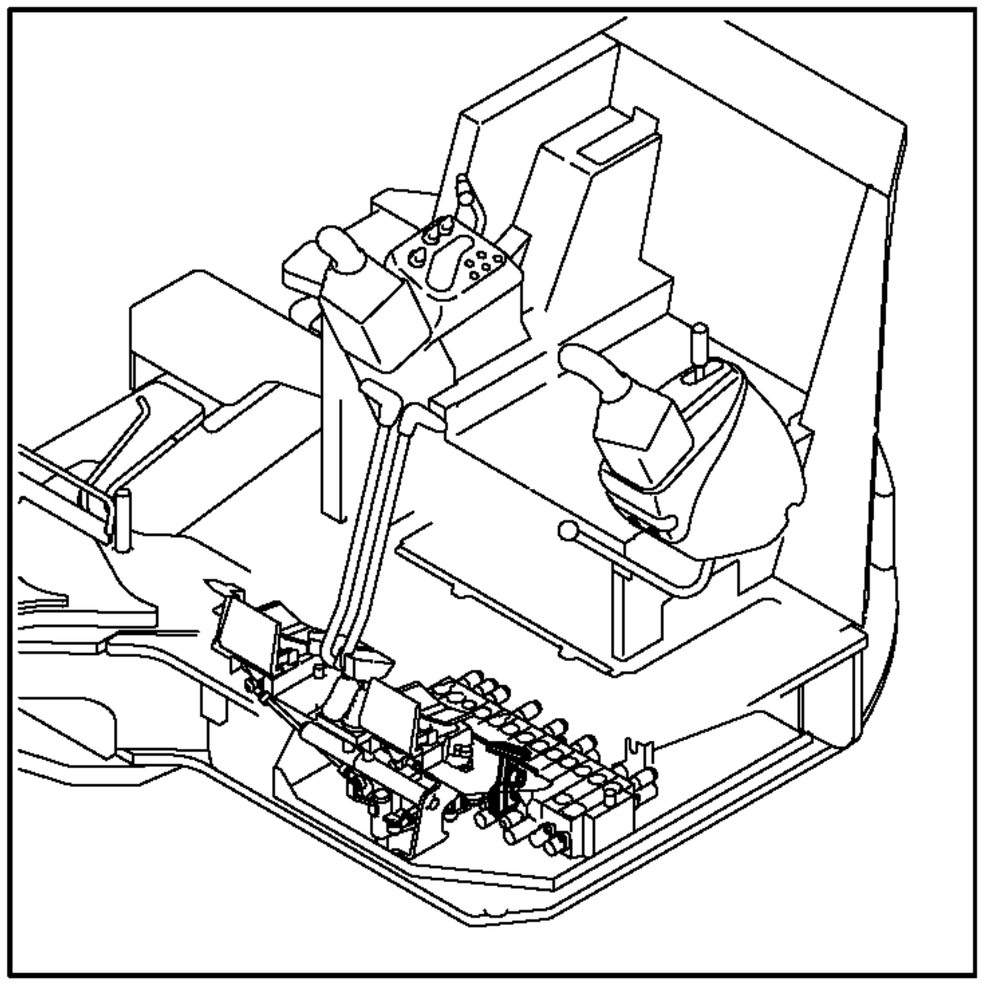

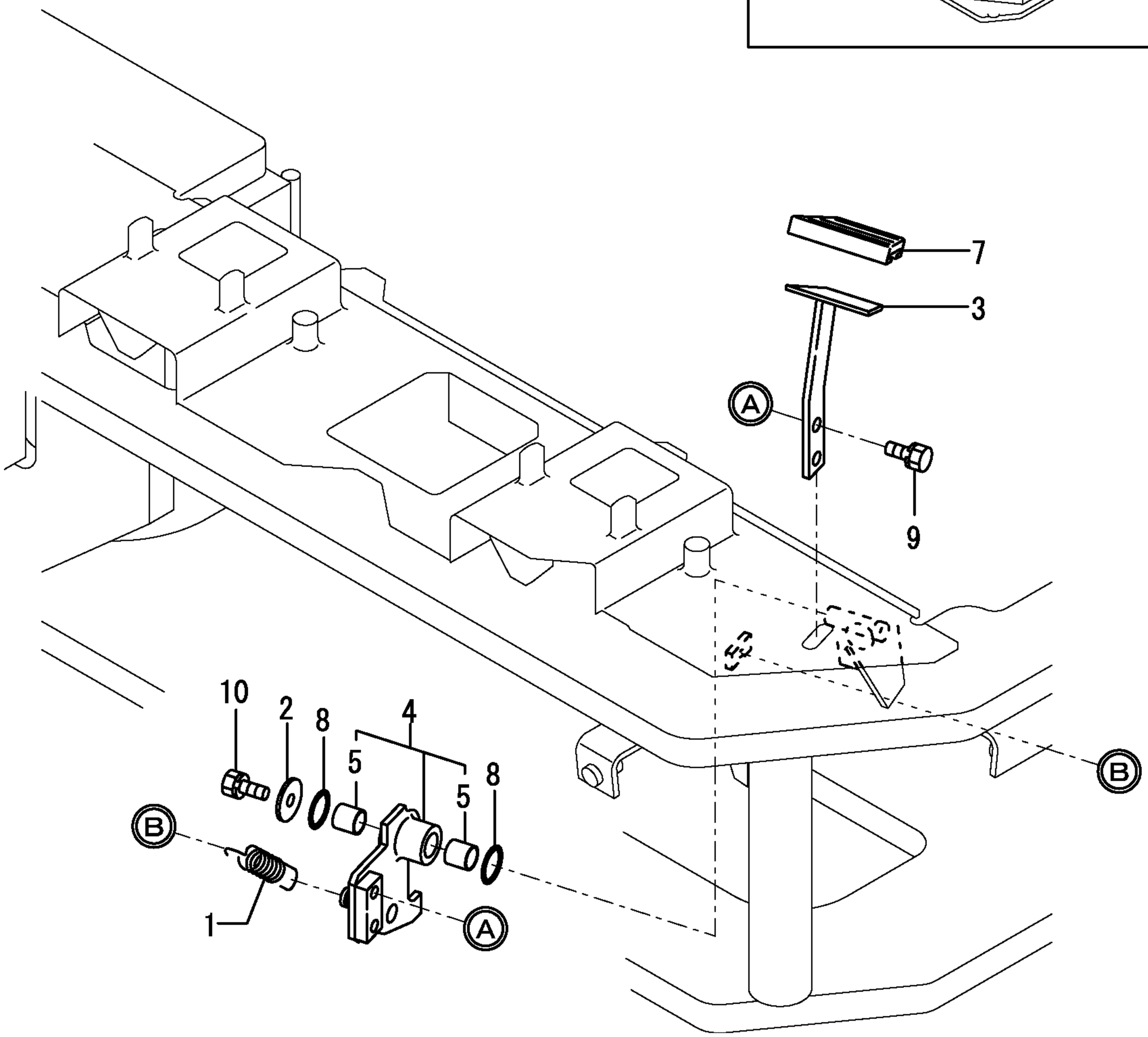

https://truckmanualshub.com/

```
1,1,,172068-28490,,"SPRING  8",2,,,,,,,,,,,,,,,,,
2,1,,194200-37780,,"LS-NUT 8",1,,,,,,,,,,,,,,,,,
3,1,,172734-41300,,"LINK BALL 8L",1,,,,,,,,,,,,,,,,,
4,1,,172732-42450,,ROD,1,,,,,,,,,,,,,,,,,
5,1,,172187-45500-4,,"PEDAL,SWING(GRAY:72)",1,,,,,,,,,,,,,,,,,
6,1,,172445-45550,,"LINK,PEDAL",1,,,,,,,,,,,,,,,,,
7,2,,172141-41360,,"BUSH 1415",2,,,,,,,,,,,,,,,,,
9,1,,172187-45651,,"SHAFT, PEDAL COVER",1,,,,,,,,,,,,,,,,,
10,1,,172187-45720-4,,"COVER,PEDAL(GRAY:72)",1,,,,,,,,,,,,,,,,,,
11,1,,172187-45760,,"COVER PAD",1,,,,,,,,,,,,,,,,,
12,1,,172448-45800,,"PLATE,LOCK(PTO  (11)",1,,,,,,,,,,,,,,,,,
13,1,,172444-45850,,SHAFT,1,,,,,,,,,,,,,,,,,
14,1,,1A1040-45890,,"WASHER 10 36 4.5",1,,,,,,,,,,,,,,,,,
15,1,,172157-45990,,"BOOTS, PEDAL",1,,,,,,,,,,,,,,,,,
16,1,,172478-46100,,"LINK ASSY,P.T.O.",1,,,,,,,,,,,,,,,,,
17,2,,172141-41370,,"BUSH 2015",2,,,,,,,,,,,,,,,,,
19,1,,172478-46150,,"SHAFT,P.T.O.",1,,,,,,,,,,,,,,,,,
20,1,,172124-46200,,"O-RING 27X5.7",2,,,,,,,,,,,,,,,,,
21,1,,172462-46230,,"BOLT 8X10",1,,,,,,,,,,,,,,,,,
22,1,,172165-46340,,BOLT,2,,,,,,,,,,,,,,,,,
23,1,,172151-46360,,"ROD, SPOOL",1,,,,,,,,,,,,,,,,,
24,1,,172122-46590,,"ELBALL 8",2,,,,,,,,,,,,,,,,,
25,1,,22137-080000,,"WASHER 8, POLISHED",3,,,,,,,,,,,,,,,,,
26,1,,22137-080000,,"WASHER 8, POLISHED",1,,,,,,,,,,,,,,,,,
27,1,,22137-100000,,"WASHER 10,POLISHED",1,,,,,,,,,,,,,,,,,
28,1,,22217-080000,,"SPRING WASHER  8",1,,,,,,,,,,,,,,,,,
29,1,,22417-160160,,"COTTER PIN 1.6X16",1,,,,,,,,,,,,,,,,,
30,1,,22417-250200,,"COTTER PIN 2.5X20",1,,,,,,,,,,,,,,,,,
31,1,,24311-000210,,"O-RING 1A P-21.0",2,,,,,,,,,,,,,,,,,
32,1,,24761-050000,,"NIPPLE C,GREASE",2,,,,,,,,,,,,,,,,,
33,1,,26013-080162,,"BOLT W/WASHER M8X16",2,,,,,,,,,,,,,,,,,
34,1,,26013-100202,,"BOLT W/WASHER M10X20",2,,,,,,,,,,,,,,,,,
35,1,,26013-100202,,"BOLT W/WASHER M10X20",1,,,,,,,,,,,,,,,,,
36,1,,26051-080002,,"NUT M 8",5,,,,,,,,,,,,,,,,,
37,1,,26116-080254,,"BOLT M 8X 25 PLATED",2,,,,,,,,,,,,,,,,,
38,1,,26347-080002,,"U-NUT,  8",1,,,,,,,,,,,,,,,,,
39,1,,26716-080002,,"NUT M 8",2,,,,,,,,,,,,,,,,,
40,1,,26716-100002,,"NUT 10",1,,,,,,,,,,,,,,,,,
41,1,,933110-54100,,"PIN 4.75X14",1,,,,,,,,,,,,,,,,,
```

https://truckmanualshub.com/

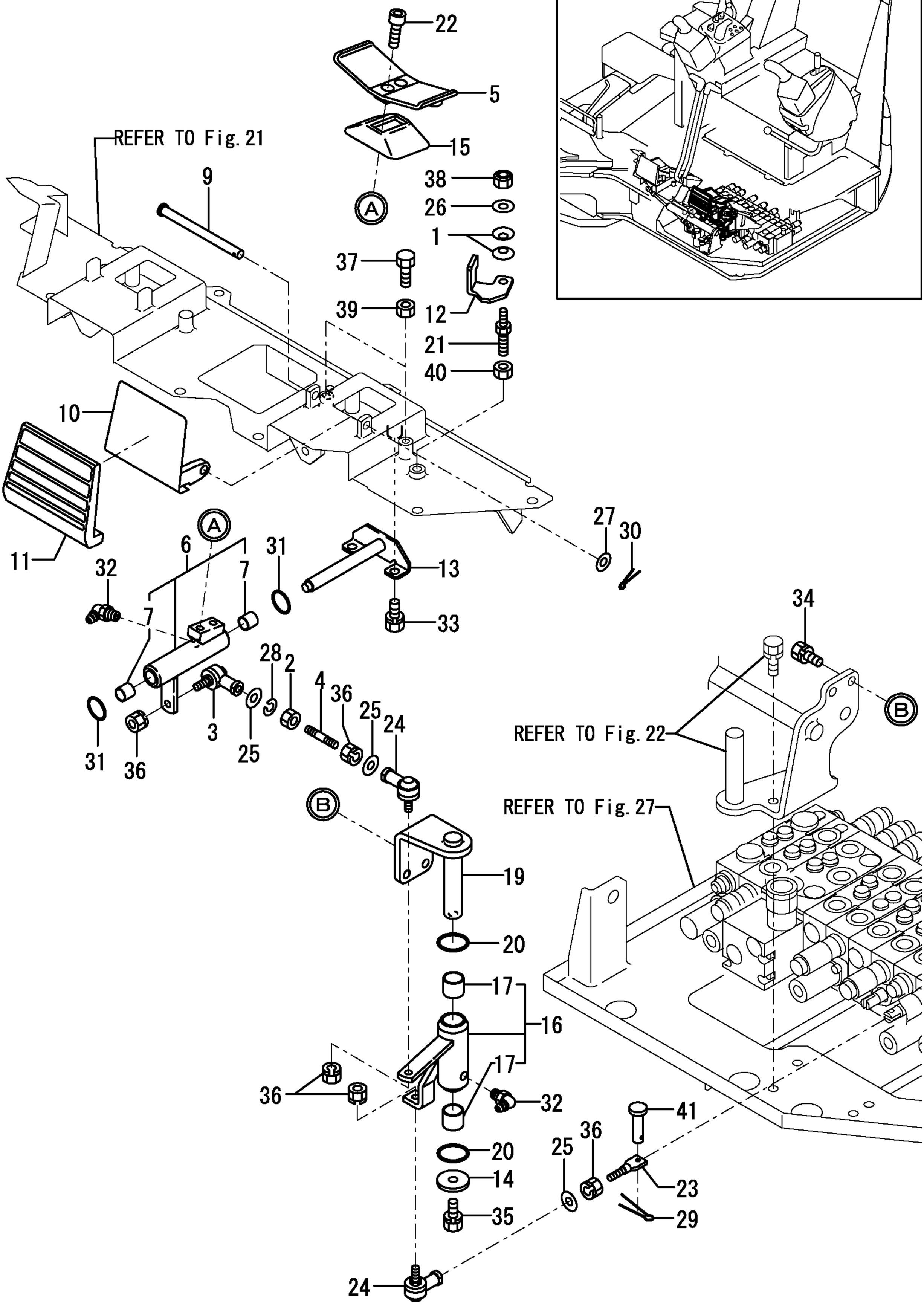

https://truckmanualshub.com/

```
1,1,,172187-45060,,"CUSHION L ASSY",2,,,,,,,,,,,,,,,,,,
2,1,,172187-45490,,CUSSHION,3,,,,,,,,,,,,,,,,,,
3,1,,172478-45600,,"PLATE,VALVE",1,,,,,,,,,,,,,,,,,,
4,1,,22242-000350,,"CIRCLIP   35",5,,,,,,,,,,,,,,,,,,
5,1,,26106-100352,,"BOLT M10X 35 PLATED",3,,,,,,,,,,,,,,,,,,
6,1,,26106-100552,,"BOLT M10X 55 PLATED",2,,,,,,,,,,,,,,,,,,
```

https://truckmanualshub.com/

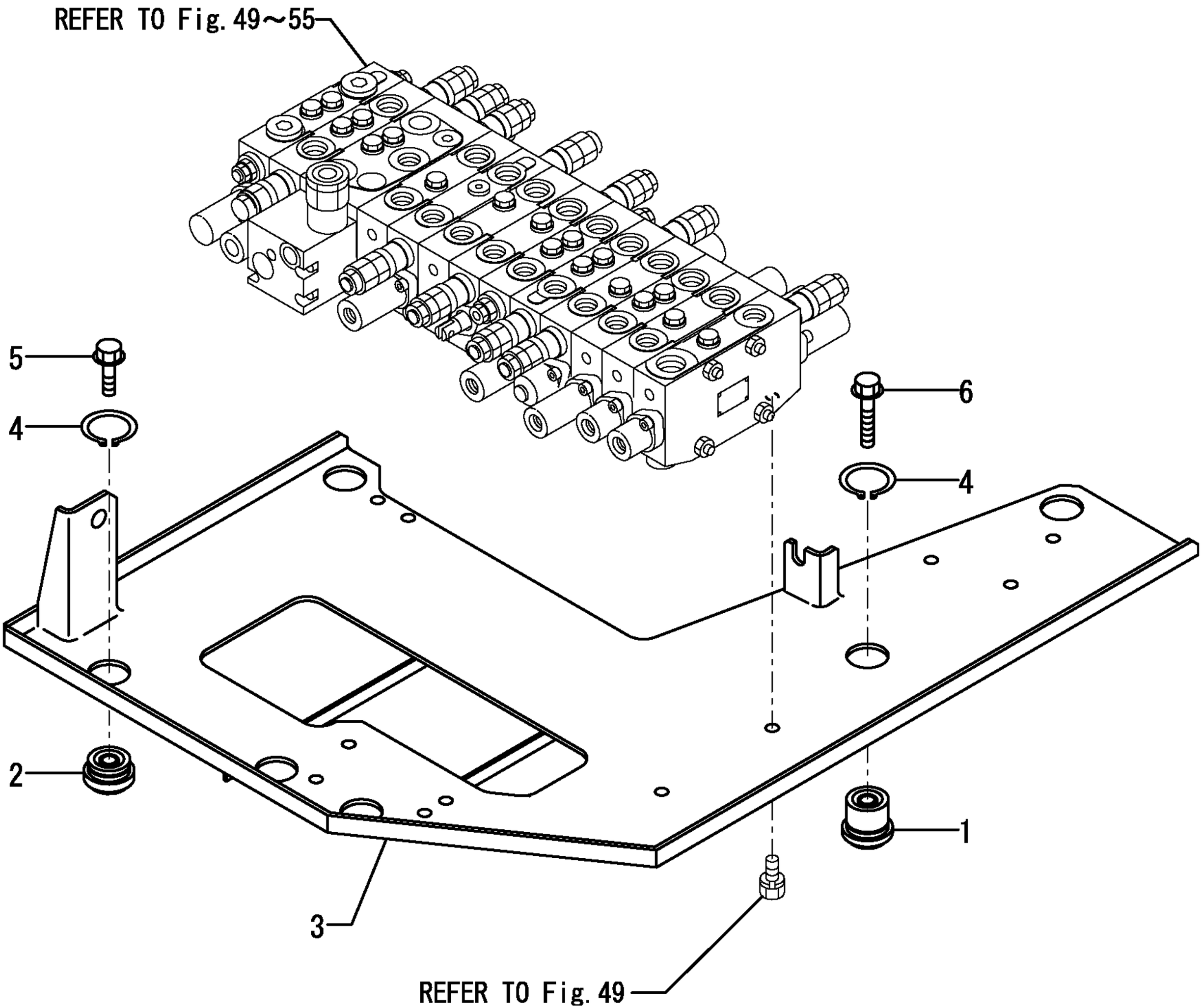

https://truckmanualshub.com/

```
1,1,,172455-50102-1,,"FRAME,LOWER(GREEN:82",1,,,,,,,,,,,,,,,,,,
1-1,1,,172455-50103-1,,"FRAME
ASSY,LOWER(82)",1,,,,,,S,,24780156,*2003.07,,,,,,,,,,I
2,1,,172141-50890,,GROMMET,2,,,,,,,,,,,,,,,,,,
2-1,1,,172458-
50480,,"COVER,FRAME(GREEN:88",2,,,,,,S,,24780156,*2003.07,,,,,,,,,,I
3,1,,172187-50801-1,,"PLATE L, GUARD  (82)",2,,,,,,,,,,,,,,,,,,
4,1,,172187-50811-1,,"PLATE R, GUARD  (82)",2,,,,,,,,,,,,,,,,,,
5,1,,22137-160000,,"WASHER 16,POLISHED",12,,,,,,,,,,,,,,,,,,
6,1,,22217-160000,,"SPRING WASHER 16",12,,,,,,,,,,,,,,,,,,
7,1,,26116-160402,,"BOLT M16X 40 PLATED",12,,,,,,,,,,,,,,,,,,
8,1,,172455-53301-1,,"WEIGHT,COUNTER  (82)",1,,,,,,,,,,,,,,,,,,
9,1,,172455-53310-1,,"WEIGHT SIDE L   (82)",1,,,,,,,,,,,,,,,,,,
10,1,,172187-53320,,"WASHER 24.5X65X8",3,,,,,,,,,,,,,,,,,,
11,1,,172455-53330,,"BOLT 24X140",3,,,,,,,,,,,,,,,,,,
12,1,,172165-53480,,"BOLT M16X 60",2,,,,,,,,,,,,,,,,,,
13,1,,172165-53500,,WASHER,2,,,,,,,,,,,,,,,,,,
14,1,,22217-160000,,"SPRING WASHER 16",2,,,,,,,,,,,,,,,,,,
15,1,,172455-54100-1,,"TURNING FRAME   (82)",1,,,,,,,,,,,,,,,,,,
16,1,,172187-57600,,"TURNING BEARING",1,,,,,,,,,,,,,,,,,,
18,2,,172187-57630,,"SEAL, UPPER",1,,,,,,,,,,,,,,,,,,
19,2,,172187-57640,,"SEAL, LOWER",1,,,,,,,,,,,,,,,,,,
20,1,,172455-57650,,"BOLT 16X90",30,,,,,,,,,,,,,,,,,,
21,1,,172162-57660,,"PIN 16X40,STRAIGHT",2,,,,,,,,,,,,,,,,,,
22,1,,172162-57660,,"PIN 16X40,STRAIGHT",2,,,,,,,,,,,,,,,,,,
23,1,,172455-57661,,"BOLT 16X80",28,,,,,,,,,,,,,,,,,,
24,1,,26106-100122,,"BOLT M10X 12
PLATED",4,,,,,,W,,24780156,*2003.07,,,,,,,,,,I
```

https://truckmanualshub.com/

P/C NEWS No:Y00S4190-1
PUBLISHED:2003/09

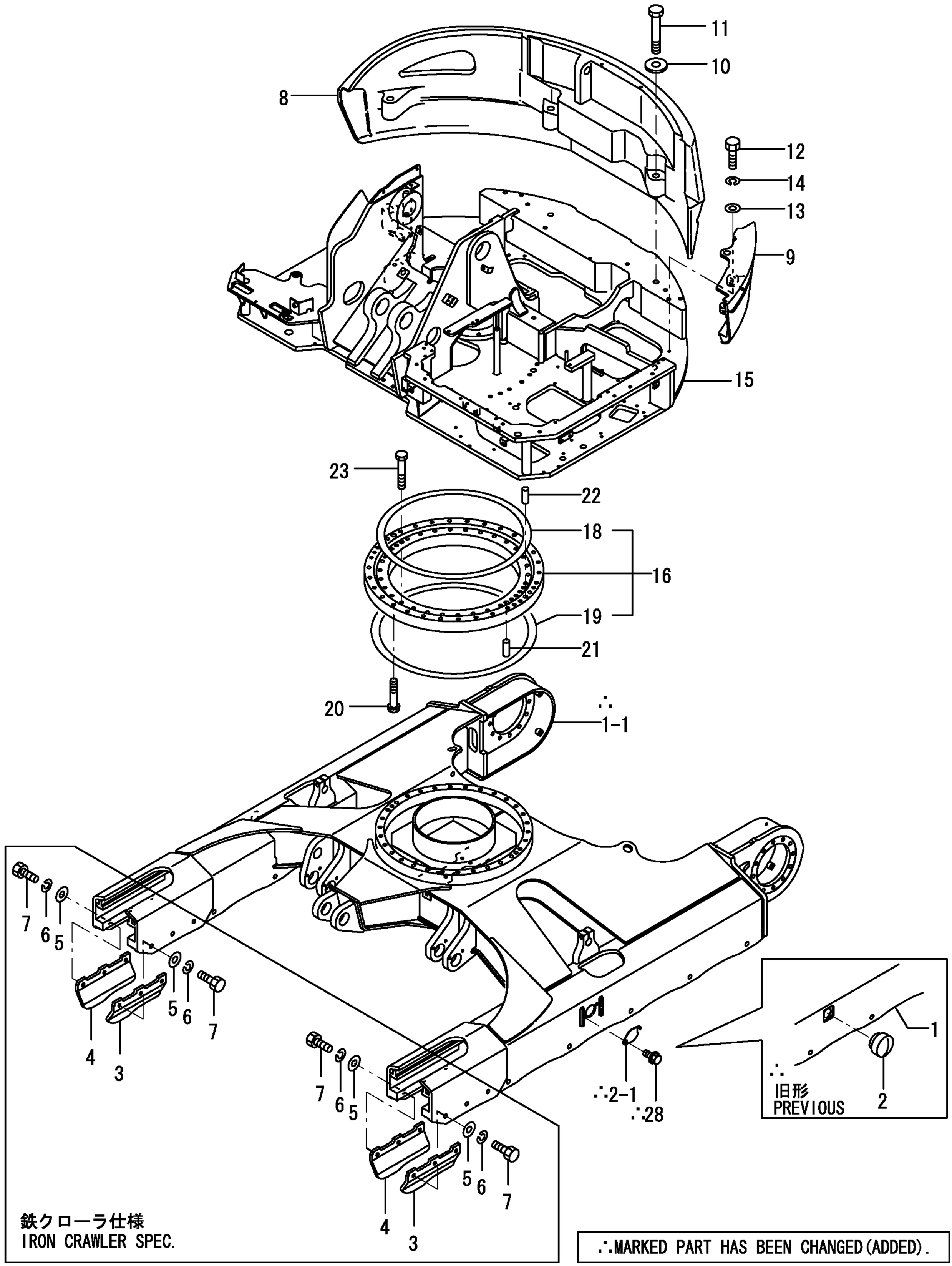

∴MARKED PART HAS BEEN CHANGED(ADDED).

https://truckmanualshub.com/

```
1,1,,172137-46040,,"SEAT, SPRING",2,,,,,,,,,,,,,,,,,
2,1,,172168-46760,,"BOLT M10X20",2,,,,,,,,,,,,,,,,,
3,1,,172455-61100-1,,"COVER, UNDER A  (82)",1,,,,,,,,,,,,,,,,,
4,1,,172478-61111-6,,"COVER B,UNDER   (82)",1,,,,,,,,,,,,,,,,,
5,1,,172455-61120-1,,"COVER, UNDER C  (82)",1,,,,,,,,,,,,,,,,,
6,1,,172455-61130-1,,"COVER, UNDER D  (82)",1,,,,,,,,,,,,,,,,,
7,1,,172455-61180-1,,"PLATE     (GREEN:82)",1,,,,,,,,,,,,,,,,,
8,1,,172478-61351-1,,"COVER , FRAME L (86)",1,,,,,,,,,,,,,,,,,
11,2,,172478-68910,,"SEAL 10X10X650",1,,,,,,,,,,,,,,,,,
12,1,,172455-61370-1,,"COVER, FRAME R  (86)",1,,,,,,,,,,,,,,,,,
13,1,,172455-61390-1,,"COVER, FRAME R  (86)",1,,,,,,,,,,,,,,,,,
14,1,,172488-61400-1,,"COVER,FRAME-F   (86)",1,,,,,,,,,,,,,,,,,
19,2,,172478-68920,,"SEAL 10X10X910",1,,,,,,,,,,,,,,,,,
20,1,,172162-61500,,RUBBER,4,,,,,,,,,,,,,,,,,
21,1,,172187-61500,,"COVER, UNDER",1,,,,,,,,,,,,,,,,,
22,1,,172455-61550-1,,"COVER,OILPAN(GREEN82",1,,,,,,,,,,,,,,,,,
23,1,,172463-61600,,"PLUG 28X3.2",6,,,,,,,,,,,,,,,,,
24,1,,172455-61650-1,,"COVER L, DRIVE  (82)",1,,,,,,,,,,,,,,,,,
25,1,,172455-61660-1,,"COVER R, DRIVE  (82)",1,,,,,,,,,,,,,,,,,
26,1,,22137-100000,,"WASHER 10,POLISHED",16,,,,,,,,,,,,,,,,,
27,1,,22137-100000,,"WASHER 10,POLISHED",8,,,,,,,,,,,,,,,,,
28,1,,22157-100000,,"WASHER 10",2,,,,,,,,,,,,,,,,,
29,1,,22157-120000,,"WASHER 12",4,,,,,,,,,,,,,,,,,
30,1,,26013-100202,,"BOLT W/WASHER M10X20",16,,,,,,,,,,,,,,,,,
31,1,,26013-100202,,"BOLT W/WASHER M10X20",4,,,,,,,,,,,,,,,,,
32,1,,26013-100202,,"BOLT W/WASHER M10X20",10,,,,,,,,,,,,,,,,,
33,1,,26013-120302,,"BOLT W/WASHER M12X30",4,,,,,,,,,,,,,,,,,
34,1,,26106-100162,,"BOLT M10X 16 PLATED",26,,,,,,,,,,,,,,,,,
```

https://truckmanualshub.com/

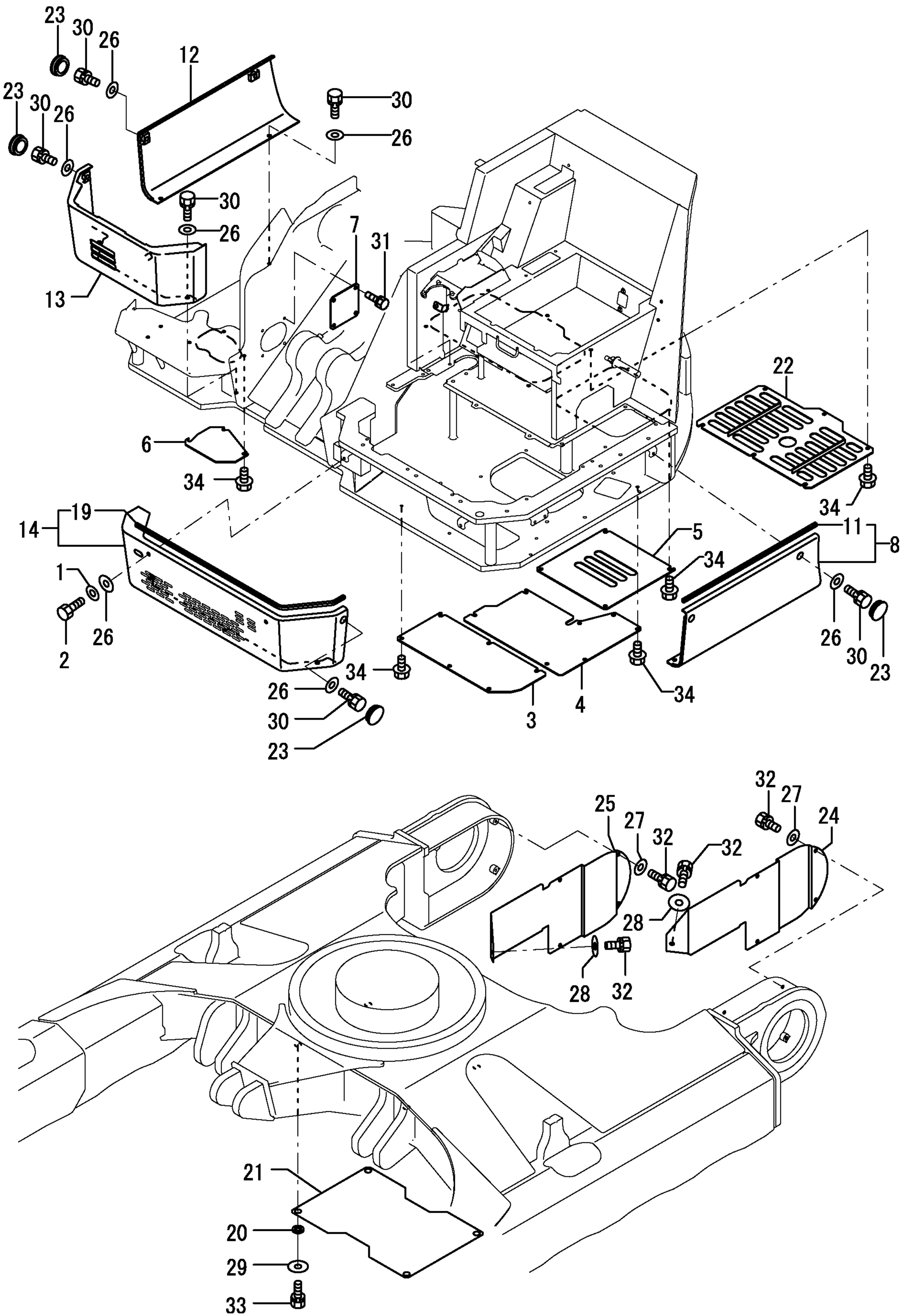

https://truckmanualshub.com/

```
1,1,,172455-61140,,"COVER      (GRAY:72)",1,,,,,,,,,,,,,,,,,,
2,1,,172478-61200,,"COVER,MULTI(BLACK:12",1,,,,,,,,,,,,,,,,,,
4,2,,172183-61350,,"RUBBER,EDGE",1,,,,,,,,,,,,,,,,,,
5,2,,172183-61360,,"RUBBER,EDGE",1,,,,,,,,,,,,,,,,,,
6,1,,172478-61270,,"RUBBER,SPONGE",1,,,,,,,,,,,,,,,,,,
7,1,,172478-61370,,"COVER,SEAT R",1,,,,,,,,,,,,,,,,,,
8,1,,172455-61440-1,,"COVER ASSY(GREEN:82)",1,,,,,,,,,,,,,,,,,,
10,2,,172164-66800,,"RUBBER, SEAL 60",2,,,,,,,,,,,,,,,,,,
11,1,,172455-61520,,"COVER,BLADE(GRAY:72)",1,,,,,,,,,,,,,,,,,,
12,1,,172455-61540-1,,"COVER ASSY, HOSE(82)",1,,,,,,,,,,,,,,,,,,
14,2,,172187-66140,,"RUBBER 580",1,,,,,,,,,,,,,,,,,,
15,1,,172519-63240,,"BOLT  8X 16",3,,,,,,,,,,,,,,,,,,
16,1,,22157-100000,,"WASHER 10",5,,,,,,,,,,,,,,,,,,
17,1,,22217-100000,,"SPRING WASHER 10",1,,,,,,,,,,,,,,,,,,
18,1,,26013-100202,,"BOLT W/WASHER M10X20",2,,,,,,,,,,,,,,,,,,
19,1,,26013-100202,,"BOLT W/WASHER M10X20",2,,,,,,,,,,,,,,,,,,
20,1,,26013-100202,,"BOLT W/WASHER M10X20",2,,,,,,,,,,,,,,,,,,
21,1,,26013-100202,,"BOLT W/WASHER M10X20",3,,,,,,,,,,,,,,,,,,
22,1,,26013-100202,,"BOLT W/WASHER M10X20",2,,,,,,,,,,,,,,,,,,
23,1,,26116-100602,,"BOLT M10X 60 PLATED",1,,,,,,,,,,,,,,,,,,
24,1,,172455-61740-1,,"COVER ASSY, PTO (82)",1,,,,,,,,,,,,,,,,,,
25,2,,172434-61350,,"RUBBER, SEAL 140",1,,,,,,,,,,,,,,,,,,
26,2,,172455-61580,,"RUBBER 30",1,,,,,,,,,,,,,,,,,,
29,2,,172168-65800,,"RUBBER,SEALE E 75",1,,,,,,,,,,,,,,,,,,
30,2,,172171-65850,,"RUBBER,SEAL K",2,,,,,,,,,,,,,,,,,,
31,1,,172455-61790,,"COVER,HOSE-P.T.O.",1,,,,,,,,,,,,,,,,,,
33,2,,172519-66340,,"CUSHION,BONNET",1,,,,,,,,,,,,,,,,,,
34,1,,172455-66250-1,,"PLATE,HOSE(GREEN:82)",1,,,,,,,,,,,,,,,,,,
35,1,,26013-100162,,"BOLT M10X 16",2,,,,,,,,,,,,,,,,,,
36,1,,26013-100202,,"BOLT W/WASHER M10X20",5,,,,,,,,,,,,,,,,,,
37,1,,26013-100202,,"BOLT W/WASHER M10X20",2,,,,,,,,,,,,,,,,,,
```

https://truckmanualshub.com/

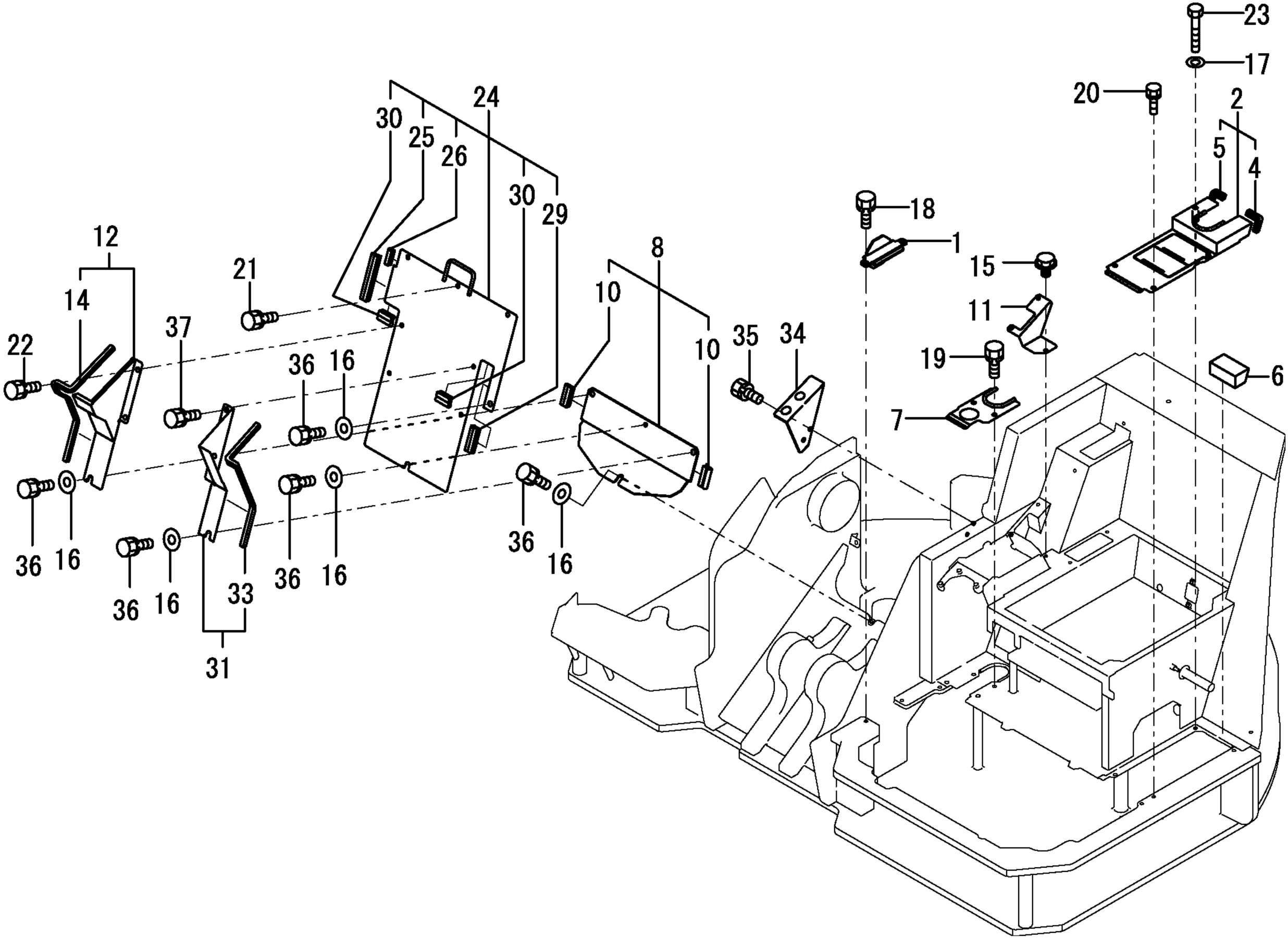

https://truckmanualshub.com/

```
1,1,,172122-17190,,CLIP,2,,,,,,,,,,,,,,,,,
2,1,,172164-45880,,"BOLT  6X 16",2,,,,,,,,,,,,,,,,,
3,1,,172187-61690,,VENTILATOR,1,,,,,,,,,,,,,,,,,
4,1,,172519-63240,,"BOLT  8X 16",2,,,,,,,,,,,,,,,,,
5,1,,172478-63370,,"COVER,SEAT MT (72)",1,,,,,,,,,,,,,,,,,
12,2,,172455-63511,,"TRIM A",1,,,,,,,,,,,,,,,,,
13,2,,172478-63520,,"TRIM B",1,,,,,,,,,,,,,,,,,
14,1,,172455-63440,,"COVER ASSY,SIDE (72)",1,,,,,,,,,,,,,,,,,
17,1,,172478-64900,,"GRILLE ASSY(GRAY:73)",1,,,,,,,,,,,,,,,,,
19,2,,172478-64970,,"TRIM 595",1,,,,,,,,,,,,,,,,,
20,2,,172519-65300,,RUBBER,1,,,,,,,,,,,,,,,,,
21,1,,172165-66980,,"BOLT M 8X 25",3,,,,,,,,,,,,,,,,,
22,1,,22137-100000,,"WASHER 10,POLISHED",3,,,,,,,,,,,,,,,,,
23,1,,26013-100202,,"BOLT W/WASHER M10X20",2,,,,,,,,,,,,,,,,,
24,1,,26013-100702,,"BOLT 10X70 W/SP.WSHR",3,,,,,,,,,,,,,,,,,
```

https://truckmanualshub.com/

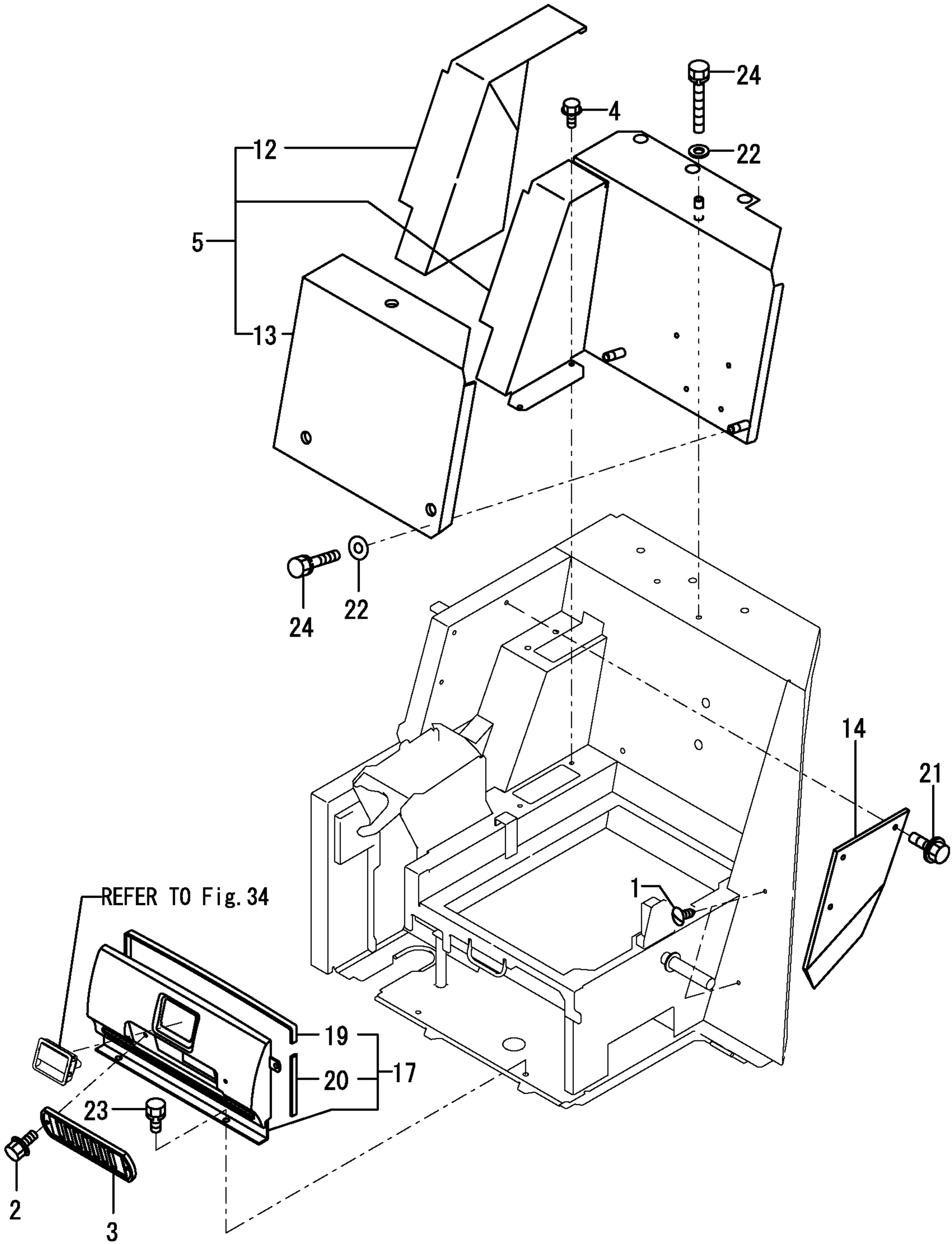

https://truckmanualshub.com/

```
1,1,,1A1380-58050,,"GROMMET 16X20X4.5",8,,,,,,,,,,,,,,,,,
2,1,,172455-79300-1,,"COVER, BOOM A   (87)",1,,,,,,,,,,,,,,,,,,
3,1,,172455-79401-1,,"COVER, BOOM C   (87)",1,,,,,,,,,,,,,,,,,,
4,1,,172455-79450-1,,"COVER, BOOM B   (87)",1,,,,,,,,,,,,,,,,,,
5,1,,22157-080000,,"WASHER  8",8,,,,,,,,,,,,,,,,,
6,1,,26013-080202,,"BOLT W/WASHER M8X20",8,,,,,,,,,,,,,,,,,,
7,1,,26013-100162,,"BOLT M10X 16",3,,,,,,,,,,,,,,,,,,
```

https://truckmanualshub.com/

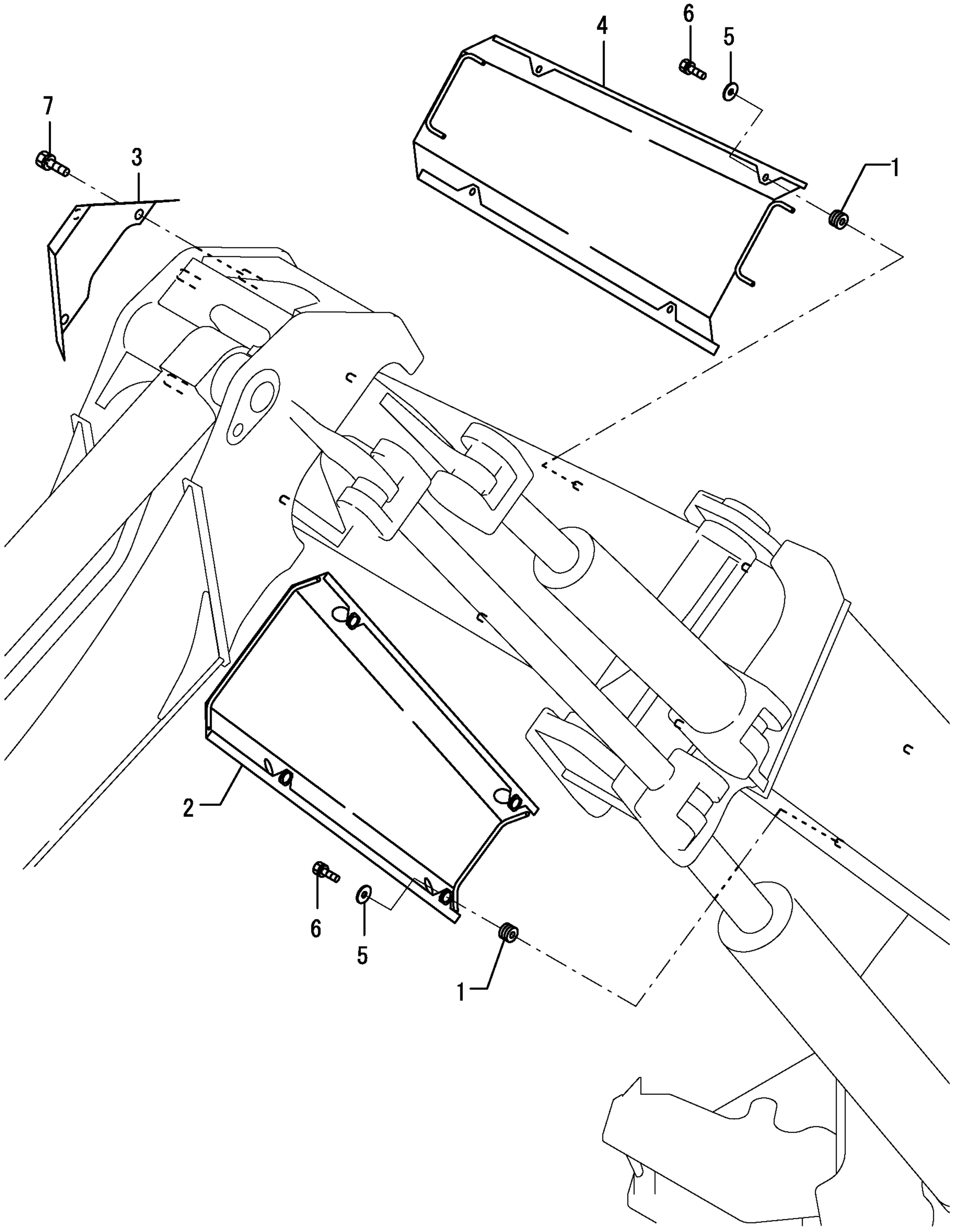

https://truckmanualshub.com/

```
1,1,,172463-62101,,STEPEV(US,1,,,,,,,,,,,,,,,,,
5,1,,172478-62160,,"MAT B,CABIN",1,,,,,,,,,,,,,,,,,
6,1,,172455-62170,,"MAT A",1,,,,,,,,,,,,,,,,,
7,1,,26013-100202,,"BOLT W/WASHER M10X20",8,,,,,,,,,,,,,,,,,
8,1,,172458-46720,,"BOLT 8X20",3,,,,,,,,,,,,,,,,,
9,1,,172458-46720,,"BOLT 8X20",1,,,,,,,,,,,,,,,,,
10,1,,172458-46720,,"BOLT 8X20",1,,,,,,,,,,,,,,,,,
11,1,,172458-46720,,"BOLT 8X20",2,,,,,,,,,,,,,,,,,
12,1,,172162-62540,,"SEAL,STEP L",2,,,,,,,,,,,,,,,,,
13,1,,172458-63100,,"INSTRUMENT PANEL L",1,,,,,,,,,,,,,,,,,
14,1,,172458-63120,,"INSTRUMENT PANEL L",1,,,,,,,,,,,,,,,,,
15,1,,172478-63200,,"COVER R",1,,,,,,,,,,,,,,,,,
18,1,,172472-63210,,"COVER R,US",1,,,,,,,,,,,,,,,,,
19,1,,172472-63220,,"COVER L,US",1,,,,,,,,,,,,,,,,,
20,1,,172519-63240,,"BOLT  8X 16",2,,,,,,,,,,,,,,,,,
21,1,,172519-63240,,"BOLT  8X 16",3,,,,,,,,,,,,,,,,,
22,1,,172472-64531,,"PLATE R,ARM REST(73)",1,,,,,,,,,,,,,,,,,
23,1,,172472-64541,,"PLATE L,ARM REST(73)",1,,,,,,,,,,,,,,,,,
24,1,,172165-66980,,"BOLT M 8X 25",4,,,,,,,,,,,,,,,,,
```

https://truckmanualshub.com/

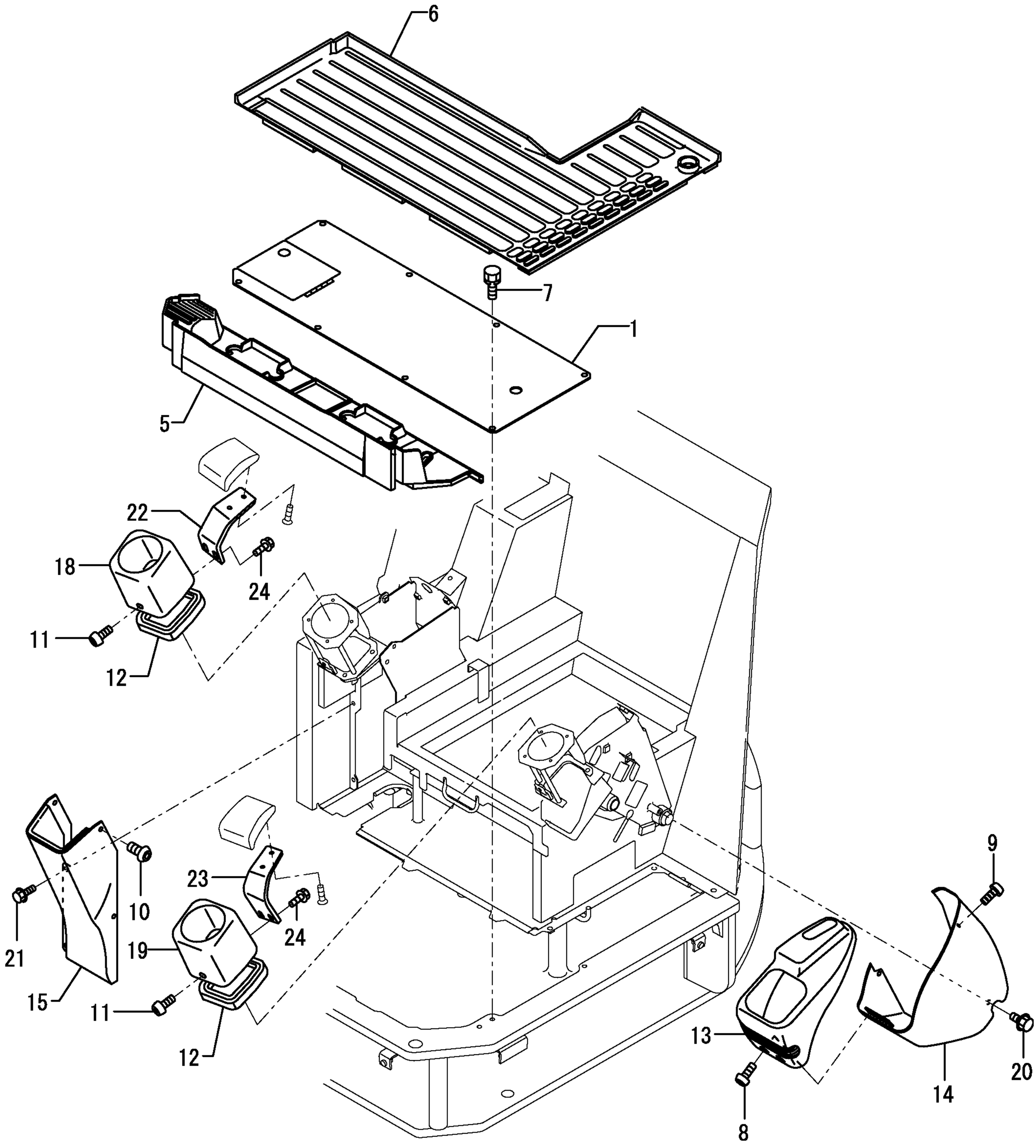

https://truckmanualshub.com/

```
1,1,,172168-46760,,"BOLT M10X20",5,,,,,,,,,,,,,,,,,
2,1,,172165-53490,,"BOLT M16X 40",5,,,,,,,,,,,,,,,,,
3,1,,172187-61421,,"HANDLE, LOCK",1,,,,,,,,,,,,,,,,,
4,1,,172519-63240,,"BOLT  8X 16",2,,,,,,,,,,,,,,,,,
5,1,,172519-63240,,"BOLT  8X 16",3,,,,,,,,,,,,,,,,,
6,1,,172478-64280,,"COVER F,SEAT MOUNT",1,,,,,,,,,,,,,,,,,
7,1,,172478-64340,,"COVER A,SEAT MOUNT",1,,,,,,,,,,,,,,,,,
9,2,,172455-64700,,"RUBBER 135",1,,,,,,,,,,,,,,,,,
10,1,,172478-64400,,"SEAT MOUNT,EP   (72)",1,,,,,,,,,,,,,,,,,
11,2,,172156-11150,,"SEAL, ENGINE",1,,,,,,,,,,,,,,,,,
12,2,,172141-41360,,"BUSH 1415",2,,,,,,,,,,,,,,,,,
13,2,,172455-61580,,"RUBBER 30",1,,,,,,,,,,,,,,,,,
22,2,,172455-66580,,MAT,1,,,,,,,,,,,,,,,,,
23,2,,172164-66640,,"RUBBER, SEAL 400",1,,,,,,,,,,,,,,,,,
26,1,,172478-64560,,"PLATE,SEAT",1,,,,,,,,,,,,,,,,,
27,1,,172478-64660,,"BRACKET,GAS SPRING",1,,,,,,,,,,,,,,,,,
28,1,,172455-64802,,"BRACKET ASSY(GRAY:73",1,,,,,,,,,,,,,,,,,
29,1,,172187-64900,,PLUG,1,,,,,,,,,,,,,,,,,
30,1,,172187-64900,,PLUG,1,,,,,,,,,,,,,,,,,
31,1,,172455-66380-1,,"COVER B ASSY    (87)",1,,,,,,,,,,,,,,,,,
32,2,,172162-61120,,"SEAL,COVER B",1,,,,,,,,,,,,,,,,,
34,2,,172455-66390,,"SEAL 570",1,,,,,,,,,,,,,,,,,
36,1,,172176-67150,,RUBBER,2,,,,,,,,,,,,,,,,,
37,1,,22137-100000,,"WASHER 10,POLISHED",3,,,,,,,,,,,,,,,,,
38,1,,22137-100000,,"WASHER 10,POLISHED",2,,,,,,,,,,,,,,,,,
39,1,,22217-160000,,"SPRING WASHER 16",5,,,,,,,,,,,,,,,,,
40,1,,26013-100202,,"BOLT W/WASHER M10X20",4,,,,,,,,,,,,,,,,,
41,1,,26013-100202,,"BOLT W/WASHER M10X20",4,,,,,,,,,,,,,,,,,
42,1,,26013-100252,,"BOLT W/WASHER M10X25",2,,,,,,,,,,,,,,,,,
43,1,,26014-100202,,"BOLT M10X 20",2,,,,,,,,,,,,,,,,,
```

https://truckmanualshub.com/

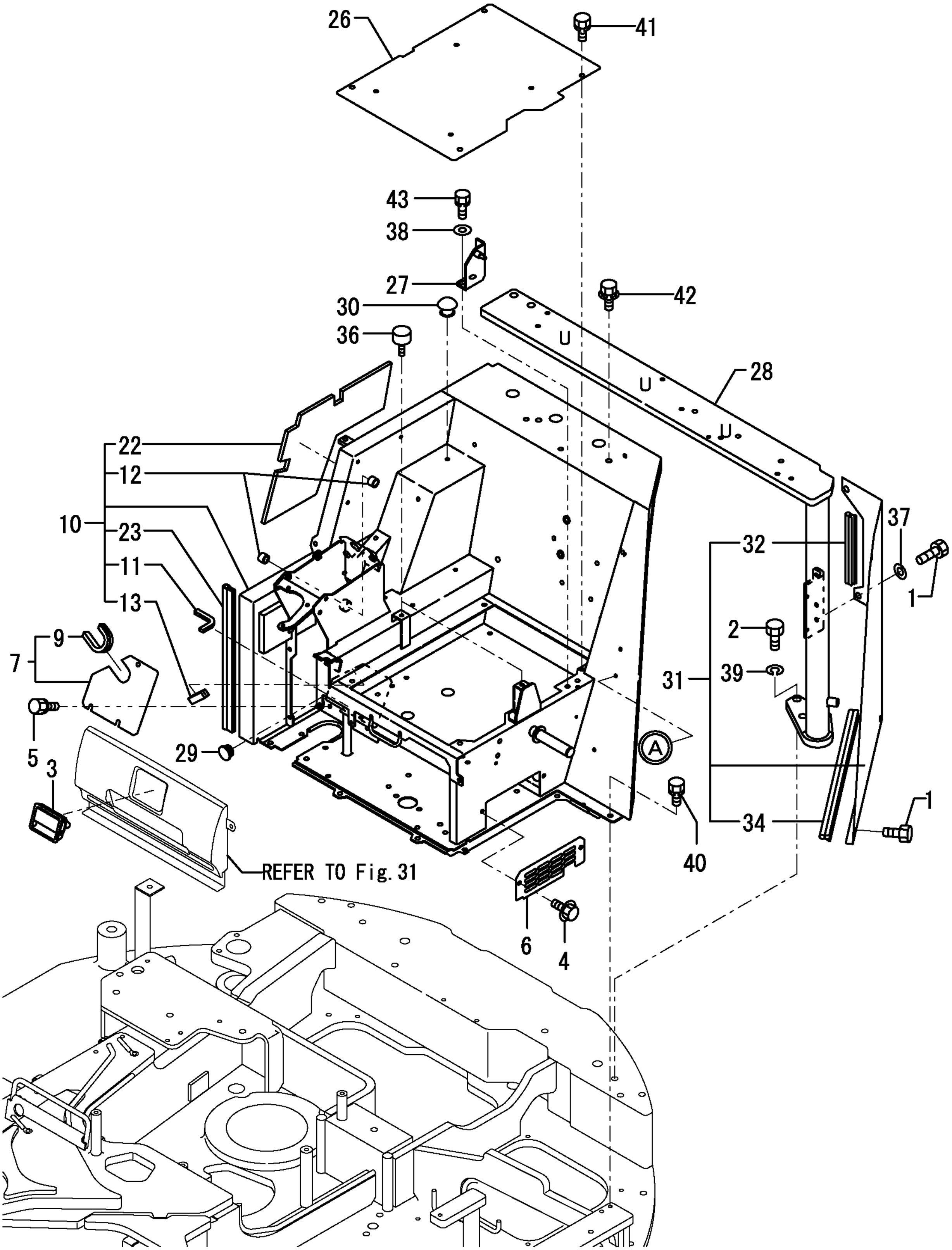

https://truckmanualshub.com/

```
1,1,,172444-54920,,"SEAL,WEIGHT C",1,,,,,,,,,,,,,,,,,
2,1,,172434-61180,,"TRIM 195",1,,,,,,,,,,,,,,,,,
3,1,,172478-65200,,"BONNET B",1,,,,,,,,,,,,,,,,,
6,1,,172455-65220,,"PLATE, RAIL",1,,,,,,,,,,,,,,,,,
7,1,,172455-65230,,"PLATE,KEY(YELLOW:87)",1,,,,,,,,,,,,,,,,,
8,1,,172455-65240,,"PLATE, ROCK",1,,,,,,,,,,,,,,,,,
9,1,,172445-65250,,BRACKET,1,,,,,,,,,,,,,,,,,
10,1,,172455-65600-1,,"CLAMP,HOSE(GREEN:82)",1,,,,,,,,,,,,,,,,,
11,1,,172455-65620-1,,"PLATE     (GREEN:82)",1,,,,,,,,,,,,,,,,,
12,1,,172164-65720,,"RUBBER, SEAL C",1,,,,,,,,,,,,,,,,,
13,1,,172455-65741-4,,"HINGE ASSY(GREEN:82)",1,,,,,,,,,,,,,,,,,
14,1,,172164-66170,,"KEY ASSY, CYLINDER",1,,,,,,,,,,,,,,,,,
19,1,,172455-66200,,"ROD, STOPPER",1,,,,,,,,,,,,,,,,,
20,1,,172455-66400,,"BRACKET, ROCK",1,,,,,,,,,,,,,,,,,
21,1,,172455-66430,,"BRACKET, GUIDE",1,,,,,,,,,,,,,,,,,
22,1,,172455-66450,,PLATE,1,,,,,,,,,,,,,,,,,
23,1,,172187-68050,,"SEAL,COVER FRONT",1,,,,,,,,,,,,,,,,,
24,1,,22137-080000,,"WASHER 8, POLISHED",2,,,,,,,,,,,,,,,,,
25,1,,22137-080000,,"WASHER 8, POLISHED",2,,,,,,,,,,,,,,,,,
26,1,,22137-100000,,"WASHER 10,POLISHED",2,,,,,,,,,,,,,,,,,
27,1,,22137-100000,,"WASHER 10,POLISHED",2,,,,,,,,,,,,,,,,,
28,1,,22137-120000,,"WASHER 12,POLISHED",4,,,,,,,,,,,,,,,,,
29,1,,22157-080000,,"WASHER  8",4,,,,,,,,,,,,,,,,,
30,1,,22372-080000,,"SNAP PIN (JASO 8)",1,,,,,,,,,,,,,,,,,
31,1,,22417-200200,,"COTTER PIN 2.0X20",1,,,,,,,,,,,,,,,,,
32,1,,26013-080122,,"BOLT M 8X 12",2,,,,,,,,,,,,,,,,,
33,1,,26013-080162,,"BOLT W/WASHER M8X16",2,,,,,,,,,,,,,,,,,
34,1,,26013-080162,,"BOLT W/WASHER M8X16",4,,,,,,,,,,,,,,,,,
35,1,,26013-100202,,"BOLT W/WASHER M10X20",2,,,,,,,,,,,,,,,,,
36,1,,26013-100202,,"BOLT W/WASHER M10X20",2,,,,,,,,,,,,,,,,,
37,1,,26013-100202,,"BOLT W/WASHER M10X20",2,,,,,,,,,,,,,,,,,
38,1,,26013-100202,,"BOLT W/WASHER M10X20",2,,,,,,,,,,,,,,,,,
39,1,,26013-100252,,"BOLT W/WASHER M10X25",2,,,,,,,,,,,,,,,,,
40,1,,26013-120202,,"BOLT W/WASHER M12X20",4,,,,,,,,,,,,,,,,,
41,1,,26014-080162,,"BOLT M 8X 16",3,,,,,,,,,,,,,,,,,
42,1,,26347-100002,,"U-NUT, 10",1,,,,,,,,,,,,,,,,,
```

https://truckmanualshub.com/

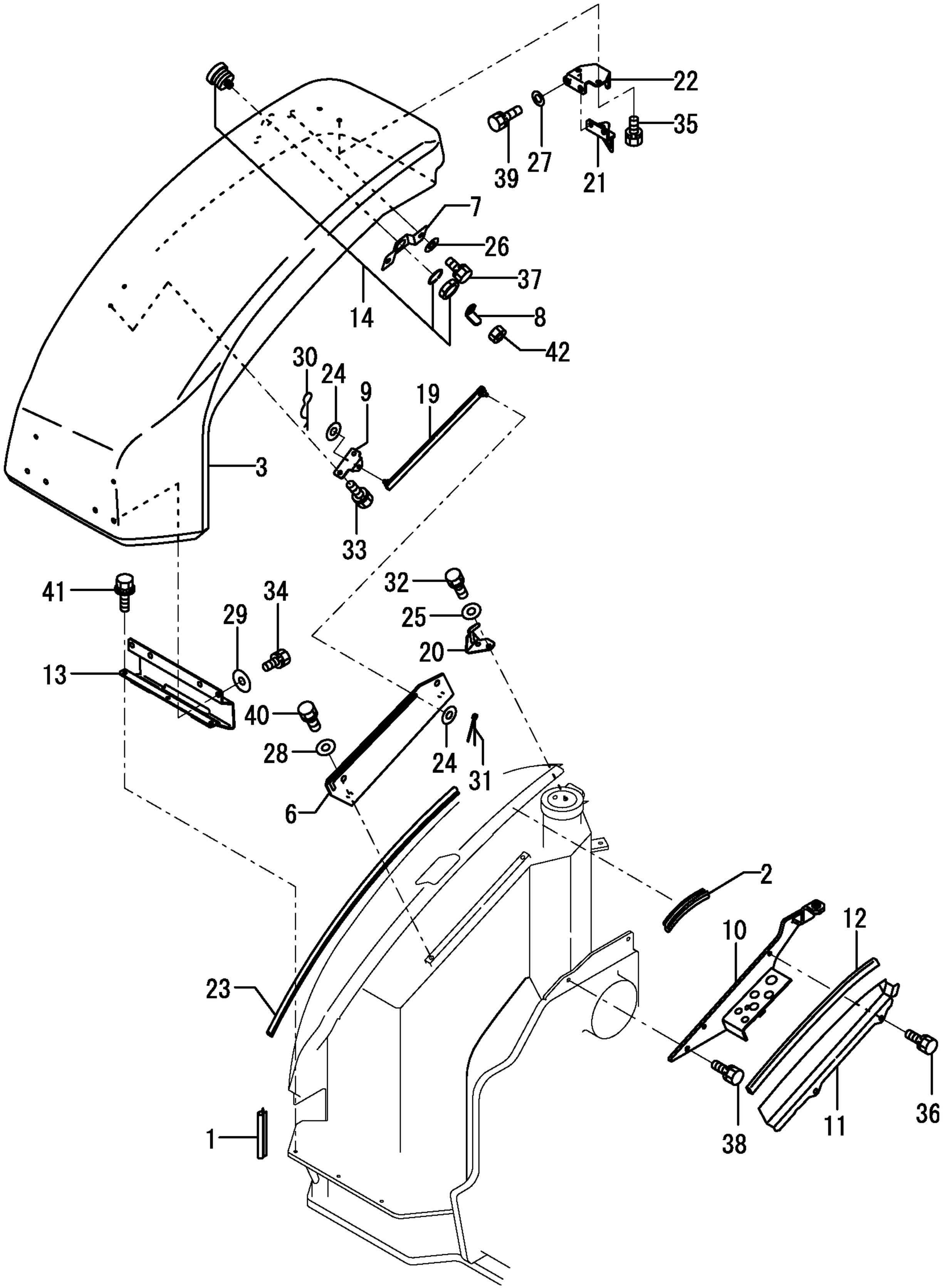

https://truckmanualshub.com/

```
1,1,,172162-61500,,RUBBER,1,,,,,,,,,,,,,,,,,,
2,1,,172187-64900,,PLUG,2,,,,,,,,,,,,,,,,,,
3,1,,172455-65201-1,,"BONNET ASSY,UP  (87)",1,,,,,,,,,,,,,,,,,,
4,2,,172434-61350,,"RUBBER, SEAL 140",1,,,,,,,,,,,,,,,,,,
5,2,,172478-65220,,"RUBBER,20",1,,,,,,,,,,,,,,,,,,
7,2,,172478-65800,,"SEAL,SPONGE 400",1,,,,,,,,,,,,,,,,,,
10,2,,172455-66711,,SPONGE,1,,,,,,,,,,,,,,,,,,
11,1,,172455-65700,,"COVER, EX.",1,,,,,,,,,,,,,,,,,,
12,1,,172455-66470,,"PLATE, STOPPER",1,,,,,,,,,,,,,,,,,,
13,1,,22137-080000,,"WASHER 8, POLISHED",4,,,,,,,,,,,,,,,,,,
14,1,,22137-100000,,"WASHER 10,POLISHED",2,,,,,,,,,,,,,,,,,,
15,1,,22137-100000,,"WASHER 10,POLISHED",3,,,,,,,,,,,,,,,,,,
16,1,,22157-120000,,"WASHER 12",1,,,,,,,,,,,,,,,,,,
17,1,,22217-100000,,"SPRING WASHER 10",3,,,,,,,,,,,,,,,,,,
18,1,,26013-080162,,"BOLT W/WASHER M8X16",4,,,,,,,,,,,,,,,,,,
19,1,,26013-100202,,"BOLT W/WASHER M10X20",2,,,,,,,,,,,,,,,,,,
20,1,,26013-120202,,"BOLT W/WASHER M12X20",1,,,,,,,,,,,,,,,,,,
21,1,,26116-100502,,"BOLT M10X 50 PLATED",3,,,,,,,,,,,,,,,,,,
```

https://truckmanualshub.com/

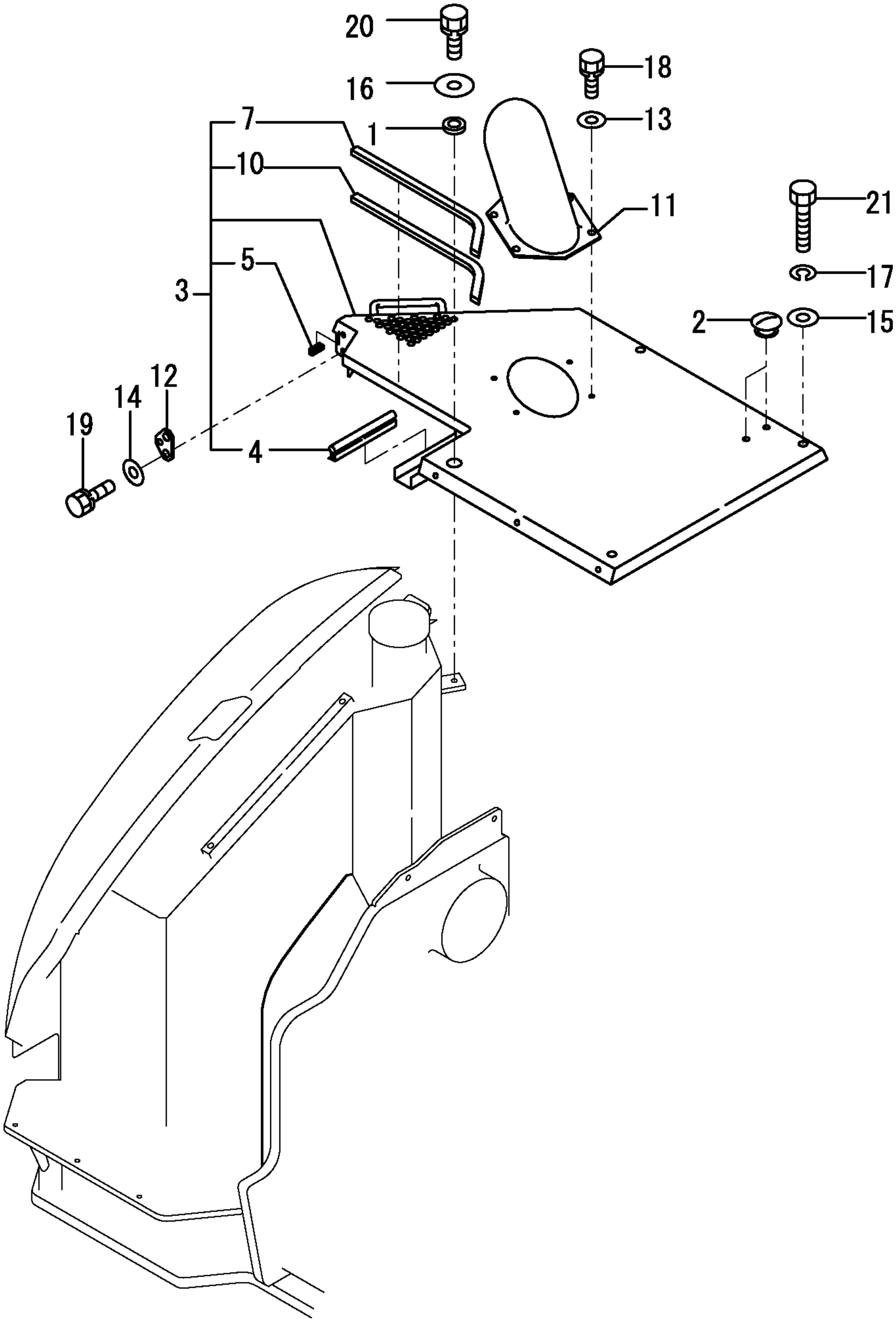

https://truckmanualshub.com/

```
1,1,,194145-04810,,"WASHER 10",3,,,,,,,,,,,,,,,,,
2,1,,194145-04810,,"WASHER 10",3,,,,,,,,,,,,,,,,,
3,1,,172434-61350,,"RUBBER, SEAL 140",1,,,,,,,,,,,,,,,,,
4,1,,1A1380-62160,,WASHER,1,,,,,,,,,,,,,,,,,
5,1,,172444-64730,,"ROD,STOPPER",1,,,,,,,,,,,,,,,,,
6,1,,172458-65050,,SHAFT,1,,,,,,,,,,,,,,,,,
7,1,,172455-65060,,HOOK,1,,,,,,,,,,,,,,,,,
8,1,,172458-65060,,"COVER,BONNET LOCK",1,,,,,,,,,,,,,,,,,
9,1,,172455-65100-1,,"BONNET A ASSY   (87)",1,,,,,,,,,,,,,,,,,,
11,2,,172455-65950,,"SEAL, RUBBER 1440",1,,,,,,,,,,,,,,,,,
12,2,,172455-65960,,"SEAL, RUBBER 1190",1,,,,,,,,,,,,,,,,,
13,2,,172455-65970,,"SEAL, RUBBER 310",1,,,,,,,,,,,,,,,,,
16,1,,172187-65210,,"LEVER ASSY, LOCK",1,,,,,,,,,,,,,,,,,
17,1,,172187-65270,,"PLATE, CATCH",1,,,,,,,,,,,,,,,,,
18,1,,172444-65270,,"ROCK PLATE",1,,,,,,,,,,,,,,,,,
19,1,,172734-65270,,"SPRING, CATCH",1,,,,,,,,,,,,,,,,,
20,1,,172478-65340-1,,"BONNET R ASSY   (87)",1,,,,,,,,,,,,,,,,,,,
23,1,,172455-65410,,BRACKET,1,,,,,,,,,,,,,,,,,
24,1,,172463-65410,,"PLUG 28X2.3",1,,,,,,,,,,,,,,,,,
25,1,,172124-65480,,CATCHER,1,,,,,,,,,,,,,,,,,
26,1,,172455-65500,,"BRACKET, ROCK",1,,,,,,,,,,,,,,,,,
27,1,,172455-65560,,"STAY R, SIDE",1,,,,,,,,,,,,,,,,,
28,1,,172455-65660,,"STAY, COVER",1,,,,,,,,,,,,,,,,,
29,1,,172156-65690,,"TORSION SPRING,STOPR",1,,,,,,,,,,,,,,,,,
30,1,,172455-65800,,"PLATE, LOCK",1,,,,,,,,,,,,,,,,,
31,1,,172164-66170,,"KEY ASSY, CYLINDER",1,,,,,,,,,,,,,,,,,
36,1,,22137-080000,,"WASHER 8, POLISHED",1,,,,,,,,,,,,,,,,,
37,1,,22137-080000,,"WASHER 8, POLISHED",1,,,,,,,,,,,,,,,,,
38,1,,22137-100000,,"WASHER 10,POLISHED",4,,,,,,,,,,,,,,,,,
39,1,,22137-100000,,"WASHER 10,POLISHED",2,,,,,,,,,,,,,,,,,
40,1,,22137-100000,,"WASHER 10,POLISHED",2,,,,,,,,,,,,,,,,,
41,1,,22137-100000,,"WASHER 10,POLISHED",1,,,,,,,,,,,,,,,,,
42,1,,22417-200200,,"COTTER PIN 2.0X20",2,,,,,,,,,,,,,,,,,
43,1,,22417-200200,,"COTTER PIN 2.0X20",2,,,,,,,,,,,,,,,,,
44,1,,26013-100252,,"BOLT W/WASHER M10X25",4,,,,,,,,,,,,,,,,,
45,1,,26013-100252,,"BOLT W/WASHER M10X25",3,,,,,,,,,,,,,,,,,
46,1,,26013-100252,,"BOLT W/WASHER M10X25",2,,,,,,,,,,,,,,,,,
47,1,,26013-100252,,"BOLT W/WASHER M10X25",2,,,,,,,,,,,,,,,,,
48,1,,26013-100252,,"BOLT W/WASHER M10X25",3,,,,,,,,,,,,,,,,,
49,1,,26013-100252,,"BOLT W/WASHER M10X25",1,,,,,,,,,,,,,,,,,
50,1,,26013-100252,,"BOLT W/WASHER M10X25",2,,,,,,,,,,,,,,,,,
51,1,,26347-080002,,"U-NUT,  8",1,,,,,,,,,,,,,,,,,
52,1,,26347-100002,,"U-NUT, 10",1,,,,,,,,,,,,,,,,,
```

https://truckmanualshub.com/

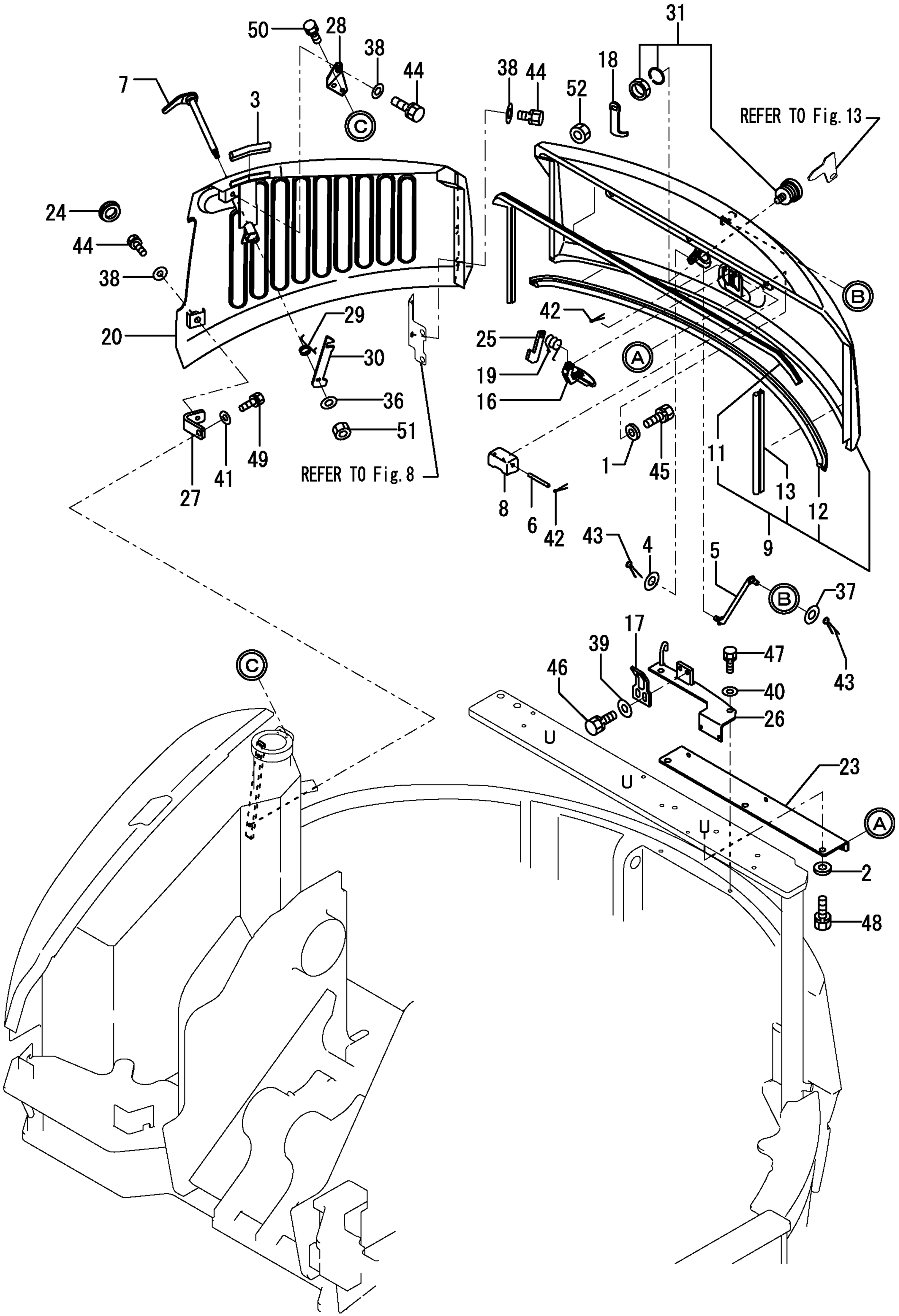

https://truckmanualshub.com/

```
1,1,,172444-17660,,CLIP,2,,,,,,,,,,,,,,,,,
2,1,,172455-68820,,"SPONGE SEAL",1,,,,,,,,,,,,,,,,,
3,1,,172488-68830,,"SPONGE CABIN",1,,,,,,,,,,,,,,,,,
4,1,,172478-68850,,"ABSOBER PAD A",1,,,,,,,,,,,,,,,,,
5,1,,172478-68860,,"ABSOBER PAD B",1,,,,,,,,,,,,,,,,,
6,1,,172478-68870,,"GROMMET 18X24X40",9,,,,,,,,,,,,,,,,,,,
7,1,,172478-68930,,"SEAL 10X12X250",1,,,,,,,,,,,,,,,,,
8,1,,172478-68940,,"SEAL 12X10X1200",1,,,,,,,,,,,,,,,,,,
9,1,,172478-68980,,"ABSOBER PAD C",1,,,,,,,,,,,,,,,,,,
```

https://truckmanualshub.com/

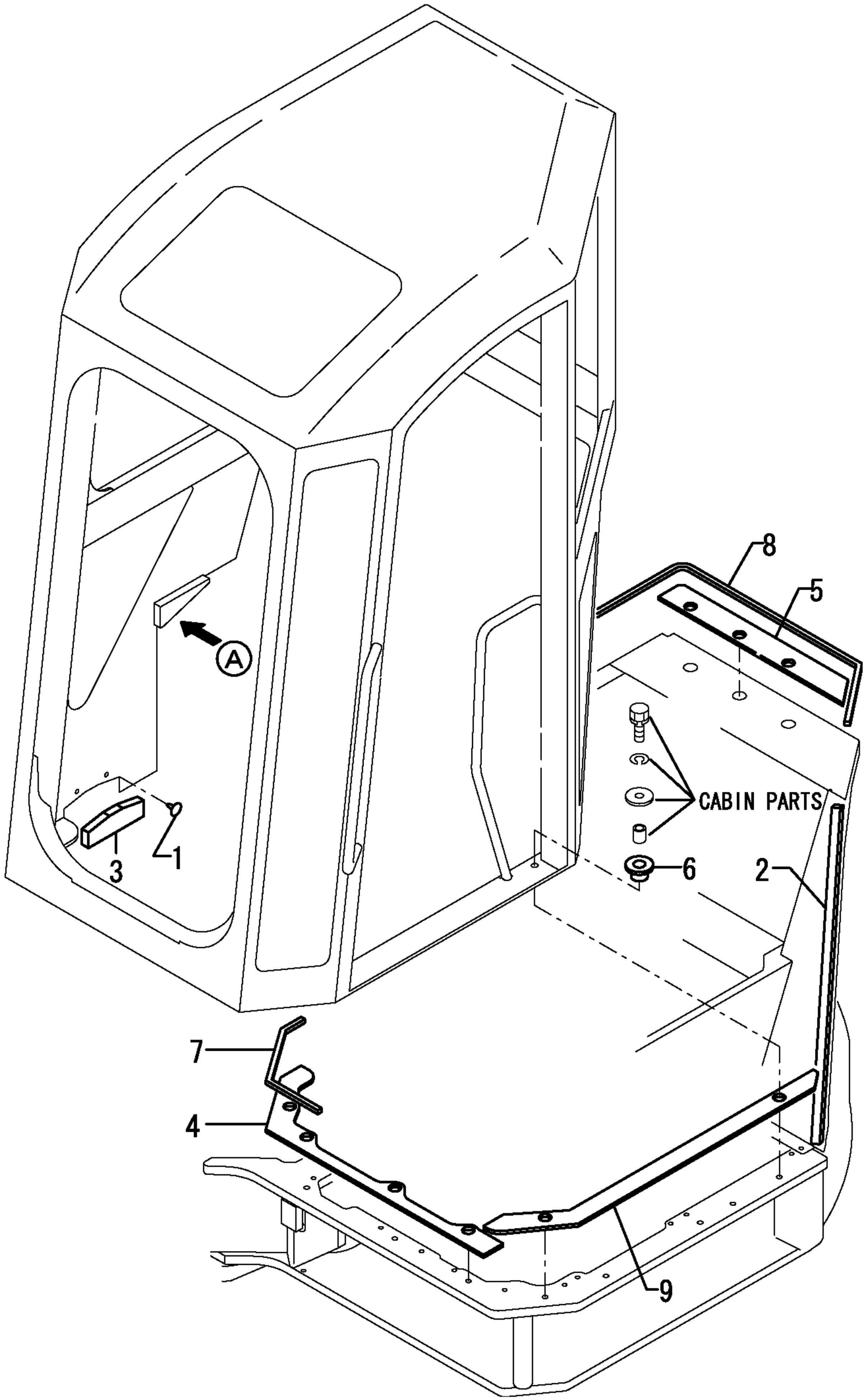

```
1,1,,172187-71100,,"COVER, FLYWHEEL",1,,,,,,,,,,,,,,,,,
2,1,,26013-100302,,"BOLT M10X 30",12,,,,,,,,,,,,,,,,,
3,1,,172187-71200,,CUPRING,1,,,,,,,,,,,,,,,,,
4,1,,172187-71210,,"BOLT 14X 50",3,,,,,,,,,,,,,,,,,
5,1,,172478-73100,,"PUMP CMP",1,,,,,,,,,,,,,,,,,
6,2,,172187-73110,,SHAFT,1,,,,,,,,,,,,,,,,,
7,3,,172187-73210,,SHAFT,1,,,,,,,,,,,,,,,,,
8,3,,172187-73220,,"SEAL CASE",1,,,,,,,,,,,,,,,,,
9,3,,172187-73230,,"BEARING,",1,,,,,,,,,,,,,,,,,
10,3,,172187-73240,,SEAL,1,,,,,,,,,,,,,,,,,
11,3,,172187-73250,,"O-RING 151",1,,,,,,,,,,,,,,,,,
12,3,,172187-73260,,KEY,1,,,,,,,,,,,,,,,,,
13,3,,22242-000350,,"CIRCLIP   35",2,,,,,,,,,,,,,,,,,
14,3,,22252-000800,,"CIRCLIP   80",1,,,,,,,,,,,,,,,,,
15,2,,172187-73120,,"ROTARY GROUP",1,,,,,,,,,,,,,,,,,
25,2,,172478-73120,,"CONTROL PISTON",1,,,,,,,,,,,,,,,,,
26,3,,172478-73130,,CYLINDER,1,,,,,,,,,,,,,,,,,
27,3,,172478-73150,,"PIN 11X50,STRAIGHT",1,,,,,,,,,,,,,,,,,
28,3,,172187-75800,,PISTON,2,,,,,,,,,,,,,,,,,
29,3,,172187-75810,,ORIFICE,1,,,,,,,,,,,,,,,,,
30,3,,172187-75820,,SPRING,4,,,,,,,,,,,,,,,,,
31,3,,172187-75830,,SPRING,2,,,,,,,,,,,,,,,,,
32,3,,172187-75840,,PLUG,2,,,,,,,,,,,,,,,,,
33,3,,24315-000160,,"O-RING 1B P-16.0",1,,,,,,,,,,,,,,,,,
34,3,,24315-000200,,"O-RING 1B P-20.0",2,,,,,,,,,,,,,,,,,
35,3,,24315-000290,,"O-RING 1B P-29.0",2,,,,,,,,,,,,,,,,,
36,3,,26450-100302,,"BOLT M10X 30",2,,,,,,,,,,,,,,,,,
37,2,,172187-73130,,"COVER ASSY",1,,,,,,,,,,,,,,,,,
38,3,,172164-73660,,FILTER,1,,,,,,,,,,,,,,,,,
39,3,,172164-73670,,"CIRCLIP,",1,,,,,,,,,,,,,,,,,
40,3,,172142-74590,,PLUG,2,,,,,,,,,,,,,,,,,
42,4,,24315-000080,,"O-RING 1B P-8.0",2,,,,,,,,,,,,,,,,,
43,3,,172142-74600,,PLUG,2,,,,,,,,,,,,,,,,,
45,4,,24315-000110,,"O-RING 1B P-11.0",2,,,,,,,,,,,,,,,,,
46,3,,172187-75600,,"CONTROL PLATE",1,,,,,,,,,,,,,,,,,
47,3,,172187-75610,,"PIN,STRAIGHT",2,,,,,,,,,,,,,,,,,
48,3,,172187-75620,,"BOLT 14X 40",2,,,,,,,,,,,,,,,,,
49,3,,172187-75630,,"BOLT 14X 65",2,,,,,,,,,,,,,,,,,
50,3,,172187-75640,,"BOLT 14X 75",1,,,,,,,,,,,,,,,,,
51,3,,172187-75650,,BEARING,1,,,,,,,,,,,,,,,,,
52,3,,172187-75660,,SLEEVE,1,,,,,,,,,,,,,,,,,
53,3,,172187-75670,,ORIFICE,2,,,,,,,,,,,,,,,,,
54,3,,172187-75680,,GASKET,1,,,,,,,,,,,,,,,,,
55,3,,24315-000050,,"O-RING 1B P-5.0",2,,,,,,,,,,,,,,,,,
56,3,,24321-001050,,"O-RING 1A G-105.0",1,,,,,,,,,,,,,,,,,
57,2,,172478-73160,,"TROCHOID PUMP",1,,,,,,,,,,,,,,,,,
58,3,,172478-73170,,CASE,1,,,,,,,,,,,,,,,,,
59,3,,172478-73180,,"O-RING YP40.87",1,,,,,,,,,,,,,,,,,
60,3,,172187-75850,,"GEAR 6.5",1,,,,,,,,,,,,,,,,,
61,3,,172187-75870,,"PLATE A ,SIDE",1,,,,,,,,,,,,,,,,,
62,3,,172187-75890,,"PIN,SPRING",1,,,,,,,,,,,,,,,,,
63,3,,172187-75910,,"PLATE B ,SIDE",1,,,,,,,,,,,,,,,,,
64,3,,172187-75920,,"PIN,SPRING",1,,,,,,,,,,,,,,,,,
65,3,,26450-050122,,"BOLT M 5X 12",3,,,,,,,,,,,,,,,,,
66,2,,172187-73170,,"PUMP, GEAR",1,,,,,,,,,,,,,,,,,
67,3,,172187-75930,,"BOLT 14X104, STUD",4,,,,,,,,,,,,,,,,,
68,3,,172187-75940,,"NUT, 6X18 HEX SOCKET",4,,,,,,,,,,,,,,,,,
69,3,,172187-75950,,"PIN, 8X54",2,,,,,,,,,,,,,,,,,
70,3,,172187-75960,,WASHER,4,,,,,,,,,,,,,,,,,
71,3,,24325-000900,,"O-RING 1B G-90.0",1,,,,,,,,,,,,,,,,,
72,2,,172187-73190,,"BOLT M10X 25",2,,,,,,,,,,,,,,,,,
74,3,,172187-75970,,PLATE,1,,,,,,,,,,,,,,,,,
75,3,,24321-000750,,"O-RING 1A G-75.0",1,,,,,,,,,,,,,,,,,
```

https://truckmanualshub.com/

```
76,3,,26450-080222,,"BOLT M 8X 22",4,,,,,,,,,,,,,,,,,
77,2,,172478-73200,,"VALVE ASSY",1,,,,,,,,,,,,,,,,,
78,3,,172989-73150,,"SOLENOID (B",1,,,,,,,,,,,,,,,,,
79,3,,172989-73160,,"SOLENOID (A",1,,,,,,,,,,,,,,,,,
80,3,,172478-73210,,SPRING,2,,,,,,,,,,,,,,,,,
81,3,,172478-73220,,SPRING,1,,,,,,,,,,,,,,,,,
82,3,,172478-73230,,"PLUG ASSY G1/8",1,,,,,,,,,,,,,,,,,
83,3,,172478-73240,,"BALL,STEEL",1,,,,,,,,,,,,,,,,,
84,3,,172478-73250,,COVER,1,,,,,,,,,,,,,,,,,
85,3,,172478-73260,,BAND,2,,,,,,,,,,,,,,,,,
86,3,,172478-73270,,"ELEMENT,FILTER",1,,,,,,,,,,,,,,,,,
87,3,,172478-73280,,WASHER,1,,,,,,,,,,,,,,,,,
88,3,,172478-73290,,CLAMP,1,,,,,,,,,,,,,,,,,
89,3,,172478-73300,,O-RING,2,,,,,,,,,,,,,,,,,
90,3,,172478-73310,,"PLUG ASSY",1,,,,,,,,,,,,,,,,,
91,3,,24311-000160,,"O-RING 1A P-16.0",2,,,,,,,,,,,,,,,,,
92,3,,26450-040102,,"BOLT  4* 10",5,,,,,,,,,,,,,,,,,
93,3,,26450-080302,,"BOLT M 8X 30",2,,,,,,,,,,,,,,,,,
94,2,,172478-73340,,SPRING,1,,,,,,,,,,,,,,,,,
95,3,,172478-73350,,"STAY,SPRING",1,,,,,,,,,,,,,,,,,
96,3,,172478-73360,,"SPRING 22.5/7X92/8.2",1,,,,,,,,,,,,,,,,,
97,3,,172187-75710,,PLATE,1,,,,,,,,,,,,,,,,,
98,3,,172187-75720,,"ADJUST SCREW",1,,,,,,,,,,,,,,,,,
99,3,,172187-75740,,SPRING,1,,,,,,,,,,,,,,,,,
100,3,,172187-75750,,NUT,1,,,,,,,,,,,,,,,,,
101,3,,172187-75760,,"SHIM 32X45X0.3",1,,,,,,,,,,,,,,,,,
102,3,,172187-75770,,SHIM,1,,,,,,,,,,,,,,,,,
103,3,,172187-75780,,SHIM,1,,,,,,,,,,,,,,,,,
104,3,,172187-75980,,SHIM,1,,,,,,,,,,,,,,,,,
105,3,,24311-000440,,"O-RING 1A P-44.0",1,,,,,,,,,,,,,,,,,
106,3,,26450-100302,,"BOLT M10X 30",2,,,,,,,,,,,,,,,,,
107,2,,172164-73470,,"VALVE ASSY, RELIEF",1,,,,,,,,,,,,,,,,,
108,3,,172164-73050,,SPOOL,1,,,,,,,,,,,,,,,,,
109,3,,172164-73370,,"ADJUST SCREW",1,,,,,,,,,,,,,,,,,
110,3,,172164-73380,,"SPRING, RETERN",1,,,,,,,,,,,,,,,,,
111,3,,172164-73390,,NUT,1,,,,,,,,,,,,,,,,,
112,3,,172164-73510,,"SEAT, SPRING",1,,,,,,,,,,,,,,,,,
113,3,,172141-74430,,O-RING,1,,,,,,,,,,,,,,,,,
114,2,,172142-74620,,PLUG,2,,,,,,,,,,,,,,,,,
116,3,,24315-000180,,"O-RING 1B P-18.0",2,,,,,,,,,,,,,,,,,
117,2,,22217-100000,,"SPRING WASHER 10",2,,,,,,,,,,,,,,,,,
118,2,,26617-100002,,"EYE BOLT M10",1,,,,,,,,,,,,,,,,,
119,1,,172164-73110,,VALVE,1,,,,,,,,,,,,,,,,,
120,1,,22217-160000,,"SPRING WASHER 16",4,,,,,,,,,,,,,,,,,
121,1,,26116-160452,,"BOLT M16X 45 PLATED",4,,,,,,,,,,,,,,,,,
```

https://truckmanualshub.com/

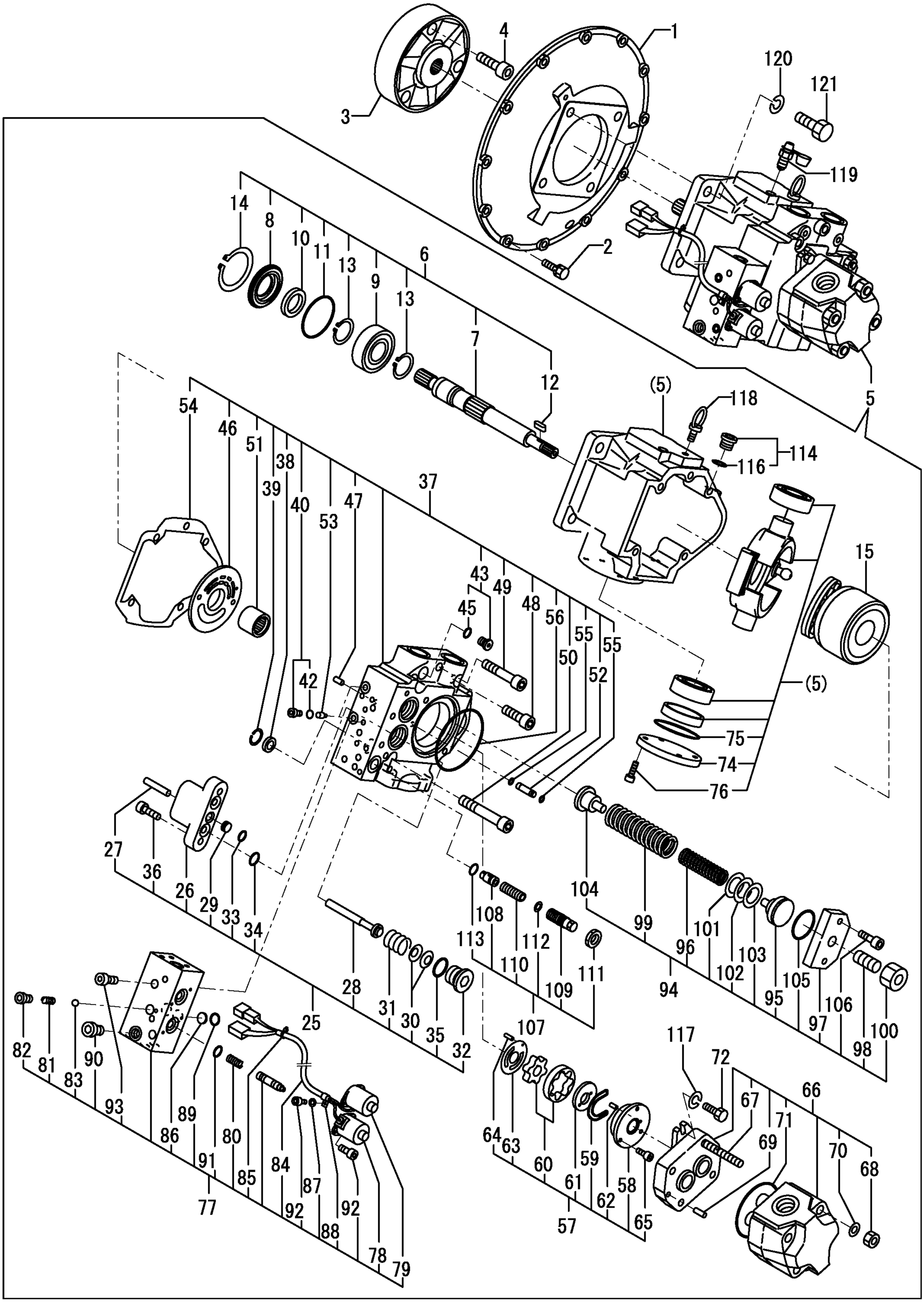

https://truckmanualshub.com/

```
1,1,,172162-61770,,"GUIDE,SLIDE",2,,,,,,,,,,,,,,,,,
2,1,,172455-72100-1,,"CYLINDER, BOOM  (87)",1,,,,,,,,,,,,,,,,,,
3,2,,172455-71800,,"SEAL SET, HEAD",1,,,,,,,,,,,,,,,,,,
12,2,,172455-71810,,"SEAL SET, PISTON",1,,,,,,,,,,,,,,,,,,
15,2,,172455-72020,,"CUSHION BEARING",1,,,,,,,,,,,,,,,,,,
16,2,,172455-72030,,PISTON,1,,,,,,,,,,,,,,,,,,
17,2,,172455-72060,,SHIM,1,,,,,,,,,,,,,,,,,,
18,2,,172455-72070,,NUT,1,,,,,,,,,,,,,,,,,,
19,2,,172455-72130,,"CYLINDER HEAD",1,,,,,,,,,,,,,,,,,,
20,2,,172455-72140,,BUSH,1,,,,,,,,,,,,,,,,,,
21,2,,172455-72150,,"SNAP RING",1,,,,,,,,,,,,,,,,,,
22,2,,172455-72640-1,,"PIPE     (YELLOW:87)",1,,,,,,,,,,,,,,,,,,
23,2,,172455-72650-1,,"PIPE     (YELLOW:87)",1,,,,,,,,,,,,,,,,,,
24,2,,172455-72670-1,,"TUBE,BOOM(YELLOW:87)",1,,,,,,,,,,,,,,,,,,
25,3,,172455-72080,,"BUSH, PIN",1,,,,,,,,,,,,,,,,,,
26,3,,172455-72090,,"SEAL, DUST",2,,,,,,,,,,,,,,,,,,
28,2,,172162-72680,,"SCREW,SET",1,,,,,,,,,,,,,,,,,,
29,2,,172455-72680,,"ROD ASSY, BOOM",1,,,,,,,,,,,,,,,,,,
30,3,,172455-72090,,"SEAL, DUST",2,,,,,,,,,,,,,,,,,,
32,3,,172455-72630,,"BUSH, PIN",1,,,,,,,,,,,,,,,,,,
33,2,,172162-72690,,"BALL,STEEL",1,,,,,,,,,,,,,,,,,,
34,2,,172176-73730,,WASHER,2,,,,,,,,,,,,,,,,,,
35,2,,24761-020000,,"NIPPLE PT1/8,GREASE",1,,,,,,,,,,,,,,,,,,
36,2,,24761-040000,,"NIPPLE B,GREASE",1,,,,,,,,,,,,,,,,,,
37,2,,26116-100162,,"BOLT M10X 16 PLATED",2,,,,,,,,,,,,,,,,,,
38,1,,172455-72920-1,,"COVER, SLIDE    (87)",1,,,,,,,,,,,,,,,,,,
39,1,,22217-100000,,"SPRING WASHER 10",1,,,,,,,,,,,,,,,,,,
40,1,,26116-100202,,"BOLT M10X 20 PLATED",1,,,,,,,,,,,,,,,,,,
41,1,,933147-03400,,"WASHER, BRAKE ARM",1,,,,,,,,,,,,,,,,,,
42,1,,933168-14170,,"SPRING 16",2,,,,,,,,,,,,,,,,,,
```

https://truckmanualshub.com/

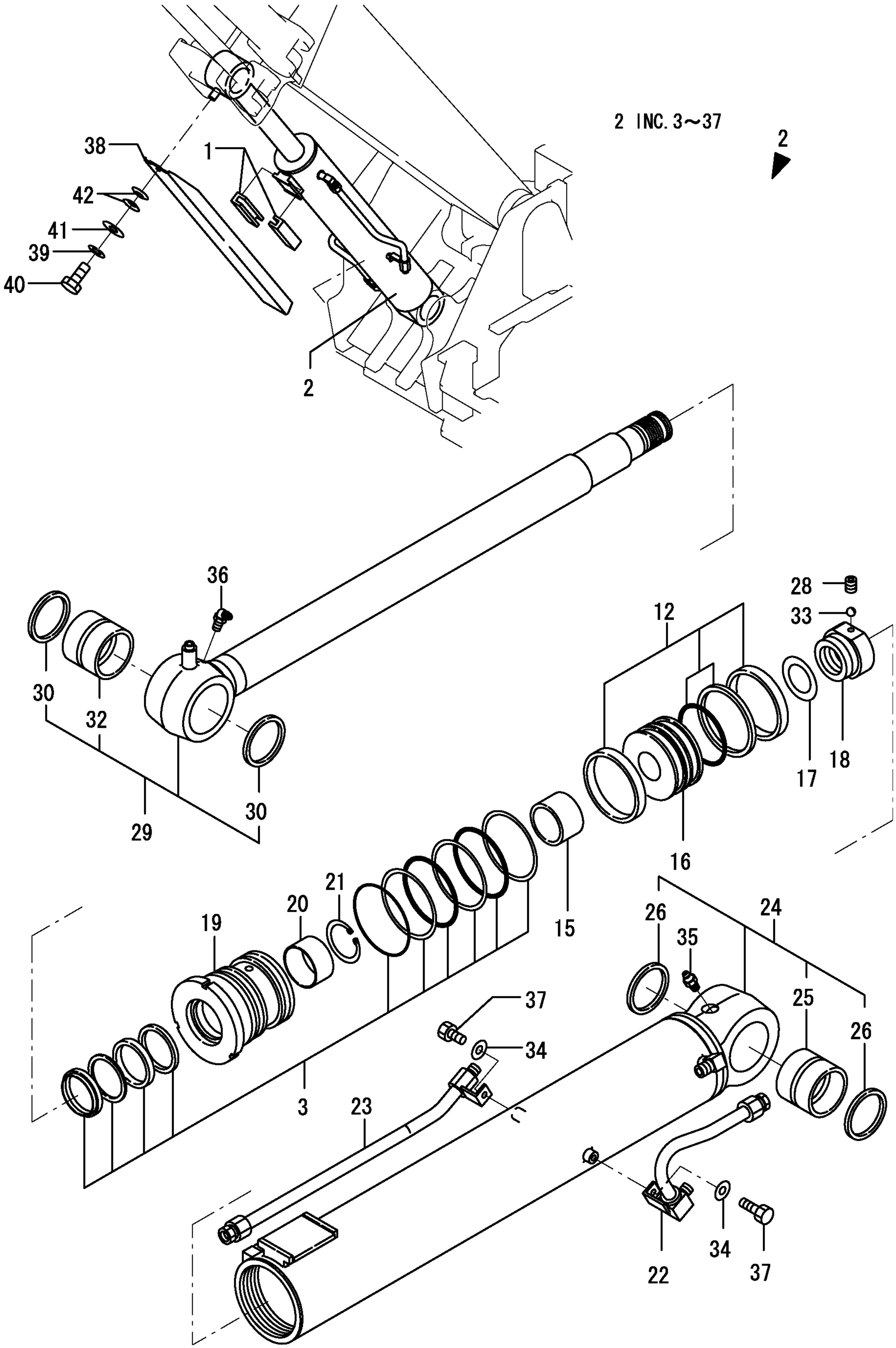

https://truckmanualshub.com/

```
1,1,,172455-72200-1,,"CYLINDER,ARM    (87)",1,,,,,,,,,,,,,,,,,
2,2,,172455-71820,,"SEAL SET, HEAD",1,,,,,,,,,,,,,,,,,
11,2,,172455-71830,,"SEAL SET, PISTON",1,,,,,,,,,,,,,,,,,
14,2,,172455-72140,,BUSH,1,,,,,,,,,,,,,,,,,
15,2,,172455-72150,,"SNAP RING",1,,,,,,,,,,,,,,,,,
16,2,,172455-72230,,"CYLINDER HEAD",1,,,,,,,,,,,,,,,,,
17,2,,172455-72250,,"CUSHION BEARING",1,,,,,,,,,,,,,,,,,
18,2,,172455-72260,,PISTON,1,,,,,,,,,,,,,,,,,
19,2,,172455-72290,,NUT,1,,,,,,,,,,,,,,,,,
20,2,,172162-72660,,SHIM,1,,,,,,,,,,,,,,,,,
21,2,,172162-72680,,"SCREW,SET",1,,,,,,,,,,,,,,,,,
22,2,,172162-72690,,"BALL,STEEL",1,,,,,,,,,,,,,,,,,
23,2,,172455-72690,,"CUSHION BEARING",1,,,,,,,,,,,,,,,,,
24,2,,172455-72700,,"CUSHION SEAL",1,,,,,,,,,,,,,,,,,
25,2,,172455-72710,,"SNAP RING",1,,,,,,,,,,,,,,,,,
26,2,,172455-72720,,STOPPER,2,,,,,,,,,,,,,,,,,
27,2,,172455-72740-1,,"PIPE     (YELLOW:87)",1,,,,,,,,,,,,,,,,,
28,2,,172455-72750,,JOINT,1,,,,,,,,,,,,,,,,,
29,2,,172455-72770-1,,"TUBE ,ARM(YELLOW:87)",1,,,,,,,,,,,,,,,,,
31,3,,172162-72570,,"BUSH,PIN",1,,,,,,,,,,,,,,,,,
32,3,,172162-72700,,"SEAL,DUST",2,,,,,,,,,,,,,,,,,
33,2,,172455-72780,,"ROD ASSY, ARM",1,,,,,,,,,,,,,,,,,
35,3,,172162-72700,,"SEAL,DUST",2,,,,,,,,,,,,,,,,,
36,3,,172455-72730,,"BUSH, PIN",1,,,,,,,,,,,,,,,,,
37,2,,172176-73730,,WASHER,1,,,,,,,,,,,,,,,,,
38,2,,24761-020000,,"NIPPLE PT1/8,GREASE",1,,,,,,,,,,,,,,,,,
39,2,,24761-040000,,"NIPPLE B,GREASE",1,,,,,,,,,,,,,,,,,
40,2,,26116-100162,,"BOLT M10X 16 PLATED",1,,,,,,,,,,,,,,,,,
```

https://truckmanualshub.com/

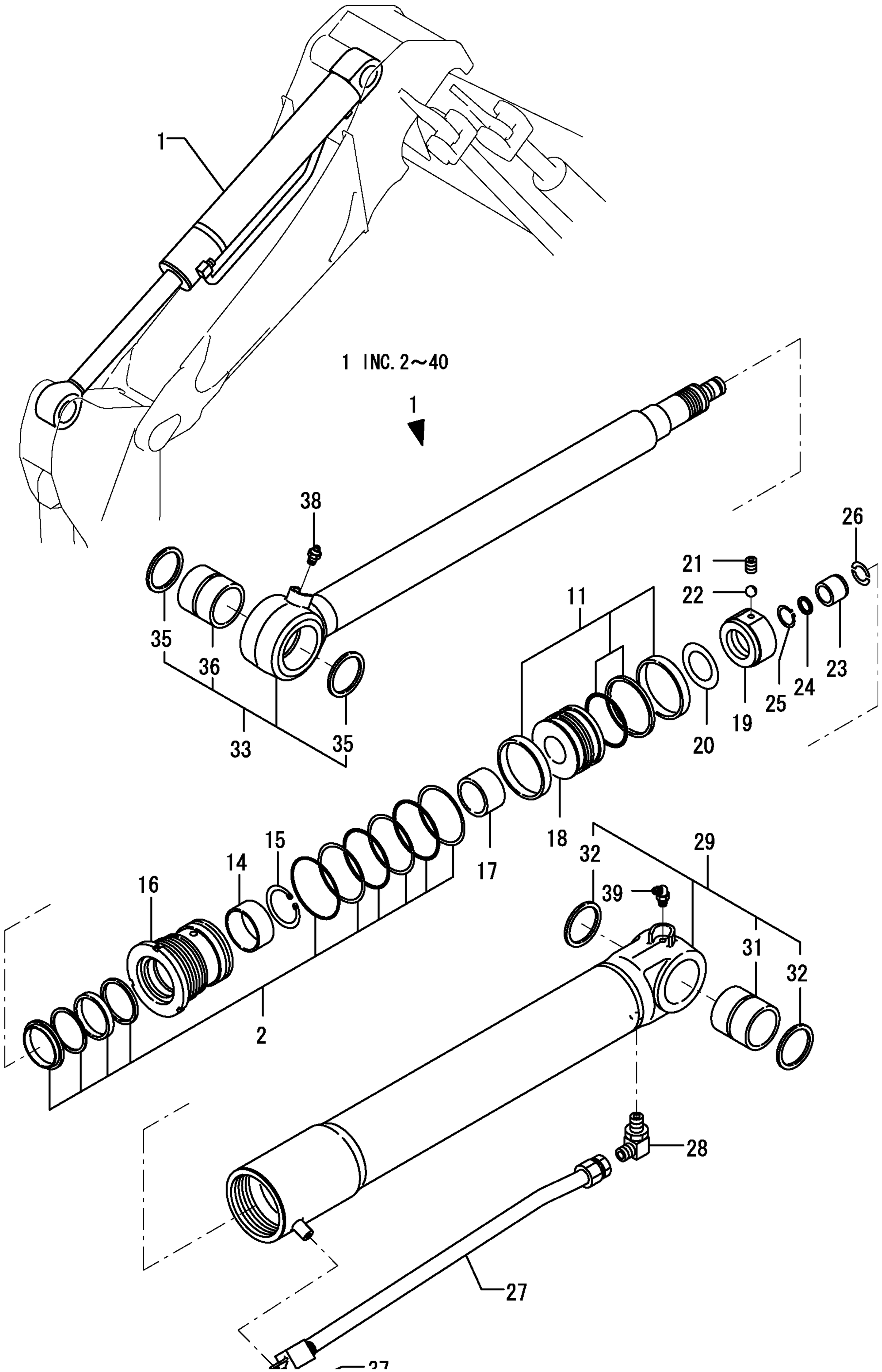

```
1,1,,172455-72301-1,,"CYLINDER ASSY,BUCKET",1,,,,,,,,,,,,,,,,,,
2,2,,194145-04810,,"WASHER 10",1,,,,,,,,,,,,,,,,,,
3,2,,172020-11000,,"ROD,BUCKET",1,,,,,,,,,,,,,,,,,,
4,3,,172020-10620,,"SEAL 60 X 75 X 5",2,,,,,,,,,,,,,,,,,,
5,3,,172020-11030,,"BUSH 60 58",1,,,,,,,,,,,,,,,,,,
6,2,,172020-11040,,"HEAD 90 55",1,,,,,,,,,,,,,,,,,,
8,3,,172151-72240,,"BUSH 55 35, ROD",1,,,,,,,,,,,,,,,,,,
9,2,,172020-11060,,"PISTON 90",1,,,,,,,,,,,,,,,,,,
10,2,,172020-11660,,"SEAL SET 90X55",1,,,,,,,,,,,,,,,,,,
11,3,,172020-11070,,"WASHER 90,LOCK",1,,,,,,,,,,,,,,,,,,
12,3,,172020-11670,,"SEAL SET 90X55,HEAD",1,,,,,,,,,,,,,,,,,,
19,3,,172020-11680,,"SEAL SET 90,PISTON",1,,,,,,,,,,,,,,,,,,
22,3,,933126-00500,,"RING 72, SPRING",1,,,,,,,,,,,,,,,,,,
23,2,,172455-71410-1,,"TUBE,BUCKET     (87)",1,,,,,,,,,,,,,,,,,,
24,3,,172448-54120,,"SEAL 50X60X4,DUST",2,,,,,,,,,,,,,,,,,,
25,3,,172151-72591,,"BUSH 50X60",1,,,,,,,,,,,,,,,,,,
26,2,,172455-71450-1,,"BUCKET PLUMBER  (87)",1,,,,,,,,,,,,,,,,,,
27,2,,172151-72270,,"U-NUT M39",1,,,,,,,,,,,,,,,,,,
28,2,,172141-76900,,"CONNECTOR 1/2L",1,,,,,,,,,,,,,,,,,,
29,3,,24315-000180,,"O-RING 1B P-18.0",1,,,,,,,,,,,,,,,,,,
30,2,,172112-77360,,"CONNECTOR PF1/2PF1/2",1,,,,,,,,,,,,,,,,,,
31,2,,24315-000180,,"O-RING 1B P-18.0",1,,,,,,,,,,,,,,,,,,
32,2,,24761-020000,,"NIPPLE PT1/8,GREASE",1,,,,,,,,,,,,,,,,,,
33,2,,24761-040000,,"NIPPLE B,GREASE",1,,,,,,,,,,,,,,,,,,
34,2,,26013-100252,,"BOLT W/WASHER M10X25",1,,,,,,,,,,,,,,,,,,
```

https://truckmanualshub.com/

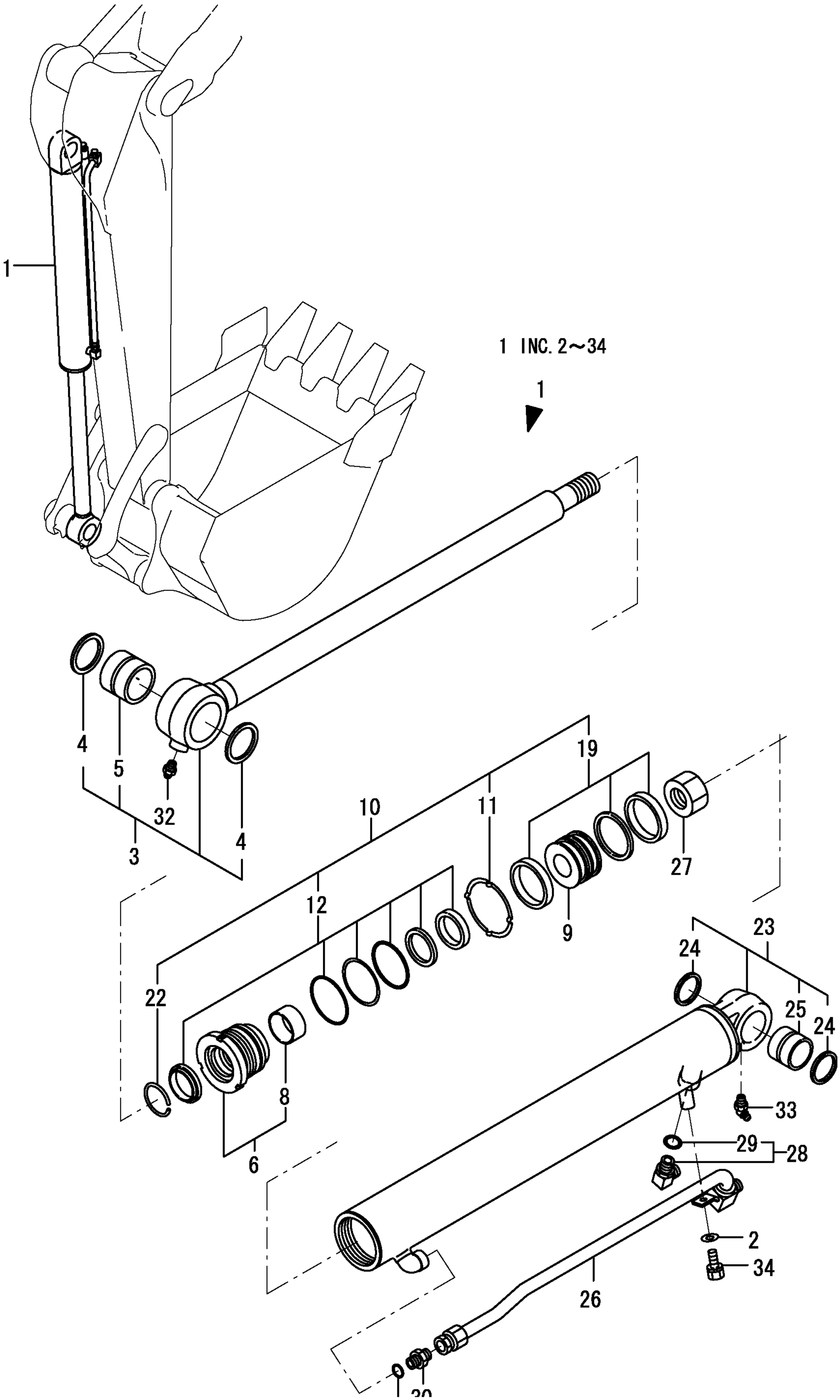

https://truckmanualshub.com/

```
1,1,,172455-72501-1,,"CYLINDER, BLADE (82)",1,,,,,,,,,,,,,,,,,
2,2,,172020-11500,,"HEAD 130 65",1,,,,,,,,,,,,,,,,,
4,3,,24550-065400,,"BUSH 65X40,DRIVE",1,,,,,,,,,,,,,,,,,
5,2,,172020-11520,,"PISTON 130",1,,,,,,,,,,,,,,,,,
6,2,,172020-11540,,"U-NUT M48X3",1,,,,,,,,,,,,,,,,,
7,2,,172020-11720,,"SEAL SET 130X65,CYL.",1,,,,,,,,,,,,,,,,,
8,3,,172020-10380,,"RING 82,SPRING",1,,,,,,,,,,,,,,,,,
9,3,,172020-11530,,"WASHER 130,LOCK",1,,,,,,,,,,,,,,,,,
10,3,,172020-11730,,"SEAL SET 130X65,HEAD",1,,,,,,,,,,,,,,,,,
17,3,,172020-11740,,"SEAL SET 130,PISTON",1,,,,,,,,,,,,,,,,,
20,2,,172455-71710,,"ROD,BLADE",1,,,,,,,,,,,,,,,,,
21,3,,172020-10620,,"SEAL 60 X 75 X 5",2,,,,,,,,,,,,,,,,,
22,3,,172020-11450,,"BUSH 60 68",1,,,,,,,,,,,,,,,,,
23,2,,172478-72210-1,,"TUBE,BLADE(GREEN:82)",1,,,,,,,,,,,,,,,,,
24,3,,172020-10620,,"SEAL 60 X 75 X 5",2,,,,,,,,,,,,,,,,,
25,3,,172020-11450,,"BUSH 60 68",1,,,,,,,,,,,,,,,,,
26,1,,172455-72900-1,,"COVER,BLADE(GREEN:82",1,,,,,,,,,,,,,,,,,
27,1,,22137-100000,,"WASHER 10,POLISHED",4,,,,,,,,,,,,,,,,,
28,1,,22217-100000,,"SPRING WASHER 10",4,,,,,,,,,,,,,,,,,
29,1,,26116-100202,,"BOLT M10X 20 PLATED",4,,,,,,,,,,,,,,,,,
```

https://truckmanualshub.com/

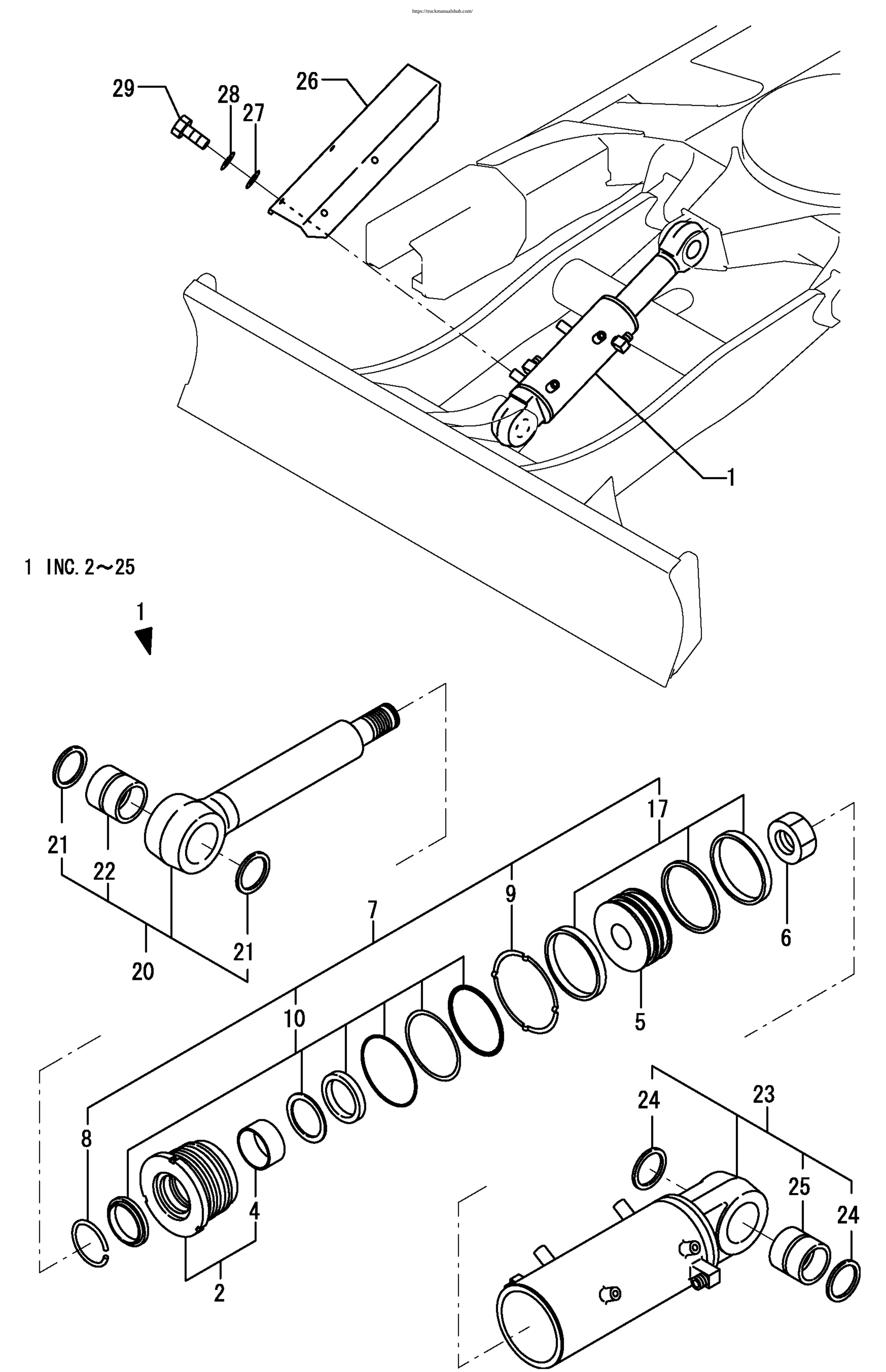

https://truckmanualshub.com/

```
1,1,,172455-72401-1,,"CYLINDER,OFFSET (87)",1,,,,,,,,,,,,,,,,,
2,2,,194145-04810,,"WASHER 10",1,,,,,,,,,,,,,,,,,
3,2,,172020-10370,,"U-NUT M45X3",1,,,,,,,,,,,,,,,,,
4,2,,172020-10760,,"COLLAR, CUSHION",1,,,,,,,,,,,,,,,,,
5,2,,172020-10770,,SPACER,1,,,,,,,,,,,,,,,,,
6,2,,172020-10780,,"COVER, STOPPER",1,,,,,,,,,,,,,,,,,
7,2,,172020-10790,,STOPPER,2,,,,,,,,,,,,,,,,,
8,2,,172455-71510-1,,"TUBE,OFFSET     (87)",1,,,,,,,,,,,,,,,,,
9,2,,172455-71550,,"ROD,OFFSET",1,,,,,,,,,,,,,,,,,
10,2,,172455-71580,,"HEAD 110 65",1,,,,,,,,,,,,,,,,,
12,3,,24550-065400,,"BUSH 65X40,DRIVE",1,,,,,,,,,,,,,,,,,
13,2,,172455-71600-1,,"OFFSET PLUMBING (87)",1,,,,,,,,,,,,,,,,,
14,2,,172455-71640,,"PLUNGER,CUSHION 72B",1,,,,,,,,,,,,,,,,,
15,2,,172455-71650,,"PISTON 110 45",1,,,,,,,,,,,,,,,,,
16,2,,172455-71690,,"PLUNGER,CHSHION 50B",1,,,,,,,,,,,,,,,,,
17,2,,172455-71750,,"CYLINDER SEAL KIT",1,,,,,,,,,,,,,,,,,
18,3,,172020-10380,,"RING 82,SPRING",1,,,,,,,,,,,,,,,,,
19,3,,172455-71760,,"HEAD SEAL KIT",1,,,,,,,,,,,,,,,,,
26,3,,172455-71770,,"PISTON SEAL KIT",1,,,,,,,,,,,,,,,,,
30,3,,172162-72250,,"WASHER,LOCK",1,,,,,,,,,,,,,,,,,
31,2,,172142-76180,,JOINT,1,,,,,,,,,,,,,,,,,
33,3,,24315-000140,,"O-RING 1B P-14.0",1,,,,,,,,,,,,,,,,,
34,2,,22242-000340,,"CIRCLIP   34",1,,,,,,,,,,,,,,,,,
35,2,,26013-100252,,"BOLT W/WASHER M10X25",1,,,,,,,,,,,,,,,,,
```

https://truckmanualshub.com/

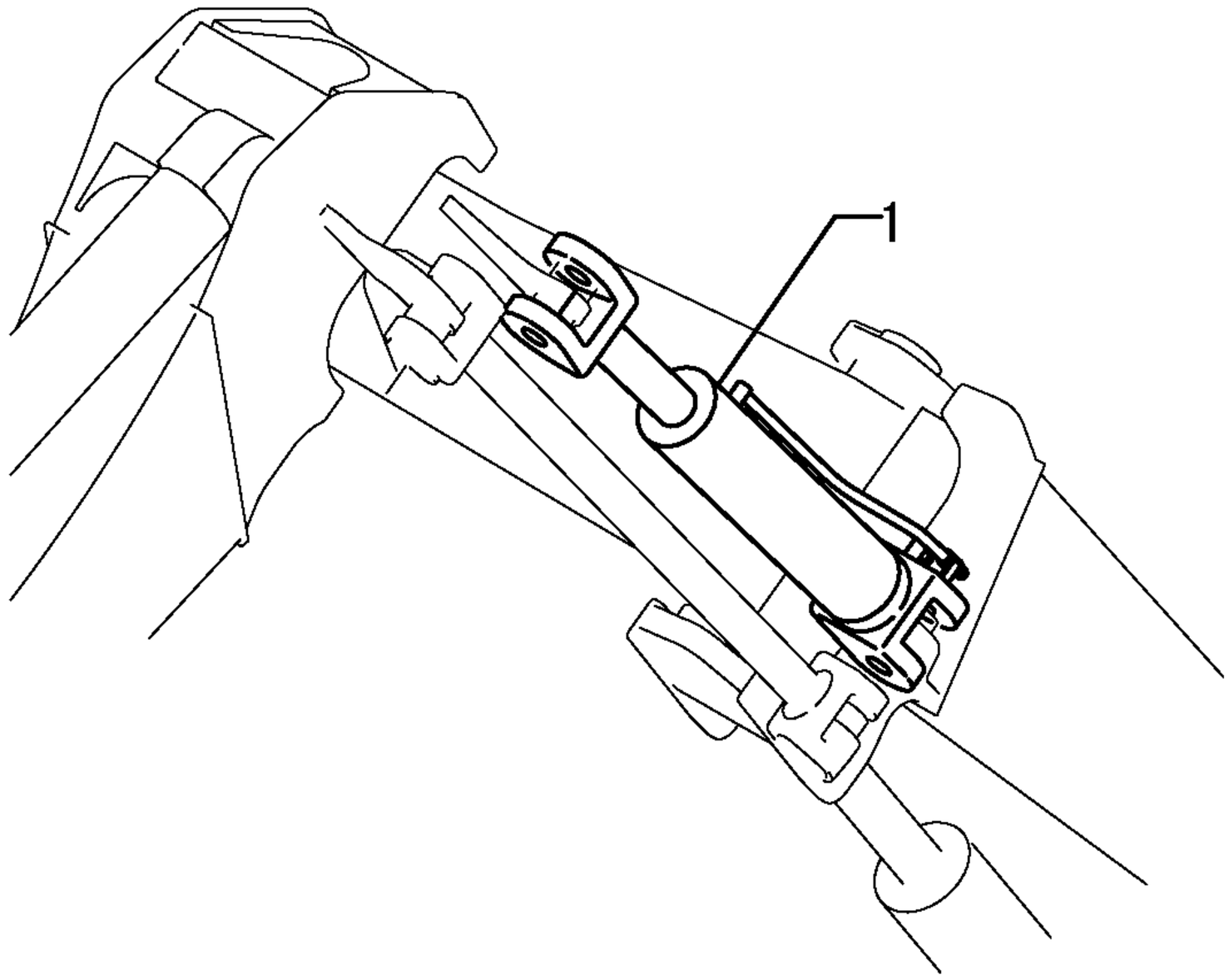

1 INC. 2～35

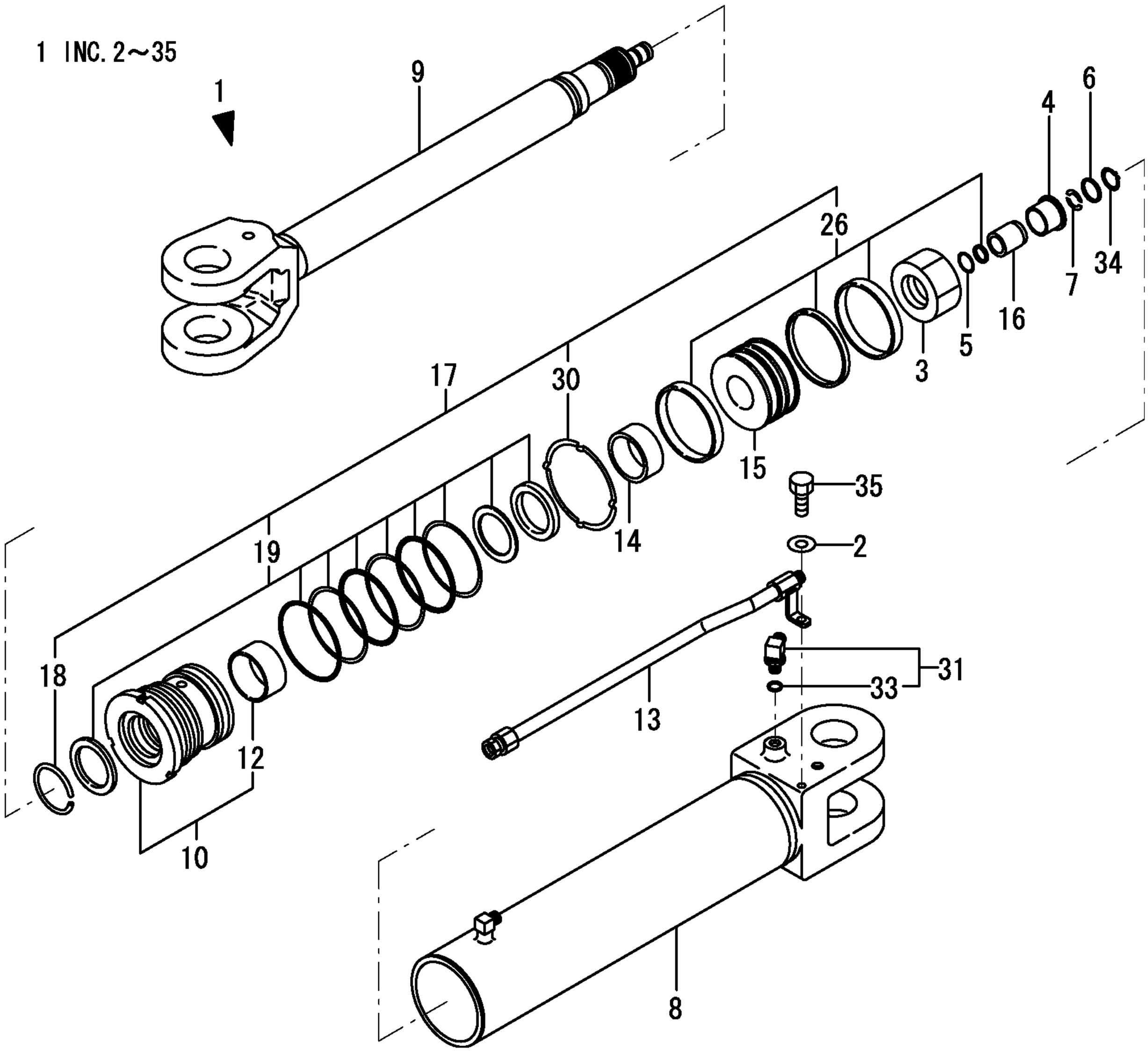

https://truckmanualshub.com/

```
1,1,,172479-73300,,"MOTOR ASSY,DRIVE",2,,,,,,,,,,,,,,,,,
2,2,,172479-73010,,"SEAL KIT",2,,,,,,,,,,,,,,,,,
3,3,,172479-73450,,O-RING,2,,,,,,,,,,,,,,,,,
4,3,,172479-73460,,"FLOATING SEAL KIT",2,,,,,,,,,,,,,,,,,,
5,3,,172479-73630,,"OIL SEAL",2,,,,,,,,,,,,,,,,,
6,3,,172479-73640,,O-RING,2,,,,,,,,,,,,,,,,,
7,3,,172479-73650,,O-RING,2,,,,,,,,,,,,,,,,,
8,3,,172479-73910,,"PISTON SEAL",4,,,,,,,,,,,,,,,,,
9,3,,172479-73920,,"BACK UP RING",8,,,,,,,,,,,,,,,,,
10,3,,172479-73930,,"BACK UP RING",8,,,,,,,,,,,,,,,,,
11,3,,24315-000080,,"O-RING 1B P-8.0",4,,,,,,,,,,,,,,,,,
12,3,,24315-000080,,"O-RING 1B P-8.0",4,,,,,,,,,,,,,,,,,
13,3,,24315-000120,,"O-RING 1B P-12.0",4,,,,,,,,,,,,,,,,,
14,3,,24315-000140,,"O-RING 1B P-14.0",6,,,,,,,,,,,,,,,,,
15,3,,24315-000140,,"O-RING 1B P-14.0",8,,,,,,,,,,,,,,,,,
16,3,,24315-000180,,"O-RING 1B P-18.0",12,,,,,,,,,,,,,,,,,,
17,3,,24315-000260,,"O-RING 1B P-26.0",4,,,,,,,,,,,,,,,,,
18,3,,24321-002300,,"O-RING 1A G-230.0",2,,,,,,,,,,,,,,,,,,
19,2,,172479-73310,,HUB,2,,,,,,,,,,,,,,,,,
20,2,,172479-73320,,"SPINDLE KIT",2,,,,,,,,,,,,,,,,,
21,3,,172479-73330,,SPINDLE,2,,,,,,,,,,,,,,,,,
22,3,,172479-73340,,BOLT,6,,,,,,,,,,,,,,,,,
23,2,,172479-73350,,"RV GEAR",2,,,,,,,,,,,,,,,,,
24,3,,172479-73360,,"RV GEAR KIT",2,,,,,,,,,,,,,,,,,
25,2,,172479-73370,,"INPUT GEAR",2,,,,,,,,,,,,,,,,,
26,2,,172479-73380,,"SPAR GEAR KIT",2,,,,,,,,,,,,,,,,,,
27,2,,172479-73390,,COVER,2,,,,,,,,,,,,,,,,,
28,2,,172479-73400,,COUPLING,2,,,,,,,,,,,,,,,,,
29,2,,172479-73410,,PIN,56,,,,,,,,,,,,,,,,,
30,2,,172479-73420,,RING,2,,,,,,,,,,,,,,,,,
31,2,,172479-73430,,"SNAP RING",6,,,,,,,,,,,,,,,,,
32,2,,172479-73440,,BEARING,4,,,,,,,,,,,,,,,,,
33,2,,172479-73470,,NUT,2,,,,,,,,,,,,,,,,,
34,2,,172479-73480,,PLUG,4,,,,,,,,,,,,,,,,,
35,2,,172479-73490,,"PIN,STRAIGHT",4,,,,,,,,,,,,,,,,,,
36,2,,172479-73500,,SHAFT,2,,,,,,,,,,,,,,,,,
37,2,,172479-73510,,"SWASH PLATE",2,,,,,,,,,,,,,,,,,
38,2,,172479-73520,,"CYLINDER BLOCK",2,,,,,,,,,,,,,,,,,,
39,2,,172479-73530,,"PISTON KIT",2,,,,,,,,,,,,,,,,,
40,2,,172479-73540,,"RETAINER PLATE",2,,,,,,,,,,,,,,,,,,
41,2,,172479-73550,,"THRUST BALL",2,,,,,,,,,,,,,,,,,
42,2,,172479-73560,,"TIMING PLATE",2,,,,,,,,,,,,,,,,,,
43,2,,172479-73570,,WASHER,4,,,,,,,,,,,,,,,,,
44,2,,172479-73580,,PISTON,2,,,,,,,,,,,,,,,,,
45,2,,172479-73590,,SPRING,16,,,,,,,,,,,,,,,,,
46,2,,172479-73600,,SPRING,2,,,,,,,,,,,,,,,,,
47,2,,172479-73610,,"PLATE,FRICTION",4,,,,,,,,,,,,,,,,,,
48,2,,172479-73620,,PLATE,4,,,,,,,,,,,,,,,,,
49,2,,172479-73660,,CLIP,2,,,,,,,,,,,,,,,,,
50,2,,172479-73670,,BEARING,2,,,,,,,,,,,,,,,,,
51,2,,172479-73680,,BEARING,6,,,,,,,,,,,,,,,,,
52,2,,172479-73690,,PISTON,2,,,,,,,,,,,,,,,,,
53,2,,172479-73700,,PIVOT,4,,,,,,,,,,,,,,,,,
54,2,,172479-73710,,"PIN,STRAIGHT",4,,,,,,,,,,,,,,,,,,
55,2,,172479-73720,,SPRING,2,,,,,,,,,,,,,,,,,
56,2,,172479-73730,,"FLANGE,REAR",2,,,,,,,,,,,,,,,,,
57,3,,172479-73740,,"FLANGE,REAR KIT",2,,,,,,,,,,,,,,,,,,
58,4,,172479-73750,,PLUG,2,,,,,,,,,,,,,,,,,
59,4,,172479-73760,,PLUG,18,,,,,,,,,,,,,,,,,
60,3,,172479-73770,,"SPOOL KIT",2,,,,,,,,,,,,,,,,,,
61,3,,172479-73780,,PLUG,4,,,,,,,,,,,,,,,,,
62,3,,172479-73790,,PLUG,4,,,,,,,,,,,,,,,,,
63,3,,172479-73800,,"SPRING RETAINER",4,,,,,,,,,,,,,,,,,,
```

https://truckmanualshub.com/

```
64,3,,172479-73810,,VALVE,4,,,,,,,,,,,,,,,,,
65,3,,172479-73820,,SPRING,4,,,,,,,,,,,,,,,,,
66,3,,172479-73830,,SPRING,4,,,,,,,,,,,,,,,,,
67,3,,172479-73840,,SPRING,2,,,,,,,,,,,,,,,,,
68,3,,172479-73850,,PLUG,8,,,,,,,,,,,,,,,,,
69,3,,172479-73860,,PLUG,4,,,,,,,,,,,,,,,,,
70,3,,172479-73870,,VALVE,4,,,,,,,,,,,,,,,,,
71,3,,172479-73880,,SLEEVE,4,,,,,,,,,,,,,,,,,
72,3,,172479-73890,,PLUG,4,,,,,,,,,,,,,,,,,
73,3,,172479-73900,,SPRING,4,,,,,,,,,,,,,,,,,
74,3,,172479-73940,,ORIFICE,4,,,,,,,,,,,,,,,,,
75,3,,24190-100001,,"BALL 5/16, STEEL",4,,,,,,,,,,,,,,,,,
76,2,,172479-73950,,"PIN,STRAIGHT",4,,,,,,,,,,,,,,,,,
77,2,,22242-000190,,"CIRCLIP   19",2,,,,,,,,,,,,,,,,,
78,2,,22242-000250,,"CIRCLIP 25S",12,,,,,,,,,,,,,,,,,
79,2,,24101-063014,,"BALL BEARING",2,,,,,,,,,,,,,,,,,
80,2,,24190-120001,,"BALL 3/8,STEEL",2,,,,,,,,,,,,,,,,,
81,2,,26450-120302,,"BOLT         M12X30",12,,,,,,,,,,,,,,,,,
82,1,,22217-160000,,"SPRING WASHER 16",24,,,,,,,,,,,,,,,,,
83,1,,26116-160452,,"BOLT M16X 45 PLATED",24,,,,,,,,,,,,,,,,,
```

https://truckmanualshub.com/

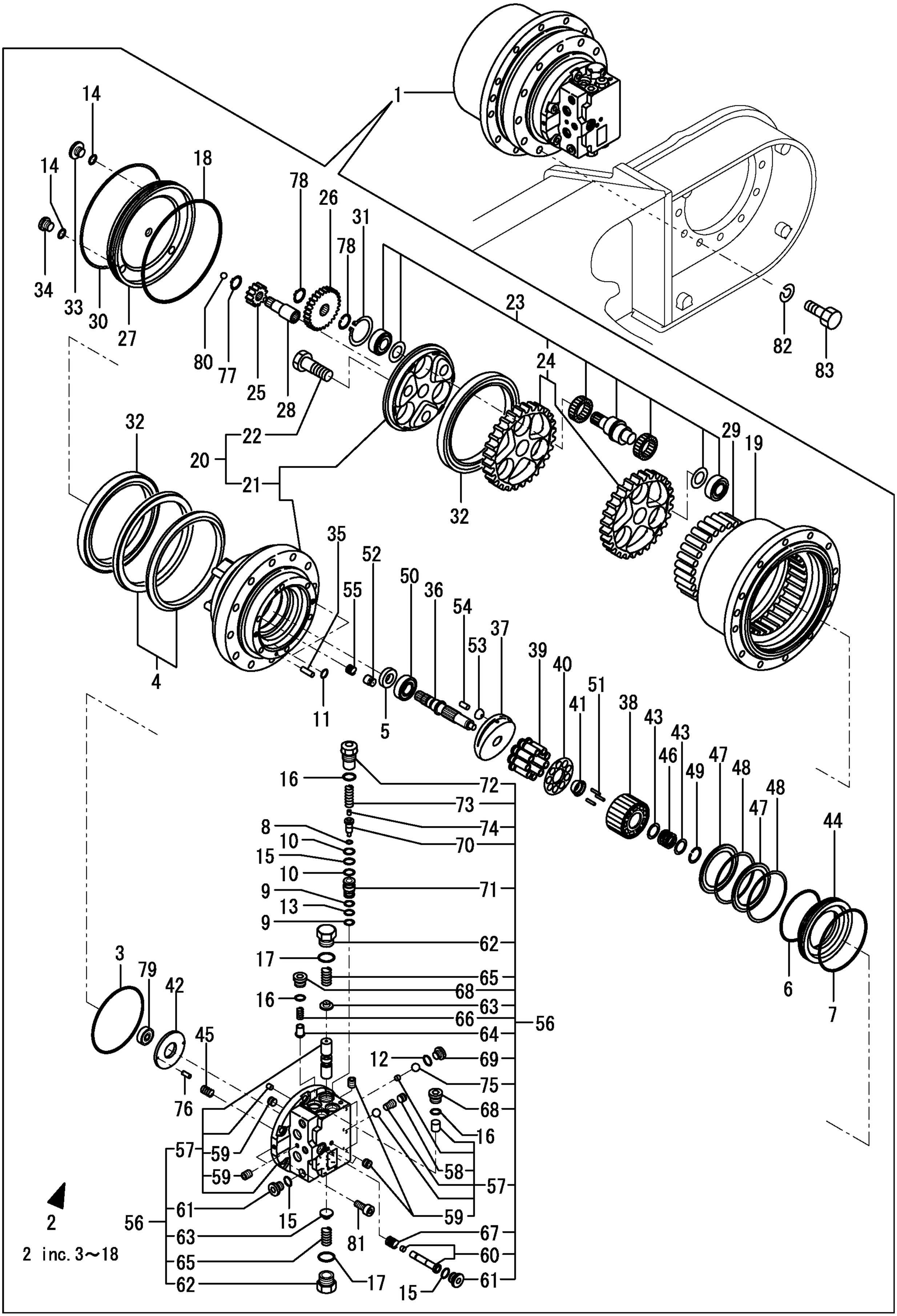

```
1,1,,172187-73311,,"MOTOR ASSY, TURNING",1,,,,,,,,,,,,,,,,,,
2,2,,172187-73370,,"REDUCTION GEAR",1,,,,,,,,,,,,,,,,,,
3,3,,172162-71480,,PLATE,1,,,,,,,,,,,,,,,,,,
4,3,,172162-71490,,"BEARING,TAPER ROLLER",1,,,,,,,,,,,,,,,,,,,
5,3,,172162-71500,,"GEAR CASE",1,,,,,,,,,,,,,,,,,,
6,3,,172162-71510,,"PLUG PT1/8",2,,,,,,,,,,,,,,,,,,
7,3,,172162-71520,,"SEAL,OIL",1,,,,,,,,,,,,,,,,,,
8,3,,172162-71530,,"BEARING,TAPER ROLLER",1,,,,,,,,,,,,,,,,,,,
9,3,,172162-71540,,PIN,2,,,,,,,,,,,,,,,,,,
10,3,,172162-71550,,"GEAR,RING",1,,,,,,,,,,,,,,,,,,
11,3,,172162-71560,,"GEAR 4,SPUR",1,,,,,,,,,,,,,,,,,,
12,3,,172162-71570,,"GEAR,SUN",1,,,,,,,,,,,,,,,,,,
13,3,,172162-71580,,"HOLDER 1 COMPL.",1,,,,,,,,,,,,,,,,,,
14,3,,172162-71590,,"HOLDER 2 COMPL.",1,,,,,,,,,,,,,,,,,,
15,4,,172162-71600,,"BUSH 2",3,,,,,,,,,,,,,,,,,,
16,4,,172162-71610,,"SHAFT 2",3,,,,,,,,,,,,,,,,,,
17,4,,172162-71620,,"SPUR GEAR 5",3,,,,,,,,,,,,,,,,,,
18,4,,172162-71630,,"THRUST PLATE",3,,,,,,,,,,,,,,,,,,
19,4,,172162-71640,,"SPRING PIN",3,,,,,,,,,,,,,,,,,,
20,4,,172162-71650,,"HOLDER 2",1,,,,,,,,,,,,,,,,,,
21,3,,172162-71660,,COLLAR,2,,,,,,,,,,,,,,,,,,
22,3,,172162-71670,,"PLUG PT3/8",1,,,,,,,,,,,,,,,,,,
23,3,,172187-73380,,SHAFT,1,,,,,,,,,,,,,,,,,,
24,3,,172187-73390,,COLLAR,1,,,,,,,,,,,,,,,,,,
25,3,,26450-120952,,"BOLT M12X95,HEX.SCKT",6,,,,,,,,,,,,,,,,,,
26,2,,172187-73411,,"MOTOR ASSY, HYD.OIL",1,,,,,,,,,,,,,,,,,,
27,3,,172162-71711,,"BEARING, NEEDLE",1,,,,,,,,,,,,,,,,,,
28,3,,172162-71720,,"PLATE,FRICTION",1,,,,,,,,,,,,,,,,,,
29,3,,172162-71730,,PLATE,1,,,,,,,,,,,,,,,,,,
30,3,,172162-71780,,"PLUG PT1/4",2,,,,,,,,,,,,,,,,,,
31,3,,172162-71820,,SPRING,18,,,,,,,,,,,,,,,,,,
32,3,,172162-71830,,PISTON,1,,,,,,,,,,,,,,,,,,
33,3,,172162-71850,,SPRING,1,,,,,,,,,,,,,,,,,,
34,3,,172162-71860,,"PLATE,RETURN",1,,,,,,,,,,,,,,,,,,
35,3,,172162-71870,,"PLATE,CAM",1,,,,,,,,,,,,,,,,,,
36,3,,172162-71880,,"GAUGE COMP.,LEVEL",1,,,,,,,,,,,,,,,,,,
37,3,,172162-71900,,COLLAR,1,,,,,,,,,,,,,,,,,,
38,3,,172162-71910,,CAP,1,,,,,,,,,,,,,,,,,,
39,3,,172162-71920,,"VALVE COMP.,BYPASS",2,,,,,,,,,,,,,,,,,,
40,3,,172162-71960,,"PIN,STRAIGHT",2,,,,,,,,,,,,,,,,,,
41,3,,172176-73351,,"BALANCE PLATE",1,,,,,,,,,,,,,,,,,,
42,3,,172176-73360,,PISTON,2,,,,,,,,,,,,,,,,,,
43,3,,172176-73370,,"TEFLON RING",2,,,,,,,,,,,,,,,,,,
44,3,,172187-73420,,"SEAL KIT",1,,,,,,,,,,,,,,,,,,
45,4,,172162-71740,,O-RING,1,,,,,,,,,,,,,,,,,,
46,4,,172162-71760,,O-RING,1,,,,,,,,,,,,,,,,,,
47,4,,172162-71890,,"OIL SEAL",1,,,,,,,,,,,,,,,,,,
48,4,,172162-71930,,RING,2,,,,,,,,,,,,,,,,,,
49,4,,172162-71950,,"RING, BACK UP",2,,,,,,,,,,,,,,,,,,
50,4,,172164-73860,,O-RING,1,,,,,,,,,,,,,,,,,,
51,4,,24315-000140,,"O-RING 1B P-14.0",1,,,,,,,,,,,,,,,,,,
52,4,,24315-000210,,"O-RING 1B P 21",2,,,,,,,,,,,,,,,,,,
53,4,,24315-000260,,"O-RING 1B P-26.0",2,,,,,,,,,,,,,,,,,,
54,3,,172165-73430,,BEARING,1,,,,,,,,,,,,,,,,,,
55,3,,172187-73430,,TIMER,1,,,,,,,,,,,,,,,,,,
56,3,,172165-73441,,BUSHING,4,,,,,,,,,,,,,,,,,,
57,3,,172187-73440,,"RELIEF, 210-60",2,,,,,,,,,,,,,,,,,,
58,3,,172165-73451,,"TEFLON RING",4,,,,,,,,,,,,,,,,,,
59,3,,172165-73461,,WAVE,4,,,,,,,,,,,,,,,,,,
60,3,,172165-73480,,"SNAP RING",1,,,,,,,,,,,,,,,,,,
61,3,,26450-120302,,"BOLT         M12X30",4,,,,,,,,,,,,,,,,,,
62,1,,172187-73340,,"FUEL PIPE",1,,,,,,,,,,,,,,,,,,
63,1,,172455-76130,,DRAIN,1,,,,,,,,,,,,,,,,,,
```

https://truckmanualshub.com/

```
64,1,,172455-78120,,"HOSE G806AY032",1,,,,,,,,,,,,,,,,,
65,1,,22217-160000,,"SPRING WASHER 16",8,,,,,,,,,,,,,,,,,,
66,1,,23001-016000,,"HOSE CLAMP 16",1,,,,,,,,,,,,,,,,,
67,1,,23871-030000,,"PLUG PT3/8,SCREW",1,,,,,,,,,,,,,,,,,,
68,1,,23871-040000,,"PLUG PT1/2,SCREW",1,,,,,,,,,,,,,,,,,,
69,1,,26013-100162,,"BOLT M10X 16",2,,,,,,,,,,,,,,,,,
70,1,,26116-160502,,"BOLT M16X 50 PLATED",8,,,,,,,,,,,,,,,,,,
```

https://truckmanualshub.com/

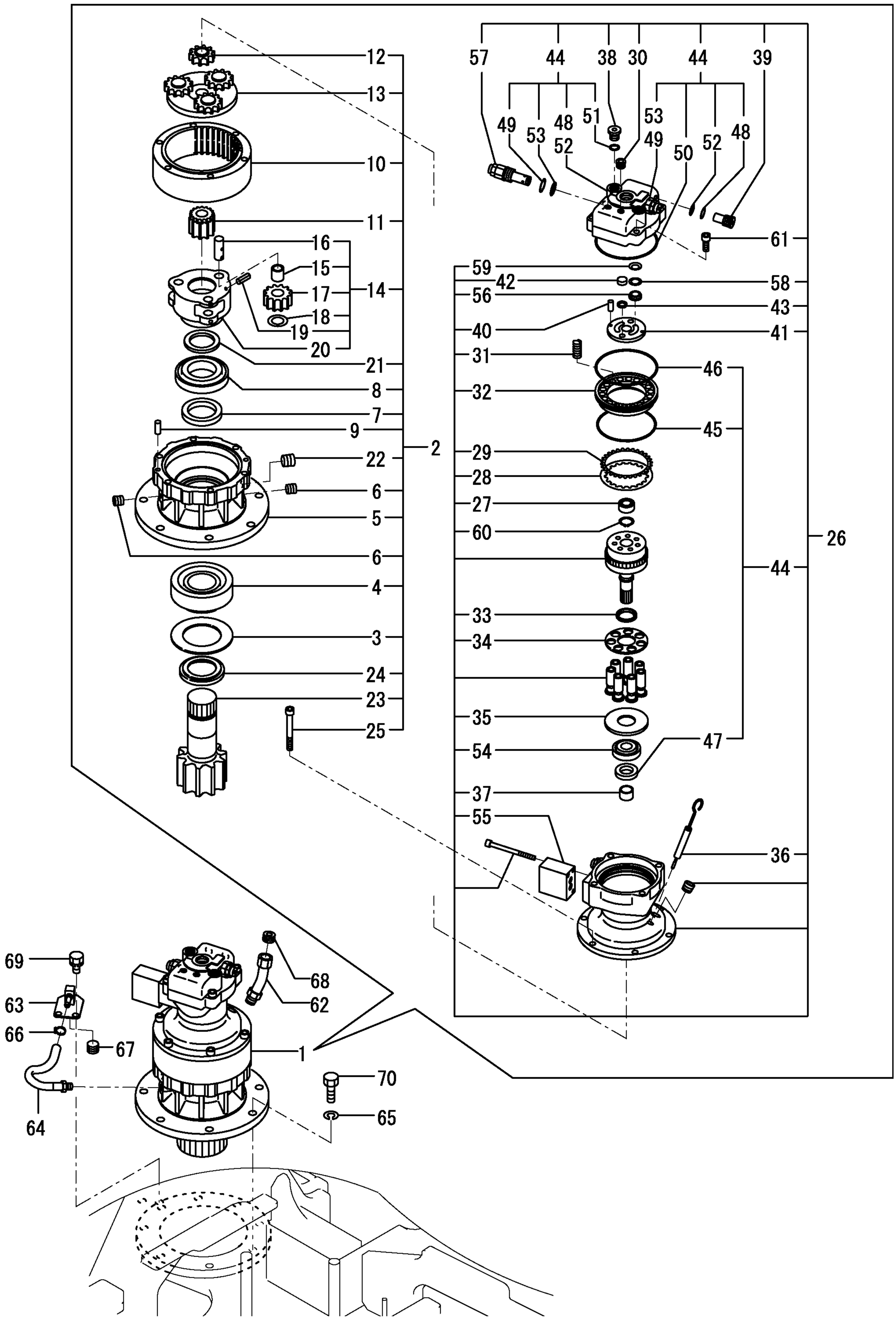

https://truckmanualshub.com/

```
1,1,,172478-73600,,ACCUMULATOR,1,,,,,,,,,,,,,,,,,
2,1,,172478-73610,,BRACKET,1,,,,,,,,,,,,,,,,,,,
3,1,,172478-73630,,CLAMP,1,,,,,,,,,,,,,,,,,,,
4,1,,172141-76180,,CONNECTOR,1,,,,,,,,,,,,,,,,,,,
5,2,,24315-000110,,"O-RING 1B P-11.0",1,,,,,,,,,,,,,,,,,,,
6,1,,172478-76200,,CONNECTOR,1,,,,,,,,,,,,,,,,,,,
7,1,,172467-78250,,"HOSE F403BC074S",1,,,,,,,,,,,,,,,,,,,
8,1,,26013-100202,,"BOLT W/WASHER M10X20",3,,,,,,,,,,,,,,,,,,,,,
9,1,,26014-080162,,"BOLT M 8X 16",2,,,,,,,,,,,,,,,,,,,,
```

https://truckmanualshub.com/

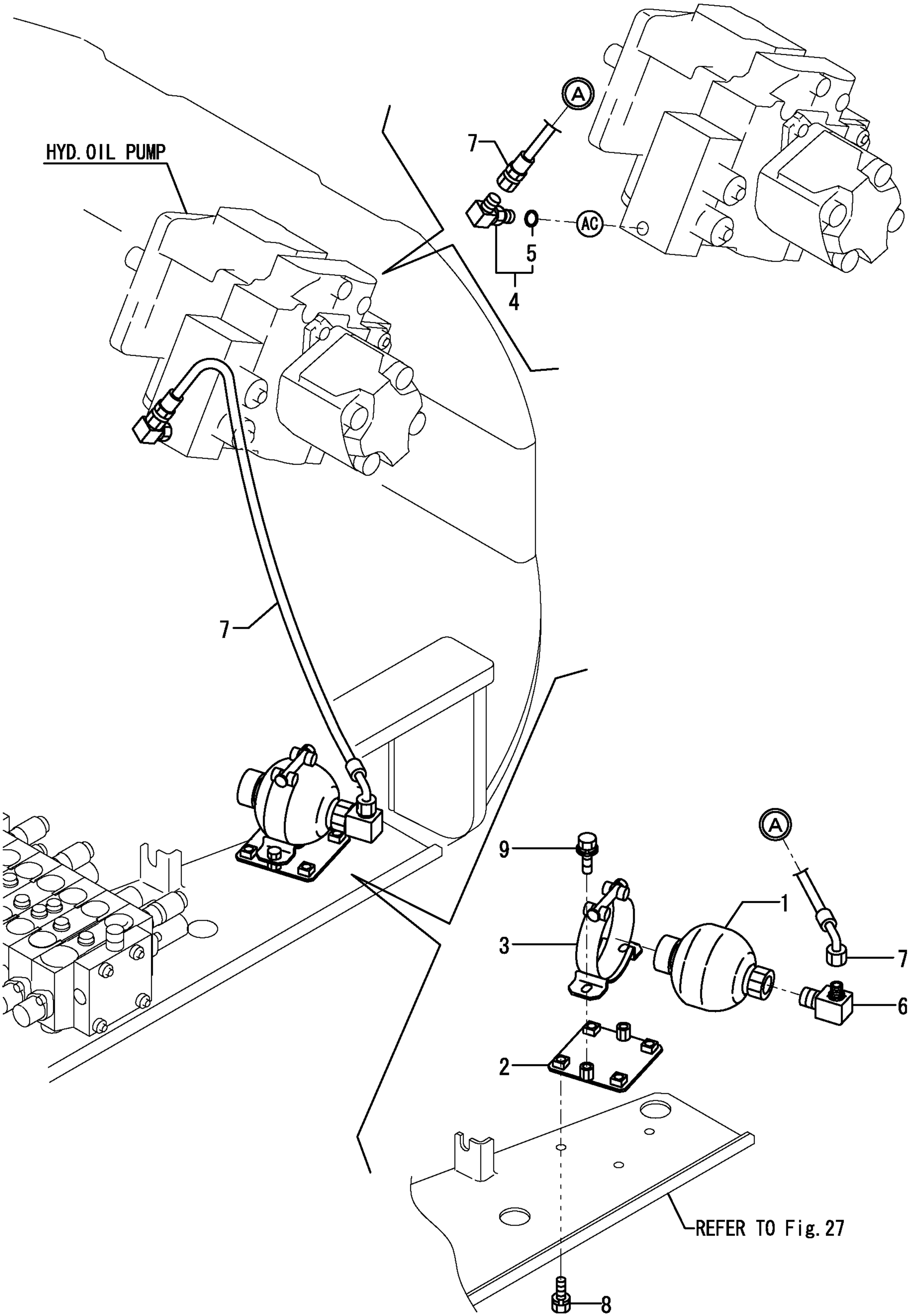

https://truckmanualshub.com/

```
1,1,,172187-73801,,"JOINT ASSY, SWIVEL",1,,,,,,,,,,,,,,,,,
2,2,,172147-73810,,SHAFT,1,,,,,,,,,,,,,,,,,
3,2,,172187-73820,,"SEAL KIT, SWIVEL",1,,,,,,,,,,,,,,,,,
4,3,,172423-73820,,"SEAL, SWIVEL",8,,,,,,,,,,,,,,,,,
5,3,,24311-000800,,"O-RING 1A P-80.0",1,,,,,,,,,,,,,,,,,
6,3,,24311-001000,,"O-RING 1A P-100.0",1,,,,,,,,,,,,,,,,,
7,3,,24321-000950,,"O-RING 1A G-95.0",1,,,,,,,,,,,,,,,,,
8,2,,172147-73830,,"HUB, SWIVEL",1,,,,,,,,,,,,,,,,,
9,2,,172147-73850,,PLATE,1,,,,,,,,,,,,,,,,,
10,2,,172122-73860,,"SPACER, SWIVEL",1,,,,,,,,,,,,,,,,,
11,2,,172122-73870,,"THRUST WASHER",1,,,,,,,,,,,,,,,,,
12,2,,22242-000700,,"CIRCLIP   70",1,,,,,,,,,,,,,,,,,
13,2,,23871-030000,,"PLUG PT3/8,SCREW",4,,,,,,,,,,,,,,,,,
14,2,,26013-100402,,"BOLT M10X 40",4,,,,,,,,,,,,,,,,,
15,1,,22217-120000,,"SPRING WASHER",4,,,,,,,,,,,,,,,,,
16,1,,26116-120902,,"BOLT M12X 90 PLATED",4,,,,,,,,,,,,,,,,,
```

https://truckmanualshub.com/

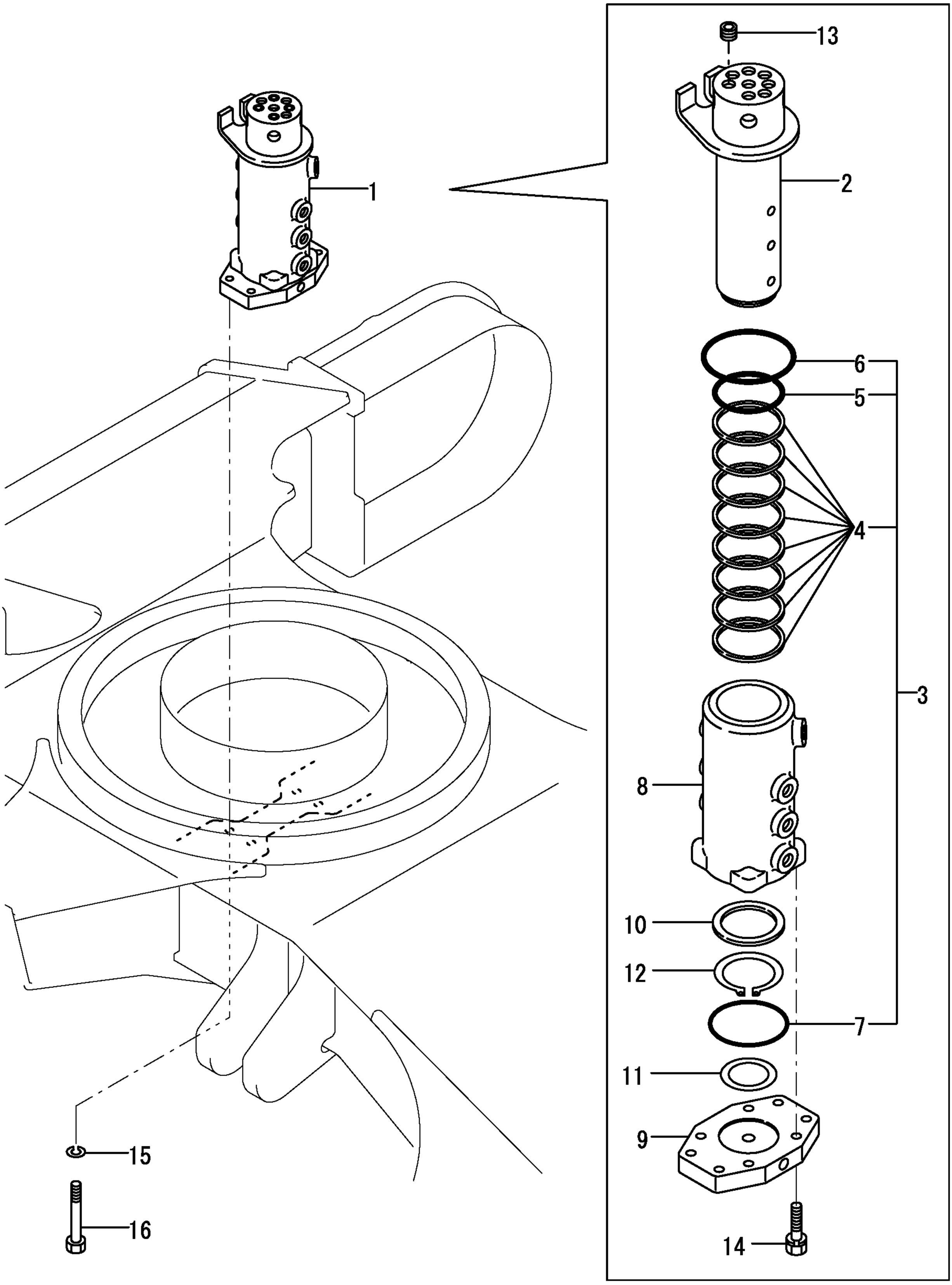

```
1,1,,172489-74100,,"VALVE ASSY, CONTROL",1,,,,,,,,,,,,,,,,,
2,2,,172422-74110,,NUT,8,,,,,,,,,,,,,,,,
3,2,,172489-74110,,"TIE ROD",4,,,,,,,,,,,,,,,,,
4,2,,172489-74250,,"SECTION ASSY, BUCKET",1,,,,,,,,,,,,,,,,,,
5,3,,172489-74150,,"SECTION, BUCKET",1,,,,,,,,,,,,,,,,,
6,4,,172151-74060,,"BOLT, SOCKET HEAD",4,,,,,,,,,,,,,,,,,,
7,4,,172478-74180,,"SEAT,SPRING",2,,,,,,,,,,,,,,,,,
8,4,,172175-74220,,"SEAT, SPRING",2,,,,,,,,,,,,,,,,,,
9,4,,172151-74320,,O-RING,2,,,,,,,,,,,,,,,,,
10,4,,172455-74390,,CAP,2,,,,,,,,,,,,,,,,,
11,4,,172455-74410,,SPRING,2,,,,,,,,,,,,,,,,,
12,4,,172455-74420,,POPPET,1,,,,,,,,,,,,,,,,,
13,4,,172455-74430,,"POPPET, VALVE",1,,,,,,,,,,,,,,,,,
14,4,,172455-74440,,SPRING,2,,,,,,,,,,,,,,,,,
15,4,,172455-74450,,PLUG,2,,,,,,,,,,,,,,,,,
16,4,,172455-74460,,PACKING,2,,,,,,,,,,,,,,,,,
17,4,,24321-000700,,"O-RING 1A G70.0,NBR",1,,,,,,,,,,,,,,,,,
18,3,,172489-74160,,"ANTI POID VALVE ASSY",1,,,,,,,,,,,,,,,,,,
19,4,,172116-74150,,O-RING,1,,,,,,,,,,,,,,,,,
20,4,,172489-74170,,PLUG,1,,,,,,,,,,,,,,,,,
21,4,,172489-74180,,POPPET,1,,,,,,,,,,,,,,,,,
22,4,,172489-74190,,SPRING,1,,,,,,,,,,,,,,,,,
23,4,,172455-74910,,O-RING,1,,,,,,,,,,,,,,,,,
24,4,,172455-74920,,"BACK-UP RING",1,,,,,,,,,,,,,,,,,
25,3,,172478-74400,,"VALVE,RELIEF 280/40",1,,,,,,,,,,,,,,,,,
26,4,,172116-74150,,O-RING,1,,,,,,,,,,,,,,,,,
45,4,,24315-000100,,"O-RING 1B P-10.0",1,,,,,,,,,,,,,,,,,
46,2,,172478-74630,,"SECTION ASSY,4TH",1,,,,,,,,,,,,,,,,,
47,3,,172455-74320,,"SHUTOFF VALVE",2,,,,,,,,,,,,,,,,,
48,4,,172455-74010,,NUT,2,,,,,,,,,,,,,,,,,
49,4,,172455-74020,,PLUG,2,,,,,,,,,,,,,,,,,
50,4,,172455-74030,,O-RING,2,,,,,,,,,,,,,,,,,
51,4,,172455-74040,,POPPET,2,,,,,,,,,,,,,,,,,
52,4,,172116-74150,,O-RING,2,,,,,,,,,,,,,,,,,
53,4,,172455-74990,,"SET SCREW",2,,,,,,,,,,,,,,,,,
54,3,,172478-74440,,PLUG,2,,,,,,,,,,,,,,,,,
55,4,,24315-000110,,"O-RING 1B P-11.0",2,,,,,,,,,,,,,,,,,
56,3,,172478-74460,,"SECTION 4TH",1,,,,,,,,,,,,,,,,,
57,4,,172151-74060,,"BOLT, SOCKET HEAD",4,,,,,,,,,,,,,,,,,
58,4,,172478-74180,,"SEAT,SPRING",2,,,,,,,,,,,,,,,,,
59,4,,172175-74220,,"SEAT, SPRING",2,,,,,,,,,,,,,,,,,,
60,4,,172151-74320,,O-RING,2,,,,,,,,,,,,,,,,,
61,4,,172455-74390,,CAP,2,,,,,,,,,,,,,,,,,
62,4,,172455-74410,,SPRING,2,,,,,,,,,,,,,,,,,
63,4,,172455-74420,,POPPET,1,,,,,,,,,,,,,,,,,
64,4,,172455-74440,,SPRING,2,,,,,,,,,,,,,,,,,
65,4,,172455-74450,,PLUG,2,,,,,,,,,,,,,,,,,
66,4,,172455-74460,,PACKING,2,,,,,,,,,,,,,,,,,
67,4,,172478-74470,,POPPET,1,,,,,,,,,,,,,,,,,
68,3,,172187-74550,,PLUG,2,,,,,,,,,,,,,,,,,
69,4,,24315-000180,,"O-RING 1B P-18.0",2,,,,,,,,,,,,,,,,,
70,1,,26013-100162,,"BOLT M10X 16",3,,,,,,,,,,,,,,,,,
```

https://truckmanualshub.com/

CONTROL VALVE ASSY
172489-74100
Fig. 49 REF. NO. 1
INC Fig. 49 REF. NO. 2～69
Fig. 50～55

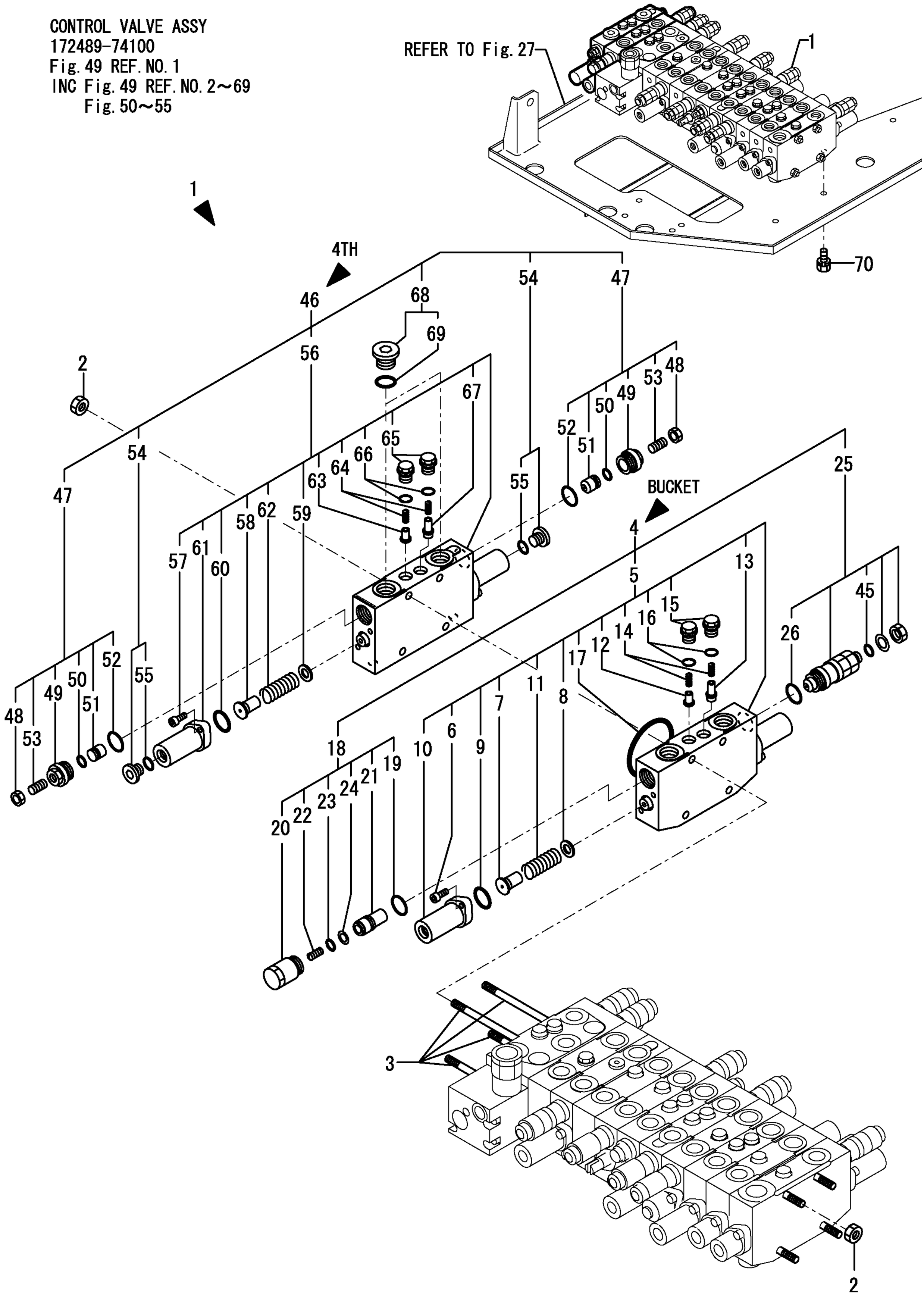

https://truckmanualshub.com/

```
1,2,,172488-74510,,"BOOM SECTION ASSY",1,,,,,,,,,,,,,,,,,
2,3,,172488-74190,,"BOOM-1 SECTION",1,,,,,,,,,,,,,,,,,
3,4,,172151-74060,,"BOLT, SOCKET HEAD",2,,,,,,,,,,,,,,,,,,
4,4,,172478-74180,,"SEAT,SPRING",2,,,,,,,,,,,,,,,,,
5,4,,172488-74200,,"ANTI-DRIFT VALVE",2,,,,,,,,,,,,,,,,,
6,4,,172638-73650,,RING,1,,,,,,1,,,,,,,,,,
7,4,,172116-74150,,O-RING,1,,,,,,1,,,,,,,,,,
9,4,,172455-74590,,POPPET,1,,,,,,1,,,,,,,,,,
10,4,,172455-74600,,PLUG,1,,,,,,1,,,,,,,,,,
12,4,,172455-74620,,SPOOL,1,,,,,,1,,,,,,,,,,
13,4,,172455-74630,,SLEEVE,1,,,,,,1,,,,,,,,,,
14,4,,172455-74640,,SPRING,1,,,,,,1,,,,,,,,,,
15,4,,172455-74650,,SPRING,1,,,,,,1,,,,,,,,,,
16,4,,172455-74660,,PACKING,1,,,,,,1,,,,,,,,,,
17,4,,172455-74670,,PACKING,1,,,,,,1,,,,,,,,,,
18,4,,172455-74680,,"BACK UP RING",1,,,,,,1,,,,,,,,,,
19,4,,172187-74690,,PLUG,1,,,,,,1,,,,,,,,,,
20,4,,172455-74690,,PACKING,2,,,,,,1,,,,,,,,,,
21,4,,172455-74720,,"SEAT, SPRING",1,,,,,,1,,,,,,,,,,
22,4,,172175-74220,,"SEAT, SPRING",2,,,,,,,,,,,,,,,,,
23,4,,172151-74320,,O-RING,2,,,,,,,,,,,,,,,,,
24,4,,172455-74390,,CAP,1,,,,,,,,,,,,,,,,,
25,4,,172455-74410,,SPRING,2,,,,,,,,,,,,,,,,,
26,4,,172455-74420,,POPPET,2,,,,,,,,,,,,,,,,,
27,4,,172455-74440,,SPRING,2,,,,,,,,,,,,,,,,,
28,4,,172455-74450,,PLUG,2,,,,,,,,,,,,,,,,,
29,4,,172455-74460,,PACKING,2,,,,,,,,,,,,,,,,,
30,4,,172455-74530,,"BOLT,SOCKET HEAD",5,,,,,,,,,,,,,,,,,
31,4,,172187-74540,,PLUG,2,,,,,,,,,,,,,,,,,
32,4,,24315-000170,,"O-RING 1B P 17.0",2,,,,,,,,,,,,,,,,,
33,4,,172455-74550,,POPPET,1,,,,,,,,,,,,,,,,,
34,4,,172455-74560,,SPACER,1,,,,,,,,,,,,,,,,,
35,4,,172455-74570,,O-RING,1,,,,,,,,,,,,,,,,,
36,4,,172455-74580,,"RING,BACK-UP",1,,,,,,,,,,,,,,,,,
37,4,,172187-74630,,SPRING,1,,,,,,,,,,,,,,,,,
38,4,,24321-000700,,"O-RING 1A G70.0,NBR",1,,,,,,,,,,,,,,,,,
39,3,,172478-74400,,"VALVE,RELIEF 280/40",1,,,,,,,,,,,,,,,,,
40,4,,172116-74150,,O-RING,1,,,,,,,,,,,,,,,,,
59,4,,24315-000100,,"O-RING 1B P-10.0",1,,,,,,,,,,,,,,,,,
60,3,,172478-74420,,"VALVE,RELIEF 300/40",1,,,,,,,,,,,,,,,,,
61,4,,172116-74150,,O-RING,1,,,,,,,,,,,,,,,,,
80,4,,24315-000100,,"O-RING 1B P-10.0",1,,,,,,,,,,,,,,,,,
```

https://truckmanualshub.com/

CONTROL VALVE ASSY
172489-74100
Fig. 49 REF. NO. 1
INC Fig. 49 REF. NO. 2～69
Fig. 50～55

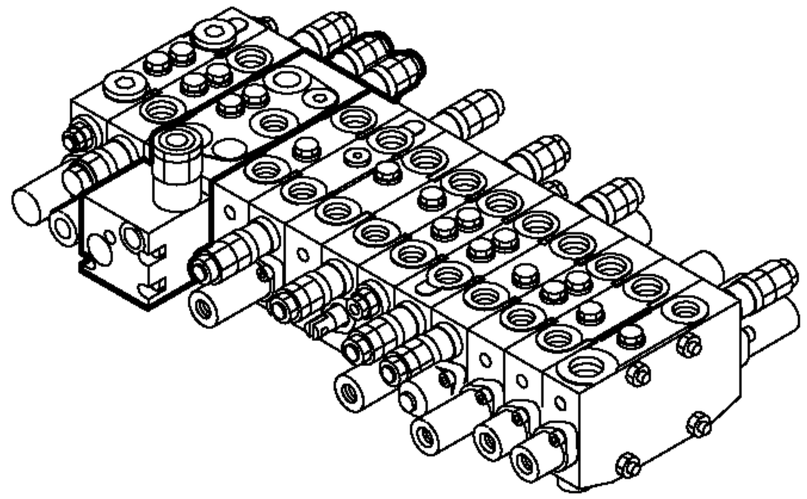

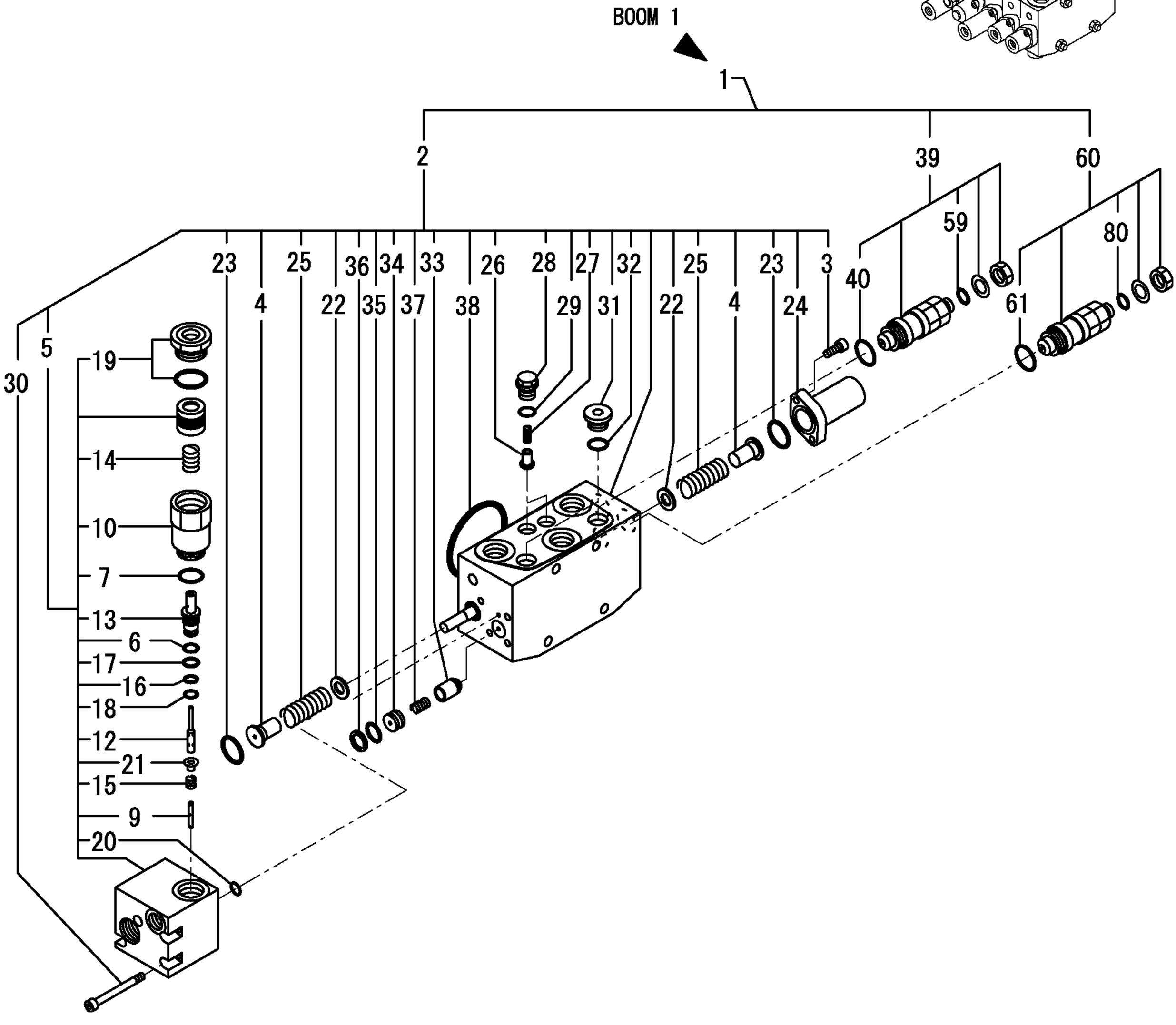

```
1,2,,172455-74130,,"DRIVE,R SECTION ASSY",1,,,,,,,,,,,,,,,,,
2,3,,172151-74060,,"BOLT, SOCKET HEAD",2,,,,,,,,,,,,,,,,,
3,3,,172113-74170,,SPRING,1,,,,,,,,,,,,,,,,,
4,3,,172113-74190,,SPRING,1,,,,,,,,,,,,,,,,,
5,3,,172116-74190,,"PLATE, SEAL",2,,,,,,,,,,,,,,,,,
6,3,,172823-74240,,SCREW,2,,,,,,,,,,,,,,,,,
7,3,,172187-74410,,POPPET,1,,,,,,,,,,,,,,,,,
8,3,,172455-74450,,PLUG,1,,,,,,,,,,,,,,,,,
9,3,,172455-74460,,PACKING,1,,,,,,,,,,,,,,,,,
10,3,,172455-74730,,CAP,1,,,,,,,,,,,,,,,,,
11,3,,172455-74740,,"CAP SCREW",1,,,,,,,,,,,,,,,,,
12,3,,24321-000700,,"O-RING 1A G70.0,NBR",1,,,,,,,,,,,,,,,,,
13,3,,933166-80520,,WIPER,2,,,,,,,,,,,,,,,,,
14,3,,933171-80510,,"SEAT, SPRING",2,,,,,,,,,,,,,,,,,
15,3,,933171-80610,,O-RING,2,,,,,,,,,,,,,,,,,
16,2,,172488-74520,,"INLET SECTION ASSY",1,,,,,,,,,,,,,,,,,
17,3,,172187-74160,,"VALVE, RELIEF",2,,,,,,,,,,,,,,,,,
18,4,,172116-74150,,O-RING,4,,,,,,,,,,,,,,,,,
19,3,,172488-74230,,"INLET SECTION",1,,,,,,,,,,,,,,,,,
20,4,,172151-74060,,"BOLT, SOCKET HEAD",4,,,,,,,,,,,,,,,,,
21,4,,172478-74180,,"SEAT,SPRING",1,,,,,,,,,,,,,,,,,
22,4,,172175-74220,,"SEAT, SPRING",1,,,,,,,,,,,,,,,,,
23,4,,172488-74240,,"CAP ASSY",1,,,,,,,,,,,,,,,,,
24,4,,172151-74320,,O-RING,2,,,,,,,,,,,,,,,,,
25,4,,172422-74330,,PLUG,1,,,,,,,,,,,,,,,,,
26,4,,172455-74470,,SPRING,1,,,,,,,,,,,,,,,,,
27,4,,172455-74480,,CAP,1,,,,,,,,,,,,,,,,,
28,4,,172455-74520,,PISTON,1,,,,,,,,,,,,,,,,,
29,4,,24321-000700,,"O-RING 1A G70.0,NBR",2,,,,,,,,,,,,,,,,,
```

https://truckmanualshub.com/

CONTROL VALVE ASSY
172489-74100
Fig. 49 REF. NO. 1
INC Fig. 49 REF. NO. 2～69
Fig. 50～55

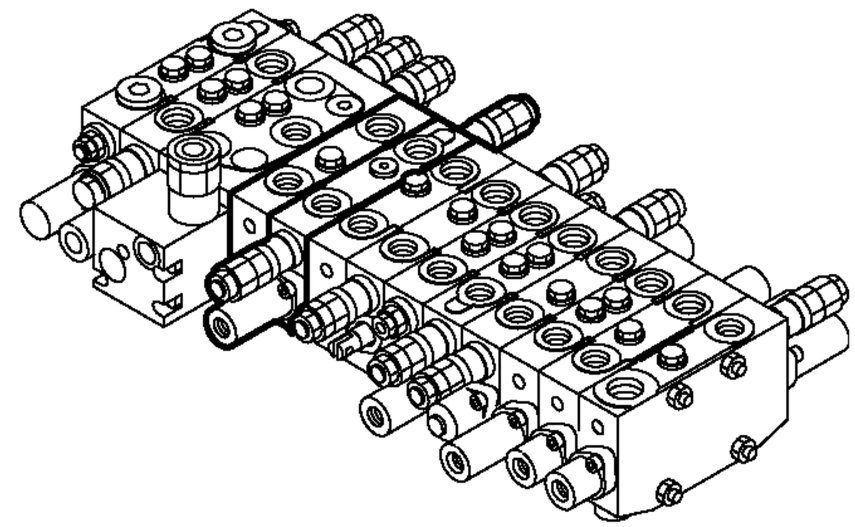

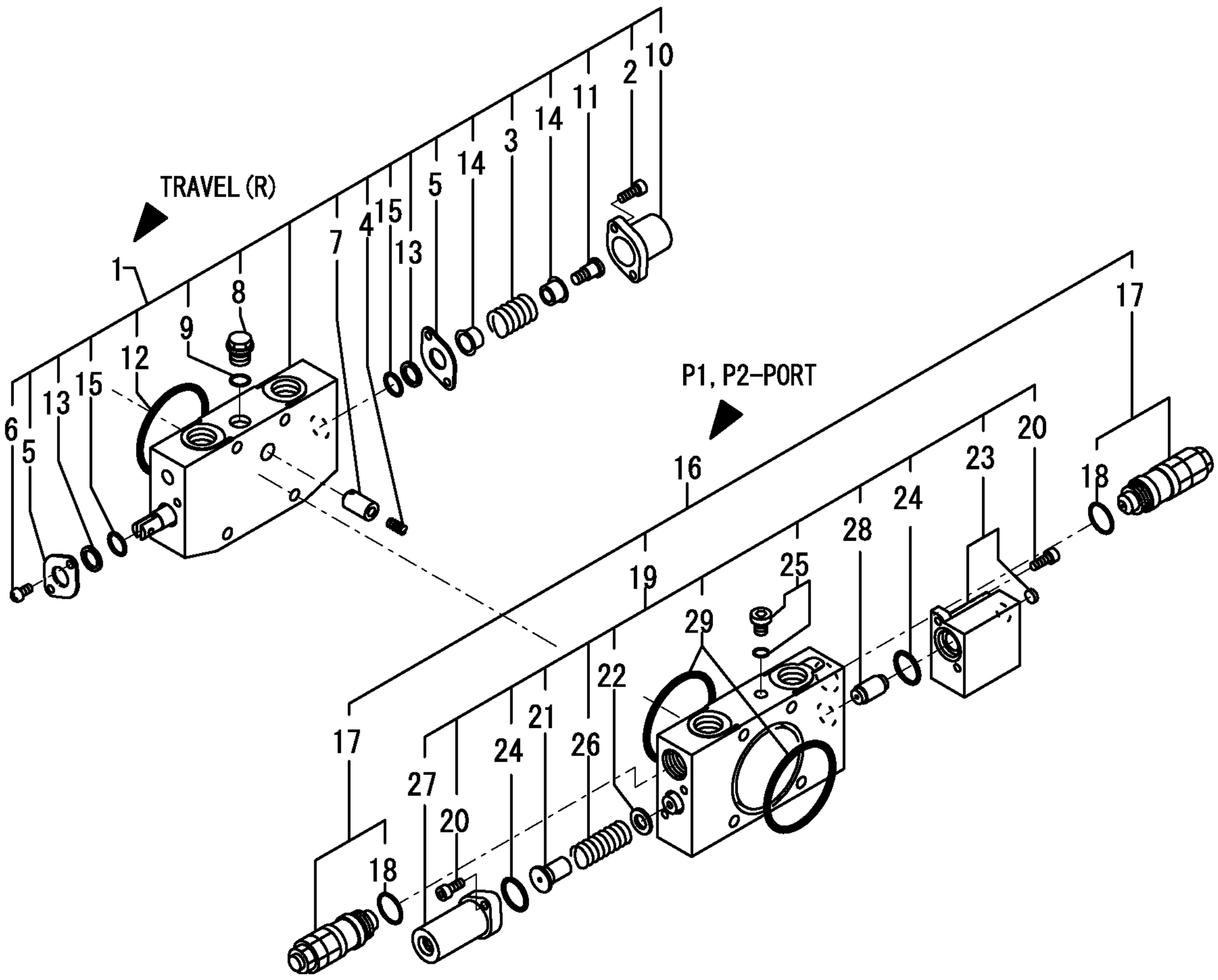

https://truckmanualshub.com/

```
1,2,,172455-74150,,"DRIVE,L SECTION ASSY",1,,,,,,,,,,,,,,,,,
2,3,,172151-74060,,"BOLT, SOCKET HEAD",2,,,,,,,,,,,,,,,,,
3,3,,172113-74170,,SPRING,1,,,,,,,,,,,,,,,,,
4,3,,172116-74190,,"PLATE, SEAL",2,,,,,,,,,,,,,,,,,
5,3,,172823-74240,,SCREW,2,,,,,,,,,,,,,,,,,
6,3,,172455-74450,,PLUG,1,,,,,,,,,,,,,,,,,
7,3,,172455-74460,,PACKING,1,,,,,,,,,,,,,,,,,
8,3,,172455-74730,,CAP,1,,,,,,,,,,,,,,,,,
9,3,,172455-74740,,"CAP SCREW",1,,,,,,,,,,,,,,,,,
10,3,,24321-000700,,"O-RING 1A G70.0,NBR",1,,,,,,,,,,,,,,,,,
11,3,,933166-80520,,WIPER,2,,,,,,,,,,,,,,,,,
12,3,,933171-80510,,"SEAT, SPRING",2,,,,,,,,,,,,,,,,,
13,3,,933171-80610,,O-RING,2,,,,,,,,,,,,,,,,,
14,2,,172488-74580,,"OFFSET SECTION,CRANE",1,,,,,,,,,,,,,,,,,
15,3,,172488-74350,,"OFF SET SEC",1,,,,,,,,,,,,,,,,,
16,4,,172116-74190,,"PLATE, SEAL",2,,,,,,,,,,,,,,,,,
17,4,,933171-80610,,O-RING,2,,,,,,,,,,,,,,,,,
18,4,,933166-80520,,WIPER,2,,,,,,,,,,,,,,,,,
19,4,,172455-74730,,CAP,1,,,,,,,,,,,,,,,,,
20,4,,933171-80510,,"SEAT, SPRING",2,,,,,,,,,,,,,,,,,
21,4,,172455-74740,,"CAP SCREW",1,,,,,,,,,,,,,,,,,
22,4,,172113-74170,,SPRING,1,,,,,,,,,,,,,,,,,
23,4,,172455-74450,,PLUG,1,,,,,,,,,,,,,,,,,
24,4,,172455-74420,,POPPET,1,,,,,,,,,,,,,,,,,
25,4,,172455-74440,,SPRING,1,,,,,,,,,,,,,,,,,
26,4,,172455-74460,,PACKING,1,,,,,,,,,,,,,,,,,
27,4,,24321-000700,,"O-RING 1A G70.0,NBR",1,,,,,,,,,,,,,,,,,
28,4,,172823-74240,,SCREW,2,,,,,,,,,,,,,,,,,
29,4,,172151-74060,,"BOLT, SOCKET HEAD",2,,,,,,,,,,,,,,,,,
30,3,,172478-74400,,"VALVE,RELIEF 280/40",2,,,,,,,,,,,,,,,,,
31,4,,172116-74150,,O-RING,2,,,,,,,,,,,,,,,,,
50,4,,24315-000100,,"O-RING 1B P-10.0",2,,,,,,,,,,,,,,,,,
```

https://truckmanualshub.com/

CONTROL VALVE ASSY
172489-74100
Fig. 49 REF. NO. 1
INC Fig. 49 REF. NO. 2～69
Fig. 50～55

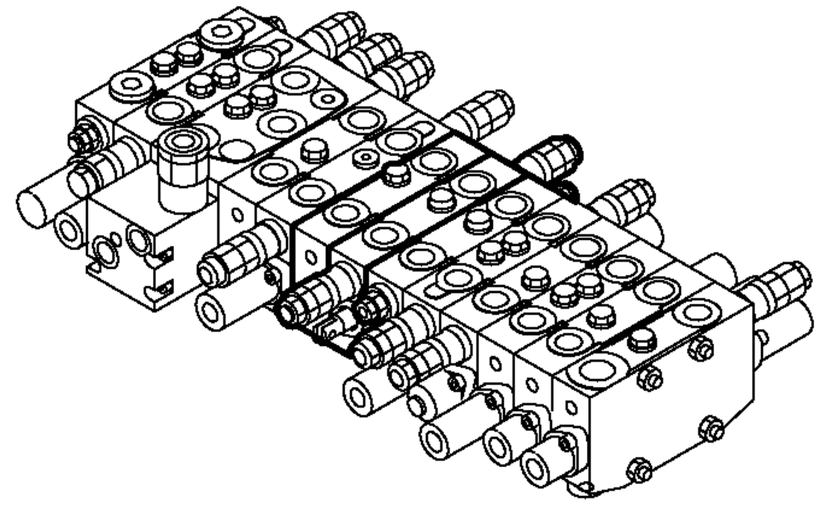

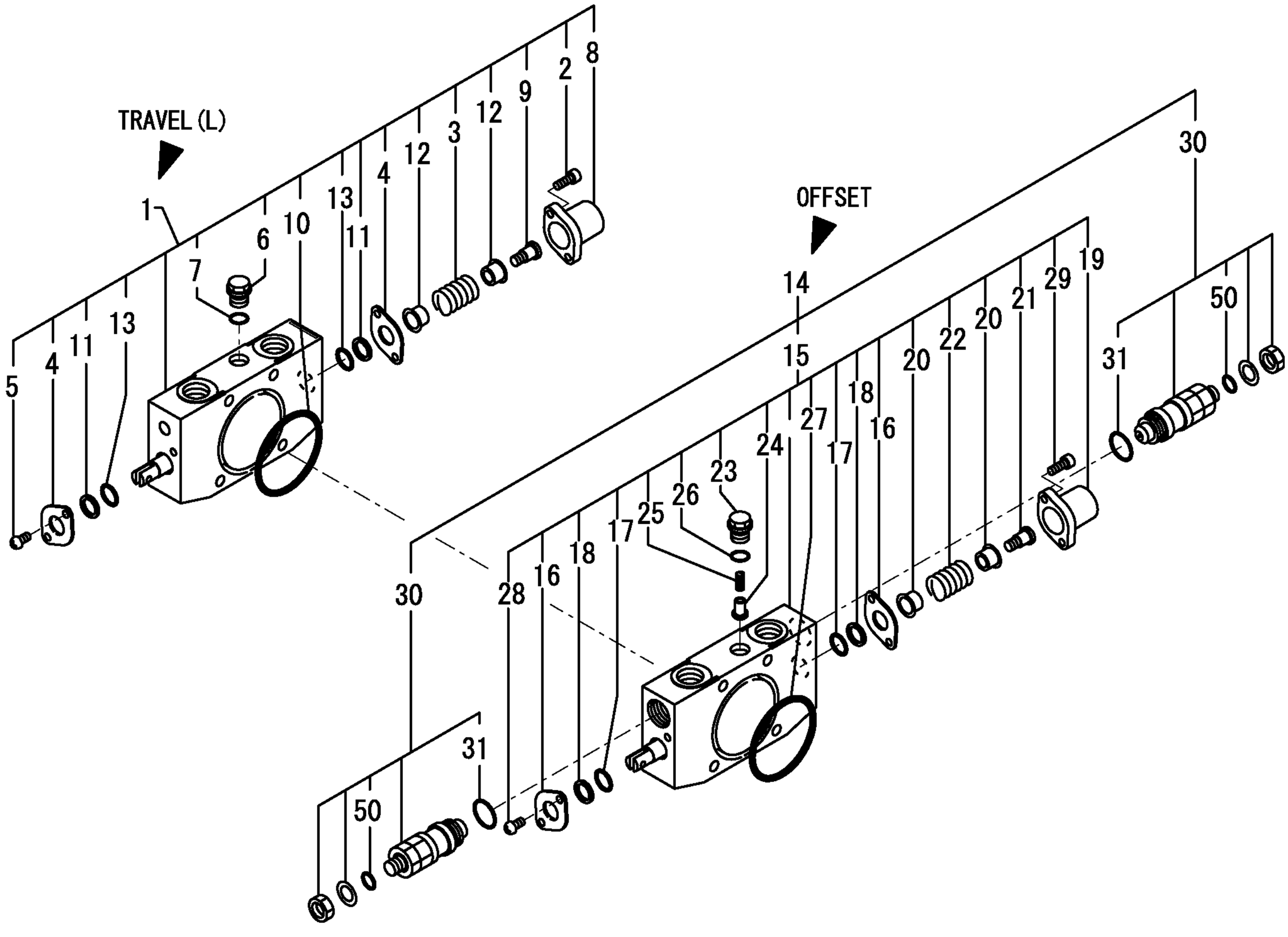

https://truckmanualshub.com/

```
1,2,,172489-74260,,"VALVE ASSY,SECTION",1,,,,,,,,,,,,,,,,,,
2,3,,172489-74200,,"VALVE ASSY,SECTION",1,,,,,,,,,,,,,,,,,,
3,4,,172151-74060,,"BOLT, SOCKET HEAD",4,,,,,,,,,,,,,,,,,,
4,4,,172478-74180,,"SEAT,SPRING",2,,,,,,,,,,,,,,,,,,
5,4,,172175-74220,,"SEAT, SPRING",2,,,,,,,,,,,,,,,,,,
6,4,,172151-74320,,O-RING,2,,,,,,,,,,,,,,,,,,
7,4,,172455-74390,,CAP,2,,,,,,,,,,,,,,,,,,
8,4,,172455-74410,,SPRING,2,,,,,,,,,,,,,,,,,,
9,4,,172455-74420,,POPPET,2,,,,,,,,,,,,,,,,,,
10,4,,172455-74440,,SPRING,2,,,,,,,,,,,,,,,,,,
11,4,,172455-74450,,PLUG,2,,,,,,,,,,,,,,,,,,
12,4,,172455-74460,,PACKING,2,,,,,,,,,,,,,,,,,,
13,3,,172478-74400,,"VALVE,RELIEF 280/40",2,,,,,,,,,,,,,,,,,,
14,4,,172116-74150,,O-RING,2,,,,,,,,,,,,,,,,,,
33,4,,24315-000100,,"O-RING 1B P-10.0",2,,,,,,,,,,,,,,,,,,
34,2,,172478-74610,,"SECTION P.T.O. ASSY",1,,,,,,,,,,,,,,,,,,
35,3,,172455-74320,,"SHUTOFF VALVE",2,,,,,,,,,,,,,,,,,,
36,4,,172455-74010,,NUT,2,,,,,,,,,,,,,,,,,,
37,4,,172455-74020,,PLUG,2,,,,,,,,,,,,,,,,,,
38,4,,172455-74030,,O-RING,2,,,,,,,,,,,,,,,,,,
39,4,,172455-74040,,POPPET,2,,,,,,,,,,,,,,,,,,
40,4,,172116-74150,,O-RING,2,,,,,,,,,,,,,,,,,,
41,4,,172455-74990,,"SET SCREW",2,,,,,,,,,,,,,,,,,,
42,3,,172478-74450,,"SECTION P.T.O.",1,,,,,,,,,,,,,,,,,,
43,4,,172151-74060,,"BOLT, SOCKET HEAD",2,,,,,,,,,,,,,,,,,,
44,4,,172113-74170,,SPRING,1,,,,,,,,,,,,,,,,,,
45,4,,172116-74190,,"PLATE, SEAL",2,,,,,,,,,,,,,,,,,,
46,4,,172823-74240,,SCREW,2,,,,,,,,,,,,,,,,,,
47,4,,172455-74420,,POPPET,2,,,,,,,,,,,,,,,,,,
48,4,,172455-74440,,SPRING,2,,,,,,,,,,,,,,,,,,
49,4,,172455-74450,,PLUG,2,,,,,,,,,,,,,,,,,,
50,4,,172455-74460,,PACKING,2,,,,,,,,,,,,,,,,,,
51,4,,172455-74730,,CAP,1,,,,,,,,,,,,,,,,,,
52,4,,172455-74740,,"CAP SCREW",1,,,,,,,,,,,,,,,,,,
53,4,,24321-000700,,"O-RING 1A G70.0,NBR",1,,,,,,,,,,,,,,,,,,
54,4,,933166-80520,,WIPER,2,,,,,,,,,,,,,,,,,,
55,4,,933171-80510,,"SEAT, SPRING",2,,,,,,,,,,,,,,,,,,
56,4,,933171-80610,,O-RING,2,,,,,,,,,,,,,,,,,,
```

https://truckmanualshub.com/

CONTROL VALVE ASSY
172489-74100
Fig. 49 REF. NO. 1
INC Fig. 49 REF. NO. 2～69
Fig. 50～55

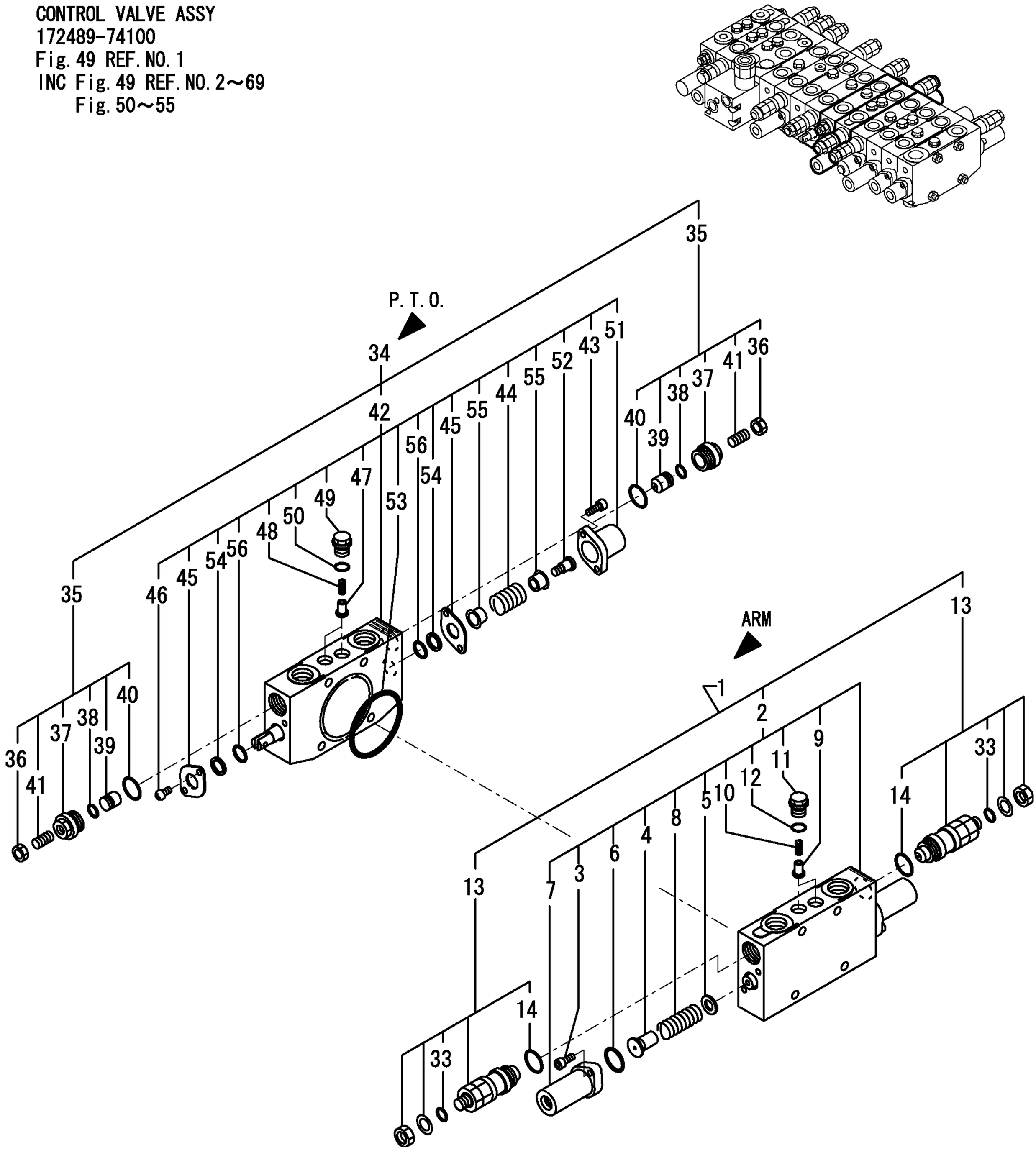

https://truckmanualshub.com/

```
1,2,,172455-74190,,"BLADE SECTION ASSY",1,,,,,,,,,,,,,,,,,
2,3,,172455-74350,,"RELIEF VALVE",1,,,,,,,,,,,,,,,,,
3,4,,172116-74150,,O-RING,1,,,,,,,,,,,,,,,,,
22,4,,24315-000100,,"O-RING 1B P-10.0",1,,,,,,,,,,,,,,,,,
23,3,,172455-74360,,"BLADE SECTION",1,,,,,,,,,,,,,,,,,
24,4,,172151-74060,,"BOLT, SOCKET HEAD",2,,,,,,,,,,,,,,,,,,
25,4,,172113-74170,,SPRING,1,,,,,,,,,,,,,,,,,
26,4,,172113-74190,,SPRING,1,,,,,,,,,,,,,,,,,
27,4,,172116-74190,,"PLATE, SEAL",2,,,,,,,,,,,,,,,,,,
28,4,,172823-74240,,SCREW,2,,,,,,,,,,,,,,,,,
29,4,,172187-74410,,POPPET,1,,,,,,,,,,,,,,,,,
30,4,,172455-74420,,POPPET,1,,,,,,,,,,,,,,,,,
31,4,,172455-74440,,SPRING,1,,,,,,,,,,,,,,,,,
32,4,,172455-74450,,PLUG,1,,,,,,,,,,,,,,,,,
33,4,,172455-74460,,PACKING,1,,,,,,,,,,,,,,,,,
34,4,,172455-74730,,CAP,1,,,,,,,,,,,,,,,,,
35,4,,172455-74740,,"CAP SCREW",1,,,,,,,,,,,,,,,,,
36,4,,24321-000700,,"O-RING 1A G70.0,NBR",1,,,,,,,,,,,,,,,,,,
37,4,,933166-80520,,WIPER,2,,,,,,,,,,,,,,,,,
38,4,,933171-80510,,"SEAT, SPRING",2,,,,,,,,,,,,,,,,,,
39,4,,933171-80610,,O-RING,2,,,,,,,,,,,,,,,,,
40,2,,172488-74310,,"TURNING SECTION",1,,,,,,,,,,,,,,,,,
41,3,,172151-74060,,"BOLT, SOCKET HEAD",4,,,,,,,,,,,,,,,,,,
42,3,,172478-74180,,"SEAT,SPRING",2,,,,,,,,,,,,,,,,,
43,3,,172175-74220,,"SEAT, SPRING",2,,,,,,,,,,,,,,,,,
44,3,,172151-74320,,O-RING,2,,,,,,,,,,,,,,,,,
45,3,,172488-74320,,"POPPET, VALVE",1,,,,,,,,,,,,,,,,,
46,3,,172455-74390,,CAP,2,,,,,,,,,,,,,,,,,
47,3,,172455-74410,,SPRING,2,,,,,,,,,,,,,,,,,
48,3,,172455-74420,,POPPET,1,,,,,,,,,,,,,,,,,
49,3,,172455-74440,,SPRING,2,,,,,,,,,,,,,,,,,
50,3,,172455-74450,,PLUG,2,,,,,,,,,,,,,,,,,
51,3,,172455-74460,,PACKING,2,,,,,,,,,,,,,,,,,
52,3,,24321-000700,,"O-RING 1A G70.0,NBR",1,,,,,,,,,,,,,,,,,,
53,2,,172455-74380,,PLUG,1,,,,,,,,,,,,,,,,,
54,3,,24315-000180,,"O-RING 1B P-18.0",1,,,,,,,,,,,,,,,,,
```

https://truckmanualshub.com/

CONTROL VALVE ASSY
172489-74100
Fig. 49 REF. NO. 1
INC Fig. 49 REF. NO. 2～69
Fig. 50～55

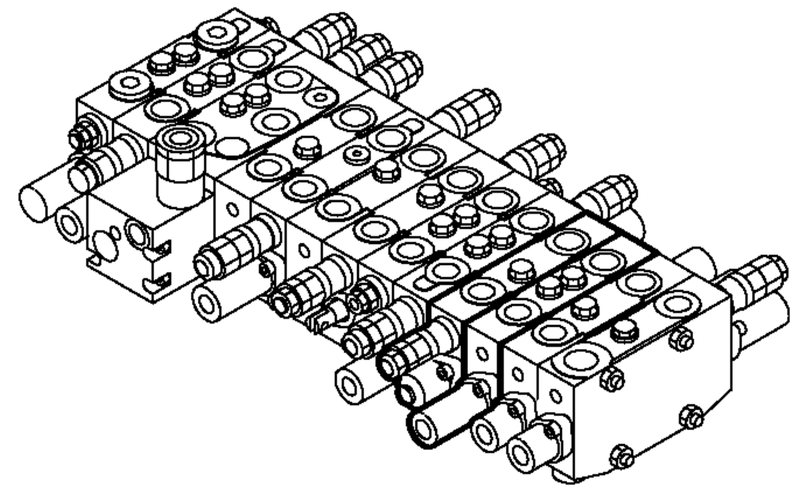

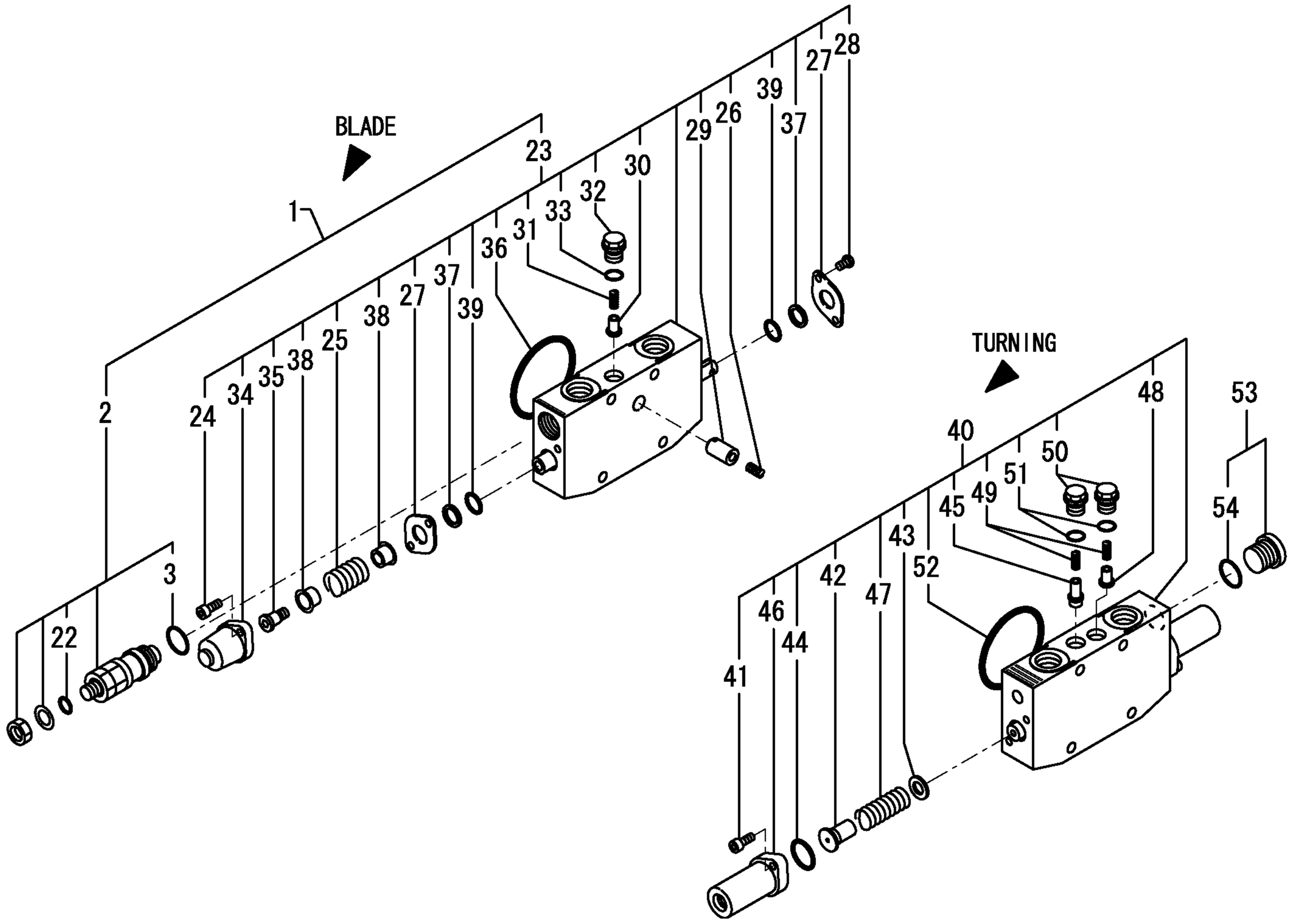

https://truckmanualshub.com/

```
1,2,,172488-74330,,"BOOM-2 SECTION",1,,,,,,,,,,,,,,,,,
2,3,,172151-74060,,"BOLT, SOCKET HEAD",4,,,,,,,,,,,,,,,,,
3,3,,172478-74180,,"SEAT,SPRING",1,,,,,,,,,,,,,,,,,
4,3,,172175-74220,,"SEAT, SPRING",1,,,,,,,,,,,,,,,,,
5,3,,172445-74280,,CAP,1,,,,,,,,,,,,,,,,,
6,3,,172151-74320,,O-RING,2,,,,,,,,,,,,,,,,,
7,3,,172455-74390,,CAP,1,,,,,,,,,,,,,,,,,
8,3,,172455-74420,,POPPET,1,,,,,,,,,,,,,,,,,
9,3,,172455-74440,,SPRING,1,,,,,,,,,,,,,,,,,
10,3,,172455-74450,,PLUG,1,,,,,,,,,,,,,,,,,
11,3,,172455-74460,,PACKING,1,,,,,,,,,,,,,,,,,
12,3,,172455-74470,,SPRING,1,,,,,,,,,,,,,,,,,
13,3,,172187-74540,,PLUG,2,,,,,,,,,,,,,,,,,
14,4,,24315-000140,,"O-RING 1B P-14.0",2,,,,,,,,,,,,,,,,,
15,3,,24321-000700,,"O-RING 1A G70.0,NBR",1,,,,,,,,,,,,,,,,,
16,2,,172488-74570,,"CONTROL SECTION ASSY",1,,,,,,,,,,,,,,,,,
17,3,,172488-74340,,"CONTROL SECTION",1,,,,,,,,,,,,,,,,,
18,4,,172455-74050,,CAP,1,,,,,,,,,,,,,,,,,
19,4,,172151-74060,,"BOLT, SOCKET HEAD",4,,,,,,,,,,,,,,,,,
20,4,,172478-74180,,"SEAT,SPRING",1,,,,,,,,,,,,,,,,,
21,4,,172175-74220,,"SEAT, SPRING",1,,,,,,,,,,,,,,,,,
22,4,,172151-74320,,O-RING,2,,,,,,,,,,,,,,,,,
23,4,,172455-74450,,PLUG,1,,,,,,,,,,,,,,,,,
24,4,,172455-74460,,PACKING,1,,,,,,,,,,,,,,,,,
25,4,,172455-74470,,SPRING,1,,,,,,,,,,,,,,,,,
26,4,,172455-74480,,CAP,1,,,,,,,,,,,,,,,,,
27,4,,172455-74510,,FILTER-A,1,,,,,,,,,,,,,,,,,
28,4,,24321-000700,,"O-RING 1A G70.0,NBR",2,,,,,,,,,,,,,,,,,
29,3,,172478-74380,,"VALVE,RELIEF 210/57",1,,,,,,,,,,,,,,,,,
30,4,,172116-74150,,O-RING,1,,,,,,,,,,,,,,,,,
31,4,,24315-000100,,"O-RING 1B P-10.0",1,,,,,,,,,,,,,,,,,
```

https://truckmanualshub.com/

CONTROL VALVE ASSY
172489-74100
Fig. 49 REF. NO. 1
INC Fig. 49 REF. NO. 2～69
Fig. 50～55

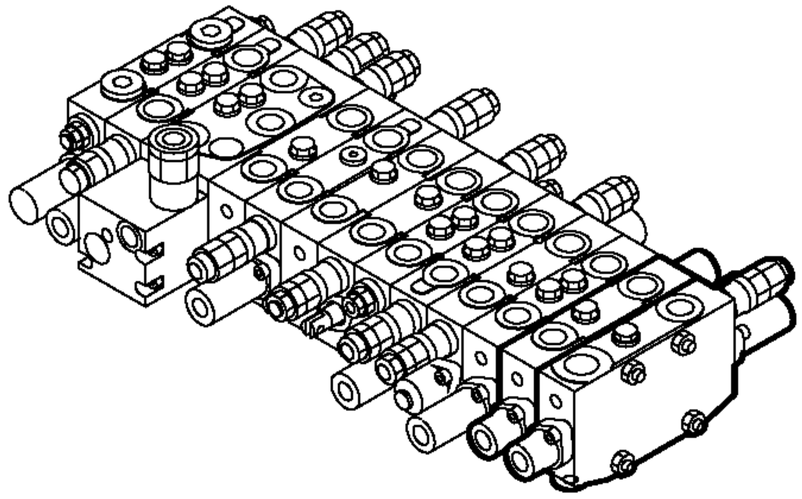

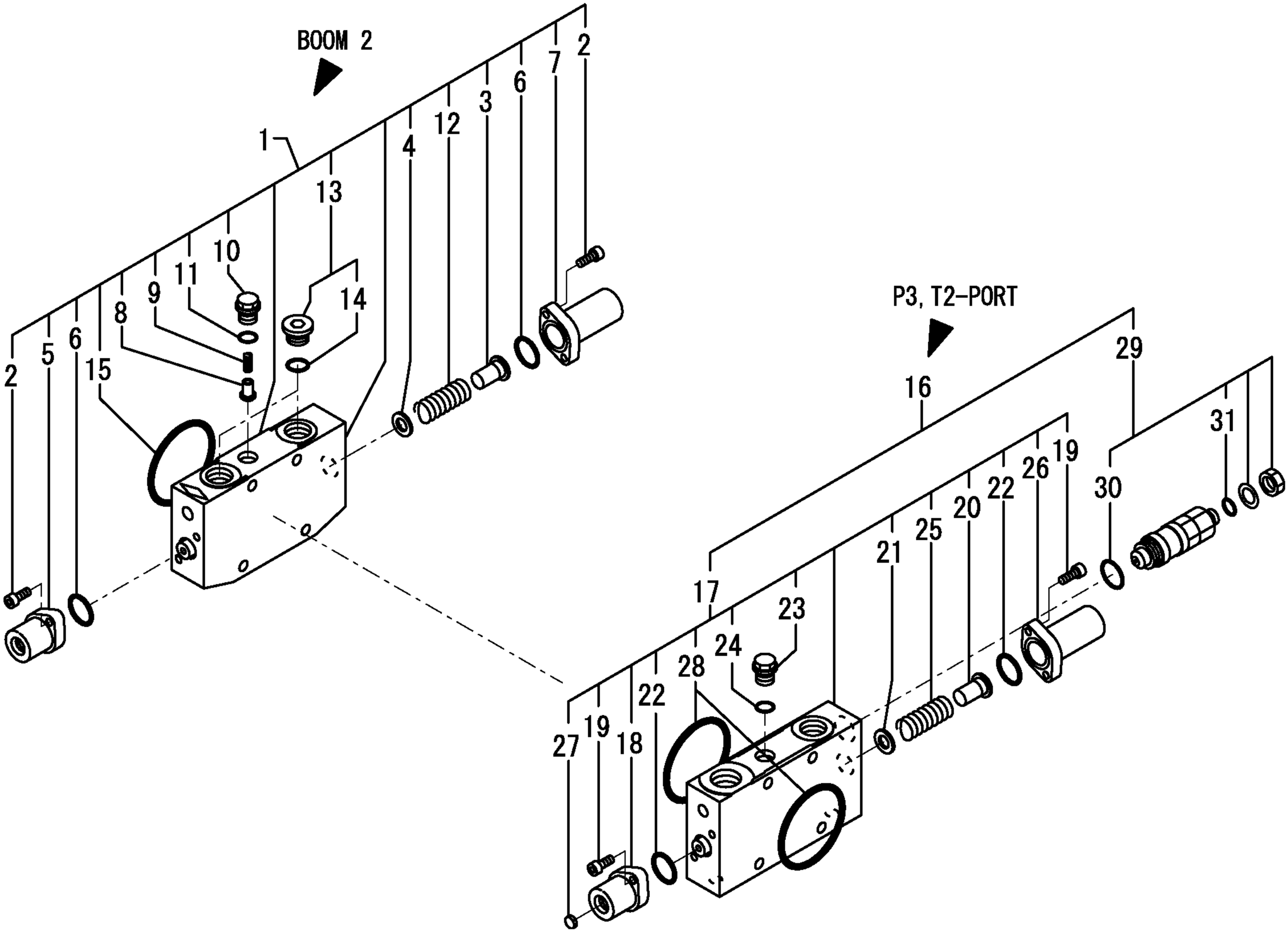

https://truckmanualshub.com/

```
1,1,,172463-74511,,"VALVE ASSY, R.US",1,,,,,,,,,,,,,,,,,
2,2,,172441-74030,,BELLOWS,1,,,,,,,,,,,,,,,,,
3,2,,172441-74040,,"COMMAND KIT",1,,,,,,,,,,,,,,,,,
4,2,,172463-74530,,"CARDAN KIT",1,,,,,,,,,,,,,,,,,
5,2,,172463-74540,,"RETAINING PLATE",1,,,,,,,,,,,,,,,,,
6,2,,172463-74551,,"PLUNGER KIT",1,,,,,,,,,,,,,,,,,
7,2,,172463-74561,,"REGULATION KIT",1,,,,,,,,,,,,,,,,,
8,2,,172463-74570,,"SPRING KIT",1,,,,,,,,,,,,,,,,,
9,2,,172463-74590,,"HANDLE R",1,,,,,,,,,,,,,,,,,
10,3,,172463-74580,,"PUSH BUTTON",1,,,,,,,,,,,,,,,,,
11,1,,172478-74700,,"VALVE ASSY (EP",1,,,,,,,,,,,,,,,,,
12,2,,172441-74030,,BELLOWS,1,,,,,,,,,,,,,,,,,
13,2,,172441-74040,,"COMMAND KIT",1,,,,,,,,,,,,,,,,,
14,2,,172463-74530,,"CARDAN KIT",1,,,,,,,,,,,,,,,,,
15,2,,172463-74540,,"RETAINING PLATE",1,,,,,,,,,,,,,,,,,
16,2,,172463-74551,,"PLUNGER KIT",1,,,,,,,,,,,,,,,,,
17,2,,172463-74561,,"REGULATION KIT",1,,,,,,,,,,,,,,,,,
18,2,,172463-74570,,"SPRING KIT",1,,,,,,,,,,,,,,,,,
19,2,,172463-74590,,"HANDLE R",1,,,,,,,,,,,,,,,,,
20,3,,172463-74580,,"PUSH BUTTON",1,,,,,,,,,,,,,,,,,
21,1,,22137-060000,,"WASHER 6, POLISHED",8,,,,,,,,,,,,,,,,,
22,1,,26013-060202,,"BOLT M 6X 20",8,,,,,,,,,,,,,,,,,
```

https://truckmanualshub.com/

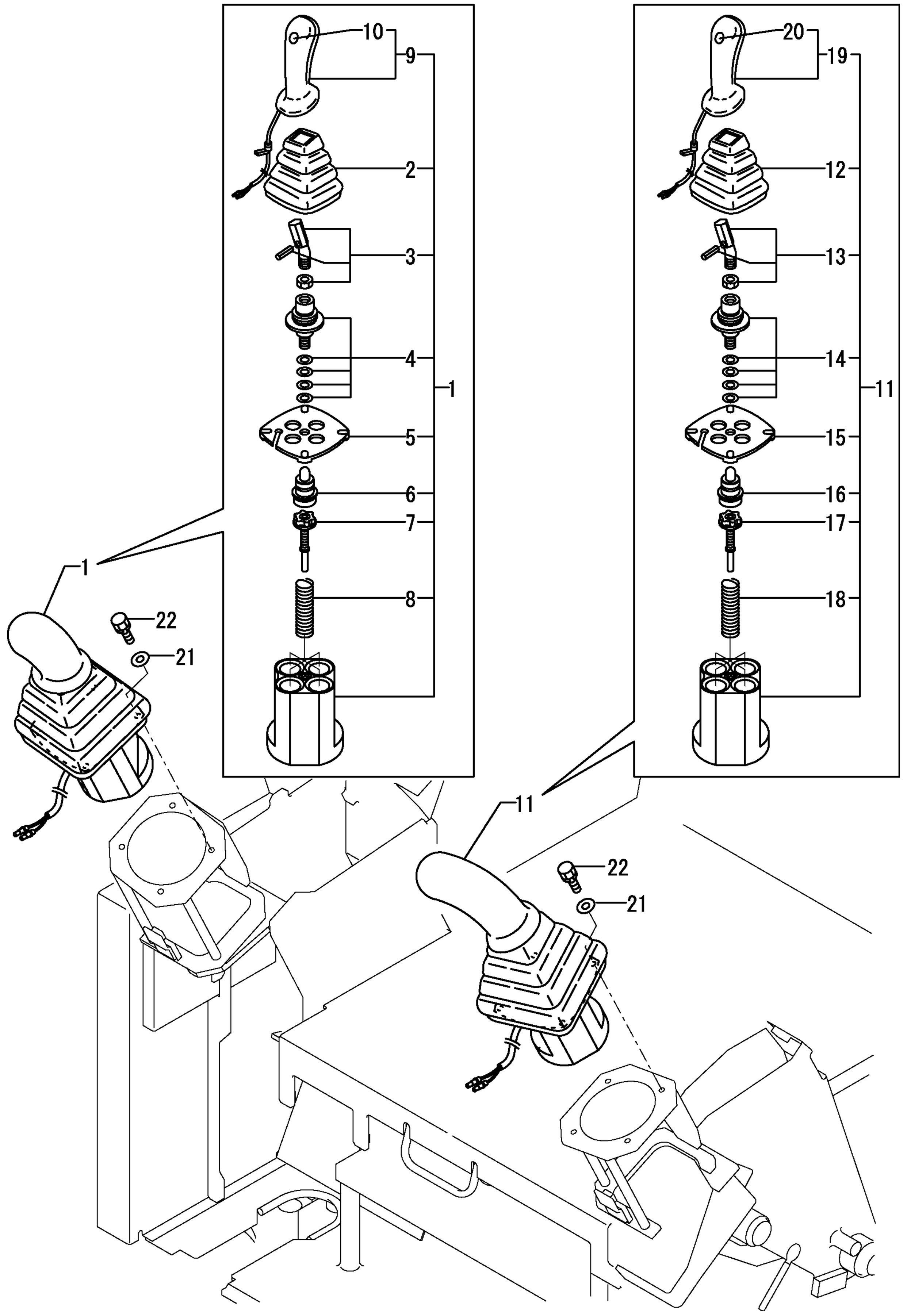

https://truckmanualshub.com/

```
1,1,,172187-74800,,"OIL COOLER",1,,,,,,,,,,,,,,,,,,
2,1,,26013-080162,,"BOLT W/WASHER M8X16",4,,,,,,,,,,,,,,,,,,
```

https://truckmanualshub.com/

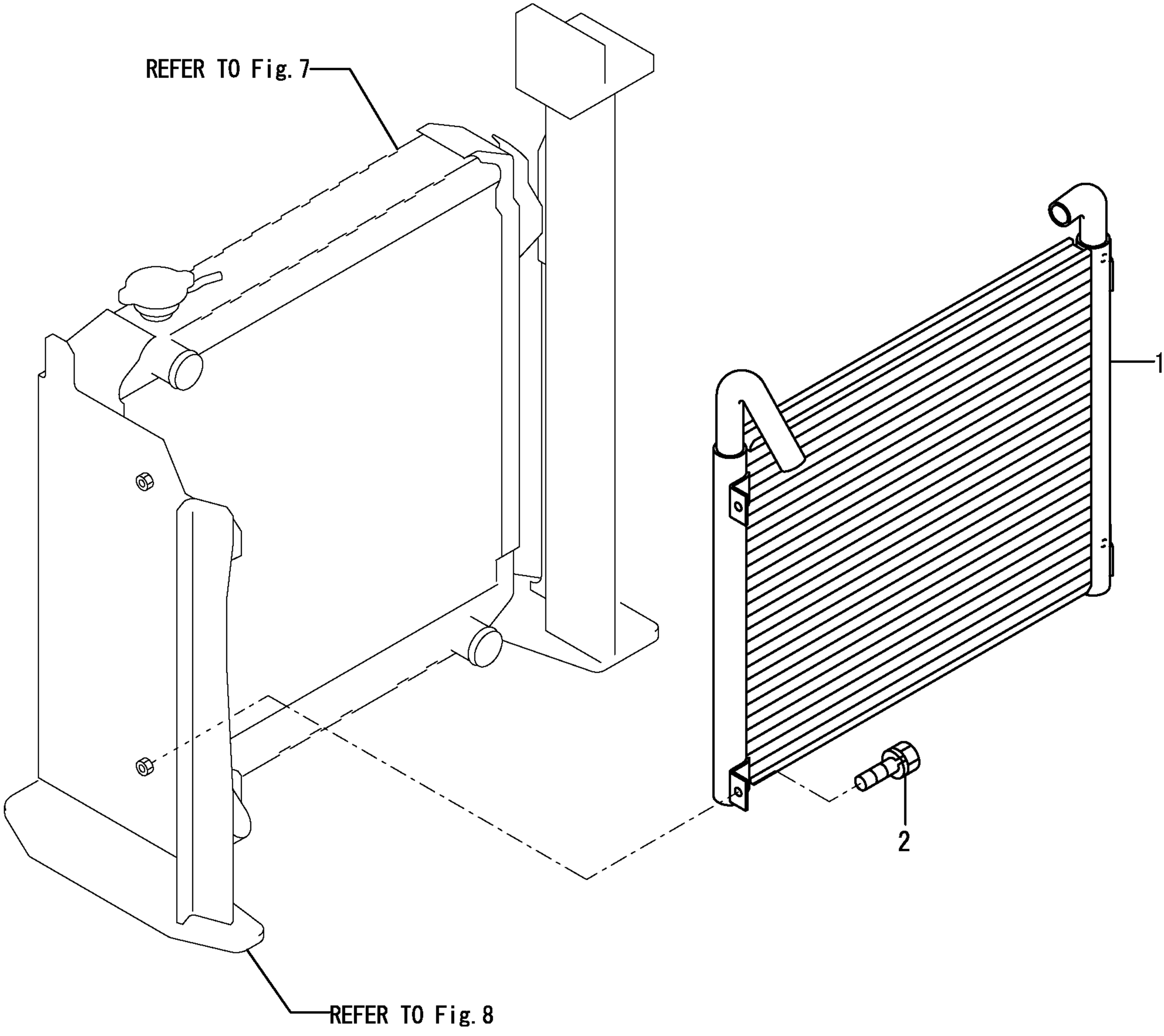

https://truckmanualshub.com/

```
1,1,,772455-75100,,"RESERVOIR ASSY",1,,,,,,,,,,,,,,,,,
2,2,,172162-73700,,"STRAINER,SUCTION",1,,,,,,,,,,,,,,,,,
3,2,,172187-73700,,"FILTER ASSY, RETURN",1,,,,,,,,,,,,,,,,,,
4,3,,172187-73730,,ELEMENT,1,,,,,,,,,,,,,,,,,
5,3,,172112-74971,,"VALVE, BY-PASS",1,,,,,,,,,,,,,,,,,
6,2,,172141-73710,,"ROD, STRAINER",1,,,,,,,,,,,,,,,,,
7,2,,172112-75770,,"SPRING, STRAINER",1,,,,,,,,,,,,,,,,,
8,2,,172112-75780,,"SPRING, STRAINER",1,,,,,,,,,,,,,,,,,
9,2,,26716-100002,,"NUT 10",1,,,,,,,,,,,,,,,,,
10,2,,124766-59050,,"CLAMP 12",1,,,,,,,,,,,,,,,,,
12,2,,172455-75240,,COVER,1,,,,,,,,,,,,,,,,,
13,2,,172455-75270,,"GAUGE ASSY, OIL",1,,,,,,,,,,,,,,,,,
15,3,,172455-75290,,"BOLT M10",2,,,,,,,,,,,,,,,,,
16,3,,172455-75300,,O-RING,4,,,,,,,,,,,,,,,,,
18,2,,172455-75320,,HOSE,1,,,,,,,,,,,,,,,,,
19,2,,172455-75330,,"DRAIN PLIG 24",1,,,,,,,,,,,,,,,,,
20,2,,172187-75340,,"COVER      (GRAY:73)",1,,,,,,,,,,,,,,,,,,
21,2,,172165-75450-2,,PLATE,1,,,,,,,,,,,,,,,,,
22,2,,172165-75460,,GASKET,1,,,,,,,,,,,,,,,,,
23,2,,172165-75481,,ELEMENT,1,,,,,,,,,,,,,,,,,
24,2,,172116-75850-3,,"PLUG,OIL FEED",1,,,,,,,,,,,,,,,,,
25,2,,22217-050000,,"SPRING WASHER  5",3,,,,,,,,,,,,,,,,,
26,2,,24311-000380,,"O-RING 1A P-38.0",1,,,,,,,,,,,,,,,,,
27,2,,24321-001350,,"O-RING 1A G-135.0",1,,,,,,,,,,,,,,,,,
28,2,,24321-001700,,"O-RING 1A G-170.0",1,,,,,,,,,,,,,,,,,
29,2,,24341-000300,,"O-RING 1A S-30.0",1,,,,,,,,,,,,,,,,,
30,2,,26013-100202,,"BOLT W/WASHER M10X20",4,,,,,,,,,,,,,,,,,
31,2,,26013-100202,,"BOLT W/WASHER M10X20",4,,,,,,,,,,,,,,,,,
32,2,,26116-050102,,"BOLT M 5X 10 PLATED",3,,,,,,,,,,,,,,,,,
33,1,,22137-160000,,"WASHER 16,POLISHED",4,,,,,,,,,,,,,,,,,
34,1,,22217-160000,,"SPRING WASHER 16",4,,,,,,,,,,,,,,,,,
35,1,,26116-160402,,"BOLT M16X 40 PLATED",4,,,,,,,,,,,,,,,,,
```

https://truckmanualshub.com/

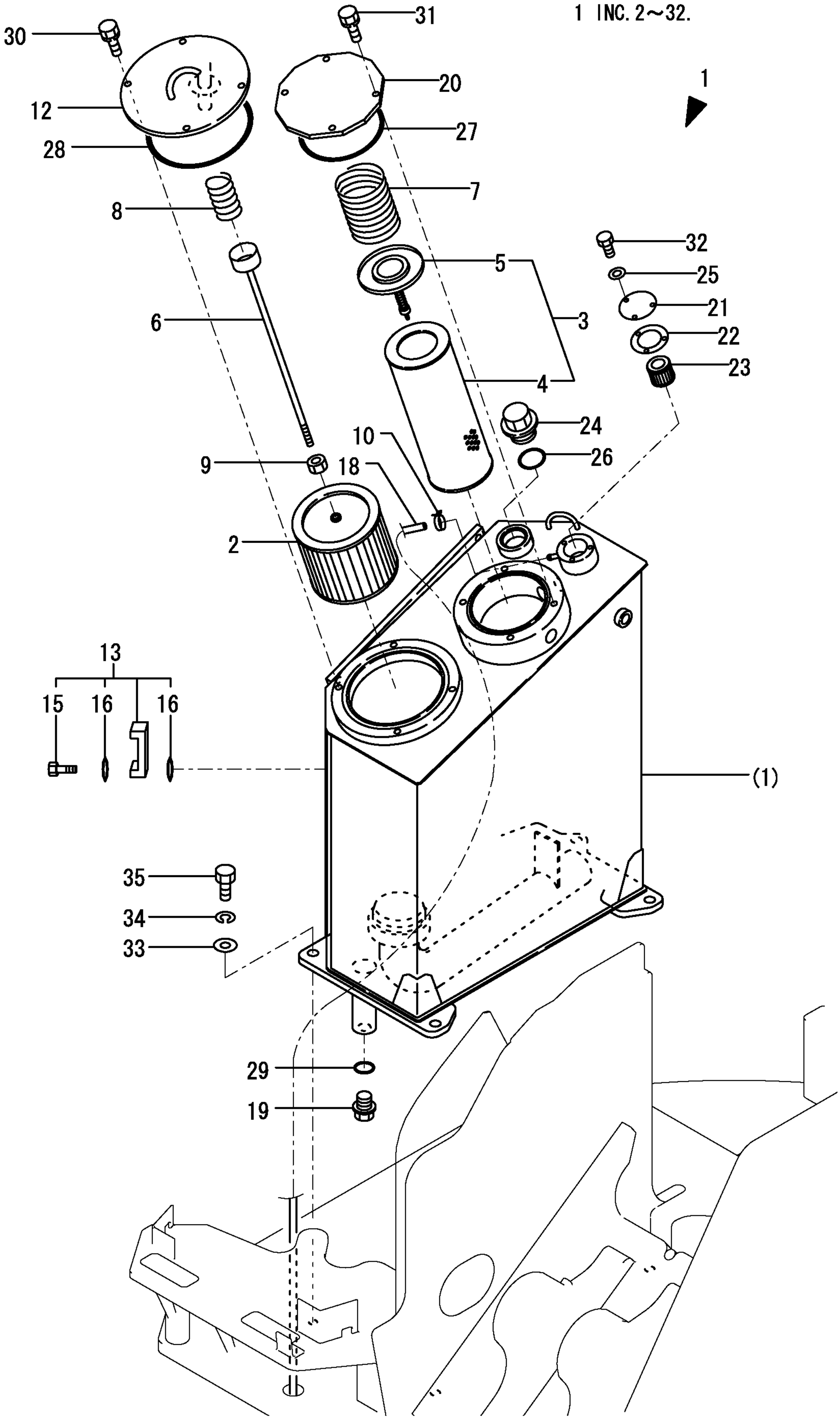

https://truckmanualshub.com/

```
1,1,,172455-76100,,FLANGE,1,,,,,,,,,,,,,,,,,,
2,1,,172151-76160,,ELBOW,2,,,,,,,,,,,,,,,,,,
3,2,,24315-000180,,"O-RING 1B P-18.0",2,,,,,,,,,,,,,,,,,,
4,1,,172187-76190,,ELBOW,2,,,,,,,,,,,,,,,,,,
5,2,,24315-000240,,"O-RING 1B P-24.0",2,,,,,,,,,,,,,,,,,,
6,1,,172455-76190,,ELBOW,1,,,,,,,,,,,,,,,,,,
7,2,,24315-000240,,"O-RING 1B P-24.0",1,,,,,,,,,,,,,,,,,,
8,1,,172455-76200,,"CONNECTOR 1/2-3/4",1,,,,,,,,,,,,,,,,,,
9,1,,24315-000180,,"O-RING 1B P-18.0",1,,,,,,,,,,,,,,,,,,
10,1,,24325-000650,,"O-RING 1B G-65.0",1,,,,,,,,,,,,,,,,,,
11,1,,26013-120402,,"BOLT M12X 40",4,,,,,,,,,,,,,,,,,,
12,1,,172455-76400,,"TUBE, SUC.",1,,,,,,,,,,,,,,,,,,
13,1,,26013-100402,,"BOLT M10X 40",2,,,,,,,,,,,,,,,,,,
14,1,,172455-78100,,"HOSE 59A",1,,,,,,,,,,,,,,,,,,
15,1,,172455-78110,,"HOSE 59B",1,,,,,,,,,,,,,,,,,,
16,1,,172455-78130,,"HOSE G110BC138",1,,,,,,,,,,,,,,,,,,
17,1,,172455-78140,,"HOSE G110BE113",1,,,,,,,,,,,,,,,,,,
18,1,,172455-78150,,"HOSE G110BC084",1,,,,,,,,,,,,,,,,,,
19,1,,23001-090000,,"HOSE CLAMP  90",8,,,,,,,,,,,,,,,,,,
```

https://truckmanualshub.com/

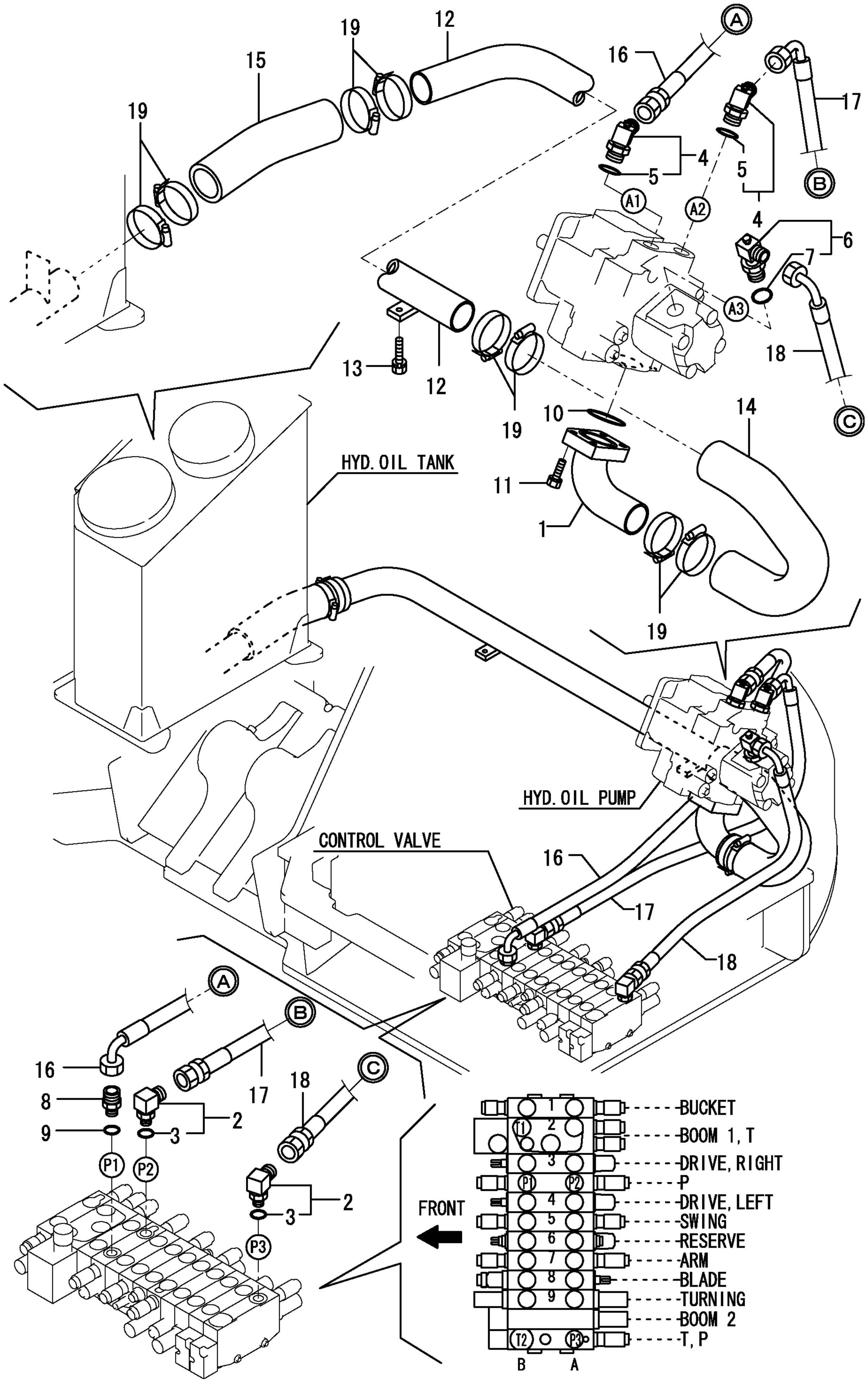

https://truckmanualshub.com/

```
1,1,,172123-76121,,"JOINT PF1/4",1,,,,,,,,,,,,,,,,,
2,1,,172123-76121,,"JOINT PF1/4",1,,,,,,,,,,,,,,,,,
3,1,,172187-76200,,ADAPTER,1,,,,,,,,,,,,,,,,,
4,1,,172147-76271,,CONNECTOR,1,,,,,,,,,,,,,,,,,
5,1,,172141-76900,,"CONNECTOR 1/2L",1,,,,,,,,,,,,,,,,,
6,2,,24315-000180,,"O-RING 1B P-18.0",1,,,,,,,,,,,,,,,,,,
7,1,,172112-77361,,CONNECTOR,2,,,,,,,,,,,,,,,,,
8,1,,172112-77361,,CONNECTOR,4,,,,,,,,,,,,,,,,,
9,1,,172112-77361,,CONNECTOR,1,,,,,,,,,,,,,,,,,
10,1,,24315-000110,,"O-RING 1B P-11.0",1,,,,,,,,,,,,,,,,,,
11,1,,24315-000110,,"O-RING 1B P-11.0",1,,,,,,,,,,,,,,,,,,
12,1,,24315-000180,,"O-RING 1B P-18.0",2,,,,,,,,,,,,,,,,,,
13,1,,24315-000180,,"O-RING 1B P-18.0",1,,,,,,,,,,,,,,,,,,
14,1,,24315-000180,,"O-RING 1B P-18.0",4,,,,,,,,,,,,,,,,,,
15,1,,24315-000180,,"O-RING 1B P-18.0",1,,,,,,,,,,,,,,,,,,
16,1,,24315-000180,,"O-RING 1B P-18.0",1,,,,,,,,,,,,,,,,,,
17,1,,24315-000180,,"O-RING 1B P-18.0",2,,,,,,,,,,,,,,,,,,
18,1,,933160-01370,,"CONNECTOR PF1/2-3/8",2,,,,,,,,,,,,,,,,,,,
19,1,,172126-11510,,"BAND 300",1,,,,,,,,,,,,,,,,,
20,1,,172455-78170,,"HOSE H108CX147",1,,,,,,,,,,,,,,,,,,
21,1,,172455-78180,,"HOSE H108CX151",1,,,,,,,,,,,,,,,,,,
22,1,,172455-78190,,"HOSE H108CX072",1,,,,,,,,,,,,,,,,,,
23,1,,172455-78200,,"HOSE H108CX106",1,,,,,,,,,,,,,,,,,,
24,1,,172455-78250,,"HOSE H106CX181",1,,,,,,,,,,,,,,,,,,
25,1,,172455-78260,,"HOSE H106CX188",1,,,,,,,,,,,,,,,,,,
26,1,,172455-78270,,"HOSE G110CX206",1,,,,,,,,,,,,,,,,,,
27,1,,172455-78280,,"HOSE H108BX190",1,,,,,,,,,,,,,,,,,,
28,1,,172455-78310,,"HOSE H108CC150",1,,,,,,,,,,,,,,,,,,
29,1,,172455-78320,,"HOSE H108CC166",1,,,,,,,,,,,,,,,,,,
30,1,,172455-78740,,"HOSE F403BC113S",1,,,,,,,,,,,,,,,,,,,
```

https://truckmanualshub.com/

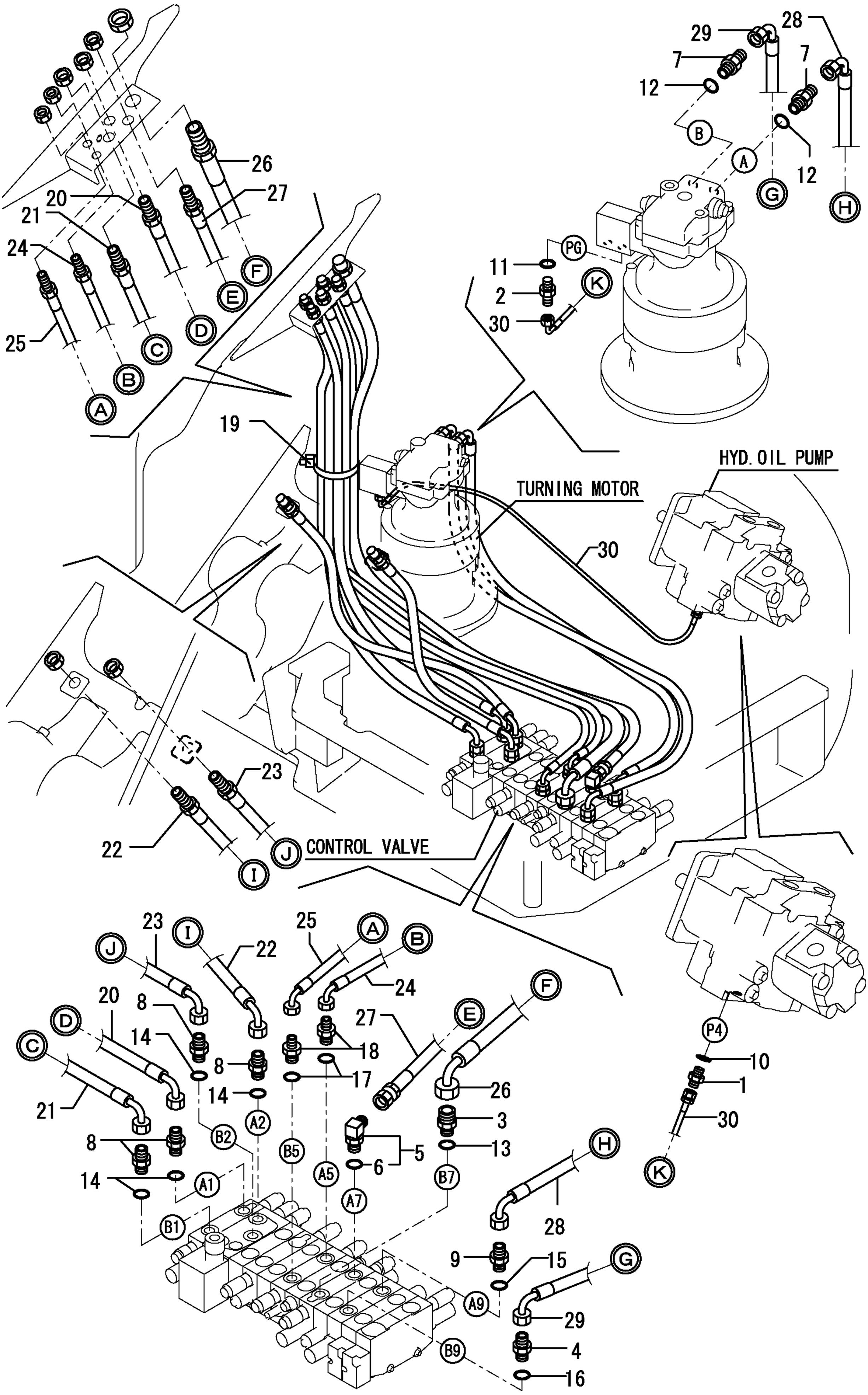

```
1,1,,172312-76020,,ELBOW,1,,,,,,,,,,,,,,,,,
2,1,,172141-76180,,CONNECTOR,1,,,,,,,,,,,,,,,,,
3,2,,24315-000110,,"O-RING 1B P-11.0",1,,,,,,,,,,,,,,,,,
4,1,,172147-76271,,CONNECTOR,1,,,,,,,,,,,,,,,,,
5,1,,172112-77361,,CONNECTOR,1,,,,,,,,,,,,,,,,,
6,1,,172112-77361,,CONNECTOR,2,,,,,,,,,,,,,,,,,
7,1,,172112-77361,,CONNECTOR,1,,,,,,,,,,,,,,,,,
8,1,,23393-040000,,"JOINT 90RGI 1/2",3,,,,,,,,,,,,,,,,,
9,1,,23394-020000,,"JOINT 45RGI1/4",1,,,,,,,,,,,,,,,,,
10,1,,23394-030000,,"JOINT 45RGI 3/8",1,,,,,,,,,,,,,,,,,
11,1,,23394-040000,,"JOINT 45RGI1/2",1,,,,,,,,,,,,,,,,,
12,1,,24315-000180,,"O-RING 1B P-18.0",1,,,,,,,,,,,,,,,,,
13,1,,24315-000180,,"O-RING 1B P-18.0",2,,,,,,,,,,,,,,,,,
14,1,,24315-000180,,"O-RING 1B P-18.0",1,,,,,,,,,,,,,,,,,
15,1,,24315-000180,,"O-RING 1B P-18.0",2,,,,,,,,,,,,,,,,,
16,1,,933160-01370,,"CONNECTOR PF1/2-3/8",1,,,,,,,,,,,,,,,,,
17,1,,172455-78210,,"HOSE H108BC068",1,,,,,,,,,,,,,,,,,
18,1,,172455-78220,,"HOSE H108BC095",1,,,,,,,,,,,,,,,,,
19,1,,172455-78230,,"HOSE H108BC089",1,,,,,,,,,,,,,,,,,
20,1,,172455-78240,,"HOSE H108BC083",1,,,,,,,,,,,,,,,,,
21,1,,172455-78290,,"HOSE H208BC110",1,,,,,,,,,,,,,,,,,
22,1,,172455-78300,,"HOSE H106BC111",1,,,,,,,,,,,,,,,,,
23,1,,172478-78670,,"HOSE F403BC110S",1,,,,,,,,,,,,,,,,,
```

https://truckmanualshub.com/

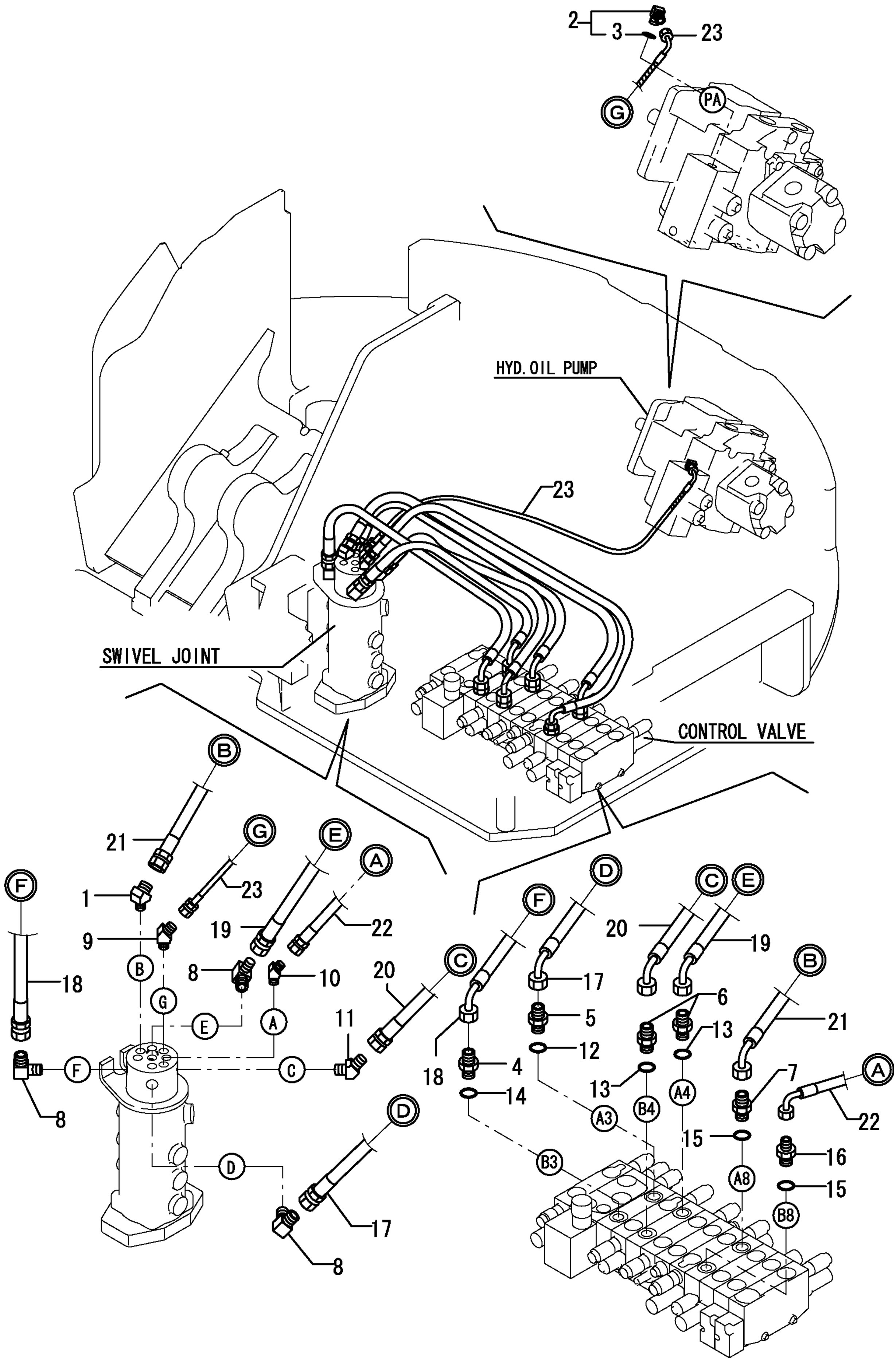

https://truckmanualshub.com/

```
1,1,,172989-76120,,CONNECTOR,1,,,,,,,,,,,,,,,,
2,1,,172455-76580,,"ELBOW G1/2-3/4",1,,,,,,,,,,,,,,,,
3,2,,24315-000180,,"O-RING 1B P-18.0",1,,,,,,,,,,,,,,,,
4,1,,172137-76110,,NIPPLE,1,,,,,,,,,,,,,,,,
5,1,,172187-76131,,CONNECTER(PF3/4-PT3/,1,,,,,,,,,,,,,,,,
6,1,,172187-76141,,CONNECTOR(PF1-PF3/4,1,,,,,,,,,,,,,,,,
7,2,,24315-000240,,"O-RING 1B P-24.0",1,,,,,,,,,,,,,,,,
8,1,,172187-76160,,JOINT,1,,,,,,,,,,,,,,,,
9,1,,172455-76160,,"ELBOW 90 3/4",1,,,,,,,,,,,,,,,,
10,1,,172187-76180,,"NIPPLE, HOSE",1,,,,,,,,,,,,,,,,
11,1,,172151-76200,,"JOINT PF3/4- 1",1,,,,,,,,,,,,,,,,
12,1,,172455-76240,,"JOINT 3/8",1,,,,,,,,,,,,,,,,
13,1,,172168-76370,,ELBOW,1,,,,,,,,,,,,,,,,
14,1,,24315-000240,,"O-RING 1B P-24.0",1,,,,,,,,,,,,,,,,
15,1,,26013-100202,,"BOLT W/WASHER M10X20",2,,,,,,,,,,,,,,,,
16,1,,933111-50001,,CONNECTOR,1,,,,,,,,,,,,,,,,
17,2,,24315-000140,,"O-RING 1B P-14.0",1,,,,,,,,,,,,,,,,
18,1,,172463-78130,,"HOSE G612EY170S",1,,,,,,,,,,,,,,,,
19,1,,172455-78330,,"HOSE G616CC170S",1,,,,,,,,,,,,,,,,
20,1,,172455-78340,,"HOSE G616EY044",1,,,,,,,,,,,,,,,,
21,1,,172455-78350,,"HOSE G806YY075",1,,,,,,,,,,,,,,,,
22,1,,172455-78360,,"HOSE G806YY045S",1,,,,,,,,,,,,,,,,
23,1,,172455-78370,,"HOSE G806YY120",1,,,,,,,,,,,,,,,,
24,1,,172455-78380,,"HOSE G616YY068",1,,,,,,,,,,,,,,,,
25,1,,23000-013000,,"CLAMP 13",3,,,,,,,,,,,,,,,,
26,1,,23001-016000,,"HOSE CLAMP 16",6,,,,,,,,,,,,,,,,
27,1,,23001-035000,,"HOSE CLAMP  35",2,,,,,,,,,,,,,,,,
28,1,,23001-041000,,"CLIP 41,HOSE",6,,,,,,,,,,,,,,,,
```

https://truckmanualshub.com/

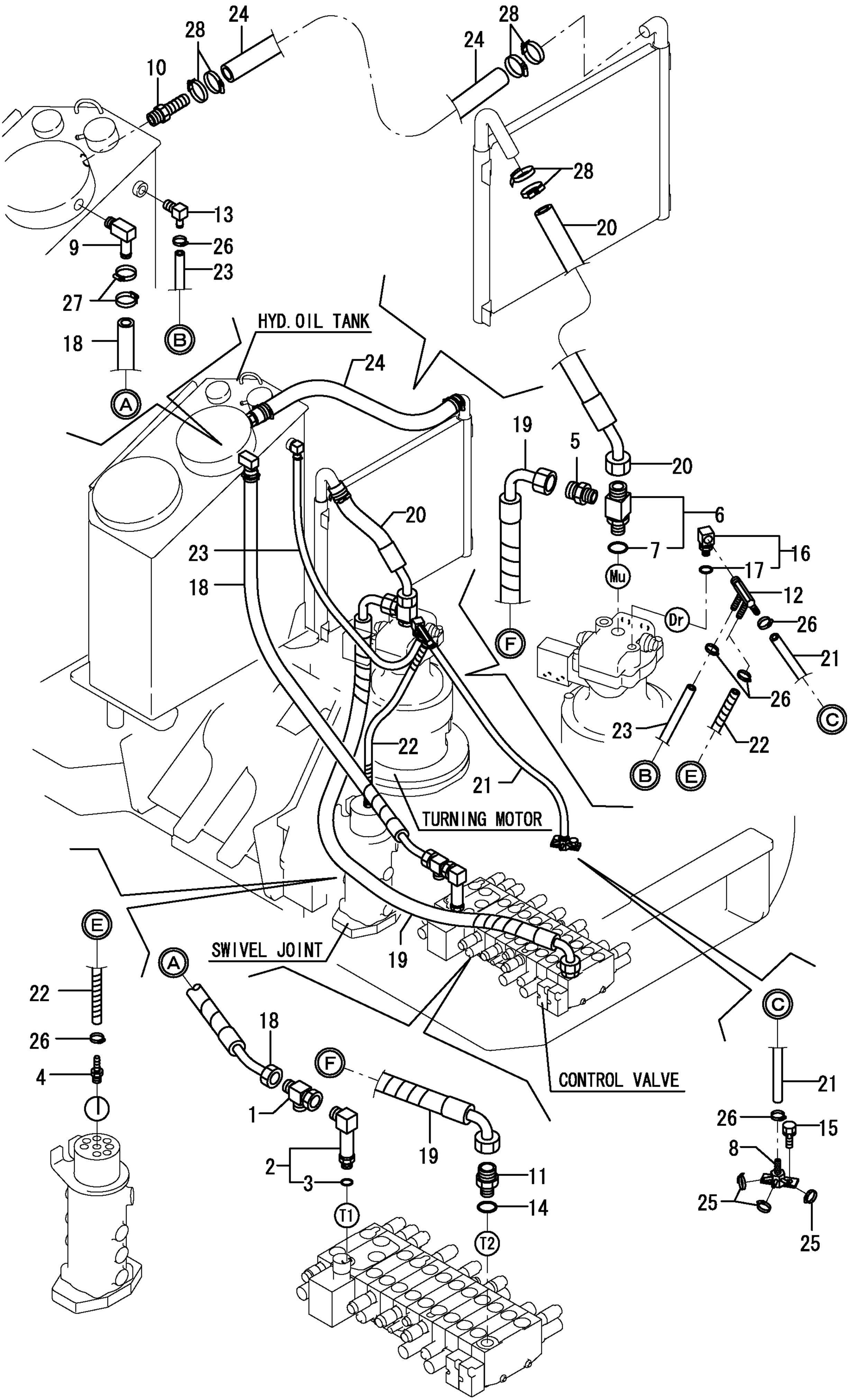

https://truckmanualshub.com/

```
1,1,,172455-78760,,"HOSE F403BC106",1,,,,,,,,,,,,,,,,,
2,1,,172457-76100,,"ADJUSTABLE TEE",1,,,,,,,,,,,,,,,,,
3,1,,172123-76121,,"JOINT PF1/4",2,,,,,,,,,,,,,,,,,
4,1,,172123-76121,,"JOINT PF1/4",1,,,,,,,,,,,,,,,,,
5,1,,172123-76121,,"JOINT PF1/4",4,,,,,,,,,,,,,,,,,
6,1,,172123-76121,,"JOINT PF1/4",2,,,,,,,,,,,,,,,,,
7,1,,172123-76121,,"JOINT PF1/4",2,,,,,,,,,,,,,,,,,
8,1,,172141-76180,,CONNECTOR,3,,,,,,,,,,,,,,,,,
9,2,,24315-000110,,"O-RING 1B P-11.0",3,,,,,,,,,,,,,,,,,
10,1,,172162-76180,,"JOINT 3-1/4 COMPL.",3,,,,,,,,,,,,,,,,,
11,2,,24315-000110,,"O-RING 1B P-11.0",3,,,,,,,,,,,,,,,,,
12,1,,24315-000110,,"O-RING 1B P-11.0",2,,,,,,,,,,,,,,,,,
13,1,,24315-000110,,"O-RING 1B P-11.0",1,,,,,,,,,,,,,,,,,
14,1,,24315-000110,,"O-RING 1B P-11.0",5,,,,,,,,,,,,,,,,,
15,1,,24315-000110,,"O-RING 1B P-11.0",3,,,,,,,,,,,,,,,,,
16,1,,24315-000110,,"O-RING 1B P-11.0",1,,,,,,,,,,,,,,,,,
17,1,,172455-78600,,"HOSE F403BE046",1,,,,,,,,,,,,,,,,,
18,1,,172455-78610,,"HOSE F403BB054",1,,,,,,,,,,,,,,,,,
19,1,,172455-78620,,"HOSE F403BB073",1,,,,,,,,,,,,,,,,,
20,1,,172478-78660,,"HOSE F403BC-61",1,,,,,,,,,,,,,,,,,
21,1,,172455-78710,,"HOSE F403BC132S",1,,,,,,,,,,,,,,,,,
22,1,,172455-78730,,"HOSE G804BY071",1,,,,,,,,,,,,,,,,,
23,1,,172173-76101,,"CONNECTOR PF1/4-45",1,,,,,,,,,,,,,,,,,
24,2,,24315-000110,,"O-RING 1B P-11.0",1,,,,,,,,,,,,,,,,,
```

https://truckmanualshub.com/

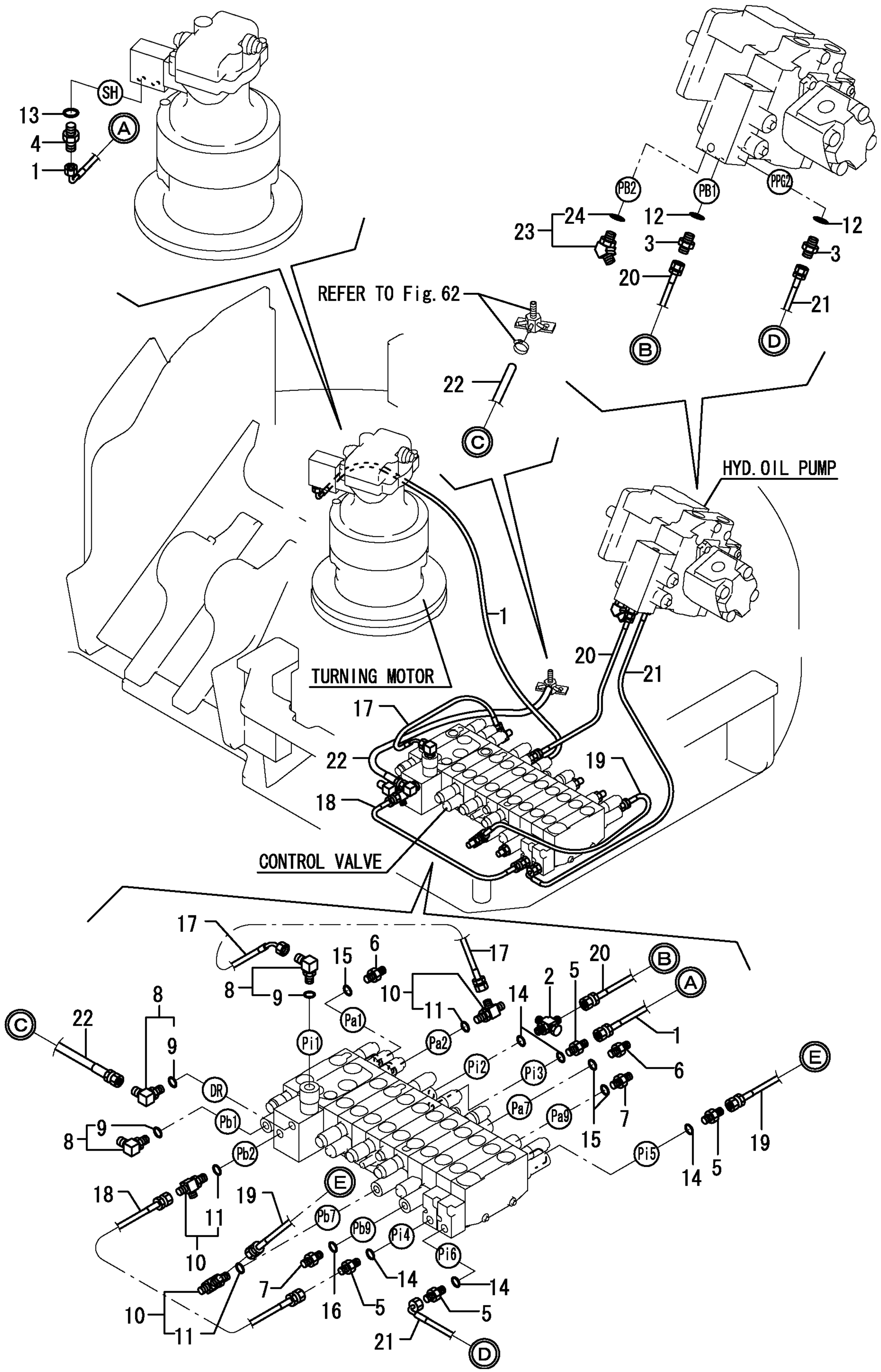

https://truckmanualshub.com/

```
1,1,,172463-74700,,"BRACKET ASSY,PTO",1,,,,,,,,,,,,,,,,,
2,1,,172437-76100,,"CONNECTOR 90PT3/4",1,,,,,,,,,,,,,,,,,
3,1,,172989-76120,,CONNECTOR,1,,,,,,,,,,,,,,,,,
4,1,,172165-76220,,NIPPLE,1,,,,,,,,,,,,,,,,,
5,1,,172176-76580,,"STOP VALVE(GREEN:97)",1,,,,,,,,,,,,,,,,,
6,1,,172455-76580,,"ELBOW G1/2-3/4",2,,,,,,,,,,,,,,,,,
7,2,,24315-000180,,"O-RING 1B P-18.0",2,,,,,,,,,,,,,,,,,
8,1,,172463-78110,,"HOSE H112EE080S",1,,,,,,,,,,,,,,,,,
9,1,,172463-78120,,"HOSE G712YZ026",1,,,,,,,,,,,,,,,,,
10,1,,172463-78140,,"HOSE G112EX110",1,,,,,,,,,,,,,,,,,
11,1,,172455-79810,,"HOSE G112BX170",1,,,,,,,,,,,,,,,,,
12,1,,23001-035000,,"HOSE CLAMP  35",1,,,,,,,,,,,,,,,,,
13,1,,23394-060000,,"JOINT 45RGI3/4",1,,,,,,,,,,,,,,,,,
14,1,,26013-100202,,"BOLT W/WASHER M10X20",2,,,,,,,,,,,,,,,,,
15,1,,26013-100302,,"BOLT M10X 30",2,,,,,,,,,,,,,,,,,
```

https://truckmanualshub.com/

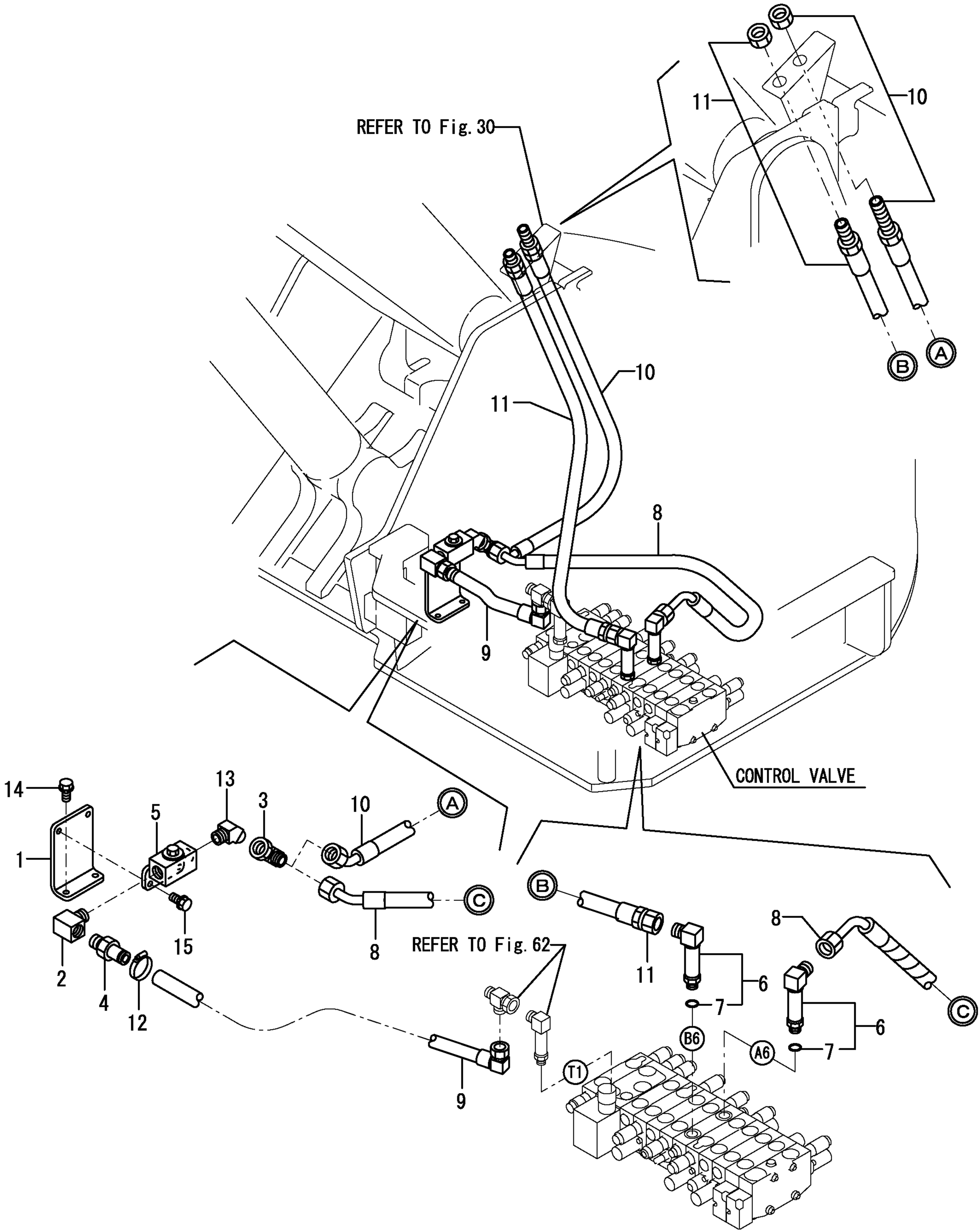

https://truckmanualshub.com/

```
1,1,,172730-75140,,ADAPTOR,2,,,,,,,,,,,,,,,,,,
2,1,,172123-76121,,"JOINT PF1/4",2,,,,,,,,,,,,,,,,,,
3,1,,172141-76940,,"ADAPTOR 1/2-3/8",1,,,,,,,,,,,,,,,,,,
4,1,,172112-77361,,CONNECTOR,4,,,,,,,,,,,,,,,,,,
5,1,,23391-030000,,"JOINT RGI 3/8",1,,,,,,,,,,,,,,,,,,
6,1,,23394-020000,,"JOINT 45RGI1/4",2,,,,,,,,,,,,,,,,,,
7,1,,23394-030000,,"JOINT 45RGI 3/8",2,,,,,,,,,,,,,,,,,,
8,1,,23394-040000,,"JOINT 45RGI1/2",4,,,,,,,,,,,,,,,,,,
9,1,,24315-000110,,"O-RING 1B P-11.0",2,,,,,,,,,,,,,,,,,,
10,1,,24315-000140,,"O-RING 1B P-14.0",2,,,,,,,,,,,,,,,,,,
11,1,,24315-000180,,"O-RING 1B P-18.0",4,,,,,,,,,,,,,,,,,,
12,1,,172187-78200,,"HOSE G604BB155W",1,,,,,,,,,,,,,,,,,,
13,1,,172187-78200,,"HOSE G604BB155W",1,,,,,,,,,,,,,,,,,,
14,1,,172187-78210,,"HOSE G706BB145W",2,,,,,,,,,,,,,,,,,,
15,1,,172187-78230,,"HOSE H108BB151W",1,,,,,,,,,,,,,,,,,,
16,1,,172187-78230,,"HOSE H108BB151W",1,,,,,,,,,,,,,,,,,,
17,1,,172187-78230,,"HOSE H108BB151W",1,,,,,,,,,,,,,,,,,,
18,1,,172187-78230,,"HOSE H108BB151W",1,,,,,,,,,,,,,,,,,,
19,1,,172455-78500,,"HOSE P108BE100W",1,,,,,,,,,,,,,,,,,,
20,1,,172455-78510,,"HOSE P106BE073W",1,,,,,,,,,,,,,,,,,,
21,1,,172455-78520,,"HOSE P106BX055",1,,,,,,,,,,,,,,,,,,
22,1,,172455-78530,,"HOSE P108BX055",1,,,,,,,,,,,,,,,,,,
```

https://truckmanualshub.com/

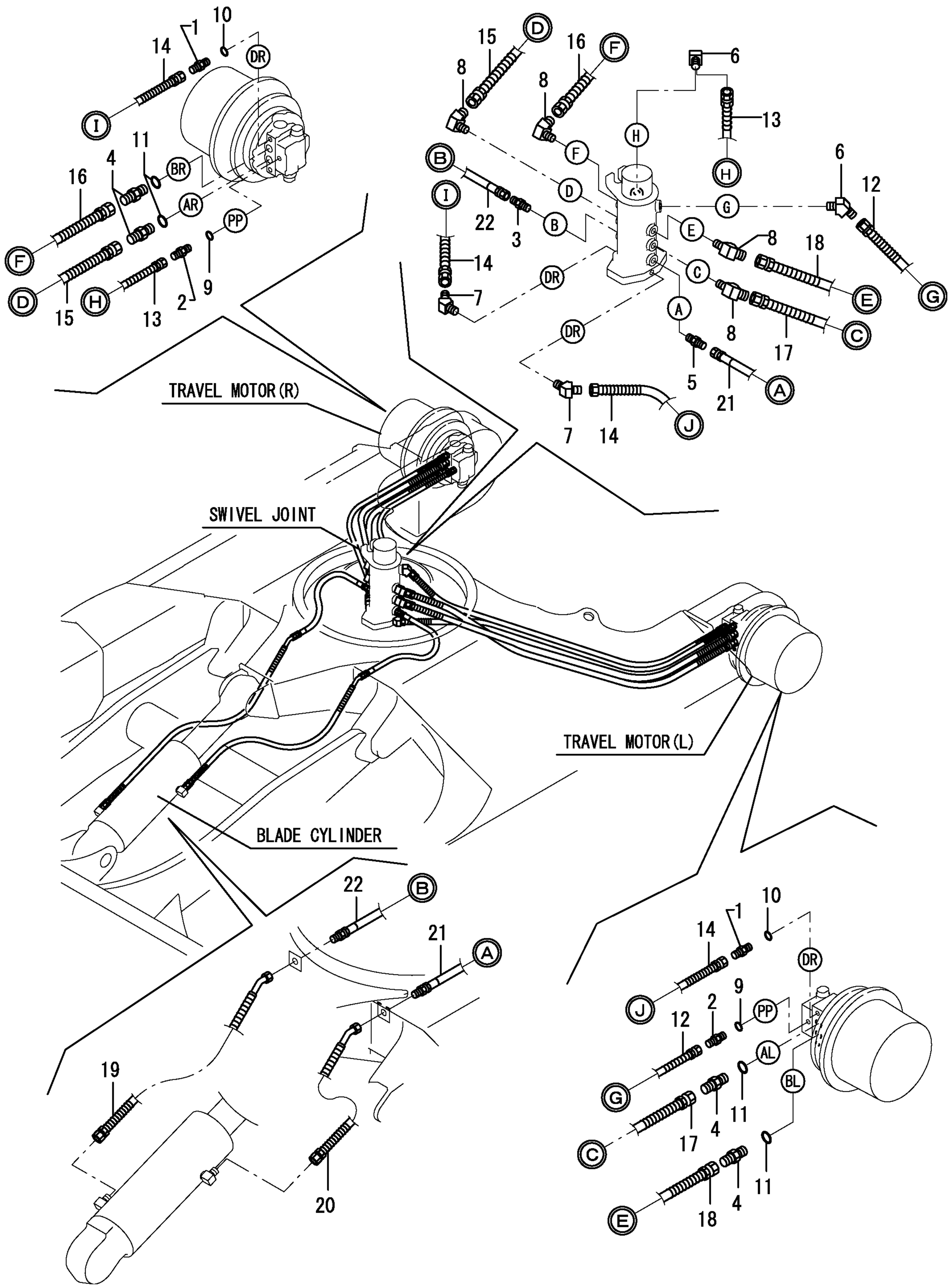

https://truckmanualshub.com/

```
1,1,,172183-16560,,"CLIP 400,HOSE",2,,,,,,,,,,,,,,,,,
2,1,,172175-76420,,"COLLAR, TUBE",1,,,,,,,,,,,,,,,,,
3,1,,172186-78860,,SUPPORT,2,,,,,,,,,,,,,,,,,
4,1,,172455-78890,,"HOSE H108BC063W",2,,,,,,,,,,,,,,,,,
5,1,,172455-78900,,"HOSE G112AC192",1,,,,,,,,,,,,,,,,,
6,1,,172186-78910-1,,"CLAMP,HOSE(YELLOW:87",1,,,,,,,,,,,,,,,,,,
7,1,,172455-78910,,"HOSE H108AC189",1,,,,,,,,,,,,,,,,,
8,1,,172445-78920,,"SUPPORT B,HOSE",1,,,,,,,,,,,,,,,,,
9,1,,172455-78920,,"HOSE H106BC248K",1,,,,,,,,,,,,,,,,,
10,1,,172455-78930,,"HOSE H106BC255K",1,,,,,,,,,,,,,,,,,
11,1,,172455-78942,,"HOSE G112BB317K",1,,,,,,,,,,,,,,,,,
12,1,,172455-78952,,"HOSE H208BB301K",1,,,,,,,,,,,,,,,,,
13,1,,172455-78961,,"HOSE H208BB396K",1,,,,,,,,,,,,,,,,,
14,1,,172455-78971,,"HOSE H208BB394K",1,,,,,,,,,,,,,,,,,
15,1,,172455-78980,,"HOSE H108AC189",1,,,,,,,,,,,,,,,,,
16,1,,172455-78990,,"HOSE H108AC189",1,,,,,,,,,,,,,,,,,
17,1,,172455-79100-1,,"CLAMP A,HOSE    (87)",1,,,,,,,,,,,,,,,,,,
18,1,,172455-79110,,"SUPPORT A, HOSE",2,,,,,,,,,,,,,,,,,
19,1,,172455-79121-1,,"CLAMP    (YELLOW:87)",1,,,,,,,,,,,,,,,,,,
20,1,,172455-79131,,SUPPORT,2,,,,,,,,,,,,,,,,,
21,1,,172455-79140,,COLLER,2,,,,,,,,,,,,,,,,,
22,1,,172455-79150-1,,"CLAMP C,HOSE    (87)",1,,,,,,,,,,,,,,,,,,
23,1,,172455-79380,,SUPPORT,1,,,,,,,,,,,,,,,,,
24,1,,172455-79390,,RUBBER,1,,,,,,,,,,,,,,,,,
25,1,,172122-79930,,"CLAMP B",1,,,,,,,,,,,,,,,,,
26,1,,172122-79930,,"CLAMP B",1,,,,,,,,,,,,,,,,,
27,1,,26013-080202,,"BOLT W/WASHER M8X20",2,,,,,,,,,,,,,,,,,
28,1,,26013-080252,,"BOLT M 8X 25",2,,,,,,,,,,,,,,,,,
29,1,,26013-100402,,"BOLT M10X 40",1,,,,,,,,,,,,,,,,,
30,1,,26013-100552,,"BOLT M10X 55",2,,,,,,,,,,,,,,,,,
```

https://truckmanualshub.com/

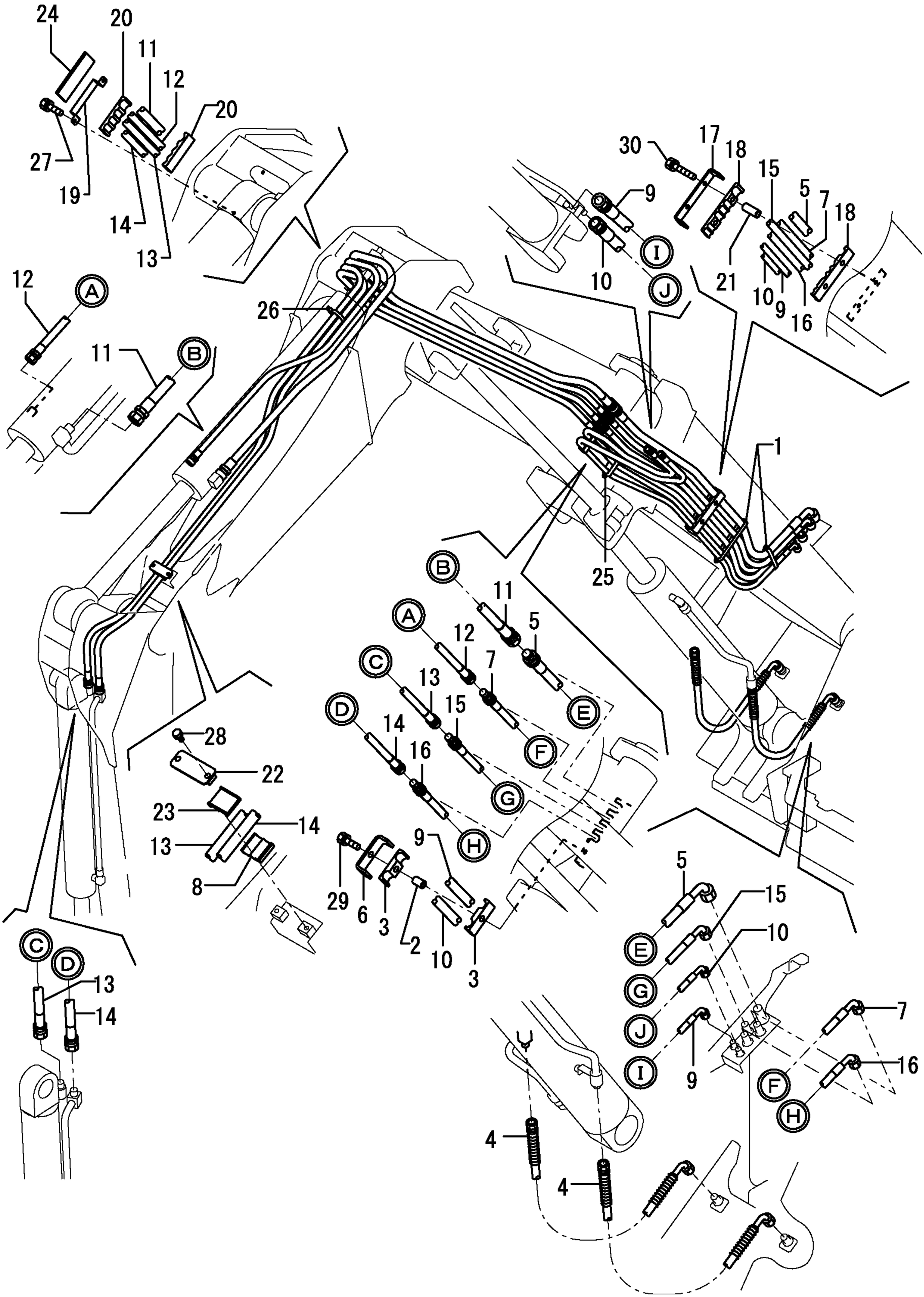

https://truckmanualshub.com/

```
1,1,,172455-76500-1,,"TUBE A,PTO(YELLOW:87",1,,,,,,,,,,,,,,,,,,
2,1,,172187-76520,,"COLLAR, CLAMP",3,,,,,,,,,,,,,,,,,
3,1,,172455-76520-1,,"TUBE B,PTO(YELLOW:87",1,,,,,,,,,,,,,,,,,,
4,1,,172455-76540-1,,"TUBE C,PTO(YELLOW:87",1,,,,,,,,,,,,,,,,,,
5,1,,172455-76560-1,,"TUBE D,PTO(YELLOW:87",1,,,,,,,,,,,,,,,,,,
6,1,,172151-76600,,"ADAPTER PF3/4,BLIND",2,,,,,,,,,,,,,,,,,,
7,1,,172142-76940,,"CLAMP 3/4(YELLOW:87)",2,,,,,,,,,,,,,,,,,,
8,1,,172455-79180,,"RUBBER A,CLAMP PTO",6,,,,,,,,,,,,,,,,,,
9,1,,172455-79190,,"CLAMP-D,TUBE    (97)",3,,,,,,,,,,,,,,,,,,
10,1,,172455-79500-1,,"PLATE A,PTO(YELLOW87",1,,,,,,,,,,,,,,,,,,,
11,1,,172455-79520-1,,"COVER B,PTO(YELLOW87",1,,,,,,,,,,,,,,,,,,,
12,1,,172455-79560-1,,"GUIDE B,PTO(YELLOW87",1,,,,,,,,,,,,,,,,,,,
13,1,,172455-79590-1,,"GUIDE C,PTO(YELLOW87",1,,,,,,,,,,,,,,,,,,,
14,1,,172455-79820,,"HOSE G112BC115K",2,,,,,,,,,,,,,,,,,,
15,1,,172455-79840,,"HOSE G112BB210K",2,,,,,,,,,,,,,,,,,,
16,1,,172183-81160,,"TREE CLIP",4,,,,,,,,,,,,,,,,,,
17,1,,172183-81170,,"TREE CLIP",2,,,,,,,,,,,,,,,,,,
18,1,,22217-100000,,"SPRING WASHER 10",2,,,,,,,,,,,,,,,,,,
19,1,,26013-100162,,"BOLT M10X 16",2,,,,,,,,,,,,,,,,,,
20,1,,26013-100502,,"BOLT M10X 50",3,,,,,,,,,,,,,,,,,,
21,1,,26013-120302,,"BOLT W/WASHER M12X30",4,,,,,,,,,,,,,,,,,,
22,1,,26116-101102,,"BOLT M10X110 PLATED",2,,,,,,,,,,,,,,,,,,
23,1,,26116-120552,,"BOLT M12X 55 PLATED",2,,,,,,,,,,,,,,,,,,
24,1,,172122-79930,,"CLAMP B",1,,,,,,,,,,,,,,,,,
25,1,,22217-120000,,"SPRING WASHER",2,,,,,,,,,,,,,,,,,,
```

https://truckmanualshub.com/

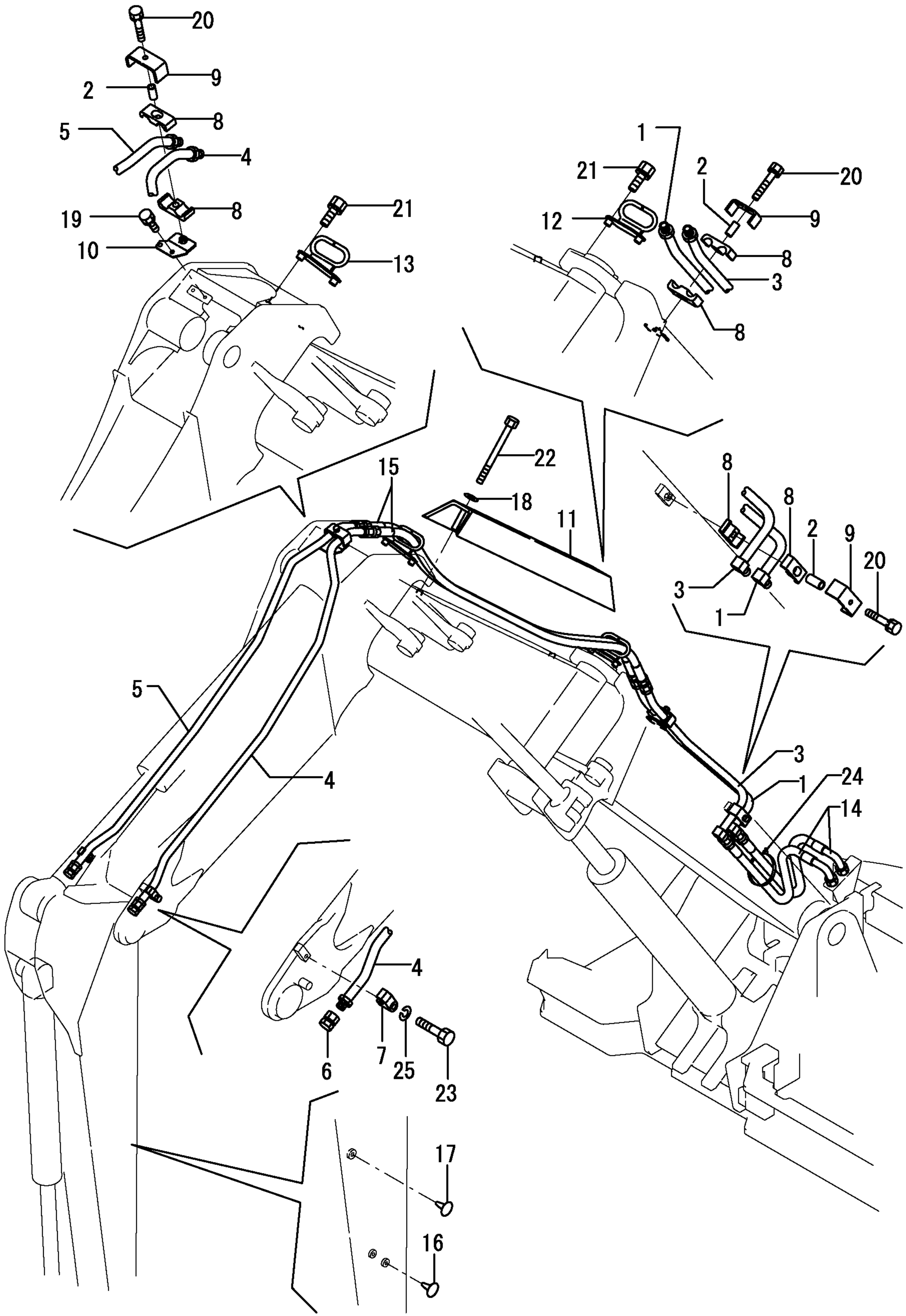

https://truckmanualshub.com/

```
1,1,,172123-76121,,"JOINT PF1/4",2,,,,,,,,,,,,,,,,,
2,1,,172455-76220,,"CONNECTOR PF1/4",2,,,,,,,,,,,,,,,,,
3,1,,24315-000110,,"O-RING 1B P-11.0",4,,,,,,,,,,,,,,,,,,
4,1,,172478-78480,,"HOSE F403BE132S",1,,,,,,,,,,,,,,,,,
5,1,,172478-78490,,"HOSE F403BC125S",1,,,,,,,,,,,,,,,,,
6,1,,172478-78500,,"HOSE G804BY096",1,,,,,,,,,,,,,,,,,
7,1,,172478-78510,,"HOSE G804BY124S",1,,,,,,,,,,,,,,,,,
```

https://truckmanualshub.com/

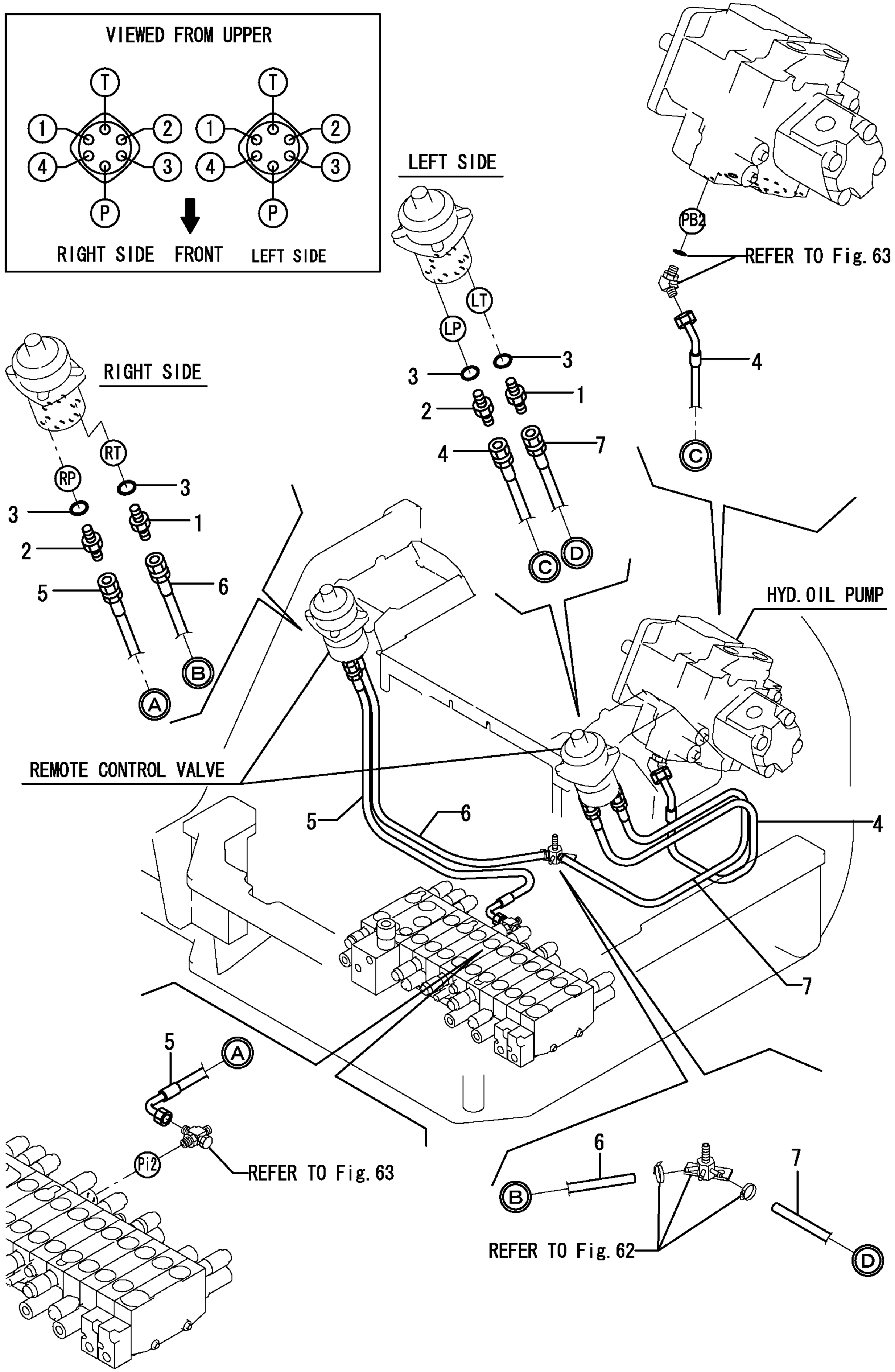

https://truckmanualshub.com/

```
1,1,,172123-76121,,"JOINT PF1/4",8,,,,,,,,,,,,,,,,,
2,1,,24315-000110,,"O-RING 1B P-11.0",8,,,,,,,,,,,,,,,,,,,
3,1,,172126-11510,,"BAND 300",5,,,,,,,,,,,,,,,,,
4,1,,172478-78400,,"HOSE F403BB130",1,,,,,,,,,,,,,,,,,,,
5,1,,172478-78410,,"HOSE F403BC160",1,,,,,,,,,,,,,,,,,,,
6,1,,172478-78420,,"HOSE F403BB179",1,,,,,,,,,,,,,,,,,,,
7,1,,172478-78430,,"HOSE F403BB128",1,,,,,,,,,,,,,,,,,,,
8,1,,172478-78440,,"HOSE F403BB120S",1,,,,,,,,,,,,,,,,,,,
9,1,,172478-78450,,"HOSE F403BB116S",1,,,,,,,,,,,,,,,,,,,
10,1,,172478-78460,,"HOSE F403BC186S",1,,,,,,,,,,,,,,,,,,,,
11,1,,172478-78470,,"HOSE F403BC147S",1,,,,,,,,,,,,,,,,,,,,
12,1,,172472-78800,,SPONGE,1,,,,,,,,,,,,,,,,,
13,1,,172165-79810,,SPONGE,1,,,,,,,,,,,,,,,,,
14,1,,172122-79930,,"CLAMP B",4,,,,,,,,,,,,,,,,,,
```

https://truckmanualshub.com/

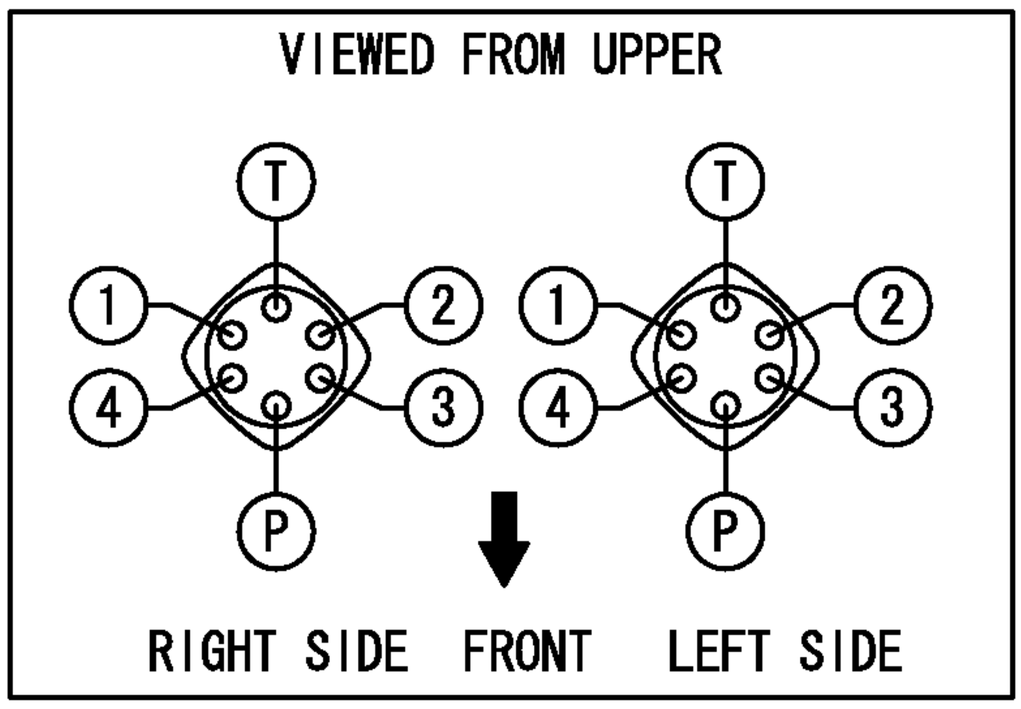

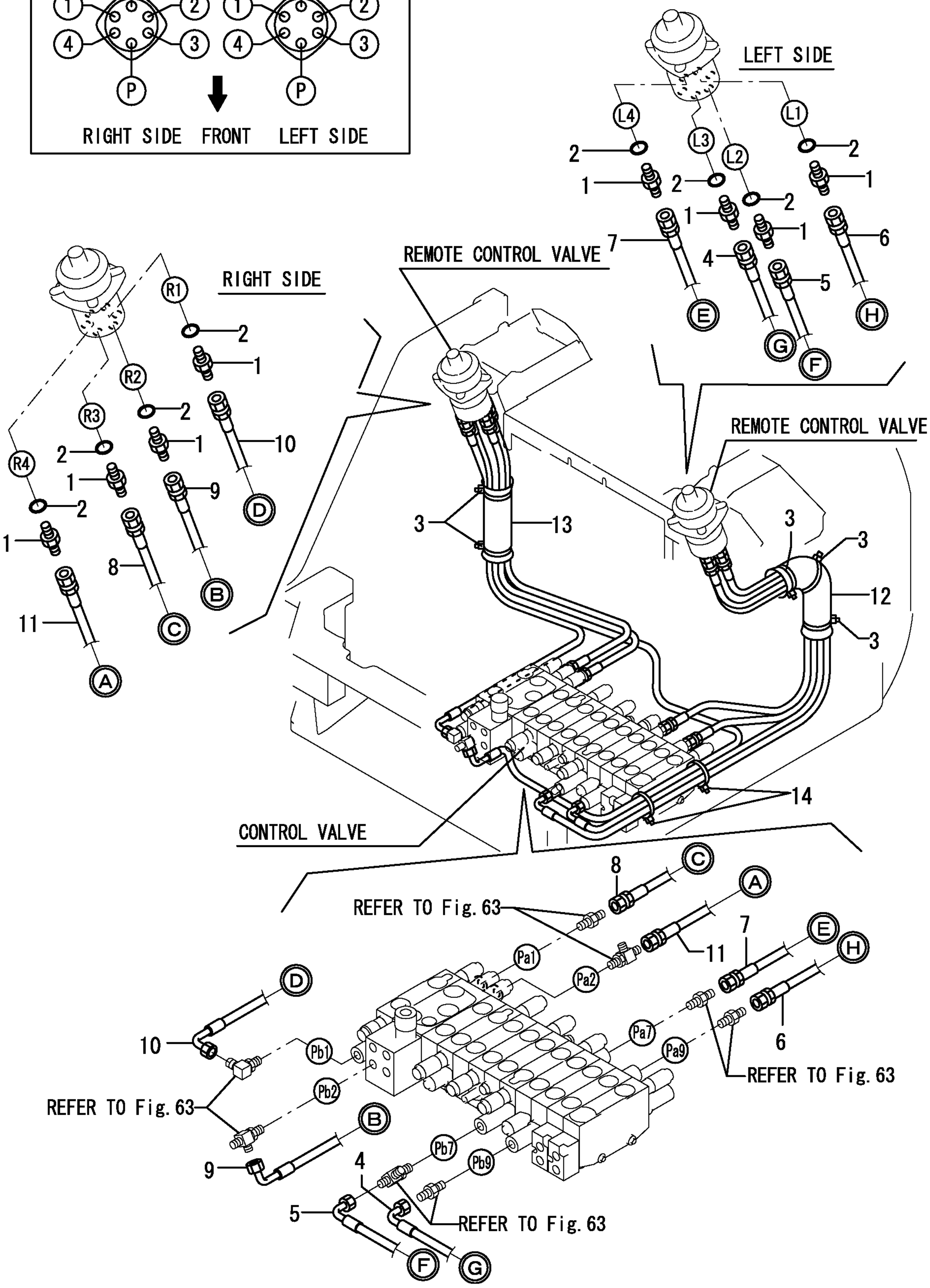

https://truckmanualshub.com/

```
1,1,,172112-77480,,"ELBOW 1/8, STREET",1,,,,,,,,,,,,,,,,,,
2,1,,172141-77800,,"JOINT, GREASE",4,,,,,,,,,,,,,,,,,,
3,1,,172455-77800,,"HOSE P602YY039",1,,,,,,,,,,,,,,,,,,
4,1,,172164-77810,,"HOSE P602YY070",1,,,,,,,,,,,,,,,,,,
5,1,,172312-77820,,"FITTING, GREASE",1,,,,,,,,,,,,,,,,,,
6,1,,24761-020000,,"NIPPLE PT1/8,GREASE",2,,,,,,,,,,,,,,,,,,
```

https://truckmanualshub.com/

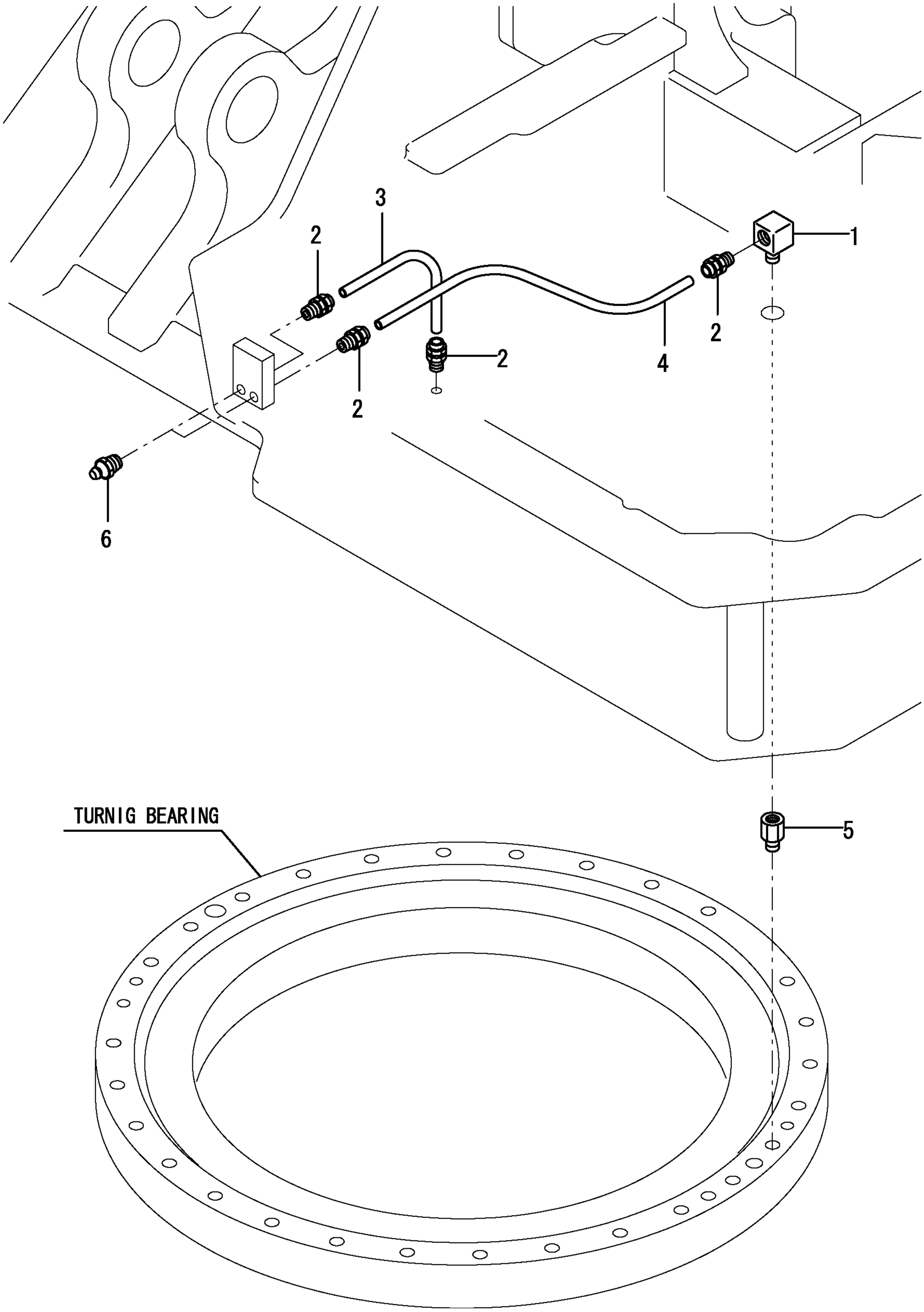

https://truckmanualshub.com/

```
1,1,,172444-17660,,CLIP,8,,,,,,,,,,,,,,,,,
2,1,,172183-81160,,"TREE CLIP",1,,,,,,,,,,,,,,,,,
3,1,,172141-12250,,PLATE,1,,,,,,,,,,,,,,,,,
4,1,,172155-45790,,SPACER,3,,,,,,,,,,,,,,,,,
5,1,,172455-81050-1,,"BOOM A,CRANE    (87)",1,,,,,,,,,,,,,,,,,
7,3,,172020-10620,,"SEAL 60 X 75 X 5",4,,,,,,,,,,,,,,,,,
8,3,,172455-81361,,"BUSH 95X105X100",2,,,,,,,,,,,,,,,,,
9,3,,172455-81370,,"BUSH 60X75X65",2,,,,,,,,,,,,,,,,,
10,3,,172455-81380,,"DUST SEAL 90X105X6",2,,,,,,,,,,,,,,,,,
11,3,,172455-81390,,"BUSH 100X48.5",2,,,,,,,,,,,,,,,,,
12,1,,172455-81690,,"O-RING 141X8",2,,,,,,,,,,,,,,,,,
13,1,,172175-81700,,"SHIM 60X110X0.8",2,,,,,,,,,,,,,,,,,
14,1,,172175-81710,,SHIM,2,,,,,,,,,,,,,,,,,
15,1,,172187-82400,,"SHIM 100X160X0.5",1,,,,,,,,,,,,,,,,,
16,1,,172187-82410,,"SHIM 100X160X0.8",1,,,,,,,,,,,,,,,,,
17,1,,172455-83100,,"PIN 90X568",1,,,,,,,,,,,,,,,,,
18,1,,172455-83130,,"PIN 80X212",1,,,,,,,,,,,,,,,,,
19,1,,172455-83140,,"PIN 80X246",1,,,,,,,,,,,,,,,,,
20,1,,172455-83160,,"PIN 100X581",1,,,,,,,,,,,,,,,,,
21,1,,172455-83220,,"PIN 60X147A",1,,,,,,,,,,,,,,,,,
22,1,,172455-83240,,"PIN 60X147C",2,,,,,,,,,,,,,,,,,
23,1,,172455-83440,,"WASHER 15X120X6",1,,,,,,,,,,,,,,,,,
24,1,,172455-83450,,"SHIM 90X160X0.5",1,,,,,,,,,,,,,,,,,
25,1,,172455-83460,,"SHIM 90X160X0.8",1,,,,,,,,,,,,,,,,,
26,1,,172455-83480,,"BOLT 18X190",1,,,,,,,,,,,,,,,,,
27,1,,172455-83490,,"PIN 12X140",1,,,,,,,,,,,,,,,,,
28,1,,172162-83600,,"SHIM 80X155X0.5",2,,,,,,,,,,,,,,,,,
29,1,,172162-83610,,"SHIM 80X155X1.2",2,,,,,,,,,,,,,,,,,
30,1,,22137-140000,,"WASHER 14,POLISHED",1,,,,,,,,,,,,,,,,,
31,1,,22157-140000,,"WASHER 14",3,,,,,,,,,,,,,,,,,
32,1,,22217-100000,,"SPRING WASHER 10",1,,,,,,,,,,,,,,,,,
33,1,,22217-140000,,"SPRING WASHER 14",5,,,,,,,,,,,,,,,,,
34,1,,24761-020000,,"NIPPLE PT1/8,GREASE",1,,,,,,,,,,,,,,,,,
35,1,,24761-050000,,"NIPPLE C,GREASE",3,,,,,,,,,,,,,,,,,
36,1,,26013-100162,,"BOLT M10X 16",1,,,,,,,,,,,,,,,,,
37,1,,26116-100604,,"BOLT M10X 60 PLATED",1,,,,,,,,,,,,,,,,,
38,1,,26116-140252,,"BOLT M14X 25 PLATED",2,,,,,,,,,,,,,,,,,
39,1,,26116-140302,,"BOLT M14X 30 PLATED",3,,,,,,,,,,,,,,,,,
40,1,,26716-180002,,"NUT M18",2,,,,,,,,,,,,,,,,,
```

https://truckmanualshub.com/

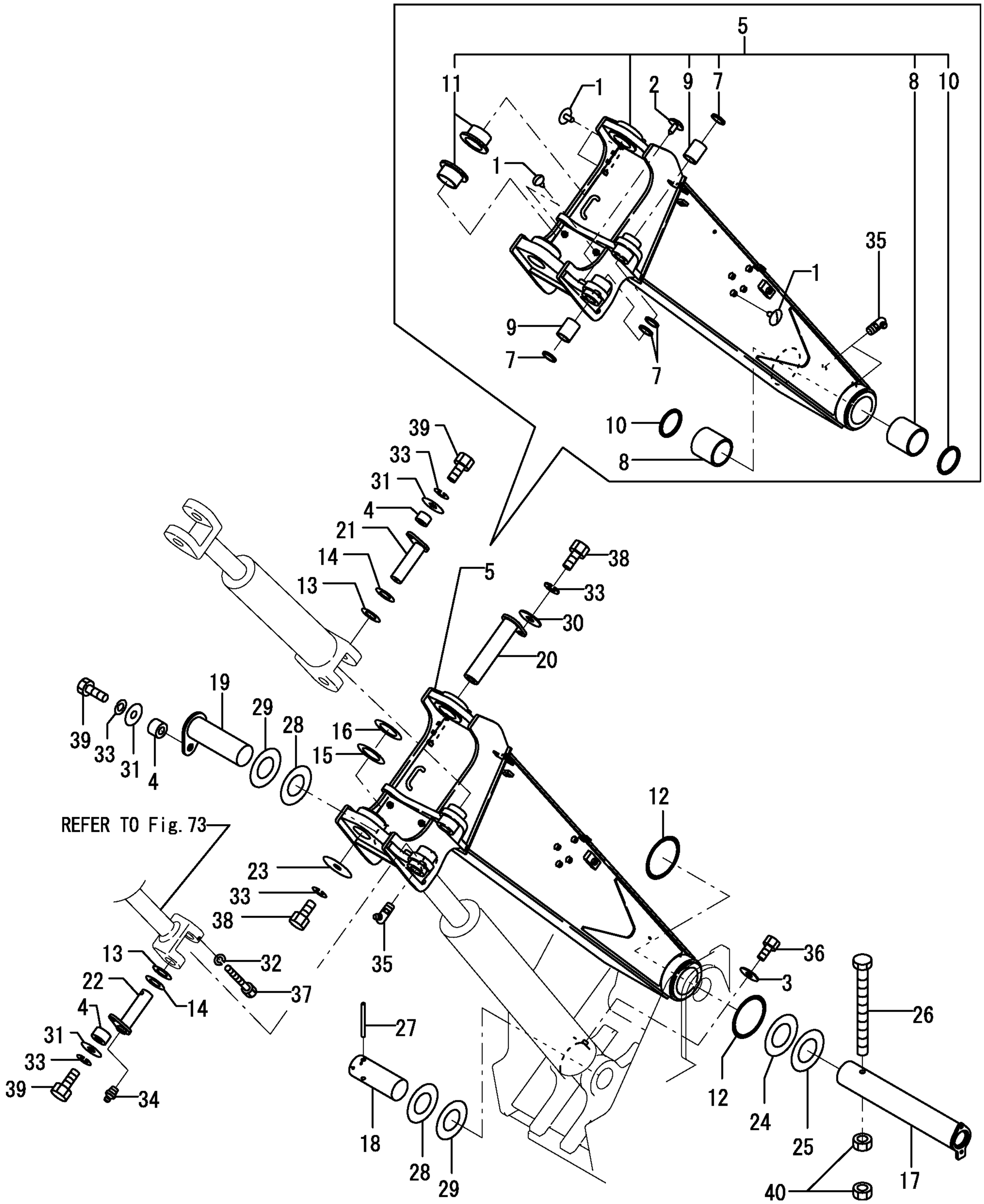

https://truckmanualshub.com/

```
1,1,,172155-45790,,SPACER,1,,,,,,,,,,,,,,,,,,
2,1,,172455-81400-1,,"BOOM B ASSY(YELLOW87",1,,,,,,,,,,,,,,,,,,,,
3,2,,172020-10620,,"SEAL 60 X 75 X 5",2,,,,,,,,,,,,,,,,,,
4,2,,172455-81370,,"BUSH 60X75X65",1,,,,,,,,,,,,,,,,,,
5,2,,172162-81680,,"SEAL 100X120X7,DUST",4,,,,,,,,,,,,,,,,,,
6,2,,172187-82320,,"BUSH 100X90",4,,,,,,,,,,,,,,,,,,
7,2,,24321-001000,,"O-RING 1A G-100.0",4,,,,,,,,,,,,,,,,,,
8,1,,172175-81700,,"SHIM 60X110X0.8",1,,,,,,,,,,,,,,,,,,
9,1,,172175-81710,,SHIM,1,,,,,,,,,,,,,,,,,,
10,1,,172455-83220,,"PIN 60X147A",1,,,,,,,,,,,,,,,,,,
11,1,,22157-140000,,"WASHER 14",1,,,,,,,,,,,,,,,,,,
12,1,,22217-140000,,"SPRING WASHER 14",1,,,,,,,,,,,,,,,,,,
13,1,,24761-020000,,"NIPPLE PT1/8,GREASE",3,,,,,,,,,,,,,,,,,,
14,1,,24761-050000,,"NIPPLE C,GREASE",2,,,,,,,,,,,,,,,,,,
15,1,,26116-140302,,"BOLT M14X 30 PLATED",1,,,,,,,,,,,,,,,,,,
```

https://truckmanualshub.com/

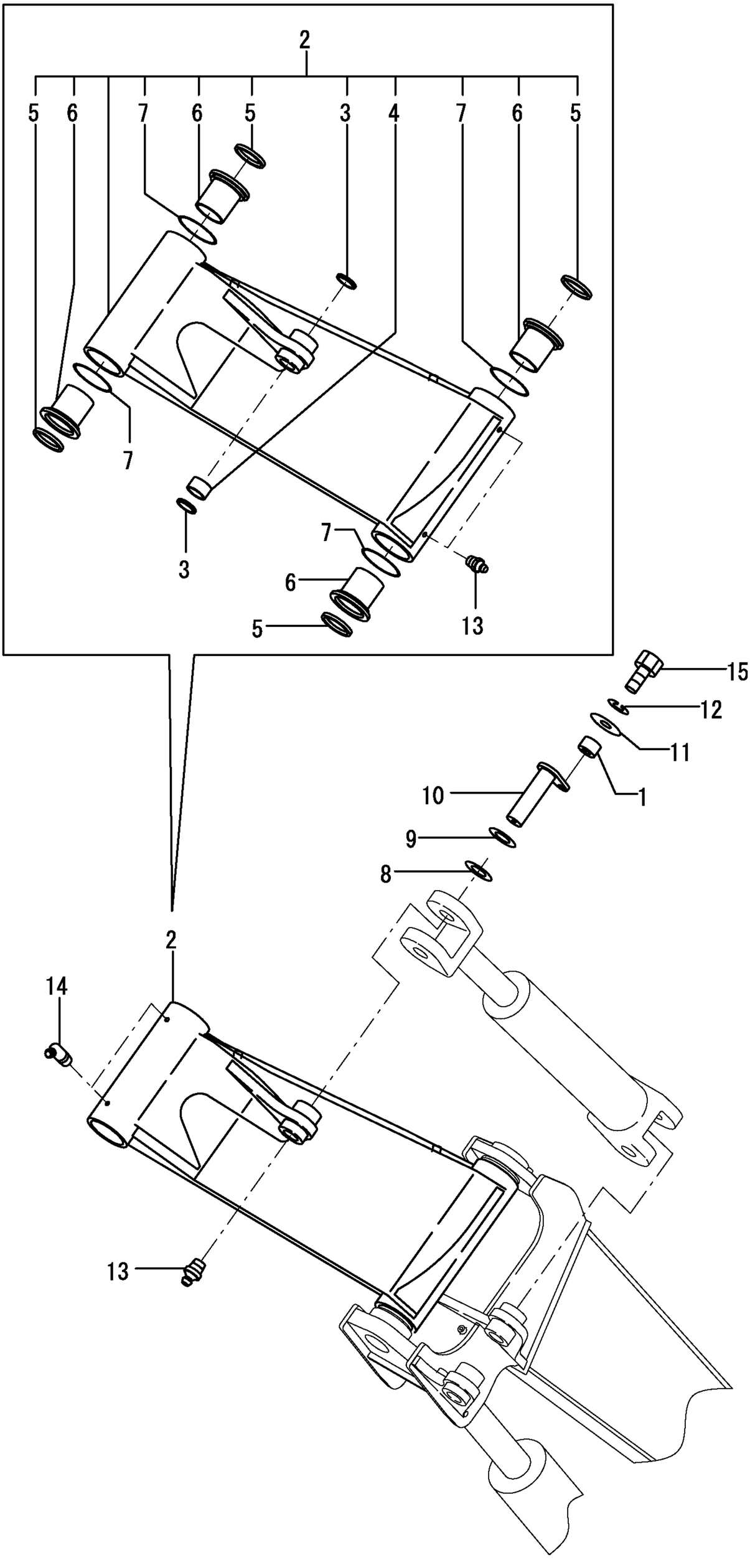

https://truckmanualshub.com/

```
1,1,,172155-45790,,SPACER,2,,,,,,,,,,,,,,,,,
2,1,,172175-81700,,"SHIM 60X110X0.8",1,,,,,,,,,,,,,,,,,
3,1,,172176-81700,,SHIM,1,,,,,,,,,,,,,,,,,
4,1,,172455-81701-1,,"BOOM C ASSY(YELLOW87",1,,,,,,,,,,,,,,,,,
5,2,,172020-10620,,"SEAL 60 X 75 X 5",2,,,,,,,,,,,,,,,,,
6,2,,172455-81370,,"BUSH 60X75X65",1,,,,,,,,,,,,,,,,,
7,2,,172455-81390,,"BUSH 100X48.5",2,,,,,,,,,,,,,,,,,
8,1,,172175-81710,,SHIM,1,,,,,,,,,,,,,,,,,
9,1,,172176-81710,,SHIM,1,,,,,,,,,,,,,,,,,
10,1,,172445-81990,,"SIMM 70X130X0.8",1,,,,,,,,,,,,,,,,,
11,1,,172187-82400,,"SHIM 100X160X0.5",1,,,,,,,,,,,,,,,,,
12,1,,172187-82410,,"SHIM 100X160X0.8",1,,,,,,,,,,,,,,,,,
13,1,,172187-82430,,"WASHER 15X90X6",1,,,,,,,,,,,,,,,,,
14,1,,172455-82800-1,,"ROD,OFFSET(YELLOW:87",1,,,,,,,,,,,,,,,,,
15,1,,172455-83180,,"PIN 100X485",1,,,,,,,,,,,,,,,,,
16,1,,172455-83200,,"PIN 70X324A",1,,,,,,,,,,,,,,,,,
17,1,,172455-83240,,"PIN 60X147C",1,,,,,,,,,,,,,,,,,
18,1,,172455-83260,,"PIN 70X324B",1,,,,,,,,,,,,,,,,,
19,1,,172455-83440,,"WASHER 15X120X6",1,,,,,,,,,,,,,,,,,
20,1,,172162-83580,,"SHIM 70X135X0.5",2,,,,,,,,,,,,,,,,,
21,1,,22137-140000,,"WASHER 14,POLISHED",2,,,,,,,,,,,,,,,,,
22,1,,22157-140000,,"WASHER 14",2,,,,,,,,,,,,,,,,,
23,1,,22217-100000,,"SPRING WASHER 10",1,,,,,,,,,,,,,,,,,
24,1,,22217-140000,,"SPRING WASHER 14",6,,,,,,,,,,,,,,,,,
25,1,,24761-020000,,"NIPPLE PT1/8,GREASE",1,,,,,,,,,,,,,,,,,
26,1,,26116-100604,,"BOLT M10X 60 PLATED",1,,,,,,,,,,,,,,,,,
27,1,,26116-140252,,"BOLT M14X 25 PLATED",4,,,,,,,,,,,,,,,,,
28,1,,26116-140302,,"BOLT M14X 30 PLATED",2,,,,,,,,,,,,,,,,,
```

https://truckmanualshub.com/

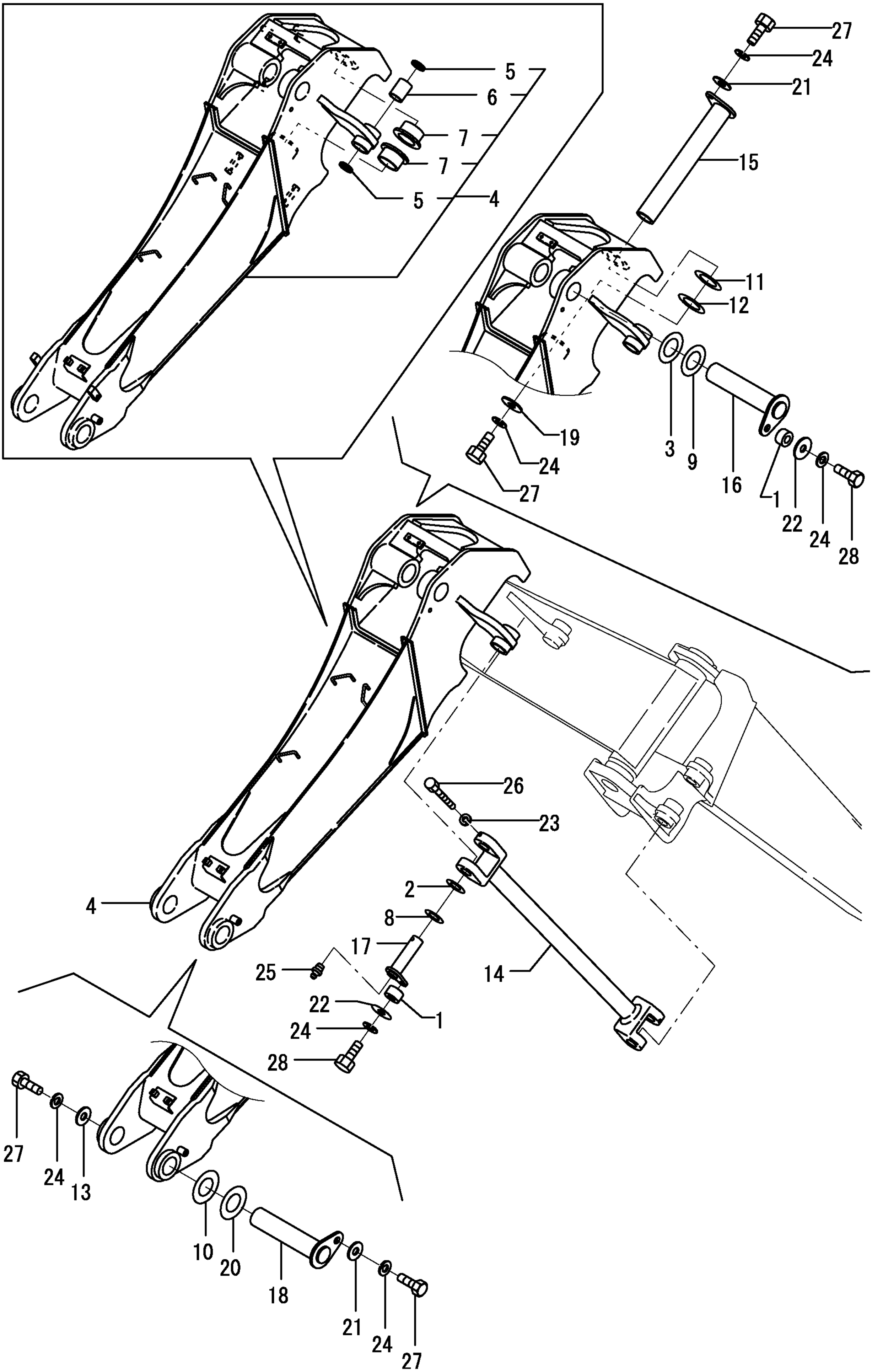

https://truckmanualshub.com/

```
1,1,,172444-17660,,CLIP,6,,,,,,,,,,,,,,,,,
2,1,,172155-45790,,SPACER,1,,,,,,,,,,,,,,,,,
3,1,,172183-81160,,"TREE CLIP",4,,,,,,,,,,,,,,,,,
4,1,,172183-81170,,"TREE CLIP",2,,,,,,,,,,,,,,,,,
5,1,,172164-81670,,SPACER,1,,,,,,,,,,,,,,,,,
6,1,,172176-81700,,SHIM,1,,,,,,,,,,,,,,,,,
7,1,,172176-81710,,SHIM,1,,,,,,,,,,,,,,,,,
8,1,,172455-82050-1,,"ARM 1720 ,CRANE (87)",1,,,,,,,,,,,,,,,,,,
10,3,,172448-54120,,"SEAL 50X60X4,DUST",4,,,,,,,,,,,,,,,,,,
11,3,,172187-81710,,"BUSH 50X75",4,,,,,,,,,,,,,,,,,
12,3,,172162-82280,,"BUSH 70-85",2,,,,,,,,,,,,,,,,,
13,3,,172162-82350,,"SEAL 70X85X6,DUST",2,,,,,,,,,,,,,,,,,,
14,1,,172165-82520,,"SHIM 50X85X0.5",1,,,,,,,,,,,,,,,,,
15,1,,172165-82530,,"SHIM 50X85X1.2",1,,,,,,,,,,,,,,,,,
16,1,,172455-83280,,"PIN 70X174",1,,,,,,,,,,,,,,,,,
17,1,,172455-83300,,"PIN 50X174",1,,,,,,,,,,,,,,,,,
18,1,,22157-120000,,"WASHER 12",1,,,,,,,,,,,,,,,,,
19,1,,22157-140000,,"WASHER 14",1,,,,,,,,,,,,,,,,,
20,1,,22217-140000,,"SPRING WASHER 14",1,,,,,,,,,,,,,,,,,
21,1,,24761-040000,,"NIPPLE B,GREASE",2,,,,,,,,,,,,,,,,,
22,1,,26013-120252,,"BOLT M12X 25",1,,,,,,,,,,,,,,,,,
23,1,,26116-140302,,"BOLT M14X 30 PLATED",1,,,,,,,,,,,,,,,,,,
```

https://truckmanualshub.com/

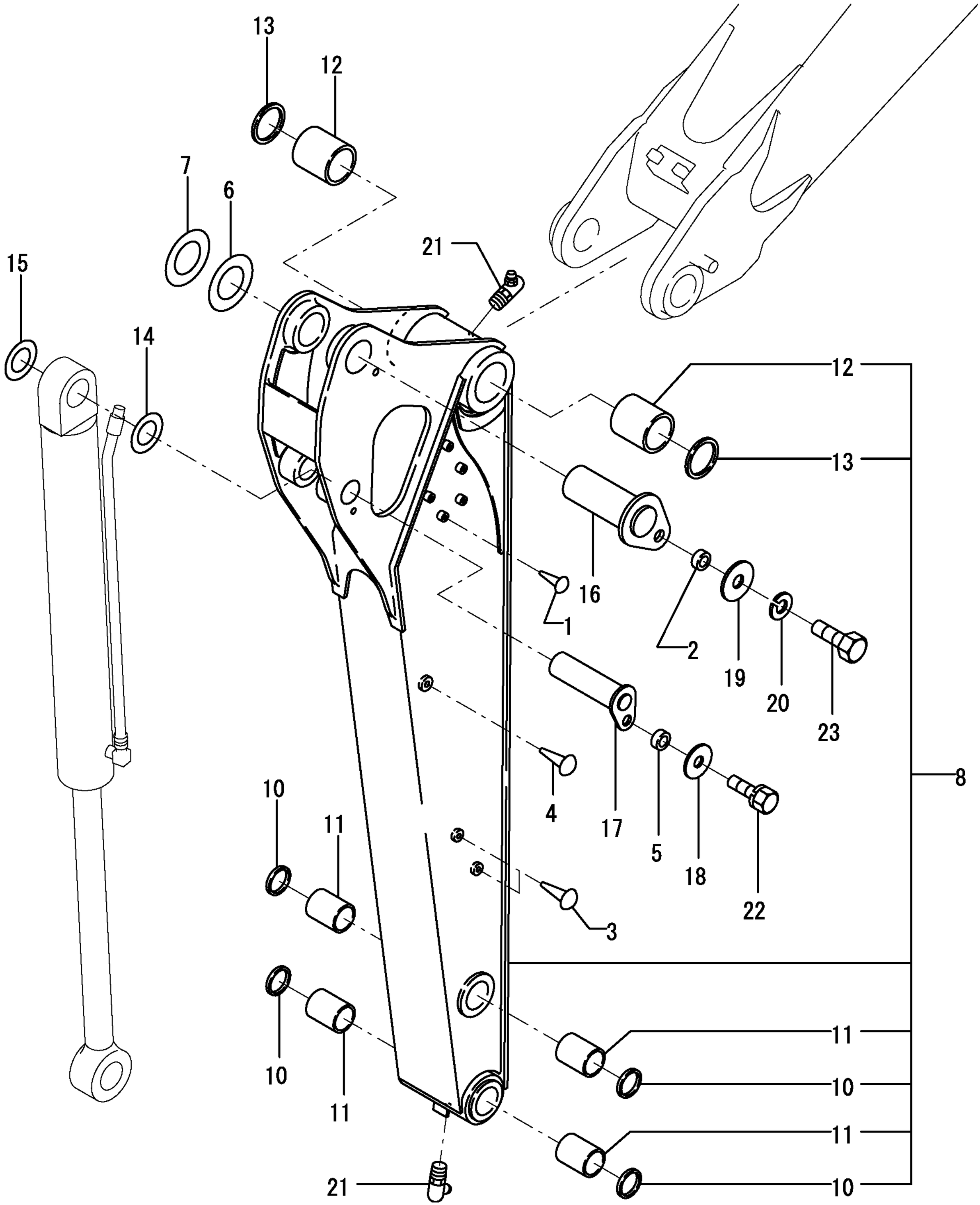

https://truckmanualshub.com/

```
1,1,,172147-82230,,SHIM,1,,,,,,,,,,,,,,,,,,
2,1,,172147-82250,,SHIM,1,,,,,,,,,,,,,,,,,,
3,1,,172455-82301-1,,"BUCKET LINK     (87)",1,,,,,,,,,,,,,,,,,,
4,2,,172448-54120,,"SEAL 50X60X4,DUST",2,,,,,,,,,,,,,,,,,,
5,2,,172168-54760,,"SEAL 60X70X4 DUST",4,,,,,,,,,,,,,,,,,,
6,2,,172455-82360,,"BUSH 60X47",2,,,,,,,,,,,,,,,,,,
7,2,,172187-83040,,"BUSHING 50X60X54.5",2,,,,,,,,,,,,,,,,,,
8,1,,172455-82380-1,,"ARM, BUCKET R   (87)",1,,,,,,,,,,,,,,,,,,
9,1,,172455-82391-1,,"ARM, BUCKET L   (87)",1,,,,,,,,,,,,,,,,,,
10,1,,172165-82520,,"SHIM 50X85X0.5",1,,,,,,,,,,,,,,,,,,
11,1,,172165-82530,,"SHIM 50X85X1.2",1,,,,,,,,,,,,,,,,,,
12,1,,172455-83350,,"PIN 60X248",1,,,,,,,,,,,,,,,,,,
13,1,,172455-83360,,"PIN 50X248",1,,,,,,,,,,,,,,,,,,
14,1,,24761-020000,,"NIPPLE PT1/8,GREASE",3,,,,,,,,,,,,,,,,,,
15,1,,24761-050000,,"NIPPLE C,GREASE",2,,,,,,,,,,,,,,,,,,
16,1,,26116-161202,,"BOLT M16X120 PLATED",2,,,,,,,,,,,,,,,,,,
17,1,,26716-160002,,"NUT M16",4,,,,,,,,,,,,,,,,,,
```

https://truckmanualshub.com/

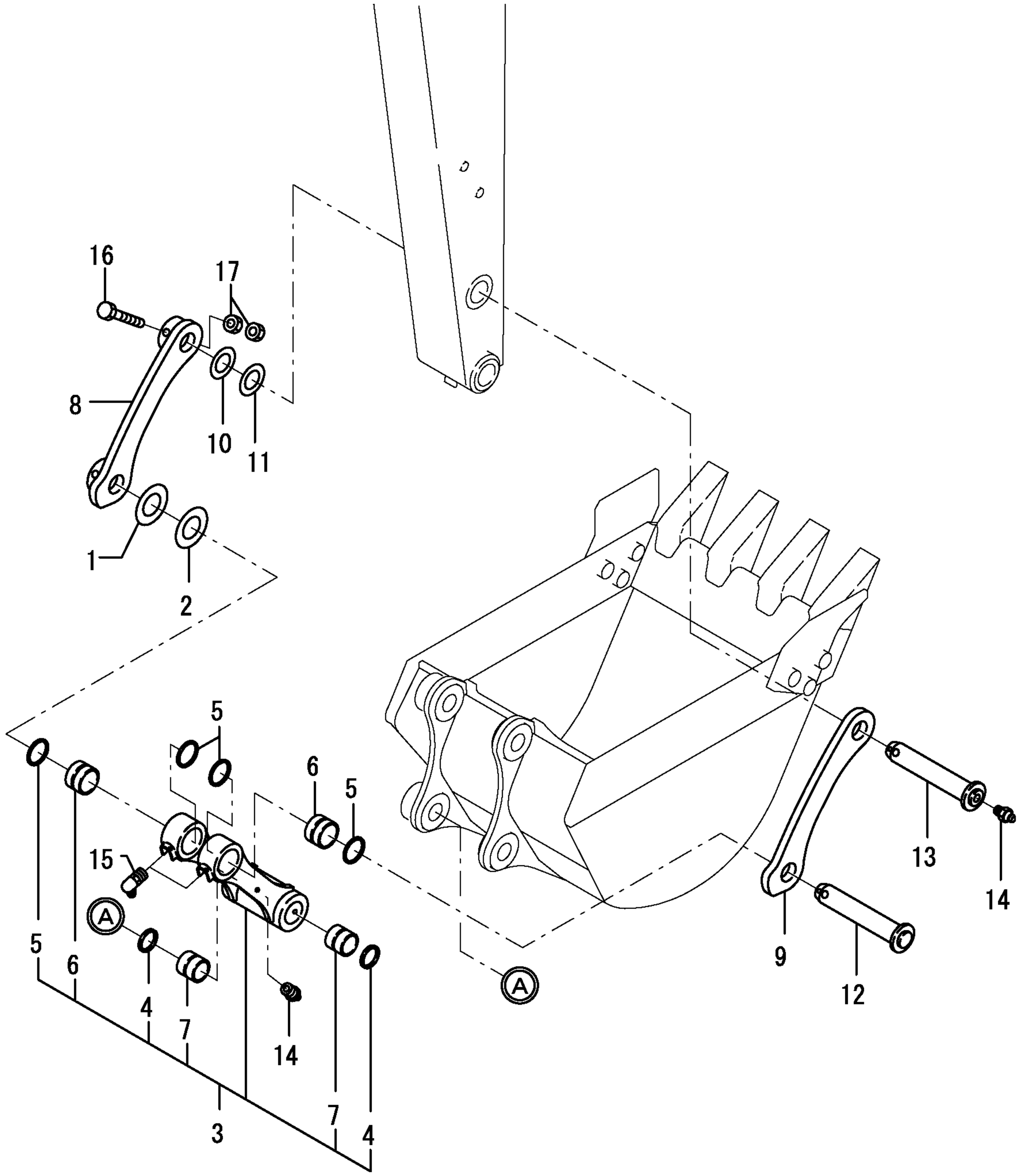

https://truckmanualshub.com/

```
1,1,,172162-82360,,"O-RING 86X8",2,,,,,,,,,,,,,,,,,,
2,1,,172455-83340,,"PIN 50X301",2,,,,,,,,,,,,,,,,,,
3,1,,172162-83540,,"SHIM 50X110X0.5",2,,,,,,,,,,,,,,,,,,
4,1,,172162-83550,,"SHIM 50X110X1.2",2,,,,,,,,,,,,,,,,,,
5,1,,26116-161302,,"BOLT M16X130 PLATED",2,,,,,,,,,,,,,,,,,,,
6,1,,26716-160002,,"NUT M16",4,,,,,,,,,,,,,,,,,,
```

https://truckmanualshub.com/

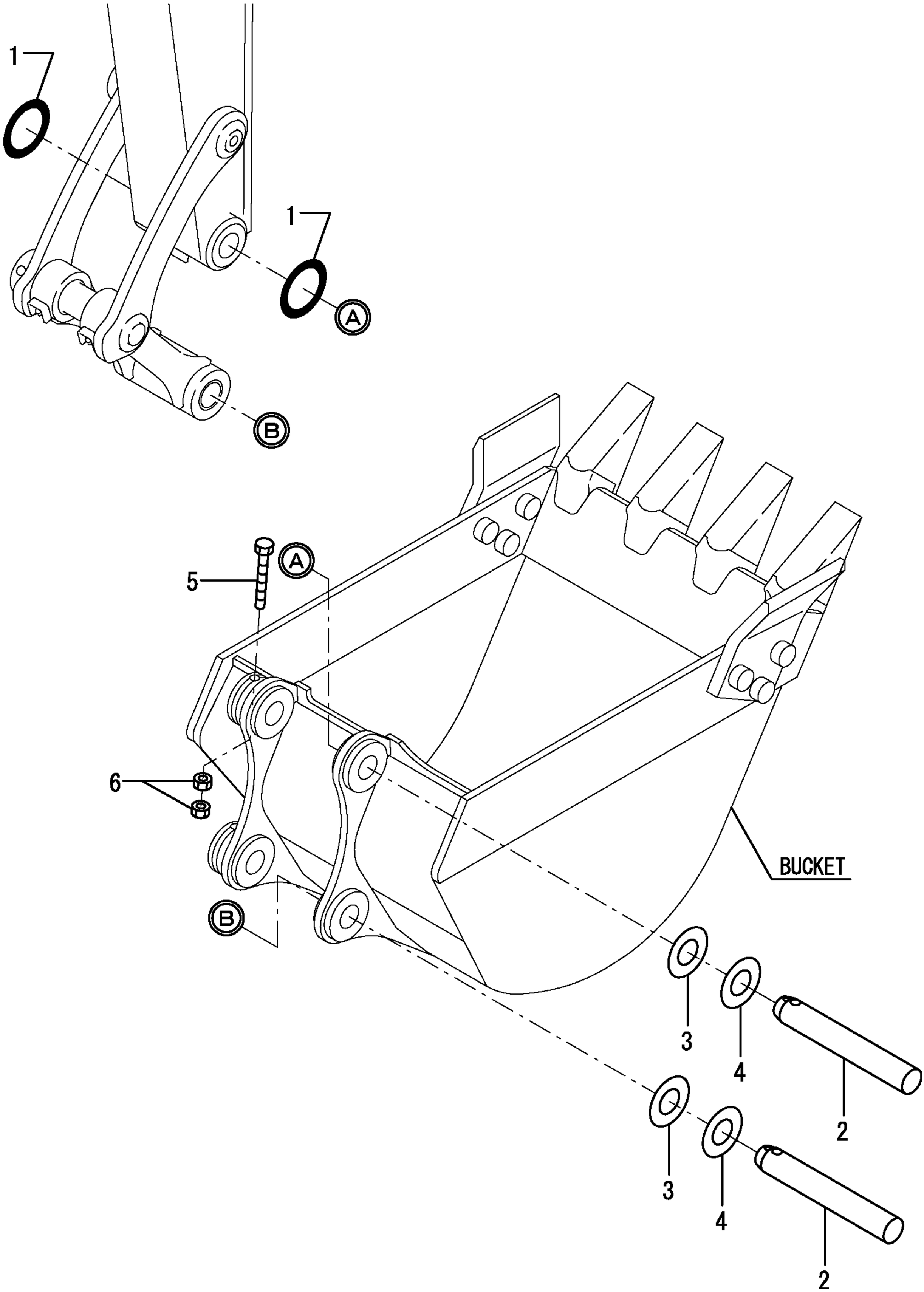

https://truckmanualshub.com/

```
1,1,,172155-45790,,SPACER,2,,,,,,,,,,,,,,,,,,
2,1,,172147-82230,,SHIM,4,,,,,,,,,,,,,,,,,,
3,1,,172147-82250,,SHIM,4,,,,,,,,,,,,,,,,,,
4,1,,172455-94100-1,,"BLADE     (GREEN:82)",1,,,,,,,,,,,,,,,,,,,,
5,2,,172020-10620,,"SEAL 60 X 75 X 5",4,,,,,,,,,,,,,,,,,,
6,2,,172162-81060,,"BUSH 60X55",2,,,,,,,,,,,,,,,,,,
7,1,,172162-94270,,PIN,2,,,,,,,,,,,,,,,,,,
8,1,,172162-94280-1,,"PLATE,LOCK(GREEN:82)",2,,,,,,,,,,,,,,,,,,,,
9,1,,172187-94300,,"PIN 60X147",2,,,,,,,,,,,,,,,,,,
10,1,,22157-140000,,"WASHER 14",2,,,,,,,,,,,,,,,,,,
11,1,,22217-140000,,"SPRING WASHER 14",2,,,,,,,,,,,,,,,,,,
12,1,,24761-020000,,"NIPPLE PT1/8,GREASE",2,,,,,,,,,,,,,,,,,,
13,1,,24761-040000,,"NIPPLE B,GREASE",2,,,,,,,,,,,,,,,,,,
14,1,,26013-120302,,"BOLT W/WASHER M12X30",4,,,,,,,,,,,,,,,,,,
15,1,,26116-140352,,"BOLT M14X 35 PLATED",2,,,,,,,,,,,,,,,,,,
```

https://truckmanualshub.com/

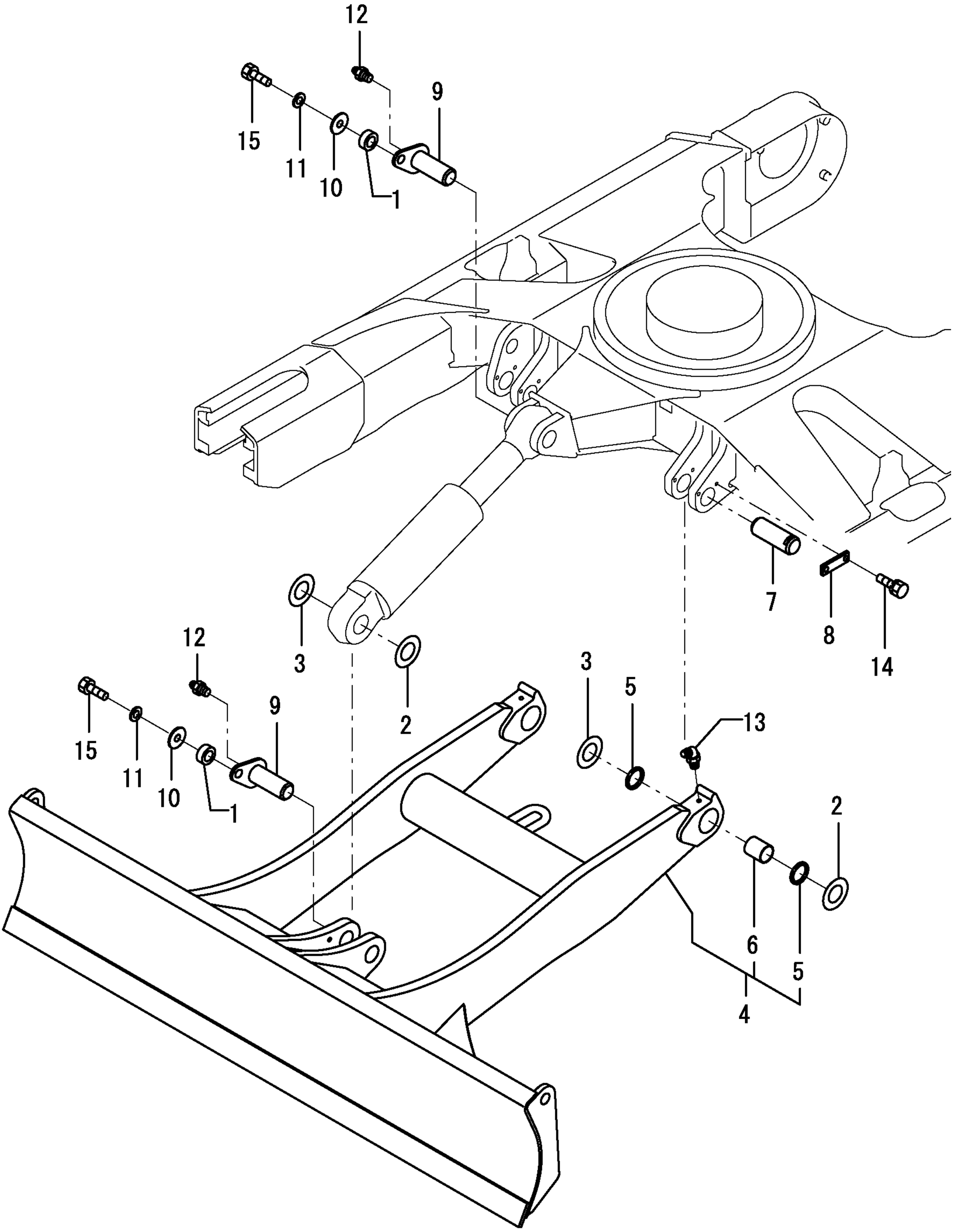

https://truckmanualshub.com/

```
[Info]
PcNo=Y00S4190
PcName=B7-5(EP)
JpnUse=0
JpnSec1=Œš‹@
JpnSec2=ƒoƒbƒNƒz[
JpnSec3=B
JpnPreface=0
EngUse=1
EngSec1=CONSTRUCTION
EngSec2=EXCAVATOR (B)
EngSec3=B
EngPreface=1
```

https://truckmanualshub.com/

```
0,Y00S4190
1,001,,"VEHICLE B7-5(EP)"
2,1,,LABEL,B7-5(EP),,,
2,2,,"SAFETY LABEL",B7-5(EP),,,
2,3,,MUFFLER,B7-5(EP),,,
2,4,,"AIR CLEANER",B7-5(EP),,,
2,5,,"ACCELERATOR LRVER",B7-5(EP),,,
2,6,,"ENGIN MOUNT",B7-5(EP),,,
2,7,,"RADIATOR & SUB-TANK",B7-5(EP),,,
2,8,,"RADIATOR MOUNT",B7-5(EP),,,
2,9,,"FUEL TANK",B7-5(EP),,,
2,10,,"FUEL LINE",B7-5(EP),,,
2,11,,BATTERY,B7-5(EP),,,
2,12,,"ELECTRIC PART(WIRING)",B7-5(EP),,,
2,13,,"ELECTRIC PART(EQUIPMENT)",B7-5(EP),,,
2,14,,"INDICATOR BOX",B7-5(EP),,,
2,15,,"WIND WASHER",B7-5(EP),,,
2,16,,HEATER,B7-5(EP),,,
2,17,,DEFROSTER,B7-5(EP),,,
2,18,,"SPROCKET & ROLLER",B7-5(EP),,,
2,19,,"IDLER & CRAWLER ADJUST",B7-5(EP),,,
2,20,,CRAWLER,B7-5(EP),,,
2,21,,"CONTROL EQUIPMENT(LOCK LEVER & STAND)",B7-5(EP),,,
2,22,,"CONTROL EQUIPMENT(TRAVEL)",B7-5(EP),,,
2,23,,"CONTROL EQUIPMENT(BLADE)",B7-5(EP),,,
2,24,,"CONTROL EQUIPMENT(OFFSET)",B7-5(EP),,,
2,25,,"CONTROL EQUIPMENT(LOW-HIGH PEDAL)",B7-5(EP),,,
2,26,,"CONTROL EQUIPMENT(P.T.O. PEDAL)",B7-5(EP),,,
2,27,,"CONTROL VALVE PLATE",B7-5(EP),,,
2,28,,"FRAME & TURNING BEARING",B7-5(EP),,,
2,29,,COVER(FRAME),B7-5(EP),,,
2,30,,"COVER(AROUND THE CONTROL)",B7-5(EP),,,
2,31,,"COVER(AROUND THE SEAT)",B7-5(EP),,,
2,32,,COVER(BOOM),B7-5(EP),,,
2,33,,"STEP & INSTRUMENT PANEL",B7-5(EP),,,
2,34,,"SEAT MOUNT",B7-5(EP),,,
2,35,,BONNET(BODY),B7-5(EP),,,
2,36,,"BONNET(UPPER COVER)",B7-5(EP),,,
2,37,,"BONNET(SIDE & REAR COVER)",B7-5(EP),,,
2,38,,"CABIN MOUNT",B7-5(EP),,,
2,39,,"HYD.OIL PUMP & JOINT",B7-5(EP),,,
2,40,,"BOOM CYLINDER",B7-5(EP),,,
2,41,,"ARM CYLINDER",B7-5(EP),,,
2,42,,"BUCKET CYLINDER",B7-5(EP),,,
2,43,,"BLADE CYLINDER",B7-5(EP),,,
2,44,,"OFFSET CYLINDER",B7-5(EP),,,
2,45,,"TRAVEL MOTOR",B7-5(EP),,,
2,46,,"TURNING MOTOR",B7-5(EP),,,
2,47,,ACCUMULATOR,B7-5(EP),,,
2,48,,"SWIVEL JOINT",B7-5(EP),,,
2,49,,"CONTROL VALVE(1/7)",B7-5(EP),,,
2,50,,"CONTROL VALVE(2/7)",B7-5(EP),,,
2,51,,"CONTROL VALVE(3/7)",B7-5(EP),,,
2,52,,"CONTROL VALVE(4/7)",B7-5(EP),,,
2,53,,"CONTROL VALVE(5/7)",B7-5(EP),,,
2,54,,"CONTROL VALVE(6/7)",B7-5(EP),,,
2,55,,"CONTROL VALVE(7/7)",B7-5(EP),,,
2,56,,"REMOTE CONTROL VALVE",B7-5(EP),,,
2,57,,"LUB.OIL COOLER",B7-5(EP),,,
2,58,,"HYD.OIL TANK",B7-5(EP),,,
2,59,,"HYD.OIL PIPING(TANK - PUMP - CONTROL VALVE)",B7-5(EP),,,
2,60,,"HYD.OIL PIPING(PUMP , CONTROL VALVE - TURNING MOTOR , BOOM)",B7-5(EP),,,
2,61,,"HYD.OIL PIPING(PUMP ,CONTROL VALVE - SWIVEL)",B7-5(EP),,,
```

https://truckmanualshub.com/

```
2,62,,"HYD.OIL PIPING(RETURN 1)",B7-5(EP),,,
2,63,,"HYD.OIL PIPING(RETURN 2)",B7-5(EP),,,
2,64,,"HYD.OIL PIPING(P.T.O. : FRAME END)",B7-5(EP),,,
2,65,,"HYD.OIL PIPING(TRACK FRAME)",B7-5(EP),,,
2,66,,"HYD.OIL PIPING(BOOM)",B7-5(EP),,,
2,67,,"HYD.OIL PIPING(P.T.O. : BOOM END)",B7-5(EP),,,
2,68,,"CONTROL PIPING(PUMP - REMOTE CONTROL VALVE - RETURN)",B7-5(EP),,,
2,69,,"CONTROL PIPING(REMOTE CONTROL VALVE - CONTRPL VALVE)",B7-5(EP),,,
2,70,,GREASING,B7-5(EP),,,
2,71,,BOOM-A,B7-5(EP),,,
2,72,,BOOM-B,B7-5(EP),,,
2,73,,BOOM-C,B7-5(EP),,,
2,74,,ARM,B7-5(EP),,,
2,75,,"BUCKET ARM & LINK",B7-5(EP),,,
2,76,,"BUCKET PIN",B7-5(EP),,,
2,77,,BLADE,B7-5(EP),,,
```