https://truckmanualshub.com/

WORK SHOP MANUAL

25LD330-2, 425-2, series engines, p.no. 1-5302-607

25 LD 330/2
25 LD 425/2

1st Edition

LOMBARDINI

SERVICE

COMPILER TECCATI	REG. CODE	MODEL N°	DATE OF ISSUE	REVISION 00	DATE	ENDORSED	
	1-5302-607	50889	06-03		23.06.2003		1

Downloaded from www.Manualslib.com manuals search engine

https://truckmanualshub.com/

LOMBARDINI

FOREWORD

We have done all in our power to give up to date and accurate technical information in this manual. Lombardini engines are, however, constantly developing thus the data in this publication may be liable to modification without prior notice.

The information in this manual is the exclusive property of Lombardini. Neither partial nor total duplications or reprints are therefore permitted without the express authorization of Lombardini.

The information in this manual is given on the assumption that:

1- the persons who service Lombardini engines have been adequately trained and outfitted to safely and professionally carry out the necessary tasks;

2- the persons who service Lombardini engines possess the necessary skills and special Lombardini tools to safely and professionally carry out the necessary tasks;

3- the persons who service Lombardini engines have read the specific information concerning the above mentioned Service operations and that they have clearly understood the operations required.

GENERAL SERVICE NOTES

1 - Only use genuine Lombardini spare parts. Use of spurious spares may lead to incorrect performance and shorten the life of the engines.
2 - The metric system is used to express all data, i.e. the dimensions are given in millimeters (mm), torque is expressed in Newton-meters (Nm), weight in kilograms (Kg), volume in liters or cubic centimeters (cc) and pressure in barometric units (bar).

LOMBARDINI SERVICE

Downloaded from www.Manualslib.com manuals search engine

https://truckmanualshub.com/

WARRANTY CERTIFICATE

The products manufactured by Lombardini Srl are warranted to be free from conformity defects for a period of 24 months from the date of delivery to the first end user.
For engines fitted to stationary equipment, working at constant load and at constant and/or slightly variable speed within the setting limits, the warranty covers a period up to a limit of 2000 working hours, if the above mentioned period (24 months) is not expired.
If no hour-meter is fitted , 12 working hours per calendar day will be considered.
For what concerns the parts subject to wear and deterioration (injection/feeding system, electrical system, cooling system, sealing parts, non-metallic pipes, belts) warranty covers a maximum limit of 2000 working hours, if the above mentioned period (24 months) is not expired.
For correct maintenance and replacement of these parts, it is necessary to follow the instructions reported in the documentation supplied with each engine.
To ensure the engine warranty is valid, the engine installation, considering the product technical features, must be carried out by qualified personnel only.
The list of the Lombardini authorized dealers is reported in the “Service” booklet, supplied with each engine.
Special applications involving considerable modifications to the cooling/lubricating system (for ex.: dry oil sump), filtering system, turbo-charged models, will require special written warranty agreements.
Within the above stated periods Lombardini Srl directly or through its authorized network will repair and/or replace free of charge any own part or component that, upon examination by Lombardini or by an authorized Lombardini agent, is found to be defective in conformity, workmanship or materials.
Any other responsibility/obligation for different expenses, damages and direct/indirect losses deriving from the engine use or from both the total or partial impossibility of use, is excluded.
The repair or replacement of any component will not extend or renew the warranty period.

Lombardini warranty obligations here above described will be cancelled if:

- Lombardini engines are not correctly installed and as a consequence the correct functional parameters are not respected and altered.
- Lombardini engines are not used according to the instructions reported in the “Use and Maintenance” booklet supplied with each engine.
- Any seal affixed to the engine by Lombardini has been tampered with or removed.
- Spare parts used are not original Lombardini.
- Feeding and injection systems are damaged by unauthorized or poor quality fuel types.
- Electrical system failure is due to components, connected to this system, which are not supplied or installed by Lombardini.
- Engines have been disassembled, repaired or altered by any part other than an authorized Lombardini agent.

Following expiration of the above stated warranty periods and working hours, Lombardini will have no further responsibility for warranty and will consider its here above mentioned obligations for warranty complete.
Any warranty request related to a non-conformity of the product must be addressed to the Lombardini Srl service agents.

Downloaded from www.Manualslib.com manuals search engine

https://truckmanualshub.com/

INDEX

This manual contains pertinent information regarding the repair of LOMBARDINI air-cooled, indirect injection Diesel engines type **25LD330-2 and 25LD425-2:** updated June 23, 2003.

I TROUBLE SHOOTING ____ Page 7

II SAFETY AND WARNING DECALS - SAFETY INSTRUCTIONS ____ " 8-9

III MODEL NUMBER AND IDENTIFICATION ____ " 10

IV TECHNICAL DATA ____ " 11

V CHARACTERISTICS ____ " 12

VI OVERALL DIMENSIONS ____ " 13

VII SPECIAL TOOLS ____ " 14

VIII MAINTENANCE - RECOMMENDED OIL TYPE - REFILLING ____ " 15-16

IX DISASSEMBLY OF THE ENGINE ____ " 17

Extracting crankcase bushes 18
Extracting fuel injectors 17
Extracting the oil pressure indicator plug 18
Extraction of crankshaft gear 17
Extraction of flywheel side main bearing 17
Extraction of the camshaft gear 18
Removing the flywheel 17

X CHECKS AND OVERHAUL ____ Page 19

Camshaft 24
Central main bearings 24
Connecting rods 22
Crankshaft 23
Cylinders 21
Cylinders heads 19
Fuel pump push-rod 25
Governor lever and spring 26
Injection pump plug nuts and control rods 25
Oil pump 25
Oil seal rings 24
Piston rings - Pistons - Piston pins 22
Rocker arms 21
Tappets and push rods 25
Valves - Guides - Seats 19
Valves and springs 21

Downloaded from www.Manualslib.com manuals search engine

https://truckmanualshub.com/

XI INJECTION EQUIPMENT — Page 27

Assembly of injection pumps 28
Checking and setting the injectors 29
Checking injection pumps 27
Disassembly and re-assembly of injectors 29
Fuel circuit 27
Injection pump setting 27
Injection pumps 27
Injectors 29
Testing air tightness 28

XII ELECTRICAL EQUIPMENT — Page 30

Checking electrical equipment 30
Checking the alternator 30
Plant specifications 30

XIII ENGINE ASSEMBLY — Page 31

Camshaft 33
Central main bearings 31
Checking injector protrusion 36
Connecting rods 35
Crankshaft 32
Crankshaft end float 32
Cylinder heads 36
Cylinders 35
Electric shut off 38
Feed pump 38
Governor tie rod adjustment 33
Injection check 37
Injection pumps 36
Injectors and injector pipes 38
Main bearings - flywheel side 32
Oil filter 38
Oil pump 34
Pistons 35
Preparing the crankcase 31
Pulley and flywheel 34
Timing cover 34
Valve clearance 36

Downloaded from www.Manualslib.com manuals search engine

https://truckmanualshub.com/

INDEX

XIV ENGINE TESTING — **Page 39**

Checking for oil leaks 39
Checking oil pressure 39
Dyno testing of engine 39
Speed adjustment 39

XV STORAGE — **Page 41**

How to prepare the engine for operation 41
Permanent protection (over 6 months) 41
Storage 41
Temporary protection (1/6 months) 41

XVI QUICK REFERENCE CHARTS — **Page 42**

Adjustments 42
Couplings 42
Standard screw tightening torques 43
Tightening torques 43

Downloaded from www.Manualslib.com manuals search engine

https://truckmanualshub.com/

POSSIBLE CAUSES AND TROUBLE SHOOTING

The following table contains the possible causes of some failures which may occur during operation. Always perform these simple checks before removing or replacing any part.

	POSSIBLE CAUSE	TROUBLE									
		Engine does not start	Engine starts but stops	No acceleration	Non-uniform speed	Black smoke	White smoke	Too low oil pressure	Increase oil level	Excessive oil consumption	Oil and fuel dripping from exhaust
FUEL CIRCUIT	Clogged pipes	●		●							
	Clogged fuel filter	●	●	●			●				
	Air inside fuel circuit	●	●	●	●		●				
	Clogged tank breather hole	●	●	●							
	Faulty fuel pump	●	●								
	Injector jammed	●									
	Jammed injection pump delivery valve	●									
	Wrong injector setting					●					●
	Excessive plunger blow-by	●				●			●		
	Jammed injection pump delivery control	●		●	●						
	Wrong injection pump setting		●	●	●	●					
LUBRICATION	Oil level too high				●		●			●	
	Jammed pressure relief valve							●			
	Worn oil pump							●			
	Air inside oil suction pipe							●			
	Faulty pressure gauge or switch							●			
	Clogged oil suction pipe							●			
ELECTRIC SYSTEM	Battery discharged	●									
	Wrong or inefficient cable connection	●									
	Defective ignition switch	●									
	Defective starter motor	●									
MAINTE-NANCE	Clogged air filter	●		●		●				●	
	Excessive idle operation						●			●	●
	Incomplete running-in						●			●	●
	Engine overloaded	●	●	●		●					
SETTINGS/REPAIRS	Advanced injection	●									
	Delayed injection	●				●	●				
	Incorrect governor linkage adjustment	●			●						
	Broken or loose governor spring		●	●							
	Idle speed too low		●		●						
	Worn or jammed piston rings						●			●	●
	Worn or scored cylinders						●			●	●
	Worn valve guides						●			●	●
	Jammed valves	●									
	Worn bearings							●			
	Governor linkage not free to slide	●	●		●						
	Drive shaft not free to slide					●					
	Damaged cylinder head gasket	●									

Downloaded from www.Manualslib.com manuals search engine

https://truckmanualshub.com/

SAFETY AND WARNING DECALS

DANGER

Failure to comply with the instructions could result in damage to persons and property

CAUTION

Failure to comply with the instructions could lead to technical damage to the machine and/or system

---

SAFETY INSTRUCTIONS

- Lombardini Engines are built to supply their performances in a safe and long-lasting way. To obtain these results, it is essential for users to comply with the servicing instructions given in the relative manual along with the safety recommendations listed below.
- The engine has been made according to a machine manufacturer's specifications and all actions required to meet the essential safety and health safeguarding requisites have been taken, as prescribed by the current laws in merit. All uses of the engine beyond those specifically established cannot therefore be considered as conforming to the use defined by Lombardini which thus declines all liability for any accidents deriving from such operations.
- The following indications are dedicated to the user of the machine in order to reduce or eliminate risks concerning engine operation in particular, along with the relative routine maintenance work.
- The user must read these instructions carefully and become familiar with the operations described. Failure to do this could lead to serious danger for his personal safety and health and that of any persons who may be in the vicinity of the machine.
- The engine may only be used or assembled on a machine by technicians who are adequately trained about its operation and the deriving dangers. This condition is also essential when it comes to routine and, above all, extraordinary maintenance operations which, in the latter case, must only be carried out by persons specifically trained by Lombardini and who work in compliance with the existing documentation.
- Variations to the functional parameters of the engine, adjustments to the fuel flow rate and rotation speed, removal of seals, demounting and refitting of parts not described in the operation and maintenance manual by unauthorized personnel shall relieve Lombardini from all and every liability for deriving accidents or for failure to comply with the laws in merit.
- On starting, make sure that the engine is as horizontal as possible, unless the machine specifications differ. In the case of manual start-ups, make sure that the relative actions can take place without the risk of hitting walls or dangerous objects, also considering the movements made by the operator. Pull-starting with a free cord (thus excluding self-winding starting only), is not permitted even in an emergency.
- Make sure that the machine is stable to prevent the risk of overturning.
- Become familiar with how to adjust the rotation speed and stop the engine.
- Never start the engine in a closed place or where there is insufficient ventilation. Combustion creates carbon monoxide, an odourless and highly poisonous gas. Lengthy stays in places where the engine freely exhausts this gas can lead to unconsciousness and death.

Downloaded from www.Manualslib.com manuals search engine

https://truckmanualshub.com/

- The engine must not operate in places containing inflammable materials, in explosive atmospheres, where there is dust that can easily catch fire unles specific, adequate and clearly indicated precautions have been taken and have been certified for the machine.
- To prevent fire hazards, always keep the machine at least one meter from buildings or from other machinery.
- Children and animals must be kept at a due distance from operating machines in order to prevent hazards deriving from their operation.
- Fuel is inflammable. The tank must only be filled when the engine is off. Thoroughly dry any spilt fuel and move the fuel container away along with any rags soaked in fuel or oil. Make sure that no soundproofing panels made of porous material are soaked in fuel or oil. Make sure that the ground or floor on which the machine is standing has not soaked up any fuel or oil.
- Fully tighten the tank plug each time after refuelling. Do not fill the tank right to the top but leave an adequate space for the fuel to expand.
- Fuel vapour is highly toxic. Only refuel outdoors or in a well ventilated place.
- Do not smoke or use naked flames when refuelling.
- The engine must be started in compliance with the specific instructions in the operation manual of the engine and/or machine itself. Do not use auxiliary starting aids that were not installed on the original machine (e.g. Startpilot').
- Before starting, remove any tools that were used to service the engine and/or machine. Make sure that all guards have been refitted.
- During operation, the surface of the engine can become dangerously hot. Avoid touching the exhaust system in particular.
- Before proceeding with any operation on the engine, stop it and allow it to cool. Never carry out any operation whilst the engine is running.
- The coolant fluid circuit is under pressure. Never carry out any inspections until the engine has cooled and even in this case, only open the radiator plug or expansion chamber with the utmost caution, wearing protective garments and goggles. If there is an electric fan, do not approach the engine whilst it is still hot as the fan could also start operating when the engine is at a standstill. Only clean the coolant system when the engine is at a standstill.
- When cleaning the oil-cooled air filter, make sure that the old oil is disposed of in the correct way in order to safeguard the environment. The spongy filtering material in oil-cooled air filters must not be soaked in oil. The reservoir of the separator pre-filter must not be filled with oil.
- The oil must be drained whilst the engine is hot (oil T ~ 80°C). Particular care is required to prevent burns. Do not allow the oil to come into contact with the skin.
- Make sure that the drained oil, the oil filter and the oil it contains are disposed of in the correct way in order to safeguard the environment.
- Pay attention to the temperature of the oil filter when the filter itself is replaced.
- Only check, top up and change the coolant fluid when the engine is off and cold. Take care to prevent fluids containing nitrites from being mixed with others that do not contain these substances since "Nitrosamine", dangerous for the health, can form. The coolant fluid is polluting and must therefore be disposed of in the correct way to safeguard the environment.
- During operations that involve access to moving parts of the engine and/or removal of rotating guards, disconnect and insulate the positive wire of the battery to prevent accidental short-circuits and to stop the starter motor from being energized.
- Only check belt tension when the engine is off.
- Only use the eyebolts installed by Lombardini to move the engine. These lifting points are not suitable for the entire machine; in this case, the eyebolts installed by the manufacturer should be used.

Downloaded from www.Manualslib.com manuals search engine

https://truckmanualshub.com/

III MODEL NUMBER AND IDENTIFICATION

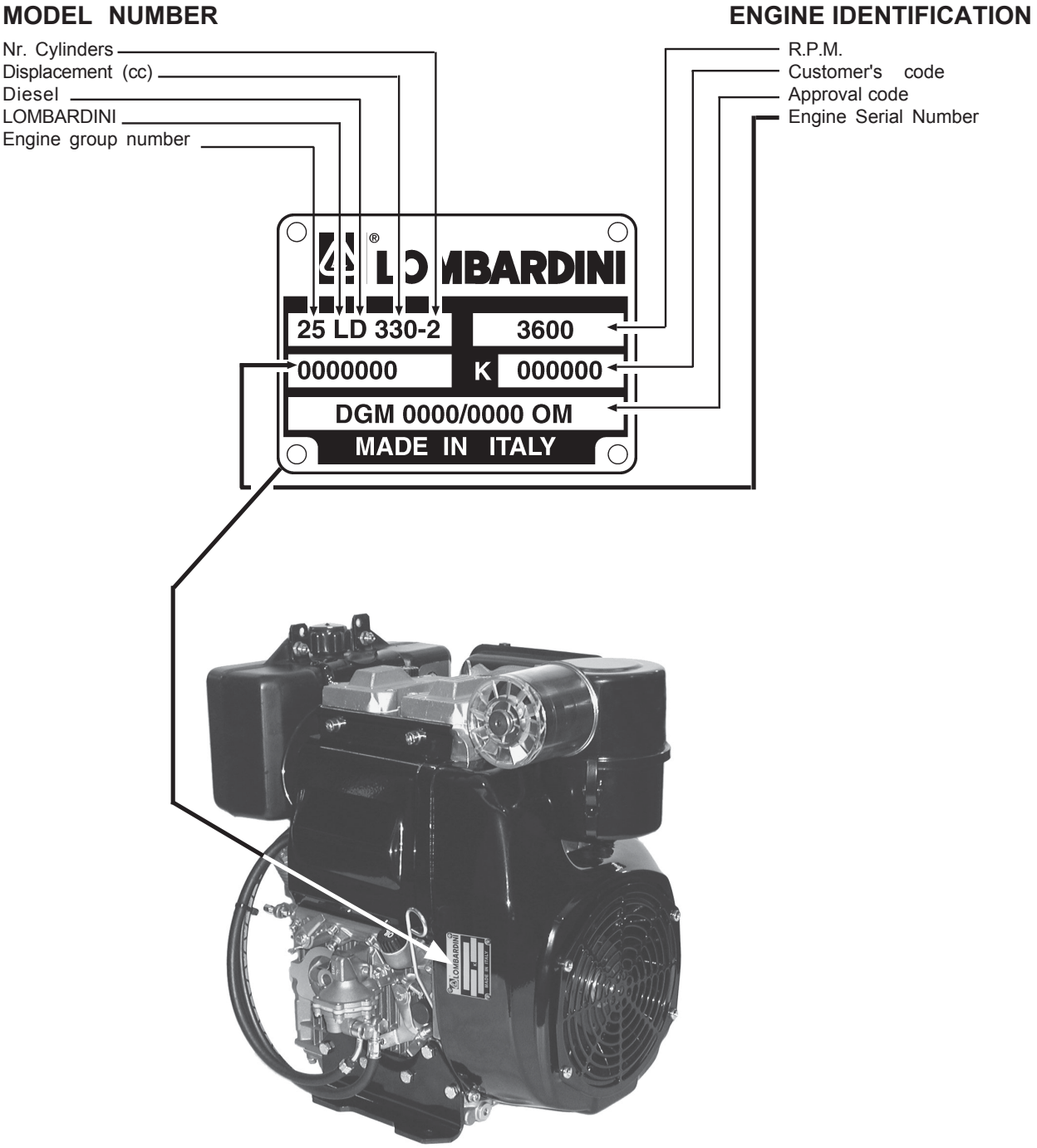

Downloaded from www.Manualslib.com manuals search engine

https://truckmanualshub.com/

CHARACTERISTICS

ENGINE TYPE			25LD330-2	25LD425-2
Number of cylinders		N.	2	2
Bore		mm	80	85
Stroke		mm	65	75
Swept volume		cm³	654	851
Compression ratio			19:1	19:1
Power kW (HP)	N 80/1269/CEE-ISO 1585	@ 3000 RPM	10(13,6)	12,5(17)
		@ 3600 RPM	12(16,3)	14(19)
	NB ISO 3046 - 1 IFN	@ 3000 RPM	9,3(12,6)	11,4(15,5)
		@ 3600 RPM	11,2(15,2)	13(17,7)
	NA ISO 3046 - 1 ICXN	@ 3000 RPM	8,6(11,7)	10,5(14,3)
		@ 3600 RPM	10,3(14)	12(16,5)
Max. torque *		Nm	32@2400	40,5@2400
Fuel consumption **		g/kW.h	246	246
Oil consumption		g/kW.h	0,8	0,8
Capacity of standard oil sump		lt	1,8	1,8
Recommended battery 12V		Ah -A	66-300	66-300
Dry weight		kg	50	53
Combustion air volume		m³/h	50	75
Cooling air volume		m³/h	600	750
Max.permissible driving shaft axial: continuous (instantaneous)		kg.	100(300)	100(300)
Max. inclination	Flywheel site: continuous (instantaneous)		25°(30°)	25°(30°)
	Power take off site: continuous (instantaneous)		25°(35°)	25°(35°)
	Lateral: continuous (instantaneous)		25°(40°)	25°(40°)

* Referred to N power
** Consumption at max torque

Downloaded from www.Manualslib.com manuals search engine

https://truckmanualshub.com/

CHARACTERISTICS POWER, TORQUE AND SPECIFIC FUEL CONSUMPTION CURVES

25LD330-2

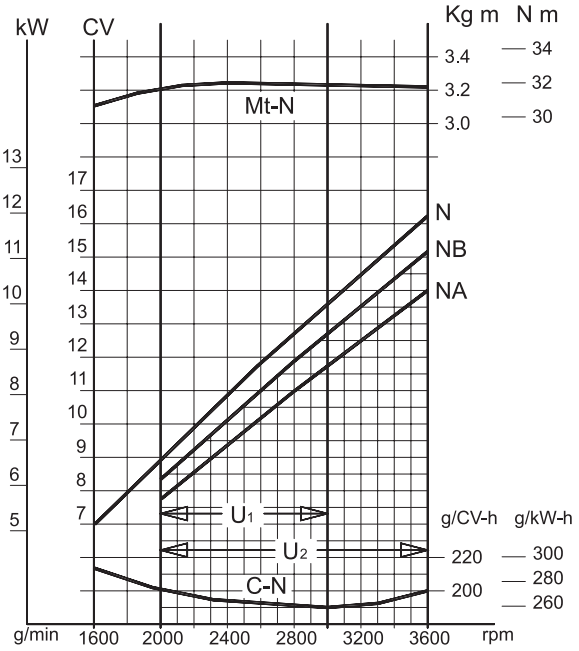

25LD425-2

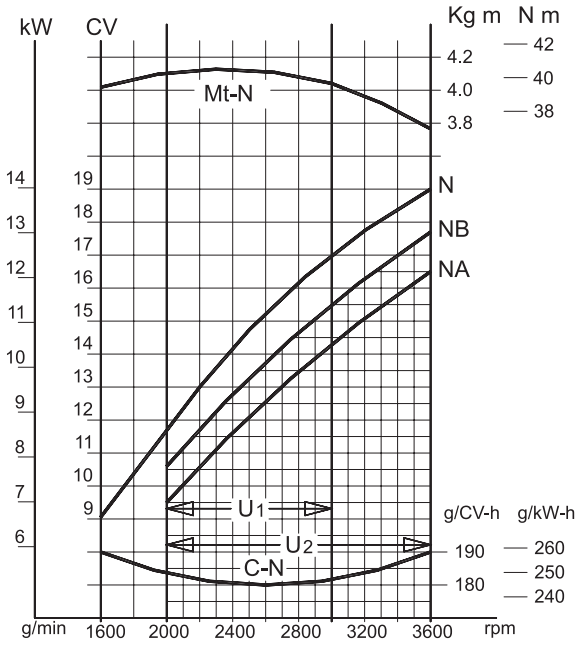

N (80/1269/EEC - ISO 1585) **AUTOMOTIVE RATING** : Intermittent operation with variable speed and variable load.
NB (ISO 3046 - 1 IFN) **RATING WITH NO OWERLOAD CAPABILITY:** continuos ligth duty operation with constant speed and variable load.
NA (ISO 3046 - 1 ICXN) **CONTINUOS RATING WITH OVERLOAD CAPABILITY:** continuos heavy duty with constant speed and constant load.
Mt-N Torque at **N** power.
C Specific fuel consumption at **N** power.
U1: Standard utilization range of engines rated at 3000 rpm
U2: Standard utilization range of engines rated at 3600 rpm

The above power values refer to an engine fitted with air cleaner and standard muffler, after testing and at the environmental conditions of 20°C and 1 bar.
Max. power tolerance is 5%.
Power decreases by approximately 1% every 100 m di altitude and by 2% every 5°C above 25°C.

Note: Consult LOMBARDINI for power, torque curves and specific consumptions at rates differing from those given above.

Downloaded from www.Manualslib.com manuals search engine

https://truckmanualshub.com/

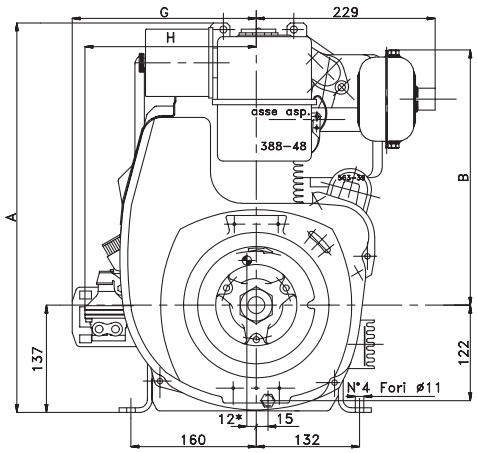

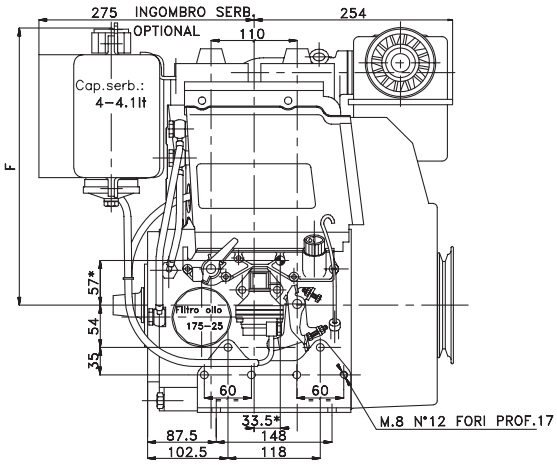

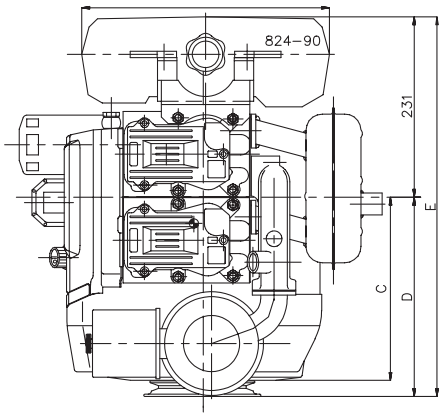

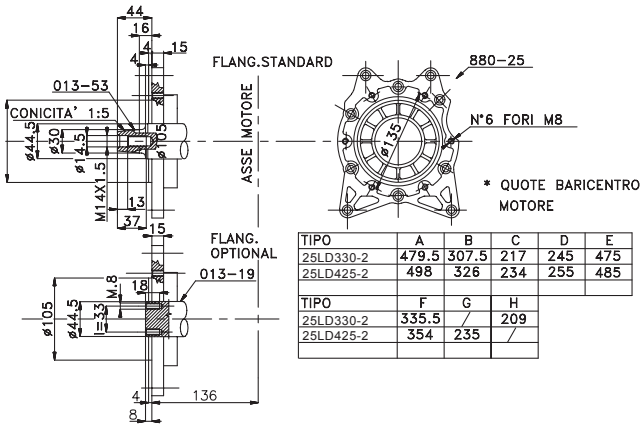

TIPO	A	B	C	D	E
25LD330-2	479.5	307.5	217	245	475
25LD425-2	498	326	234	255	485

TIPO	F	G	H
25LD330-2	335.5	/	209
25LD425-2	354	235	/

Note: Dimensions in mm

COMPILER TECOMATI	REG. CODE	MODEL N°	DATE OF ISSUE	REVISION 00	DATE	ENDORSED	13
	1-5302-607	50889	06-03		23.06.2003		

Downloaded from www.Manualslib.com manuals search engine

https://truckmanualshub.com/

TOOL	CODE	DESCRIPTION
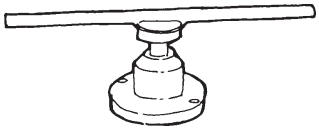	**00365R0020**	Flywheel puller
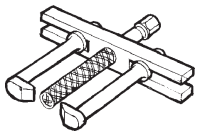	**00365R0010**	Universal puller
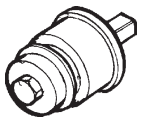	**00365R0900**	Main bearing extractor
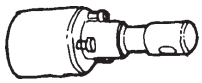	**00365R0890**	Gear extractor
	00365R0910	Central bearing assembly tool
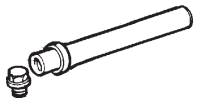	**00365R0930**	Valve guide rubber fitting tool
	00365R0770	Cylinder collar Ø 80/85 mm
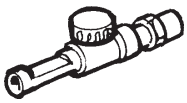	**00365R0940**	Injection advance control tool
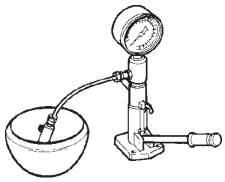	**00365R0430**	Injector test bench

Downloaded from www.Manualslib.com manuals search engine

https://truckmanualshub.com/

Failure to carry out the operations described in the table may lead to technical damage to the machine and/or system

MANUTENANCE

OPERATION	COMPONENT		INTERVAL (HOURS)							
				8	50	200	300	400	2500	5000
CLEANING	OIL-BATH AIR CLEANER		(*)	●						
	HEAD AND CYLINDER FINS		(*)	●						
	INTERNAL OIL FILTER					●				
	FUEL TANK						●			
	INJECTOR						●			
CHECK	LEVEL	AIR CLEANER OIL		●						
		OIL SUMP		●						
		BATTERY FLUID			●					
	VALVE/ROCKER ARM CLEARANCE						●			
	INJECTOR SETTING						●			
REPLACEMENT	OIL	AIR CLEANER	(**)	●						
		SUMP	(**)(***)		□	●				
	INTERNAL OIL FILTER CARTRIDGE					●				
	EXTERNAL OIL FILTER CARTRIDGE							●		
	FUEL FILTER CARTRIDGE					●				
	DRY AIR CLEANER CARTRIDGE					●				
OVERALL INSPECTION	PARTIAL		(x)						●	
	COMPLETE		(xx)							●

□ First replacement
(*) Under severe working conditions, clean daily.
(**) Under extremely dusty conditions, change every 4-5 hours.
(***) See recommended oil type.
(x) The partial overhaul includes the following operations: valve and seat lapping, injector and injection pump overhaul, injector projection check, fuel injection spark advance check, check of the harmful area between head and piston, camshaft and crankshaft end float check, tightening of bolts.
(xx) The general overhaul includes - in addition to all partial overhaul - the following procedures: cylinder and piston replacement, seat, guide and valve refacing, crankshaft replacement or grinding, bench bearing and connecting rod replacement.

The maintenance operations listed above refer to an engine operating in normal conditions (temperature, degree of humidity, dust in the working environment). They may vary significantly according to the type of use.

To avoid explosions or fire outbreaks, do not smoke or use naked flames during the operations.
Fuel vapours are highly toxic. Only carry out the operations outdoors or in a well ventilated place.
Keep your face well away from the plug to prevent harmful vapours from being inhaled. Dispose of fuel in the correct way and do not litter as it is highly polluting.

FUEL

When refuelling, it is advisable to use a funnel to prevent fuel from spilling out. The fuel should also be filtered to prevent dust or dirt from entering the tank.
Use the same type of diesel fuel as used in cars. Use of other types of fuel could damage the engine. The cetane rating of the fuel must be higher than 45 to prevent difficult starting. Do not use dirty diesel fuel or mixtures of diesel fuel and water since this would cause serious engine faults.

The capacity of the standard tank is: lt. 4,0

Downloaded from www.Manualslib.com manuals search engine

https://truckmanualshub.com/

VIII MAINTENANCE - RECOMMENDED OIL TYPE - REFILLING

The engine could be damaged if allowed to operate with insufficient oil. It is also dangerous to add too much oil as its combustion could sharply increase the rotation speed.
Use a suitable oil in order to protect the engine.
The lubrication oil influences the performances and life of the engine in an incredible way.
The risk of piston seizure, jammed piston rings and rapid wear of the cylinder liner, the bearings and all moving parts increases if oil whose characteristics differ from the recommended type is used, or if the oil is not regularly changed. All this notably reduces engine life.
Oil viscosity must suit the ambient temperature in which the engine operates.

Old oil can cause skin cancer if repeatedly left in contact with the skin and for long periods of time. If contact with the oil is inevitable, you are advised to thoroughly wash your hands with soap and water as soon as possible.
Appropriate protective gloves etc should be wore during this operation.
Old oil is highly polluting and must be disposed of in the correct way. Do not litter.

RECOMMENDED OIL

AGIP SINT 2000 5W40 specification API SJ/CF ACEA A3-96 B3-96 MIL-L-46152 D/E.
ESSO ULTRA 10W40 specification API SJ/CF ACEA A3-96 MIL-L-46152 D/E.
In countries where AGIP and ESSO products are not available, use API SJ/CF oil for gasoline-fuelled engines or oil that complies with military specification MIL-L-46152 D/E.

OIL SUPPLY (liters)
Standard oil sump

filter included **1,8 l.**

GRADE

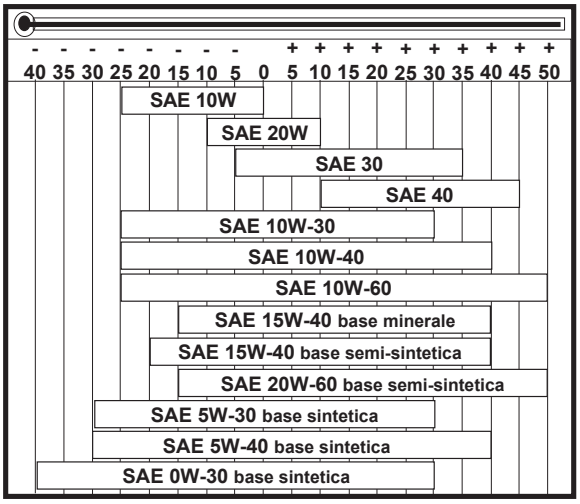

ACEA SEQUENCES

A = Gasoline (Petrol)
B = Light Diesel fuels
E = Heavy Diesel fuels

Required levels :

A1-96
A2-96
A3-96

B1-96
B2-96
B3-96

E1-96
E2-96
E3-96

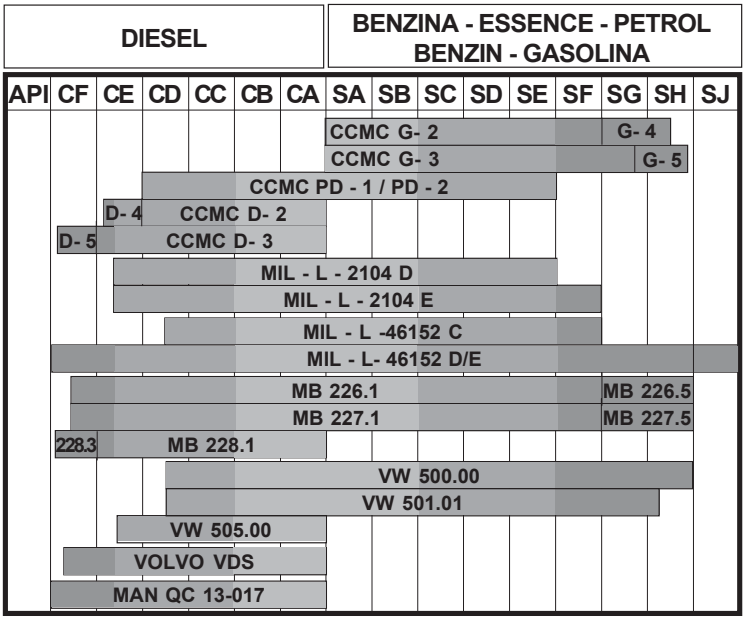

Downloaded from www.Manualslib.com manuals search engine

https://truckmanualshub.com/

! During repair operations, when using compressed air, wear eye **protection**.

DISASSEMBLY AND REASSEMBLY
Besides disassembly and reassembly operations this chapter also includes checking and setting specifications, dimensions, repair and operating instructions. Always use original LOMBARDINI spare parts for repair operations.

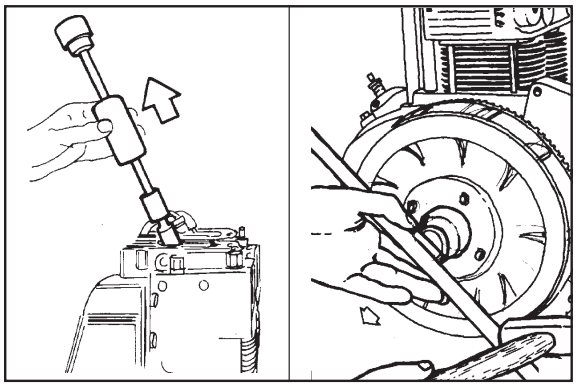

1 2

Extracting fuel injectors
Unscrew the fuel feeding pipes.
Remove the injectors using a commercial extractor tool as shown in fig. 1.

Removing the flywheel
Use the extractor number 00365R0020 as shown in figure 2.

⚠ During the demounting phases, pay particular attention to prevent the flywheel from dropping as this could seriously injure the operator.
Wear protective goggles when removing the flywheel ring.

! IMPORTANT: Do not tap the end of the extractor when removing the flywheel.

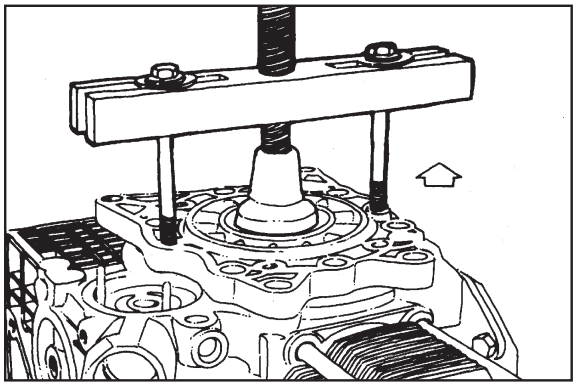

3

Extraction of flywheel side main bearing
Withdraw the bearing using two M8 screws taking care to tighten them evenly; alternatively use a commercial extractor, as shown in figure 3.

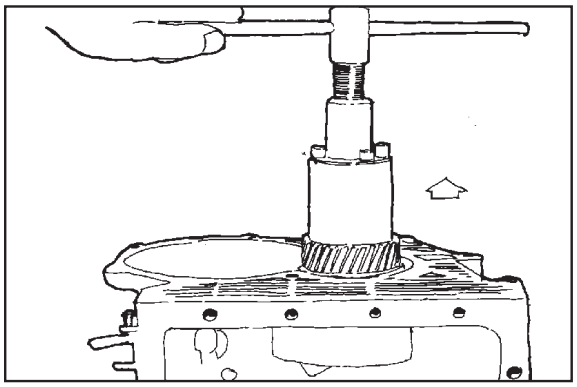

4

Extraction of crankshaft gear
Use extractor tool number 00365R0890 (fig.4).

Downloaded from www.Manualslib.com manuals search engine

https://truckmanualshub.com/

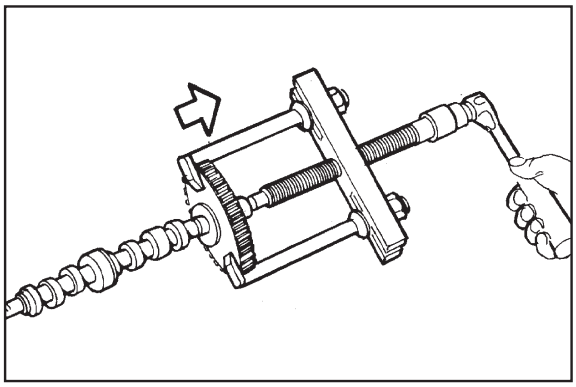

5

Extraction of the camshaft gear
Use the extractor number 00365R0010 (fig.5).

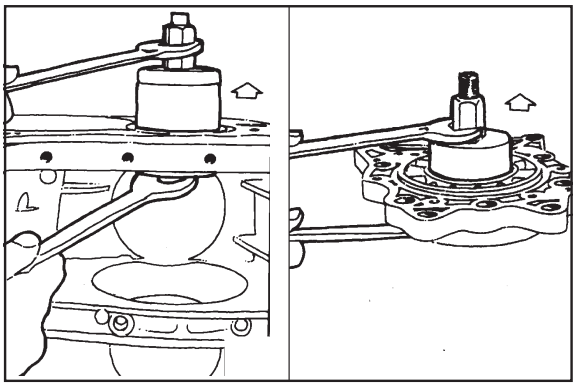

6 7

Extracting crankcase bushes
From crankcase (fig.6)
From main bearing (fig.7)
Use extractor number 00365R0900.

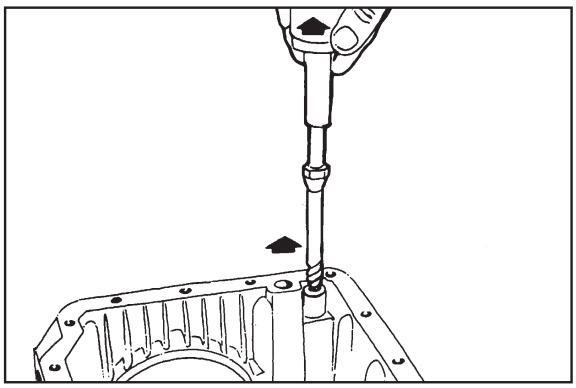

8

Extracting the oil pressure indicator plug
Loosen the plug securing screw, and remove circlip, spring and ball.
Cut a thread on the inside of the plug body and then withdraw it using a commercial extractor tool (fig. 8).

Downloaded from www.Manualslib.com manuals search engine

https://truckmanualshub.com/

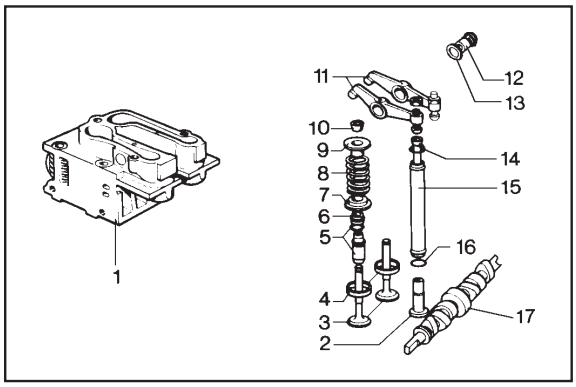

9

Cylinders heads

Parts shown in figure 9.

1.Head - 2.Tappets - 3.Valves - 4.Seats - 5.Guides - 6.Seals - 7.Lower washers - 8.Springs - 9.Top washers - 10.Valve locking split cones - 11.Rocker arms - 12.Rocker pins - 13.Gaskets - 14.Push rods - 15.Cover tube - 16.O-ring - 17.Camshaft.

The heads are made off aluminium with valve guides and seats are made of cast iron.

! Do not disassemble the head when the engine is hot to avoid deformation.

Clean heads of carbon deposits and check the cylinder mating surfaces; if they are deformed they must be ground to a maximum of 0.3 mm. Check that there are no cracks or other imperfections in the heads. If defects are encountered the heads must be renewed. In this case consult the spare parts catalogue.

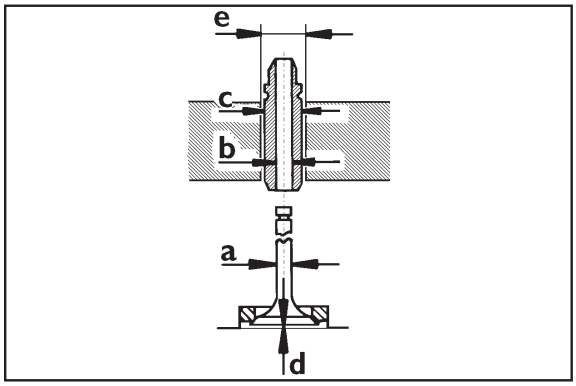

10

Valves - Guides - Seats

Clean the valves with a wire brush and renew them if the valve heads are deformed, cracked or worn.

Guide	a mm	b mm	c mm	d mm	e mm
Inlet	6,960÷6,970	7,00÷7,01 assembly	13,025÷13,037	0,8÷1,0	13÷13,01
Exhaust	6,945÷6,955				

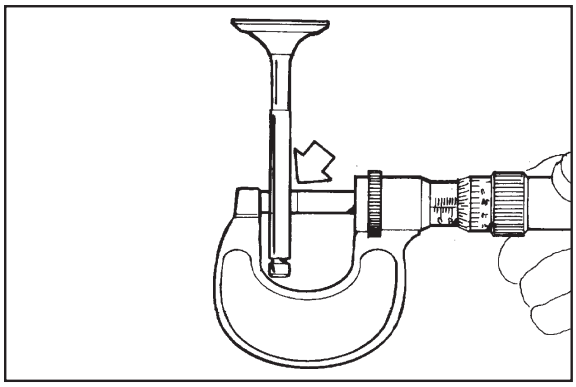

11

Check the dimensional conformity of the valve stems (fig. 11) and the clearance between valve and guide, bore out the guides to the dimensions indicated in the table (fig. 10).

Renew both guide and valve if the clearance is greater than 0.1mm.

It is always necessary to grind the valve seats when new guides are fitted.

Oversize valve guides with external diameter increased by 0.10 are available.

Downloaded from www.Manualslib.com manuals search engine

https://truckmanualshub.com/

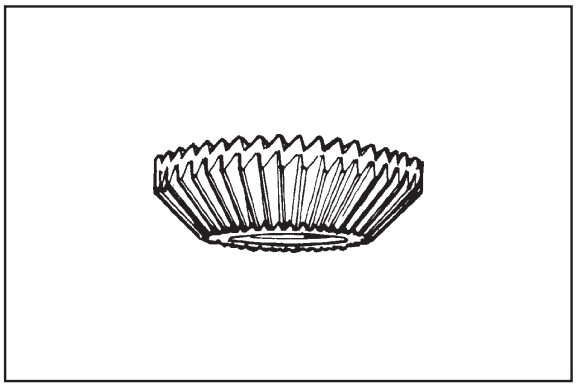

12

After prolonged running of the engine the hammering of the valves on their seats at high temperature tends to harden the faces of the seats and makes manual grinding difficult. It is necessary to remove the hardened surface with a 45° cutter (fig. 12).

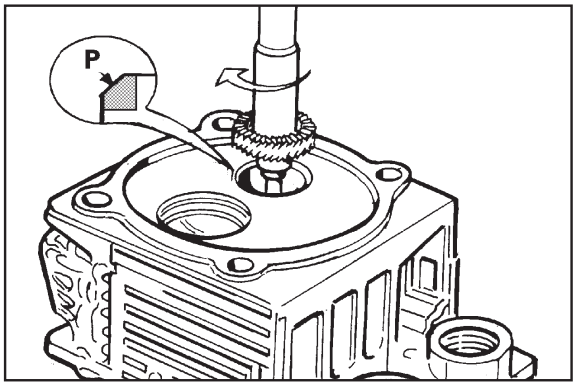

13

Grinding of valve seats causes a widening of the valve seat face **P** (fig.13).
Final lapping of the valve on the seat must be carried out by coating the seat with a fine lapping compound and rotating the valve in a clockwise and counterclockwise direction with slight pressure until a perfect surface finish is obtained (fig.14).

Observe the valve seating clearances indicated in the following table (fig.10).

Fitting mm	Max. wear mm
d= 0,8 ÷1,0	d=1,3

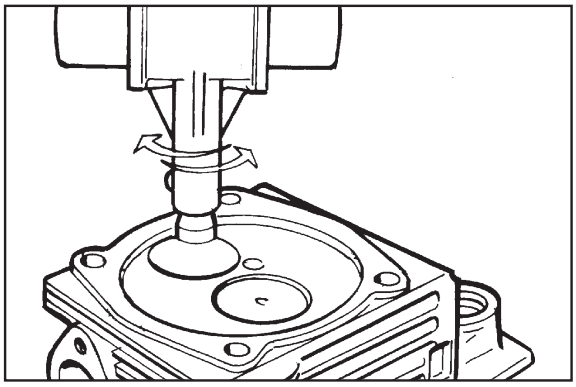

14

! In the case of lower values the valve may strike the piston. In the case of values in excess of 1.3 mm the valve seat rings must be replaced.

Fitting of new seats or valves always requires preparatory grinding. Valves are available with the external diameter increased by 0.5 mm.

After grinding wash the valve and seat carefully with petrol or paraffin in order to remove residual grinding paste and chips. Once you have finished grinding check the efficiency of the seal between the valve and seat as outlined below:

1. Fit the valve on the head with spring, washers and split cones (fig.9).
2. Invert the head and pour in a few drops of diesel fuel or oil around the edges of the valve head.
3. Blow compressed air into the inlet of the cylinder head taking care to seal the edges so that the air does not escape (fig.15).

Should air bubbles form between the seat and the valve remove the valve and regrind the seat.

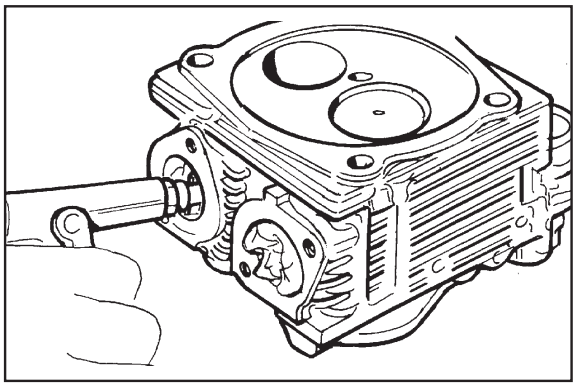

15

Downloaded from www.Manualslib.com manuals search engine

https://truckmanualshub.com/

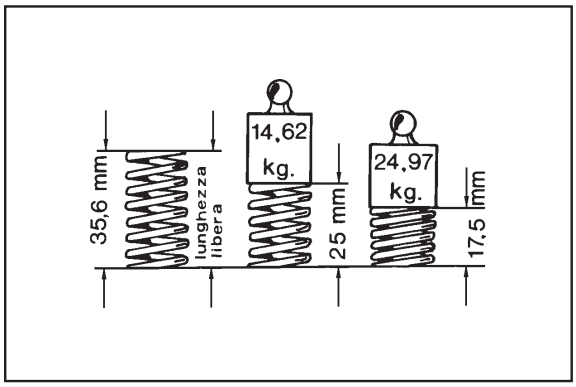

16

Valves and springs
In order to check the springs for possible failure measure the lengths under load as shown in figure 16.
The permissible tolerance for loads and lengths is ± 10%. If the figures measured do not fall within these values, the springs must be renewed.

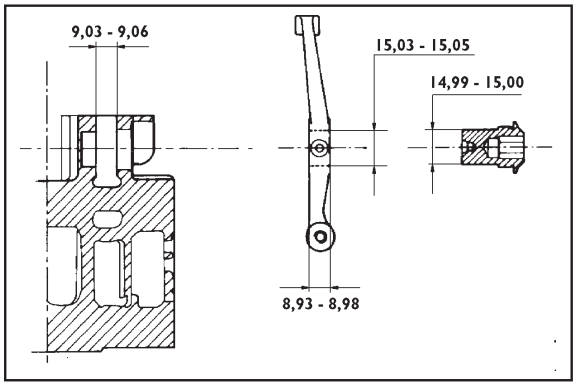

17

Rocker arms
Make sure that the facing surfaces between rocker and pin are not scored and show no signs of seizure. If such marks are encountered, renew rocker and pin. Rocker / pin clearance (fig.17):

Fitting mm	Max. wear mm
0,03 ÷ 0,06	0,15

Rocker axial play (fig.17):

Fitting mm	Max. wear mm
0,05 ÷ 0,130	0,5

Make sure that the rocker arm adjusting screw is not worn and that the lubrication hole is free of dirt.

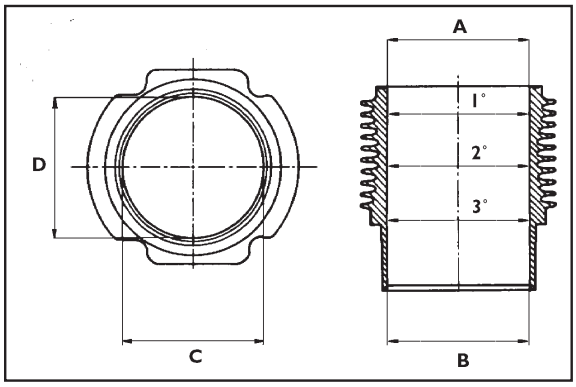

18

Cylinders
Air cooled with cylinder barrels in special cast iron with integral liners.

Use a dial gauge to check internal diameters (C-D) at three different heights (fig.18).
Maximum permitted taper (A-B) and ovality (C-D) is 0.06mm.

Diameter of cylinders (fig.18):

25LD330-2	Ø 80 ÷ 80,020
25LD425-2	Ø 85 ÷ 85,015

If the diameter of the cylinder does not exceed said values or if there are slight surface scores on the cylinder, it will be sufficient to change the piston rings.

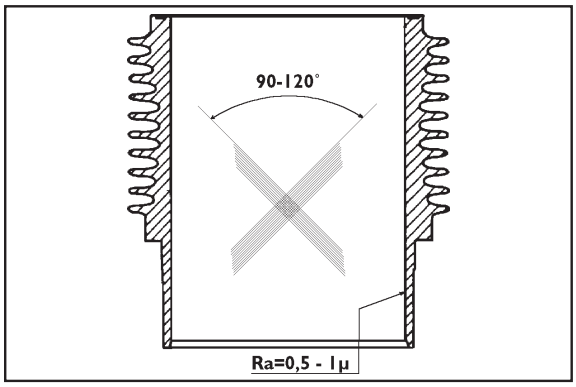

19

! Do not manually hone the cylinder bore surfaces with emery cloth or other means.

The cross-hatch pattern should be at an angle of 90°÷120°; lines should be uniform and clear in both directions.
Average roughness must range between 0.5 mm 1 µm.
The cylinder surface which comes into contact with piston rings should be machined with the plateau method.

If the taper and ovality of the cylinder exceed the values indicated, then the cylinder and piston must be renewed.

Diameter of cylinders (fig.22):

Downloaded from www.Manualslib.com manuals search engine

https://truckmanualshub.com/

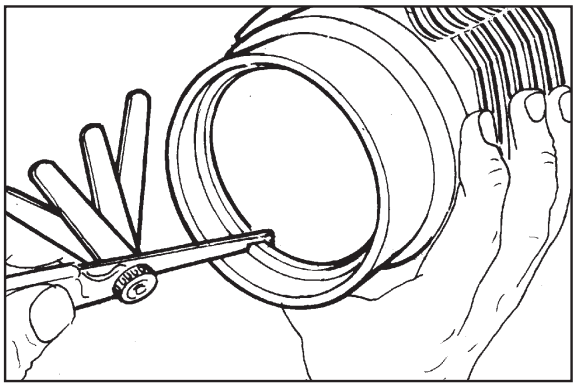

20

Piston rings - Pistons - Piston pins

Check the wear of piston rings by fitting them into the cylinder through the lower end and measuring the end gap (fig.20). The values should be:

Piston ring	Fitting mm	Max. wear mm
Compression	0,30 ÷ 0,50	0,80
Oil scrapper	0,25 ÷ 0,50	0,80

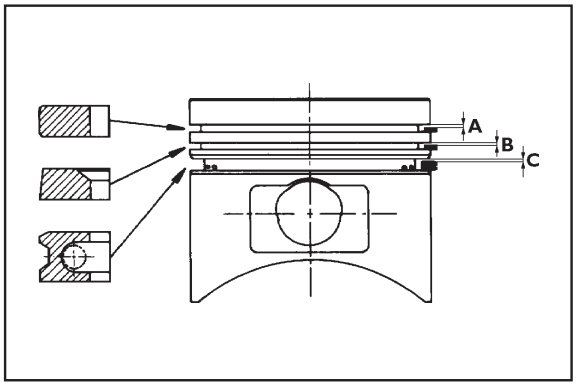

21

Check that the rings move freely in the grooves and check the ring/groove clearance using a feeler gauge (fig.21).
If the clearance exceeds the values shown in the table, renew the piston and the piston rings.

Piston ring	Max. wear mm
1st Compression	A = 0,22
2nd Compression	B = 0,18
3rd Oil scrapper	C = 0,16

! Piston rings must always be renewed after dismantling the piston.

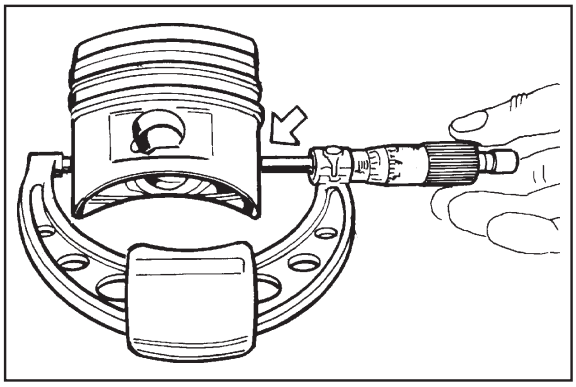

22

Piston diameter check: The diameter of the piston must be measured at approximately 18 mm from the base (fig.22).

Engine	Diameter mm
25LD330-2	79,93 ÷ 79,958
25LD425-2	84,910 ÷ 84,940

Check the clearance between cylinder and piston, if it is greater than 0.120 mm both cylinder and piston must be replaced. Assembly clearance between piston pin and piston in millimetres:

Fitting mm	Max. wear mm
0,003 ÷ 0,013	0,050

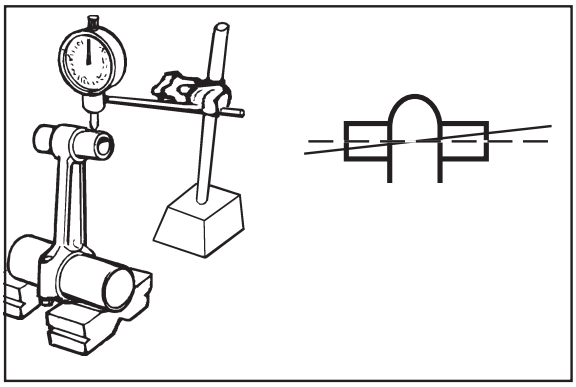

23

Connecting rods

The connection between the connecting rod small end and the wrist pin is without a bushing. Assembly clearance between connecting rod small end and piston pin in millimetres:

Engine	Ø Piston pin mm	Assy.clearance mm	Max wear mm
25LD330-2	19,997 ÷ 20,002	0,023 ÷ 0,038	0,070
25LD425-2	21,997 ÷ 22,002	0,023 ÷ 0,038	0,070

Checking parallelism between the two axes of the connecting rod (fig.23):

1. Fit the wrist pin in the hole in the small end of the connecting rod and fit a calibrated pin into the big end (with bush fitted).

Downloaded from www.Manualslib.com manuals search engine

https://truckmanualshub.com/

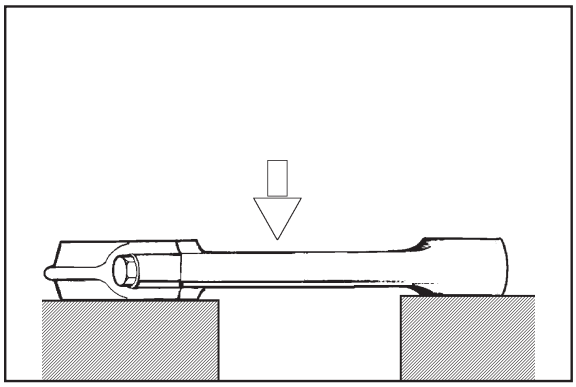

24

2. Position the calibrated pin on two prisms arranged on a check surface.

3. Use a dial gauge to check that the discrepancy between readings at the ends of the calibrated pin is no more than 0.05 mm; should deformation exceed this value (max. 0.10mm) the connecting rod must be straightened.
   This operation is performed by placing the connecting rod on a parallel surface and applying slight pressure mid-way along the convex side of the stem (fig.24).

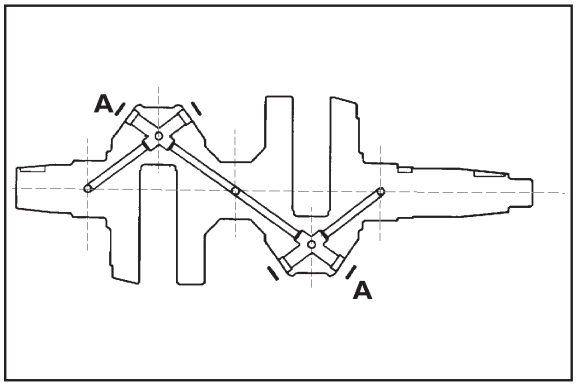

25

Crankshaft

Whenever the engine is dismantled, particularly for the replacement of cylinders and pistons due to wear caused by the aspiration of dust, it is good practice to check the condition of the crankshaft.

1. Remove the plugs “A” from the oil passages (fig.25).

2. Use an appropriately shaped steel punch to clean the inside of the oil passages and the collection traps. If the deposits are particularly resistant, immerse the whole crankshaft in petrol or paraffin before proceeding with the operations.

3. When the oil passages and traps have been throughly cleaned, close the openings with new plugs (fig.26).

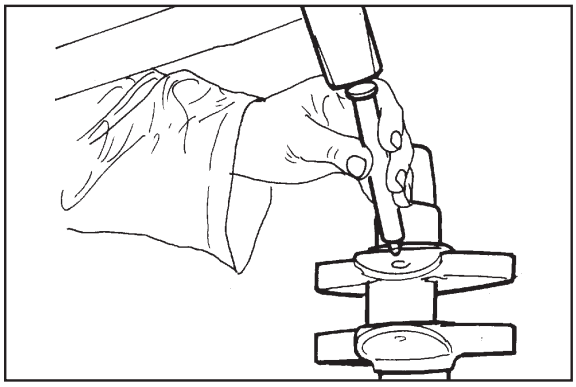

26

Checking crankshaft dimensions

Once the crankshaft has been thoroughly cleaned, use a micrometer to check the wear and ovality of the main journals and crank journals across two sections at right angles to each other (fig.27).

If wear exceeds 0.08 mm (fig.28) grind the crankshaft to the dimensions shown in the table:

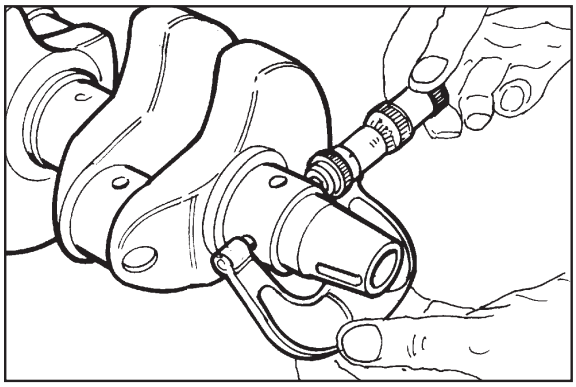

27

Dimensions	STD mm	-0,25 mm	-0,50 mm	-0,75 mm
A - B - D	45,005 ÷ 45,015	44,755 ÷ 44,765	44,505 ÷ 44,515	44,255 ÷ 44,265
C	39,994 ÷ 40,010	39,744 ÷ 39,760	39,494 ÷ 39,510	39,244 ÷ 39,260

Undersize bearing bushes are already available at the necessary sizes without requiring any adjustment by boring.

Downloaded from www.Manualslib.com manuals search engine

https://truckmanualshub.com/

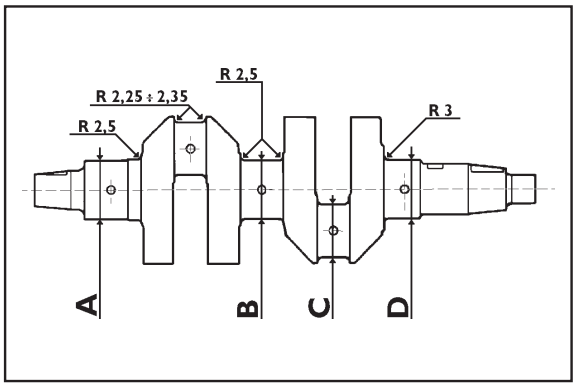

28

!

During grinding take care not to remove the shim adjustment material from the main journal thrust face to avoid changing the crankshaft end float; also ensure that the grinding wheel radii are as specified in figure 28 so as not to create crack initiation sections on the crankshaft.

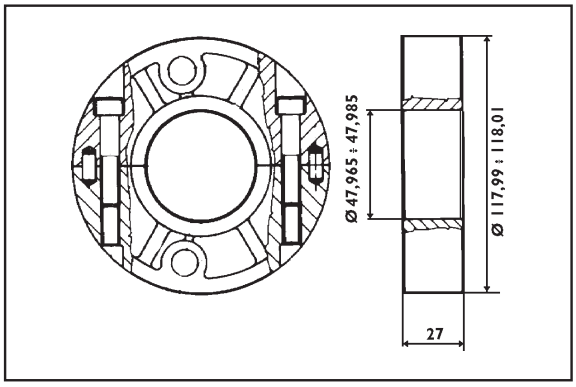

29

Central main bearings

In order to facilitate assembly the central main bearings are of different external diameters (fig.29) and are machined with a bevelled edge to assist their insertion into the crankcase.
Check the dimensions of the shells and renew them if they are worn or deformed.
Also check the condition of the oil passages (25LD425-2) and, if necessary, clean them with paraffin or petrol and dry with compressed air.

Oil seal rings

Check that the rings have not hardened around the internal contact edge and that they show no signs of cracks or wear.

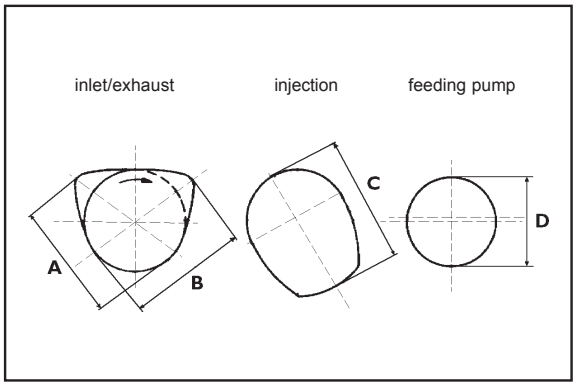

30

Camshaft

Check the cams and bearing journals for scoring and wear. Measure the dimensions and compare them to the values in the table below and shown if figures 30-31.

Camshaft dimensions fig.30.

Cam	Measurement	Dimensions mm
Timing	A B	34,69 ÷ 34,74
Injection	C	34,98 ÷ 35,02
Fuel pump	D	25,50 ÷ 25,70

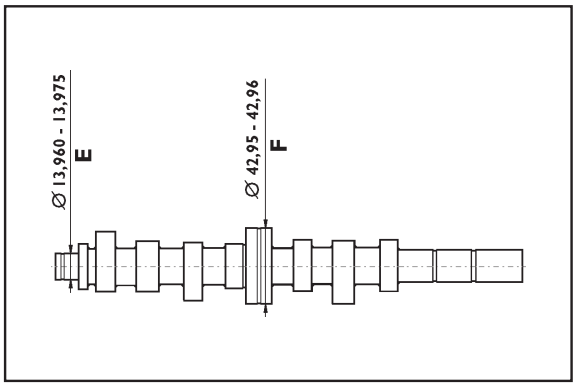

31

Assembly clearance between the journals and their housings should be (fig.31):

Measurement	Clearance mm
E	0,025 ÷ 0,065
F aluminium crankcase	0,07 ÷ 0,105
F cast iron crankcase	0,04 ÷ 0,075

!

Renew the camshaft if the cams or journals show wear in excess of 0.1mm.

Downloaded from www.Manualslib.com manuals search engine

https://truckmanualshub.com/

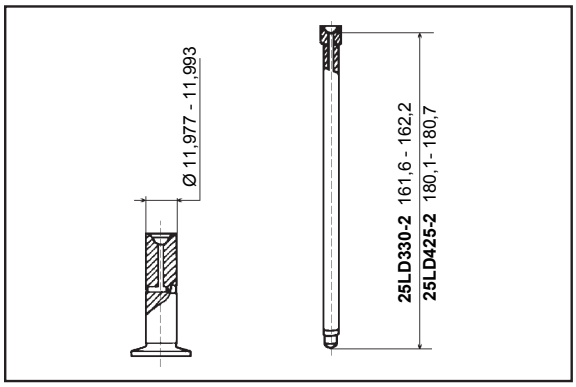

32

Tappets and push rods

Make sure that the tappet surfaces (fig.32) are free from wear and present no signs of scoring or seizure, otherwise, renew.

Assembly clearance between tappets and their housings should be:

Fitting mm	Max. wear mm
0,07 ÷ 0,041	0,10

The push rods must be straight and with the spherical surfaces at either end in good condition (fig.32).

Make sure that the lubrication holes inside the tappets and push rods are free of dirt.

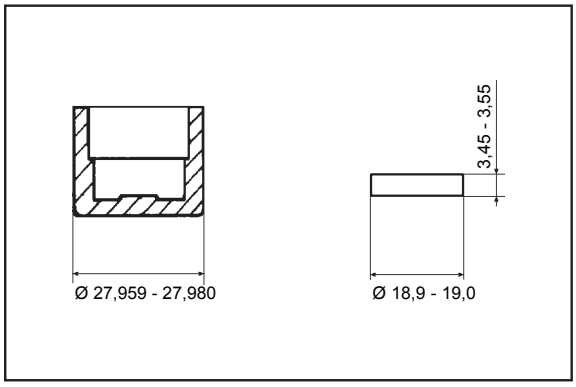

33

Injection pump plug nuts and control rods

Renew the parts if the surface wear is greater than 0.10mm (fig.33).

Assembly clearance between control rods and their housings in the crankcase:

Fitting mm	Max. wear mm
0,02 ÷ 0,059	0,10

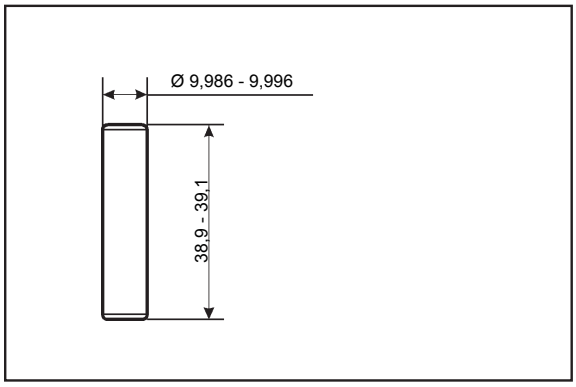

34

Fuel pump push-rod

Check that the surfaces of the fuel pump push-rod, fig. 34, are free of wear, scoring, or signs of seizure, otherwise, renew.

Assembly clearance between fuel pump push-rod and its housing in the crankcase:

Fitting mm	Max. wear mm
0,05 ÷ 0,098	0,120

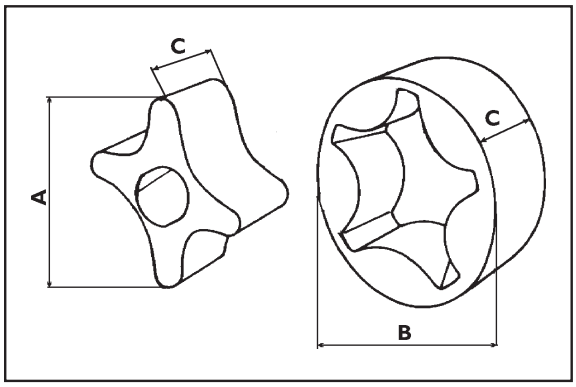

35

Oil pump

Check the rotors and renew them if they have worn lobes or centres. Check the extent of pump wear by taking the measurements indicated in figure 35.

Measurement	Dimensions mm	Max. wear mm
A	29,72 ÷ 29,77	29,65
B	40,551 ÷ 40,576	40,45
C	17,92 ÷ 17,94	17,89

Downloaded from www.Manualslib.com manuals search engine

https://truckmanualshub.com/

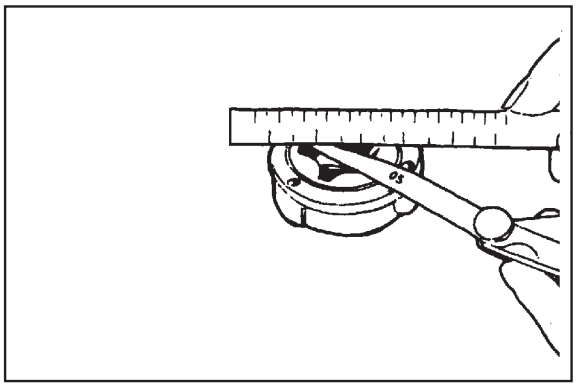

36

The clearance between the external rotor of the oil pump and the cover facing surface must be:

Fitting mm	Max. wear mm
0,27 ÷ 0,47	0,60

End float of rotors (fig.36):

Fitting mm	Max. wear mm
0,01 ÷ 0,06	0,10

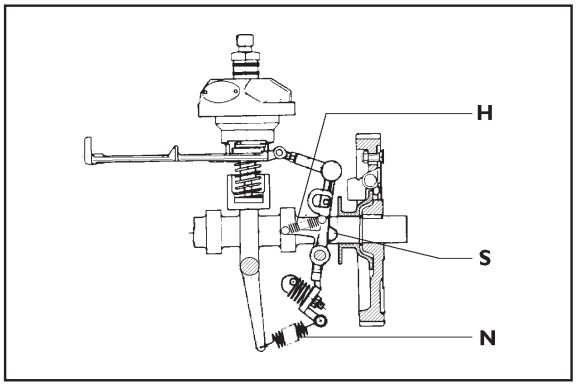

37

Governor lever and spring
Check that the shoes (**S**, fig.37) are level and that the springs have not lost their elasticity. Renew any excessively worn parts after consulting the spare parts catalogue.

Supplement and governor spring dimensions (fig.37):

Spring	Lenght mm	Lenght under load mm	Load kg	Nr of windings
Governor (N)	32 ÷ 34	53	1,9	14,75
Supplement (H)	25,75 ÷ 26,25	38,7	0,6	25,5

Downloaded from www.Manualslib.com manuals search engine

https://truckmanualshub.com/

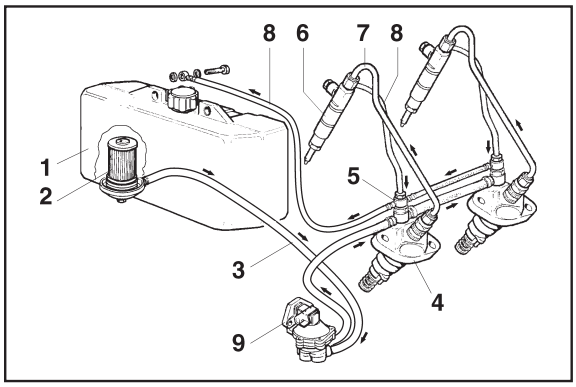

38

Fuel circuit

Fuel feeding can be either gravity type or forced, with a mechanical double diaphragm pump operated a cam located on the camshaft. Fuel is filtered by a filter in the fuel tank or through an external filter cartridge.

The fuel circuit is bled of air automatically.

Components of figure 38:

1. Fuel tank - 2. Fuel filter - 3. Fuel supply lines - 4. Fuel injection pumps - 5. Bleed off connection - 6. Fuel injectors - 7. Injection lines - 8. Fuel return lines - 9. Fuel sully pump.

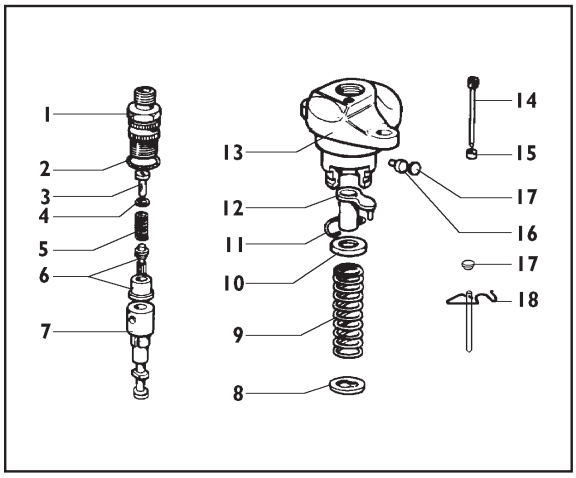

39

Injection pumps

Components of figure 39:

1. Delivery connection - 2. O-ring - 3. Filler - 4. Washer - 5. Valve spring - 6. Delivery valve - 7. Injection plunger - 8. Lower plate - 9. Spring - 10. Top plate - 11. Retaining ring - 12. Adjustment sleeve - 13. Pump body - 14. Sleeve securing pin - 15. Distance ring - 16. Eccentric pin - 17. Cap - 18. Clip for BOSCH pump type PF30.

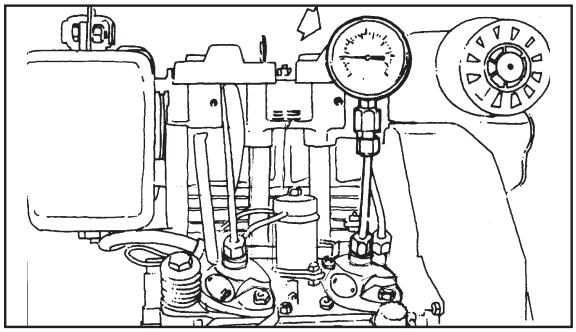

40

Checking injection pumps

Before dismantling the injection pumps check for pressure leak of the pumping unit, plunger and valve, as follows:

1. Connect a pressure gauge with 600 Kg/cm² full scale to the diesel delivery line (fig.40).
2. Set the control sleeve (nr. 12, fig.39) to a mid-point delivery position.
3. Turn the flywheel slowly until the plunger has completed a full compression stroke.
4. Take the pressure gauge reading. If it is below 300 Kg/cm² the complete plunger unit must be changed.

During the test the reading on the gauge will show a progressive pressure increase to a maximum value and then will fall suddenly and stop at a lower pressure. Replace the valve if the fall in pressure exceeds 50 Kg/cm² and continues to fall slowly.

The pressure drop from 200 Kg/cm² to 150 Kg/cm² must occur in a time interval of no less than 7 seconds.

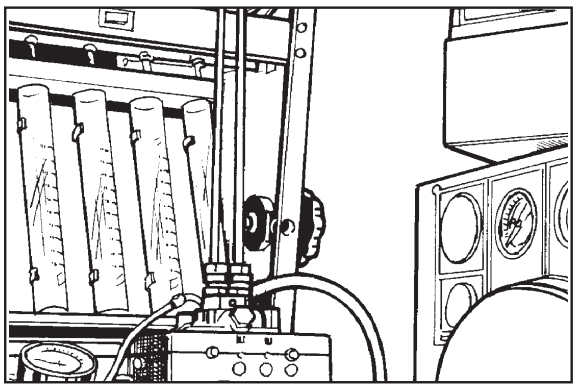

41

Injection pump setting (fig.41)

Set the maximum quantity delivered by the pump by turning the eccentric pin using a screwdriver (nr. 16, fig.39).

With the control sleeve at 10mm from the stop position and the pump running at 1,500 rpm, the quantity of fuel for 1,000 shots must be between:

23 ÷ 25 cc	20 ÷ 22 cc (BOSCH)

Downloaded from www.Manualslib.com manuals search engine

https://truckmanualshub.com/

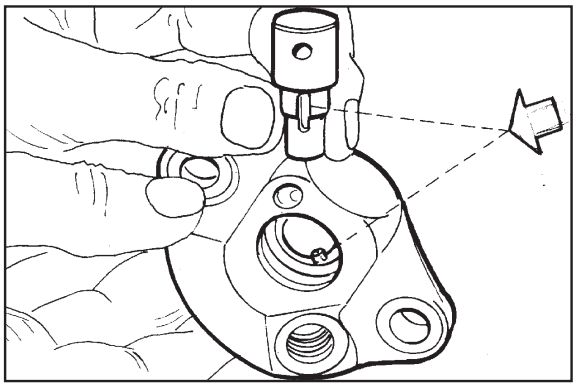

42

!

The difference between the deliveries of the two pumps when locked must not exceed **0.5 cc.**

Also check:

1. That the distance between the injection cams in the rest position (bottom dead centre) and the pump supporting face is between **52.8 and 54.4 mm** as shown on the data plate;
2. That the stroke of the piston with injection cams in the rest position (bottom dead centre), to the start of delivery is between **2 and 2.1 mm.**

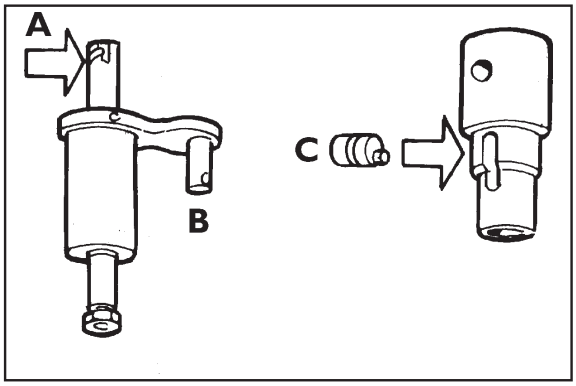

43

Assembly of injection pumps

If it proves necessary to disassemble the injection pumps they must be reassembled following the instructions listed below:

1. Insert barrel into pump casing with the fuel inlet hole aligned with the feeding connection (fig.42). This is the only possible position because of the stud on the pump body. Make sure that the seating face between the barrel and the pump are free of dirt.
2. Insert delivery valve, copper gasket, spring, washer, filler, O-ring, and temporarily tighten the delivery connection.
3. Insert plunger, with helical profile (**A**, fig.43) on the opposite side of the sleeve pin (**B**, fig.43), into the internal groove of the control sleeve (make sure the helical profile is turned towards the fuel inlet and eccentric pin (**C**, fig.43).
4. Complete pump assembly with plunger (**a**, fig.44), control sleeve (**b**), upper washer (**c**), retaining ring (**d**), spring (**f**) and secure all with the spring holder washer (**g**)
5. Tighten delivery valve holder (**h**, fig.44) to 4.5 ÷ 5 kgm torque.
6. Check, by compressing the spring through its various work positions, that the control sleeve (**b**, fig.44) turns freely and does not stick or encounter resistance throughout its full stroke; any irregular movement will give rise to hunting of engine speeds.
7. Secure the control sleeve using the pin (**n**, fig.44) screwed into pump housing.

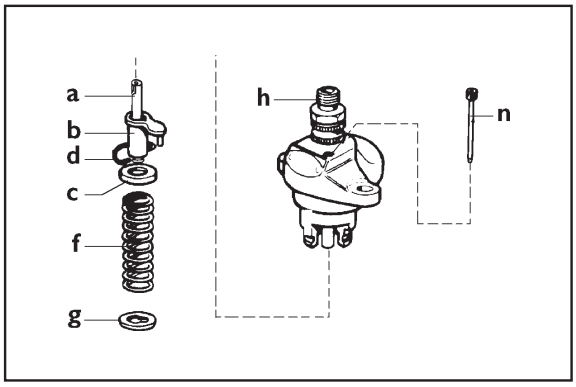

44

!

Always check the injection pump calibration after the delivery connection (**h**, fig.44) has been dismantled.

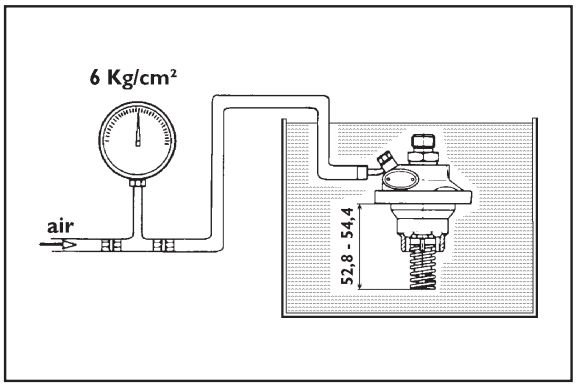

45

Testing air tightness

Feed pressurized air at 6 Kg/cm² into the fuel sullpy union and completely immerse the pump in oil or diesel fuel for about 20 ÷ 30 seconds (fig.45); check that no air bubbles are released.

N.B.: Tightness can be checked by compressing the springs to 52.8 ÷ 54.4 mm, which corresponds to the bottom dead centre working position of the pump.

Downloaded from www.Manualslib.com manuals search engine

https://truckmanualshub.com/

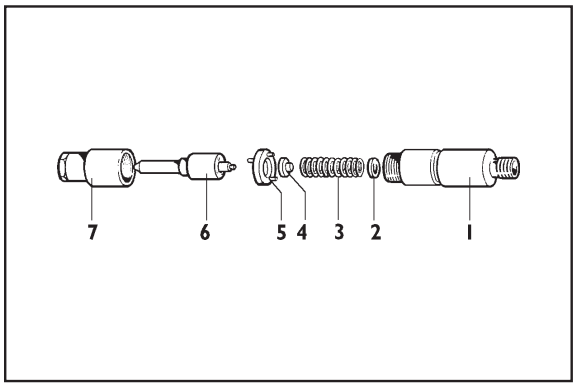

46

Injectors
Details of fig.46:
1.Injector casing - 2.Adjusting shim - 3.Spring - 4.Rod - 5.Distance ring with locating pin - 6.Nozzle - 7.Ring nut

Checking and setting the injectors

1. Clean the nozzle holes with 0.25mm gauge steel wire (fig.47).

2. Place the injector on the test bench (p.n. 00365R0430, fig.48) bypass the pressure gauge and operate the lever rapidly. The nozzle should chatter audibly and spray correctly.

3. Connect the pressure gauge while pressing the lever slowly and steadily until injection occurs.
   The opening pressure registered on the gauge should be 230 Kg/cm² (200 Kg/cm² on silenced versions).
   Change the adjusting shims (nr. 2, fig. 46) in order to achieve correct adjustment.

4. Testing fortightness: Operate test bench hand lever until the pressure gauge reads 20 Kg/cm² below the opening pressure of the needle valve. The nozzle can be considered well sealed if there no Diesel fuel accumulates at the nozzle tip after 10 seconds.

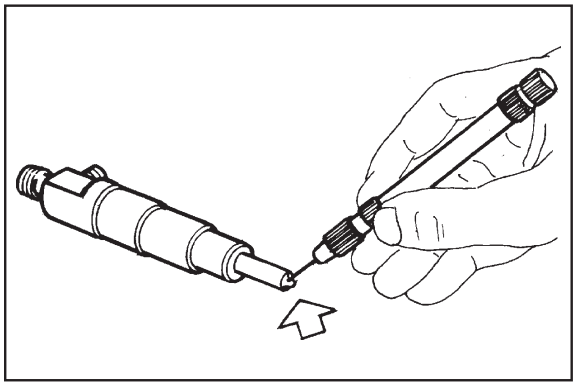

47

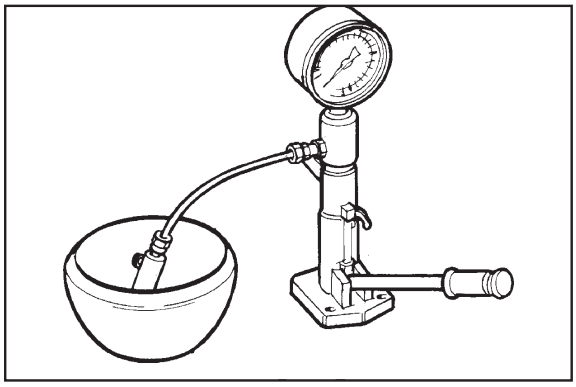

48

Disassembly and re-assembly of injectors
Unscrew the ring nut on the injector nozzle using a ring wrench and a special tool as illustrated in figure 49 serving to release the pressure exerted by the spring on the ring nut.

1. Visual check: make sure that the seat of the needle shows no signs of hammering or excess roughness, that the needle is not worn or damaged, and that the holes are free of carbon deposits.

2. Smoothness test: the needle, previously immersed in diesel and inserted into the nozzle casing, must be pulled out to a third of the length of the guide while holding the nozzle in a vertical position. When the needle is released it should return freely to its seat by the effect of its own weight.

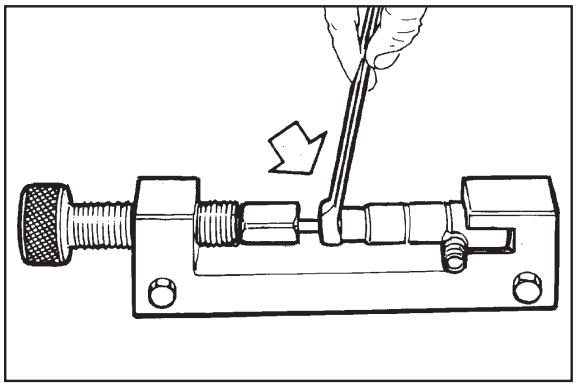

49

Reassemble the injector following the assembly order shown in figure 46; during reassembly make sure that the locating elements on distance ring 5 (fig.46) are correctly inserted to the corresponding holes. Torque the nozzle securing ring nut to:

kgm 3,5 (Nm 34,3)

Downloaded from www.Manualslib.com manuals search engine

https://truckmanualshub.com/

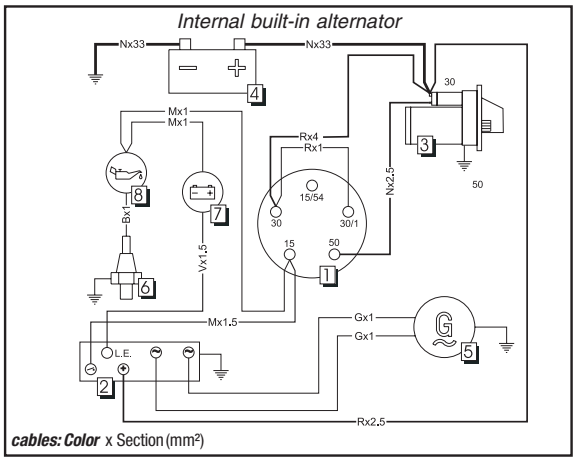

50

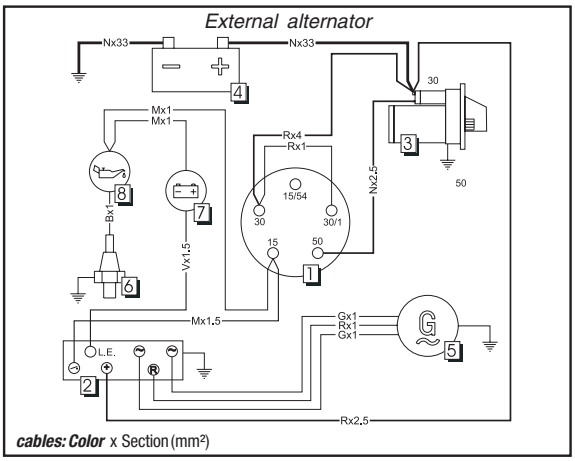

51

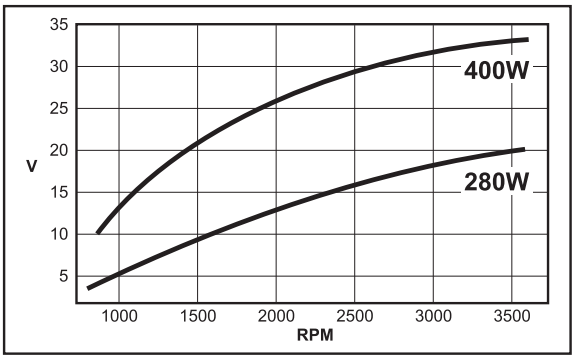

52

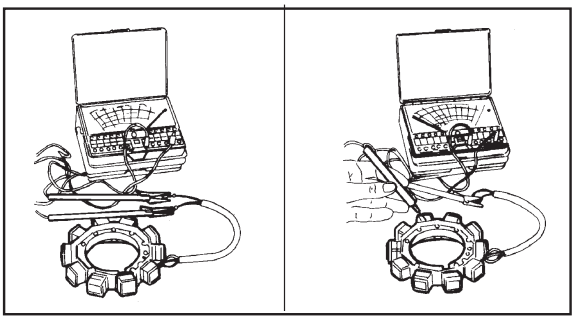

53 54

Plant specifications

Starter motor: Left rotation, 12V, power from 1.25 to 1.4 kW
Built-in alternator: 280W
Voltage regulator: Electronic with controlled diodes and connection for battery charge indicator light
External alternator: 12V - 400W
Recommended battery: Refer to tables in chapters 4
Flywheel ring gear: Check teeth for wear or damage. Fit crown wheel to flywheel by pre-heating to 200-250°C.

Description (fig. 50-51)	*Cables color (fig. 50-51)*
1. Ignition key (optional)	**M** Brown
2. Voltage regulator	**N** Black
3. Engine starter	**A** White
4. Battery (not included)	**V** Green
5. Alternator	**R** Red
6. Pressure switch	
7. Battery recharge warning light (optional)	
8. Oil pressure warning light (optional)	

Checking electrical equipment

1. Make sure that the connections between the voltage regulator and alternator are correctly made and in good condition.
2. Disconnect the starter motor wire from the battery terminal and connect a dc ammeter (fig.50 and 51).
3. Connect a dc voltmeter to the battery terminals (fig.50 and 51).
4. Turn over the engine a few times without load or connect an 80÷100W lamp load across the battery to restrict voltage to lower than 13V.
5. Accelerate the engine to 3000 rpm. The current shown by the ammeter must be in line with the values indicated in figure 52.
6. Disconnect the load from the battery (if it was previously connected) and keep the engine running at the above indicated speed for a few minutes, the battery voltage should slowly increase until it reaches approximately 14.2V. At the same time the charge current should drop to around 2A in a period of time that depends on the whether the battery is fully charged or not.
7. If the charging current is absent or is lower than the value indicated above, proceed by checking the alternator and if necessary, renewing the voltage regulator.

Checking the alternator

Check:

1. with motor stopped: the continuity of the windings (fig.53) by connecting an ohmmeter and ensuring that resistance is zero, and the insulation between the windings and ground (fig. 54) by ensuring that the ohmmeter gives a reading of infinite resistance. If these readings are not obtained the stator must be renewed.
2. with motor running: use a multitester to check the charge current between the two yellow wires. Bring the engine up to 3000 rpm - the multitester should give a reading of 35V.
   If the values are more than 10V below this value, the rotor is de-magnetized and the alternator must be renewed.

! Important:

1. The alternator will not deliver current when the yellow wires are disconnected.
2. The alternator will burn out if the yellow wires are connected to ground.
3. The voltage regulator may be damaged if the ground connection or other circuit connections are not made properly.
4. The alternator and the voltage regulator will burn out instantly if the battery connections are inverted.

Downloaded from www.Manualslib.com manuals search engine

https://truckmanualshub.com/

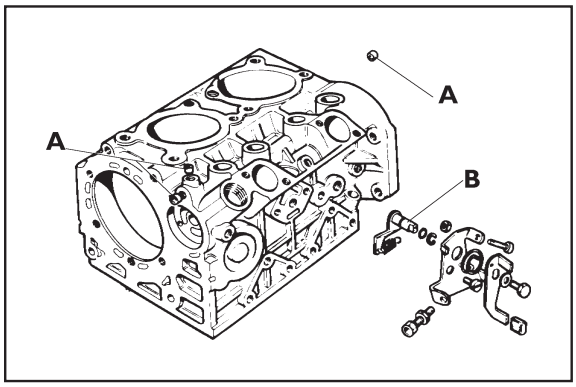

55

!

Notice: These instructions are valid for engines up-dated prior to the publication of this manual. Any modifications must be checked on the technical circulars.
Before assembling the engine carefully clean all parts and dry them with compressed air. Lubricate moving parts to prevent seizing when starting up. Replace the gaskets with new ones each time the engine is assembled.
Use torque wrenches to ensure that the correct tightening torques are applied.

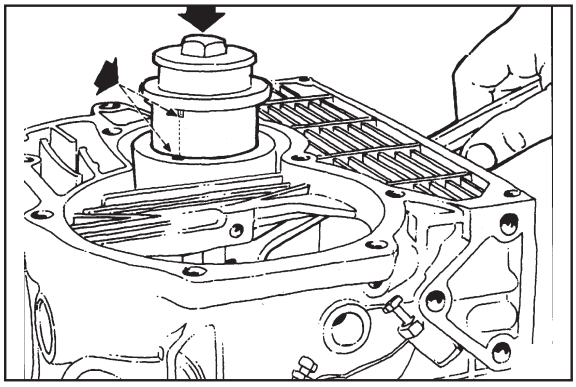

56

Preparing the crankcase
Clean the mating surfaces of sealing compound residues or other foreign material using a copper scraper or fine emery stone. Make sure that the oil passages are open and free of built-up deposits.

1. Fit the plugs (A, fig.55) in their holes.
2. Insert the internal accelerator lever (B, fig.55) into the crankcase with its spring taking care to protect the oil seal O-ring from damage.
   Complete the external assembly with plate, spring, lever, etc. as shown in figure 55.
3. Mount the bearing bush (gear train side) using either a standard press or a made-to-measure punch as shown in figure 56. Fit the bush by matching the hole with the passage on the crankcase. Bushes with standard or smaller internal diameters can be ordered as required.
4. Insert the complete oil pressure relief valve (A, fig. 57) into its housing (C, fig.57). Make sure that the valve ball seat is free of dirt that could reduce the effectiveness of the pressure seal.
   Secure the oil pressure valve with the relative screw (B, fig. 57).
5. Insert the cylinder studs and the centring pins.

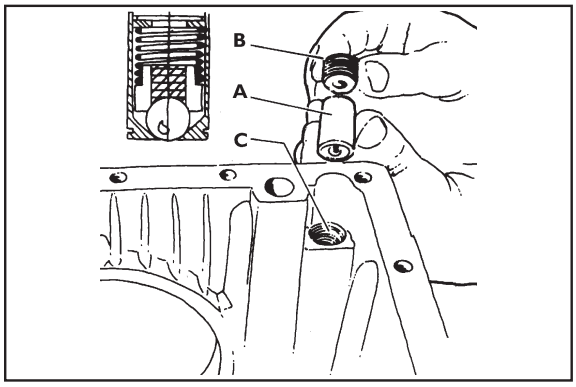

57

!

A warped oil retainer may allow the introduction of air into the engine thus causing crankcase ventilation problems.
Use genuine oil retainers with the LOMBARDINI.

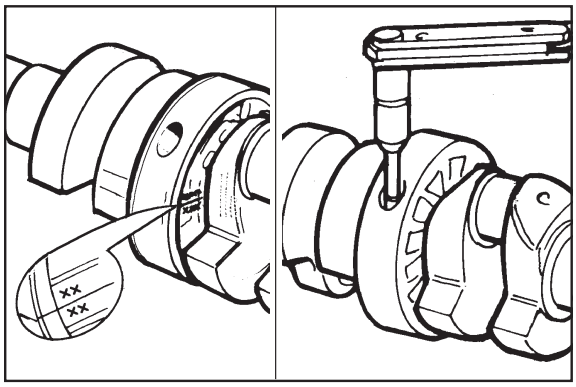

58 59

Central main bearings
Fit the shells into their seats and coat with a thin film of oil.
The reference numbers (fig.58) must be aligned on each half-shell, making sure that the oil passages match the corresponding openings in the crankcase. Torque the bearing assembly bolts (fig. 59) to:

kgm 2,2 (Nm 21,6)

Downloaded from www.Manualslib.com manuals search engine

https://truckmanualshub.com/

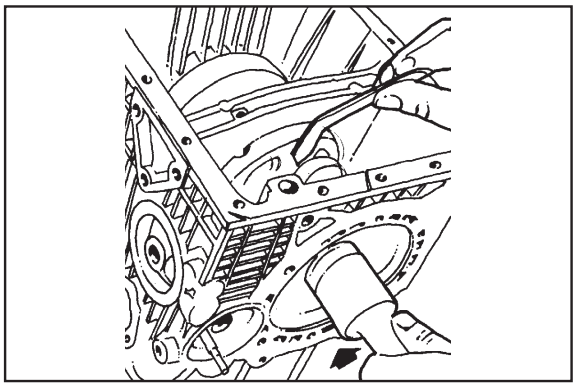

60

Crankshaft

Fit the crankshaft into the crankcase using tool p.n. 00365R0910 as shown in figure 60; make sure that the bearing oil passages are matched to the crankcase oil passages.

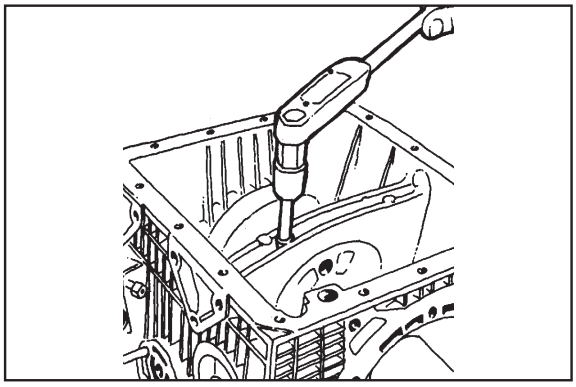

61

Torque the bearing screws (fig. 61) to :

kgm 2,2 (Nm 21,6)

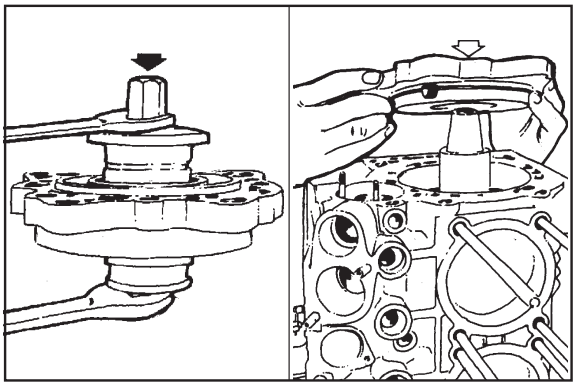

62 63

Main bearings - flywheel side

Fit the bush to the bearing carriern using a special tool of appropriate diameter as shown in figure 62. Insert the bush arranging the groove so that it is facing the internal side of the bearing and positioned vertically.

Fit the oil seal ring to the bearing using a suitable diameter tubular punch.

Fit the bearing into the crankcase after having first interposed an O-ring between the contact surfaces (fig. 63). Torque the screws to:

kgm 2,2 ÷ 2,4 (Nm 21,6 ÷ 23,5)

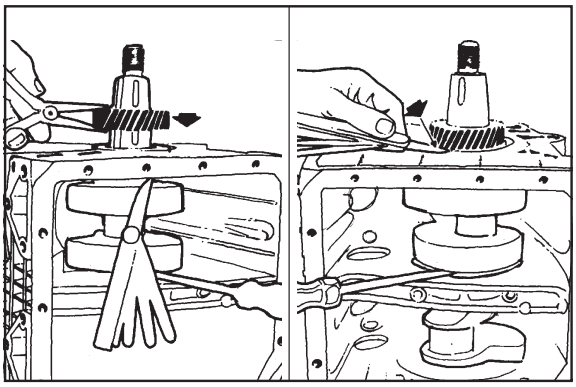

64 65

Crankshaft end float

Install an 0.15 mm feeler gauge betwen the crankshaft shoulder and the crankcase (flywheel side).

Use a screwdriver to force the crankshaft against its shoulder as shown in figure 64. Pre-heat the timing gear to a temperature of 180 ÷ 200 °C and fit it onto the crankshaft pressing it down until it comes into contact with the crankcase. Wait until the timing gear has cooled down and then withdraw the feeler gauge and the screwdriver and check end float (fig. 65), which must be within the range:

0,10 ÷ 0,20 mm
0,20 ÷ 0,30 mm (cast iron crankcase)

Downloaded from www.Manualslib.com manuals search engine

https://truckmanualshub.com/

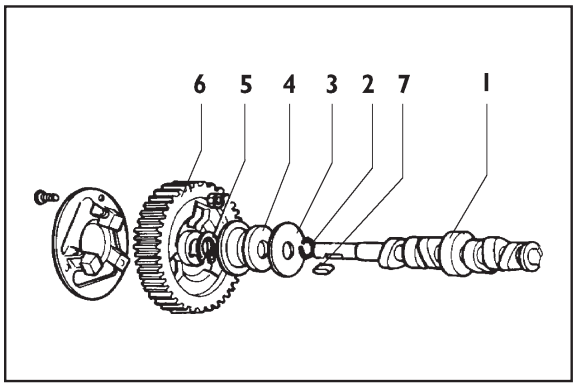

66

Camshaft

Prepare the camshaft assembly (fig.66) as described below:

1. Fit adjustment shim (nr. 3) and governor washer (nr. 4) onto the camshaft.
2. Fit snap ring (nr. 5) and key (nr. 7) into their respective seats.
3. Preheat (180 ÷ 200 °C) gear (nr. 6) complete with flyweights and mount it to the camshaft, making sure that it is snugly fitted against the retaining ring.
4. Insert the governor driving plate retaining ring (nr. 2).

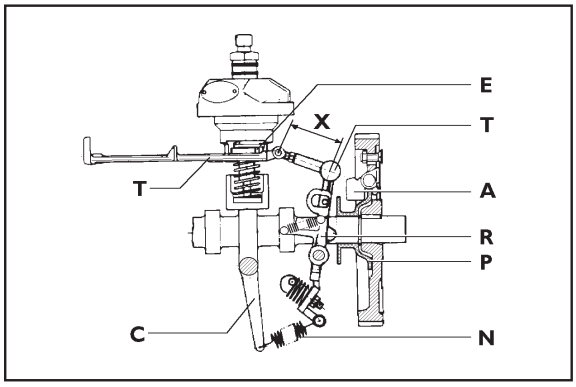

67

The speed governor is of the centrifugal type with flyweights keyed directly onto the end of the camshaft gear (fig.67).
Flyweights (A) impelled outward by centrifugal force, cause a moving plate (P) to shift axially. The plate operates a lever (R) which is connected, through tie rods (T) to the control sleeves (E) of the injection pumps.
Spring (N) placed under tension by speed control lever (C), contrasts the action of the centrifugal force of the governor.
The balance between the two forces keeps the engine speed virtually constant with respect to load variations.

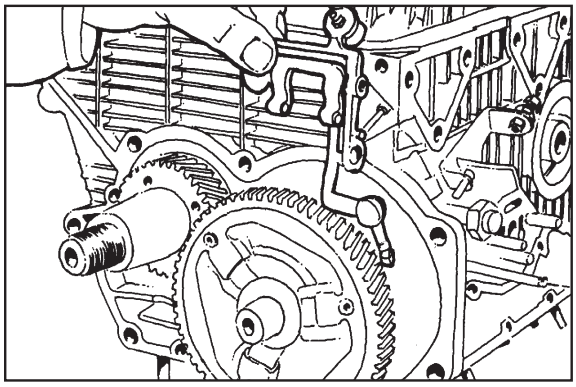

68

Governor tie rod adjustment

The length of the tie rod, measured between the centredistance of holes (X, fig. 67), must be:

mm 36,5 ± 1 turn

! The accuracy of this setting will serve to eliminate hunting of engine speed, difficulty in starting, and power fall-off.

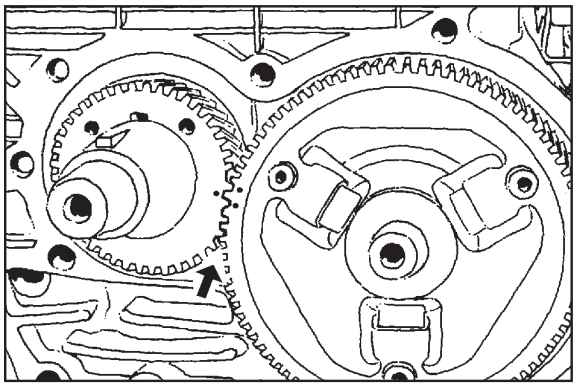

69

Assembly

1. Fit the tappets into their housings in the crankcase
2. Fit the governor lever and tie rod, simultaneously with the camshaft, into the crankcase (fig.68)
3. Insert the governor lever fulcrum pin from the outside of the crankcase and secure it with the relative screw (fig.68).
   The lever must be free to effect its full stroke without sticking.
4. Insert the spring between the governor lever and the accelerator, making sure that it is correctly installed.
5. Check that the timing marks on the camshaft and crankshaft gears are correctly aligned with respect to each other (fig. 69).

Downloaded from www.Manualslib.com manuals search engine

https://truckmanualshub.com/

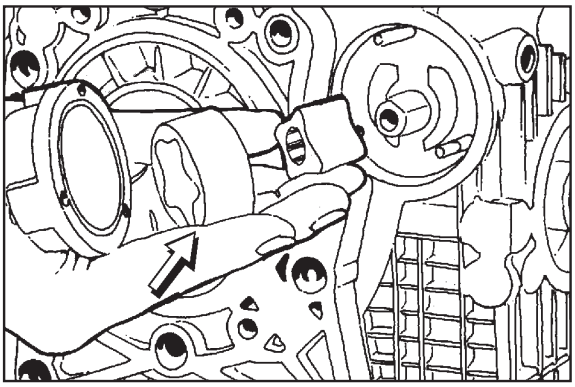

70

Oil pump
See pag. 25 if you wish to check the rotors.

Fit the external oil pump rotor with the bevel toward the inside of the cover (fig.70).
Torque the bolts to:

kgm 0,5 ÷ 0,6 (Nm 4,9 ÷ 5,9)

! It is good practive to fill the oil suction pipe in order to aid pump priming when the engine is started up for the first time.

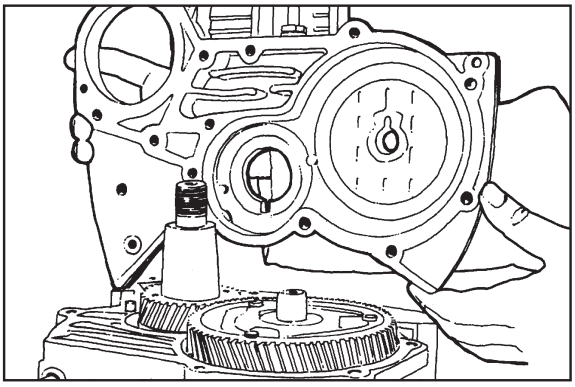

71

Timing cover
Check that the timing markeson the camshaft and crankshaft gears are aligned (fig.69).
Fit the oil seal onto the cover using a normal tubular punch of appropriate diameter. Mount the cover to the crankcase (fig.71) after first inserting a gasket between the mating surfaces; tighten the screws to:

kgm 2,2 ÷ 2,4 (Nm 21,6 ÷ 23,8)

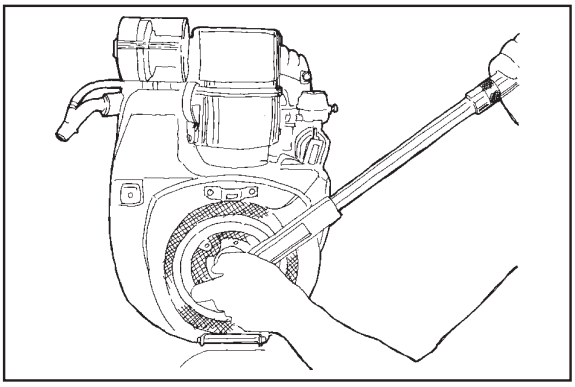

72

Pulley and flywheel
Tighten the pulley and flywheel nut (fig.72) to:

kgm 18 ÷ 22 (Nm 176,5 ÷ 215,7)

Downloaded from www.Manualslib.com manuals search engine

https://truckmanualshub.com/

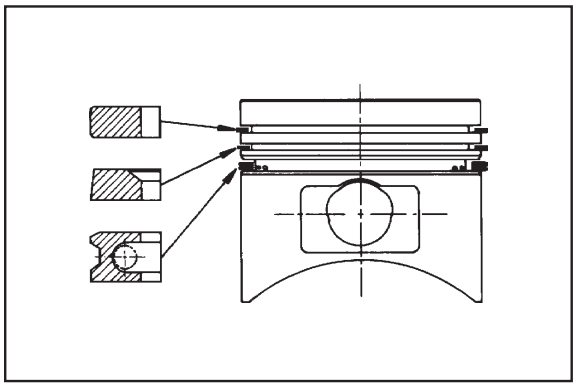

73

Pistons

! Lubricate the following parts with oil before mounting: the piston pin, the piston, the cylinder and the big-end bearing

Fit the piston rings onto the pistons (fig.73) in the following order:

1. Chromed compression ring
2. Torsional compression ring (with internal bevel facing upward)
3. Expander oil scraper ring (external bevel facing upward).

Install the piston to the connecting rod, by pushind the wrist pin in, without heading the piston.

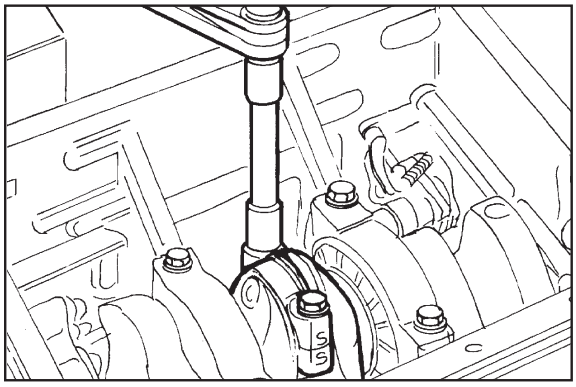

74

Connecting rods

After having fitted the bearings into the big ends mount the connecting rods to the crank journals pins; note that the pistons are marked with an arrow showing the direction of rotation of the engine. The combustion chamber, which is offset with respect to the central axis of the piston, must be turned to face the injector nozzle side. Mount the connecting rod big end cap ensuring that the reference numbers are aligned with those punched on the connecting rod itself (fig.74). Torque the bolts to:

kgm 3,6 ÷ 3,8 (Nm 35,3 ÷ 37,3)

Now fit the oil pan after first inserting the appropriate gasket between the facing surfaces.

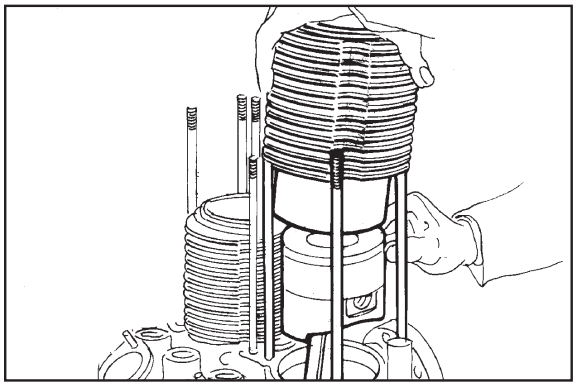

75

Cylinders

Before fitting the cylinders turn the piston rings so that the end gaps are arranged at intervals of 120° with the end gap of the first compression ring aligned with the axis of the wrist pin. The lower face of the cylinders are chamfered to permit the easy insertion of the piston rings. The operation can be simplified, however, using a normal piston ring compressor (p.n. 00365R0770) as shown in figure 75.

Mount the cylinders to the crankcase as shown in figure 76 and then bring the pistons up to their respective TDC (top dead centre) positions. The following must now be checked:

1. that the dots punched on the flywheel (TDC) correspond to the reference mark on the flywheel-housing
2. that the pistons protrude over the top surface of the cylinders (fig.76) by a distance of:

0,10 ÷ 0,20 mm

This distance is adjusted with special shims that are inserted between the bottom surface of the cylinder and the crankcase 0.1 - 0.2 - 0.3 mm.

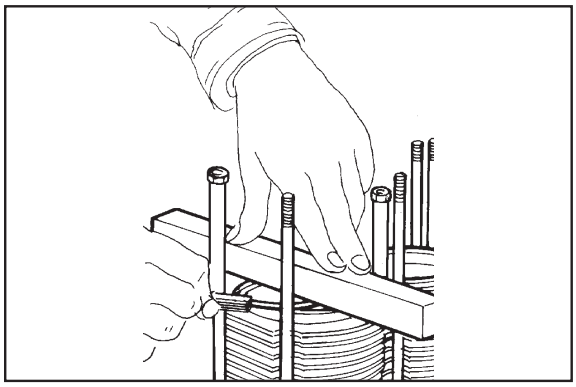

76

Downloaded from www.Manualslib.com manuals search engine

https://truckmanualshub.com/

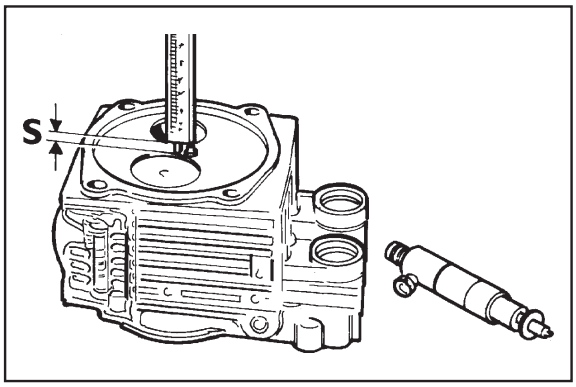

77

Checking injector protrusion

Before mounting the heads to the cylinders fit the injectors into their housings and, after having secured them temporarily, check the protrusion of the nozzles from the head faces (fig.77). Protrusion **S** should be:

1,75 ÷ 2,25 mm

This value is adjusted by inserting copper washers between the injectors and the injector supporting faces on the heads (fig. 77).

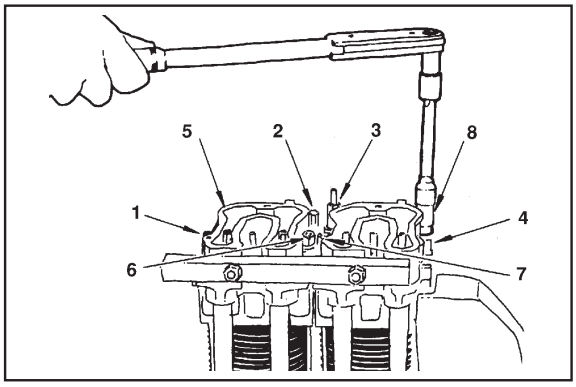

78

Cylinder heads

For checking and overhaul of the cylinder heads refer to page 19.
Fit the push rods and oil sealing O-rings on the cover pipes and proceed to install the cylinder heads with the relative gaskets on the facing surfaces.

! Make sure that the oil seal rings are correctly seated in the heads to avoid the risk of oil leaks.

Align the heads using a metal bar or the exhaust manifold (fig.78). Following a cross pattern tighten the head nuts (fig.78) in increments of 1 kgm until you reach the value:

4 kgm (Nm 39,2)

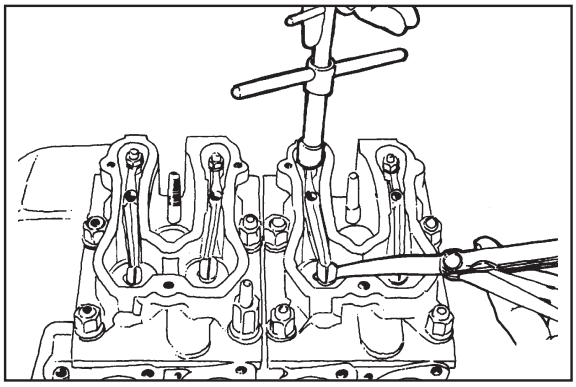

79

Valve clearance

The clearance between valves and rockers with the engine cold (fig.79) is:

0,15 mm
intake/exhaust

This clearance is to be adjusted with the pistons at their respective TDC compression positions.

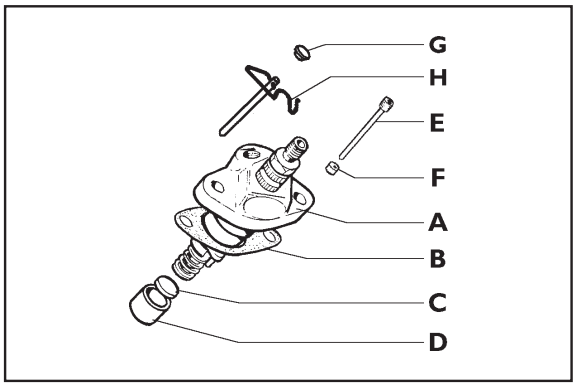

80

Injection pumps

1. Insert the injection pump tappet (D) and spacer (C) into the housings in the crankcase (fig.80).
2. Assemble the injection pumps (A fig. 80) on the crankcase and secure them on the adjustment sleeve by means of the appropriate pins (E or H fig. 80) on PF30 BOSCH pumps. Then, place the advance adjustment shims (B, fig. 80) between the crankcase and the pump.
3. Fix the injection pump connection rod (A, fig.81) to the speed governor lever tie rod (B, fig.81)
4. Secure the injection pumps to the crankcase, taking care to turn the first injection pump around through approximately 3/4 of a turn in a clockwise direction.

Downloaded from www.Manualslib.com manuals search engine

https://truckmanualshub.com/

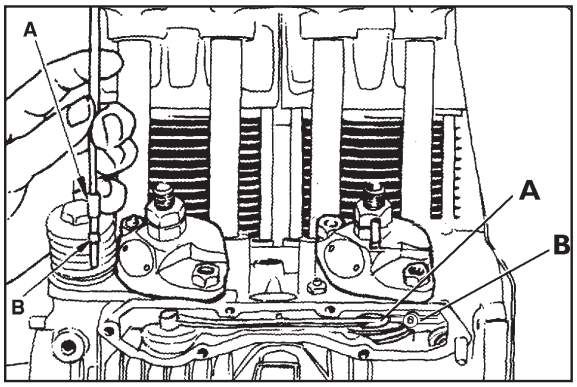

81

5. Release the control sleeves:
- on the traditional pumps by loosening the pins (E, fig.80) and inserting the appropriate distance collars (F, fig.80).
- on the BOSCH type PF30 pumps by removing the pins (H, fig.80) and closing the hole on the pump body using plug G.

! Important: injection pumps should be released only after they have been connected to the governor tie rod and secured to the crankcase. If one or both pumps must be changed, in order to guarantee the same fuel delivery for each pump the pump remaining on the crankcase must be locked using the pins (E or H, fig.80). Alternatively the above steps must be performed in their entirety.

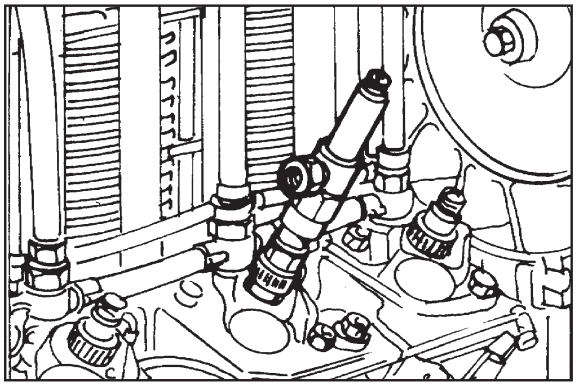
82

Injection check

1. Connect the fuel tank to the injection pumps.
2. Set the speed control lever to Max. (fig.83) and the piston to the start of compression (cylinder nr. 1 on timing gear side).
3. To eliminate the injection delay caused by the milling on the pumping elements, bring the injection pump connection rod (A, fig.81) to a position mid-way between minimum and maximum.
4. Fit the special tool, p.n. 00365R0940, to the delivery valve holder (timing case side) as shown in figure 82.
5. Turn the flywheel slowly until the column of diesel fuel inside the special tool starts to move. This indicates the start of static injection.

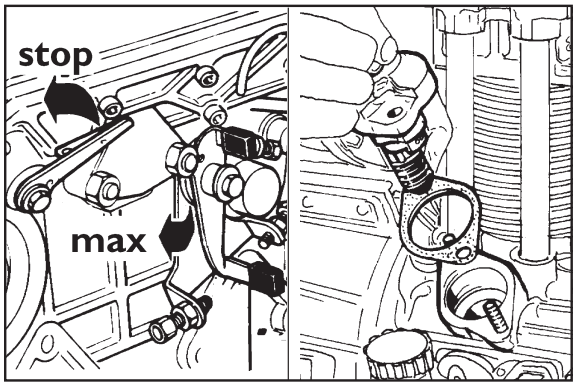

83 84

For variable advance pumps, the reference mark on the flange bell (fig.85) must match the intermediate point (*) between TDC and "IP" (start of dynamic injection) punched onto the flywheel.
On traditional pumps the static start of injection (*) is the same as the start of dynamic injection (IP).

Should the reference mark (* or IP) fall short of the notch on the flange bell, this indicates that injection is too advanced so that the injection pump must be removed and then reassembled with shims (gaskets) between the pump and the crankcase (fig.84).

Should the reference mark (* or IP) fall after the TDC reference mark, this indicates that injection is too retarded. In this case proceed as above but this time removing shims.
Now repeat the injection timing check for all injection pumps.
Note that every 0.1mm shim inserted beneath the pump corresponds to 2.75mm rotation of the flywheel.

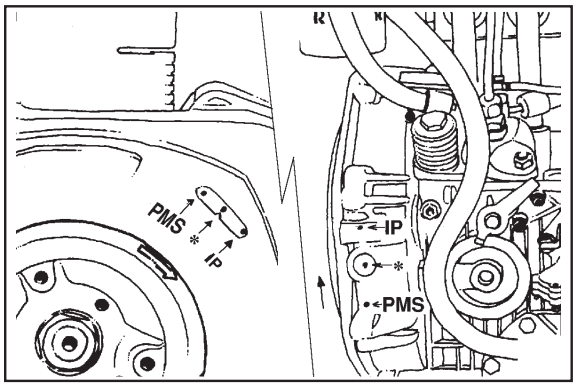

85

Should the flywheel need changing, determine TDC and mark the start of static and dynamic injection as shown in the table:

Version	I.P.	(*)
standard	22° = 44 mm	17° = 34 mm
whisper quiet	20° = 40 mm	12° = 24 mm

Downloaded from www.Manualslib.com manuals search engine

https://truckmanualshub.com/

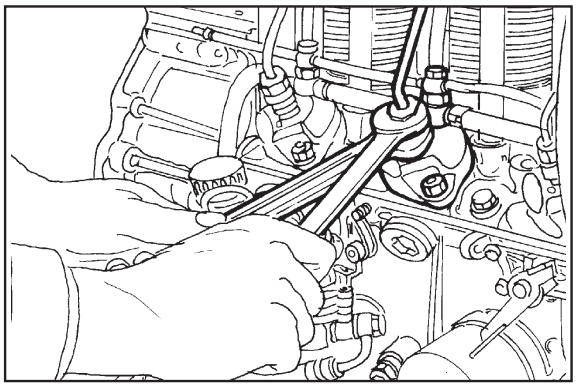

86

Injectors and injector pipes

Mount injectors to heads placing copper gaskets in between (see pag. 36).

Connect the injectors to the pumps by way of the injection lines.

! Important: always use two wrenches to loosen or tighten the unions on the injector pipes (fig.86) thereby ensuring that the position of the delivery valve holder on the pumps is not changed (see pag.27).

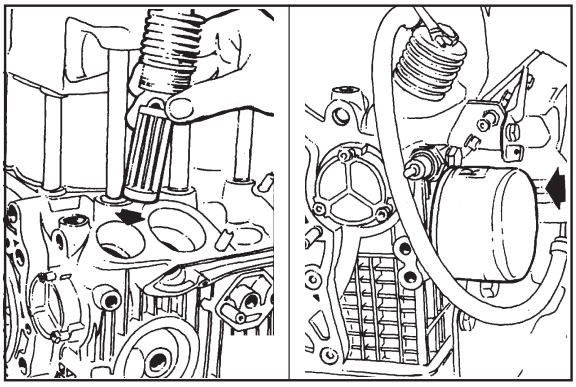

87 88

Oil filter

Fit the mesh type oil filter cartridge into the crankcase (fig.87) and check that the rubber seals and the O-ring on the cover are in good condition.

On request or 25LD425-2 engines can mount an external filter cartridge that can be screwed onto the crankcase (fig.88). Oil the seal before assembly.

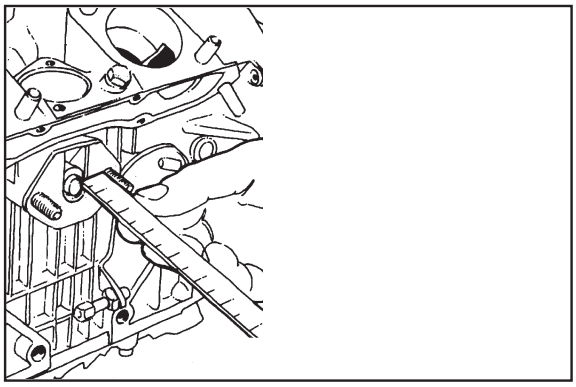

89

Feed pump

1. Insert the fuel feed pump tappet into its housing and make sure that it moves freely.
2. Fit the 0.2 and 1mm adjustment gaskets.
3. With the fuel pump excenter in rest position the tappet should protrude from the gasket surface (fig. 89) by:

1,3 ÷ 1,7 mm

4. With the fuel feed pump cam in the rest position mount the pump and actuate it manually .

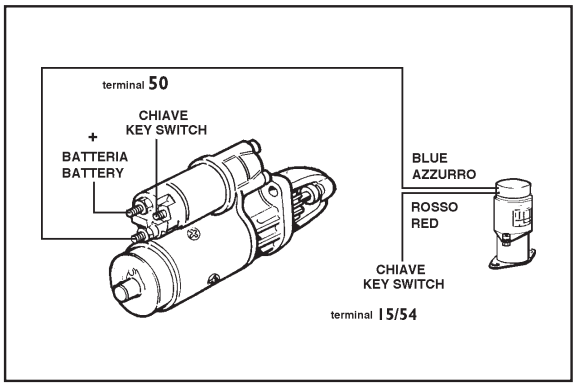

90

Electric shut off

If the engine is equipped with an electric shut off, insert the electro-magnet into the crankcase taking care to position the engine shut-off lever in the STOP position; make sure that the injection pump connection lever moves freely along its entire stroke.

Make the electrical connections as shown in diagram 90.

Downloaded from www.Manualslib.com manuals search engine

https://truckmanualshub.com/

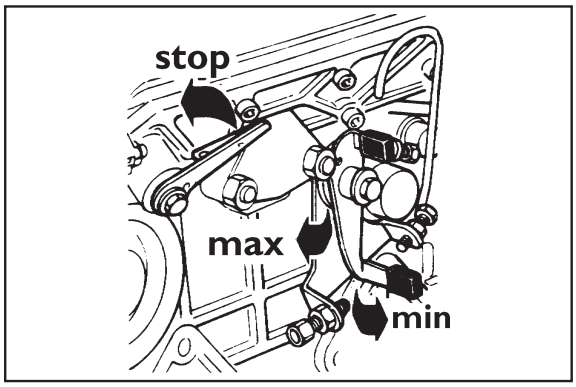

91

Speed adjustment (fig.91)

When the engine is hot set idle speed at 1000 rpm and maximum no-load speed at:

3150 rpm for engines at 3000 rpm
3750 rpm for engines at 3600 rpm

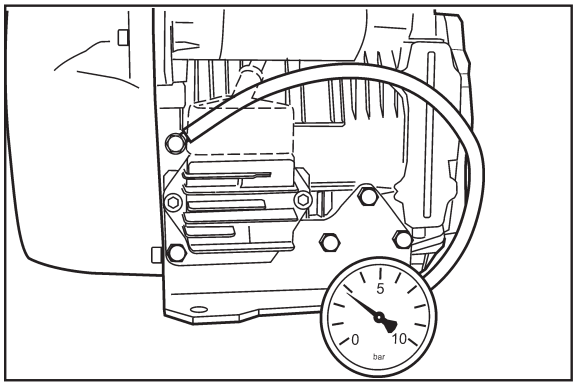

92

Checking oil pressure

1. Remove the bolt from the hole in the crankcase and fit a pressure gauge with 0 to 10 kg/cm² full scale (fig.92)
2. Start the engine, accelerate to 3000 rpm and wait for the oil to reach a temperature of 70 to 80°C.
3. The pressure reading must be between 2.5 and 4 kg/cm².
4. Reduce engine speed to minimum; the pressure should not fall below 1 ÷ 1.5 Kg/cm² with oil temperature of 80°C.

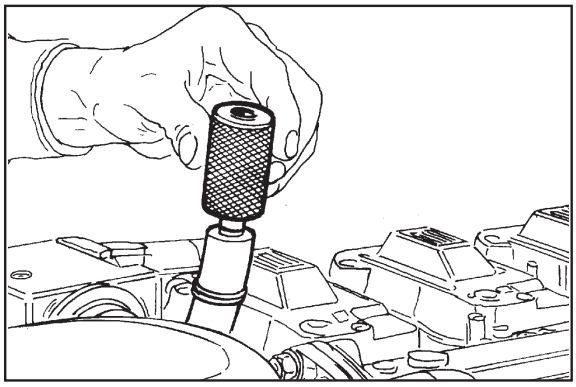

93

Checking for oil leaks

1. Remove the exhaust gas collection pipe from the inlet manifold and close the connection with a plug (fig.93).
2. Start the engine and let it run for a few minutes. The high pressure generated in the crankcase will show up any oil leaks.
3. Reconnect the exhaust gas collection pipe to the inlet manifold.

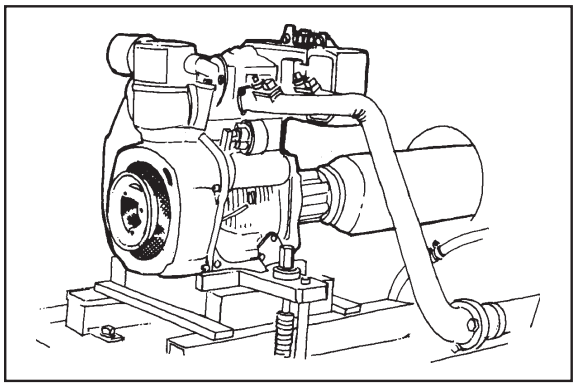

94

Dyno testing of engine

After you have placed the engine on the brake (fig.94) perform the following:

1. Check the oil level (fig.95).
2. Start the engine and let it idle.
3. Check the oil pressure on the pressure gauge (fig.92)
4. Run in engine before testing it at full power.

Downloaded from www.Manualslib.com manuals search engine

https://truckmanualshub.com/

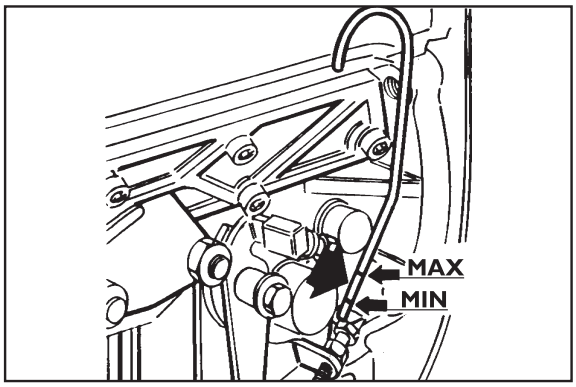

95

Running-in table

Time (min)	RPM	Load
5	2000	0
15	3000/3600	0
30	3000/3600	30%
30	3000/3600	50%
30	3000/3600	70%
5	3000/3600	100%

Engine power curves are reported at page 12.

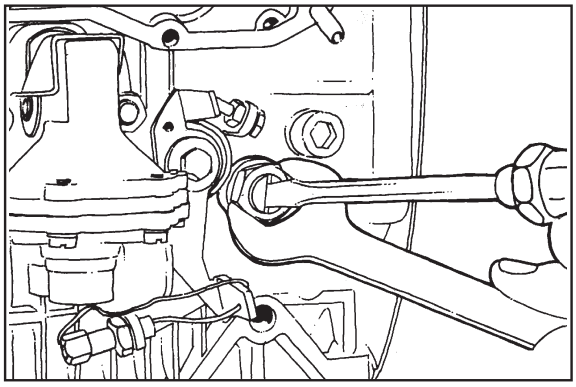

96

! In order to check that the setting is correct, without tools, accelerate the engine a few times with no load and check the exhaust fumes.
Delivery of diesel fuel is correctly calibrated when the exhaust gas is slightly coloured by smoke; change the adjustment if necessary by turning the adjustment screw (fig.96).

Downloaded from www.Manualslib.com manuals search engine

https://truckmanualshub.com/

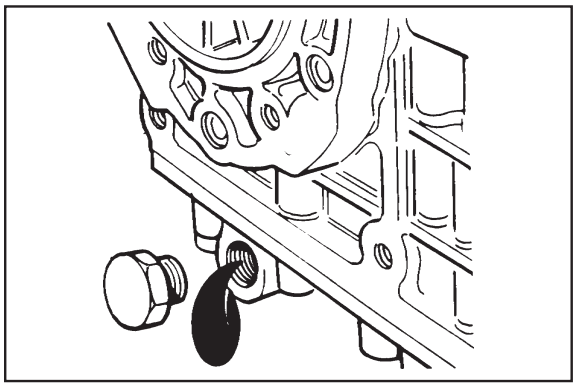

97

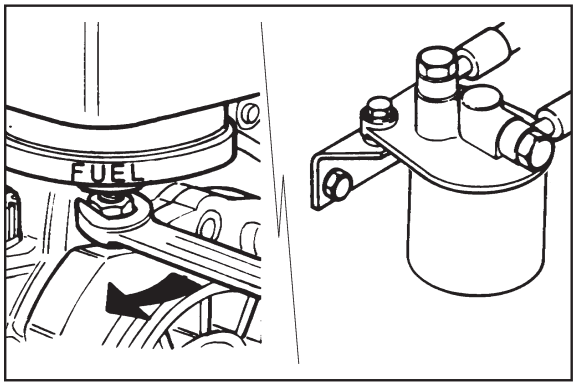

98

Storage

Prepare engines as follows for storage over 30 days

Temporary protection (1/6 months)

- Let engine run at idling speed in no-load conditions for 15 minutes.
- Fill crankcase with protection oil MIL-1-644-P9 and let engine run at 3/4 full speed for 5/10 minutes.
- When engine is warm empty oil pan and fill with standard new oil (fig. 97)
- Remove fuel tube and empty the tank
- Remove fuel filter, replace cartridge if dirty and refit (fig. 98).
- Carefully clean cylinder fins, heads and fan.
- Seal all openings with tape.
- Remove injectors, pour a spoonful of oil type SAE 30 into the cylinders and rotate manualy to distribute the oil. Refit injectors.
- Spray oil type SAE 10W into exhaust and intake manifolds, rocker arms, valves, tappet etc. Grease all unpainted parts.
- Loosen belt
- Wrap the engine in a plastic film.
- Store in a dry place, if possible not directly on the soil and far from high voltage electric lines.

Permanent protection (over 6 months)

- The following is recommended apart from the above instructions:
- For the lubrication and injection system as well as for moving parts use rustproof oil type MIL-L-21260 P10 grade 2, SAE 30 (Ex. ESSO RUST - BAN 623 - AGIP, RUSTIA C. SAE 30) Let the engine run with rustproof oil and drain any excess.
- Coat external unpainted surfaces with antirust type MIL-C-16173D - grade 3 /Ex. ESSO RUST BAN 398 - AGIP, RUSTIA 100/F).

How to prepare the engine for operation

- Clean engine outside
- Remove protections and covers
- Remove antirust with an appropriate solvent or degreaser.
- Remove injector, fill with standard oil, turn crankshaft by a few revolutions, remove oil pan and drain the protective oil.

Downloaded from www.Manualslib.com manuals search engine

https://truckmanualshub.com/

Couplings	Spiel (mm)	Grezen (mm)
Camshaft and central bearings (aluminium crankcase)	0,070 ÷ 0,105	0,2
Camshaft and central bearings (cast iron crankcase)	0,040 ÷ 0,075	0,2
Camshaft and flywheel side bearing	0,025 ÷ 0,075	0,2
End gap of compression rings	0,30 ÷ 0,50	0,8
End gap of oil scraper rings	0,25 ÷ 0,50	0,8
Connecting rod and wrist pin	0,023 ÷ 0,038	0,07
Rocker arm and pin	0,03 ÷ 0,06	0,15
Fuel pump push rod and housing	0,05 ÷ 0,098	0,12
Injection pump tappets and housing	0,020 ÷ 0,059	0,1
Tappets and housings	0,07 ÷ 0,041	0,1
Oil pump rotor and housing	0,27 ÷ 0,47	0,6
Pistons and wrist pin	0,003 ÷ 0,013	0,05
Inlet valve guide to stem	0,030 ÷ 0,050	0,1
Exhaust valve guide to stem	0,045 ÷ 0,065	0,1

Adjustments	MIN (mm)	MAX (mm)
Crankshaft end float	0,10 ÷ 0,20	0,2
Rocker arm end float	0,05 ÷ 0,130	0,5
Valve clearance	0,15	0,15
Valve depth from cylinder head	0,8 ÷ 1,0	1,3
Injector protrusion	1,75 ÷ 2,25	2,25
Piston protrusion	0,10 ÷ 0,20	0,2

Downloaded from www.Manualslib.com manuals search engine

https://truckmanualshub.com/

Tightening torques	kgm	(Nm)
Big ends	3,6 ÷ 3,8	(35,3 ÷ 37,3)
Timing cover	2,2 ÷ 2,4	(21,6 ÷ 23,5)
Injector ring nut	3,5	(34,3)
Injectors	2 ÷ 2,3	(19,6 ÷ 22,6)
Injection pump	2 ÷ 2,3	(19,6 ÷ 22,6)
Oil pump	0,5 ÷ 0,6	(4,9 ÷ 5,9)
Injection pump connection	4,5 ÷ 5	(44,1 ÷ 49)
Central bearing halfshells	2,2	(21,6)
Central main bearings	2,2	(21,6)
Main engine bearings - flywheel side	2,2 ÷ 2,4	(21,6 ÷ 23,5)
Cylinder heads	4	(39,2)
Injection pipe	1,5 ÷ 2,5	(14,7 ÷ 24,5)
Flywheel	18 ÷ 22	(176,5 ÷ 215,7)

Standard screw tightening torques						
Denomination	8.8 **= 8.8**		R10 **= R10 = 10.9**		R12 **= R12 = 12.9**	
	R ≥ 800 N/mm²		**R ≥ 1000 N/mm²**		**R ≥ 1200 N/mm²**	
Diameter x pitch **mm**	**Nm**	**kgm**	**Nm**	**kgm**	**Nm**	**kgm**
4 x 0,70	3,6	0,37	5,1	0,52	6	0,62
5 x 0,80	7	0,72	9,9	1,01	11,9	1,22
6 x 1,00	12	1,23	17	1,73	20,4	2,08
7 x 1,00	19,8	2,02	27,8	2,84	33	3,40
8 x 1,25	29,6	3,02	41,6	4,25	50	5,10
9 x 1,25	38	3,88	53,4	5,45	64.2	6,55
10 x 1,50	52,5	5,36	73,8	7,54	88.7	9,05
13 x 1,75	89	9,09	125	12,80	150	15,30
14 x 2,00	135	13,80	190	19,40	228	23,30
16 x 2,00	205	21,00	289	29,50	347	35,40
18 x 2,50	257	26,30	362	37,00	435	44,40
20 x 2,50	358	36,60	504	51,50	605	61,80
22 x 2,50	435	44,40	611	62,40	734	74,90
24 x 3,00	557	56,90	784	80,00	940	96,00

Downloaded from www.Manualslib.com manuals search engine

https://truckmanualshub.com/

42100 Reggio Emilia – Italia - ITALY
Via Cav. del Lavoro Adelmo Lombardini, 2 - Cas. Post. 1074
Tel. (+39) 0522 3891 - Telex 530003 Motlom I – Telegr.: Lombarmotor
R.E.A. 227083 - Reg. Impr. RE 10875
Cod. fiscale e Partita IVA 01829970357 - CEE Code IT 01829970357
E-MAIL: atl@lombardini.it
Internet: http://www.lombardini.it

La Lombardini si riserva il diritto di modificare in qualunque momento i dati contenuti in questa pubblicazione.
Lombardini se rèserve le droit de modifier, à n'importe quel moment, les données reportées dans cette publication.
Data reported in this issue can be modified at any time by Lombardini .
Lombardini vorbehält alle Rechte, diese Angabe jederzeit verändern.
La Lombardini se reserva el derecho de modificar sin previo aviso los datos de esta publicación.

Downloaded from www.Manualslib.com manuals search engine