https://truckmanualshub.com/

Operation Manual

For

ZL50 Series Wheel Loader

Ding Sheng Tian Gong Construction Machinery St ock Co.,Ltd

https://truckmanualshub.com/

Preface

To make users understand the operation, maintenances and manages for ZL50 series wheel loader, the instructions for operations and maintenances have been published. It summarizes wheel loader's properties, operations, structure principles, maintenances and adjustments so as to make reference for drivers, maintainers and technicians.

Because the structures and characteristics of the wheel loaders are improved and raised continuously, the contents of this instruction are slightly different from the later products. Please users would be cautions.

We hope, in the procedure of operating wheel loaders and using the operation instruction, if you find any questions, please inform us in order to raise products qualities and service well for the users.

We reserve the right to revise this manual. The manual will not be revised for minor technical changes but addendum will be attached at the end of manual.

https://truckmanualshub.com/

Contents

Chapter one Application and main performance parameter……..…4

Ⅰ.Purpose……..4

Ⅱ.Performance……4

Ⅲ.Engine….……5

Ⅳ.Driving system……6

Ⅴ.Traveling brake system……8

Ⅵ.Steering system……8

Ⅶ.Working system……8

Ⅷ.Electrical system……...…… …… ……9

Ⅸ.Capacity of adding-oil……...9

Chapter two Operation and use of the loader……10

Ⅰ.Control mechanism and instruments..……...11

Ⅱ.Running-in of new vehicle……..12

Ⅲ.Uses and operation of the loader……...13

Chapter three Structures and maintenances of main parts…….15

Section 1 System of diesel engine……...15

Ⅰ.Operating system of oil valve……15

Ⅱ.Park device……16

Ⅲ.Radiator group……..16

Ⅳ.Fuel tank……16

Section 2 Hydraulic torque converter-transmission system……...16

1.Structure principle ……...16

2.Transmission ……21

3.Hydraulic system of torque converter-transmission ……27

Ⅱ. Operating requirements and maintenances……..…31

Section 3 Driving shaft..……32

Section 4 Driving axle……...33

Ⅰ.General…… ……...33

https://truckmanualshub.com/

Ⅱ.Structure features and working principles……33

Ⅲ.Maintenance and service……....34

Section 5 Braking system……...37

Ⅰ.Summary……...37

Ⅱ.Braking system of traveling……..37

Ⅲ.Stopping and emergency braking system……....41

Section 6 Steering system……43

Section 7 Hydraulic system of working implement……44

Ⅰ.Checking and adjusting the system……44

Ⅱ.Multi-way valve……..46

Ⅲ.Hydraulic oil tank……...53

Ⅳ.Requirements and maintenances of hydraulic system……55

Section 8 Working implement……..55

Section 9 Carrier……..56

Section 10 Electrical system……57

Ⅰ.Batteries……..58

Ⅱ.Lamps……..58

Chapter four Technical maintenances……...65

Ⅰ.Technical maintenances of all classes……...65

Ⅱ.Oils and lubrication……...66

Chapter five Main faults and troubleshooting……..68

Ⅰ.Torque converter and transmission system……...68

Ⅱ.Driving axle ……69

Ⅲ.Electrical system ……..70

Chapter six Operation and application of air conditioner……...71

Additional instructions……...72

https://truckmanualshub.com/

1. Introduction

Because of our rich experience in the manufacture of engineering machinery, our loaders produced from our company have advanced level of design and technology. If you can operate and maintain the machine correctly. The loader, will get responsible performances, high production efficiency and long service life.

Free of trouble operations and long service life depend largely on the correct use and maintenances of your loaders. So before using your loaders for the first time, we recommend that the operator should read this operating instructions carefully and strictly observe all rules contained in this manual.

After repairs are taken or parts are changed, the respective system must be readjusted and then checked for its correct function. This work is very important for braking and steering system.

The products are according to the standard JB/T3688.2-1998 Technical conditions of wheel loader.

Guarantee:

We observe the contract, supply spare parts and sale services. We are responsible for the replacing, repairing, repairing and returning of the machine if faults are found.

Spare parts

Be sure that in all repair work, only srcinal spare parts supplied by our company are used. This gives you the assurance that you will be protected from damage and your machine will be kept in srcinal condition.

Sale-Service dep.

Ding Sheng Tian Gong Construction Machine ry Stock Co.,Ltd.

(TG ENGINEERING MACHINERY CO.,LTD)

Sale-Service dep.

ADD: No.5 Haitai South & North Street, New Technology Industry Zone of Huayuan Industry Zone, Tianjin, China

Tel: 86-22-58396099

Fax: 86-22-58396090

BP: 300384

Http://www.dstg.com.cn

E-mail:export @dstg.com.cn

The copyright of this manual belongs to Dingsheng Tiangong Construction Machinery Stock Co.,Ltd. Reprint shall be prosecuted.

Note: Users should not modify the structure of the machine. Any problem occurs after modification by users sha ll be their liability. Our company shall not bear any responsibili ty.

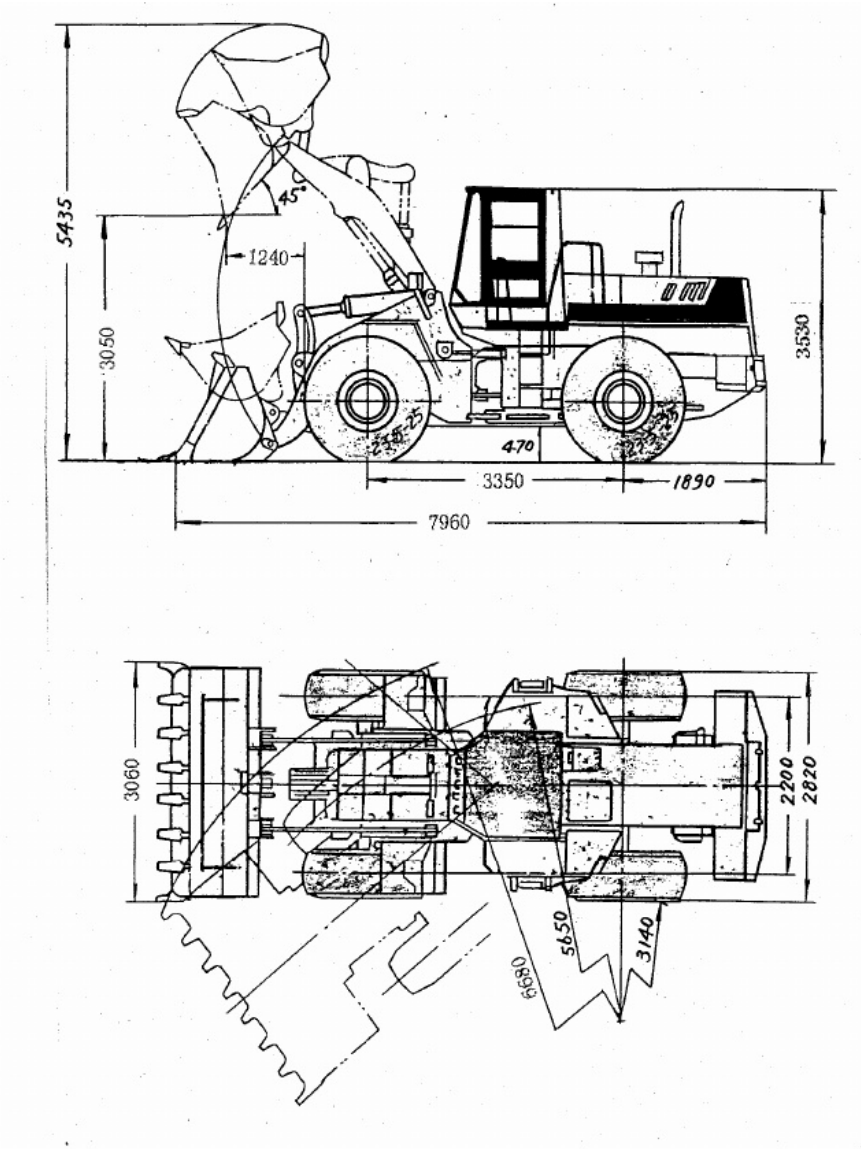

Overall dimensions of ZL50 series Wheel Loader

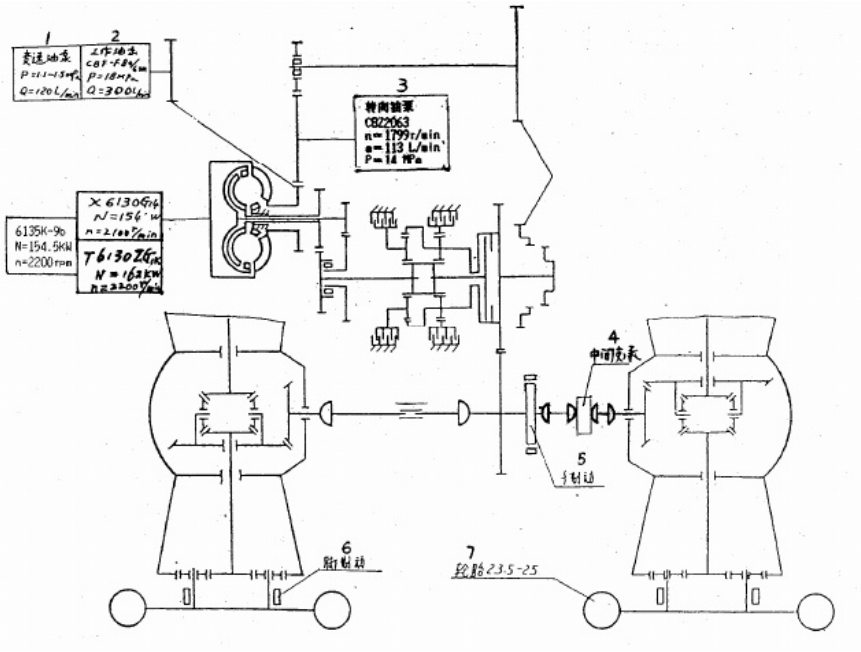

Figure of driving system of ZL50 Series Wheel Loader

1. Oil pump of the transmission 2. Oil pump for working

3. Oil pump for steering 4.Medium support 5.Hand brake 6.Foot brake 7. Tyre

https://truckmanualshub.com/

Chapter one Application and main performance parameter

1. Purpose

This loader is a large engineering machinery for lading and unloading loose materials such as coal, sand, earth and minerals etc. It is suitable for loading and unloading,bulldozing, craning and dragging im mine fields, basic construction,road construction and iron-steet enterprise. It is used for operations of piledemolishing. When the shipping distance is not very long, this loader can replace the traditional means of transit truck and accomplish the auxiliary operation such as road paving, clear up working clear up working cleaning up working face, levelling earth deposits etc. This loader is multipurepse engineering machine with high efficiency.

2. Main performance parameters

1) Capacity of bucket 3 m^3

2) Rating loading 5000 kg

Note: Rated load of long arm: 3500kg

3) Time of lifing arm(full loading) 6.6 S

4) Time of front tilt of the bucket(empty loading) 1.5 S

5) Driving speed

gear	Ⅰ	0~12 km/h
gear	Ⅱ	0~34 km/h
	Reverse	0~17 km/h

6) Max.climbing gradient 30°

7) Max.turn radius

Center line of outer wheel 5650mm

Outer of the bucket 6680mm

8) Geometrical size:

Overall length (Put the bucket in plain surface)	7960mm
Overall width (outer of wheels)	2820mm
Bucket width	3060mm
Overall height (cab roof)	3530mm
Axle base	3350mm
Wheel base	2200mm
Min.clearance	470mm
Max.unloading height (unloading distance 1240mm)	3050mm

9) Whole machine (with the cab) 16500kg

10) Driver's seat placed in the center of front end in rear frame.

Ⅲ. Engine

1） Model			
6CTA8.3-C215 （ Dong Feng-Cummins Engine ）	Plateau type WD61564G Weifang Diesel Engine Factory	WD61567G3-28 Weifang Diesel Engine Factory	QSB6.7-220 (American Cummins)
2） Type:			
Water cooling, in-line, 4 strokes engine, direct injecting combustion cab type.	Water-cooling mono-row, vertical direct-injecting, 4 strokes.	Water-coolling mono-row,vertical direct-injecting, 4 stroks.-	Electronically Controlled Diesel Engine
3） Rating turn speed			
2200r/min	2200r/min	2200r/min	2200r/min
4） Rating power (1 hour power)			
160kW	162kW	162kW	164kW

5） Max.torque			
872/1500rpm	850Nm/1400-1500rpm	843Nm/1500rpm	949Nm/1500rpm
6） Consumed coefficient of combustion fuel in rating power			
≤209g/kW·h	≤225g/kW·h	≤225g/kW·h	≤214g/kW·h
Diesel engine is suit able for working at 5000 meters above sea level. 7） Max.exhaust fume degree			
R B≤4.0			
8） Max.exhaust fume degree （2250rpm and stored coefficient of the torque ）			
1.14			
9） Fan			
φ590mm anti-direction fan			φ760mm anti-direction fan
Clock-wise, exhausting-wind			Clock-wise, exhausting-wind

Ⅳ. Driving system

1) Torque convere ter

Type	Double turbine, mono-class, 2 phases, 4 components
Max.torque ratio	≥4
Cooling type	Circulating of cooling oil pressure
Oil pressure of the entrance	0.3-0.45MPa
Oil Pressure of the vent	0.20-0.30MPa

Lubricating pressure	0.10-0.20Mpa
Max.allowing temperature of entrance	120°

2) Transmission

Model	4WG180 （Hangzhou Gear Factory）	ZL50（Hangzhou Gear Factory）
Type	Fixed shaft electro hydraulic gear shifting	Planetary type mechanical-hydraulic gear shifting
Transferring-shifiting	Front 4 and reverse 3 gears	Front 2 and reverse 1 gears
Oil pressure of operating	1.10-1.50MPa	1.10-1.50MPa
Transmission ratio gear Ⅰ	4.166	2.155
gear Ⅱ	2.594	0.578
Ⅲgear	1.178	
Ⅳgear	0.672	
Reverse gear		1.577

3) Main driving

Type	Helical bevel gear of reducing speed of one class
Ratio of reducing speed	5.286:1

4) Wheel-side reducer

Type	Cylindrical spur gear of planetary reducing
Reducer	4.4:1

5) Driving axle & wheels

https://truckmanualshub.com/

Type	Driving with 4 wheels
Tyre	23.5-25
Air pressure of the tyre	Front and rear wheel 0.30±0.01Mpa

Ⅴ Traveling brake system

1)Service braking (foot brake)	Double lines, air-oil combining action,disc brake in wheels
System pressure	0.6-0.7Mpa

2)Parking braking & Emergency braking: Hand controlling, brake of hoof type

Ⅵ Steering system

Type: Articulating frame, all hydraulic steering-gear,constant-flow valve amounted in the system.

Cylinder numbers of steering-bore×st roke	2— φ90×442
Steering pump	CBZ2080
Steering-gear	TLF1—E1000C
Working pressure	14Mpa
Steering angle	Left and right 40°±1.5°respectively

Ⅶ Working device

Cylinder numbers of the arm-bore×stroke	2— φ160×769
Cylinder numbers of lifting bucket- bore×stroke	2— φ200×485
Distrubuting valve	Valve rod of double combine
Working pump	CB- KpZ100 left-hand rotation
Turning speed	2100r/min
Flowing	320L/min
Max. working presure	18Mpa

https://truckmanualshub.com/

Working device	4 connecting-rod of anti-turn mono-rocker

Ⅷ Electrical system

Electrical pressure of the system	24V
Batte ry	OPTIMA Red Top RTS-4.2L
Electrical pressure of the lamp	24V
Starting of diesel engine	Electrical starting 24V

Ⅸ Capacity of adding oil

Fuel	320L
Hydraulic oil	250L
Transmission	45L
Axle (differential & planetary system)	40L
Front and rear booster	4L
Medial support of driving axle	2L

https://truckmanualshub.com/

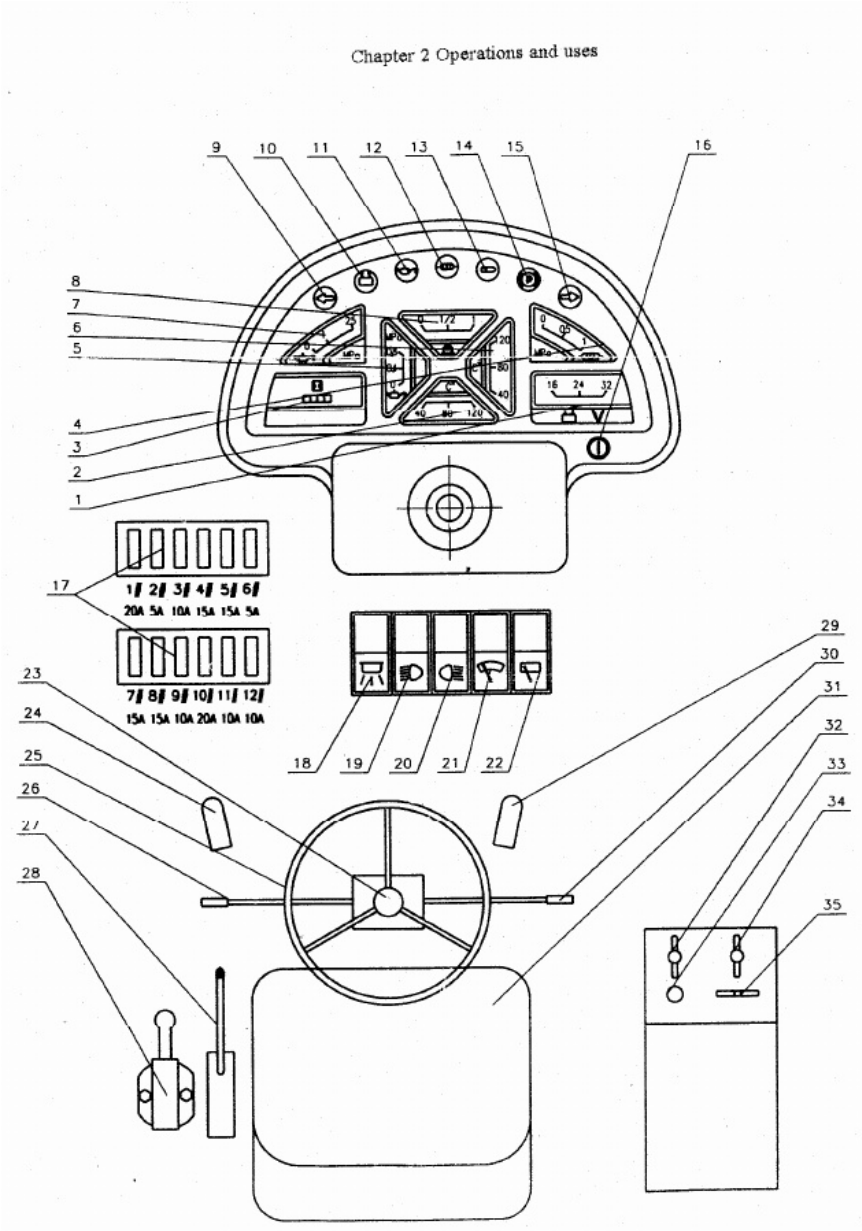

Fig.2-1 Figure of operating position

https://truckmanualshub.com/

Ⅰ. Control mechanism and instruments

1.Electrical pressure gauge	2.Water temperature gauge for the engine
3.Timer	4.Air pressure gauge for braking
5.Oil pressure gauge for the engine	6.Oil temperature gauge for torque converter
7.Oil pressure gauge for the transmission	8.Fuse gauge for the engine
9.Indicating lamp for left steering	10.Indicating lamp for recharging
11.Oil pressure indicating lamp of more low	12.Indicating lamp for low air pressure
13.Indicating lamp for far-light	14.Indicating lamp for braking
15.Indicating lamp for right steering	16.Starting switch
17.Fuse box	18.Switch of roof lamp
19.Switch of working lamp	20.Switch of rear lamp
21.Switch of the wiper of front window	22.Switch of the wiper of rear window
23.Horn knob	24.Brake pedal
25.Steering wheel	26.Operating lever for the transmission
27.Operating lever for the hand brake	28.Switch for mail power
29.Oil valve pedal	30.Combined switch
31.Driver's seat	32.Operating lever for moving arm
33.Operating lever of locking plate	34.Operating lever for turning bucket
35.Extinguishing switch for the engine	
Note: For combining switch (No.30), it includes small lamp, far-light or near-light, for front lamp and steering lamp.	

https://truckmanualshub.com/

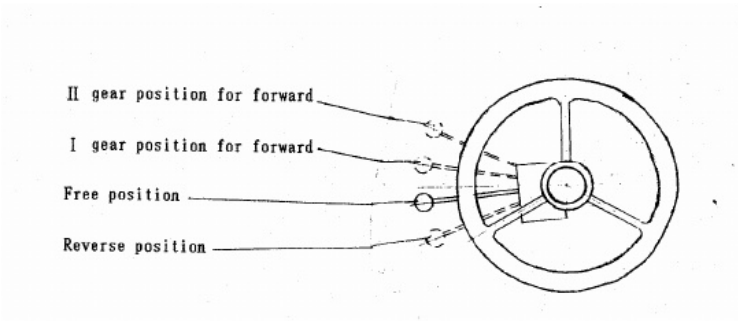

Fig. 2-2 Position figure of controlling transmission

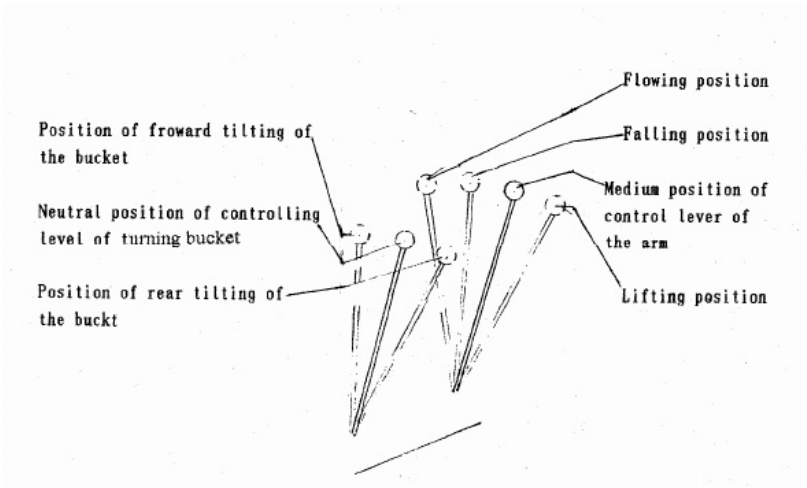

Fig.2-3 Position figure of controlling working device

Ⅱ. Running-in of new vehicle

To make loaders have a long service life, the new machine should be run in for a period, so all the moving parts can get a good fitting.

The running in of new machine is 60 h. During this period , the travel speed should be under 30km, the Loading and unloading weight could not exceed 70% of normal load.In running in time , it is suitable for loading loose material , and its movement doesn't act violently. Pay attention to the maintence and check working

https://truckmanualshub.com/

state of each part,tighten the bolts and nut.

After the running in period ,.each part should be fully checked and renew the oil.(the oil of operating system is an exception.)

Ⅲ.Use and operation of the loader

(1) Notes before starting the engine and operating loader

1.Before operating the machine, the driver must read this instruction carefully,make acquaintance with function featrues and cautions. In order to use the machine reasonably,insure the operation safety and make the machine have a long life, the driver should well know the position and application of each control lever and gauges.

2.Many kinds of the engines can be assembled on this machine. No matter what kind of the engine is assembled, the performance of the machine can't be changed. For the engine,please refer to *Operation Manual for Engine* with the machine and it is not mentioned in here.

3.Cherk the tyre pressure according to the regulation

4.Each lubrication part should be oiled or greased sufficiengly.

(2) Starting the engine

1.Put hydraulic control lever of the transmition in middle position.

2.Turn on the master switch and starting switch, starting motor drivers the engine for turning. If the engine could not start in 5 seconds,(continuously working time of the startor is less than 15 seconds) releases the starting button, after one minute,start it again. If it fails to start for more than 4 timess, check the faults and remove trouble shooting to start again.

Note： Before starting machine, make sure to check wheterh floating switch of bucket firstly are at off position，the machine can be start ed only when it is at the off position

https://truckmanualshub.com/

(3) The preparation before travelling

1.The engine should run 5 minutes idly after it starts. When the water temperature of engine rises above 60℃,the engine is allowed to revolute with fully loaded. At the same time, the revolution and load should increase gradully
And evenly

2.During running idly,check the read of each gauge to see if it accord with regulation. If not, you should stop the engine and maintain it.

3.Check the braking part carefully before travelling. Make sure that the brake is reliable and sensitive. The air pressure of braking systemis not less than 0.65MPa.

4.Check electric light equipment,steering light and braking light.

5.Release the hand brake.

(4) Points for attention during travelling

During travelling, please pay attention to each gauge to see if the read is up to the regulation.

(5)The working of the loader

1.Push the control lever in a position of operating speed.

2.Taking the metterial : The loader driver vertically to ship material in the operating speed. Insert the bucket to the material pile, at the same time, the bucket buttom should parallel with groud. Then increase the engine revolution gradually and to go on driving forward. Then increase the engine revolution gradually and go on driving forward,then retrieve the bucket, lift the moving arm. If the resistance is too much , the wheel may slip. To solve this problem, retrieve the bucket or lift the moving armslightly so as to decrease the resistance. Pay attention to the gauge read to see if they are accord with the regulation.

The driver would better insert the bucket in the front side, otherwise, the side resistance is overmuch, this can cause trouble.

3. Transporting the material: After loading the material, the bucket should be retrieved. Then the loader is drived to the unloading place. During transporting, the distance between the bucket and ground is nearer, the stability is better. When driving is stopping area or uneven and winding road, the driver should make the bucket have a proper position according to the road condition.

4. Loading the truck: When the loader comes near the truck, the driver should rise the moving arm gradually until the bucket does not collide witgh the truck box when tiktubg the bucket forward. Control level of front bucket let it unloading forward. With control level of the of the bucket, make unloading completely or a part and smooth actions are required. The materials must be dropped to the truck evenly, so it can reduce the shock to truck, at the same time, the loader should have a proper distabce wuth the truck and does not collide with the truck.

https://truckmanualshub.com/

Chapter three The structure and maintenance of main parts

Section 1: System of diesel engine

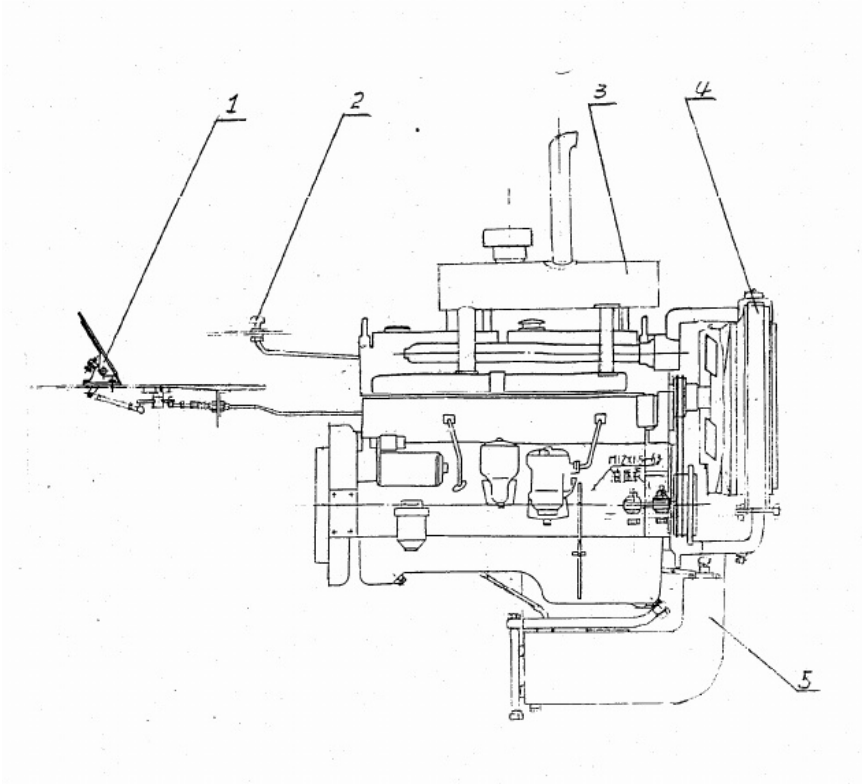

Fig. 3.1.-1 System of diesel engine

1. Operating system of oil valve 2. Parking device 3. Diesel engine
4. Radiator group 5. Diesel tank

Please see fig.3.1-1 for diesel engine system. Many kinds of Engine Can be assembled on this machine. No matter which kind engine is assembled, the characteristic of the whole machine is not changed. For details of the engine, please refer to Operation Manual of the Engine. This manual only simply introduced the system principle instead of detailed introduction.

Ⅰ. Operating system of oil valve

As shown from figure. Operating system of oil valve is composed of the pedal of oil valve, spherical joint and support of pushing rod. Limit screws are used to limit oil valve to max. extent and make adjustment up and down according to rear conditions. Through adjusting rotational length of all pushing rod with spherical joint, the pedal

https://truckmanualshub.com/

argle is changed and adjusted to the best position of the operation.

Ⅱ. Parking device

As shown from the figure, parking device is mainly composed of soft shaft. One end is connected with parking handle of diesel engine and its support is fixed on fuel pump. Another end is fixed on the cab. If you pull up the cut-off handle, the loader is immediately palked.

Ⅲ. Radiator group

Radiator group is mainly composed of water tank, oil radiator of torque converter (cooling torque converter and working oil of the transmission) hydraulic oil radiator (cooling oil of hydraulic ststem) and guide wind cup. The radiator of hydraulic oil is fixed on water tank rear fan end and oul radiator of torque converter is fixed on another end of water tank. Guide wind cup can breathe air current to cool the radiator fully. The entry of water tank is connected with the corner of water outlet of saving-temperature device on diesel engine.Water outlet in lower part is connected with water entry of the pump.Exhausting valve is arranged below water tank to exhaust water. When Cummins QSB6.7 electric spurting oil diesel engine is equipped，the radiator will be water+oil+gas compound radiator and cooled by fan mounted on diesel engine.

Ⅳ. Diesel tank

It is fixed under bottom case of diesel engien and connected with its frame, store oil is 320 Litres. The holes of oil intake, oil returning and washing are mounted on diesel tank and breather cap is mounted to protect fuel consumption from appearing vacuum. Fuel sensor is used to measure oil amount. On right side of oil tank the mouth of adding oil is provided. On the mouths of adding oil and oil intake, filter screens are fixed to filter fuel fully in order to let proper working of fuel system of diesel engine. On its left side of the bottom, the bolt from exhausting oil is mounted for washing all filter screen and the tank. On the front end of the tank, the support is used to fix the pipes of exhausting oil. If you work to loose the bolt, the oil will be exhausted out in the bottom case.

Section 2: Torque converter-transmission system

1. Structure principle

As shown from fig.3.2-1, two parts are composed of torque converter and transmission. Torque converter is in left side and right side is transmission.

1. Torque converter

(1) Structure: Please see left part and K direction of structure fig. 3.2-2. From the view of H direction, left end of case 13 is combined with the case of flying wheel and right end is fixed on box 4. Two ends are separately sealed by paper gasket 21 and 9. Pump wheel 16 and cap wheel 25 (shaft end supported in the hole of flying wheel) are combined with flying wheel 22 through elastic plate and turn with diesel engine at the same speed. Turbine grouo are composed of Ⅰ turbine 18 and Ⅱ turbine 19. Ⅰ turbine

https://truckmanualshub.com/

18 is fixed with turbine cap 23 by elaspic pins and riveted on turbine case 26. Two turbines are separately connected with input gear 5 and input gear 8 of one class and two class and tow class by splines and turn around the commone center line of shaft independently. The seat 10 of guide wheel is fixed with the case 13 for right support of pump wheel. Guide wheel 27 and the ring of guide wheel are mounted on its splines and limited by spring washer.The gear 14 is fixed on pump wheel 16 to drive all oil pumps.Seal ring 12 is provided in the gap not to turn when working little oil is leaked but the pressure is not leaked. The application of seal ring 7 is the same as seal ring Ⅱ.

Capper sleeve 6 is used for separating the opposite motion of gear 6 and gear 8.

Spring 36 of large clutch of overstep type (See the view of H direction). One end supports in pressure cap 37. Another end applys the pressure to the roller through separating ring 38 for touching the rolling track with gear 40 of outer ring and cam 39 of inner ring. The gear 40 of outer ring turns with cam 39 of inner ring at the same direction, when the foremr is quick over the latter, the clutch is close. When the latter is quick over the former, the clutch is open.

Pressure valve 32 controls oil pressure of the inlet of torque converter, pressure valve 33 controls oil pressure of lubrication.

(2) Working principle

Simple working principle of torque converter described as fig. 3.2-3. Working cavity of torque converter is composed of four vane wheels. It is full of working oil. The application of pump wheel B is to change mechanical energy into kinetic energy of the oul by engine. It is turned by engine and force the hydraulic oil to shock turbine with large speed by the direction shown as the figure. Two turbines T_1 and T_2 absorb kinetic energy oil current and reture into mechancial energy and rotate with turning speed n_{T1} and n_{T2} and separately. The power is transmitted to gear Z_1 and Z_2 transmitted to large clutch of over step-type. Guide wheel is not to rotate. When hydraulic oil shocks vanes of guide wheel, the torque is transmitted and make the guide wheel produce a equal and opposite torque of opposite direction to change of turbine output through inflexing hydraulic oil to the turbine. Four vanes of working wheel have certain shape and inlet and outlet angles to make oil current flow into all vane wheels by stipulating direction of current road. Because turning speed of pump wheel has high or low controlled by oil valve, turning speed n_{T1} and n_{T2} of the turbine and outter load is applied on output shaft, so, high and low of turn speed is changed or even not to turn. (Such as starting, braking condition, machine wheel does not move n_T is zero). When hydraulic oil flows into all working wheel and opposite angle changes continuously. The torque and relexing torque of pump wheel is changed. Mathenatic sum is also changed from the torque of pump wheel (position and oppositive) and reflexing torque of guide wheel (two directions of positive and opposite). As the torque of guide wheel is positive, output torque is increased and in oppositing direction output torque is decreased. Torque converter can change the torque existing guide wheel of no rotating.

The turbine T_2 is centrifugal and the power is directly transmitted through gear Z_3 and Z_4. It is mainly used in condition of high speed and light load. Turbine T_1 is

https://truckmanualshub.com/

shaft-flowing and it is mainly used in low load conditions. The power is transmitted out with combining roller gers Z_3 and Z_4 completely. Such as the figure, in the action fo the spring, the roller touches inner ring of outer gear Z_7 and the rolling track of inner ring cam (it is fixed into one body with gear Z_1) . When the loader is in the condition of high speed and light load, gear Z_4 of outer ring when the roller turns along A direction, gear Z_2 of outer ring idles and power from turbine T_1 is cutted off, at this time, turbine T_2 works independently. When the loader is low speed and heavy load, outer loading which descreases, turn speed of gear Z_4 is lower than Gear Z_2 of outer ring and the roller turning along B direction is compressed. Two gears Z_2 and Z_4 are combined, so, the power from turbines T_1 and T_2 is transmitted out. At this time, turbines T_1 and T_2 work commonly. Large clutch of overstep type which is closed and opened automatically follows with the change fo outer loading, no person controls.

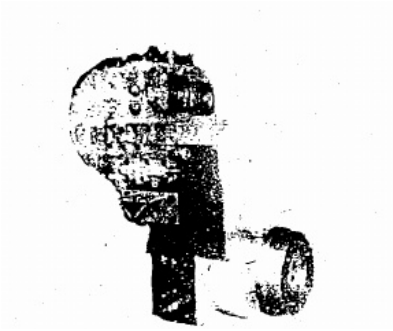

Fig. 3.2-1 Figure of torque converter-transmission

https://truckmanualshub.com/

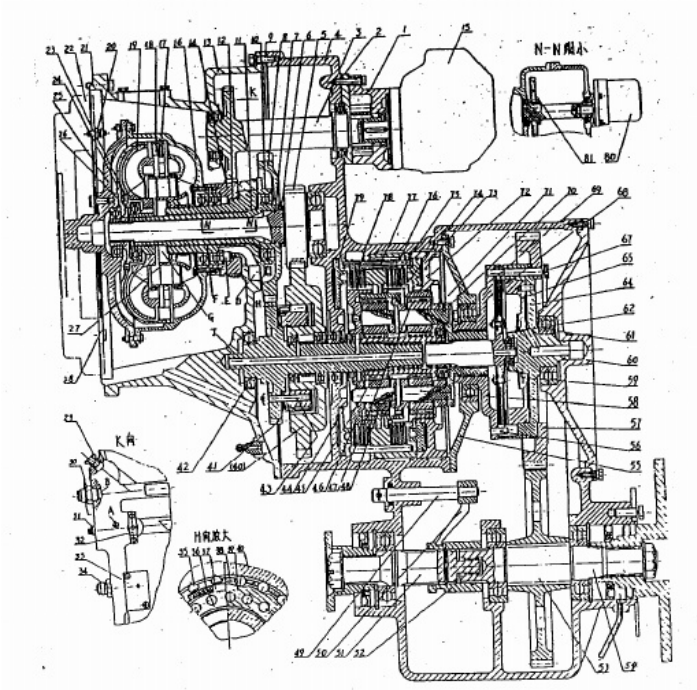

Fig. 3.2-2 Structure figure of torque converter-transmission

1. Transmisstion pump
2. Washer
3. Shaft-gear
4. Box
5. One class gear of output
6. Copper sleeve
7. Seal ring
8. Two class gear of output
9. Seal ring
10. Seal of guide wheel
11. Seal ring
12. Seal ring
13. Case
14. Gear
15. Working pump
16. Pump wheel
17. Plastic pin
18. Ⅰturbine
19. Ⅱturbine
20. Washer
21. Paper washer
41. Input shaft
42. Bearing
43. Bolt
44. Sum wheel
45. (Reverse) Planetary wheel
46. Support of planetary wheel
47. (Ⅰ Gear) Planetary wheel
48. Gear ring of the reverse
49. Push pole of front and rear axles
50. Fork of front and rear axles
51. Output shaft
52. Smooth sleeve
53. Gear of output shaft
54. Output shaft
55. Maddle cap
56. Cylinder pin
57. Output gear of medium shaft
58. Planetary shaft of Ⅰ Gear
59. Plate spring
60. End cap
61. Spherical bearing 311

https://truckmanualshub.com/

22. Flying wheel
23. Turbine cap
24. Vient
25. Cap wheel
26. Turbine hub
27. Guide wheel
28. Plastic plate
29. Gauge joint of oil temperature
30. Pipe joint
31. Screw plug
32. Pressure valve
33. Back pressure valve
34. Pipe joint
35. Roller
36. Spring
37. Pressure cap
38. Separate ring
39. Cam of inner ring
40. Gear of outer ring

62. Shifting shaft
63. Shifting piston
64. Shifting cylidner
65. Shifting piston
67.Bolt
68.Clutch of friction plate
69. Forced plate
70. Connecting plate
71.Wheel support of planetary type
72. Cylinder of I gear
73. I gear piston
74. Gear ring of I gear
75. Clutch of friction plate
76. Spring
77. Spring pin
78. Reverse clutch of friction plate
79. Reverse piston
80. Steering pump
81. Driving gear of steering pump

https://truckmanualshub.com/

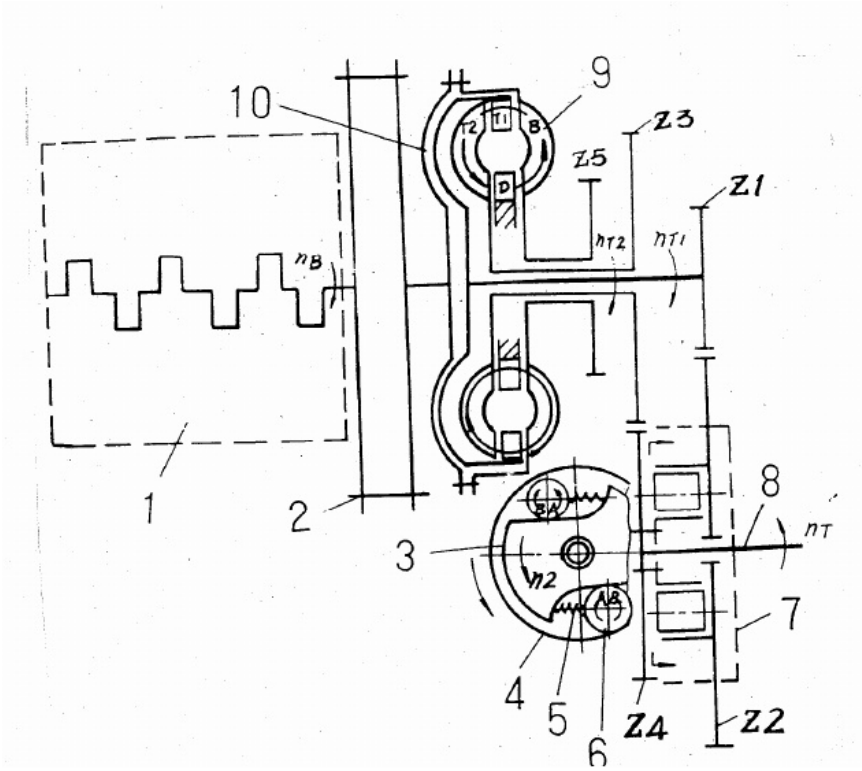

Fig. 3.2-3 Working principle of torque converter

1. Diesel engine 2. Flying wheel 3. Cam of inner ring 4. Gear of outer ring
5. Spring 6. Roller 7. Large clutch of overstep type 8. Output wheel
9. Working cavity 10. Cap wheel

2. Transmittion

(1) Summary of the transmission

ZL50 series transmission is hydraulic shifting of planetary type. It is composed of two forward gears and on reverse gear. It has characteristics of simple structure, compact, rigid, driving of high efficiency, simple and reliable operation, long life of gear and frictional plate.

The transmission is mainly composed of clutch of overstep type, transmission structrue of planetary type, clutch of friction plate, cyliner, piston, transmission pump, operating valve of transmission, filter, shaft and gears. The transmission figure as shown in fig. 3.2-1.

Shifting or change direction of travelling is applied by the transmission. Transmission pump (gear pump) intaking the oil from the tank, through the filter, transmits to operating valve of transmission. By means of operating pole of the

https://truckmanualshub.com/

transmission, according to own require, pressure oil is transmitted to selecting gears to complete hydraulic shifting with operating valve of the transmission.

When the conditions of load is complex, with the fork of smoothing sleeve, front and rear axles are jointed to form the driving of front and rear axles, that is 4 driving wheel.

(2) Structrue principle of the transmission

a. Transmission structure of planetary type, see fig. 3.2-2. Reverse gear abd I gear applys planetary transmission structure. It is mainly provided with wheel support of planetary type, planetary wheel, planetary shaft, ring gear and sunwheel, planetary wheel mounted on planetary wheel support gears with sunwheel and ring gear. Fig.3.2-4 reverse wheel support of planetary type assemblys with planetary wheel.

Ring gear 74 of I gear is splined with driving plates of frictional clutch 75. Driving plates of reverse frictional clutch 78 is splined with wheel support 40 of reverse planetary. When shifting I gear, ring gear 74 of I gear is braked by frictional clutch 75. Because of rotating of sunwheel, on the one hand, planetary wheel 47 rotates around own shaft cernter and on the other hand, ring gear 74 of I gear is braked and does not rotate, so, wheel support 71 of planetary tyoe and planetary wheel 47 rotates around common shaft center. The power is transmitted from wheel support of planetary type.

When shifting reverse gear, wheel support 46 of planetary reverse is braked, the rotation of sunwheel 44 make planetary wheel 45 of reversing only being the rotating but no revolution and by planetray wheel, force ring gear 48 of reversing to ture. The power is transmitted from ring gear of reversing.

In reversing structure of planetary transmission, wheel support 46 of planetray erverse is braked by frictional clutch to transfer the power from ring gear 48 of the reversing. Thus, ring gear 74 of I gear is braked by I gear. Transferring power is planetrary wheel support 71 of I gear and two structrue of planetary transmission transfer the power in direction of the rotation. Fig. 3.2-5 as shown the structure principle of planetary transmission. In this indicate, working with shifting gear of the reversing, frictional clutch of I gear is loosing, the planetary wheel of I gear and ring gear of I gear are idle, no power is transferred. In this time, power of the reversing is transferred only by planetary wheel support 71 of I gear.

b. Driving lines of each shifting of the transmission, see fig.3.2-2.

II Gear (direct gear). When distributing valve pole of operating valve of the transmission is in II gear positon, pressure oil from oeprating valve flows into the box and oil inlet of II gear flows into direct gear. The cylidner 64 pushes the piston 65 of direct gear to move for the left to let frictional plates 68 of direct gear to combine. Forced plate 69 of direct gear, cylidner 64 of direct gear, shaft gear 57 of medium output are jointed. The cylindercial pin 56 is fixed on forced plate 69 of direct gear. The power from medium input shaft 41, through sunwheel 44, transfers to the shaft 62 of direct gear, from the clutch 68 of frictional plates to cylinderical pin 56, forced plates69 of direct gear, bolt 67, output gear 57 of medium shaft, the gear 53 of output shaft into front output 67, output gear 57 of medium shaft, the gear 53 of output shaft into front output shaft to travel at high speed. The summary of driving lines of II gear

https://truckmanualshub.com/

is as follows: input shaft 41→sunwheel 44→shaft 62 of direct gear→ clutch 68 of frictional plate→forced plate 69→bolt 67 → cylidner 64 of direct gear→ output gear 57 of medium shaft→shaft gear 53→front output shaft 54. See the fig.3.2-6.

I gear, when distributing valve pole of operating valve of the transmission is in I gear position, pressure oil from operating valve flows into oil inlet of I gear on the box, I gear cylinder 72,pushing I gear piston 73 to more for the left to combine the clutch 75 of frictional plates of I gear. According to structure principle of planetary transmission of I gear, the power of sunwheel 44 transfers to planetary wheel support of I gear, through connecting plate of direct gear, transfers to forced plate 69 of direct gear, turn direction is the same as II gear. The summary of driving lines is as follows: medium input shaft 41→sunwheel 44→planetary wheel 47→planetary wheel support 71 of I gear→connecting plate 70 of direct gear→forced plate 69 of direct gear→ bolt 67 → cylidner 64 of direct gear→ output gear 57 of medium shaft→shaft gear 53 of the output→front output shaft 54. See the fig.3.2-7.

Reversing gear, when distributing valve pole of operating valve of transmission is in reversing gear position, pressure oil from operating valve of transmission flows into oil inlet of reversing gear of the box, to the cylidner of reversing gear (on the box), pushing the pison 79 of reversing gear to move for the right, so, jointed with the clutch 78 of frictional plates of reversing gear. According to structure principle of planetary transmission of reversing gear, ring gear of reversing gear is combined with planetray wheel support 71 of I gear by gear ring. In this time, the power of ring gear of reversing gear transfers to planetary wheel support of I gear and rotating direction is opposite with I gear to produce reversing travel. The summary of driving lines of reversing gear is as follows: medium input shaft→sunwheel 44→planet 45 →ring gear of reversing gear 48→planetary wheel support 71 of I gear→direct connecting plate 70→ forced plate of direct gear 69→bolt 67 →cylidner 64 of direct gear→output gear 57 of medium shaft→ gear 53 of output shaft→ front output shaft 54. See fig.3.2-8.

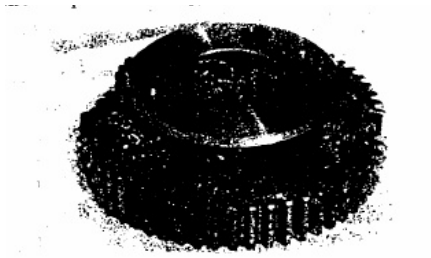

Fig.3.2-4 Planetary wheel support of reversing gear assembly with planetary wheel

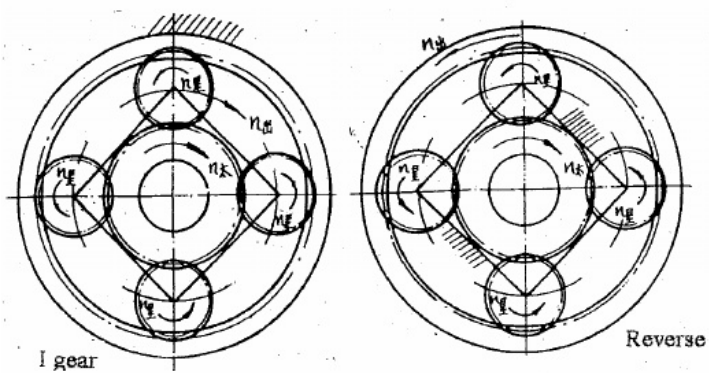

Fig. 3.2-5 Structure principle of planetary transmission

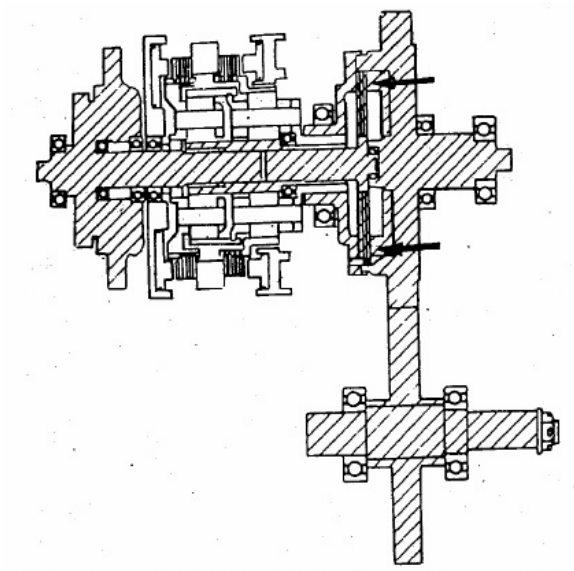

Fig.3.2-6 Driving figure of II gear

https://truckmanualshub.com/

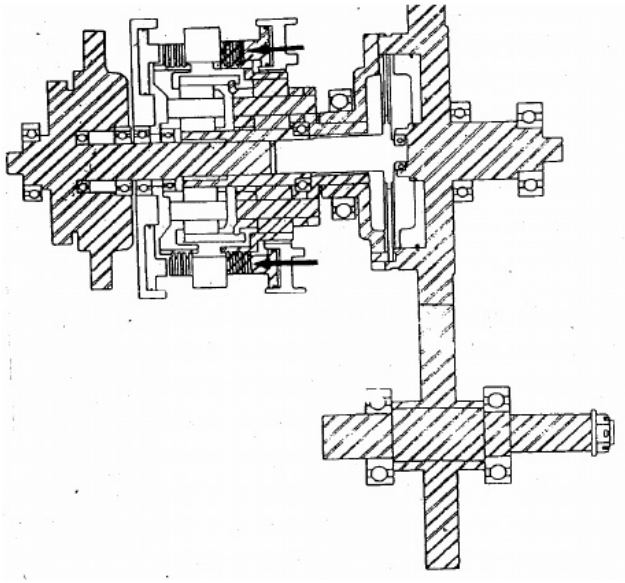

Fig.3.2-7 Driving figure of I gear

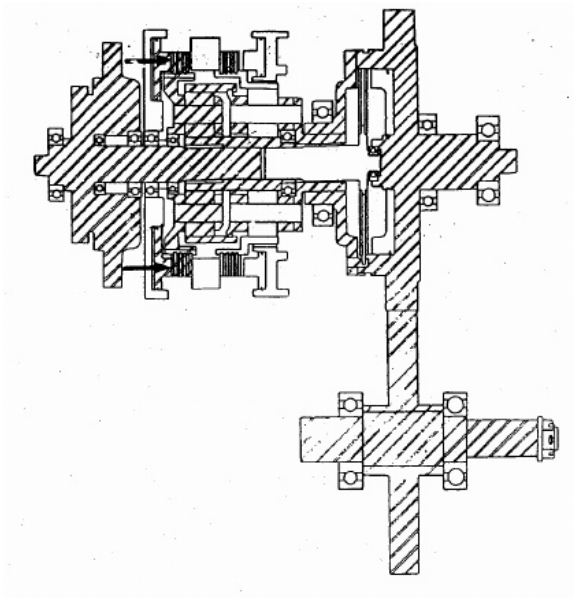

Fig.3.2-8 Driving figure of reversing gear

(3) Operating valve of transmission, see fig.3.2-9. It is mainly composed of

https://truckmanualshub.com/

regulating valve of pressure, cut-off valve, distributing valve, spring accumulator and valve block.

See 3.2-10 valve structure of transmission operating.

The summary of working principle is as follows:

(a) Rgulating valve: The pole 1 of regulating vavle balances with the spring 2 and the spring 2 pushes the smooth block 5 of the accumulator of main spring. The smooth block 5 presses the spring 2 and the spring 3. The cavity C is the oil inlet of operating vavle of transmission. Cavitys A and C interlink through small throttle hole, cavity B interlinks with oil tank and cavity D interlinks torque converter. When starting the engine, the oil of transmission pump intakes regulating valve from cavity C. The oil of the line F intakes the line T through cut-off valve to distributing valve. At the same time, the pressure oil flows the cavity A through small throttle hole of regulating valve pole 1. The cavity A applys the pressure for regulating valve pole 1 to move regulating valve pole for the right. Operating oil line D, a part of oil from transmission pump flows torque converter. The oil in oil line 7, through the line P, intakes cavity E of spring accumulator and pushes smooth block 5 for the left to control the pressure of regulating valve. The ring 4 of regulating pressure is used for preventing oil pressure from over-high. If oil pressure continues to raise in the system and exceed stipulating range, the smooth block 5 of spring accumualtor is limited by the ring of regulating pressure. Thus, the oil pressure of the cavity A raises with following the raising of oil pressure to push regulating valve pole 1 for the right. When opening oil line B, a part of oil returns to oil tank and decreases the pressure to make the pressure of distributing maintain in stipulating range. When regulating vavle pole 1 moves to the left, close oil line B. The regulating vavle takes effect either regulating pressure or safety valve.

(b) Distributing valve: See fig.3.2-9. Distributing valve pole 12 is positioned by the spring 14 and the steel ball 13. When moving distributing valve pole, separately joint I gear, II gear or reversing gear. Cavitys of M, L and J interlink with the cylidners of I gear, II gear and reversing gear. Cavitys of N, K and H interlink with oil tank. Cavitys of U, V and W interlink with oil link T.

See fig. 3.2-11. When shifting I gear, pressure oil of the cavity V intakes oil inlet M of I gear to let the working of the cylinder in I gear. At this time, oil inlet L of reversing gear, J and U, V and W oil cavitys are stopped.

Each gears, oil inlet and returning hole are formed as follows:

Gears	Oil inlet	Returning hole
I	M	N
II	L	K
Reverse	J	H

See fig.3.2-12. When shifting II gear, pressure oil of the cavity U intakes oil inlet L of II gear to let the working of II gear cylinder. At this time, oil inlets M, J of I gear, reversing gear and the pressure cavity are stopped.

See fig.3.2-13. When shifting reversing gear, pressure oil of cavity N intakes oil

https://truckmanualshub.com/

inlet J of reversing gear to let the working of reversing gear. At this time, oil inlet M, L of I gear and reversing gear and pressure cavity are stopped.

(c) See fig.3.2-9. Spring accumulator is sure to joint the clutch of frictional plate quickly and smoothl.

The cavity E of spring accumulator, through throttle hole Y of throttle vavle 15 and mono-way vavle, stipulates with oil line P. When shifting, oil line stipulate4s with new oil cylidner. Apparently, at the beginning, oil pressure of oil line T is low, so, not only the oil of regulating vavle intakes oil cylidner by oil line T, but also pressure oil of the cavity E of spring accumulato, pushing steel ball of mono-way valve, intakes oil cylidner through oil line P and T. Because oil pressure of two oil line intakes oil cylidner at the same time, the oil cylidner changes oil rapidly and oil pressure is raised quickly. Oil pressure of line T is also increased, spring accumulator takes the application of jointing cluctch according to above conditions, so that the clutch is rapidly jointed and causes qucik stroke. Because of the oil current of the cavity E of spring accumulator flows the cylidner, oil pressure is lower. The smooth block 5 moves for the right and regulating vavle pole moves for the right. After the oil is full of oil cylider, oil pressure of the line T returns and through oil line P close mono-way vavle. The oil from throttle hole Y flows into the cavity E of spring accumulator, so, returning oil pressure slowly shifting smoothly and reducing stroke. After jointing the clutch 9of frictional plate, the pressure of oil line 7 balances with the pressure of the cavity E to prepare the energy for next shifting.

(d) See fig. 3.2-9. Cut-off valve is composed of spring 7, vavle pole 8 of the braking, cylinder plug 9, air vavle pole 10, vavle body, spring 16, weather cup ring 17. In common conditions (no braking), the air of hole C intakes left cavity of air vavle and pushes the piston to press the spring 16, the valve pole 10 of braking is in the position of fig.3-2-9. The oil line F is stipulated with oil line 7 and the cavity G of valve bodu is stipulated with oil tank.

When service braking, compressing air from braking system intakes right right cavity and pushes air valve pole 10 for the left. The cylidner plug, valve pole B of braking is moved for the right to press spring, see fig.3.2-14.

In cutting-off oil line F, oil line T is stipulated with the cavity G. The oils of working cylidners T and G returns to oil tank rapidly so that the clutch of frictional plates is separated and the oil flows into empty cavity automatically to help braker braking.

When stopping the braking, right cavity stipulates the air. In the application of the air pressure of left cavity, air valve pole 10 moves for the right with the help of the spring 7, cylinder plug 9 and the valve pole 8 of the braking return to srcinal position. Oil line T is a part from cavity G and joint with T and F. Pressure oil from regulating vavle intakes into working cylinder by the cavitys F and T and auto joint the clutch of frictional plates. The loader returns to common running and all braking course stops.

When pushing the handles of emergency and park braking, air line of hole C is cutted off and air pressure of left cavity disappears. The spring 16 pushes air vavle pole 10 for the left and oil line F is cutted off, the transmission is in idle gear.

3. Hydraulic system of torque of torque converter-transmission

https://truckmanualshub.com/

The heat producing from the working of torque converter-transmission is radiated by circulation of pressure oil. Hydraulic sysem see fig.3.2-15.

Through hose 3 and filter screen 2, transmission pump intakes oil from bottom case of the transmission of pressuer oil. Pressure oil pumped out flows out from box wall. Through hose 5 and filter 6 (Once the resistance of filter core is more than common resistance 0.08~0.12 Mpa, by-way vavle opens) and hose 7, pressure oil intakes operating valve. At this time, pressure oil is separated two ways. One way of pressure oil intakes distributing valve 10 of operating transmission with regulating valve 8 (1.1~1.5MPa) and cut-off valve 9 of clutch. According to different positions of valve pole of transmission, separately through oil line D,B and A pressure oil intakes the cylinders of I gear, II gear and reversing gear making different working of shifting. Another way of presure oil, through oil line 17 of box wall intakes torque converter 19. the hose 20 and 22 is the intaking and returning pipes of radiator. After cooling, low pressure oil returns the hole J (Fig.3.2-2) of transmission case 13 to lubricating large clutch of overstep type and all planetary rows of transmission and return oil bottom case. Pressure valve 18 makes sure that oil pressure of the inlet of torque converter is 0.30~0.45 MPa, oil pressure of the inlet is 0.20~0.30Mpa. Back pressure valve 23 makes sure that oil pressure lubricating is 0.1~0.2Mpa. If oil pressure exceeds this numeric value, opens to leak oil pressure.

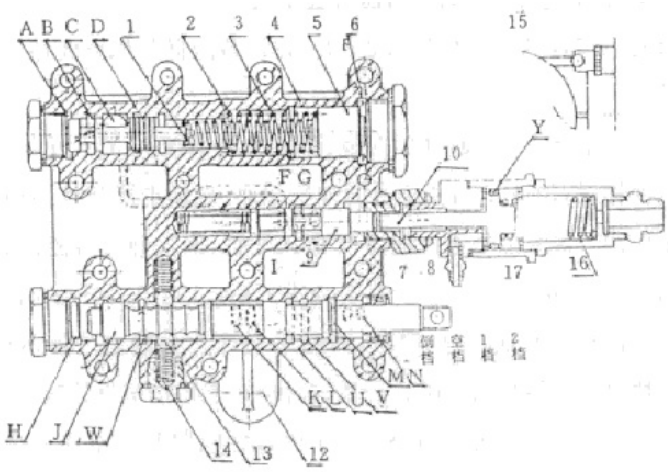

Fig. 3.2-9 Operating valve of transmission

1. Regulating valve poe	2.Spring	3. Spring	4. Regulating ring
5. Smooth block	6. Washer	7. Spring	8. Valve pole of braking
9. Cylinder plug	10.Air valve pole		11. Valve body
12.Distributing valve pole	13.Steel ball		14. Spring
15.Mono-way throttle	16. Spring		17.Cup ring

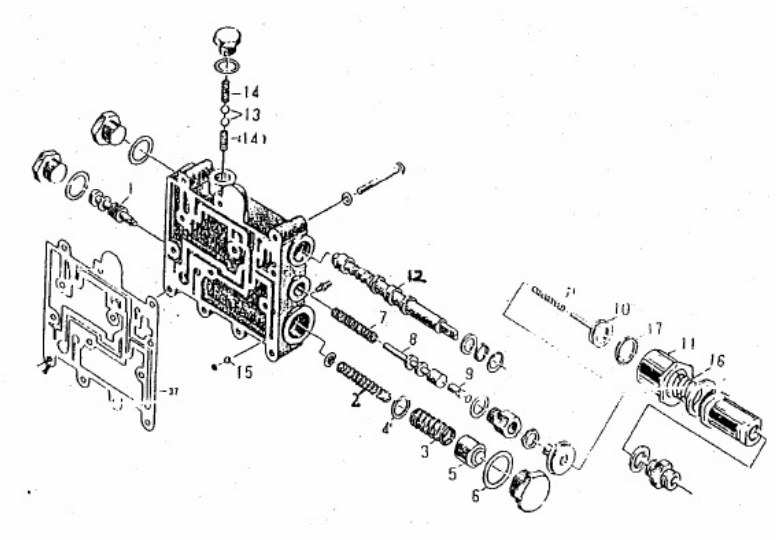

Fig.3.2-10 Valve structure of operating transmission

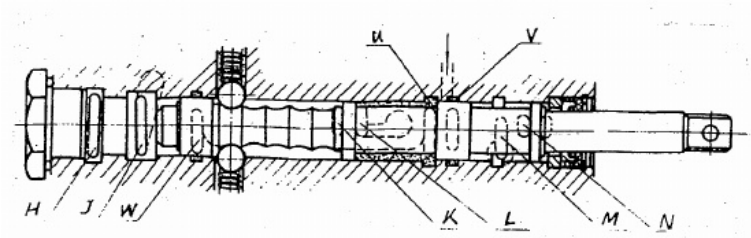

Fig. 3.2-11 Oil valve of I gear

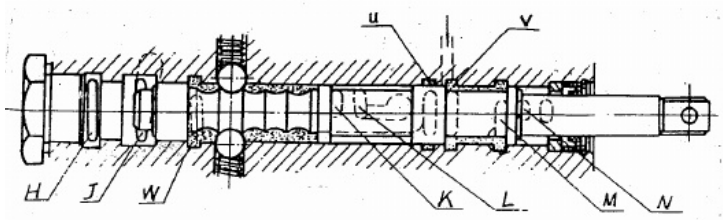

Fig. 3.2-12 Oil line of II gear

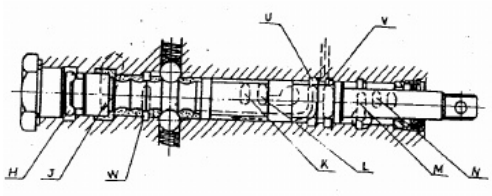

Fig.3.2-13 Oil line of reversing gear

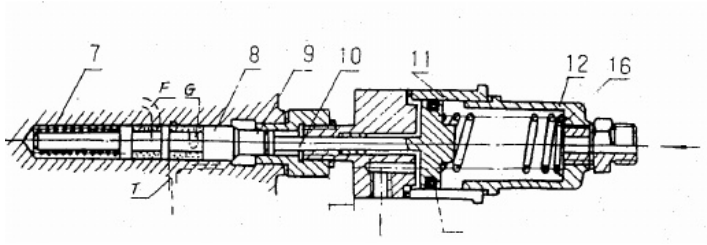

Fig.3.2-14 Working condition of cutting-off valve

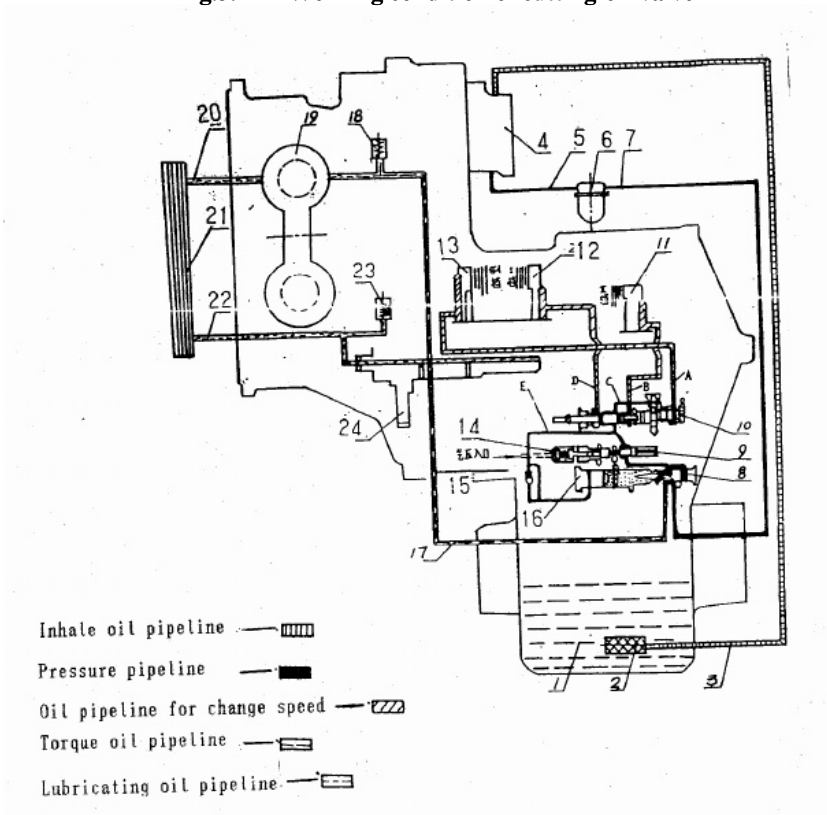

Fig. 3.2-15 Torque converter-hydraulic system of transmission

https://truckmanualshub.com/

1. Oil bottom casing 2. Filter screen 3.Hose 4. Change speed pump 5. Hose
6. Oil filter 7. Hose 8. Valve of pressure regulator 9. Cut-off valve of clutch
10. Distributing valve for change speed regulation 11. Oil cylinder for II gear
12. Oil cylinder for I gear 13. Oil cylidner for reverse gear 14. Pneumatic valve
15.One-way throttle vavle 16. Sliding valve 17. Buried pipeline of box wall
18.Pressure valve 19. Torque covnerter 20.Hose 21. Radiator 22. Hose
23. Counterbalance vavle 24. Big overrunning clutch

Ⅱ. Operating requirement and maintenance

1. Oil for transmission, oil of transmission one side is for actuating medium of hydraulic system of torque converter-transmission, the other side is for cooling and lubricating of spare parts in the torque converter-transmission.

Quantity and shop sign of oil for transmission must be according to stipulations.

When the transmission is shifting oil, open the filter pipe cap and from the filling pipe enters into the tanki. After the first filling oil, the engine must be started, after the engine has run for five minutes, from oil level switch of side of filter pipe, check height of oil surface. It must be checked oil level and according to time of stipulation in the operation, so that keeping oil quantity.

Checking of cooling plane, before the engine is started, check plane of cooling oil, this purpose is enough oil when starting. It is particularly important for loader of stop operating long-time. Before the engine is started, open refuelling switch, the engine can start if the oil florws. The engine must be fulled of oil if the oil does not flow, it can start at this moment.

The transmission changes oil according to the allotted time, it must change oil in advance if the filth enters into oil liquid or the oil liquid has gone bad. To indicate torque converter-transmission abnormal wear if the metal clastic enters into oil liquid, the torque converter-transmision must be thorough disassembled, it is mounted again after cleaning, then to change for the clean and new oil.

The transmission changes oil, you’s d better change oil after last working of changing oil time, it is the best change immediately. Because through the working of a few hours, the housing is stired in the torque converter-transmission, the filter, metal clastic and sediment are suspended in the oil liquid, if change oil in this time, it is cleaned easily.

2. Control valve for transmision. Degree of clean of oil liquid have influence on performance of control valve of transmission, therefore, the oil liquid must be kept clean.

When the control vavle for transmission is disassembled, following matters needing attention:

(1) To attend not to injure part when the part is disassembled, especially sealing parts, it must be changed if has been injured.

(2) When the decompress rod 1 and spring 2 are disassembled, (See fig.3.2-9) the spring seat is also fetched, when it is mounted again, carefully mount.

(3) When the vavle of regulating pressure leaves the factory, it is already

https://truckmanualshub.com/

regulated, pay attention not to damage its balance performance, you must regulate the pressure carefully again if the part has been changed. The method of regulating pressure: the washer 4 of regulating pressure is changed thick if the pressure is too high; the washer 6 is changed thin if the pressure is too low, it will regulate untill stipulative limits.

3. Friction plate for clutch. Working of friction plate is dependent on produced friction in interaction of driving plate and driven plate. Therefore, its working surface must be wore. There are many wear factors to influence friction plate. Follroing matters are needing attention in use.

(1) Degree of clean of oil liquid, oil liquid includes metal clastic especially, wear aggravation. Therefore, degree of clean of oil liquid must be kept in the transmission.

(2) Quantity of oil influences wear of friction plae for clutch too. If the density over thick and the viscosity over big, so that separation of friction plate brings about different and brings about wear. Oil liquid is overthin so that lubricating performance is influenced too, the friction plate probably is burnt. Therefore, oil of transmission must be used oil liquid of prescriptive sign.

(3) Variability pressure of control vavle for transmission must be made in the stipulative limits. Variability pressure is over low so that the friction plate for clutch is slipped and violent worn.

Pressure oil of oil tank is returned when changing gears. Thi time, separation of friction plate completely is dependent on spring force, complete degreee of separation depends recovery force of the spring, spring force does not complete and bring about wear. Therefore, recovery force of spring must be checked, yield and deformed spring must be changed.

Driving plate of friction plate for clutch is metallurgy lining of reinforcing and base copper powder, the driven plate is steel plate.

Section 3: Driving shaft

Driving shaft is used for transmission of transmission to driving axle.

There are three driving shafts in ZL50 series loader. The driving shaft of rear axle connects rear output shaft of transmission and rear driving alxe. The center driving shaft connects front output shaft of transmission and middle suppprt. The driving shaft of forward axle connects middle support and front driving axle, see fig. 3-1.

Because the driving shaft has sliding fork and shaft pipe assembly are connected with spline, so that is can reliable transfer power when changing relative plates of transmission and driving axle.

When the loader is starting and working, driving shaft bears much torque and shock load and continuous shake. Driving shaft is under the loader, conditions of operation are very abominable, therefore the driving shaft must be carefully maintained so that the driving shaft can work normally. Following matters needing attention in use:

1. It often makes shaft sliding in the sliding fork when the spline shaft is working, the other, the cross shaft is driving part of high-speed and high-load, therefore it must

https://truckmanualshub.com/

be lubricated according to time of stipulation. The oil seal of spline shaft can prevent flowing lubricating grease of spline shaft, besides prevent moisture and dust getting into spline, it must be kept complete.

2. In order to remove driving not even for main driver, to prevent driving shaft shake and shoke inner gear of driving axle. Cardan joint of driving shaft at both ends is situated in same plane, it has been made inertia balance and printed arrow when it leaves the factory. Pay attention to not to destroy its balance when it wash and reapir, or else it must be made inertia blance again.

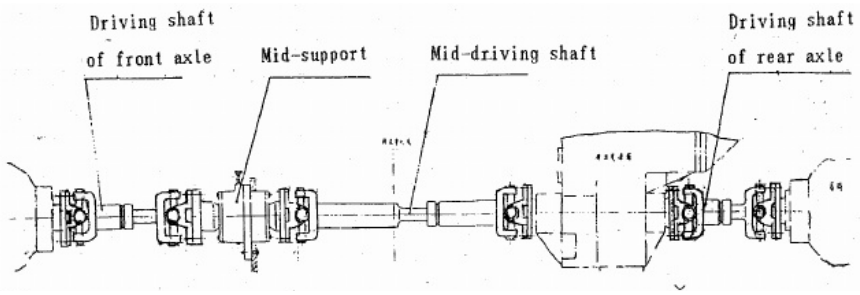

Fig. 3.3-1 Driving shaft system

Section 4: Driving axle

Ⅰ. General

Four wheels driving I adopted in the loader. Therefore, front axle and rear axle are all driving axles, and same structures. The difference: there are four pliers trys in the front axle, there are two spliers strys in the rear axle.

Ⅱ.Structure feature and working principle:

1. **Structure feature**

Retarding device of main retarder is GLEASON tooth driving of circular bevel gear, it possessive feature is big inout torque and high driving efficiency and smooth working,etc. Structrue of driving semi-shaft is full floating, that is, driving semi-shaft uses connect of direct link up in connect retarder device. Its merits, full floating surmount influence of axle case on semi-shaft driving in working deformation, driving semi-shaft can free rectilinear moving up and down, but not influence flexibility turning of semi-shaft as a consequence of deformation of axle case. To use retarding structrue of four planetary gears in retarding structrue of wheel rim, round gear of driving semi-shaft and four epicyclic gears achieve great progress in the movement rigid of the whole, and the output speed more smooth.

2. Operation principle

From the main engine input pitching moment through main retader make retarding and difference-speed, from the semi-shaft into retarding system of wheel edge make driving, its driving line: main engine inoput pitching moment→main retarder of axle case→difference-speed→into semi-shaft→wheel rim retarding of axle case →driving axle case→wheel, the driving line is two levels retarding.

https://truckmanualshub.com/

3. Brake structure and operation principle

To use pliers try braking, its merits: quick braking speed and large braking torque,etc.

a. Structure: the brake be made up of grip and piston,etc, the brake is fixed on top of the support of driving axle case, the piston motivates friction plate by the action of hydraulic when braking, grip braking tray of wheel hub so as to produce braking.

b. Operation principle: there is a input glib in the grip pass hydraulic cylidner into hydraulic drive piston of grip, the piston forward mvoe by the action of hydraulic, to motivate braking friction plate achieve braking.

The oepration line: Hydraulic of hydraulic→piston moving→motivate friction plate→grip braking tray.

4. Structure and driving system figure:

a. Structure system figure see fig.3.4-1 driving axle;

b. Driving system figure see fig.3.4-2.

5. Wheel

Include rim and tyre.

a. Rim: 19.50/2.5～25 stardard rim；

b. Tyre: 23.50～25 PR16G standard tyre.

Ⅲ. Maintenance and service

1. Technical maintenance every 50 hours.

1-1. To check main retarder case and end cover of wheel whetehr too heat early. If it heat too earl, check ouil level whether accord with the demands.

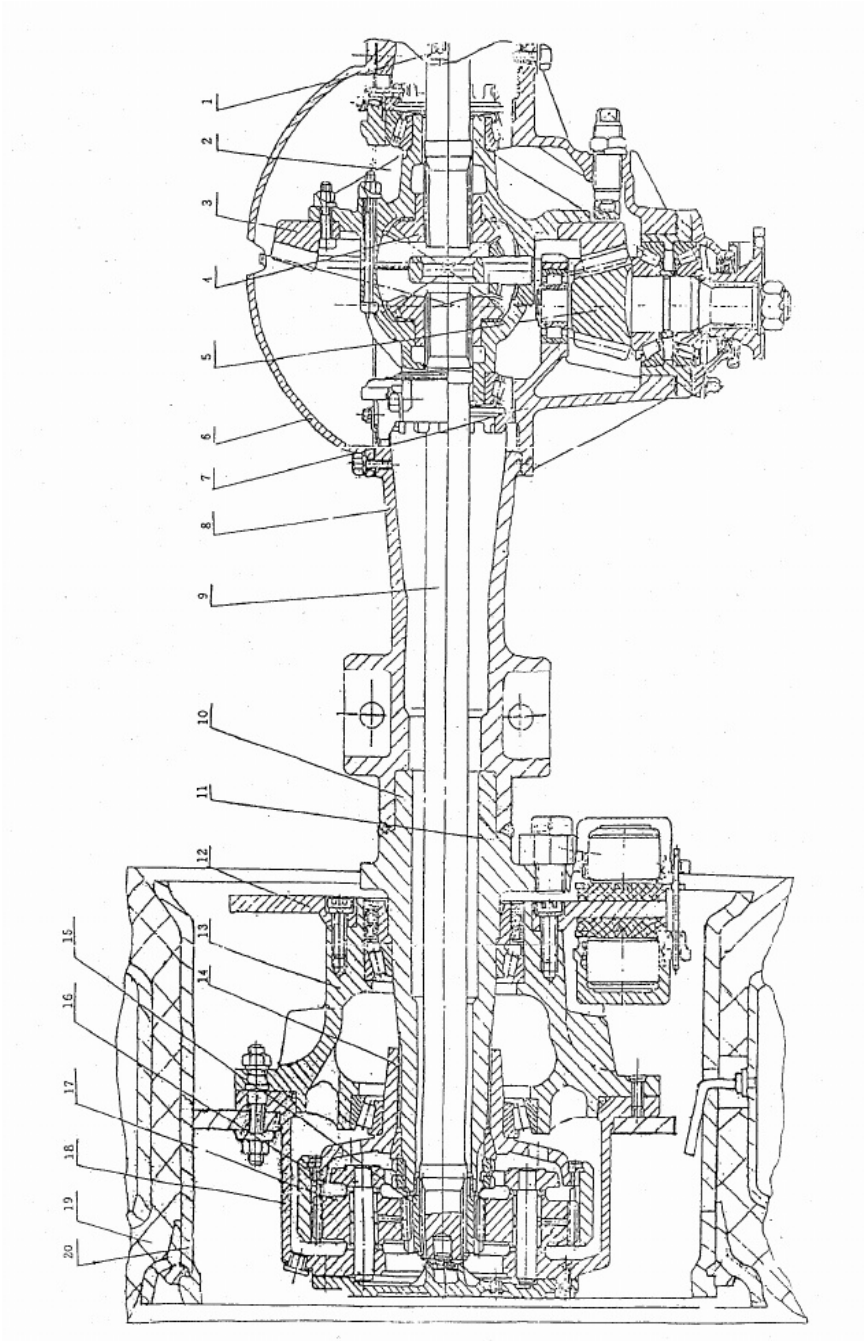

Fig. 3.4-1 Driving axle

https://truckmanualshub.com/

1. Gas mouth 2. Differential case 3. Driven spiral bevel gear
4. Semi-shaft gear 5. Driving spiral bevel gear 6. Rear cover
7. Main retarder case 8.Axle case 9. Semi-shaft 10.Shaft pipe
11. Brakuing pliers 12. Braking tray 13. Wheel hub
14. Gear circle support 15. Sun wheel 16. Gear circle
17. Epicyclic gear 18. Epicyclic frame 19. Tyre 20. Rim

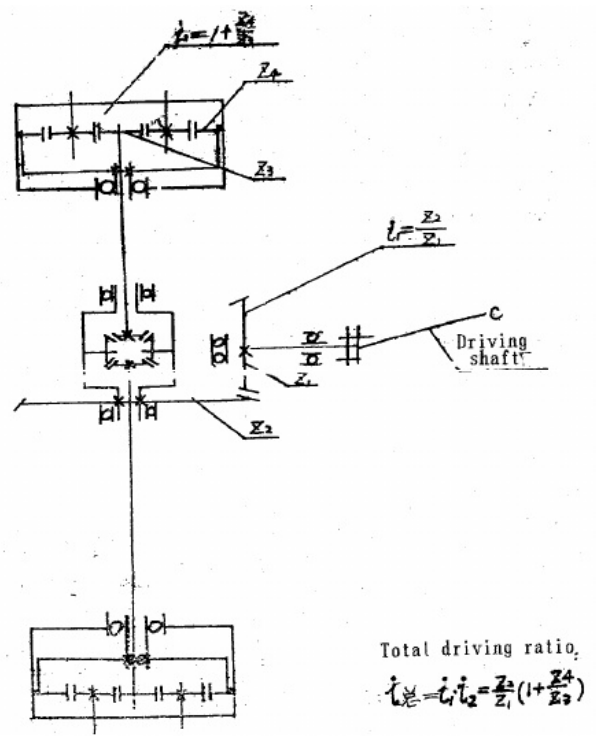

Fig. 3.4-2 Chart of driving system

1-2 To check not hard up situation of every tight part, to discover not hard up situation must be tighted in time.

1-3 To check noise whetehr no normal in operation, if discover no normal running must be stopped, it operates again after eliminating faults.

2. Technical maintenance every month

2-1 To check wear situation of brake disc, whetehr exist damaging wear.

2-2 To check unblocked situation of bake oil pipeline, to check braking of brake whether sensitive.

2-3 To check wear situation of brake friction platem it must be changed when the wear is not according requirements.

3. Technical maintenance every quarter

https://truckmanualshub.com/

3-1 To check oil level of axle case whether according requirements, it must be refuelled when oil level lower.

3-2 To check tight nut of rim whether it is loose.

4. Checking and adjusting of driving axle in use

4-1 It must be run quickly and light and not blocking phenomenon when the groverning system is checked, the teeth clearance is 0.1~02mm when the gear engaged.

4-2 To check spiral bevel gear and its clearance 0.2~0.3mm, its contact trace more than 60% along length of gear and height of gear, to change clearance and contact area, use adjusting plate of bearing.

4-3 It must be had beforehand tight force when checking and mounting taper roller, it must be had 1~3.5N·m torque when the bevel gear turns round, the locking nut of wheel rim bearing shaft is tightened untill the wheel case reluctantly run for reducer of wheel rim, then the nut is returned 1、10 ring.

Periodic table of lubricatign and refuelling

Position	Choice of oil
Wheel rim reducer of main driver	No.18 gear oil of double curve (Accord SY1102-77)

Section 5: Braking system

Ⅰ. Summary

The braking system is used for reducing and stopping on traelling and stopping on the level ground or slope for a long time.

There are two braking systems in the loader:

1. Braking system of traveling: it is used for regular speed controlling in traveling and stopping. Braking system of traveling of this loader uses air-hydraulic braking for four wheel discs. It brakes smoothly and safety reliable and simple structure and convenient maintenance and advantages of restoring property with water.

2. Braking system of emergency and parking: it is used for brake after parking or emergency braking when the traveling braking lose efficacy. Mechanically operating and form of shoe brake is used for the system, simple structure and reliable using and convenient maintenance.

Ⅱ. Braking system of traveling

https://truckmanualshub.com/

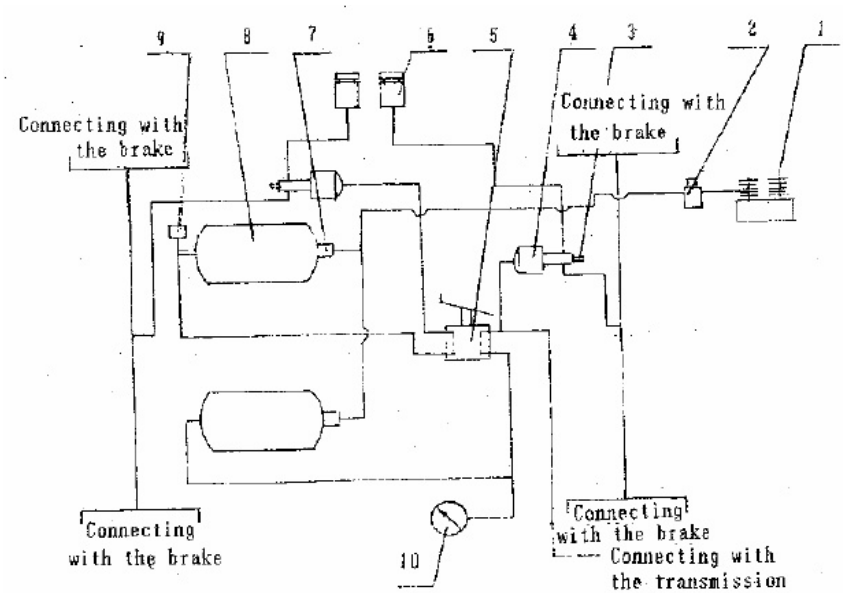

Fig. 3.5-1 Traveling brake system

1. Air compressor 2. Adjusting pressure valve of automatic drainage 3. Switch of braking light
4. Booster 5. Gas braking valve of double pipeline 6. Supplemental oil tank
7. One-way valve 8. Gas-holder 9. Safety valve 10. Barometer

(Ⅰ) Structure and principle (Fig. 3.5 -1)

The system is air-hydraulic and double pipeline system of four wheels braking. The system is made from air compressor 1, adjusting pressure valve 2 of automaticdraining, booster 4, air braking valve 5 of double pipeline, supplemental oil tank 6, single valve 7, gas-holder 8, safety valve 9, etc.

The engine drives air compressor 1, compressed air passes adjusting pressure valve 2 of automatic draining; air pressure is 0.6-0.7Mpa. The air from two air tanks takes lower cavity of braking valve of double pipeline, the air from the top outlet cavity of braking valve flows when the foot braking valve 5 is stepped on, separately enters booster of controlling brake of front and rear axle and drive piston of disc brake, friction plates and press braking discs (pressure 12MPa) to brake wheels. To loosen braking padel, compressed air through braking valve 5 in the booster 4 is exhausted the braking is relieved. To step on foot braking valve in the operation, the output of braking valve takes one way of air to enyer input gear-shift control valve of transmission, and cuts off the power so that control pressure of the transmission is zero. Thus, the transmission lighten gear-shift shocking in changing shifting.

(Ⅱ) Main parts

1. Air compressor

Its structure see fig. 3.5-2. It is piston type of double cylinders and diesel engine

https://truckmanualshub.com/

attachment, its lubricating oil is supplied by engine, and air cooling is used. Its inhale pipeline connects inlet pipeline of engine. The oil holes from the engine limit the oil to bottom case of air compressor, and keep definitely height oil level, the surplus oil returns to engine by oil pipeline.

Air compressor continuous to work for tens minutes without using air compressor, when the pressure of foot braking system is stable, this illustrates compressed are working normally. If air pressure suddenly or regularlyfluctuates, check exhause valve of air compressor and carry on abrasion and keep its sealing.

Air compressor can not permeate large oil into compressed air. If it works 24 hours and when predrainage receiver gathers large oil, check vent oil reason of air compressor.

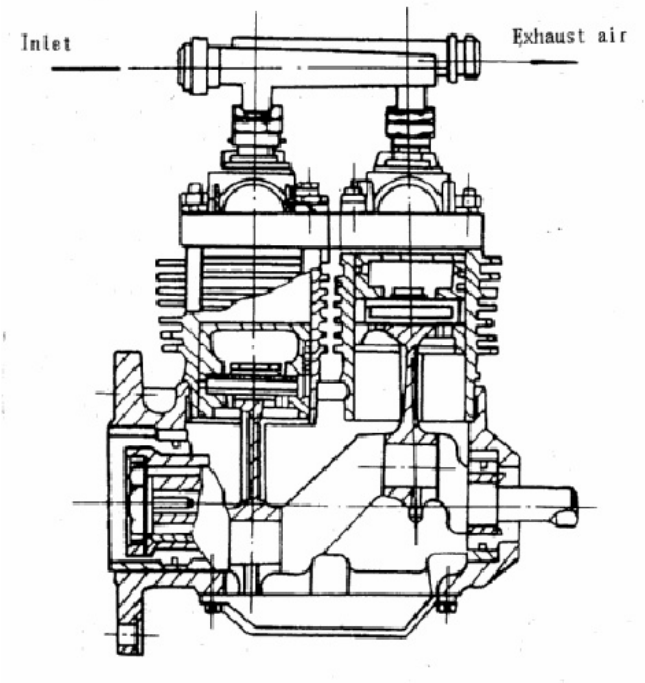

Fig. 3.5-2

2. Air braking valve of double pipelines (Fig. 3.5-3)

Operation principle: you press push rod 5 and equilibrium rod 6 when braking, equilibrium piston 7 of two cavities is respectively driven down and close exhause valve 8, and open inlet valve 9 into V cavity. The outlets of two cavitys respectively get into front and rear booster. The pressure of V cavity acted on the underneath of equilibrium piston 7, it is used for equilibrium push rod act on force of equilibrium spring a. Inlet and exhaust valve close meantime when it achieves equilibrium to enable the pressure of outlet and push rod force adaptation each other to change push rod force and the outlet can get new equilibrium pressure. That is: Output pressure P,

https://truckmanualshub.com/

changes with push rod force F.

When the braking pipeline of any cavity in two cavities crack and leak, owing to two cavities structure is independent each other, so the other cavity can yet keep normal braking function.

Operation process is opposite from the braking when relaxing braking, the pressure of two outlets exhausts into air through exhausting valve 8 and outlet D.

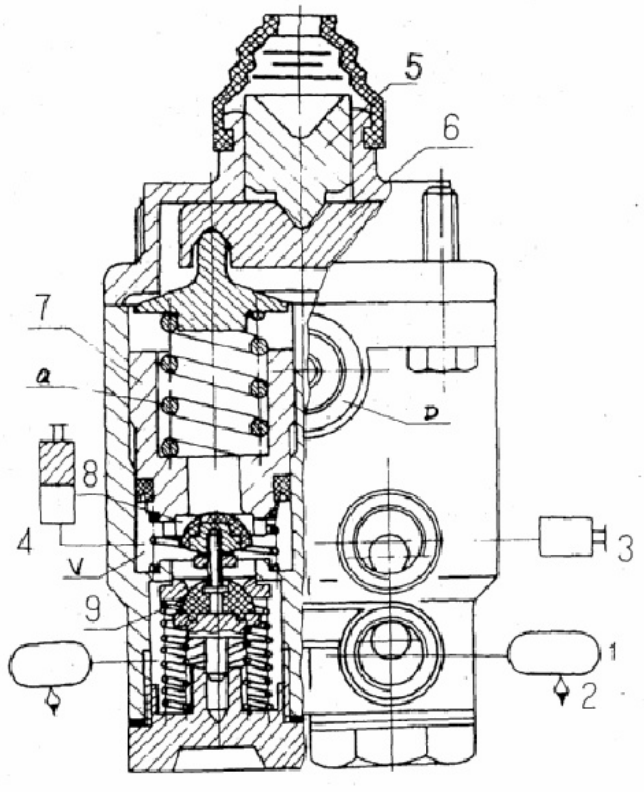

Fig. 3.5-3 Air braking valve of double pipelines

3. Booster

See fig. 3.5-4, this is booster of air-hydraulic oil. It is divided into two parts of cylinder and master hydraulic pump.

Compressed air pushes piston 2 and overcomes resisting force of spring 5 when braking. The piston 13 of master hydraulic pump is moved for the right by push rod. High pressure producing from braking liquid in master pump open small valve of return oil valve 16 into piston cylinder of the brake. Oil pressure of the outlet is 10MPa when the pressure is 0.63-0.70MPa.

To loose braking padel and compressed air returns from connector 1, piston 2 and 13 are restored by the action of spring, the braking liquid of the brake through oil pipe opens oil valve and returns into master pump. The piston of master pump is

https://truckmanualshub.com/

restored. If oil liquid is over. It can flow into oil storage cavity through compensating hole B. the braking padel loose too quickly so that the braking liquid is detained can not return with piston in time and the low pressure is formed in master pump cylinder. The braking liquid of oil storage cavity, through return oil hole A, six small holes of piston end and cup ring compensates to master pump. The braking effect increase at once when the braking padel is treaded again.

Small valve is installed on the return oil valve 16 and hydraulic pipeline keeps regular pressure when it is closed to prevent air invade the system from oil pipe joint or braking cup ring etc.

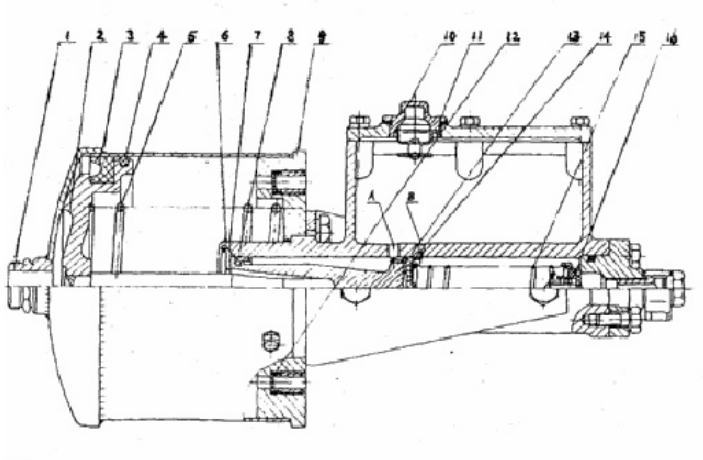

Fig. 3.5-4 Booster

1. Connector 2. Piston 3. Y-sealing ring 4. Felt sealing ring 5. Spring 6. Lock ring 7. Thrust washer 8. Leather ring 9. End cover 10. Filling plug 11. Liner 12. Filter screen 13. Piston 14. Cup leather 15. Spring 16. Return oil valve A—return oil hole B—compensating hole

Ⅲ. Stopping and emergency braking system

1. Hand brake control equipment see fig. 3.5-5

Operation principle: to draw braking lever order 1 and bring stopping brake to effect, when the lever is loosed and the braking is relieved, the lever is gently drawn, then to push down button order 2 again and the lever is completely pushed down.

https://truckmanualshub.com/

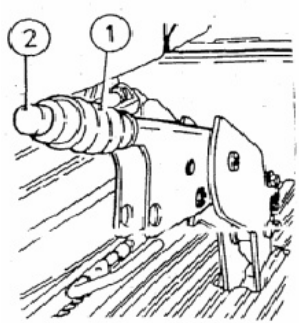

Fig. 3.5-4

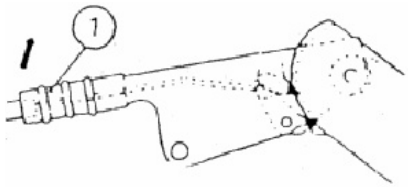

Fig. 3.5-6

2. Adjusting of stopping brake: Note: Adjusting of stopping braking, the lever is drawn up to the fourth gullet, see fig. 3.5-6, all braking force instantly achieve. The sixth gullet of ratchet of the controlling lever if it uses normal pulling force, then the brake must be adjusted again.

Hand brake is automatic addition force and inner expansion shoe, see fig. 3.5-7. It is installed in front end of the transmission output wheel.

Common trouble: the crackle of friction plate 1 and brake drum, the face wear or scar and rut. Pin hole of clop bolt 7 wears and matching loose etc. it must be changed when wear of the friction plate is away from rivet head 0.5mm or seriously wear and oil pollutes etc. Scar and rut depth of the brake drum exceed 0.5mm or seriously wear and out of round, it must be repaired or changed in the brake drum. The crackle and deformation are not allowed in. After it is repaired, ellipticity of inner diameter not exceed 0.25mm and the working surface oppositing the centre line of transmission output-shaft does not exceed 0.10mm and it must be balanced. (80g/cm)

It must be changed and repaired when matching clearance of every connect pin exceeds 0.20mm, it is generally controlled in 0.03-0.12mm.

After it is assembled, the clearance of between the braking shoe and the brake drum can be adjusted by screw driver to turn adjustable rod 2, its value must be 0.15-1.30mm. After it is completely assembled, pull pull-rod. The contact rate reach 85% and above. When the shoe completely presses the brake drum, it can not start or stopping on the slop of less than 15% when it is completely braked. The friction plate can not contact with the brake drum after releasing brake is relieved brake.

https://truckmanualshub.com/

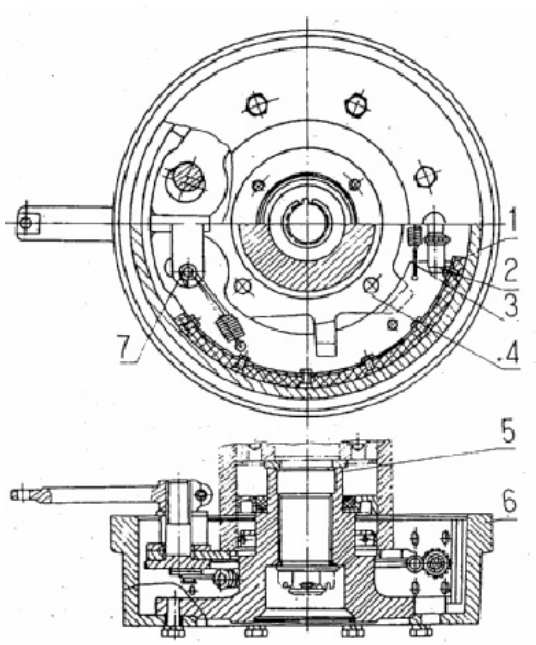

Fig. 3.5-7 Brake

1. Brake shoe (friction plate) 2. Adjustable rod 3. Spring 4. Stand plate 5. Flange 6. Brake drum 7. Clip bolt

Section 6: Hydraulic steering system

The system apples steering-gear with enlarged flow rate by prior relief valve, hydraulic steering system and working device system are combined together and hydraulic system. Protect the engine, lengthen service life of the machine. Hydraulic steering system is composite of steering pump, prior relief valve, steering-gear, FKB valve block, steering cylinders. Working pressure is 14MPa (Fig. 3.7-1).

Steering-gear is the one of enlarged flow and sensitive to the load. Compared with common steering-gear, the steering-gear with enlarged flow has the features of small volume, light weight, micro-adjusting, convenient operation. When turning steering-wheel, load entrance of the steering-gear is connected to pressure single and push valve core of priority valve to move and open the pipeline for supplying steering-gear to supply pressure oil to realize steering.

By power steering, pressured oil, passing valve core and the bushing, enters into rotator pair to push the rotator to turn followed by steering wheel and the oil will be pressed into left and right cavities of steering cylinder to make piston rod push front wheel for steering. Oil in another cavity, passing steering gear, returns into oil tank.

When the steering-gear controls steering speeding, flow rate of steering gear is synchronous change with the speed of steering wheel. That is, if you turn steering wheel slowly, flow rate of steering gear is decreased and front wheel will steer slowly.

https://truckmanualshub.com/

When raising speed of steering gear, flow rate of steering gear is increased to make the wheel steer quickly.

When prior relief valve lets the loader steer, oil from steering pump first supplies steering-gear to steering cylinder and the rest flow rate supplies hydraulic operation system.

According to requirement of steering system, FKB valve block is matched and the valve block is consisted of one-way valve and overload valve with double directions.

Overload valve: It is set between left and right cavities of steering cylinder and returning oil inlet to limit the top value of left and right cavities and prevent steering wheel shocked by outer force from damaging in parts.

One way valve: It is set in oil inlet of steering-gear to prevent hydraulic oil reversed and steering gear itself deflected to cause not to work properly in steering.

Section 7: Hydraulic operation system

Hydraulic operation system is consisted of operation pump, multi-way valve, arm cylinder, bucket cylinder, oil filter (Fig. 3.7-1). Max. working pressure is 18MPa. Oil of operation system is supported by operation pump and rest flow rate of steering system (a lot of flow rate in no steering). When raising operation of the loader (the pressure is less than 15MPa), operation pump and steering pump supply oil for arm cylinder at the same time to lift moving arm at high speed. When working of the bucket and if the pressure is move than 15MPa, relief valve in prior valve makes rest oil in steering system auto-unload in low pressure. Only operation pump supplies oil for multi-way valve to realize operation and decrease energy consumption.

Ⅰ. Check and adjust the system

Generally, check in working site. Hydraulic operation system is checked by lifting or lowering arm and inclining time of the bucket, releasing pressure in multi-way valve and overload compensating valve and falling moving arm.

(Ⅰ) Checking time

The bucket is filled under rated load and lower in lowest position and let the engine and hydraulic oil work in common temperature. Pedal oil valve enough to make the engine run at rated speed and operate valve lever of moving arm of multi-way valve to raise moving arm to the highest position. The request time should be less than 7.5s.

The engine is run idle speed and operate valve lever of multi-way valve to lowering position to make the empty bucket lower from the highest position to the ground. The request time should be less than 3.96s.

As the same condition as raising the bucket, the bucket is truned from the largest position inclined backward to the largest position inclined forward. The request time should be less than 1.5s.

(Ⅱ) Check operation pressure

1. Check the largest working pressure in the system

Unscrew screw plug on multi-way valve and mount pressure gauge with 25MPa.

https://truckmanualshub.com/

In common condition for diesel engine and hydraulic oil, the engine is run in rated speed. At the moment, operate sliding valve of moving arm of multi-way valve to make moving arm raise to the highest position and show the highest pressure of pressure gauge. The reading should be 18MPa. If anything wrong, you should adjust safety valve of multi-way valve.

2. Check and adjust pressure of overload compensating valve.

a. Check and adjust pressure of safety valve in big cavity of the cylinder of dumping bucket

One end of hose joint for measuring pressure is mounted on pressure gauge (25MPa) and another end is connected on micro-measuring joint of big cavity of the dumping cylinder. Then moving arm is raised to the highest position. In common working condition for diesel engine and hydraulic oil, the engine is run in idle speed and sliding valve of multi-way valve is operated to turn the bucket to max. position inclined forward and return to medium position. Then, sliding valve moving arm of multi-way valve is moved to low position and moving arms are lowered. At this time, the max. pressure of pressure gauge should be 18MPa. If the pressure is wrong, the adjustment is done.

b. Adjusting the pressure of safety valve for the small cavity of bucket cylinder

Mount on connector of hose fro measuring pressure on the pressure gauge which is 25MPa, another one is connected with a microprobe on the tube of small cavity for bucket cylinder. And then, lift the moving arm to the level and the diesel engine is in idle when the diesel engine and hydraulic oil is in commonly operating temperature. Operate the slide valve of multi-ways valve in order to make the bucket turn to the max. front inclined position, lift the moving arm. At this moment, the max. pressure of the gauge is at 10MPa. If not, adjust it.

c. Checking the fallen rate of moving arm

Load the bucket with rated load while the diesel engine and hydraulic oil is in normal operating temperature, lift the moving arm to the highest position. And then, the engine will go out and the multi-ways valve will be in the closed position. Meanwhile, meature the distance of moving the piston rod of arm cylinder. If the hydraulic unit is in condition, the fall tate should be less than 70mm/15min.

https://truckmanualshub.com/

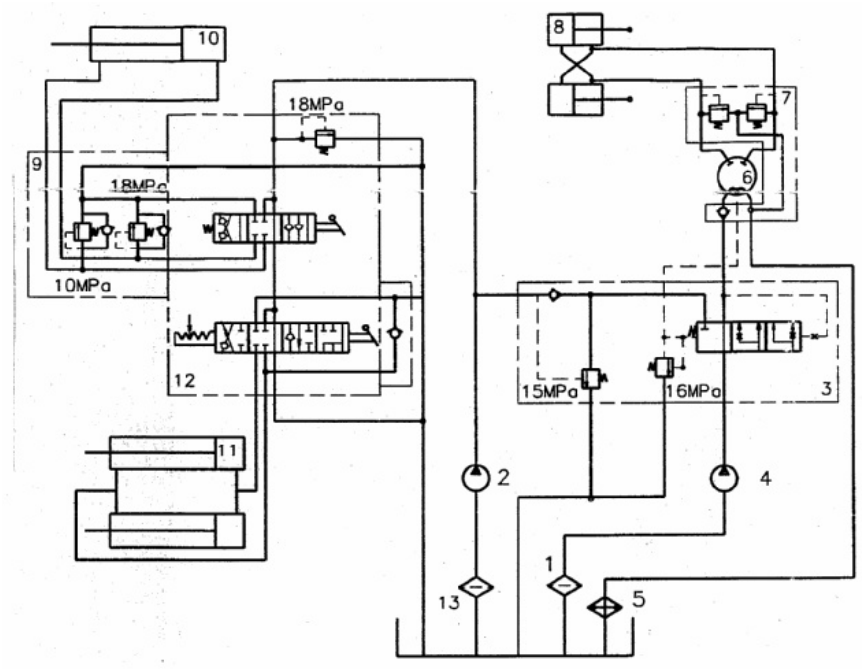

Fig. 3.7-1 Figure of hydraulic system

1 & 13. Oil filter 2. Operation pump 3. Prior load valve 4. Steering pump
5. Cooler 6. steering gear 7. Valve block 8. Steering cylinder
9. Overload compensating valve 10. Bucket cylinder 11. Cylinder of moving arm
12. Multi-way valve

Ⅱ. Multi-ways valve (see Fig. 3.7-2)

The multi-ways valve is a complete duplex slide valve style and consists of three parts of reversing valve of bucket, reversing valve of moving arm and safety valve. It applied a serial to parallel oil line.

https://truckmanualshub.com/

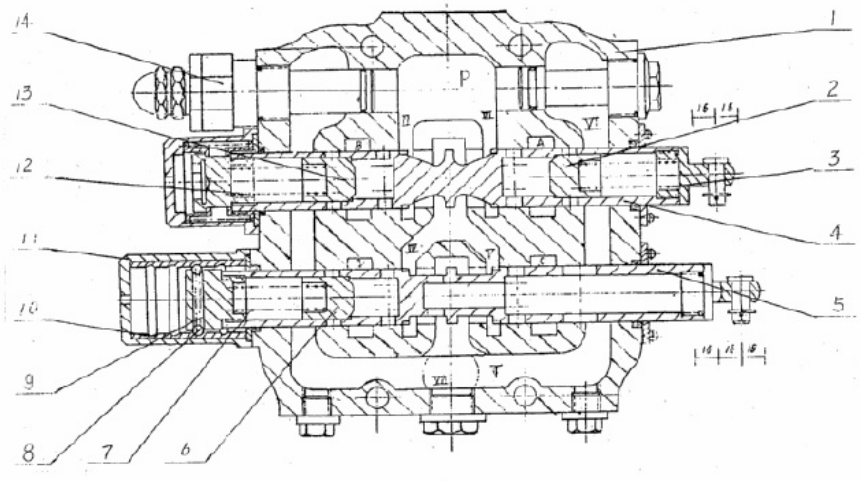

Fig. 3.7-2 Multyway reverse valve

1. Valve casing	8. Steel ball
2. Single-way valve	9. Spring
3. Spring	10. Spring fixing sleeve
4. Slide valve for rotary bucket	11. Fixing sleeve for moving arm
5. Slide valve for moving arm	12. Spring
6. Single way valve	13. Single way valve
7. Spring	14. Safety valve

The function of multiway reverse valve are that control the direction of cylinder for bucket and moving arm through changing the oil flow direction or keep them in position to meet the requitments of various working actions.

(Ⅰ) Structure and principle

The reverse valve for bucket is of three positions. It controls three actions of front incline, rear incline or keep it in position.

The reverse valve for moving arm is of our positions. It includes with up, retaining, down or floating. The steel balls(8) are pressed toward both sides by a spring(9) of fixing sleeve(11) of moving arm, and clamped it in the V-belt inside the fixing sleeve(10) so that the slide valve(5) of moving arm can be localized in one of four operating positions

The safety valve is used to control the pressure in system. When the pressure is over 18MPa, the valve is opened and oil returns to oil tank to prevent the system from damage. The upward port P of multiway reverse valve connected with duplex pump is a oil inlet and the upward port T connected with oil tank is a suction inlet. The chambers A and B are connected with small and big chamber of bucket cylinder and the chamber C and D with upward and downward chamber separately.

Two of the single way valve(13) is mounted both ends of slide valve for bucket. It is clamped on a valve socket by spring(12). On the left of slide valve(5) for moving

https://truckmanualshub.com/

arm also mounted one of single way valve. It is clamped on a valve socket. The function of single way valve is preventing the pressure oil to return to oil tank, thereby, the appearance of 'Nodding' is overcome. In addition, this back pressure produced by returning oil has an act of stabilized work in system.

1. The principle of multiway valve: (l) Mid-position (Closed), see fig. 3.7-2.

Both sides of oil-way for moving arm cylinder is closed and stopped in position. Meanwhile, the oil from pump flows to the returning inlet via oil inlet P, Ⅱ, Ⅲ, Ⅳ, Ⅴ, and then to the oil tank by oil tube. Safety valve is closed and formed no-load circulation in system.

(2) Bucket incline backward (turn up) see fig. 3.7-3.

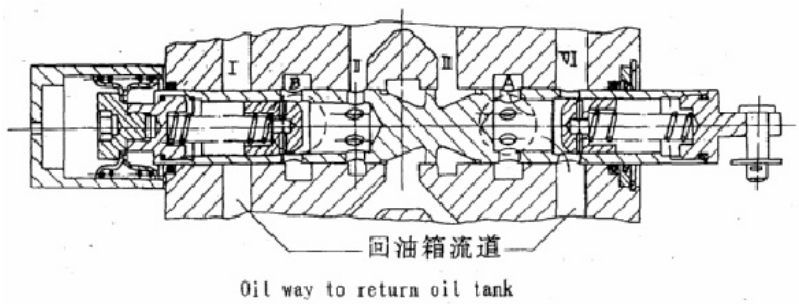

Fig. 3.7-3 The inclining position backward of slide valve for bucket

With moving the slide valve of bucket to the right, the pressure oil enters from oil way Ⅱ on the valve to a valve hole, then pushes the single way valve to open and enters from a valve hole to the oil way B connected with the big chamber of cylinder and to the big chamber for bucket through oil tube so that the piston rod in chamber would be stretched out and the bucket would be inclined backward.

The return oil from the front chamber of cylinder enter from oil way A connected with small chamber of cylinder to a valve hole and push the single way valve open and flow into oil way Ⅵ connected with oil tank.

(3) Bucket incline forward (turn down), see fig. 3.7-4.

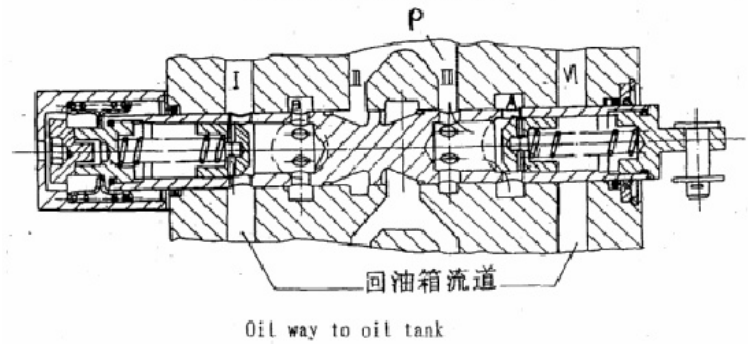

Fig. 3.7-4 The inclining position forward of slide valve for bucket

With moving the slide valve of bucket to the left, the pressure oil from oil way Ⅲ on the valve enter to a valve hole, then push the single way valve to open and by from a valve hole enters to the oil way A connected with the small chamber of cylinder and to the small chamber for bucket through oil tube so that the piston rod in chamber would be drawn back and the bucket would be inclined forward.

However, the returning oil from the front chamber of cylinder enter from oil way B connected with big chamber of cylinder to a valve hole and push the single way valve open and flow into oil way Ⅰ connected with oil tank.

(4) Lifting the moving arm. See fig. 3.7-5.

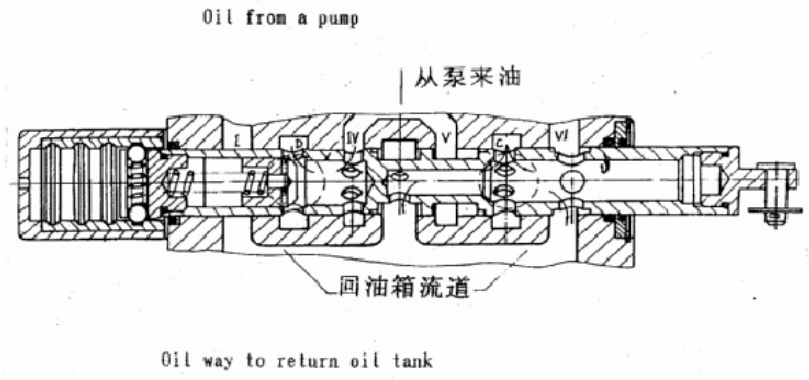

Fig. 3.7-5 Lifting position of slide valve for moving arm

When moving the slide valve of moving arm to the right, the pressure oil enter from oil way Ⅳ on the valve to a valve hole, then push the single way valve and enter from a valve hole to the oil way D connected with tower chamble of moving arm cylinder. The piston rod would be stretched out and the moving arm would be lifted.

However, the return oil from upper chamber of moving arm cylinder returns to oil way C connected with upper chamber of cylinder in multiway valve by tube, and enter the valve hole to the centre way in valve, then return to oil way Ⅵ connected oil tank via this valve hole again.

(5) Lower the moving arm. Fig. 3.7-6.

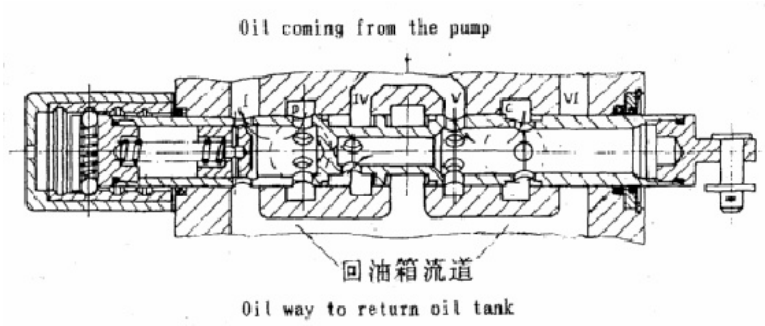

Fig. 3.7-6 The lower position of slide valve for moving arm

https://truckmanualshub.com/

With turning the slide valve of moving arm to the left, the pressure oil enter from oil way Ⅴ on the valve into the centre way in valve, as well, oil from valve hole flow to the oil way C connected with upper chamber of cylinder and then to upper chamber of moving arm cylinder so that the piston rod would be drawn back and the moving arm would be lowered.

However, the return oil from tower chamber of the cylinder returns to oil way D connected with tower chamber of cylinder in multiway valve via tube, enters the valve hole and push the single way valve to open. Then the oil way Ⅰ connected with the oil tank via valve hole.

(6) Floating the moving arm (See fig. 3.7-7).

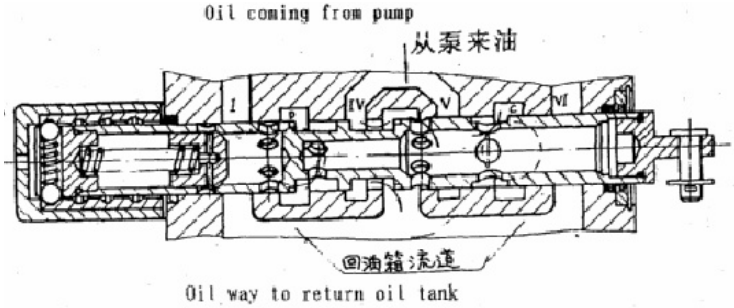

Fig. 3.7-7 The floating position of slide valve for moving arm

With lowering the moving arm, the position of slide valve continuously move to the left.

The oil coming from the oil pump goes through the mid-unload slot to oil way Ⅵ and returns to the oil tank while the tower chamber of cylinder connected with return oil way through oil way C, D, valve hole in valve and oil way of the centre hole on the right. It is no pressure idle circulation without pressure. Cylinder is in free floated stateof affairs under the weight of working device and force acting as the ground surface.

2. Safety valve which controlled the pressure in system is mounted in the mu1tiway valve. It is a preferential guide style structure which is consisted of both main valve and pilot valve. The main valve on and off is controlled by the pilot valve. When the pressure is system is too low to overcome the pressing force of spring 2 and make the pilot valve 3 open, the taper valve is closed and little oil pass through damped hole a at the middle of the main valves, thus in both sides of main valve(5) on the left and right, the oil pressure is equal. Due to the action of differential pressure produced by the differential area and spring 4 of main valve, the plunger valve cire remains in the right to limited and closes the by-pass oil way between the pressure chamber P and returning oil chamber Ⅰ.

https://truckmanualshub.com/

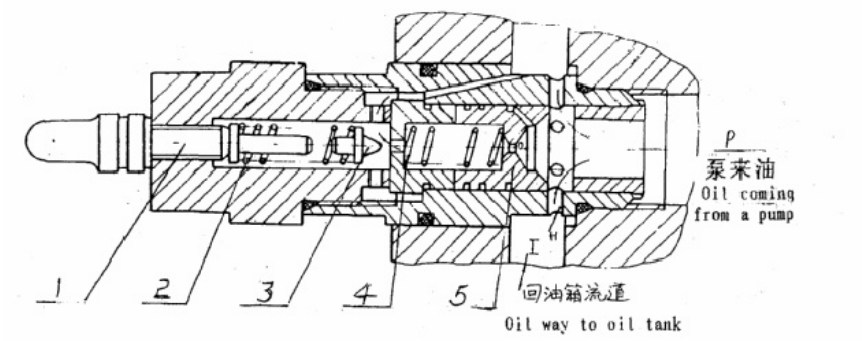

Fig. 3.7-8 The schematic diagram of opening the safety valve

1. Lead screw for adjusted pressure 2. Spring in pilot valve 3. Pilot valve
4. Spring in main valve 5. Valve core

When the pressure in system is higher enough to pushing pilot valve 3 to open against the force of valve spring (See figure 3.7-8), a small of oil passing through damp hole a flows to the oil way Ⅰ from port of the pilot valve. Because of this acting, the differential pressure is produced between the left hand and right hand of the valve core. The oil pressure in the left is less than the one in the right. When the acting toward the left produced by the difference of both side for the main valve core is bigger than the force of spring 4, the main valve core moves to the left and open the port, a large amount of pressure oil return to the oil tank via returning oil way H so as to act as overload protected. At this moment, the working pressure in the system is 18 MPa.

When the pressure in the system is lower than 18MPa, polit valve is close. The oil passing through a damp hole a stop to flow, the differential pressure disappear and the valve core returns to its position to make the oil port close.

The working pressure in the system can be adjusted through adjusting the pressing force of pilot valve spring 3 by leading screw Ⅰ.

(11) Remove and check

(1) Clean the valve casing, valve rod and all of the parts with kerosene oil or diesel oil, and then wipe away with a rag or blow out with compressed air.

(2) Check valve hole and valve rod for rut, scar and wear. The standard clearance between the valve hole and valve rod is 0.5-0.25. The repairing allowance (i.e. maximum clearance) is 0.04m. If the valve core is put into the valve hole correspondingly, feet no gap pressing by hands slightly. If the valve rod is worn or damaged distinctly, you must renew the valve casing and valve rod together as a valve assembly.

(3) Check the cone and socket of pilot valve for seal. If it engaged unreasonably, due to damage, scar or gap, so that the effectiveness of seating would be affected. Grind and repair it or change new one, if necessary.

(4) Check the single way and valve socket inside the valve rod for sealing. If it

https://truckmanualshub.com/

is deformed or damaged to affect sealing and valve socket. Renew the single way valve.

(5) The standard clearance of the main valve core fitted with the main valve sleeve is 0.010-0.018mm, and the repairing allowance (i.e. maximum clearance) is 0.03mm.

3. Overload supplemental valve with big and small chamber

(I) Structure and principle

The overload supplemental valve with big and small chamber is a relief valve preferential style. The feature is that the damp hole is variable. So it is called as variable damp style safety valve. The structure is seen as fig. 3.7-9.

The valve consist of pilot valve core 4, valve socket 5, spring 3, screw l, main valve core 7, slide valve 8, spring 6 and valve casing 2. The main valve core 7 is compressed on the valve casing 2 by the action of weak spring 6 and oil pressure so that working chamber A is separated from returning oil chamber 0. The pressure in the big chamber of overload valve is 18MPa and the pressure in small one is 10MPa. When the oil pressure in chamber A is over the adjusting pressure of overload valve, the pilot valve opens and oil passes through the centre hole in the slide valve 8. Because of damping action, the oil pressure in chamber a is lower in chamber A. The slide valve moves to the right against the weak spring 6 by the action of pressure difference until close up to the pilot valve core 4. And now, the action on the slide valve by the pressure in chamber A is transmitted to the pilot valve directly to make the valve port open; on the other hand, right new, the oil flows only through the space between the slide valve and the main valve core because the centre hole of slide valve 8 have been blocked up by pilot valve, the damping action in the space is bigger than the one in the centre hole of slide valve. As a result, the oil pressure in chamber a is lower quickly and the main valve core(7) open by the action of pressure difference between chamber A and a, while the oil returns to the oil tank.

In the normal case, the oil pressure in the chamber A is higher than the chamber 0. The main valve core 7 and slide valve 8 are compressed up on the valve socket. When the oil pressure in chamber A is lower than the chamber 0, the main valve core and slide valve would be opened under the action of pressure difference just as a common single way valve. Thereby, the oil would be supplied from chamber 0 to A.

https://truckmanualshub.com/

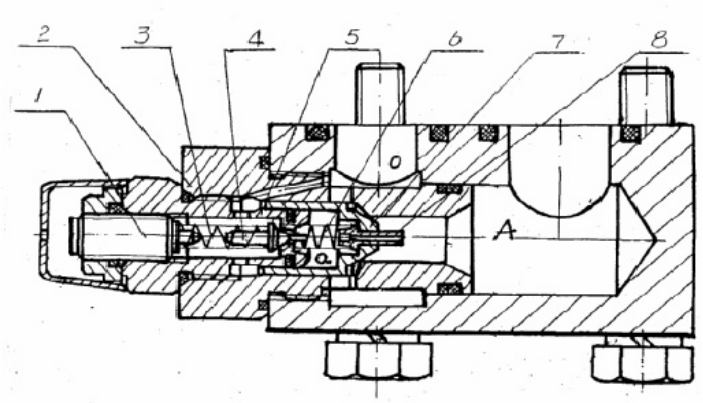

Fig. 3.7-9 Overload supplemental valve

1) Screw for adjusting pressure 2) Valve casing 3) Spring 4) Pilot valve core
5) Valve socket 6) Spring 7) Main valve core 8) Slide valve

The functions of overload supplemental valve are to protected both big and small chamber of bucket cylinder against overload and to supply oil in order to overcome an appearance of interference when the linkage of working is in motion. For example (e.g.), When the moving arm lift-up, the linkage in motion out of harmony can complelte the piston for bucket cylinder to pull out and to step up the pressure in small chamber, at the moment the overload valve overflow. With the piston of bucket cylinder pullingout, bring pressure to bear on the small chamber, the volume of big chamber increase and cause partial vacuum, right new, the oil from oil tank push the single way valve to open for supplying oil for big chamber. Other vise, when the moving arm is lower, it can compel the piston for bucket cylinder to draw back. The pressure of big raise and at this time, overload valve throttles. Meanwhile, the pressure in small chamber goes down and the volume increase and cause partial vacuum，at the moment, oil from oil tank pushes the single way valve to open for supplying oil small chamber, thereby, in order to avoid units in hydrautic system from damage.

(Ⅱ) Remove and check

1) Check valve core, valve casing, slide valve and valve socket for seating, if it is damaged and affect the seating, renew its parts.

2) Check all of rubber '0' -rings, if it is cut or damaged and affects the seating, change new one.

Ⅲ Hydraulic oil tank

Hydraulic oil tank is 15 used for the working system and steering hydraulic system.

It is mainly used to storage oil and radiate, meanwhile, air and foreign substances are separated from oil.

https://truckmanualshub.com/

This hydraulic oil tank is a closed pressure oil tank. The pressure is 0.02MPa in it when the hydraulic system put into operation. This increases the ability for self-sucking of oil pump to avoid oil suction insufficient and produce noisy or vibration because the inside of oil tank is separated from atmosphere, the dust in air can not entered in it so that it is favourable to keep the tank clean.

The structure of oil tank:

The oil indicator, air valve, oil suction fitter bleed air bolt and oil drain plug are equiped on the oil tank.

The air valve (see figure 3.7-12) is used to eliminate increased pressure and negative pressure (vacuume) in the tank when the oil level fluctuates up and down when the oil level goes up and the pressure exceeds about 0.02MPa, the single way valve for exhausting opens automaticaly an exhausts towards outside; when the oil level goes down and produces the negative pressure in the tank, the single way valve for inlet opens and supplys air from outside to inside of the tank. Unscrew valve cap 2, remove spring 4 and pressing socket 5, you can fill oil.

The bleed air botl is mounted on the oil tank. Opening the rubber cap on and to exhaust air from the tank when filling oil or repairing.

There is a oil drain plug at the bottom of oil tank. Remove it, oil will be drained off, if changing oil.

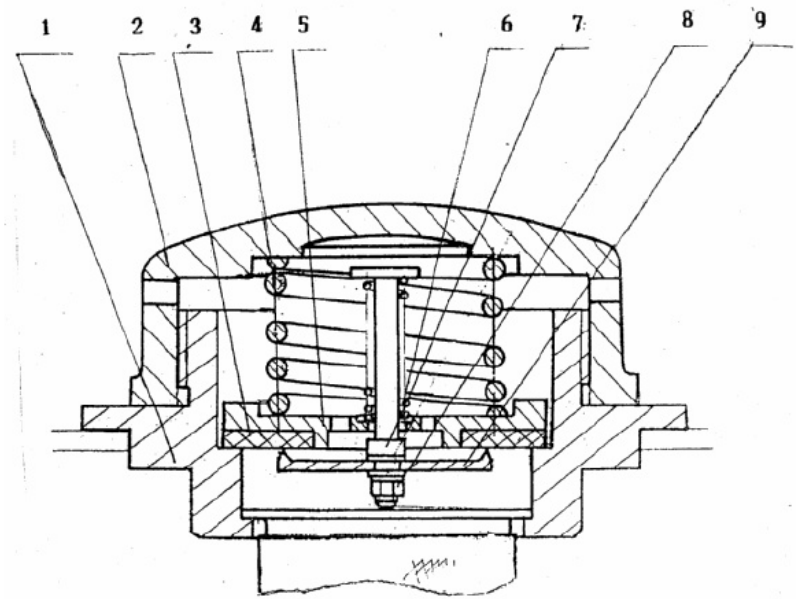

Fig. 3.7-12 Air valve

l) Valve socket 2) Valve cover 3) Seating gasket 4) Big spring
5) Pressing socket 6) Small spring 7) Valve rod 8) Nut 9) Valve nozzle

https://truckmanualshub.com/

Ⅳ Requirements and Maintenances of Hydraulic System

(Ⅰ) Must use high quality and clean hydraulic oil as prescribed in the system.

(Ⅱ) After 1000 hours, the working oil must be changed, the method is as follow:

1. Swing the bucket upward and lift the moving arm to the top position, cuts off the engine, then swinq the bucket downward and lower the arm depended on their weight so that the oil in cylinder is drained away.

2. The waste oil had to be drained off before the oil temperature is still hot in order to drain out the dust and sediment properly.

3. Open the oil drain plug at the bottom of the oil tank and unscrew hoses at the bottom of bucket cylinder so as to drain off the dirty oil, and then, clean the oil tank and oil fitter with kerosene (or diesel oil).

4. After fitting oil enough, operate the moving arm and bucket many times in order to exhaust the air in system.

(Ⅲ) Make sure the operating site clean to prevent unites from fallen dust and dirt when removing and mounting the hydraulic units.

(Ⅳ) Reassembly the hydraulic units after repaired. Check the rubber seal, 0-ring for defective, if necessary, renew it. The old seating gasket must be changed properly.

(Ⅴ) Do not knock and dash to avoid damaged when removing and reassembly the hydraulic units.

Section 8 Working implement

The working implement is consisted of bucket, moving arm, rocker, connecting rod, bucket cylinder and lifting cylinder atc.. It is a reversing linkage mechanism (see fig. 3.8-l), single rocker arm, horizontal cylinder for moving arm.

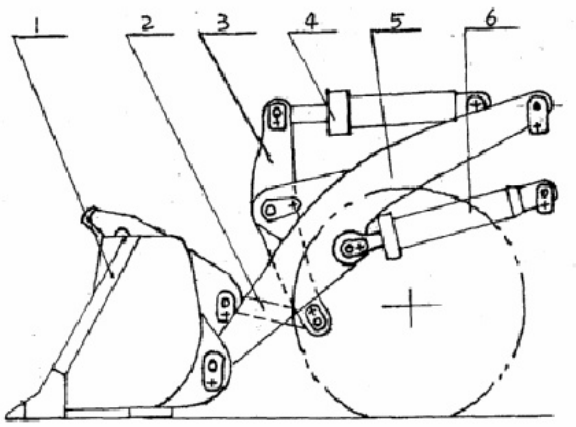

Fig. 3.8-1

1. Bucket 2. Connecting rod 3. Rocker arm 4. Bucket cylinder 5. Moving arm 6. Lifting arm cylinder

https://truckmanualshub.com/

According to users' requirement, they can choose Bucket-tooth or movable edge plate. The bucket-tooth is removable (Fig. 3.8-2). When the bucket-tooth is not required for working, unscrew the bolt 2 and the bucket-tooth and change movable edge plate.

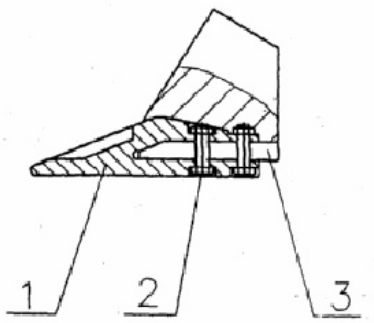

1. Bucket-tooth
2. Bolt
3. Main edge

Fig. 3.8-2

The standard bucket is mounted with toothes. Each of tooth is a tooth-sleeve style (see figure 3.8-2), if the toothes get out of use, you would draw off the pin (2) and load off toothes. There are 8 pieses of toothes equiped on the standard bucket.

After operating every 75 hours, grease each pin shaft one time. The total of lubricating point is 13 pieses.

The joint bearing assembled in articulated point. It is equiped with oil seat in both sides to prevent dust so that the life of the pin shaft and joint bearing will be longer.

Section 9 Carriers

The carriers is made of front carrier(1), rear carrier(2) and assistant carrier(3). The front or rear carrier can stretch out or draw back along with the steering cylinder and turn 40° on the left or right. The articulated steering is easy to control. Smaller turning radius. High efficient loading. The assistant carrier(3) is linked up with rear carrier by a pin. Rear axle is mounted in the assistant carrier which can turn around the centre of pin. The oscillating angle up and down is 13° so that the four wheels of loader can still touched the ground while traveling in rugged pavement. It has a good stability.

https://truckmanualshub.com/

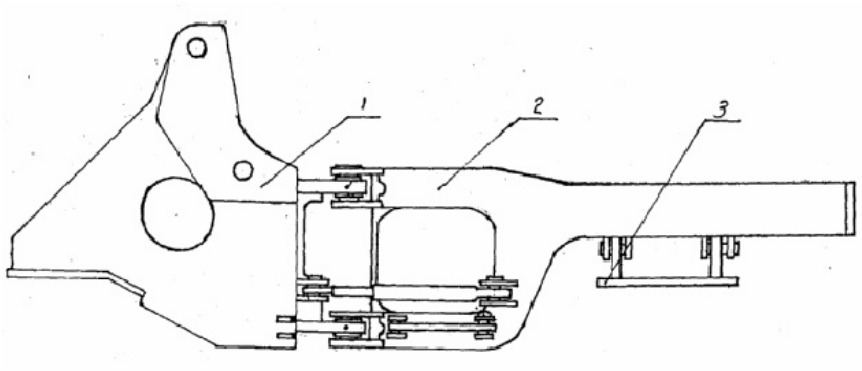

Fig. 3.9-1 Carrier

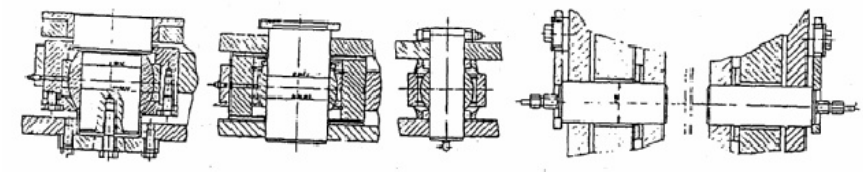

Fig. 3.9-2

Upward articulated pin

Fig. 3.9-3

Downward articulated pin

Fig. 3.9-1

The articulated pin for steering cylinder

Fig. 3.9-5

The articulated pin for assistant carrier

The joint bearing is mounted in the point of the front and rear carrier, inner ring can oscillat in the outer ring properly when the machine steers in order to fit the distortion of this pin when the deflection is caused by radial. Thus avoid additional flexibility.

The articulated point between assistant carrier and rear carrier, shown as fig. 3.9-5, make sure the reliable requirement for operation. The play of cuperr-shimes in shaft can be adjusted to 0-0.20mm when the assembly. It is depend on cupper-shimes. In working, worn limit is more than 0.7mm, relace worn copper-shims. Check play limit for worn, at first, both wheels on the rear axle must be down in ground, and then, measure the plays of both sides of assistant carrier and plus together or hang up the rear axle and push the assistant carrier to one side, then measure it by feeler gauge.

The maintenances for the carrier: Check components for crack and deformation regularly, if damaged, repair it in time. Should grease the lubricating grease cup of each action component regularly to make sure every part operating well and long operating life.

Section 10 Electrical system

The electrical system includes battery, starterand lamps, etc. The voltage in system is 24V. Negative pole is connected with iron. The cable is adopted single line.

The electrical system is used for electric equipment of starting engine, lighting,

https://truckmanualshub.com/

signal light, instrument indicator, electric horn, wiper, etc.

When Cummins QSB6.7 diesel engine, ZL50 transmission case of Hangzhou Gear Factory and Pilot System are equipped，please see fig. 3.10-1 for electrical principle；

When WD61567G3-28 diesel engine、ZL50 transmission case of Hangzhou Gear Factory are equipped，please see fig. 3.10-2 for electrical principle；

When Cummins 6CTA8.3-215 diesel engine、ZL50 transmission case of Hangzhou Gear Factory are equipped，please see fig. 3.10-3for electrical principle；

When Cummins 6CTA8.3-215 diesel engine、4WG-200electrically controlled transmission case of Hangzhou Gear Factory are equipped，please see fig. 3.10-4 for electrical principle；

When Cummins 6CTA8.3-215 diesel engine、ZL50 transmission case of Hangzhou Gear Factory, Pilot System are equipped，please see fig. 3.10-5 for electrical principle.

Ⅰ. Bettery

There are two of series batteries with the machine. The negative pole of the first one is connected with the positive pole of the second one. The negative pole of the second one is put up iron through the battery relay DK2312. Electricity will be supplied for electric equipments by closing the battery relay.

The type of battery is OPTIMA Red Top RTS-4.2L which is maintenance-free battery.

Owing to the battery equipped with the machine, its belong to moveable. Should take attention as follows:

1. Keep the battery clean.
2. Fasten the battery in its box after put into to avoid the machine from damaged during traveling. Keep the ends of cable in touch with battery poles closely.
3. The rubber plug on the hole of filling liquid must be screwed up to prevent electrolyte spilt by vibriation and secure bleed hold on the rubber plug unblocked.
4. Check the level of electrolyte in the battery every 5 months a time. In summer season, check every an half and two months a time, the level must be 10-15 mm above the upper edges of the plates. If the level is lower, top up with distilled water instead of sulphuric acid.
5. Do not put any metal on the battery to prevent short-circuit. Do not use the methord of short-circuit spark, i.e. the screw driver or wire is used in the pole directly, to check the battery for leakage, in order to prevent capacity of battery against loss much more and burned out the battery pole.
6. Do not draw or pull the battery on the ground when moving it.
7. The density of electrolyte in battery: 1.20 in winter season; 1.26 in summer season.

Ⅱ. Lamps

This machine is matched with front lamps, rear lamps, fog lamp, cab lamp, front

https://truckmanualshub.com/

and rear steering lamps, brake lamp, license lamp, small front lamp, indicating lamp for steering, etc.

Table 3.10-1 List of bulbs

No.	Name	Qty.	Specification
1	Front light	2	24V 55/35W
2	Rear light	2	24V 35W
3	Fog light	2	24V 35W
4	Cab light	1	24V 35W
5	Small front light and front steering light	2	24V 8/20W
6	Rear steering light	2	24V 20W
7	Small rear light, braking light	2	24V 8/20W
8	License plate light	1	24V 5W
9	Steering indicator	2	24V 1.5W

https://truckmanualshub.com/

https://truckmanualshub.com/

https://truckmanualshub.com/

https://truckmanualshub.com/

https://truckmanualshub.com/

https://truckmanualshub.com/

Chapter four Technical Maintenance

In order to raise service lift of the machine and prevent it from damaging and during operation, the loader should be maintained in regular time. For maintaining the engine, please refer to *Engine maintenance or engine workshop manual*.

Ⅰ. Maintenance at all classes.

The technical maintenances are devided into 8, 50, 200, 500, 1000 hours.

(Ⅰ) 8 hours

1. Check the fuel oil level
2. Check oil pipes, water tubes; gas tubes and other accessories for leaks.
3. Check transmission, torque converter, hydraulic oil pump, front and rear axles for overheat.
4. Check felloe bolts, driving shaft bolts, connecting pin-shaft between front and rear carriers and other pin shaft and bolts for loosened.
5. Check air pressure of types.
6. Drain off the cooling water when working in cold region.

(Ⅱ) 50 hours

1. Check up oil level of braking booster.
2. Check up oil level of transmission.
3. Check up lubricating throttle operating, hand brake and controlling system
4. Grease the shaft of fan, articulated points of front and rear carriers, driving shaft and each point in assistant carrier.

(Ⅲ) 200 hours

1. Check up oil cylinders for the front and rear axles.
2. Check the welded seam or bolts of working implements, front or rear carriers and assistant carrier for loosened.

(Ⅳ) 500 hours

1. Fasten up bolts for front and rear axles and carriers.
2. Check oil in the gear box for clean. If there are some foreign substance in it, clean oil filter in the bottom of casing.
3. Supply fresh oil for oil tank.

(Ⅴ) 1000 hours

1. Change gear oil in the front and rear axles.
2. Change working oil in hydraulic system, clean oil filter and the bottom of oil tank.
3. Clean and check the braking booster. Check sealing parts and spring. Change brake oil. Jack up frame and turning wheels to check its sensitivity of brake.
4. Clean diesel oil filter.

https://truckmanualshub.com/

5. Check performance of torque converter, transmission, steering. If necessary, remove it and check.
6. Check distributive valve and the sealing sensitivity of cylinder through self-fall of working cylinder. The max, working pressure is about 18MPa.
7. Check the working implements, welded seam of all parts of the carrier for crack and tightness of the bolts.
8. Check the welded seam of felloe and each part under pressure on.

Ⅱ Oils and lubrication

Correct lubrication can reduce the friction of the machine and worn of parts.

(Ⅰ) Pay attention to lubricating:

1. Clean all filling container and filling parts.
2. Put the wheel loader horizontally on the solid ground when check the oil level.
3. The capacity of the transmission or working oil tank depends on oil level. At first filling, the engine must be turned more than 5 minutes and than check oil level again.
4. Do not mix up various oils, othervise, the rubber parts would be deactivated at the spare parts would be worn earlier.

(Ⅱ) The grades and types of the lubricants see as follow:

Sort	Name			Application position
	Lubricating oil for summer	Lubricating oil for winter		
Grease	Extreme pressure lithium-based grease (No.2)			Applied to rolling bearing, slide baring and hinhe part
Hydraulic oil	N32 Anti-wear hydraulic oil, and N32 Low-freezing anti wear hydraulic oil when oil temperature is lower than -25°C			Applied to work device and steering hydraulic system
Working oil for Torque converter and gear box	No.8 hydraulic transmission oil			Applied to hydraulic torque converter and hydraulic gearshift gear box
	Mobil Delvac Super 1300 (SAE15W-40) for ZF gear box)			
Engine oil	No.40 L-ECD diesel engine oil	No.30 L-ECD diesel engine oil		Applied to Hangzhou Engine
				Weichai Deutz
Engine fuel	No.0 light diesel fuel when oil temperature is above 0°C	-0°C~0°C	No.-10 light diesel oil	Applied to diesel engine
		-20°C~10°C	No.-20 light diesel oil	
		-30°C~20°C	No.-30 light diesel oil	
Gear oil	No.18 Hyperbolic gear oil			Applied to main drive
	85W/90-LS used for ZF driving axle			
Brake oil	719 synthetic brake fluid as 912 synthetic brake fluid (conforming to GB10830-89 standard). But must empty 719 synthetic brake fluid fully and clean with 912 synthetic brake fluid before adding 912 synthetic brake fluid. Note: Both can not be mixed for use to avoid brake system failure			Applied to brake system
	Mobil Delvac 1310 (SAE10WE) used for ZF driving axle			
Engine oil	Grade 15W-40CD engine oil			Applied to Tiandong diesel engine
	Grade HC-14 engine oil for Summer Grade HC-11 engine oil for Winter			Applied to Shanghai diesel engine

https://truckmanualshub.com/

Chapter five Trouble shooting

Ⅰ Hydraulic torque converter and transmission system

No.	Faults	Possible causes	Remedies
1	Engine is running but the machine can not be traveled	The lever is in idle	Repush the lever in the operating position or check its accuracy
		Oil lever is too low	Top up to prescribed oil level
		Brake valve lever can not restore	Remove and check the brake valve lever to find out the defective
		Oil pump is defective or oil seal leaks caused oil insufficient	Change oil pump or oil seal
2	Driving force is not enough	Oil pressure is low in inlet of torque converter	Check oil level of torque converter. Clean strainer at the bottom of oil casing and filter. Check adjusted valve.
		The sliping of clutch	Check oil pressure of clutch and oil seal of piston
		Speed of engine is lower	Check the engine
3	The oil pressure of gear shift is too low	Relift valve is not adjusted properly	Readjust it
		The oil filter is cogged up	Change the oil filter
		The oil pump is defective	Change the oil pump
		The oil seal of clutch teak seriously	Change the oil seal
4	The oil temperature of torque converter is too high	The oil level of torque converter is too low or too high	Top up oil as required
		The clutch slop	Check oil pressure of clutch
		Long time operating under heavy load	Stop the machine for cooling
5	The machine is in idle after emergency braking	The limit screw of pedal on the air brake valve is not adjusted and not restored properly	Readjust limit screw of pedal to make it restore.
		The piston of braking valve is block up which can not be restored after releasing	Clean and overhaul the piston
		The brake valve rod is clamped down	Remove and check the brake valve rod

Ⅱ Driving axle

Position	Faults	Possible cause	Remedies
Main reducer	High noisy	1. The clearance of gears is too larger 2. The roller bearing is worn	Adjust the clearance Change the bearing
	The case becomes hot earlier	Lubricating is not well or no lubricating oil	Top up oil to the prescribed level
	Unusual sound perioudicity	Toothes of gear is defective	Change gears
		There are foreign matter in it	Drain out oil and check
		Fasteners loose	Tighten up the fastener.
	The differential speed is out of order	Cross shaft is broken	Change the cross shaft
	Leak oil	The oil seal is worn	Change the oil seat
		Sealing glue is defective	Scrape the old glue, recoat.
		Fasteners loose	Tighten up the fasteners.
Rim reducer	Rim does not turn	Half shaft is broken	Change the defective half
		Sun gear and half shaft is of relative motion	Change the half shaft and sun gear
		The differential system is out of order	Adjust and change it
	Unusual sound	Toothes of gear is defective	Change the defective gear
		There are some foreign matter in it	Drain out oil and check
	The case becomes hot earlier	The lubricating is not well or no lubricating oil	Top up oil to prescribed level
	Leak oil	The oil seat is worn	Change oil seat
		Sealing glue and gasket is defective	Scrape the old glue and recoat, change new one
		Fasteners loosen	Tight up the fasteners
Brake	Brake does not work	The oil way block up in open circuit style	Connect and change oil tube
		O-ring of piston is worn and pressure lower	Change 0-ring
		Piston and cylinder can not be moved	Change the brake pincers
		Hydraulic pressure is not enough	Check oil pump
	Leak oil	Sealing ring is worn	Change sealing ring
		Oil nozzle loosen	Tight up it
		The clamp block is defective when casting	Change the braking clamp block or repair it

https://truckmanualshub.com/

Ⅲ Electric system

No.	Faults	Possible causes	Remedies
1	Engine can not generate electricity or the voltage supplied is too low	The commutator has greasy dirt	Clean it by the clean cloth with gasoline or gring it by emery cloth
		The electric brush can not be connected well with commutator	Check the electric brushfor clamping down and check the spring for strength.
		The circuit of exciting coil is broken	Check the wire outside the magnetic field and check the exciting circuit by a bulb
2	The battery Can not be charged or electric current is too low	The contact for cut off current does not be closed or has been burned	Weaken the tension of spring adjust its clearance grind it by emery cloth no.00
		The cable does not contacted well or has been broken	Check the generator and wire between batteries, tight it.
		Voltage-saver and throttle adjusted not correctly	Check and adjust them
3	Spark between electric brush of generator and commutator is bigger	The commutator is worn seriously	Clean commutator and reject the impurity between the rectifying disks.
4	Generator overheat	The voltage adjusted is too high	Adjust the voltage-saver and reduce the current charged.
		The bearing is worn or lack of oil	Change the hearing or top up oil
		Commutator or coil is shorted circuit	Remove generator. Check the commutator and coil. Trouble shooting.
5	Small or big bulb is often burned down	The voltage-saver has not been adjusted well or contact is burned down	Check and adjust the voltage-saver. Clean its contact.
6	The dieset engine is difficult to start	The battery is damaged or the electricity is weak	Change a new battery or charge it.
		The starting switch is defective	Change new one.
		The lubricating oil is too thick	Change the fresh oil.
		The circuit doesn't contact well or it is cut off	Check and restore it.
		Carbon brush is seriously worn or contact not well	Overhaul or change.
7	All the light go out	Wire of power supply would be cut off	Check and repair.
8	Some light goes out	The line has brocken down	Check the fuse and bulb

https://truckmanualshub.com/

Chapter six Operation and application of air conditioner

Ⅰ**. Refrigeration:** After starting the engine, turn wind switch to “High” shifting position to run for 5 minutes. Then turn temperature controlling Switch to “Refrigeration” position to cool in the system.

In adjusting wind outlet angle, the angle and direction of cooling wind can be changed. When adjusting the switch of wind amount, you can get wind amount of three shiftings (high-middle-low).

When using air conditioner, don’t put wind amount switch in low shifting position to prevent vapour from frosting to after cooling.

Note: When cooling in summer season, please close hot water valve.

Ⅱ**.Heating:** When heating in winter season, you should notice to close temperature controlling switch. First, open hot water valve and start the engine. Then, turn on wind amount switch to begin to supply hot wind in the system.

In adjusting wind outlet angle, the angle and direction of hot wind can be changed. When adjusting the switch of wind amount, you can get wind amount of three shiftings (high-middle-low)

Additional instructions

When the operating hydraulic system of ZL50 series loader is operated by pilot means, the distributing valve shall be changed into hydrodynamic valve，operating control handle shall be simple handle, please see following figure for its operating instrument.

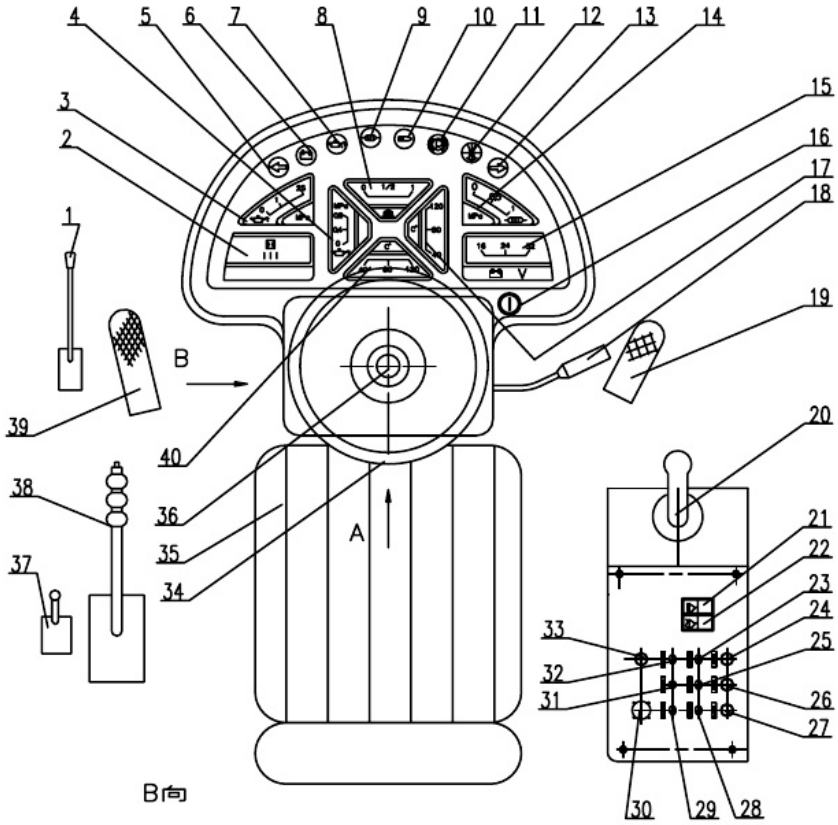

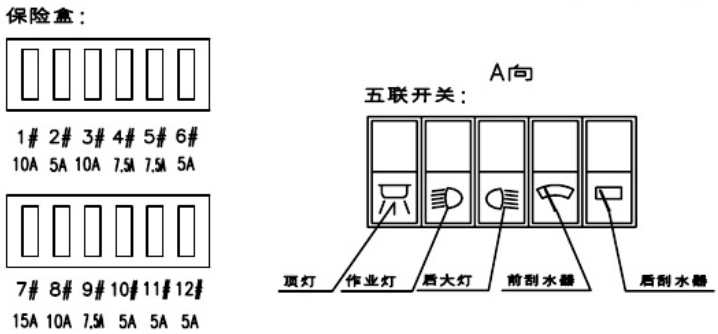

https://truckmanualshub.com/

1. High-low-speed control lever	2. Timer
3. Oil pressure gauge for transmission	4. Engine oil pressure gauge
5. Left turning indicator lamp	6. Charge indicator lamp
7. Indicator lamp for low engine oil pressure	8. Fuel gauge
9. Indicator lamp for low air pressure	10. Indicator lamp for distance light
11. Indicator lamp for braking	12. Indicator lamp for blocked air filter
13. Right turning indicator lamp	14. Air pressure gauge for braking
15. Voltmeter	16. Starting switch
17.Oil temperature gauge for torque converter	18. Combination switch
19. Accelerator pedal	20. Control lever for working device
21. Bucket leveling switch	22. Bucket floating switch
23. Intermediate speed 1 switch	24. Alarm indicator lamp (Yellow)
25. Intermediate speed 2 switch	26. Stopping indicator lamp (Red)
27. Waiting indicator lamp (Red)	28. Intermediate speed 3 switch
29. Switch for torque reinforcing	30. Test plug
31. Speedingup/down switch	32. Diagnostic switch
33. Emergency stop button	34. Steering wheel
35. Driver's seat	36. Horn button
37. Main power switch	38. Control lever for hand brake
39. Brake paddle	40. Water thermometer for engine

Note: No.18 combination switch includes small light, high beam and dipped beam of front lamp and turning light.

When it necessary for movable arm to conduct floating operations, the switch for bucket floating must be pressed （Namely, closed）to guarantee safety of floating operations, then press the control lever to bottom within 4 seconds, then operations can be carried out with the movable arm under floating status. If fails to complete above action within 4 seconds, movable arm cannot be floated, the operator must pay attention to this point.