https://truckmanualshop.com/

ELECTRIC SCISSOR LIFTS

Operator's manual

ELECTRIC SCISSOR LIFTS

Compact 8 (Compact 2032E)
Compact 8W (Compact 2247E)
Compact 10 (Compact 2747E)
Compact 10N (Compact 2632E) - Compact 10N-1
Compact 12 (Compact 3347E)
Compact 14 (Compact 3947E)
Optimum 6 (Optimum 1530E)
Optimum 8 (Optimum 1930E) - Optimum 8-1
Compact 10RTE (Compact 2668RTE)
Compact 12RTE (Compact 3368RTE)

2420332270 e10 12 EN

https://truckmanualshub.com/

CONTENTS

1 - Operator's manual 7
2 - After Sales Service 7
3 - Compliance 8
4 - HAULOTTE Services® contact details. 9

A

SAFETY PRECAUTIONS

1 - Recommendations 11
1.1 - Operator's manual 11
1.2 - Symbols used 11
1.3 - Label colors 12
2 - Pre-operation instructions 13
2.1 - General instructions 13
2.2 - Specific instructions. 13
3 - Operation instructions 14
3.1 - Prohibitions. 14
3.2 - Potential risks. 15
3.2.1 - Risk of command system disturbance 15
3.2.2 - Risk of falling 15
3.2.3 - Risk of electrocution 16
3.2.4 - Risk of uncontrolled movement and overturning 16
3.2.5 - Risk of burns and explosion 18
3.2.6 - Risk of crushing and collision 18

B

INTERVENOR'S RESPONSIBILITY

1 - Owner's (or hirer's) responsibility. 19
2 - Employer's responsibility 19
3 - Trainer's responsibility 19
4 - Operator's responsibility 19
5 - Inspection and maintenance 20

C

MACHINE LAYOUT

1 - Identification 21
2 - Main components 21
3 - Safety devices. 24
3.1 - Sliding (or swinging) intermediate guardrail. 24
3.2 - Anchorage point (Please see machine configuration) 24
3.3 - Maintenance support. 25
3.4 - Folding guardrails - Option 25
4 - Labels. 26
4.1 - Classification plan 26
4.1.1 - Red labels. 26
4.1.2 - Orange labels 30
4.1.3 - Yellow labels. 31
4.1.4 - Other labels 32
4.1.5 - Green labels 35
4.1.6 - Blue labels 35
4.2 - Identification 36
5 - Control boxes 52
5.1 - Ground control box - Emergency control panel. 52
5.2 - Platform control box 54

D

OPERATING PRINCIPLE

1 - Description 59
2 - Safety devices. 59
2.1 - Activation of controls 59
2.2 - Drive speed. 60
2.3 - Space for operating temperature thermostat 61
2.4 - Load limiting in the platform (if fitted) 61
2.5 - Anti-pothole safety system. 61
2.6 - Battery discharge indicator-Hour meter 62
2.6.1 - Hour meter 62
2.6.2 - Automatic reset 62
2.7 - On-board charger 63
2.8 - manual extension 63
2.9 - Drive buzzer 63

E

DRIVING

1 - Recommendations 65
2 - Checks before use 65
2.1 - Visual inspections 65
2.1.1 - General mechanical functions 65
2.1.2 - Environment 67
2.2 - Functional tests 68
2.2.1 - Safety features 68
2.2.2 - Ground control box controls (emergency station) 68
2.2.3 - Platform control box controls (driving station) 68
2.3 - Periodical checks. 69
2.4 - Repairs and adjustments. 69
2.5 - Inspection / Testing requirements 69
3 - Operation. 70
3.1 - Test procedure. 70
3.1.1 - Emergency stop switch- button function (cut out) 70
3.1.2 - Tilt sensor switch operation 70
3.1.3 - Visual and sound alarms 71
3.1.4 - Weighing system 72
3.1.5 - 8 m(26 ft3 in) drive cut-off (Floor height) 72
3.2 - Operation from ground position 73
3.2.1 - Machine start-up. 73
3.2.2 - Machine shutdown 73
3.2.3 - Movement control. 73
3.2.4 - Other controls. 73
3.3 - Operations from the platform 74
3.3.1 - Machine start-up. 74
3.3.2 - Machine shutdown 74
3.3.3 - Movement control. 74
3.3.4 - Other controls. 77

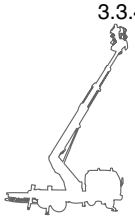

CONTENTS

F

SPECIAL PROCEDURE

1 - Emergency lowering 79
1.1 - Principle 79
1.2 - Procedure 79
1.3 - Extraordinary procedure 79
2 - Towing 80
2.1 - Manual brake release 80
2.2 - Automatic brake release (Option) 81
3 - Loading and unloading 82
3.1 - Principle 82
3.1.1 - Loading by ramp 82
3.1.2 - Unloading by ramps 82
3.1.3 - Loading by lifting 82
3.1.4 - Loading by lifting 82
3.2 - Putting in transport position 83
3.3 - Unloading 85
3.4 - Warning 85

G

TECHNICAL CHARACTERISTICS

1 - Main characteristics 87
2 - Overall dimensions 111
3 - Working area 115
3.1 - Machine C8 (COMPACT 2032E) 115
3.2 - Machine C8W (COMPACT 2247E) 116
3.3 - Machine C10N (COMPACT 2632E) 117
3.4 - Machine C10 (COMPACT 2747E) 118
3.5 - Machine C12 (COMPACT 3347E) 119
3.6 - Machine C14 (COMPACT 3947E) 120
3.7 - Machine OPTIMUM 6 (OPTIMUM 1530E) 121
3.8 - Machine OPTIMUM 8 (OPTIMUM 1930E) 122
3.9 - Machine COMPACT 10RTE (COMPACT 2668RTE) 123
3.10 - Machine COMPACT 12RTE (COMPACT 3368RTE) 124
4 - AS - CE standard specificities 125
4.1 - Overload test 125
4.2 - Functional test 125
4.3 - Stability test 126
5 - Declaration of conformity 136

H

INTERVENTION REGISTER

1 - Intervention register 139

https://truckmanualshub.com/

You have just purchased a HAULOTTE® product

and we would like to thank you for your business.

1 - Operator's manual

As stated on the delivery slip, this manual is one of the documents in the on-board document holder provided upon delivery of your HAULOTTE® machine.

The operator manual is a translation of the original instructions.

Safe operation of this product can only be assured if you follow the operating instructions contained in this manual.

We would particularly like to draw your attention to 2 essential points :

- Compliance with safety instruction (machine, use, environment)
- Use of the equipment within the performance limits.

With regard to the designation of our equipment, we stress that this is purely for commercial purposes and not to be confused with the technical characteristics. Only the tables of technical characteristics should be used to study the suitability of the equipment for the intended use.

2 - After Sales Service

Our HAULOTTE Services® After Sales Service is at your disposal throughout your machine's service life to ensure optimal use of your HAULOTTE product..

- When contacting our After Sales Service, ensure that you provide the machine model and serial number.
- When ordering any consumables or spare parts, please use this manual and the Haulotte Essential catalogue to receive your genuine HAULOTTE spare parts, your only guarantee of parts interchangeability and correct machine operation..
- If there is an equipment malfunction involving a HAULOTTE® product, then contact HAULOTTE Services® immediately even if the malfunction does not involve material and/or bodily damage..
- HAULOTTE® must be informed in the event of an incident that either involves one of these products or has caused bodily injury or significant deterioration of property (personal property or the product); contact HAULOTTE Services® immediately (See : HAULOTTE Services® contact details)

https://truckmanualshub.com/

3 - Compliance

We would like to remind you that HAULOTTE® complies with the provisions of any applicable directives applicable to this type of machine.

HAULOTTE advises you that NO modifications carried out without the written permission of HAULOTTE® will void the HAULOTTE warranty..

HAULOTTE® cannot be held liable for any changes to the technical specifications contained in this manual.

HAULOTTE® reserves the right to alter technical specifications and to make improvements or modifications to the machine without modifying this manual.

Certain options can modify the machine's operating characteristics and its associated safety. If your machine was originally delivered with options fitted, replacing a safety component associated with a particular options not require any particular precautions other than those associated with the installation itself (static test).

Otherwise, it is essential to follow the manufacturer's recommendations below :

- **Installation by authorised HAULOTTE® personnel only.**
- **Update the manufacturer's identification plate.**
- **Have stability tests carried out by a certified agency/competent person.**
- **Ensure label compliance.**

https://truckmanualshub.com/

4 - HAULOTTE Services® contact details

HAULOTTE Services® contact details

	HAULOTTE FRANCE PARC DES LUMIERES 601 RUE NICEPHORE NIEPCE 69800 SAINT-PRIEST **TECHNICAL Department:** **+33 (0)820 200 089** **SPARE PARTS : +33 (0)820 205 344** FAX : +33 (0)4 72 88 01 43 E-mail : haulottefrance@haulotte.com www.haulotte.fr		HAULOTTE ITALIA VIA LOMBARDIA 15 20098 SAN GIULIANO MILANESE (MI) **TEL: +39 02 98 97 01** FAX: +39 02 9897 01 25 E-mail : haulotteitalia@haulotte.com www.haulotte.it		
	HAULOTTE HUBARBEITSBÜHNEN GmbH AN DER MÖHLINHALLE 1 D-79189 BAD KROZINGEN-HAUSEN **TEL : +49 (0) 7633 806 92-0** FAX : +49 (0) 7633 806 92-18 E.mail : haulotte@de.haulotte.com www.haulotte.de		HAULOTTE VOSTOK, OOO 35, SVOBODY STREET Bldg. 19 125362 MOSCOW RUSSIAN FEDERATION **TEL/FAX : +7 495 221 53 02 / 03** E.mail : info@haulottevostok.ru www.haulotte-international.com		HAULOTTE DO BRASIL AV. Tucunaré, 790 CEP: 06460-020 – TAMBORE BARUERI – SAO PAULO – BRASIL **TEL : +55 11 4208 4206** FAX : +55 11 4191 4677 E.mail : haulotte@haulotte.com.br www.haulotte.com.br
	HAULOTTE IBERICA C/ARGENTINA N° 13 - P.I. LA GARENA 28806 ALCALA DE HENARES MADRID **TEL : +34 902 886 455** TEL SAT : +34 902 886 444 FAX : +34 91 656 97 81 E.mail : iberica@haulotte.com www.haulotte.es		HAULOTTE POLSKA Sp. Z.o.o. UL. GRANICZNA 22 05-090 RASZYN - JANKI **TEL : +48 22 720 08 80** FAX : +48 22 720 35 06 E-mail : haulottepolska@haulotte.com www.haulotte.pl		HAULOTTE MÉXICO, Sa de Cv Calle 9 Este, Lote 18, Civac, Jiutepec, Morelos CP 62500 Cuernavaca México **TEL : +52 77 7321 7923** FAX : +52 77 7516 8234 E-mail : haulotte.mexico@haulotte.com www.haulotte-international.com
	HAULOTTE PORTUGAL ESTRADA NACIONAL NUM. 10 KM. 140 - LETRA K 2695 - 066 BOBADELA LRS **TEL : + 351 21 995 98 10** FAX : + 351 21 995 98 19 E.mail : haulotteportugal@haulotte.com www.haulotte.es		HAULOTTE SINGAPORE Pte Ltd. No.26 CHANGI NORTH WAY, SINGAPORE 498812 **Parts and service Hotline: +65 6546 6179** FAX : +65 6536 3969 E-mail: haulotteasia@haulotte.com www.haulotte.sg		HAULOTTE MIDDLE EAST FZE PO BOX 293881 Dubaï Airport Free Zone DUBAÏ United Arab Emirates **TEL : +971 (0)4 299 77 35** FAX : +971 (0) 4 299 60 28 E-mail : haulottemiddle-east@haulotte.com www.haulotte-international.com
	HAULOTTE SCANDINAVIA AB Taljegårdsgatan 12 431 53 Mölndal SWEDEN **TEL : +46 31 744 32 90** **FAX : +46 31 744 32 99** E-mail : info@se.haulotte.com spares@se.haulotte.com www.haulotte.se		HAULOTTE TRADING (SHANGHAI) Co. Ltd. #7 WORKSHOP No 191 HUA JIN ROAD MIN HANG DISTRICT SHANGHAI CHINA 201108 **TEL : +86 21 6442 6610** FAX : +86 21 6442 6619 E-mail : haulotteshanghai@haulotte.com www.haulotte.cn		HAULOTTE ARGENTINA Ruta Panamericana Km. 34,300 (Ramal A Escobar) 1615 Gran Bourg (Provincia de Buenos Aires) Argentina **TEL.: +54 033 27 45 21 91** FAX. +54 033 27 45 72 19 E-mail : haulotteargentina@haulotte.com www.haulotte-international.com
	HAULOTTE UK Ltd STAFFORD PARK 6 TELFORD - SHROPSHIRE TF3 3AT **TEL : +44 (0)1952 292753** FAX : + 44 (0)1952 292758 E.mail : salesuk@haulotte.com www.haulotte.co.uk		HAULOTTE GROUP / BILJAX 125 TAYLOR PARKWAY ARCHBOLD, OH 43502 – USA **TEL : +1 419 445 8915** FAX :+1 419 445 0367 Toll free : +1 800 537 0540 E.mail : sales@us.haulotte.com www.haulotte-usa.com		HAULOTTE GROUP 1301 E PATRICK STREET FREDERICK, MD 21701 – USA **TEL : +1 419 445 8915** FAX :+1 419 445 0367 Toll free : +1 800 537 0540 E.mail : sales@us.haulotte.com www.haulotte-usa.com
	HAULOTTE NETHERLANDS BV Koopvaardijweg 26 4906 CV OOSTERHOUT - Nederland **TEL : +31 (0) 162 670 707** FAX : +31 (0) 162 670 710 E.mail info@haulotte.nl		HAULOTTE AUSTRALIA PTY Ltd 46 GREENS ROAD DANDENONG – VIC – 3175 **TEL : +61 (0)3 9792 1000** FAX : +61 (0)3 9792 1011 E.mail : sales@haulotte.com.au		

https://truckmanualshub.com/

https://truckmanualshub.com/

1 - Recommendations

1.1 - OPERATOR'S MANUAL

This operators manual is specific to the HAULOTTE® products listed on the cover page of this manual..

The operator manual does not replace the basic training required for all worksite equipment operators.

HAULOTTE® has compiled this manual to assist in safe and efficient operation of the products covered by the manual.

This manual must be kept on the machine (or in the cab in its storage case. The manual must be available to all operators and must be kept in good condition. Additional copies can be ordered from HAULOTTE Services®.

1.2 - SYMBOLS USED

Symbols are used to alert the operator to safety precautions or to highlight practical information.

Legend

Symbol	Meaning
	Danger : Risk of injury or death (work safety)
	Caution : Risk of material damage (work quality)
	Prohibition relating to work safety and quality
	Reminder : No identified risk, but a reminder of the need for common sense, good practice or pre-action prerequisites
	Cross-reference to another part of the manual (see section or sheet)
	Cross-reference to another manual (see manual)
	Cross-reference to repairs (contact HAULOTTE Services®)
N.B. :	Additional technical information

https://truckmanualshub.com/

1.3 - LABEL COLORS

The potential dangers and any specific regulations are indicated around the product by labels and identification plates.

The labels must be kept in good condition. Additional labels can be obtained from HAULOTTE Services®.

Familiarize yourself with the labels and their respective color codes.

Label color code

Labels	Color	Meaning
	Red	Potentially fatal danger
	Orange	Risk of serious injury
	Yellow	Risk of material damage and/or minor injury
	Other	Additional technical information
	Green	Maintenance operation or information

Label color code-For Russia and the Ukraine only

Labels	Color	Meaning
	Red	Prohibitions - Danger
	Yellow	Warning : Risk of material damage and/or minor injury
	Blue	Precaution
	Blue	Information
	Other	Additional technical information

https://truckmanualshub.com/

2 - Pre-operation instructions

2.1 - GENERAL INSTRUCTIONS

- **The employer has the obligation to issue a driving permit to the operator.**
- **The employer is obliged to inform the operator of the local regulations.**

Do not operate the product in the following situations :

- On soft, unstable or cluttered ground.
- With wind blowing faster than the permissible limit. Check the maximum value in the technical characteristics (Section G 1-Main characteristics). Consult the Beaufort scale (Section A 3.2.4-Risk of uncontrolled movement and overturning).
- Close to power lines. Respect the safety distance (Section A 3.2.3-Risk of electrocution).
- At ambient temperatures higher than 45 °C(113 °F) and lower than -15 °C(5 °F) . Consult HAULOTTE® if it is necessary to work outside this range.
- In an explosive atmosphere.
- During storms (risk of lightning).
- In the presence of strong electromagnetic fields (radar, etc ...).

***N.B.**-:-You are advised to use the machine under "NORMAL" climatic conditions.. If you need to use the machine in climatic conditions likely to cause deterioration (humidity, temperatures outside the recommended ranges, salinity, corrosiveness, atmospheric pressure), contact HAULOTTE Services®. Reduce intervals between servicing.*

***N.B.**-:-Whilst the machine is not in use, care must be taken to ensure that if the machine is not locked in a secure location, that the unit key switch is removed to prevent unauthorised use of the machine.*

2.2 - SPECIFIC INSTRUCTIONS

Do not operate the product in the following situations :

- If the load in the platform exceeds the maximum load authorized. Check the maximum value in the technical characteristics (Section G 1-Main characteristics).
- If the ground slope is greater than the permissible limit. Check the maximum value in the technical characteristics (Section G 1-Main characteristics).
- At night unless the machine is equipped with the optional light.
- If the number of persons exceeds the permissible limit. Check the maximum value in the technical characteristics (Section G 1-Main characteristics)
- If the side force is greater than the permissible force. Check the maximum value in the technical characteristics (Section G 1-Main characteristics)

https://truckmanualshub.com/

3 - Operation instructions

It is preferable to operate the machine on flat, consolidated ground (tarmac, concrete, etc.).

3.1 - PROHIBITIONS

- Never use a faulty machine (hydraulic leaks, worn tires, malfunction).
- Never operate the machine controls suddenly.
- Never place the machine against a structure to hold that structure in place.
- Never use the machine to tow other machines or to drag materials.
- Never expose the batteries or electrical components to water (pressure cleaner, rain).
- Never disable the safety devices.
- Do not make contact with a fixed or mobile obstacle. The contact can cause premature deterioration of the structure and lead to the corruption of certain safety elements.
- Do not climb onto the covers.
- Never use the machine with only an operator in the platform. It must be used by 2 operators.
- Never use the machine when the platform is cluttered.
- Never increase the surface area of the platform by using floor extensions or accessories not authorized by HAULOTTE®.
- Never leave the hydraulic cylinders fully extended or retracted before switching off the machine, or during an extended stop period.

- Never use the machine with material or objects suspended from the guard-rail.
- Never use the machine with elements that can increase the wind force (panels).
- Never increase the working height by using attachments (ladder).
- Never use the guardrail as a means of access for climbing in or out of the platform. The basket can be easily accessed in its low position. For machines fitted with : Steps have been provided for this purpose where required.
- Never climb on the guardrail.
- Do not use the machine if the guard rails are not correctly installed and locked.
- Never use the machine without fitting the sliding (or rotating) middle rail, closing the safety gate or the swing gates beforehand.
- Never use the machine as a crane, material lift or elevator.
- Never use the machine for any other purpose than to transport people, their tools and material to the desired place.
- Never drive fast in narrow or cluttered areas. Keep speed under control in bends.
- Never tow the machine over extended distances (it must be transported on a trailer).

https://truckmanualshub.com/

3.2 - POTENTIAL RISKS

3.2.1 - Risk of command system disturbance

Risk of disrupted movement. Maintain clearance from high voltage lines or magnetic fields.

3.2.2 - Risk of falling

When in the platform, respect the following instructions :

- Carry individual protection equipment adapted to the work conditions and local rules.
- Avoid contact with fixed or mobile obstacles (other machines).
- Ensure that the adjustable midrail is closed (low position and against the guardrails).
- Ensure that the gate is closed and locked (For machines fitted with).
- Hold on securely to the guardrails during elevation and driving.
- Do not sit, stand, or climb on the platform guard rails.
- Ensure that guard rails are correctly installed and locked.
- Always keep your feet firmly on the floor of the platform.
- Remove any trace of oil or grease from the steps, floor, handrail and the guardrails.
- Keep the floor of the platform free of debris.
- Do not leave the platform until it is fully in its stowed position.
- Do not climb on to the platform if the machine is not in the stowed position.

To climb up or climb down from the platform :

- The machine must be completely stowed.
- Face the machine to access the entry opening to the platform
- Keep 3 support points between the steps and the guardrail

https://truckmanualshub.com/

3.2.3 - Risk of electrocution

The machine is not electrically insulated and does not offer any insulation protection.

The risks of electrocution are high in the following situations :

- Close to live power lines, consider the movement of the machine and the sway of the electric power lines particularly in windy conditions.
- In the event that you were to make accidental contact with a high voltage line, wait for the power to the line to be switched off before operating the machine.
- During storms.

Never use the machine as a welding earth.

Maintain a minimum safe distance with regard to power lines and electrical devices.

Respect the local rules and the minimum safety distance from power lines..

Minimum safety distance

Electric voltage	Minimum safety distance	
	Mètre	Feet
0 - 300 V	Avoid contact	
300 V - 50 kV	3	10
50 - 200 kV	5	15
200 - 350 kV	6	20
350 - 500 kV	8	25
500 - 750 kV	11	35
750 - 1000 kV	14	45

***N.B.**-:-This table is applicable, except when the local regulations are more strict.*

3.2.4 - Risk of uncontrolled movement and overturning

When in the platform, respect the following instructions :

- Before operating the machine on any indoor or outdoor surface (premises, bridge, truck, etc.), check that the surface is capable of supporting the combined machine weight and platform capacity. Check the maximum value in the technical characteristics (Section G 1-Main characteristics).
- Remain vigilant of driving direction reversal at the platform. Check driving direction. The front of the machine is located on the opposite side to the step.
- Always ensure that the chassis is never driven any closer than 1 m(3 ft3 in) m to holes, bumps, tilts, obstructions, debris and ground coverings that may hide holes and other dangers.
- During motion direction reversal from the platform or ground control box, the joysticks or switches must be stopped in neutral position before reversing the direction of motion.
- Taking note of the overall load dimensions and weight, place the loads in the centre of the platform or distribute them it a uniform manner.
- If the tilt alarm sounds when the platform is raised, lower platform completely, then reposition machine onto level ground before raising platform.

https://truckmanualshub.com/

- **Do not drive the machine on slopes or tilts beyond the design limits. Check the maximum value in the technical characteristics(Section G 1-Main characteristics).**
- **Do not travel down slopes at high speed.**
- **Do not use the machine (elevation and travel) on an incline greater than that permitted by the slope sensor.**
- **Do not drive in reverse (direction opposite the field of vision).**
- **Never use the machine in winds exceeding the permissible limit.**
- **Do not increase the surface area exposed to wind. The greater the surface area exposed, the more unstable the machine becomes.**

N.B.-:-*The Beaufort scale measures the wind force with a graduation system. A wind speed range at 10 m(32 ft9 in) above flat, clear land is associated with each degree.*

Some models have a zero wind rating and must not be exposed to wind forces. It should also be noted that winds can occur inside buildings if external windows or doors are left open. Refer to the machine identification plate to confirm the allowable wind load on the product being used.

Beaufort scale

Force	Meteorological description	Observed effects	m/s	km/h	mph
0	Calm	Smoke rises vertically.	0 - 0,2	0 - 1	0 - 0,62
1	Very light breeze	Smoke indicates the wind direction.	0,3 - 1,5	1 - 5	0,62 - 3,11
2	Light breeze	Wind felt on the face. Leaves rustle. Weather vanes turn.	1,6 - 3,3	6 - 11	3,72 - 6,84
3	Slight breeze	Leaves and small branches in constant movement. Flags move slightly.	3,4 - 5,4	12 - 19	7,46 - 11,8
4	Nice breeze	Dust and loose papers fly. Small branches bend.	5,5 - 7,9	20 - 28	12,43 - 17,4
5	Nice breeze	Small trees sway. Crested wavelets form on inland waters.	8,0 - 10,7	29 - 38	18,02 - 23,6
6	Cool wind	Large branches shake. Power lines and chimneys 'sing'. It is difficult to use an umbrella.	10,8 - 13,8	39 - 49	24,23 - 30,45
7	Strong cool wind	All trees shake. Walking against the wind becomes difficult.	13,9 - 17,1	50 - 61	31 - 37,9
8	Squall	Some branches break. Generally we cannot walk against the wind.	17,2 - 20,7	62 - 74	38,53 - 45,98
9	Strong squall	The wind causes slight damage to buildings. Tiles and chimney stacks are blown off.	20,8 - 24,4	75 - 88	46,60 - 54,68

https://truckmanualshub.com/

3.2.5 - Risk of burns and explosion

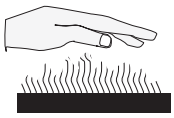

For any intervention on the power sources, wear glasses and protective clothes (acid spray).

N.B.-:-*Acid is neutralised with sodium bicarbonate and water.*

- **Do not work in an explosive or flammable atmosphere (spark, flame, etc.).**
- **Do not touch the hot parts of the hydraulic power source (engine, filters, etc.).**
- **Do not bridge the battery terminals with metallic objects.**
- **Do not service the battery close to a spark, naked flame, glowing tobacco (emissions of gas).**

3.2.6 - Risk of crushing and collision

When in the platform, respect the following instructions :

- During operation, keep all the parts of the body inside the platform.
- Keep hands and limbs well away from the scissor arms.
- Adjust the movement speed to the ground conditions (traffic, slope, etc.).
- Respect stopping distances after the controls are released :
  - 3 m(9 ft10 in) at high speed.
  - 1 m(3 ft3 in) at low speed.
- Ensure there are no obstacles (structure) in the work area.
- Always obtain assistance from a guide on the ground when manoeuvring.
- All the personnel in the platform or on the within the vicinity of the machine must wear Personal Protection Equipment (safety helmet, etc.).
- When moving the machine, ensure that the machine operating areas is free of persons and obstacles.

Do not operate other machines (crane, platform, etc.) in the work area.

Take account of the distance, reduced visibility and blind spots during use of the machine.

https://truckmanualshub.com/

B - Intervenor's responsibility

1 - Owner's (or hirer's) responsibility

The owner (or hirer) has the obligation to inform operators of the instructions contained in the Operator Manual.

The owner (or hirer) has the obligation to renew all manuals or labels that are either missing or in bad condition. Additional copies can be ordered from HAULOTTE Services®.

The owner (or hirer) is responsible for applying the local regulations regarding operation of the machine.

2 - Employer's responsibility

The employer has the obligation to issue a driving permit to the operator.

***N.B.**-:-In accordance with the regulation in the country where the machine is operating, the user must be authorized to drive by the doctor of Labour Ministry.*

Forbid anyone from operating the machine who is :
- **Under the influence of drugs, alcohol, etc..**
- **subject to fits, loss of motor skills, dizziness, etc..**

3 - Trainer's responsibility

The trainer must be qualified to provide training to operators in accordance with applicable local regulations. The training must be given in an obstacle-free area until the trainee is considered competent as defined by the training program undertaken.

4 - Operator's responsibility

The operator must read and understand the contents of this manual and the labels affixed on the machine.

The operator must inform the owner (or hirer) if the manual or any labels are missing or in poor condition, and of any malfunction of the machine.

The operator may only operate the machine for the purpose intended by the manufacturer.

Only authorized and qualified operators may operate HAULOTTE® machines.

All operators must become familiar with and fully understand the emergency controls and how to operate the machine in an emergency as a component of their formal operator training.

The operator has the obligation stop using the machine in the event of malfunction or safety problems on the machine or in the work area and report the problem to his/her supervisor.

https://truckmanualshub.com/

5 - Inspection and maintenance

The inspection and maintenance table below, identifies the role and the responsibilities of each party in periodical machine maintenance..

If the machine is operated in a hostile environment or intensively, increase the frequency of maintenance.

Inspections and maintenance

Type of intervention	Frequency	Person-in-charge	Intervenor	Reference document
Pre-delivery inspection	Before each delivery of sold, hired or resold equipment	Owner (or hirer)	Qualified HAULOTTE Services® technician	Operator's manual
Pre-operation inspection	Before operation or when the operator changes	Operator	Operator	Operator's manual
Periodical preventive maintenance	At the specified intervals (250 hours or 1 year)	Owner (or hirer)	On-site technician or qualified HAULOTTE Services® technician	Maintenance book
Periodical visit	2 times a year or at the latest 6 months after the last periodic visit, and according to the local regulations	Owner (or hirer)	Organization or technician approved by the employer or by the intermediary of HAULOTTE Services® in accordance with the HAULOTTE Services® contract	Maintenance book

https://truckmanualshub.com/

1 - Identification

The manufacturers identification plate fixed on the chassis bears all pertinent information to identify the machine (Please see machine configuration).

For any request for information, intervention or spare parts, specify the type and serial number of the machine.

2 - Main components

COMPACT 8 (COMPACT 2032E) - COMPACT 8W (COMPACT 2247E) - COMPACT 10N (COMPACT 2632E) - COMPACT 10 (COMPACT 2747E) -COMPACT 12 (COMPACT 3347E) - COMPACT 14 (COMPACT 3947E) - Major Component Location Diagram

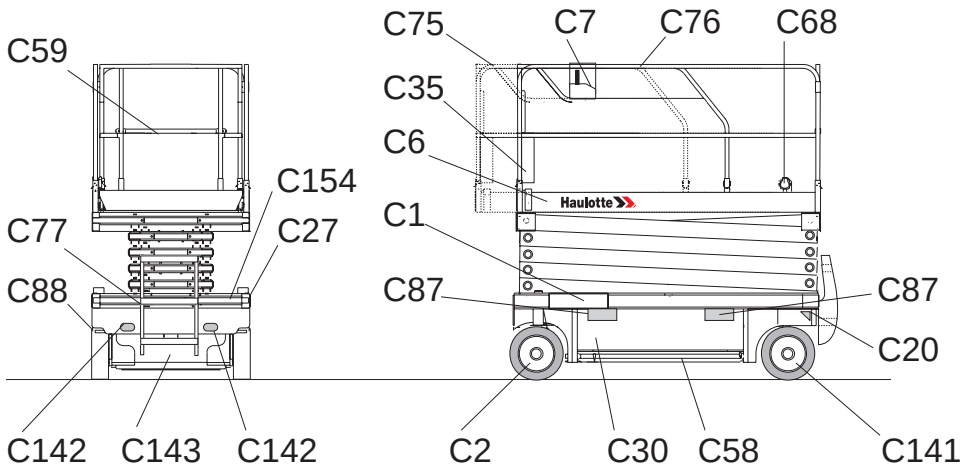

OPTIMUM 6 (OPTIMUM 1530E) - OPTIMUM 8 (OPTIMUM 1930E) - Major Component Location Diagram

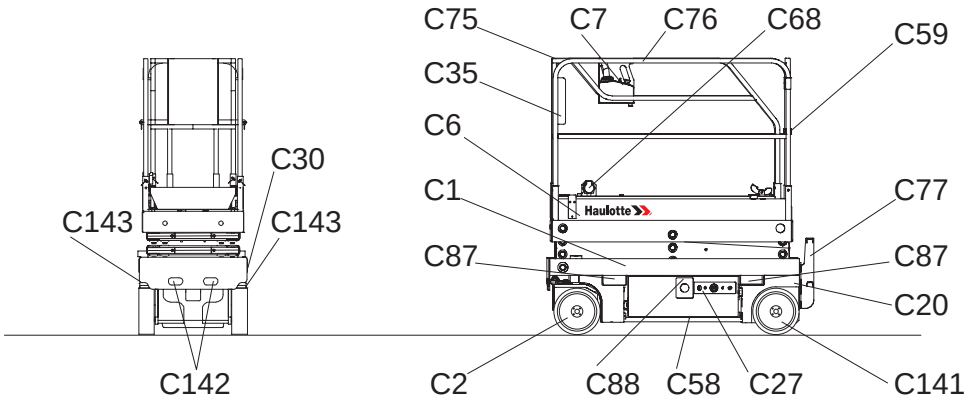

https://truckmanualshub.com/

C - Machine layout

COMPACT 8 (COMPACT 2032E) - COMPACT 8W (COMPACT 2247E) - COMPACT 10N (COMPACT 2632E) - COMPACT 10 (COMPACT 2747E) -COMPACT 12 (COMPACT 3347E) - COMPACT 14 (COMPACT 3947E) - OPTIMUM 6 (OPTIMUM 1530E) - OPTIMUM 8 (OPTIMUM 1930E) - Description of the components

Marking	Description
C1	Chassis
C2	Front driven steering axle
C6	Platform
C7	Platform control box
C20	Tie-down (and/or lifting) points
C27	Ground control box
C30	Hydraulic oil tank
C35	Document holder
C58	Pothole protection
C59	Hinged midrail
C68	Electric socket(Option)
C75	Extension
C76	Guardrail
C77	Platform access ladder
C87	Position of the lift truck forks
C88	Battery drawer lock
C141	Rear wheel
C142	Machine anchorage point
C143	Battery drawer
C154	For Russia and the Ukraine only : Temperature probe relays

https://truckmanualshub.com/

COMPACT 10RTE (COMPACT2668RTE) -COMPACT 12RTE (COMPACT 3368RTE) - Major Component Location Diagram

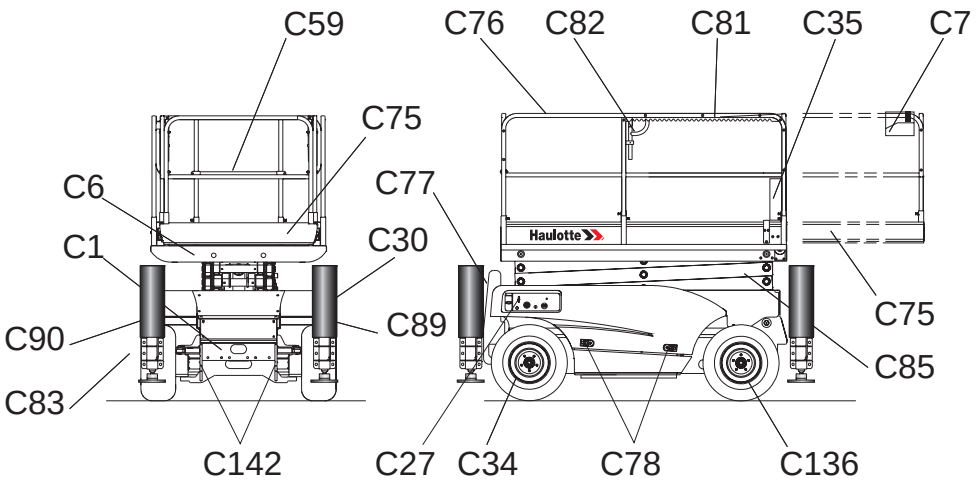

COMPACT 10RTE (COMPACT2668RTE) -COMPACT 12RTE (COMPACT 3368RTE) - Description of the components

Marking	Description
C1	Chassis
C6	Platform
C7	Platform control box
C27	Ground control box
C30	Hydraulic oil tank
C34	Drive wheels
C35	Document holder
C59	Hinged midrail
C75	Extension
C76	Guardrail
C77	Platform access ladder
C78	Hood locking catch
C81	Sliding guardrail
C82	Doeck extension handle
C83	Stabiliser (1)
C85	Scissors
C89	Battery bay (electropump unit)
C90	Battery bay (hydraulic block and filter)
C136	Steer wheels
C142	Machine anchorage point

(1) : Outriggers option only

https://truckmanualshub.com/

3 - Safety devices

3.1 - SLIDING (OR SWINGING) INTERMEDIATE GUARDRAIL

The illustrations in this paragraph do not necessarily correspond to the range of products designated in the manual.

The platform is comprised of guardrails and a sliding mid-rail facilitating platform access.

Do not restrain the sliding midrail to the guard rail.

3.2 - ANCHORAGE POINT (PLEASE SEE MACHINE CONFIGURATION)

The illustrations in this paragraph do not necessarily correspond to the range of products designated in the manual.

The machine is equipped with harness anchorage points points which accept a single harness per anchorage point. The anchorage points are identified by the presence of the Anchorage point label.

If the local regulation imposes the wearing of a harness, use the approved anchorage points.

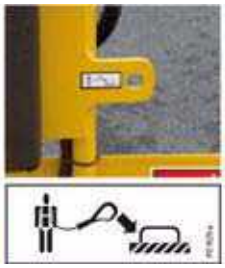

https://truckmanualshub.com/

3.3 - MAINTENANCE SUPPORT

The illustrations in this paragraph do not necessarily correspond to the range of products designated in the manual.

The maintenance support (on both sides of the machine) must be put in place before any maintenance operations.

3.4 - FOLDING GUARDRAILS - OPTION

Before using the machine, make sure that all the guardrails are fixed in the correct positions.

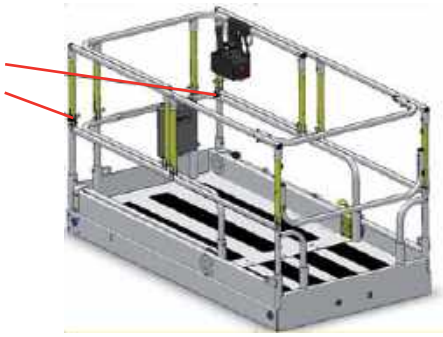

https://truckmanualshub.com/

4 - Labels

4.1 - CLASSIFICATION PLAN

4.1.1 - Red labels

The red labels indicate a potentially fatal danger.

Common labels

R2

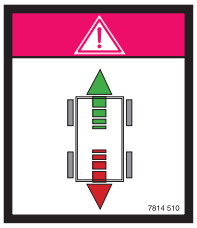

R3

R5

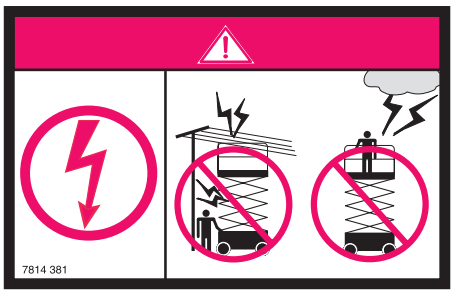

R7

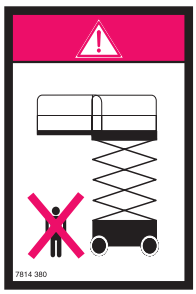

R8

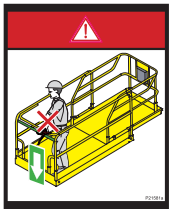

R21

R25

R4

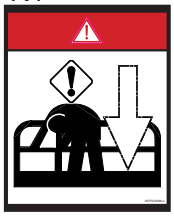

R13

R59

Specific labels COMPACT 8 (COMPACT 2032E)

R1

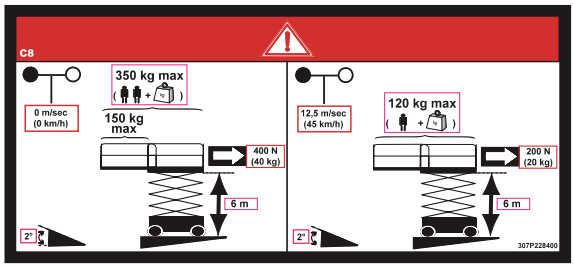

R9

Specific labels COMPACT 8 (COMPACT 2032E) Single load (Option)

R1

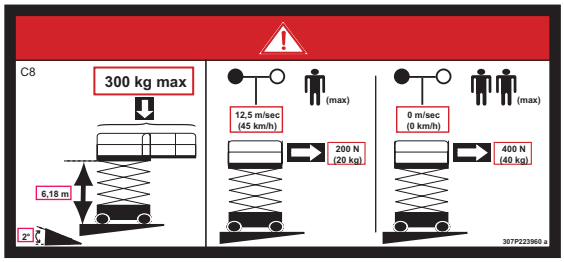

R9

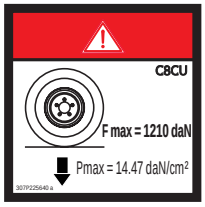

https://truckmanualshub.com/

Specific labels COMPACT 8W (COMPACT 2247E)

R1

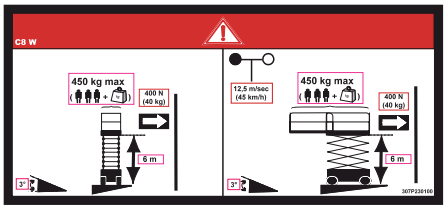

R9

Specific labels COMPACT 10N (COMPACT 2632E)

R1

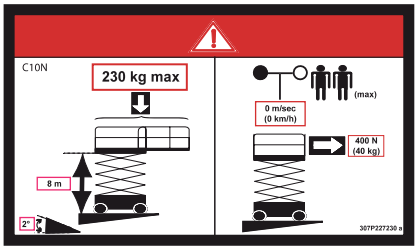

R9

Specific labels COMPACT 10 (COMPACT 2747E)

R1

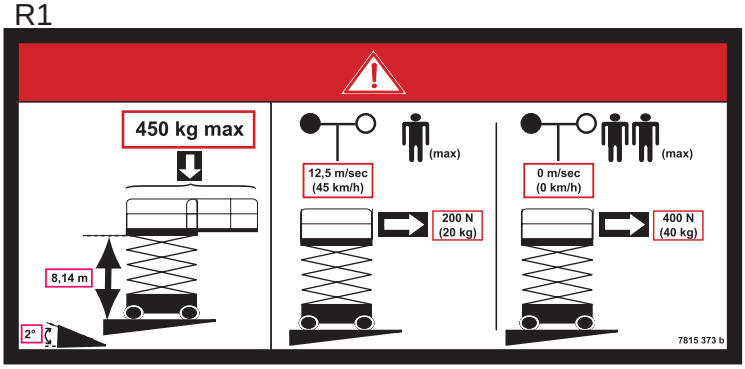

R9

Specific labels COMPACT 12 (COMPACT 3347E)

R1

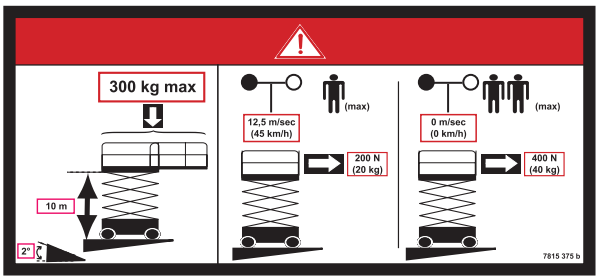

R9

https://truckmanualshub.com/

Specific labels COMPACT 14 (COMPACT 3947E)

R1

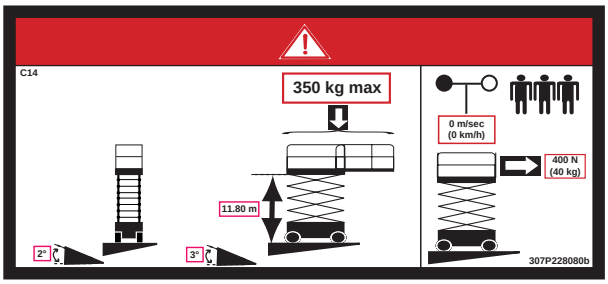

R9

Specific labels OPTIMUM 6 (OPTIMUM 1530E)

R1

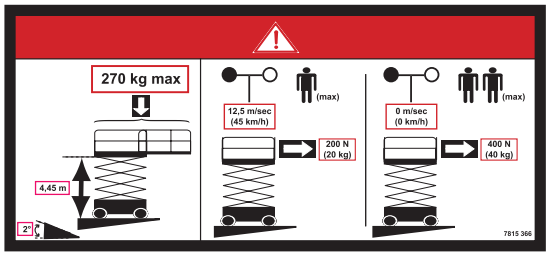

R9

Specific labels OPTIMUM 8 (OPTIMUM 1930E)

R1

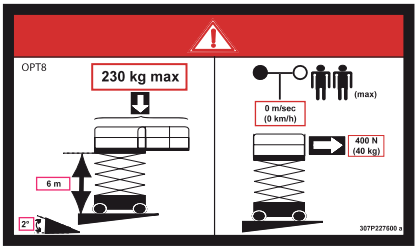

R9

Specific labels COMPACT 10RTE (COMPACT 2668RTE)

R1

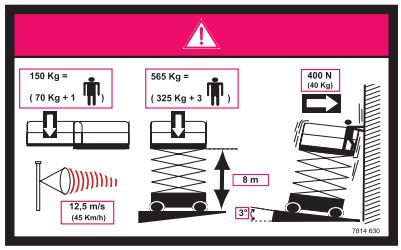

R9

https://truckmanualshub.com/

Specific labels COMPACT 12RTE (COMPACT 3368RTE)

R1

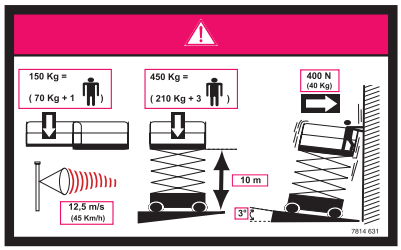

R9

Specific labels COMPACT 10 / 12 RTE (COMPACT 2668 / 3368 RTE) - If outriggers option

R10

https://truckmanualshub.com/

4.1.2 - Orange labels

The orange labels indicate a risk of serious injury.

Common labels - CE

O1

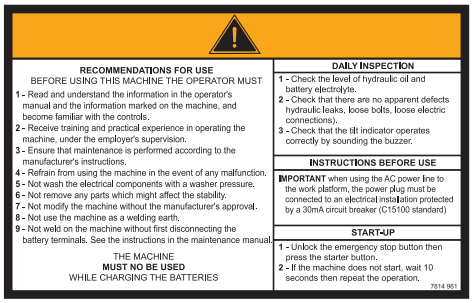

O4

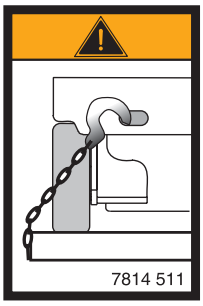

O5

Common labels - ANSI

O1

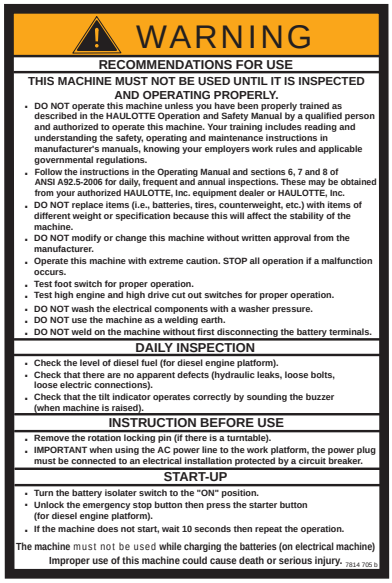

O4

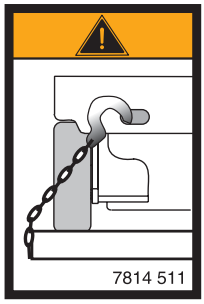

O5

https://truckmanualshub.com/

4.1.3 - Yellow labels

The yellow labels indicate a risk of material damage and/or minor injury.

Common labels

J4

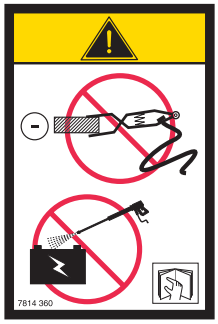

J9

J13

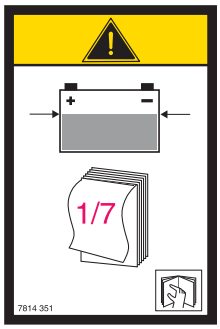

J14

J6 Compact et RTE

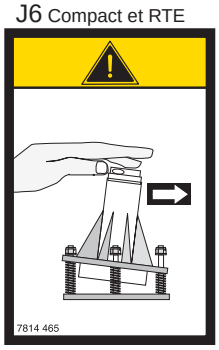

J6 Optimum CE-AS

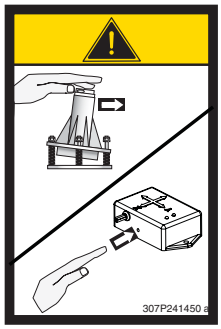

J6 Optimum ANSI-CSA

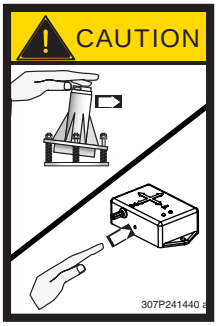

Specific COMPACT 8 (COMPACT 2032E) , COMPACT 8W (COMPACT 2247E) , COMPACT 10N (COMPACT 2632E) , COMPACT 10 (COMPACT 2747E) , COMPACT 12 (COMPACT 3347E) , COMPACT 14 (COMPACT 3947E) , OPTIMUM 6 (OPTIMUM 1530E) and OPTIMUM 8 (OPTIMUM 1930E) labels

J5

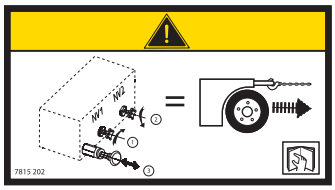

Specific COMPACT 10RTE (COMPACT 2668RTE) and COMPACT 12RTE (COMPACT 3368RTE) labels

J3

J16

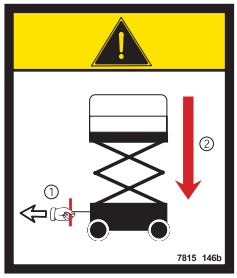

J5

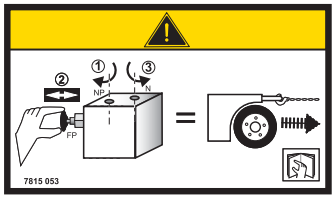

https://truckmanualshub.com/

4.1.4 - Other labels

The other labels provide additional technical information.

Common labels

A1

A2

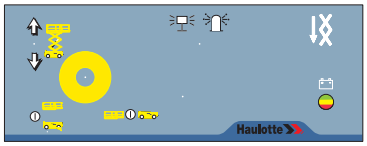

A8

A33

A5

A15

A16

A7

Specific COMPACT 8 (COMPACT 2032E) , COMPACT 8W (COMPACT 2247E) , COMPACT 10N (COMPACT 2632E) , COMPACT 10 (COMPACT 2747E) , COMPACT 12 (COMPACT 3347E) , COMPACT 14 (COMPACT 3947E) , OPTIMUM 6 (OPTIMUM 1530E) and OPTIMUM 8 (OPTIMUM 1930E) labels

A3

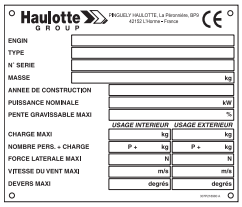

A4

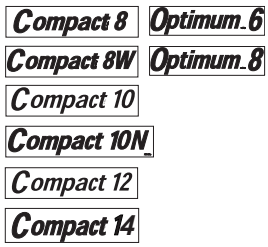

A23

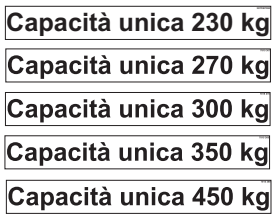

Specific COMPACT 10RTE (COMPACT 2668RTE) and COMPACT 12RTE (COMPACT 3368RTE) labels

A3

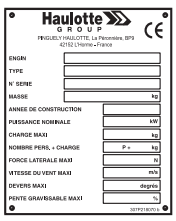

A4

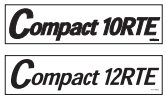

A30

A9

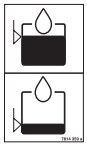

A80

A17

https://truckmanualshub.com/

If outriggers option : Specific COMPACT 10RTE (COMPACT 2668RTE) and COMPACT 12RTE (COMPACT 3368RTE) labels

A1

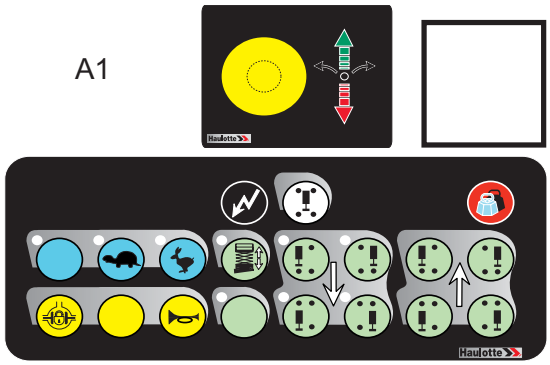

Specific labels AS

J10

J17

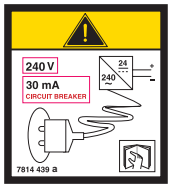

A28

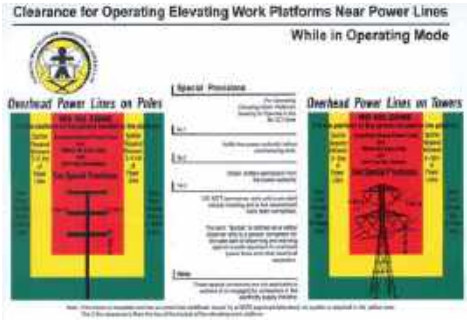

Specific labels AS : COMPACT - OPTIMUM - COMPACT RTE

R13

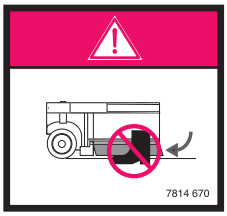

R16 Compact - Optimum

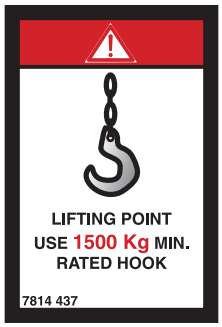

R16 Compact RTE

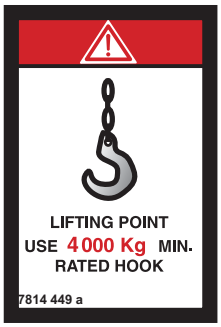

https://truckmanualshub.com/

Specific labels AS : Optimum 8-1

R1

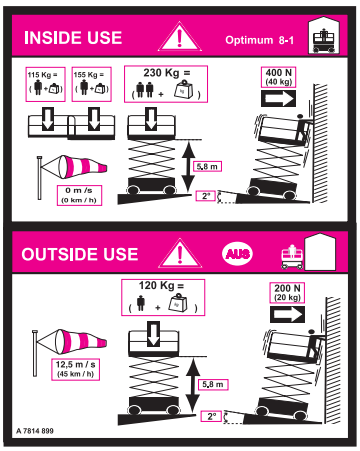

Specific labels AS : Compact 10N-1

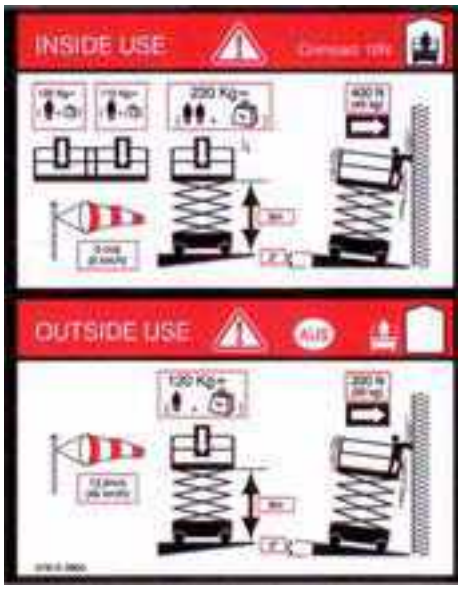

Specific labels ANSI

A22

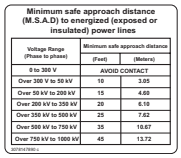

Minimum safe approach distance (M.S.A.D) to energized (exposed or insulated) power lines

Voltage Range (Phase to phase)	Minimum safe approach distance	
	(Feet)	(Meters)
0 to 300 V	AVOID CONTACT	
Over 300 V to 50 kV	10	3.05
Over 50 kV to 200 kV	15	4.60
Over 200 kV to 350 kV	20	6.10
Over 350 kV to 500 kV	25	7.62
Over 500 kV to 750 kV	35	10.67
Over 750 kV to 1000 kV	45	13.72

O3

https://truckmanualshub.com/

Specific labels ANSI : COMPACT 8 (COMPACT 2032E) , COMPACT 8W (COMPACT 2247E) , COMPACT 10N (COMPACT 2632E) , COMPACT 10 (COMPACT 2747E), COMPACT 12 (COMPACT 3347E) and COMPACT 14 (COMPACT 3947E)

O6

A27

500 lbs CAPACITY

660 lbs CAPACITY

770 lbs CAPACITY

990 lbs CAPACITY

A34

BATTERY CHARGER 7814 862

A35

POWER TO PLATFORM 7814 863

Specific labels ANSI : OPTIMUM 6 (OPTIMUM 1530E) and OPTIMUM 8 (OPTIMUM 1930E)

O6

A27

506 lbs CAPACITY

596 lbs CAPACITY

A34

BATTERY CHARGER 7814 862

A35

POWER TO PLATFORM 7814 863

Specific labels ANSI : COMPACT 10RTE (COMPACT 2668RTE) and COMPACT 12RTE (COMPACT 3368RTE)

A27

992 lbs CAPACITY

1245 lbs CAPACITY

A80

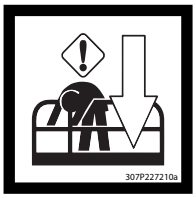

Specific labels, optional

A8

J10

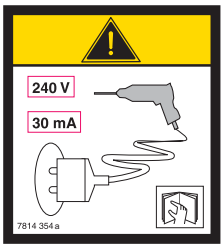

J17

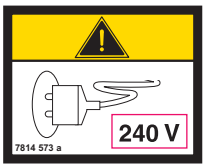

4.1.5 - Green labels

Green labels indicate maintenance, operations or information (CSA standard).

4.1.6 - Blue labels

N.B.-:-*The blue labels indicate information or a precaution to be taken in case of danger.*

https://truckmanualshub.com/

4.2 - IDENTIFICATION

COMPACT - Locations - Standards CE and AS

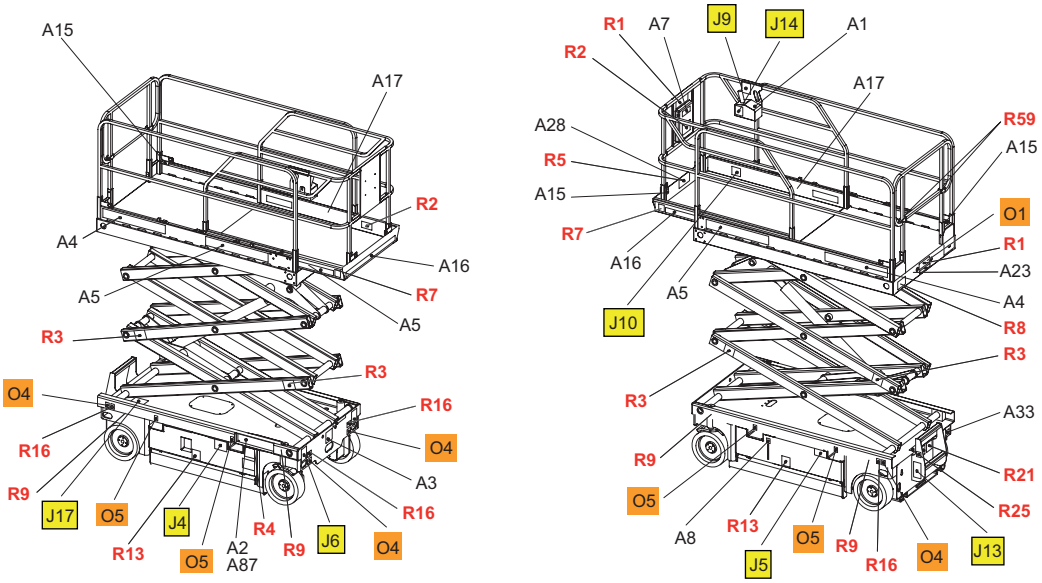

***N.B.**-:-COMPACT 10N-1 (NA) : Only for Australia.*

COMPACT - Label descriptions - Standards CE and AS

Color	Marking	Description	Quantity	
Red	R1	Height of the floor and load	2	For COMPACT 8 (COMPACT 2032E) : 307P228400 For COMPACT 8 (COMPACT 2032E) Single load : 307P223960 For COMPACT 8W (COMPACT 2247E) : 307P230100 For COMPACT 10N (COMPACT 2632E) : 307P227230 For COMPACT 10N-1 (NA) : A7815095 For COMPACT 10 (COMPACT 2747E) : 3078153730 For COMPACT 12 (COMPACT 3347E) : 3078153750 For COMPACT 14 (COMPACT 3947E) : 307P228080
Red	R2	Travel direction	1	3078145100
Red	R3	Risk of crushed hands	4	3078149010
Red	R4	Risk of body crushing	1	307P228390
Red	R5	Danger of electrocution	1	3078143810
Red	R7	Do not park in the work area	2	3078143800
Red	R8	Close the sliding mid-rail	1	307P215810

https://truckmanualshub.com/

C - Machine layout

Color	Marking	Description	Quantity	
Red	R9	Wheel load	4	For COMPACT 8 (COMPACT 2032E) : 307P215530 For COMPACT 8 (COMPACT 2032E) Single load : 307P225640 For COMPACT 8W (COMPACT 2247E) : 307P215550 For COMPACT 10N (COMPACT 2632E) : 307P215570 For COMPACT 10N-1 (NA) : 307P215570 For COMPACT 10 (COMPACT 2747E) : 307P215590 For COMPACT 12 (COMPACT 3347E) : 307P215610 For COMPACT 14 (COMPACT 3947E) : 307P228090
Red	R13	Risk of crushed feet	2	CE standard : 3078144670 AS standard : 3078146700
Red	R16	Load strength on each slings	4	For AS standard only : 3078144370
Red	R21	Protective clothing required	1	3078143610
Red	R25	Battery drawer lock	1	3078145310
Red	R59	Red general danger	2	307P230010
Orange	O1	Operation instructions	1	In french (CE standard) : 3078149030 In english (CE standard) : 3078149610 In english (AS standard) : 3078149660 In spanish (CE standard) : 3078149630 In german (CE standard) : 3078149620 In italian (CE standard) : 3078149640 In danish (CE standard) : 3078149670 In portuguese (CE standard) : 3078149690 In finish (CE standard) : 3078149680 In swidish (CE standard) : 3078149700 In dutch (CE standard) : 3078149650
Orange	O4	Machine tie down points	4	3078145110
Orange	O5	Position of the lift truck forks	4	3078143830
Yellow	J4	Do not use the machine as a welding earth	1	3078143600
Yellow	J5	Brake release	1	3078152020
Yellow	J6	Verification of tilt operation	1	3078144650
Yellow	J9	Stop time during descent	1	In french (CE standard) : 3078144640 In english (Standards CE and AS) : 3078144710 In spanish (CE standard) : 3078144720 In german (CE standard) : 3078144700 In italian (CE standard) : 3078144730 In danish (CE standard) : 3078145320 In portuguese (CE standard) : 3078145850 In finish (CE standard) : 3078145560 In swidish (CE standard) : 3078146010 In dutch (CE standard) : 3078144740
Yellow	J10	Socket	1	CE standard : 3078145730 AS standard : 3078144390
Yellow	J13	Battery verification	1	3078143510
Yellow	J14	Using the machine during battery charging is forbidden	1	3078144630
Yellow	J17	Socket connection	1	CE standard : 3078143540 AS standard : 3078144570
Other	A1	Platform control box	1	3078151230
Other	A2	Ground control box	1	3078145060

https://truckmanualshub.com/

C - Machine layout

Color	Marking	Description	Quantity	
Other	A3	Identification plate	1	3078146180
Other	A4	Machine name logo	2	For COMPACT 8 (COMPACT 2032E) and COMPACT 8 (COMPACT 2032E) Single load : 3078145120 For COMPACT 8W (COMPACT 2247E) : 3078145130 For COMPACT 10N (COMPACT 2632E) and COMPACT 10N-1 (NA) : 3078150900 For COMPACT 10 (COMPACT 2747E) : 3078145140 For COMPACT 12 (COMPACT 3347E) : 3078145150 For COMPACT 14 (COMPACT 3947E) : 307P227250
Other	A5	Small format HAULOTTE® logo	2	307P217080
Other	A7	Read the operation manual	1	3078143680
Other	A8	Hydraulic oil	1	3078143520
Other	A8	Biodegradable oil	1	3078148890
Other	A8	Winter grade hydraulic oil	1	307P223700
Other	A15	Harness anchor point location	4	307P216290
Other	A16	Yellow and black adhesive tape	1	2421808660
Other	A17	Load limitation on extension	2	For Netherlands only For COMPACT 8W (COMPACT 2247E) , COMPACT 10 (COMPACT 2747E) and COMPACT 12 (COMPACT 3947E) : 3078145710
Other	A23	Single load	1	For Italy only For COMPACT 12 (COMPACT 3447E) and COMPACT 8 (COMPACT 2032E) Single load : 307P223970 For COMPACT 8W (COMPACT 2247E) and COMPACT 10 (COMPACT 2747E) : 3078153690 For COMPACT 10N (COMPACT 2632E) : 307P227590 For COMPACT 14 (COMPACT 3947E) : 3078153680
Other	A28	Danger of electrocution	1	For AS standard only : 307P226440
Other	A33	Battery charger socket	1	3078152440
Other	A87	Emergency control panel	1	For Italy only : 307P232500

https://truckmanualshub.com/

OPTIMUM - Locations - Standards CE and AS

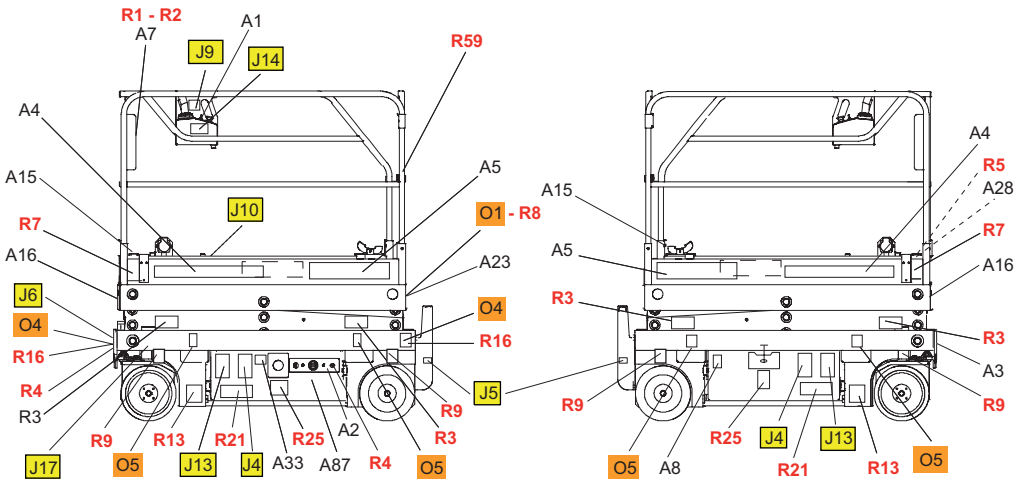

***N.B.**-:-OPTIMUM 8-1 (NA) : Only for Australia.*

OPTIMUM - Label descriptions - Standards CE and AS

Color	Marking	Description	Quantity	
Red	R1	Height of the floor and load	2	For OPTIMUM 6 (OPTIMUM 1530E) : 3078153660 For OPTIMUM 8 (OPTIMUM 1930E) : 3078146740 Except Italy : 307P227600 For OPTIMUM 8-1 (NA) : 307P230030
Red	R2	Travel direction	1	3078145100
Red	R3	Risk of crushed hands	4	3078149010
Red	R4	Risk of body crushing	1	307P228390
Red	R5	Danger of electrocution	1	3078143810
Red	R7	Do not park in the work area	2	3078143800
Red	R8	Close the sliding mid-rail	1	307P215810
Red	R9	Wheel load	4	For OPTIMUM 6 (OPTIMUM 1530E) : 307P215260 For OPTIMUM 8 (OPTIMUM 1930E) and OPTIMUM 8-1 (NA) : 307P215810
Red	R13	Risk of crushed feet	2	CE standard : 3078144670 AS standard : 3078146700
Red	R16	Load strength on each slings	4	For AS standard only : 3078144370
Red	R21	Protective clothing required	1	3078143610
Red	R25	Battery drawer lock	1	3078148240
Red	R59	Red general danger	2	307P230010
Orange	O1	Operation instructions	1	In french (CE standard) : 3078149030 In english (CE standard) : 3078149610 In english (AS standard) : 3078149660 In spanish (CE standard) : 3078149630 In german (CE standard) : 3078149620 In italian (CE standard) : 3078149640 In danish (CE standard) : 3078149670 In portuguese (CE standard) : 3078149690 In finish (CE standard) : 3078149680 In swidish (CE standard) : 3078149700 In dutch (CE standard) : 3078149650
Orange	O4	Machine tie down points	4	3078145110
Orange	O5	Position of the lift truck forks	4	3078143830

https://truckmanualshub.com/

C - Machine layout

Color	Marking	Description	Quantity	
Yellow	J4	Do not use the machine as a welding earth	1	3078143600
Yellow	J5	Brake release	1	3078152020
Yellow	J6	Verification of tilt operation	1	307P241450
Yellow	J9	Stop time during descent	1	In french (CE standard) : 3078144640 In english (Standards CE and AS) : 3078144710 In spanish (CE standard) : 3078144720 In german (CE standard) : 3078144700 In italian (CE standard) : 3078144730 In danish (CE standard) : 3078145320 In portuguese (CE standard) : 3078145850 In finish (CE standard) : 3078145560 In swidish (CE standard) : 3078146010 In dutch (CE standard) : 3078144740
Yellow	J10	Socket	1	CE standard : 3078145730 AS standard : 3078144390
Yellow	J13	Battery verification	1	3078143510
Yellow	J14	Using the machine during battery charging is forbidden	1	3078144630
Yellow	J17	Socket connection	1	CE standard : 3078143540 AS standard : 3078144570
Other	A1	Platform control box	1	3078151230
Other	A2	Ground control box	1	3078150520
Other	A3	Identification plate	1	3078146180
Other	A4	Machine name logo	2	For OPTIMUM 6 (OPTIMUM 1530E) : 3078146720 For OPTIMUM 8 (OPTIMUM 1930E) and OPTIMUM 8-1 (NA) : 3078146730
Other	A5	Small format HAULOTTE® logo	2	307P217080
Other	A7	Read the operation manual	1	3078143680
Other	A8	Hydraulic oil	1	3078143520
Other	A8	Biodegradable oil	1	3078148890
Other	A8	Winter grade hydraulic oil	1	307P223700
Other	A15	Harness anchor point location	4	307P216290
Other	A16	Yellow and black adhesive tape	1	2421808660
Other	A23	Single load	1	For Italy only : 3078153670
Other	A28	Danger of electrocution	1	For AS standard only : 307P226440
Other	A33	Battery charger socket	1	3078152440
Other	A87	Emergency control panel	1	For Italy only : 307P232500

https://truckmanualshub.com/

COMPACT RTE - Locations - Standards CE and AS

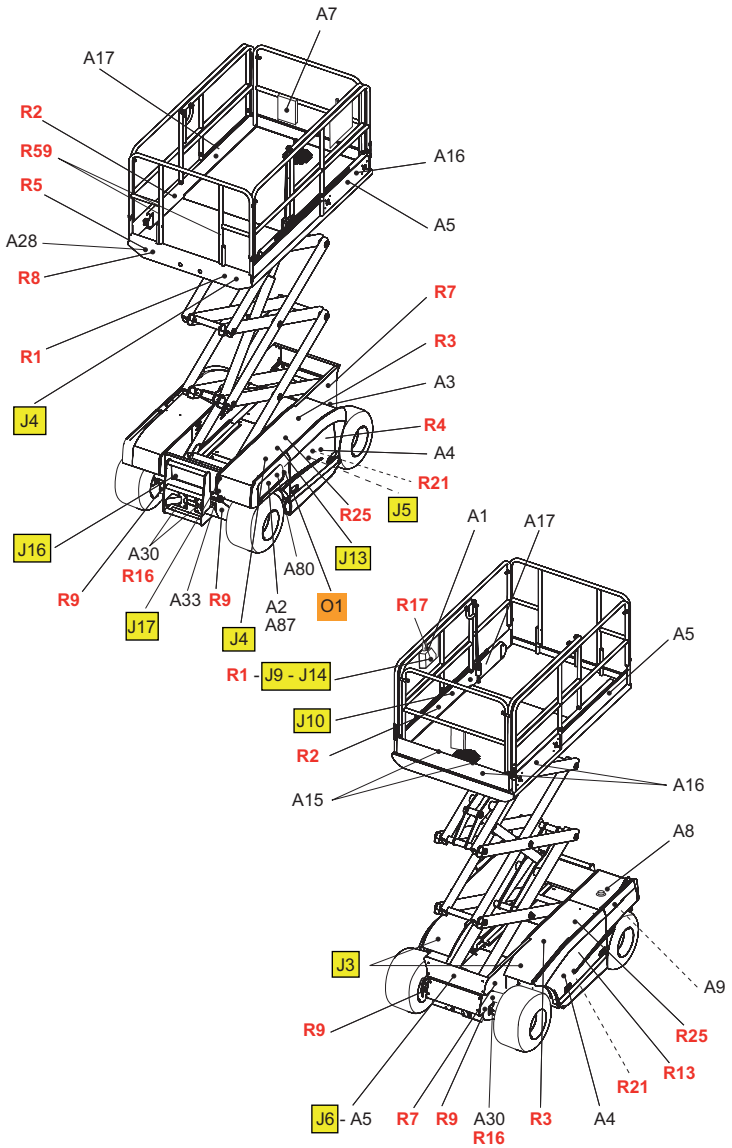

COMPACT RTE - Label descriptions - Standards CE and AS

Color	Marking	Description	Quantity	
Red	R1	Height of the floor and load	2	For COMPACT 10RTE (COMPACT 2668RTE) : 3078146300 For COMPACT 12RTE (COMPACT 3368RTE) : 3078146310
Red	R2	Travel direction	1	3078145100
Red	R3	Risk of crushed hands	4	3078143810
Red	R4	Risk of body crushing	1	307P228390
Red	R5	Danger of electrocution	1	3078143810
Red	R7	Do not park in the work area	2	3078143800
Red	R8	Close the sliding mid-rail	1	307P215810
Red	R9	Wheel load	4	For COMPACT 10RTE (COMPACT 2668RTE) : 3078152400 For COMPACT 12RTE (COMPACT 3368RTE) : 3078152410

https://truckmanualshub.com/

C - Machine layout

Color	Marking	Description	Quantity	
Red	R10	Maximum effort on the stabilizers	4	For COMPACT 10RTE (COMPACT 2668RTE) : 3078153280 For COMPACT 12RTE (COMPACT 3368RTE) : 3078153290
Red	R13	Risk of crushed feet	4	CE standard : 3078144670 AS standard : 3078146700
Red	R16	Load strength on each slings	4	For AS standard only : 3078144490
Red	R17	Do not travel down slopes at high speed	1	For AS standard only : 3078144360
Red	R21	Protective clothing required	1	3078143610
Red	R23	Use of stabilizers	1	3078144260
Red	R24	The cylinders must be retracted	1	3078144280
Red	R25	Battery drawer lock	1	3078148240
Red	R59	Red general danger	2	307P230010
Orange	O1	Operation instructions	1	In french (CE standard) : 3078143420 In english (Standards CE and AS) : 3078143450 In spanish (CE standard) : 3078143430 In german (CE standard) : 3078143440 In italian (CE standard) : 3078143460 In danish (CE standard) : 3078144940 In portuguese (CE standard) : 3078145830 In finish (CE standard) : 3078145540 In swidish (CE standard) : 3078145940 In dutch (CE standard) : 3078143470
Yellow	J3	Do not place your foot on the cover	2	3078143640
Yellow	J4	Do not use the machine as a welding earth	1	3078143600
Yellow	J5	Brake release	1	3078150530
Yellow	J6	Verification of tilt operation	1	3078144650
Yellow	J9	Stop time during descent	1	In french (CE standard) : 3078144640 In english (Standards CE and AS) : 3078144710 In spanish (CE standard) : 3078144720 In german (CE standard) : 3078144700 In italian (CE standard) : 3078144730 In danish (CE standard) : 3078145320 In portuguese (CE standard) : 3078145850 In finish (CE standard) : 3078145560 In swidish (CE standard) : 3078146010 In dutch (CE standard) : 3078144740
Yellow	J10	Socket	1	CE standard : 3078145730 AS standard : 3078144390
Yellow	J13	Battery verification	1	3078143510
Yellow	J14	Using the machine during battery charging is forbidden	1	3078144630
Yellow	J16	Emergency lowering	1	307815140
Yellow	J17	Socket connection	1	CE standard : 3078143540 AS standard : 3078144570
Other	A1	Platform control box	1	307P217640
Other	A1	Platform control box - If outriggers option	1	307P227930
Other	A2	Ground control box	1	307P217630
Other	A3	Identification plate	1	3078146180

https://truckmanualshub.com/

C - Machine layout

Color	Marking	Description	Quantity	
Other	A4	Machine name logo	2	For COMPACT 10RTE (COMPACT 2668RTE) : 3078148680 For COMPACT 12RTE (COMPACT 3368RTE) : 3078148690
Other	A5	Small format HAULOTTE® logo	2	307P217080
Other	A7	Read the operation manual	1	3078143680
Other	A8	Hydraulic oil	1	3078143520
Other	A8	Biodegradable oil	1	3078148890
Other	A8	Winter grade hydraulic oil	1	307P223700
Other	A9	Upper and lower oil level	1	3078143590
Other	A15	Harness anchor point location	4	307P216290
Other	A16	Yellow and black adhesive tape	1	2421808660
Other	A30	Machine tie down points	4	3078147930
Other	A33	Battery charger socket	1	3078152440
Other	A80	Emergency lowering location	1	307P226580
Other	A87	Emergency control panel	1	For Italy only : 307P232500

https://truckmanualshub.com/

C - Machine layout

COMPACT - Locations - Standards ANSI and CSA

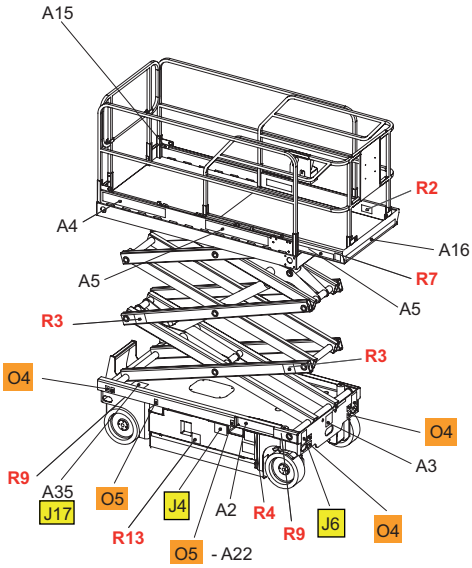

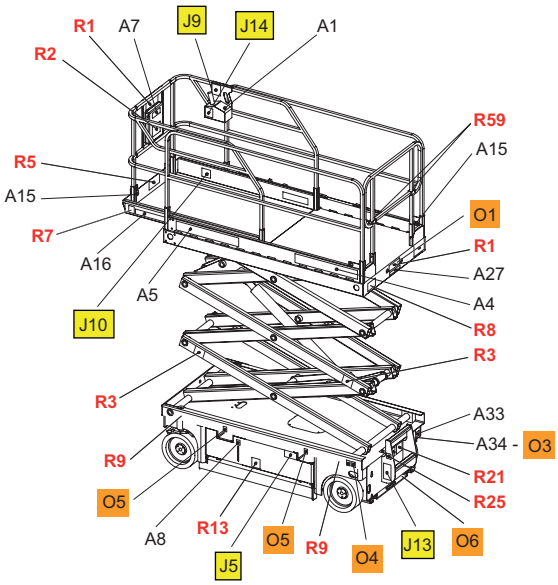

COMPACT - Label descriptions - Standards ANSI and CSA

Color	Marking	Description	Quantity	
Red	R1	Height of the floor and load	2	For COMPACT 8 (COMPACT 2032E) : 3078146970 For COMPACT 8W (COMPACT 2247E) : 3078146990 For COMPACT 10N (COMPACT 2632E) : 3078151010 For COMPACT 10 (COMPACT 2747E) : 3078147010 For COMPACT 12 (COMPACT 3347E) : 3078147020 For COMPACT 14 (COMPACT 3947E) : 307P229170
Red	R2	Travel direction	1	3078147280
Red	R3	Risk of crushed hands	4	3078147250
Red	R4	Risk of body crushing	1	307P229490
Red	R5	Danger of electrocution	1	3078147400
Red	R7	Do not park in the work area	2	3078147380
Red	R8	Close the sliding mid-rail	1	307P215820
Red	R9	Wheel load	4	For COMPACT 8 (COMPACT 2032E) : 307P215540 For COMPACT 8W (COMPACT 2247E) : 307P215560 For COMPACT 10N (COMPACT 2632E) : 307P215580 For COMPACT 10 (COMPACT 2747E) : 307P215600 For COMPACT 12 (COMPACT 3347E) : 307P215620 For COMPACT 14 (COMPACT 3947E) : 307P229200
Red	R13	Risk of crushed feet	2	3078147180
Red	R21	Protective clothing required	1	3078147350
Red	R25	Battery drawer lock	1	3078147150
Red	R59	Red general danger	2	307P230010

https://truckmanualshub.com/

Color	Marking	Description	Quantity	
Orange	O1	Operation instructions	1	3078149050
Orange	O3	Risks of explosion	1	3078148030
Orange	O4	Machine tie down points	4	3078147310
Orange	O5	Position of the lift truck forks	4	3078146950
Orange	O6	Do not park in the work area	1	3078149020
Yellow	J4	Do not use the machine as a welding earth	1	3078147220
Yellow	J5	Brake release	1	3078152030
Yellow	J6	Verification of tilt operation	1	3078147090
Yellow	J10	Socket	1	3078148900
Yellow	J13	Battery verification	1	3078147330
Yellow	J14	Using the machine during battery charging is forbidden	1	3078147420
Yellow	J17	Socket connection	1	3078147580
Other	A1	Platform control box	1	3078151240
Other	A2	Ground control box	1	3078145060
Other	A3	Identification plate	1	307P218930
Other	A4	Machine name logo	2	For COMPACT 8 (COMPACT 2032E) : 3078147040 For COMPACT 8W (COMPACT 2247E) : 3078147060 For COMPACT 10N (COMPACT 2632E) : 3078151050 For COMPACT 10 (COMPACT 2747E) : 3078147070 For COMPACT 12 (COMPACT 3347E) : 3078147080 For COMPACT 14 (COMPACT 3947E) : 307P229100
Other	A5	Small format HAULOTTE® logo	2	307P217080
Other	A7	Read the operation manual	1	3078147290
Other	A8	Hydraulic oil	1	3078147140
Other	A8	Biodegradable oil	1	3078148920
Other	A15	Harness anchor point location	4	3078147950
Other	A16	Yellow and black adhesive tape	1	2421808660
Other	A22	Voltage table	1	3078147890
Other	A27	Permissible load	1	For COMPACT 8 (COMPACT 2032E) and COMPACT 14 (COMPACT 3947E) : 3078150110 For COMPACT 8W (COMPACT 2247E) and COMPACT 10 (COMPACT 2747E) : 3078150120 For COMPACT 10N (COMPACT 2632E) : 3078151060 For COMPACT 12 (COMPACT 3347E) : 3078150130
Other	A33	Battery charger socket	1	307P219120
Other	A34	Battery charger	1	3078148620
Other	A35	Socket connection	1	3078148630

https://truckmanualshub.com/

C - Machine layout

OPTIMUM - Locations - Standards ANSI and CSA

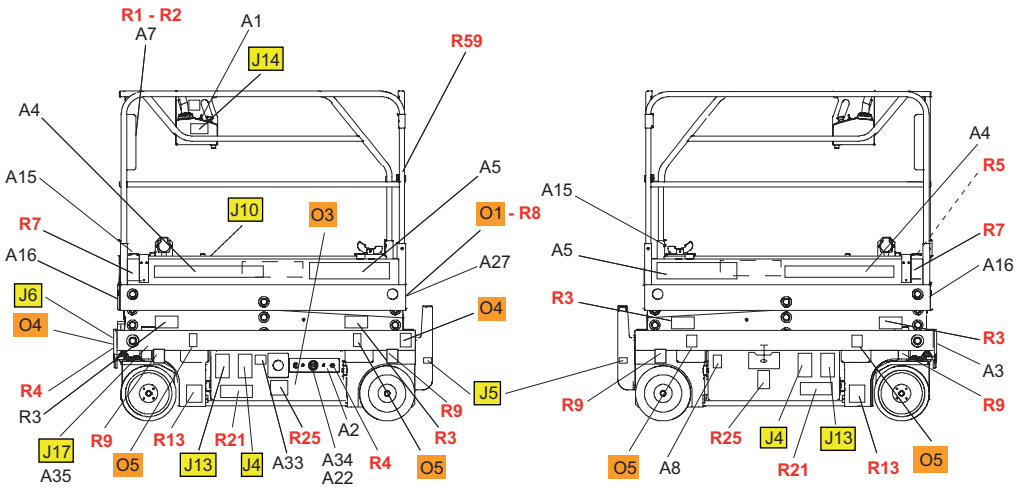

OPTIMUM - Label descriptions - Standards ANSI and CSA

Color	Marking	Description	Quantity	
Red	R1	Height of the floor and load	2	For OPTIMUM 6 (OPTIMUM 1530E) : 3078148440 For OPTIMUM 8 (OPTIMUM 1930E) : 3078148450
Red	R2	Travel direction	1	3078147280
Red	R3	Risk of crushed hands	4	3078147250
Red	R4	Risk of body crushing	1	307P229490
Red	R5	Danger of electrocution	1	3078147400
Red	R7	Do not park in the work area	2	3078147380
Red	R8	Close the sliding mid-rail	1	307P215820
Red	R9	Wheel load	4	For OPTIMUM 6 (OPTIMUM 1530E) : 307P215300 For OPTIMUM 8 (OPTIMUM 1930E) : 307P215310
Red	R13	Risk of crushed feet	2	3078147180
Red	R21	Protective clothing required	1	3078147350
Red	R25	Battery drawer lock	1	3078148460
Red	R59	Red general danger	2	307P230010
Orange	O1	Operation instructions	1	3078149050
Orange	O3	Risks of explosion	1	3078148030
Orange	O4	Machine tie down points	4	3078147310
Orange	O5	Position of the lift truck forks	4	3078146950
Yellow	J4	Do not use the machine as a welding earth	2	3078147220
Yellow	J5	Brake release	1	3078152030
Yellow	J6	Verification of tilt operation	1	307P241440
Yellow	J10	Socket	1	3078148900
Yellow	J13	Battery verification	1	3078147330
Yellow	J14	Using the machine during battery charging is forbidden	1	3078147420
Yellow	J17	Socket connection	1	3078147580
Other	A1	Platform control box	1	3078151240
Other	A2	Ground control box	1	3078150520
Other	A3	Identification plate	1	307P218930

https://truckmanualshub.com/

C - Machine layout

Color	Marking	Description	Quantity	
Other	A4	Machine name logo	2	For OPTIMUM 6 (OPTIMUM 1530E) : 3078148420 For OPTIMUM 8 (OPTIMUM 1930E) : 3078148430
Other	A5	Small format HAULOTTE® logo	2	307P217080
Other	A7	Read the operation manual	1	3078147290
Other	A8	Hydraulic oil	1	3078147140
Other	A15	Harness anchor point location	4	3078147950
Other	A16	Yellow and black adhesive tape	1	2421808660
Other	A22	Voltage table	1	3078147890
Other	A27	Permissible load	1	For OPTIMUM 6 (OPTIMUM 1530E) : 3078150140 For OPTIMUM 8 (OPTIMUM 1930E) : 3078150150
Other	A33	Battery charger socket	1	307P219120
Other	A34	Battery charger	1	3078148620
Other	A35	Socket connection	1	3078148630

https://truckmanualshub.com/

COMPACT RTE - Locations - Standards ANSI and CSA

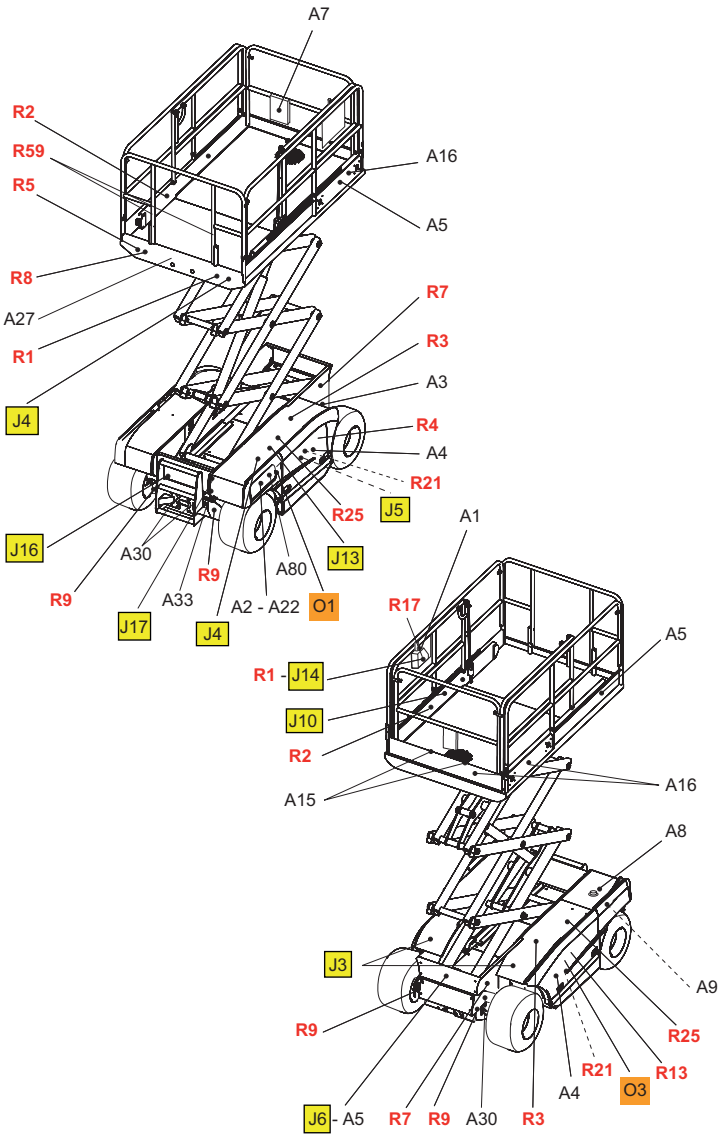

COMPACT RTE - Label descriptions - Standards ANSI and CSA

Color	Marking	Description	Quantity	
Red	R1	Height of the floor and load	2	For COMPACT 10RTE (COMPACT 2668RTE) : 3078148520 For COMPACT 12RTE (COMPACT 3368RTE) : 3078148530
Red	R2	Travel direction	1	3078147280
Red	R3	Risk of crushed hands	4	3078147240
Red	R4	Risk of body crushing	1	307P229490
Red	R5	Danger of electrocution	1	3078147400
Red	R7	Do not park in the work area	2	3078147380
Red	R8	Close the sliding mid-rail	1	307P215820
Red	R9	Wheel load	4	For COMPACT 10RTE (COMPACT 2668RTE) : 307P219100 For COMPACT 12RTE (COMPACT 3368RTE) : 307P219110

https://truckmanualshub.com/

C - Machine layout

Color	Marking	Description	Quantity	
Red	R10	Maximum effort on the stabilizers	4	For COMPACT 10RTE (COMPACT 2668RTE) : 307P217790 For COMPACT 12RTE (COMPACT 3368RTE) : 307P217800
Red	R13	Risk of crushed feet	2	3078147180
Red	R17	Do not travel down slopes at high speed	1	3078144360
Red	R21	Protective clothing required	1	3078147350
Red	R23	Use of stabilizers	1	3078144260
Red	R24	The cylinders must be retracted	1	3078144280
Red	R25	Battery drawer lock	1	3078148460
Red	R59	Red general danger	2	307P230010
Orange	O1	Operation instructions	1	3078149050
Orange	O3	Risks of explosion	1	3078148030
Yellow	J3	Do not place your foot on the cover	2	3078147270
Yellow	J4	Do not use the machine as a welding earth	1	3078147220
Yellow	J5	Brake release	1	3078150540
Yellow	J6	Verification of tilt operation	1	3078147090
Yellow	J10	Socket	1	3078148900
Yellow	J13	Battery verification	1	3078147330
Yellow	J14	Using the machine during battery charging is forbidden	2	3078147420
Yellow	J16	Emergency lowering	1	3078151460
Yellow	J17	Socket connection	1	3078147580
Other	A1	Platform control box If outriggers option	1	307P227930
Other	A1	Platform control box	1	307P218870
Other	A2	Ground control box	1	307P217630
Other	A3	Identification plate	1	307P218930
Other	A4	Machine name logo	2	For COMPACT 10RTE (COMPACT 2668RTE) : 307P219080 For COMPACT 12RTE (COMPACT 3368RTE) : 307P219090
Other	A5	Small format HAULOTTE® logo	2	307P217230
Other	A7	Read the operation manual	1	3078147290
Other	A8	Hydraulic oil	1	3078147140
Other	A9	Upper and lower oil level	1	3078147210
Other	A15	Harness anchor point location	4	3078147950
Other	A16	Yellow and black adhesive tape	1	2421808660
Other	A22	Voltage table	1	3078147890
Other	A27	Permissible load	1	For COMPACT 10RTE (COMPACT 2668RTE) : 3078150090 For COMPACT 12RTE (COMPACT 3368RTE) : 3078150100
Other	A30	Machine tie down points	4	3078147930
Other	A33	Battery charger socket	1	307P219120
Other	A80	Emergency lowering location	1	307P227210

https://truckmanualshub.com/

COMPACT 14 (COMPACT 3947E) - Locations - Russia and the Ukraine version

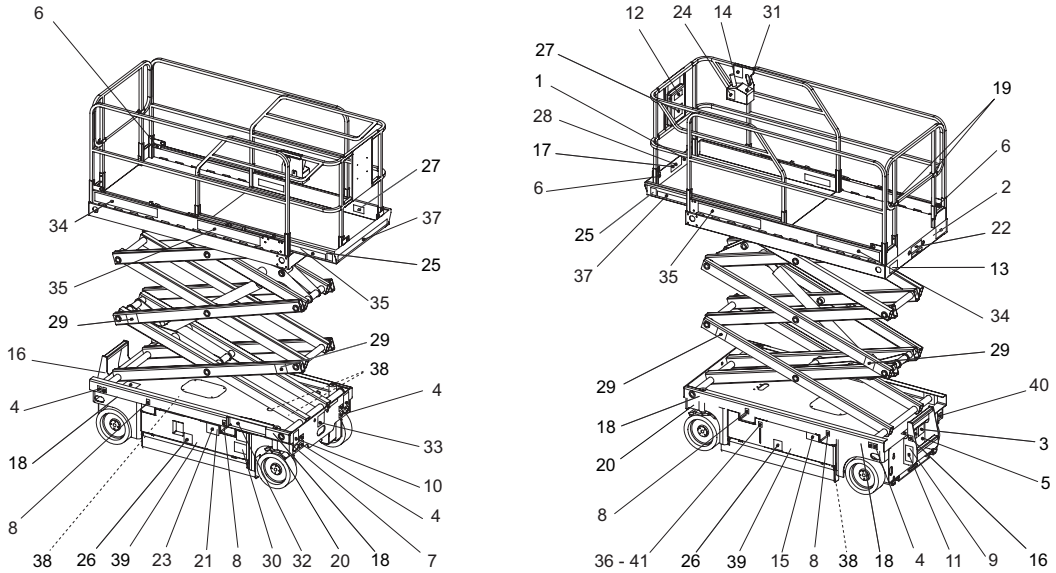

COMPACT 14 (COMPACT 3947E) - Label descriptions - Russia and the Ukraine version

Color	Marking	Description	Quantity	
Blue	1	Height of the floor and load	1	4000015650
Blue	2	Operation instructions	1	For Russia : 4000014360 For Ukraine : 4000014380
Blue	3	Goggles compulsory	1	307P226670
Blue	4	Machine tie down points	4	4000013970
Blue	5	Hand protection compulsory	1	307P226700
Blue	6	Harness anchor point location	3	307P226710
Blue	7	Plug : 24 V	1	307P226740
Blue	8	Position of the lift truck forks	4	4000013830
Blue	9	Plug : 240 V - 30 mA	1	307P227050
Blue	10	Verification of tilt operation	1	For Russia : 307P227060 For Ukraine : 307P227870
Blue	11	Battery verification	1	For Russia : 307P227180 For Ukraine : 307P227860
Blue	12	Read the operation manual	1	For Russia : 307P227190 For Ukraine : 307P227840
Blue	13	Obligatory routing	1	307P227510
Blue	14	Stop time during descent	1	For Russia : 4000011400 For Ukraine : 4000011430
Blue	15	Brake release	1	4000015940
Blue	16	Battery drawer lock	2	4000015580
Red	17	Danger of electrocution	1	307P226960
Red	18	Wheel load	4	307P228090
Red	19	Red general danger	4	307P230010
Red	20	Lubrication point	2	307P219370
Red	21	Pressurised spraying forbidden	1	307P226780
Red	22	Blocking of the sliding bar is forbidden	1	307P226950
Red	23	Do not use the machine as a welding earth	1	307P226970

https://truckmanualshub.com/

Color	Marking	Description	Quantity	
Red	24	Using the machine during battery charging is forbidden	1	307P226980
Red	25	Do not park in the work area	2	4000015610
Red	26	Do not place your foot on the cover	2	4000020390
Yellow	27	Travel direction	1	4000015630
Yellow	28	Electrical danger	1	307P227620
Yellow	29	Risk of crushed hands	4	4000014340
Yellow	30	Risk of body crushing	2	4000014290
Other	31	Platform control box	1	3078151230
Other	32	Ground control box	1	3078145060
Other	33	Identification plate	1	For Russia : 4000016130 For Ukraine : 4000019640
Other	34	Machine name logo	1	307P227250
Other	35	Small format HAULOTTE® logo	1	307P217080
Other	36	Hydraulic oil	1	3078143520
Other	37	Yellow and black adhesive tape	1	2421808660
Other	38	Tamper-proof labe	5	307P227450
Other	39	Smoking forbidden	2	307P226760
Other	40	Plug : 220 V	1	307P227520
Other	41	Upper and lower oil level	1	3078143590
Other		Buzzer	1	307P232520

https://truckmanualshub.com/

5 - Control boxes

***N.B.**-:-The functions are described for the entire range. Refer to the machine model to identify the controls and functions indicators.*

5.1 - GROUND CONTROL BOX - EMERGENCY CONTROL PANEL

General view

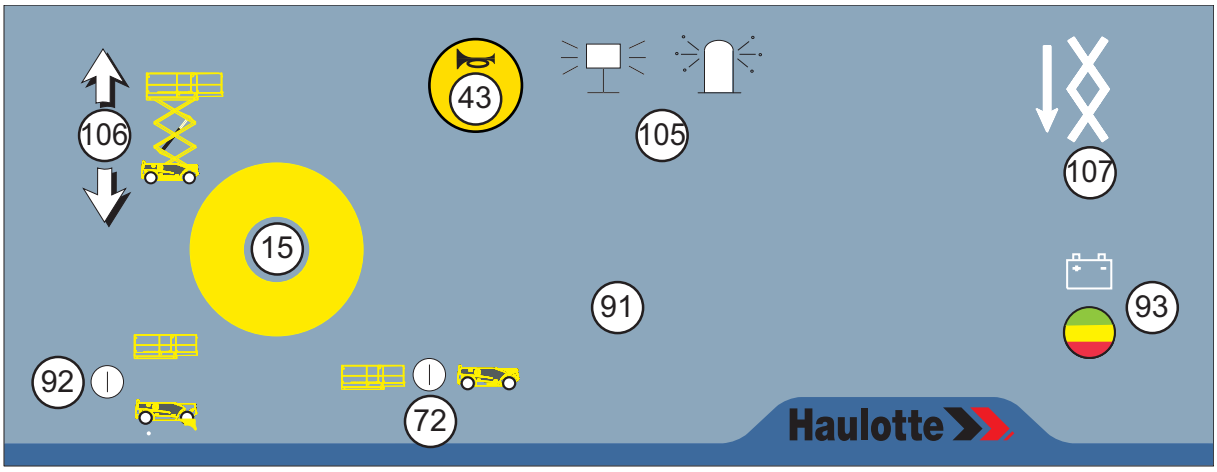

Controls and indicators

Marking	Description	Function
43	Horn selector(1)	Horn
72	Control box energizing key selector(2)	Left : Platform control box energized
		Center : De-energizes control system
		Right : Ground control box energized
91	Hour meter-Battery charge indicator	Total machine running hours-Battery charger status
92	Control box energizing key selector((2.))	Move upwards : Platform control box energized
		Center : De-energizes control system
		Move downwards : Ground control box energized
93	Battery charging indicator((2.))	Battery charge level status during battery charging
105	Flashing light selector	Move upwards : Switching on the flashing light
		Move downwards : Switching off the flashing light
106	Platform elevation / lowering selector((2.))	Move upwards : Platform raises
		Move downwards : Lowering of platform
107	Pull rod for emergency lowering	Pulled out : Lowering of platform
		Release : Stops platform lowering
144	Emergency stop button-Cut-off	Pulled out (activated) : Ground control box energized
		Pushed down (deactivated) : De-energizes control system

(1.) For machines fitted with
(2.) Depending on the machine

https://truckmanualshub.com/

Photo

https://truckmanualshub.com/

5.2 - PLATFORM CONTROL BOX

General view

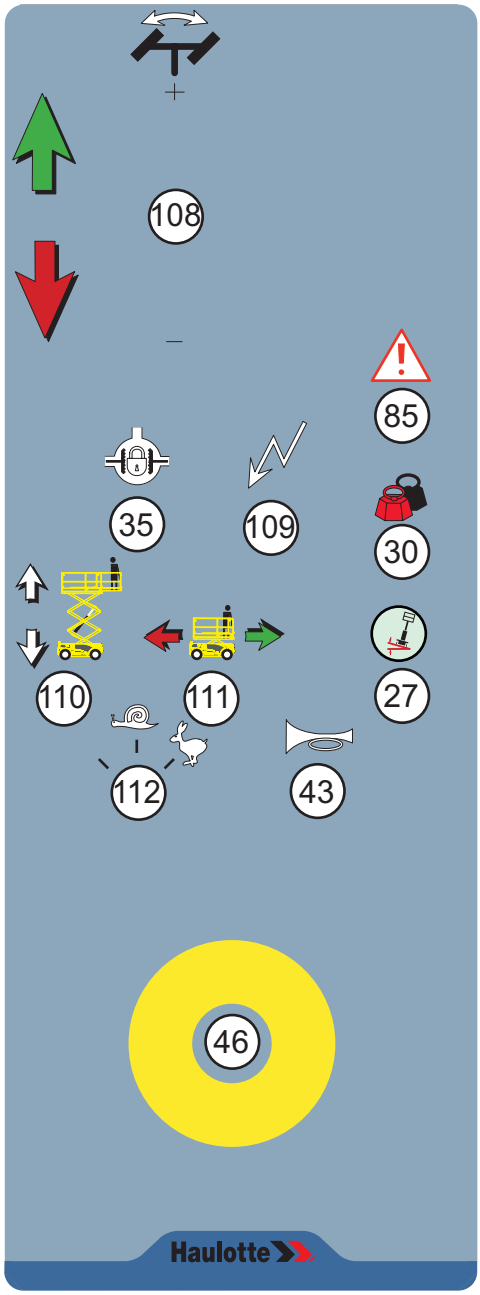

Controls and indicators

Marking	Description	Function
27	Tilt indicator	Machine on excessive slope
30	Overload indicator	Platform overloaded
35	Differential lock selector	Press in and hold (activated) : Maximum drive torque (on difficult or sloping ground)
		Release (deactivated) : Standard torque
43	Horn selector	Horn
46	Emergency stop button	Pulled out (activated) : Ground control box energized
		Pushed down (deactivated) : De-energizes control system
85	Fault indicator	Faulty or tilting or overload machine

https://truckmanualshub.com/

C - Machine layout

Marking	Description	Function
108	Movement joystick	Move forward : Forward drive or platform elevation
		Move backward : Reverse drive or platform lowering
	Front axle steering selector	Press right side of button : Right-hand steering
		Press left side of button : Left-hand steering
109	Power ON indicator-Fault indicator	On : Machine switched on
		Flashing : Fault indicated
110	Elevation / Lowering selection indicator	On : Elevation / Lowering selection activated
		Off : Elevation / Lowering movement is not selected
111	Driving selection indicator	On : Driving selection activated
		Off : Driving movement is not selected
112	3-position selector	high-speed driving
		low-speed driving
		Platform elevation/lowering
145	Platform overload indicator	Platform overload

https://truckmanualshub.com/

If outriggers option - Compact 10/12 RTE (Compact 2668 / 3368 RTE) - General view

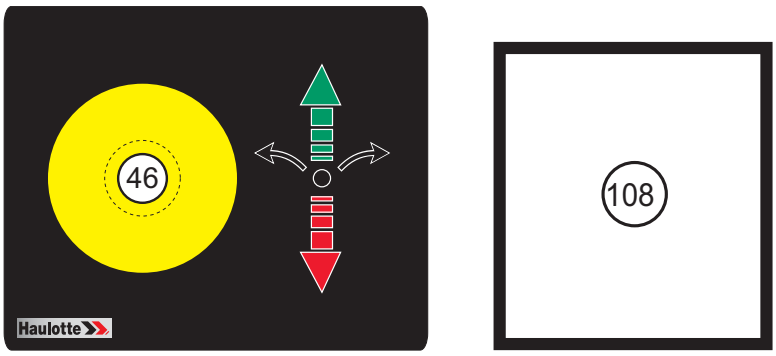

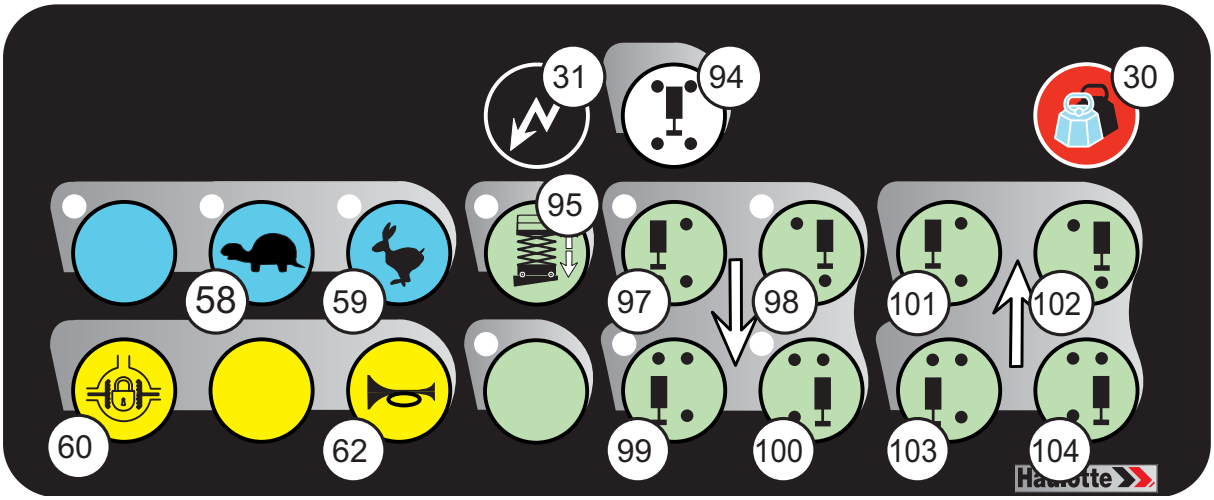

If outriggers option - Compact 10/12 RTE (Compact 2668 / 3368 RTE) - Controls and indicators

Marking	Description	Function
30	Platform overload indicator	Platform overload
31	Power ON indicator	On : Machine switched on
		Off : Machine switched off
46	Emergency stop button	Pulled out (activated) : Ground control box energized
		Pushed down (deactivated) : De-energizes control system
58	Medium-drive speed selector switch and indicator	Pressed down (activated and LED on) : Medium-drive speed selection (difficult ground, slope)
59	High-speed drive selector switch with indicator light	Pressed down (activated and LED on) : High-speed drive selection (for long distance)
60	Differential lock selector switch	Pressed down (activated) : Differential blocking selection
62	Horn selector switch	Pressed down (activated) : Horn
94	Centralized outriggers selector switch	Pressed down (activated) : Automatic stabilizer lowering until the machine is stabilized
95	Platform elevation/lowering selector switch and indicator	Pressed down (activated and LED on) : Platform elevation/ lowering selection
97	Front left stabilizer extension selector switch and indicator	Pressed down (activated) : Stabilizer extended and LED on (continuously: stabilizer extended and set against the ground; rapid flashing: stabilizer extended but not yet set; slow flashing: stabilizer totally extended but not set)
98	Front right stabilizer extension selector switch and indicator	Pressed down (activated) : Stabilizer extended and LED on (continuously: stabilizer extended and set against the ground; rapid flashing: stabilizer extended but not yet set; slow flashing: stabilizer totally extended but not set)

https://truckmanualshub.com/

Marking	Description	Function
99	Rear left stabilizer extension selector switch and indicator	Pressed down (activated) : Stabilizer extended and LED on (continuously: stabilizer extended and set against the ground; rapid flashing: stabilizer extended but not yet set; slow flashing: stabilizer totally extended but not set)
100	Rear right stabilizer extension selector switch and indicator	Pressed down (activated) : Stabilizer extended and LED on (continuously: stabilizer extended and set against the ground; rapid flashing: stabilizer extended but not yet set; slow flashing: stabilizer totally extended but not set)
101	Front left stabilizer retraction selector switch	Pressed down (activated) : Stabilizer retraction and corresponding LED off during lowering P97
102	Front right stabilizer retraction selector switch	Pressed down (activated) : Stabilizer retraction and corresponding LED off during lowering P98
103	Rear left stabilizer retraction selector switch	Pressed down (activated) : Stabilizer retraction and corresponding LED off during lowering P99
104	Rear right stabilizer retraction selector switch	Pressed down (activated) : Stabilizer retraction and corresponding LED off during lowering P100
108	Movement joystick	Move forward : Forward drive or platform elevation
		Move backward : Reverse drive or platform lowering
	Front axle steering selector	Press right side of button : Right-hand steering
		Press left side of button : Left-hand steering

Photo

https://truckmanualshub.com/

C - Machine layout

https://truckmanualshub.com/

D - Operating principle

1 - Description

Machine movements are powered by a hydraulic pump.

The hydraulic pump is powered by an battery-powered electric motor.

To protect the user and the machine, safety systems prevent the operation of the machine beyond its capacities. Section G Technical characteristics

These security systems if activated, immobilize the machine and neutralize the movements.

Poor knowledge of the characteristics and operation of the machine can lead the operator to think that a normal safety operation is a malfunction.

2 - Safety devices

2.1 - ACTIVATION OF CONTROLS

The controls must be validated by a 'Enable Switch' system to activate the different movements.

The 'Enable Switch' system depends on the machine configuration and will consist of one of the following :

- Joystick handle.
- Pedal.
- Validation button.

https://truckmanualshub.com/

2.2 - DRIVE SPEED

All driving speeds are authorised when the machine is folded, (machine in transport position).

The maximum travelling speeds are reduced when the following lifting height is reached :

Machine	Transport configuration limit height	
	Mètre	Feet
OPTIMUM 6 (OPTIMUM 1530E)	1,50	4 ft 11 in
OPTIMUM 8 (OPTIMUM 1930E)	1,60	5 ft 3 in
COMPACT 8 (COMPACT 2032E)	1,60	5 ft 3 in
COMPACT 8W (COMPACT 2247E)	1,75	5 ft 9 in
COMPACT 10N (COMPACT 2632E)	1,55	5 ft 1 in
COMPACT 10 (COMPACT 2747E)	1,80	5 ft 11 in
COMPACT 12 (COMPACT 3747E)	1,85	6 ft 1 in
COMPACT 14 (COMPACT 3947E)	2,45	8 ft 0 in
COMPACT 10/12RTE (COMPACT 2668/3368RTE)	2,70	8 ft 10 in

For C8 (COMPACT 2032E) - C8W (COMPACT 2247E) - C10N (COMPACT2632E) - C10 (COMPACT 2747E) - C12 (COMPACT 3347E) - C14 (COMPACT 3947E) - OPTIMUM 6 (OPTIMUM 1530E) - OPTIMUM 8 (OPTIMUM1930E) :

When not in the above-described transport position, the low speed is engaged automatically.

For COMPACT 10RTE (COMPACT 2668RTE) - COMPACT 12RTE (COMPACT 3368RTE) :

When not in the above-described transport position, the micro speed is engaged automatically.

Driving is cut off if the tilt exceeds the authorized limit.

The electronic variable speed unit controls movement and driving speed.

It receives information from the control joystick concerning the movements to be performed.

It also manages the safety systems status.

Poor knowledge of the characteristics and operation of the machine can lead the operator to think that a normal safety operation is a malfunction.

https://truckmanualshub.com/

2.3 - SPACE FOR OPERATING TEMPERATURE THERMOSTAT

For Russia and the Ukraine only :

Hydraulic energy to perform machine movements is provided by an electric motor driven hydraulic pump.The operating speed of the pump is governed by a speed regulator. If the temperature llimits are reached, an audible alarm alerts the operator. All movements are cut off apart from travel to transport position.

Temperature limits :

- Electric machines : from 0° to + 40°
- Fuel-powered machines : from - 20° to + 40°

Location of operating temperature thermostat

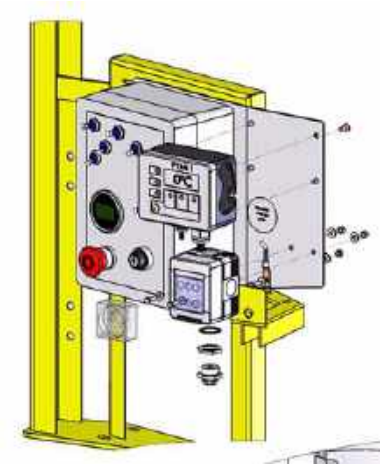

2.4 - LOAD LIMITING IN THE PLATFORM (IF FITTED)

The overload limitation system activates if the heights defined in the “Transport position maximum height” table are exceeded.

If the platform load exceeds the maximum authorized load, no movement is possible from the platform control box.

The platform overload indicator and the buzzer warn the operator that the overload condition exists.

To return the machine to normal operation remove some weight from the platform.

2.5 - ANTI-POTHOLE SAFETY SYSTEM

For C8 (COMPACT 2032E) - C8W (COMPACT 2247E) - C10N (COMPACT 2632E) - C10 (COMPACT 2747E) - C12 (COMPACT 3347E) - C14 (COMPACT 3947E) - OPTIMUM 6 (OPTIMUM 1530E) - OPTIMUM 8 (OPTIMUM 1930E) :

A system of protection against the holes on road is spread automatically when the platform is raised above values quoted in the table Drive speed. Only micro-speed is possible in this position. If the pothole protection are not extended, micro-speed and platform elevation are automatically cut. As soon as the platform is below values quoted in the table Drive speed and that control into large and low speed are engaged, the anti-tipping over devices return automatically

The lifting height depends on the model of the machine. Refer to Drive speed.

https://truckmanualshub.com/

2.6 - BATTERY DISCHARGE INDICATOR-HOUR METER

For : C8 (COMPACT 2032E) - C8W (COMPACT 2247E) -C10N (COMPACT 2632E) -C10 (COMPACT 2747E) -C12 (COMPACT 3347E) -C14 (COMPACT 3947E) -OPTIMUM 6 (OPTIMUM 1530E) -OPTIMUM 8 (OPTIMUM 1930E)

The battery charger-hour recorder combines 3 functions :

- Battery charger status
- Hour meter
- Automatic reset

For : COMPACT 10RTE (COMPACT 2668RTE) -COMPACT 12RTE (COMPACT 3368RTE)

The battery charger-hour recorder combines 3 functions :

- Battery charger status
- Hour meter
- Automatic reset

For : C8 (COMPACT 2032E) - C8W (COMPACT 2247E) -C10N (COMPACT 2632E) -C10 (COMPACT 2747E) -C12 (COMPACT 3347E) -C14 (COMPACT 3947E) -OPTIMUM 6 (OPTIMUM 1530E) -OPTIMUM 8 (OPTIMUM 1930E)

Battery charged : The green diodes are on.

The battery discharges : The diodes go out one after the other.

Battery discharged : The red LED lights up. Elevation is cut and driving is still possible.

For : COMPACT 10RTE (COMPACT 2668RTE) -COMPACT 12RTE (COMPACT 3368RTE)

10 bars are displayed : 2 red-3 orange-2 green

Battery charged : The green diode on the left lights up.

The battery discharges : The diodes light up from left to right.

- Battery discharged 70 % : 1 red diode flashes. The battery needs recharging.
- Battery discharged 80 % : 2 red diodes flash. The batteries must be recharged. The movement ascent is stopped.

2.6.1 - Hour meter

It totals up :

- Machine operating hours (the egg timer flashes).

2.6.2 - Automatic reset

The automatic restart is coming up at a certain voltage level.

The automatic restart doesn't mean that the battery is fully charged.

Only the indicator of the charger gives the real state of the batteries charge.

https://truckmanualshub.com/

2.7 - ON-BOARD CHARGER

The on-board charger is used to charge the semi-drive batteries.

Battery charging starts as soon as external power supply is connected.

The (93) indicator indicates charge status :

- Green LED : Battery 100 % charged.
- Yellow LED : Battery 80 % charged.
- Red LED : Battery in initial charging phase.

If a fault occurs, the indicator flashes in different colours, depending on the type of fault (See machine maintenance book). The audible beep sounds.

2.8 - MANUAL EXTENSION

Machines are equipped with manual extension with several possible positions.

For : C8 (COMPACT 2032E) - C8W (COMPACT 2247E) -C10N (COMPACT 2632E) -C10 (COMPACT 2747E) -C12 (COMPACT 3347E) -C14 (COMPACT 3947E) -OPTIMUM 6 (OPTIMUM 1530E) -OPTIMUM 8 (OPTIMUM 1930E)

- Press the pedal.
- Push to the required notch.

For : COMPACT 10RTE (COMPACT 2668RTE) -COMPACT 12RTE (COMPACT 3368RTE)

- Grasp and lift the handles to 90 °.
- Push the handles to open or close the extension.
- Place the handles in the initial position to lock the extension.

***N.B.**-:-Do not load the extension, to ease manoeuvring.*

The manual extension must be retracted and locked during transport or towing.

2.9 - DRIVE BUZZER

For Russia and the Ukraine only :

Each travel or lifting movement activates a buzzer (horn).

https://truckmanualshub.com/

D - Operating principle

https://truckmanualshub.com/

1 - Recommendations

The manager of the company responsible for the commissioning of the machine must ensure that the machine is fit for the work it is to perform. i.e. that the machine is suitable to carry out the work in complete safety in compliance with this Operator Manual. All managers who are responsible for persons operating the machine, must be familiar with the regulations currently applicable in the country of use and ensure that they are adhered to.

Before using the machine, read the previous chapters in this manual. Ensure that you have understood the following points :

- **Safety precautions.**
- **Operator's responsibilities.**
- **Presentation and the operating principle of the machine.**

N.B.-:-*The machine reaches optimum performance (speed of movement, load capacity) when the temperature of the oil in the hydraulic circuit is greater than 10°C. After a prolonged period of disuse at a lower temperature, lifting and lowering the platform several times without any load and performing a few translation movements is enough to restore the machine's nominal performances.*

2 - Checks before use

Each day and before the beginning of a new work period and on each change of operator, the machine must be subjected to a visual inspection and a complete functional test.

Any repairs required must be performed before the machine is used, its correct operation depends on it.

Find all the function indicators and controls in Section C 5 - Control boxes

2.1 - VISUAL INSPECTIONS

2.1.1 - General mechanical functions

For all the following checks, ensure that the machine is switched off.

Check the following points :

- The presence of the identification plate, labels and operator manual :
  - Their state of cleanliness and visibility.
  - Clean or replace if necessary.

https://truckmanualshub.com/

- Visual state of the machine :
  - Absence of leaks (battery acid, hydraulic oil, etc.). Absence of foreign objects on all surfaces. Call the staff in charge of the maintenance if necessary.
  - No missing or loose parts (bolts, nuts, connectors, cables, etc.). Refer to the "tightening torques" table quoted in the Maintenance Book.
  - Absence of cracks, broken parts, damaged paint. No deformations or other anomalies on the structure's parts.

Example

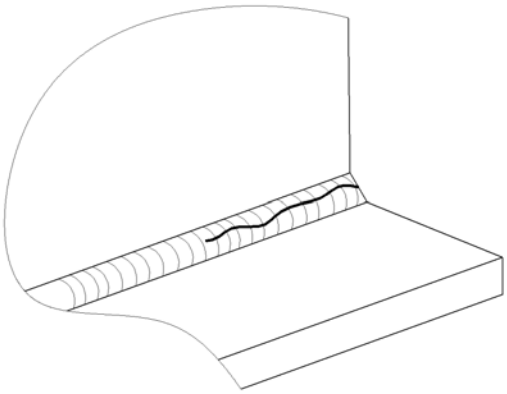

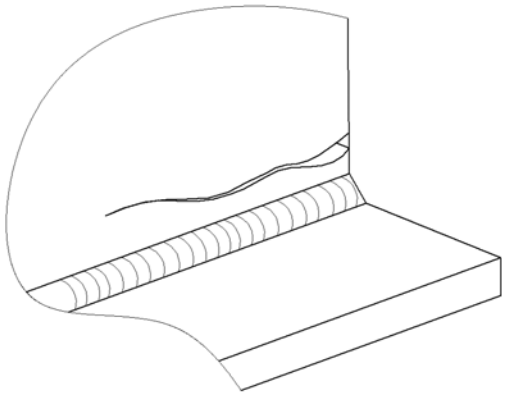

- Cylinders' state :
  - No leaks. Refer to the Maintenance book.
  - No rust and abrasions on the cylinder rod.
  - Absence of foreign objects on all surfaces.
- Steering system's state : wheels, reducers, brakes and tires :
  - No cracks, distortions, damaged paint or other faults
  - No missing or loose bolts. Refer to the "tightening torques" table quoted in the Maintenance Book.
  - Condition of the tyres (cuts, excessive wear, etc.).
- Status of the control boxes :
  - No damage.
  - Back to neutral for all joysticks, selectors, etc..
  - Presence and readablility of the control box labels.
- Movement, safety limit switches :
  - No damage.
  - No missing or loose bolts. Refer to the "tightening torques" table quoted in the Maintenance Book.
  - Absence of foreign objects on all surfaces.
- The state and connection of the electric wires and cables :
  - No damage, wear marks or other faults.
  - No contact between connectors.

https://truckmanualshub.com/

- State of the hydraulic unit and pump :
  - No leaks.
  - No missing or loose parts (bolts, nuts, connectors, cables, etc.).
  - Hydraulic oil filter. Refer to the Maintenance book.
- State of the structure's parts : Arm, platform :
  - No cracks, damaged paint.
  - No distortion in metal components or visible damage.
  - No foreign objects between arms.
  - Guardrails are present and locked in place.
  - Presence and check the original position of the platform control box sliding bar.
- State of the tanks :
  - No leaks.
  - No missing or loose parts (bolts, nuts, connectors, cables, etc.). Top up the oil level, if necessary (Machine in transport position).

2.1.2 - Environment

Section A -Safety precautions.

Check the following points :

- Wind speed (Section G 1-Main characteristics).
- The permissible ground pressure and loading on the machine supporting surface (Section G 1-Main characteristics).
- The maximum permissible load in the platform (Section G 1-Main characteristics).
- The maximum permissible lateral force allowed at the platform (Section G 1-Main characteristics).

https://truckmanualshub.com/

2.2 - FUNCTIONAL TESTS

2.2.1 - Safety features

Features to be tested :

- Operation of the upper and lower emergency stop buttons.
- Operation of the tilt sensor.
- Visual and audible alarms.
- Platform load management system (Where fitted).

For functional test procedures refer to (Section E 3.1-Test procedure).

2.2.2 - Ground control box controls (emergency station)

Refer to the corresponding operations to test the controls in the order mentioned (Section E 3.2-Operation from ground position).

Step	Control
1	Control box energizing key selector(72) or (92)(Depending on the machine)
2	Movements : Platform elevation/lowering(106)
3	Flashing light selector(105)
4	Horn selector 43(1)

(1.) For machines fitted with

2.2.3 - Platform control box controls (driving station)

Refer to the corresponding operations to test the controls in the order mentioned (Section E 3.3-Operations from the platform).

Step	Control
1	Control box energizing key selector 72 or 92 (Depending on the machine)
2	Energizes control system 46
2	Steering (108), driving (112) and indicator (111) selector
3	Driving (108) and steering (112) and 111
4	Drive and steering (108) movements
5	selector : Platform elevation/lowering (110) and (112) or (95)
5	Movement : Platform elevation/lowering (108) or (95)
6	Horn selector 43

https://truckmanualshub.com/

2.3 - PERIODICAL CHECKS

The machine must be inspected on a regular basis at intervals in accordance with the requirements set forth in the Country of use but no less than once per year. The purpose of the inspection is to detect any defect which could lead to an accident during routine use of the machine.

These inspections must be carried out by a competent company or person whose selection is under the responsibility of the manager (Company employee or other).

The inspection results must be recorded in the safety register or machine log book controlled and overseen by the company manager. This register or machine log book and the list of competent repair persons must be made available to the Government Work Inspector and company safety commitee at all times.

N.B.-:- *Section H Intervention register*

2.4 - REPAIRS AND ADJUSTMENTS

Extensive repairs, interventions or adjustments on the safety systems or elements must be performed by a HAULOTTE Services® employee or a HAULOTTE Services®-approved employee with HAULOTTE Services® training, using original spare parts only.

HAULOTTE Services® technicians are specially trained to carry out extensive repairs, interventions or adjustments on the safety systems or elements of HAULOTTE® machines, and carry genuine HAULOTTE spare parts and tools as required, and also provide fully documented reports on all work completed..

HAULOTTE Services® will not take responsibility for any consequential outcomes resulting from inferior services/repairs carried out by others.

HAULOTTE advises you that NO modifications carried out without the written permission of HAULOTTE® will void the HAULOTTE warranty..

2.5 - INSPECTION / TESTING REQUIREMENTS

Intervention to be made after :

- Extensive dismantling and reassembly.
- Repairs involving the machine's essential components.
- Any accident causing stress to the machine.

Perform a fitness for function inspection, a condition inspection and static and dynamic tests (Consult the After-Sales Service HAULOTTE Services®).

https://truckmanualshub.com/

3 - Operation

***N.B.**-:-The functions are described for the entire range. Refer to the machine model to identify the controls and functions indicators.*

Find all the function indicators and controls in Section C 5 - Control boxes

3.1 - TEST PROCEDURE

3.1.1 - Emergency stop switch- button function (cut out)

Ground control box emergency stop button

Step	Action
1	Pull the emergency stop switch- buttons (cut-off) 144, 46
2	Switch the machine on 72 or 92(Depending on the machine).
3	Turn the (72) or (92) control box activation keyed selector switch to the right to energize the ground control box(Depending on the machine). The indicators light up.
4	Push the emergency stop switch- push button (cut-off) 144. The indicators go out.

Platform control box emergency stop button

Step	Action
1	Pull the emergency stop switch- buttons (cut-off) 144, 46
2	Switch the machine on 72 or 92(Depending on the machine).
3	Turn the (72) or (92) control box activation selection key to the left to activate the platform control box(Depending on the machine). The indicators light up.
4	Push the emergency stop switch- push button (cut-off) 46. The indicators go out.

3.1.2 - Tilt sensor switch operation

Machine unfolded, the slope sensor gives an audible signal telling the operator that the machine should not be deployed. In this case, fully lower the platform and reposition the machine on level ground before raising the platform again.

***N.B.**-:-Depending on your machine configuration, outside assistance may be necessary in order to carry out this operation.*

1. Pull out the emergency stop switch-push buttons (cut-out) on the upper and lower control boxes (144, 46).
2. Switch on the machine from the lower control box (72) or (92)(Depending on the machine).
3. Locate the tilt sensor next to the ground control box.
4. Manually tilt and maintain the tilt sensor towards the front for a few seconds (Section C 2-Main components) :
5. The audible beep sounds.
6. For machines fitted with : The slope sensor prevents lifting and driving movements.

https://truckmanualshub.com/

For OPTIMUM 6 (OPTIMUM 1530E) and OPTIMUM 8 (OPTIMUM 1930E) only :
The knob (1) located on the tilt label is used for the autotest.

The autotest mode simulates a slope exceeding the authorized angle. An internal control is carried out.

- Push on the knob (1) (less de 1 s) to launch the autotest.
- The 2 LED flicker during the test. The total duration of the test is 5 s.

Messages delivered by the tilt detector

indicator Status	Description
Lit green LED	Machine in authorized angular position
Blinkling green LED	Machine exceeding the angular limit within the authorized time
LED red lit	Machine exceeding the authorized angular limit
Green LED and reds lit	Fault detector
Green LED and red twinkling	Detector in autotest

***N.B.**-:-Once the test carried out, return under normal operation.*

3.1.3 - Visual and sound alarms

1. Pull the emergency stop switch- buttons (cut-off) (144, 46).
2. Switch the machine on (72) or (92)(Depending on the machine). All of the ground control box indicators light up and a sound signal (beep) is emitted.

https://truckmanualshub.com/

3.1.4 - Weighing system

Check the overload limitation device every 6 following the procedure below :

- Position the machine on a flat and firm surface.
- Stow the machine completely.
- Retract the extensions.
- Use suitable handling equipment to position the test load (see table) in the centre of the platform.

Load table

Model	Test load	Model	Test load
Compact 8 (Compact 2032E)	450 kg (992 lbs)	Compact 14 (Compact 3947E)	450 kg (992 lbs)
Compact 8 CU	400 kg (882 lbs)	Optimum 6 (Optimum 1530E)	350 kg (772 lbs)
Compact 8W (Compact 2247E)	600 kg (1323 lbs)	Optimum 8 (Optimum 1930E)	300 kg (662 lbs)
Compact 10 (Compact 2747E)	600 kg (1323 lbs)	Compact 10RTE (Compact 2668RTE)	750 kg (1654 lbs)
Compact 10N (Compact 2632E)	300 kg (662 lbs)	Compact 12RTE (Compact 3368RTE)	600 kg (1323 lbs)
Compact 12 (Compact 3347E)	400 kg (882 lbs)		

- Pull the emergency stop switch- buttons (cut-off) (144, 46).
- Turn the (72) or (92) control box activation keyed selector switch to the right to energize the ground control box.
- Activate the raising/lowering selector 106 upwards to lift the platform by 0,10 m (4 in) over the specified upper transport position limit. Drive speed
- Stop the movement.
- Check that the platform overload indicator (30) for the upper console is active and that a warning signal (bip) is audible.
- If this result is not obtained, the overload limitation system must be restored to working order. Please refer to the Maintenance book or contact HAULOTTE Services®.

3.1.5 - 8 m(26 ft3 in) drive cut-off (Floor height)

For C10RTE / C12RTE machine only :

1. Always ensure that the chassis is never driven any closer than 2 m(6 ft7 in) m to holes, bumps, tilts, obstructions, debris and ground coverings that may hide holes and other dangers.
2. From the upper control panel, set the gear selector (112) to microspeed position.
3. Raise the platform at 8 m(26 ft3 in) minimum (Floor height)
4. Push the movement joystick (108) forwards to move the machine forwards
5. No travel movement has to be performed from the upper control panel.

https://truckmanualshub.com/

3.2 - OPERATION FROM GROUND POSITION

Ground control box is an auxiliary to be used only in case of emergency.

3.2.1 - Machine start-up

1. Pull the emergency stop button 144.
2. Switch the machine on 72 or 92(Depending on the machine).
3. Turn the key on the control box activation selector switch (72) to the right to energize the ground control box.

3.2.2 - Machine shutdown

- Turn the key of the control box activation selector (72) to the center.
- Push in the emergency stop switch- push button (cut-off)(114).

3.2.3 - Movement control

***N.B.**-:-Hold the (72) control box activation keyed selector switch to perform movements.*

Ground control box controls (emergency station)

Control		Action
Platform elevation/ lowering	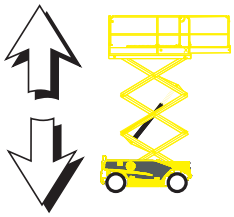	Push the platform elevation / lowering selector (106) upwards to raise the platform.
		Press the platform elevation / lowering selector (106) downwards to lower the platform.
Emergency lowering / Emergency platform lowering halted		Pull the emergency handle (107) to lower the platform.
		Release the emergency handle (107) to stop platform lowering.

***N.B.**-:-Releasing the (72) key or (106) selector stops movement.*

3.2.4 - Other controls

- Switching from the ground control box to the platform control box :

The emergency stop cut-off switch- button (15) must be pulled out.

- **Turn the key on the control box activation selector switch (72) to the left to energize the platform control box. The ground control box controls are de-energized.**

https://truckmanualshub.com/

3.3 - OPERATIONS FROM THE PLATFORM

3.3.1 - Machine start-up

Pull the emergency stop button 46.

3.3.2 - Machine shutdown

Press the emergency stop button (46).

3.3.3 - Movement control

Activate the controls and the 'Enable Switch' system simultaneously to perform the various movements.

Platform control box controls (driving station)

Control	Action
Driving(1).	Push the movement joystick (108) forwards to move the machine forwards.
	Push the movement joystick (108) forwards to reverse the machine.
If outriggers option : Driving(2).	Set the driving speed selector to : • : Low speed (58) • : Fast speed (59) Push the movement joystick (108) forwards to move the machine forwards.
	Set the driving speed selector to : • : Low speed (58) • : Fast speed (59) Push the movement joystick (108) forwards to reverse the machine.
Front-axle steering	Push the front-axle steering selector switch (108) to the right to steer to the right.
	Push the front-axle steering selector switch (108) to the left to steer to the left.
Platform elevation/ lowering	Push the movement joystick (108) forwards to raise the platform.
	Push the movement joystick (108) backwards to lower the platform. (3). (4).

https://truckmanualshub.com/

Control		Action
Drive speed (minimum)		Set the movement selector (112) to for high speed (long distance driving, tarmac, concrete).
		Set the movement selector (112) to for slow driving (short distance, final approach).
If outriggers option : Drive speed (minimum)		Set the movement selector (59) to for high speed (long distance driving, tarmac, concrete).
		Set the movement selector (58) to for slow driving (short distance, final approach).
If outriggers option : Centralised stabilizer		Push the centralised outriggers touch pads (94) until the machine is stabilized (LED on)
If outriggers option : Front left stabilizer extension/retraction		Push the touch pads (97) until the front left stabilizer is set against the ground (LED on). Push the touch pads (101) until the front left stabilizer is totally retracted (LED off).
If outriggers option : Front right stabilizer extension/retraction		Push the touch pads (98) until the front right stabilizer is set against the ground (LED on). Push the touch pads (102) until the front right stabilizer is totally retracted (LED off).

https://truckmanualshub.com/

Control		Action
If outriggers option : Rear left stabilizer extension/retraction	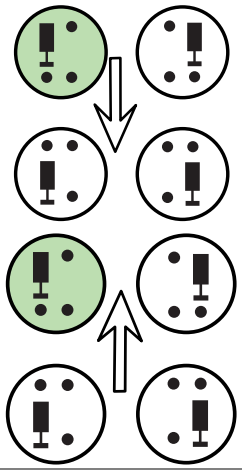	Push the touch pads (99) until the rear left stabilizer is set against the ground (LED on). Push the touch pads (103) until the rear left stabilizer is totally retracted (LED off).
If outriggers option : Rear right stabilizer extension/retraction	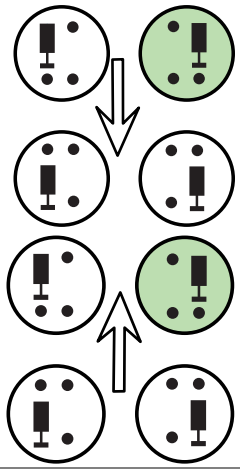	Push the touch pads (100) until the rear right stabilizer is set against the ground (LED on). Push the touch pads (104) until the rear right stabilizer is totally retracted (LED off).

(1.) When the platform is raised above 1,50 m(4 ft11 in), only micro-speed is possible
(2.) When the platform is raised above 1,50 m(4 ft11 in), only micro-speed is possible
(3.) When the platform is lowered,there is a time out lasting several seconds 1,50 m(4 ft11 in) from the ground, to avoid any risk of crushing
(4.) The alarm sounds

***N.B.**-:-The release of the selectors and (or) joysticks causes all movement to stop.*

https://truckmanualshub.com/

3.3.4 - Other controls

- Horn : Push the horn selector (43) to the right to sound the horn. The horn stops when the selector switch is released.
- Differential lock : Press the differential blocking touch pads (35).

***N.B.**-:-If outriggers option :*

- Horn : Push the horn selector (62) to the right to sound the horn. The horn stops when the selector switch is released.
- Differential lock : Press the differential blocking touch pads (60).

https://truckmanualshub.com/

E- Driving

https://truckmanualshub.com/

Find all the function indicators and controls in Section C 5 - Control boxes

1 - Emergency lowering

1.1 - PRINCIPLE

***N.B.**-:-During emergency manoeuvres controlled from the ground with extension out, it is essential to ensure that there is no obstacle under the platform (wall, beam, electric line, etc).*

Emergency lowering is implemented if the operator using the console on the platform needs to be rescued and cannot operate the controls himself even if the machine is operating normally. This situation may arise if the operator is taken ill, is injured or if the control console is inaccessible.

A ground operator trained in using the emergency controls and in possession of the starter key can use the ground control box with the main power source to lower the platform operator.

If the machine is stuck or hooked in surrounding structures or equipment, it is essential to release the operators before intervening on the machine.

1.2 - PROCEDURE

Section A 2-Pre-operation instructions

Lower the platform using the emergency pull rod (107) on the ground control box.

Or :

1. Turn the key on the control box activation selector switch (72) to the right to energize the ground control box. The platform control box controls are de-energized.
2. Lower the platform from the ground control box.
3. Lower the platform using the selector (106) while holding the key (72).
4. Release the key to stop lowering.

***N.B.**-:-Activating the emergency controls listed above deactivates the controls of the console on the platform.*

1.3 - EXTRAORDINARY PROCEDURE

In the context of emergency lowering, it is possible that the emergency stop located on the platform is activated or that safety mechanisms such as the overload limitor are preventing the machine from operating normally.

During an exceptional procedure, for machines which are not fitted with the manual rescue control as described in the "emergency lowering" paragraph, activating the lower console deactivates the emergency pushbutton located on the platform.

***N.B.**-:-During these exceptional manoeuvres, movements are slowed down for safety reasons.*

https://truckmanualshub.com/

2 - Towing

In case of a machine failure, it is possible to tow it to load it onto a trailer.

2.1 - MANUAL BRAKE RELEASE

To tow a broken-down machine, perform manual brake release.

Perform these operations on flat, horizontal ground. Failing that, block the wheels to immobilize the machine. During an operation of disengaging the drive hubs, the machine is in free wheels, the brake system no longer functions.

For : C8 (COMPACT 2032E) - C8W (COMPACT 2247E) - C10N (COMPACT 2632E) - C10 (COMPACT 2747E) - C12 (COMPACT 3347E) - C14 (COMPACT 3947E) - OPTIMUM 6 (OPTIMUM 1530E) - OPTIMUM 8 (OPTIMUM 1930E)

1. Close the tap (NV1).
2. Open the tap (NV2).
3. Push the pump by hand (HP1) until the brake is fully released.
4. Slow towing.

After towing the machine :

5. Close the tap (NV2)
6. Open the tap (NV1).

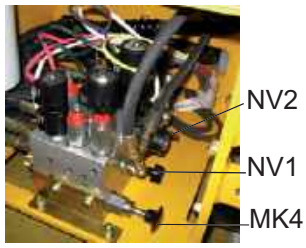

For : COMPACT 10RTE (COMPACT 2668RTE) -COMPACT 12RTE (COMPACT 3368RTE)

7. Close the tap (N1).
8. Open the tap (N2).
9. Push the pump by hand (MK4) until the brake is fully released.
10. Slow towing.

After towing the machine :

11. Close the tap (N2)
12. Open the tap (N1).

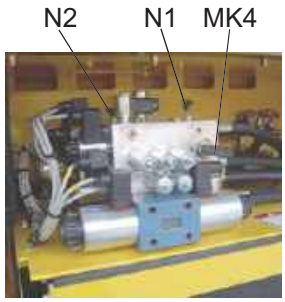

In the towing configuration, the machine is no longer slowed down. Use a drawbar to avoid any risk of accident.

Do not exceed 5 km/h (3,10 mph) .

https://truckmanualshub.com/

2.2 - AUTOMATIC BRAKE RELEASE (OPTION)

To tow a broken down machine, the brakes on the drive wheels can be released using a remote control allowing brake release to be activated remotely.

Perform these operations on flat, horizontal ground. Failing that, block the wheels to immobilize the machine. During an operation of disengaging the drive hubs, the machine is in free wheels, the brake system no longer functions.

1. Activate brake release using the push button control (lower console). The motor pump unit is powered for a brief moment. Brake release is effective after approximately 1 s.
2. As long as the button is activated, the brakes on the machine are released (solenoid valves YV10 and YV11 are supplied).
3. Tow the machine in slow speed.
4. The brakes are reactivated 0,5 s after the push button is released.

In the towing configuration, the machine is no longer slowed down. Use a drawbar to avoid any risk of accident.

Do not exceed 5 km/h (3,10 mph) .

https://truckmanualshub.com/

3 - Loading and unloading

3.1 - PRINCIPLE

3.1.1 - Loading by ramp

To avoid any risk of sliding during loading, ensure that :

- **The loading ramps can bear the load.**
- **The loading ramps are correctly attached.**
- **The loading ramp has sufficient grip.**

To climb the slope, select low driving speed (or).

If the slope is too steep, use a winch in addition to traction.

Never place yourself below or too close to the machines during loading.

A wrong move can lead to the tipping over of the machine and cause serious bodily and material accidents.

3.1.2 - Unloading by ramps

Before operating, check that the machine is in good condition.

If the machine has been damaged during transportation, contact the transporter in writing

1. Remove the tie downs.
2. Start the machine.
3. The lifting equipment ie. slings, shackles, hooks, lifting beam etc. are in good condition and of sufficient capacity.
4. The personnel performing the lift is authorised to complete the lift.

3.1.3 - Loading by lifting

Ensure that :

- The machine is completely stowed.
- The platform must be empty.
- The lifting equipment ie. slings, shackles, hooks, lifting beam etc. are in good condition and of sufficient capacity.
- The personnel performing the lift is authorised to complete the lift.

3.1.4 - Loading by lifting

Prohibited

https://truckmanualshub.com/

3.2 - PUTTING IN TRANSPORT POSITION

The machine must be completely stowed.

1. Check the platform is completely empty.
2. Secure the machine to the anchorage points provided for this purpose.
3. The guardrails must be locked and/or folded back.
4. Extensions must be locked and maintained with straps.

For : COMPACT 8 (COMPACT 2032E) - COMPACT 8W (COMPACT 2247E) -COMPACT 10N (COMPACT 2632E) -COMPACT 10 (COMPACT 2747E) -COMPACT 12 (COMPACT 3347E) -COMPACT 14 (COMPACT 3947E) -OPTIMUM 6 (OPTIMUM 1530E) -OPTIMUM 8 (OPTIMUM 1930E)

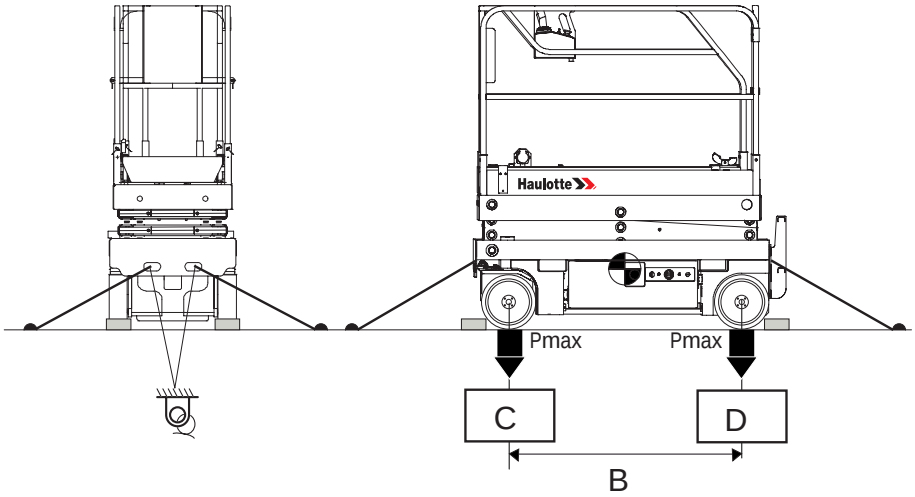

For : COMPACT 10RTE (COMPACT 2668RTE) -COMPACT 12RTE (COMPACT 3368RTE)

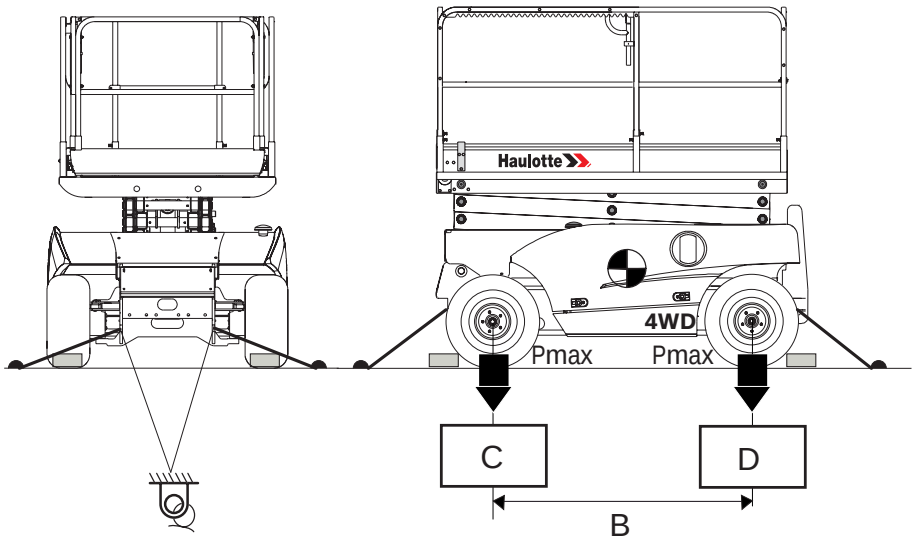

https://truckmanualshub.com/

Loading characteristics

Marking	Description	C8 (COMPACT 2032E)	C8W (COMPACT 2247E)
B	Lateral distance between the wheels(1).	1,86 m(6 ft1 in)	1,86 m(6 ft1 in)
C	Front wheel ground pressure((1.))	13,2 daN/cm² (2,70 lbf/sq.ft)	17,3 daN/cm² (3,54 lbf/sq.ft)
D	Rear wheel ground pressure((1.))	13,2 daN/cm² (2,70 lbf/sq.ft)	17,3 daN/cm² (3,54 lbf/sq.ft)
	Anchorage point		

(1.) Check the technical data in the technical characteristics

Loading characteristics

Marking	Description	C8 (COMPACT 2032E) Single load (Option)
B	Lateral distance between the wheels(1).	1,86 m(6 ft1 in)
C	Front wheel ground pressure((1.))	14,47 daN/cm² (2,96 lbf/sq.ft)
D	Rear wheel ground pressure((1.))	14,47 daN/cm² (2,96 lbf/sq.ft)
	Anchorage point	

(1.) Check the technical data in the technical characteristics

Loading characteristics

Marking	Description	C10N (COMPACT 2632E)	C10 (COMPACT 2747E)
B	Lateral distance between the wheels(1).	1,86 m(6 ft1 in)	1,86 m(6 ft1 in)
C	Front wheel ground pressure((1.))	15,96 daN/cm² (3,27 lbf/sq.ft)	17,7 daN/cm² (3,63 lbf/sq.ft)
D	Rear wheel ground pressure((1.))	15,96 daN/cm² (3,27 lbf/sq.ft)	17,7 daN/cm² (3,63 lbf/sq.ft)
	Anchorage point		

(1.) Check the technical data in the technical characteristics

Loading characteristics

Marking	Description	C12 (COMPACT 3347E)	C14 (COMPACT 3947E)
B	Lateral distance between the wheels(1).	1,86 m(6 ft1 in)	1,86 m(6 ft1 in)
C	Front wheel ground pressure((1.))	19,3 daN/cm² (3,95 lbf/sq.ft)	28,7 daN/cm² (5,88 lbf/sq.ft)
D	Rear wheel ground pressure((1.))	19,3 daN/cm² (3,95 lbf/sq.ft)	28,7 daN/cm² (5,88 lbf/sq.ft)
	Anchorage point		

(1.) Check the technical data in the technical characteristics

https://truckmanualshub.com/

Loading characteristics

Marking	Description	OPTIMUM 6 (OPTIMUM 1530E)	OPTIMUM 8 (OPTIMUM 1930E)
B	Lateral distance between the wheels(1).	1,38 m(4 ft6 in)	1,38 m(4 ft6 in)
C	Front wheel ground pressure((1.))	14,9 daN/cm² (3,05 lbf/sq.ft)	17,8 daN/cm² (3,65 lbf/sq.ft)
D	Rear wheel ground pressure((1.))	14,9 daN/cm² (3,05 lbf/sq.ft)	17,8 daN/cm² (3,65 lbf/sq.ft)
	Anchorage point		

(1.) Check the technical data in the technical characteristics

Loading characteristics

Marking	Description	COMPACT 10RTE (COMPACT 2668RTE)	COMPACT 12RTE (COMPACT 3368RTE)
B	Lateral distance between the wheels(1).	1,87 m(6 ft2 in)	1,87 m(6 ft2 in)
C	Front wheel ground pressure((1.))	7 daN/cm² (1,43 lbf/sq.ft)	7,5 daN/cm² (1,54 lbf/sq.ft)
D	Rear wheel ground pressure((1.))	7 daN/cm² (1,43 lbf/sq.ft)	7,5 daN/cm² (1,54 lbf/sq.ft)
	Anchorage point		

(1.) Check the technical data in the technical characteristics

3.3 - UNLOADING

Before operating, check that the machine is in good condition.

If the machine has been damaged during transportation, contact the transporter in writing.

1. The machine is completely stowed.
2. Remove the tie downs.
3. Start the machine.

3.4 - WARNING

Do not travel down the ramp at a fast speed.

https://truckmanualshub.com/

F - Special procedure

https://truckmanualshub.com/

1 - Main characteristics

Certain options can modify the machine's operating characteristics and its associated safety. If your machine was originally delivered with options fitted, replacing a safety component associated with a particular options not require any particular precautions other than those associated with the installation itself (static test).

Otherwise, it is essential to follow the manufacturer's recommendations below :

- Installation by authorised HAULOTTE® personnel only.
- Update the manufacturer's identification plate.
- Have stability tests carried out by a certified agency/competent person.
- Ensure label compliance.

HAULOTTE® has a continuous improvement policy in place for its product range ; Given this policy, The Company reserves the right to modify their product technical characteristics without notice.

The hand and feet vibration and noise level values indicated in the technical characteristics tables are obtained in the following conditions :

- The maximum quadratic mean value weighted as an acceleration frequency and the total value of the vibrations to which the hand-arm system is exposed have been measured on the products by simulating a cycle representative of normal use. The values meet the requirements of the 2006/42/CE machine directive.
- For electric machines, the sound power level is measured at the drive station under the conditions described by the 2006/42/CE machine directive.
- For machines equipped with internal combustion engines, the noise level guarantees (LWA displayed on the product) and is measured in accordance with the method and the conditions described in Appendix III, Part B, Method 1 and 0 of the 2000/14/CE European directive.

https://truckmanualshub.com/

For C10N-1 - For AS only - Technical characteristics

Machine	C10N-1	
Characteristics	Metric	Imperial
Length of machine in stowed position	2,48 m	(8 ft2 in)
Overall width of machine	0,81 m	(2 ft7 in)
Platform length	2,30 m	(7 ft7 in)
Number of extensions	1	
Machine height	2,17 m	(7 ft1 in)
Maximum overall height of the machine in folded/stowed position guard-rail dismounted	1,33 m	(4 ft4 in)
Maximum ground clearance	0,125 m	(0 ft5 in)
Transport height	1,33 m	(4 ft4 in)
Maximum work height	10,08 m	(33 ft1 in)
Maximum platform height	8,08 m	(26 ft6 in)
Platform width	0,80 m	(2 ft7 in)
Outer turning circle	2,38 m	(7 ft9 in)
Inner turning circle	0,34 m	(1 ft1 in)
Distance between centres of the wheels	1,86 m	(6 ft1 in)
Dumping For AS only	2 °	
Maximum wind speed allowed	Indoor use : 0 km/h Outdoor use : 45 km/h	Indoor use : (0 mph) Outdoor use : (28 mph)
Total weight	2448 kg	(5398 lb)
Maximum platform load	Indoor use : 230 kg Outdoor use : 120 kg	Indoor use : (507 lb) Outdoor use : (265 lb)
Recommended load capacity when extended	120 kg-	(265 lb)-
Manual lateral force at platform	Indoor use : 40 daN(lbf) Outdoor use : Prohibited	Indoor use : daN(90 lbf) Outdoor use : Prohibited
Maximum number of people on the platform	Section C 4.1.1Specific labels C10N-1 (N/A)	
Power source	24 V	
Hydraulic oil tank capacity	25 l	(7 gal US)
Battery	24 V-180 Ah	
Maximum climbable slope	23 %	
Tyre type and/ or size	380 x 127 x 30 - No Marking	
Platform elevation time (when empty)	46 s	
Platform lowering time (when empty)	51 s	
Micro drive speed	1 km/h	(0,6 mph)
Low drive speed	1,5 km/h	(0,9 mph)
High drive speed	3,5 km/h	(2,2 mph)
Hand vibration	<2,5 m/s²	(98 in/s²)
Feet vibration	<0,5 m/s²	(19 in/s²)
Noise emission level	< 70 dB (A)	

https://truckmanualshub.com/

For OPTIMUM 8-1 - For AS only - Technical characteristics

Machine	OPTIMUM 8-1	
Characteristics	Metric	Imperial
Length of machine in stowed position	1,88 m	(6 ft2 in)
Overall width of machine	0,76 m	(0 ft30 in)
Platform length	1,73 m	(5 ft8 in)
Number of extensions	1	
Machine height	2,00 m	(6 ft7 in)
Maximum ground clearance	0,08 m	(0 ft3 in)
Transport height	1,20 m	(3 ft11 in)
Maximum work height	7,76 m	(25 ft6 in)
Maximum platform height	5,76 m	(18 ft11 in)
Platform width	0,70 m	(2 ft4 in)
Outer turning circle	1,70 m	(5 ft7 in)
Inner turning circle	0,34 m	(1 ft1 in)
Distance between centres of the wheels	1,38 m	(4 ft6 in)
Dumping	2 °	
Maximum wind speed allowed	Indoor use : 0 km/h Outdoor use : 45 km/h	Indoor use : (0 mph) Outdoor use : (28 mph)
Total weight	1585 kg	(3495 lb)
Maximum platform load	Indoor use : 230 kg Outdoor use : 120 kg	Indoor use : (507 lb) Outdoor use : (265 lb)
Recommended load capacity when extended	115 kg-	(254 lb)-
Maximum number of people on the platform	Indoor use : 2 Outdoor use : 1 Section C 4.1.1Specific labels OPTIMUM 8-1 (NA)	
Power source	24 V	
Hydraulic oil tank capacity	20 l	(5 gal US)
Operating batteries	24 V-180 Ah	
Maximum climbable slope	25 %	
Tyre type and/ or size	317 x 107,25 - No Marking	
Platform elevation time (when empty)	22 s	
Platform lowering time (when empty)	37 s	
Micro drive speed	0,6 km/h	(0,4 mph)
Low drive speed	1,5 km/h	(0,9 mph)
High drive speed	4,5 km/h	(2,8 mph)
Hand vibration	<2,5 m/s²	(98 in/s²)
Feet vibration	<0,5 m/s²	(19 in/s²)
Noise emission level	< 70 dB (A)	
Manual lateral force at platform	400 N - 90 lbf	

https://truckmanualshub.com/

G - Technical characteristics

For COMPACT 8 (COMPACT 2032E) -Technical characteristics

Machine	COMPACT 8		COMPACT 2032E	
Characteristics	Metric	Imperial	Metric	Imperial
Length of machine in stowed position	2,48 m	(8 ft2 in)	2,48 m	(8 ft2 in)
Overall width of machine	0,81 m	(0 ft32 in)	0,81 m	(0 ft32 in)
Platform length	2,30 m	(7 ft7 in)	2,30 m	(7 ft7 in)
Number of extensions	1			
Machine height	1,99 m	(6 ft6 in)	1,99 m	(6 ft6 in)
Maximum overall height of the machine in folded/stowed position guard-rail dismounted	1,14 m	(3 ft9 in)	1,14 m	(3 ft9 in)
Maximum ground clearance	0,125 m	(0 ft5 in)	0,125 m	(0 ft5 in)
Transport height	1,99 m	(6 ft6 in)	1,99 m	(6 ft6 in)
Maximum work height	8,18 m	(26 ft10 in)	8,18 m	(26 ft10 in)
Maximum platform height	6,18 m	(20 ft3 in)	6,18 m	(20 ft3 in)
Platform width	0,92 m	(3 ft0 in)	0,92 m	(3 ft0 in)
Outer turning circle	2,38 m	(7 ft9 in)	2,38 m	(7 ft9 in)
Inner turning circle	0,34 m	(1 ft1 in)	0,34 m	(1 ft1 in)
Distance between centres of the wheels	1,86 m	(6 ft1 in)	1,86 m	(6 ft1 in)
Rated slope CE - AS	2 °			
Rated slope ANSI - CSA	0 °			
Slope warning ANSI - CSA	2 °			
Maximum wind speed allowed CE - AS	Indoor use : 0 km/h Outdoor use : 45 km/h	Indoor use : (0 mph) Outdoor use : (28 mph)		
Total weight	1655 kg	(3649 lb)	1655 kg	(3649 lb)
Maximum platform load CE - AS	Indoor use : 350 kg Outdoor use : 120 kg	Indoor use : (773 lb) Outdoor use : (265 lb)		
Maximum platform load ANSI - CSA			350 kg	(773 lb)
Recommended load capacity when extended	150 kg-	(331 lb)-	150 kg-	(331 lb)-
Manual lateral force at platform CE - AS	Indoor use : 40 daN Outdoor use : 20 daN	Indoor use : (90 lbf) Outdoor use : (45 lbf)		
Manual lateral force at platform ANSI - CSA			445 N	100 lbf
Maximum number of people on the platform CE - AS	Indoor use : 2 Outdoor use : 1 Section C 4.1.1Specific labels COMPACT 8 (COMPACT 2032E)			
Maximum number of people on the platform ANSI - CSA			2 Section C 4.1.1Specific labels COMPACT 8 (COMPACT 2032E)	
Power source	24 V			
Hydraulic oil tank capacity	25 l	(7 gal US)	25 l	(7 gal US)
Battery	24 V-180 Ah			
Maximum climbable slope	25 %			
Tyre type and/ or size	380 x 127 x 30			

https://truckmanualshub.com/

G - Technical characteristics

Machine	COMPACT 8		COMPACT 2032E	
Characteristics	Metric	Imperial	Metric	Imperial
Platform elevation time (when empty)	37 s			
Platform lowering time (when empty)	41 s			
Low drive speed	1,5 km/h	(0,9 mph)	1,5 km/h	(0,9 mph)
Micro drive speed	1 km/h	(0,6 mph)	1 km/h	(0,6 mph)
High drive speed	3,5 km/h	(2,2 mph)	3,5 km/h	(2,2 mph)
Hand vibration	<2,5 m/s²	(98 in/s²)	<2,5 m/s²	(98 in/s²)
Feet vibration	<0,5 m/s²	(19 in/s²)	<0,5 m/s²	(19 in/s²)
Noise emission level	< 70 dB (A)			

https://truckmanualshub.com/

G - Technical characteristics

For COMPACT 8W (COMPACT 2247E) - Technical characteristics

Machine	COMPACT 8W		COMPACT 2247E	
Characteristics	Metric	Imperial	Metric	Imperial
Length of machine in stowed position	2,45 m	(8 ft0 in)	2,45 m	(8 ft0 in)
Overall width of machine	1,20 m	(3 ft11 in)	1,20 m	(3 ft11 in)
Platform length	2,30 m	(7 ft7 in)	2,30 m	(7 ft7 in)
Number of extensions	1			
Machine height	2,14 m	(7 ft0 in)	2,14 m	(7 ft0 in)
Maximum ground clearance	0,13 m	(0 ft5 in)	0,13 m	(0 ft5 in)
Transport height	1,28 m	(4 ft2 in)	1,28 m	(4 ft2 in)
Maximum work height	8,27 m	(27 ft2 in)	8,27 m	(27 ft2 in)
Maximum platform height	6,27 m	(20 ft7 in)	6,27 m	(20 ft7 in)
Platform width	1,20 m	(3 ft11 in)	1,20 m	(3 ft11 in)
Outer turning circle	2,50 m	(8 ft2 in)	2,50 m	(8 ft2 in)
Inner turning circle	0,20 m	(0 ft7 in)	0,20 m	(0 ft7 in)
Distance between centres of the wheels	1,86 m	(6 ft1 in)	1,86 m	(6 ft1 in)
Rated slope CE - AS	3 °			
Rated slope ANSI - CSA	0 °			
Slope warning ANSI - CSA	2 °			
Maximum wind speed allowed CE - AS	Indoor use : 0 km/h Outdoor use : 45 km/h	Indoor use : (0 mph) Outdoor use : (28 mph)		
Total weight	2030 kg	(4476 lb)	2030 kg	(4476 lb)
Maximum platform load CE - AS	Indoor use : 450 kg Outdoor use : 450 kg	Indoor use : (1000 lb) Outdoor use : (1000 lb)		
Maximum platform load ANSI - CSA			450 kg	(1000 lb)
Recommended load capacity when extended	150 kg	(330 lb)	150 kg	(330 lb)
Manual lateral force at platform CE - AS	Indoor use : 40 daN Outdoor use : 40 daN	Indoor use : (90 lbf) Outdoor use : (90 lbf)		
Manual lateral force at platform ANSI - CSA			666 N	150 lbf
Maximum number of people on the platform CE - AS	Indoor use : 3 Outdoor use : 3 Section C 4.1.1Specific labels COMPACT 8W (COMPACT 2247E)			
Maximum number of people on the platform ANSI - CSA	3 Section C 4.1.1Specific labels COMPACT 8W (COMPACT 2247E)			
Power source	24 V			
Hydraulic oil tank capacity	25 l	(7 gal US)	25 l	(7 gal US)
Battery	24 V-240 Ah			
Maximum climbable slope	23 %			
Tyre type and/ or size	380 x 127 x 30			
Platform elevation time (when empty)	44 s			

https://truckmanualshub.com/

G - Technical characteristics

Machine	COMPACT 8W		COMPACT 2247E	
Characteristics	Metric	Imperial	Metric	Imperial
Platform lowering time (when empty)	56 s			
Low drive speed	1,5 km/h	(0,9 mph)	1,5 km/h	(0,9 mph)
Micro drive speed	1 km/h	(0,6 mph)	1 km/h	(0,6 mph)
High drive speed	3,5 km/h	(2,2 mph)	3,5 km/h	(2,2 mph)
Hand vibration	<2,5 m/s²	(98 in/s²)	<2,5 m/s²	(98 in/s²)
Feet vibration	<0,5 m/s²	(19 in/s²)	<0,5 m/s²	(19 in/s²)
Noise emission level	< 70 dB (A)			

https://truckmanualshub.com/

G - Technical characteristics

For COMPACT 10N (COMPACT 2632E) - Technical characteristics

Machine	COMPACT 10N		COMPACT 2632E	
Characteristics	Metric	Imperial	Metric	Imperial
Length of machine in stowed position	2,48 m	(8 ft2 in)	2,48 m	(8 ft2 in)
Overall width of machine	0,81 m	(2 ft8 in)	0,81 m	(2 ft8 in)
Platform length	2,30 m	(7 ft7 in)	2,30 m	(7 ft7 in)
Number of extensions	1			
Machine height	2,17 m	(7 ft1 in)	2,17 m	(7 ft1 in)
Maximum overall height of the machine in folded/stowed position guard-rail dismounted	1,33 m	(4 ft4 in)	1,33 m	(4 ft4 in)
Maximum ground clearance	0,125 m	(0 ft5 in)	0,125 m	(0 ft5 in)
Transport height	1,33 m	(4 ft4 in)	1,33 m	(4 ft4 in)
Maximum work height	10,08 m	(33 ft1 in)	8 m	(26 ft3 in)
Maximum platform height	8,08 m	(24 ft6 in)	8 m	(26 ft3 in)
Platform width	0,80 m	(2 ft7 in)	0,80 m	(2 ft7 in)
Outer turning circle	2,38 m	(7 ft9 in)	2,38 m	(7 ft9 in)
Inner turning circle	0,34 m	(1 ft1 in)	0,34 m	(1 ft1 in)
Distance between centres of the wheels	1,86 m	(6 ft1 in)	1,86 m	(6 ft1 in)
Rated slope CE - AS	2 °			
Rated slope ANSI - CSA			0 °	
Slope warning ANSI - CSA			2 °	
Maximum wind speed allowed CE - AS	Indoor use : 0 km/h Outdoor use : 0 km/h	Indoor use : (0 mph) Outdoor use : (0 mph)		
Total weight	2190 kg	(4829 lb)	2190 kg	(4829 lb)
Maximum platform load CE - AS	Indoor use : 230 kg Outdoor use : 0 kg	Indoor use : (507 lb) Outdoor use : (0 lb)		
Maximum platform load ANSI - CSA			230 kg	(507 lb)
Recommended load capacity when extended	120 kg	(265 lb)	120 kg	(265 lb)
Manual lateral force at platform CE - AS	Indoor use : 40 daN Outdoor use : Prohibited	Indoor use : (90 lbf) Outdoor use : Prohibited		
Manual lateral force at platform ANSI - CSA			445 N	100 lbf
Maximum number of people on the platform CE - AS	Indoor use : 2 Outdoor use : 0 Section C 4.1.1Specific labels COMPACT 10N (COMPACT 2632E)			
Maximum number of people on the platform ANSI - CSA			2 Section C 4.1.1Specific labels COMPACT 10N (COMPACT 2632E)	
Power source	24 V			
Hydraulic oil tank capacity	25 l	(7 gal US)	25 l	(7 gal US)
Battery	24 V-180 Ah			
Maximum climbable slope	23 %			

https://truckmanualshub.com/

G - Technical characteristics

Machine	COMPACT 10N		COMPACT 2632E	
Characteristics	Metric	Imperial	Metric	Imperial
Tyre type and/ or size	380 x 127 x 30			
Platform elevation time (when empty)	46 s			
Platform lowering time (when empty)	51 s			
Micro drive speed	1,5 km/h	(0,9 mph)	1,5 km/h	(0,9 mph)
Low drive speed	1 km/h	(0,6 mph)	1 km/h	(0,6 mph)
High drive speed	3,5 km/h	(2,2 mph)	3,5 km/h	(2,2 mph)
Hand vibration	<2,5 m/s²	(98 in/s²)	<2,5 m/s²	(98 in/s²)
Feet vibration	<0,5 m/s²	(19 in/s²)	<0,5 m/s²	(19 in/s²)
Noise emission level	< 70 dB (A)			

https://truckmanualshub.com/

G - Technical characteristics

For COMPACT 10 (COMPACT 2747E) - Technical characteristics

Machine	COMPACT 10		COMPACT 2747E	
Characteristics	Metric	Imperial	Metric	Imperial
Length of machine in stowed position	2,43 m	(8 ft0 in)	2,43 m	(8 ft0 in)
Overall width of machine	1,20 m	(3 ft11 in)	1,20 m	(3 ft11 in)
Platform length	2,30 m	(7 ft7 in)	2,30 m	(7 ft7 in)
Number of extensions	1			
Machine height	2,26 m	(7 ft5 in)	2,26 m	(7 ft5 in)
Maximum overall height of the machine in folded/stowed position guard-rail dismounted	1,40 m	(4 ft7 in)	1,40 m	(4 ft7 in)
Maximum ground clearance	0,13 m	(0 ft5 in)	0,13 m	(0 ft5 in)
Transport height	1,40 m	(4 ft7 in)	1,40 m	(4 ft7 in)
Maximum work height	10,14 m	(33 ft3 in)	10,14 m	(33 ft3 in)
Maximum platform height	8,14 m	(26 ft8 in)	8,14 m	(26 ft8 in)
Platform width	1,20 m	(3 ft11 in)	1,20 m	(3 ft11 in)
Outer turning circle	2,50 m	(8 ft2 in)	2,50 m	(8 ft2 in)
Inner turning circle	0,20 m	(0 ft7 in)	0,20 m	(0 ft7 in)
Distance between centres of the wheels	1,86 m	(6 ft1 in)	1,86 m	(6 ft1 in)
Rated slope CE - AS	2 °			
Rated slope ANSI - CSA	0 °			
Slope warning ANSI - CSA	2 °			
Maximum wind speed allowed CE - AS	Indoor use : 0 km/h Outdoor use : 45 km/h	Indoor use : (0 mph) Outdoor use : (28 mph)		
Total weight	2235 kg	(4928 lb)	2235 kg	(4928 lb)
Maximum platform load CE - AS	Indoor use : 450 kg Outdoor use : 450 kg	Indoor use : (1000 lb) Outdoor use : (1000 lb)		
Maximum platform load ANSI - CSA			450 kg	(1000 lb)
Recommended load capacity when extended	150 kg	(330 lb)	150 kg	(330 lb)
Manual lateral force at platform CE - AS	Indoor use : 40 daN Outdoor use : 20 daN	Indoor use : (90 lbf) Outdoor use : (45 lbf)		
Manual lateral force at platform ANSI - CSA			666 N	150 lbf
Maximum number of people on the platform CE - AS	Indoor use : 2 Outdoor use : 1 Section C 4.1.1Specific labels COMPACT 10 (COMPACT 2747E)			
Maximum number of people on the platform ANSI - CSA			3 Section C 4.1.1Specific labels COMPACT 10 (COMPACT 2747E)	
Power source	24 V			
Hydraulic oil tank capacity	25 l	(7 gal US)	25 l	(7 gal US)
Battery	24 V-240 Ah			
Maximum climbable slope	23 %			

https://truckmanualshub.com/

G - Technical characteristics

Machine	COMPACT 10		COMPACT 2747E	
Characteristics	Metric	Imperial	Metric	Imperial
Tyre type and/ or size	380 x 127 x 30			
Platform elevation time (when empty)	51 s			
Platform lowering time (when empty)	42 s			
Micro drive speed	1,5 km/h	(0,9 mph)	1,5 km/h	(0,9 mph)
Low drive speed	1 km/h	(0,6 mph)	1 km/h	(0,6 mph)
High drive speed	3,5 km/h	(2,2 mph)	3,5 km/h	(2,2 mph)
Hand vibration	<2,5 m/s²	(98 in/s²)	<2,5 m/s²	(98 in/s²)
Feet vibration	<0,5 m/s²	(19 in/s²)	<0,5 m/s²	(19 in/s²)
Noise emission level	< 70 dB (A)			

https://truckmanualshub.com/

G - Technical characteristics

For COMPACT 12 (COMPACT 3347E) - Technical characteristics

Machine	COMPACT 12		COMPACT 3347E	
Characteristics	Metric	Imperial	Metric	Imperial
Length of machine in stowed position	2,43 m	(8 ft0 in)	2,43 m	(8 ft0 in)
Overall width of machine	1,20 m	(3 ft11 in)	1,20 m	(3 ft11 in)
Platform length	2,30 m	(7 ft7 in)	2,30 m	(7 ft7 in)
Number of extensions	1			
Machine height	2,38 m	(7 ft10 in)	2,38 m	(7 ft10 in)
Maximum overall height of the machine in folded/stowed position guard-rail dismounted	1,53 m	(5 ft0 in)	1,53 m	(5 ft0 in)
Maximum ground clearance	0,13 m	(0 ft6 in)	0,13 m	(0 ft6 in)
Transport height	1,53 m	(5 ft0 in)	1,53 m	(5 ft0 in)
Maximum work height	12 m	(39 ft4 in)	12 m	(39 ft4 in)
Maximum platform height	10 m	(32 ft10 in)	10 m	(32 ft10 in)
Platform width	1,20 m	(0 ft48 in)	1,20 m	(0 ft48 in)
Outer turning circle	2,5 m	(8 ft2 in)	2,5 m	(8 ft2 in)
Inner turning circle	0,2 m	(0 ft8 in)	0,2 m	(0 ft8 in)
Distance between centres of the wheels	1,86 m	(6 ft1 in)	1,86 m	(6 ft1 in)
Rated slope CE - AS	2 °			
Rated slope ANSI - CSA	0 °			
Slope warning ANSI - CSA	2 °			
Maximum wind speed allowed CE - AS	Indoor use : 0 km/h Outdoor use : 45 km/h	Indoor use : (0 mph) Outdoor use : (28 mph)		
Total weight	2470 kg	(5446 lb)	2470 kg	(5446 lb)
Maximum platform load CE - AS	Indoor use : 300 kg Outdoor use : 300 kg	Indoor use : (662 lb) Outdoor use : (662 lb)		
Maximum platform load ANSI - CSA			300 kg	(662 lb)
Recommended load capacity when extended	150 kg	(330 lb)	150 kg	(330 lb)
Manual lateral force at platform CE - AS	Indoor use : 40 daN Outdoor use : 20 daN	Indoor use : (90 lbf) Outdoor use : (45 lbf)		
Manual lateral force at platform ANSI - CSA			445 N	100 lbf
Maximum number of people on the platform CE - AS	Indoor use : 2 Outdoor use : 1 Section C 4.1.1Specific labels COMPACT 12 (COMPACT 3347E)			
Maximum number of people on the platform ANSI - CSA	2 Section C 4.1.1Specific labels COMPACT 12 (COMPACT 3347E)			
Power source	24 V			
Hydraulic oil tank capacity	25 l	(7 gal US)	25 l	(7 gal US)
Battery	24 V-240 Ah Option : 24 V-240 Ah (C5)			
Maximum climbable slope	23 %			

https://truckmanualshub.com/

G - Technical characteristics

Machine	COMPACT 12		COMPACT 3347E	
Characteristics	Metric	Imperial	Metric	Imperial
Tyre type and/ or size	380 x 127 x 30			
Platform elevation time (when empty)	83 s			
Platform lowering time (when empty)	52 s			
Micro drive speed	1,5 km/h	(0,9 mph)	1,5 km/h	(0,9 mph)
Low drive speed	1 km/h	(0,6 mph)	1 km/h	(0,6 mph)
High drive speed	3,5 km/h	(2,2 mph)	3,5 km/h	(2,2 mph)
Hand vibration	<2,5 m/s²	(98 in/s²)	<2,5 m/s²	(98 in/s²)
Feet vibration	<0,5 m/s²	(19 in/s²)	<0,5 m/s²	(19 in/s²)
Noise emission level	< 70 dB (A)			

https://truckmanualshub.com/

G - Technical characteristics

For COMPACT 14 (COMPACT 3947E) - Technical characteristics

Machine	COMPACT 14		COMPACT 3947E	
Characteristics	Metric	Imperial	Metric	Imperial
Length of machine in stowed position	2,475 m	(8 ft1 in)	2,475 m	(8 ft1 in)
Overall width of machine	1,206 m	(3 ft11 in)	1,206 m	(3 ft11 in)
Platform length	2,30 m	(7 ft7 in)	2,30 m	(7 ft7 in)
Number of extensions	1			
Machine height	2,505 m	(8 ft3 in)	2,505 m	(8 ft3 in)
Maximum overall height of the machine in folded/stowed position guard-rail dismounted	1.644 m	(5 ft5 in)	1.644 m	(5 ft5 in)
Maximum ground clearance	0,13 m	(0 ft5 in)	0,13 m	(0 ft5 in)
Maximum work height	13.80 m	(45 ft3 in)	13.80 m	(45 ft3 in)
Maximum platform height	11.80 m	(38 ft9 in)	11.80 m	(38 ft9 in)
Platform width	1,20 m	(3 ft11 in)	1,20 m	(3 ft11 in)
Outer turning circle	2,38 m	(7 ft10 in)	2.38 m	(7 ft10 in)
Inner turning circle	0,34 m	(1 ft1 in)	0.34 m	(1 ft1 in)
Distance between centres of the wheels	1,86 m	(6 ft1 in)	1,86 m	(6 ft1 in)
Rated slope CE - AS	2° / 3°			
Rated slope ANSI - CSA	0 °			
Slope warning ANSI - CSA	2 ° / 3 °			
Maximum wind speed allowed CE - AS	Indoor use : 0 km/h Outdoor use : Prohibited	Indoor use : (0 mph) Outdoor use : Prohibited		
Total weight	3174 kg	(6999 lb)	3174 kg	(6999 lb)
Maximum platform load CE - AS	Indoor use : 350 kg Outdoor use : Prohibited	Indoor use : (772 lb) Outdoor use : Prohibited		
Maximum platform load ANSI - CSA			350 kg	(772 lb)
Recommended load capacity when extended	150 kg	(330 lb)	150 kg	(330 lb)
Manual lateral force at platform CE - AS	Indoor use : 40 daN Outdoor use : Prohibited	Indoor use : (90 lbf) Outdoor use : Prohibited		
Manual lateral force at platform ANSI - CSA			445 N	100 lbf
Maximum number of people on the platform CE - AS	Indoor use : 3 Outdoor use : Prohibited Section C 4.1.1Specific labels COMPACT 14 (COMPACT 3947E)			
Maximum number of people on the platform ANSI - CSA			2 Section C 4.1.1Specific labels COMPACT 14 (COMPACT 3947E)	
Power source	24 V			
Hydraulic oil tank capacity	25 l	(7 gal US)	25 l	(7 gal US)
Battery	24 V-255 Ah Option : 24 V-240 Ah (C5)			
Maximum climbable slope	23 %			
Tyre type and/ or size	380 x 127 x 30			

https://truckmanualshub.com/

G - Technical characteristics

Machine	COMPACT 14		COMPACT 3947E	
Characteristics	Metric	Imperial	Metric	Imperial
Platform elevation time (when empty)	68 s			
Platform lowering time (when empty)	54 s			
Micro drive speed	0.85 km/h	(0.53 mph)	0.85 km/h	(0.53 mph)
High drive speed	2.8 km/h	(1.7 mph)	2.8 km/h	(1.7 mph)
Hand vibration	<2,5 m/s²	(98 in/s²)	<2,5 m/s²	(98 in/s²)
Feet vibration	<0,5 m/s²	(19 in/s²)	<0,5 m/s²	(19 in/s²)
Noise emission level	< 70 dB (A)			

https://truckmanualshub.com/

G - Technical characteristics

For OPTIMUM 6 (OPTIMUM 1530E) - Technical characteristics

Machine	OPTIMUM 6		OPTIMUM 1530E	
Characteristics	Metric	Imperial	Metric	Imperial
Length of machine in stowed position	1.89 m	(6 ft2 in)	1.89 m	(6 ft2 in)
Overall width of machine	0,76 m	(2 ft6 in)	0,76 m	(2 ft6 in)
Platform length	1.68 m	(5 ft6 in)	1.68 m	(5 ft6 in)
Number of extensions	1			
Machine height	1,91 m	(6 ft3 in)	1,91 m	(6 ft3 in)
Maximum ground clearance	0,08 m	(0 ft3 in)	0,08 m	(0 ft3 in)
Maximum overall height of the machine in folded/stowed position guard-rail dismounted	1.04 m	(3 ft5 in)	1.04 m	(3 ft5 in)
Maximum work height	6.35 m	(20 ft10 in)	6.35 m	(20 ft10 in)
Maximum platform height	4.35 m	(14 ft3 in)	4.35 m	(14 ft3 in)
Platform width	0,70 m	(2 ft4 in)	0,70 m	(2 ft4 in)
Outer turning circle	1,70 m	(5 ft7 in)	1,70 m	(5 ft7 in)
Inner turning circle	0,34 m	(1 ft1 in)	0,34 m	(1 ft1 in)
Distance between centres of the wheels	1,38 m	(4 ft6 in)	1,38 m	(4 ft6 in)
Rated slope CE - AS	2°			
Rated slope ANSI - CSA	0 °			
Slope warning ANSI - CSA	2 °			
Maximum wind speed allowed CE - AS	Indoor use : 0 km/h Outdoor use : 45 km/h	Indoor use : (0 mph) Outdoor use : (28 mph)		
Total weight	1290 kg	(2844 lb)	1290 kg	(2844 lb)
Maximum platform load CE - AS	Indoor use : 270 kg Outdoor use : 270 kg	Indoor use : (595 lb) Outdoor use : (595 lb)		
Maximum platform load ANSI - CSA			270 kg	(595 lb)
Recommended load capacity when extended	115 kg	(254 lb)	115 kg	(254 lb)
Manual lateral force at platform CE - AS	Indoor use : 40 daN Outdoor use : 20 daN	Indoor use : (90 lbf) Outdoor use : (45 lbf)		
Manual lateral force at platform ANSI - CSA			445 N	100 lbf
Maximum number of people on the platform CE - AS	Indoor use : 2 Outdoor use : 1 Section C 4.1.1Specific labels OPTIMUM 6 (OPTIMUM 1530E)			
Maximum number of people on the platform ANSI - CSA			2 Section C 4.1.1Specific labels OPTIMUM 6 (OPTIMUM 1530E)	
Power source	24 V			
Hydraulic oil tank capacity	20 l	(5 gal US)	20 l	(5 gal US)
Battery	24 V-180 Ah			
Maximum climbable slope	25 %			
Tyre type and/ or size	317 x 107 x 25			

https://truckmanualshub.com/

G - Technical characteristics

Machine	OPTIMUM 6		OPTIMUM 1530E	
Characteristics	Metric	Imperial	Metric	Imperial
Platform elevation time (when empty)	21 s			
Platform lowering time (when empty)	37 s			
Micro drive speed	0.5 km/h	(0.31 mph)	0.5 km/h	(0.31 mph)
High drive speed	4,5 km/h	(2,8 mph)	4,5 km/h	(2,8 mph)
Hand vibration	<2,5 m/s²	(98 in/s²)	<2,5 m/s²	(98 in/s²)
Feet vibration	<0,5 m/s²	(19 in/s²)	<0,5 m/s²	(19 in/s²)
Noise emission level	< 70 dB (A)			

https://truckmanualshub.com/

G - Technical characteristics

For OPTIMUM 8 (OPTIMUM 1930E) - Technical characteristics

Machine	OPTIMUM 8		OPTIMUM 1930E	
Characteristics	Metric	Imperial	Metric	Imperial
Length of machine in stowed position	1.89 m	(6 ft2 in)	1.89 m	(6 ft2 in)
Overall width of machine	0,76 m	(2 ft6 in)	0,76 m	(2 ft6 in)
Platform length	1.68 m	(5 ft6 in)	1.68 m	(5 ft6 in)
Number of extensions	1			
Machine height	1,91 m	(6 ft3 in)	1,91 m	(6 ft3 in)
Maximum ground clearance	0,08 m	(0 ft3 in)	0,08 m	(0 ft3 in)
Maximum overall height of the machine in folded/stowed position guard-rail dismounted	1.14 m	(3 ft9 in)	1.14 m	(3 ft9 in)
Maximum work height	7.80 m	(25 ft7 in)	7.80 m	(25 ft7 in)
Maximum platform height	5.95 m	(19 ft6 in)	5.95 m	(19 ft6 in)
Platform width	0.76 m	(2 ft6 in)	0,76 m	(2 ft6 in)
Outer turning circle	1,70 m	(5 ft7 in)	1,70 m	(5 ft7 in)
Inner turning circle	0,34 m	(1 ft1 in)	0,34 m	(1 ft1 in)
Distance between centres of the wheels	1,38 m	(4 ft6 in)	1,38 m	(4 ft6 in)
Rated slope CE - AS	2°			
Rated slope ANSI - CSA	0 °			
Slope warning ANSI - CSA	2 °			
Maximum wind speed allowed CE - AS	Indoor use : 0 km/h Outdoor use : Prohibited	Indoor use : 0 km/h Outdoor use : Prohibited		
Total weight	1372 kg	(3025 lb)	1372 kg	(3025 lb)
Maximum platform load CE - AS	Indoor use : 230 kg Outdoor use : Prohibited	Indoor use : (507 lb) Outdoor use : Prohibited		
Maximum platform load ANSI - CSA			230 kg	(507 lb)
Recommended load capacity when extended	115 kg	(253 lb)	115 kg	(253 lb)
Manual lateral force at platform CE - AS	Indoor use : 40 daN Outdoor use : Prohibited	Indoor use : (90 lbf) Outdoor use : Prohibited		
Manual lateral force at platform ANSI - CSA			445 N	100 lbf
Maximum number of people on the platform CE - AS	Indoor use : 2 Outdoor use : Prohibited Section C 4.1.1Specific labels OPTIMUM 8 (OPTIMUM 1930E)			
Maximum number of people on the platform ANSI - CSA	2 Section C 4.1.1Specific labels OPTIMUM 8 (OPTIMUM 1930E)			
Power source	24 V			
Hydraulic oil tank capacity	20 l	(5 gal US)	20 l	(5 gal US)
Battery	24 V-180 Ah			
Maximum climbable slope	25 %			
Tyre type and/ or size	317 x 107 x 25			

https://truckmanualshub.com/

G - Technical characteristics

Machine	OPTIMUM 8		OPTIMUM 1930E	
Characteristics	Metric	Imperial	Metric	Imperial
Platform elevation time (when empty)	23 s			
Platform lowering time (when empty)	29 s			
Micro drive speed	0.5 km/h	(0,31 mph)	0.5 km/h	(0,31 mph)
High drive speed	4,5 km/h	(2,8 mph)	4,5 km/h	(2,8 mph)
Hand vibration	<2,5 m/s²	(98 in/s²)	<2,5 m/s²	(98 in/s²)
Feet vibration	<0,5 m/s²	(19 in/s²)	<0,5 m/s²	(19 in/s²)
Noise emission level	< 70 dB (A)			

https://truckmanualshub.com/

G - Technical characteristics

For COMPACT 8 (COMPACT 2032E) Single load (Option) - on AS and CE only - Technical characteristics

Machine	COMPACT 8 CU	
Characteristics	Metric	Imperial
Length of machine in stowed position	2,48 m	(8 ft2 in)
Overall width of machine	0,81 m	(0 ft32 in)
Platform length	2,30 m	(7 ft7 in)
Number of extensions	1	
Machine height	1,99 m	(6 ft6 in)
Maximum overall height of the machine in folded/stowed position guard-rail dismounted	1,14 m	(3 ft9 in)
Maximum ground clearance	0,125 m	(0 ft5 in)
Transport height	1,99 m	(6 ft6 in)
Maximum work height	8,18 m	(26 ft10 in)
Maximum platform height	6,18 m	(20 ft3 in)
Platform width	0,92 m	(3 ft0 in)
Outer turning circle	2,38 m	(7 ft9 in)
Inner turning circle	0,34 m	(1 ft1 in)
Distance between centres of the wheels	1,86 m	(6 ft1 in)
Rated slope CE - AS	2°	
Maximum wind speed allowed CE - AS	Indoor use : 0 km/h Outdoor use : 45 km/h	Indoor use : (0 mph) Outdoor use : (28 mph)
Total weight	1875 kg	(4134 lb)
Maximum platform load CE - AS	Indoor use : 300 kg Outdoor use : 300 kg	Indoor use : (662 lb) Outdoor use : (662 lb)
Recommended load capacity when extended	150 kg	(331 lb)
Manual lateral force at platform CE - AS	Indoor use : 40 daN Outdoor use : 20 daN	Indoor use : (90 lbf) Outdoor use : (45 lbf)
Maximum number of people on the platform CE - AS	Indoor use : 2 Outdoor use : 1 Section C 4.1.1Specific labels COMPACT 8 CU (COMPACT 2032 CU)	
Power source	24 V	
Hydraulic oil tank capacity	25 l	(7 gal US)
Operating batteries	24 V-180 Ah	
Maximum climbable slope	25 %	
Tyre type and/ or size	380 x 127 x 30	
Platform elevation time (when empty)	37 s	
Platform lowering time (when empty)	41 s	
Micro drive speed	1 km/h	(0,9 mph)
Low drive speed	1,5 km/h	(0,6 mph)
High drive speed	3,5 km/h	(2,2 mph)
Hand vibration	<2,5 m/s²	(98 in/s²)
Feet vibration	<0,5 m/s²	(19 in/s²)
Noise emission level	< 70 dB (A)	

https://truckmanualshub.com/

For COMPACT 10RTE (COMPACT 2668RTE) - Technical characteristics

Machine	COMPACT 10RTE		COMPACT 2668RTE	
Characteristics	Metric	Imperial	Metric	Imperial
Length of machine in stowed position	2,65 m	(8 ft8 in)	2,65 m	(8 ft8 in)
Overall width of machine	1,80 m	(0 ft71 in)	1,80 m	(0 ft71 in)
Platform length	2,50 m	(8 ft2 in)	2,50 m	(8 ft2 in)
Number of extensions	1			
Machine height	2,42 m	(7 ft11 in)	2,42 m	(7 ft11 in)
Maximum overall height of the machine in folded/stowed position guard-rail dismounted	1,51 m	(4 ft11 in)	1,51 m	(4 ft11 in)
Maximum ground clearance	0,25 m	(0 ft10 in)	0,25 m	(0 ft10 in)
Transport height	1,51 m	(4 ft11 in)	1,51 m	(4 ft11 in)
Maximum work height	10,25 m	(33 ft8 in)	10,25 m	(33 ft8 in)
Maximum platform height	8,25 m	(27 ft1 in)	8,25 m	(27 ft1 in)
Platform width	1,54 m	(5 ft10 in)	1,54 m	(5 ft10 in)
Outer turning circle	3,73 m	(12 ft3 in)	3,73 m	(12 ft3 in)
Inner turning circle	1,21 m	(4 ft0 in)	1,21 m	(4 ft0 in)
Distance between centres of the wheels	1,87 m	(6 ft2 in)	1,87 m	(6 ft2 in)
Rated slope CE - AS	3°			
Rated slope ANSI - CSA	0 °			
Slope warning ANSI - CSA	2 °			
Maximum wind speed allowed CE - AS	Indoor use : 0 km/h Outdoor use : 45 km/h	Indoor use : (0 mph) Outdoor use : (28 mph)		
Total weight - Machine without stabilizers	3380 kg	(7453 lb)	3380 kg	(7453 lb)
Total weight - Machine with outriggers	3620 kg	(7982 lb)	3620 kg	(7982 lb)
Maximum platform load CE - AS	565 kg	(1246 lb)		
Maximum platform load ANSI - CSA	565 kg	(1246 lb)		
Recommended load capacity when extended	150 kg	(330 lb)	150 kg	(330 lb)
Manual lateral force at platform CE - AS	400 N	90 lbf		
Manual lateral force at platform ANSI - CSA	445 N	100 lbf		
Maximum number of people on the platform CE - AS	2 Section C 4.1.1Specific labels COMPACT 10RTE (COMPACT 2668RTE)			
Maximum number of people on the platform ANSI - CSA	2 Section C 4.1.1Specific labels COMPACT 10RTE (COMPACT 2668RTE)			
Power source	48 V			
Additional power source	285 Ah			
Maximum climbable slope	25 %			
Tyre type and/ or size	26 x 12 - 12			
Platform elevation time (when empty)	35 s			
Platform lowering time (when empty)	40 s			
Micro drive speed	0,8 km/h	(0,49 mph)	0,8 km/h	(0,49 mph)
Low drive speed	1,6 km/h	(0,99 mph)	1,6 km/h	(0,99 mph)

https://truckmanualshub.com/

G - Technical characteristics

Machine	COMPACT 10RTE		COMPACT 2668RTE	
Characteristics	Metric	Imperial	Metric	Imperial
High drive speed	5,8 km/h	(3,6 mph)	5,8 km/h	(3,6 mph)
Hand vibration	<2,5 m/s²	(98 in/s²)	<2,5 m/s²	(98 in/s²)
Feet vibration	<0,5 m/s²	(19 in/s²)	<0,5 m/s²	(19 in/s²)
Noise emission level	< 70 dB (A)			

https://truckmanualshub.com/

For COMPACT 12RTE (COMPACT 3368RTE) - Technical characteristics

Machine	COMPACT 12RTE		COMPACT 3368RTE	
Characteristics	Metric	Imperial	Metric	Imperial
Length of machine in stowed position	2,65 m	(8 ft8 in)	2,65 m	(8 ft8 in)
Overall width of machine	1,80 m	(0 ft71 in)	1,80 m	(0 ft71 in)
Platform length	2,50 m	(8 ft2 in)	2,50 m	(8 ft2 in)
Number of extensions	1			
Machine height	2,54 m	(8 ft4 in)	2,54 m	(8 ft4 in)
Maximum overall height of the machine in folded/stowed position guard-rail dismounted	1,68 m	(5 ft6 in)	1,68 m	(5 ft6 in)
Maximum ground clearance	0,25 m	(0 ft10 in)	0,25 m	(0 ft10 in)
Transport height	1,68 m	(5 ft6 in)	1,68 m	(5 ft6 in)
Maximum work height	12,15 m	(39 ft10 in)	12,15 m	(39 ft10 in)
Maximum platform height	10,15 m	(33 ft4 in)	10,15 m	(33 ft4 in)
Platform width	1,54 m	(5 ft10 in)	1,54 m	(5 ft10 in)
Outer turning circle	2,50 m	(8 ft2 in)	2,38 m	(7 ft9 in)
Inner turning circle	1,21 m	(4 ft0 in)	0,34 m	(1 ft1 in)
Distance between centres of the wheels	1,87 m	(6 ft2 in)	1,86 m	(6 ft1 in)
Rated slope CE - AS	3°			
Rated slope ANSI - CSA	0 °			
Slope warning ANSI - CSA	2 °			
Maximum wind speed allowed CE - AS	Indoor use : 0 km/h Outdoor use : 45 km/h	Indoor use : (0 mph) Outdoor use : (28 mph)		
Total weight - Machine without stabilizers	3800 kg	(8379 lb)	3800 kg	(8379 lb)
Total weight - Machine with outriggers	4040 kg	(8908 lb)	4040 kg	(8908 lb)
Maximum platform load CE - AS	450 kg	(992 lb)		
Maximum platform load ANSI - CSA			450 kg	(992 lb)
Recommended load capacity when extended	150 kg	(330 lb)	150 kg	(330 lb)
Manual lateral force at platform CE - AS	400 N	90 lbf		
Manual lateral force at platform ANSI - CSA			445 N	100 lbf
Maximum number of people on the platform CE - AS	3 Section C 4.1.1Specific labels COMPACT 12RTE (COMPACT 3368RTE)			
Maximum number of people on the platform ANSI - CSA			3 Section C 4.1.1Specific labels COMPACT 12RTE (COMPACT 3368RTE)	
Power source	48 V			
Additional power source	285 Ah			
Maximum climbable slope	25 %			
Tyre type and/ or size	26 x 12 - 12			
Platform elevation time (when empty)	50 s			
Platform lowering time (when empty)	40 s			
Micro drive speed	0,8 km/h	(0,49 mph)	0,8 km/h	(0,49 mph)
Low drive speed	1,6 km/h	(0,99 mph)	1,6 km/h	(0,99 mph)
High drive speed	5,8 km/h	(3,6 mph)	5,8 km/h	(3,6 mph)

https://truckmanualshub.com/

G - Technical characteristics

Machine	COMPACT 12RTE		COMPACT 3368RTE	
Characteristics	Metric	Imperial	Metric	Imperial
Hand vibration	<2,5 m/s²	(98 in/s²)	<2,5 m/s²	(98 in/s²)
Feet vibration	<0,5 m/s²	(19 in/s²)	<0,5 m/s²	(19 in/s²)
Noise emission level	< 70 dB (A)			

https://truckmanualshub.com/

2 - Overall dimensions

General diagram COMPACT 8 (COMPACT 2032E) -COMPACT 8W (COMPACT 2247E) -COMPACT 10N (COMPACT 2632E) -COMPACT 10 (COMPACT 2747E) -COMPACT 12 (COMPACT 3347E) -COMPACT 14 (COMPACT 3947E) -OPTIMUM 6 (OPTIMUM 1530E) -OPTIMUM 8 (OPTIMUM 1930E)

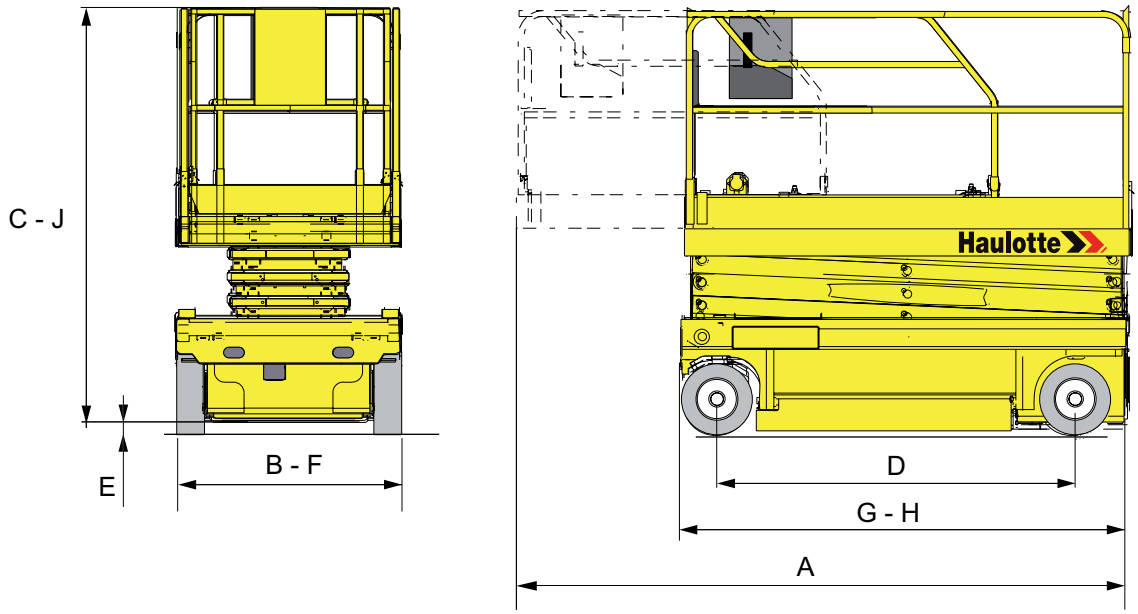

Overall dimension specifications

Marking	COMPACT 8 (COMPACT 2032E)		COMPACT 8W (COMPACT 2247E)	
	Mètre	Feet inch	Mètre	Feet inch
A	3,40	11 ft 1 in	3,40	11 ft 1 in
B	0,80	2 ft 7 in	1,20	3 ft 11 in
C	1,99	6 ft 6 in	2,14	7 ft
D	1,86	6 ft 1 in	1,86	6 ft 1 in
E	0,13	0 ft 5 in	0,13	0 ft 5 in
F x G	2,30 x 0,80	7 ft 6 in x 2 ft 7 in	2,30 x 1,20	7 ft 6 in x 3 ft 11 in
H	2,30	7 ft 6 in	2,30	7 ft 6 in
J	1,99	6 ft 6 in	2,14	7 ft

Overall dimension specifications

Marking	COMPACT 10N (COMPACT 2632E)		COMPACT 10 (COMPACT 2747E)	
	Mètre	Feet inch	Mètre	Feet inch
A	3,40	11 ft 1 in	3,40	11 ft 1 in
B	0,80	2 ft 7 in	1,20	3-11
C	2,18	7 ft 1 in	2,26	7 ft 5 in
D	1,86	6 ft 1 in	1,86	6 ft 1 in
E	0,13	0 ft 5 in	0,13	0 ft 5 in
F x G	2,30 x 0,80	7 ft 6 in x 2 ft 7 in	2,30 x 1,20	7 ft 6 in x 3 ft 11 in
H	2,30	7 ft 6 in	2,30	7 ft 6 in
J	2,18	7 ft 1 in	2,26	7 ft 5 in

https://truckmanualshub.com/

G - Technical characteristics

Overall dimension specifications

Marking	COMPACT 12 (COMPACT 3347E)		COMPACT 14 (COMPACT 3947E)	
	Mètre	Feet inch	Mètre	Feet inch
A	3,40	11 ft 1 in	3,40	11 ft 1 in
B	1,20	3 ft 11 in	1,20	3 ft 11 in
C	2,38	7 ft 9 in	2.50	7 ft 9 in
D	1,86	6 ft 1 in	1,86	6 ft 1 in
E	0,13	0 ft 5 in	0,13	0 ft 5 in
F x G	2,30 x 1,20	7 ft 1 in x 3 ft 11 in	2,30 x 1,20	7 ft 1 in x 3 ft 11 in
H	2,30	7 ft 6 in	2,30	7 ft 6 in
J	2,38	7 ft 9 in	2.50	7 ft 9 in

Overall dimension specifications

Marking	OPTIMUM 6 (OPTIMUM 1530E)		OPTIMUM 8 (OPTIMUM 1930E)	
	Mètre	Feet inch	Mètre	Feet inch
A	2,80	9 ft 2 in	2,80	9 ft 2 in
B	0,76	2 ft 5 in	0,76	0 ft 29 in
C	1,90	6 ft 2 in	1,99	6 ft 6 in
D	0,13	0 ft 5 in	0,13	4 ft 6 in
E	0,80	2 ft 7 in	0,80	0 ft 3 in
F x G	1,73 x 0,68	5 ft 8 in x 2 ft 2 in	1,73 x 0,68	5 ft 8 in x 6 ft 2 in
H	1,73	5 ft 8 in	1,73	5 ft 8 in
J	1,90	6 ft 2 in	1,99	6 ft 6 in

https://truckmanualshub.com/

General diagram COMPACT 10RTE (COMPACT 2668RTE) -COMPACT 12RTE (COMPACT 3368RTE)

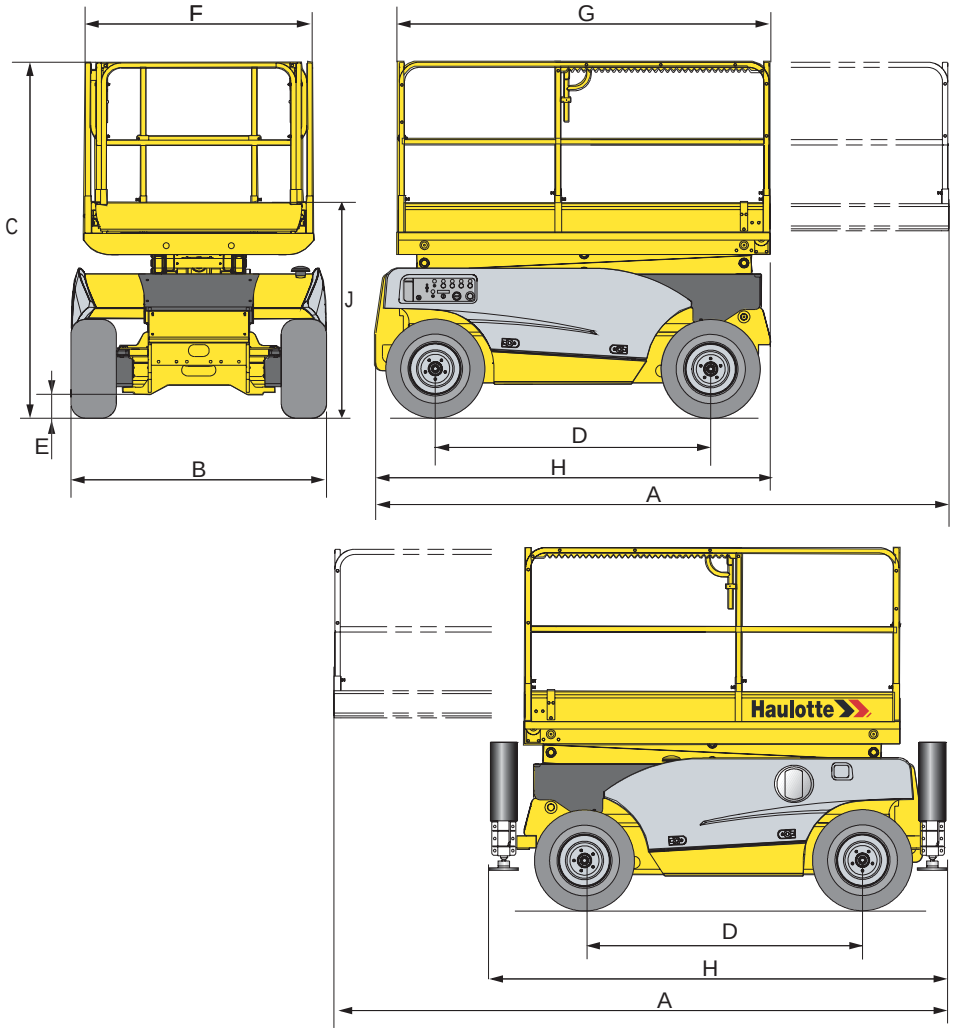

Overall dimension specifications

Marking	COMPACT 10RTE (COMPACT 2668RTE)		COMPACT 12RTE (COMPACT 3368RTE)	
	Mètre	Feet inch	Mètre	Feet inch
A	3,85	12 ft 7 in	3,85	12 ft 7 in
B	1,80	5 ft 10 in	1,80	5 ft 10 in
C	2,42	7 ft 11 in	2,54	8 ft 4 in
D	1,87	6 ft 1 in	1,87	6 ft 1 in
E	0,21	0 ft 8 in	0,21	0 ft 8 in
F x G	2,50 x 1,54	8 ft 2 in x 5 ft 0 in	2,50 x 1,54	8 ft 2 in x 5 ft 0 in
H	2,65	8 ft 8 in	2,65	8 ft 8 in
J	2,42	7 ft 11 in	2,54	8 ft 4 in

https://truckmanualshub.com/

G - Technical characteristics

If outriggers option : Overall dimension specifications

Marking	COMPACT 10RTE (COMPACT 2668RTE)		COMPACT 12RTE (COMPACT 3368RTE)	
	Mètre	Feet inch	Mètre	Feet inch
A	3,85	12 ft 7 in	3,85	12 ft 7 in
B	1,80	5 ft 10 in	1,80	5 ft 10 in
C	2,42	7 ft 11 in	2,54	8 ft 4 in
D	1,87	6 ft 1 in	1,87	6 ft 1 in
E	0,21	0 ft 8 in	0,21	0 ft 8 in
F x G	2,50 x 1,54	8 ft 2 in x 5 ft 0 in	2,50 x 1,54	8 ft 2 in x 5 ft 0 in
H	3,06	10 ft 0 in	3,06	10 ft 0 in
J	2,42	7 ft 11 in	2,54	8 ft 4 in

https://truckmanualshub.com/

3 - Working area

3.1 - MACHINE C8 (COMPACT 2032E)

Working area

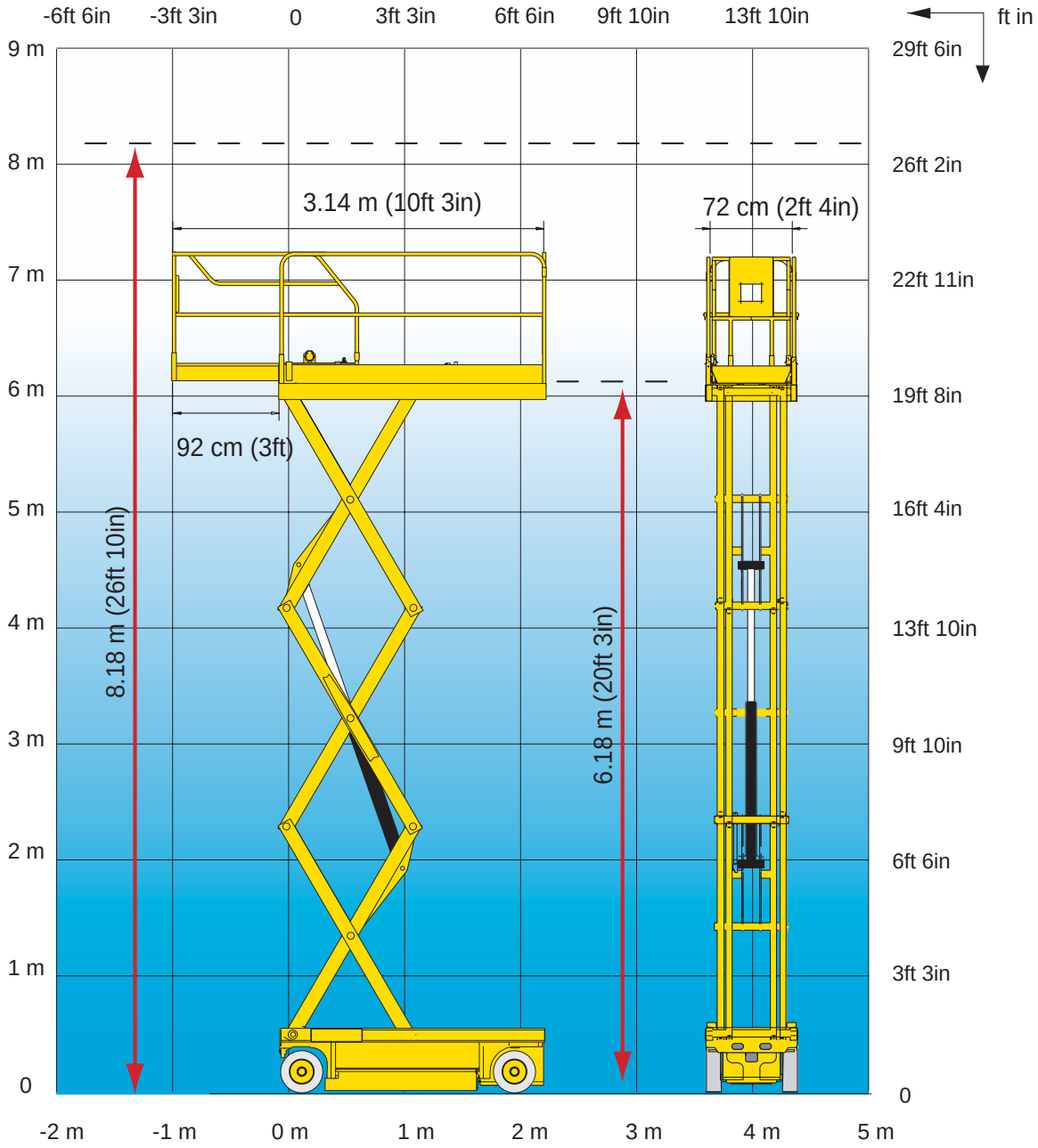

https://truckmanualshub.com/

3.2 - MACHINE C8W (COMPACT 2247E)

Working area

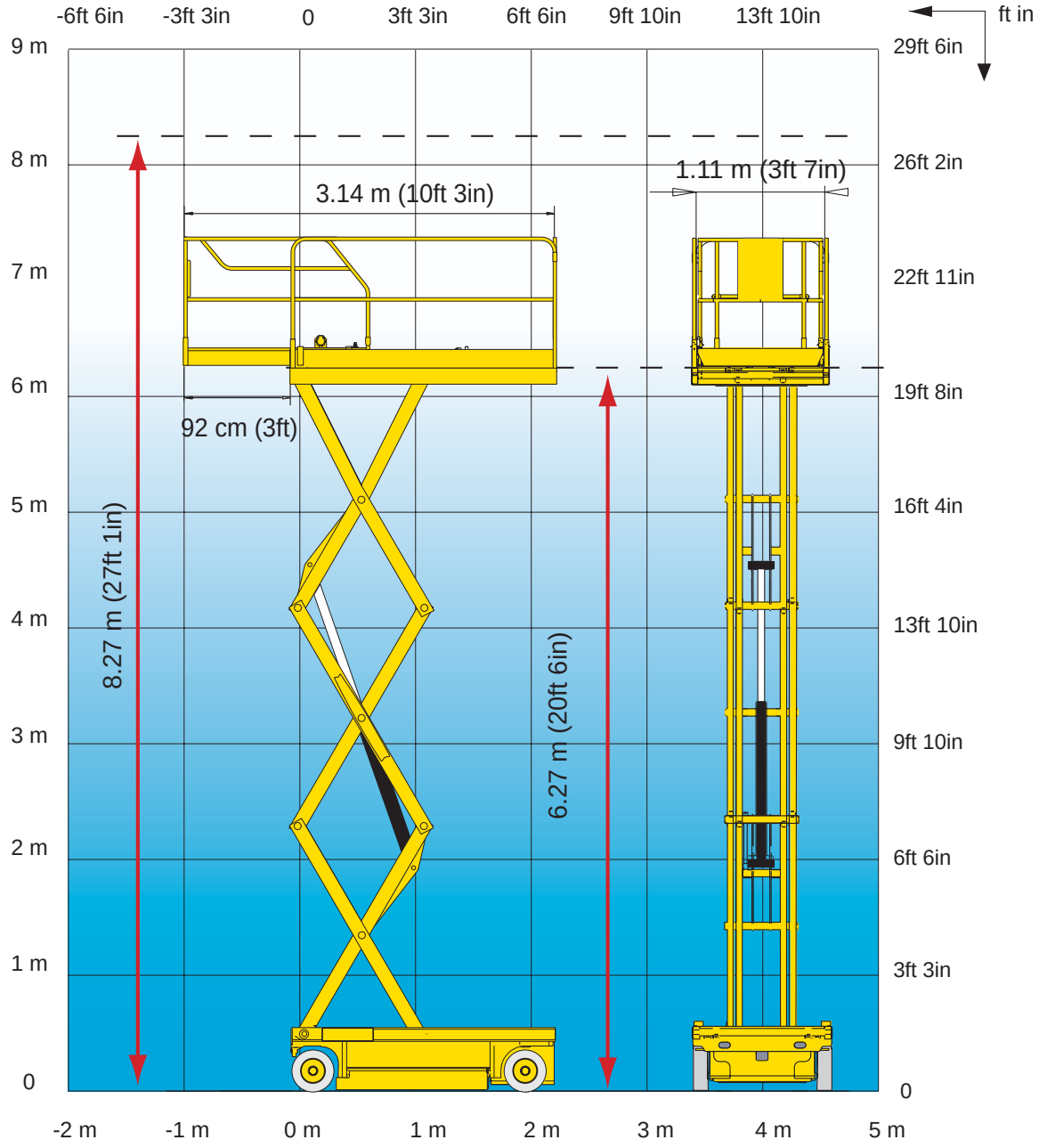

https://truckmanualshub.com/

3.3 - MACHINE C10N (COMPACT 2632E)

Working area

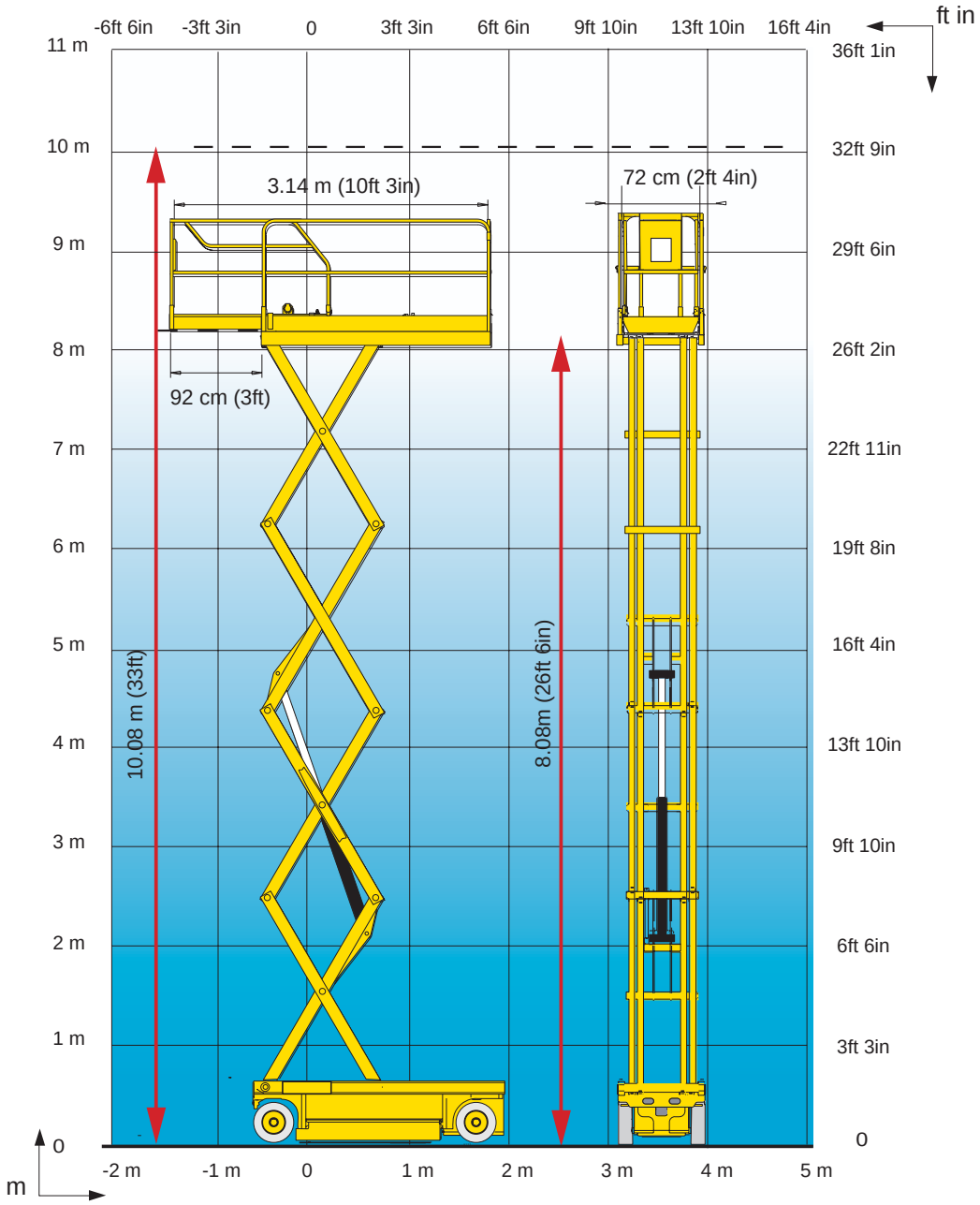

https://truckmanualshub.com/

3.4 - MACHINE C10 (COMPACT 2747E)

Working area

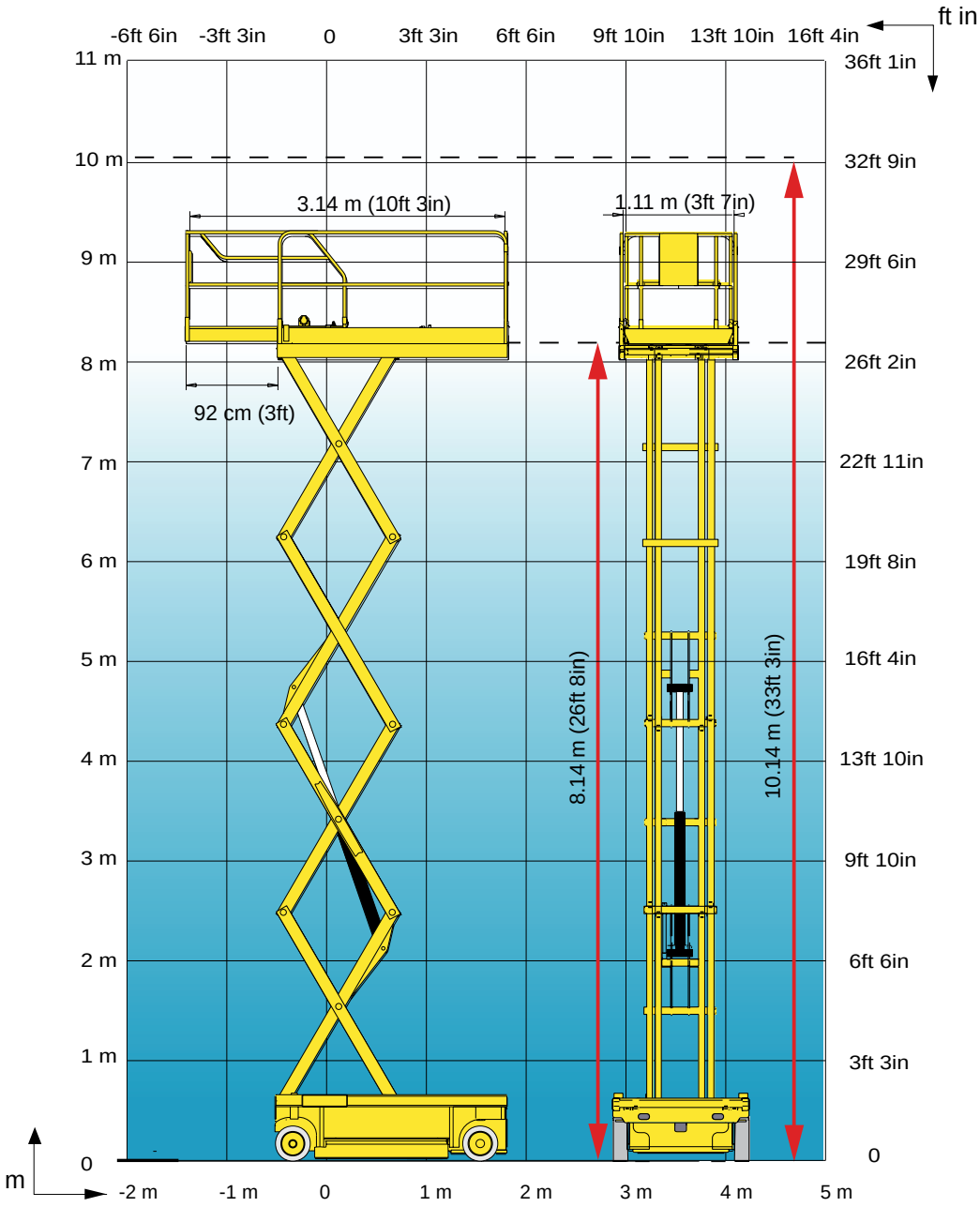

https://truckmanualshub.com/

3.5 - MACHINE C12 (COMPACT 3347E)

Working area

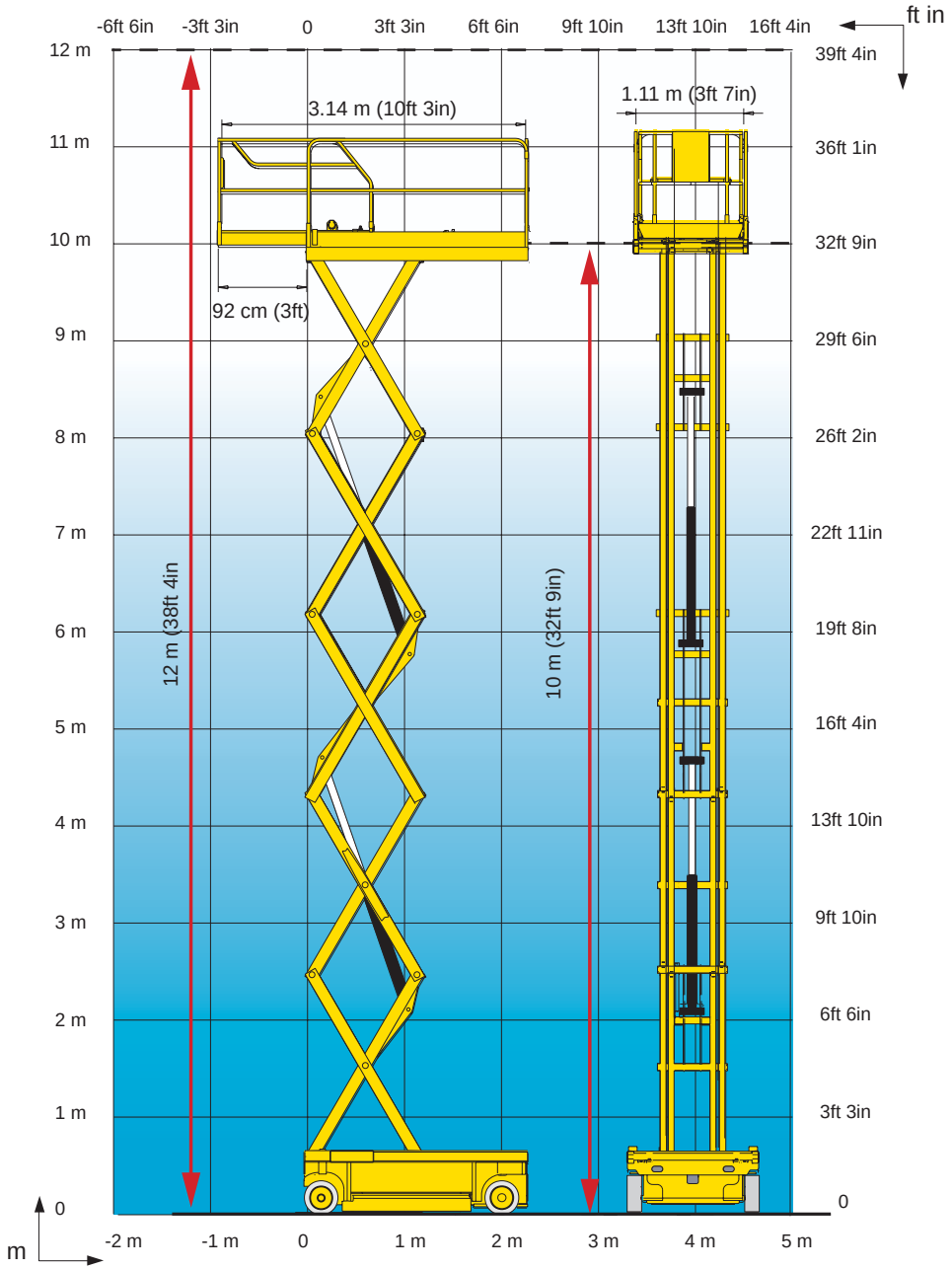

https://truckmanualshub.com/

3.6 - MACHINE C14 (COMPACT 3947E)

Working area

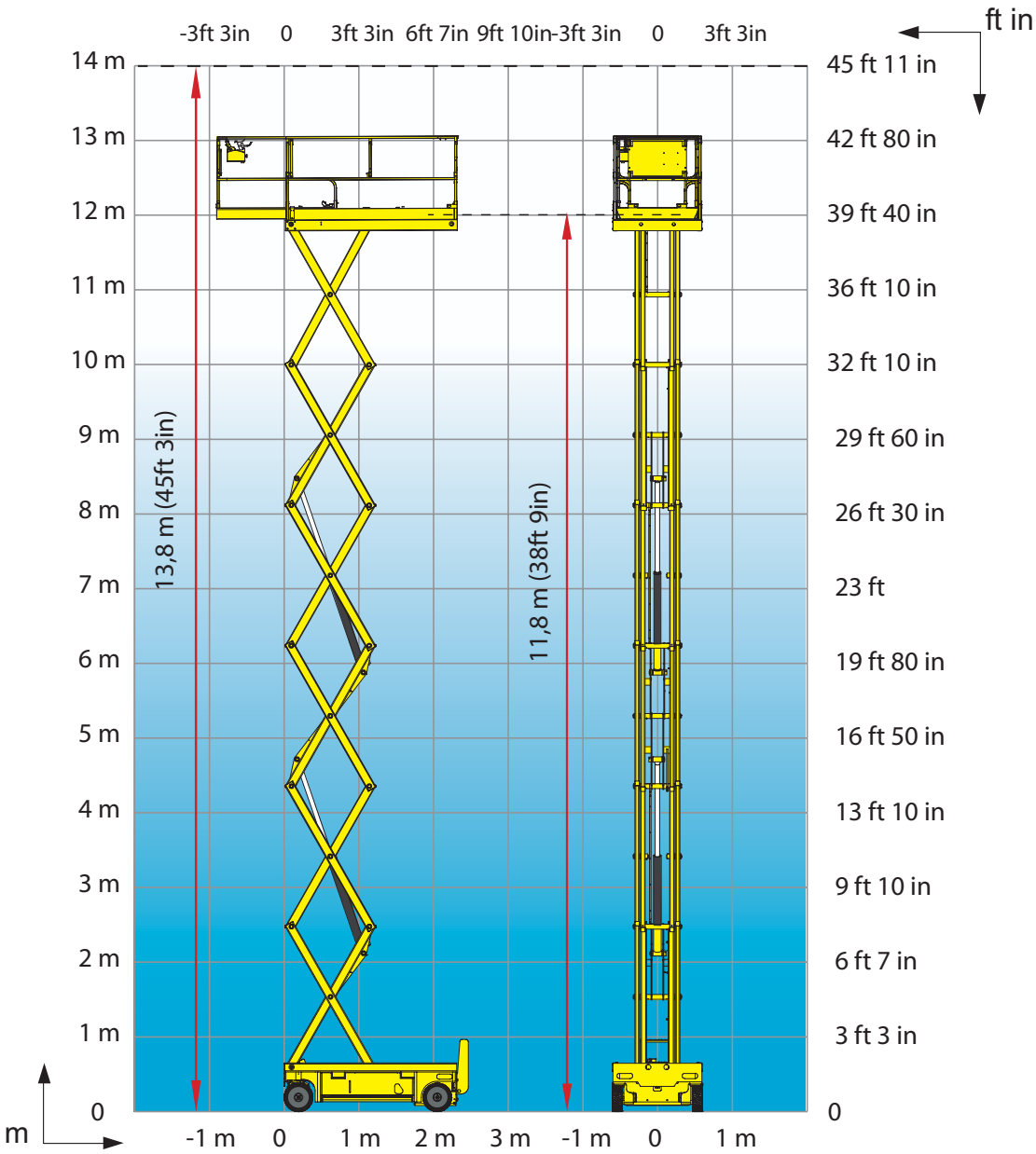

https://truckmanualshub.com/

3.7 - MACHINE OPTIMUM 6 (OPTIMUM 1530E)

Working area

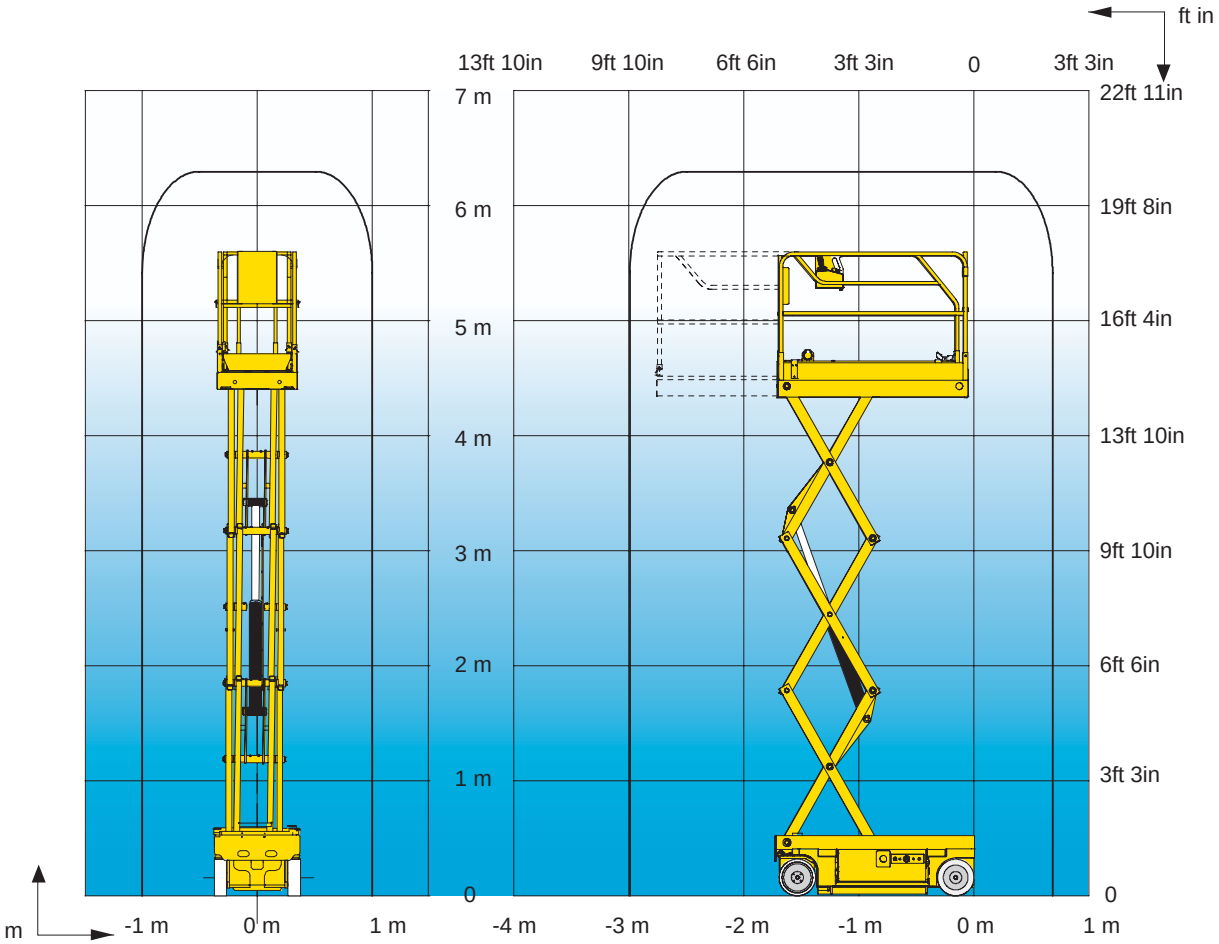

https://truckmanualshub.com/

3.8 - MACHINE OPTIMUM 8 (OPTIMUM 1930E)

Working area

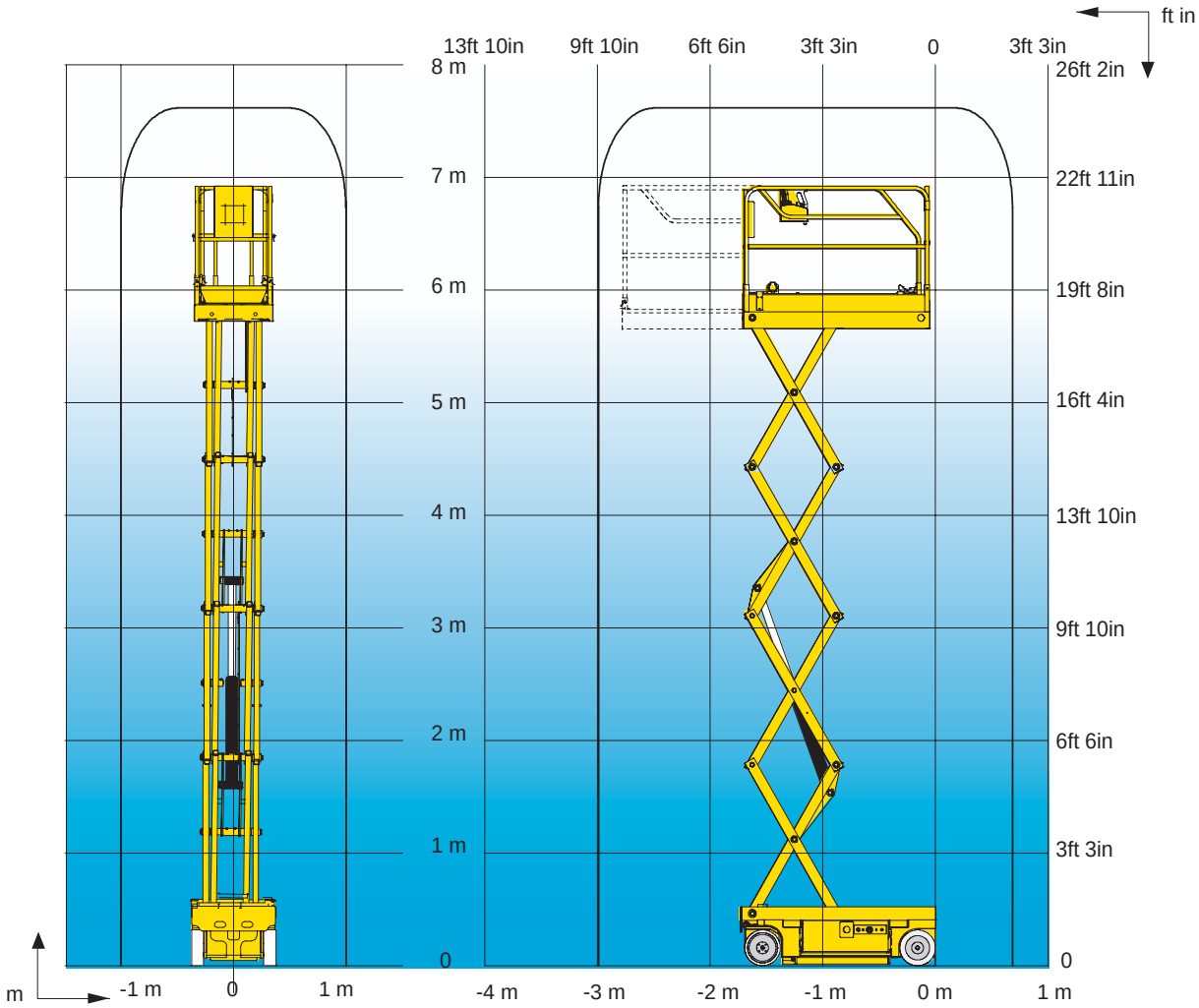

https://truckmanualshub.com/

3.9 - MACHINE COMPACT 10RTE (COMPACT 2668RTE)

Working area

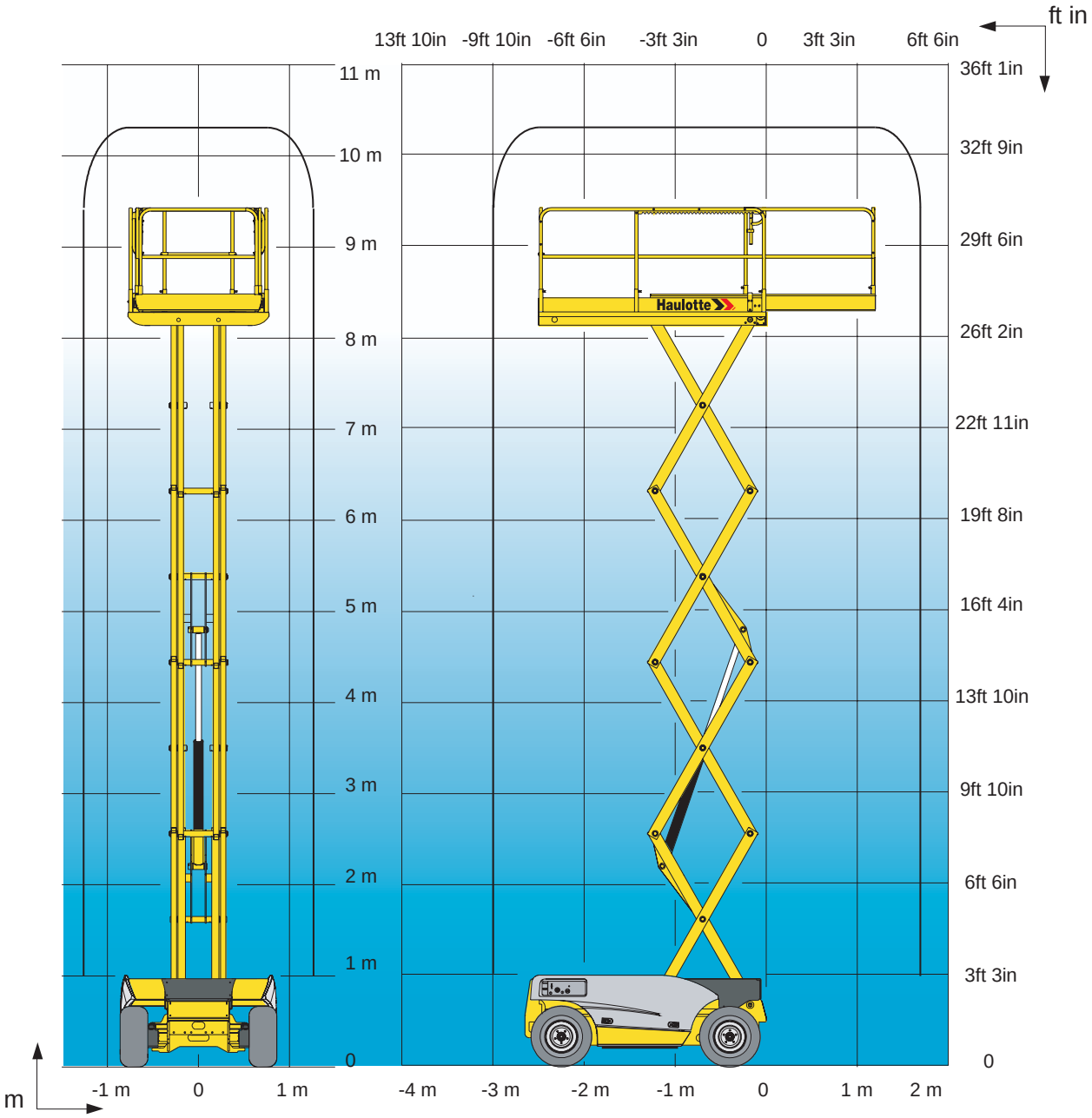

https://truckmanualshub.com/

3.10 - MACHINE COMPACT 12RTE (COMPACT 3368RTE)

Working area

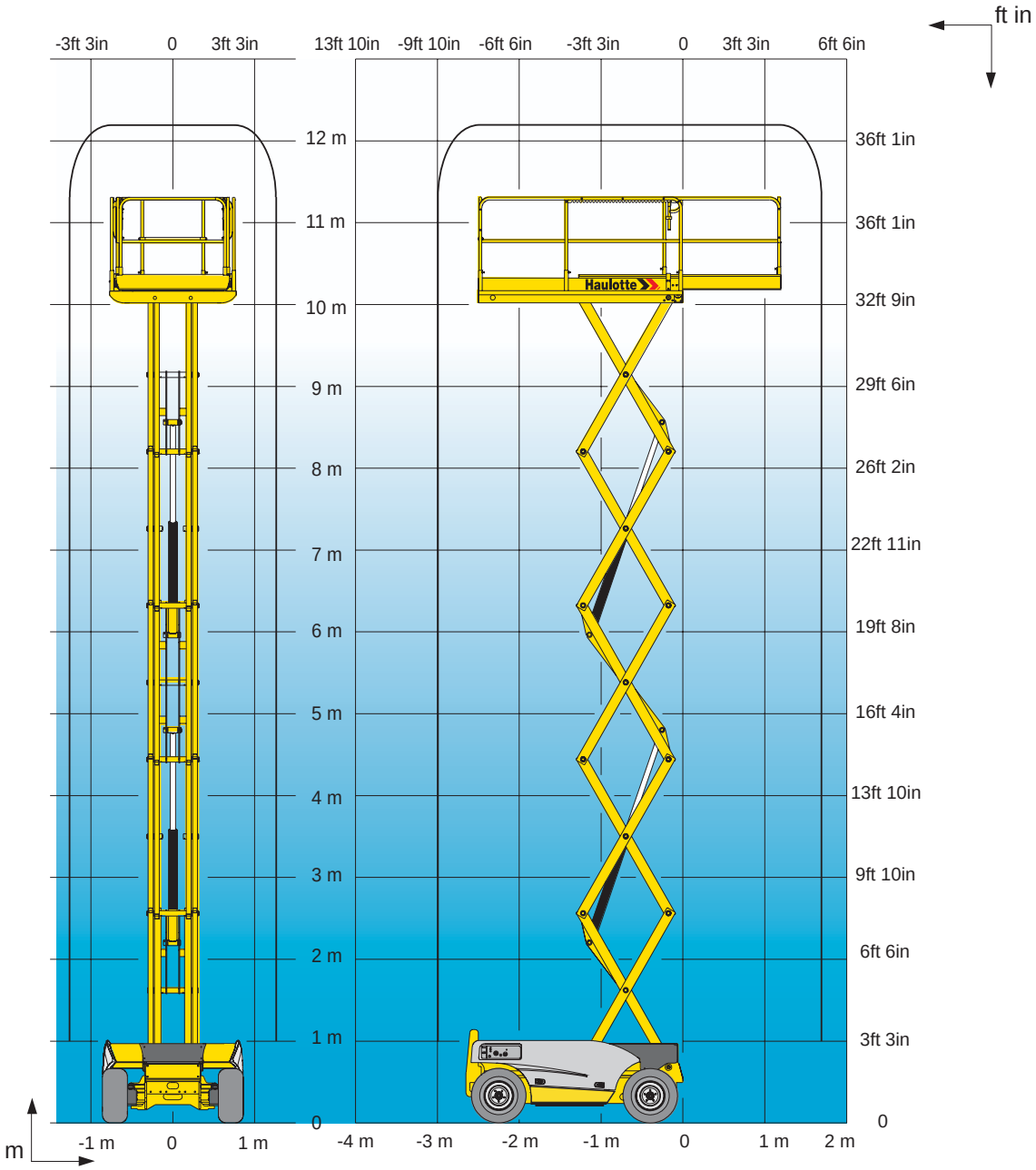

https://truckmanualshub.com/

4 - AS - CE standard specificities

The following tests must be performed after :

- A major technical intervention.
- An accident due to major component failure on the machine.

• The following tests must be performed by a qualified person in secure conditions.

• The results must be fully recorded.

To avoid the machine tipping over, it must be secured during the test (by a chain or anchorage point).

4.1 - OVERLOAD TEST

Load table

Machine	Test load	
	Pound (lb)	Kilogramme (kg)
COMPACT 8 (COMPACT 2032E) COMPACT 14 (COMPACT 3947E)	965	437,5
COMPACT 8W (COMPACT 2247E) COMPACT 10 (COMPACT 2747E) COMPACT 12RTE (COMPACT 3368RTE)	1240	562,5
COMPACT 10N (COMPACT 2632E) OPTIMUM 8 (OPTIMUM 1930E)	634	287,5
COMPACT 10N-1 (NA) OPTIMUM 8-1 (NA)	331	150
COMPACT 12 (COMPACT 3347E) COMPACT 8CU (NA)	827	375
OPTIMUM 6 (OPTIMUM 1530E)	744	337,5
COMPACT 10RTE (COMPACT 2668RTE)	1557	706,25

The machine must not show any signs of permanent distortion.

Tests are performed by a qualified person under optimal conditions and results must be fully recorded.

4.2 - FUNCTIONAL TEST

Functional tests have confirmed the following: :

- The machine has performed all movements without jerking, while carrying the nominal load.
- All security systems are operating correctly.
- Maximum authorized operating speeds are not exceeded.

https://truckmanualshub.com/

4.3 - STABILITY TEST

The stability test proves that the machine is stable in an unfavourable position. The moment when the machine tips is calculated by combining loads in the machine's most unfavourable position (load W applied over distance L).

Stability table for COMPACT 8 (COMPACT 2032E)

	T (°)	W		L		Moment of tipping over
		Pound (lb)	Kilogramme (kg)	Feet inch (ft in)	Mètre (m)	Déca Newton Mètre (DaN.m)
Horizontal (1)	2,5	154	70	24 ft 1 in	7.33	516
Vertical (2)	2,5	121	55	24 ft 6 in	7.459	410

Stability table for COMPACT 8 CU (NA)

	T (°)	W		L		Moment of tipping over
		Pound (lb)	Kilogramme (kg)	Feet inch (ft in)	Mètre (m)	Déca Newton Mètre (DaN.m)
Horizontal (1)	2,5	240	109	24 ft 1 in	7.33	800
Vertical (2)	2,5	150	68	24 ft 6 in	7.459	507

Stability for COMPACT 8 (COMPACT 2032E) - COMPACT 8 CU

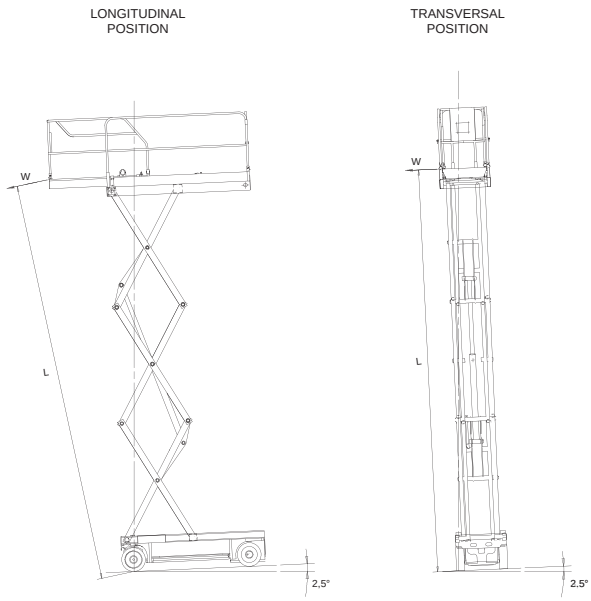

https://truckmanualshub.com/

Stability table for C8W (COMPACT 2247E)

	T (°)	W		L		Moment of tipping over
		Pound (lb)	Kilogramme (kg)	Feet inch (ft in)	Mètre (m)	Déca Newton Mètre (DaN.m)
Horizontal (1)	3,5	265	120	25 ft 2 in	7,68	925
Vertical (2)	3,5	247	112	24 ft 6 in	7,46	840

Stability for C8W (COMPACT 2247E)

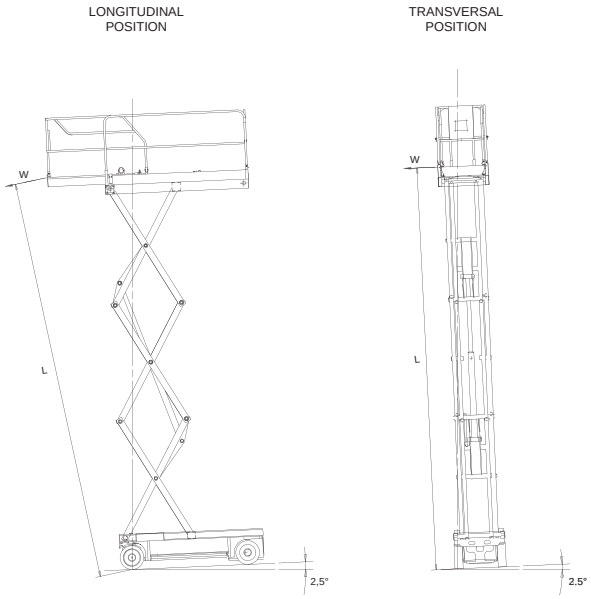

https://truckmanualshub.com/

Stability table for Compact 10N (COMPACT 2632E)

	T (°)	W		L		Moment of tipping over
		Pound (lb)	Kilogramme (kg)	Feet inch (ft in)	Mètre (m)	Déca Newton Mètre (DaN.m)
Horizontal (1)	2,5	176	80	30 ft 7 in	9.32	752
Vertical (2)	2,5	126	57	30 ft 0 in	9.45	543

Stability table for COMPACT 10N-1 (NA)

	T (°)	W		L		Moment of tipping over
		Pound (lb)	Kilogramme (kg)	Feet inch (ft in)	Mètre (m)	Déca Newton Mètre (DaN.m)
Horizontal (1)	2,5	154	70	30 ft 7 in	9.32	650
Vertical (2)	2,5	150	68	30 ft 0 in	9.45	644

Stability for COMPACT 10N (COMPACT 2632E) - COMPACT 10N-1

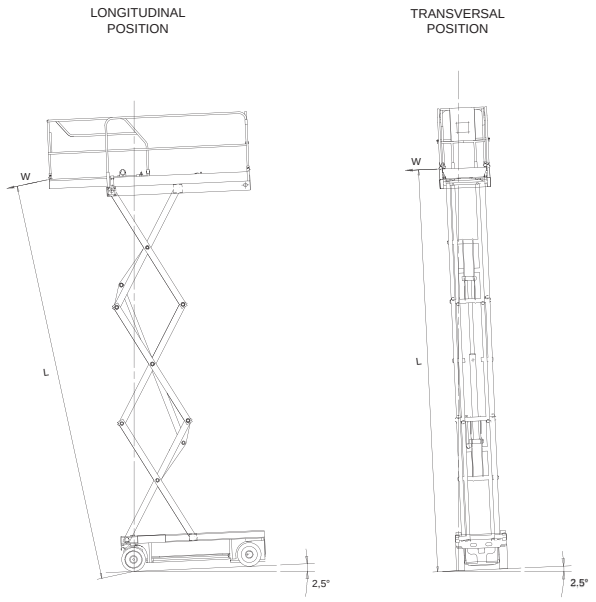

https://truckmanualshub.com/

Stability table for COMPACT 10 (COMPACT 2747E)

	T (°)	W		L		Moment of tipping over
		Pound (lb)	Kilogramme (kg)	Feet inch (ft in)	Mètre (m)	Déca Newton Mètre (DaN.m)
Horizontal (1)	2,5	234	106	30 ft 7 in	9.32	997
Vertical (2)	2,5	216	98	31 ft 0 in	9.45	928

Stability for COMPACT 10 (COMPACT 2747E)

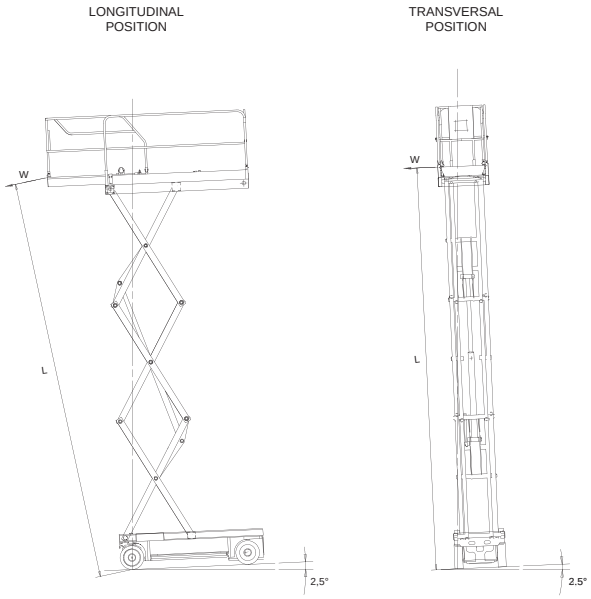

https://truckmanualshub.com/

Stability table for COMPACT 12 (COMPACT 3347E)

	T (°)	W		L		Moment of tipping over
		Pound (lb)	Kilogramme (kg)	Feet inch (ft in)	Mètre (m)	Déca Newton Mètre (DaN.m)
Horizontal (1)	2,5	181	82	37 ft 7 in	11.45	938
Vertical (2)	2,5	139	63	37 ft 3 in	11.35	713

Stability for COMPACT 12 (COMPACT 3347E)

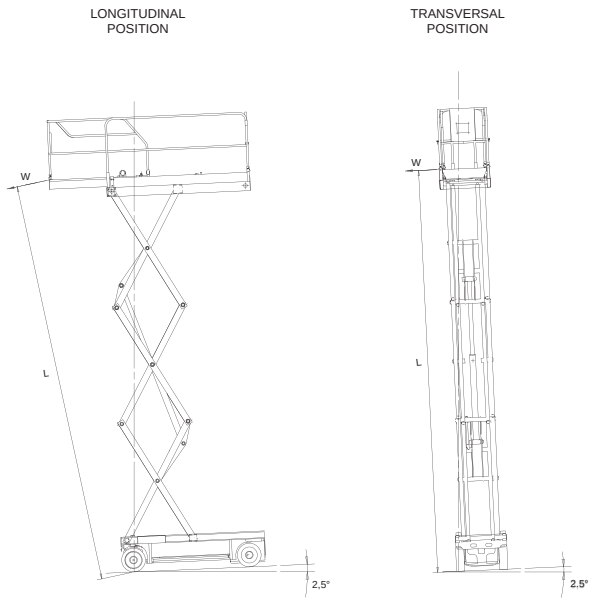

https://truckmanualshub.com/

Stability table for COMPACT 14 (COMPACT 3947E)

	T (°)	W		L		Moment of tipping over
		Pound (lb)	Kilogramme (kg)	Feet inch (ft in)	Mètre (m)	Déca Newton Mètre (DaN.m)
Horizontal (1)	3,5	159	72	42 ft 8 in	13.01	940
Vertical (2)	2,5	123	56	42 ft 4 in	12.9	721

Stability for COMPACT 14 (COMPACT 3947E)

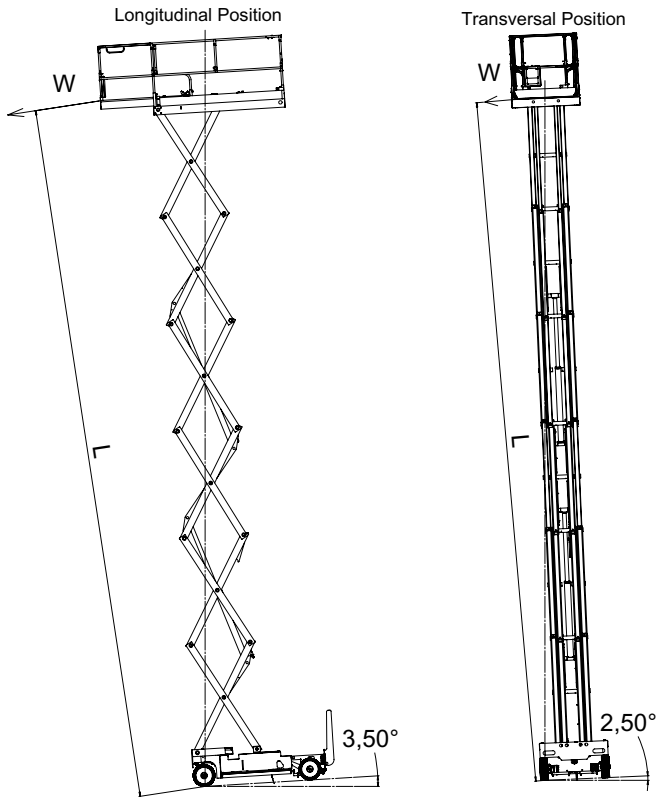

https://truckmanualshub.com/

Stability table for OPTIMUM 6 (OPTIMUM 1530E)

	T (°)	W		L		Moment of tipping over
		Pound (lb)	Kilogramme (kg)	Feet inch (ft in)	Mètre (m)	Déca Newton Mètre (DaN.m)
Horizontal (1)	2,5	159	72	18 ft 4 in	5.60	404
Vertical (2)	2,5	130	59	17 ft 10 in	5.44	321

Stability for OPTIMUM 6 (OPTIMUM 1530E)

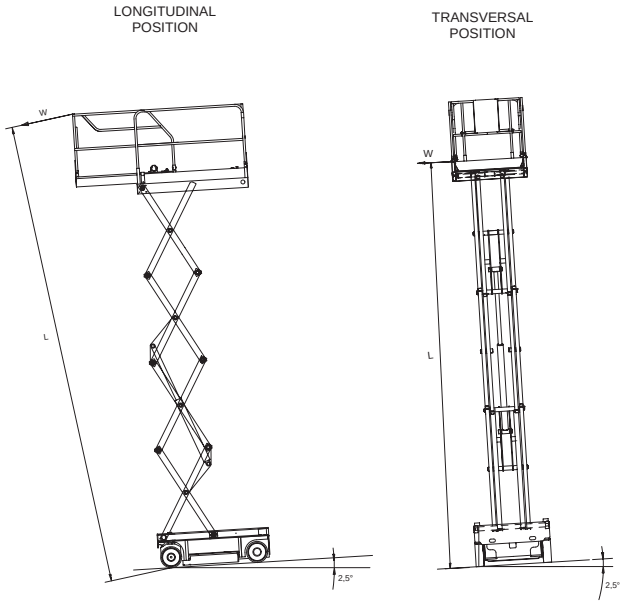

https://truckmanualshub.com/

Stability table for OPTIMUM 8 (OPTIMUM 1930E)

	T (°)	W		L		Moment of tipping over
		Pound (lb)	Kilogramme (kg)	Feet inch (ft in)	Mètre (m)	Déca Newton Mètre (DaN.m)
Horizontal (1)	2,5	95	43	23 ft 3 in	7,08	310
Vertical (2)	2,5	60	27	22 ft 10 in	6,96	185

Stability table for OPTIMUM 8-1 (NA)

	T (°)	W		L		Moment of tipping over
		Pound (lb)	Kilogramme (kg)	Feet inch (ft in)	Mètre (m)	Déca Newton Mètre (DaN.m)
Horizontal (1)	2,5	126	57	23 ft 3 in	7,08	404
Vertical (2)	2,5	115	52	22 ft 10 in	6,96	365

Stability for OPTIMUM 8 (OPTIMUM 1930E) - OPTIMUM 8-1

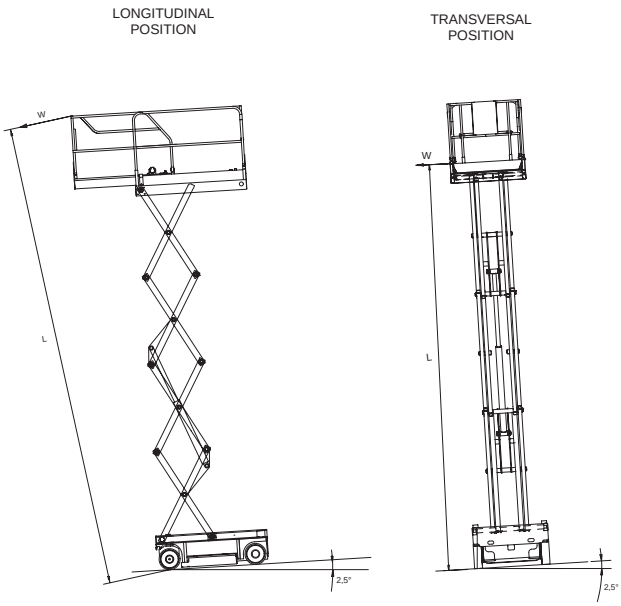

https://truckmanualshub.com/

Stability table for COMPACT 10RTE (COMPACT 2668RTE)

	T (°)	W		L		Moment of tipping over
		Pound (lb)	Kilogramme (kg)	Feet inch (ft in)	Mètre (m)	Déca Newton Mètre (DaN.m)
Horizontal (1)	3,5	362	164	31 ft 10 in	9,70	1592
Vertical (2)	3,5	311	141	31 ft 6 in	9,60	1356

Stability for COMPACT 10RTE (COMPACT 2668RTE)

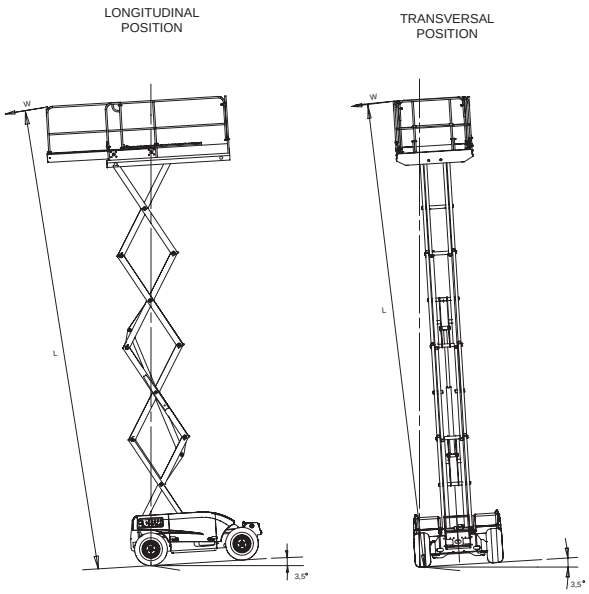

https://truckmanualshub.com/

Stability table for COMPACT 12RTE (COMPACT 3368RTE)

	T (°)	W		L		Moment of tipping over
		Pound (lb)	Kilogramme (kg)	Feet inch (ft in)	Mètre (m)	Déca Newton Mètre (DaN.m)
Horizontal (1)	3,5	340	154	37 ft 9 in	11,50	1772
Vertical (2)	3,5	304	138	37 ft 5 in	11,40	1582

Stability for COMPACT 12RTE (COMPACT 3368RTE)

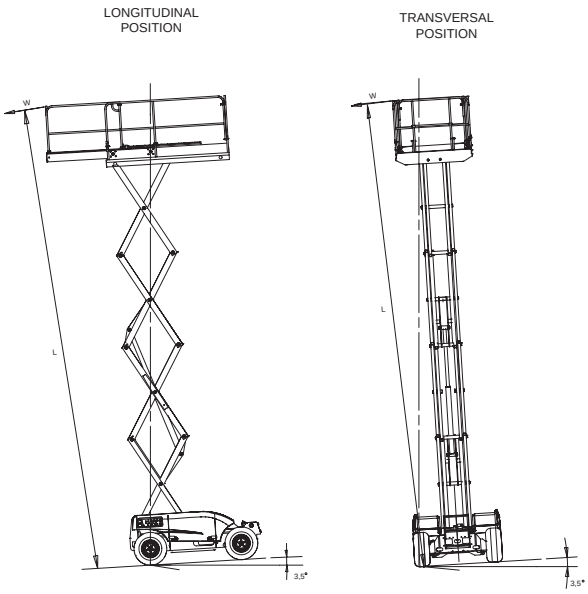

See paragraph 1.12.2 of the AS1418.10 standard for test details.

The machine must return to a stable state without tipping over.

https://truckmanualshub.com/

5 - Declaration of conformity

CE Declarations of Conformity only apply to machines that are certified for the European market.

Declaration of conformity - Electric platforms

DECLARATION DE CONFORMITE CE

(certificate of conformity with CE-directives)

Nom et adresse du constructeur ou son représentant autorisé dans la communauté :
Name and address of manufacturer or their authorised agents within the European Community

HAULOTTE Group Siège Social
La Péronnière
BP 09
42152 L'HORME Cedex
FRANCE

HAULOTTE GROUP
Usine de _____
_____
_____
_____

Déclare que la machine décrite ci-dessous :
(Declares that the technical installation described below)

Nacelle ou Plate-forme mobile élévatrice de personnes
(Elevating work Platform)

Machine au nom commercial *(Machine with the commercial name)* ____,
Conforme au type *(in compliance with the type)* ____
Numéro de série *(Serial number)*: ____

Se conforme aux dispositions de la directive machine 2006/42/CE.
(Conforms to the provisions set out in the EC Machinery Directive 2006/42/EC)

N° de certificat *(Certificate no)*: ____ ____ ___ __ __ ____

Cette machine est identique au modèle ayant fait l'objet d'un examen CE de type par l'organisme notifié :
(This machinery is identical to the model that was tested in an EC type-examination by the appointed body)

Organisme certifié (*Authorised certification body*) :

_____ n° ___
_____
_____

- Se conforme également aux dispositions de la directive 2004/108/CE concernant la compatibilité électromagnétique.
  (is in accordance with the provisions contained in EEC Directive no. 2004/108/CE on electromagnetic compatibility)
- Se conforme aux principales exigences des normes harmonisées suivantes : EN 280 et EN 954.
  (also fulfils the principal requirements of the following harmonised standards: EN 280 and EN 954)

Fait à L'Horme le : ……

_____
Directeur Division _____ */Managing Director,* _____ *Division*

Signature

Cette déclaration est conforme aux exigences de l'annexe II-a de la directive 2006/42/CE. Toute modification de la machine décrite ci-dessus rendrait cette déclaration caduque.
This declaration conforms with the requirements of annex II-A of the directive 2006/42/EEC.Any modification to the above described machine violates the validity of this declaration.

https://truckmanualshub.com/

Declaration of conformity - Thermal platforms

DECLARATION DE CONFORMITE CE

(certificate of conformity with EC directives)

Nom et adresse du constructeur ou son représentant autorisé dans la communauté :
Name and address of manufacturer or their authorised agents within the European Community

HAULOTTE Group Siège Social
La Péronnière
BP 09
42152 L'HORME Cedex
FRANCE

HAULOTTE GROUP
Usine de _____
_____
_____
_____

Déclare que la machine décrite ci-dessous :
(Declares that the technical installation described below)

Nacelle ou Plate-forme mobile élévatrice de personnes
(Elevating work Platform)

Machine au nom commercial *(Machine with the commercial name)* ____,
Conforme au type *(in compliance with the type)* ____
Numéro de série *(Serial number)*: ____

Se conforme aux dispositions de la directive machine 2006/42/CE.
(Conforms to the provisions set out in the EC Machinery Directive 2006/42/EC)

N° de certificat *(Certificate no)*: ____ ____ ___ __ __ ____

Cette machine est identique au modèle ayant fait l'objet d'un examen CE de type par l'organisme notifié :
(This machinery is identical to the model that was tested in an EC type-examination by the appointed body)

Organisme certifié (*Authorised certification body*) :

_____ **n°** ___
_____
_____

- Se conforme également aux dispositions de la directive 2000/14/CE concernant l'émission de bruit par l'équipement dans l'environnement en utilisation extérieure
  (is also in accordance with the clauses contained in the EC Outdoor Noise Directive (2000/14/EC))
  - Méthode de mesure (*Measuring methods*) Annexe III-B
  - LwA, Niveau de puissance acoustique garantie (*LWA, sound level guaranteed)* ___ dB
  - LwA, Niveau de puissance acoustique minimum/maximum (*LWA, maxi sound level)* ___/___ dB
- Se conforme également aux dispositions de la directive 2004/108/CE concernant la compatibilité électromagnétique.
  (is in accordance with the provisions contained in EEC Directive no. 2004/108/CE on electromagnetic compatibility)
- Se conforme aux principales exigences des normes harmonisées suivantes : EN 280 et EN 954.
  (also fulfils the principal requirements of the following harmonised standards: EN 280 and EN 954)

Fait à L'Horme le : ……

_____
Directeur Division _____ */Managing Director,* _____ *Division*

Signature

Cette déclaration est conforme aux exigences de l'annexe II-a de la directive 2006/42/CE. Toute modification de la machine décrite ci-dessus rendrait cette déclaration caduque.
This declaration conforms with the requirements of annex II-A of the directive 2006/42/EEC.Any modification to the above described machine violates the validity of this declaration.

https://truckmanualshub.com/

G - Technical characteristics

https://truckmanualshub.com/

1 - Intervention register

In order to benefit from the HAULOTTE® guarantee, each maintenance or repair operation must be entered in the INTERVENTION REGISTER, which can be found at the end of the maintenance book delivered with your machine.

Intervention register

Haulotte GROUP

H - REGISTRE D'INTERVENTION

REGISTRE D'INTERVENTION HAULOTTE SERVICE				
Date	Nature de l'intervention	Nbre heures	Intervenant	N° intervention Haulotte service

MODELE

https://truckmanualshub.com/

H - Intervention register