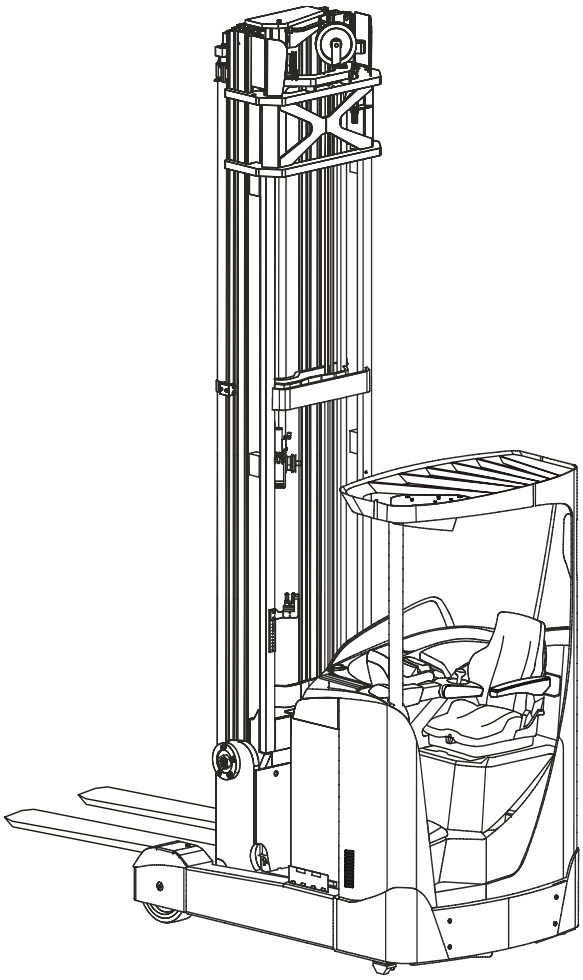

Repair manual en

RRE140/160/180/200/250

Applies from serial number: 6070557

Order number: 7510399-020
Issued: 2012-10-03 ESP

© BT Industries AB

Document revisions:

Publishing date	Order number	Amendments
2009-06-22	7510399-040	Completely new issue.
2009-12-22	7510399-040	Update: Chapter: 4.1.3, 4.14.4, 5, 8.2.2, 8.5.2, 8.5.4, 8.5.5, 8.6.4, 13.2, 14.8, 15.6, 15.10, 15.11, 16.1.2, 20.1, 22.4 New: Chapter: 4.1.1, 4.1.2, 4.1.4, 4.5.3, 4.7, 4.9.7, 9.3, 9.4.2, 9.4.3, 14.5, 15.1, 15.3.3, 20.2, 20.7
2012-09-03	7510399-040	Update: Chapter 4.3.2 has been updated. Chapter: 5 New parameters have been added. Chapter: 20.1 (columns added referring to schematic pages), 20.6, 20.7, 21.2.3 Chapter: 8 Troubleshooting with new error codes. Chapter: 7.4.2 Maintenance, checking fork yoke 1 item added, updated items for checking for cracks. Added replacing oil in gears at 1000h. Chapter: 7.4.1 Maintenance, checking parking brake every 500 b-hour. Chapter: 15.2 Instructions for replacing the filter has been added Chapter: 15.3 Instructions for replacing the valves has been added Chapter: 15.7, Free lift cylinder has been updated Chapter: 22.4, Service instrument (CASTOR USB) for programming has been added Chapter: 11.3.2 oil change has been updated. Chapter: 16.5 Fork carriage

This manual contains information on the following trucks:

T-Code	Model:	Serial number
815	RRE140, RRE140C, RRE140CC, RRE140E, RRE140EC, RRE140ECC, RRE160, RRE160C, RRE160CC RRE160E, RRE160EC, RRE160ECC	6070557-
816	RRE180, RRE180C, RRE180CC, RRE180E, RRE180EC, RRE180ECC, RRE200, RRE200C, RRE200CC, RRE200E, RRE200EC, RRE200ECC, RRE250, RRE250C, RRE250CC, RRE250E, RRE250EC, RRE250ECC	6070557-

Order number	Date	Valid from serial number	T-code
7510399-020	2012-10-03	6070557	815, 816

1 – Contents

2 – General introduction 2-1
2.1 How to use the manual 2-1
2.2 Warning symbols 2-2
2.3 Pictogram 2-2

3 – General safety rules 3-1
3.1 Safety while working 3-1
3.2 Electrical system 3-2
3.3 Safe lifting 3-3

4 – Descriptions of functions 4-1
4.1 Chassis 0000 4-1
4.1.1 Operator’s cabin (0500) 4-1
Versions for cold-store cabs 4-1
Emergency exit from the cab 4-2
4.1.2 Cab windows (0530) 4-3
Electrically heated windows 4-3
4.1.3 Operator's seat (0620) 4-4
Adjustment: 4-4
Button for seat heater 4-4
4.1.4 Cab heating/ventilation (0630) 4-5
Climate control knobs 4-5
Ventilation 4-5
Temperature 4-5
4.1.5 Operator protection (0840) 4-6
Tilt stops 4-6
Overhead guard 4-8
4.2 Motors 1000 4-9
4.2.1 General 4-9
4.2.2 Electric pump motor (1710) 4-9
General 4-9
Design 4-9
4.2.3 Electric steering motor (1730) 4-11
General 4-11
Design 4-11
4.2.4 Fan motor/fan (1740) 4-12
4.2.5 Electric drive motor (1760) 4-13
General 4-13
Design 4-13
4.3 Drive gear - 2000 4-14
4.3.1 General 4-14
4.3.2 Design 4-15
4.4 Brake system 3100 4-16
4.4.1 General 4-16
Travel brake 4-16
Parking brake 4-16
Emergency brake 4-16
4.4.2 Drive motor brake (travel brake) 4-17
Accelerator released 4-17
Changing the direction of travel 4-17

Contents

T-code	Valid from serial number	Date	Order number
815, 816	6070557	2012-10-03	7510399-020

4.4.3 Multiple disc brake, support arm (travel brake) 4-18
General 4-18
Design 4-18
4.4.4 Disc brake on the drive motor (parking brake) 4-19
General 4-19
Design 4-19
4.5 Steering system 4000 4-20
4.5.1 General 4-20
4.5.2 Design 4-20
4.5.3 Sensor 4-21
4.6 Operator compartment 4-22
4.6.1 Truck control, overview 4-22
Right-hand control panel, single control 4-22
Right-hand control panel, multi-control 4-22
Emergency off switch 4-23
Steering wheel module 4-24
Pedals 4-24
4.6.2 Single-function controls 4-25
4.6.3 Multi-function controls 4-26
4.6.4 Central Information Display – CID 4-27
Navigation 4-27
LED symbols 4-30
Information symbols 4-31
Operator parameter symbols – Overview 4-32
Blocking symbols – Overview 4-33
Service functions 4-35
Calibration functions 4-37
Automatic calibration of lowering valve 4-38
Configuration functions 4-40
Other functions 4-43
4.6.5 Load Information Display – LID (option) 4-45
LED symbols 4-45
Symbols in the display part 4-46
4.7 sensors and sensors (5800) 4-47
4.7.1 Inductive sensors 4-47
4.7.2 Position sensor 4-47
4.7.3 Magnetic sensor 4-48
4.8 Operation and connection sequences 4-49
4.9 Functions 4-82
4.9.1 General overview 4-82
Terminology 4-82
Components 4-82
4.9.2 MCU – main control unit 4-83
General 4-83
Downloading software 4-83
System communication 4-83
4.9.3 ACT/ACH transistor regulators 4-84
General 4-84
4.9.4 Start-up 4-84
4.9.5 Shutdown 4-85
4.9.6 Driving 4-85
Introduction 4-85
Acceleration and speed reduction 4-85
Reversing 4-86
Brake 4-86
Travel speed 4-87

Order number	Date	Valid from serial number	T-code
7510399-020	2012-10-03	6070557	815, 816

4.9.7 OTP ... 4-88
Travel speed reduction - steering angle ... 4-88
Travel speed reduction - extension of reach carriage ... 4-88
Speed reduction - main lift range ... 4-88
Prevention of lifting/lowering of the forks ... 4-88
Reduced extension speed ... 4-88
4.9.8 Guide ... 4-89
Steering position control ... 4-89
Steering speed ... 4-89
Steering reference ... 4-90
Travel speed limitation ... 4-90
Compass rose ... 4-90
4.9.9 Hydraulic system ... 4-91
Definitions ... 4-91
Controls ... 4-91
Lift ... 4-91
Reach movement ... 4-92
Lift height limitation ... 4-92
Maximum height limitation ... 4-92
Auxiliary/Extra functions (option) ... 4-93
4.10 Height preselector, description of function ... 4-94
4.10.1 Using the height preselector ... 4-94
4.10.2 Symbols ... 4-94
4.10.3 Buzzer ... 4-94
4.10.4 Height preselector levels ... 4-95
4.10.5 Level selection ... 4-95
4.10.6 Height programming ... 4-96
4.10.7 Height preselector and TruckCom ... 4-97
4.10.8 Lifting/lowering movement ... 4-97
4.10.9 Parameter settings braking at height preselector ... 4-98
4.11 Hydraulic system 6000 ... 4-99
4.11.1 General ... 4-99
4.11.2 Tank ... 4-99
4.11.3 Filter ... 4-99
Return filter ... 4-99
Dehumidification filter ... 4-99
4.11.4 Hydraulic pump ... 4-100
4.11.5 Valve unit ... 4-100
Main valve block ... 4-100
Second valve block ... 4-101
4.11.6 Cylinders ... 4-102
Main lift cylinders ... 4-102
Free-lift cylinder ... 4-102
Cylinders for the reach movement, cabin tilt, sideshift and fork tilt ... 4-102
4.11.7 Lift and lowering function ... 4-103
Lifting and lowering of free lift ... 4-103
Transition from free lift to main lift ... 4-103
Lifting and lowering of main lift ... 4-103
Reach movement, in and out ... 4-103
Simultaneous operation of mast lift and reach movement . 4-104
4.11.8 Extra functions ... 4-104

Contents

T-code	Valid from serial number	Date	Order number
815, 816	6070557	2012-10-03	7510399-020

4.11.9 Cabin tilt (RRE Ergo) 4-104
Hydraulic priority system 4-104
Cabin tilt (RRE Ergo) during servicing 4-105
Cabin tilt in the event of hydraulic or electrical power loss 4-105
4.12 Mast 7000 4-106
4.12.1 Mast and reach carriage 4-106
4.13 Lifting devices 4-107
4.13.1 Fork extensions 4-107
4.13.2 Telescopic forks 4-107
4.14 Accessories 9000 4-109
4.14.1 Radio equipment 4-109
4.14.2 Extra lighting 4-109
4.14.3 Extra warning lights/alarm 4-110
4.14.4 Turn signal lights 4-110
4.14.5 Movement alarm 4-111
4.14.6 Positioning/TV equipment 4-112
4.14.7 Extra electrical equipment 4-114
4.14.8 Other extra equipment 4-115
Fork spacers 4-115
Load rest 4-116
E-bar 4-117
Flashlight 4-118

5 – Parameters 5-1
5.1 General 5-1
5.2 Displaying/changing parameters 5-1
5.3 Operator parameters 5-2
5.3.1 Overview 5-2
5.3.2 Connection to logged-in operator 5-3
5.3.3 Description 5-4
Parameter 1 – Steering 5-4
Parameter 2, 3 – Maximum travel speed 5-6
Parameters 4 and 5 – Acceleration/Retardation 5-6
Parameter 6 – Cab tilt 5-6
5.4 General service parameters 5-7
5.4.1 Overview 5-7
5.4.2 Description 5-7
Parameter 101/104 – Service/Logout 5-7
Parameter 105/106/114/115/117 (Travel alarms 1 and 2) 5-8
Parameter 107/108 – Battery 5-10
Parameter 109/110/111/112 – Collision sensor 5-14
Parameter 113 (shunt value) 5-15
Parameter 116 (Door on cold store cab) 5-16
5.4.3 Service parameters, travel functions 5-17
5.4.4 Overview 5-17
5.4.5 Description 5-17
Parameter 201 – Deceleration when reversing 5-17
Parameter 202/203/204 – Adjusting erroneous, maximum travel speeds 5-18
Parameter 205/206/207 – Adjusting erroneous, maximum travel speeds 5-18
Parameter 208 - Creep speed in travel direction control 5-19

Order number	Date	Valid from serial number	T-code
7510399-020	2012-10-03	6070557	815, 816

Parameter 209/210 – Reduced maximum travel speed above a certain lift height 5-19
Parameter 211/212 – Reduced maximum travel speed with a certain reach length 5-20
Parameter 213 – Permanently reduced maximum travel speed 5-20
Parameter 214 – Adjusting the maximum travel speed in main lift range 5-20
5.5 Service parameters, hydraulics 5-21
5.5.1 Overview 5-21
5.5.2 Description 5-24
Parameter 301/302/303/304 – Extra valve function 5-24
Parameter 305/306/307/308 – Max. oil pressure through valve Q8 5-26
Parameter 313/314/315/316 – Closing time 5-27
Parameter 317/318/319/320 – Max. oil flow through valve Q8 5-27
Parameter 321/322/323/324 – Max. oil flow through valve Q9 5-28
Parameter 325/326/327/328 – Opening/closing time valve Q8 5-28
Parameter 329/330/331/332 – Opening/closing time valve Q9 5-29
Parameter 341/342 – Reducing the lifting/lowering speed 5-29
Parameter 343 – Reduction of reach speed 5-30
Parameter 344 - Reduction of fork lowering speed before floor level 5-30
Parameter 345- Lift/lower sensitivity 5-30
Parameter 347/348 – Prevent the lifting/lowering of forks 5-31
Parameter 349 - Fork weight 5-31
Parameter 350 – Multi-function 5-32
Parameters 358/359/360 – Deactivation of hydraulic functions 5-33
Parameters 361/362/363/364/365 /366 – Function related, maximum lift/lowering speeds 5-34
Parameter 367/368 – Fork limit for deactivating the extension of the fork carriage and for sideshift 5-35
Parameter 369 through 379 – Height preselector 5-36
Parameter 380 through 386 – Lift height limitations 5-38
Parameters 387 through 393 – Configuration of lift height limitations 5-38
Parameters 395/396/397 – Function-related, maximum lift heights 5-39
Parameters 398/399 – Operator profile dependent, maximum lift heights 5-40
5.6 Service parameters, CID 5-41
5.6.1 Overview 5-41
5.6.2 Description 5-42
Parameter 503 – Login method 5-42
Parameter 504/505/506/507 – Smart Access 5-42
Parameters 508/509/512/513/514 – CID configuration . 5-47
Parameter 510/511 - Height pre-selector 5-49
5.7 Service parameters, General Function Unit GFU 5-50

Contents

T-code	Valid from serial number	Date	Order number
815, 816	6070557	2012-10-03	7510399-020

5.8 General factory parameters 5-51
5.8.1 Overview 5-51
5.8.2 Description 5-52
Parameter 1001 - Truck type 5-52
Parameter 1002 - (Drive motor) 5-52
Parameter 1003 – Pedal type 5-52
Parameter 1004 - Steering servo 5-53
Parameter 1005 - Pump motor 5-53
Parameter 1006 – Hydraulic pump 5-53
Parameter 1007 – Activation of hydraulic levers 5-54
Parameter 1008 – Mast type 5-54
Parameter 1009 – Height indication 5-55
Parameter 1010 - Weight indication 5-55
5.9 Factory parameters, activation of options 5-56
Parameter 1115 (Steering angle) 5-58
Parameter 1116 (Extended mast) 5-58
Parameter 1117 (Weight of load and fork height) 5-59
..... 5-59
Parameter 1118 (Main lift range) 5-59
5.10 Factory parameters, calibration 5-61

6 – Installation 6-1
6.1 Transporting the truck 6-1
Method 1 6-1
Method 2 6-1
6.2 Initial operation 6-2
6.2.1 Tool 6-2
6.2.2 Battery 6-2
Placing the battery 6-2
Battery parameters 6-3
6.2.3 Mast, fitting 6-3
6.2.4 Parameters on initial operation 6-3
Load indicator 6-3
Ergo cabin 6-4
Cold store cabin 6-4
6.2.5 Parameters for optional equipment 6-5
Height measurement (option) 6-5
Travel speed limitation, height-dependent 6-5
Travel speed limitation, reach movement dependent 6-5
Travel speed limitation, parameter-dependent 6-6
Collision sensor (BT) 6-6
6.2.6 Test driving 6-6

7 – Maintenance 7-1
7.1 Introduction, maintenance 7-1
7.2 Safety precautions for maintenance work 7-2
7.3 Checks for cracks 7-4
7.3.1 Visual inspection 7-4
7.3.2 Crack detection 7-5
Crack detection with liquid penetrants 7-5
Crack detection with magnetic yoke 7-5
7.4 Periodic maintenance 7-6
7.4.1 Every 500 B-hours/180 days 7-6
7.4.2 Every 1000 B-hours/360 days 7-8
7.4.3 Every 2000 B-hours/720 days 7-13

Order number	Date	Valid from serial number	T-code
7510399-020	2012-10-03	6070557	815, 816

7.4.4 Every 3000 B-hours/1080 days 7-13
7.4.5 Every 5000 B-hours/1800 days 7-15
7.4.6 Annual status inspection 7-15
7.5 Maintenance instructions 7-16
7.5.1 Cleaning and washing 7-16
High-pressure washers 7-16
Degreasing agents 7-16
Cleaning the truck exterior 7-16
Cleaning the chain 7-17
Cleaning the motor compartment 7-17
Electrical components 7-17

8 – Troubleshooting 8-1
8.1 Abbreviations used in this section 8-1
8.2 Truck help functions 8-1
8.2.1 Error log menu 8-1
Description 8-1
Access 8-1
8.2.2 Error information menu 8-2
Description 8-2
Access 8-2
8.2.3 Diagnostic screens 8-2
Access 8-2
State 1 – Voltage from the control console levers 8-3
State 2 – Digital signals from the truck control to CID 8-4
State 3 – Voltage from control/sensor to MCU 8-5
State 4 – Digital input signals to MCU 8-6
State 5 – Digital output signals from MCU 8-8
State 6 – PWM output signals from MCU 8-9
State 7 – FCU (not used) 8-9
State 8 – FCU (not used) 8-9
State 9 – GFU (not used) 8-9
State 10 – GFU (not used) 8-9
State 11 – Temperature signals 8-10
State 12 – Voltage levels 8-10
State 13 – Travel information 8-11
State 14 – Steering information 8-12
State 15 – Lift/lowering information 8-13
Stage 16 – Reach movement information 8-14
Stage 17 – Hydraulic information 8-15
State 18 – VNA (not used) 8-16
State 19 – Pressure sensor for free and main lifts 8-16
8.3 Initial troubleshooting 8-17
8.4 Troubleshooting using catch symbol 8-18
8.5 Troubleshooting using error codes 8-26
8.5.1 CID, warnings and errors 8-28
8.5.2 MCU and other warnings and errors 8-32
8.5.3 Drive system error 8-42
8.5.4 Hydraulic system error 8-55
8.5.5 Steering system, warnings and errors 8-88
8.5.6 GFU, warnings and errors 8-95

Contents

T-code	Valid from serial number	Date	Order number
815, 816	6070557	2012-10-03	7510399-020

8.6 Troubleshooting without indications 8-97
8.6.1 Mechanical brake (3000) 8-97
8.6.2 Steering (4000) 8-97
8.6.3 Telescopic forks 8-98
8.6.4 Log on was normal, but one or several functions cannot be used 8-99

9 – Frame/Chassis 0000 9-1
9.1 General 9-1
9.2 Motor hood (0340) 9-1
9.2.1 Opening the motor compartment 9-1
RRE 140-RRE 250 9-1
To open the motor compartment: 9-1
To close the motor compartment: 9-1
Replacing the motor hood 9-2
Adjustment of motor hood 9-2
9.3 Battery compartment components (0390) 9-4
9.3.1 Adjusting the battery bed 9-4
9.4 Operator's cab (0500) 9-5
9.4.1 Cab tilting RRE 140 – 250 Ergo 9-5
9.3.1 Cab windows (0530) 9-6
Fitting a window 9-6
9.3.2 Cab door (0550) 9-8
Disassembly of the door lock 9-8
Tools required 9-9
Method 9-9
Disassembly of the lock device 9-10
9.4 Operator compartment (0600) 9-12
9.4.1 Operator's seat (0620) 9-12
Disassembling the entire seat 9-12
Replacing the seat switch 9-13
Replacing the back rest 9-14
Replacing the chair seat 9-15
Replacing the seat heater switch 9-15
9.4.2 Cab heating/ventilation (0630) 9-16
Replacing the air filter on the cold store cabin: 9-16
Removing the fan and heater 9-17
Replacing the potentiometers 9-21
9.4.3 Internal fittings (0680) 9-23
9.4.4 Disassembling/assembling the floor plate, B version 0680 9-24
9.5 Safety equipment (0800) 9-26
9.5.1 Checking the overhead guard (0810) 9-26
9.5.2 Adjusting the tilt stops (0840) 9-27

10 – Motors 1000 10-1
10.1 Motor sensors 10-1
10.1.1 Temperature sensor 10-1
Retrofitting an external temperature sensor 10-2
10.1.2 Replacing the motor speed sensor 10-2
10.2 Pump motor (1710) 10-3
10.2.1 General 10-3
The pump motor dismantled 10-3
10.2.2 Replacing the bearing on the pump motor 10-4
Dismantling the pump motor 10-4

Order number	Date	Valid from serial number	T-code
7510399-020	2012-10-03	6070557	815, 816

Reassembling the pump motor 10-6
10.3 Steering motor and steering unit (1730) 10-7
10.3.1 General 10-7
10.3.2 Layout of the flange holes 10-7
10.3.3 Removing the steering motor from the truck 10-8
10.3.4 Fitting the steering motor in the truck 10-8
10.4 Fan motor/fan (1740) 10-9
10.4.1 General 10-9
10.4.2 Replacing the frequency converter cooling fan 10-9
Standard truck 10-9
Ergo truck 10-9
10.4.3 Replacing the motor compartment cooling fan 10-11
10.5 Drive motor (1760) 10-12
10.5.1 General 10-12
The drive motor dismantled 10-12
10.5.2 Removing the drive motor from the truck 10-13
10.5.3 Dismantling the drive motor 10-15
10.5.4 Cleaning 10-17
10.5.5 Assembling the drive motor 10-18
10.5.6 Fitting the drive motor in the truck 10-20

11 – Drive gear 2000 11-1
11.1 General 11-1
11.2 Repair- and serviceability 11-1
11.3 Measures 11-2
11.3.1 Checking the oil level. 11-2
11.3.2 Oil change 11-3
Oil refill table. 11-3
11.3.3 Leakage from the bottom cap 11-4
11.3.4 Replacing the drive gear 11-5
Special tools 11-5
Exposing the drive gear 11-5
Removing a drive motor from the truck 11-5
Removing a steering motor from the truck 11-5
Removing the drive gear from the truck 11-6
Fit the drive gear back in the truck 11-8
Placing the steering motor in the truck 11-9
Placing the drive motor in the truck 11-9
Concluding work 11-9

12 – Brake and wheel 3000 12-1
12.1 Travel brake system (3100) 12-1
12.1.1 Removing the support arm's multiple disc brake 12-1
12.1.2 Dismantling the multiple disc brake 12-1
Inspection 12-2
Adjusting play 12-2
Assembling the multiple disc brake 12-3
12.1.3 Installing the multiple disc brake in the truck 12-3
12.1.4 Checking the wheel brake's brake force 12-4
12.2 Parking brake (3300) 12-5
12.2.1 General 12-5
12.2.2 Emergency release of the parking brake 12-6
12.2.3 Checking the brake force 12-6
12.2.4 Removing the parking brake from the truck 12-7
Dismantling and checking for wear 12-8

Contents

T-code	Valid from serial number	Date	Order number
815, 816	6070557	2012-10-03	7510399-020

Adjusting the air gap 12-10
12.2.5 Installing the parking brake in the truck 12-12
12.3 Drive wheel (3530)..... 12-13
12.3.1 General 12-13
12.3.2 Removing the drive wheel from the truck 12-13
12.3.3 Installing the drive wheel on the truck 12-13
12.4 Wheel bolt (3530)..... 12-14
General 12-14
12.4.1 Replacing wheel bolts 12-14
12.5 Support arm wheel (3550)..... 12-15
12.5.1 Removing the support arm wheel from the truck 12-15
12.5.2 Replacing a wheel bearing - braked wheel (A) 12-16
12.5.3 Replacing a wheel bearing - unbraked wheel (B) 12-17
12.5.4 Fitting the support arm wheel to the truck 12-18
12.5.5 Wheel wear and tear 12-19

13 – Steering system 4000 13-1
13.1 Electric steering wheel (4310)..... 13-1
13.1.1 General 13-1
13.1.2 Replacing the pulse transducer on the steering wheel module 13-1
13.1.3 Removing the operating console from the truck 13-2
13.1.4 Replacing the wiring harness in the operating console . 13-4
13.1.5 Fitting the operating console in the truck 13-6
13.2 Steering reference sensor (4350) 13-7
General 13-7
13.2.1 Replacing the reference transducer [B17] 13-7
13.3 Steering bearings (4380) 13-8
13.3.1 Removing a steering bearing from the drive gear 13-8
13.3.2 Fitting a steering bearing on the drive gear 13-8

14 – Electrical system 5000 14-1
14.1 Battery (5110) 14-1
14.1.1 Battery recommendation 14-1
Exide gel batteries (e.g. Sonnenschein) 14-1
Hawker Evolution gel batteries 14-1
14.1.2 Battery installation 14-2
Replacement/installation of battery. 14-2
Procedure without battery changing table 14-3
Procedure with battery changing table 14-3
14.2 LID (5200)..... 14-4
14.2.1 Replacing the LID 14-4
14.2.2 Replacing the LID cold store cab 14-5
14.3 Replacing pedals (5300) 14-6
14.3.1 Accelerator and brake pedal 14-6
14.3.2 Safety pedal 14-6
14.4 Control console (5510)..... 14-7
14.4.1 General 14-7
14.4.2 Replacement/installation of a control 14-7
14.4.3 Replacing the multi-function control 14-8
Replacing the multi-function control's buttons. 14-8
14.4.4 Removing the control console from the truck 14-9
14.4.5 Replacing the access card's circuit board 14-10
14.4.6 Dismantling the control console 14-12
Installing an extra push button 14-14

Order number	Date	Valid from serial number	T-code
7510399-020	2012-10-03	6070557	815, 816

Replacing the travel direction selector with signal button 14-14
Replacing the display 14-15
14.4.7 Assembling the control console 14-15
14.4.8 Fitting the control console in the truck 14-16
14.5 Magnetic sensor (5850) 14-18
General 14-18
14.5.1 Replacing the magnetic sensor [B47] 14-18
14.5.2 Reference magnet 14-19
14.6 Parameter settings 14-20
14.6.1 Configuration menu 14-20
Calendar/hour counter menu 14-20
Parameter menu (PAR) 14-20
Setting operator parameters 14-21
14.7 PIN menu 14-22
14.7.1 Menu for activating a PIN block 14-23
14.7.2 Menu for programming a PIN (P) 14-23
14.8 Calibrations 14-24
14.8.1 Calibrating the hydraulic function control 14-24
14.8.2 Height measurement/reach movement length calibration 14-25
Calibrating height measurement (option) 14-26
14.8.3 Valve calibration 14-29
Lift valve calibration 14-29
Lowering valve calibration with height indication 14-31
Lowering calibration without height indication 14-33
Reach movement valve calibration 14-35
Calibration of the Ergo cab 14-38
14.8.4 Weight calibration 14-39
Calibrating the weight indicator 14-39
14.9 Replacing the wiring harness 14-41
14.10 main computer unit MCU (A5) 14-42
14.10.1 Installing a new card in the truck 14-42
14.10.2 Voltage supply 14-43
14.10.3 Battery negative 14-43
14.10.4 Internal status monitoring 14-43
14.10.5 Resetting the battery indicator 14-43

15 – Hydraulic system 6000 15-1
15.1 Hydraulic hygiene 15-1
15.1.1 Washing 15-1
15.1.2 Packaging 15-1
15.1.3 Handling 15-1
15.1.4 Storage 15-2
15.1.5 Work procedures 15-2
15.2 Hydraulic unit (6100) 15-3
15.2.1 Hydraulic tank, emptying 15-4
15.2.2 Hydraulic system, bleeding 15-5
15.2.3 Filter 15-6
Overview 15-6
Filter replacement (air and oil) 15-7
15.2.4 Remove the pump motor from the truck 15-9
15.2.5 Replacing the hydraulic pump 15-10
15.2.6 Fitting the pump motor in the truck 15-11
15.3 Main valve (6210) 15-12

Contents

T-code	Valid from serial number	Date	Order number
815, 816	6070557	2012-10-03	7510399-020

15.3.1 Emergency lowering of forks 15-12
15.3.2 Replacing the main valve block 15-14
15.3.3 Replacing the lifting/lowering valves 15-16
Overview 15-16
Method 15-17
15.3.4 Adjusting the maximum opening pressure 15-20
15.4 Hydraulic connections (6230) 15-22
15.4.1 Tightening torques for hydraulic connections 15-22
Tapered coupling with O-ring 15-22
Tredo sealing 15-23
Pipe coupling 15-24
15.4.2 Quick change connector 15-26
..... 15-27
15.5 Hydraulic system, mast (6300)..... 15-28
15.5.1 Mast-mounted hose reel (6370) 15-28
General 15-28
15.5.2 Fitting the hose reel 15-28
Spring preloading (turns) 15-28
15.5.3 Checks after fitting 15-29
15.6 Main lift cylinder 6610 15-30
General 15-30
15.6.1 Overview 15-31
Cylinder nomenclature 15-31
Nomenclature for cylinder head 15-32
Nomenclature for piston 15-32
15.6.2 Removing the air cylinder from the mast 15-33
15.6.3 Replacing the hose rupture valve 15-34
15.6.4 Dismantling the cylinder 15-36
15.6.5 Dismantling the piston. 15-38
Method 15-38
15.6.6 Dismantling the cylinder head 15-38
15.6.7 Fitting the cylinder head seals. 15-40
15.6.8 Fitting the piston seals 15-42
15.6.9 Assembling the cylinder 15-44
15.6.10 Assembling cylinder in the mast 15-46
15.7 Free lift cylinder (6620) 15-48
General 15-48
15.7.1 Overview 15-49
Cylinder nomenclature 15-49
Nomenclature for cylinder head 15-50
Nomenclature for piston 15-50
15.7.2 Removing the free lift cylinder from the truck 15-51
15.7.3 Replacing the hose rupture valve, free lift cylinder 15-51
15.7.4 Dismantling the cylinder 15-52
Tools required 15-53
Method 15-53
15.7.5 Dismantling the piston 15-53
Method 15-53
15.7.6 Dismantling the cylinder head 15-54
Method 15-54
15.7.7 Fitting the cylinder head seals. 15-55
Method 15-55
15.7.8 Fitting the piston seals 15-56
Method 15-57
15.7.9 Assembling the cylinder 15-58
..... 15-59

Order number	Date	Valid from serial number	T-code
7510399-020	2012-10-03	6070557	815, 816

15.7.10 Assembling the free lift cylinder in the mast 15-60
15.8 Reach cylinder (6650) 15-61
15.8.1 General 15-61
15.8.2 Removing the reach cylinder from the truck 15-61
15.8.3 Fitting the reach cylinder in the truck 15-62
15.9 Fork tilt cylinder (6660) 15-63
15.9.1 General 15-63
15.9.2 Remove the tilt cylinder from the truck 15-64
Mast with valve on the fork carriage: 15-64
Mast without valve on the fork carriage: 15-66
15.9.3 Fit the tilt cylinder in the truck 15-68
Mast without valve on the fork carriage: 15-70
15.10 Cab tilt cylinder (6660) 15-72
15.10.1 General 15-72
15.10.2 Overview 15-72
Cylinder nomenclature 15-72
Nomenclature for cylinder head 15-73
Nomenclature for piston 15-73
15.10.3 Dismantling the cylinder 15-74
15.10.4 Dismantling the piston rod 15-76
15.10.5 Dismantling the cylinder head 15-78
15.10.6 Fitting the cylinder head seals. 15-80
15.10.7 Mounting the piston rod 15-82
15.10.8 Assembling the cylinder 15-84
15.11 Sideshift cylinder (6670) 15-86
15.11.1 General 15-86
15.11.2 Overview 15-87
Cylinder nomenclature 15-87
Nomenclature for cylinder head 15-88
Nomenclature for piston 15-88
15.11.3 Dismantling the cylinder from the truck 15-89
15.11.4 Dismantling the cylinder 15-90
15.11.5 Dismantling the piston rod 15-92
15.11.6 Dismantling the cylinder head 15-94
15.11.7 Fitting the cylinder head seals. 15-96
15.11.8 Mounting the piston rod 15-98
15.11.9 Assembling the cylinder 15-100
15.11.10 Refitting the cylinder in the truck 15-101

16 – Mast/Lift system 7000 16-1
16.1 Main mast 1.6-2.5 t (7100) 16-1
16.1.1 Replacing the full mast 16-1
16.1.2 Removing the mast from the truck 16-2
16.1.3 Adjusting mast play 16-5
General 16-5
Preparations 16-5
Adjusting lateral play 16-8
Adjustment of radial play 16-9
Adjusting the damper parts 16-9
Adjusting the damper plate 16-10
Refitting the mast 16-10
16.1.4 Replacing the mast damper plates 16-11
16.1.5 Placing the mast on the truck 16-12
16.2 Main lift chain system (7120) 16-16
16.2.1 General 16-16

Contents

T-code	Valid from serial number	Date	Order number
815, 816	6070557	2012-10-03	7510399-020

16.2.2 Checking the chain 16-16
Noise 16-16
Surface rust 16-16
Rusty links 16-16
Stiff links 16-17
Bolt rotation 16-17
Loose bolts 16-17
Outline wear 16-18
Stretching 16-19
Damage 16-19
Damaged plates 16-20
Damaged bolts 16-20
Dirty chain 16-20
16.2.3 Lubricating the chain 16-20
16.2.4 Main lift chain system, adjusting the fork-to-floor distance 16-21
16.3 Reach carriage (7190) 16-22
16.3.1 Adjusting radial play in the reach carriage 16-22
16.3.2 Adjusting axial play in the reach carriage 16-24
16.4 Lifting devices (7400) 16-25
16.4.1 Forks 16-25
General 16-25
Inspection 16-25
Inspection intervals 16-25
Surface cracks 16-25
Difference in height between the fork tips 16-26
Position lock 16-26
Readability of the markings 16-26
Fork blades and back of fork carriage 16-26
Mounting fixtures on the fork 16-26
16.4.2 Forks, repairs and testing 16-27
Repairs 16-27
Testing the yield point 16-27
Fork 16-27
16.5 Fork carriage 16-28
16.5.1 Checking the fork carriage's wear strip 16-28
16.5.2 Lubricating the fork carriage 16-29
16.6 Fork spread unit 16-30
16.6.1 Servicing the fork spread unit 16-30
Replacing bearings 16-31
Roller replacement 16-31
16.7 Fork extensions with adjustable fork length 16-32
16.8 Manual telescopic forks 16-34
16.8.1 Installation 16-34
16.8.2 Maintenance 16-35
16.9 Hydraulic telescopic forks 16-36
16.9.1 Telescopic forks with separate flow dividers 16-37
Fitting instructions 16-38
Initial operation of telescopic forks with separate flow dividers 16-38
16.9.2 Telescopic forks with integrated flow dividers 16-39
Fitting instructions 16-40
Initial operation of telescopic forks with integrated flow dividers 16-40
16.9.3 Maintenance of telescopic forks 16-41

Order number	Date	Valid from serial number	T-code
7510399-020	2012-10-03	6070557	815, 816

16.9.4 Dismantling telescopic forks 16-42
16.9.5 Assembling telescopic forks 16-43

17 – Peripherals - 8000 17-1
17.1 Introduction 17-1

18 – Extra equipment - 9000 18-1
18.1 Introduction 18-1

19 – Appendix “Destruction instructions” 19-1
19.1 General 19-1
19.2 Marking of plastics 19-1
19.2.1 General marking of products and packaging material ... 19-1
19.2.2 Marking according to our standard 19-2
Abbreviations 19-2
Marking examples 19-2
19.3 Pressure vessels 19-3
19.3.1 Gas dampers 19-3
19.4 Sorting categories 19-4

20 – Wiring diagram 20-1
20.1 Components 20-1
20.2 Component location 20-11
Figure 1 (Fork carriage) 20-11
Figure 2 (Chassis wiring harness) 20-12
Figure 3 (Chassis wiring harness) 20-13
Figure 4 (Support leg brake) 20-14
Figure 5 (Pedals) 20-14
Figure 6 (Motor wiring harness) 20-15
Figure 7 (Reach carriage wiring harness) 20-16
Figure 8 (Level/position meter) 20-17
Figure 9 (seat) 20-18
Figure 10 (DC/DC) 20-19
Figure 11 (Driver position wiring harness) 20-20
Figure 12 (Extra hydraulic function(s)) 20-21
Figure 13 (Travel alarm) 20-22
Figure 14 (Roof wiring harness) 20-23
Figure 15 (Roof) 20-24
Figure 16 (Sound system) 20-25
Figure 17 (Forks camera) 20-26
Figure 18 (Battery harness) 20-27
Figure 19 (Fuse box) 20-28
Figure 20 (LID) 20-29
Figure 21 (Mast wiring harness) 20-30
Figure 22 (Fork carriage wiring harness) 20-31
Figure 23 (Reach carriage wiring harness options) 20-32
Figure 24 (Working light wiring harness) 20-33
Figure 24 (Extra outlet DC) 20-34
Figure 25 (T.W.I.S.) 20-34
Figure 26 (Shock Switch / Impact Manager) 20-35
Figure 27 (Heated windows CC) 20-36
Figure 28 (Cabling driver position CC) 20-37
Figure 29 (Heater CC) 20-38
Figure 30 (Cab heater wiring harness CC) 20-39
Figure 31 (Safety switch for door CC) 20-40

Contents

T-code	Valid from serial number	Date	Order number
815, 816	6070557	2012-10-03	7510399-020

Figure 32 (Cab tilt wiring harness) 20-40
Figure 33 (Control panel) 20-41
Figure 34 (Control panel) 20-42
Figure 35 (Steering arm) 20-43
Figure 36 (MCU) 20-44
Figure 37 (Control motor) 20-45
Figure 38 (Main valve block) 20-46

20.3 Cable connections and pole bolts 20-48
20.3.1 ACT/ACH transistor regulators 20-48
20.3.2 Connections to CID 20-50
20.3.3 Connections on the MCU 20-52

20.4 Fuse box A9 20-54

20.5 Overview 20-55

20.6 Details up to and including serial no. 6206800 20-60

20.7 Detailed diagram cold-store cab 20-85

20.8 Details up to and including serial no. 6206800 20-110

20.9 Details cold store cab starting with 6206800 20-136

21 – Hydraulics schematics 21-1

21.1 Main valve unit 21-1
21.1.1 RRE Std. 21-1
21.1.2 RRE Ergo 21-2

21.2 Hydraulics schematics 21-3
21.2.1 Schematics designations 21-3
21.2.2 List of symbols 21-4
21.2.3 Wiring diagrams RRE/RRE Ergo 21-5

22 – Tools 22-1

22.1 AMP connectors 22-1

22.2 MQS contacts 22-2

22.3 CPC contacts 22-4

22.4 Miscellaneous tools 22-5

23 – Appendix “Service data and grease specifications” 23-1

23.1 General tightening torques 23-1
23.1.1 Galvanised non-oiled bolts 23-1
23.1.2 Untreated oiled bolts 23-2

23.2 Oil and grease specification 23-3

24 – Technical data 24-1

Order number	Date	Valid from serial number	T-code
7510399-020	2012-10-03	6070557	815, 816

2 – General introduction

2.1 How to use the manual

The service manual is divided into chapters containing the following information:

- Safety regulations – This chapter includes general safety regulations regaring working with the truck.
- Function – This chapter provides a basic description of the main functions of the truck.
- Parameters – This chapter contains a basic description of the steering system's parameters.
- Installation – This chapter describes the work that needs to be done before the truck is used for the first time.
- Maintenance – the chapter contains a general periodic maintenance schedule and a detailed description of the maintenance to be carried out.
- Troubleshooting – This chapter describes the error codes that appear in the display when the truck completely or partly stops working. The chapter also describes the reason why the errors occur and suggested remedies.
- Actions chapter – This chapter describes the various parts of the truck, what the parts look like and the service actions that need to be carried out. The various chapters are organised according to BT's C-code system.
- Appendixes – The appendixes contain:
  - instructions for disposal
  - information about electrical components and wiring diagrams
  - hydraulics diagrams
  - list of required tools
  - information about general tightening torques
  - oil and grease specifications
  - technical data.

T-code	Valid from serial number	Date	Order number
815, 816	6070557	2012-10-03	7510399-020

2.2 Warning symbols

The following warning symbols are used in the repair manual:

DANGER!

DANGER! means there is a risk of accident potentially leading to death or serious injury and material loss or damage. Always accompanied by the warning symbol.

WARNING!

WARNING! means that there is a risk of damage to components that are sensitive to electro static discharge.
Follow the ESD-protection regulations.

Note!

NOTE! means there is a risk of material loss or damage if the instructions are not followed. Also used to draw attention to a non-standard torque.

2.3 Pictogram

Pictograms are used, where possible, to describe certain elements. Pictograms are maily used at moments requiring the loosening or tightening of screws:

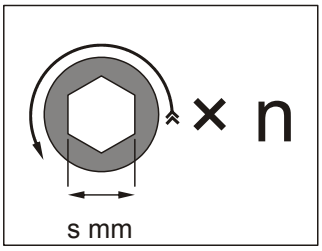

A pictogram contains information about the type of screw head and an arrow shows whether the screw should be loosened or tightened.

Text beneath the pictogram provides additional information about 's': key size, 'n': the number of screws as well as the recommended torque where necessary.

Another type of Pictogram is "Cut cable ties":

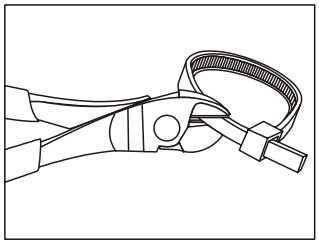

Additional information under the Pictogram can, for example, indicate the number of cable ties to be cut.

Order number	Date	Valid from serial number	T-code
7510399-020	2012-10-03	6070557	815, 816

3 – General safety rules

Only personnel trained in servicing and repairing this type of truck are authorised to carry out service and repair activities.

3.1 Safety while working

To ensure that you work safely and to prevent accidents while working on a truck, remember the following:

- keep the area where servicing activities are performed clean. Oil or water will make the floor slippery.
- use the correct working position. Service activities often involve kneeling or bending forward. Try sitting on a toolbox, for example, to relieve the strain on your knees and back.
- loose articles and jewellery may become trapped in the moving parts of the truck. So never wear loose articles or jewellery while working on the truck.
- use the correct tools for the work you are carrying out.
- keep all tools well maintained.
- store and transport old oil according to applicable local regulations.
- do not flush solvents, etc. down the drain unless they are intended to be disposed of in this way.

  Follow the local disposal regulations.
- heated paint gives off harmful gases. So use sanding or a paint stripper to remove the paint at least 100 mm around an area where any welding/grinding is to take place.

T-code	Valid from serial number	Date	Order number
815, 816	6070557	2012-10-03	7510399-020

3.2 Electrical system

When working on the electrical system of the truck, remember the following:

- a short circuit may occur if metal objects come into contact with live connections. This can result in burns. So remove watches, rings and other metal jewellery before starting work.
- always use insulated tools while working on the electrical system.
- always switch off the truck's power supply before opening the hoods to the drive assembly and the electrical system.
- disconnect the battery when using electric welding equipment. The welding current may damage the battery.
- always remove the battery plug when carrying out maintenance on the truck, unless the instructions in this service manual state otherwise.
- blow electric motors clean using compressed air.
- clean electrical panels, electronic cards, connectors, contactors, solenoid valves, etc. with a moist cloth and a cleaning agent that will not damage the part.

IMPORTANT

Risk of short-circuiting that may damage electrical components. Do not break the warranty seal on the electronic cards.

Thank you very much for your reading. Please Click Here. Then Get COMPLETE MANUAL. NO WAITING

CLICK HERE

NOTE:
If there is no response to click on the link above, please download the PDF document first and then click on it.

Order number	Date	Valid from serial number	T-code
7510399-020	2012-10-03	6070557	815, 816

3.3 Safe lifting

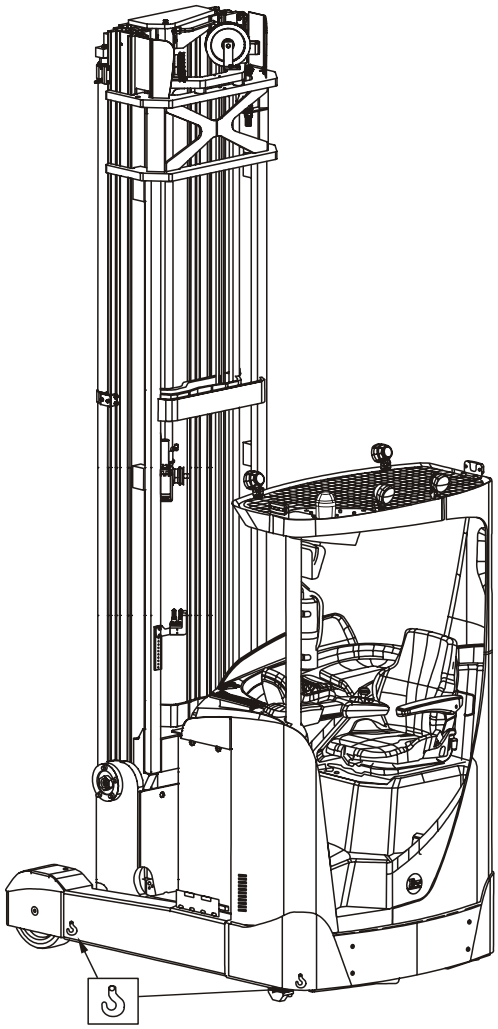

All lifting must be carried out on a flat, nonslip and stable surface. Asphalt floors must be avoided if possible.

- To prevent the truck moving while it is being lifted, it must not be lifted with anyone on the platform or with the tiller arm in the lowered position.
- If the drive wheel, which is braked, is being lifted the other wheel must be chocked to stop the truck moving.
- Select the lifting point so that the lift is as light as possible, for example one corner at a time. If the truck has marked lifting points on the lower part of the chassis, these should be used for a well-balanced lift.
- Ensure the area where you place the jack is clean and free of oil and grease.
- Ensure there is no grease or oil on your hands or the jack lever.

- Use the lever supplied with the jack. If the lever is too short, it will require more effort than is necessary. If the lever is too long there is a risk that the jack will be overloaded.

DANGER!
Risk of crushing – a poorly chocked truck may fall.

- ***Never work under a truck that is not blocked with supports or secured by a lifting device.***
- Place supports:
  - as close to the raised part of the chassis as possible to reduce the falling height if the truck tips over
  - so that the truck cannot roll.
- **Never** place a support under the jack to increase the lifting height.
- **Never** work under a lifted truck without appropriate supports.

Publication no.	Date	Valid from serial no.	T code
7510399-020	2012-10-03	6070557	815, 816

4 – Descriptions of functions

4.1 Chassis 0000

4.1.1 Operator’s cabin (0500)

Versions for cold-store cabs

Both the standard and the tilting cabs are available to cold-store specifications with or without a heated cab. They are all designed for use in temperatures down to -35°C.

Properties

- All switches and electrical components are designed for use in cold stores.
- The air supply to the hydraulic system is filtered to prevent accumulation of air.
- The hydraulic system uses a special oil that withstands cold temperatures.
- All exposed axles are manufactured in stainless steel.
- Exposed parts have been rust-protected with Tectyl ®