https://truckmanualshub.com/

Technical data
Hydraulic lift crane

LR 1300
Litronic®

Derrick equipment

LIEBHERR

https://truckmanualshub.com/

Dimensions

Basic machine with derrick equipment

Derrick equipment
with suspended counterweight

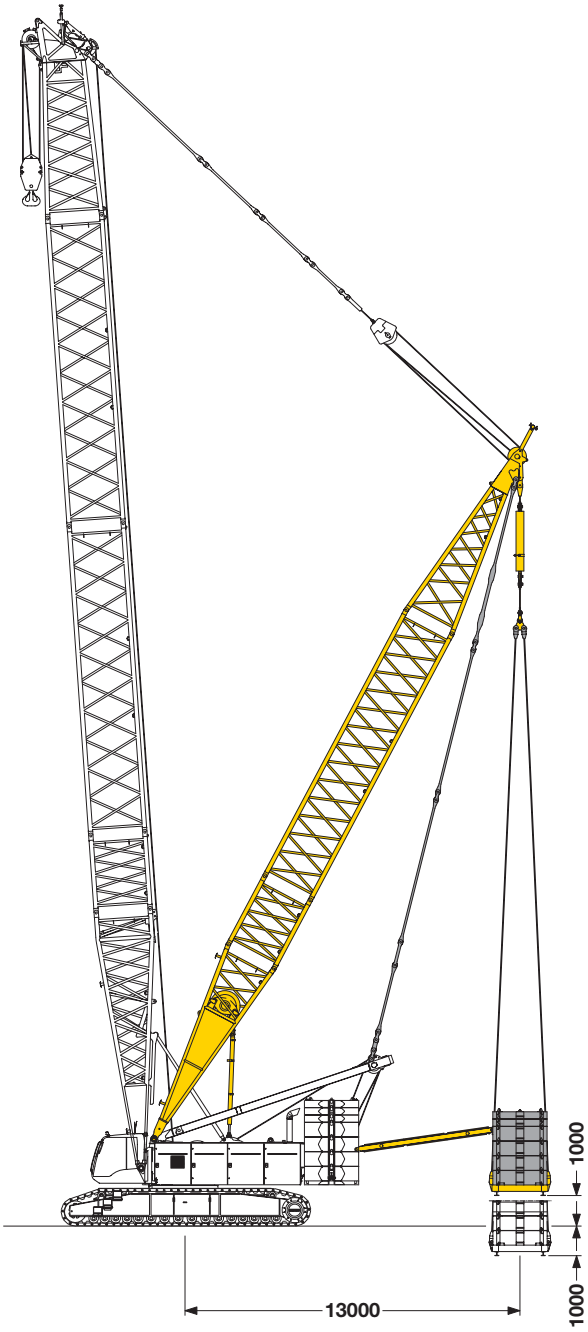

Derrick equipment
with wheeled counterweight carriage

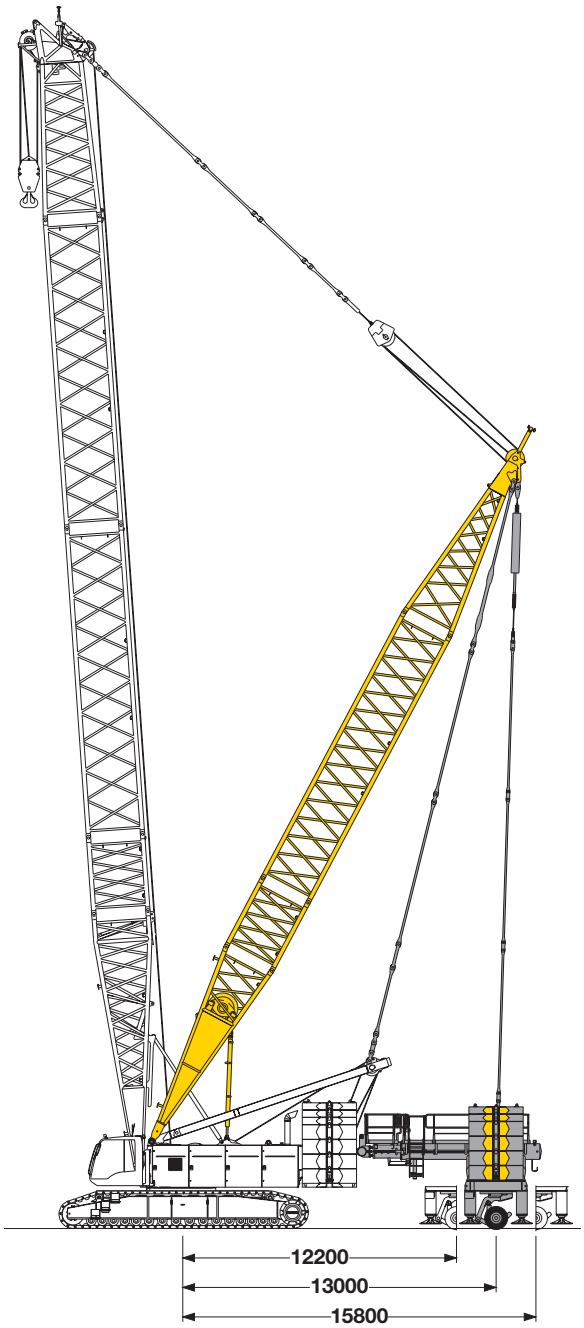

https://truckmanualshub.com/

Transport dimensions and weights

Basic machine and boom (No. 2220.xx)

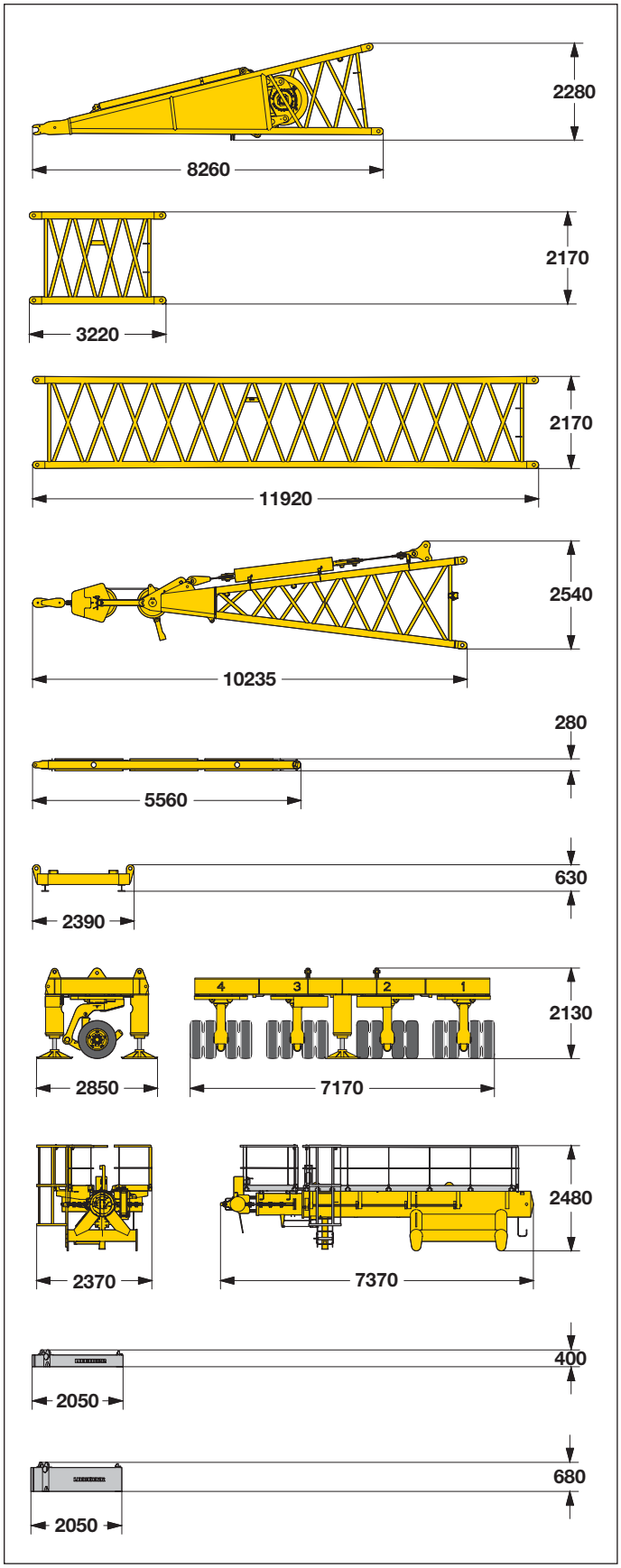

Derrick foot (No. 2220.24)	
Width	2420 mm
Weight incl. rope	7800 kg

Boom section (No. 2220.24)	
Width	2420 mm
Weight*	1030 kg

Boom section (No. 2220.22)	
Width	2420 mm
Weight*	2560 kg

Boom head (No. 2220.22)	
Width	2420 mm
Weight*	5400 kg

Spacer frame	
Width	2470 mm
Weight*	495 kg

Counterweight frame	
Width	5050 mm
Weight**	14360 kg

Wheeled counterweight carriage	
Width	2850 mm
Weight*	13155 kg

Telescopic unit	
Width	2370 mm
Weight*	6645 kg

Counterweight	(5 t)
Width	2120 mm
Weight*	5000 kg

Counterweight	(10 t)
Width	2120 mm
Weight*	10000 kg

*) including pendant straps; **) including pendant ropes

https://truckmanualshub.com/

Working range - main boom (No.2821.xx) 86° - 15°

124 t counterweight and 57 t carbody counterweight

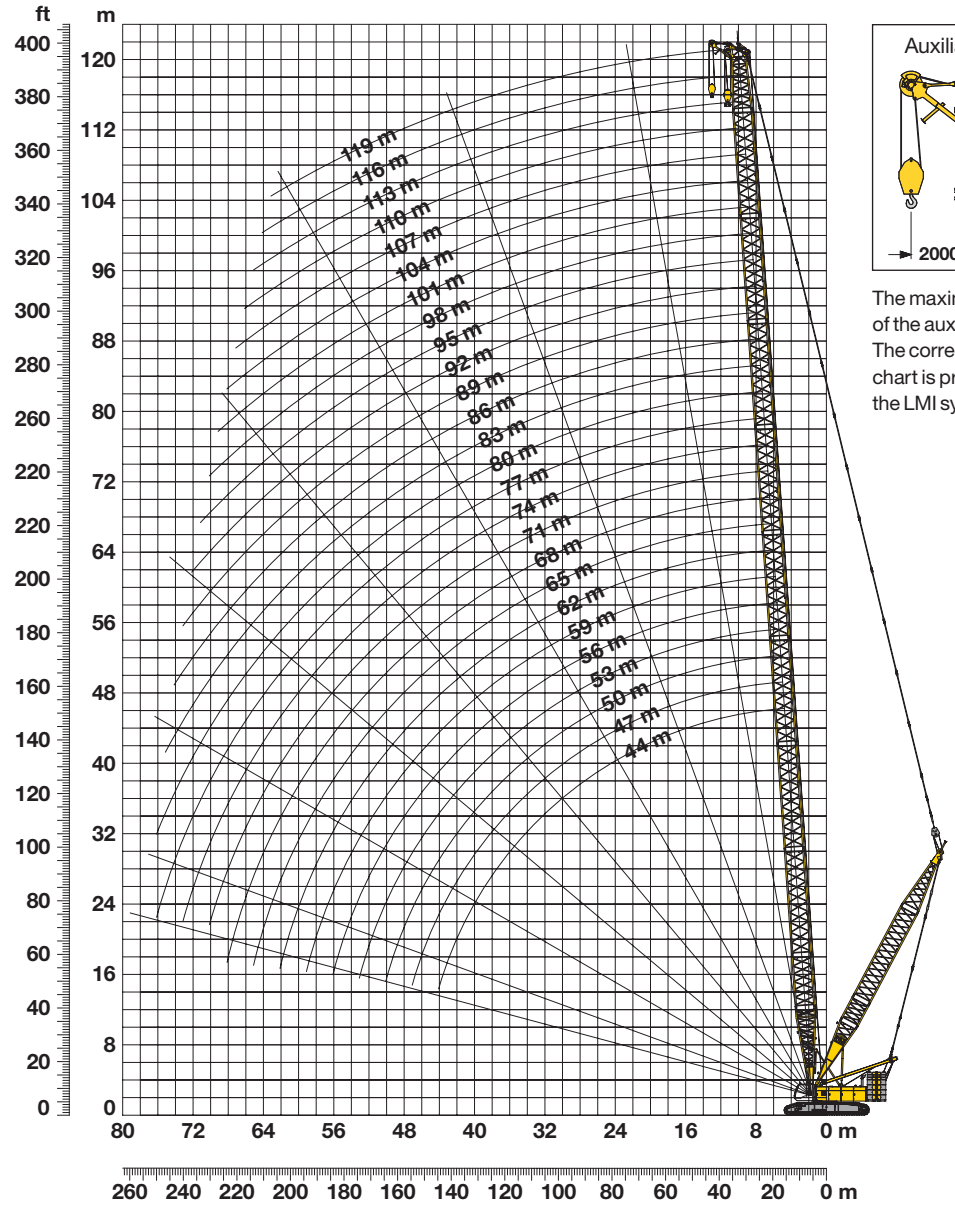

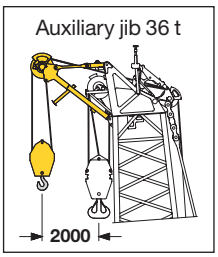

The maximum capacity of the auxiliary jib is 36 t. The corresponding load chart is programmed in the LMI system.

Main boom configuration (Table 1 – No. 2821.xx)

Configuration for boom lengths between 44 m and 119 m

	Length																										
Boom foot	10 m	1	1	1	1	1	1	1	1	1	1	1	1	1	1	1	1	1	1	1	1	1	1	1	1	1	1
Boom section	3 m	1		1		1		1		1		1		1		1		1		1		1		1		1	
Boom section	6 m		1	1			1	1			1	1			1	1			1	1			1	1			1
Boom section	12 m	2	2	2	3	3	3	3	4	4	4	4	5	5	5	5	6	6	6	6	7	7	7	7	8	8	8
Boom head	7 m	1	1	1	1	1	1	1	1	1	1	1	1	1	1	1	1	1	1	1	1	1	1	1	1	1	1
Boom length (m)		44	47	50	53	56	59	62	65	68	71	74	77	80	83	86	89	92	95	98	101	104	107	110	113	116	119

https://truckmanualshub.com/

Lift chart – main boom (No. 2821.xx)

124 t counterweight and 57 t carbody counterweight

Capacities in metric tons for boom lengths (44 m - 119 m) - with 215 kN winches
124 t counterweight and 57 t carbody counterweight

	Boom length in (m)												
	44	50	56	68	74	86	92	98	104	110	113	119	
Radius (m)	t	t	t	t	t	t	t	t	t	t	t	t	Radius (m)
8.9						92.2							8.9
9				141.7	129.9	92.2							9
10				123.2	122.8	92.2	79.2	68.5					10
12	98.2	98.0	97.8	97.1	96.7	90.2	77.8	67.7	59.0	51.4	47.9	41.5	12
14	80.6	80.4	80.1	79.4	78.9	78.0	76.5	66.2	57.7	50.4	47.1	41.0	14
16	68.1	67.8	67.5	66.7	66.2	65.2	64.7	64.2	56.6	49.2	45.9	39.7	16
18	63.1	58.4	58.1	57.2	56.7	55.7	55.2	54.6	54.1	48.0	44.8	38.6	18
20	55.3	55.0	50.4	49.5	48.9	47.9	47.4	46.8	46.3	45.7	43.4	36.9	20
22	48.6	48.3	48.1	43.7	43.1	42.1	41.6	41.0	40.4	39.8	39.6	35.7	22
24	43.5	43.2	43.0	38.5	38.0	36.9	36.4	35.8	35.2	34.6	34.4	33.8	24
26	38.9	38.6	38.4	34.3	33.7	32.6	32.1	31.5	30.9	30.3	30.1	29.9	26
28	35.1	34.7	34.5	33.6	30.1	29.4	28.8	28.2	27.7	27.0	26.8	26.2	28
30	31.7	31.4	31.1	30.3	30.1	26.2	25.7	25.0	24.5	23.8	23.6	23.0	30
32	29.1	28.8	28.5	27.7	27.1	23.5	22.9	22.3	21.7	21.1	20.9	20.2	32
34	26.5	26.2	25.9	25.1	24.6	23.5	20.5	19.9	19.3	18.7	18.5	17.8	34
36	24.2	23.9	23.6	22.8	22.3	21.2	20.7	17.8	17.2	16.6	16.4	15.7	36
38	22.2	21.9	21.6	20.8	20.3	19.2	18.7	18.1	15.3	15.1	15.1	14.5	38
40	20.3	20.1	19.8	19.0	18.4	17.4	16.9	16.3	15.7	13.6	13.4	12.8	40
42	18.7	18.4	18.2	17.3	16.8	15.8	15.3	15.1	14.7	14.1	13.8	11.2	42
44	17.2	16.9	16.7	15.9	15.3	14.9	14.3	13.7	13.2	12.5	12.3	11.7	44
46		15.6	15.3	15.1	14.5	13.5	13.0	12.3	11.8	11.1	10.9	10.3	46
48		14.7	14.5	13.8	13.3	12.2	11.7	11.1	10.5	9.9	9.6	9.0	48
50		13.5	13.4	12.6	12.1	11.0	10.5	9.9	9.3	8.7	8.5	7.8	50
55			10.7	10.1	9.6	8.5	8.0	7.4	6.8	6.2	6.0	5.3	55
60				7.9	7.4	6.4	5.9	5.3	4.8	4.1	3.9	3.3	60
65				6.1	5.7	4.7	4.2	3.6	3.0	2.4	2.2		65
70					4.1	3.2	2.7	2.1					70

Above lift chart is for reference only.
For actual lift duty and complete chart with all available configurations please refer to lift chart in operator's cab or manual.

https://truckmanualshub.com/

Working range - main boom (No.2821.xx) 86° - 15°

124 t counterweight and 57 t carbody counterweight and max. 120 t suspended counterweight at 13 m radius

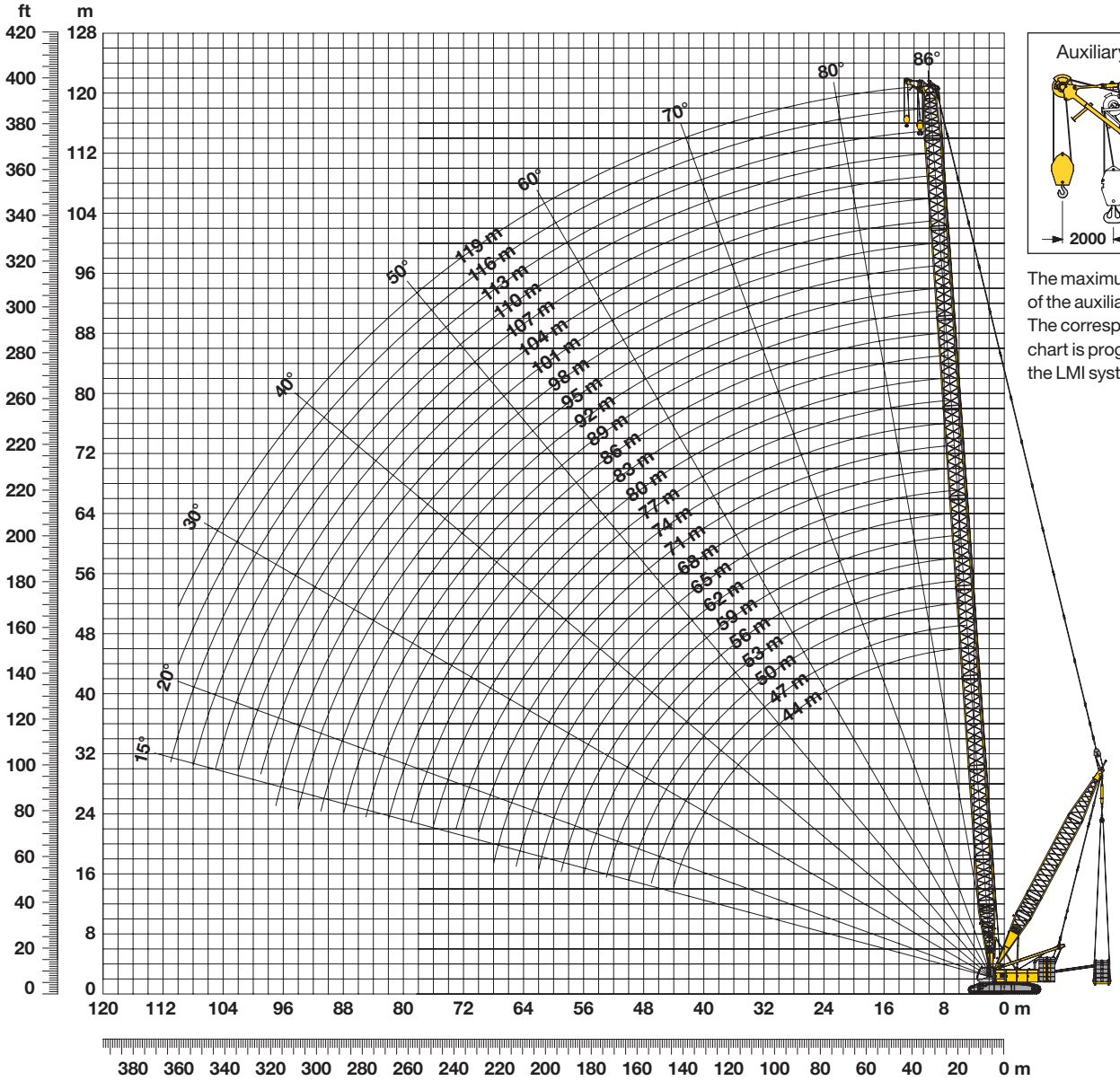

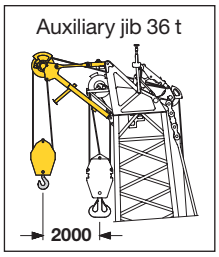

The maximum capacity of the auxiliary jib is 36 t. The corresponding load chart is programmed in the LMI system.

Main boom configuration (Table 1 – No. 2821.xx)

Configuration for boom lengths between 44 m and 119 m

	Length																									
Boom foot	10 m	1	1	1	1	1	1	1	1	1	1	1	1	1	1	1	1	1	1	1	1	1	1	1	1	1
Boom section	3 m	1		1		1		1		1		1		1		1		1		1		1		1		1	
Boom section	6 m		1	1			1	1			1	1			1	1			1	1			1	1			1
Boom section	12 m	2	2	2	3	3	3	3	4	4	4	4	5	5	5	5	6	6	6	6	7	7	7	7	8	8	8
Boom head	7 m	1	1	1	1	1	1	1	1	1	1	1	1	1	1	1	1	1	1	1	1	1	1	1	1	1	1
Boom length (m)		44	47	50	53	56	59	62	65	68	71	74	77	80	83	86	89	92	95	98	101	104	107	110	113	116	119

https://truckmanualshub.com/

Lift chart – main boom (No. 2821.xx)

124 t counterweight and 57 t carbody counterweight and max. 120 t suspended counterweight at 13 m radius

Main boom 44 m

Radius	Suspended counterweight in metric tons at 13 m radius				
	0	50	75	90	120
(m)	t	t	t	t	t
12	98.2	157.6	187.0	204.8	236.6
14	80.6	130.5	155.2	170.1	199.8
16	68.1	110.8	132.1	144.9	170.7
18	63.1	100.8	119.4	130.8	153.2
20	55.3	88.6	105.2	115.4	135.3
22	48.6	78.8	93.9	102.9	121.0
24	43.5	70.9	84.6	92.7	109.2
26	38.9	64.1	76.7	84.3	99.4
28	35.1	58.5	70.1	77.0	90.9
30	31.7	53.5	64.3	70.9	83.8
32	29.1	49.2	59.5	65.4	77.5
34	26.5	45.4	55.0	60.6	72.1
36	24.2	42.2	51.1	56.5	67.2
38	22.2	39.2	47.6	52.7	62.8
40	20.3	36.5	44.6	49.3	59.0
42	18.7	34.0	41.7	46.2	55.4
44	17.2	31.8	39.1	43.4	50.8

Main boom 50 m

Radius	Suspended counterweight in metric tons at 13 m radius				
	0	50	75	90	120
(m)	(t)	(t)	(t)	(t)	(t)
11	109.3				
12	97.8	157.1	182.5	182.5	
14	80.1	129.9	154.7	169.5	175.6
16	67.5	110.2	131.4	144.4	168.7
18	58.1	95.4	114.2	125.4	147.8
20	50.4	83.9	100.6	110.5	130.6
22	48.1	78.2	93.3	102.5	120.4
24	43.0	70.3	84.0	92.1	108.6
26	38.4	63.5	76.0	83.7	98.8
28	34.5	57.9	69.5	76.4	90.3
30	31.1	52.9	63.7	70.3	83.2
32	28.5	48.6	58.9	64.8	76.9
34	25.9	45.0	54.4	60.0	71.5
36	23.6	41.7	50.5	55.9	66.6
38	21.6	38.6	47.0	52.1	62.2
40	19.8	36.0	44.1	48.7	58.4
42	18.2	33.5	41.2	45.7	54.9
44	16.7	31.3	38.6	43.0	51.7
46	15.3	29.4	36.3	40.5	48.7
48	14.5	27.5	34.2	38.2	46.0
50	13.4	25.8	32.2	36.0	43.7
55	10.7	22.0	27.8	31.3	38.2

Main boom 56 m

Radius	Suspended counterweight in metric tons at 13 m radius				
	0	50	75	90	120
(m)	t	t	t	t	t
11	109.3	174.9	187.1	187.1	
12	97.8	157.1	182.5	182.5	
14	80.1	129.9	154.7	169.5	175.6
16	67.5	110.2	131.4	144.4	168.7
18	58.1	95.4	114.2	125.4	147.8
20	50.4	83.9	100.6	110.5	130.6
22	48.1	78.2	93.3	102.5	120.4
24	43.0	70.3	84.0	92.1	108.6
26	38.4	63.5	76.0	83.7	98.8
28	34.5	57.9	69.5	76.4	90.3
30	31.1	52.9	63.7	70.3	83.2
32	28.5	48.6	58.9	64.8	76.9
34	25.9	45.0	54.4	60.0	71.5
36	23.6	41.7	50.5	55.9	66.6
38	21.6	38.6	47.0	52.1	62.2
40	19.8	36.0	44.1	48.7	58.4
42	18.2	33.5	41.2	45.7	54.9
44	16.7	31.3	38.6	43.0	51.7
46	15.3	29.4	36.3	40.5	48.7
48	14.5	27.5	34.2	38.2	46.0
50	13.4	25.8	32.2	36.0	43.7
55	10.7	22.0	27.8	31.3	38.2

Main boom 68 m

Radius	Suspended counterweight in metric tons at 13 m radius				
	0	50	75	90	120
(m)	(t)	(t)	(t)	(t)	(t)
9	141.7				
10	123.2	144.5	144.5		
12	97.1	139.4	139.4	139.4	
16	66.7	109.4	130.8	131.4	131.4
18	57.2	94.5	113.3	124.5	126.2
20	49.5	83.0	99.7	109.6	121.8
22	43.7	73.8	88.6	97.7	115.6
24	38.5	65.9	79.6	88.0	104.2
26	34.3	59.7	72.2	79.6	94.7
28	33.6	57.1	68.6	75.5	89.4
30	30.3	52.1	62.8	69.4	82.3
32	27.7	47.7	58.0	63.9	76.0
34	25.1	44.2	53.6	59.3	70.6
36	22.8	40.8	49.6	55.1	65.7
38	20.8	37.8	46.2	51.3	61.3
40	19.0	35.1	43.2	47.9	57.6
44	15.9	30.5	37.8	42.2	50.8
48	13.8	26.8	33.4	37.4	45.2
50	12.6	25.1	31.4	35.2	42.9
55	10.1	21.4	27.2	30.6	37.6
60	7.9	18.3	23.6	26.8	33.1
65	6.1	15.7	20.5	23.5	29.3

Above lift chart is for reference only.
For actual lift duty and complete chart with all available configurations please refer to lift chart in operator's cab or manual.

https://truckmanualshub.com/

Lift chart – main boom (No. 2821.xx)

124 t counterweight and 57 t carbody counterweight and max. 120 t suspended counterweight at 13 m radius

Main boom 74 m

Radius	Suspended counterweight in metric tons at 13 m radius				
	0	50	75	90	120
(m)	(t)	(t)	(t)	(t)	(t)
9	129.9				
10	122.8	129.9			
12	96.7	126.9	122.1		
14	78.9	122.1	118.0	118.0	
18	56.7	108.9	111.6	111.6	111.6
20	48.9	94.0	99.1	107.3	107.3
22	43.1	82.4	88.2	97.2	103.6
24	38.0	73.2	79.1	87.4	100.6
26	33.7	65.4	71.7	79.1	94.2
28	30.1	59.1	65.2	72.2	86.1
30	30.1	53.6	62.3	68.9	81.8
32	27.1	51.6	57.5	63.4	75.5
34	24.6	47.2	53.0	58.8	70.1
36	22.3	43.7	49.1	54.5	65.2
38	20.3	40.3	45.6	50.7	60.8
40	18.4	37.3	42.7	47.4	57.1
44	15.3	32.2	37.3	41.7	50.3
48	13.3	28.1	32.8	36.9	44.9
55	9.6	24.6	26.7	30.1	37.1
60	7.4	20.9	23.1	26.3	32.6
65	5.7	17.8	20.1	23.0	28.9
70	4.1	15.2	17.5	20.2	25.6

Main boom 86 m

Radius	Suspended counterweight in metric tons at 13 m radius				
	0	50	75	90	120
(m)	(t)	(t)	(t)	(t)	(t)
8.9	92.2				
12	90.2	90.2			
16	65.2	86.0	86.0		
18	55.7	84.2	84.2	84.2	
24	36.9	64.3	76.4	76.4	76.4
26	32.6	58.1	70.6	74.1	74.1
28	29.4	52.5	64.1	70.9	72.2
30	26.2	47.7	58.7	65.0	71.5
32	23.5	43.9	53.8	59.8	71.3
34	23.5	42.6	52.0	57.7	69.0
36	21.2	39.2	48.1	53.5	64.1
38	19.2	36.2	44.8	49.7	59.8
40	17.4	33.5	41.7	46.3	56.0
44	14.9	29.1	36.3	40.7	49.3
48	12.2	25.2	31.8	35.8	43.9
55	8.5	19.9	25.7	29.2	36.1
60	6.4	16.8	22.1	25.3	31.6
65	4.7	14.6	19.1	22.1	28.0
70	3.2	12.3	16.6	19.3	24.7
75		10.4	14.6	16.9	21.9
80		8.6	12.6	15.0	19.5
85		7.1	10.8	13.0	17.3

Main boom 92 m

Radius	Suspended counterweight in metric tons at 13 m radius				
	0	50	75	90	120
(m)	(t)	(t)	(t)	(t)	(t)
9.3	79.2				
12	77.8	77.8			
18	55.2	72.8	72.8		
20	47.4	71.6	71.6	71.6	
28	28.8	52.0	62.5	62.5	62.5
30	25.7	47.2	58.2	60.9	60.9
32	22.9	43.3	53.3	59.2	60.3
34	20.5	39.7	49.0	54.8	59.9
36	20.7	38.7	47.5	53.0	59.6
38	18.7	35.7	44.3	49.2	59.1
40	16.9	33.0	41.1	45.8	55.5
44	14.3	28.6	35.7	40.1	48.7
48	11.7	24.7	31.3	35.3	43.3
50	10.5	23.0	29.5	33.2	40.9
55	8.0	19.4	25.2	28.7	35.5
60	5.9	16.3	21.6	24.8	31.1
65	4.2	14.1	18.6	21.6	27.5
70	2.7	11.9	16.1	18.8	24.2
75		9.9	14.2	16.4	21.4
80		8.2	12.2	14.6	19.0
85		6.7	10.4	12.6	16.8
90		5.3	8.8	10.9	14.9

Main boom 98 m

Radius	Suspended counterweight in metric tons at 13 m radius				
	0	50	75	90	120
(m)	(t)	(t)	(t)	(t)	(t)
9.7	68.5				
14	66.2	66.2			
20	46.8	62.0	62.0		
22	41.0	60.1	60.1	60.1	
30	25.0	46.6	57.6	58.0	58.0
32	22.3	42.7	52.7	57.9	57.9
34	19.9	39.0	48.4	54.2	57.9
36	17.8	35.8	44.9	50.1	57.9
38	18.1	35.1	43.7	48.6	57.9
40	16.3	32.4	40.5	45.2	54.9
44	13.7	28.0	35.1	39.5	48.1
48	11.1	24.1	30.7	34.7	42.7
50	9.9	22.4	28.9	32.6	40.3
55	7.4	18.8	24.6	28.1	34.9
60	5.3	15.7	21.0	24.2	30.5
65	3.6	13.5	18.1	21.0	26.9
70	2.1	11.3	15.5	18.2	23.7
75		9.3	13.6	15.8	20.9
80		7.6	11.6	14.0	18.4
85		6.1	9.9	12.1	16.3
90		4.8	8.3	10.4	14.6
95		3.5	6.8	8.8	12.8

Above lift chart is for reference only.
For actual lift duty and complete chart with all available configurations please refer to lift chart in operator's cab or manual.

https://truckmanualshub.com/

Lift chart – main boom (No. 2821.xx)

124 t counterweight and 57 t carbody counterweight and max. 120 t suspended counterweight at 13 m radius

Main boom 104 m

Radius	Suspended counterweight in metric tons at 13 m radius				
	0	50	75	90	120
(m)	t	t	t	t	t
12	59.0				
14	57.7	57.7			
22	40.4	52.5	52.5		
26	30.9	50.3	50.3	50.3	
32	21.7	42.1	50.1	50.1	50.1
34	19.3	38.5	47.9	50.1	50.1
36	17.2	35.3	44.3	49.5	50.1
38	15.3	32.4	41.0	45.9	50.1
40	15.7	31.9	40.0	44.8	50.1
44	13.2	27.4	34.6	39.0	47.6
48	10.5	23.6	30.1	34.1	42.2
50	9.3	21.9	28.3	32.0	39.7
55	6.8	18.2	24.0	27.6	34.4
60	4.8	15.2	20.5	23.7	30.0
65	3.0	13.0	17.5	20.5	26.3
70		10.7	15.1	17.7	23.1
75		8.8	13.1	15.3	20.3
80		7.1	11.1	13.5	17.9
85		5.6	9.3	11.6	15.8
90		4.3	7.8	9.9	14.1
95		3.0	6.4	8.4	12.4
100			5.1	7.0	10.8

Main boom 110 m

Radius	Suspended counterweight in metric tons at 13 m radius				
	0	50	75	90	120
(m)	(t)	(t)	(t)	(t)	(t)
10.6	51.4				
16	49.2	49.2			
24	34.6	44.6	44.6		
28	27.0	43.1	43.1	43.1	
36	16.6	34.6	42.7	42.7	42.7
38	15.1	31.8	40.3	42.7	42.7
40	13.6	29.4	37.3	42.0	42.7
44	12.5	26.8	34.0	38.4	42.7
46	11.1	24.8	31.6	35.8	42.7
48	9.9	22.9	29.7	33.5	41.5
50	8.7	21.2	27.7	31.4	39.1
55	6.2	17.6	23.4	26.9	33.8
60	4.1	15.0	19.9	23.1	29.5
65	2.4	12.4	16.9	19.8	25.7
70		10.1	14.7	17.1	22.5
75		8.2	12.5	15.0	19.7
80		6.5	10.5	12.9	17.3
85		5.0	8.7	11.0	15.2
90		3.7	7.2	9.3	13.5
95		2.5	5.8	7.8	11.8
100			4.5	6.4	10.2
105			3.4	5.2	8.8

Main boom 113 m

Radius	Suspended counterweight in metric tons at 13 m radius				
	0	50	75	90	120
(m)	(t)	(t)	(t)	(t)	(t)
10.8	47.9				
16	45.9	45.9			
24	34.4	41.3	41.3		
30	23.6	39.4	39.4	39.4	
38	15.1	31.5	38.9	38.9	38.9
40	13.4	29.2	37.1	38.9	38.9
44	12.3	26.6	33.7	38.0	38.9
46	10.9	24.6	31.4	35.6	38.9
48	9.6	22.7	29.5	33.3	38.9
50	8.5	21.0	27.5	31.2	38.7
55	6.0	17.4	23.2	26.7	33.6
60	3.9	14.8	19.7	22.9	29.3
65	2.2	12.1	16.7	19.6	25.5
70		9.9	14.5	16.9	22.3
75		8.0	12.2	14.8	19.5
80		6.3	10.3	12.7	17.1
85		4.8	8.5	10.8	15.0
90		3.5	7.0	9.1	13.3
95		2.3	5.6	7.6	11.6
100			4.3	6.2	10.0
105			3.2	5.0	8.6
110			2.1	3.8	7.3

Main boom 119 m

Radius	Suspended counterweight in metric tons at 13 m radius				
	0	50	75	90	120
(m)	(t)	(t)	(t)	(t)	(t)
11.2	41.5				
18	38.6	38.6			
28	26.2	33.4	33.4		
32	20.2	32.6	32.6	32.6	
42	11.2	26.2	31.9	31.9	31.9
44	11.7	25.9	31.9	31.9	31.9
46	10.3	23.9	30.8	31.9	31.9
48	9.0	22.1	28.8	31.9	31.9
50	7.8	20.4	26.9	30.6	31.9
55	5.3	16.7	22.6	26.1	31.9
60	3.3	14.1	19.0	22.2	28.6
65		11.5	16.1	19.0	24.9
70		9.3	13.9	16.2	21.7
75		7.3	11.6	14.2	18.9
80		5.7	9.7	12.1	16.5
85		4.2	7.9	10.2	14.4
90		2.9	6.4	8.5	12.5
95			5.0	7.0	10.8
100			3.8	5.7	9.3
105			2.6	4.4	7.9
110				3.3	6.6
115				2.2	2.6

Above lift chart is for reference only.
For actual lift duty and complete chart with all available configurations please refer to lift chart in operator's cab or manual.

https://truckmanualshub.com/

Working range - main boom (No.2821.xx) 86° - 15°

124 t counterweight and 57 t carbody counterweight and 120 t wheeled counterweight carriage at 15.8 m radius

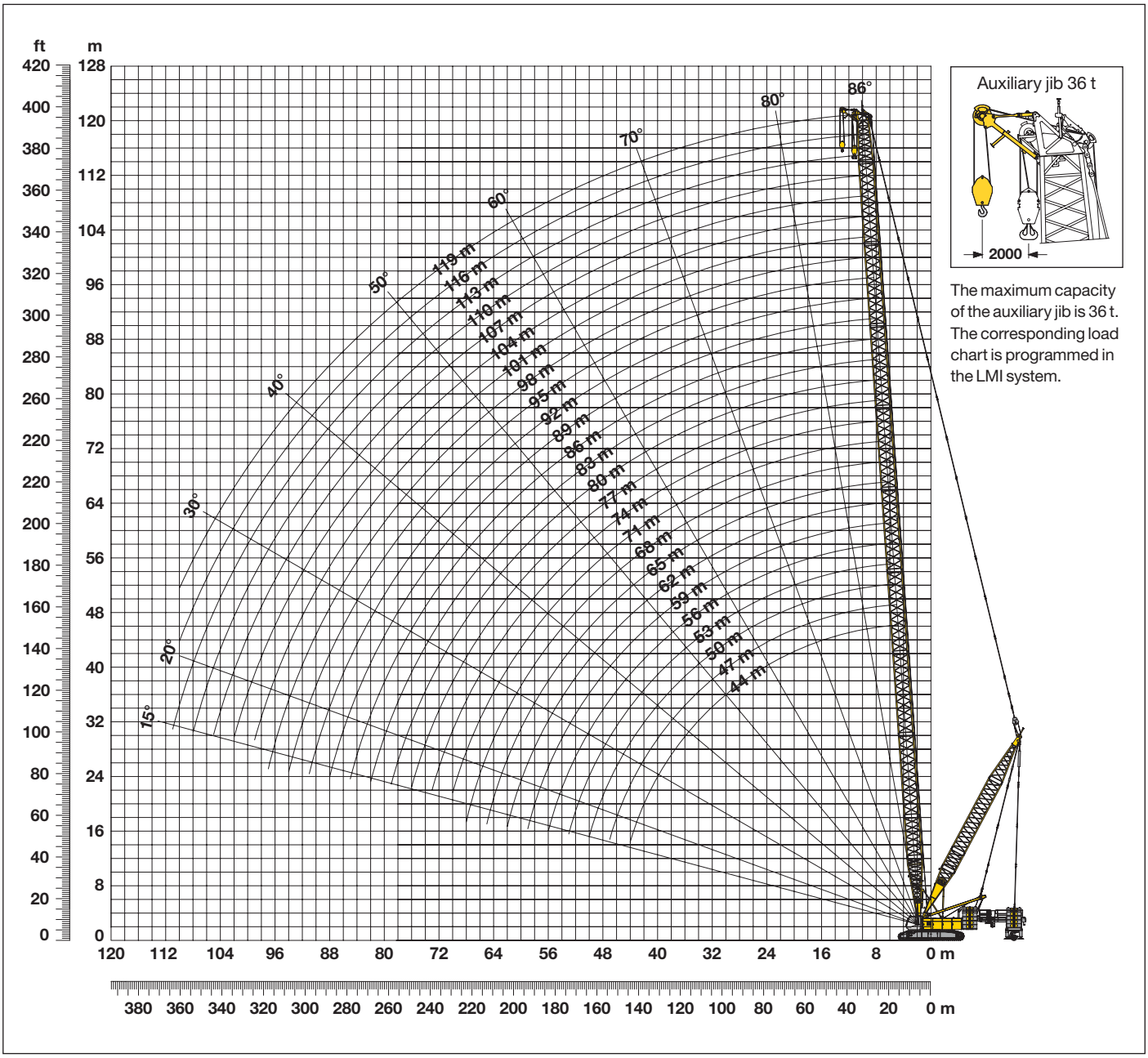

Main boom configuration (Table 1 – No. 2821.xx)

Configuration for boom lengths between 44 m and 119 m

	Length																									
Boom foot	10 m	1	1	1	1	1	1	1	1	1	1	1	1	1	1	1	1	1	1	1	1	1	1	1	1	1
Boom section	3 m	1		1		1		1		1		1		1		1		1		1		1		1		1
Boom section	6 m		1	1			1	1			1	1			1	1			1	1			1	1			1
Boom section	12 m	2	2	2	3	3	3	3	4	4	4	4	5	5	5	5	6	6	6	6	7	7	7	7	8	8	8
Boom head	7 m	1	1	1	1	1	1	1	1	1	1	1	1	1	1	1	1	1	1	1	1	1	1	1	1	1	1
Boom length (m)		44	47	50	53	56	59	62	65	68	71	74	77	80	83	86	89	92	95	98	101	104	107	110	113	116	119

https://truckmanualshub.com/

Lift chart – main boom (No. 2821.xx)

124 t counterweight and 57 t carbody counterweight and 120 t wheeled counterweight carriage at 15.8 m radius

Capacities in metric tons for boom lengths (44 m - 119 m) - with 215 kN winches
124 t counterweight and 57 t carbody counterweight and 120 t wheeled counterweight carriage

	Boom length in (m)												
Radius	**44**	**50**	**56**	**68**	**74**	**86**	**92**	**98**	**104**	**110**	**113**	**119**	**Radius**
(m)	t	t	t	t	t	t	t	t	t	t	t	t	(m)
8.9						92.2							8.9
9				147.9	129.9	92.2							9
10				144.5	126.9	92.2	79.2	68.5					10
12	236.6	211.2	182.5	139.4	122.1	90.2	77.8	67.7	59.0	51.4	47.9	41.5	12
14	219.4	201.0	175.6	134.7	118.0	88.4	76.5	66.2	57.7	50.4	47.1	41.0	14
16	188.8	188.3	168.7	131.4	114.9	86.0	74.5	64.9	56.6	49.2	45.9	39.7	16
18	169.1	164.1	163.2	126.2	111.6	84.2	72.8	63.3	55.1	48.0	44.8	38.6	18
20	149.6	149.3	144.7	121.8	107.3	82.3	71.6	62.0	53.9	46.7	43.4	36.9	20
22	133.8	133.5	133.2	118.2	103.6	79.1	69.2	60.1	52.5	45.7	42.4	35.7	22
24	120.9	120.6	120.3	114.9	100.6	76.4	66.6	58.7	51.2	44.6	41.3	34.8	24
26	110.1	109.8	109.5	105.4	98.1	74.1	64.4	58.2	50.3	43.7	40.4	34.0	26
28	101.0	100.5	100.3	99.5	95.6	72.2	62.5	58.0	50.1	43.1	39.7	33.4	28
30	93.0	92.7	92.4	91.5	91.0	71.5	60.9	58.0	50.1	42.9	39.4	32.9	30
32	86.2	85.9	85.6	84.7	84.2	71.3	60.3	57.9	50.1	42.8	39.3	32.6	32
34	80.1	79.8	79.5	78.6	78.1	71.1	59.9	57.9	50.1	42.7	39.1	32.4	34
36	74.7	74.4	74.2	73.2	72.9	71.0	59.6	57.9	50.1	42.7	39.0	32.1	36
38	70.0	69.7	69.5	68.6	68.1	67.0	59.3	57.9	50.1	42.7	38.9	31.9	38
40	65.7	65.4	65.2	64.3	63.8	62.7	59.0	57.9	50.1	42.7	38.9	31.9	40
42	61.8	61.5	61.3	60.4	59.9	59.0	58.2	57.7	50.1	42.7	38.9	31.9	42
44	58.1	58.1	57.9	57.1	56.5	55.5	55.0	54.4	50.1	42.7	38.9	31.9	44
46		54.9	54.7	53.9	53.3	52.3	51.8	51.2	49.2	42.7	38.9	31.9	46
48		51.9	51.7	50.9	50.4	49.4	48.9	48.3	47.7	42.4	38.9	31.9	48
50		49.2	49.0	48.2	47.7	46.7	46.2	45.6	45.0	42.1	38.9	31.9	50
55			43.2	42.5	42.0	41.0	40.5	39.9	39.4	38.7	38.4	31.9	55
60				37.6	37.1	36.2	35.6	35.1	34.5	33.9	33.7	31.9	60
65				33.5	33.0	32.1	31.6	31.0	30.4	29.8	29.6	29.0	65
70					29.5	28.6	28.1	27.5	27.0	26.4	26.2	25.5	70
75						25.5	25.0	24.5	23.9	23.3	23.1	22.3	75
80						22.8	22.4	21.8	21.3	20.7	20.5	19.4	80
85						20.4	20.0	19.5	18.9	18.3	18.1	16.5	85
90							17.9	17.4	16.9	16.3	16.1	14.1	90
95								15.4	15.0	14.4	14.2	12.3	95
100									13.4	12.7	12.5	10.7	100
105										11.3	11.0	9.4	105
110											9.6	6.6	110
115												2.6	115

Above lift chart is for reference only.
For actual lift duty and complete chart with all available configurations please refer to lift chart in operator's cab or manual.

https://truckmanualshub.com/

Working range - main boom (No.2821.xx) 86° - 15°

124 t counterweight and 57 t carbody counterweight

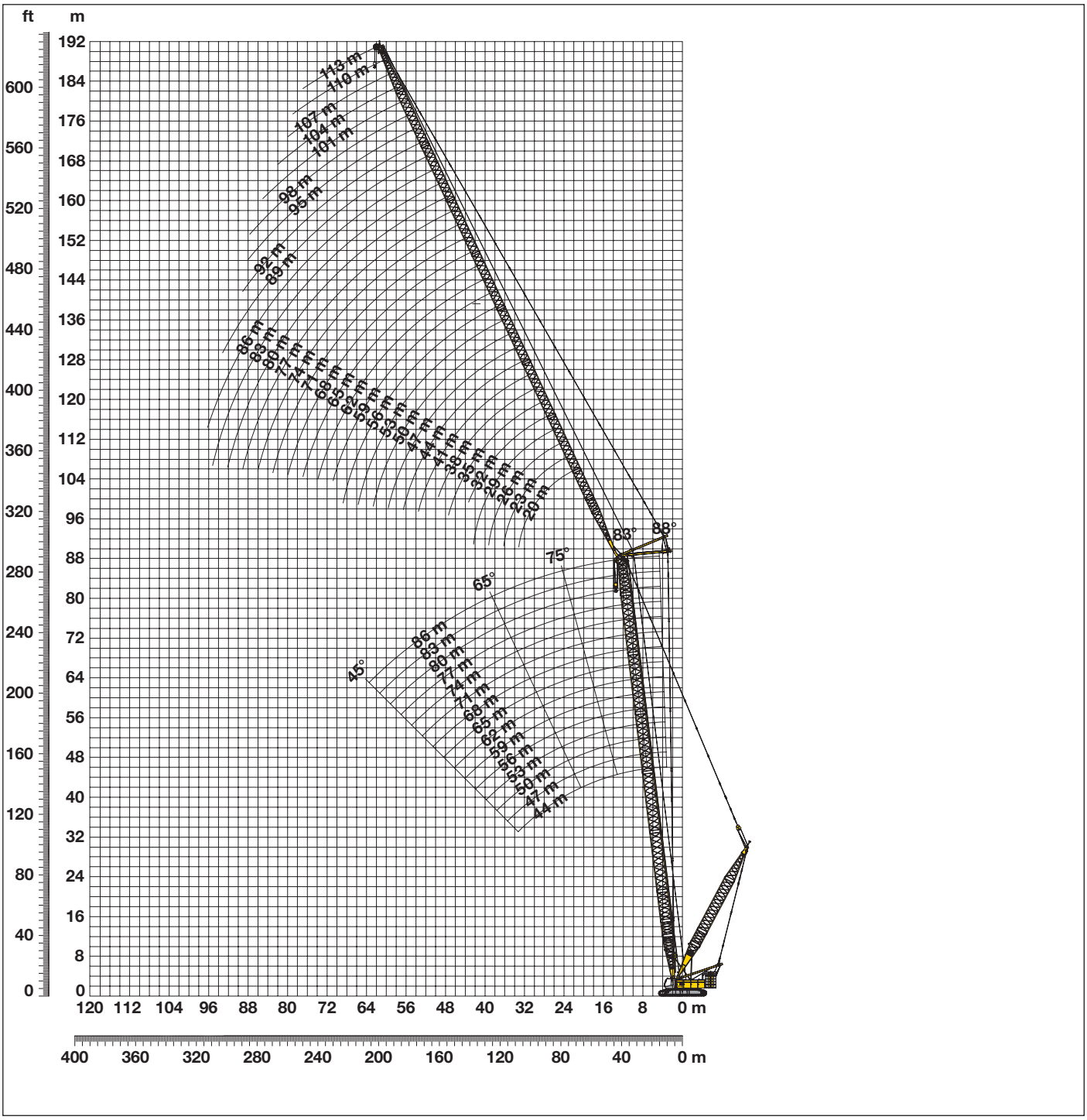

Boom configuration for main boom lengths (44 m – 86 m) – see table 1 on page 4

Jib configuration for jib lengths (20 m – 113 m)

	Length	Amount of luffing jib extensions																															
Luffing jib foot	10 m	1	1	1	1	1	1	1	1	1	1	1	1	1	1	1	1	1	1	1	1	1	1	1	1	1	1	1	1	1	1	1	1
Luffing jib section	3 m		1		1		1		1		1		1		1		1		1		1		1		1		1		1		1		1
Luffing jib section	6 m			1	1			1	1			1	1			1	1			1	1			1	1			1	1			1	1
Luffing jib section	12 m					1	1	1	1	2	2	2	2	3	3	3	3	4	4	4	4	5	5	5	5	6	6	6	6	7	7	7	7
Luffing jib head	10 m	1	1	1	1	1	1	1	1	1	1	1	1	1	1	1	1	1	1	1	1	1	1	1	1	1	1	1	1	1	1	1	1
Luffing jib length (m)		20	23	26	29	32	35	38	41	44	47	50	53	56	59	62	65	68	71	74	77	80	83	86	89	92	95	98	101	104	107	110	113

https://truckmanualshub.com/

Lift chart – luffing jib (No. 2316.xx)

Main boom angle 88°

Main boom 44 m

Radius	Jib length in (m) 41	53	65	77	89	95	101	113
(m)	t	t	t	t	t	t	t	t
13.2	66.3							
16	58.4	47.0						
19	46.4	43.2	32.7					
22	38.1	35.9	31.0	23.0				
24	32.8	31.1	29.0	22.3	16.3			
26	30.2	28.6	26.4	21.7	16.0	13.7	11.7	
30	25.3	23.5	22.2	19.4	15.4	13.2	11.4	8.2
34	22.2	20.7	19.0	17.1	14.6	12.7	11.0	7.9
38	19.1	17.8	16.5	14.9	13.5	12.2	10.5	7.5
40	18.3	16.8	15.6	13.7	12.6	11.7	10.3	7.3
42	17.4	16.0	14.6	12.7	11.8	11.0	10.0	7.2
55		11.1	9.9	8.3	7.4	6.7	6.1	4.8
65			7.5	6.1	5.0	4.3	3.9	2.8
75				4.6	3.3	2.9	2.3	
80					2.6	2.1		
85					2.1			

Main boom 50 m

Radius	Jib length in (m) 41	53	65	77	89	95	101	113
(m)	t	t	t	t	t	t	t	t
13.4	61.5							
16	54.5	44.5						
19	44.1	40.7	31.2					
22	36.5	33.8	29.6	22.0				
24	31.7	29.5	27.6	21.5	15.7			
26	29.0	27.2	25.1	20.8	15.5	13.2	11.3	
30	24.5	22.6	21.0	18.5	15.0	12.8	11.1	8.0
34	21.5	20.0	18.1	16.2	13.8	12.2	10.6	7.6
38	18.7	17.2	15.8	14.1	12.6	11.5	10.1	7.3
40	17.8	16.2	14.9	13.0	11.8	11.0	9.8	7.1
42	16.9	15.5	14.0	12.0	11.0	10.3	9.5	6.9
44	15.8	14.6	13.0	11.4	10.2	9.6	8.9	6.8
55		10.8	9.5	7.9	7.0	6.3	5.7	4.5
65			7.3	5.9	4.7	4.1	3.7	2.5
75				4.3	3.1	2.7	2.2	
80					2.5			

Main boom 62 m

Radius	Jib length in (m) 41	53	65	77	89	95	101	113
(m)	t	t	t	t	t	t	t	t
13.9	50.7							
17	43.9	36.9						
19	38.7	34.8	26.9					
22	32.5	29.6	25.6	19.3				
24	28.8	26.1	23.8	19.0	14.0			
26	26.2	24.1	21.8	18.4	13.9	11.9		
28	24.4	22.3	19.7	17.6	13.8	11.8	10.1	
30	22.5	20.4	18.2	16.4	13.6	11.7	10.1	7.0
34	19.7	18.0	15.9	14.2	12.3	11.1	9.8	6.8
42	15.7	14.0	12.3	10.7	9.5	8.8	8.0	6.0
44	14.8	13.3	11.5	10.1	8.9	8.2	7.5	5.7
55		10.0	8.4	7.1	6.0	5.4	4.7	3.5
60			7.3	6.2	4.9	4.4	3.8	2.5
65			6.5	5.3	4.1	3.4	3.0	
70				4.4	3.4	2.7	2.1	
75				3.9	2.7	2.1		

Main boom 74 m

Radius	Jib length in (m) 41	53	65	77	89	95	101	113
(m)	t	t	t	t	t	t	t	t
14.3	39.7							
17	37.5	29.5						
20	31.8	27.9	21.5					
22	28.8	25.6	21.0	15.7				
26	23.5	21.2	18.7	15.2	11.3	9.7		
28	22.0	19.7	17.1	14.8	11.3	9.6	8.1	
30	20.5	18.2	15.9	13.9	11.2	9.6	8.1	5.3
34	18.0	16.1	14.0	12.2	10.2	9.1	7.9	5.3
38	16.0	14.2	12.2	10.8	9.1	8.2	7.2	5.1
40	15.0	13.3	11.6	10.1	8.6	7.7	6.8	4.8
42	14.4	12.7	10.9	9.3	8.0	7.2	6.4	4.6
44	13.7	12.1	10.3	8.8	7.5	6.8	6.0	4.3
55		9.1	7.6	6.1	5.0	4.4	3.7	2.5
65			5.8	4.5	3.3	2.7	2.2	
70				3.8	2.7	2.1		
75				3.3	2.1			

Main boom 80 m

Radius	Jib length in (m) 41	53	65	77	89	95	101	113
(m)	t	t	t	t	t	t	t	t
14.5	35.0							
17	33.7	26.1						
20	29.1	25.1	19.1					
22	26.4	23.5	18.6	14.0				
26	21.7	19.8	16.9	13.6	10.1	8.5		
28	20.4	18.5	15.8	13.3	10.0	8.5	7.1	
30	19.0	17.2	14.7	12.6	9.9	8.4	7.0	4.5
34	16.8	15.2	13.0	11.3	9.2	8.1	6.9	4.4
38	15.0	13.4	11.4	10.0	8.3	7.3	6.3	4.3
42	13.6	12.0	10.2	8.7	7.3	6.5	5.7	3.8
44	12.9	11.4	9.6	8.1	6.8	6.1	5.3	3.6
50		9.6	8.1	6.8	5.4	4.7	4.1	2.7
60			6.1	4.9	3.6	3.1	2.5	
65			5.4	4.2	2.9	2.3		
70				3.4	2.3			
75				3.0				

Main boom 86 m

Radius	Jib length in (m) 41	53	65	77	89	95	101	113
(m)	t	t	t	t	t	t	t	t
14.7	30.8							
18	29.0	22.8						
20	26.8	22.0	16.8					
24	22.4	19.1	15.9	12.2				
26	20.3	17.7	15.2	12.0	8.7	7.3		
28	19.2	16.6	14.4	11.7	8.7	7.3	6.0	
30	17.9	15.5	13.6	11.3	8.6	7.2	6.0	3.6
34	15.8	13.7	12.1	10.3	8.1	7.0	5.8	3.5
38	14.2	12.1	10.6	9.1	7.4	6.4	5.4	3.4
42	12.8	10.9	9.5	7.9	6.5	5.8	5.0	3.1
44	12.2	10.4	8.9	7.4	6.1	5.4	4.6	2.9
50		8.8	7.5	6.2	4.8	4.1	3.5	2.2
60			5.6	4.5	3.2	2.6	2.0	
65			5.0	3.8	2.5			
70				3.0				
75				2.6				

Capacities in metric tons with luffing jib (No. 2316.xx), 124 t counterweight + 57 t carbody counterweight. Above lift chart is for reference only. For actual lift duty and complete chart with all available configurations please refer to lift chart in operator's cab or manual.

https://truckmanualshub.com/

Lift chart – luffing jib (No. 2316.xx)

Main boom angle 83°

Main boom 44 m

Radius	Jib length in (m) 41	53	65	77	89	95	101	113
(m)	t	t	t	t	t	t	t	t
20.6	50.5							
26	38.3	37.3						
28	35.0	34.0	29.6					
32	29.7	29.1	28.2	21.0				
36	25.9	25.0	24.1	20.4	15.1			
38	24.2	23.3	22.4	20.0	14.9	12.6		
40	22.6	21.8	20.9	19.6	14.7	12.5	10.6	
42	21.2	20.4	19.5	18.6	14.4	12.2	10.5	7.3
44	20.0	19.2	18.3	17.4	14.1	12.0	10.3	7.3
46	18.8	18.0	17.2	16.3	13.8	11.7	10.1	7.1
55		14.0	13.2	12.3	11.4	10.6	9.3	6.5
70			8.8	8.0	7.2	6.8	6.3	5.2
80				5.8	5.0	4.9	4.4	3.5
85					4.1	3.7	3.6	2.8
90					3.4	2.9	2.4	2.1
95						2.3		

Main boom 50 m

Radius	Jib length in (m) 41	53	65	77	89	95	101	113
(m)	t	t	t	t	t	t	t	t
21.3	47.7							
26	37.7	36.7						
30	31.6	30.7	28.2					
32	29.2	28.6	27.6	20.2				
36	25.5	24.6	23.6	19.8	14.6			
38	23.8	22.9	22.0	19.4	14.5	12.2		
40	22.3	21.4	20.5	19.0	14.3	12.1	10.3	
44	19.6	18.8	17.9	17.0	13.8	11.7	10.1	7.0
46	18.5	17.7	16.8	15.9	13.5	11.4	9.9	7.0
48	17.4	16.7	15.8	14.9	13.2	11.2	9.7	6.8
60		12.0	11.3	10.4	9.5	9.1	8.4	6.0
70			8.6	7.8	7.0	6.5	6.1	4.9
80				5.9	5.0	4.7	4.2	3.3
85					4.1	3.7	3.4	2.5
90					3.4	2.9	2.4	
95						2.3		

Main boom 62 m

Radius	Jib length in (m) 41	53	65	77	89	95	101	113
(m)	t	t	t	t	t	t	t	t
22.7	42.8							
28	33.2	32.2						
30	30.5	29.6	25.5					
34	26.4	25.4	24.4	18.3				
38	22.9	22.0	21.0	17.8	13.4			
40	21.4	20.5	19.6	17.5	13.3	11.2		
42	20.1	19.2	18.3	17.0	13.0	11.1	9.6	
44	18.9	18.0	17.1	16.1	12.8	10.9	9.5	6.5
46	17.8	17.0	16.0	15.1	12.5	10.7	9.3	6.5
48	16.8	16.0	15.1	14.1	12.3	10.5	9.1	6.4
60		11.5	10.7	9.8	8.9	8.4	7.9	5.5
70			8.1	7.3	6.4	6.0	5.5	4.5
80				5.4	4.6	4.2	3.7	2.8
85					3.7	3.4	3.0	2.1
90					3.1	2.5	2.2	
95					2.3	2.0		

Main boom 74 m

Radius	Jib length in (m) 41	53	65	77	89	95	101	113
(m)	t	t	t	t	t	t	t	t
24.2	36.4							
28	31.8	27.7						
32	27.2	26.2	21.0					
36	23.4	22.5	20.5	15.8				
40	20.4	19.5	18.5	15.4	11.7	10.0		
42	19.2	18.2	17.3	15.3	11.6	9.9	8.4	
46	17.0	16.1	15.1	14.0	11.3	9.7	8.3	5.5
48	16.0	15.1	14.2	13.2	11.0	9.5	8.1	5.4
50	15.1	14.3	13.4	12.4	10.6	9.3	8.0	5.4
60		10.8	10.0	9.1	8.1	7.7	7.1	4.9
65			8.7	7.8	6.9	6.4	5.9	4.6
70			7.6	6.7	5.7	5.3	4.9	3.9
80				4.9	4.0	3.6	3.1	2.1
85				4.2	3.1	2.8	2.4	
90					2.6			
95					2.0			

Main boom 80 m

Radius	Jib length in (m) 41	53	65	77	89	95	101	113
(m)	t	t	t	t	t	t	t	t
24.9	32.0							
30	28.4	24.6						
32	26.6	24.2	18.7					
36	22.8	21.7	18.3	14.2				
40	19.9	18.9	17.2	13.9	10.4			
42	18.7	17.7	16.2	13.7	10.4	8.8		
44	17.5	16.6	15.2	13.3	10.2	8.7	7.3	
46	16.4	15.5	14.4	12.7	10.1	8.7	7.3	4.7
48	15.6	14.6	13.6	12.2	10.0	8.6	7.2	4.6
50	14.7	13.9	12.8	11.6	9.6	8.5	7.1	4.6
60		10.5	9.6	8.5	7.6	7.0	6.2	4.1
65			8.2	7.4	6.4	5.9	5.4	3.8
75			6.2	5.3	4.4	3.8	3.3	2.5
80				4.6	3.6	3.2	2.6	
85				3.9	2.8	2.5	2.0	
90					2.3			

Main boom 86 m

Radius	Jib length in (m) 41	53	65	77	89	95	101	113
(m)	t	t	t	t	t	t	t	t
25.7	28.3							
30	26.9	21.6						
34	23.6	20.8	16.4					
38	20.5	18.5	16.1	12.5				
40	19.2	17.4	15.6	12.3	9.1			
42	18.0	16.5	14.8	12.2	9.1	7.6		
44	16.9	15.5	14.1	11.9	9.0	7.6	6.3	
48	15.0	13.6	12.7	11.0	8.8	7.5	6.2	3.8
50	14.1	13.0	12.0	10.5	8.5	7.4	6.1	3.8
55		11.3	10.2	9.2	7.7	6.8	5.8	3.6
60		10.0	9.0	7.8	6.8	6.1	5.2	3.4
65			7.8	6.7	5.7	5.2	4.6	3.0
70			6.9	5.8	4.5	4.2	3.7	2.6
75			6.0	4.9	3.9	3.2	2.8	
80				4.2	3.2	2.7	2.1	
85				3.6	2.4	2.1		

Capacities in metric tons with luffing jib (No. 2316.xx), 124 t counterweight + 57 t carbody counterweight. Above lift chart is for reference only. For actual lift duty and complete chart with all available configurations please refer to lift chart in operator's cab or manual.

https://truckmanualshub.com/

Lift chart – luffing jib (No. 2316.xx)

Main boom angle 75°

Main boom 44 m

Radius	Jib length in (m) 41	53	65	77	89	95	101	113
(m)	t	t	t	t	t	t	t	t
31.9	26.3							
36	22.6							
38	21.0	20.0						
40	19.7	18.7						
44	17.3	16.4	15.3					
46	16.3	15.4	14.4					
48	15.4	14.5	13.5	12.4				
50	14.5	13.6	12.6	11.6				
55		11.8	10.9	9.9	8.9	8.4		
60		10.3	9.4	8.4	7.5	7.0	6.5	
65		9.0	8.2	7.2	6.3	5.8	5.3	4.3
70			7.1	6.2	5.2	4.8	4.3	3.3
75			6.1	5.3	4.3	3.9	3.4	2.4
80				4.5	3.6	3.1	2.6	
85				3.8	2.9	2.4		
90					2.3			

Main boom 50 m

Radius	Jib length in (m) 41	53	65	77	89	95	101	113
(m)	t	t	t	t	t	t	t	t
33.5	23.7							
36	21.6							
38	20.1							
40	18.8	17.7						
42	17.6	16.6						
44	16.5	15.5	14.5					
46	15.6	14.6	13.5					
48	14.7	13.7	12.7					
50	13.8	12.9	11.9	10.8				
55	12.0	11.2	10.2	9.2	8.1			
60		9.7	8.8	7.8	6.8	6.3	5.7	
65		8.5	7.6	6.6	5.6	5.2	4.6	3.6
70			6.6	5.6	4.7	4.2	3.7	2.7
75			5.7	4.8	3.8	3.3	2.8	
80				4.0	3.1	2.6	2.1	
85				3.3	2.4			

Main boom 62 m

Radius	Jib length in (m) 41	53	65	77	89	95	101
(m)	t	t	t	t	t	t	t
36.6	19.0						
38	18.0						
40	16.8						
42	15.7	14.6					
44	14.8	13.7					
46	13.9	12.8					
48	13.1	12.0	10.9				
50	12.3	11.3	10.2				
55	10.7	9.7	8.7	7.6			
60		8.4	7.4	6.3	5.3	4.8	
65		7.3	6.3	5.3	4.3	3.8	3.2
70		6.3	5.4	4.4	3.4	2.9	2.4
75			4.6	3.6	2.6	2.2	
80			3.9	2.9			
85				2.3			

Main boom 74 m

Radius	Jib length in (m) 41	53	65	77	89	95
(m)	t	t	t	t	t	t
39.7	14.7					
40	14.6					
42	13.6					
44	12.7					
46	11.9	10.8				
48	11.2	10.1				
50	10.5	9.4	8.3			
55	9.1	8.0	6.9	5.8		
60	7.8	6.9	5.8	4.7	3.6	
65		5.9	4.9	3.8	2.7	2.2
70		5.0	4.1	3.0		
75			3.4	2.3		
80			2.7			

Main boom 80 m

Radius	Jib length in (m) 41	53	65	77
(m)	t	t	t	t
41.2	12.8			
42	12.4			
44	11.6			
46	10.9			
48	10.2	9.0		
50	9.6	8.4		
55	8.2	7.2	6.0	
60	7.1	6.1	5.0	3.9
65		5.2	4.1	3.0
70		4.4	3.3	2.3
75			2.7	
80			2.1	

Main boom 86 m

Radius	Jib length in (m) 41	53	65	77
(m)	t	t	t	t
42.8	10.9			
44	10.4			
46	9.7			
48	9.1	7.9		
50	8.5	7.4		
55	7.3	6.2	5.0	
60	6.2	5.2	4.1	2.9
65		4.3	3.3	2.1
70		3.6	2.6	
75		2.9		

Capacities in metric tons with luffing jib (No. 2316.xx), 124 t counterweight + 57 t carbody counterweight. Above lift chart is for reference only. For actual lift duty and complete chart with all available configurations please refer to lift chart in operator's cab or manual.

https://truckmanualshub.com/

Working range - luffing jib (No.2316.xx) 78° - 15°

124 t counterweight and 57 t carbody counterweight
120 t suspended counterweight at 13 m radius

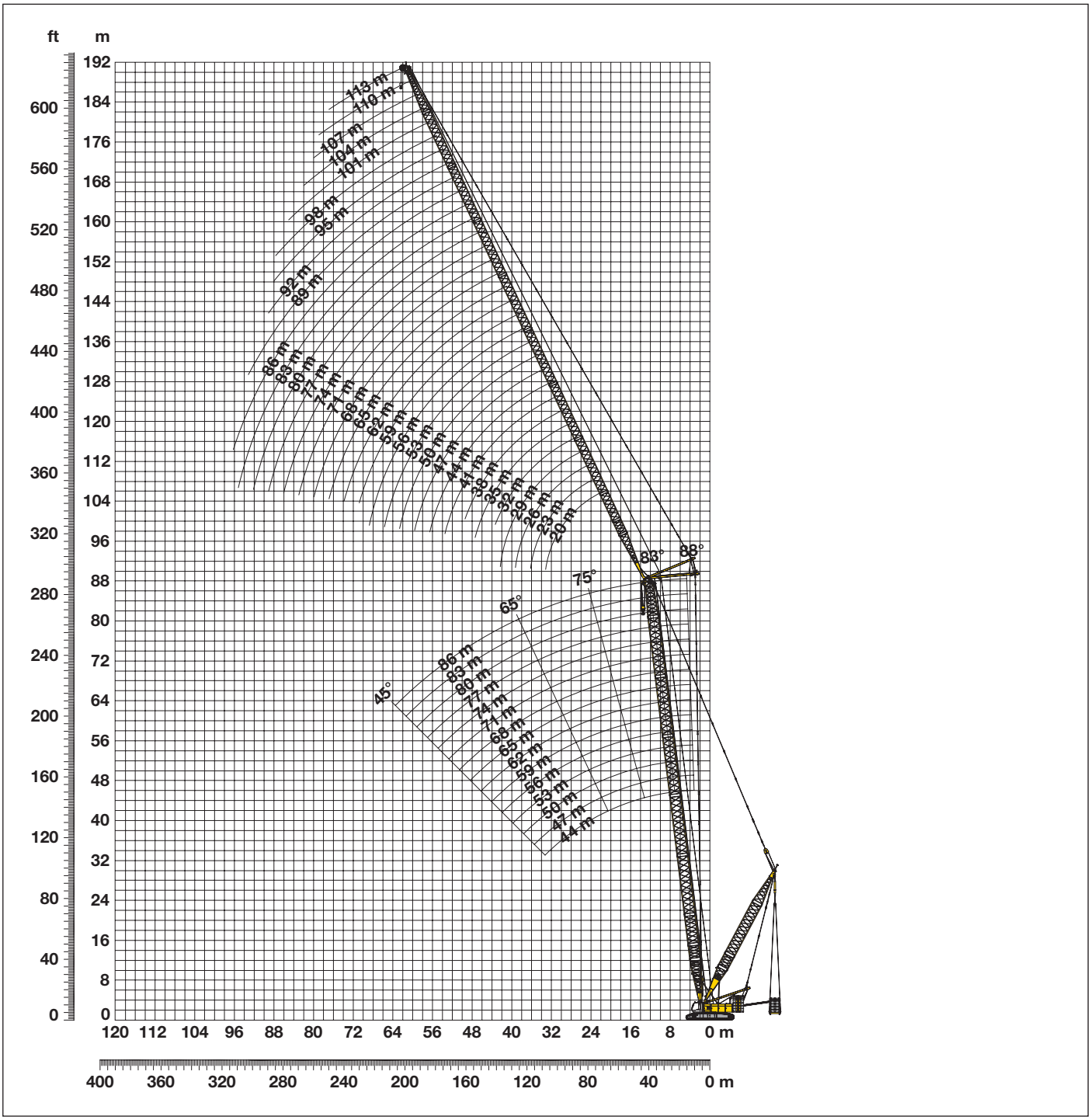

Boom configuration for main boom lengths (44 m – 86 m) – see table 1 on page 4

Jib configuration for jib lengths (20 m – 113 m)

	Length	Amount of luffing jib extensions																														
Luffing jib foot	10 m	1	1	1	1	1	1	1	1	1	1	1	1	1	1	1	1	1	1	1	1	1	1	1	1	1	1	1	1	1	1	1
Luffing jib section	3 m		1		1		1		1		1		1		1		1		1		1		1		1		1		1		1	
Luffing jib section	6 m			1	1			1	1			1	1			1	1			1	1			1	1			1	1			1	1
Luffing jib section	12 m					1	1	1	1	2	2	2	2	3	3	3	3	4	4	4	4	5	5	5	5	6	6	6	6	7	7	7	7
Luffing jib head	10 m	1	1	1	1	1	1	1	1	1	1	1	1	1	1	1	1	1	1	1	1	1	1	1	1	1	1	1	1	1	1	1	1
Luffing jib length (m)		20	23	26	29	32	35	38	41	44	47	50	53	56	59	62	65	68	71	74	77	80	83	86	89	92	95	98	101	104	107	110	113

https://truckmanualshub.com/

Lift chart – luffing jib (No. 2316.xx)

Main boom angle 75°
max. 120 t suspended counterweight at 13 m radius

Main boom 44 m

Radius	Jib length in (m)							
	41	53	65	77	89	95	101	113
(m)	t	t	t	t	t	t	t	t
32	52.2							
38	45.3	38.5						
44	36.5	34.6	26.9					
48	30.8	30.4	26.2	18.8				
50	28.9	28.5	25.7	18.8				
55		25.1	22.6	18.1	13.3	10.9		
60		21.6	20.2	17.2	12.8	10.7	9.1	
65		17.7	18.0	16.1	12.3	10.3	8.9	6.0
70			15.9	14.6	11.8	10.0	8.6	5.8
75			13.6	13.0	11.2	9.5	8.3	5.6
80				11.4	10.3	9.0	8.0	5.3
85				9.8	9.3	8.4	7.5	5.0
90					8.2	7.7	7.0	4.4
95					7.0	6.8	6.3	3.3
105						4.3	4.6	
110							3.3	

Main boom 50 m

Radius	Jib length in (m)							
	41	53	65	77	89	95	101	113
(m)	t	t	t	t	t	t	t	t
33.5	50.4							
40	44.0	37.0						
44	38.2	35.3	26.1					
50	29.7	29.7	25.3	18.2				
55	24.4	26.0	23.1	17.8	12.9			
60		22.2	20.6	17.1	12.6	10.5	8.9	
65		19.0	18.6	16.1	12.2	10.2	8.7	5.8
70			16.3	14.9	11.7	9.8	8.4	5.7
75			14.4	13.4	11.2	9.4	8.2	5.5
80				11.8	10.3	9.0	7.9	5.2
85				10.4	9.5	8.4	7.5	4.9
90					8.5	7.8	7.0	4.6
95					7.4	7.1	6.5	3.5
100					6.0	6.1	5.9	2.3
105						4.9	5.0	
110							3.8	

Main boom 62 m

Radius	Jib length in (m)							
	41	53	65	77	89	95	101	113
(m)	t	t	t	t	t	t	t	t
36.6	45.3							
42	42.3	33.5						
48	34.0	32.4	23.7					
55	25.8	27.0	22.6	16.7				
60		23.0	20.7	16.3	11.9	9.9		
65		19.4	18.7	15.7	11.6	9.7	8.3	
70		16.2	16.5	15.1	11.2	9.4	8.1	5.3
75			14.4	13.8	10.7	9.1	7.8	5.2
80			12.3	12.4	10.2	8.7	7.6	5.0
85				11.0	9.6	8.3	7.3	4.7
90				9.4	8.8	7.8	6.9	4.4
95					8.0	7.3	6.5	3.9
100					6.8	6.6	6.0	2.9
105						5.5	5.3	
110						4.1	4.4	
115							3.2	

Main boom 74 m

Radius	Jib length in (m)							
	41	53	65	77	89	95	101	113
(m)	t	t	t	t	t	t	t	t
39.7	36.3							
46	33.1	28.3						
50	30.1	27.1	21.0					
55	25.2	24.9	20.5	15.1				
60	21.7	22.2	19.7	14.9	10.8			
65		18.7	18.7	14.4	10.6	9.0	7.6	
70		16.4	16.3	13.9	10.3	8.8	7.5	
75			13.6	13.2	9.9	8.5	7.3	4.8
80			12.0	11.7	9.5	8.1	7.0	4.6
85				10.0	8.9	7.8	6.7	4.3
90				8.9	8.0	7.2	6.4	4.0
95				7.5	7.0	6.5	5.8	3.7
100					6.2	5.8	5.2	3.1
105					5.1	5.0	4.5	2.2
110						4.1	3.8	
115							3,1	

Main boom 80 m

Radius	Jib length in (m)							
	41	53	65	77	89	95	101	113
(m)	t	t	t	t	t	t	t	t
42	31.1							
48	28.3	24.6						
50	27.3	24.0						
55	24.0	22.4	18.6					
60	20.8	20.7	17.5	14.0				
65		18.0	16.5	13.6	10.0	8.4		
70		15.7	15.0	13.0	9.7	8.3	7.0	
75			13.0	12.4	9.4	8.0	6.9	4.4
80			11.4	11.1	9.0	7.7	6.6	4.2
85			9.9	9.5	8.4	7.4	6.3	4.0
90				8.3	7.5	6.8	6.1	3.7
95				7.2	6.5	6.0	5.5	3.5
100					5.6	5.2	4.8	3.1
105					4.8	4.4	4.0	2.3
110						3.7	3.3	
115						2.7	2.7	

Main boom 86 m

Radius	Jib length in (m)							
	41	53	65	77	89	95	101	113
(m)	t	t	t	t	t	t	t	t
42.8	26.6							
48	24.9	20.7						
50	24.1	20.4						
55	22.0	18.9	16.2					
60	19.8	17.4	15.2	12.4				
65		15.8	14.2	11.9	9.1			
70		14.1	13.2	11.3	8.9	7.6	6.4	
75		12.5	11.9	10.6	8.5	7.4	6.3	3.9
80			10.6	9.7	7.9	6.9	6.0	3.8
85			9.5	8.6	7.3	6.5	5.6	3.6
90				7.6	6.6	5.9	5.1	3.3
95				6.7	5.7	5.2	4.6	3.0
100					4.9	4.5	4.0	2.7
105					4.3	3.8	3.4	2.1
110					3.4	3.2	2.7	
115						2.5	2.2	

Suspended counterweight	120 t	90 t	75 t	50 t	0 t

Capacities in metric tons with luffing jib (No. 2316.xx), 124 t counterweight + 57 t carbody counterweight. Above lift chart is for reference only. For actual lift duty and complete chart with all available configurations please refer to lift chart in operator's cab or manual.

https://truckmanualshub.com/

Lift chart – luffing jib (No. 2316.xx)

Main boom angle 65°
max. 120 t suspended counterweight at 13 m radius

Main boom 44 m

Radius	Jib length in (m) 41	53	65	77	89	95	101	113
(m)	t	t	t	t	t	t	t	t
46	43.9							
48	42.2							
50	39.2							
55	33.1	31.0						
60	28.2	26.8	23.1					
65		23.5	21.3					
70		20.9	19.2	16.4				
75			17.2	15.3	11.3			
80			15.5	14.0	11.1	9.2	7.7	
85				12.4	10.7	9.0	7.7	
90				11.3	9.9	8.7	7.5	4.7
95				9.9	9.0	8.2	7.3	4.5
100					8.3	7.6	6.8	4.3
105					7.3	6.9	6.3	3.2
110						6.2	5.7	
115							4.9	

Main boom 50 m

Radius	Jib length in (m) 41	53	65	77	89	95	101	113
(m)	t	t	t	t	t	t	t	t
48	43.4							
50	42.6							
55	35.9	31.6						
60	30.6	28.8						
65		25.3	22.4					
70		22.1	20.0	15.9				
75		19.3	18.2	15.6				
80			16.3	14.6	10.9	8.9		
85			14.6	13.2	10.7	8.8	7.4	
90				11.8	10.2	8.7	7.4	4.5
95				10.7	9.5	8.3	7.3	4.4
100					8.6	7.8	6.9	4.2
105					7.9	7.3	6.5	3.7
110						6.6	6.0	2.4
115						5.7	5.4	
120							4.5	

Main boom 62 m

Radius	Jib length in (m) 41	53	65	77	89	95	101	113
(m)	t	t	t	t	t	t	t	t
55	36.0							
60	32.5	30.5						
65	29.5	28.5						
70		24.8	21.2					
75		21.7	19.4	14.8				
80		19.0	17.6	14.7				
85			15.7	14.3	10.1	8.3		
90			14.1	13.0	10.0	8.3	6.9	
95				11.7	9.7	8.2	6.9	4.0
100				10.7	9.2	8.0	6.8	4.0
105					8.6	7.6	6.6	3.9
110					7.9	7.2	6.3	3.5
115						6.6	5.9	2.3
120						5.7	5.3	
125							4.5	

Main boom 74 m

Radius	Jib length in (m) 41	53	65	77	89	95	101	113
(m)	t	t	t	t	t	t	t	t
60	30.1							
65	27.4	26.2						
70	25.0	23.9						
75		21.9	19.1					
80		20.1	18.8	13.4				
85		18.4	17.2	13.4				
90			15.5	13.2	9.2	7.6		
95			14.0	12.4	9.1	7.6	6.3	
100				11.5	9.0	7.5	6.3	3.5
105				10.6	8.7	7.4	6.2	3.5
110					8.3	7.3	6.1	3.4
115					7.7	7.0	5.9	3.2
120						6.4	5.7	2.1
125						5.6	5.1	
130							4.4	

Main boom 80 m

Radius	Jib length in (m) 41	53	65	77	89	95	101	113
(m)	t	t	t	t	t	t	t	t
60.5	28.6							
65	26.2							
70	23.9	22.7						
75	21.5	20.8	17.8					
80		19.1	17.7					
85		17.6	16.5	12.6				
90			15.2	12.6	8.6			
95			14.0	12.2	8.6	7.1	5.9	
100				11.7	8.6	7.1	5.9	
105				10.9	8.4	7.1	5.9	3.2
110				9.8	8.2	7.0	5.8	3.2
115					7.8	6.8	5.7	3.1
120					7.1	6.5	5.6	2.5
125						5.9	5.2	
130							4.7	

Main boom 86 m

Radius	Jib length in (m) 41	53	65	77	89	95	101	113
(m)	t	t	t	t	t	t	t	t
65	24.9							
70	22.7	19.4						
75	20.8	19.0						
80		18.0	15.0					
85		16.5	14.7	11.3				
90		15.2	14.2	11.2				
95			13.1	11.1	7.9	6.6		
100			12.0	10.8	7.9	6.6	5.4	
105				10.1	7.8	6.5	5.4	2.9
110				9.3	7.6	6.4	5.3	2.9
115					7.4	6.3	5.2	2.8
120					6.8	6.1	5.1	2.7
125						5.7	5.0	
130						5.2	4.6	
135							4.0	

Suspended counterweight	120 t	90 t	75 t	50 t	0 t

Capacities in metric tons with luffing jib (No. 2316.xx), 124 t counterweight + 57 t carbody counterweight. Above lift chart is for reference only. For actual lift duty and complete chart with all available configurations please refer to lift chart in operator's cab or manual.

https://truckmanualshub.com/

Lift chart – luffing jib (No. 2316.xx)

Main boom angle 45°
max. 120 t suspended counterweight at 13 m radius

Main boom 44 m

Radius	Jib length in (m) 41	53	65	77	89	95	101	113
(m)	t	t	t	t	t	t	t	t
67.6	27.3							
70	26.2							
80		21.1						
85		19.4						
90			16.3					
95			14.8					
100				11.9				
105				10.7				
110					8.5			
115					7.8	7.2		
120						6.6	5.8	
125						5.9	5.2	
130							4.6	2.0

Main boom 50 m

Radius	Jib length in (m) 41	53	65	77	89	95	101
(m)	t	t	t	t	t	t	t
71.9	23.9						
75	22.7						
85		18.2					
95			14.6				
100			13.5				
105				11.5			
110				10.6			
115					8.3		
120					7.7	7.0	
125						6.5	5.6
130							5.1
135							4.5
140							

Main boom 62 m

Radius	Jib length in (m) 41	53	65	77	89	95	101
(m)	t	t	t	t	t	t	t
80.3	18.1						
85	16.7						
95		13.3					
100			11.2				
105			10.3				
110				8.4			
115				7.7			
120				7.1	6.0		
125					5.4	4.9	
130					4.9	4.4	3.8
135						3.9	3.3
140							2.8

Main boom 74 m

Radius	Jib length in (m) 41	53	65	77	89
(m)	t	t	t	t	t
88.8	13.0				
90	12.8				
100		9.8			
105		9.0			
110			7.1		
115			6.5		
120				4.8	
125				4.3	
130					2.7
135					2.3
140					
145					

Main boom 80 m

Radius	Jib length in (m) 41	53	65	77
(m)	t	t	t	t
93.1	10.8			
95	10.4			
105		7.7		
110		7.1		
115			5.3	
120			4.8	
125				3.2
130				2.8
135				
140				
145				

Main boom 86 m

Radius	Jib length in (m) 41	53	65
(m)	t	t	t
97.3	8.6		
100	8.2		
110		5.8	
120			3.6
125			3.1
130			
135			

Suspended counterweight	120 t	90 t	75 t	50 t	0 t

Capacities in metric tons with luffing jib (No. 2316.xx), 124 t counterweight + 57 t carbody counterweight. Above lift chart is for reference only. For actual lift duty and complete chart with all available configurations please refer to lift chart in operator's cab or manual.

https://truckmanualshub.com/

Working range - luffing jib (No.2316.xx) 78° - 15°

124 t counterweight and 57 t carbody counterweight
120 t wheeled counterweight carriage from 12.2 m - 15.8 m radius

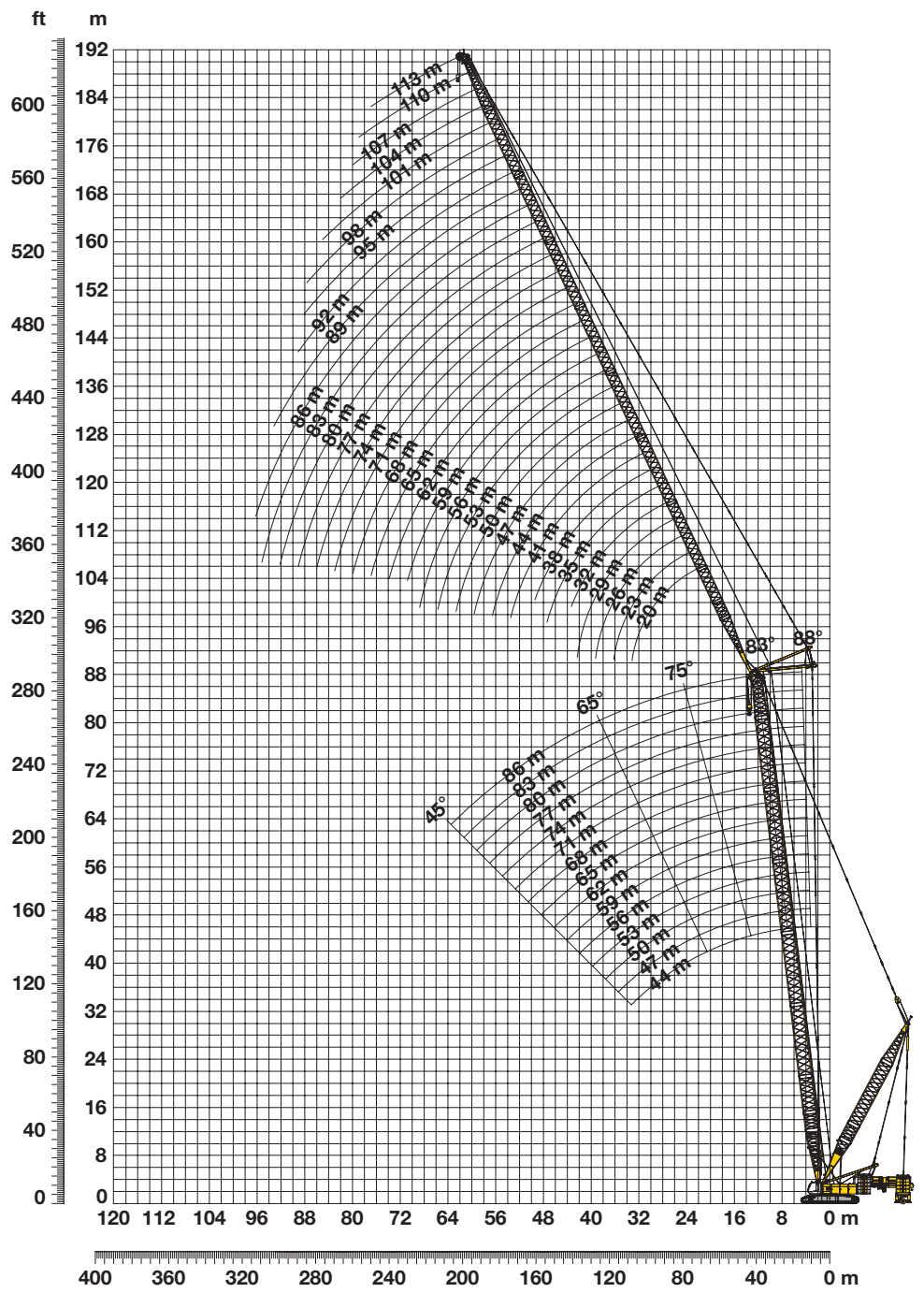

Boom configuration for main boom lengths (44 m – 86 m) – see table 1 on page 4
Jib configuration for jib lengths (20 m – 113 m)

	Length	Amount of luffing jib extensions																														
Luffing jib foot	10 m	1	1	1	1	1	1	1	1	1	1	1	1	1	1	1	1	1	1	1	1	1	1	1	1	1	1	1	1	1	1	1
Luffing jib section	3 m		1		1		1		1		1		1		1		1		1		1		1		1		1		1		1	
Luffing jib section	6 m			1	1			1	1			1	1			1	1			1	1			1	1			1	1			1	1
Luffing jib section	12 m					1	1	1	1	2	2	2	2	3	3	3	3	4	4	4	4	5	5	5	5	6	6	6	6	7	7	7	7
Luffing jib head	10 m	1	1	1	1	1	1	1	1	1	1	1	1	1	1	1	1	1	1	1	1	1	1	1	1	1	1	1	1	1	1	1	1
Luffing jib length (m)		20	23	26	29	32	35	38	41	44	47	50	53	56	59	62	65	68	71	74	77	80	83	86	89	92	95	98	101	104	107	110	113

https://truckmanualshub.com/

Lift chart – luffing jib (No. 2316.xx)

Main boom angle 75°
120 t wheeled counterweight carriage at 15.8 m radius

Main boom 44 m

Radius	Jib length in (m)							
	41	53	65	77	89	95	101	113
(m)	t	t	t	t	t	t	t	t
32	52.2							
38	45.3	38.5						
44	36.5	34.6	26.9					
48	30.8	30.4	26.2	18.8				
50	28.9	28.5	25.7	18.8				
55		25.1	22.6	18.1	13.3	10.9		
60		21.6	20.2	17.2	12.8	10.7	9.1	
65		17.7	18.0	16.1	12.3	10.3	8.9	6.0
70			15.9	14.6	11.8	10.0	8.6	5.8
75			13.6	13.0	11.2	9.5	8.3	5.6
80				11.4	10.3	9.0	8.0	5.3
85				9.8	9.3	8.4	7.5	5.0
90					8.2	7.7	7.0	4.4
95					7.0	6.8	6.3	3.3
105						4.3	4.6	
110							3.3	

Main boom 50 m

Radius	Jib length in (m)							
	41	53	65	77	89	95	101	113
(m)	t	t	t	t	t	t	t	t
33.5	50.4							
40	44.0	37.0						
44	38.2	35.3	26.1					
50	29.7	29.7	25.3	18.2				
55	24.4	26.0	23.1	17.8	12.9			
60		22.2	20.6	17.1	12.6	10.5	8.9	
65		19.0	18.6	16.1	12.2	10.2	8.7	5.8
70			16.3	14.9	11.7	9.8	8.4	5.7
75			14.4	13.4	11.2	9.4	8.2	5.5
80				11.8	10.3	9.0	7.9	5.2
85				10.4	9.5	8.4	7.5	4.9
90					8.5	7.8	7.0	4.6
95					7.4	7.1	6.5	3.5
100					6.0	6.1	5.9	2.3
105						4.9	5.0	
110							3.8	

Main boom 62 m

Radius	Jib length in (m)							
	41	53	65	77	89	95	101	113
(m)	t	t	t	t	t	t	t	t
36.6	45.3							
42	42.3	33.5						
48	34.0	32.4	23.7					
55	25.8	27.0	22.6	16.7				
60		23.0	20.7	16.3	11.9	9.9		
65		19.4	18.7	15.7	11.6	9.7	8.3	
70		16.2	16.5	15.1	11.2	9.4	8.1	5.3
75			14.4	13.8	10.7	9.1	7.8	5.2
80			12.3	12.4	10.2	8.7	7.6	5.0
85				11.0	9.6	8.3	7.3	4.7
90				9.4	8.8	7.8	6.9	4.4
95					8.0	7.3	6.5	3.9
100					6.8	6.6	6.0	2.9
105						5.5	5.3	
110						4.1	4.4	
115							3.2	

Main boom 74 m

Radius	Jib length in (m)							
	41	53	65	77	89	95	101	113
(m)	t	t	t	t	t	t	t	t
39.7	36.3							
46	33.1	28.3						
50	30.1	27.1	21.0					
55	25.2	24.9	20.5	15.1				
60	21.7	22.2	19.7	14.9	10.8			
65		18.7	18.7	14.4	10.6	9.0	7.6	
70		16.4	16.3	13.9	10.3	8.8	7.5	
75			13.6	13.2	9.9	8.5	7.3	4.8
80			12.0	11.7	9.5	8.1	7.0	4.6
85				10.0	8.9	7.8	6.7	4.3
90				8.9	8.0	7.2	6.4	4.0
95				7.5	7.0	6.5	5.8	3.7
100					6.2	5.8	5.2	3.1
105					5.1	5.0	4.5	2.2
110						4.1	3.8	
115							3.1	

Main boom 80 m

Radius	Jib length in (m)							
	41	53	65	77	89	95	101	113
(m)	t	t	t	t	t	t	t	t
41.2	30.0							
48	28.3	24.6						
50	27.3	24.0						
55	24.0	22.4	18.6					
60	20.8	20.7	17.5	14.0				
65		18.0	16.5	13.6	10.0	8.4		
70		15.7	15.0	13.0	9.7	8.3	7.0	
75			13.0	12.4	9.4	8.0	6.9	4.4
80			11.4	11.1	9.0	7.7	6.6	4.2
85			9.9	9.5	8.4	7.4	6.3	4.0
90				8.3	7.5	6.8	6.1	3.7
95				7.2	6.5	6.0	5.5	3.5
100					5.6	5.2	4.8	3.1
105					4.8	4.4	4.0	2.3
110						3.7	3.3	
115						2.7	2.7	

Main boom 86 m

Radius	Jib length in (m)							
	41	53	65	77	89	95	101	113
(m)	t	t	t	t	t	t	t	t
42.8	26.6							
48	24.9	20.7						
50	24.1	20.4						
55	22.0	18.9	16.2					
60	19.8	17.4	15.2	12.4				
65		15.8	14.2	11.9	9.1			
70		14.1	13.2	11.3	8.9	7.6	6.4	
75		12.5	11.9	10.6	8.5	7.4	6.3	3.9
80			10.6	9.7	7.9	6.9	6.0	3.8
85			9.5	8.6	7.3	6.5	5.6	3.6
90				7.6	6.6	5.9	5.1	3.3
95				6.7	5.7	5.2	4.6	3.0
100					4.9	4.5	4.0	2.7
105					4.3	3.8	3.4	2.1
110					3.4	3.2	2.7	
115						2.5	2.2	

Capacities in metric tons with luffing jib (No. 2316.xx), 124 t counterweight + 57 t carbody counterweight. Above lift chart is for reference only. For actual lift duty and complete chart with all available configurations please refer to lift chart in operator's cab or manual.

https://truckmanualshub.com/

Lift chart – luffing jib (No. 2316.xx)

Main boom angle 65°
120 t wheeled counterweight carriage at 15.8 m radius

Main boom 44 m

Radius	Jib length in (m) 41	53	65	77	89	95	101	113
(m)	t	t	t	t	t	t	t	t
46	43.9							
48	42.2							
50	39.2							
55	33.1	31.0						
60	28.2	26.8	23.1					
65		23.5	21.3					
70		20.9	19.2	16.4				
75			17.2	15.3	11.3			
80			15.5	14.0	11.1	9.2	7.7	
85				12.4	10.7	9.0	7.7	
90				11.3	9.9	8.7	7.5	4.7
95				9.9	9.0	8.2	7.3	4.5
100					8.3	7.6	6.8	4.3
105					7.3	6.9	6.3	3.2
110						6.2	5.7	
115							4.9	

Main boom 50 m

Radius	Jib length in (m) 41	53	65	77	89	95	101	113
(m)	t	t	t	t	t	t	t	t
48	43.4							
50	42.6							
55	35.9	31.6						
60	30.6	28.8						
65		25.3	22.4					
70		22.1	20.0	15.9				
75		19.3	18.2	15.6				
80			16.3	14.6	10.9	8.9		
85			14.6	13.2	10.7	8.8	7.4	
90				11.8	10.2	8.7	7.4	4.5
95				10.7	9.5	8.3	7.3	4.4
100					8.6	7.8	6.9	4.2
105					7.9	7.3	6.5	3.7
110						6.6	6.0	2.4
115						5.7	5.4	
120							4.5	

Main boom 62 m

Radius	Jib length in (m) 41	53	65	77	89	95	101	113
(m)	t	t	t	t	t	t	t	t
55	41.0							
60	35.4	30.5						
65	30.2	28.5						
70		24.8	21.2					
75		21.7	19.4	14.8				
80		19.0	17.6	14.7				
85			15.7	14.3	10.1	8.3		
90			14.1	13.0	10.0	8.3	6.9	
95				11.7	9.7	8.2	6.9	4.0
100				10.7	9.2	8.0	6.8	4.0
105					8.6	7.6	6.6	3.9
110					7.9	7.2	6.3	3.5
115						6.6	5.9	2.3
120						5.7	5.3	
125							4.5	

Main boom 74 m

Radius	Jib length in (m) 41	53	65	77	89	95	101	113
(m)	t	t	t	t	t	t	t	t
60	34.6							
65	31.4	27.3						
70	28.7	26.7						
75		24.4	19.1					
80		21.4	18.8	13.4				
85		18.9	17.2	13.4				
90			15.5	13.2	9.2	7.6		
95			14.0	12.4	9.1	7.6	6.3	
100				11.5	9.0	7.5	6.3	3.5
105				10.6	8.7	7.4	6.2	3.5
110					8.3	7.3	6.1	3.4
115					7.7	7.0	5.9	3.2
120						6.4	5.7	2.1
125						5.6	5.1	
130							4.4	

Main boom 80 m

Radius	Jib length in (m) 41	53	65	77	89	95	101	113
(m)	t	t	t	t	t	t	t	t
65	30.1							
70	27.8	23.9						
75	25.4	23.5	17.8					
80		22.0	17.7					
85		20.1	17.1	12.6				
90			15.9	12.6	8.6			
95			14.6	12.2	8.6	7.1	5.9	
100				11.7	8.6	7.1	5.9	
105				10.9	8.4	7.1	5.9	3.2
110				9.8	8.2	7.0	5.8	3.2
115					7.8	6.8	5.7	3.1
120					7.1	6.5	5.6	2.5
125						5.9	5.2	
130							4.7	

Main boom 86 m

Radius	Jib length in (m) 41	53	65	77	89	95	101	113
(m)	t	t	t	t	t	t	t	t
63	25.0							
65	25.3							
70	24.1	19.4						
75	22.8	19.0						
80		18.1	15.0					
85		17.2	14.7	11.3				
90		16.2	14.2	11.2				
95			13.6	11.1	7.9	6.6		
100			12.9	10.8	7.9	6.6	5.4	
105				10.5	7.8	6.5	5.4	2.9
110				9.8	7.6	6.4	5.3	2.9
115					7.4	6.3	5.2	2.8
120					7.0	6.1	5.1	2.7
125						5.8	5.0	
130						5.2	4.6	
135							4.0	

Capacities in metric tons with luffing jib (No. 2316.xx), 124 t counterweight + 57 t carbody counterweight. Above lift chart is for reference only. For actual lift duty and complete chart with all available configurations please refer to lift chart in operator's cab or manual.

https://truckmanualshub.com/

Lift chart – luffing jib (No. 2316.xx)

Main boom angle 45°
120 t wheeled counterweight carriage at 15.8 m radius

Main boom 44 m

Radius	Jib length in (m)							
	41	53	65	77	89	95	101	113
(m)	t	t	t	t	t	t	t	t
67.6	30.1							
70	29.9							
80		22.2						
85		19.8						
90			16.3					
95			14.8					
100				11.9				
105				10.7				
110					8.5			
115					7.8	7.2		
120						6.6	5.8	
125						5.9	5.2	
130							4.6	2.0

Main boom 50 m

Radius	Jib length in (m)						
	41	53	65	77	89	95	101
(m)	t	t	t	t	t	t	t
71.9	27.7						
75	26.3						
85		21.4					
95			16.0				
100			14.6				
105				11.6			
110				10.6			
115					8.3		
120					7.7	7.0	
125						6.5	5.6
130							5.1
135							4.5

Main boom 62 m

Radius	Jib length in (m)						
	41	53	65	77	89	95	101
(m)	t	t	t	t	t	t	t
80.3	21.4						
85	19.9						
95		16.1					
100			13.8				
105			12.8				
110				10.8			
115				10.0			
120				9.3	7.9		
125					7.5	6.4	
130					6.9	6.4	5.2
135						5.8	5.2
140							4.8

Main boom 74 m

Radius	Jib length in (m)						
	41	53	65	77	89	95	101
(m)	t	t	t	t	t	t	t
88.8	16.0						
90	15.8						
100		12.4					
105		11.5					
110			9.6				
115			8.8				
120				7.1			
125				6.5			
130					4.8		
135					4.3	3.8	
140					3.8	3.3	2.7
145						2.9	2.2

Main boom 80 m

Radius	Jib length in (m)					
	41	53	65	77	89	95
(m)	t	t	t	t	t	t
93.1	13.7					
95	13.3					
105		10.3				
110		9.5				
115			7.7			
120			7.0			
125				5.3		
130				4.8		
135					3.2	
140					2.8	2.3
145					2.3	

Main boom 86 m

Radius	Jib length in (m)			
	41	53	65	77
(m)	t	t	t	t
97.3	11.4			
100	10.9			
110		8.2		
120			5.8	
125			5.3	
130				3.6
135				3.2

Capacities in metric tons with luffing jib (No. 2316.xx), 124 t counterweight + 57 t carbody counterweight. Above lift chart is for reference only. For actual lift duty and complete chart with all available configurations please refer to lift chart in operator's cab or manual.

https://truckmanualshub.com/

Drive options

Wheeled counterweight carriage

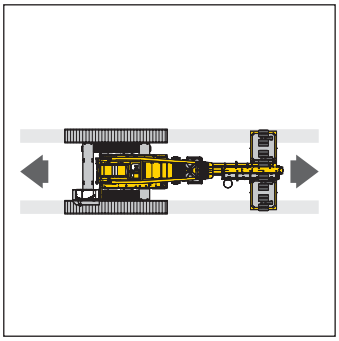

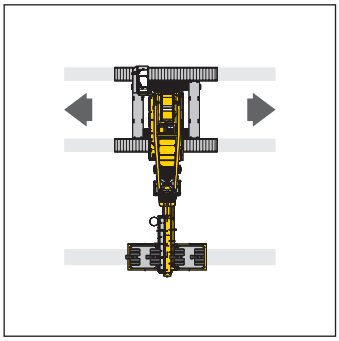

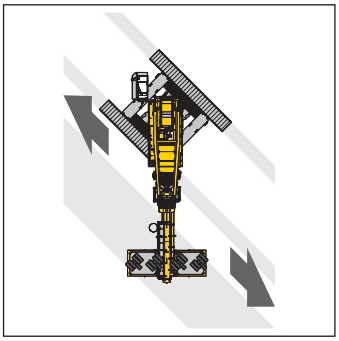

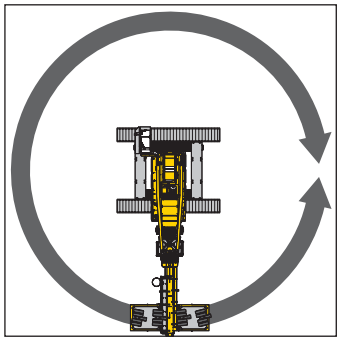

Carriage with steerable axles

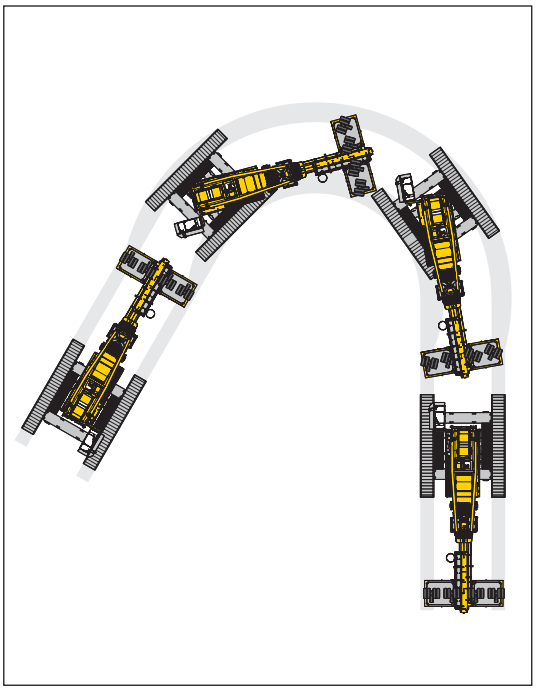

Carriage with blocked steering axle

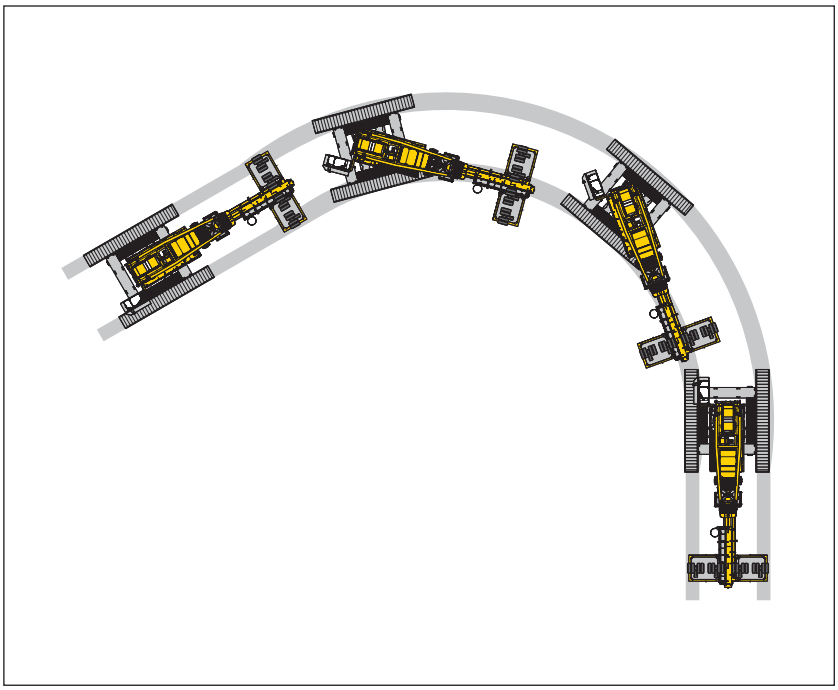

LR 1300 Derrick–10502952–08/2008–Subject to change without notice.

Liebherr-Werk Nenzing GmbH
P.O. 10, A-6710 Nenzing/Austria
Tel.: +43 50809 41–473
Fax: +43 50809 41–499
crawler.crane@liebherr.com
www.liebherr.com