https://truckmanualshub.com/

SISU Axles

MAINTENANCE MANUAL

MP270 Drive gear

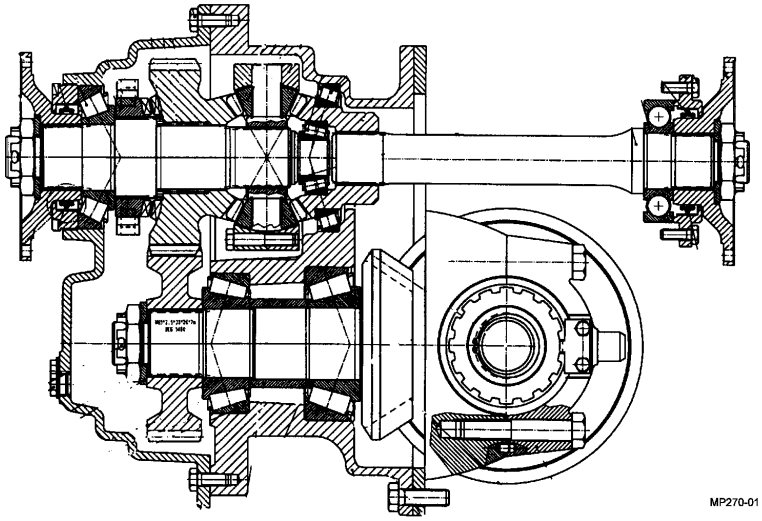

Sisu Axles, Inc.
Autotehtaantie 1
P.O. Box 189
FIN-13101 Hämeenlinna
Finland
Phone int + 358 204 55 2999
Fax int + 358 204 55 2900

MP270-DG 11/99

https://truckmanualshub.com/

https://truckmanualshub.com/

List of contents

General 5
Axle design 5
Repairs 6
Axle removal 6
Removing of the drive gear unit from the axle body 7
Longitudinal differential lock 7
Dismantling 7
Spur gear unit 9
Dismantling 9
Dismantling of the longitudinal differential 10
Assembly of the longitudinal differential 10
Pinion unit 11
Dismantling 11
Assembly 12
Differential unit 13
Dismantling 14
Transverse differential lock 14
Dismantling 14
Differential unit 14
Assembly 14
Drive gear assembly and adjustment of gear backslash and contact 15
Installation of the differential assy 15
Replacement of pinion / crown wheel pair and necessary measures 15
Assembly of the spur gear unit including longitudinal differential 18
Assembly of the spur gear unit 18
Inspection of the components 18
Installation and adjustment of the input shaft bearing 20
Assembly and adjustment of the differential locks 22
Assembly 22
Adjustment: 22
Installation and adjustment of differential lock indicator light senders 22
Installation of intermediate shaft 23
Oil Checks And Oil Changes 24
Differential oils 24
Wheel hub oils 24
Special tools 24
Torque 24z
Lubrication 25
Oil volumes: 25
Use of the differential locks 25

NOTE ! This Manual is intended for use by experienced mechanics using safe procedures in properly equipped shops.
Safety precautions should always be followed such as wearing safety glasses, using adequate lifting aids, and using tools and equipment in good condition. Sisu Axles, Inc., its agents, associates or representatives are not responsible for damage or injury occurring while working on their components.

https://truckmanualshub.com/

1 SISU MP270 DRIVE GEAR

1.1 General

In this manual there are instructions only for foremost axle of light weight tandem drive.

Instructions for rearmost axle are in separate SISU DTB axle Workshop Manual.

Repair instructions for brakes and hub reduction gears are in separate manuals.

1.2 Axle design

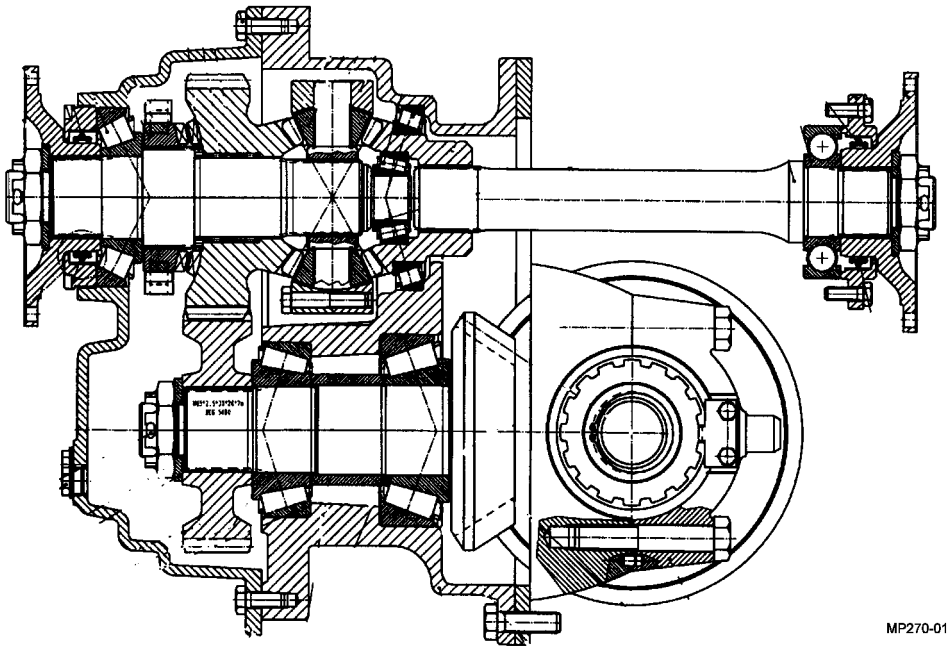

Picture 1: Drive gear in sectional view

The axle casing is rectangular shaped and pressed of steel sheet material.

Power from transmission to the tandem drive rear axle goes through the foremost axle. Propeller shaft flange of foremost axle is installed onto drive gear input shaft and it drives the spider of the longitudinal differential through its splines and this rotates always when the propeller shaft is rotating.

The inter-axle differential divides the power between the foremost and the rearmost axles of the tandem. Power to the foremost axle is transmitted through the front side gear of the inter-axle differential that is integral with a spur gear. The spur gear drives a second spur gear which is installed on splines of the foremost axle pinion where the primary reduction takes place.

The second side gear of the inter-axle differential is splined onto the output shaft which transmits power to the rearmost axle of the tandem.

The bevel crown wheel and pinion gears provide the primary reduction in the axles with the final reduction being accomplished in the planetary gearing in the wheel hubs.

The drive gears, differentials and wheel hubs are all lubricated by the same oil, but checking of the oil levels as well draining and refilling must be done by using respective plugs of each component

1.3 Repairs

1.3.1 Axle removal:

1. Lift axle and support it on stands. Remove tire and wheel assemblies.
2. Remove hub drain plugs and drain oil from planetary gears.

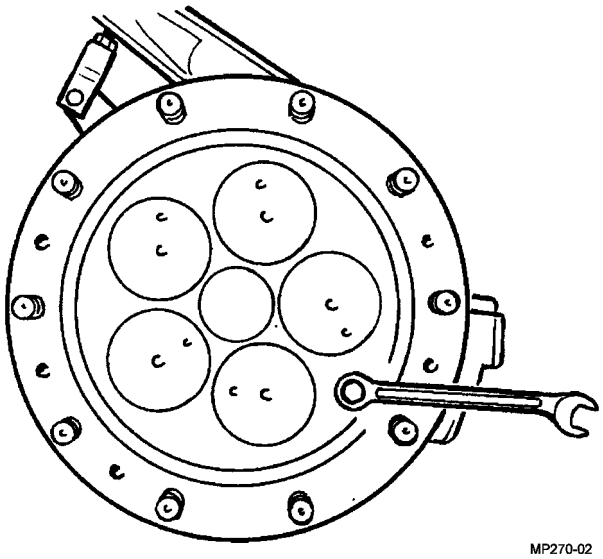

Picture 2: Wheel hub drain plug

3. Remove carrier drain plug and drain drive gear oil.
4. Remove input and output propeller shafts from flanges.
5. Remove axle from vehicle. (The carrier can be removed alone by using a special lift.)
6. Place the axle assembly on the repair stand.
7. Remove both brake drums.
8. Remove both wheel hub covers complete with planetary gears.
9. Dismantle both wheel hubs. (See separate maintenance manual for wheel hubs.)
10. Remove both half shafts from the axle housing..

1.3.2 Intermediate shaft removal

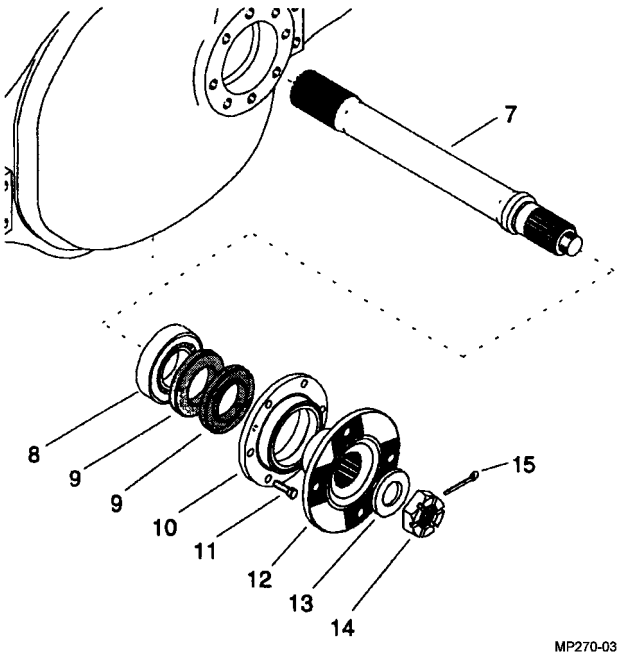

Picture 3: Intermediate shaft with installation parts.

1. Remove the intermediate shaft complete with the bearing from the rear side of the axle body as follows:
2. Remove the cotter pin (15).
3. Undo the flange retaining nut (14) and remove the washer (13) and the flange (12).
4. Unscrew screws (11) and remove the bearing flange (10) with the seal (9) and the shaft (7) with the bearing (8)

1.4 Removing carrier from axle housing

Remove eleven drive gear cap screws (B in Picture 4). While supporting the carrier in a suitable fixture, use two cap screws as extractors and screw them into the threaded holes in the case (Holes are protected by plastic plugs). Place carrier in repair stand or fixture with the input shaft pointed up.

Warning! Do not remove four Allen head screws (A in picture 4) in the connection flange, because these screws keep the spur gear and crown wheel housings together. If these screws are removed, these housing may come apart and it may cause a serious accident.

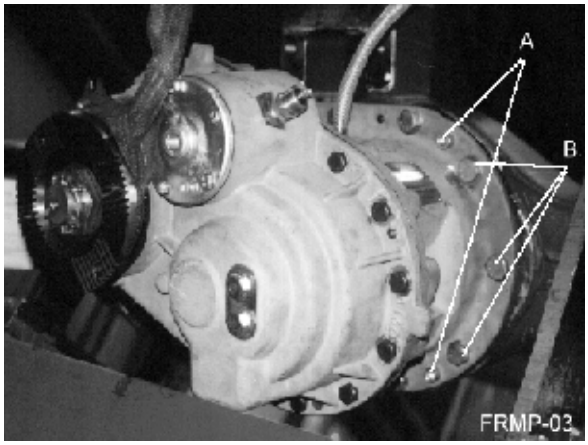

Picture 4: Removing of the drive gear unit from the axle body

1.5 Inter-axle differential lock

1.5.1 Dismantling:

Text references are found in picturepicture 5.

1. Remove differential lock engagement sender switch (Items 19 – 25 in Picture 7).
2. Remove the 5 lock cylinder cover screws to remove the cover (1) and diaphragm (2).
3. Remove the diaphragm support cup screw (3) and remove the cup (4) and spring (5).
4. Remove the plug (Item 26 in Picture7) and reaching through the hole, loosen the fork lock screw (6) approximately 2 turns. Remove the fork shaft by rotating it counterclockwise using a suitable open end wrench..

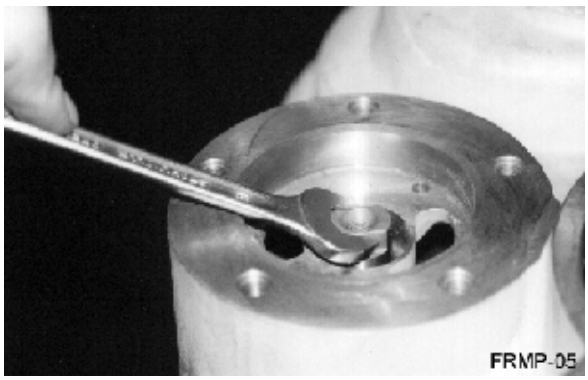

Picture 6: Removing of the differential lock fork shaft

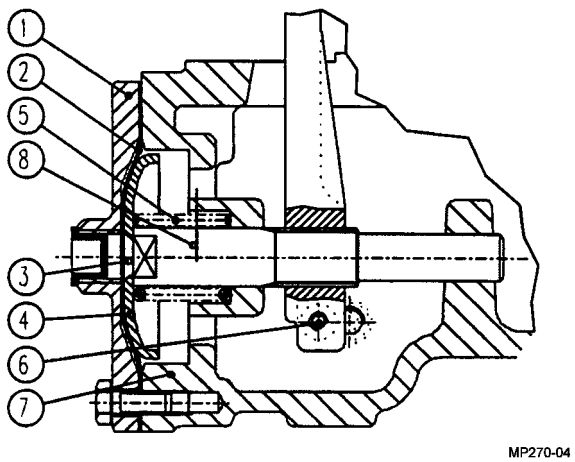

Picture 5: Engagement mechanism of differential lock

5. When the shaft is removed you can remove the fork with slide shoes.

https://truckmanualshub.com/

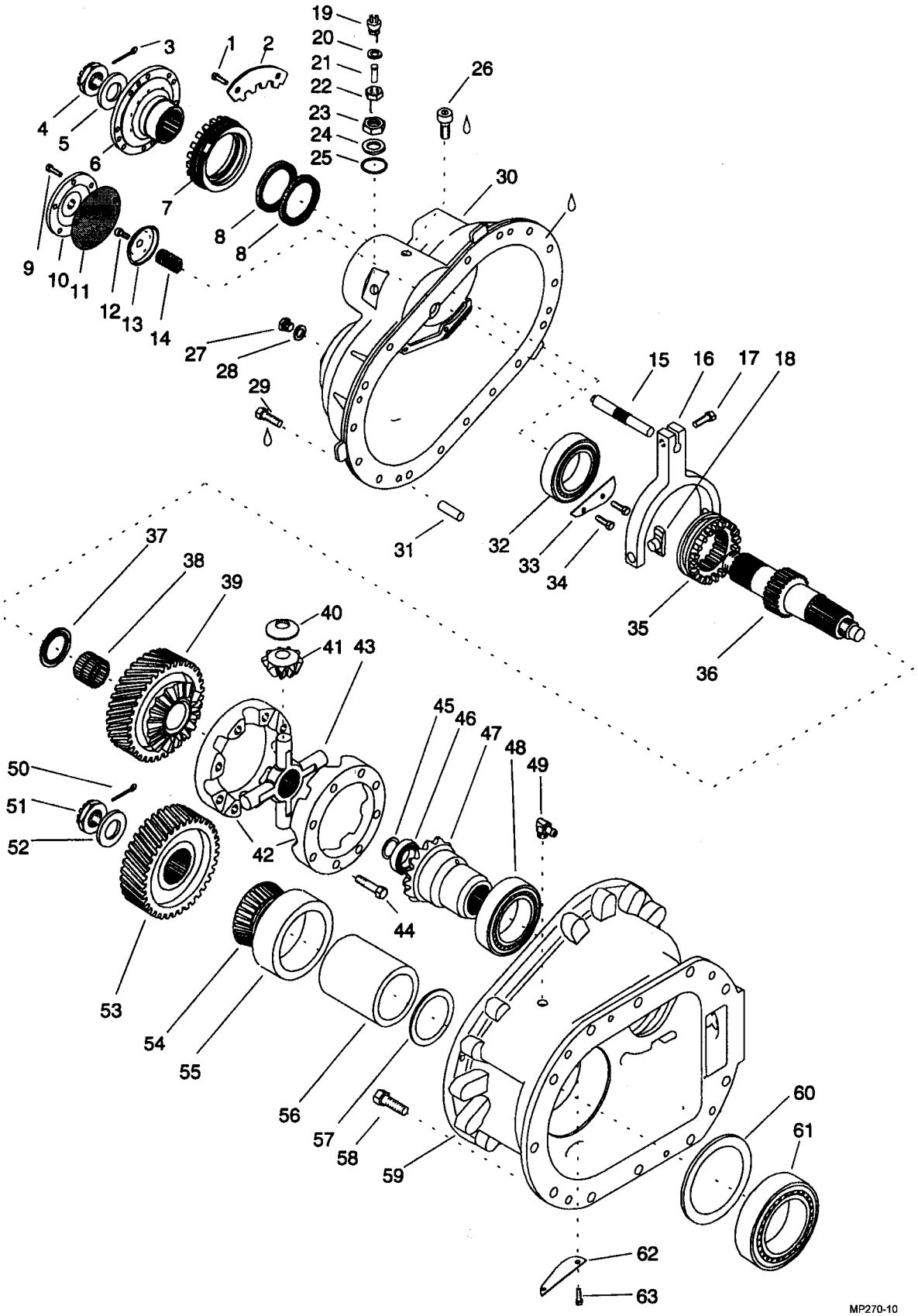

Picture 7: Spur gear housing with related parts

1.6 Spur gear unit

1.6.1 Dismantling

Text references are found in picture 7.

1. Remove cotter pin (3)
2. Remove the flange retaining nut (4), the washer (5) and the flange (6).
3. Remove screws (1) and locking plate (2) for the bearing adjustment nut (7).
4. Remove the bearing adjustment nut (7). The seals (8) remain in the adjustment nut.
5. Remove outer housing cap screws. Using cap screws as extractors, screw them into the threaded holes in the housing flange (Holes are protected by plastic plugs) and, tightening the screws evenly, pull the housing carefully off the dowels.
6. Remove the housing (30)..

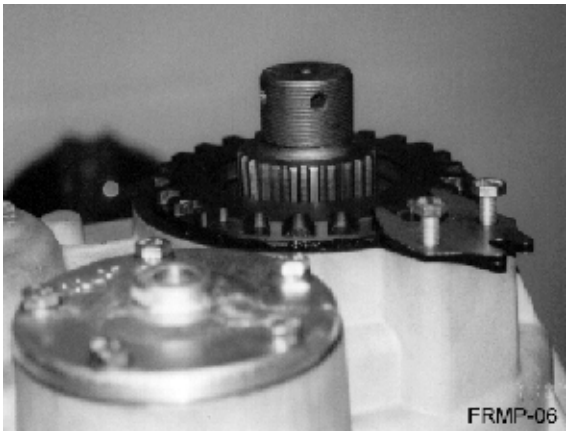

Picture 8: Input shaft without the drive flange and with loosened adjustment nut locking plate screws.

Note! The housing has to be tipped so that the oil collector plate (33) inside the housing clears the bearing (32) which remains on the shaft.

When the housing has been removed, remove the differential lock fork (16) and shoes (18).

Remove the bearing cone (32) from the shaft (36). Use a puller with the legs inside the groove of the differential lock engagement bushing (35).

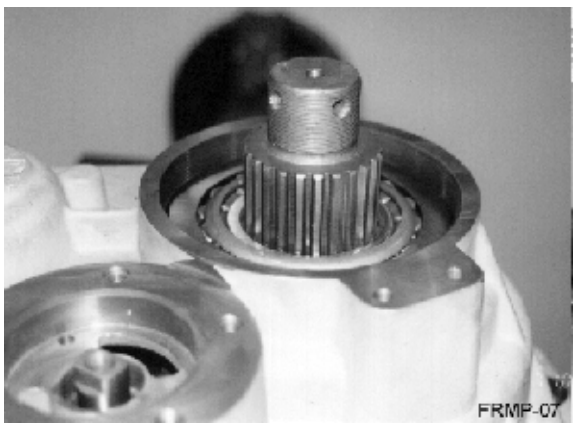

Picture 9: Input bearing adjustment nut removed and housing ready for dismantling

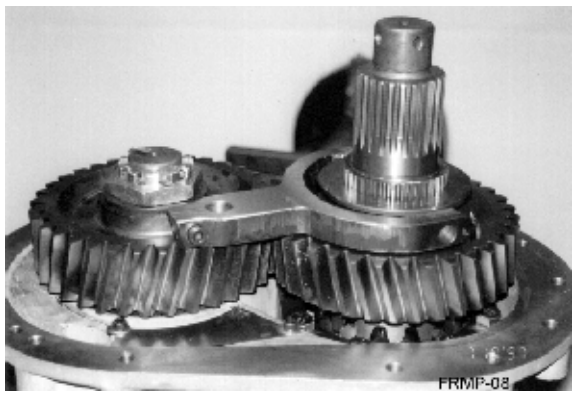

Picture 10: Housing and bearing removed; differential lock fork still in position.

Picture 11: Input shaft complete with related parts

7. Remove the input shaft (36) and the following components will follow:
   - Inter-axle differential (40-44), spur gear (39), bearing (38), thrust bearing (37) and the cone of the tapered roller bearing (46) and its shim(s) (45). The inner differential side gear (47) and the tapered roller bearing cup (46) will remain inside the housing but may be lifted out now. The tapered roller bearing cone (48) will follow with the side gear. The tapered roller bearing cup (59) will remain inside the housing.

1.6.2 Dismantling of Inter-axle differential

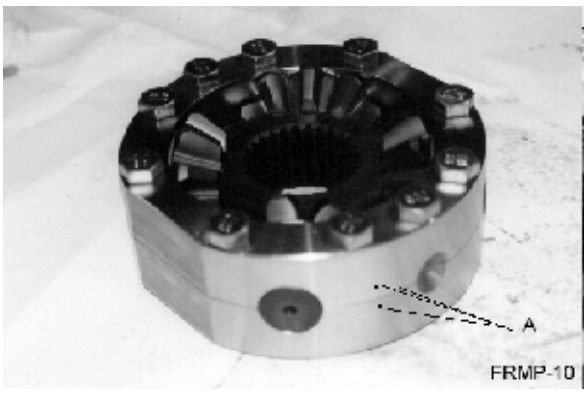

Picture 12: Inter-axle differential ready for dismantling (Note location markings A).

8. Mark differential case halves with a center punch (A in Picture 12) to ensure reassembly in the same relationship.
9. Remove the differential case retaining screws (44) and separate the halves (42). The spider (43) and gears (41) with thrust washers (40) will remain inside the lower half.

1.6.3 Assembly of the longitudinal differential

Assemble by carrying out in reverse order the operations described for dismantling.

Lubricate all parts within the assembly with engine oil within the assembly.

Tighten the retaining screws (44) to 80 Nm [50 lb-ft] torque.

Use Loctite or equivalent thread locking liquid on these screws.

1.7 PINION UNIT

1.7.1 Dismantling

Text references are found in picture 7. The pinion itself is seen in picture 17.

1. Remove the socket head cap screws (Picture 13) and the crown wheel and differential assembly from the spur gear housing (59).

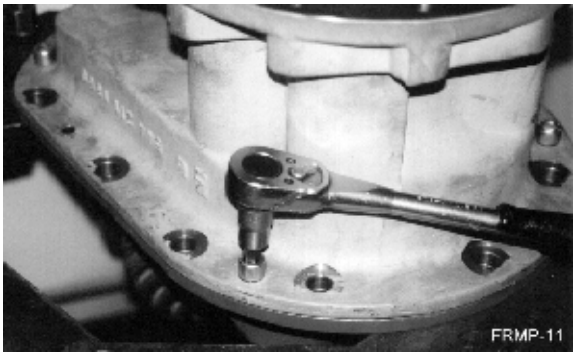

Picture 13: Removal of the retaining screws between the housings

2. Remove the cotter pin (50) the nut (51) and the washer (52).
3. Remove the spur gear (53) using a puller if required.
4. With a shop press, remove the pinion from the housing (59). The following parts will follow with the pinion: the inner bearing (61), the spacer bushing (56), and the shim (57). The tapered roller bearing cup (55) and the inner bearing cup (61) as well as the pinion engagement adjusting shims (60) under the bearing cup will remain inside the housing.

Picture 14: Removal of the spur gear housing

Note! Take care of the shims because if bearing and gears are not replaced with old shims, gear position and contact can be kept. (this is important for proper operation of the differential). If some parts are replaced, it is most convenient to start adjustment work with old shims, which in most cases are suitable too.

1.8 PINION UNIT

1.8.1 Assembly

Text references are found in picture 7. The pinion itself is seen in picture 17.

Prior to assembly, inspect to ensure that all components to be reused are in unconditionally sound condition. Only flawless bearings may be reused. If a new ring and pinion set are used, new bearings must be used.

1. Start assembly by pressing the inner bearing cone (61) onto the pinion. Place old shim(s) (57) and the spacer bushing (58) on the pinion.
2. Install bearing cups (61 and 55) in housing if they were removed. Use old shims (60) for the pinion engagement adjustment under the bearing cup (61).

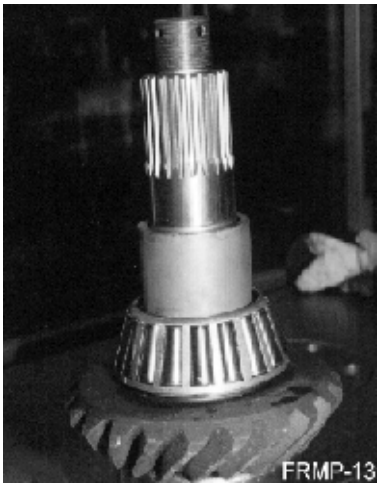

Picture 15: Pinion with inner bearing cone installed

3. Lift the housing (59) onto the pinion and place the outer bearing cone (54) on the pinion.
4. With a workshop press, press the outer baring cone (54) onto the pinion using a suitable bushing while rotating the housing
5. Increase pressure up to 16 metric tons [35,000 lbs.]. If bearing resists rotation completely, press the pinion out and replace shims and/or spacer bushing to increase length and repeat the previous step

When bearings rotate properly, inspect the pinion rolling torque in the following way:

- Attach a length of string with a hook as shown in Picture 17 to a hole at the smallest diameter of the housing surface.
- Using a spring scale attached to the end of the string measure the force required to turn the housing. The correct force is 75 – 105 N [16.8 - 23.6 lbs.].
- Change adjustment shims or the spacer bushing (56 in Picture 7) as required until correct rolling torque value is achieved.

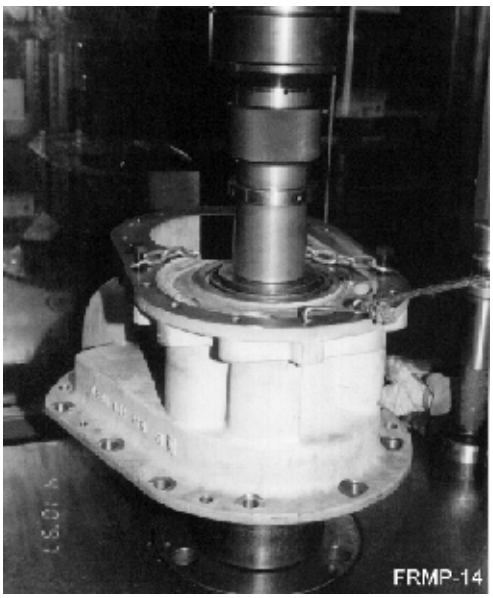

Picture 16: Pinion bearing installation and rolling torque check in the press

Following spacers and shims are available for pinion bearing adjustment:

Description	*Part no.*	*Thickness*
Spacer	599-557-2061	57.02 mm [2.2449 inches]
Spacer	599-557-1062	57.04 mm [2.2457 inches]
Spacer	599-557-1063	57.06 mm [2.2464 inches]
Spacer	599-557-1064	57.08 mm [2.2472 inches]
Shim	099-517-1000	0.3 mm [0.012 inches]
Shim	099-517-1001	0.4 mm [0.016 inches]
Shim	099-517-1002	0.5 mm [0.020 inches]

If a workshop press in not available for assembly, adjustment can be performed as follows:

Assembly as usual, but instead of pressing install spur gear, washer and nut , tighten the nut to 1300 Nm [960 lbs.-ft.] torque. Check the rolling torque as described earlier and adjust shims until desired value is reached.

When rolling torque is correctly adjusted, install spur gear, washer and nut. Finally, tighten the pinion nut to 1300 Nm [960 lbs.-ft.] and secure the nut with a cotter pin.

1.9 DIFFERENTIAL UNIT

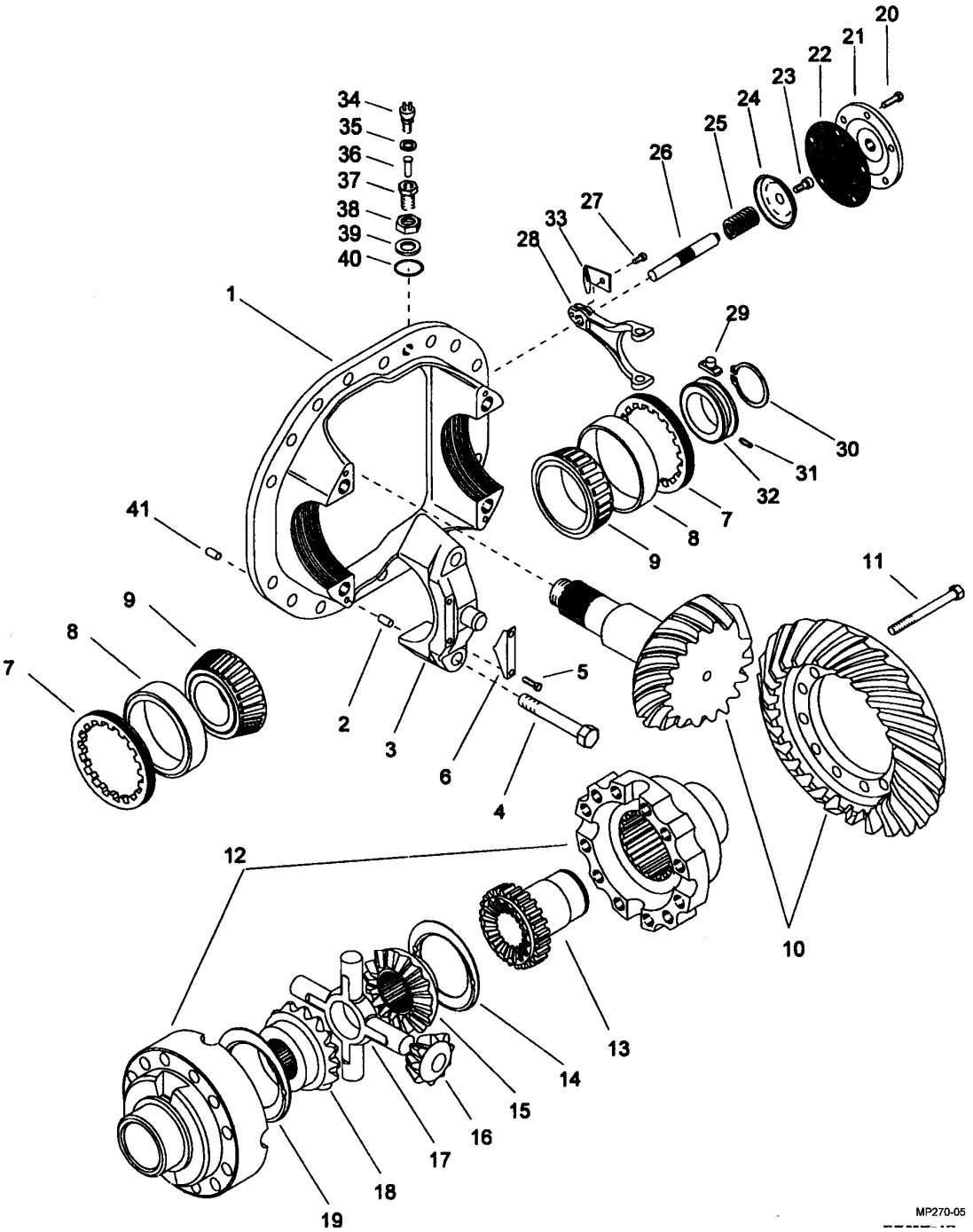

Picture 17: Differential with crown wheel and pinion with transversal differential lock exploded to parts.

1.9.1 Dismantling

Text references are found in picture 17.

1. Remove the differential side bearing adjusting nut locking plates (6) and slacken the nut a little.
2. Mark side bearing covers (3) with center punch marks on adjacent points to ensure the bearing caps are not mixed.

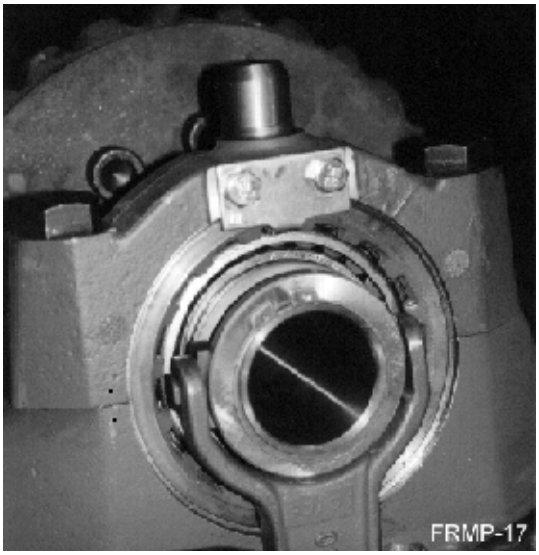

Picture 18: Differential unit and bearing cover marking before dismantling

3. Remove bearing cap retaining cap screws (4) and remove caps. Remove dowels (2) if necessary.
4. Lift the differential and crown wheel assembly including the bearing cones (9) from the case. When lifting the differential and crown wheel assembly, retain the bearing cups (8) and the differential lock fork sliding shoes (29) as they are now loose.
5. Dismantle the differential lock engagement mechanism, if required, according to the following instructions.

Picture 19: Differential unit with the crown wheel; the engagement ring for differential lock and the locking ring are removed

1.10 Transverse differential lock

1.10.1 Dismantling

Text references are found in picture 17.

1. Remove differential lock engagement sender switch (34-40).
2. Remove lock cylinder cover retaining screws (20), the cover (21) and the diaphragm (22).
3. Remove the diaphragm support cup screw (23), the cup (24) and the spring (25).
4. Remove the plug from the case and reaching through the hole, loosen the fork lock screw (27) approximately 2 turns.
   Remove the fork shaft (27) by rotating it counterclockwise using a suitable open end wrench.
   The fork can be removed when the differential and crown wheel are first removed.
5. Remove the differential lock locking ring (30) and the engagement ring (33).
6. Make adjacent marks on the differential case halves with a center punch to ensure they are aligned properly during reassembly.
7. Mount the carrier housing in a vise or special repair stand.
8. Remove differential and crown wheel assembly nuts (11) from the cap screws and lift the upper half of the housing and the crown wheel off. Remove and inspect all the differential parts from the lower case half.

1.11 DIFFERENTIAL UNIT

1.11.1 Assembly

Text references are found in picture 17.

1. Inspect all parts carefully before assembly assuring that all parts that are to be reused are in good condition.
2. Start assembly by pressing the tapered outer bearing cones (9) onto the case halves (12) if they were removed.
3. Place the differential case half opposite the crown wheel side in a vise.

4. Lubricate the differential parts and place them into the lower case half. Place the thrust washer (19) and the side gear (18) without the dog clutch teeth first. Place the side gear with the dog clutch teeth (15) and the thrust washer (14) on top of the spider (17) and spider gears (16).
5. Install the differential lock engagement ring (13).
6. Install the upper differential case half, lining up the center punch marks made at disassembly, and install screws (11). Use Loctite locking liquid and tighten screws to 320 Nm [236 lb.-ft] torque.

1.12 Drive gear assembly and adjustment of gear backslash and contact

The pinion already assembled in the housing and the old shims for the pinion distance adjustment are used in bottom of the bearing bore:

1.12.1 Installation of the differential assy:

1. Place drive gear housing in a suitable fixture with the differential bearing supports facing up.
2. Using suitable lifting gear, position differential and crown wheel assembly with bearing cups in the housing.
3. Install the bearing caps with the center punch marking lined up. Use Loctite on the cap screws and install them to exert light pressure on the bearing caps.. Install the bearing adjusting nuts and adjust so that the nut on the differential lock side is flush with the bearing cap surface.
4. Tighten the cap screws to 480 Nm [354 lb.-ft] of torque.
5. Turn the housing over so the crown wheel is down.
6. Lift the spur gear housing lower half with the pinion installed onto the housing and install four cap screws (58). Tighten cap screws to 100 Nm [74 lb-ft] of torque.
7. Adjust the position of the crown wheel so that the gear backlash is approximately 0.15 –0.30 mm [0.006 - 0.012 inches].
8. Adjust differential bearing to zero clearance again. Monitor clearance with a dial indicator. Using screwdrivers, move the differential assembly in the bearings. When zero clearance is reached, tighten the bearing adjusting nut on the crown wheel toothed side further ½ to 1-1/2 lock slots.
9. Perform adjustments with suitable drift and a hammer.
10. Adjust gear backlash by moving thee crown wheel in or out be turning both adjusting nuts equally to maintain bearing preload.
11. Check to ensure that backlash remains at 0.15 –0.30 mm [0.006 - 0.012 inches].

Picture 20: Installing of the spur gear housing

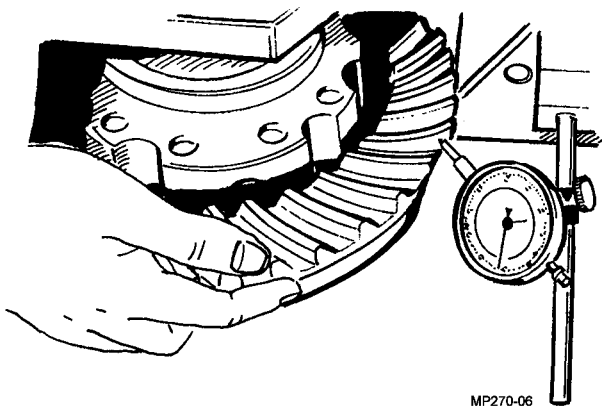

Picture 21: Checking of gear backslash

1.13 Replacement of pinion / crown wheel pair and necessary measures

When a new pinion/crown wheel assembly is installed, it is necessary to note the information marked on the pinion and the crown wheel in order to determine the correct location of the pinion.

1. Part number
2. Number of teeth
3. Pinion/crown wheel pair number
4. Variation value which is needed for correct positioning of the pinion.

Part number and tooth combination number are die cut in the outer surface of all pinions.

On crown wheels these numbers are marked on outside diameter.

Tooth combination number (for example 28/16) indicates that the pinion has 16 teeth and the crown wheel 28, equal to a drive ratio of 1.75 : 1.

Available pinion/crown wheel assemblies and respective drive ratios:

Part No.	*No. of Teeth*	*Drive Ratio*
543 240 3229	28/16	1.75

All pinion/crown wheel assemblies are supplied in matched sets and both parts have the same part number.

On pinions this number is die cut in the inner end of the pinion.

On crown wheels these numbers are marked on outside diameter.

Never use a pinion and crown wheel together which do not have the same pair number.

Each pinion is marked with a true installation distance or with a variation value, which indicates the correct installation distance compared to nominal installation distance (173 mm).

Variation value = True installation distance subtracted by 173 mm.

This variation value will be used in calculating the shims to placed between the intermediate housing and the drive gear housing.

Variation number (for example +0.1 or -0.1) is marked on the either end of the pinion.

To calculate the thickness of the shims:

1. Measure the thickness of previously used shim (s) by a micrometer.
2. Note the variation number on the new pinion. If this number has a plus value (+) subtract it from measurement calculations below.

If this number has a minus value (-) add it to measurement calculations below.

Take note of this measurement.

CALCULATION EXAMPLES

Example 1

- Thickness of original shim(s)	0.75 mm [0.030 inches]
- Variation value on original pinion +0.05	-0.05 mm [0.002 inches]
- Measurement obtained	0.70 mm [0.028 inches]
- Variation number on new pinion +0.10	+0.10 mm [0.004 inches]
- Thickness of new shim(s) to be used	0.80 mm [0.032 inches]

Example 2

- Thickness of original shim(s)	0.65 mm [0.026 inches]
- Variation value on original pinion –0.05	+0.05 mm [0.002 inches]
- Measurement obtained	0.70 mm [0.028 inches]
- Variation number on new pinion +0.15	+0.15 mm [0.006 inches]
- Thickness of new shim(s) to be used	0.85 mm [0.034 inches]

Example 3

- Thickness of original shim(s)	0.70 mm [0.028 inches]
- Variation value on pinion +0.05	-0.05 mm [0.002 inches]
- Measurement obtained	0.65 mm [0.026 inches]
- Variation number on new pinion –0.05	-0.05 mm [0.002 inches]
- Thickness of new shim(s) to be used	0.60 mm [0.024 inches]

Available shims for determining the location of the pinion

Description	Part No.	Thickness
Shim	90731-12010	0.1 mm [0.004 inches]
Shim	90731-12020	0.2.mm [0.008 inches]
Shim	90731-12050	0.5 mm [0.020 inches]
Shim	90731-12010	1.0 mm [0.040 inches]

Use these shims singly or in combinations as required

NOTE: Check the tooth contact and correct it as required. To obtain the correct contact pattern it may be necessary to move the pinion which changes gear backlash. All adjustments have to be made together to obtain the correct backlash and contact pattern.

Correct tooth contact is most important while the gear backlash allows a tolerance within 0.15 – 0.30 mm [0.006 - 0.012 inches] with a new pinion/crown wheel assembly.

With an old assembly, the tooth contact and the gear backlash have to be set as they were prior to dismantling.

Check tooth contact using lead oxide paint (red lead).

The following pictures illustrate tooth contact unloaded

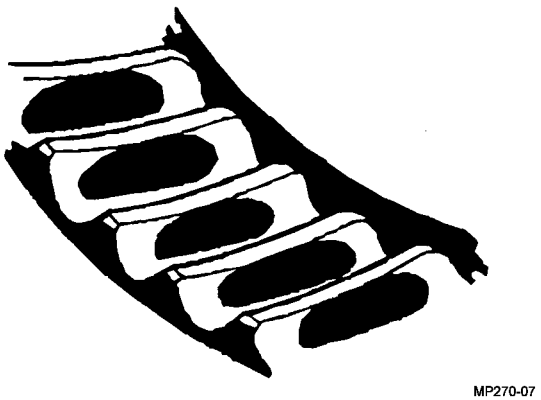

Picture 22: Correct tooth contact

Picture 22 indicates that the pinion is set correctly. This gives the quietest drive and the longest life.

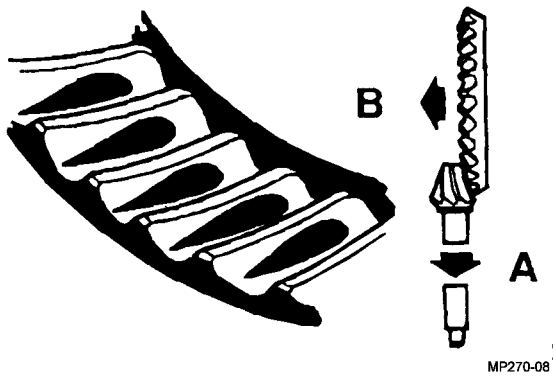

Picture 23: Poor tooth contact

Picture 23 indicates that the pinion is set too deeply. This causes a noisy drive, excessive wear, and damage to the gears. To correct the setting, add shims under the intermediate housing to move the pinion out and move the crown wheel in (direction of arrow B in picture). The correct backlash is 0.15 – 0.30 mm [0.006 - 0.012 inches]

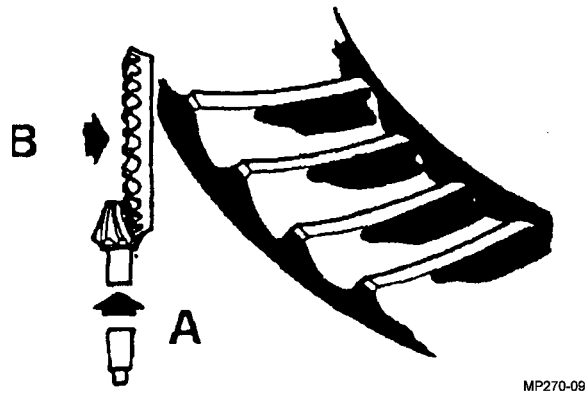

Picture 24: Poor tooth contact

Picture 24 indicates that the pinion is set too far out. This also causes a noisy drive, excessive wear, and damage to the gears. To correct the setting remove shims under the intermediate housing to move the pinion in and move the crown wheel out (direction of arrow B in picture).

1. When the differential side bearings are finally adjusted, lock the adjustment nut with their lock plates and tighten the lock plate retaining screws to 21 Nm [16 lb-ft] of torque. Set the lock plate tabs into the groove of the nut with a hammer.
2. When the adjustments are complete, remove the spur gear housing and coat both surfaces with Silmate Silicone Rubber RTV 1473 or a similar room temperature curing sealant and reassemble the housing. Install four M12 x 20 cap screws (58) using Loctite and tighten them to 130 Nm [96 lb-ft] of torque.

1.14 Assembly of the spur gear unit including longitudinal differential

1.14.1 Assembly of the spur gear unit

In this situation, the adjustment of the crown wheel/pinion contact is performed and the housings are installed together, crown wheel down on the work bench or in a repair stand.

1.14.2 Inspection of the components

Wash all gear unit components and inspect them carefully. Discard any faulty or excessively worn parts. Check bearings very carefully. Replace all bearings if there is any doubt about their condition.

Text references are found in picture 7.

1. Install the cup of tapered roller bearing (48) into the housing (59) and the cup of the input shaft inner end bearing (46) inside the side gear (47).

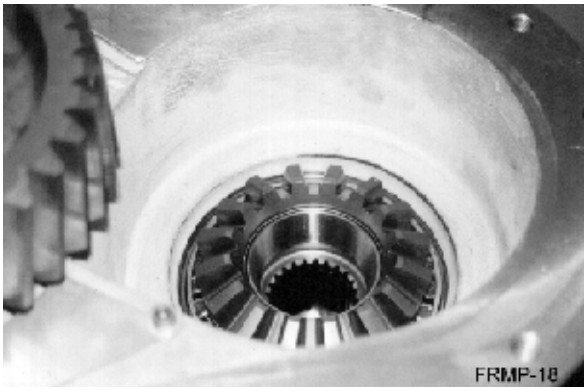

Picture 25: Differential side gear (47) installed inside the housing

2. Install the cone of the tapered roller bearing (48) onto the differential side gear (47).
3. Install the differential side gear (47) into the housing.
4. Place the input shaft (36) into a vise or on the work bench vertically, threaded end downwards.

Picture 26: Input shaft partially assembled, without inside tapered roller bearing

5. Place the thrust bearing (37) against the shaft shoulder.
6. Lift the spur gear (39) complete with the bearing (38) on the shaft. Lubricate the bearing with engine oil before assembly.
7. Assemble the inter-axle differential as follows:
   - Place one housing half (42) on the work bench, install lubricated planet gears (41) and thrust washers (40) onto the spider (43) and place this assembly in the housing half.
   - Install the other housing half with the center punch marks made at disassembly lined up and install the retaining cap screws (44).
   - Tighten cap screws to 80 Nm [60 lb-ft] torque.
8. Lift the differential assembly (40-44) onto the input shaft splines so that the assembly engages the spur gear (39) teeth.
9. Place the old or similar differential backlash adjustment shim(s) (45) on the shaft shoulder.

Picture 27: Installation of the adjustment shim underneath the bearing

10. Install the bearing cone (46) onto the shaft with a press.
11. Lift the input shaft assembly onto the side gear (47) in the housing.

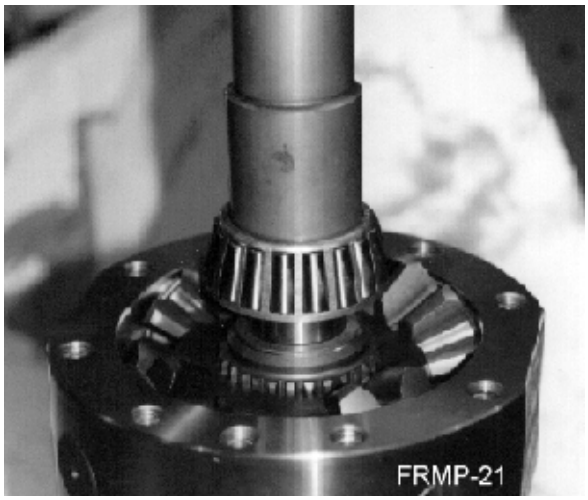

Picture 28: Installation of the inside tapered roller bearing cone

12. Measure the axial clearance of the differential with a feeler gauge between the shoulder of the shaft (36) and the thrust bearing (37) (See Picture 30). The axial clearance in the inter-axle differential should be 0.8 – 1.2 mm [0.031 – 0.05 inches]. This corresponds to 0.2 – 0.3 mm [0.008 – 0.012 inches] in actual gear backlash.
    If the clearance is not within the given limits, the bearing cone (46) must be removed and the thickness of the shim(s) changed accordingly.

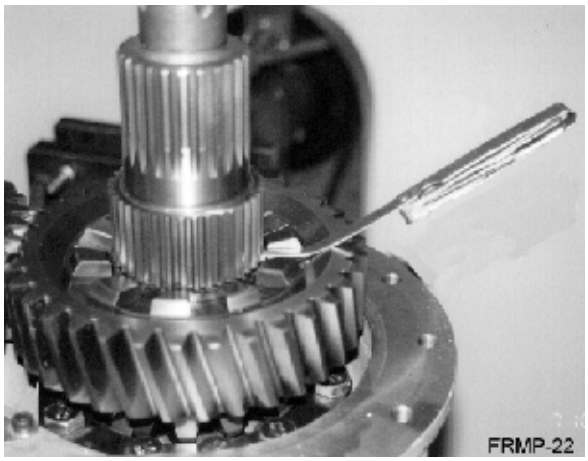

Picture 29: Clearance check by a feeler gauge

13. When the axial clearance of the inter-axle differential is measured and adjusted as required, place the differential lock engagement sleeve onto the shaft.
14. Place the engagement fork (16) with the glide shoes (18) onto the spur gear and into the engagement sleeve groove as shown in Picture 30
15. Heat the outer tapered bearing cone (16) up to a temperature of approximately 100° C [212° F] and install it against the shoulder of the input shaft..

Available shims for adjustment of the axial clearance of the inter-axle differential

Description	*Part No.*	*Thickness*
Shim	90731-03510	0,1 mm [0.004 inches]
Shim	90731-03520	0,2 mm [0.008 inches]
Shim	90731-03550	0,5 mm [0.020 inches]
Shim	90732-03510	1,0 mm [0.025 inches]

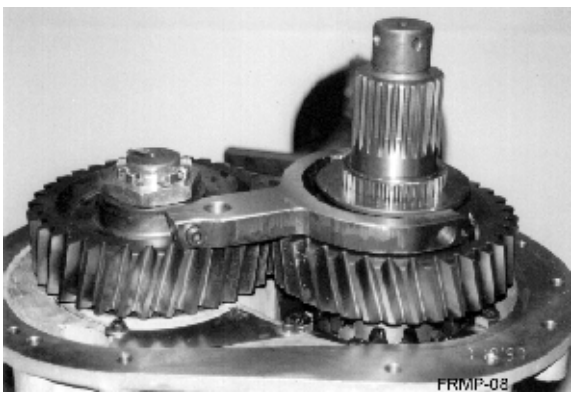

Picture 30: Assembled spur gear unit, but without the outer bearing

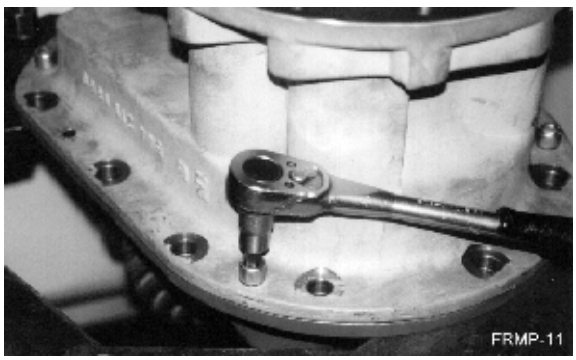

Picture 31: Installation of the spur gear housing

16. Spread the housing contact surfaces (30 and 59) with Silmate Silicone Rubber RTV 1473 or similar room temperature curing sealant.
17. Lift the outer housing (30) and place it on the spur gear housing (59). Apply Loctite locking liquid on the cap screws and tighten them evenly to 130 Nm [96 lb-ft] torque.

1.14.3 Installation and adjustment of the input shaft bearing

Install the outer tapered roller bearing cup (32) into the bearing bore using a soft drive or a suitable installation bushing.

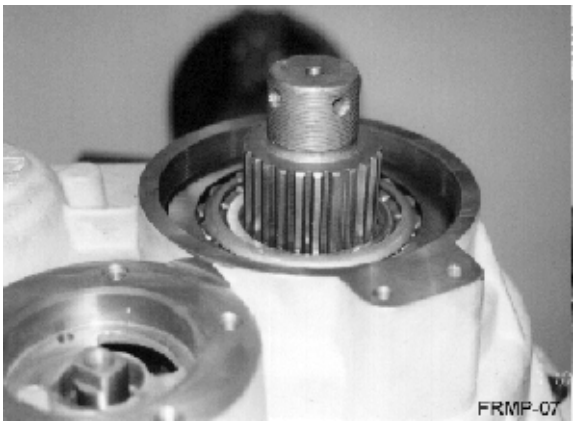

Picture 32: Installed cup of the input shaft outer bearing

1. Replace the seals (8) inside the input shaft adjustment nut (7) and fill the cavity between the seals with Mobil Grease MP or other NLG1 OR 2 lithium based grease.

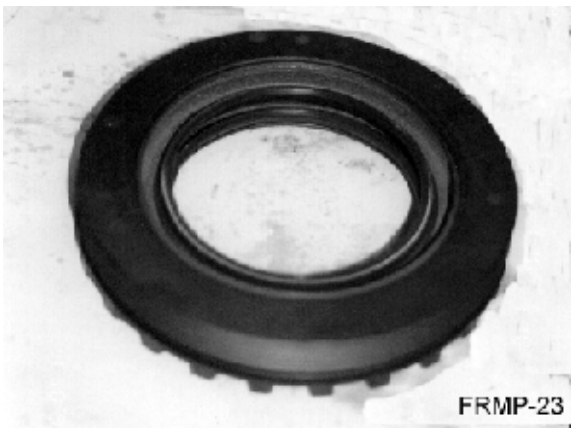

Picture 33: Input shaft bearing adjustment nut with its seal.

2. Apply Silmate Silicone Rubber RTV 1473 or similar room temperature curing sealant to the threads of the adjusting nut and screw the nut up against the bearing cup.

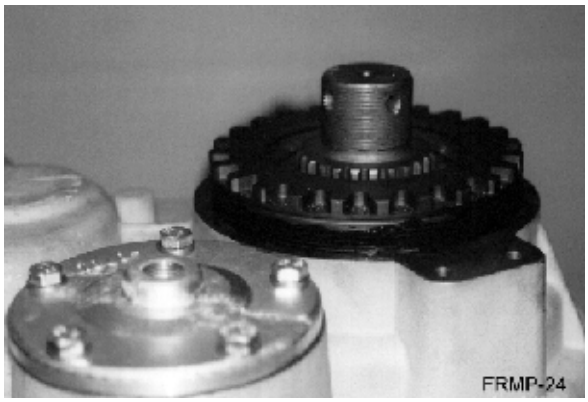

Picture 34: Input shaft bearing adjustment nut/seal housing smeared with sealant, partially installed

3. Tighten the nut (7) with the special tool until there is no clearance in the bearing. Slacken the nut to the nearest locking position. Note that the locking plate (2) can be installed in two positions. Apply Loctite locking liquid to the screws (1) and tighten to 21 Nm [16 lb-ft] torque.

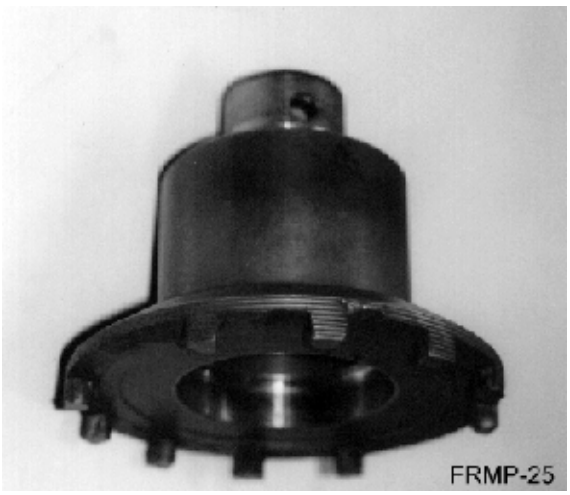

Picture 35: Special tool for the adjustment nut

4. Install the propeller shaft flange on the shaft splines, place the washer on the shaft and tighten the nut to 600 Nm [440 lb-ft] torque and secure the nut with a cotter pin. This tightening can be done in the vehicle if desired.

1.15 Assembly and adjustment of the differential locks

1.15.1 Assembly:

Inspect that all lock components are in good condition and that they are not excessively worn. Replace all damaged components.

Assemble in reverse order to the operations described for dismantling. (See Section 1.5.1)

1. Lock cylinder cover
2. Diaphragm
3. Support cup retaining screw
4. Support cup
5. Releasing spring
6. Fork lock screw
7. Lock housing
8. Fork shaft

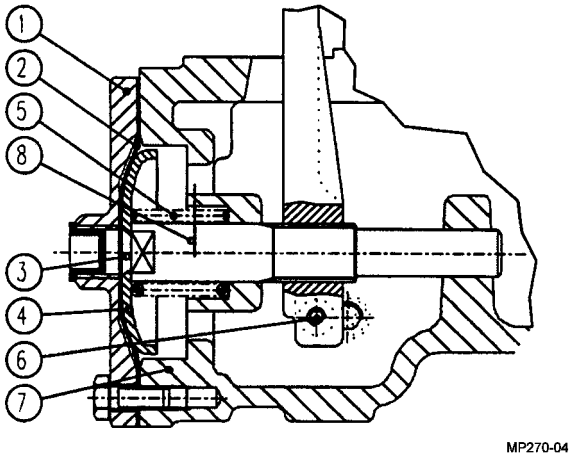

Picture 36: Differential lock parts in sectional view

To adjust, the following parts must be removed:

1. Cover
2. Diaphragm
3. Screw
4. Cup
5. Spring

1.15.3 Installation and adjustment of differential lock indicator light senders

Text numbers refer to the inter-axle differential lock, but the measures are the same for the axle differential lock, if installed..

1. Install the sender unit and related parts (19-25 in Picture 7 and B in Picture 37) into the threaded bore in the housing.
2. Adjust the sender switch as follows
3. Engage the differential lock by applying air pressure (A in Picture 37) and rotate the sender switch (20) clockwise until the switch closes. (This can be checked with a multimeter or a batter powered indicator light).
4. Rotate the sender an additional ½ turns clockwise and lock the sender switch with its lock nut (23) in this position.
1. Release the air pressure and perform the engagement once more to ensure that the sender is working properly.

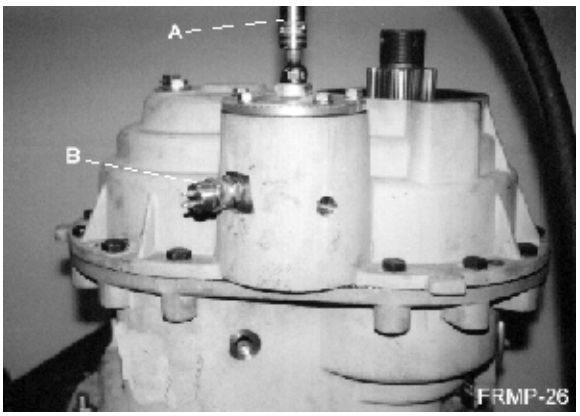

Picture 37: Inter-axle differential lock light sender

1.16 Installation of intermediate shaft

1. Assemble intermediate shaft as required by new spares and fill cavity between the seals by Mobil-Grease MP or by other NLG1 or 2 lithium based grease.

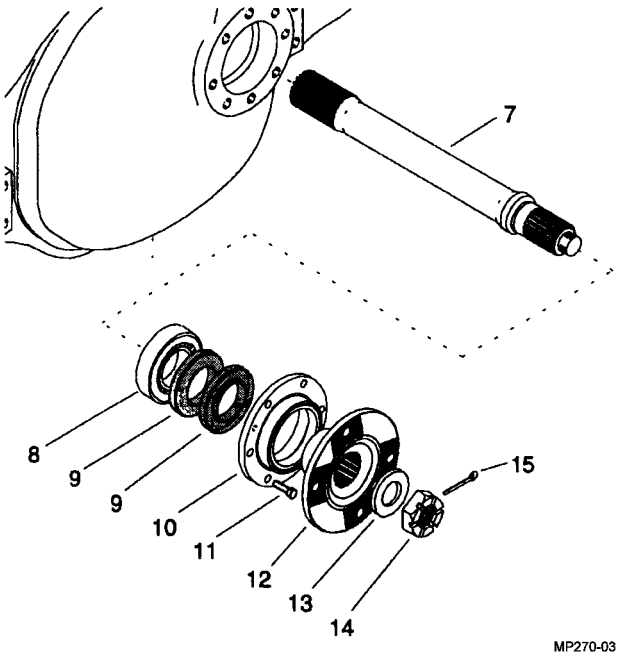

Picture 38: Intermediate shaft with installation parts.

2. Carefully install the shaft assembly making sure that the shaft end enters the splines properly.
3. Apply Silmate Silicone Rubber RTV 1473 or similar sealant to the contact surface (10 in Picture 38).
4. Install the sealing flange and tighten the retaining screws (11 in Picture 38) to 45 Nm [29 lb-ft] torque.

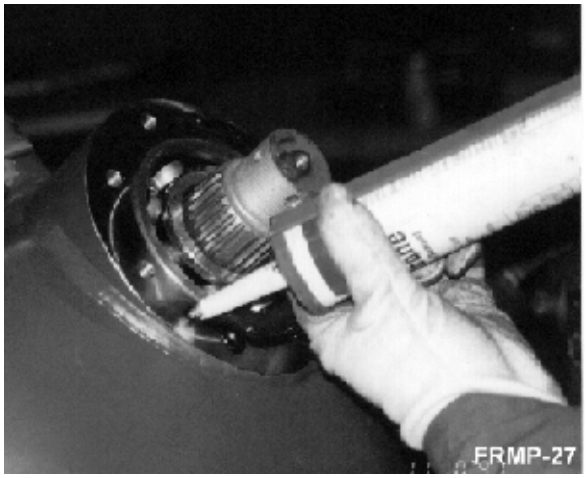

Picture 39: Application of the sealant

5. Install the propeller shaft flange on the shaft splines, place the washer on the shaft and tighten the nut to 600 Nm [440 lb-ft] torque and secure the nut with a cotter pin.

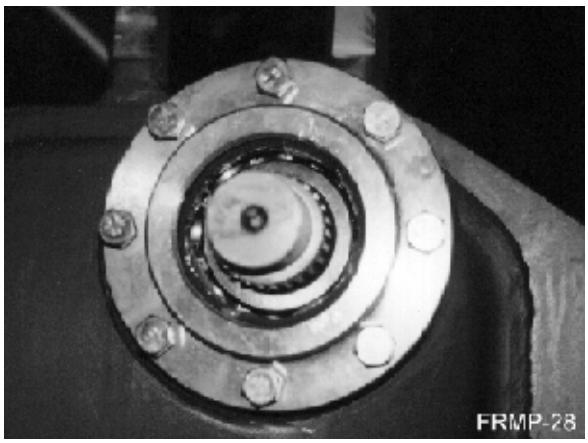

Picture 40: Installed intermediate shaft without the propeller shaft flange

1.17 Oil Checks And Oil Changes

1.17.1 Differential

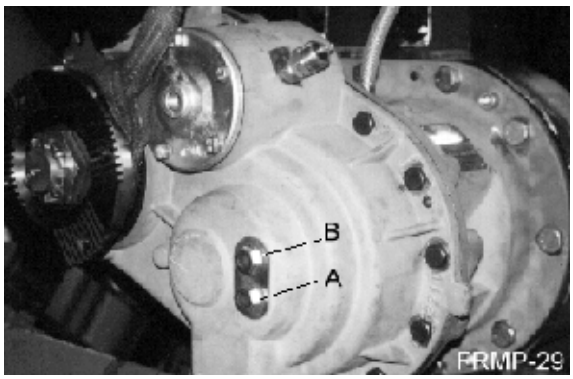

Picture 41: Level plug of the drive gear

Vehicle must be on level ground when oil level checks are made.

1. Check that the oil level is at the lower inspection plug (A in Picture 41) opening.
2. If the vehicle is operating in very difficult or very hilly terrain, the oil level may be raised to the upper inspection (B in Picture 42). NOTE: Oil level must not be raised to the upper level if the vehicle is operating at highway speeds to avoid excessive oil temperature.
3. Tighten the inspection plug to 50-70 Nm [37 – 52 lb-ft] torque.

1.18 Special tools

Adjustment wrench for input shaft bearing 7544-201-010

1.19 Torque

Description	*Nm*	*[lb-ft]*
Propeller shaft flange nuts	600	[442]
Pinion nut	1300	[960]
Differential side bearing cover screws	480	[354]
Differential housing halves and crown wheel screw nuts	320	[236]
Drive gear unit M16 screws to axle housing	240	[177]
Allen head screws M12x20 between the differential housing and spur gear housing	130	[96]
Screws of spur gear drive cover	130	[96]
Retaining screws of the longitudinal differential halves	80	[59]
Differential lock cylinder cover screws	21	[15,6]
Differential lock cylinder diaphragm support cup screw	30	[22]
Lock plate screws of differential side bearing adjustment nut	21	[15,6]
Retaining screws of the intermediate shaft sealing flange	45	[33,2]

1.20 Lubrication

Axle oil quality API GL - 5, also synthetic oils are approved
Viscosity according to prevailing ambient temperature as indicated in enclosed table.

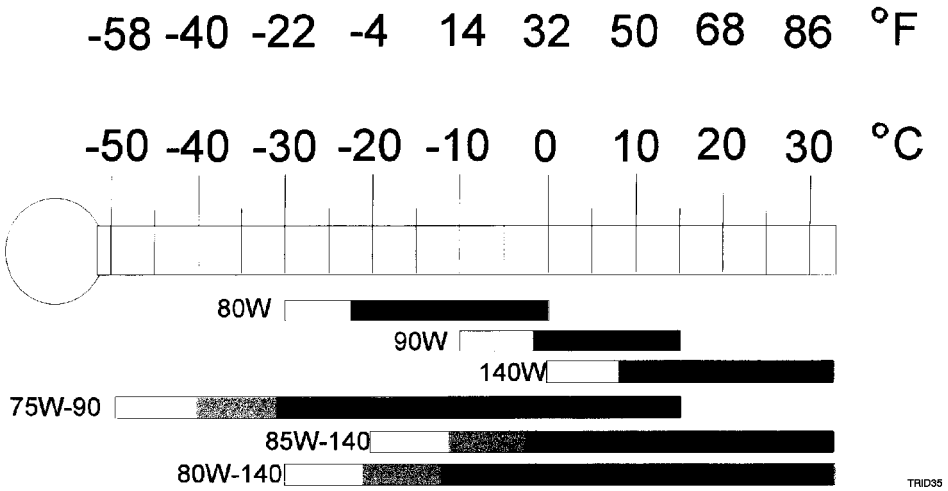

1.20.1 Oil volumes:

(axles in level position)

MP270 Drive gear	approx. 17 litres	[36 US Pints]

Maintenance recommendation for Sisu Axles in automotive use
Initial oil change after 10.000 km, further changes with 60.000 km or 12 month intervals

1.20.2 Use of the differential locks

- Use differential locks in slippery conditions only
- Do not use differential locks in down hill operations
- Engaged differential locks makes steering difficult
- Do not use differential locks within speeds over 40 km/h