https://truckmanualshub.com/

BOMAG

Operating instructions

Maintenance instructions

BW 80 AD-2 / BW 80 ADH-2

BW 90 AD-2 / BW 100 ADM-2

BW 90 AC-2 / BW 80 ADS

S/N 101 460 42 0101 S/N 101 460 62 0101
S/N 101 460 52 0101 S/N 101 460 72 0101
S/N 101 460 73 0101

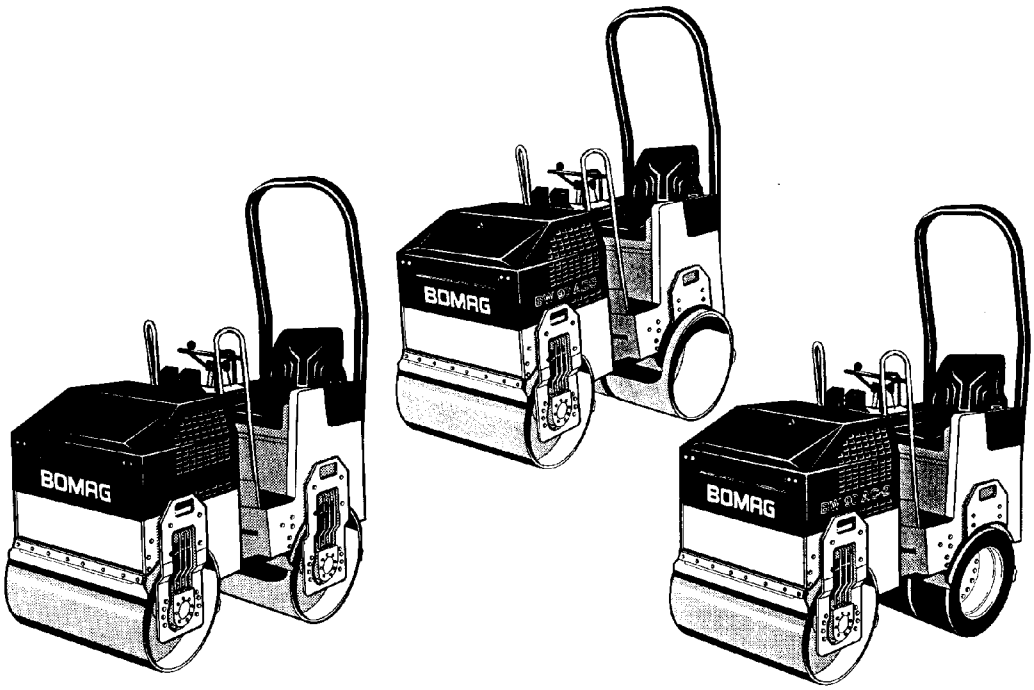

CE

Tandem vibratory/combination roller

Side-free tandem roller

Catalogue number
008 104 31

07/2003

https://truckmanualshub.com/

If the machine is equipped with a battery :

CALIFORNIA
Proposition 65 Warning

Battery posts, terminals and related accessories contain lead and lead compounds, chemicals known to the State of California to cause cancer and birth defects or other reproductive harm.
Wash hands after handling.

If the machine is equipped with a diesel engine :

CALIFORNIA
Proposition 65 Warning

The engine exhaust and some of its constituents are known to the state of California to cause cancer, birth defects, and other reproductive harm.

https://truckmanualshub.com/

BOMAG machines are products from the wide product range of BOMAG compaction equipment.

The vast experience of BOMAG as well as modern production and testing methods such as lifetime tests of all important components and most stringent quality demands ensure highest reliability of the machine.

These instructions comprise:

- Safety regulations
- Operating instructions
- Maintenance instructions
- Trouble shooting

Using these instructions will

- help to become acquainted with the machine.
- avoid malfunctions caused by unprofessional operation.

Compliance with the maintenance instructions will

- increase the reliability when being used on a construction site
- prolong the lifetime of the machine,
- reduce repair costs and downtimes.

BOMAG will not assume liability for the correct function of the machine

- if the operation is not in accordance with the operating instructions,
- if it is used for purposes other than the ones it is determined for (see safety regulations).

No warranty claims can be lodged for damage resulting from

- operating errors,
- insufficient maintenance and
- the use of wrong fuels and lubricants.

Please note!

This manual was written for operators and maintenance personnel on construction sites.

Make sure that these instructions are always close at hand, e.g. in the tool compartment of the machine or in the specially provided container. The operating and maintenance instruction manual is part of the machine.

You should only operate this machine after you have been instructed and by observing these instructions.

Please observe strictly the safety regulations.

Please observe also the guidelines of the civil engineering liability association "safety regulations for the operation of road rollers and soil compactors" as well as the relevant accident prevention regulations.

For your own safety you should only use genuine BOMAG spare parts.

We reserve the right for technical modifications without prior notification.

These operating and maintenance instructions are also available in other languages.

The spare parts catalogue and the repair instructions are available from your BOMAG dealer against the serial number of your machine.

You can also obtain information about the correct use of our machines for asphalt applications from your BOMAG dealer.

The above mentioned or following notes do not constitute an extension or replacement of the general terms of business of BOMAG.

We wish you successful work with your BOMAG machine.

BOMAG GmbH

Printed in Germany

Copyright by BOMAG

https://truckmanualshub.com/

Foreword

Please fill in

. . . . . .

Machine type (Fig. 1)

. . . . . .

Serial No. (Fig. 1 and 2)

. . . . . .

Engine type (Fig. 3)

. . . . . .

Engine No. (Fig. 3)

i Note

Fill in the above listed data when receiving the machine.

Upon receipt of the machine our organization will instruct you about correct operation and maintenance.

Please observe strictly all safety regulations and notes on potential dangers!

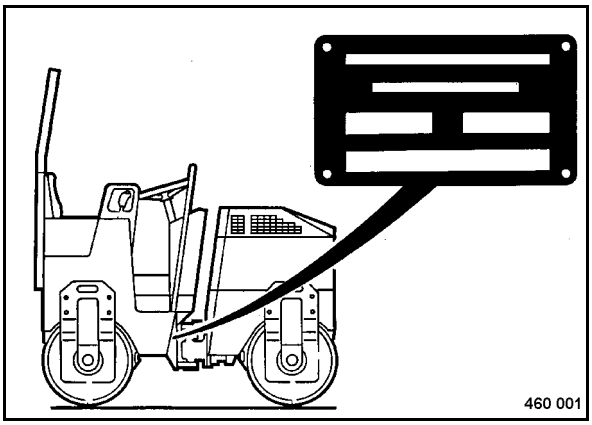

Fig. 1

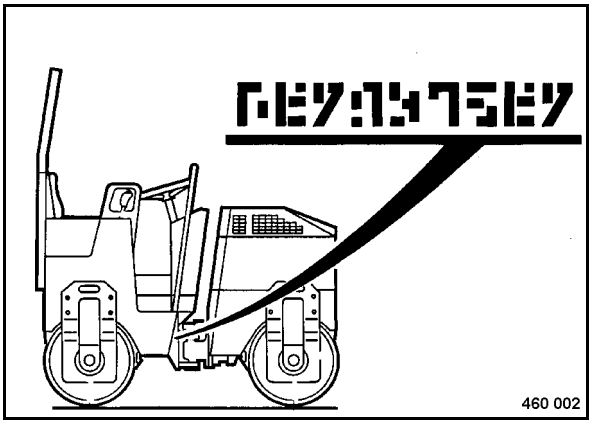

Fig. 2

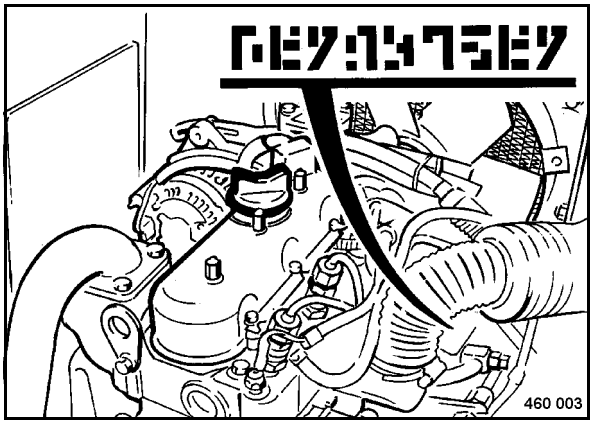

Fig. 3

https://truckmanualshub.com/

Table of Contents

Technical Data **7**

Safety regulations **15**

Indicators and Controls **23**

3.1 General notes 27

3.2 Description of indicators and control elements 27

Operation **35**

4.1 General notes 36

4.2 Tests before taking into operation 36

4.3 Starting the engine 37

4.4 Starting at low temperatures 39

4.5 Starting with jump leads 41

4.6 Driving the machine 41

4.7 Operating the parking brake, stopping the machine 43

4.8 Switching the vibration on and off 44

4.9 Switching the gravity sprinkler system on or off 46

4.10 Switching the pressure sprinkling system on and off 46

4.11 Checking the sprinkling system with the machine stopped 47

4.12 Switching the tire sprinkler system in or off 47

4.13 Stopping the engine/machine 48

4.14 Adjusting the operator's seat 49

4.15 Towing 50

4.16 Loading and transport 51

Maintenance **53**

5.1 General notes on maintenance 54

5.2 Fuels and lubricants 55

5.3 Table of fuels and lubricants 58

5.4 Running-in instructions 59

5.5 Maintenance chart 60

5.6 Checking the engine oil level 62

5.7 Checking the fuel level 62

5.8 Check the hydraulic oil level 63

5.9 Checking the hydraulic oil filter element 63

5.10 Checking the coolant level 64

5.11 Checking the water level 64

5.12 Checking the emulsion level (BW 90 AC-2) 65

5.13 Cleaning the scrapers 65

5.14 Greasing the articulated joint 66

5.15 Checking the tire pressure 66

5.16 Checking, cleaning, changing the dry air filter cartridge 67

5.17 Changing the engine oil 69

5.18 Change the engine oil filter 70

https://truckmanualshub.com/

Table of Contents

5.19 Checking the condition, tension of the V-belt, changing the V-belt 71
5.20 Checking the condition and tension of the toothed belt for the pump drive 72
5.21 Changing the fuel precleaner, bleeding the fuel system 73
5.22 Cleaning the cooling fins on radiator and hydraulic oil cooler 74
5.23 Cleaning the water sprinkler system 76
5.24 Changing the main fuel filter 77
5.25 Draining the fuel tank sludge 77
5.26 Checking the condition of the battery 78
5.27 Checking, adjusting the valve clearance 80
5.28 Changing the hydraulic oil 82
5.29 Changing the hydraulic oil filter element 83
5.30 Changing the coolant 84
5.31 Replacing the pump drive toothed belt 85
5.32 Replacing the dry air filter cartridge 87
5.33 Water sprinkler system, maintenance in the event of frost 88
5.34 Tightening torques for screws with metric unified thread 88
5.35 Engine conservation 89

Trouble shooting **91**

6.1 General notes 92
6.2 Engine 93

https://truckmanualshub.com/

1 Technical Data

https://truckmanualshub.com/

Technical Data

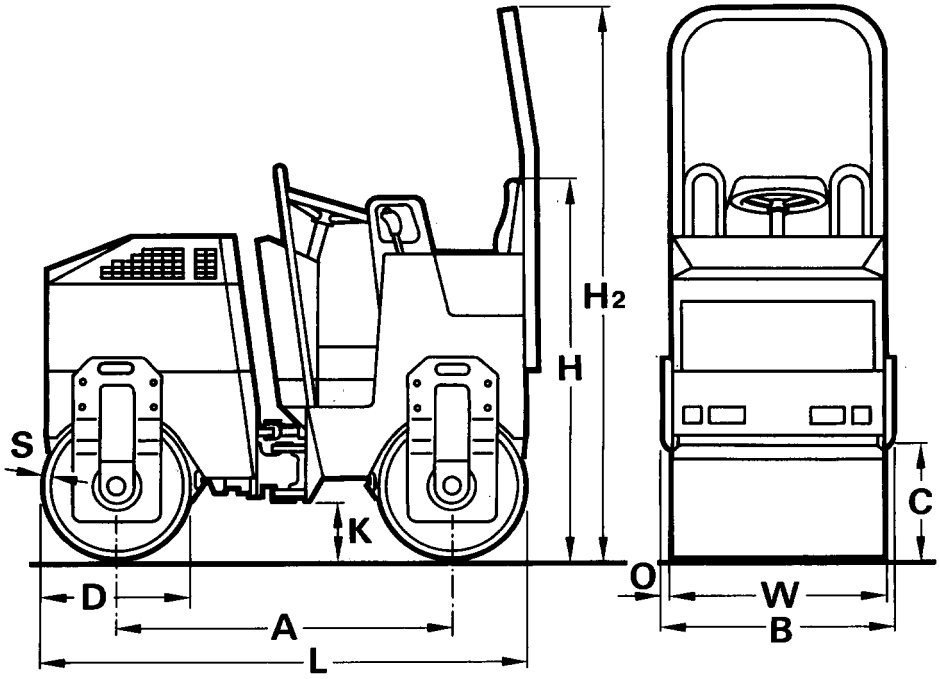

Fig. 4

Dimensions in mm	A	B	C	D	H	H2	K	L	O1/O2	S	W
BW 80 AD/ ADH-2	1282	856	458	580	1482	2300	250	1862	28	13	800
BW 90 AD-2	1282	956	458	580	1482	2300	250	1862	28	12	900
BW 100 ADM-2	1282	1056	458	580	1482	2300	250	1862	28	12	1000

*

		BW 80 AD-2	**BW 80 ADH-2**	**BW 90 AD-2**	**BW 100ADM-2**
Weights					
Basic weight	kg	1335	1485	1385	1435
Operating weight (CECE)	kg	1470	1620	1520	1570
Mean axle load (CECE)	kg	735	810	760	785
Mean static linear load	kg/cm	9,2	10,1	8,4	7,9
Dimensions					
Working width	mm	800	800	900	1000
Outer track radius	mm	2820	2820	2870	2920
Length with ROPS	mm	1934	1934	1934	1934

https://truckmanualshub.com/

*		BW 80 AD-2	BW 80 ADH-2	BW 90 AD-2	BW 100ADM-2
Travel characteristics					
Travel speed (1)	km/h	0 to 4,5	0 to 4,5	0 to 4,5	0 to 4,5
Travel speed (2)	km/h	0 to 8	0 to 8	0 to 8	0 to 8
Max. gradability without/ with vibration (soil dependent)	%	40/30	40/30	40/30	40/30
Drive					
Engine manufacturer/type				Kubota D 722 B	
Cooling				Water	
Number of cylinders				3	
Rated power ISO 9249	kW (PS)			11,9 (16)	
Rated speed	1 rpm			3000	
Battery	V/AH			12/50	
Drive system				hydrostatic	
Driven axles				front+rear	
Brakes					
Service brake				hydrostatic	
Parking brake				hydrost. mechanical	
Steering					
Type of steering				Oscill.-articul.	
Steering operation				hydrostatic	
Steering/oscillation angle	Degree			31/6	
Vibration system					
Vibrating drum		front+rear	front+rear	front+rear	front+rear
Drive system		hydrostatic	hydrostatic	hydrostatic	hydrostatic
Frequency	Hz	60/40	60/40	60/40	60/40
Amplitude	mm	0,5	0,5	0,5	0,5
Centrifugal force	kN	15	15	15	15
Water sprinkler system					
Type of sprinkling				Gravity, pressure sprinkling with interval**	
Filling capacities					
Fuel (diesel)	l			23	
Water	l			100	
Hydraulic oil	l			9	

* The right for technical modifications remains reserved
** Optional equipment

https://truckmanualshub.com/

Technical Data

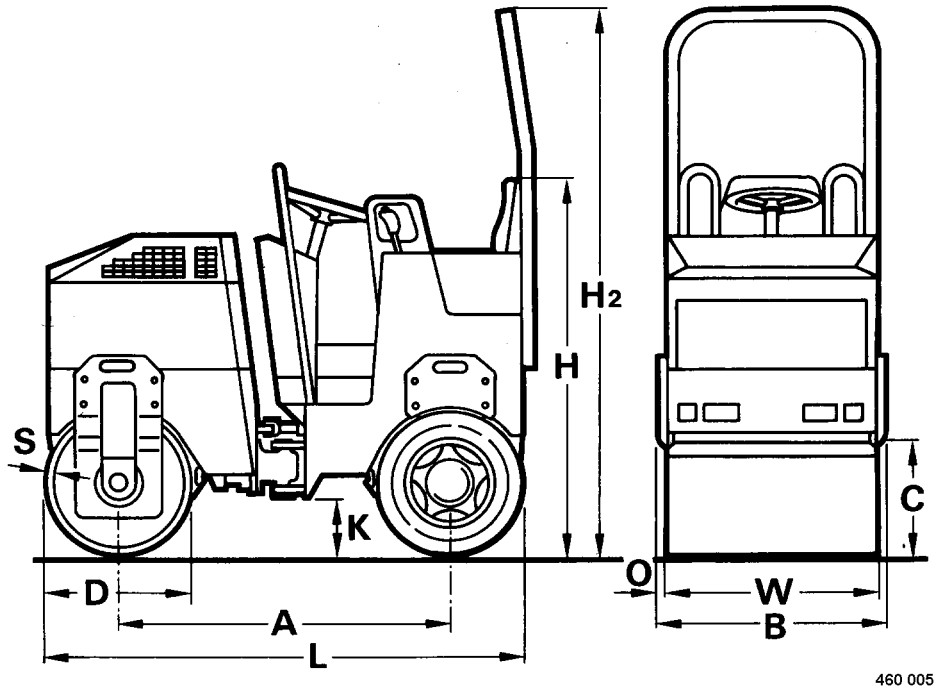

Fig. 5

Dimensions in mm	A	B	C	D	H	H2	K	L	O1/O2	S	W
BW 90 AC-2	1282	956	458	580	1562	2380	250	1870	28	12	900

*

		BW 90 AC-2
Weights		
Basic weight	kg	1530
Operating weight (CECE)	kg	1670
Mean axle load (CECE), drum	kg	701
Mean axle load (CECE), wheels	kg	969
Mean static linear load	kg/cm	7,8
Dimensions		
Working width	mm	900/860
Outer track radius	mm	2870
Length with ROPS	mm	1985

https://truckmanualshub.com/

*		BW 90 AC-2
Travel characteristics		
Travel speed (1)	km/h	0 to 4,5
Travel speed (2)	km/h	0 to 8
Max. gradability without/ with vibration (soil dependent)	%	40/30
Drive		
Engine manufacturer/type		Kubota D 722 B
Cooling		Water
Number of cylinders		3
Rated power ISO 9249	kW (PS)	11,9 (16)
Rated speed	1 rpm	3000
Battery	V/AH	12/50
Drive system		hydrostatic
Driven axles		front+rear
Brakes		
Service brake		hydrostatic
Parking brake		hydrost. - mechanical
Steering		
Type of steering		Oscill.-articul.
Steering operation		hydrostatic
Steering/oscillation angle	Degree	31/6
Vibration system		
Vibrating drum		front
Drive system		hydrostatic
Frequency	Hz	60/40
Amplitude	mm	0,5
Centrifugal force	kN	15
Water sprinkler system		
Type of sprinkling		Pressure sprinkling with interval
Filling capacities		
Fuel (diesel)	l	23
Water	l	100
Emulsion	l	10
Hydraulic oil	l	9

* The right for technical modifications remains reserved

https://truckmanualshub.com/

Technical Data

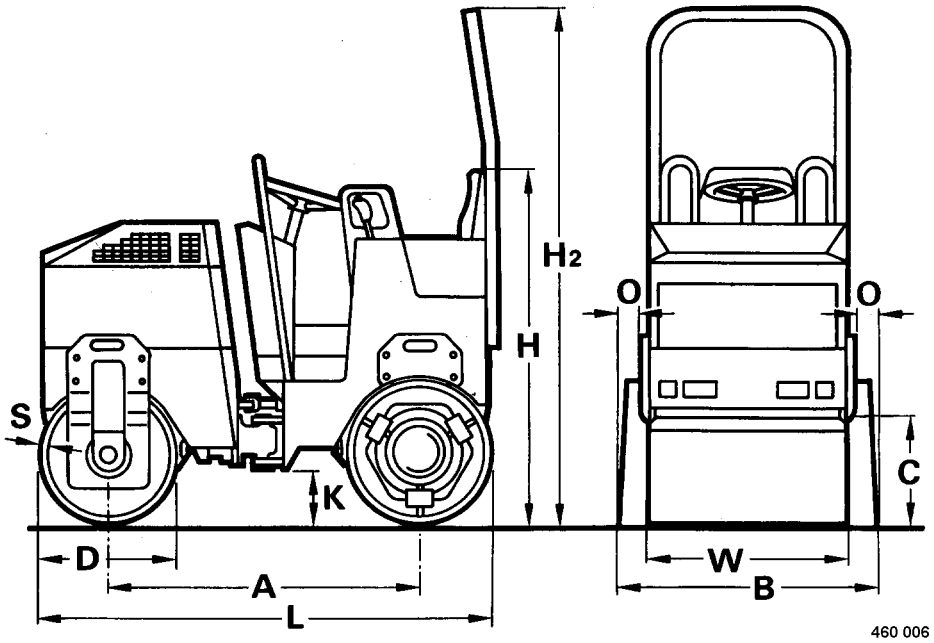

Fig. 6

Dimensions in mm	A	B	C	D	H	H2	K	L	O1/O2	S	W
BW 80 ADS	1282	900	458	580	1562	2380	250	1870	0	13	900

*

		BW 80 ADS
Weights		
Basic weight	kg	1467
Operating weight (CECE)	kg	1564
Mean static linear load	kg/cm	10,2
Dimensions		
Working width	mm	800
Outer track radius	mm	2870
Length with ROPS	mm	1870
Travel characteristics		
Travel speed (1)	km/h	0 to 4,5
Travel speed (2)	km/h	0 to 8
Max. gradability without/ with vibration (soil dependent)	%	40/30

https://truckmanualshub.com/

*		BW 80 ADS
Drive		
Engine manufacturer/type		Kubota D 722 B
Cooling		Water
Number of cylinders		3
Rated power ISO 9249	kW (PS)	11,9 (16)
Rated speed	1 rpm	3000
Battery	V/AH	12/55
Drive system		hydrostatic
Driven axles		front+rear
Brakes		
Service brake		hydrostatic
Parking brake		hydrost. - mechanical
Steering		
Type of steering		Oscill.-articul.
Steering operation		hydrostatic
Steering/oscillation angle	Degree	31/6
Vibration system		
Vibrating drum		front
Drive system		hydrostatic
Frequency	Hz	60/40
Amplitude	mm	0,52
Centrifugal force	kN	15,7
Water sprinkler system		
Type of sprinkling		Pressure sprinkling with interval
Filling capacities		
Fuel (diesel)	l	23
Water	l	100
Hydraulic oil	l	9

* The right for technical modifications remains reserved

https://truckmanualshub.com/

The following noise and vibration values according to the EC-directive for machines, edition (98/37/EEC) and the noise emission regulation 2000/14/EC were measured at nominal engine speed and with the vibration switched on. The machine was standing on an elastic base.

During operation these values may vary because of the existing operating conditions.

Noise value

The sound level according to enclosure 1, paragraph 1.7.4. f of the EC-machine regulation is

sound pressure level on the operator's stand:

BW 80 AD-2

L_{pA} =84,3 dB(A)

BW 90 AC-2

L_{pA} =82,2 dB(A)

BW 90 AD-2

L_{pA} =83,8 dB(A)

BW 100 ADM-2

L_{pA} =82,3 dB(A)

The nose emission value for the machine according to the noise emission regulation 2000/14/EG is

guaranteed sound capacity level of the machine:

BW 80 AD-2

L_{WA} = 102 dB(A)

BW 90 AD-2, BW 90 AC-2, BW 100 ADM-2

L_{WA} = 102 dB(A)

These sound values were determined according to ISO 3744 for the sound capacity level (L_{WA}) and ISO 11204 for sound pressure level (L_{pA}) at the place of the operator.

Vibration value

The vibration values according to enclosure 1, paragraph 3. 6. 3. a of the EC-machine regulation are:

Vibration of the entire boy (driver's seat)

The weighted effective acceleration value determined according to ISO 7096 is <= 0.5 m/sec^2.

Hand-arm vibration values

The weighted effective acceleration value determined according to EN 500/ISO is <= 2.5 m/sec^2.

https://truckmanualshub.com/

2 Safety regulations

https://truckmanualshub.com/

General Notes

This BOMAG machine has been built in accordance with the latest technical standard and complies with the applicable regulations and technical rules. However, dangers for persons and property may arise from this machine, if:

- it is used for purposes other than the ones it is intended for
- it is operated by untrained personnel
- it is changed or converted in an unprofessional way
- the safety instructions are not observed

Each person involved in the operation, maintenance and repair of the machine must therefore read and comply with these safety regulations. If necessary, this must be confirmed by obtaining the signature of the customer.

Furthermore, the following instructions and regulations must obviously also be complied with:

- applicable accident prevention instructions
- generally accepted safety and road traffic regulations
- country specific safety regulations. It is the duty of the operator to be acquainted with these instructions and to apply these accordingly. This applies also for local regulations concerning different types of handling work. Should the recommendations in these instructions be different from the regulations valid in your country, you must comply with the safety regulations valid in your country.

Intended use

This machine must only be used for:

- compaction of bituminous material, e.g. road surface layers. (Only AC and AD machines)
- medium to heavy compaction work in earth construction (road sub-bases)
- You should only operate the unit with fully functional safety equipment.
- Have the machine inspected by an expert once every year.

Unintended use

However, dangers may arise from this machine if it is operated by untrained personnel or if it is subject of unintended use.

Do not work with vibration on hard concrete, cured bitumen layers or extremely frozen ground.

Starting and operation of the machine in explosive environments is prohibited.

Who has permission to operate the machine?

Only trained and instructed persons of at least 18 years of age are permitted to drive and operate this machine. For operation of the machine the responsibilities must be clearly specified and complied with.

Persons under the influence of alcohol, medicine or drugs are not allowed to operate, service or repair the machine.

Maintenance and repair work requires specific knowledge and must therefore only be performed by trained specialists.

Conversions and changes to the machine

Unauthorized alterations to the machine are prohibited for safety reasons.

Original parts and accessories have been specially designed for this machine. We wish to make explicitly clear that we have not tested or approved any parts or accessories not supplied by us. The installation and/or use of such products may have an adverse effect on the active and/or passive driving safety. The manufacturer explicitly excludes any liability for damage caused by the use of non-original parts or accessories.

Notes on safety in the operating and maintenance instructions:

⚠ Danger

Paragraphs marked like this highlight possible dangers for persons.

⚠ Caution

Paragraphs marked like this highlight possible dangers for machines or parts of the machine.

https://truckmanualshub.com/

i Note

Paragraphs marked like this contain technical information for the optimal economical use of the machine.

Environment

Paragraphs marked like this point out practices for safe and environmental disposal of fuels and lubricants as well as replacement parts.

Observe environmental regulations.

Information and safety stickers/decals on the machine

Keep safety stickers in good and legible condition (see parts manual) and comply with their meaning.

Replace damaged and illegible stickers/decals.

Loading the machine

Always check the fastening of the central lifting hook before attempting to lift the machine.

Use only strong and stable loading ramps. The ramp inclination must not exceed the gradability of the machine.

Secure the machine against turning over or slipping off.

Secure the machine on the transport vehicle against rolling, sliding and tipping over.

Persons are highly endangered if

- they step or stand under loads being lifted
- they remain in the drive range of the machine during a demonstration or during loading.

The machine must not swing about when lifted off the ground.

Use only safe lifting gear of sufficient load bearing capacity.

Attach the lifting gear only to the specified lifting points.

Towing the machine

You should generally use a tow bar.

Max. towing speed 1 km/h, max. towing distance 500 m.

Before releasing the multi-disc brake secure the machine against unintended rolling.

Checking the roll over protection structure (ROPS)

The frame of the machine must not be warped, bent or cracked in the area of the ROPS fastening.

The ROPS must not show any rust, damage, hairline cracks or open fractures.

The ROPS must not rattle about when driving. This would indicate that it is not properly fastened. All bolted connections must comply with the specifications and should be absolutely tight (observe the tightening torques). Screw and nuts must not be damaged, bent or deformed.

No accessories may be welded or bolted on and no additional holes must be drilled without the consent of the distributor, since this will impair the strength of the unit.

Starting the machine

Before starting

The machine must only be operated from the driver's seat.

Use only machines which are serviced at regular intervals.

Become acquainted with the equipment, the control elements, the working principle of the machine and the working area.

Wear your personal protective outfit (hard hat, safety boots, etc.).

Before climbing on the machine check whether:

- persons or obstructions are beside or under the machine
- the machine is free of oily and combustible material
- all grips, steps and platforms are free of grease, oils, fuel, dirt, snow and ice
- the engine hood is closed and locked

Use steps and grips to climb onto the machine.

Before starting the machine check whether:

- the machine shows any obvious faults
- all guards and safety elements are in place
- steering, brakes, control elements, light system and warning horn work correctly

https://truckmanualshub.com/

- the seat is correctly adjusted
- mirrors (if present) are clean and correctly adjusted.

Do not start the machine with defective gauges, control lights or control elements.

Do not take any loose objects with you or fasten them to the machine.

On machines with roll over protection system you must always wear your seat belt.

Starting

Start and operate the machine only from the driver's seat.

For starting set all control levers to 'neutral position'.

Do not use any starting aids like start pilot or ether.

After starting check all gauges and control lights.

Starting with jump wires

Connect plus with plus and minus with minus (ground cable) - always connect the ground strap last and disconnect it first! A wrong connection will cause severe damage in the electric system.

Do not start the engine by shorting the electric terminals on the starter motor, because the machine may start to drive immediately.

Starting in closed rooms

Exhaust gases are highly dangerous! Always ensure an adequate supply of fresh air when starting in closed rooms!

Driving the machine

Persons in the endangered area

Before starting or resuming work and especially when reversing, check that there are not any persons or obstructions in the endangered area.

If necessary give warning signals. Stop work immediately if persons remain in the danger area despite the warning.

Do not step or stand in the articulation area of the machine when the engine is running. Risk of squashing!

Driving

In events of an emergency operate the emergency stop switch immediately. Do not use the emergency stop switch as a service brake.

Restart the machine only after the danger, that has caused the actuation of the emergency stop, has been eliminated.

If the machine has come in contact with high-voltage power lines:

- do not leave the operator's stand
- warn others from coming too close to the machine or touching it
- if possible drive the machine out of the danger zone
- have the power shut off

Operate the machine only from the operator's seat.

Do not adjust the seat while driving.

Do not climb onto or off the machine while driving.

Change the travel direction only while the machine is standing.

Do not use the machine to transport persons.

Stop the machine if you notice unusual noises or the development of smoke. Investigate the cause and have the fault corrected.

Keep a sufficient distance to excavations and embankments and make sure that your work does not impair the stability of the machine.

Do not work with vibration on hard concrete, on a cured bitumen surface or heavily frozen ground.

When passing under flyovers, bridges, tunnels, electric power lines etc. keep a sufficient distance.

Driving on slopes and gradients

Do not drive up and down gradients, which exceed the max. gradability of the machine.

Always drive extremely carefully on slopes and always straight up and down the slope. Change to the lower speed range before approaching the slope.

Wet and loose soils reduce the ground adhesion of the machine on gradients and slopes. Higher risk of accident!

Behaviour in traffic

Match the speed of the machine to the working conditions.

Always allow loaded transport vehicles to pass.

Switch the lights on when the visibility is poor.

Keep clear of edges and embankments.

https://truckmanualshub.com/

Check the effect of vibration

When compacting with vibration check the effect of the vibration on nearby buildings and underground supply lines (gas, water, sewage, electric power supply), stop vibratory compaction if necessary.

Do not activate the vibration on hard (frozen, concrete) ground. Risk of bearing damage!

Parking the machine

Park the machine on level and firm ground.

Before leaving the machine:

- return the travel lever to neutral position
- apply the parking brake
- shut the engine down and pull the ignition key out
- secure the machine against unauthorized use.

Do not jump off the machine, use access steps and hand rails.

Always secure parked machines, which could be in the way, with appropriate measures.

Parking on slopes and gradients

Secure the machine against rolling, place metal chocks in front of and behind the drums.

Filling the fuel tank

Do not inhale fuel fumes.

Refuel only after shutting the engine and the auxiliary heater down.

Do not refuel in closed rooms.

No open fire, do not smoke.

Do not spill any fuel. Catch running out fuel, do not let it seep into the ground.

Wipe off spilled fuel. Keep dirt and water away from fuel.

Leaking fuel tanks can cause explosions. Ensure tight fit of the fuel tank lid, replace immediately if required.

Fire protection measures

Become acquainted with the location and the handling of fire extinguishers. Observe all fire alarm and fire fighting possibilities.

Maintenance

Observe the maintenance tasks described in the operating and maintenance instructions, including the exchange of parts.

Maintenance work must only be carried out by qualified and authorized personnel.

For overhead service and assembly work use the provided access installations or any other safe access ladders and work platforms. Do not use machine parts as access steps.

Keep unauthorized persons away from the machine.

Do not perform maintenance work with the machine driving or the engine running.

Park the machine on horizontal, level and stable ground.

Pull the key out of the ignition switch.

Lock the articulated joint with the articulation lock.

Working on hydraulic lines

Always depressurize the hydraulic lines before starting to work on them. Hydraulic oil escaping under pressure can penetrate the skin and cause severe injury. If injured by hydraulic oil seek medical advice immediately as otherwise severe infections may result.

When adjusting the hydraulic system do not stand behind or in front of the drum/wheels.

Do not change the setting of high pressure relief valves.

Drain hydraulic oil at operating temperature - danger of scalding!

Catch running out hydraulic oil and dispose of environmentally.

Always catch and dispose of biological hydraulic oils separately.

Do not start the engine after draining off the hydraulic oil.

After finishing work (with the system still depressurized!) check all connections and fittings for leaks.

Changing hydraulic hoses

All hydraulic hoses must be inspected visually at regular intervals.

Hydraulic hoses must be changed immediately if:

- the outer layer is worn down to the metal lining (e.g. chafing, cuts, cracks)

https://truckmanualshub.com/

- embrittlement of the outer layer (development of cracks in the hose material)
- deformation under pressurized and depressurized condition, which are not in accordance with the normal shape of the hydraulic hose
- deformation in bends, e.g., squeezes, kinks, layer separation, formation of blisters
- leakages.
- non-observance of the installation requirements.
- separation of the hydraulic hose from the fitting
- corrosion of the fitting, which impairs the function and the strength.
- Do not mix up hoses by mistake.
- damage or deformation of the fitting, which impairs the function and strength of the hose/ hose connection.

Only genuine BOMAG hydraulic hoses ensure that the correct type of hose (pressure range) is used at the right place.

Working on the engine

Shut the engine down before opening the engine compartment hood.

Drain the engine oil at operating temperature - danger of scalding!

Wipe off spilled oil, catch running out oil and dispose of environmentally.

Store used filters and other oily materials in a separate, specially marked container and dispose of environmentally.

Do not leave any tools or other objects, which could cause damage, in the engine compartment.

Check and change the coolant only when the engine is cold.

Catch the coolant and dispose of environmentally.

Working on electrical equipment

Before working on electrical equipment disconnect the battery and cover it with insulating material.

Do not use any fuses with higher Ampere ratings and do not repair fuses with a piece of wire. Fire hazard!

Always disconnect the battery before starting to weld on the machine.

Working on the battery

When working on the battery do not smoke, no open flames!.

Do not let your hands or clothes come in contact with acid. In case of injuries caused by acid, flush off with clear water and consult a doctor.

Metal objects (e.g. tools, rings, wrist watches) must not contact the battery poles - danger of short circuit and burns!

When recharging maintenance free batteries remove the plugs to avoid the accumulation of explosive gases.

When using an external battery to start the machine follow the respective instructions.

Dispose of old batteries environmentally.

Switch the charging current off before removing the charge clamps.

Ensure good ventilation, especially when charging the battery in a closed room.

Working on the fuel system

Do not inhale fuel fumes.

No open fire, do not smoke, do not spill any fuel.

Catch running out fuel, do not let it seep into the ground and dispose of environmentally.

Working on wheels and tires

Explosion-like bursting of tires and parts of rims and tires can cause severe or even deadly injuries.

You should only assemble tires if you have the necessary experience and with the proper equipment. If necessary have the tires mounted by a specialised workshop.

Ensure correct tire pressure and do not exceed the highest specified pressure.

Check tires and wheels every day for pressure drop, cuts, bulges, damaged rims, missing wheel studs and nuts. Do not drive with damaged tires or wheels.

Non-sticking emulsions for tires must only be made up of a mix of water and a concentrated anti-stick agent according to the instructions of the manufacturer. Observe the regulations for the protection of the environment.

Cleaning

Do not clean the machine while the engine is running.

https://truckmanualshub.com/

Do not use gasoline or other combustible substances for cleaning purposes.

When using steam cleaning equipment do not subject electrical components and insulating materials to the direct water jet, but cover them beforehand.

- Do not guide the water jet into the exhaust or into the air filter.

After maintenance work

Reinstall all protective devices after completing the maintenance work.

Repair

Mark a defective machine by attaching a warning tag to the steering wheel.

Repair work must only be performed by qualified and authorized persons. Use our repair instructions for this work.

Exhaust gases are highly dangerous! Always ensure an adequate supply of fresh air when starting in closed rooms!

Test

The safety of compaction equipment must be checked by a specialist as required in dependence on the application and the operating conditions, however at least once every year.

https://truckmanualshub.com/

https://truckmanualshub.com/

3 Indicators and Controls

https://truckmanualshub.com/

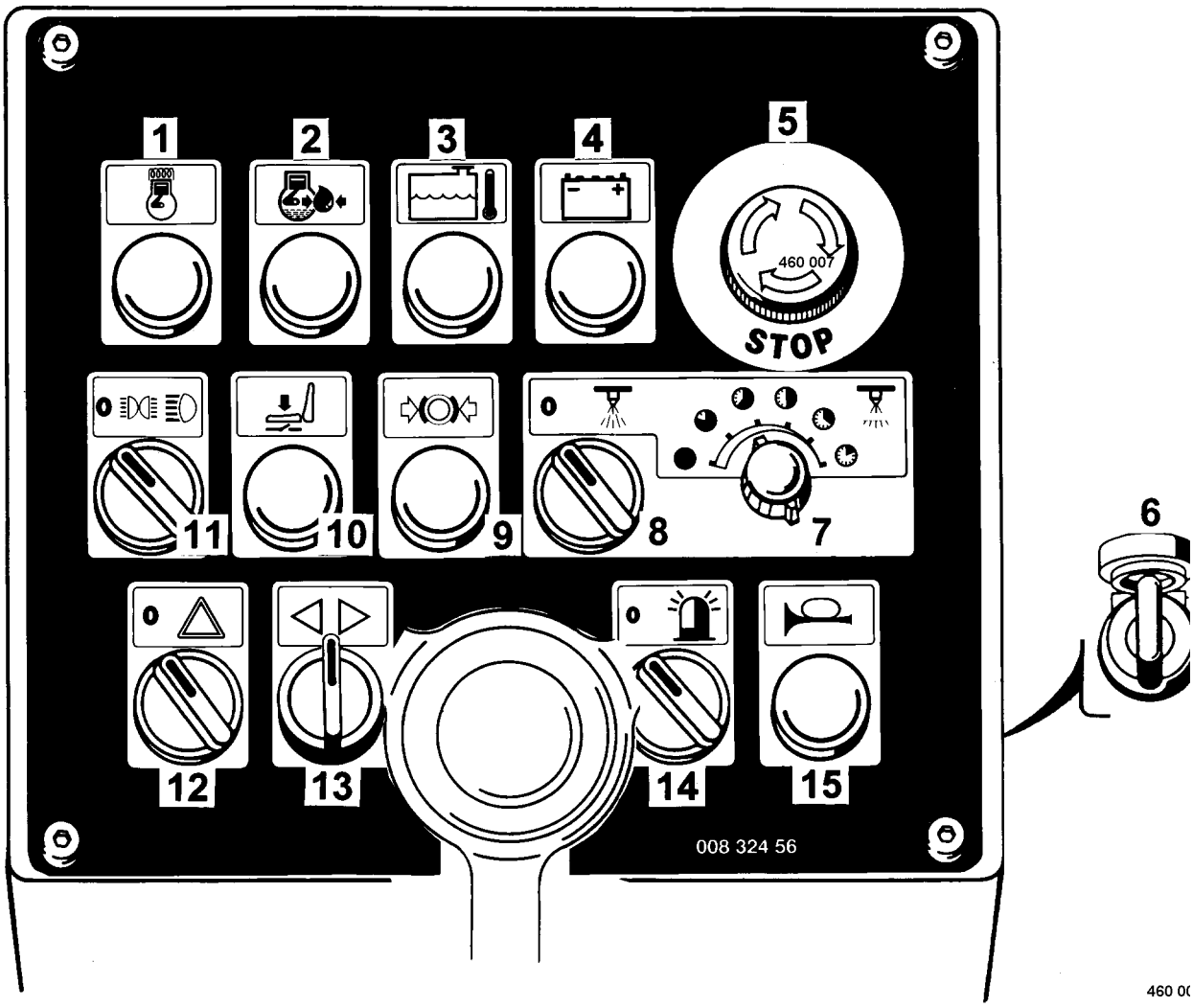

Fig. 7

https://truckmanualshub.com/

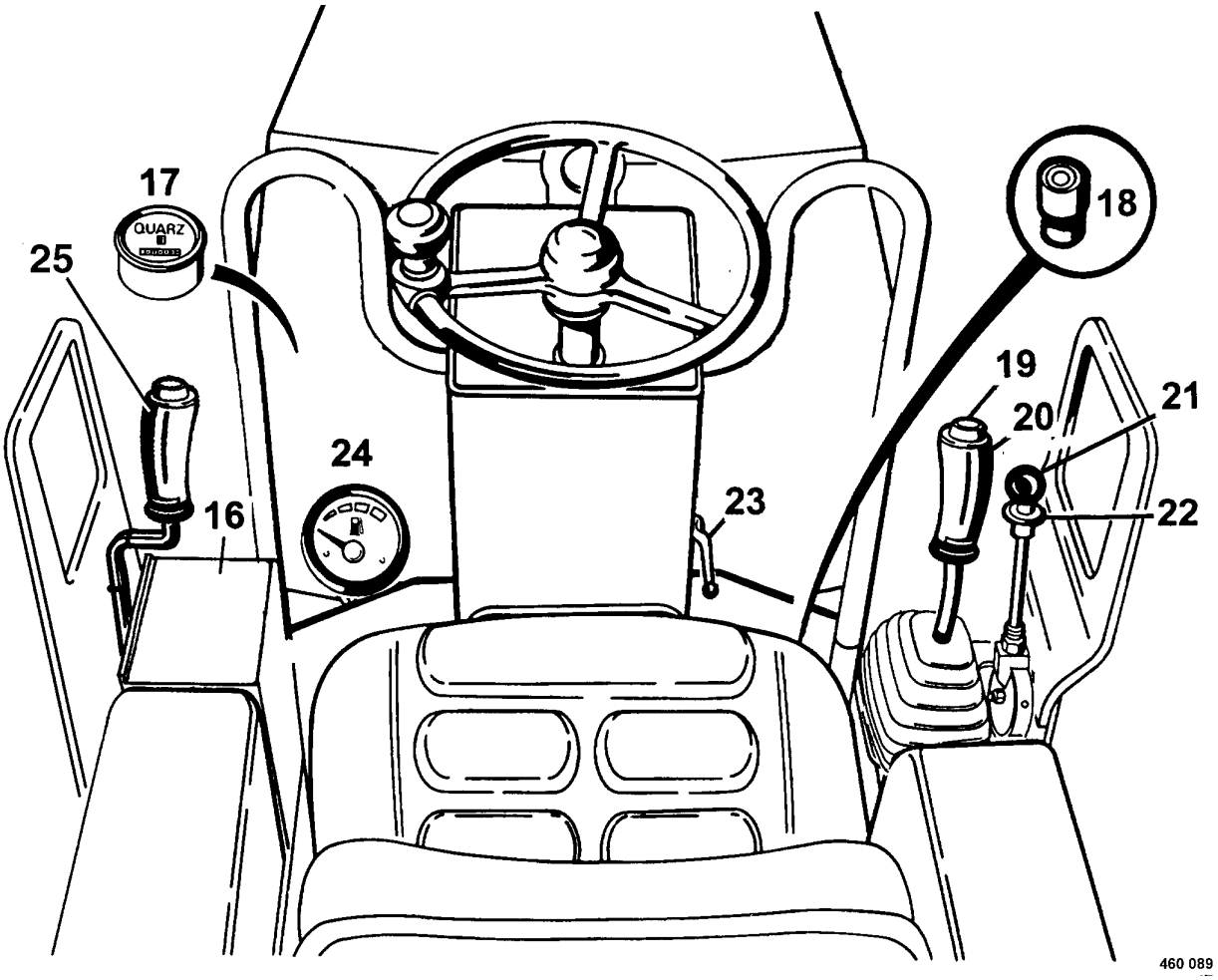

Fig. 8

https://truckmanualshub.com/

Indicators and Controls

1 Preheating control light
2 Oil pressure warning light
3 Coolant temperature warning light
4 Charge control light
5 Emergency stop switch
6 Ignition switch
7 Sprinkler system interval switch*
8 Rotary switch for sprinkler system
9 Parking brake warning light
10 Warning light for seat contact switch
11 Rotary switch for lighting acc. to StVZO* or working lights*
12 Rotary switch for hazard light system*
13 Rotary switch for direction indicators*
14 Rotary switch for flashing beacon*
15 Push button for warning horn
16 Fuse box
17 Operating hour meter (in engine compartment)
18 Foot switch for tire sprinkling system (only AC)
19 Push button for vibration
20 Travel lever
21 Throttle lever
22 Locking plate for throttle lever
23 Cock valve for rear vibration shut off
24 Fuel level gauge (in engine compartment)
25 Additional travel lever*

* Option

https://truckmanualshub.com/

3.1 General notes

Please read this section thoroughly before operating this machine if you are not yet conversant with the indicators and control elements. All functions are described in detail hereunder.

Paragraph 4 "Operation" contains only concise descriptions of the individual operating steps.

3.2 Description of indicators and control elements

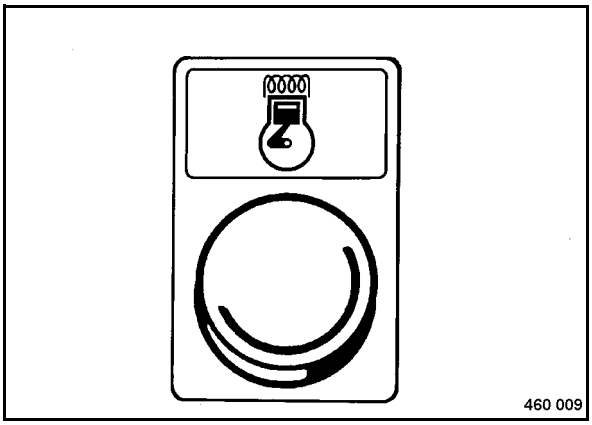

Fig. 9

No. 1 = Preheating control light

lights up	=	for approx. 6 seconds with the ignition switch (6) in position "II".
goes out	=	after approx. 6 seconds with the ignition switch in position "II", at this point start the engine immediately.

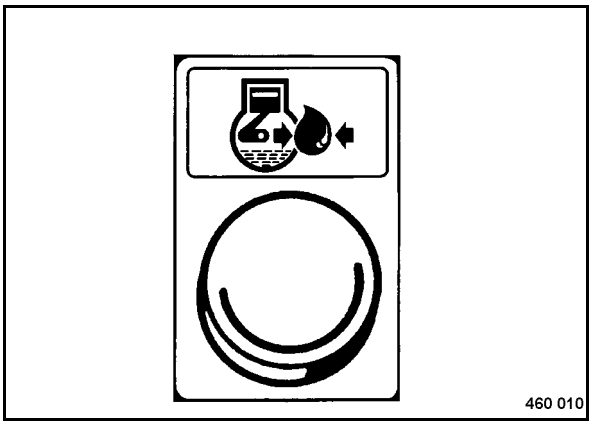

Fig. 10

No. 2 = Oil pressure warning light

lights up	=	with the ignition switch in position "I" (test) in case of insufficient oil pressure the engine will be shut down immediately.
goes out	=	after starting the engine

https://truckmanualshub.com/

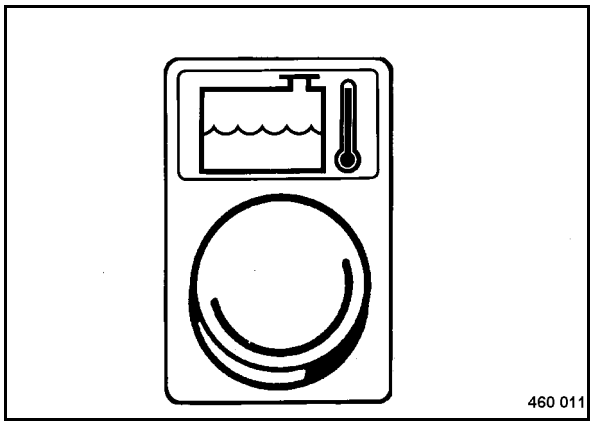

Fig. 11

No. 3 = Coolant temperature warning light

lights up = if the coolant temperature is too high, the warning buzzer will sound.

⚠ Caution

Clean the radiator. Check the coolant level

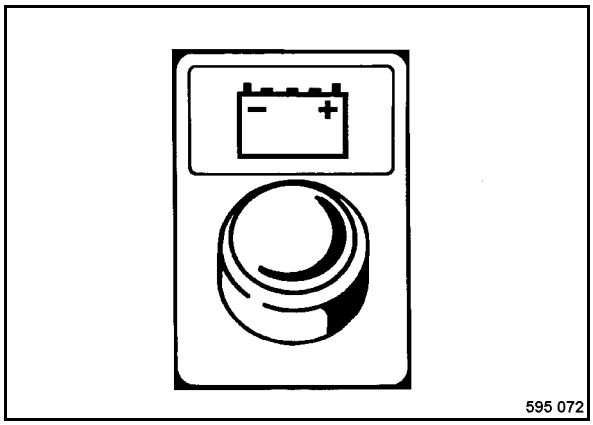

Fig. 12

No. 4 = Charge control light

lights up = when switching the ignition on (test), in case of charging faults during operation.

goes out = after starting the engine

⚠ Caution

If the control light lights up while the engine is running, the battery is not being charged. Detect the cause and eliminate the fault.

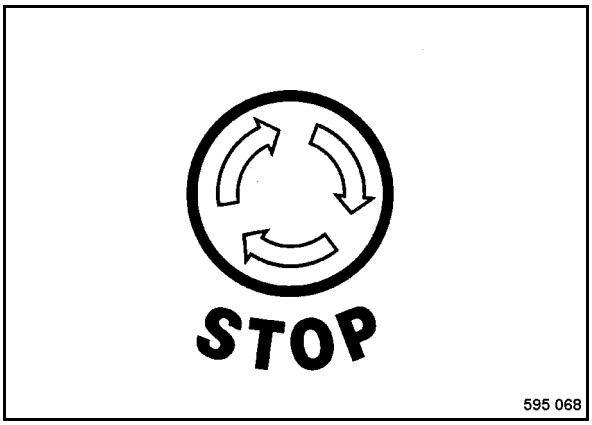

Fig. 13

No. 5 = Emergency stop switch

The engine will be shut down and the brake will close.

⚠ Danger

Danger of accident!

Operate only in emergency situations during operation, do not use as a service brake.

The machine should only be started again after the danger, that caused the actuation of the emergency stop switch, has been removed.

operate = push the button completely down, it will automatically lock in end position.

unlock = turn the button clockwise and release it.

to drive = move the travel lever first to braking position, then start the engine and choose the travel direction.

For safety reasons the travel system of the machine will only be enabled after the travel lever has been shifted back to braking position.

https://truckmanualshub.com/

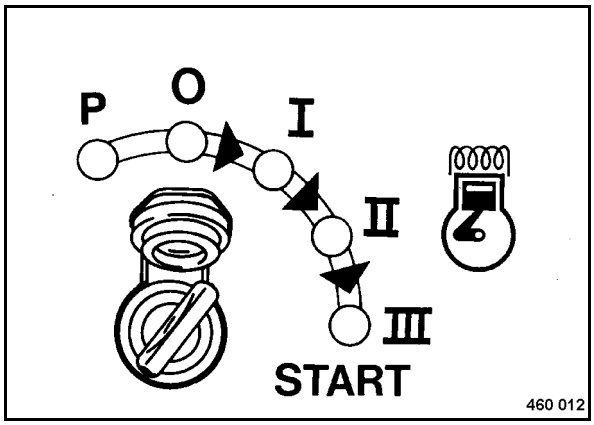

Fig. 14

No. 6 = Ignition switch

Position "P"/"0" = ignition off, the key can be pulled out, engine not running.

Position "I" = ignition on, control and warning lights (2, 4, 9 and 10) light up. The light system can be switched on.

i Note

The engine can only be started when the travel lever is in braking position, the seat is occupied and the emergency stop switch is unlocked.

The ignition switch is fitted with a lock against repetitive starting. First turn the ignition back to position "0" before trying again.

Position "II" = preheating position, for starting at temperatures below +10 °C hold the ignition key in position "II", until the preheating control light (1) goes out.

Position "III" = turn further against spring pressure, start the engine, turn the ignition key back to position "I" once the engine has started.

⚠ Caution

Run the engine warm for a short while before starting to work. Do not let the engine run at idling speed for longer than 10 minutes.

Do not shut the engine down all of a sudden from full speed, but let it idle for a while for temperature equalization.

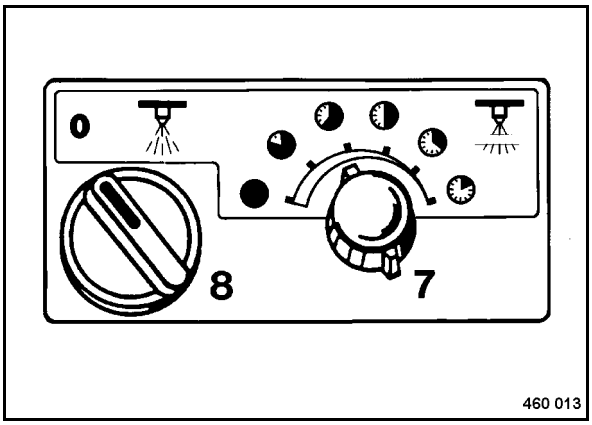

Fig. 15

No. 7 = Sprinkler system interval switch*

turn clockwise

Position "left" = permanent sprinkling

other positions = various interruption intervals in sprinkling of 4...32 seconds, sprinkling time always 5 seconds.

No. 8 = Rotary switch for sprinkler system

i Note

If the operator's seat is not occupied and the travel lever is in "0"-position (parking brake applied) the pressure sprinkler system is switched off.

The rotary switch enables the sprinkling in gravity feed and pressurized sprinkling mode.

Position "left" = sprinkling "OFF"

Position "right" = sprinkling "ON"

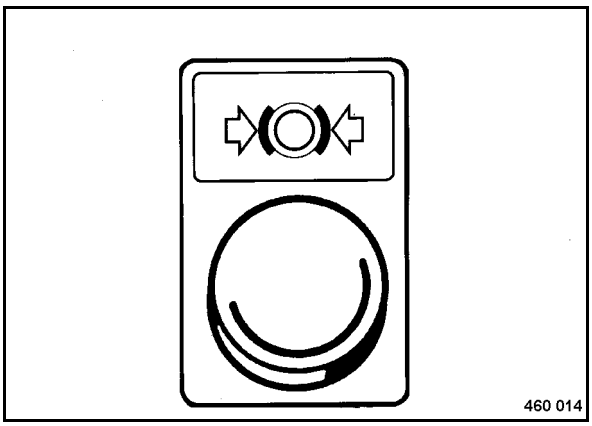

Fig. 16

No. 9 = Parking brake warning light

* Option

https://truckmanualshub.com/

lights up = with the ignition switch in position "I" (Test) with the travel lever in "0"-position the parking brake is applied.

goes out = when moving the travel lever out of neutral position and sitting down on the operator's seat. Parking brake released.

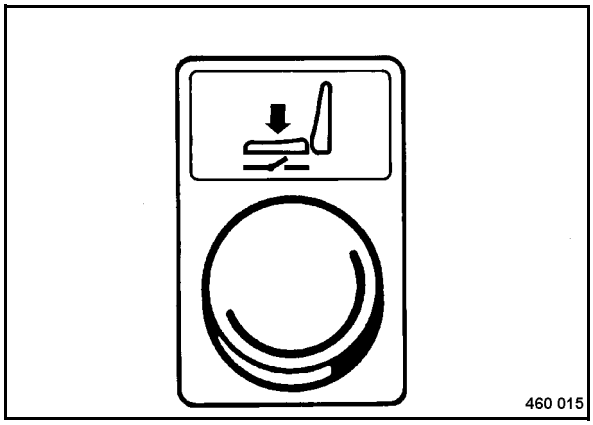

Fig. 17

No. 10 = Warning light for seat contact switch

goes out = when the driver's seat is occupied and the travel lever is in brake position.

lights up when the machine is at rest = with the ignition switch in position "I" (test), if the driver's seat is not occupied and the parking brake is closed, when actuating the travel lever while the driver's seat is not occupied.

i Note

Standard design

lights when the machine is driving = when the driver’s seat is unoccupied.

i Note

Design with seat contact for engine shut-down

lights when the machine is driving = when the driver’s seat is unoccupied. Warning buzzer sounds. Engine is shut down after 8 seconds.

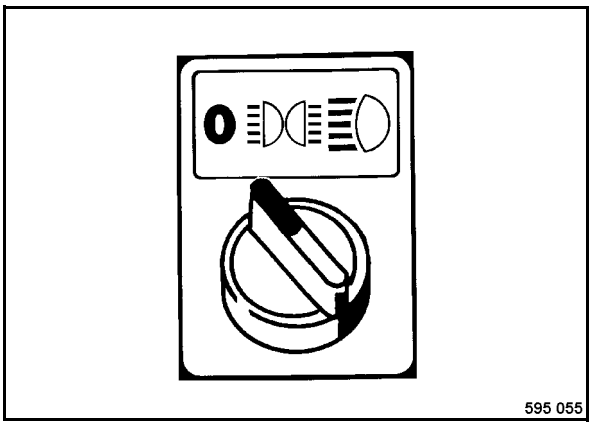

Fig. 18

No. 11 = Rotary switch for lighting acc. to StVZO* or working lights**

Lighting acc. to StVZO

Position "left" = light off

Position"middle" = fender lights on, ignition switch in position "I" or "P",

Position "right" = travel light on, with ignition switch in position "I".

Working light

Position "left" = light off

Position "right" = working lights on, with ignition switch in position "I".

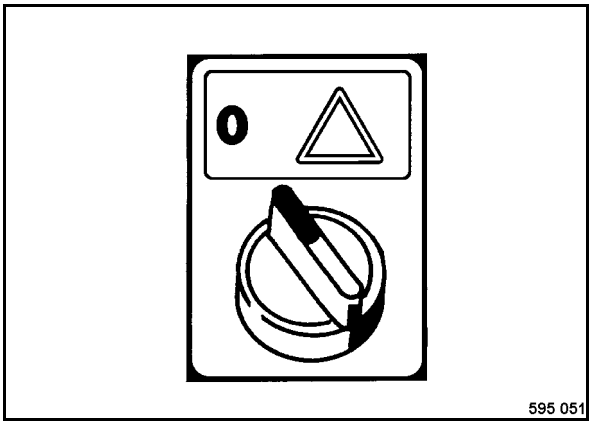

Fig. 19

No. 12 = Rotary switch for hazard light system***

* Option
** Option

https://truckmanualshub.com/

Position "left" = hazard light switched off, the control lights go out.

Position "right" = hazard light switched on, the control light in the rotary switch lights.

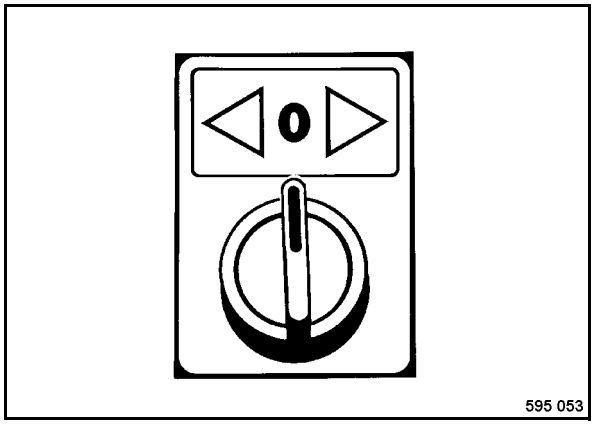

Fig. 20

No. 13 = Rotary switch for direction indicators left / right*

Position "middle" = direction indicators off

Position "left or right" = front and rear direction indicators on the respective side light up, the control light in the switch flashes

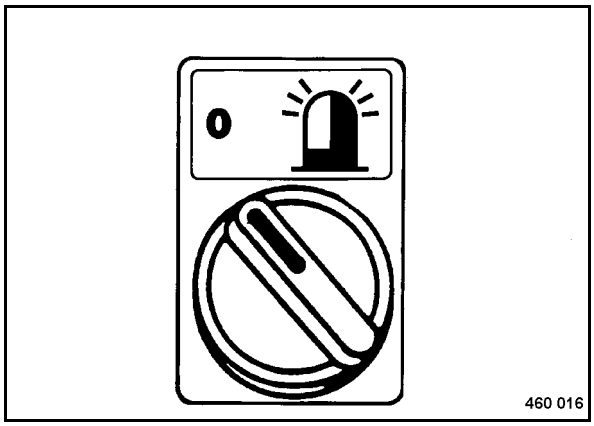

Fig. 21

No. 14 = Rotary switch for flashing beacon**

Position "left" = flashing beacon off

Position "right" = flashing beacon on

*** Option
* Option
** Option

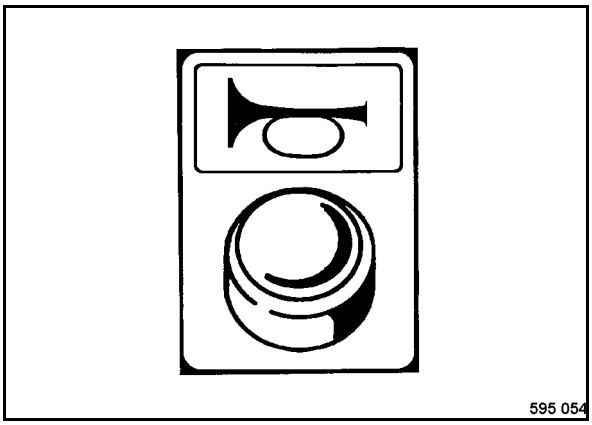

Fig. 22

No. 15 = Push button for warning horn

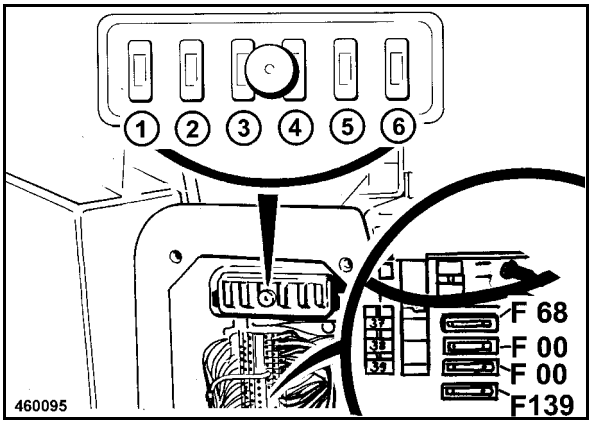

Fig. 23

No. 16 = Fuses

⚠ Danger

Fire hazard!

Do not use fuses with higher ampere ratings and do not bridge fuses.

Fuse box

(1), 15A = (F14) engine solenoid

(2), 15A = (F25) solenoid valve for driving and braking

(3), 20A = (F03) vibration

(4), 15A = (F08) direction indicators, working head lights*

(5), 15A = (F11) head lights, left*

(6), 15A = (F12) head lights, right*

Fuses on terminal strip

F68 = (30A) potential 30

https://truckmanualshub.com/

F00 = (30A) battery
F00 = (30A) battery
F139 = (30A) engine solenoid*

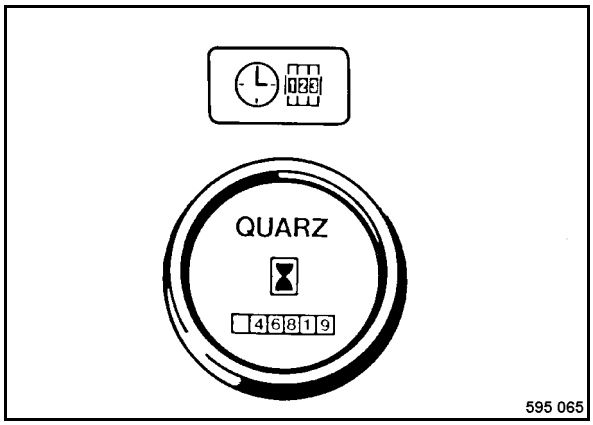

Fig. 24

No. 17 = Operating hour meter

counts the operating hours while the engine is running

All service work must be carried out according to the reading of the operating hour meter.

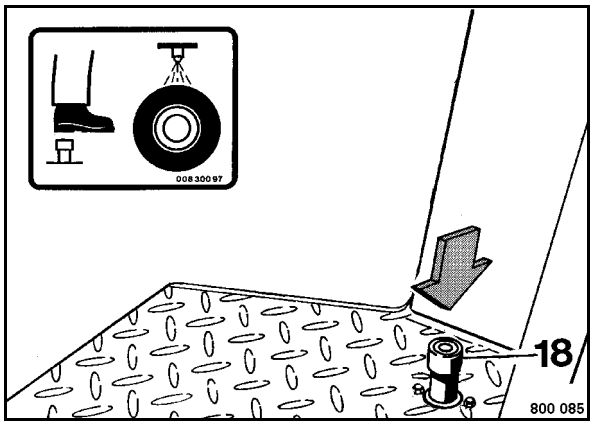

Fig. 25

No. 18 = Foot switch for tire sprinkling system (only AC)

depress = to switch the tire sprinkler system on or off.

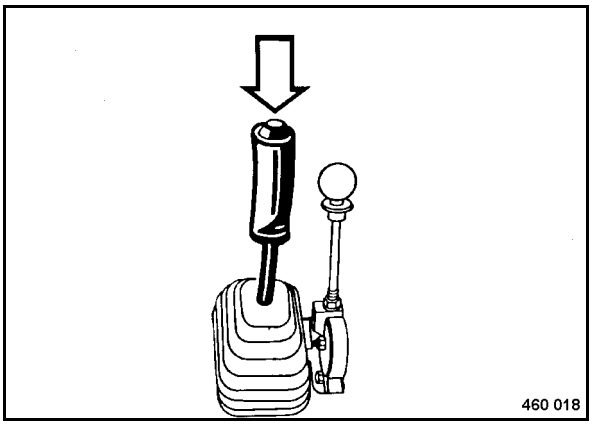

Fig. 26

No. 19 = Push button for vibration

depress = to switch the vibration on or off.

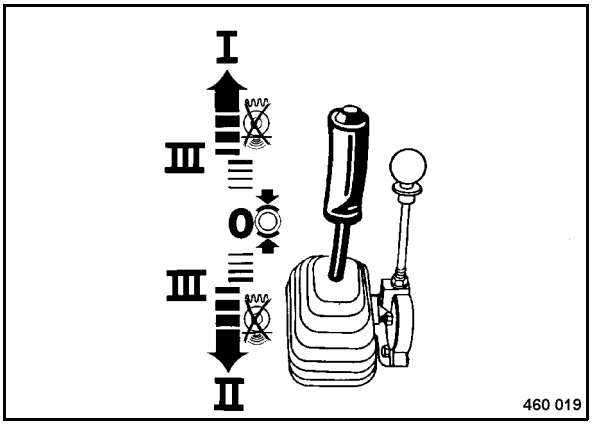

Fig. 27

No. 20 = Travel lever

i Note

Double travel lever, optional

shift through position"0", engage to the right = Parking brake applied, the engine can be started. Sprinkler system switched off.

Position "0" = Service brake, the machine is automatically braked by the hydrostatic drive.

Position direction "I" = the forward speed is adjusted according to the travel lever position.

* Optional equipment

https://truckmanualshub.com/

Position direction
"II" = the reverse speed is adjusted according to the travel lever position.

Position "III" = Max. forward/reverse travel with vibration

i Note

When shifting the travel lever through position "III" to position "I" or "II", the vibration will be automatically switched off.

On machines with double travel lever the travel lever cannot be engaged to the right. The parking closes automatically in “0”-position and is released when shifting the travel lever out of neutral.

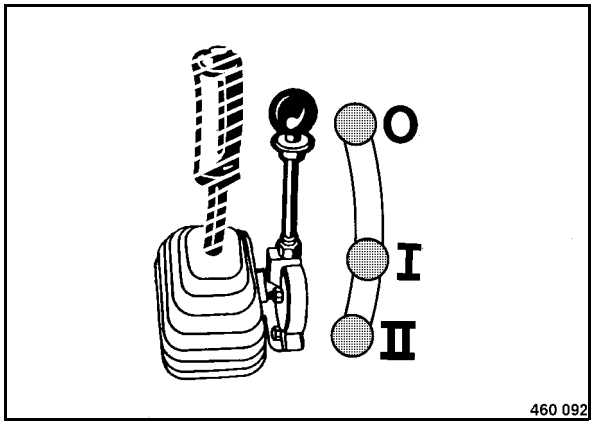

Fig. 28

No. 21 = Throttle lever

Position "0" = Idle speed position, engine start.

Position "I" = Full load position (2000 rpm), operating position for driving and vibration (40 Hz).

Position "II" = Full load position (3000 rpm), operating position for driving and vibration (60 Hz).

⚠ Caution

Always drive and vibrate in throttle lever position I or II!

Control the travel speed only with the travel lever!

i Note

Pull up the locking plate to move the throttle lever.

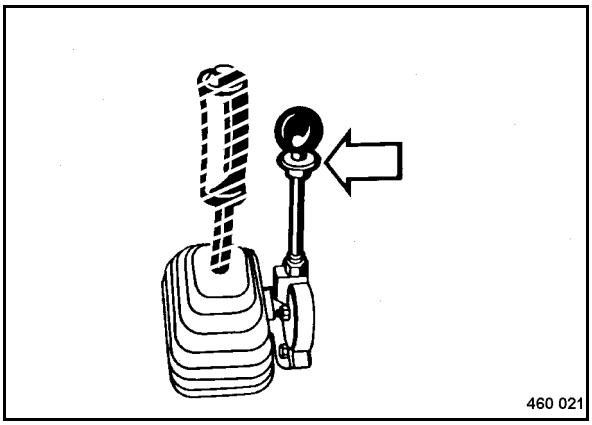

Fig. 29

No. 22 = Locking plate for throttle lever

pull = throttle lever can be moved.

release = throttle lever is locked in place.

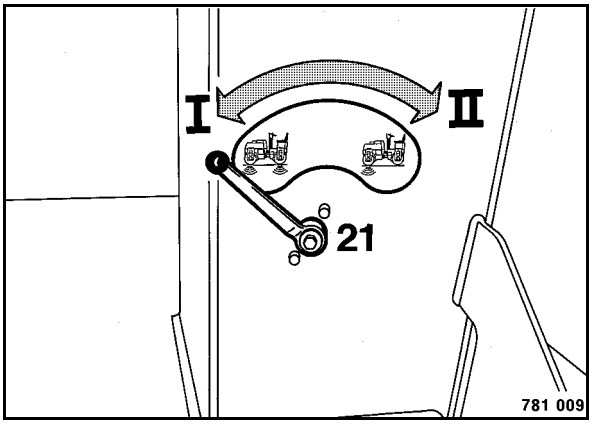

Fig. 30

No. 23 = Cock valve for vibration (only AD)

Position "I" = vibration of both drums

Position "II" = vibration of front drum only

https://truckmanualshub.com/

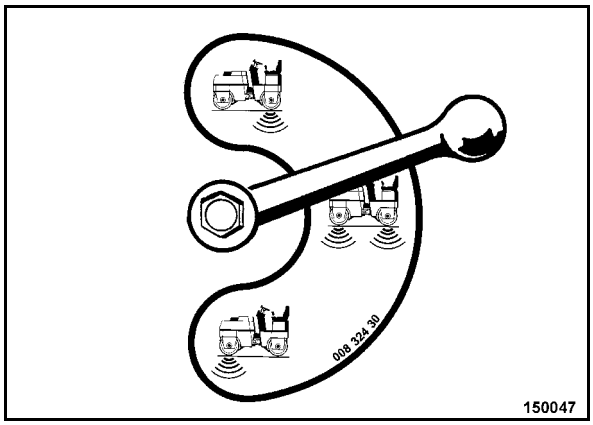

Fig. 31

Ball valve for 3-stage vibration*

Position upward	=	Vibration of rear drum only
Position horizontal	=	Vibration of both drums
Position downward	=	Vibration of front drum only

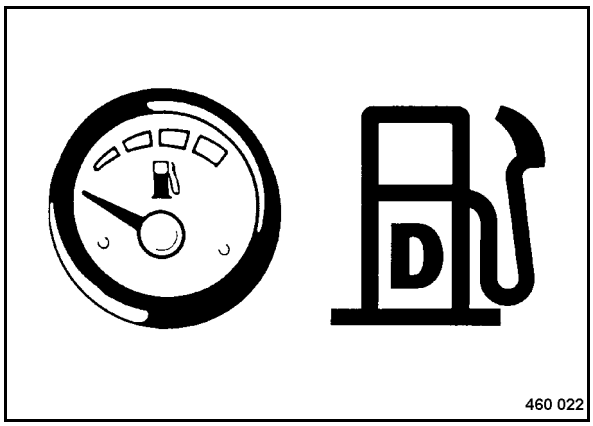

Fig. 32

No. 24 = Fuel gauge

shows the filling level in the fuel tank

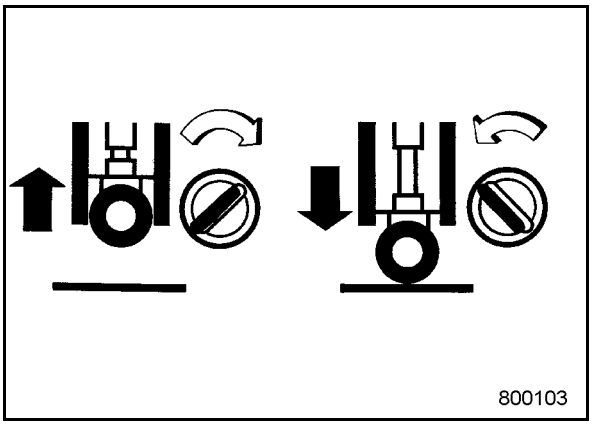

Fig. 33

No. 25 = Edge cutter **

turn to

position "right"	=	lift
position "left"	=	lower

* Optional equipment

** Option

https://truckmanualshub.com/

4 Operation

https://truckmanualshub.com/

4.1 General notes

Please read section 3 Indicators and Control Elements thoroughly before operating the machine if you are not yet fully familiar with the indicators and control elements of the machine.

All indicators and control elements are described in detail in this chapter.

4.2 Tests before taking into operation

The following inspections must be carried out before each working day or before a longer working period.

⚠ Danger

Danger of accident!

Please observe strictly the safety regulations in chapter 2 of this instruction manual!

- Park the machine on ground as level as possible.

Check:

- fuel tank and fuel lines for leaks
- screw joints for tight fit
- function of steering
- machine for cleanliness, damage
- presence of the appropriate operating and maintenance instructions,
- check whether the machine has been properly serviced.

i Note

For a description of the following tasks refer to the chapter "maintenance every 10 operating hours".

- Engine oil level

i Note

In hydraulic systems filled with Panolin HLP Synth. 32 always use the same oil to top up. With other ester based oils consult the lubrication oil service of the respective oil manufacturer.

- Check the hydraulic oil level, top up if necessary.
- Hydraulic oil filter contamination indicator
- Check the coolant level, top up if necessary.

⚠ Danger

Fire hazard!

Do not refuel in closed rooms.

- Check the fuel level, top up if necessary.

https://truckmanualshub.com/

- Check the sprinkler system water level, fill up if necessary.
- Emulsion level, fill up if necessary (only AC)
- Scrapers, adjust if necessary
- Air pressure in the tires For values refer to the technical data.

⚠ Caution

Ensure equal pressure in the rubber tires.

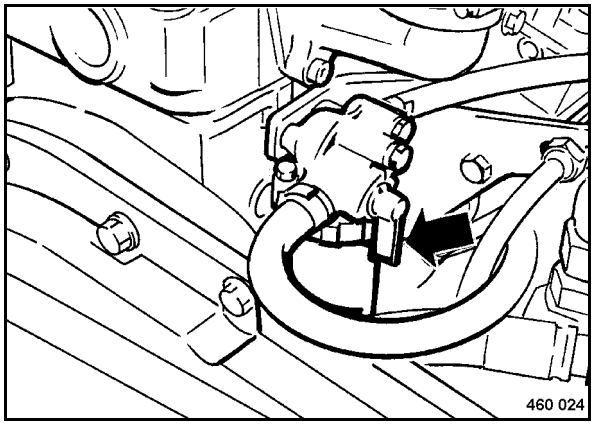

Fig. 34

- Check whether the fuiel shut-off lever (Fig. 34) is pointing vertically down.

4.3 Starting the engine

⚠ Caution

In this chapter it is assumed that the operator is fully acquainted with the functions of the various control elements on the machine.

⚠ Danger

Start the engine only from the operator's seat.

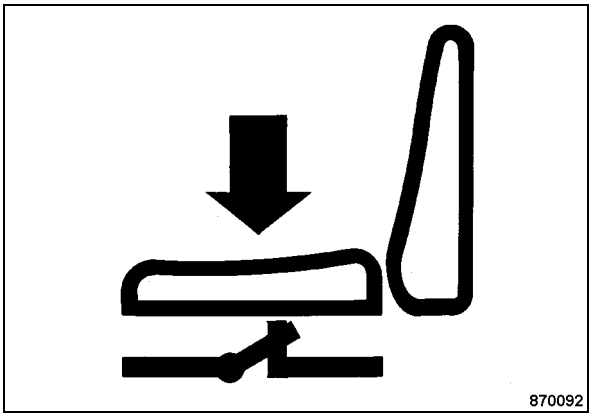

Fig. 35

- Always start the engine from the driver's seat with seat contact switch (Fig. 35).

⚠ Danger

Danger of accident!

Always wear your seat belt.

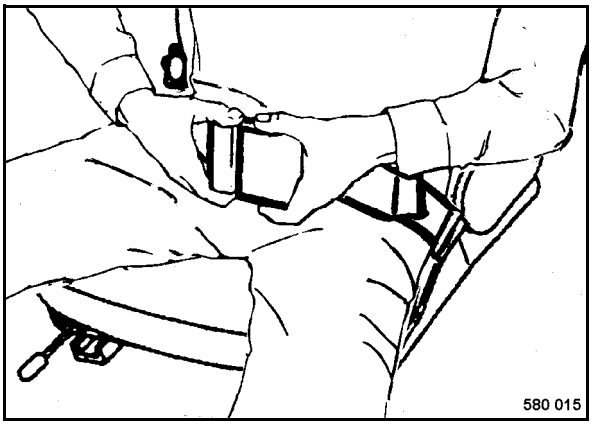

Fig. 36

- Fasten your seat belt (Fig. 36).

https://truckmanualshub.com/

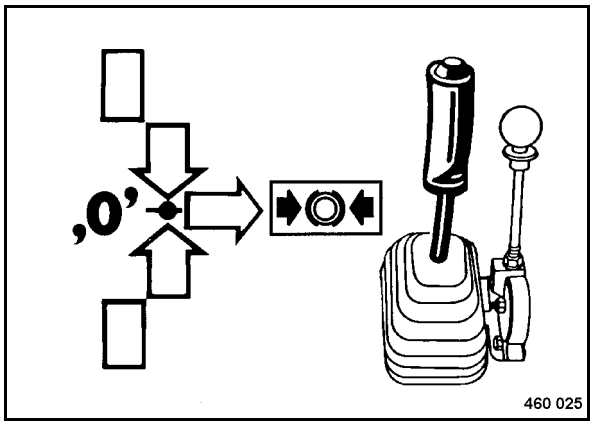

Fig. 37

- Check, whether the travel lever (Fig. 37) is engaged to the right in brake position.

i Note

On machines with double travel lever the travel lever cannot be engaged to the right. The parking closes automatically in “0”-position and is released when shifting the travel lever out of neutral.*

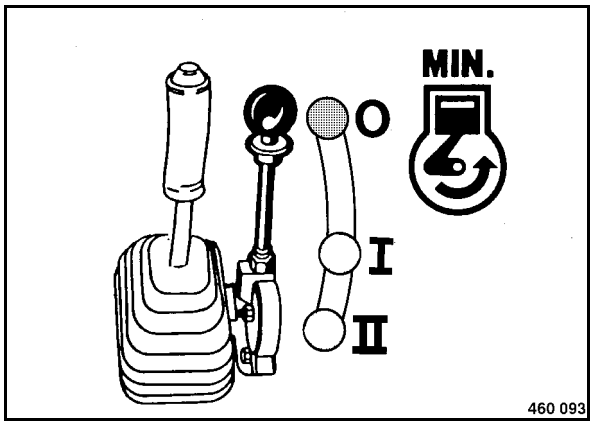

Fig. 38

- Set the throttle lever (Fig. 38) to "0"-position.

* Optional equipment

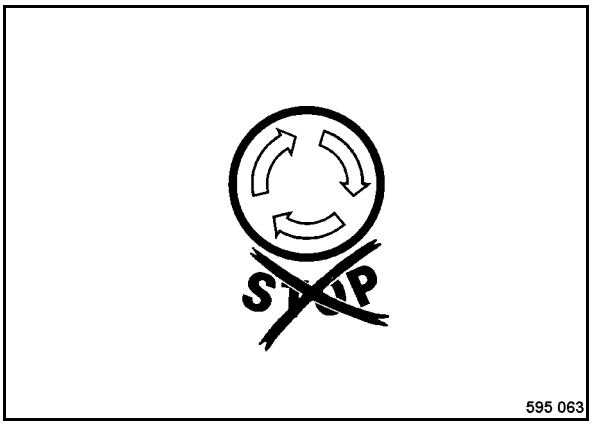

Fig. 39

- Check, whether the emergency stop switch (Fig. 39) is unlocked.

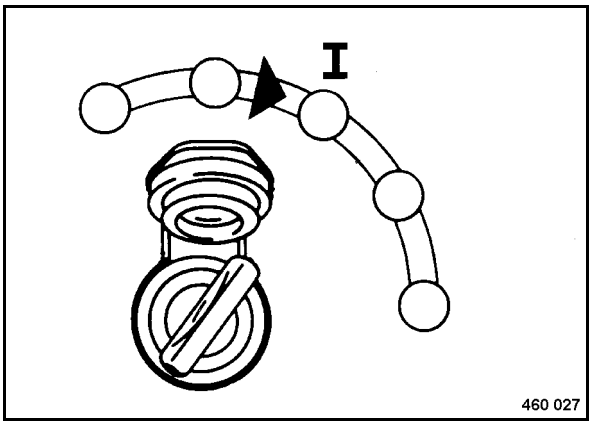

Fig. 40

- Turn the ignition key (Fig. 40) to position "I".

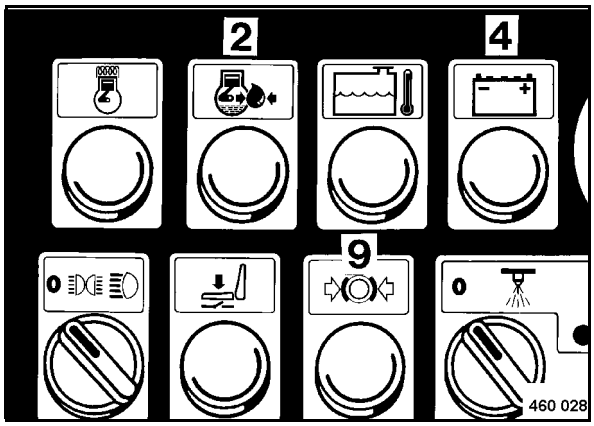

Fig. 41

Oil pressure warning light 2 (Fig. 41), charge congtrol light (4) and parking brake warning light (9) light up.

https://truckmanualshub.com/

⚠ **Caution**

Perform the starting process for maximum 20 seconds without interruption and pause for a minute between starting attempts.

If the engine has not started after two attempts perform trouble shooting.

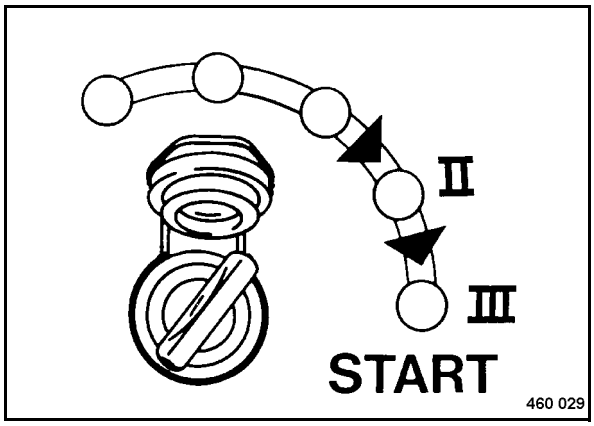

Fig. 42

- Turn the ignition key (Fig. 42) through position "II" to position "III", the starter will crank the engine.
- As soon as the engine ignites return the ignition key to position "I".

⚠ **Caution**

Run the engine warm for a short while, but do not run with idle speed for more than 10 minutes.

4.4 Starting at low temperatures

At temperatures below approx. +10 °C:

- Check, whether the travel lever is locked to the right in braking position.
- Check, whether the emergency stop switch is unlocked.

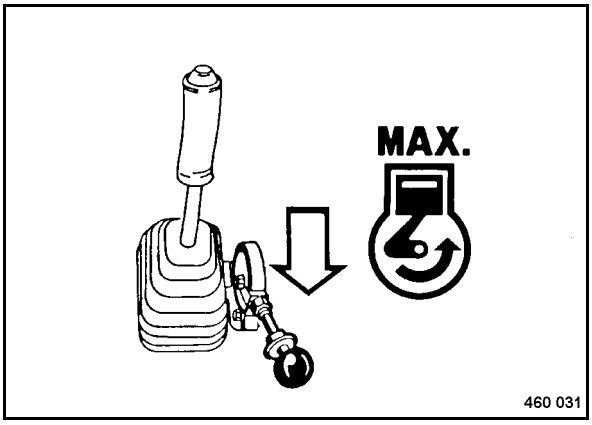

Fig. 43

- Shift the throttle lever (Fig. 43) to position "MAX" and lock it.

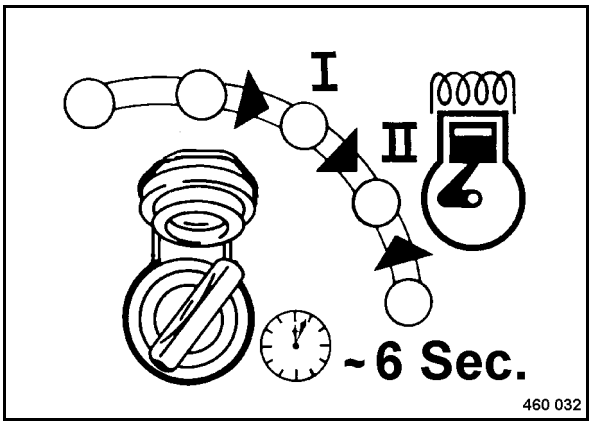

Fig. 44

- Turn the ignition key (Fig. 44) through position "I" to position "II" and hold it for approx. 6 seconds.

https://truckmanualshub.com/

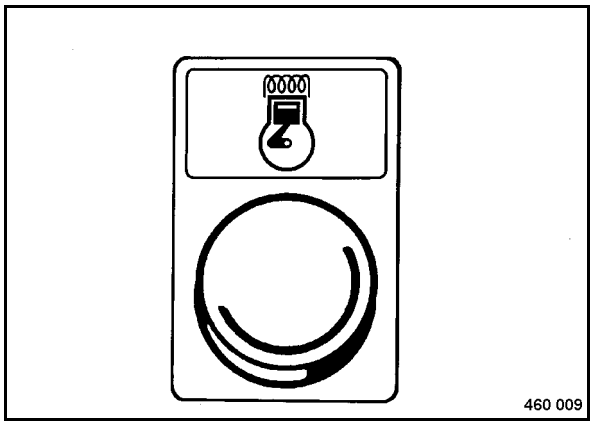

Fig. 45

- The preheating control light (Fig. 45) lights for approx. 6 seconds.

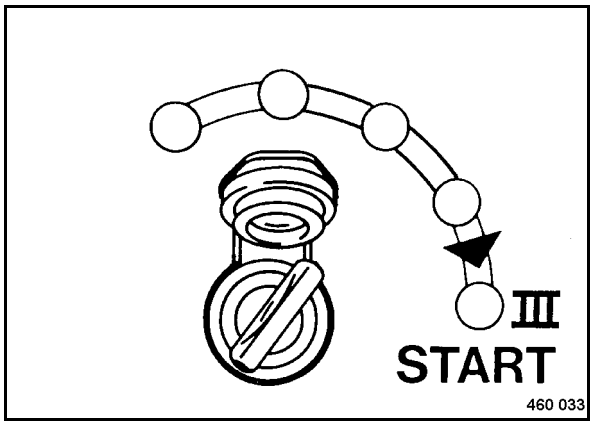

Fig. 46

- Once the preheating control light has gone out turn the ignition key to position "III" (Fig. 46), the starter will crank the engine.
- Once the engine ignites turn the ignition switch back to position "I".
- Once the engine runs properly, reduce the engine speed.
- If required, the ignition key may be held in position "II" longer than 6 seconds. The preheating time will be extended accordingly.

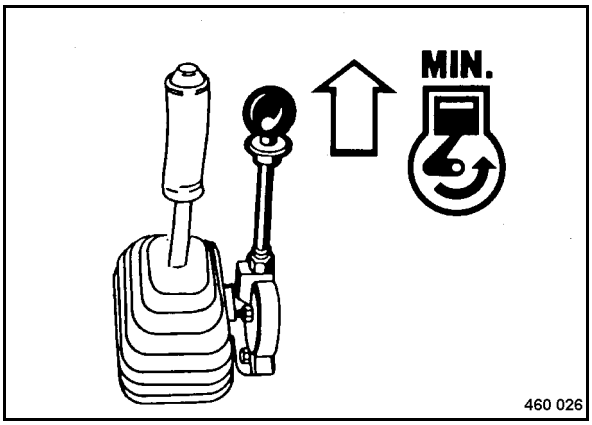

Fig. 47

- Pull the locking plate up and shift the throttle lever (Fig. 47) back to position "MIN".

⚠ Caution

Run the engine warm for a short while, do not run at idling speed for more than 10 minutes.

https://truckmanualshub.com/

4.5 Starting with jump leads

⚠ Caution

Wrong connection will cause severe damage to the electrical system.

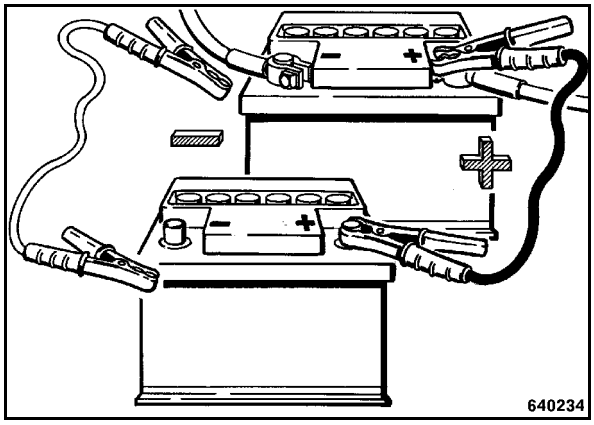

Fig. 48

- When starting with an external battery connect both plus poles (Fig. 48) first and both minus poles (earth cable) after.
- Perform all steps as described in the previous section.
- After starting disconnect the minus poles (earth cable) first and the plus poles after.

4.6 Driving the machine

⚠ Danger

Danger of accident!

Wet and loose soils considerably reduce the ground adhesion of the machine on inclinations and slopes.

Soil conditions and weather influences impair the gradability of the machine.

Do not drive up and down inclinations exceeding the maximum gradability of the machine (see technical data).

Do not drive without wearing your seat belt.

Always give way to loaded transport vehicles!

Before starting to drive make sure that the drive range is absolutely safe.

Drive and operate the machine only from the driver's seat.

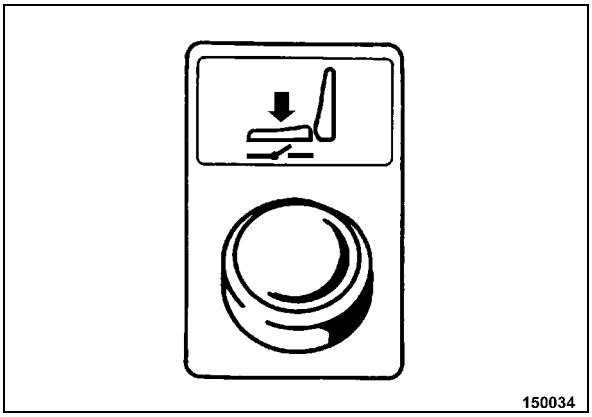

Fig. 49

i Note

Seat contact control light (Fig. 49):

goes out	=	when the driver's seat is occupied.
lights up when the machine is at rest	=	when the driver's seat is unoccupied. Drive operation is not possible. (The brake is closed).

https://truckmanualshub.com/

i Note

Standard design

lights when the machine is driving = when the driver's seat is unoccupied.

i Note

*Design with seat contact for engine shut-down**

lights when the machine is driving* = when the driver's seat is unoccupied. Warning buzzer sounds. Engine is shut down after 8 seconds.

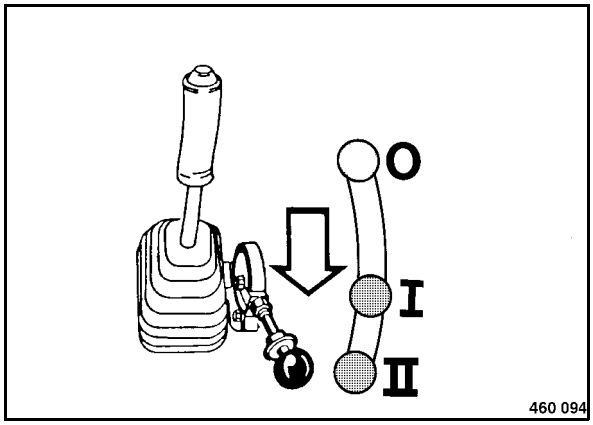

Fig. 50

- Shift the throttle lever (Fig. 50) to position "I" or "II" and lock it.

i Note

During operation the throttle lever always remains engaged in full load position "I" or "II" .

Control the travel speed only with the travel lever (Fig. 51).

* Optional equipment

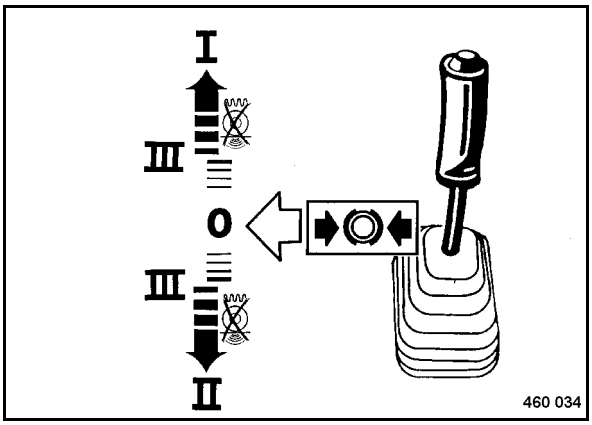

Fig. 51

⚠ Caution

When changing the travel direction hold the travel lever for a moment in ”0”-position, until the machine has stopped, before actuating to the new travel direction.

- Disengage the travel lever (Fig. 51) to the left out of braking position and move it slowly through ”0”-position to the desired travel direction.

i Note

The parking brake warning light goes out.

Position "I" = max. forward travel without vibration

Position "II" = max. backward travel without vibration

Position "III" = Max. forward/backward travel with vibration

i Note

When shifting the travel lever through position "III" to position "I" or "II", the vibration will be automatically switched off.

https://truckmanualshub.com/

4.7 Operating the parking brake, stopping the machine

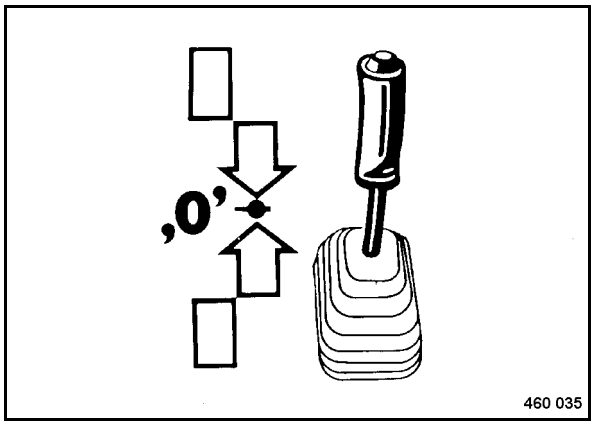

Fig. 52

- Shift the travel lever (Fig. 52) slowly to position "0". The hydrostatic drive automatically brakes the machine.

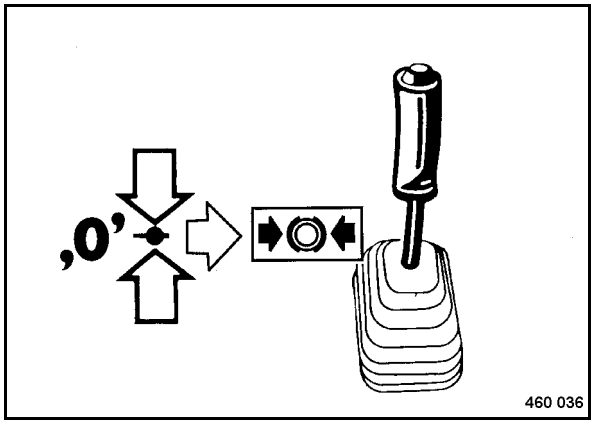

Fig. 53

- Check, whether the travel lever (Fig. 53) is locked to the right in braking position.

i Note

The travel lever returns automatically to parking brake position when releasing it in "0"-position.

The pressure sprinkler system is automatically switched off.

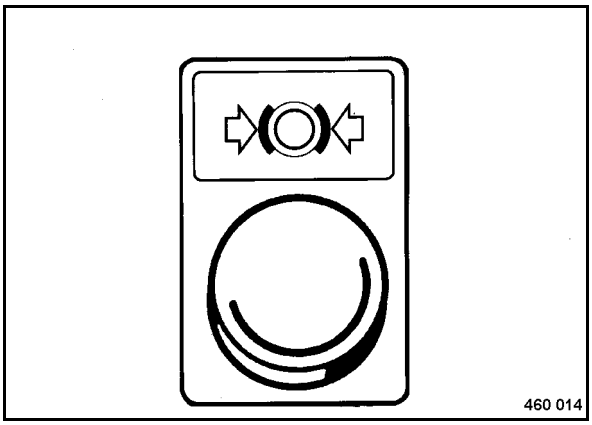

Fig. 54

i Note

The parking brake warning light (Fig. 54) lights up.

https://truckmanualshub.com/

4.8 Switching the vibration on and off

⚠ Danger

Risk of damage!

When compacting with vibration you must check the effect on nearby buildings and underground supply lines (gas, water, sewage, electric power), if necessary stop compaction work with vibration.

⚠ Caution

Danger of bearing damage!

Do not activate the vibration on hard (frozen, concrete) ground.

i Note

Switch the vibration on only at maximum engine speed.

Vibration at standstill causes transverse ruts, therefore:

- switch the vibration on only after shifting the travel lever to the desired travel direction.
- Switch the vibration off before stopping the machine.

Pre-selecting vibration (only AD)

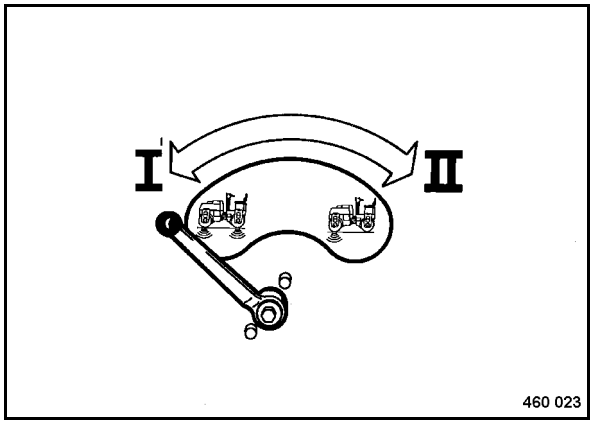

Fig. 55

⚠ Caution

Destruction of hydraulic components!

Switch over only with the vibration switched off.

- Pre-select the desired drum or drums with the ball valve (Fig. 55).

Position "I" = Vibration of both drums

Position "II" = Vibration of front drum only

Pre-selecting vibration (3 stages, only AD)*

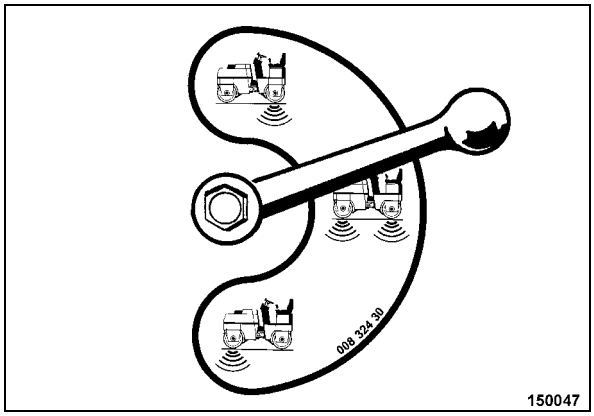

Fig. 56

⚠ Caution

Destruction of hydraulic components!

Switch over only with the vibration switched off.

- Pre-select the desired drum or drums with the ball valve (Fig. 56).

Position upward = Vibration of rear drum only

Position horizontal = Vibration of both drums

Position downward = Vibration of front drum only

* Optional equipment

https://truckmanualshub.com/

Switch the vibration on

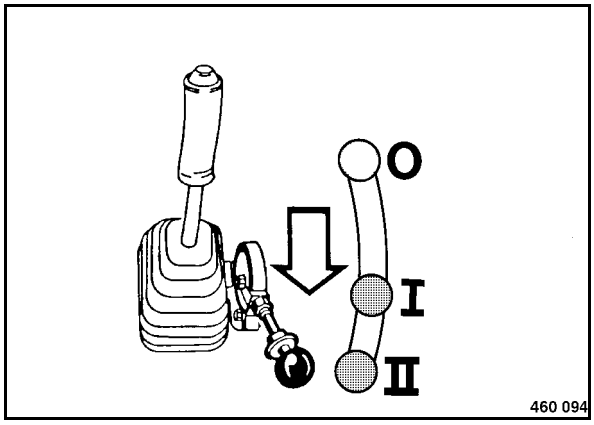

Fig. 57

- Shift the throttle lever (Fig. 57) to position "I" (40 Hz) or "II" (60 Hz) and lock it.

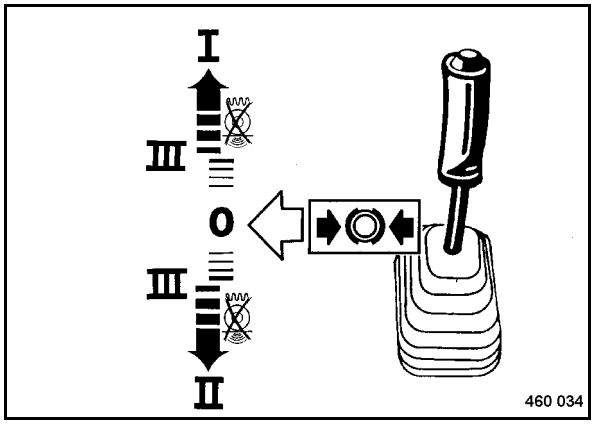

Fig. 58

- Shift the travel lever (Fig. 58) slowly to the desired travel direction, max. to position "III".

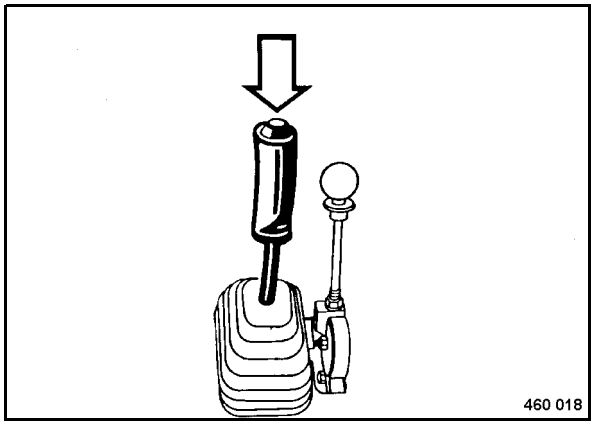

Fig. 59

- Actuate the vibration push button (Fig. 59).

i Note

When actuating the travel lever (Fig. 58) through position "III", vibration will be automatically switched off.

Switching off vibration

- Actuate the vibration push button (Fig. 59) again.

https://truckmanualshub.com/

4.9 Switching the gravity sprinkler system on or off

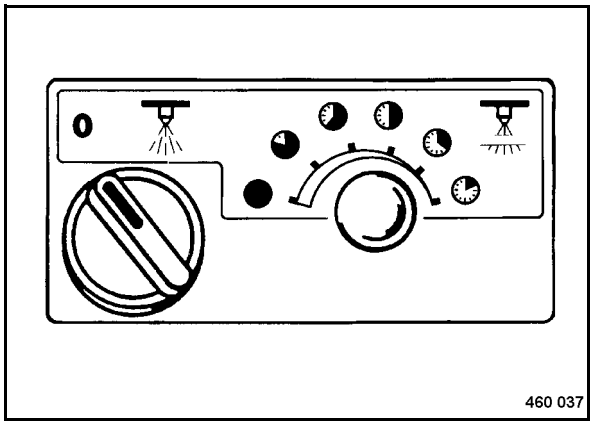

Fig. 60

- Rotary switch for sprinkler system (Fig. 60).

Position "left" = sprinkling "OFF"

Position "right" = sprinkling "ON"

4.10 Switching the pressure sprinkling system on and off*

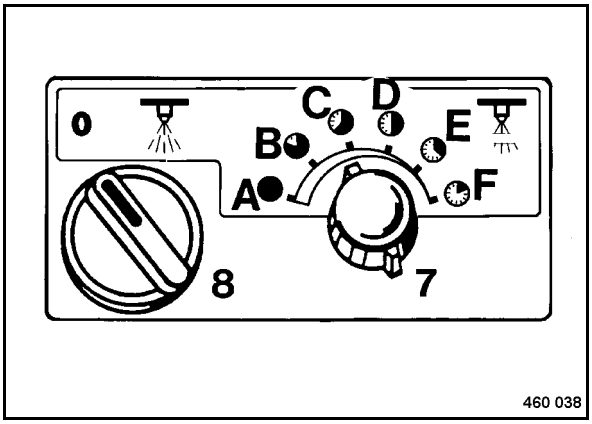

Fig. 61

- Rotary switch for sprinkling system 8 (Fig. 61)

Position left = Sprinkling "OFF"

Position right = Sprinkling "ON"

- Set the interval switch (7) to the desired flow interval.

Position "A" = Permanent sprinkling

Position "B" to "F" = Interruption intervals of sprinkling of 4, 8, 16, 24 and 32 seconds, always switched on for 5 seconds.

i Note

The pressure sprinkling system is automatically stopped when the travel lever is in parking brake position.

This ensures that the machine will not use any water when not in operation

In order to test the function of the sprinkling system with the machine stopped shift the travel lever sideways out of braking position.

* Optional equipment

https://truckmanualshub.com/

4.11 Checking the sprinkling system with the machine stopped

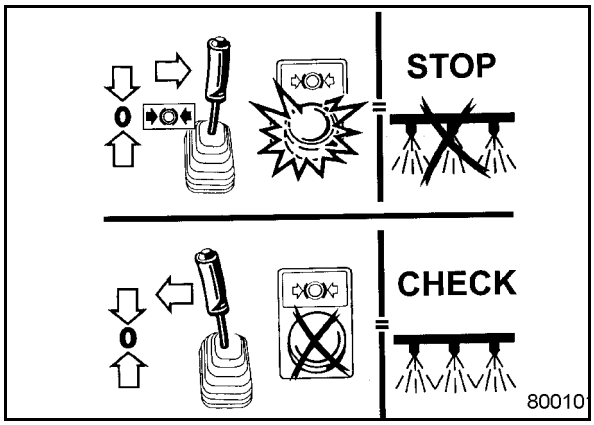

Fig. 62

- Shifting the travel lever to the right through braking position "0" activates the parking brake, the water sprinkling system is automatically switched off, checking of sprinkling system is not possible.
- Shift the travel lever to the left through brake position "0" and hold it in position, check whether sprinkling system switches on.

4.12 Switching the tire sprinkler system in or off

i Note

AC-machines only.

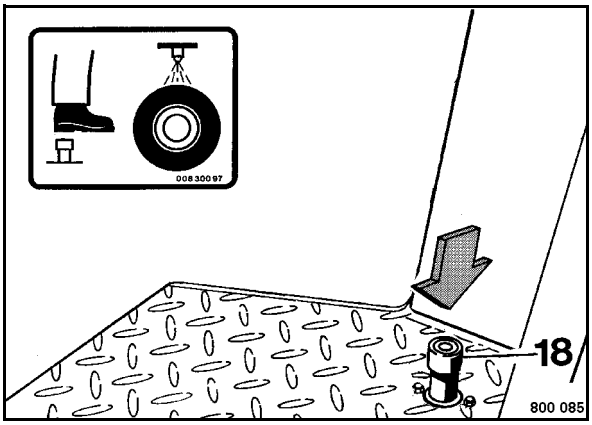

Fig. 63

- Operate the foot switch 18 (Fig. 63).

depress = to switch on or off.

https://truckmanualshub.com/

4.13 Stopping the engine/machine

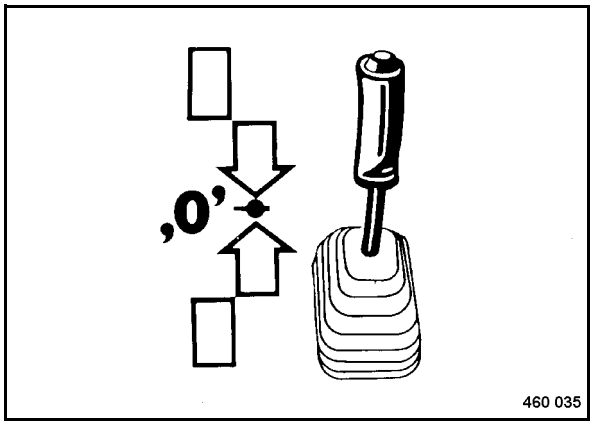

Fig. 64

- Shift the travel lever (Fig. 64) slowly to position "0". The hydrostatic drive automatically brakes the machine.

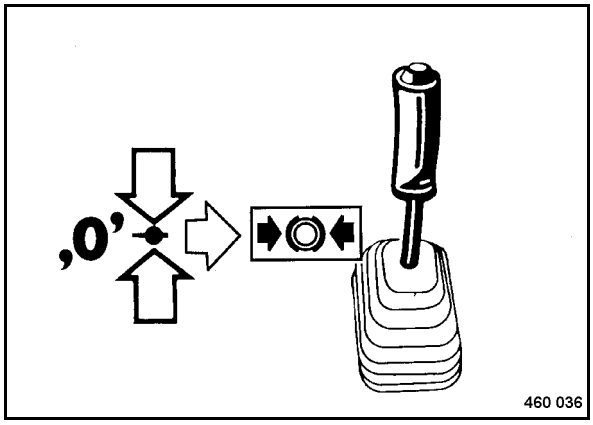

Fig. 65

- Set the travel lever (Fig. 65) to the right in parking brake position.

i Note

The travel lever returns automatically to parking brake position when releasing it in "0"-position.

The pressure sprinkler system is automatically switched off.

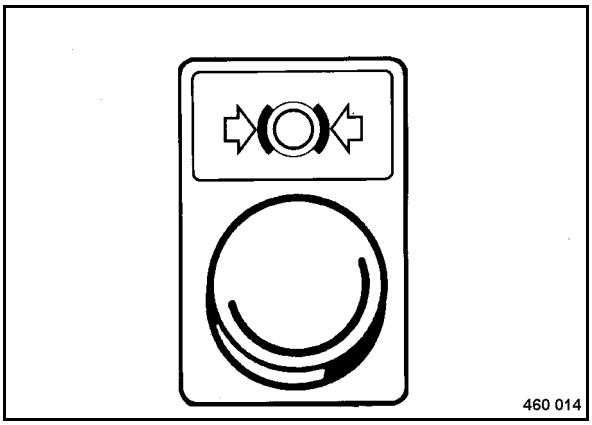

Fig. 66

i Note

The parking brake warning light (Fig. 66) lights up.

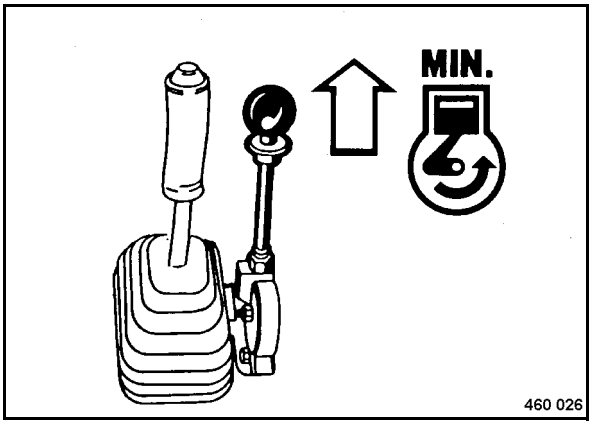

Fig. 67

- Pull the locking plate up and shift the throttle lever (Fig. 67) back to position "MIN".

i Note

Do not shut the engine down suddenly from full speed, but let it idle for a while for temperature equalization.

https://truckmanualshub.com/

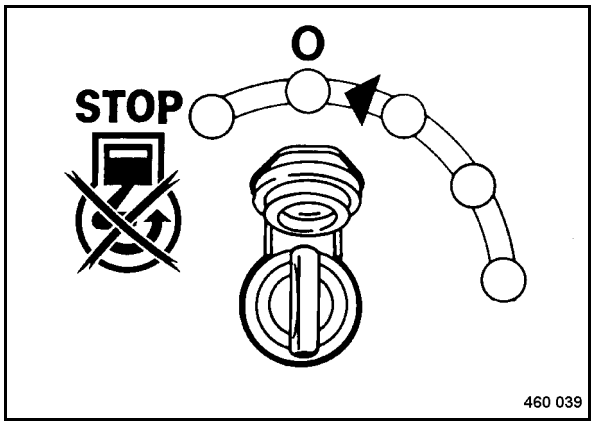

Fig. 68

- To shut the engine down turn the ignition switch (Fig. 68) to position "0".

i Note

After shutting the engine down the parking brake warning light will light up.

⚠ Danger

Danger of accident!

Secure the machine properly against unauthorized use, pull the ignition key out.

Always secure parked machines, which could be in the way, with appropriate measures.

4.14 Adjusting the operator's seat

⚠ Danger

Danger of accident!

Do not adjust the seat while driving.

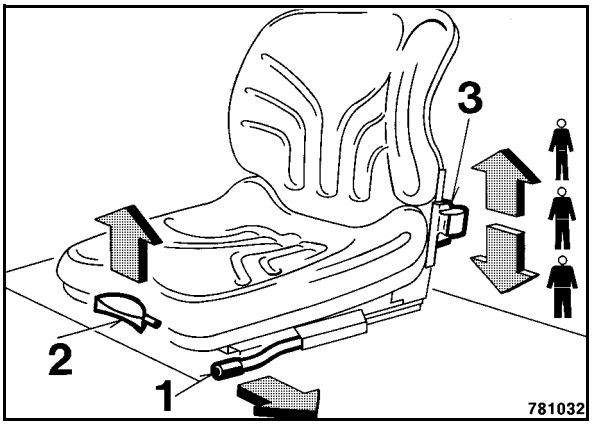

Fig. 69

- To adjust the seat in longitudinal direction push the lever 1 (Fig. 69) outwards.
- Pull the lever (2) up and adjust the backrest.
- Operate the lever (3) to adjust the weight of the operator.

i Note

In its setting the lever (3) is locked in upwards direction. This lock can be released by pressing the lever down against the end stop. Then adjust the operator's weight by sliding the lever downwards.

https://truckmanualshub.com/

4.15 Towing*

⚠ Caution

Tow the machine only with the brake releasing device attached, otherwise lift by central lifting hook.

⚠ Danger

Danger of accident!

Always secure the machine against unintended rolling.

Release the brake

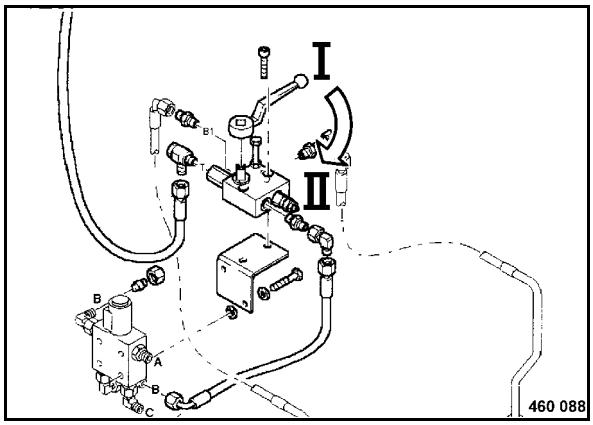

Fig. 70

- Unscrew the locking bolt (Fig. 70).
- Switch the ball valve over.

Position "I" = Brake released

Position "II" = Brake applied

- Turn the steering wheel anti-clockwise until the brake is released.

Towing the machine

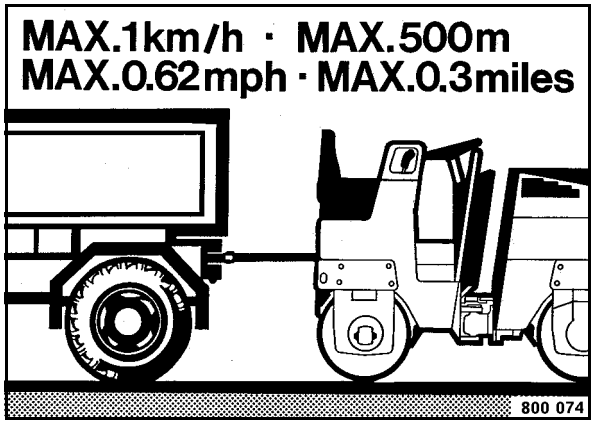

Fig. 71

⚠ Caution

Generally use the tow bar (Fig. 71), max. towing speed
1 km/h, max. towing distance 500 m.

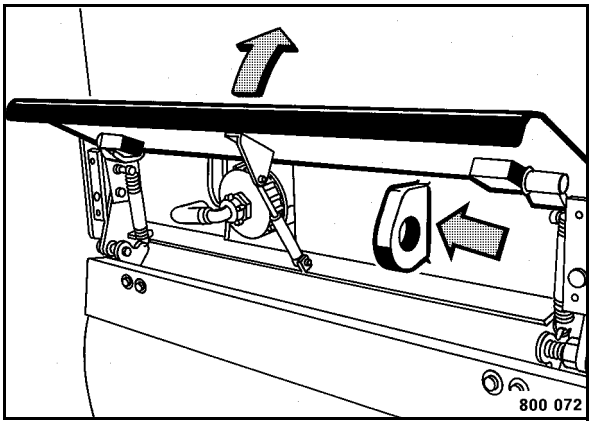

Fig. 72

- Open the rear flap and tow the machine by the towing eye (Fig. 72).

After towing

⚠ Danger

Switch the ball valve (Fig. 70) back to position "II", turn the locking screw back in and counter it with the hexagon nut.

* Optional equipment

https://truckmanualshub.com/

4.16 Loading and transport

⚠ Danger

Danger of accident!

Use only strong and stable loading ramps. Make sure that no persons are endangered if the machine should turn over or slip off.

Lash the machine down so that it is properly secured against rolling off, slipping and turning over.

Do not step or stand under loads being lifted.

Always use shackles on the lifting points to load, lift or lash down the machine.

Always check the fastening of the central lifting hook before attempting to lift the machine.

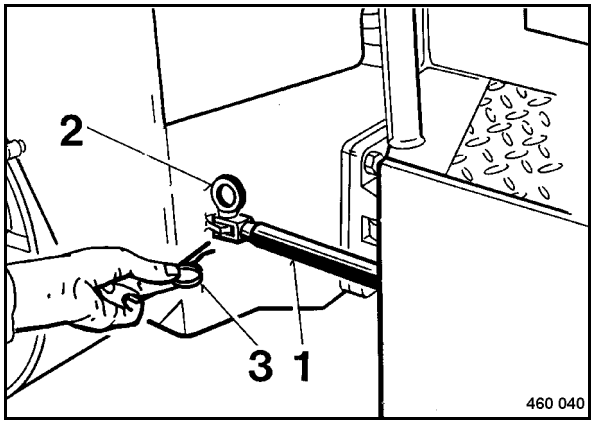

Fig. 73

- After driving the machine on the transport vehicle swing the articulation lock 1 (Fig. 73) out of its receptacle to the front. Insert the pin (2) and secure it with the cotter pin (3).

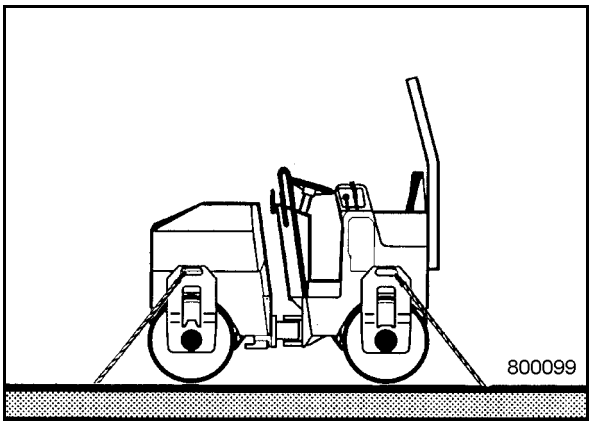

Fig. 74

- Lash the machine to the transport vehicle, attach the lashing gear (Fig. 74) to the front and rear frames.
- On BW 80 AD/ADH-2 use the fastening hooks to attach the lashing tackle for lashing the machine down.

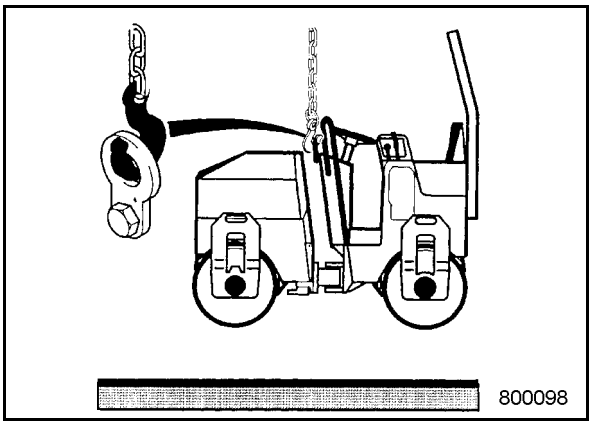

Fig. 75

- To lift the machine attach the lifting gear to the central lifting device (Fig. 75).

https://truckmanualshub.com/

Loading weight: see technical data.

After the transport

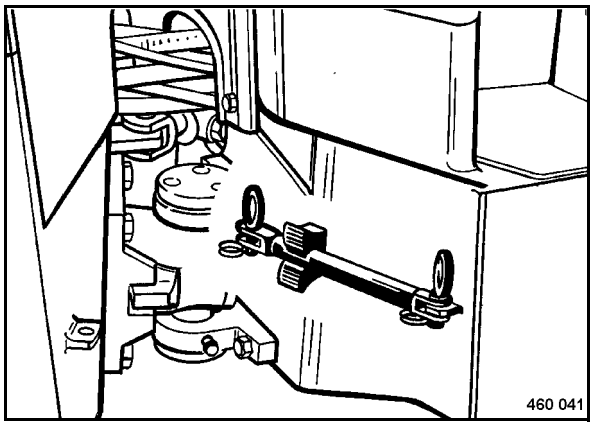

Fig. 76

- After the transport release the articulation lock and fix it in its receptacle (Fig. 76).

https://truckmanualshub.com/

5 Maintenance

https://truckmanualshub.com/

5.1 General notes on maintenance

When servicing the machine pay careful attention to all applicable safety instructions.

Thorough maintenance of the machine ensures maximum reliability and prolongs the lifetime of important components. The effort required for these activities is small when being compared with the problems which may arise, if these instructions are not observed.

The terms left/right are always related to travel direction forward.

- Clean machine and engine thoroughly before starting maintenance work.
- For maintenance work park the machine on level ground.
- Maintenance work must generally be carried out with the engine shut down.
- Depressurize hydraulic lines before working on them.
- Disconnect the battery and cover it with insulation material before starting to work on electrical components.
- Always attach the articulation lock (transport lock) before starting to work in the articulation area of the machine.

Environment

Catch running out oils, coolant and fuel and do not let them seep into the ground or into the sewage system. Dispose of oils, coolant and fuels environmentally.

Notes on the fuel system

The lifetime of the diesel engine is decisively depending on the cleanliness of the fuel.

- Keep the engine free of dirt and water as this could damage the injection elements of the engine.
- Zinc lined drums are not suitable for storing fuel.
- The fuel drum should rest for a longer period of time before drawing off fuel.
- Do not let the suction hose disturb the sludge on the bottom of the drum.
- Do not draw off fuel from near the bottom of the fuel drum.
- Fuel left in the fuel drum is not suitable for the engine and should only be used for cleaning purposes.

Notes on the engine performance

Combustion air and fuel injection rates of the diesel engine have been carefully adjusted and determine the engine's performance and temperature level as well as the quality of the exhaust gas.

If your machine has to operate permanently in "thin air" (at high altitudes) and with full power, you should consult the after sales service of BOMAG or the service department of the engine manufacturer.

Notes on the hydraulic system

When servicing the hydraulic system cleanliness is of utmost importance. Make sure, that no dirt or other contaminating substances enter into the system. Small particles can flute valves, cause pumps to seize and block restrictors and pilot bores, thereby causing costly repairs.

- If during the daily oil level check the oil level is found to have dropped, check all lines, hoses and components for leakages.
- Seal external leakages immediately. If necessary inform the after sales service of BOMAG.
- Do not store drums with hydraulic oil outside, or at least store them under a cover. With changing weather water can penetrate through the bunghole.
- Always use the filling and filtering unit (BOMAG part-no. 007 610 01) to fill the hydraulic system. This unit is fitted with a fine filter, which cleans the hydraulic oil and thereby prolongs the lifetime of the system filter.
- Clean fittings, filler caps and their immediate surrounding area before removing them, so that no dirt can fall in.
- Do not leave the tank opening unnecessarily open, cover it so that no dirt can fall in.

https://truckmanualshub.com/

Notes on the cooling system

On water cooled engines the preparation and monitoring of the coolant is of utmost importance, as otherwise engine failures caused by corrosion, caviation and freezing may occur.

The coolant is a mixture of water and a cooling system protection agent.

The cooling system must be continuously monitored. Apart from the inspection of the coolant level it means also the inspection of the concentration of cooling system protection agent.

The concentration of the cooling system protection agent can be checked with commercially available test instruments (glycomat).

⚠ Danger

Health hazard!

The mixing of nitride based cooling system protection agents with amine based agents will cause the generation of highly toxic nitrosamines.

Environment

Cooling system protection agents must be disposed of environmentally.

5.2 Fuels and lubricants

Engine oil

In order to assure perfect cold starting it is import to chose the viscosity (SAE-class) of the engine oil according to the ambient temperature.

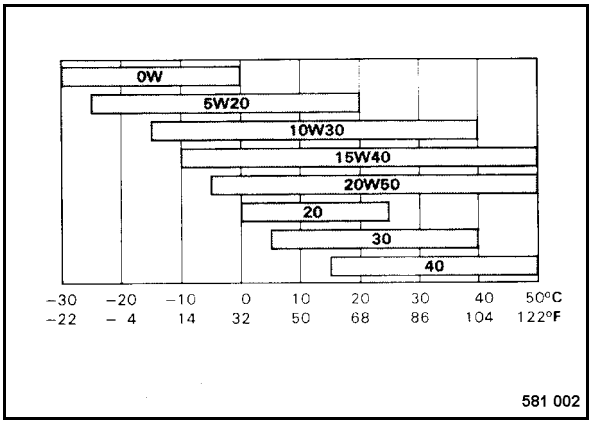

Fig. 77

Lubrication oil with a too high viscosity index causes starting difficulties. The temperature when starting the engine is therefore of highest importance when choosing the viscosity of engine oil for winter operation.

Oil viscosity

Since lubrication oil changes its viscosity with the temperature, the ambient temperature at the operating location of the engine is of utmost importance when choosing the viscosity class (SAE-class) (see diagram).

Occasional falling short of the temperature limit (e.g. use of SAE 15W/40 down to -15°C) may effect the cold starting ability of the engine, but will not cause any engine damage.

Temperature related lubrication oil changes can be avoided by using multi-purpose oils. The following oil change intervals apply also when using multi-purpose oils.

Regular lubrication oil changes

The longest permissible time a lubrication oil should remain in an engine is 1 year. If the following oil change intervals are not reached over a period of 1 year, the oil change should be performed

https://truckmanualshub.com/

at least once per year, irrespective of the operating hours reached.

Oil quality

Lubrication oil are classified according to their performance and quality class. Specifications according to API (American Petroleum Institute) and CCMC (Committee of Common Market Automobile Constructors) are commonly used.

Permitted API-oils

Aspirating engines = CD/SE

Permitted CCMC-oils

Aspirating engines = D4

Lubrication oil change intervals

⚠ **Caution**

These intervals apply only when using a diesel fuel with maximum 0.5 % sulphur by weight and for ambient temperatures higher than -10 °C.

CCMC-D4 = 250 operating hours

API: CD/SE = 250 operating hours

When using fuels with a sulphur content of more than 0,5% to 1% or under ambient temperatures below -10°C the oil change intervals must be halved.

For fuels with a sulphur content of more than 1% you should consult the responsible service agency.

Fuels

Quality

You should only use commercially available brand diesel fuel with a sulphur content below 0.5% and ensure strict cleanliness when filling in. A higher sulphur content has a negative effect on the oil change intervals. Use only winter-grade diesel fuel under low ambient temperatures. The fuel level should always be topped up in due time so that the fuel tank is never run dry, as otherwise filter and injection lines need to be bled.

The following fuel specifications are permitted: DIN/EN 590; DIN 51 601; Nato Codes: F-54, F-75; BS 2869: A1 and A2; ASTM D 975-78: 1-D and 2-D.

Winter fuel

For winter operation use only winter diesel fuel, to avoid clogging because of paraffin separation. At very low temperatures disturbing paraffin separation can also be expected when using winter diesel fuel.

In most cases a sufficient cold resistance can also be achieved by adding flow enhancing fuel additives. Consult the engine manufacturer.

Hydraulic oil

The hydraulic system is operated with hydraulic oil HV 32 (ISO) with a kinematic viscosity of 32 mm^2/s at 40°C. For topping up or for oil changes use only high-quality hydraulic oil, type HVLP according to DIN 51524, part 3, or hydraulic oils type HV according to ISO 6743/3. The viscosity index (VI) should be at least 150 (observe information of manufacturer).

Bio-degradable hydraulic oil

On request the hydraulic system can also be filled with synthetic ester based biodegradable hydraulic oil (Panolin HLP Synth. 32). The biologically quickly degradable hydraulic oil meets all demands of a mineral oil based hydraulic oil according to DIN 51524.

In hydraulic systems filled with Panolin HLP Synth. 32 always use the same oil to top up. When changing from mineral oil based hydraulic oil to an ester based biologically degradable oil, you should consult the lubrication oil service of the oil manufacturer for details.

Check the filter more frequently after this change.

Lubrication grease

For lubrication use only EP-high pressure grease, lithium saponified (penetration 2).

Coolant

For coolant mixtures use only soft tap water (drinking water) with a water hardness between 3 and 12 °dGH. The water should not contain more than

https://truckmanualshub.com/

100 mg/dm3 of chlorine and sulphate. The ph-value should be between 6.5 and 8.5.

As a protection against frost, corrosion and boiling point anti-freeze agents must be used under any climatic conditions.

The proportion of cooling system protection agent must be between min. 35% and max. 45% to the water.

⚠ Caution

Do not mix different coolants and additives of any other kind.

https://truckmanualshub.com/

5.3 Table of fuels and lubricants

Assembly	Fuel or lubricant		Quantity approx.
	Summer	**Winter**	**Attention** Observe the level marks
Engine	Engine oil API: CD/SE or CD/SF SHPD CCMC-D4-D5-PD1		3,9 l up to max. dipstick mark
	SAE 10W/40 (-20 °C to +30 °C)		
	SAE 15W/40		
	(-10°C to + 40°C)		
	SAE 30	SAE 10W	
	(+5 °C to +30 °C)	(-5 °C to -30 °C)	
	SAE 40	SAE 20W/20	
	(+25°C to +40°C)	(+10°C to -10°C)	
	Fuel		
	Diesel	Winter diesel fuel (down to -12 °C)	23 litres
Cooling system	Coolant		
	Water + anti-freeze		1,9 l
Hydraulic system	Hydraulic oil (ISO), HV32, kinem. viscosity 32 mm^2/s at 40 °C		up to middle of dipstick approx. 9 litres (tank capacity)
	or biodegradable hydraulic oil, ester based		
Sprinkler system	Water	Anti-freeze mixture	as required
		Water*	100 litres
Sprinkling of tires	Emulsion		10 litres
Oscillating articulated joint	High pressure grease (lithium saponified)		as required

**Mix water and anti-freeze agent by following the instructions of the manufacturer

https://truckmanualshub.com/

5.4 Running-in instructions

i Note

The maintenance plan under the engine hood helps with the maintenance work!

Maintenance after 50 operating hours

With new or totally overhauled engines you should generally:

- Change the engine oil.
- Change the engine oil filter.
- Check the engine for leaks
- Tighten the fastening screws on air filter, exhaust manifold, and other attachments.

⚠ Caution

Retighten the cylinder head fastening screws to the engine.

Maintenance after 200 operating hours

- New engines normally have a higher oil consumption. It is recommended to check the oil level twice every day during the running-in period.
- After the running-in period it is quite sufficient to check the oil level once every day.
- Check and retighten the screws on the machine.
- Watch out for leaks.

https://truckmanualshub.com/

5.5 Maintenance chart

With all maintenance intervals perform also the work for shorter preceding service intervals.

No.	Designation	Note
Every 10 operating hours		
5.6	Check the engine oil level	
5.7	Check the fuel level	
5.8	Check the hydraulic oil level	up to middle of dipstick marking
5.9	Checking the hydraulic oil filter element	contamination indicator
5.10	Check the coolant level	
5.11	Check the water level in the sprinkling system	Summer: Water Winter: Anti-freeze mixture
5.12	Checking the emulsion level	AC-machines)
5.13	Check, adjust the scrapers	
Every 50 operating hours		
5.14	Grease the articulated joint	High pressure grease
5.15	Check the tire pressure	(AC-machines)
5.16	Check, clean dry air filter, replace if necessary.	
Every 250 operating hours		
5.17	Changing the engine oil (at least 1x per year)*	up to upper dipstick mark
5.18	Changing the engine oil filter	
5.19	Check condition and tension of the V-belt, replace if necessary.	
5.20	Check condition and tension of pump drive toothed belt	
5.21	Change the fuel pre-cleaner, bleed the fuel system	
5.22	Clean the cooling fins on radiator and hydraulic oil cooler	
5.23	Clean the sprinkler system	
Every 500 operating hours		
5.24	Changing the main fuel filter	
5.25	Fuel tank, draining the sludge off	
5.26	Service the battery	
Every 1000 operating hours		
5.27	Check and adjust the valve clearance	

https://truckmanualshub.com/

No.	Designation	Note
Every 2000 operating hours		
5.28	Change the hydraulic oil** (at least every 2 years)	HV 32
5.29	Change the hydraulic oil filter** (at least every 2 years)	
5.30	Change the coolant	
5.31	Replace the pump drive toothed belt	
As required		
5.32	Change the dry air filter cartridge (at least 1 x per year)	
5.33	Water sprinkler system, maintenance in case of frost	
5.34	Tightening torques for screws with metric unified thread	
5.35	Engine conservation	

* When using diesel fuel with a sulphur content of more than 0,5 % by weight the engine oil change intervals must be halved. This applies also when using engine oil of API-class CC/SE or CC/SF. Example: Fuel 1 % sulphur and lubrication oil CD/SE.

** Also in case of repairs in the hydraulic system.

https://truckmanualshub.com/

5.6 Checking the engine oil level

i Note

Park the machine on level ground, so that the engine is in horizontal position.

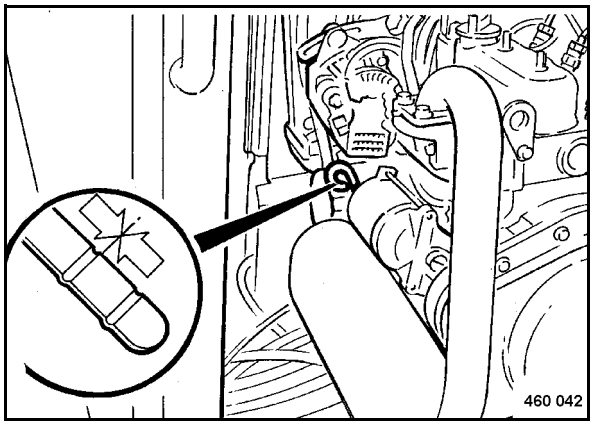

Fig. 78

- Shut the engine down.
- Pull the oil dipstick (Fig. 78) out, wipe it clean with a lint-free cloth and reinsert it until it bottoms.
- Pull the oil dipstick out again.
- The oil level must reach the top mark on the dipstick.
- Top up oil immediately if the oil level is too low.

For quality and quantity of oil refer to the section about fuels, lubricants and filling capacities.

- Check the oil level again after a running time of approx. 1 minute with the engine shut down.

5.7 Checking the fuel level

⚠ Danger

Fire hazard!

Do not inhale any fuel fumes.

When working on the fuel system do not use open fire, do not smoke.

Do not refuel in closed rooms

⚠ Caution

Dirty fuel can cause engine failures or even damage to the engine.

If necessary fill in fuel through a strainer or with a filling gun.

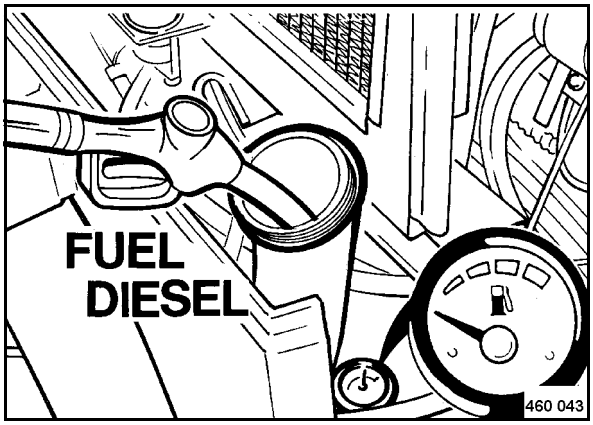

Fig. 79

- Check the fuel level on the fuel gauge (Fig. 79).

i Note

Never drive the fuel tank empty, because this would required bleeding of the entire fuel system.

- Clean the area around the filler opening.
- Unscrew the filler cap.
- If necessary top up fuel (diesel or winter diesel).

For quality of fuel refer to the table of fuels and lubricants.

https://truckmanualshub.com/

5.8 Check the hydraulic oil level

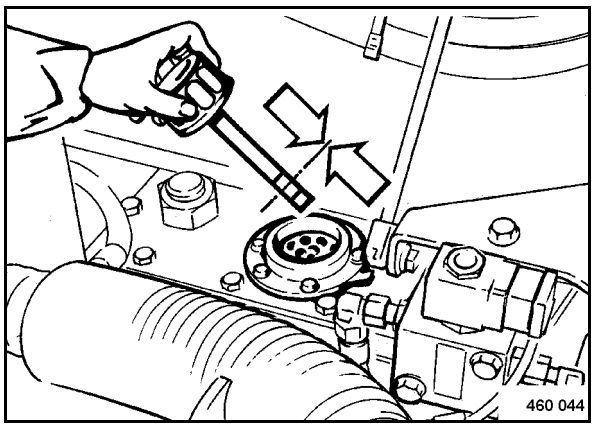

Fig. 80

- Clean the area around the filler opening.
- Remove the filler cap.
- Check the oil level in the inspection glass. The oil level must be between the "MIN" and "MAX" marks (Fig. 80).
- If the oil level is too low top up hydraulic oil immediately.

For quality and quantity of oil refer to the ”table of fuels, lubricants and filling capacities”.

i Note

If, during the daily inspection of the oil level the hydraulic oil level is found to have dropped, check all lines, hoses and components for leaks.

In hydraulic systems filled with Panolin HLP Synth. 32 always use the same oil to top up. With other ester based oils consult the lubrication oil service of the respective oil manufacturer.

5.9 Checking the hydraulic oil filter element

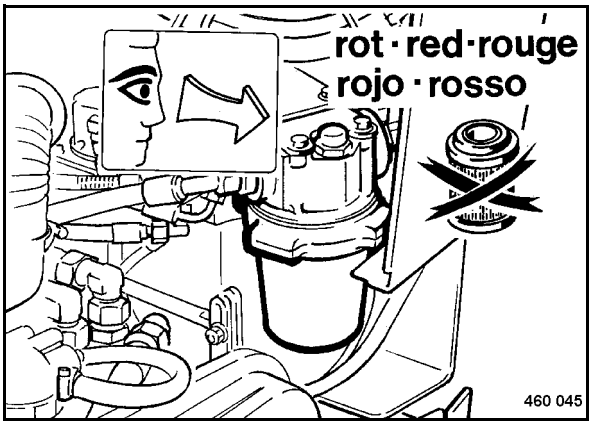

Fig. 81

- Check the hydraulic oil filter contamination indicator at operating temperature and at maximum engine speed.
- If the optical display (Fig. 81) shows red replace the hydraulic oil filter element immediately.

i Note

After replacing the dirty filter the optical display will show green.

https://truckmanualshub.com/

5.10 Checking the coolant level

⚠ Caution

Fill up coolant only when the engine is cold.

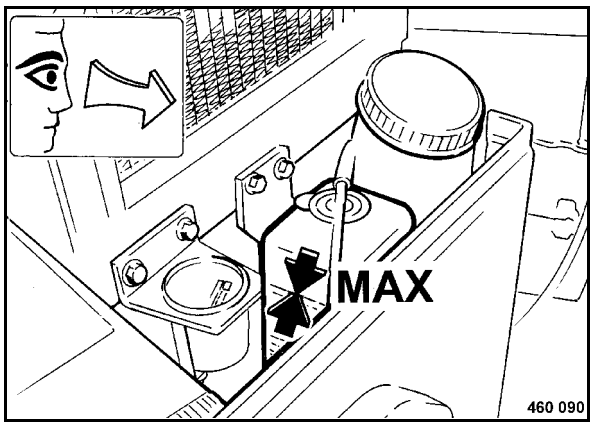

Fig. 82

- Check the coolant level (Fig. 82).

⚠ Caution

If, during the daily inspection the coolant level is found to have dropped, check all lines, hoses and engine for leaks.

- To top up unscrew the filler cap and fill in coolant up to the MAX-mark.

For quality of coolant refer to the chapter 5.2, fuels and lubricants.

5.11 Checking the water level

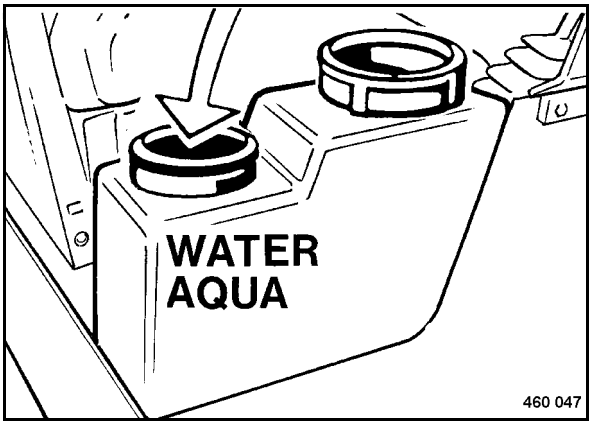

Fig. 83

- Open the lid (Fig. 83) and check the water level.
- If necessary top up water and close the lid.

i Note

In the event of frost observe the special maintenance notes 'water sprinkler system, maintenance in the event of frost'.

Make sure that the bores in the lid are free.

https://truckmanualshub.com/

5.12 Checking the emulsion level (BW 90 AC-2)

i Note

The mixing ratio of water and emulsion must be in accordance with the instructions of the manufacturer.

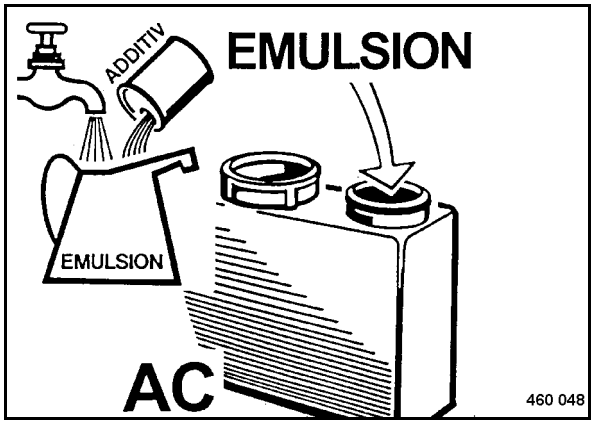

Fig. 84

- Check the emulsion level in the emulsion tank at the back of the machine, top up if necessary (Fig. 84).

5.13 Cleaning the scrapers

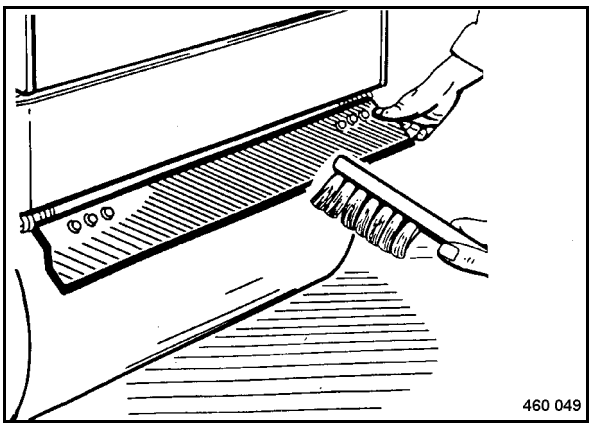

Fig. 85

- Fold the scrapers up and clean them (Fig. 85). This is of particular importance before compacting asphalt surfaces.

https://truckmanualshub.com/

5.14 Greasing the articulated joint

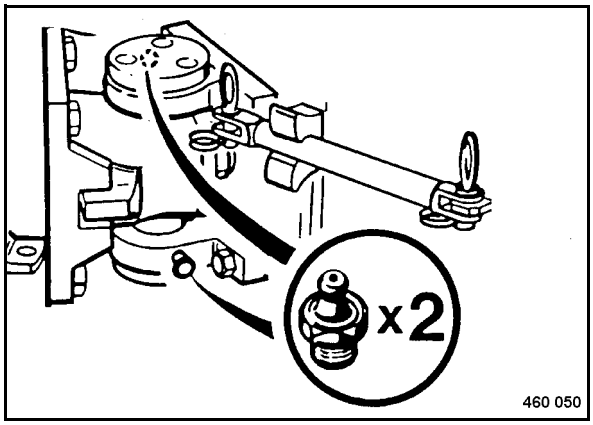

Fig. 86

- Clean the grease nipples (Fig. 86) and lubricate with approx. 5 strokes from the grease gun.

For quality of oil refer to the section about fuels, lubricants and filling capacities.

5.15 Checking the tire pressure

i Note

AC-machines only

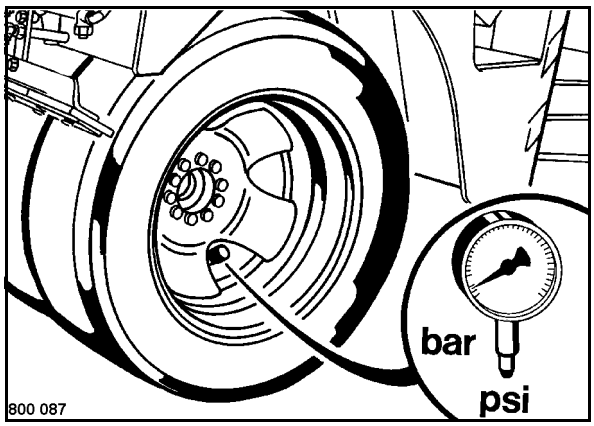

Fig. 87

- Check the tire pressure with a pressure gauge on the tire inflation valve (Fig. 87).

i Note

Ensure even pressure in all tires.

Specified value 2 ... 2,5 bar (29 ... 36 psi)

https://truckmanualshub.com/

5.16 Checking, cleaning, changing the dry air filter cartridge

⚠ Caution

Excessive exhaust smoke may be caused by a soiled dry air filter cartridge.

A dry air filter cartridge with damaged filter element or seal must be replaced in any case. It is therefore recommended to keep at least one cartridge in stock.

The dry air filter cartridge must be changed after being cleaned 6 times, but at the latest after 1 year.

Each cleaning must be marked with a cross on the filter cartridge.

In case of a sooty deposit on the cartridge cleaning does not make sense. Use a new filter cartridge.

Incorrectly handled filter elements may be ineffective because of faults (e.g. cracks) and cause engine damage.

Always replace the filter cartridge if it is soiled with wet or oily dirt.

Do not use gasoline or any hot fluids to clean the filter cartridge.

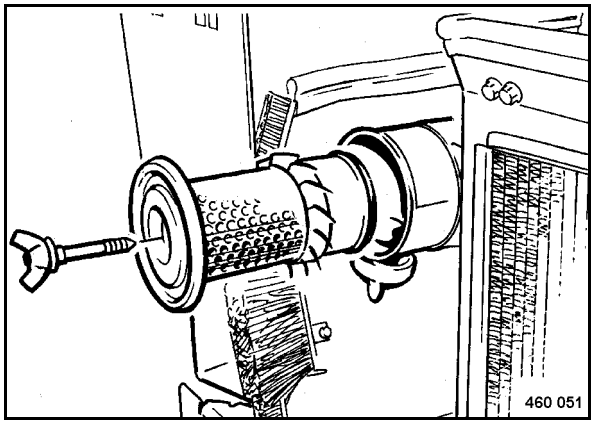

Fig. 88

- Unscrew the wing screw and take the air filter cartridge (Fig. 88) out of the air filter housing.

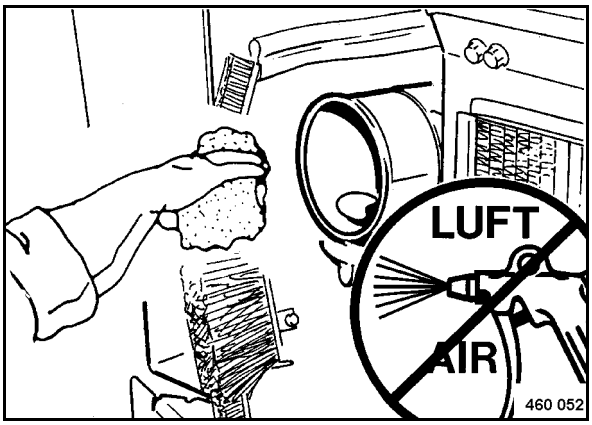

Fig. 89

- Clean the air filter housing out with a cloth (Fig. 89).

⚠ Caution

Do not blow the air filter housing out with compressed air.

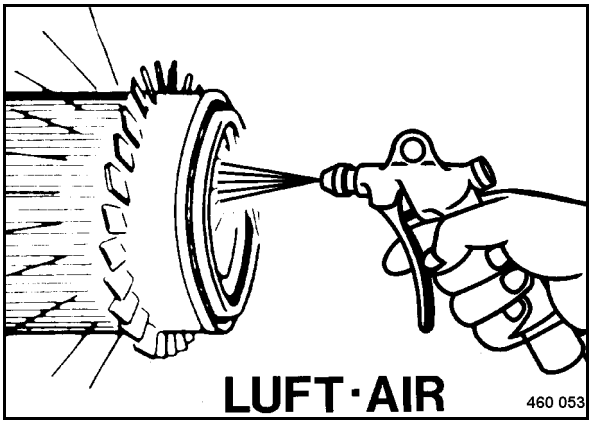

Fig. 90

⚠ Danger

Eye injury!

Wear goggles.

- Blow the dry air filter (Fig. 90) out with clean and dry compressed air with a pressure of max. 7 bar.

⚠ Caution

Do not hold the pressure air nozzle closer than 3 cm to the filter.

- Always blow along the inner folds.

https://truckmanualshub.com/

Wet cleaning:

- Clean the filter cartridge by moving it to and fro in luke-warm water containing a commercial detergent. Then rinse it thoroughly in clear water, shake all water off and let it dry properly.

⚠ Caution

Do not use gasoline or any hot fluids to clean the filter cartridge.

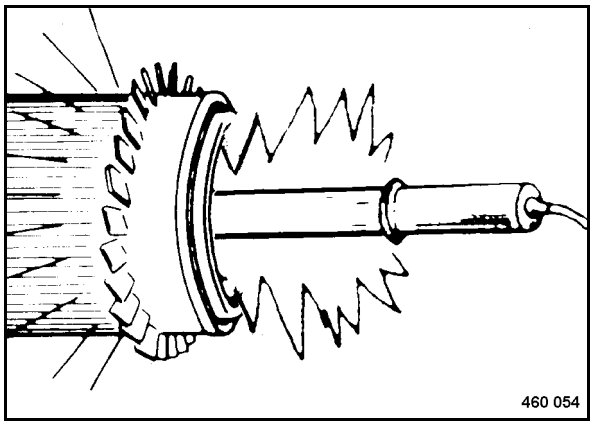

Fig. 91

- Use a torch to examine the dry air filter (Fig. 91) from inside for any holes, cracks, grooves and damage.
- Replace a damaged dry air filter immediately.

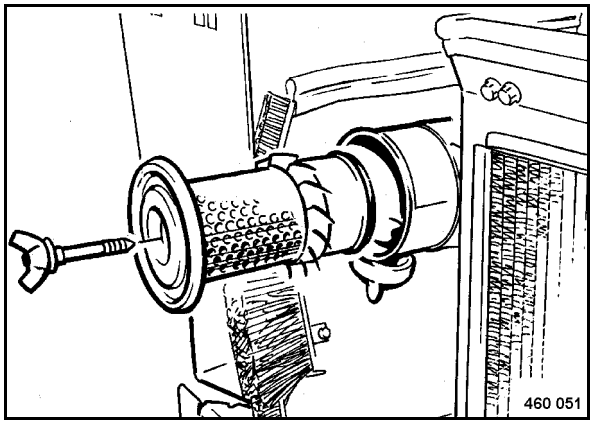

Fig. 92

- Before inserting the cartridge check the sealing faces on the dry air filter.
- Insert the dry air filter and fasten it with the wing screw.

⚠ Caution

If the wing screw is not properly tightened dust and dirt may be drawn in. This may damage the engine.

https://truckmanualshub.com/

5.17 Changing the engine oil

⚠ Caution

The oil change at 250 operating hours applies when using fuel with a sulphur content of less than 0,5 %.

When using fuel with a sulphur content of more than 0,5 % the oil change intervals must be halved (see section 5.2, fuels and lubricants).

Drain the engine oil only when the engine is warm.

⚠ Danger

Danger of scalding!

When draining hot oil.

Environment

Catch running out oil and dispose of environmentally.

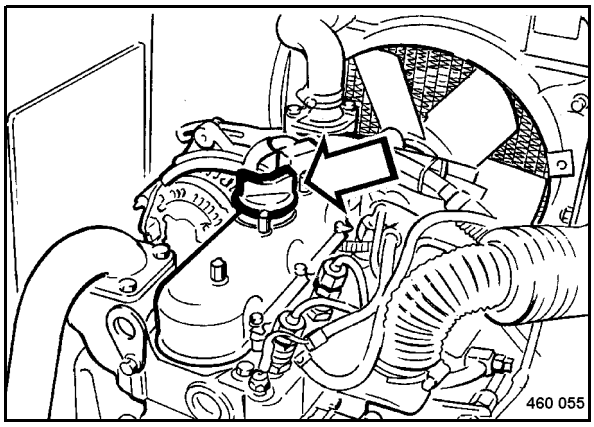

Fig. 93

- Remove the lid from the oil filler opening (Fig. 93).

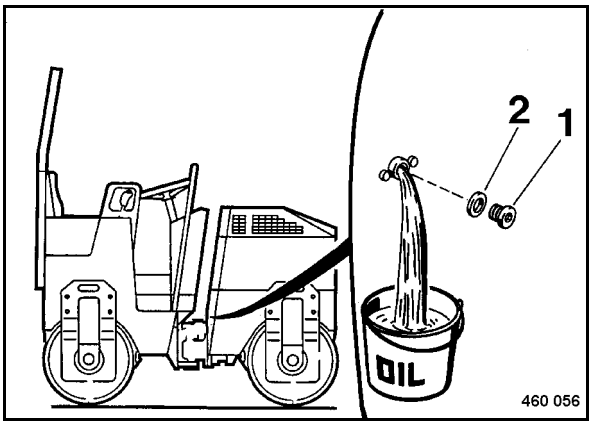

Fig. 94

- Unscrew the drain plug 1 (Fig. 94) and catch all oil running out.
- Screw the drain plug tightly back in with a new sealing ring (2).

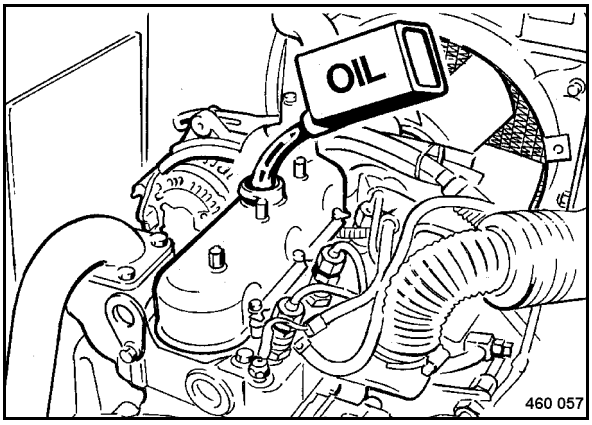

Fig. 95

- Fill in new engine oil (Fig. 95).

For quality and quantity of oil refer to the section about fuels, lubricants and filling capacities.

- Screw the lid back on the oil filler neck.

https://truckmanualshub.com/

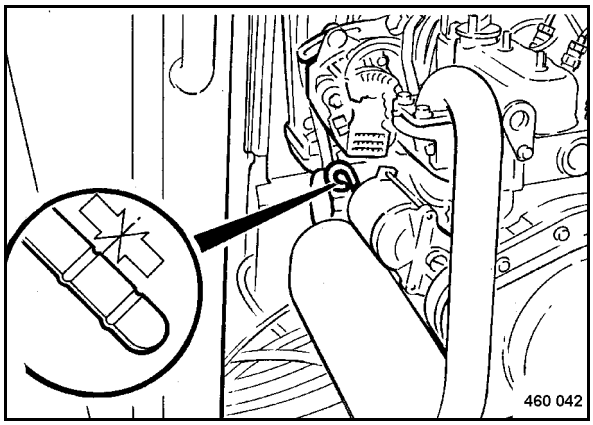

Fig. 96

- After a short test run check the oil level on the dipstick (Fig. 96). The oil level must reach the top mark on the dipstick, if necessary top up oil.

5.18 Change the engine oil filter

Danger

Danger of scalding!

There is a danger of scalding by hot oil when unscrewing the engine oil filter.

Environment

Environmental hazard

Catch running out oil and dispose of environmentally together with the engine oil filter cartridge.

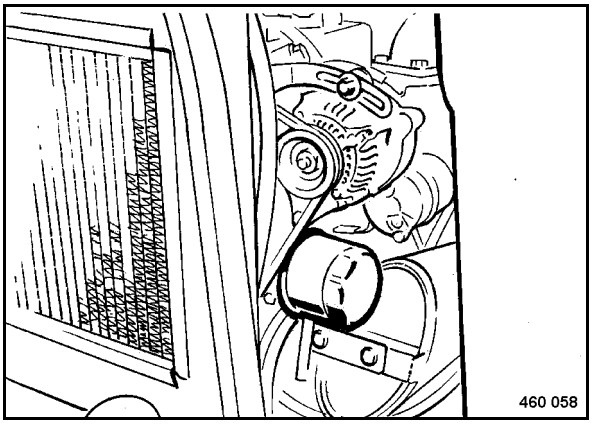

Fig. 97

- Unscrew the filter cartridge (Fig. 97) with a suitable filter wrench.
- Wipe the sealing face on the engine clean.
- Apply some clean oil to the rubber seal on the new filter cartridge.
- Screw the new filter cartridge on and tighten it hand tight.
- After a short test run examine the engine for leaks and check the oil level, if necessary top up oil.

https://truckmanualshub.com/

5.19 Checking the condition, tension of the V-belt, changing the V-belt

⚠ Danger

Danger of accident!

This work must only be performed with the engine shut down.

Checking the V-belt

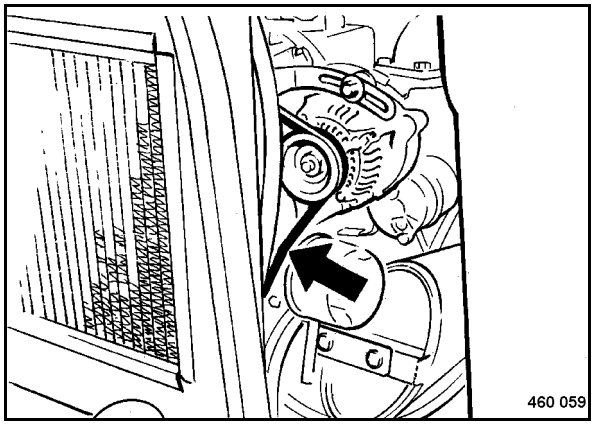

Fig. 98

- Examine the entire circumference of the V-belt (Fig. 98) for damage and cracks. Replace damaged or cracked V-belts.
- Apply thumb pressure to check whether the V-belt can be depressed for more than 7 to 9 mm between the V-belt pulleys, if necessary retension.

Tensioning the V-belt

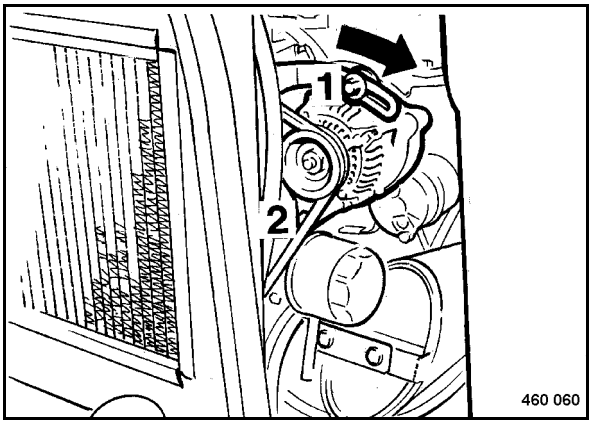

Fig. 99

- Slacken the fastening screws 1 and 2 (Fig. 99).
- Press the generator towards the outside until the correct tension of the V-belt is reached.
- Tighten all fastening screws and check the V-belt tension again.

Changing the V-belt

i Note

Remove the guard from the blower.

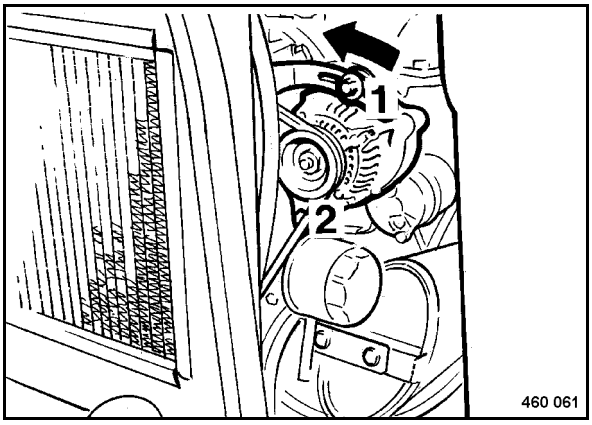

Fig. 100

- Slacken the fastening screws 1 and 2 (Fig. 100).
- Push the generator completely towards the engine..
- Take the old V-belt off.

https://truckmanualshub.com/

- Place the new V-belt on the V-belt pulleys.
- Tension the V-belt as described before.

⚠ Danger

Danger of injury!

Reassemble the guard for the blower.

⚠ Caution

Check the V-belt tension after a running time of 30 minutes.

5.20 Checking the condition and tension of the toothed belt for the pump drive

⚠ Danger

Danger of accident!

This work must only be performed with the engine shut down!

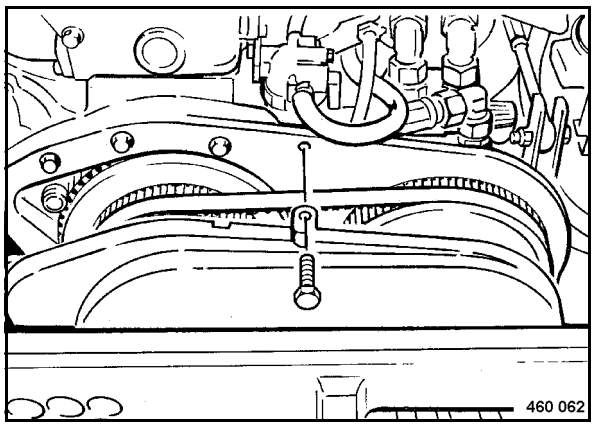

Fig. 101

- Remove the protection hood (Fig. 101).

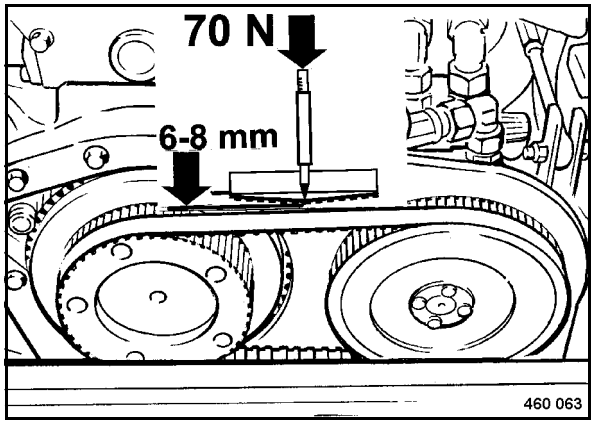

Fig. 102

- Check the entire circumference of the toothed belt (Fig. 102) for starting cracks in the area of the basis and the back of the teeth.
- Have the toothed belt replaced if starting cracks are found.
- Use the belt tension tester (BOMAG P/N 079 947 10) to check whether the toothed belt can be depressed 6 to 8 mm between the

https://truckmanualshub.com/

toothed belt pulleys when applying a pressing force of 70 N.

- Required frequency 100-130 Hz.
- Reassemble the protection hood.

5.21 Changing the fuel precleaner, bleeding the fuel system

⚠ Danger

Fire hazard!

When working on the fuel system do not use open fire, do not smoke.

Do not spill any fuel.

⚠ Caution

Environmental hazard!

Catch running out fuel, do not let it seep into the ground.

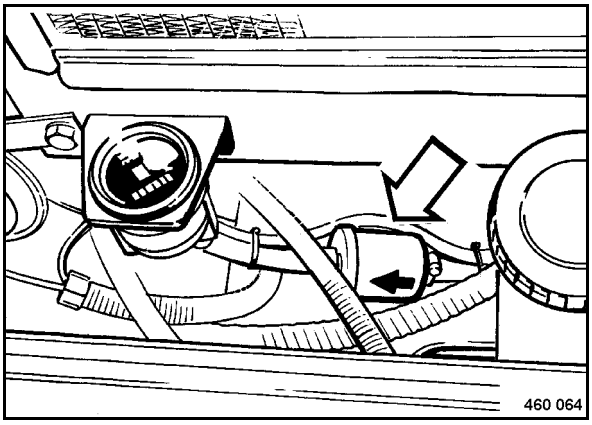

Fig. 103

- Loosen the hose clamp (Fig. 103).
- Pull the fuel filter out of the bottom and the top hoses.
- Install a new fuel filter by observing the flow direction.

Bleeding the fuel system

⚠ Danger

Fire hazard!

Do not bleed the fuel system while the engine is hot. Fuel may drip onto the hot exhaust.

- In the following cases the fuel system needs to be bled: after changing the fuel filter, after running the fuel tank dry, after a long resting period of the machine.

https://truckmanualshub.com/

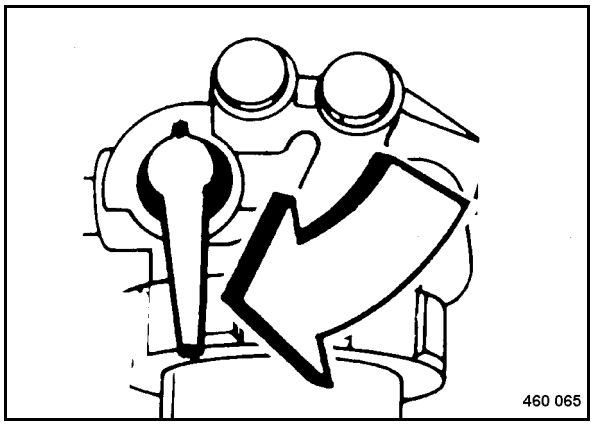

Fig. 104

- Set the fuel shut-off lever (Fig. 104) to vertical position.

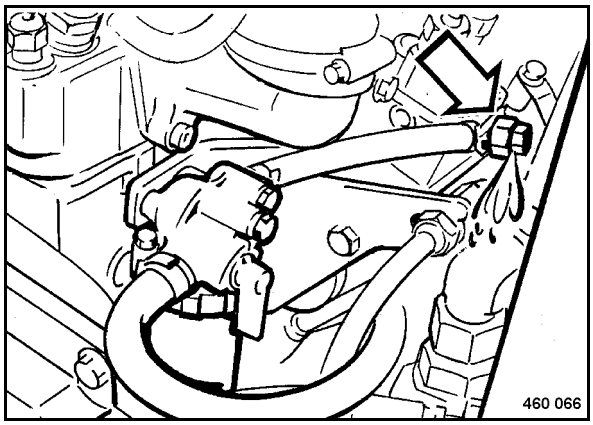

Fig. 105

- Open the bleeding screw (Fig. 105) on the injection pump for a few turns.
- Crank the engine with the starter until fuel runs out without air bubbles.
- Retighten the bleeding screw.

5.22 Cleaning the cooling fins on radiator and hydraulic oil cooler

⚠ Danger

Danger of injury!

Cleaning work should only be carried out with the engine stopped and cooled down.

⚠ Caution

Take care to avoid deformation of the radiator cooling fins.

i Note

Dirt on blower wings and oil cooler reduces the cooling efficiency. Dampness caused by oil and fuel on these surfaces support the accumulation of dirt in these areas. You should therefore eliminate any oil or fuel leaks in these areas immediately and clean the cooling surfaces after.

Coolant radiator

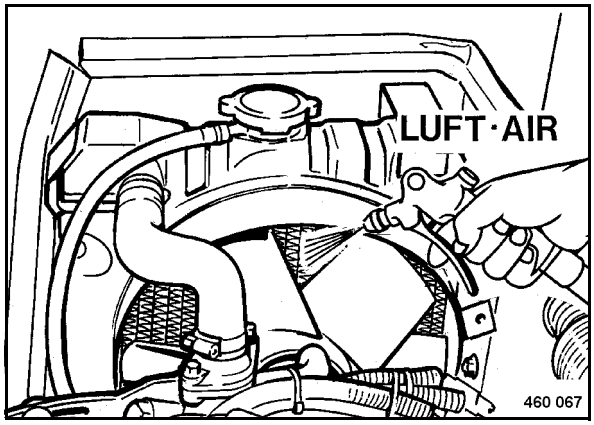

Fig. 106

- Remove the blower grid.

i Note

Start to blow out from the air discharge side.

- Blow the radiator (Fig. 106) out with compressed air from the air discharge side.

https://truckmanualshub.com/

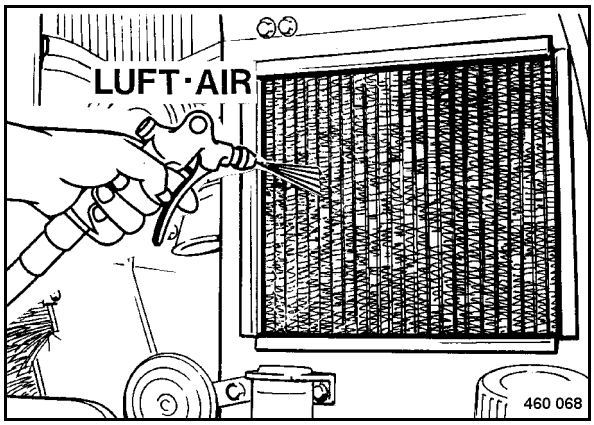

Fig. 107

- Blow the coolant radiator (Fig. 107) out from the air intake side.

Hydraulic oil cooler

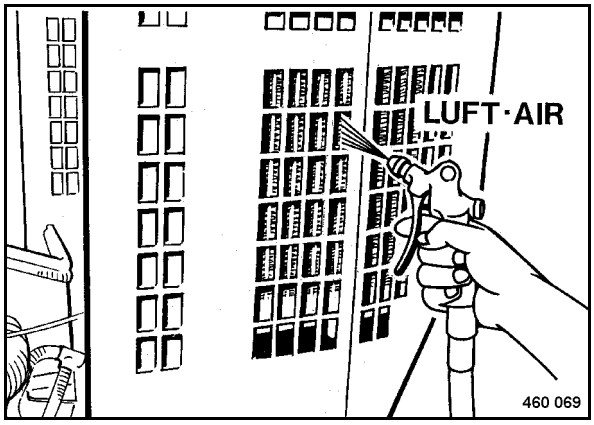

Fig. 108

- Blow the hydraulic oil cooler (Fig. 108) out from the air discharge side first.

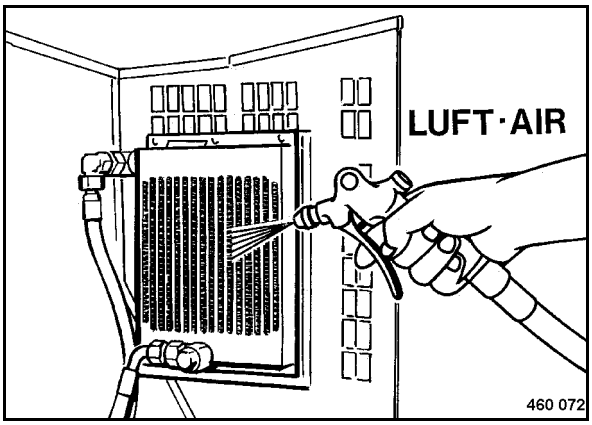

Fig. 109

- Blow the hydraulic oil cooler (Fig. 109) out from the air intake side.

Cleaning with cold cleansing agent

⚠ Caution

Protect electrical equipment such as generator, regulator and starter against the direct water jet.

- Spray the engine with a suitable cleansing agent, e.g. cold cleansing agent and wash it off with a strong water jet after a sufficient soaking time.
- Run the engine warm for a short time to avoid corrosion.
- Reassemble the blower grid.

https://truckmanualshub.com/

5.23 Cleaning the water sprinkler system

i Note

In the event of frost observe the special maintenance notes 'water sprinkler system, maintenance in the event of frost'.

- Drain the water tank.

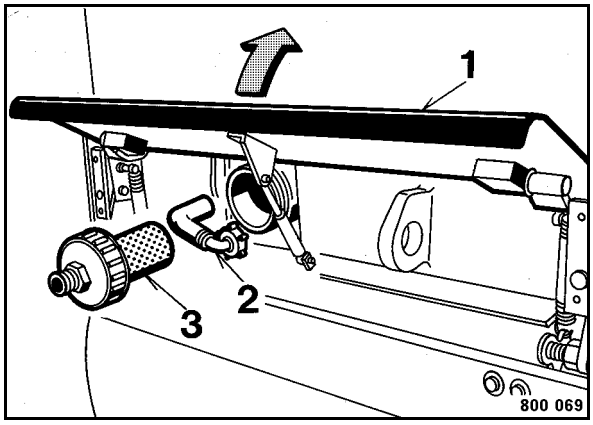

Fig. 110

- Open the rear flap 1 (Fig. 110).
- Unscrew the spigot nut (2).
- Unscrew the water filter (3) and clean it.
- Flush the water tank thoroughly.
- Screw the water filter back in, tighten the spigot nut and close the flap.

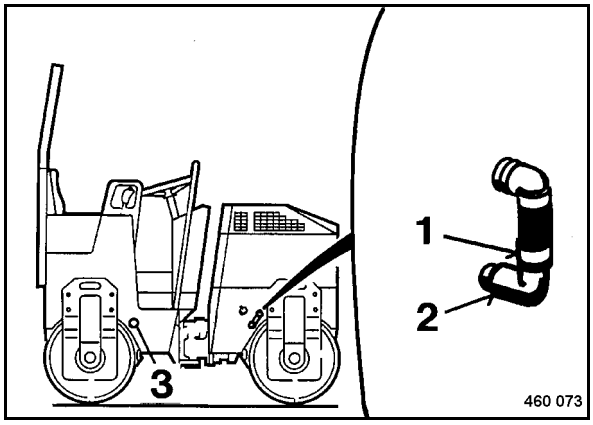

Fig. 111

- Pull the caps 3 (Fig. 111) off both sprinkler tubes.
- Loosen the hose clamps (2) and pull the hoses of the sprinkler tubes.
- Pull the sprinkler tubes (3) out and flush them thoroughly.
- Assemble the sprinkler tubes and fill the water tank.

Environment

Dispose of emulsion fluid environmentally.

- Drain the emulsion tank.

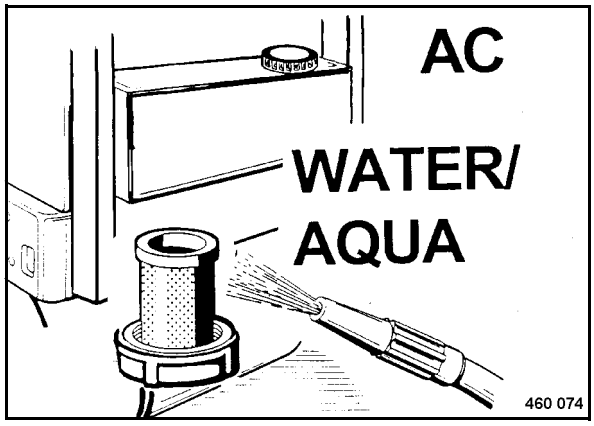

Fig. 112

- Unscrew the fitting.
- Take the emulsion filter (Fig. 112) out and clean it.
- Thoroughly rinse the emulsion tank.
- Reinsert the emulsion filter.
- Turn the fitting back on.

https://truckmanualshub.com/

5.24 Changing the main fuel filter

Danger

Fire hazard!

When working on the fuel system do not use open fire, do not smoke, do not spill any fuel.

Do not inhale any fuel fumes.

Environment

Catch running out fuel, do not let it seep into the ground.

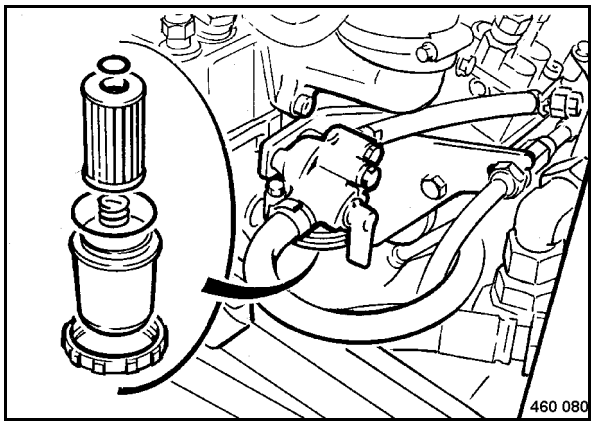

Fig. 113

- Unscrew the filter bowl (Fig. 113).
- Take the filter element out.
- Check O-rings and springs, replace if necessary.
- Wash the filter bowl out with diesel fuel.
- Insert the new filter element.
- Screw the filter bowl back on and bleed the fuel system, refer to the section "changing the fuel precleaner".
- Check the fuel lines for wear and damage, replace if necessary.

5.25 Draining the fuel tank sludge

Danger

Fire hazard!

When working on the fuel system do not use open fire, do not smoke.

Do not spill any fuel.

Catch running out fuel, do not let it seep into the ground.

Note

For this work the fuel tank should not hold more than max. 5 l of fuel, if necessary pump off down to this level.

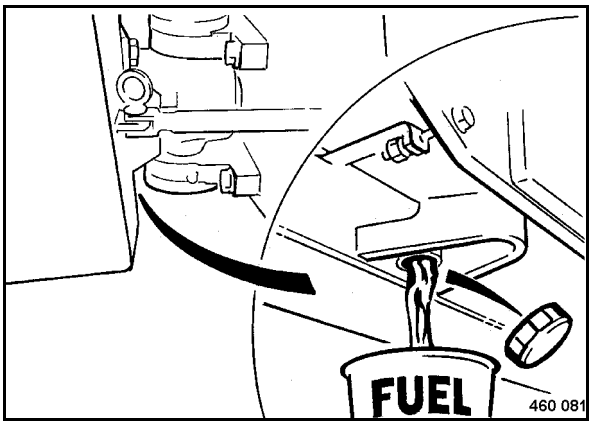

Fig. 114

- Unscrew the screw cap (Fig. 114) under the fuel tank and drain the fuel out.
- After draining the fuel screw the screw cap back on with a new seal ring.

https://truckmanualshub.com/

5.26 Checking the condition of the battery

⚠ Danger

Cauterization, danger of explosion!

When working on the battery do not use open fire, do not smoke!

Do not let acid come in contact with skin or clothes!

Wear safety goggles!

Do not lay any tools on the battery!

For recharging remove the plugs from the battery to avoid the accumulation of highly explosive gases.

⚠ Caution

Dispose of the old batteries environmentally.

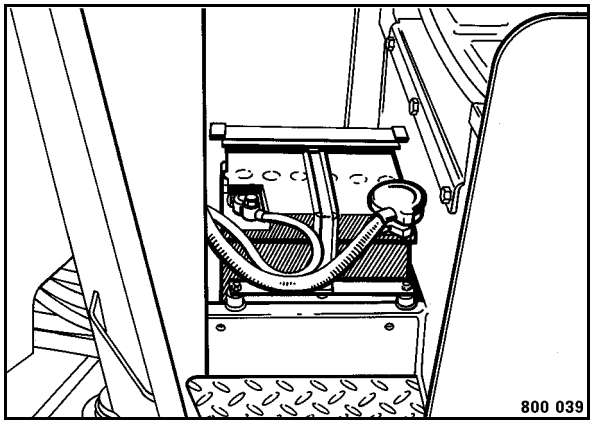

Fig. 115

- Remove the covering hood from the foot area (Fig. 115).

Maintenance free batteries:

- Clean battery and battery compartment.
- Clean battery poles and pole clamps and grease them with pole grease (Vaseline).
- Tighten the terminal clamps.
- Check the fastening of the battery.

Non-maintenance free batteries:

- Clean battery and battery compartment.

⚠ Caution

Top up missing fluid with distilled water.

- Unscrew the plugs and check the acid level, if necessary top up with distilled water.

With control inserts

- The acid level must reach the bottom of the control inserts.

Without control inserts

- The acid level must reach 10 to 15 mm above the upper edge of the lead plates.

i Note

Measure the acid level with a clean wooden stick.

With transparent battery housing

- The acid level must reach the mark on the housing.
- Clean battery poles and pole clamps and grease them with pole grease (Vaseline).
- Tighten the terminal clamps.
- Check the fastening of the battery.

i Note

When using Delco batteries the function must be checked by visually inspecting the installed hydrometer.

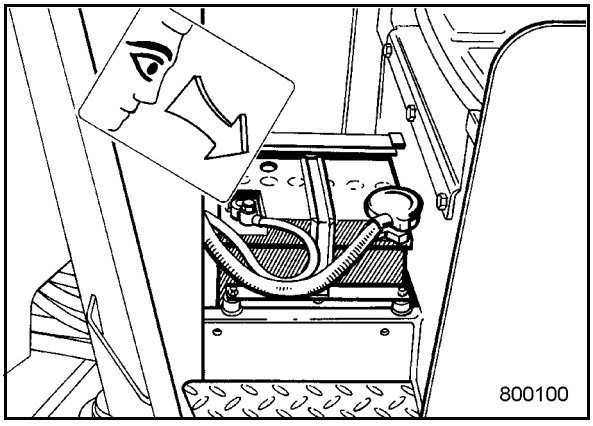

Fig. 116

Colour indication on hydrometer.

- Indication green, battery ready.
- Indication dark green, charge battery.
- Indication yellow, replace battery.

https://truckmanualshub.com/

https://truckmanualshub.com/

5.27 Checking, adjusting the valve clearance

i Note

The valve clearance must only be checked and adjusted when the engine is cold.

⚠ Caution

The first cylinder is at the front on the blower end.

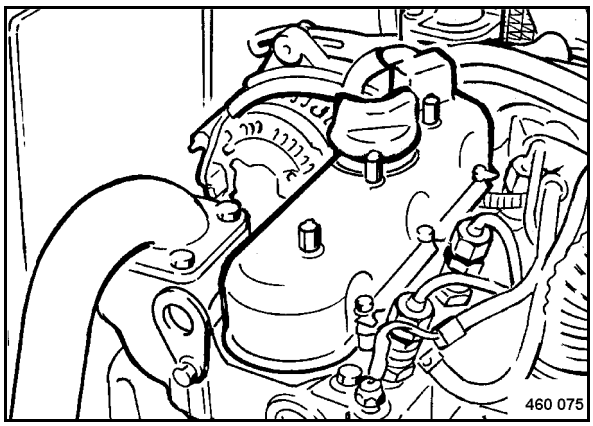

Fig. 117

- Remove the cylinder head cover (Fig. 117).

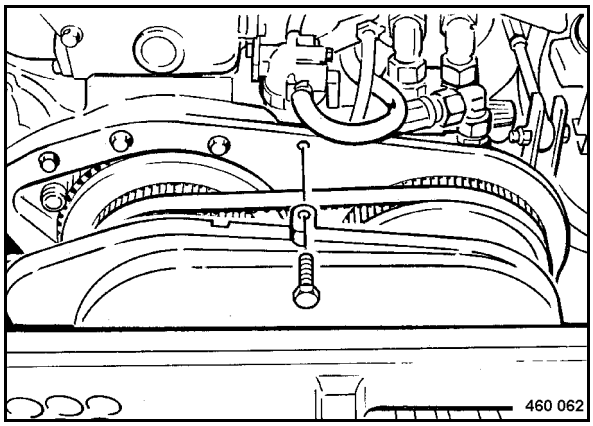

Fig. 118

- Remove the protection hood (Fig. 118).

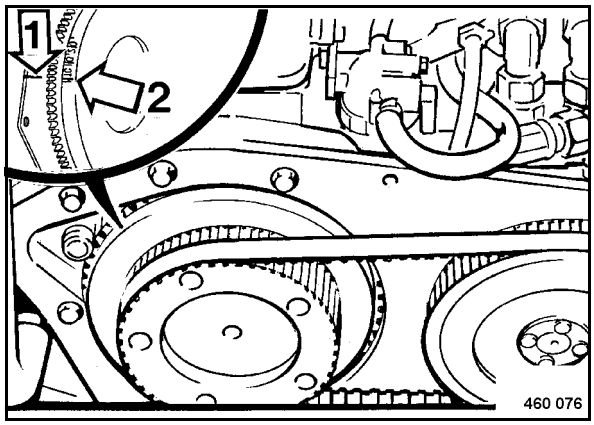

Fig. 119

- Align the mark "1TC" 2 (Fig. 119) on the flywheel to the mark (1) on the housing.

i Note

the piston of cylinder 1 is in top dead center. The "1TC"-mark is only valid for cylinder 1.

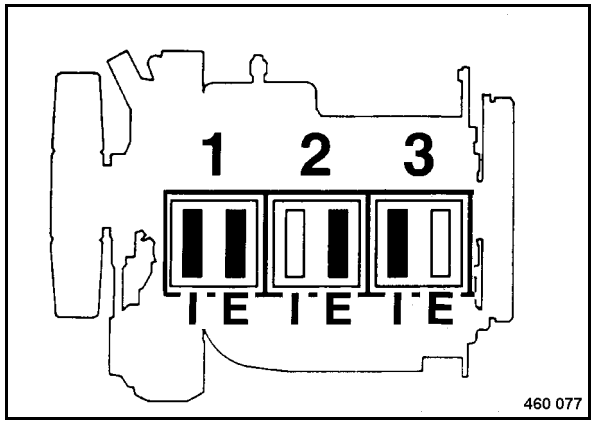

Fig. 120

- Check whether the piston of cylinder 1 is in compression position or in overlap position, to do so turn the flywheel 15° to right or left respectively.

Overlapping	=	both valves are moving and cannot be checked or adjusted.
Compression position	=	none of the valves moves and can be checked or adjusted.

i Note

I = Inlet valve

https://truckmanualshub.com/

E = Exhaust valve

- Check the valves marked black (Fig. 120) on cylinders 1, 2 and 3, adjust if necessary.

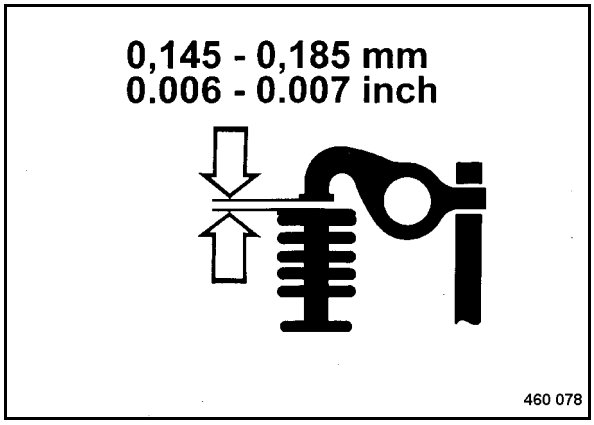

Fig. 121

- Check the gap between rocker arm and valve with a feeler gauge (Fig. 121).

Valve clearance:

Inlet valve and exhaust valve 0,145 - 0,185 mm.

- If the gap is too narrow or too wide for the feeler gauge the valve clearance must be adjusted.

i Note

Mark checked and adjusted valves with chalk.

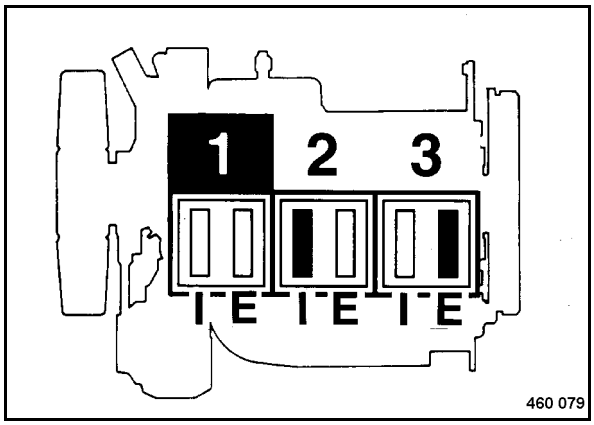

Fig. 122

- Turn the flywheel for another 360° and align the "1TC"-mark with the mark on the mark on the housing.
- Check the valves marked black on cylinders 2 and 3 (Fig. 122), adjust if necessary.
- Install the cylinder head cover with a new gasket.

i Note

After a short test run check the engine for leaks.

https://truckmanualshub.com/

5.28 Changing the hydraulic oil

⚠ Danger

Danger of scalding!

Danger of scalding by hot oil.

⚠ Caution

Do not start the engine after draining off the hydraulic oil. Do not run the pumps without oil.

When changing from a mineral oil based hydraulic oil to an ester based biodegradable hydraulic oil consult the lubrication oil service department of the oil manufacturer.

Environmental hazard

Catch the old oil and dispose of environmentally.

i Note

Apart from the normal oil change intervals the hydraulic oil must also be changed after major repairs in the hydraulic system.

Change the hydraulic oil filter with every hydraulic oil change (see next chapter).

See also section 5.1 "Notes on the Hydraulic System".

- Drive the machine until the hydraulic oil has reached operating temperature.
- Clean the area around the filler opening.
- Take the filler cap off.

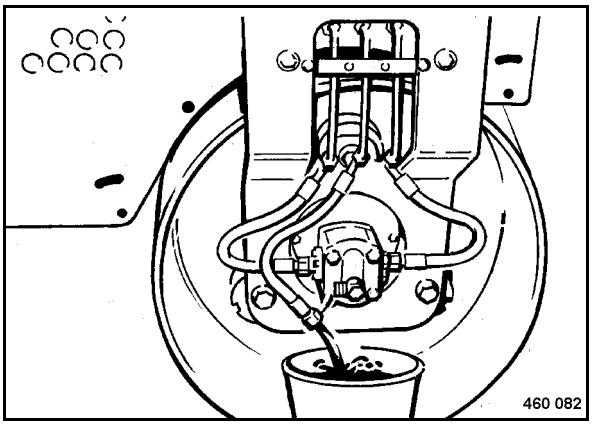

Fig. 123

- Unscrew the hydraulic hose from the vibration motor and catch the old oil running out (Fig. 123).
- Screw the hydraulic hose back on.

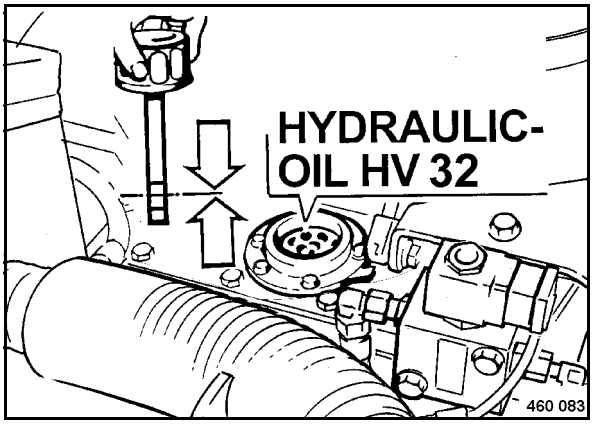

Fig. 124

i Note

We recommend to fill in the hydraulic oil with a filling and filtering unit fitted with a fine filter.

For quality and quantity of oil refer to the section about fuels, lubricants and filling capacities.

- Fill in new hydraulic oil (Fig. 124).
- Do not remove the strainer filter when filling.
- Put the filler cap back on.
- Check the hydraulic oil level on the oil dipstick.
- Perform a test run and check the system for leaks.

https://truckmanualshub.com/

Bleeding the hydraulic system

- Run the engine for max. 3 minutes at idle speed, this will bleed the hydraulic system.

5.29 Changing the hydraulic oil filter element

⚠ Danger

Danger of scalding!

Danger of scalding by hot hydraulic oil.

⚠ Caution

Do not reuse the oil in the filter bowl.

Environmental hazard!

Catch running out oil and dispose of environmentally.

i Note

If the hydraulic oil contamination indicator on the filter shows 'red' while the engine is running and the machine has operating temperature, change the filter element.

When the oil filter element is clean the hydraulic oil filter contamination indicator shows 'green'.

The filter element must be changed with every hydraulic oil change and after major repairs in the hydraulic system.

If the filter has to be changed together with the hydraulic oil, the filter should in any case be changed after the oil change and the test run.

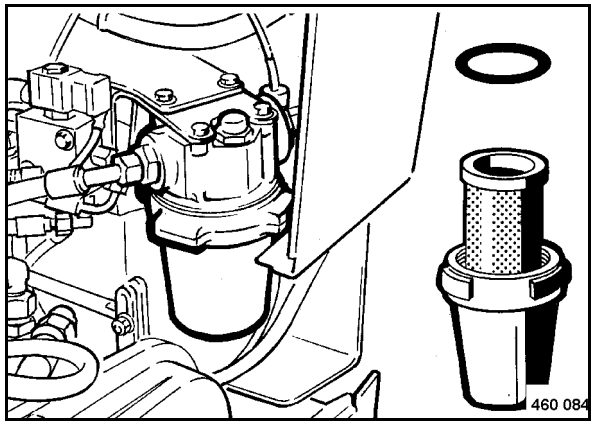

Fig. 125

- Unscrew the filter bowl (Fig. 125) from the filter housing.
- Take the old filter element out and dispose of environmentally.

https://truckmanualshub.com/

- Clean the filter bowl.
- Insert the filter element with the opening facing upwards and screw the filter bowl on, observe the condition of the seal ring.

5.30 Changing the coolant

Danger

Danger of scalding!

Change the coolant only when the engine is cold.

Environment

Catch running out coolant and dispose of environmentally.

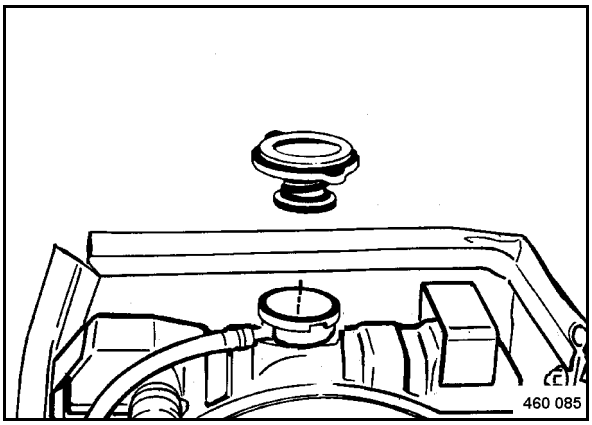

Fig. 126

- Remove the radiator cap (Fig. 126).

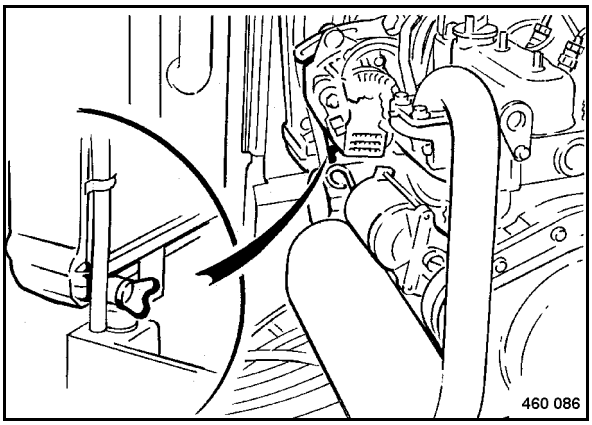

Fig. 127

- Unscrew the drain cock (Fig. 127).
- Drain the coolant completely off and collect it.
- Screw the drain cock back in.
- Empty the coolant compensation tank.

https://truckmanualshub.com/

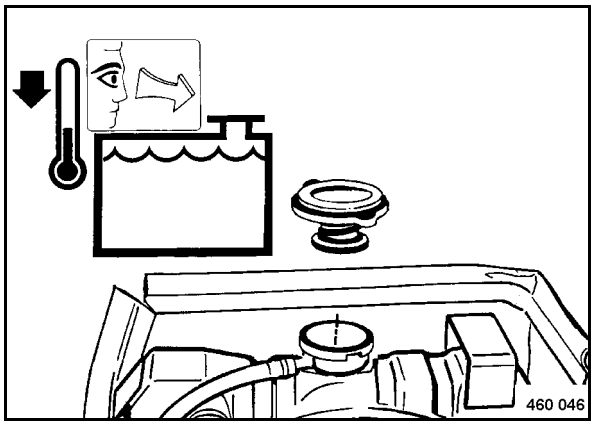

Fig. 128

- Fill in coolant until the level reaches the bottom edge of the filler socket (Fig. 128).

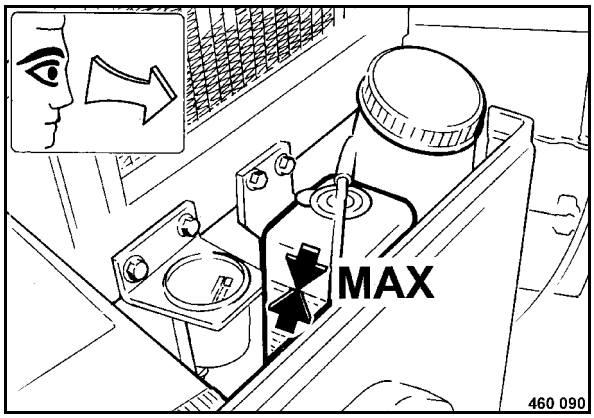

Fig. 129

- Fill in coolant up to the “MAX” mark (Fig. 129).

For quality of coolant refer to the chapter 5.2, fuels and lubricants.

- Reattach radiator cap and cap of the compensation tank.
- Start the diesel engine and run it warm to operating temperature.
- Let the engine cool down and check the coolant level again, top up if necessary.

5.31 Replacing the pump drive toothed belt

⚠ Danger

Danger of accident!

Perform this work only with the engine shut down!

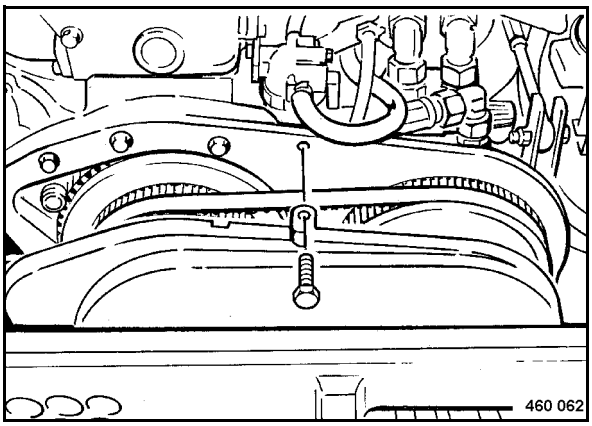

Fig. 130

- Disassemble the protection hood (Fig. 130).

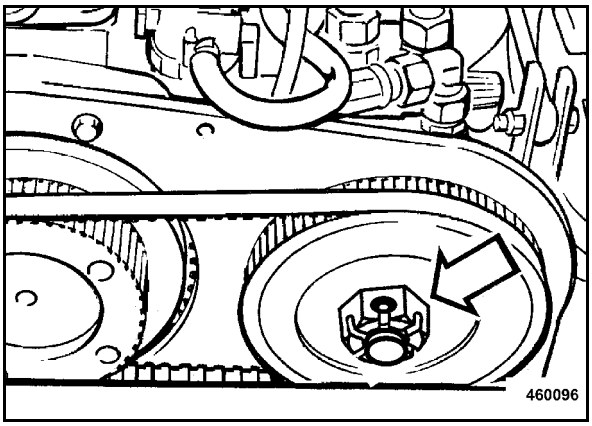

Fig. 131

- Pull out the cotter pin and unscrew the castle nut (Fig. 131) from the toothed belt pulley on the hydraulic pump.

https://truckmanualshub.com/

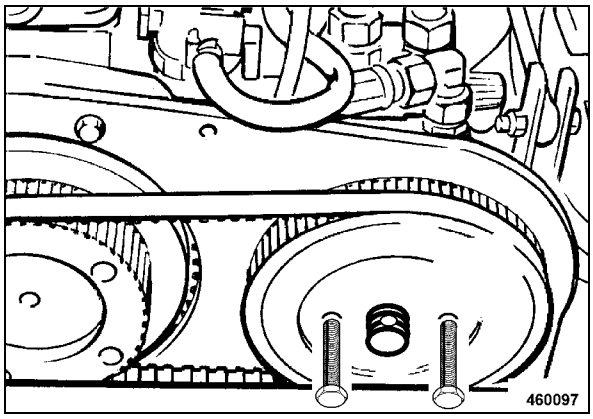

Fig. 132

- Use two forcing screws M8 X60 to press the toothed belt pulley off the retaining taper (Fig. 132) and take off toothed belt with toothed belt pulley.
- Take off the woodruff key.

i Note

When reassembling hold the new toothed belt and the toothed belt pulley always as close as possible to the pump carrier.

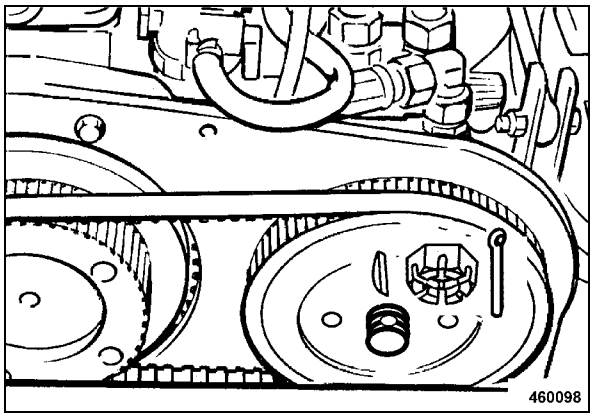

Fig. 133

- Insert the woodruff key into the groove (Fig. 133).
- Screw on the castle nut and tighten with a torque of 50Nm
- Lock the castle nut with the cotter pin.

i Note

If the bore is not in line with the recess in the castle nut, turn the castle nut further, do not turn back.

https://truckmanualshub.com/

5.32 Replacing the dry air filter cartridge

⚠ Caution

Perform cleaning, maintenance and repair work only with the engine shut down. Do not start the engine after removing the filter element.

The dry air filter cartridge must be changed after 6 times cleaning, but at the latest after 1 year.

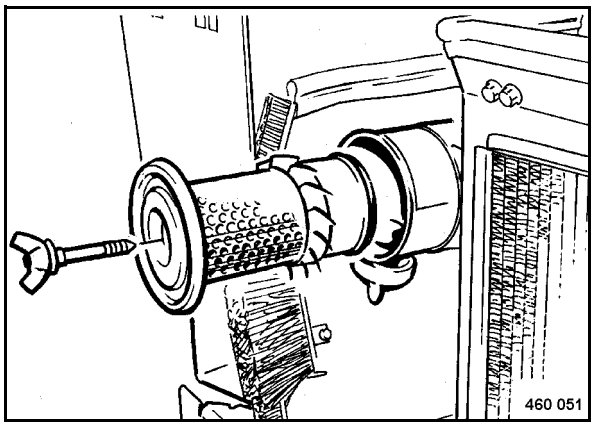

Fig. 134

- Unscrew the wing screw and pull the air filter cartridge (Fig. 134) out of the air filter housing.

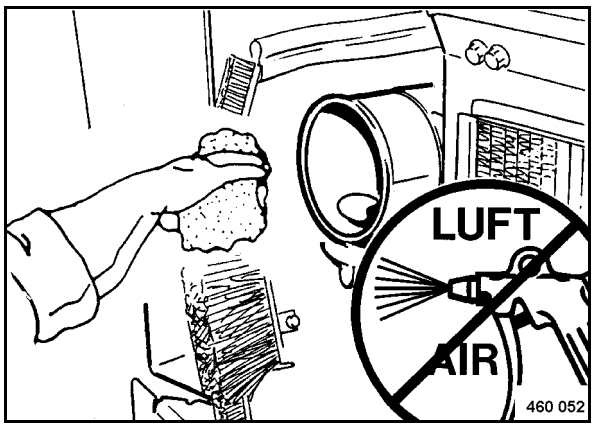

Fig. 135

- Clean out the air filter housing with a cloth (Fig. 135).

⚠ Caution

Do not use compressed air to blow out the air filter housing.

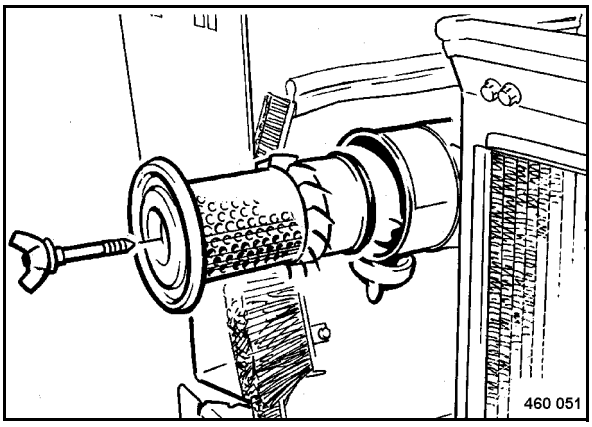

Fig. 136

- Before installation check the sealing faces on the dry air filter (Fig. 136).
- Insert the dry air filter and tighten with the wing screw.

⚠ Caution

If the wing screw is not properly tightened dirt and dust may be drawn in. This may damage the engine.

https://truckmanualshub.com/

5.33 Water sprinkler system, maintenance in the event of frost

⚠ Caution

In the event of frost the water sprinkler system must be drained or filled with an anti-freeze mixture respectively.

- Drain all water off.
- Switch the water sprinkler system on and let all remaining water run out.
- Fill the water tank with approx. 5 l of anti-freeze mixture (water and anti-freeze agent, e.g. glycol).
- Run the sprinkler system, until the anti-freeze mixture starts to run out from the sprinkler tubes.

5.34 Tightening torques for screws with metric unified thread

Bolt dimensions	Tightening torques* ft - lb		
	8.8	10.9	12.9
M4	2	3	4
M5	4	7	7
M6	7	11	13
M8	18	26	33
M10	37	55	61
M12	65	91	108
M14	101	145	173
M16	156	221	264
M18	213	303	361
M20	304	426	513
M22	413	559	695
M24	524	738	885
M27	774	1092	1308
M30	1047	1482	1770

Fig. 137

* Strength classes for screws with untreated, non-lubricated surface. The quality designation of the screws is stamped on the screw heads.

8.8 = 8G

10.9 = 10K

12.9 = 12K

The values result in a 90%ige utilization of the screws yield point, at a coefficient of friction of tot. = 0,14.

The compliance with the specified tightening torques is checked with torque wrenches.

The specified tightening torques do not apply when using a MoS_2 lubricant.

i Note

Self locking nuts must always be replaced after they have been unscrewed.

https://truckmanualshub.com/

5.35 Engine conservation

⚠ Caution

Mark a machine with conserved engine by attaching a clearly visible warning tag.

i Note

Depending on the weather condition these conserving measures will provide protection for approx. 6 - 12 months.

The conserving oil must be replaced by engine oil (refer to the section "Fuels and lubricants") according to the API- (MIL) classification before taking the machine into operation.

Anti-corrosion oils are those that comply with the specification MIL-L-21260 B or TL 9150-037/2 resp. Nato Code C 640/642.

If the engine is to be shut down for a longer period of time (e.g. during winter) we recommend the following conservation measures for the engine to avoid corrosion:

- Clean the engine, including the cooling system: With cold cleansing agent and a water jet or, even better, with steam cleaning equipment
- Run the engine warm and shut it down.
- Drain the still warm engine oil and fill in anti-corrosion engine oil.
- Drain the fuel from the fuel tank, mix it well with 10% anti-corrosion oil and fill it in again. Instead of mixing anti-corrosion oil to the fuel the tank may also be filled with injection pump testing oil with anti-corrosive properties (e.g. Calibration Fluid B).
- Run the engine for 10 minutes until all lines, filter, pump and nozzles are filled with the conserving mixture and the new engine oil is distributed to all parts.
- After this run remove the cylinder head cover and spray the rocker chamber with a mixture of diesel fuel and 10% anti-corrosion oil. Reassemble the hood.
- Now crank the engine several times (throttle lever in stop-position) to spray the combustion chamber.
- Take the V-belt off and spray the grooves on the V-belt pulleys with anti-corrosion oil. Remove the anti-corrosion oil before restarting the machine.
- Close the air intake opening on the air filter and the exhaust opening.

https://truckmanualshub.com/

As required

https://truckmanualshub.com/

6 Trouble shooting

https://truckmanualshub.com/

6.1 General notes

The following work must only be carried out by qualified and trained personnel or by the BOMAG sales service.

Please observe strictly the safety regulations in chapter 2 of these operating and maintenance instructions.

Malfunctions are frequently caused by incorrect operation of the machine or insufficient maintenance. Whenever a fault occurs you should therefore thoroughly read these instruction on correct operation and maintenance. If you cannot locate the cause of a fault or rectify it yourself by following the trouble shooting chart, you should contact the service departments at our branch offices or dealers.

On the following pages you will find a selection of fault remedies. It goes without saying that not all possible reasons for faults could be listed.

⚠ Danger

Danger of injury!

Do not touch rotating parts of the engine.

https://truckmanualshub.com/

6.2 Engine

Faults	Possible cause	Remedy
The engine does not start	Fuel tank empty	Fill the tank
	Fuel filter clogged,in winter due to paraffin separation	Change the filter Use winter fuel
	Fuel lines leaking	Check all line connections for leakages and tighten the fittings.
	Travel lever not in "0"-position	Move the travel lever to "0"-position
	Battery discharged or not connected	Charge the battery, check the terminal clamps
	Operating error	see chapter "Starting the engine"
	Incorrect valve clearance	Adjust the valve clearance
	Lack of oil	Top up engine oil
	Emergency stop switch is engaged.	Emergency stop switch is unlocked.
The engine starts poorly and works irregularly with poor power	Battery power too low	Have the battery inspected
	Battery clamps loose or oxidized, causing the starter to turn too slowly	Clean the terminal clamps, tighten them and cover them with acid free grease
	Especially during winter: the use of too viscous engine oil	Use engine oil suitable for the ambient temperature
	Insufficient fuel supply, clogging of the fuel system due to paraffin separation in winter	Change the fuel filter Check the line connections for leaks and tighten the fittings. Use winter fuel in the cold season.
	Incorrect valve clearance	Adjust the valve clearance
	Injection valves or injection pump defective	Have examined by a specialist
	Air filter cartridge dirty	Clean, change if necessary
	Excessive play in the throttle cable	Adjust the throttle cable, change it if necessary
Engine loses power and speed, excessive exhaust smoke	Engine oil level too high	Drain the oil to the upper dipstick mark
	Poor fuel quality	Use specified fuel
	Air filter dirty	Clean, change if necessary
	Poor compression due to burned or broken compression rings or incorrect valve clearance	Have compression rings and pistons examined by a specialist, adjust the valve clearance
	Injection valve defective	Have examined by a specialist

https://truckmanualshub.com/

Faults	Possible cause	Remedy
Engine overheats, shut down immediately!	Radiator excessively soiled	Clean the cooling fins
	Coolant level to low	Top up coolant.Danger! Only when the engine is cold
	Injection valve defective	Have examined by a specialist
	Engine oil level too low	Top up engine oil to the upper dipstick mark
	Filling capacity of the injection pump not correctly adjusted	Have adjusted by a specialist
	Lack of cooling air at the cooling air blower	Clean the cooling air duct
	V-belt loose or broken	Tension or replace the V-belt
	Air filter cartridge dirty	Clean, change if necessary
Engine oil pressure too low, shut down immediately	Leakages in the lubrication system, oil level too low	Check fittings on oil lines, lubrication oil filter for leaks, tighten the fittings if necessary. Top up lubrication oil up to the upper mark on the dipstick.
	Engine oil of wrong SAE-class	Change the engine oil.
The charge control light lights during operation	The generator does not charge the battery, because generator or regulator is defective	Have examined by a specialist

https://truckmanualshub.com/

BOMAG

We will help you - immediately!

Operating, maintenance, repair instructions and spare parts catalogues

- in situ:

- Safe and simple trouble shooting
- Secure access to required spare parts
- Easy to understand – from experts for users

Contact us or your BOMAG distributor!

englisch

https://truckmanualshub.com/

BOMAG

Printed in Germany

Head Office/Hauptsitz

BOMAG
Hellerwald
56154 Boppard
GERMANY
Tel.: +49 6742 100-0
Fax: +49 6742 3090
e-mail: germany@bomag.com

www.bomag.com

BOMAG
Niederlassung Berlin
Gewerbestraße 3
15366 Dahlwitz-Hoppegarten
GERMANY
Tel.: +49 3342 369410
Fax: +49 3342 369436
e-mail: nlberlin@bomag.de

BOMAG
Niederlassung Boppard
Hellerwald
56154 Boppard
GERMANY
Tel.: +49 6742 1000
Fax: +49 6742 100392
e-mail: nlboppard@bomag.de

BOMAG
Niederlassung Chemnitz
Querstraße 6
09247 Chemnitz
GERMANY
Tel.: +49 3722 51590
Fax: +49 3722 515951
e-mail: nlchemnitz@bomag.de

BOMAG
Niederlassung Hannover
Dieselstraße 44
30827 Garbsen-Berenbostel
GERMANY
Tel.: +49 5131 70060
Fax: +49 5131 6766
e-mail: nlhannover@bomag.de

BOMAG
Niederlassung München
Otto-Hahn-Ring 3
85301 Schweitenkirchen
GERMANY
Tel.: +49 8444 91840
Fax: +49 8444 918420
e-mail: nlmuenchen@bomag.de

BOMAG
Niederlassung Stuttgart
Kruppstraße 8
71696 Möglingen
GERMANY
Tel.: +49 7141 24500
Fax: +49 7141 245025
e-mail: nlstuttgart@bomag.de

BOMAG
Maschinenhandelsgesellschaft m.b.H.
Postfach 73
Porschestraße 9
1234 Wien-Siebenhirten
AUSTRIA
Tel.: +43 1 69040-0
Fax: +43 1 69040-20
e-mail: austria@bomag.com

BOMAG (CANADA), INC.
1300 Aerowood Drive
Mississauga, Ontario L4W 1B7
CANADA
Tel.: +1 905 6256611
Fax: +1 905 6254403
e-mail: canada@bomag.com

BOMAG (Shanghai)
Compaction Machinery Co. Ltd.
No. 1619 Shanghai-Hangzhou Highway
Shanghai Comprehensive Industrial
Development Zone
Shanghai 201400
CHINA
Tel.: +86 2163532728
Fax: +86 2163532730
e-mail: china@bomag.com

BOMAG S.A.F.
BP 34
Z.A. des Cochets
91223 Bretigny-sur-Orge cedex
FRANCE
Tel.: +33 1 69883900
Fax: +33 1 60841866
e-mail: france@bomag.com

BOMAG (GREAT BRITAIN), LTD.
Sheldon Way, Larkfield
Aylesford
Kent ME20 6SE
GREAT BRITAIN
Tel.: +44 1622 716611
Fax: +44 1622 718385
e-mail: gb@bomag.com

BOMAG Italia Srl.
Z.I. Via Mella, 6
25015 Desenzano del Garda (BS)
ITALY
Tel.: +39 030 9127263
Fax: +39 030 9127278
e-mail: italy@bomag.com

BOMAG Japan Co. Ltd.
EKK Bldg. 5F 3-2-2
Nihonbashi Kayaba-cho
Chuo-ku Tokyo
103-0025
JAPAN
Tel.: +81 3 5645 1610
Fax: +81 3 3664 8570
e-mail: japan@bomag.com

BOMAG
Representative Office Asia & Pacific
300 Beach Road
The Concourse, 32-02
Singapore 199555
SINGAPORE
Tel.: +65 294 1277
Fax: +65 294 1377
e-mail: singapore@bomag.com

Compaction America Inc.
2000 Kentville Road
Kewanee, Illinois 61443
U.S.A.
Tel.: +1 309 8533571
Fax: +1 309 8520350
e-mail: usa@bomag.com