www.truck-freeworkshop.com

FOREWORD

This repair manual explains the repair points of the 4Y model engine equipped on the Toyota Forklift Trucks.

Please make good use of this manual for your technical service.

This repair manual contains the latest information available as of August 2006. For any changes thereafter, Toyota reserves the right to make such changes in specifications and descriptions without incurring any obligation and without previous notice.

TOYOTA Material Handling Company
A Division of TOYOTA INDUSTRIES CORPORATION

www.truck-freeworkshop.com

www.truck-freeworkshop.com

SECTION INDEX

NAME	SECTION
GENERAL	0
TROUBLESHOOTING	1
ENGINE OVERHAUL (4Y-M)	2
ENGINE OVERHAUL (4Y-E)	3
FUEL SYSTEM (4Y-M)	4
FUEL SYSTEM (4Y-E)	5
PCV DEVICE	6
COOLING SYSTEM	7
LUBRICATION SYSTEM	8
IGNITION SYSTEM (4Y-M)	9
IGNITION SYSTEM (4Y-E)	10
STARTING SYSTEM	11
CHARGING SYSTEM	12
APPENDIX	13

www.truck-freeworkshop.com

www.truck-freeworkshop.com

GENERAL

Page

SPECIFICATIONS 0-2

ENGINE EXTERIOR VIEW 0-3

ENGINE SECTIONAL VIEW 0-5

HOW TO USE THIS MANUAL 0-7

- EXPLANATION METHOD 0-7
- TERMINOLOGY 0-8
- ABBREVIATIONS 0-9

OPERATING TIPS 0-10

- POINTS FOR WHICH SPECIAL CARE MUST BE TAKEN 0-10
- GENERAL INSTRUCTIONS 0-10
- ELECTRICAL PARTS INSPECTION 0-13

BOLT & NUT TIGHTENING TORQUES 0-15

- BOLT STRENGTH CLASS IDENTIFICATION METHOD AND TIGHTENING TORQUE 0-15

PRECOATED BOLTS (BOLTS WITH SEAL LOCK AGENT COATING ON THREADS) 0-18

SI UNITS 0-18

HANDLING FIPG (LIQUID GASKETS) 0-19

www.truck-freeworkshop.com

SPECIFICATIONS

Engine model*		4Y	
		4Y-M	4Y-E
Type		Gasoline	←
Cycle		4	←
Number and arrangement of cylinders		Inline 4 cylinder, longitudinally mounted	←
Ignition order		1-3-4-2	←
Start up method		Self starting type	←
Combustion chamber type		Wedge type	←
Valve mechanism		OHV chain drive	←
Bore x stroke mm (in.)		91.0 × 86.0 (3.58 × 3.39)	←
Total displacement cc (cu·in)		2237 (136)	←
Compression ratio		8.8	←
Compression pressure kPa (kgf/cm^2) [psi]/rpm		1226 (12.5) [178]/250	←
Minimum fuel consumption when fully loaded g/PS·h (rpm)		Refer to repair manual for each vehicle model	←
No-load maximum speed rpm		Refer to repair manual for each vehicle model	←
Idle speed rpm		Refer to repair manual for each vehicle model	←
Engine dimensions (length × width × height) mm (in.)		709 × 525 × 733 (27.9 × 20.7 × 28.9)	709 x 513 x 733 (27.9 × 20.2 × 28.9)
Weight kg (lb)		134 (295)	←
Number of piston rings	Compression rings	2	←
	Oil ring	1	←
Intake valve open/close interval	Open	BTDC 12°	←
	Close	ABDC 40°	←
Exhaust valve open/close interval	Open	BBDC 54°	←
	Close	ATDC 6°	←
Valve clearance mm (in.)	Intake	0 (Automatic adjusting type)	←
	Exhaust	0 (Automatic adjusting type)	←
Blow-by gas reductor type		Closed type	←

*: In this manual the engine with mechanical fuel injection fitted is referred to as 4Y-M, while the one with electronic fuel injection fitted is referred to as 4Y-E.

www.truck-freeworkshop.com

ENGINE EXTERIOR VIEW

4Y-M

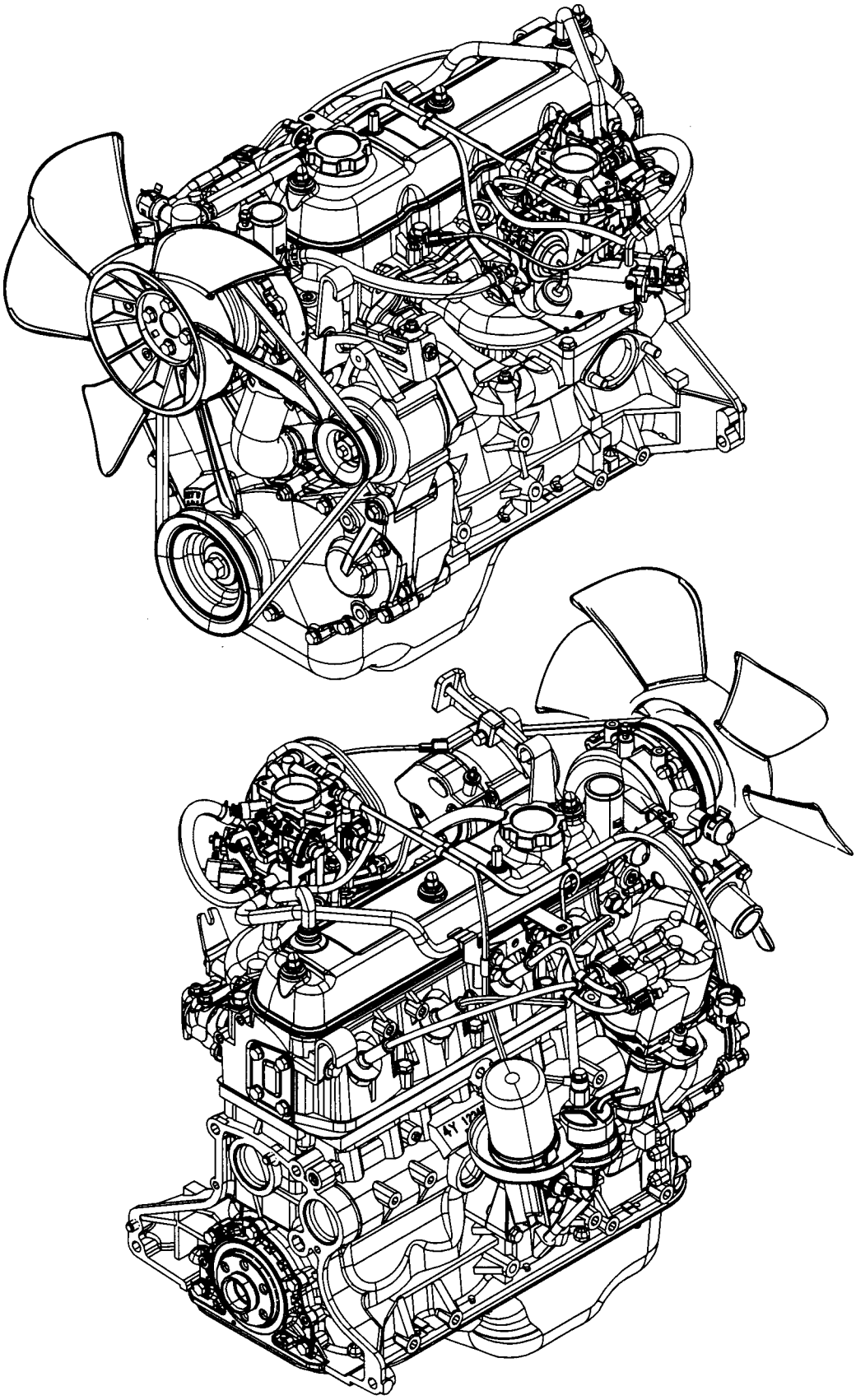

www.truck-freeworkshop.com

4Y-E (OPT)

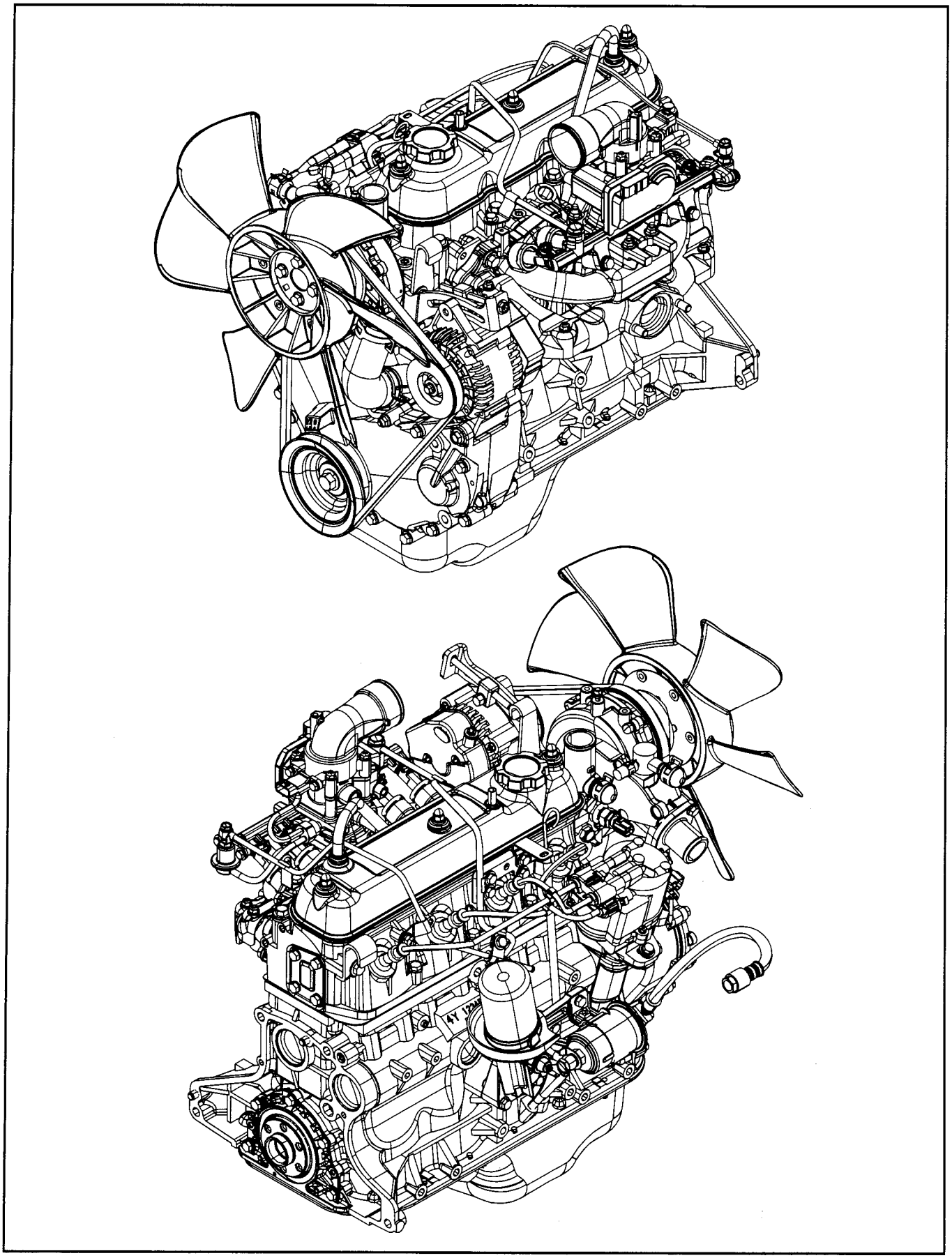

www.truck-freeworkshop.com

ENGINE SECTIONAL VIEW

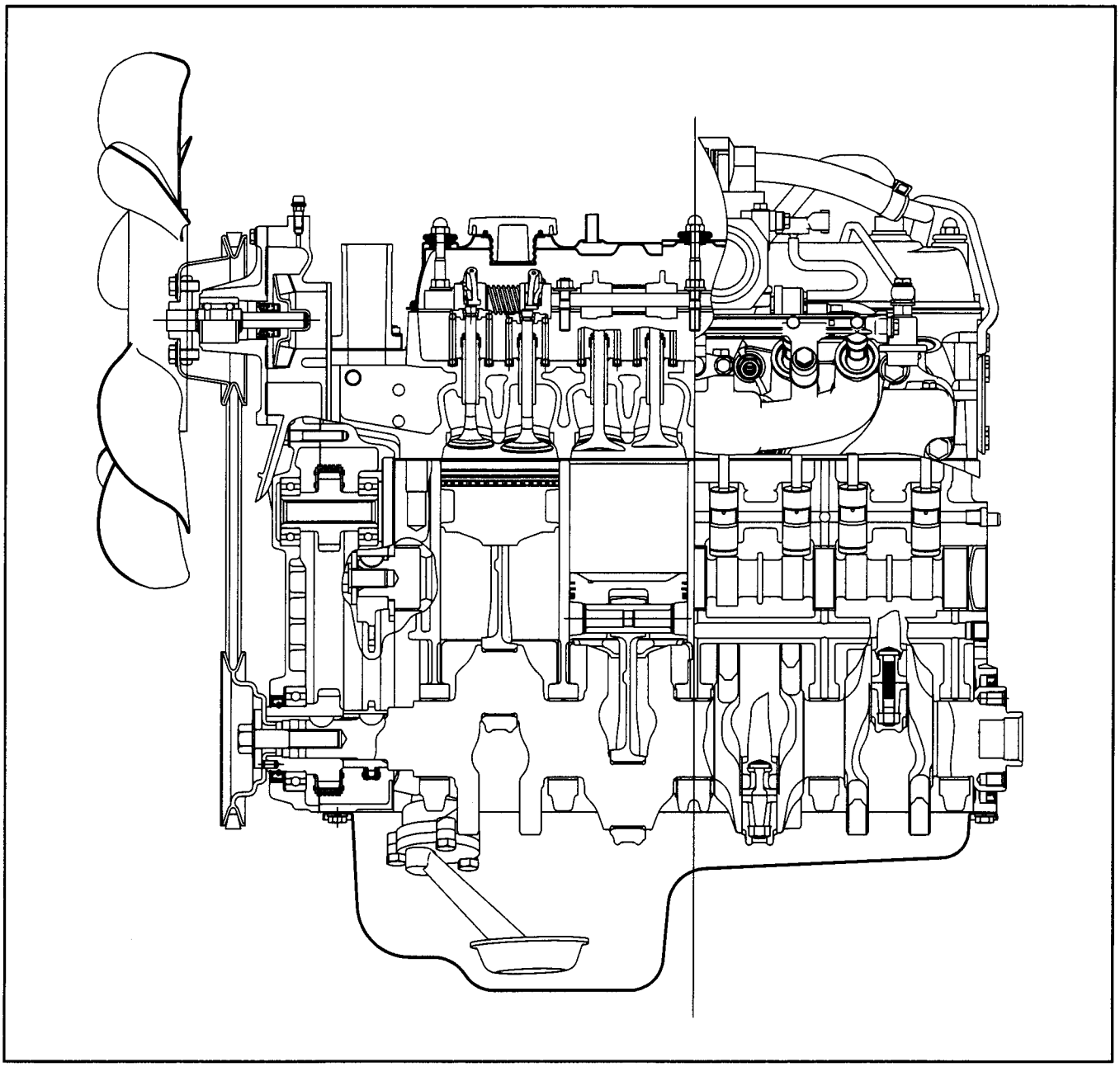

www.truck-freeworkshop.com

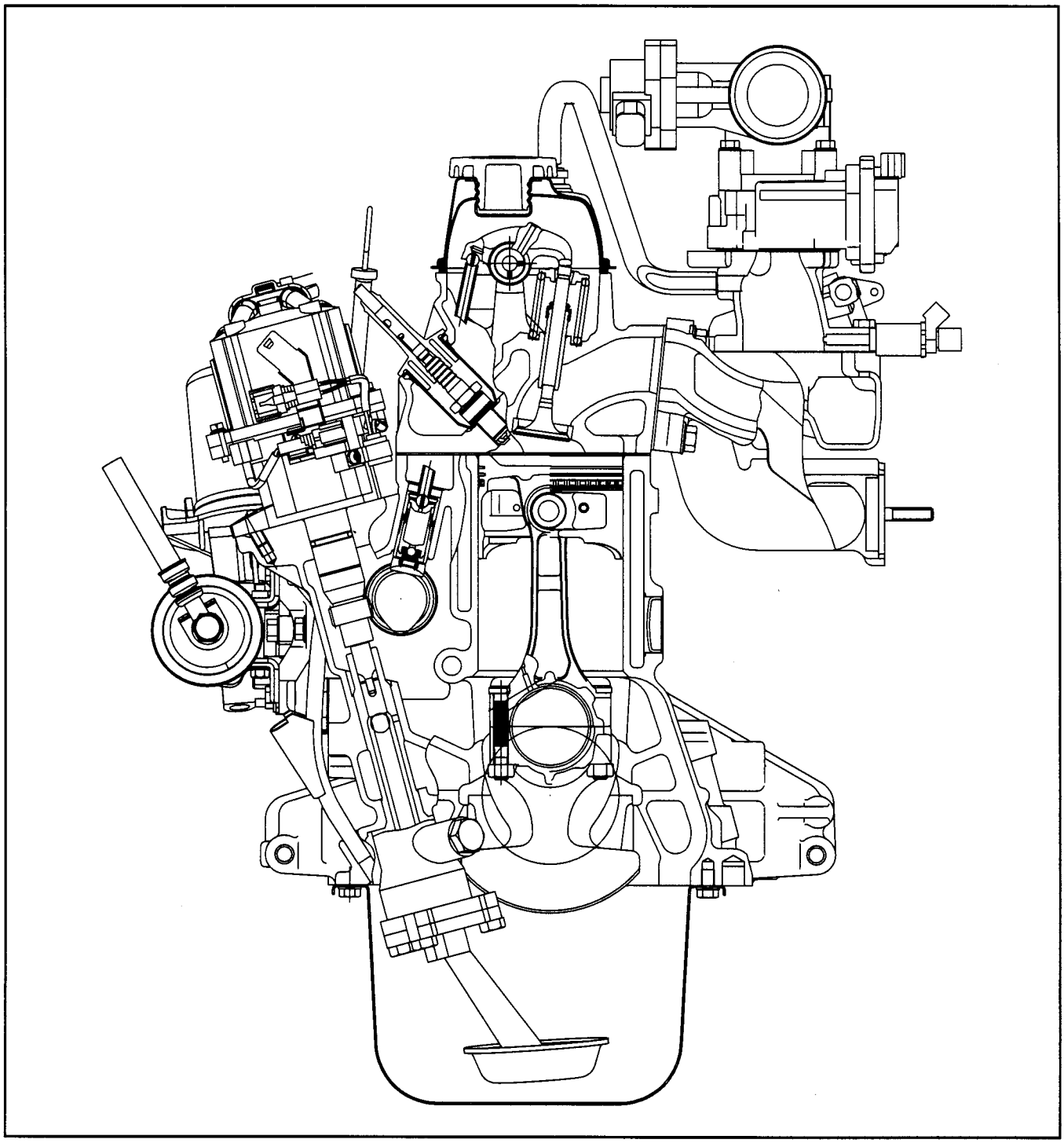

www.truck-freeworkshop.com

HOW TO USE THIS MANUAL

EXPLANATION METHOD

1. Operating procedure

   (1) Operating procedures are described using either pattern A or pattern B.
   Pattern A: Each step of the operation is explained with its own illustration.
   Pattern B: The entire operation is indicated by step numbers in one illustration, followed by cautions, notes, and "Point Operations".

Example of pattern B

DISASSEMBLY·INSPECTION·REASSEMBLY

Tightening torque unit → T = N·m (kgf·cm) [ft·lbf]

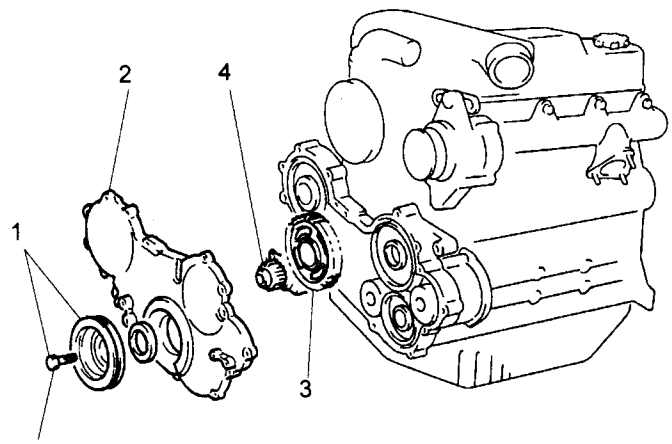

T = 274.59 to 370.69 (2800 to 3780) [202.6 to 273.5]

- The numbers may partially be omitted in the illustration.
- In the case where a part for which the tightening torque is specified is not shown in the illustration, the name of the part will be listed inside the illustration frame.

Disassembly·Reassembly Procedure

The reassembly procedure is the reverse of the disassembly procedure.

No.	Item	Disassembly	Inspection	Reassembly
1	Crank pulley W/ set bolt			
2	Timing gear cover			
3	Idle gear No.1		**[Point 1]**	
4	Oil pump ASSY			**[Point 2]**

Operations that have a following explanation

Point Operations

Explanation of operation point with illustration

[Point 1]

Inspection:
Measure the backlash.
Standard: 0.05 mm (0.0020 in.)

[Point 2]

Reassembly: Install the rotor in the position shown in the illustration.

www.truck-freeworkshop.com

2. How to read component figures

   (1) The component figures use the illustration in the parts catalog for the vehicle model. Please refer to the catalog to check the part name.

3. Matters omitted from this manual

   (1) This manual omits descriptions of the following jobs, but perform them in actual operation:

      (a) Cleaning and washing of removed parts as required

      (b) Visual inspection (partially described)

(Example)

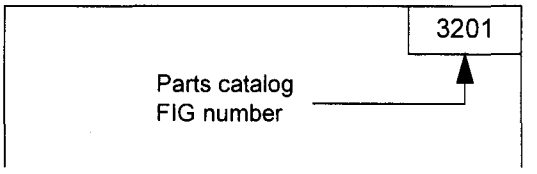

TERMINOLOGY

Warning:
Items that may lead to an injury to either the operator or another person, and items and operation points which, if not followed, may lead to an injury or accident.

Caution:
Items that must not be performed because doing so will result in damage to the vehicle or it's components, and items in the operation to which special attention should be paid.

Note:
Supplemental explanations for performing the operation easily.

Standard: Value showing the allowable range in inspection or adjustment.
Limit: The maximum or minimum value allowed in inspection or adjustment.

www.truck-freeworkshop.com

ABBREVIATIONS

Reference symbol	Original word	Meaning
RH	Right Hand	Right hand side
LH	Left Hand	Left hand side
FR	Front	Front
RR	Rear	Rear
STD	Standard	This refers to the part size used by the maker at the time of assembly being the standard size.
O/S	Over Size	For parts that do not engage well anymore due to wear from long use, or repeated disassembly, by replacing the part that is engaged by a part of slightly larger dimensions, it's corresponding part can be reused. These parts that have larger dimensions than STD, and are referred to as O/S.
U/S	Under Size	As with the O/S parts, by replacing the engaging part with one that has a smaller hole, it's corresponding part can be reused. These parts that have smaller dimensions than STD, and are referred to as U/S.
ATDC	After Top Dead Center	After the top dead center point of the piston in the cylinder.
BTDC	Before Top Dead Center	Before the top dead center point of the piston in the cylinder.
IN	Intake	Refers to the intake system.
EX	Exhaust	Refers to the exhaust system.
SST	Special Service Tool	Special service tool
T	Torque	Tightening torque
ASSY	Assembly	A part that consists of two or more single parts or sub-assembled parts that have been assembled together into an intergrated whole.
SUB/ASSY	Sub Assembly	A part in which two or more parts are joined together by welding, casting, riveting etc.
W/	With/	The following items are attached. (Example: W/ washer ... With a washer attached)
LWR	Lower	Lower

www.truck-freeworkshop.com

OPERATING TIPS

POINTS FOR WHICH SPECIAL CARE MUST BE TAKEN

1. Always set the engine on an engine stand for carrying out assembly and disassembly of an engine. Never operate on a workbench or on the floor as this is dangerous.

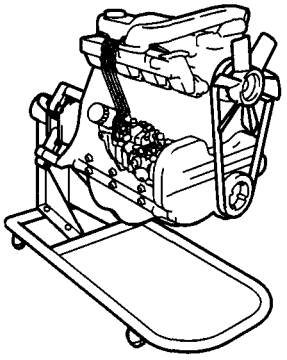

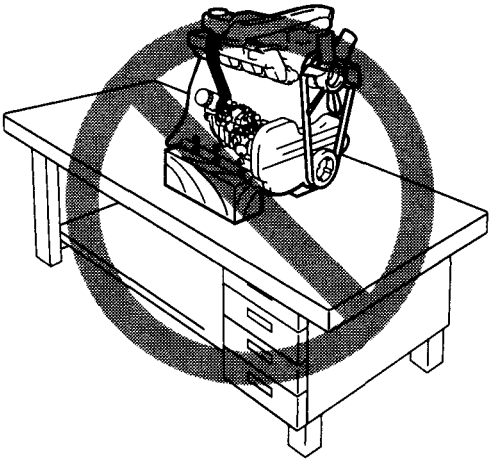

2. When handling and moving the cylinder head ASSY or the cylinder block, always wear gloves and do not use your bare hands.

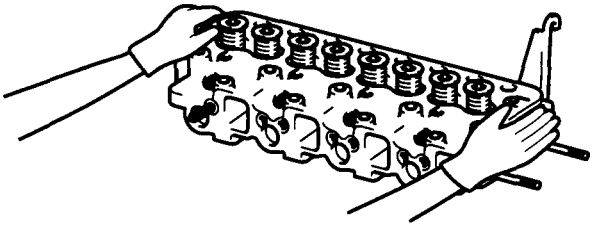

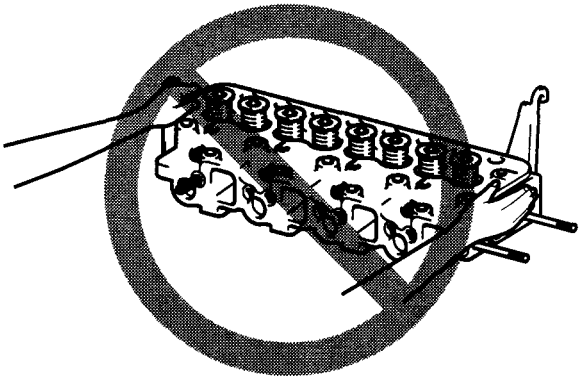

GENERAL INSTRUCTIONS

1. For safe operation
   (1) Wear the correct safety gear (cap, safety goggles, gloves, safety shoes).
   (2) To prevent burns, do not touch the radiator, muffler or exhaust pipe directly after stopping the engine.
   (3) Do not put your clothing or tools near to the rotating part when the engine is turning.
   (4) When the engine is not on, always have the engine switch OFF, and remove the starter key.
2. Preparation for disassembly
   (1) Prepare general tools, SSTs, measuring instruments, lubricant and parts that cannot be reused.
   (2) When disassembling a complex part, put imprints and match marks in places that will not effect the function of the part in order to facilitate easy reassembly.
3. Prevention of entry of foreign bodies
   Foreign bodies such as dust, sand and metal pieces inside the engine cause faults to occur.
   (1) Thoroughly remove sand and mud etc. sticking to the engine exterior.
   (2) Protect disassembled parts from dust with a plastic cover or similar.

www.truck-freeworkshop.com

4. Prevention of damage to parts
   Damage to contact surfaces or rotating parts can cause oil leakage or burning.
   (1) To disassemble contact surfaces of parts, do not use a screw driver or such, but tap them lightly with a plastic hammer to separate them.
   (2) When clamping parts in a vice, do not clamp them directly in the vice, but between aluminum plates.
5. Washing parts
   (1) Before reassembling each part, wash thoroughly, dry by blowing them with air and apply the specified oil.
   (2) Parts that may not be washed in alkaline chemicals.
   Aluminum parts, rubber parts (O-rings etc.)
   (3) Parts that may not be washed in treated oil (kerosene, non-residue solvent etc.).
   Rubber parts (O-rings etc.)
6. Removal and installation of fuel system parts
   (1) Work area for removal and installation of fuel system parts
      (a) Work in a well-ventilated area where there are no sparks from surrounding welding equipment, grinders, drills, electric motors, or stoves.
      (b) Do not work in or near a pit that could fill up with the vapor from evaporated fuel.
   (2) Removal and installation of fuel system parts
      (a) Prepare a fire extinguisher before beginning work.
      (b) To prevent static electricity, attach an earth wire to the fuel changer, vehicle, fuel tank and so forth, and spread as much water on the floor as can be spread without causing slipping.
      (c) Do not use electric pumps or working lights as these may give off sparks or become hot.
      (d) Do not use a steel hammer as there is a possibility of a spark being generated during use.
      (e) Dispose of fuel-soaked waste cloths separately.
7. Position and orientation when reassembling
   (1) Reassemble each part with the same position and orientation from before it was disassembled.
   (2) Reassemble the correct parts in the correct order, keeping to the specified standards (tightening torque, adjustment values etc.). (Reassemble using the middle value within the range for tightening torque and adjustment values).
   (3) Always use genuine parts for replacements.
   (4) Always use new parts for oil seals, O-rings, gaskets, cotter-pins and so forth.
   (5) Before reassembling, apply seal packing for gaskets depending on their place of application, apply the specified oil or grease to the specified places for sliding parts, and apply MP grease to the lip section of oil seals.
8. Handling hose clamps
   (1) Before removing a hose, check the insertion depth of the hose, and the position of the hose clamp so that you can definately return them to their original positions.
   (2) Replace deformed or fatigued clamps with new parts.
   (3) When reusing the hose, align the new clamp over the mark left on the hose by the previous clamp.
   (4) Adapt leaf spring clamps by applying force in the direction of tightening after attaching them.
9. Adjustment and checking operations
   Use a gauge or tester to adjust to the specified service standard.

www.truck-freeworkshop.com

10. Disposal of waste fluids
    When draining waste fluid from the vehicle, always drain it into an appropriate container.
    Careless discharge of oil, fuel, coolant, oil filter, battery or other harmful substances may adversely affect human health and the environment. Always collect and sort them well, and ask specialized companies for appropriate disposal.
    Also, be sure to collect or wipe up spilled waste fluids.

11. Protection of functional parts
    Before connecting the battery terminal after vehicle inspection or maintenance, thoroughly check each connector for any connection failure or imperfect connection.
    Failure to connect, or imperfect connection of connectors related to controllers, especially, may damage elements inside the controllers.

www.truck-freeworkshop.com

ELECTRICAL PARTS INSPECTION

1. Always disconnect the battery plug before inspecting or servicing electrical parts.
2. Pay sufficient attention when handling electronic parts.

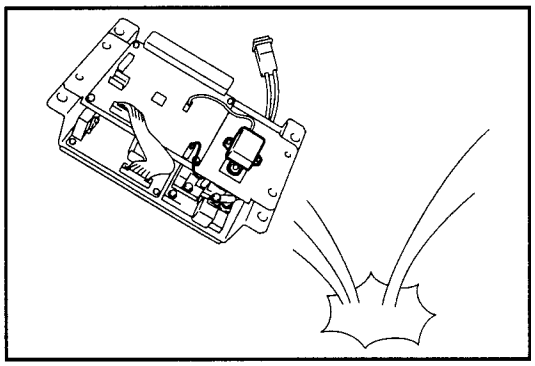

(1) Never subject electronic parts, such as computers and relays, to impact.

(2) Never expose electronic parts to high temperature or humidity.

(3) Do not touch connector terminals, as they may be deformed or damaged due to static electricity.

3. Use a circuit tester that matches the object and purpose of measurement.
   Analog type: This type is convenient for observing movement during operation and the operating condition. The measured value should be used only for reference or rough judgement.
   Digital type: A fairly accurate reading is possible. However, it may be difficult to observe variation or movement.

   (1) Difference between results of measurement with analog and digital types
   The results of measurements using the analog type and the digital type may be different.
   Use the circuit tester according to its instruction manual.
   Differences between the polarities of the analog type and the digital type are described below.

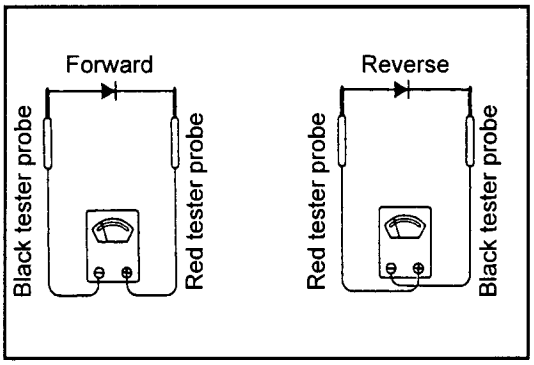

(a) Analog circuit tester
Example of measurement result
Tester range: kΩ range
Forward direction: Continuity 11 kΩ
Reverse direction: No continuity ∞

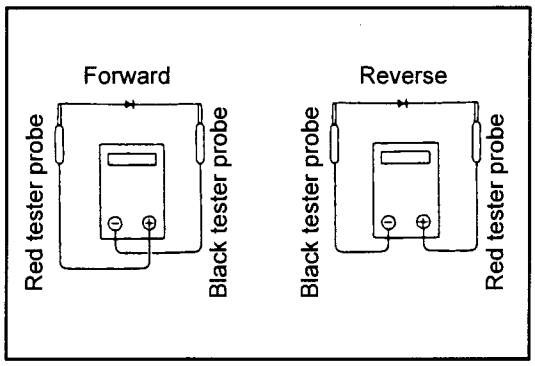

(b) Digital circuit tester
Example of measurement result
Tester range: 2 MΩ range
Forward direction: Continuity 2 MΩ
Reverse direction: No continuity 1

www.truck-freeworkshop.com

(2) Differences in results of measurement with circuit testers

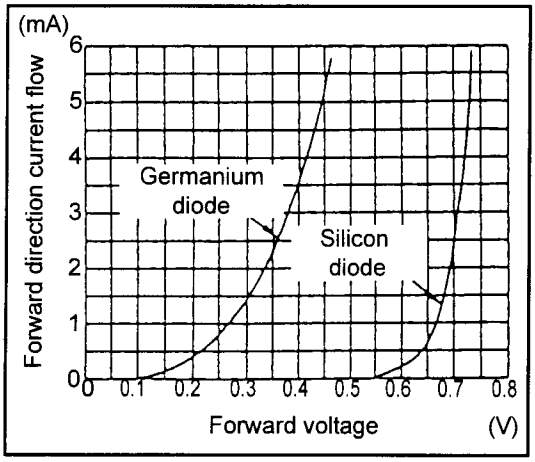

The circuit tester power supply voltage depends on the tester type: 1.5 V, 3.0 V and 6.0 V.
The resistance of a semiconductor such as a diode varies with the circuit tester power supply voltage.
Diode characteristics are shown in the figure to the left.
The resistance values of the same diode measured with two types of circuit testers having different power supply voltages are different.

This manual describes the results of measurement with an analog circuit tester with a power supply voltage of 3.0 V.

(3) Differences in results of measurement by measurement range.

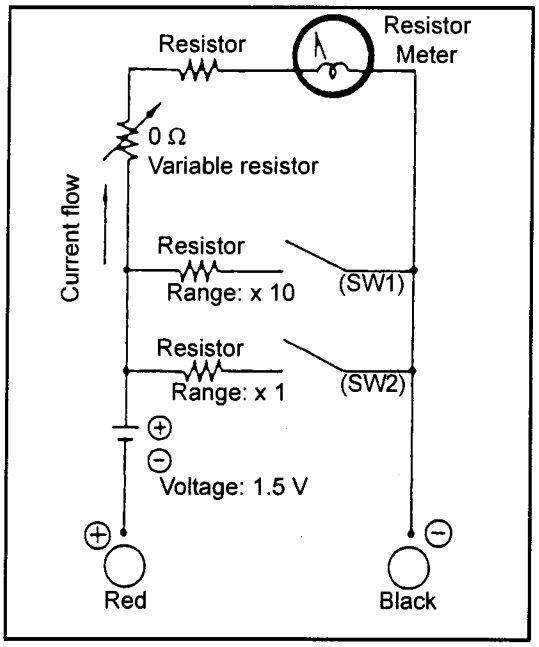

In the analog type circuit tester, changing the measurement range switches over the internal circuit to vary the circuit resistance. Even when the same diode is measured, the measurement result varies according to the measurement range.
Always use the range described in the repair manual for measurement.

www.truck-freeworkshop.com

BOLT & NUT TIGHTENING TORQUES

Standard Bolt & Nut Tightening Torque

Tightening torques of standard bolts and nuts are not indicated throughout the manual.
Use the procedures and table below to judge the standard tightening torque.

1. Judge the tightening torque for the hexagon head bolt, welded bolt or stud bolt having the standard bearing surface according to the tightening torque table by identifying the bolt strength class from the table below.
2. Judge the tightening torque for the hexagon flange bolt based on the threading diameter.
3. The nut tightening torque can be judged from its corresponding bolt type by using procedure 1.

BOLT STRENGTH CLASS IDENTIFICATION METHOD AND TIGHTENING TORQUE

Identification by Actual Part

Type	Shape and Strength class	Strength class
Hexagon head bolt (standard bearing surface)	Number in relief or hallmark on head	4 = 4T 5 = 5T 6 = 6T 7 = 7T 8 = 8T
	No mark	4T
	Bolt with two raised lines on head	5T
	Bolt with three raised lines on head	7T
	Bolt with four raised lines on head	8T
Welded bolt	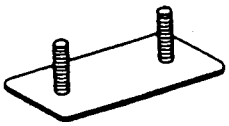	4T
Stud bolt	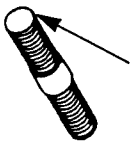 No mark	4T
	About 2 mm (0.08 in.) groove(s) on one/both edge(s)	6T

www.truck-freeworkshop.com

Identification by Part No.

Type	Part No.	Shape
Hexagon bolt	91611-40625 Nominal length (mm) Nominal diameter (mm) Strength class	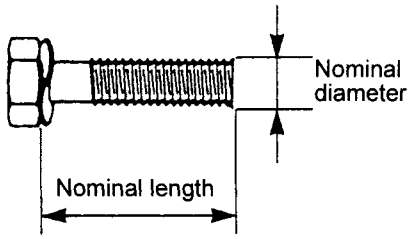
Stud bolt	92132-40614 Nominal length (mm) Nominal diameter (mm) Strength class	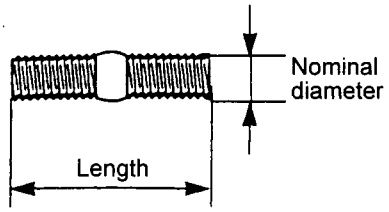

Tightening Torque Table

Strength class	Nominal diameter mm	Pitch mm	Standard tightening torque		
			N·m	kgf·cm	ft·lbf
4T	6	1.0	5.4	55	4.0
	8	1.25	13	130	9.4
	10	1.25	25	260	18.8
	12	1.25	47	480	34.7
	14	1.5	75	760	54.9
	16	1.5	113	1150	83.0
5T	6	1.0	6.5	65	4.7
	8	1.25	16	160	11.6
	10	1.25	32	330	23.8
	12	1.25	59	600	43.3
	14	1.5	91	930	67.1
	16	1.5	137	1400	101.1
6T	6	1.0	7.8	80	5.8
	8	1.25	19	195	14.1
	10	1.25	39	400	28.9
	12	1.25	72	730	52.7
	14	1.5	108	1100	79.4
	16	1.5	172	1750	126.6
7T	6	1.0	11	110	7.9
	8	1.25	25	260	18.8
	10	1.25	52	530	38.3
	12	1.25	95	970	70.0
	14	1.5	147	1500	108.3
	16	1.5	226	2300	166.1
8T	6	1.0	12	125	9.0
	8	1.25	29	300	21.7
	10	1.25	61	620	44.9
	12	1.25	108	1100	79.4
	14	1.5	172	1750	126.6
	16	1.5	265	2700	195.3

www.truck-freeworkshop.com

Identification by Bolt Shape (Hexagon flange bolt)

Class	4.8T	6.8T	8.8T	10.9T	11.9T
Hexagon flange bolt	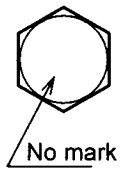			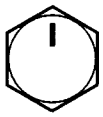	
				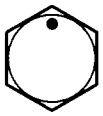	
	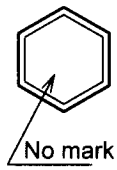				

Tightening Torque Table (Hexagon flange bolt)

Strength class	Nominal diameter mm	Pitch mm	Standard tightening torque		
			N·m	kgf·cm	ft·lbf
4.8T	6	1.0	5.5	56	4
	8	1.25	13	130	9
	10	1.25	27	280	20
	12	1.25	50	510	37
	14	1.5	78	800	58
	16	1.5	120	1220	88
6.8T	6	1.0	7.5	80	6
	8	1.25	19	190	14
	10	1.25	39	400	29
	12	1.25	71	720	52
	14	1.5	110	1120	81
	16	1.5	170	1730	125
8.8T	6	1.0	12	120	9
	8	1.25	29	300	22
	10	1.25	61	620	45
	12	1.25	110	1120	81
	14	1.5	175	1780	129
	16	1.5	270	2750	199
10.9T	6	1.0	15.5	160	12
	8	1.25	38	390	28
	10	1.25	80	820	59
	12	1.25	145	1480	107
	14	1.5	230	2350	170
	16	1.5	360	3670	266
11.9T	6	1.0	17.5	180	13
	8	1.25	42	430	31
	10	1.25	89	910	66
	12	1.25	160	1630	118
	14	1.5	260	2650	192
	16	1.5	400	4080	295

www.truck-freeworkshop.com

PRECOATED BOLTS (BOLTS WITH SEAL LOCK AGENT COATING ON THREADS)

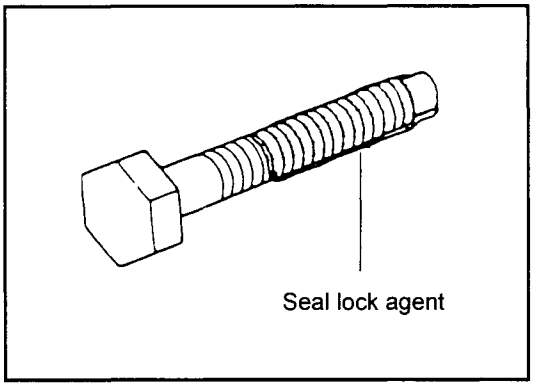

1. Do not use the precoat bolt as it is in either of the following cases:
   (1) After it has been removed.
   (2) When it has been moved by tightness check, etc. (loosened or tightened)

Note:
For torque check, tighten the bolt at the lower limit of the allowable tightening torque range; if the bolt moves, retighten it according to the steps below.

2. How to reuse precoated bolts
   (1) Wash the bolt and threaded hole.
   (The threaded hole must be washed even when replacing the bolt with a new one.)
   (2) Completely dry the washed parts by blowing with air.
   (3) Apply the specified seal lock agent to the bolt threaded portion.

SI UNITS

Meaning of SI

This manual uses SI units. SI represents the International System of Units, which was established to unify the various systems of units used in the past for smoother international technical communication.

New Units Adopted in SI

Item	New unit	Conventional unit	Conversion rate*1 (1 [conventional unit] = X [SI unit])
Force*2	N (newton)	kgf	1 kgf = 9.80665 N
Torque*2 (Moment)	N·m	kgf·cm	1 kgf·cm = 9.80665 N·m
Pressure*2	Pa (pascal)	kgf/cm^2	1 kgf/cm^2 = 98.0665 kPa = 0.0980665 MPa
↑	↑	mmHg	1 mmHg = 0.133322 kPa
Revolving speed	r/min	rpm	1 rpm = 1 r/min
Spring constant*2	N/mm	kgf/mm	1 kgf/mm = 9.80665 N/mm
Volume	L	cc	1 cc = 1 mL
Power	W	PS	1 PS = 0.735499 kW
Heat quantity	W·h	cal	1 kcal = 1.16279 W·h
Specific fuel consumption	g/W·h	g/PS·h	1 g/PS·h = 1.3596 g/kW·h

Reference:
*1: X represents the value in SI units as converted from 1 [conventional units], which can be used as the rate for conversion between conventional and SI units.
*2: In the past, kilogram [kg] representing mass was often used in place of weight kilogram [kgf], which should be used as the unit of force.

www.truck-freeworkshop.com

Conversion between Conventional and SI Units

Equations for conversion

Value in SI unit = Conversion rate x Value in conventional unit
Value in conventional unit = Value in SI unit ÷ Conversion rate

Conversion rate: Figure corresponding to X in the conversion rate column in the table above

Caution:
When converting, change the unit of the value in conventional or SI units to the one in the conversion rate column in the table above before calculation. For example, when converting 100 W to the value in conventional unit PS, first change it to 0.1 kW and divide by the conversion rate 0.735499.

HANDLING FIPG (LIQUID GASKETS)

FIPG:
08826-76001-71

Example of Application Area

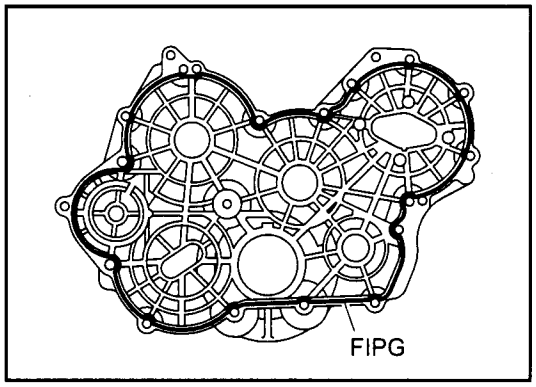

Points for application method and reassembling parts.

Caution:
When removing the gasket, be careful not to let broken pieces of the gasket get inside the engine.

1. Clean the contact surfaces of every part and corresponding part with a waste cloth so that they are free of oil, moisture, and foreign objects.
2. Apply FIPG to the side of the part to be attached. Parts requiring FIPG to be applied are listed in the point operations for each section.
3. Always overlap the start and finish of the application so that there is no excess application or insufficient application.
4. Take care not to move the parts after reassembling them.
5. Reassemble within 3 minutes of finishing the application.
6. For at least 2 hours after reassembly, do not pour in coolant or lubrication oil, and do not start the engine.

www.truck-freeworkshop.com

www.truck-freeworkshop.com

TROUBLESHOOTING

Page

TROUBLESHOOTING 1-2

MECHANICAL TROUBLE 1-2

ENGINE DOES NOT CRANK NORMALLY 1-3

ENGINE DOES NOT START EASILY, OR DOES NOT START AT ALL 1-4

ENGINE IS ROUGH, OR STOPS, DURING IDLING 1-5

CANNOT ACCELERATE SMOOTHLY (INCLUDING HESITATION) 1-6

INSUFFICIENT POWER OUTPUT (INCLUDING HUNTING) 1-8

ENGINE OVERHEATS 1-9

EXCESSIVE FUEL CONSUMPTION 1-10

ABNORMAL COMBUSTION 1-11

ABNORMAL ENGINE NOISE, OR NOISY ENGINE 1-13

EXCESSIVE ENGINE OIL CONSUMPTION 1-16

www.truck-freeworkshop.com

TROUBLESHOOTING

This manual describes the basic 4Y-M vehicle (mechanical fuel injection system). For troubleshooting for the electrical systems of the 4Y-E (electronic fuel injection system), refer to the troubleshooting pages for the separate repair manual for each vehicle.

MECHANICAL TROUBLE

The causes of engine faults are divided into 3 factors of gasoline engines.

3 Factors of Gasoline Engines

3 factors	Main functional parts
Good air-fuel mixture	Fuel tank, fuel pump, fuel strainer, carburetor, air governor etc.
Good compression	Engine body (Intake and exhaust valves, piston rings, cylinders etc.)
Good ignition	Distributor, spark plugs, resistive cord and ignition

The basics are as described above, however, since insufficient maintenance also gives rise to faults. Carry out pre-inspections of the following items.

Pre-inspection items	
Coolant	Spark plugs
Engine oil	Ignition timing
Battery and terminals	Idle speed status
Air cleaner	Air governor operating condition
Fan belt	Looseness in any engine part

List of Items

Status	Fault	Page
Engine has trouble in starting or does not start	Engine does not crank normally	See P1-3
	Engine does not start easily, or does not start at all	See P1-4
Engine running rough	Engine is rough, or stops, during idling	See P1-5
	Cannot accelerate smoothly (including hesitation)	See P1-6
	Insufficient power output (including hunting)	See P1-8
Engine overheats	—	See P1-9
Excessive fuel consumption	—	See P1-10
Abnormal combustion	Knocking	See P1-11
	Run on	See P1-11
	After fire	See P1-12
	Back fire	See P1-12
Abnormal engine noise, or noisy engine	Noise that changes with operation of the clutch pedal	See P1-13
	Noise that is often heard during idling	See P1-13
	Noise that is often heard at a certain engine speed	See P1-14
	Noise that is often heard regardless of engine speed	See P1-15
Excessive engine oil consumption	—	See P1-16

www.truck-freeworkshop.com

ENGINE DOES NOT CRANK NORMALLY

When the ignition key switch is turned ON, the starter motor does not respond, or makes an abnormal noise.

Phenomenon	Main places for inspection and adjustment
Starter does not respond **[Point 1]**	1. Battery
	2. Battery cables
	3. Ignition key switch
	4. Starter unit
	5. Neutral safety switch
Slow cranking speed or clicking sound	1. Battery
	2. Starter motor
	3. Engine body (When all the plugs are removed, the engine should rotate easily.)
"Rev and rattle" sound	1. Starter clutch
	2. Ring gear
	3. Magnetic switch

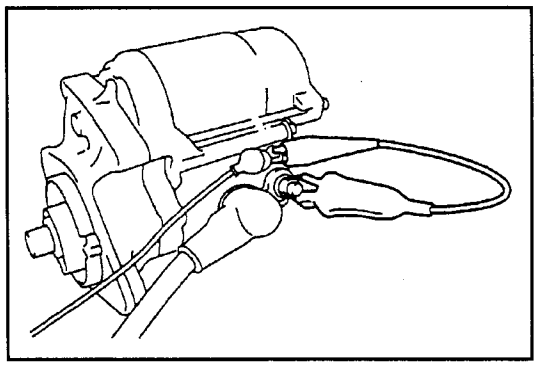

[Point 1]

To test whether the fault is with the circuit to the starter motor, or with the starter motor itself, connect the starter motor directly to the battery with the 30 terminal and 50 terminal leads. If the starter motor turns, then the fault is in the circuit. If it does not turn, then the fault is in the motor.

www.truck-freeworkshop.com

ENGINE DOES NOT START EASILY, OR DOES NOT START AT ALL

Classification	Main places for inspection and adjustment
Ignition **[Point 1]**	1. Spark plugs
	2. Plug cords
	3. Ignition key switch
	4. Distributor
	5. Igniter
	6. Ignition timing
Fuel **[Point 2]**	1. Fuel pump
	2. Fuel pipe
	3. Fuel strainer
	4. Air breather of the fuel tank
	5. Fuel
	6. Carburetor **[Point 3]**
	7. Air governor **[Point 4]**
	8. Choke valve
Compression	1. Valve
	2. Piston rings
	3. Piston
	4. Cylinder

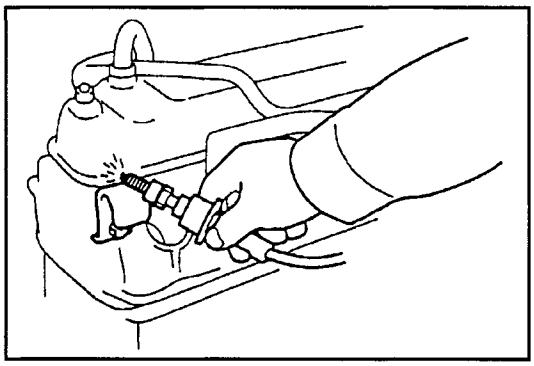

[Point 1]
Inspect sparks using the spark plug
Remove the spark plug and position it about 6 to 8 mm (0.24 to 0.31 in.) away from earth. Normally, during cranking, a strong spark should fly out. Check all the plugs in the same way.
If there is no spark at all, inspect the distributor and the primary lead side.

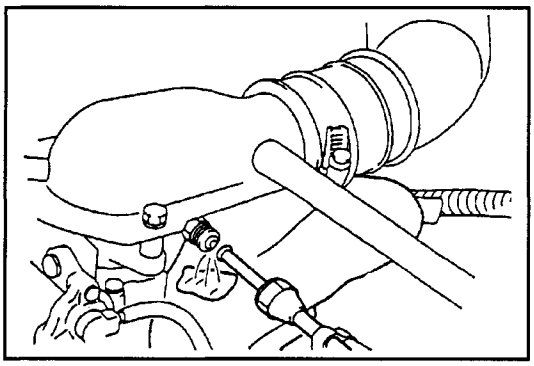

[Point 2]
Inspect the fuel flow to the carburetor
Disconnect the fuel pipe connector on the carburetor side, and run the engine with the starter motor. Check whether the fuel is ejected strongly from the fuel pipe.

Caution:
- **Do not allow open flames to come near during the inspection.**
- **Take measures to prevent the fuel from scattering.**

www.truck-freeworkshop.com

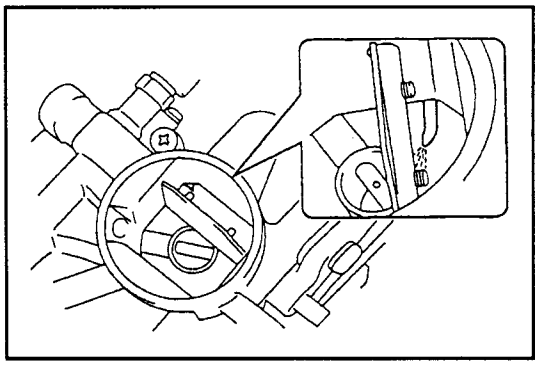

[Point 3]
Inspect the fuel ejection status of the acceleration pump jet
Remove the intake air connector from the top of the carburetor. Inspect the ejection of fuel from the pump jet when the throttle valve is operated.

[Point 4]
Inspect the air governor
If the ribbon spring or coil spring of the governor is broken, the governor valve will stay fully closed and the engine will be unable to start.

ENGINE IS ROUGH, OR STOPS, DURING IDLING

Phenomenon	Main places for inspection and adjustment
Engine is rough during idling **[Point 1]**	1. Carburetor
	2. PCV valve
	3. Resistive cord
	4. Distributor
	5. Ignition timing
	6. Tappet clearance
	7. Valve contact
	8. Plug
Roughness during idle-up	1. Idle-up actuator
	2. VTV
	3. Vacuum hose

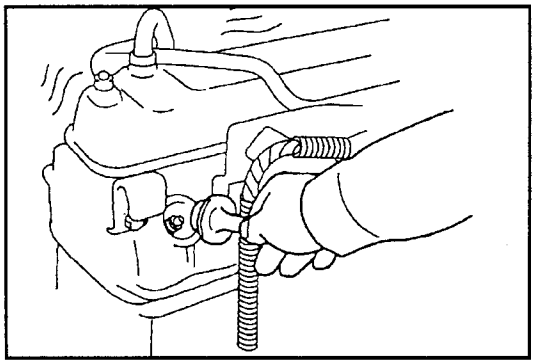

[Point 1]
Inspect non-combusting cylinders
Hold the bottom of the resistive cord and pull it off from the plug. Work through each cylinder, disconnecting the cord end from the spark plug terminal and stopping the spark. Inspect for the presence of combustion by checking:

- The change in engine speed
- Change in combustion sound, or change in vibration

www.truck-freeworkshop.com

CANNOT ACCELERATE SMOOTHLY (INCLUDING HESITATION)

Classification	Main places for inspection and adjustment
Fuel	1. Accelerator pedal and link **[Point 1]**
	2. Governor
	3. Accelerator pump
Ignition	1. Spark plugs
	2. Ignition timing
	3. Ignition circuit
	4. Vacuum advancer **[Point 2]**
	5. Vacuum hose
	6. Vacuum controller
	7. Breaker plate
	8. Governor controller **[Point 3]**
	9. Air governor **[Point 4]**
Compression	1. Intake and exhaust valve contact
	2. Piston rings
	3. Piston
	4. Cylinder

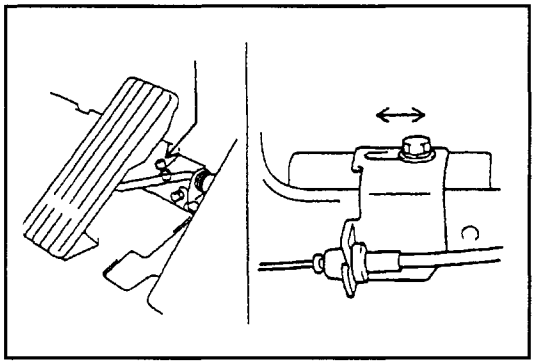

[Point 1]
Adjust the accelerator pedal and link system
The opening of the throttle valve depends on the adjustment of the accelerator pedal height and the link wire. Check that the throttle valve becomes fully open when the accelerator pedal is fully depressed.

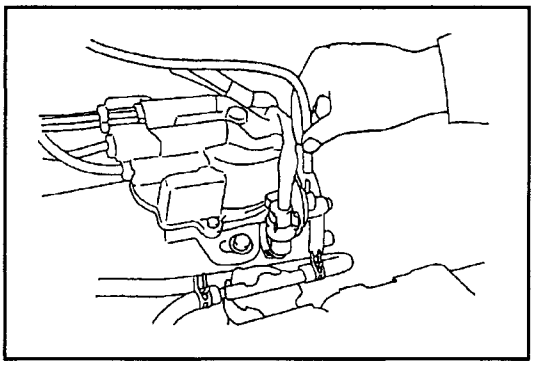

[Point 2]
Check vacuum advancer function

1. Connect a timing light with the engine running. Inspect to see that the degree of advance is reduced when the vacuum hose is disconnected from the distributor, and that it returns to its original position when the vacuum hose is reconnected.

Note:
If this inspection is as it should be, omit the inspection in 2.

www.truck-freeworkshop.com

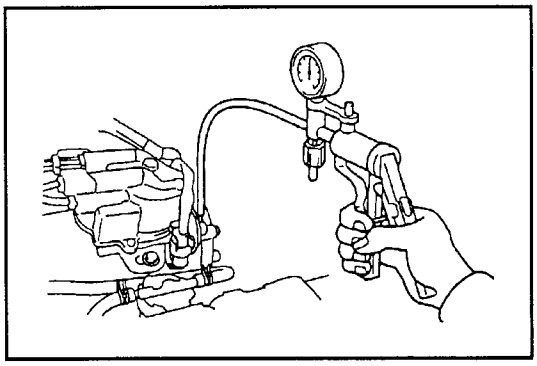

2. When the engine is stopped, disconnect the vacuum hose connector from the distributor and apply vacuum to a diaphragm to check that the vacuum advancer is working smoothly. Inspect the return condition as well.

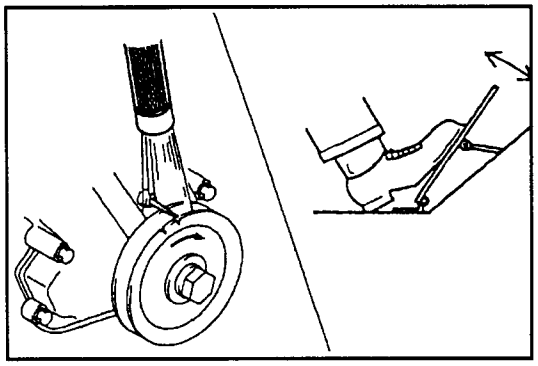

[Point 3]
Check governor controller function

1. Connect a timing light. When the engine speed is gradually increased from idle, there should be an advance.

Note:
If this inspection is as it should be, omit the inspection in 2.

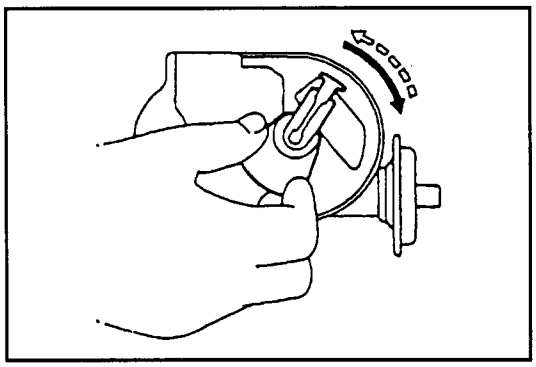

2. With the engine stopped, remove the distributor cap. When the rotor is turned by hand about 15° in the turning direction and released, it should return.

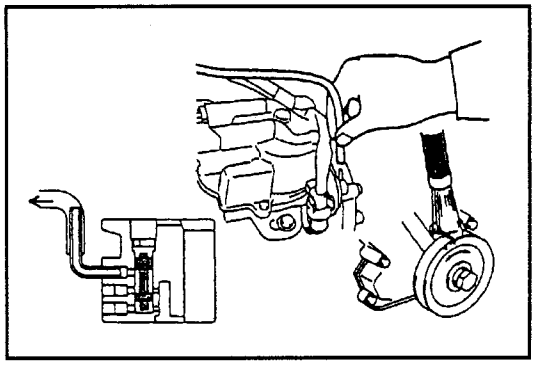

[Point 4]
Check function of the VCV inside the air governor
Using a timing light to check the degree of advance, disconnect the vacuum hose from the distributor with the engine running at 2000 rpm or more. Check that the degree of advance becomes smaller.

www.truck-freeworkshop.com

INSUFFICIENT POWER OUTPUT (INCLUDING HUNTING)

Classification	Main places for inspection and adjustment
Ignition	1. Ignition timing **[Point 2]**
	2. Vacuum advancer
	3. Ignition circuit
	4. Governor controller
	5. Vacuum pipe
	6. Vacuum controller
	7. Breaker plate
Fuel	1. Air governor **[Point 3]**
	2. Carburetor
	3. VCV inside air governer
Compression	1. Valve
	2. Piston rings
	3. Piston
	4. Cylinder
Drivetrain **[Point 1]**	1. Slipping of the clutch
	2. Slipping of the torque converter one-way clutch (torque converter models only)

[Point 1]
Inspect the relief down speed
This is a test to see whether the lack of power output is on the engine side or on the drivetrain system side. If the relief down engine speed is within the standard values, then the engine is normal and the drivetrain system needs to be checked.

Note:
If the ignition timing is retarded, the engine speed will become slower during a torque converter stall test. Do not mistake this for a reduction in stall speed (only torque converter vehicles).

[Point 2]
Generally if the ignition timing is retarded excessively, the vehicle after-fires, and tends to overheat easily. If the ignition timing is advanced excessively, this tends to cause knocking and loss of power. With forklifts in particular, the construction makes knocking unlikely to occur (the drive gear ratio is large), and therefore it becomes difficult to recognise fault phenomena indicative of advanced timing.

[Point 3]
Adjust the air governor
If the relief down engine speed is faster than standard, or if the engine starts hunting, adjust the air governor. If power output does not improve (the relief down is large) even after adjusting the air governor, the fault is in the governor itself, or in the fuel system, ignition system, or compression system.

www.truck-freeworkshop.com

ENGINE OVERHEATS

Classification	Main places for inspection and adjustment
Ignition	1. Governor controller
	2. Ignition timing
Compression	1. Cylinder head gasket
	2. Cylinder head
	3. Cylinder block
Cooling	1. Coolant
	2. V-belt
	3. Radiator **[Point 1]**
	4. Thermostat

[Point 1]
Check for bubble formation inside radiator
When bubbles form in the radiator due to a fault in the cyclinder head, gasket, or cylinder block, the engine oil becomes cloudy.

www.truck-freeworkshop.com

EXCESSIVE FUEL CONSUMPTION

Before beginning troubleshooting, ask the following questions and respond as necessary.

1. When did it start? (Since the vehicle was new, recently, since it has become colder etc.)
2. High fuel consumption compared with what? (The lift used previously, a similar vehicle, other manufacture's lift etc.)
3. What is the lift being used for? (Stacking and unloading cargo, carrying, in a small space, traveling distances etc.)
4. Others (Fuel, tyres, additional specifications, operating time, change in load, change of operator etc.)

Factors in high fuel consumption	1. Engine structure (compression ratio, improved fuel burning, cooling loss, mechanical efficiency etc.)
	2. Vehicle structure (vehicle weight, tyres, drivetrain system transmission efficiency, gear ratio etc.)
	3. Conditions in the usage environment (weather, traveling environment, load environment, operation method, altitude etc.)
	4. Maintenance status of the engine and vehicle (ignition timing, air-fuel mixture, compression pressure etc.)
	5. Specification, differences in attachments (mast lift height, attachments, air conditioner)

Places for inspection and adjustment when fuel consumption has become greater than previously

Classification	Main places for inspection and adjustment
Ignition	1. Vacuum hose
	2. Vacuum advancer
	3. Governor controller
Fuel	1. Carburetor
	2. Leak in the fuel system
	3. Choke valve
Compression	1. Valve
	2. Piston rings
	3. Piston
	4. Cylinder
Drivetrain	1. Slipping of the manual clutch
	2. Slipping of the torque converter one-way clutch
Braking	1. Brakes dragging
	2. Brake automatic adjustment mechanism
	3. Brake shoe return mechanism
Cooling	1. Thermostat
	2. Coolant temperature **[Point 1]**

[Point 1]
If the temperature of the engine coolant becomes too high or too low, optimal fuel combustion cannot be achieved and fuel consumption increases. In particular, if repeated traveling and loading is carried out when the engine is cold, the combustion timing is delayed due to slow propagation speed of the air-fuel mixture, and because the gasoline has poor vaporization, the engine may misfire, resulting in imperfect combustion and loss of engine output.

www.truck-freeworkshop.com

ABNORMAL COMBUSTION

The abnormal noises and other noises caused by abnormal combustion in the engine are classified as follows:

1. Knocking
   On sudden acceleration, or when the accelerator pedal is fully depressed, a high pitched "ping ping" knocking sound is heard. This has a bad effect on the piston and valves, and will also damage the engine.
2. Run on
   Even after the ignition key switch has been turned OFF, combustion continues in the combustion chamber, and the engine continues to run erratically.
3. After fire
   When travelling for a long time under engine braking, or when the accelerator pedal is suddenly released, a loud "bang" is heard due to an explosion in the exhaust system, with flame being visible around the muffler.
4. Back fire
   The combustion does not complete within the explosion cycle, and continues until the intake valve opens for the next cycle, igniting the air-fuel mixture while it is still being intaken. This causes a back fire, in which the air-fuel mixture in the intake manifold or carburetor explode.

Knocking

Classification	Main places for inspection and adjustment
Ignition	1. Ignition timing
	2. Vacuum advancer
	3. Governor controller
	4. Spark plugs
	5. Carbon build-up in the combustion chamber

Run on

Phenomenon	Main places for inspection and adjustment
Ignition	1. Spark plugs
	2. Carbon build-up in the combustion chamber
Fuel	1. Carburetor solenoid valve **[Point 1]**
	2. Idle speed

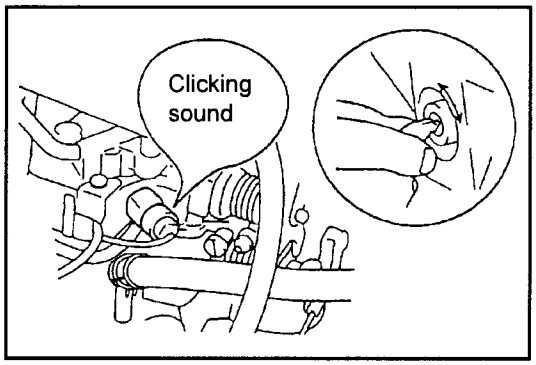

[Point 1]
Inspect the carburetor solenoid valve
With the engine stopped, when the ignition key switch is turned ON and OFF, if a clicking sound is audible from the solenoid valve, then electrically everything is normal.
For the defective valve inspection, if there is still run on when the throttle valve is completely closed (idling), then it can be judged that the sealing of the valve tip is defective.

www.truck-freeworkshop.com

After fire

Item	Inspection content
Fuel, intake system	Check the operation and adjustment of parts that might make the air-fuel mixture too rich. • Air cleaner element clogging • Idle adjusting screw too loose • Float level too high? • Too much choke (Autochoke mechanism defective)
Ignition timing, spark advance	Check the initial setting of the ignition timing and that the spark advance is operating normally. • Is the timing too retarded when idling? • Spark advance operation inspection (Do the vacuum advancer and the governer controller start operating a little late when the accelerator pedal is suddenly released?) • Is the stationary plate not sliding well?
Spark plugs, ignition device	Correct the cause of any occasional missing of the ignition.
	Are the specified spark plugs being used?
	Inspect for soiling, wear or gap defect of the spark plugs.
	Inspect for soiling or poor connections in the secondary circuit of the ignition system.

Back fire

Item	Inspection content
Fuel, intake system	Check the operation and adjustment of parts that might make the air-fuel mixture too lean. • Float level too low? • Insufficient ejection from the accelerator pump • Power jet clogging • Power piston malfunction • Choke valve malfunction (if it opens too early when cold, the mixture becomes lean) • Idle adjusting screw too tight (air-fuel mixture in the slow speed system becomes too lean) • Air being sucked in from the intake manifold
Ignition timing, spark advance	Inspect to see whether the ignition timing is too retarded. • Is the timing too retarded when idling? • Timing control operation inspection (this occurs easily after engine O/H, or reinstalling of the distributor - whenever the timing is extremely out)
Valve timing	Is the valve timing out?

www.truck-freeworkshop.com

ABNORMAL ENGINE NOISE, OR NOISY ENGINE

Further breakdown of abnormal noises, or excessive noise generation is as follows.

1. Noise that changes with operation of the clutch pedal
2. Noise that is often heard during idling
3. Noise that is often heard at a certain engine speed
4. Noise that is often heard regardless of engine speed

Noise that changes with operation of the clutch pedal

Operation	Main causes
No change in the abnormal noise even when the clutch pedal is depressed	Seizure of the crankshaft thrust bearing
Abnormal noise disappears when the clutch pedal is depressed	1. Worn crankshaft thrust bearing
	2. Transmission defect

Noise that is often heard during idling

Probable cause	Example of sound	Notes
Defective water pump bearing	Rasping sound	Put a sound scope on the water pump body to check. • Remove the V-belt and turn the water pump by hand. If the turning feels rough or bumpy to the hand, then the bearing is defective.
Oil seal squeal	Squealing sound Chirping sound	Apply engine oil from outside the seal, or spray an anti-squealing agent. • The sound becomes quieter or stops.
Camshaft thrust direction play	Gravely sound Rattling sound	Put a sound scope near the timing gear cover to check. • When the engine is warmed up, the sound can be heard clearly.
		When the engine is warm, if the engine is taken from idle to high speed, the sound becomes small, or stops.
		Inspect the sprocket gear runout.
Camshaft bearing wear	Knocking sound Dull knocking sound	Put a sound scope on the camshaft bearing section to check. • The sound becomes quieter at high speed.
Defective chain tensioner	Gravely sound Rattling sound	This sound can be heard on startup and stops after a while.
Wear inside the distributor and the gears	Whirring sound Clattering sound	Put a sound scope on the distributor body to check.
		If the rotor is turned clockwise by hand and released, it should return easily to its original position.
		Inspect the contact point of the center piece and the rotor.
		Remove the distributor and inspect the gear.
Defective contact of the valve and seat	Clicking sound	Adjust the valve clearance.
		Put a sound scope near the cylinder head valve to check. • The sound becomes smaller or stops when the valve is sticking up.
Improper contact or damage to the valve lifter	Clicking sound	Put a sound scope on the cylinder head to check. • This sound often occurs when a pushrod is not turning. • Remove the lifter and inspect the contact surface.
Run out of oil on valve rocker arm	Grating sound Squeaking sound	The sound becomes smaller or stops if engine oil is applied, or if the valve rocker arm position is shifted.
Crankshaft thrust direction play	Clattering sound Rasping sound	Check by depressing the clutch pedal. • If the sound stops, there is too much play in the thrust direction.
		When the clutch pedal is depressed, the crankshaft is pushed forwards and the thrust play is reduced to nothing, so the noise stops.

www.truck-freeworkshop.com

Probable cause	Example of sound	Notes
Fuel pump operation noise	Pumping noise "Pfft Pfft" noise	Noise stops if the fuel pump is removed.
		A small noise is normal. Care should be taken as it can easily be mistaken for another sound.
Air intake noise	Sucking noise Hissing noise	Inspect the intake manifold and air cleaner for appropriate installation. • Try plugging the place where the air gets in with engine oil, grease or cotton waste.

Noise that is often heard at a certain engine speed

Probable cause	Example of sound	Notes
Belt slipping	Squealing sound	The sound occurs on sudden acceleration from idle. • Adjust the belt to the standard tension. • Inspect the belt for wear, cracking and oil.
Contact noise of the alternator bearing or brush	Whirring noise Grating noise	Check by removing the belt and turning the alternator by hand.
Side knocking of the piston	Knocking sound	The knocking sound is loud when the engine is cold, and grows quieter or stops as the engine warms up. • Since auminum alloy pistons expand more than the cylinder, the piston clearance grows smaller and the side knock grows smaller.
		If the spark plug is disconnected, the sound changes and generally grows quieter.
Knocking of the connecting rod bearing	Knocking sound	This can be heard loudly from the bottom of the engine when accelerating after warm-up or directly after acceleration.
		When the engine is at the speed when the knocking sound usually occurs (about 1000 rpm), if the spark plug is disconnected, the sound changes, generally becoming quieter.
Crankshaft bearing knocking	Knocking sound	This can be heard loudly from the bottom of the engine when accelerating after warm-up or directly after acceleration. • The sound does not change even if the spark plug is disconnected. • This is a somewhat lower, sharper sound than the connecting rod bearing knocking.
Piston pin knocking	Knocking sound Rattling sound	The noise gets louder as the engine warms up, and is a harder sound than the piston side knocking.
		When the engine is at the speed when the knocking sound usually occurs (about 1000 rpm), if the spark plug is disconnected, the knocking sound changes.
Unbalanced cooling fan	Humming sound Whining sound	The noise stops when the belt is removed and the engine is running. • Check for bending of the fan, loose fit, or runout.
Loose set bolt on the flywheel	Rattling sound Knocking sound	The sound becomes louder on sudden acceleration.
		The sound becomes quieter or stops when the clutch pedal is fully depressed. • The sound is similar to crankshaft bearing knocking, but it sounds harder.
Timing chain wear	Grating sound Scraping sound	Put a sound scope on the timing chain cover to check.
		The noise becomes louder if the engine is run at high speed.

www.truck-freeworkshop.com

Noise that is often heard regardless of engine speed

Probable cause	Example of sound	Notes
Excess valve clearance or faulty contact	Clicking sound Clattering sound	Inspect for the presence of valve clearance using a thickness gauge. • If there is a clearance, the sound stops. In this case, correct the oil tappet. • If the sound does not stop, there is a defect in the contact of the rocker arm and the valve.
Valve sticking sound	Creaking sound Squeaking sound	Put a sound scope on the valve section to check. • The sound becomes quieter or stops if engine oil is applied, or an anti-squealing agent is sprayed on.
Exhaust leak	A "raspberry" sound A "put-put" sound	Check by holding a wet cloth to the spot on the exhaust system to plug where the leak is suspected to be. • The noise becomes louder when the engine speed is increased.
Compression leak	Hissing sound	Disconnect the spark plug to inspect. • When disconnected, the sound becomes quieter or stops.
		Apply oil to the cylinder head gasket and to the spark plug gasket attachment section to check. • If there is a leak, the oil blows out.
		If the gasket is destroyed, the combustion gas may leak into the cooling system, causing bubbles to form in the top of the radiator

www.truck-freeworkshop.com

EXCESSIVE ENGINE OIL CONSUMPTION

A classification of oil consumption by the main phenomena is as follows:

1. Oil loss via the piston ring
   This is when the oil that lubricates the cylinder walls gets into the combustion chamber.
   After the engine has warmed up, after left idling or operated at about 1000 rpm for 4 to 5 minutes, if the engine is raced, a large amount of white-purple exhaust is output for the first 30 to 60 seconds, thereafter tending to become less. In this case, if left idling or operated at under 1000 rpm for another 4 to 5 minutes, then raced again, the engine emits a large amount of white-purple exhaust again as before.
2. Oil loss via the valve guide
   This is when the oil enters the combustion chamber from the clearance between the valve stem and the valve guide.
   After warming the engine, race it at about 2000 rpm and inspect the exhaust gas. At this time, a large amount of white-purple exhaust gas is exhausted, and this output increases gradually if the engine speed is increased.
3. In-flow from the crankcase emission control system (PCV device)

Phenomenon	Main places for inspection and adjustment
Leaking to the exterior of the engine	1. PCV valve
	2. Engine body
Leaking to the interior of the engine	1. Cylinder head
	2. Cylinder block
	3. Head gasket
	4. Oil loss via the piston ring **[Point 1]**
	5. Oil loss via the valve guide **[Point 2]**

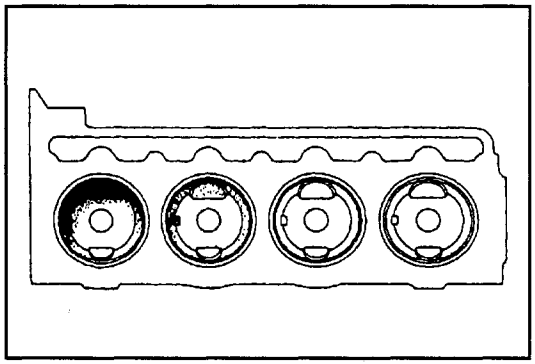

[Point 1]
Inspect for oil loss via the piston ring
A lot of carbon build-up will be visible around the top of the piston.

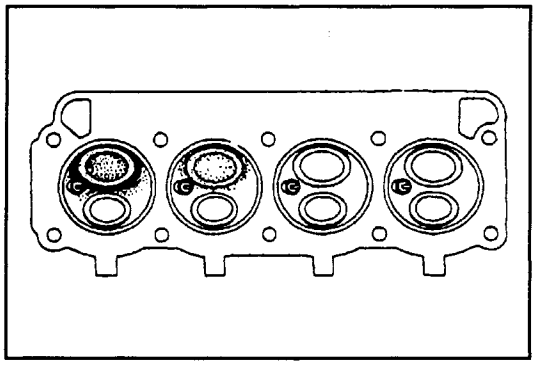

[Point 2]
Inspect for oil loss via the valve guide
This can be determined from the carbon build-up on the intake valve head and on the top of the piston, and how wet with oil the valve head is.

www.truck-freeworkshop.com

ENGINE OVERHAUL (4Y-M)

Page

SST TO BE USED 2-2

ENGINE ATTACHMENTS 2-4

REMOVAL·INSPECTION·INSTALLATION 2-4

CYLINDER HEAD 2-7

COMPONENTS 2-7

DISASSEMBLY·INSPECTION·REASSEMBLY 2-10

TIMING GEAR 2-19

COMPONENTS 2-19

DISASSEMBLY·INSPECTION·REASSEMBLY 2-22

CYLINDER BLOCK 2-31

COMPONENTS 2-31

DISASSEMBLY·INSPECTION·REASSEMBLY 2-33

ENGINE ADJUSTMENT 2-42

V-BELT INSPECTION·ADJUSTMENT 2-42

INSPECTION·ADJUSTMENT OF IGNITION TIMING 2-43

INSPECTION·ADJUSTMENT OF IDLE-UP SPEED 2-43

INSPECTION·ADJUSTMENT OF IDLE SPEED 2-44

NO LOAD MAXIMUM SPEED INSPECTION AND ADJUSTMENT 2-44

COMPRESSION INSPECTION 2-44

www.truck-freeworkshop.com

SST TO BE USED

Illustration	Part No.	Part name
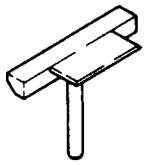	09032-76001-71 (09032-00100)	Oil pan seal cutter
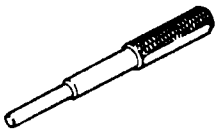	09201-76006-71 (09201-60011)	Valve guide bushing remover & replacer
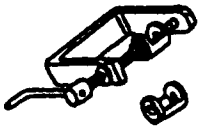	09202-76002-71 (09202-70020)	Valve spring compressor
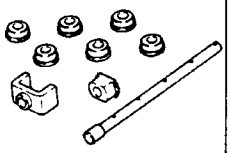	09215-76004-71 (09215-00101)	Camshaft bearing remover & replacer
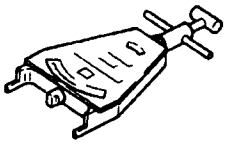	09216-76001-71 (09216-00020)	Belt tension gauge
	09221-76002-71 (09221-25018)	Piston pin remover & replacer
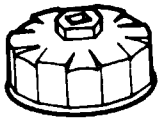	09228-76001-71 (09228-06501)	Oil filter wrench
	09270-76001-71 (09270-71010)	Rocker arm support tool set

www.truck-freeworkshop.com

Illustration	Part No.	Part name
	09276-76001-71 (09276-71010)	Valve lifter tool
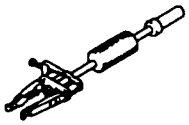	09320-23000-71	Bearing remover
	09950-76014-71 (09950-40011)	Puller B set
	09950-76018-71 (09950-60010)	Replacer set
	09950-76019-71 (09950-60020)	Replacer B set
	09950-76020-71 (09950-70010)	Handle set

www.truck-freeworkshop.com

ENGINE ATTACHMENTS
REMOVAL·INSPECTION·INSTALLATION

T = N·m (kgf·cm) [ft·lbf]

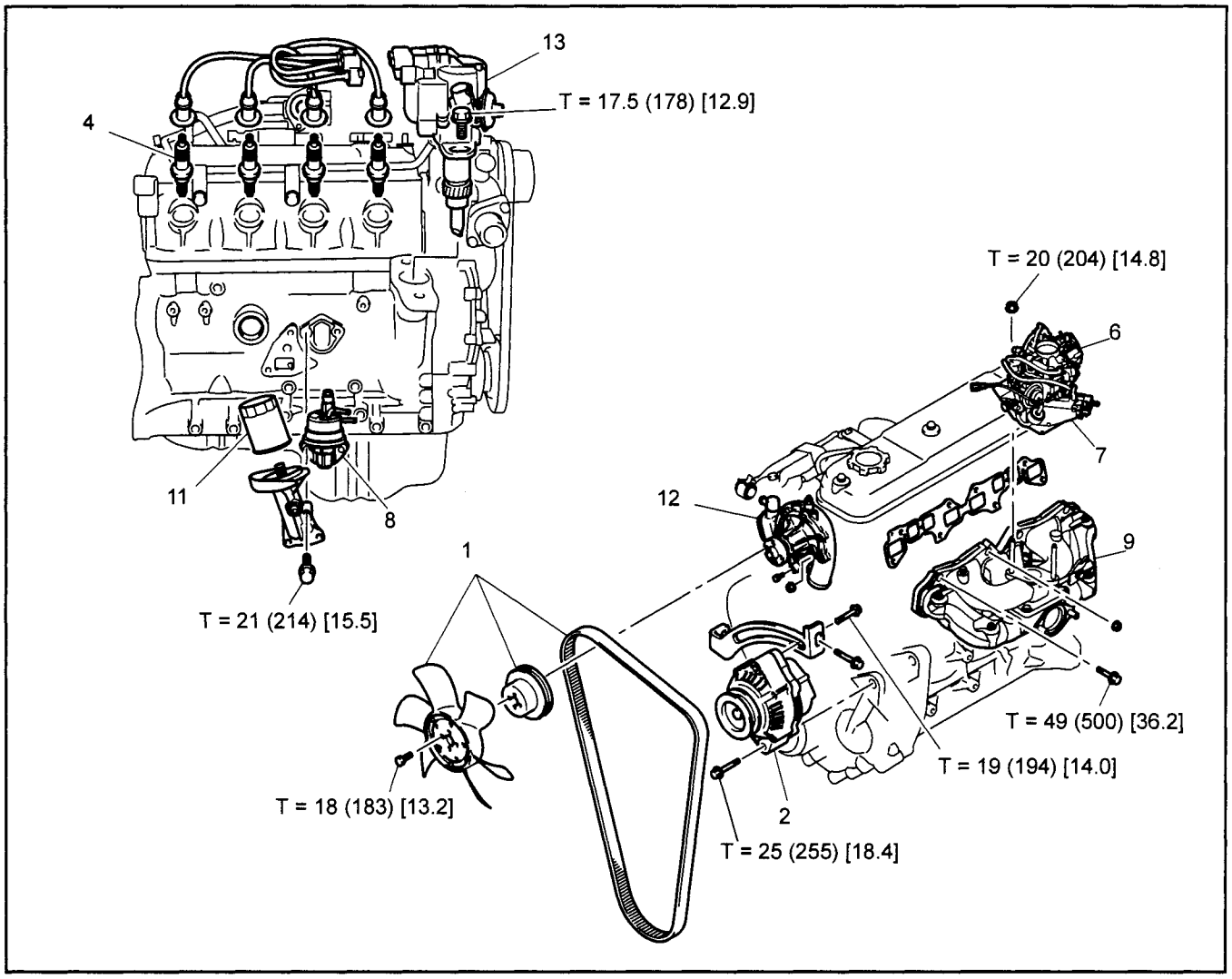

Removal·Installation Procedure

The installation procedure is the reverse of the removal procedure.

No.	Item	Removal	Inspection	Installation
1	Fan, Pulley, V-belt		See P2-42	See P2-42
2	Alternator			
3	Intake pipe			
4	Spark plugs			
5	Accelerator wire			
6	Carburetor			
7	Air governor			
8	Fuel pump			
9	Intake·Exhaust manifolds	**[Point 1]**	**[Point 2]**	
10	Oil level gauge			
11	Oil filter	**[Point 3]**		**[Point 5]**
12	Water pump			
13	Distributor			**[Point 4]**

www.truck-freeworkshop.com

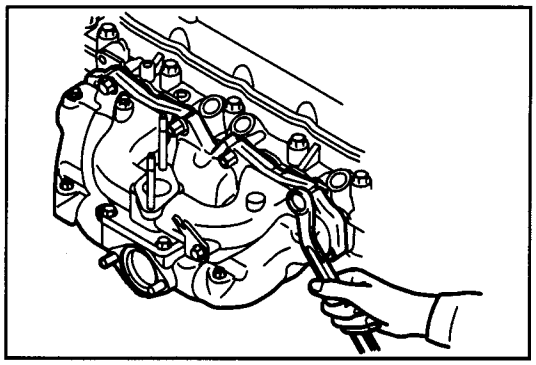

[Point 1]

Removal:

The intake manifold and exhaust manifold are to be removed at the same time.

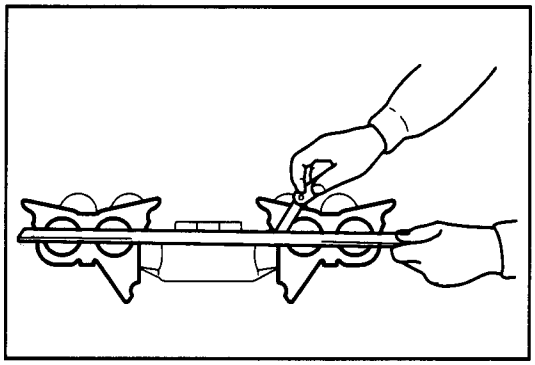

[Point 2]

Inspection:

Using a straight edge ruler and a thickness gauge, measure the amount of distortion of the intake manifold.

Limit: 0.40 mm (0.0157 in.)

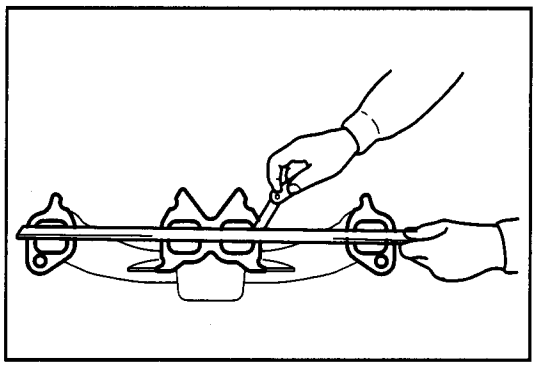

Inspection:

Using a straight edge ruler and a thickness gauge, measure the amount of distortion of the exhaust manifold.

Limit: 0.40 mm (0.0157 in.)

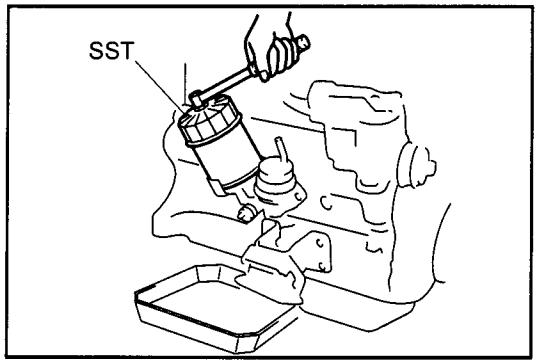

[Point 3]

Removal:

Use the SST to remove the oil filter.

SST 09228-76001-71
(09228-06501)

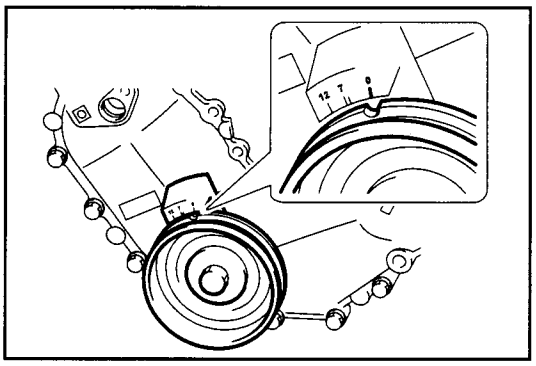

[Point 4]

Installation:

Install the distributor.

1. Align the TDC mark of the crank pully with the notch of the timing gear cover.

www.truck-freeworkshop.com

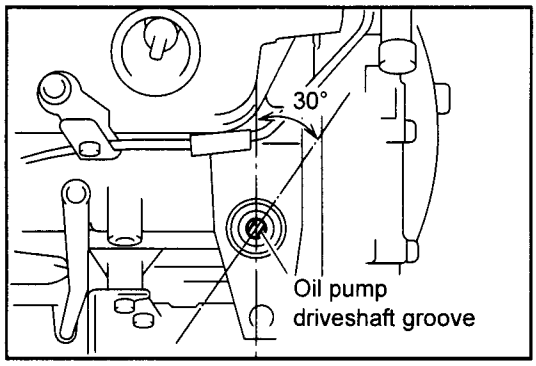

2. Set the position of the groove in the oil pump driveshaft at about 30° when seen from above.

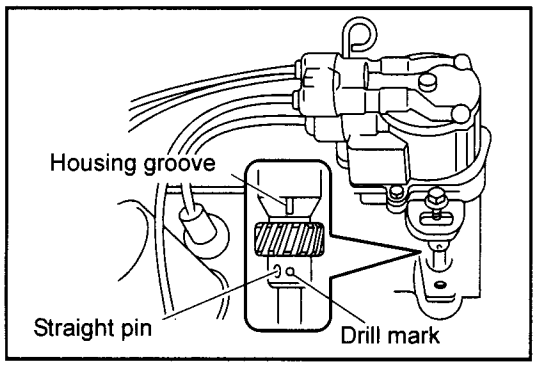

3. Align the housing groove with the drill mark of the gear, and insert the distributor.

Note:

- **Do not confuse the drill mark and the straight pin.**
- **When installing the distributor, align the screw hole for attaching the block with the center of the groove in the flange to install.**
- **After installation, adjust the ignition timing. (See P2-43)**

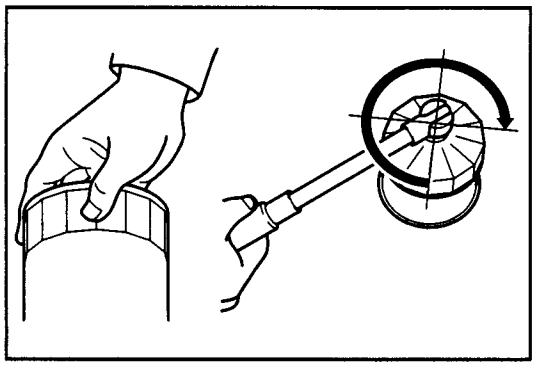

[Point 5]

Installation:

After cleaning the attachment surface of the oil filter, fit an O-ring to the oil filter and tighten the oil filter to the bracket by hand first, and then use the SST to further tighten by 3/4 turn.

SST 09228-76001-71
(09228-06501)

Caution:

- **Apply a small amount of engine oil to the O-ring.**
- **Clean the surface to which the O-ring will be attached.**

www.truck-freeworkshop.com

CYLINDER HEAD
COMPONENTS

1104

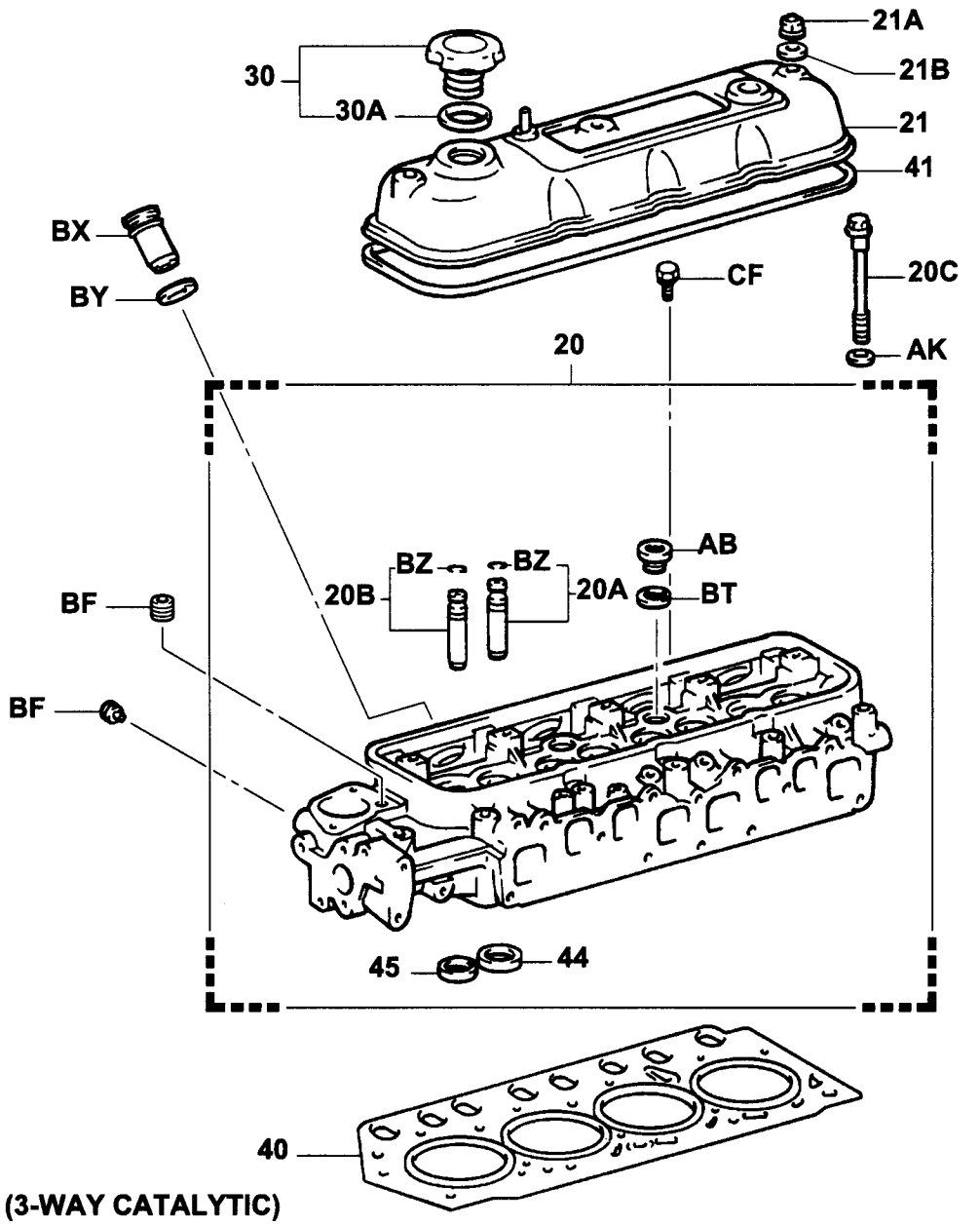

(3-WAY CATALYTIC)

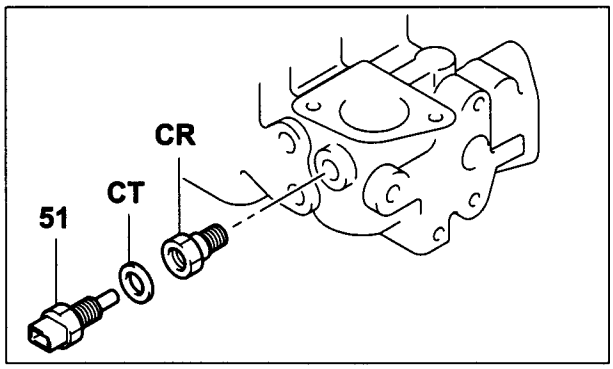

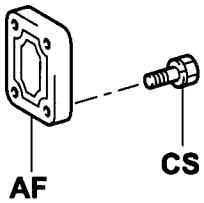

1101-148

www.truck-freeworkshop.com

1302

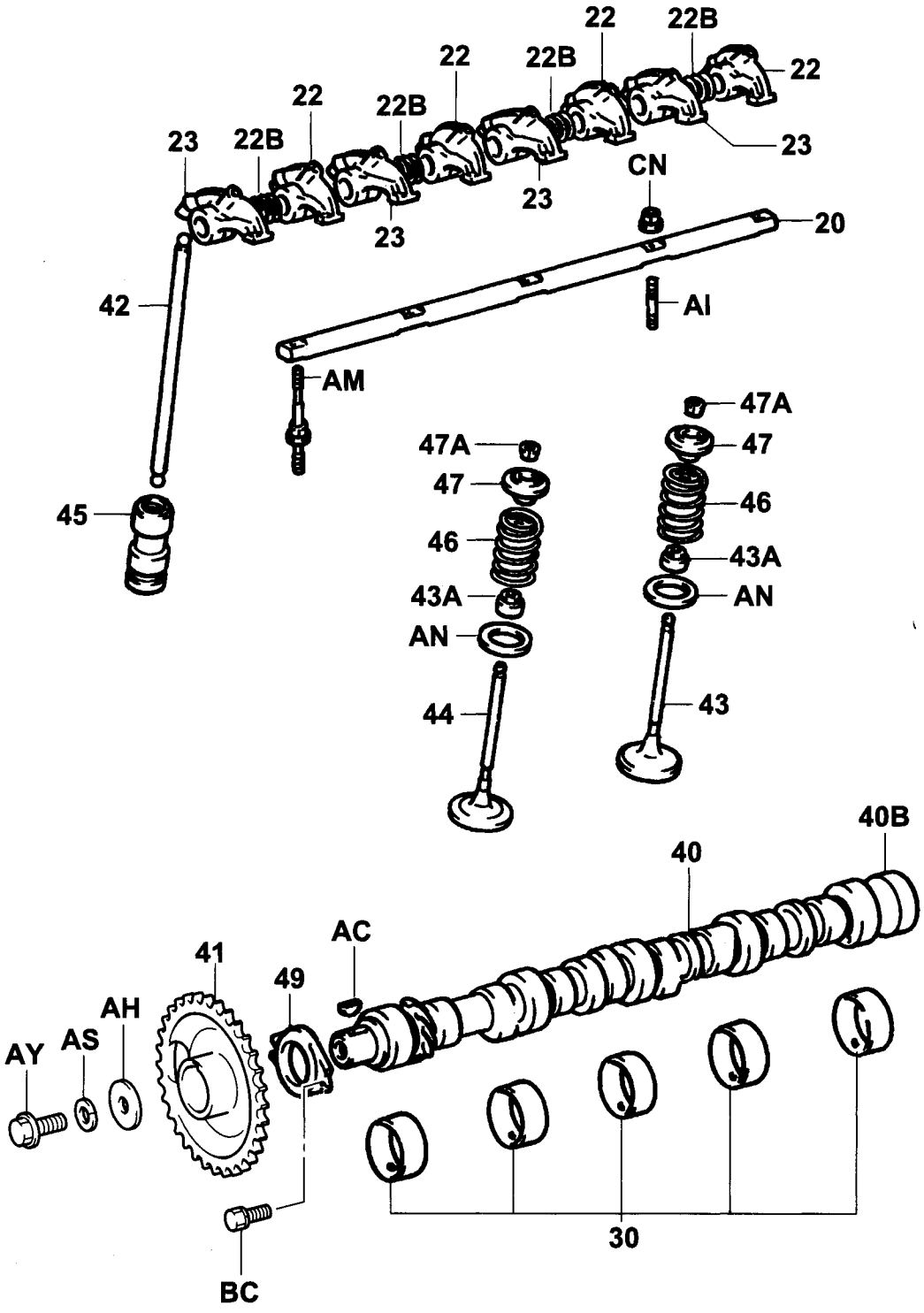

1302-130

www.truck-freeworkshop.com

1701

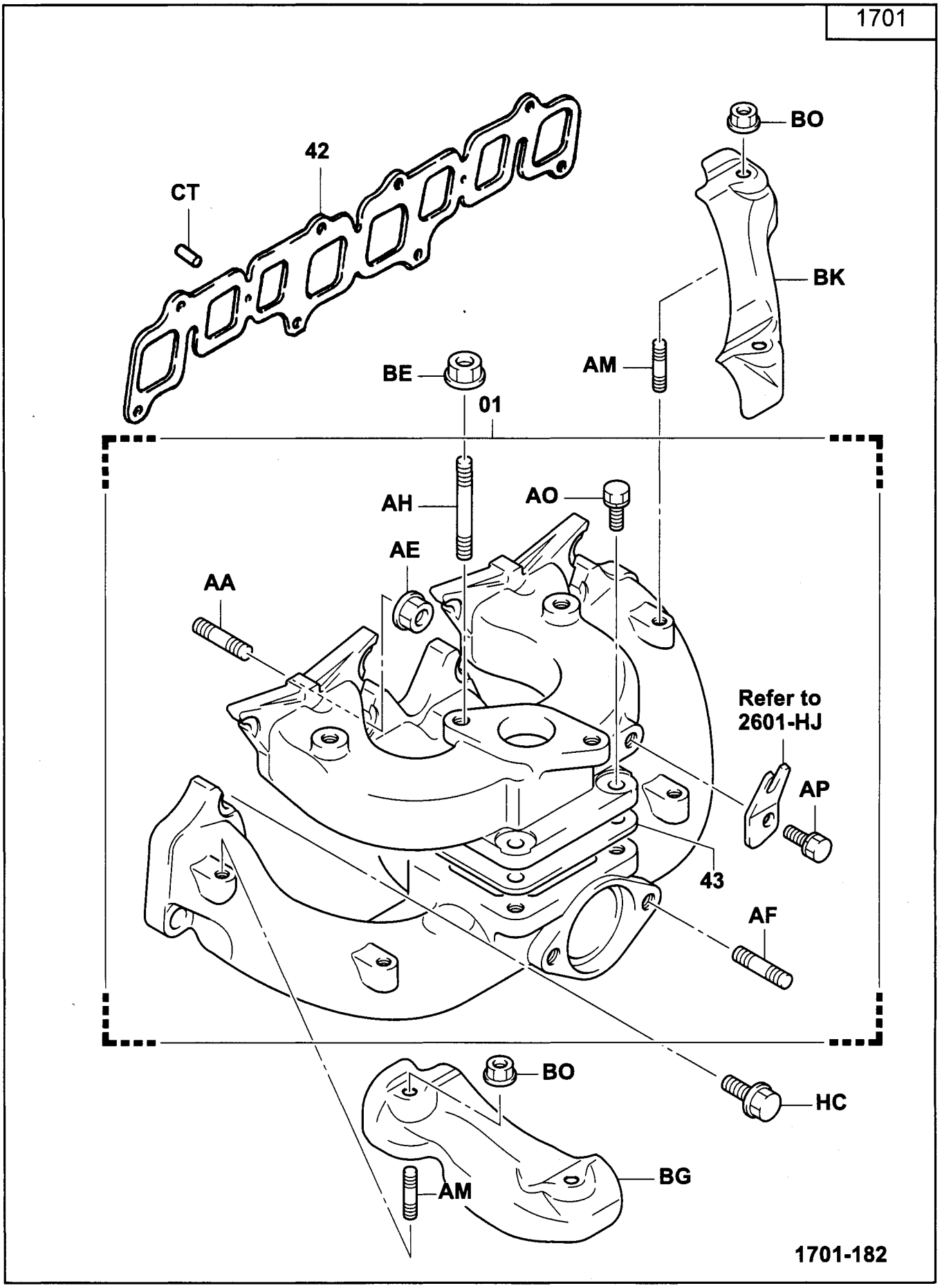

www.truck-freeworkshop.com

DISASSEMBLY·INSPECTION·REASSEMBLY

T = N·m (kgf·cm) [ft·lbf]

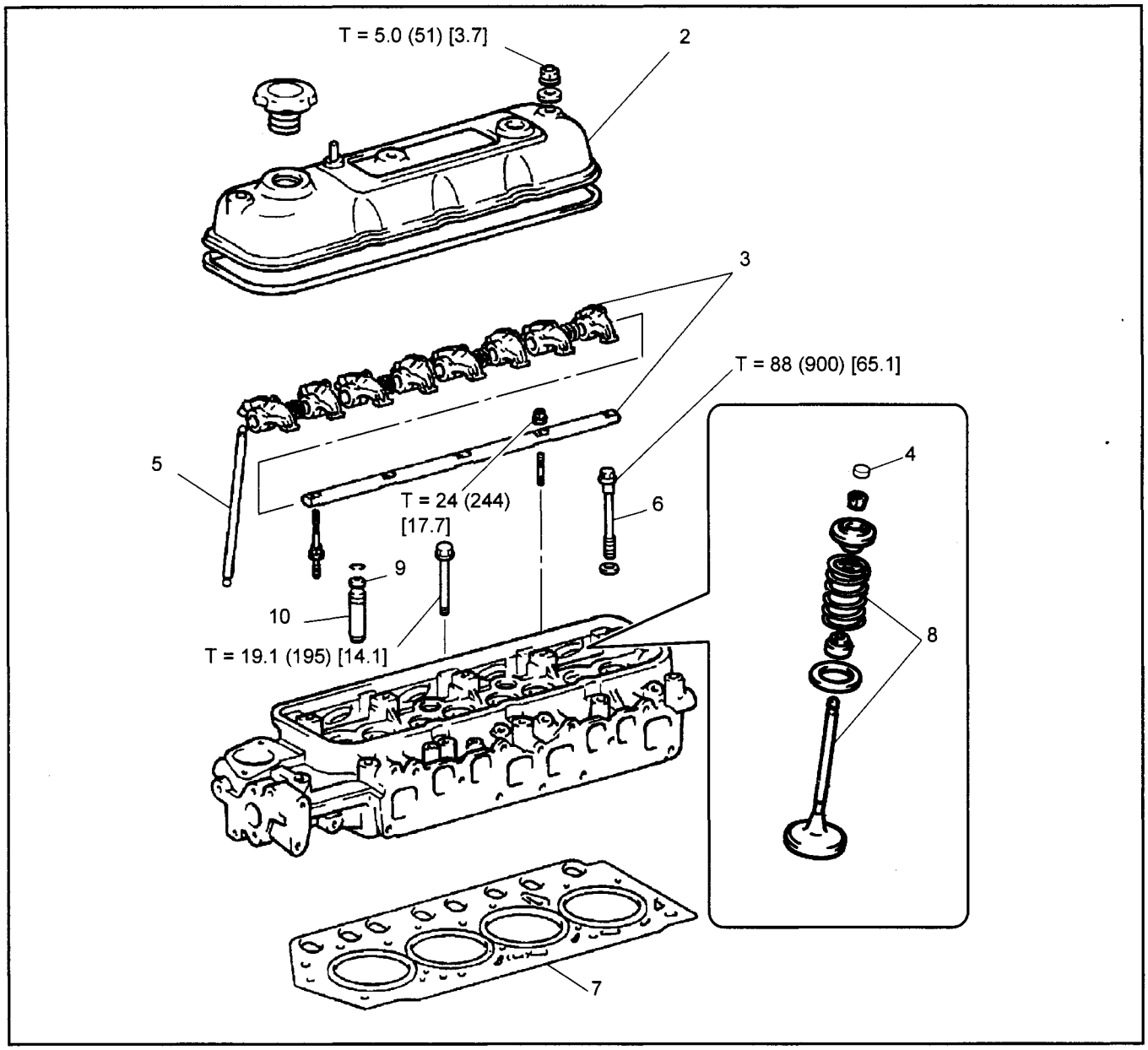

Disassembly·Reassembly Procedure

The reassembly procedure is the reverse of the disassembly procedure.

No.	Item	Disassembly	Inspection	Reassembly
1	Remove parts in procedures 1 to 13 on page 2-4.			
2	Cylinder head cover			
3	Rocker shaft ASSY	**[Point 1]**	**[Point 2]**	**[Point 18]**
4	Valve stem cap		**[Point 3]**	
5	Valve push rod	**[Point 4]**	**[Point 5]**	**[Point 17]**
6	Cylinder head bolt	**[Point 6]**		**[Point 16]**
7	Cylinder head gasket		**[Point 7]**	**[Point 15]**
8	Valve spring and valve	**[Point 8]**	**[Point 9]**	**[Point 14]**
9	Valve stem oil seal			**[Point 13]**
10	Valve guide bushing	**[Point 10]**	**[Point 11]**	**[Point 12]**

www.truck-freeworkshop.com

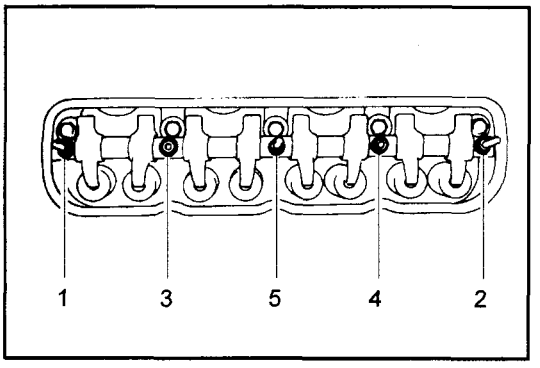

Point Operations

[Point 1]

Disassembly:

Evenly loosen the support set bolts in two or three times, following the order shown in the illustration.

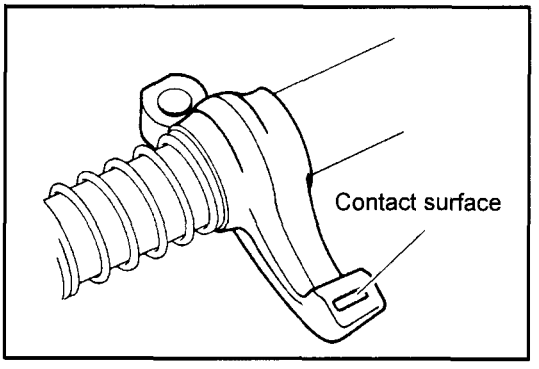

[Point 2]

Inspection:

Inspect for wear or damage to the contact surface for the rocker arm valve stem cap.

If there is a slight damage, correct it by polishing with oil stone, and replace if there is a considerable wear or damage.

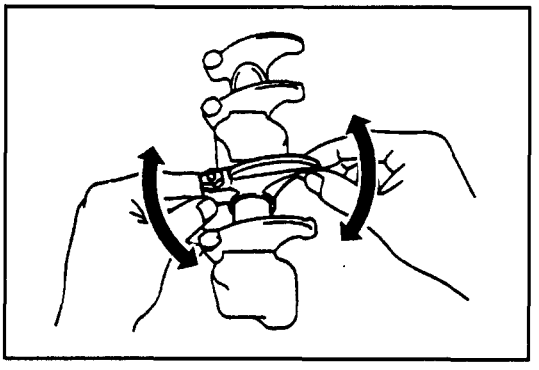

Inspection:

Move the rocker arm as shown in the illustration, and inspect the clearance between the rocker arm and the shaft. If the clearance is large, disassemble and inspect it.

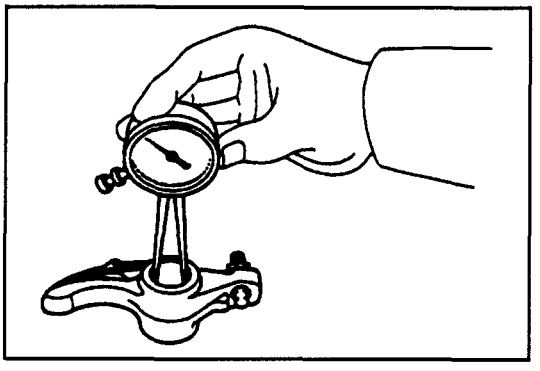

Inspection:

Inspect the oil clearance between the rocker arm and the rocker shaft.

1. Measure the rocker arm inside diameter with a caliper gauge.

   Standard: 18.500 to 18.515 mm (0.7283 to 0.7289 in.)

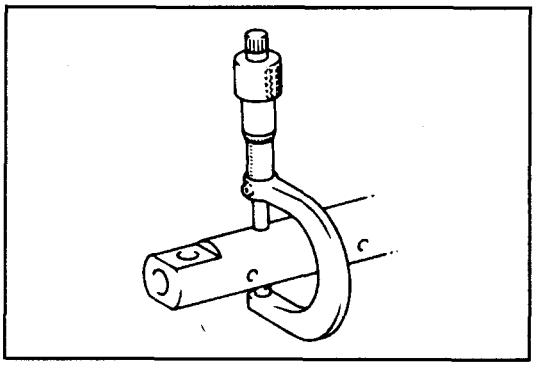

2. Measure the rocker shaft outside diameter with a micrometer.

   Standard: 18.474 to 18.487 mm (0.7273 to 0.7278 in.)

   Calculate the oil clearance by the difference between the arm inner diameter and the shaft outer diameter.

   Standard: 0.013 to 0.041 mm (0.0005 to 0.0016 in.)
   Limit: 0.08 mm (0.0031 in.)

   If it exceeds the limit, replace the rocker arm or the rocker shaft.

www.truck-freeworkshop.com

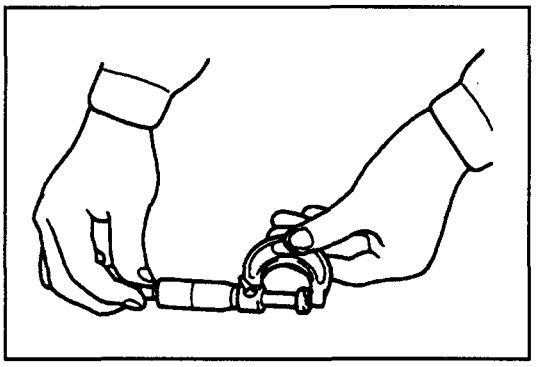

[Point 3]

Inspection:

Inspect the valve stem cap.

1. Measure the wall thickness of the valve stem cap.

   Standard: 1.31 to 1.49 mm (0.0516 to 0.0587 in.)

2. If there is a slight scratch on the contact surface with the rocker arm, correct it by polishing with oil stone, and if there is considerable wear or damage, replace with a new one.

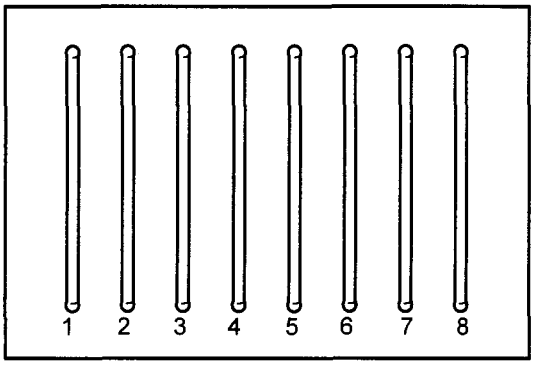

[Point 4]

Disassembly:

Store the removed push rods carefully so that their order will not be mixed up during reassembly.

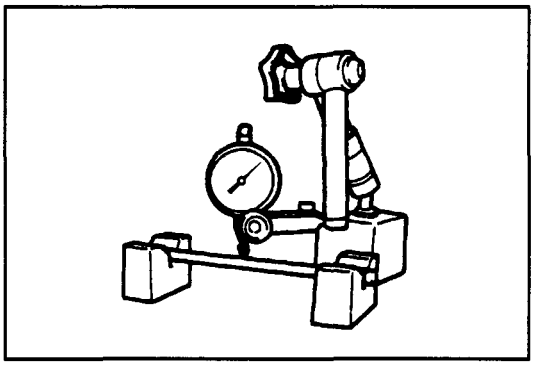

[Point 5]

Inspection:

Inspect the push rod.

1. Inspect the runout in the push rod.

   Limit: 0.30 mm (0.0118 in.)

   If it exceeds the limit, replace the push rod.

2. Inspect for blockage of the push rod oil hole.
   If there is a blockage, remove it with an air gun.

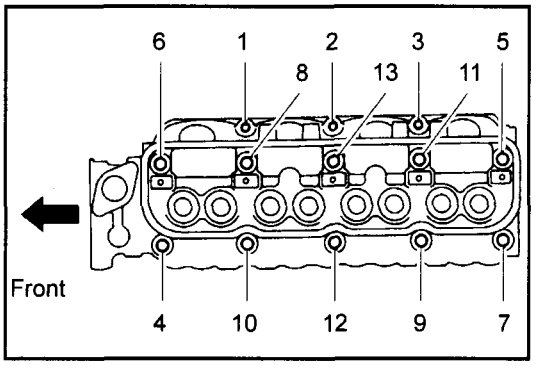

[Point 6]

Disassembly:

Loosen the cylinder head bolts in two or three times, following the order shown in the illustration.

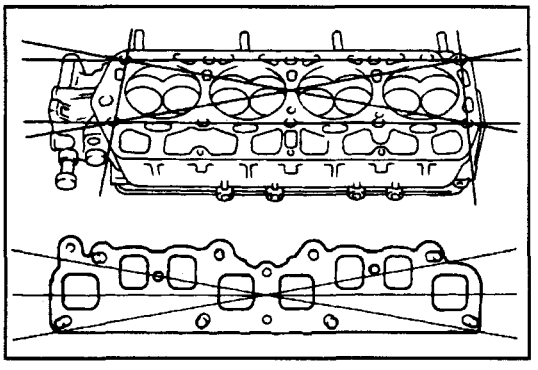

[Point 7]

Inspection:

Use a straight edge ruler and a thickness gauge to measure the distortion of the lower surface of the cylinder head and the attachment surface of the manifold.

Limit
Cylinder head lower surface: 0.15 mm (0.0059 in.)
Manifold attachment surface: 0.10 mm (0.0039 in.)

If it exceeds the limit, grind or replace.

www.truck-freeworkshop.com

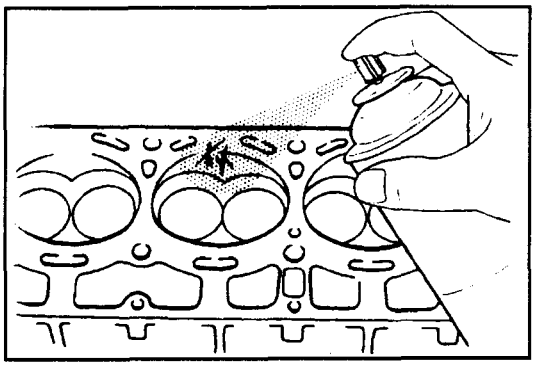

Inspection:

Inspect for cracking in the cylinder head.

With color check (dye penetrant inspection), inspect the combustion chambers, the intake ports, the exhaust ports, and the lower and upper faces of the heads.

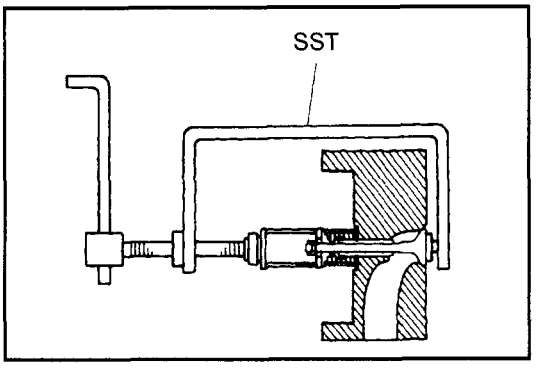

[Point 8]

Disassembly:

Use the SST to disassemble the valve spring and valve.

SST 09202-76002-71
(09202-70020)

Disassembly:

Store the removed parts by sorting them out for each cylinder.

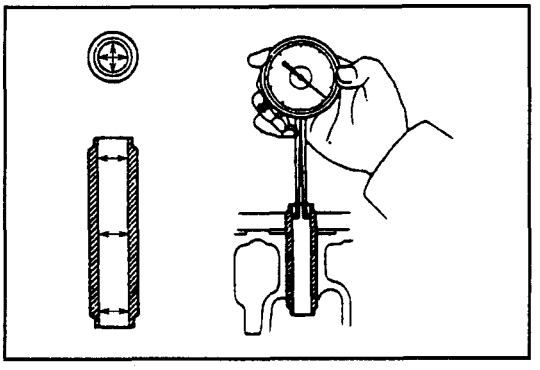

[Point 9]

Inspection:

Inspect the oil clearance between the valve guide bushing and the valve stem.

1. Measure the valve guide bushing inside diameter with a caliper gauge.

   Standard
   IN: 8.010 to 8.030 mm (0.3154 to 0.3161 in.)

2. Measure the outside diameter of the valve stem.

   Standard
   IN: 7.970 to 7.985 mm (0.3138 to 0.3144 in.)
   EX: 7.965 to 7.980 mm (0.3136 to 0.3142 in.)

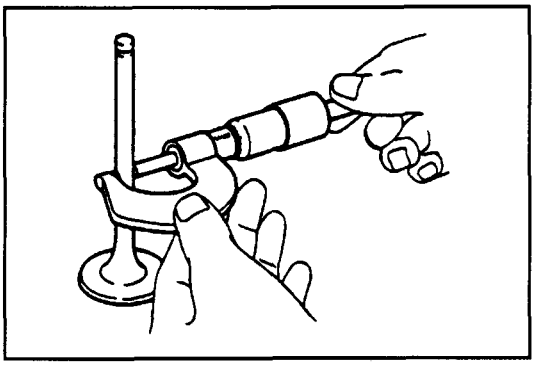

3. Calculate the oil clearance.

   Standard
   IN: 0.025 to 0.060 mm (0.0010 to 0.0024 in.)
   EX: 0.030 to 0.065 mm (0.0012 to 0.0026 in.)
   Limit
   IN: 0.10 mm (0.0039 in.)
   EX: 0.12 mm (0.0047 in.)

   If it exceeds the limit, replace the valve stem or the valve guide bushing. Also, if necessary, grind the inside surface by using a reamer to correct the oil clearance between the valve guide bushing and the valve stem within the standard range.

www.truck-freeworkshop.com

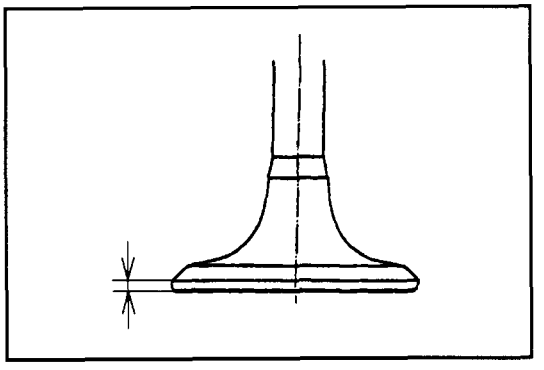

Inspection:

Inspect the valves.

1. Measure the wall thickness of the valve head.

   Standard
   IN: 1.0 to 1.4 mm (0.039 to 0.055 in.)
   EX: 1.3 to 1.7 mm (0.051 to 0.067 in.)
   Limit
   IN: 0.5 mm (0.020 in.)
   EX: 0.8 mm (0.031 in.)

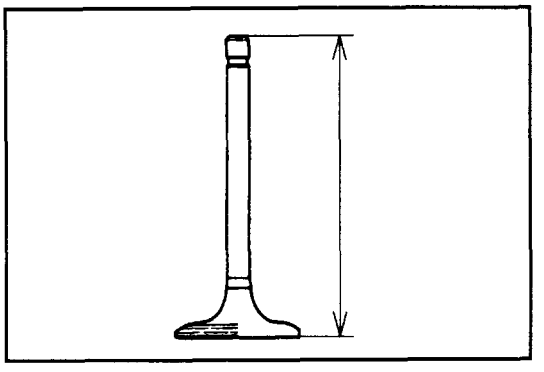

2. Measure the total length of the valves.

   Standard
   IN: 108.2 mm (4.260 in.)
   EX: 108.5 mm (4.272 in.)
   Limit
   IN: 107.7 mm (4.240 in.)
   EX: 108.0 mm (4.252 in.)

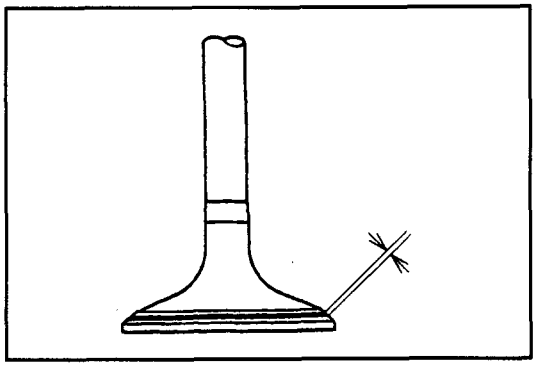

Inspection:

Inspect the valve seat.

1. Apply red lead primer thinly to the valve face.
2. Insert the valve into the valve guide bushing, and press the valve onto the valve seat. Do not rotate the valve while it is pressed onto the valve seat.
3. Inspect the width of the contact surface to see whether it is within the standard along the entire circumference.

   Standard
   Contact width: 1.2 to 1.6 mm (0.047 to 0.063 in.)

   If the width is not within the standard, replace the valve or correct the valve seat.

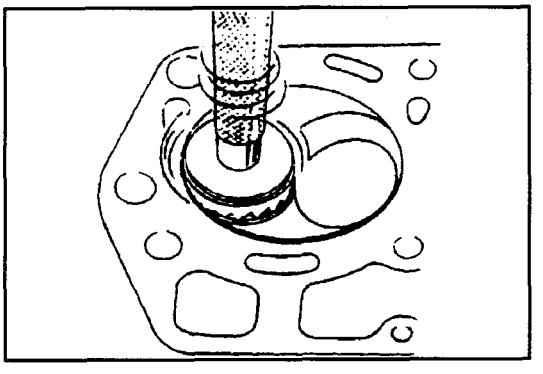

4. Correct the valve seat.

Caution:

- **Use a carbide tip cutter for the EX side.**
- **Cutting should be performed while constantly checking the contact point and contact width of the valve.**
- **In order not to create steps, gradually reduce the force towards the end of cutting.**
- **Make corrections after inspecting the valve guide bushing.**

www.truck-freeworkshop.com

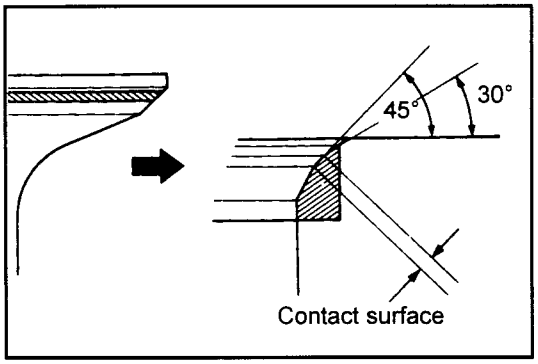

(1) Grind the valve seat with a 45° valve seat cutter.

(2) If the contact position is on the outward side, grind using a 30° cutter.

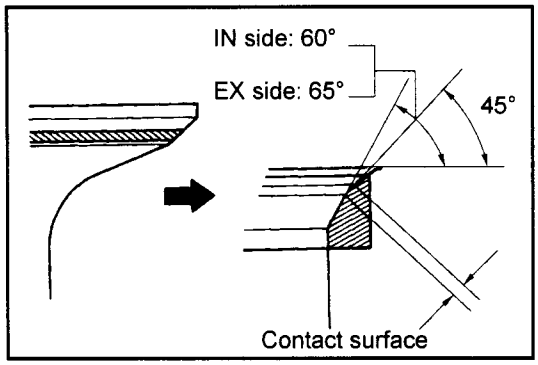

(3) If the contact position is on the inward side, grind using a 60° cutter on the IN side, and a 65° cutter on the EX side.

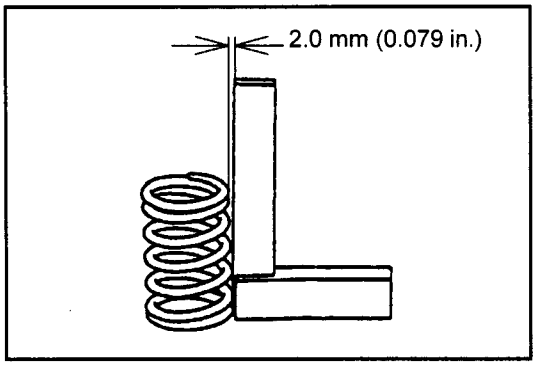

Inspection:

Inspect the valve spring.

1. Measure the squareness at the top end of the spring.

   Limit IN·EX: 2.0 mm (0.079 in.)

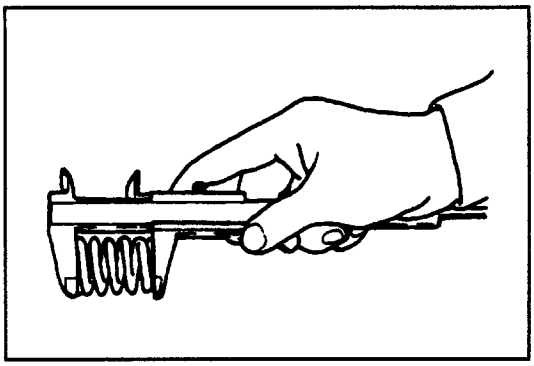

2. Measure the free length.

   Standard
   IN·EX: 46.0 mm (1.81 in.)
   Limit
   IN·EX: 45.5 mm (1.79 in.)

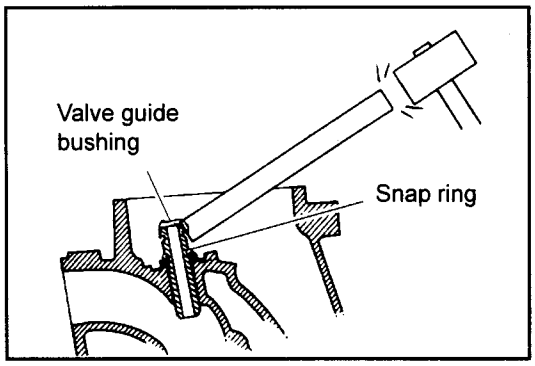

[Point 10]

Disassembly:

Remove the valve guide bushing.

1. Use a bar and hammer to break off the valve guide bushing.
2. Remove the snap ring.

www.truck-freeworkshop.com

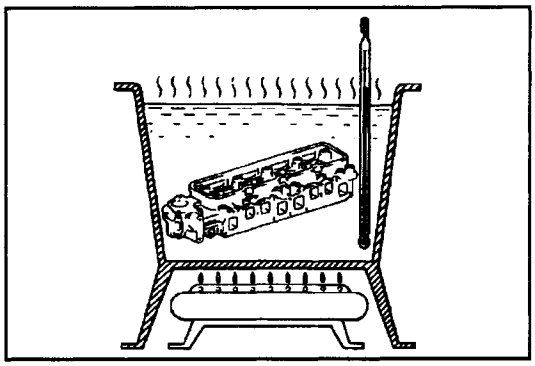

3. Gradually warm the cylinder head to between 80 and 100°C (176 to 212°F).

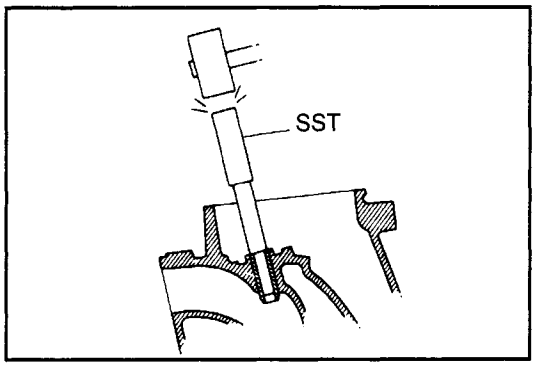

4. Use the SST and a hammer to tap out the valve guide bushing.

   SST 09201-76006-71
   (09201-60011)

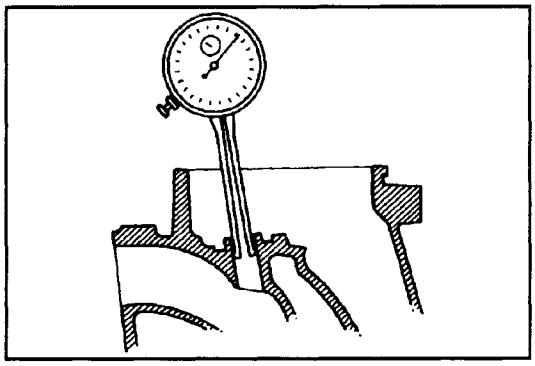

[Point 11]

Inspection:

Use a caliper gauge to measure the inside diameter of the bushing bottom hole, then select the bushing to be used.

Bushing inside diameter (mm) [in.]	Bushing size
13.000 to 13.027 (0.5118 to 0.5129)	STD bushing
13.027 (0.5129) or more	O/S 0.05 bushing

If the bushing bottom hole inside diameter is 13.027 mm (0.5129 in.) or more, correct the inside of the bushing bottom hole with a reamer.

Bushing bottom hole inside diameter:
13.050 to 13.077 mm (0.5138 to 0.5148 in.)

If the bushing bottom hole inside diameter is 13.077 mm (0.5148 in.) or more, replace the cylinder head.

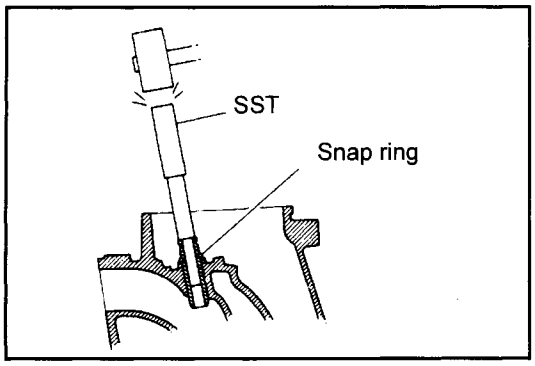

[Point 12]

Reassembly:

Install the valve guide bushing.

1. Gradually warm the cylinder head to between 80 and 100°C (176 to 212°F).
2. Use the SST and a hammer to tap the bushing in until the snap ring makes contact with the head.

   SST 09201-76006-71
   (09201-60011)

www.truck-freeworkshop.com

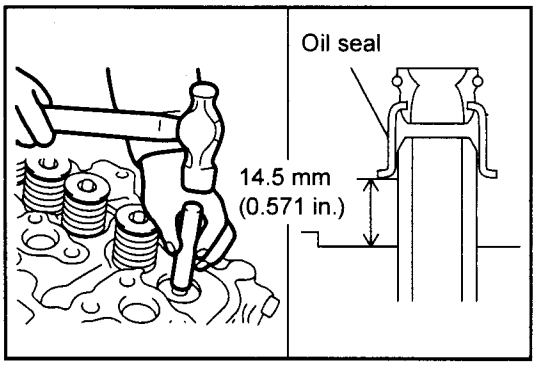

[Point 13]

Reassembly:

Apply engine oil to the valve stem oil seal lip portion and to the valve stem, and reassemble them.

Reassemble according to the dimensions shown in the illustration on the left.

SST 09201-76005-71
(09201-58010)

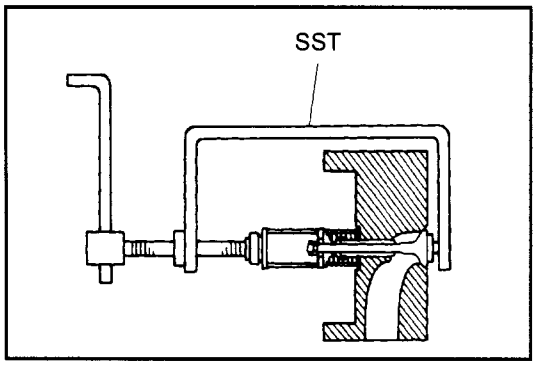

[Point 14]

Reassembly:

Use the SST to reassemble the valve spring and valve.

SST 09202-76002-71
(09202-70020)

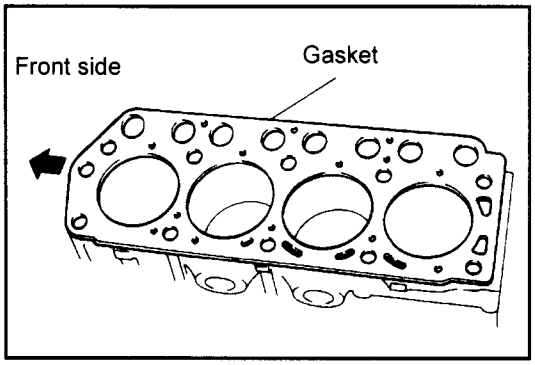

[Point 15]

Reassembly:

Check the direction of the gasket and install the gasket.

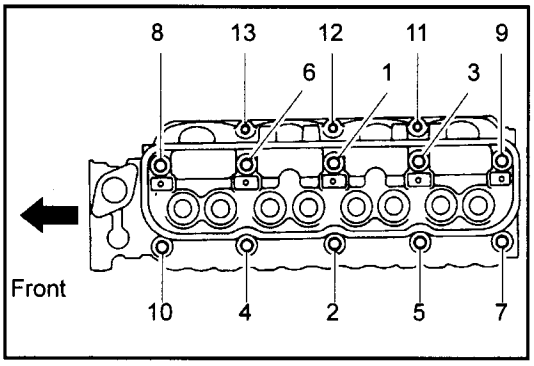

[Point 16]

Reassembly:

Tighten the cylinder head bolts in two or three times, following the order shown in the illustration.

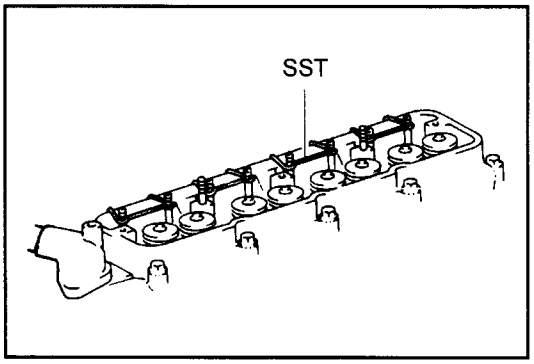

[Point 17]

Reassembly:

Use the SST to position and install the push rod.

SST 09270-76001-71
(09270-71010)

www.truck-freeworkshop.com

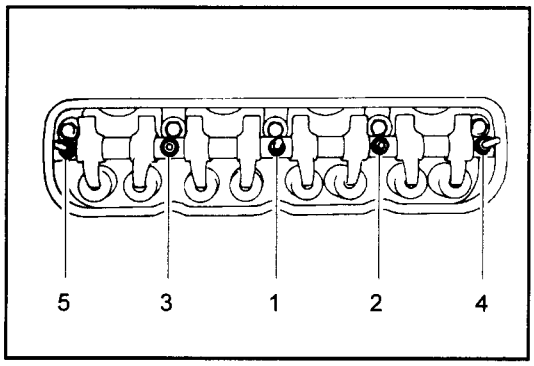

[Point 18]

Reassembly:

Evenly tighten the support set bolts in two or three times, following the order shown in the illustration.

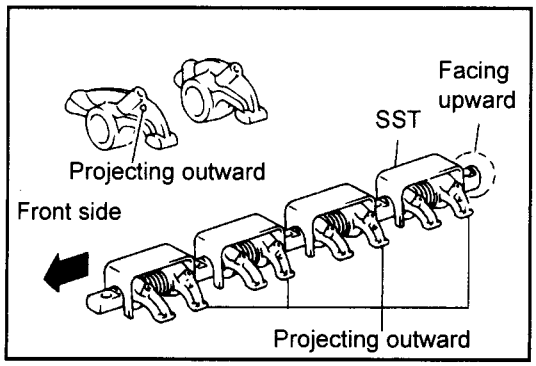

Reassembly:

Check the direction of the rocker arm shaft, then use the SST to position the rocker arm and install the rocker arm ASSY.

SST 09270-76001-71
(09270-71010)

www.truck-freeworkshop.com

TIMING GEAR
COMPONENTS

1106

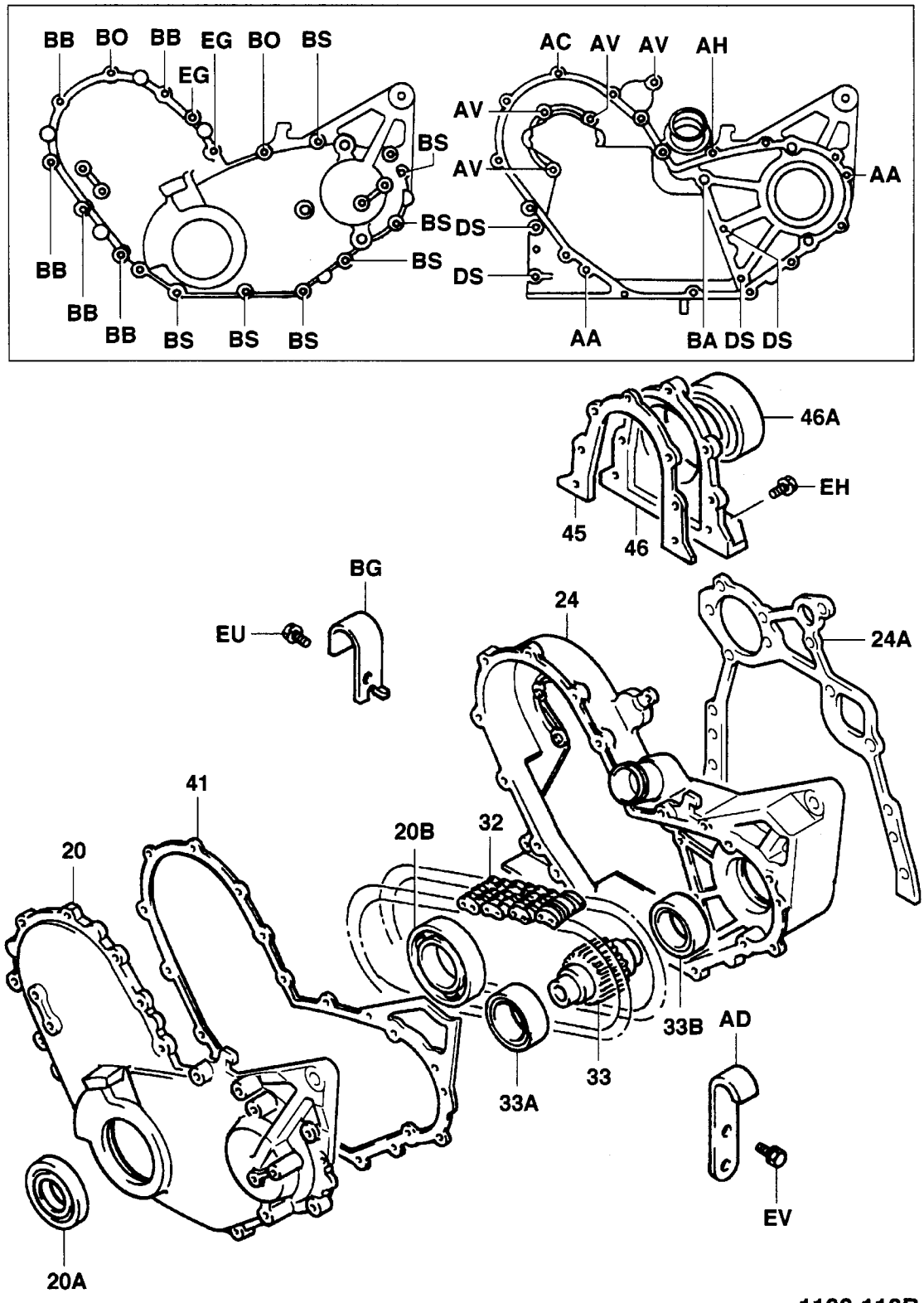

www.truck-freeworkshop.com

1302

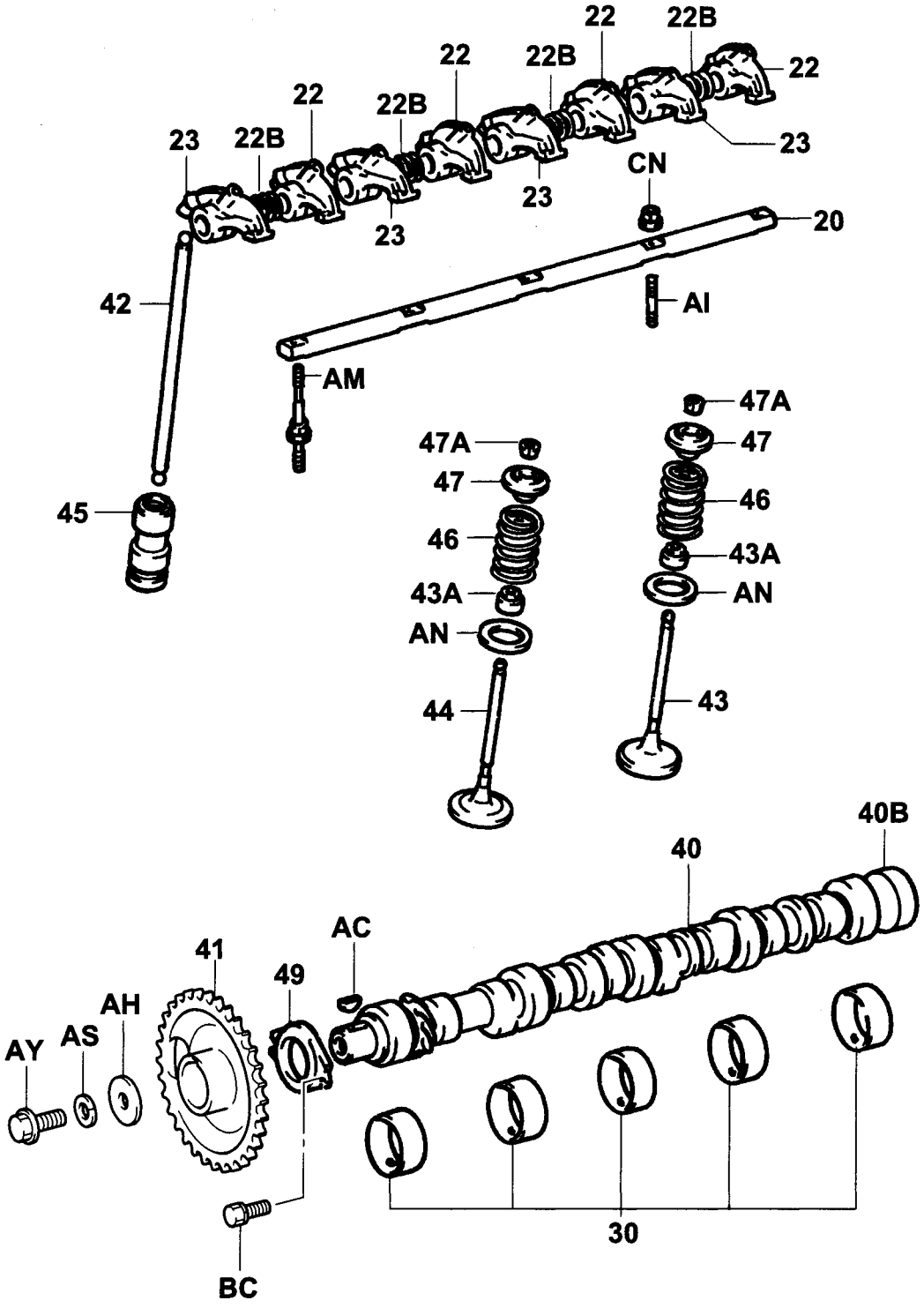

1302-130

www.truck-freeworkshop.com

1303

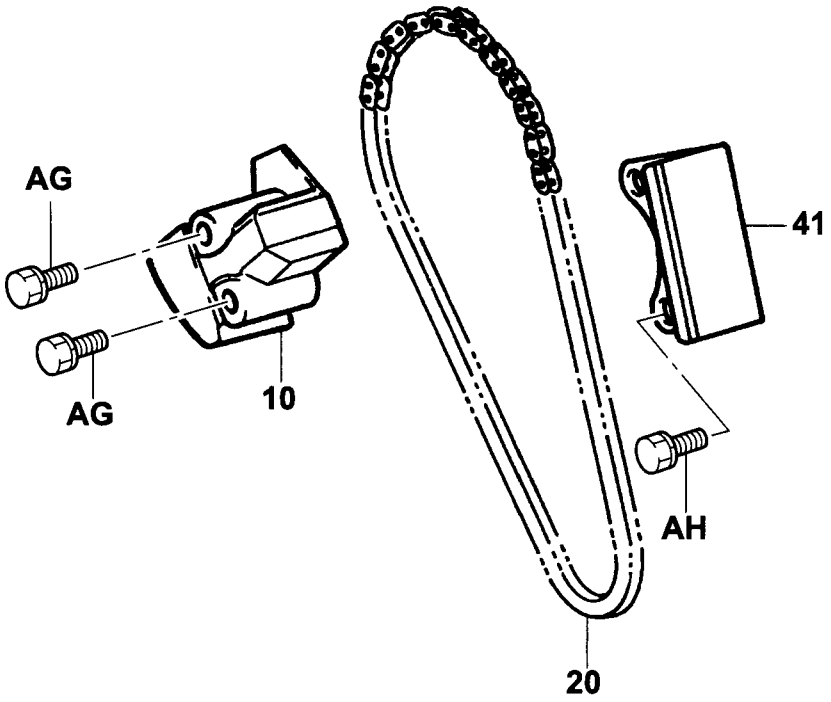

1303-012

www.truck-freeworkshop.com

DISASSEMBLY·INSPECTION·REASSEMBLY

T = N·m (kgf·cm) [ft·lbf]

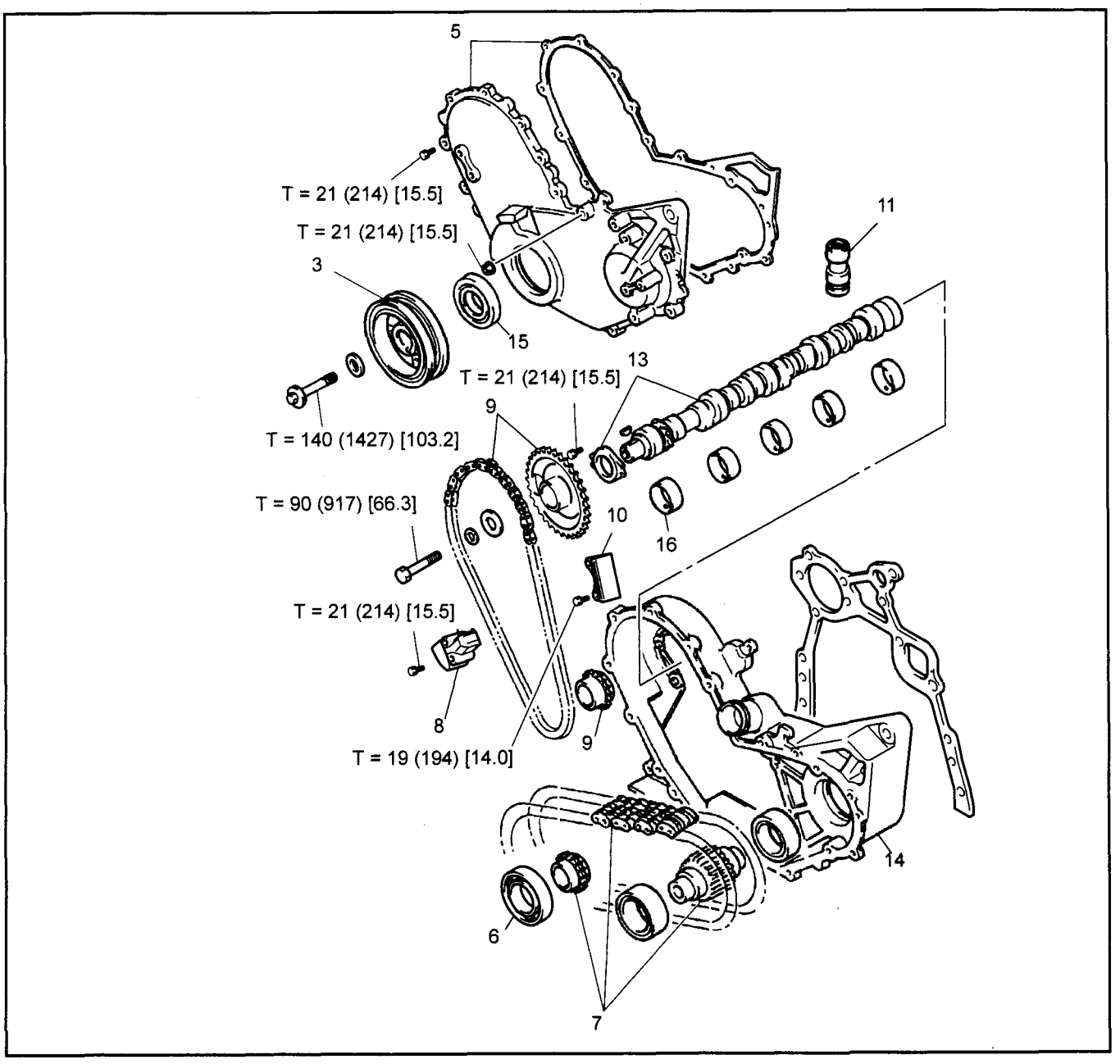

Disassembly·Reassembly Procedure

The reassembly procedure is the reverse of the disassembly procedure.

No.	Item	Disassembly	Inspection	Reassembly
1	Fan pulley, V-belt, alternator	See P2-42	←	←
2	Cylinder head ASSY*	See P2-10	←	←
3	Crankshaft pulley			
4	Crank position sensor			
5	Timing gear cover and gasket			
6	Crankshaft bearing	**[Point 1]**		**[Point 19]**
7	Pump drive sprocket and drive chain, crankshaft sprocket	**[Point 2]**		**[Point 18]**
8	Chain tensioner		**[Point 3]**	
9	Timing chain, crankshaft sprocket, camshaft sprocket		**[Point 4]**	**[Point 17]**

www.truck-freeworkshop.com

No.	Item	Disassembly	Inspection	Reassembly
10	Chain vibration damper		**[Point 5]**	
11	Valve lifter	**[Point 6]**	**[Point 7]**	
12	Oil pan	**[Point 8]**		**[Point 16]**
13	Thrust plate and camshaft	**[Point 9]**	**[Point 10]**	**[Point 15]**
14	Timing gear case			
15	Front oil seal	**[Point 11]**		**[Point 14]**
16	Camshaft bearing	**[Point 12]**		**[Point 13]**

* If you remove the parts other than the camshaft, you do not need to remove the cylinder head.

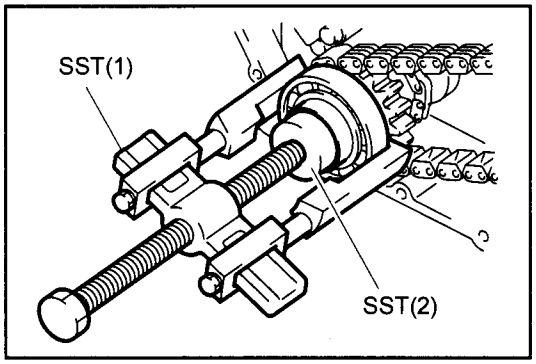

Point Operations

[Point 1]

Disassembly:

Use the SST to remove the crankshaft bearing.

SST 09950-76014-71 .....(1)
(09950-40011)
09950-76018-71 .....(2)
(09950-60010)

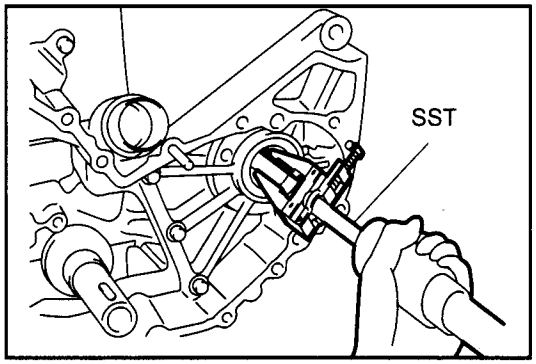

[Point 2]

Disassembly:

Use the SST to remove the bearing (case side).

SST 09320-23000-71

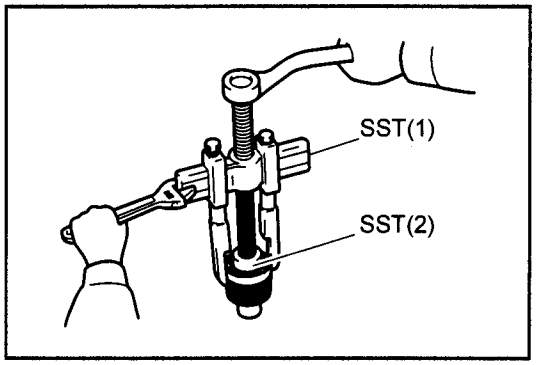

Disassembly:

Use the SST to remove the bearing (gear side).

SST 09950-76014-71 .....(1)
(09950-40011)
09950-76018-71 .....(2)
(09950-60010)

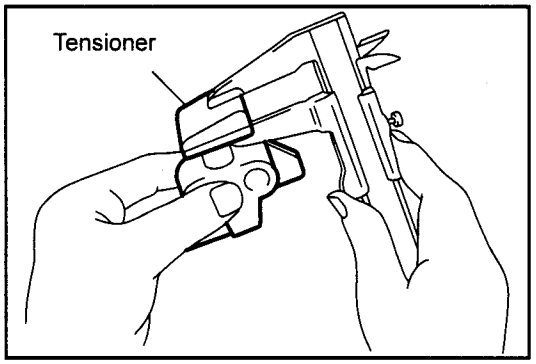

[Point 3]

Inspection:

Use a vernier caliper to measure the tensioner.

Standard: 15.0 mm (0.591 in.)
Limit: 12.5 mm (0.492 in.)

www.truck-freeworkshop.com

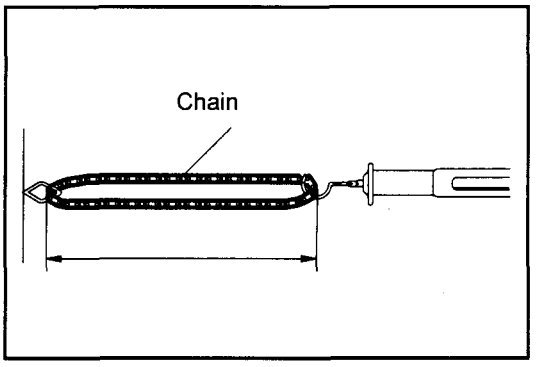

[Point 4]

Inspection:

Inspect the timing chain.
Tension the chain to 49 N (5 kgf) [11.0 lbf], then measure the chain length in at least 3 places at random to inspect the stretch of the chain.

Limit: 291.4 mm (11.472 in.)

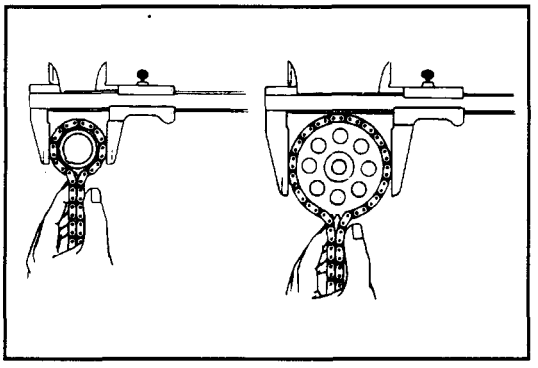

Inspection:

Inspect the timing gear.
Measure the outside diameter of the sprocket with the chain on.

Limit
Crankshaft: 59 mm (2.32 in.)
Camshaft: 114 mm (4.49 in.)

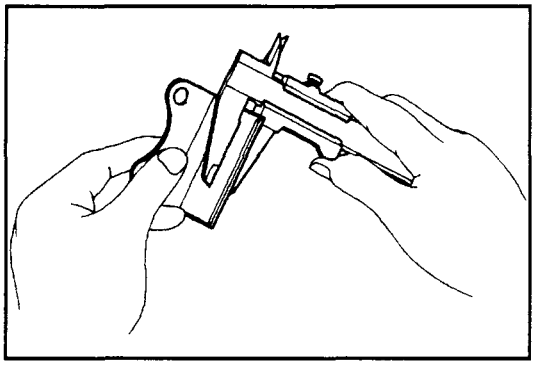

[Point 5]

Inspection:

Use a vernier caliper to measure the thickness of the damper.

Standard: 6.6 mm (0.260 in.)
Limit: 5.0 mm (0.197 in.)

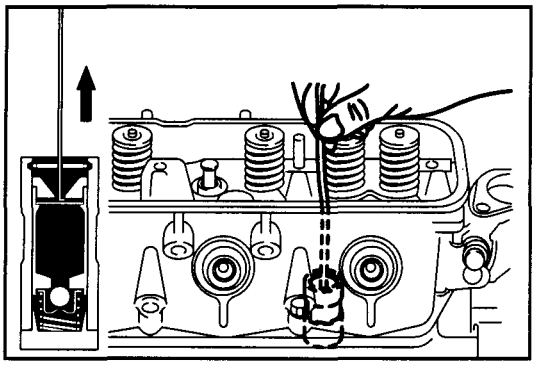

[Point 6]

Disassembly:

Use a wire with the end bent into an L shape to remove the valve lifter.

Note:

- **Bend the end of the wire about 1 mm (0.04 in.), and insert the wire into the center hole of the valve lifter to hook the valve lifter.**
- **Clean the wire thoroughly first.**

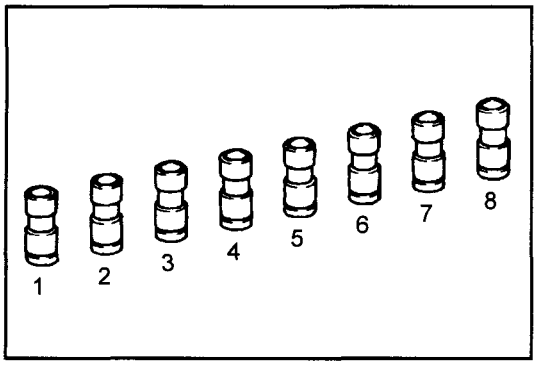

- **Line the removed valve lifters up in number order. Always store them with standing up with the hole facing upwards.**
- **Do not disassemble the valve lifters.**

www.truck-freeworkshop.com

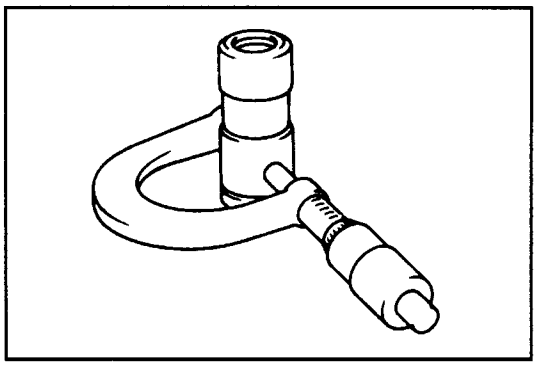

[Point 7]

Inspection:

Inspect the oil clearance of the valve lifter.

1. Measure the outside diameter of the valve lifter.

   Standard: 21.387 to 21.404 mm (0.8420 to 0.8427 in.)

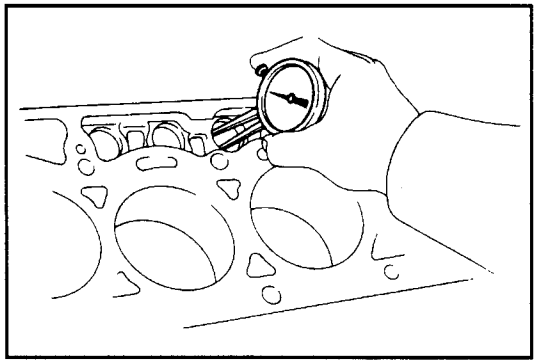

2. Measure the inside diameter of the cylinder block bottom hole.

   Standard: 21.417 to 21.443 mm (0.8432 to 0.8442 in.)

3. Calculate the oil clearance of the valve lifter.

   Standard: 0.012 to 0.056 mm (0.0005 to 0.0022 in.)
   Limit: 0.10 mm (0.0039 in.)

   If it exceeds the limit, replace the valve lifter.

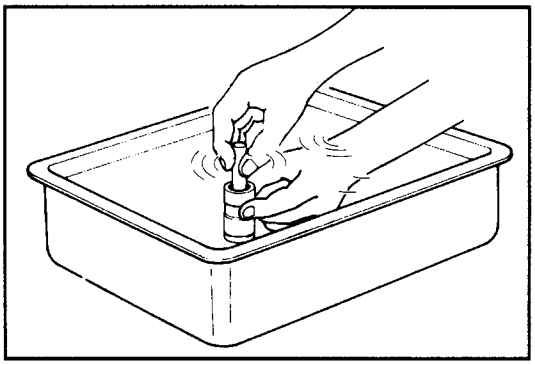

Inspection:

Valve lifter leak down test

1. Bleed the air from the valve lifter.
   Immerse the valve lifter in a container full of diesel oil, and use the SST to move the plunger up and down several times.

   SST 09276-76001-71
   (09276-71010)

Caution:
The diesel oil is used only for the test. When installing the valve lifter, perform bleeding again in engine oil.

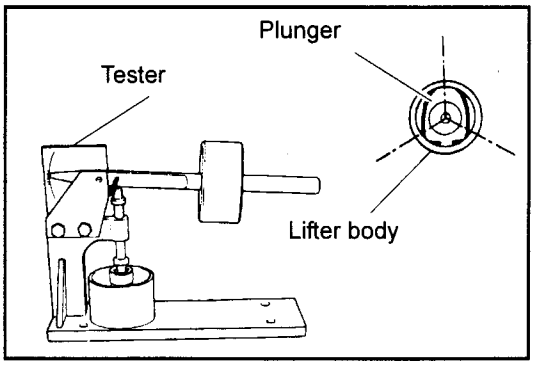

2. Use a tester and apply 196 N (20 kgf) [44.1 lbf] of force to the plunger of the air-bled lifter. After the plunger has dropped about 2 mm (0.08 in.), measure the time taken for the plunger dropping a further 1 mm (0.04 in.).

3. Measure 3 times, shifting the position of the plunger 120° each time, and find the average value.

   Standard: 7 to 28 sec./1 mm (0.04 in.)
   (oil temperature 20°C [68°F])

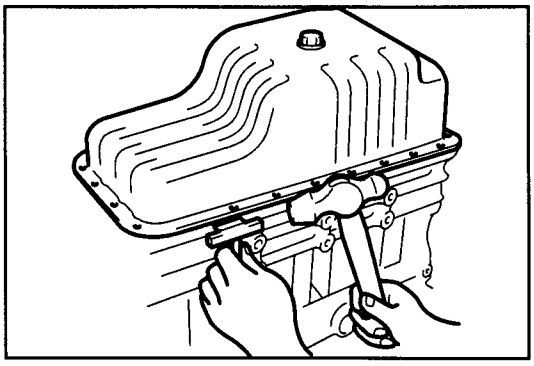

[Point 8]

Disassembly:

Do not deform the flange section of the oil pan during the operation.

SST 09032-76001-71
(09032-00100)

Caution:

- **Do not use the SST on the timing gear case side.**
- **Do not pry with a screwdriver.**

www.truck-freeworkshop.com

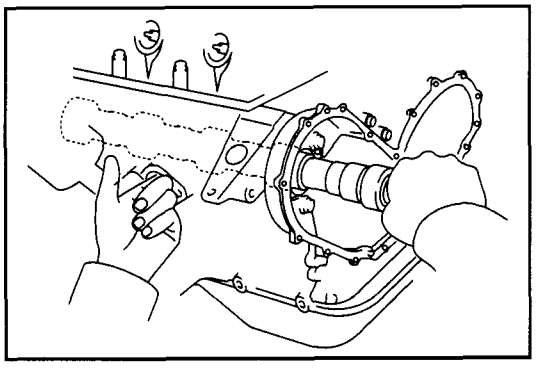

[Point 9]

Disassembly:
Remove the camshaft.

Caution:
When pulling out the camshaft, pull it out straight to avoid damaging the camshaft bearing.

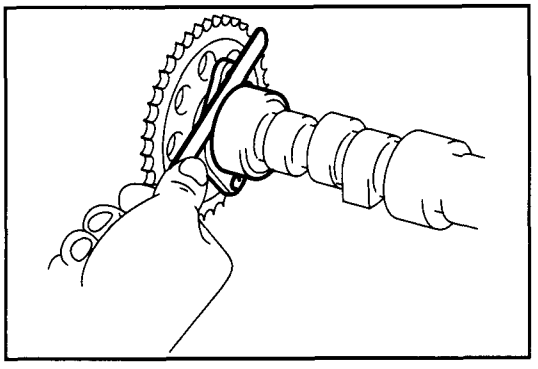

[Point 10]

Inspection:
Measure the thrust clearance of the camshaft.

Standard: 0.07 to 0.22 mm (0.0028 to 0.0087 in.)
Limit: 0.3 mm (0.012 in.)

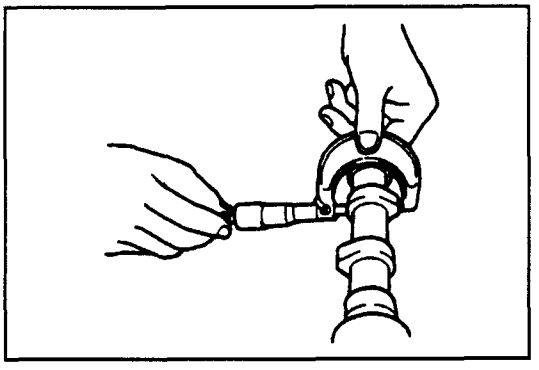

Inspection:
Measure the height of the cam.

Standard
IN: 38.620 to 38.720 mm (1.5205 to 1.5244 in.)
EX: 38.629 to 38.729 mm (1.5208 to 1.5248 in.)
Limit
IN: 38.26 mm (1.5063 in.)
EX: 38.27 mm (1.5067 in.)

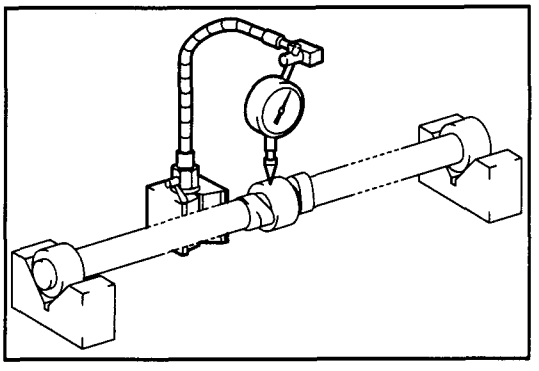

Inspection:
Inspect the bending of the camshaft.
Bending = runout of the dial gauge/2

Limit: 0.06 mm (0.0024 in.)

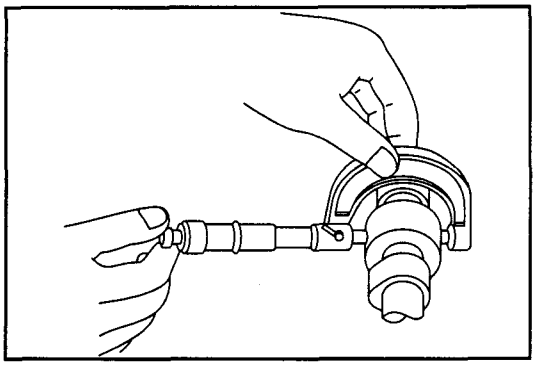

Inspection:
Inspect the oil clearance of the camshaft bearing.

1. Measure the outside diameter of the camshaft journal.

Standard
No.1: 46.459 to 46.475 mm (1.8291 to 1.8297 in.)
No.2: 46.209 to 46.225 mm (1.8192 to 1.8199 in.)
No.3: 45.959 to 45.975 mm (1.8094 to 1.8100 in.)
No.4: 45.709 to 45.725 mm (1.7996 to 1.8002 in.)
No.5: 45.459 to 45.475 mm (1.7897 to 1.7904 in.)

www.truck-freeworkshop.com

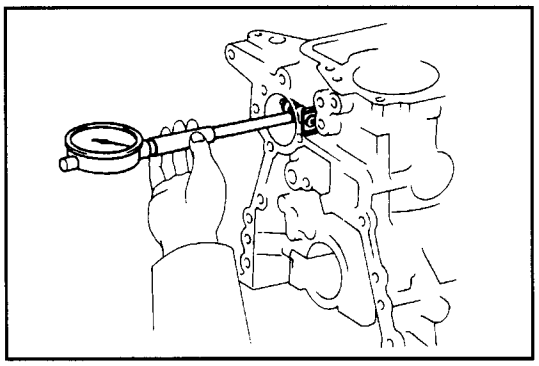

2. Measure the inside diameter of the camshaft bearing.

   Standard
   No.1: 46.500 to 46.540 mm (1.8307 to 1.8323 in.)
   No.2: 46.250 to 46.290 mm (1.8209 to 1.8224 in.)
   No.3: 46.000 to 46.040 mm (1.8110 to 1.8126 in.)
   No.4: 45.750 to 45.790 mm (1.8012 to 1.8028 in.)
   No.5: 45.500 to 45.540 mm (1.7913 to 1.7929 in.)

3. Calculate the oil clearance.

   Standard: 0.025 to 0.081 mm (0.0010 to 0.0032 in.)
   Limit: 0.1 mm (0.0039 in.)

   If it exceeds the limit, replace the bearing.

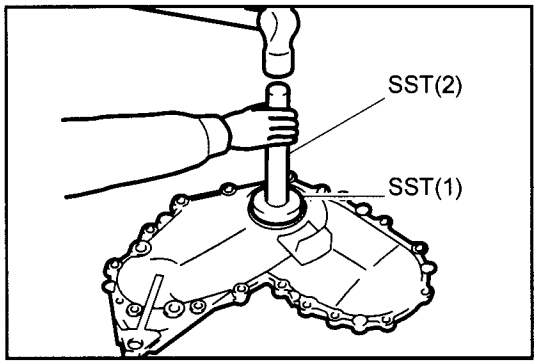

[Point 11]

Disassembly:
Use the SST to tap out the oil seal.

SST 09950-76018-71 .....(1)
(09950-60010)
09950-76020-71 .....(2)
(09950-70010)

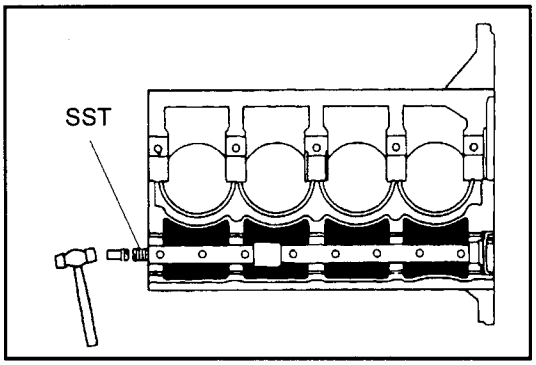

[Point 12]

Disassembly:
Remove the camshaft bearing.

1. Remove the oil pump w/ strainer. (See P8-6)
2. Use the SST to remove the rear tight plug.

   SST 09215-76004-71
   (09215-00101)

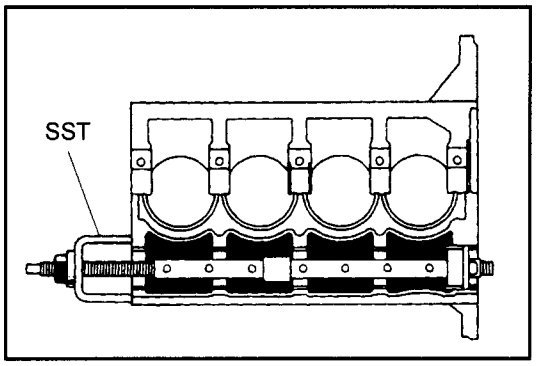

3. Use the SST to remove the camshaft bearing.

   SST 09215-76004-71
   (09215-00101)

www.truck-freeworkshop.com

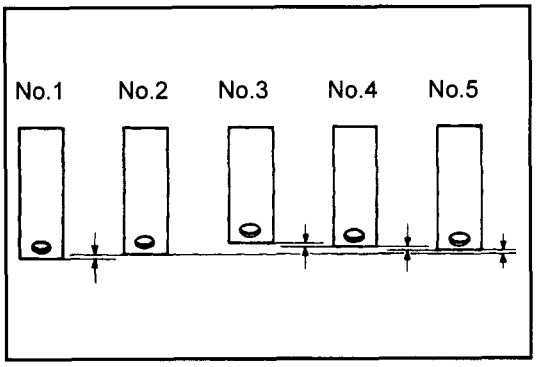

Note:
Each bearing has a different outside diameter, so take care when removing and reinstalling them.

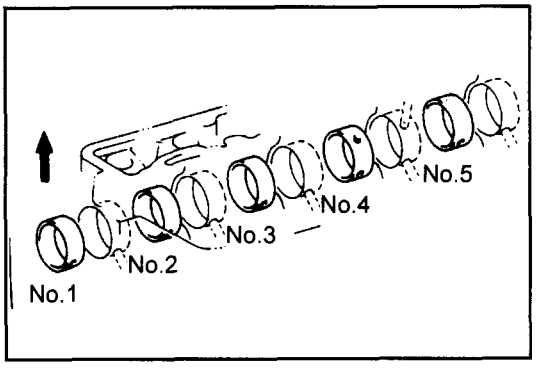

[Point 13]

Disassembly:
Install the camshaft bearing.

1. Align the oil holes of the cylinder block and the bearing.

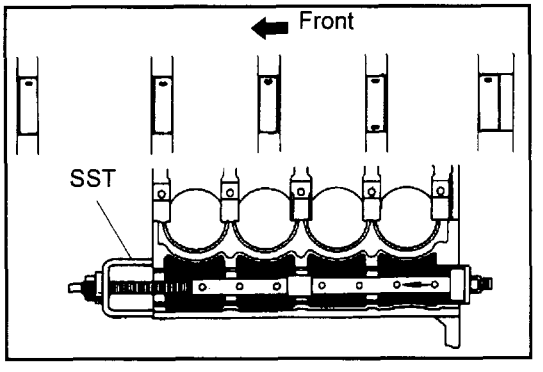

2. Use the SST to install the bearing.

   SST 09215-76004-71
   (09215-00101)

3. Use a new tight plug to apply ThreeBond 1386 to the outer circumference, and drive the tight plug into the cylinder block until the surface is even.

   SST 09215-76004-71
   (09215-00101)

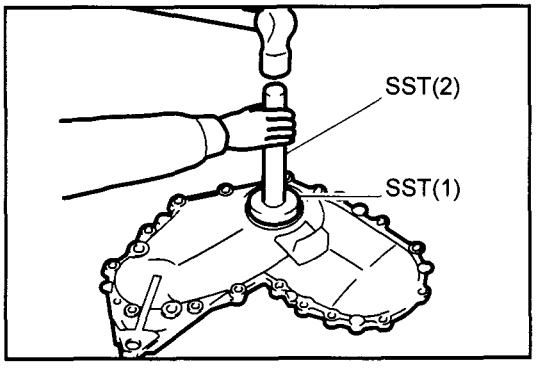

[Point 14]

Reassembly:
Using the SST, drive the oil seal into the timing gear cover until the surface is even.

SST 09950-76018-71 .....(1)
(09950-60010)
09950-76020-71 .....(2)
(09950-70010)

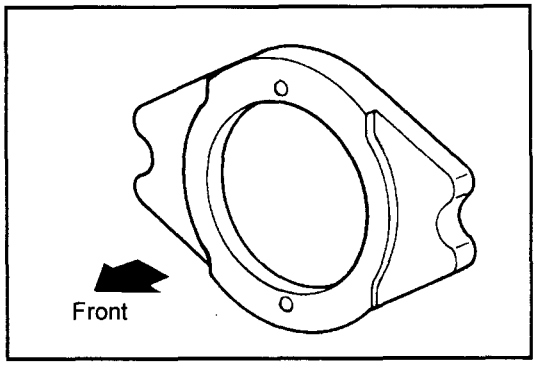

[Point 15]

Reassembly:
Take care as the thrust plate has a direction.

www.truck-freeworkshop.com

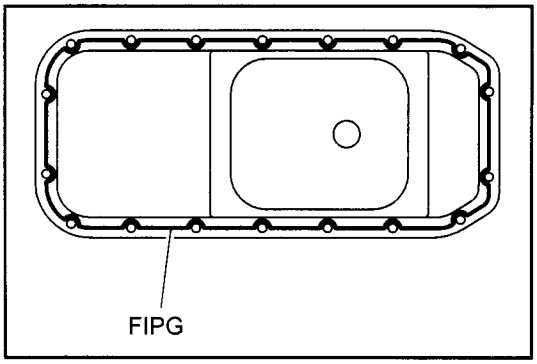

[Point 16]

Reassembly:

Apply FIPG to the seal section of the oil pan.
FIPG: 08826-76001-71
(For handling of FIPG, See P0-19)

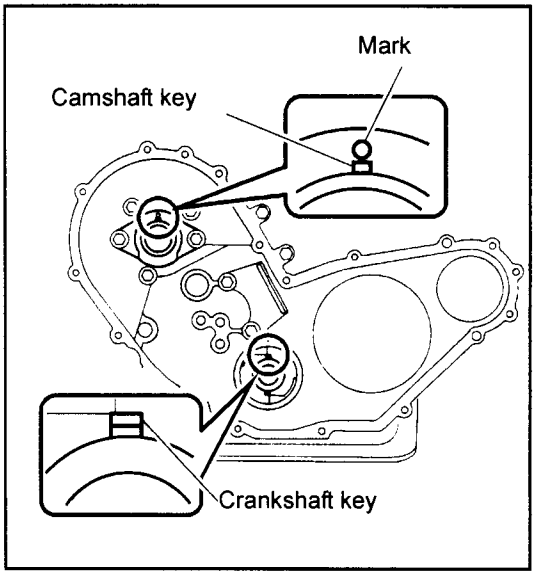

[Point 17]

Reassembly:

Install the timing chain, camshaft sprocket, and crankshaft sprocket.

1. Position the crankshaft key exactly at the top.
2. Align the camshaft key with the upper mark on the thrust plate.

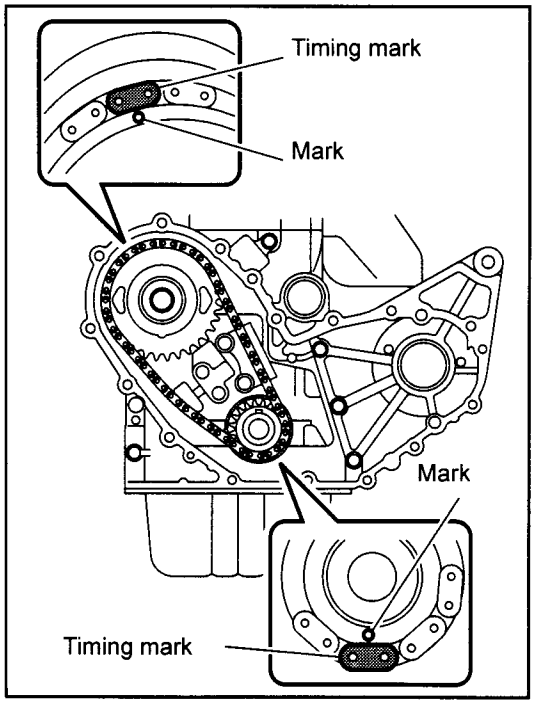

3. Assemble the timing chain, camshaft sprocket, and crankshaft sprocket at the same time.

Caution:
Be sure to align the marks of each sprocket with the marks on the timing chain.

www.truck-freeworkshop.com

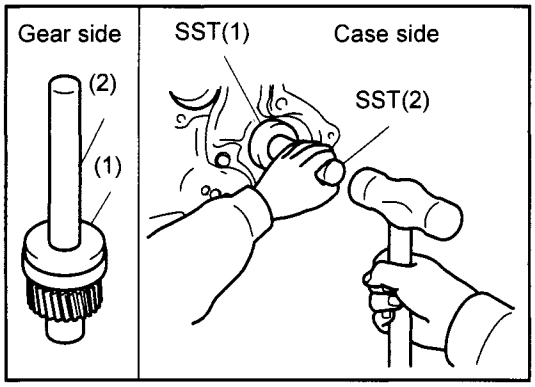

[Point 18]

Reassembly:

Use the SST to install the bearing.

SST 09950-76018-71 .....(1)
(09950-60010)
09950-76020-71 .....(2)
(09950-70010)

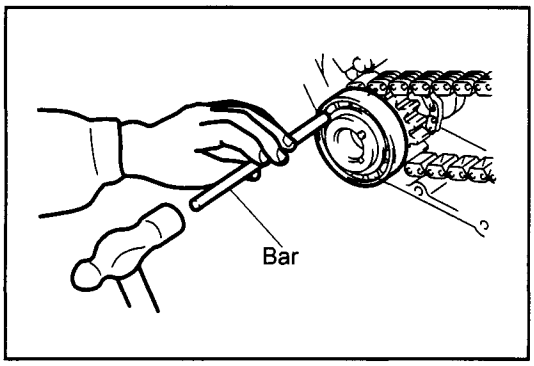

[Point 19]

Reassembly:

Tap the bearing inner race evenly around with a bar to fit it.

www.truck-freeworkshop.com

CYLINDER BLOCK
COMPONENTS

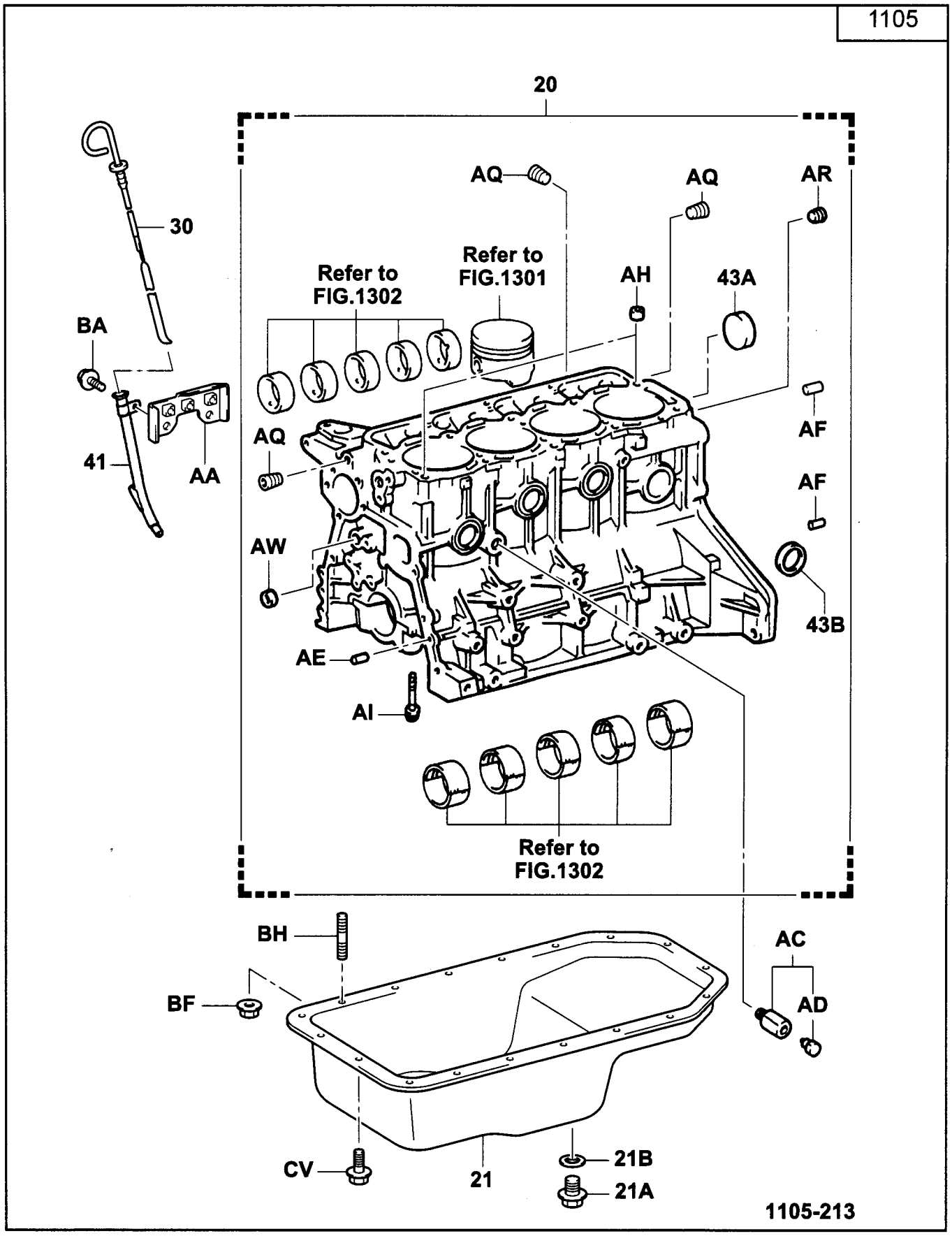

www.truck-freeworkshop.com

1301

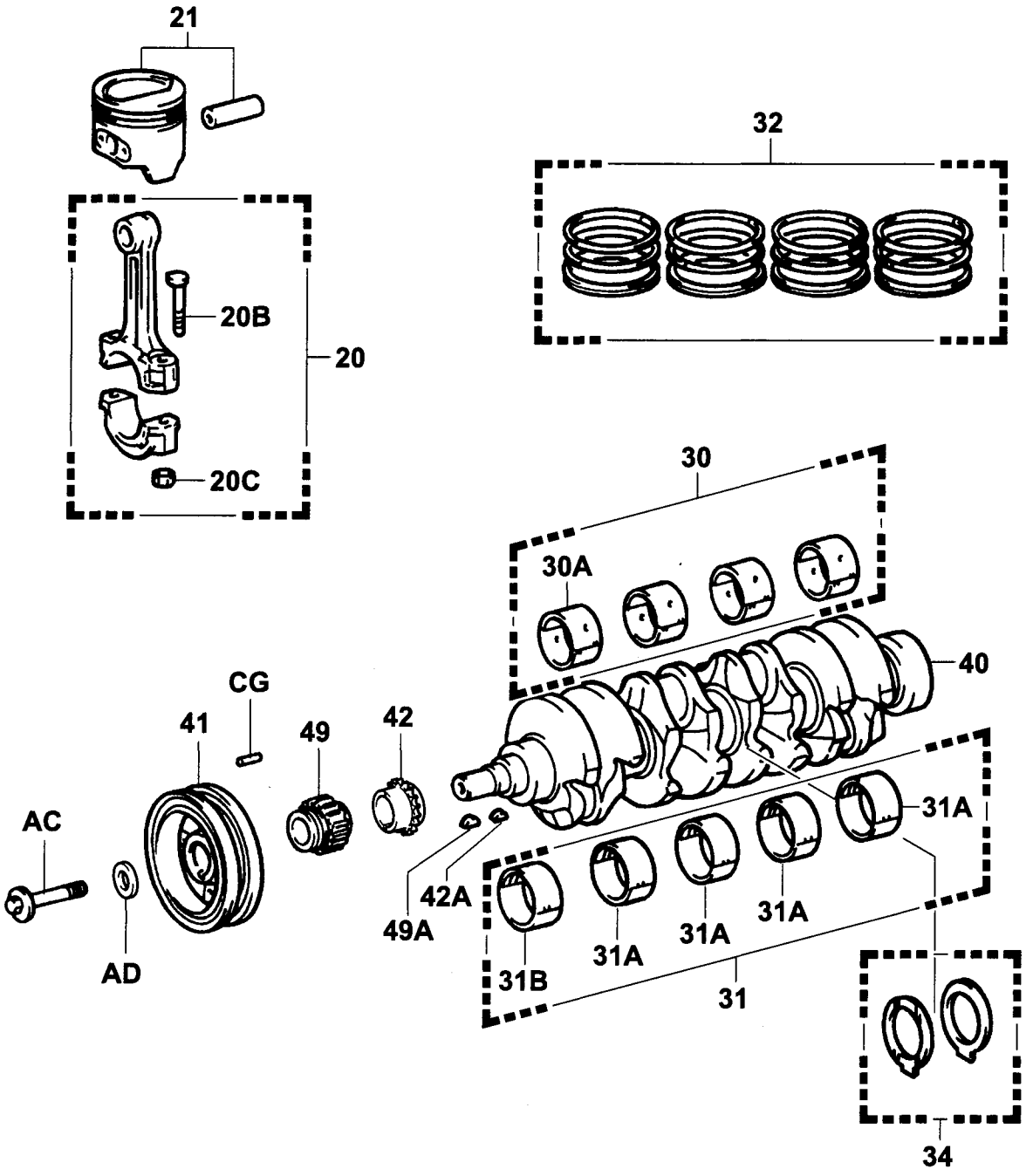

1301-159

www.truck-freeworkshop.com

DISASSEMBLY·INSPECTION·REASSEMBLY

T = N·m (kgf·cm) [ft·lbf]

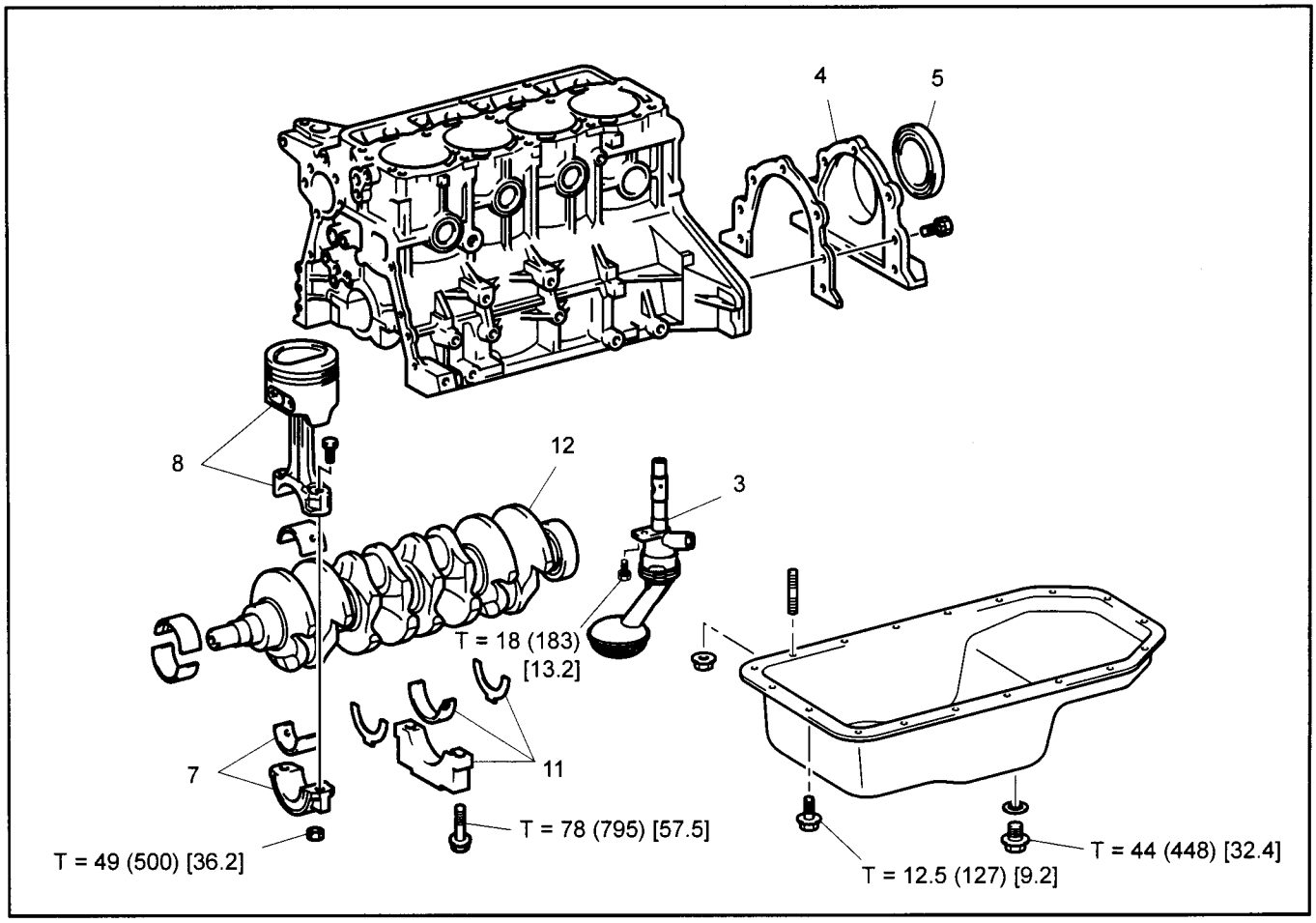

Disassembly·Reassembly Procedure

The reassembly procedure is the reverse of the disassembly procedure.

No.	Item	Disassembly	Inspection	Reassembly
1	Cylinder head ASSY	See P2-10	←	←
2	Timing gear-related	See P2-22	←	←
3	Oil pump ASSY W/ oil strainer			
4	Rear oil seal retainer W/ oil seal	**[Point 1]**		**[Point 14]**
5	Rear oil seal			
6	Measuring the thrust clearance of the connecting rod		**[Point 2]**	
7	Connecting rod cap W/ bearing		**[Point 3]**	**[Point 13]**
8	Piston W/ connecting rod	**[Point 4]**		**[Point 12]**
9	Piston disassembly	**[Point 5]**	**[Point 6]**	**[Point 11]**
10	Measuring the thrust clearance of the crankshaft		**[Point 7]**	
11	Crankshaft cap, bearing, thrust washer	**[Point 8]**		**[Point 10]**
12	Crankshaft		**[Point 9]**	

Caution:
Be sure that the parts for each cylinder are assembled in their correct combinations.

www.truck-freeworkshop.com

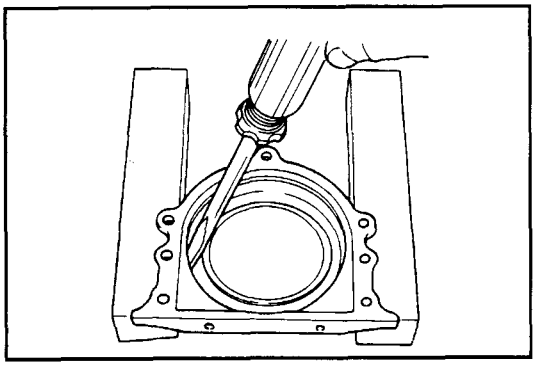

Point Operations

[Point 1]

Disassembly:

Use a screwdriver and a hammer to tap out the oil seal.

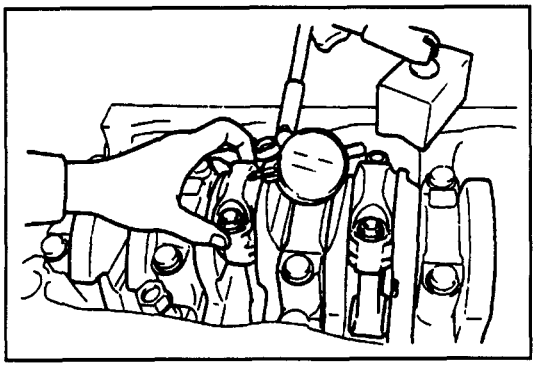

[Point 2]

Inspection:

Move the connecting rod back and forth to measure the thrust clearance.

Standard: 0.016 to 0.312 mm (0.0063 to 0.00123 in.)
Limit: 0.35 mm (0.0138 in.)

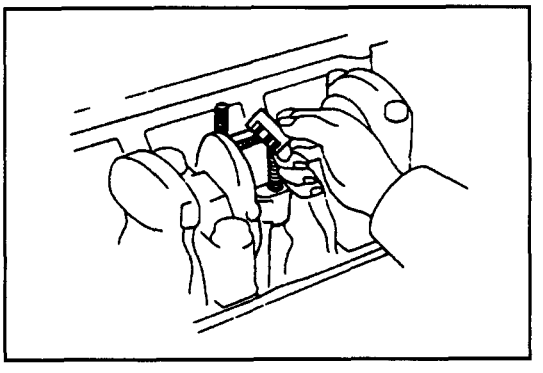

[Point 3]

Inspection:

Measure the oil clearance of the connecting rod bearing. Perform the measurement with a Plastigage, and tighten the connecting rod cap set nut to the specified torque.
Do not turn the crankshaft during the measurement.

Standard: 0.020 to 0.051 mm (0.0008 to 0.0020 in.)
Limit: 0.10 mm (0.0039 in.)

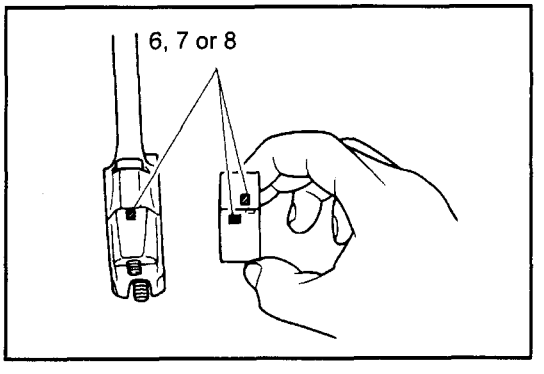

Caution:

- **When using STD bearings, use a bearing with the same reference number (6, 7, 8) as that punched into the connecting rod cap.**
- **Remove the Plastigage completely after measuring.**

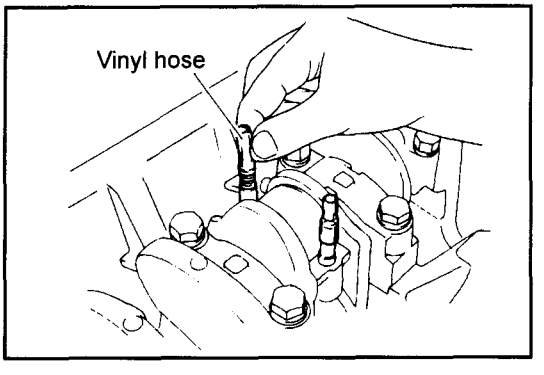

[Point 4]

Disassembly:

Attach a vinyl hose or similar to the connecting rod bolt to protect the cylinder inner wall and the crankshaft.

www.truck-freeworkshop.com

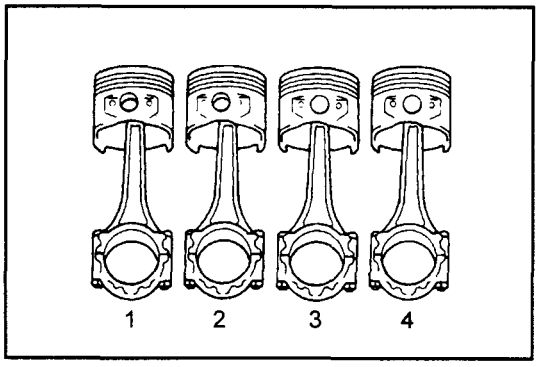

Note:
Sort the removed pistons, connecting rod caps, and bearings into the order of the cylinders.

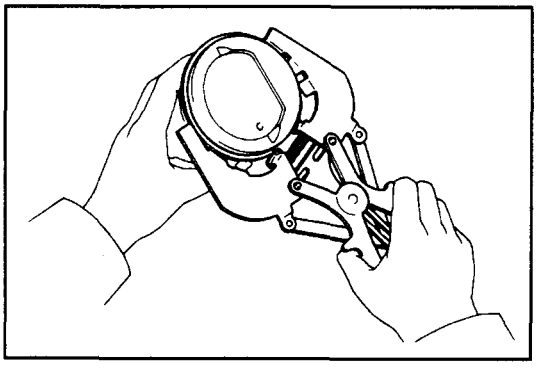

[Point 5]

Disassembly:
Disassemble the piston and the connecting rod.

1. Remove the piston ring and the oil ring.

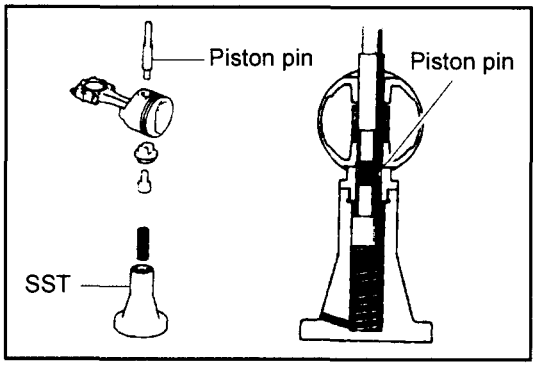

2. Use the SST and a press to push out and remove the piston pin.

   SST 09221-76002-71
   (09221-25018)

Note:
- **The removal should be performed at room temperature.**

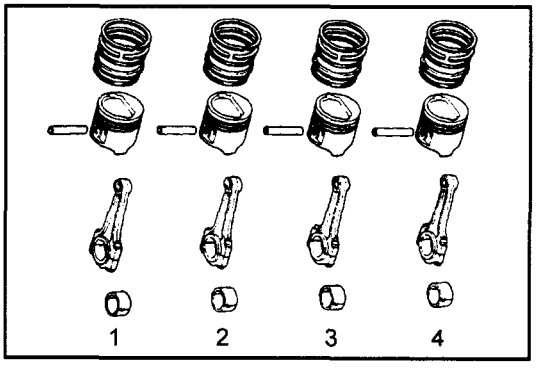

- **Sort out the removed parts for each cylinder, and be sure not to mix them up during reassembly.**

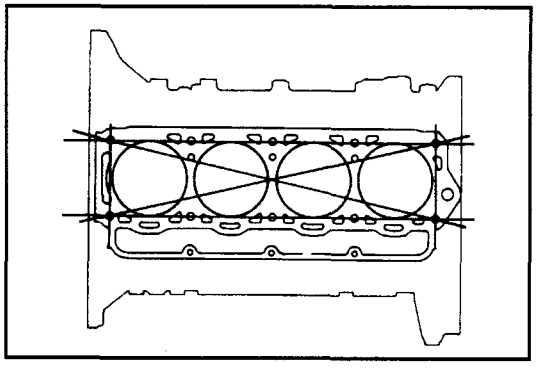

[Point 6]

Inspection:
Inspect the cylinder block.

1. Inspect for any distortions on the upper face of the cylinder block.

   Limit: 0.05 mm (0.0020 in.)

   Check that there are no considerable scratches on the cylinder wall surface. If there are scratches, rebore the cylinder.

www.truck-freeworkshop.com

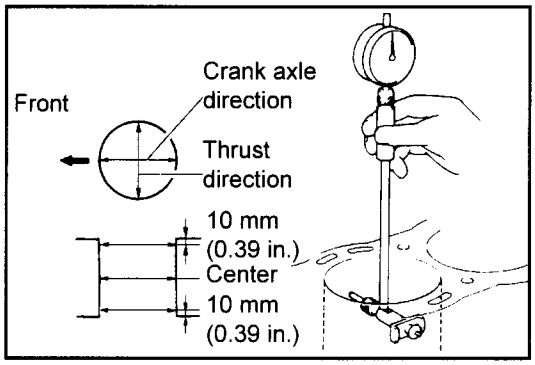

2. Measure the six points shown in the left illustration, and find the difference between the maximum and minimum values.

   Limit: 0.05 mm (0.0020 in.)

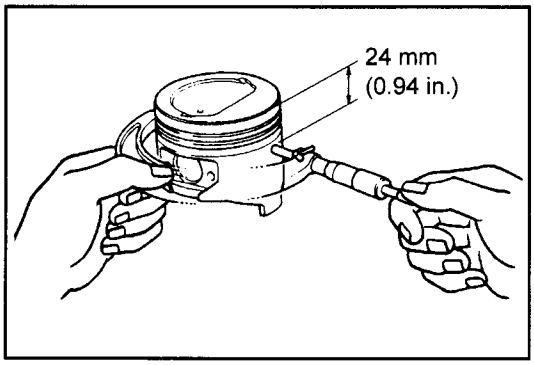

3. Measure the piston clearance.

   (1) Measure the outside diameter of the piston.

   Measurement position:
   Measure the diameter at the place in a position 24 mm (0.94 in.) from the top of the piston and orthogonal to the piston pin.

   Standard
   STD: 90.925 to 90.955 mm (3.5797 to 3.5809 in.)
   O/S 0.5: 91.425 to 91.455 mm (3.599 to 3.601 in.)

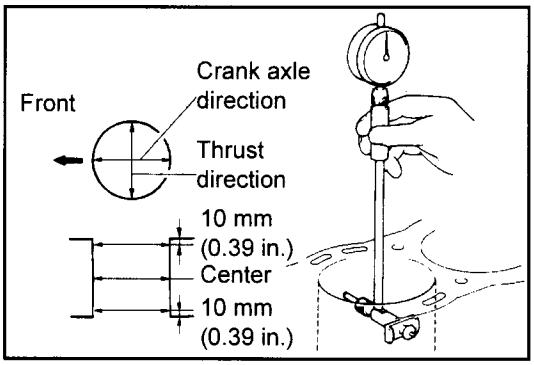

   (2) Measure the cylinder bore and calculate the piston clearance.

   Standard: 0.065 to 0.085 mm (0.0026 to 0.0033 in.)

   If the value exceeds the limit, replace the piston or rebore the cylinder and install an O/S piston.

Note:
Boring dimension = P + C - H
P: Outside diameter of the piston C: Piston clearance
H: Honing margin (0.02 mm [0.0008 in.] or less)

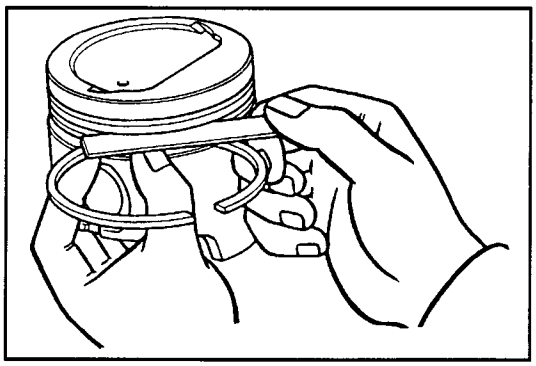

Inspection:
Inspect the piston and the connecting rod.

1. Measure the gap between the piston ring and the ring groove along the entire circumference.

   Standard: 0.03 to 0.07 mm (0.0012 to 0.0028 in.)

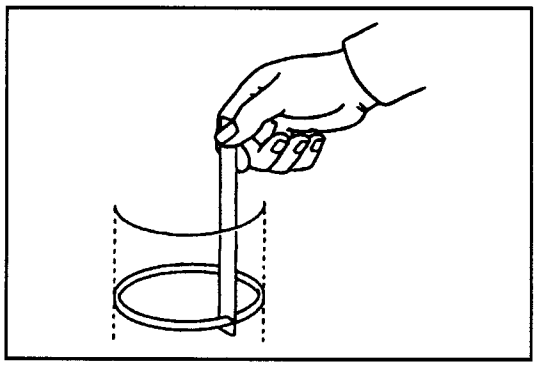

2. Press the piston ring into the sliding section of the piston, and measure the piston ring gap.

   Standard
   No.1: 0.23 to 0.48 mm (0.0091 to 0.0189 in.)
   No.2: 0.16 to 0.44 mm (0.0063 to 0.0173 in.)
   Oil ring: 0.13 to 0.47 mm (0.0051 to 0.0185 in.)

www.truck-freeworkshop.com

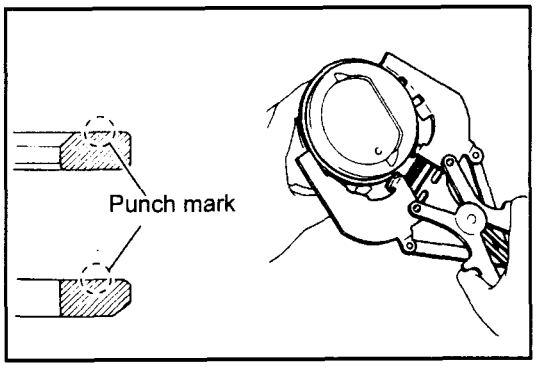

Reassembly:

Install the piston ring.

1. Install the oil ring expander.
2. Install the oil ring side rail using the piston ring tool.
   There is no difference between the top and bottom sides of the oil ring side rail.
3. Install each compression ring with the punch mark at the top using the piston ring tool.

   Punch mark
   Top ring: 1 T
   Second ring: 2 T
4. Align the ring gaps as shown in the illustration.

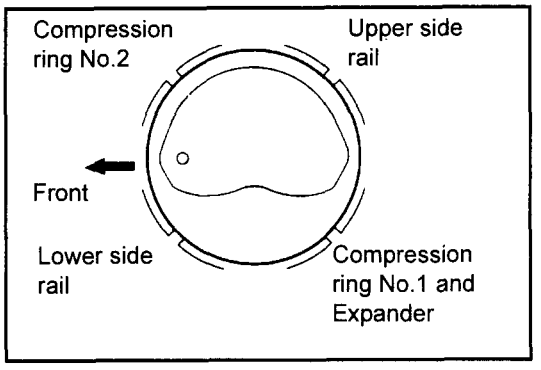

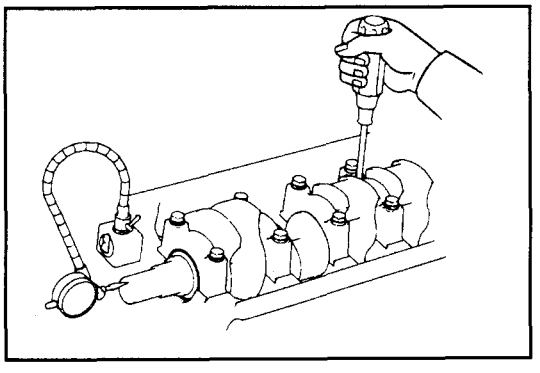

[Point 7]

Inspection:

Measure the thrust clearance of the crankshaft.

Standard: 0.020 to 0.220 mm (0.0008 to 0.0087 in.)
Limit: 0.30 mm (0.0118 in.)

If it exceeds the limit, replace the thrust washer.

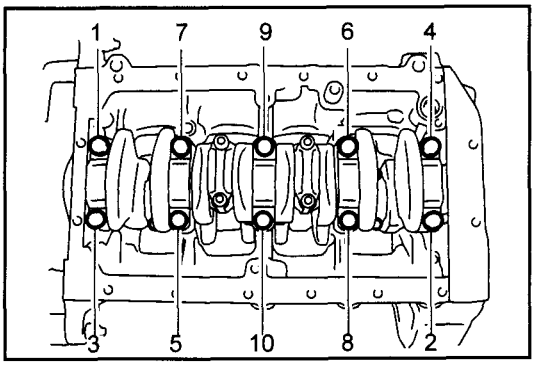

[Point 8]

Disassembly:

Evenly loosen the cap set bolts in several times, following the order shown in the left illustration.

www.truck-freeworkshop.com

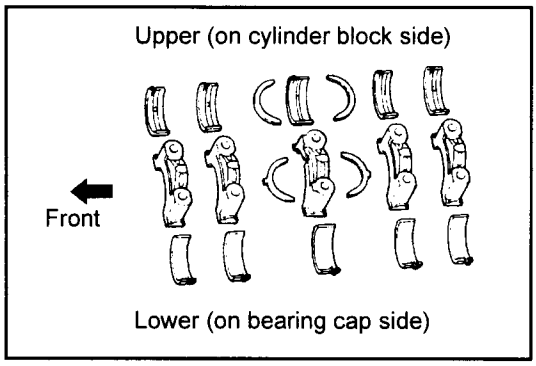

Note:
Store the caps, bearings and washers in correct order in order to reinstall them in the same position as when they were removed.

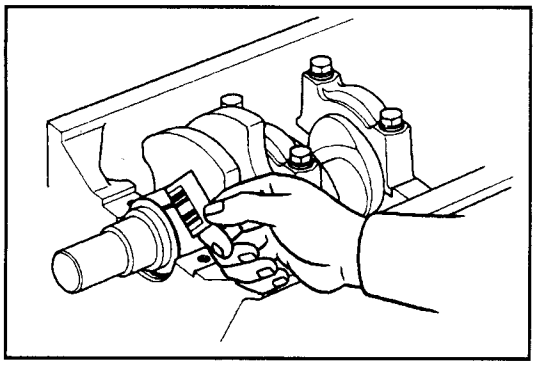

[Point 9]

Inspection:

Measure the oil clearance of the crankshaft.
Do not turn the crankshaft during the measurement.

Standard: 0.02 to 0.051 mm (0.0008 to 0.0020 in.)
Limit: 0.10 mm (0.0039 in.)

If it exceeds the limit, replace the bearing. Or, if necessary, replace the crankshaft.

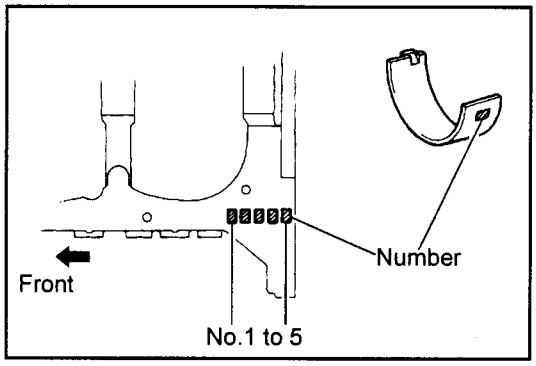

Note:
When using STD bearings, replace with a bearing with the same reference number (1 to 3) as that punched into the cylinder block.

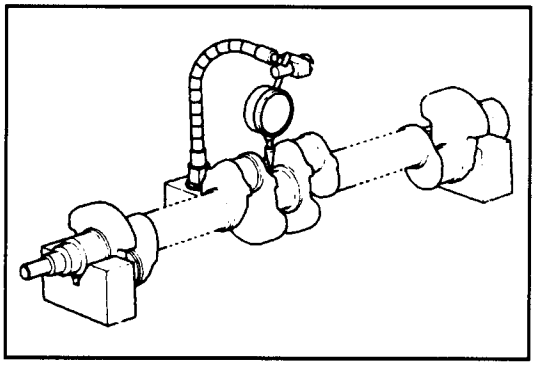

Inspection:

Inspect the bending of the crankshaft.
Inspect the bending when turning the crankshaft once.

Bending = runout of the dial gauge/2

Limit: 0.06 mm (0.0024 in.)

www.truck-freeworkshop.com

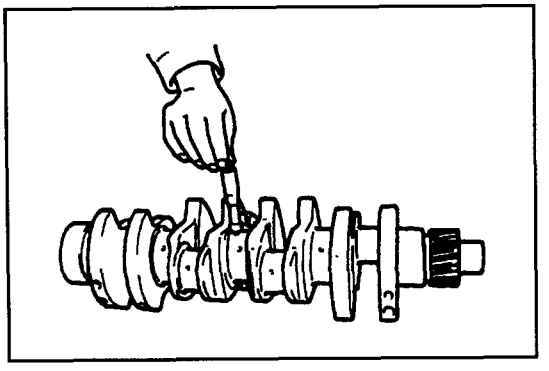

Inspection:

Inspect for crankshaft wear.

1. Measure the outside diameters of all of the crankshaft journals and pins.

   Standard
   Journal outside diameter: 57.985 to 58.000 mm (2.2829 to 2.2835 in.)
   Crank pin outside diameter: 47.985 to 48.000 mm (1.8892 to 1.8898 in.)

2. Calculate the ellipticity and taper degree.

   Limit Ellipticity: 0.02 mm (0.0008 in.)
   Taper degree: 0.02 mm (0.0008 in.)

   If it exceeds the limit, replace the crankshaft.

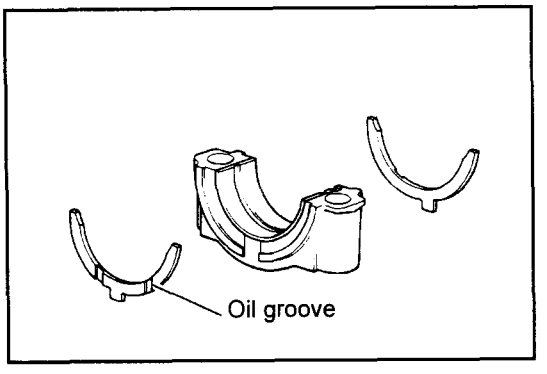

[Point 10]

Reassembly:

Install the bearing cap.

1. Install with the oil groove of the thrust washer facing the crankshaft.
2. Check the front mark, and install in the same place as before it was disassembled.

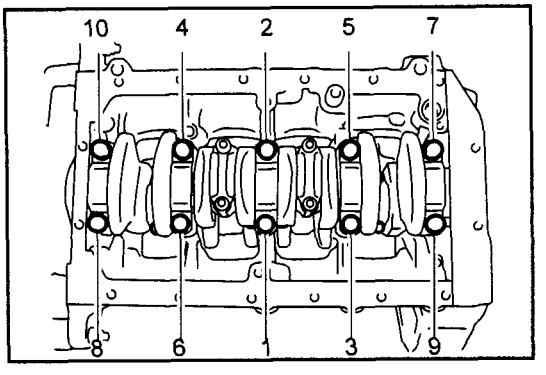

Disassembly:

Evenly tighten the bearing cap bolts in several times, following the order shown in the illustration.

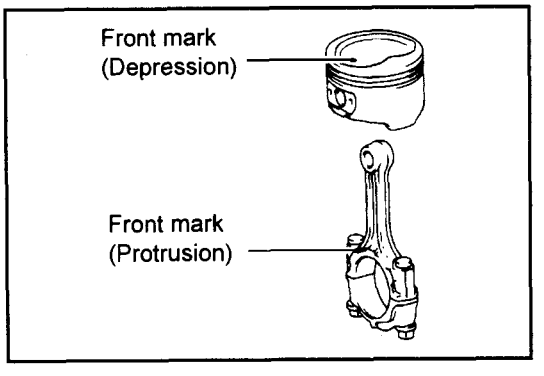

[Point 11]

Reassembly:

Reassemble the piston and connecting rod.

1. Align the front marks of the piston and the connecting rod.

www.truck-freeworkshop.com

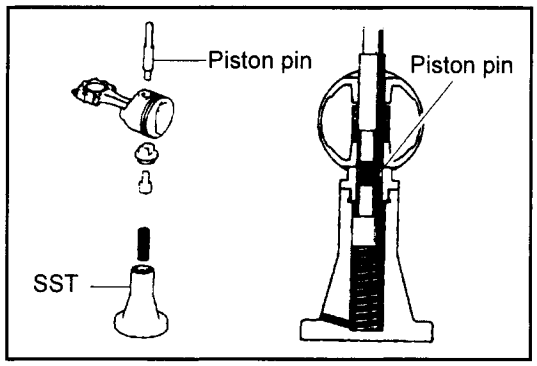

2. Apply engine oil to the piston pin and piston pin hole.
3. Use the SST and a press to press fit the piston pin.

   SST 09221-76002-71
   (09221-25018)

Note:
The assembly should be performed at room temperature.

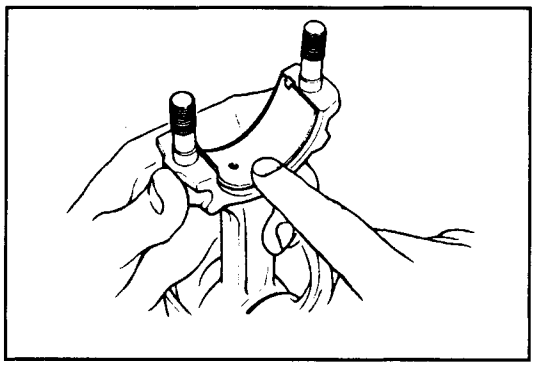

[Point 12]

Reassembly:
Install the bearing.
Ensure that no foreign matter, oil, etc., becomes attached to the contact surface between the bearing and the connecting rod.
Apply engine oil to the inner surface of the bearing.
Assemble the upper bearing to the locking groove of the connecting rod.
Install the lower bearing to the locking groove of the bearing cap.

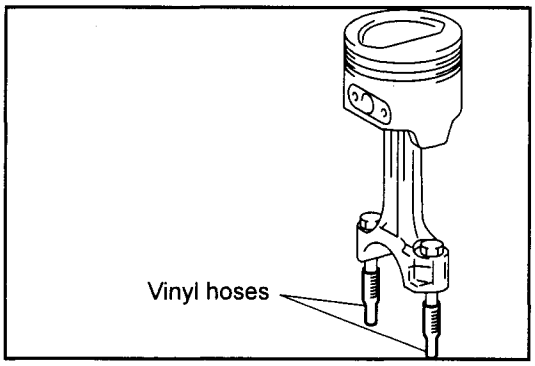

Reassembly:
Attach a vinyl hose or similar to the connecting rod bolt to protect the cylinder inner wall and the crankshaft.

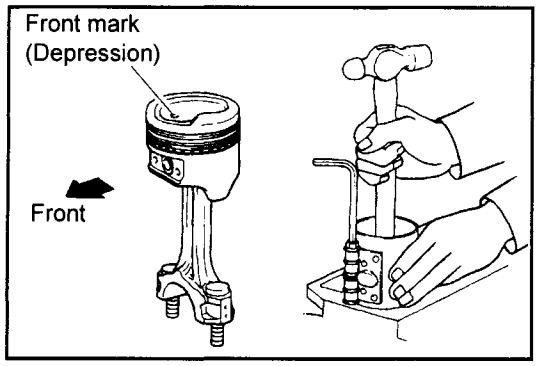

Reassembly:
When reinstalling the piston to the cylinder, be sure to install it in the same cylinder from which it was removed.
Apply engine oil to the sliding sections of the connecting rod and the piston.
Use a piston ring compressor to assemble with the front mark facing front.

www.truck-freeworkshop.com

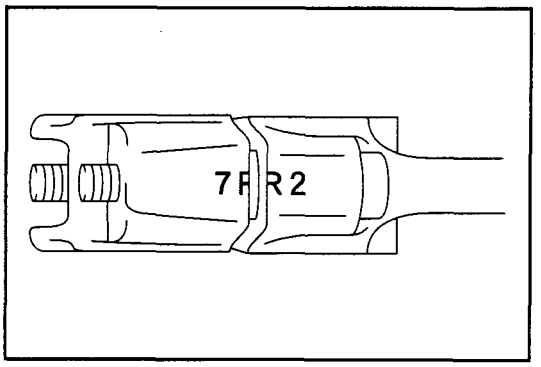

[Point 13]

Reassembly:

Install the connecting rod cap.

1. Install with the front mark of the bearing cap facing the front of the engine.
2. Align the punch marks of the connecting rod.

Note:

- ***There are several kinds of alphabet punch marks.***
- **Each of the rotation angles of the punched alphabet marks differs. Be sure to align them when installing.**

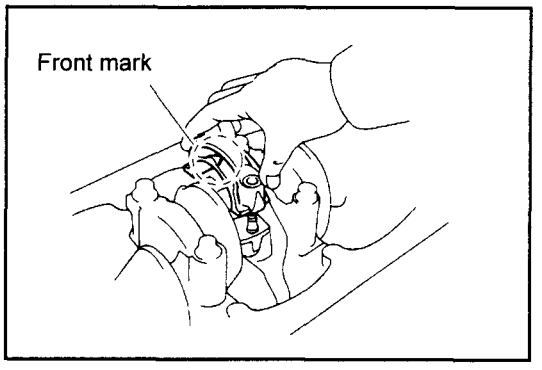

3. Make sure that no foreign matter or oil, etc., becomes attached to the back surface of the bearing.
4. Apply engine oil to the inner surface of the bearing.
5. Tighten the left and right bolts alternately in two or three times.

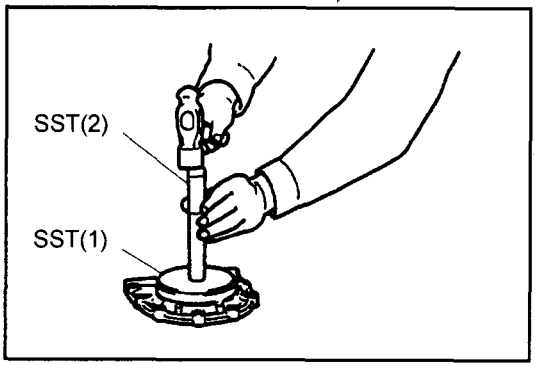

[Point 14]

Reassembly:

Use the SST to knock in the oil seal.

SST 09950-76019-71 .....(1)
(09950-60020)
09950-76020-71 .....(2)
(09950-70010)

www.truck-freeworkshop.com

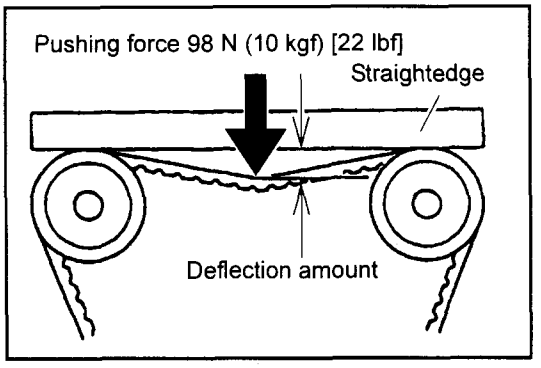

ENGINE ADJUSTMENT

V-BELT INSPECTION·ADJUSTMENT

V-belt Inspection

1. Check the belt for correct installation.
2. Apply a pushing force of 98 N (10 kgf) [22 lbf] between the alternator and the water pump and measure the amount of deflection.

   When installing a new part: 7 to 9 mm (0.28 to 0.35 in.)
   When inspecting: 8 to 13 mm (0.31 to 0.51 in.)

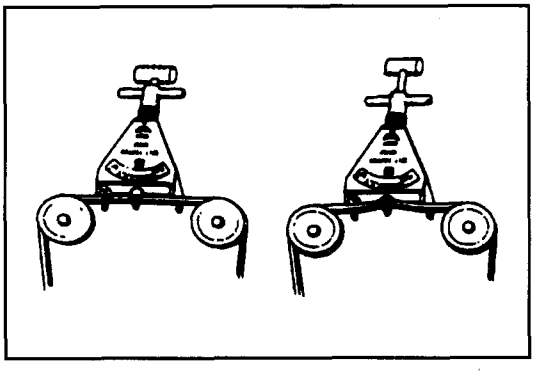

Caution:

- **Measurement of the belt deflection amount must be performed between the specified pulleys.**
- **When replacing with a new belt, adjust the deflection to the middle value of the standard "When installing a new part".**
- **Apply the standard of "When inspecting" for the inspection of the belt if it is used for five minutes or more.**
- **When reassembling the belt that is used for 5 minutes or more, adjust to the mean value of the standard in "When inspecting".**

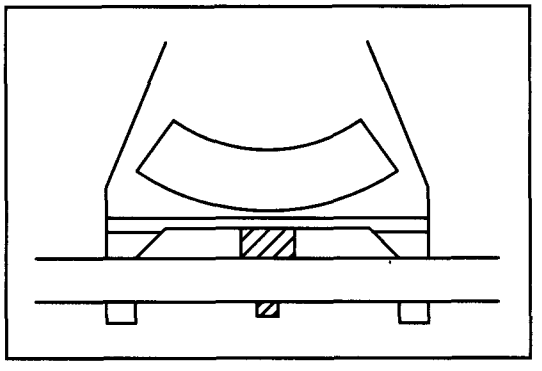

- **Tension standard when using SST**

  SST 09216-76001-71
  (09216-00020)

  When installing a new part: 392 to 588 N (38 to 62 kgf) [84 to 137 lbf]
  When inspecting: 294 to 490 N (30 to 50 kgf) [66 to 110 lbf]

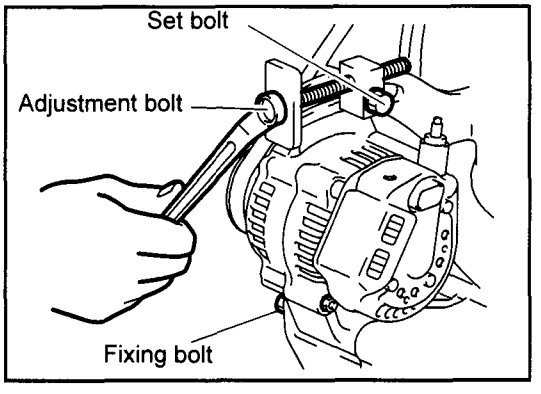

V-belt Deflection Adjustment

1. Loosen the fixing bolt.
2. Loosen the set bolt, then turn the adjustment bolt to adjust the tension.
3. Tighten the set bolt then re-check the belt tension.
4. Tighten the fixing bolt.

Caution:
Be careful not to apply too much tension to the belt.

www.truck-freeworkshop.com

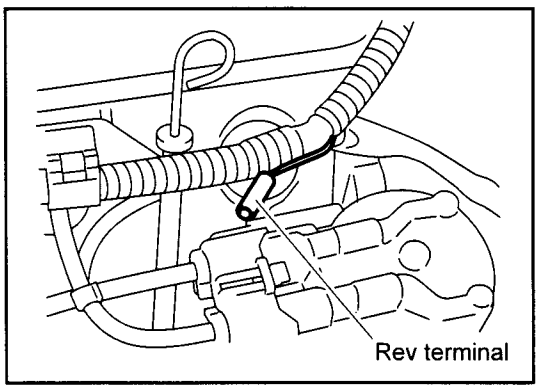

INSPECTION·ADJUSTMENT OF IGNITION TIMING

1. Warm-up the engine.

   Standard
   Coolant temperature: 75°C (167°F) or above
   Hydraulic oil temperature: 50°C (122°F) or above
   Engine oil temperature: 60°C (140°F) or above

2. Install the rev counter and timing light.
   Attach a rev counter to the terminal for measuring engine speed (Rev terminal).

3. Inspect the idle speed.

   Standard: Refer to repair manual for each vehicle model.

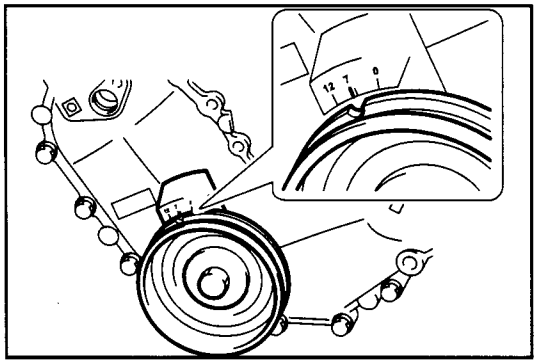

4. Inspect and adjust the ignition timing.

   (1) Disconnect the distributor vacuum hose.

   (2) Use the timing light to inspect the ignition timing.

   Standard: BTDC 7°/750 rpm

   (3) If the value is outside of the standard, loosen the distributor set bolt and rotate the distributor to adjust to the standard value.

   (4) Tighten the set bolt and inspect the ignition timing again.

   T = 17.5 N·m (178 kgf·cm) [12.9 ft·lbf]

   (5) If the ignition timing has been adjusted, seal the distributor set bolt with sealing tape.

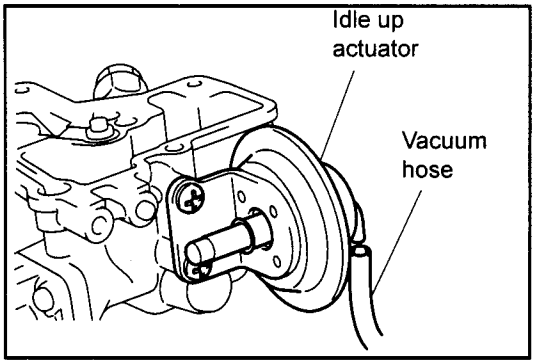

INSPECTION·ADJUSTMENT OF IDLE-UP SPEED

1. Warm-up the engine.

   Standard
   Coolant temperature: 75°C (167°F) or above
   Hydraulic oil temperature: 50°C (122°F) or above
   Engine oil temperature: 60°C (140°F) or above

2. Install the rev counter. (Refer to above)

3. Start the engine, and measure the engine speed with the vacuum hose removed from the idle-up actuator.

   Standard
   M/T: 1100 ± 30 rpm
   T/C: 1000 ± 30 rpm

   If the value is outside of the standard, adjust it by turning the adjusting screw.

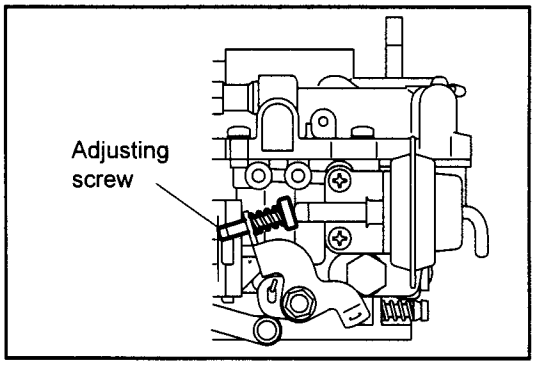

Caution:

If the adjusting screw is turned clockwise, the engine speed increases.

4. After adjustment, connect the vacuum hose.

www.truck-freeworkshop.com

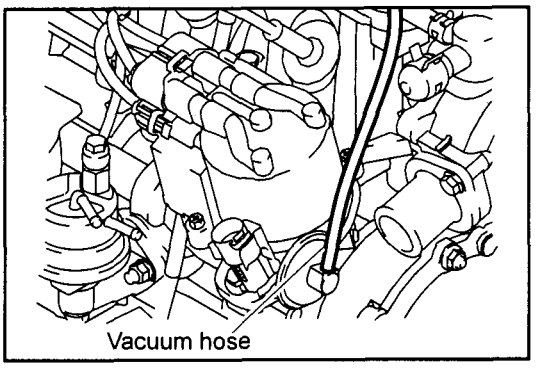

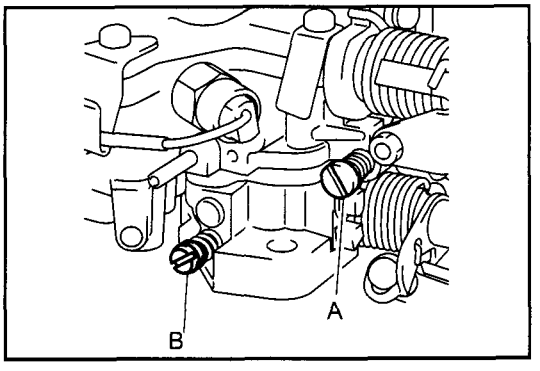

INSPECTION·ADJUSTMENT OF IDLE SPEED

1. Warm-up the engine.

   Standard
   Coolant temperature: 75°C (167°F) or above
   Hydraulic oil temperature: 50°C (122°F) or above
   Engine oil temperature: 60°C (140°F) or above

2. Install the rev counter and vacuum gauge.

   (1) Install the rev counter.

   (2) Disconnect the vacuum hose from the vacuum advancer, and connect the vacuum gauge.

3. Inspect and adjust the idle speed.

   (1) Start the engine and alternately adjust the throttle adjusting screw "A" and the idle adjusting screw "B", to adjust so that the vacuum is at a stable maximum at the regulation idle speed.

   (2) If the idle up adjusting screw is connected to the idle up actuator rod and the idle speed does not reduce, loosen the idle up adjusting screw. (See P2-43)

   Standard
   Idle speed: Refer to repair manual for each vehicle model.
   Vacuum: 400 mmHg or more

NO LOAD MAXIMUM SPEED INSPECTION AND ADJUSTMENT

(See P4-24)

COMPRESSION INSPECTION

Note:
When there is a drop in power output or excessive oil consumption, or if the fuel consumption is extremely high, measure the compression pressure in the cylinders.

1. Warm-up the engine.

   Standard
   Coolant temperature: 75°C (167°F) or more
   Hydraulic oil temperature: 50°C (122°F) or more

2. Remove all the spark plugs.

3. Disconnect the distributor connector.

4. Measure the compression pressure.

Caution:
Operate the starter before inspecting the compression in order to expel foreign bodies from inside the cylinder.

www.truck-freeworkshop.com

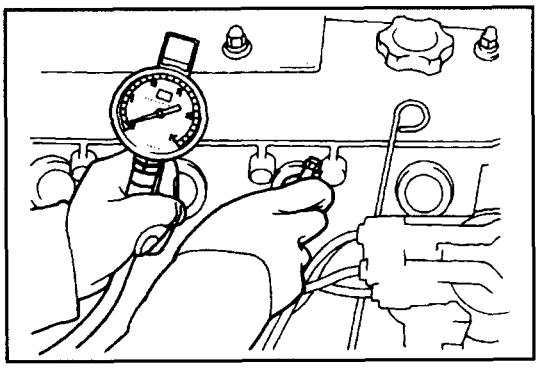

(1) Insert a compression gauge into the spark plug hole.

(2) Open the throttle up fully.

(3) Crank the engine with the starter to measure the compression pressure.

Standard: 1225 kPa (12.5 kgf/cm^2) [178 psi]
Limit: 883 kPa (9.0 kgf/cm^2) [128 psi]

Caution:
In order to maintain the engine speed to more than 250 rpm, use a fully charged battery.

(4) Carry out the above operations (1) to (3) on every cylinder, and inspect the pressure difference.

Limit
Pressure difference between cylinders:
98 kPa (1.0 kgf/cm^2) [14 psi]

(5) If some cylinders have a compression pressure less than the limit, or if their pressure differences are more than the limit, add a small amount of engine oil from the spark plug hole, and repeat the above operations (1) to (3).

(a) If the pressure goes up by adding oil, there may be wear or damage to the piston ring and the cylinder wall.

(b) If the pressure remains low even if oil is added, there may be a burnout of the valve, defect in valve contact, or pressure leak from the gasket.

5. Connect the distributor connector.

6. Install the spark plugs.

T = 18 N·m (183 kgf·cm) [13.2 ft·lbf]

www.truck-freeworkshop.com

www.truck-freeworkshop.com

ENGINE OVERHAUL (4Y-E)

Page

SST TO BE USED 3-2

ENGINE ATTACHMENTS 3-4

REMOVAL·INSPECTION·INSTALLATION 3-4

CYLINDER HEAD 3-8

COMPONENTS 3-8

DISASSEMBLY·INSPECTION·REASSEMBLY 3-11

TIMING GEAR 3-20

COMPONENTS 3-20

DISASSEMBLY·INSPECTION·REASSEMBLY 3-23

CYLINDER BLOCK 3-32

COMPONENTS 3-32

DISASSEMBLY·INSPECTION·REASSEMBLY 3-34

ENGINE ADJUSTMENT 3-43

V-BELT INSPECTION·ADJUSTMENT 3-43

IDLE SPEED INSPECTION 3-44

INSPECTION·ADJUSTMENT OF IGNITION TIMING 3-44

NO-LOAD MAXIMUM SPEED MEASUREMENT 3-45

COMPRESSION INSPECTION 3-45

www.truck-freeworkshop.com

SST TO BE USED

Illustration	Part No.	Part name
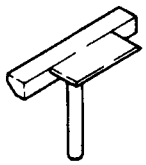	09032-76001-71 (09032-00100)	Oil pan seal cutter
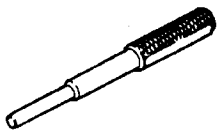	09201-76006-71 (09201-60011)	Valve guide bushing remover & replacer
	09202-76002-71 (09202-70020)	Valve spring compressor
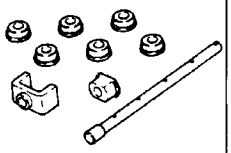	09215-76004-71 (09215-00101)	Camshaft bearing remover & replacer
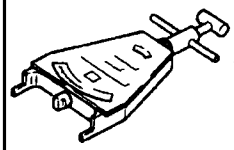	09216-76001-71 (09216-00020)	Belt tension gauge
	09221-76002-71 (09221-25018)	Piston pin remover & replacer
	09228-76001-71 (09228-06501)	Oil filter wrench
	09238-13130-71	Sub-harness

www.truck-freeworkshop.com

Illustration	Part No.	Part name
	09270-76001-71 (09270-71010)	Rocker arm support tool set
	09276-76001-71 (09276-71010)	Valve lifter tool
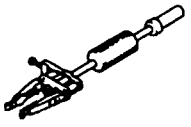	09320-23000-71	Bearing remover
	09950-76014-71 (09950-40011)	Puller B set
	09950-76018-71 (09950-60010)	Replacer set
	09950-76019-71 (09950-60020)	Replacer B set
	09950-76020-71 (09950-70010)	Handle set

www.truck-freeworkshop.com

ENGINE ATTACHMENTS
REMOVAL·INSPECTION·INSTALLATION

T = N·m (kgf·cm) [ft·lbf]

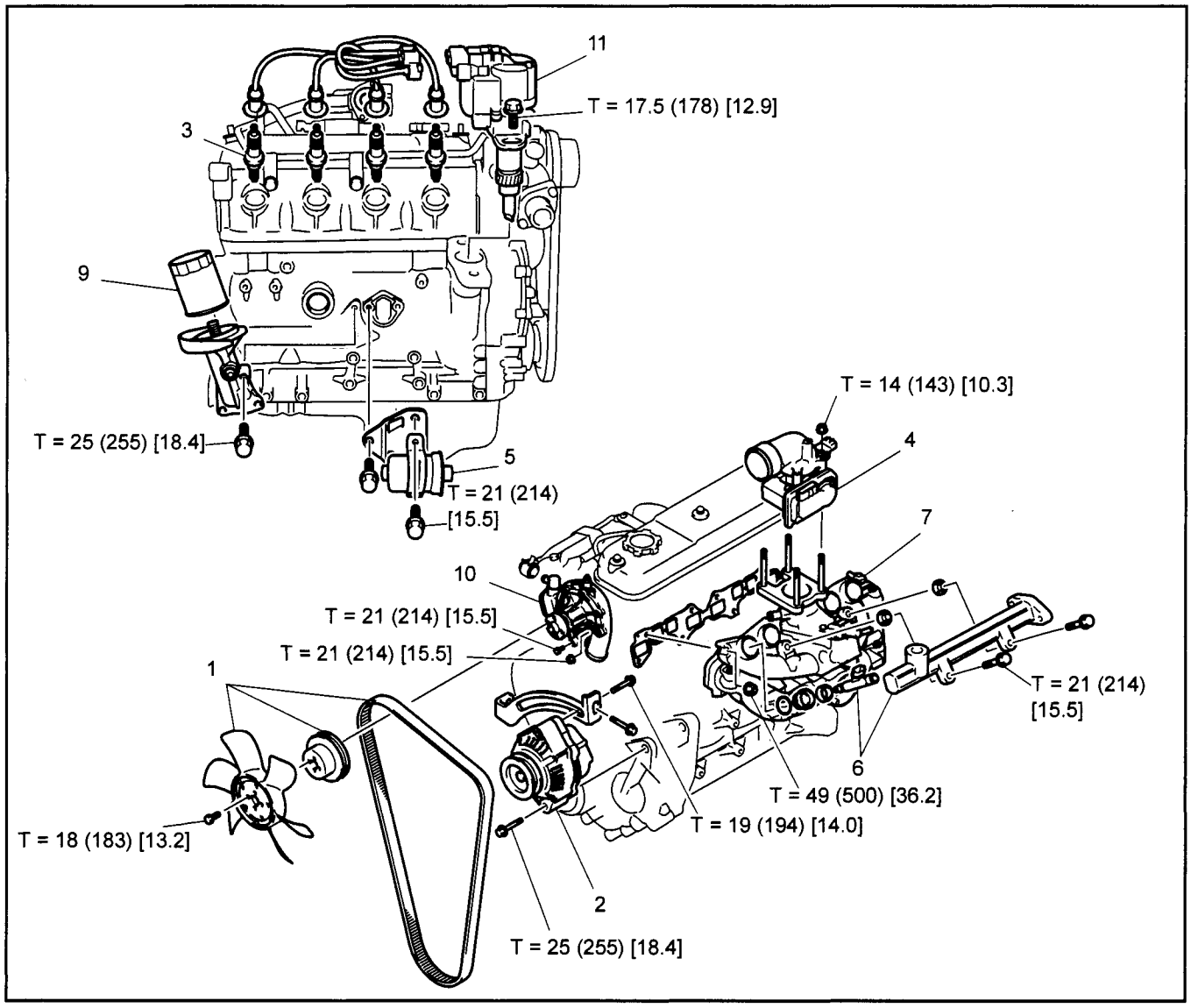

Removal·Installation Procedure

The installation procedure is the reverse of the removal procedure.

No.	Item	Removal	Inspection	Installation
1	Fan, pulley, V-belt	See P3-43	←	←
2	Alternator			
3	Spark plugs			
4	Throttle body and adapter			
5	Fuel filter and hose	**[Point 1]**		
6	Delivery pipe, injector	**[Point 2]**		
7	Intake·exhaust manifolds		**[Point 3]**	
8	Oil level gauge			
9	Oil filter	**[Point 4]**		**[Point 6]**
10	Water pump			
11	Distributor			**[Point 5]**

www.truck-freeworkshop.com

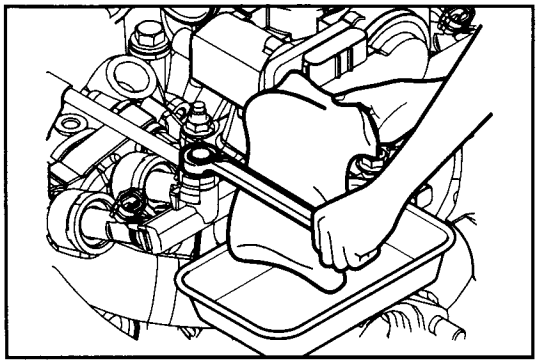

Point Operations

[Point 1]

Removal:

Depressurization of the fuel system is performed with the following procedure.

1. Prepare a waste cloth and a fuel receptacle tray under the delivery pipe.
2. Wrap the union part in waste cloth, loosen the union bolt slightly and release the fuel pressure.
3. With the union bolt loosened, drain all the fuel into the receptacle tray.

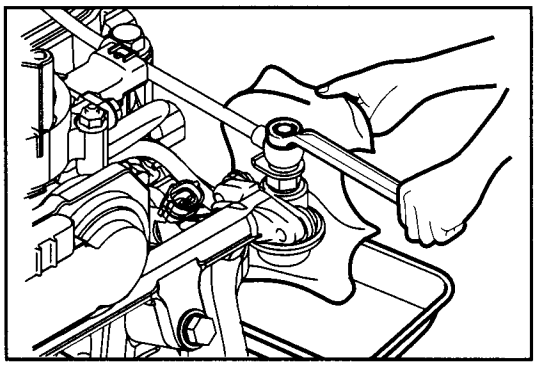

Caution:

- **Do not allow any fire to come close during the operation.**
- **Take measures to prevent the fuel from scattering.**

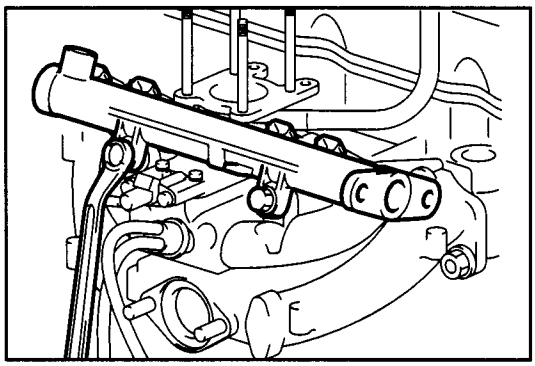

[Point 2]

Removal:

Remove the delivery pipe and the injectors (4 pieces) at the same time.

Note:

- **Draw the delivery pipe out perfectly straight with respect to the injectors.**
- **Take good care that the injectors do not fall.**

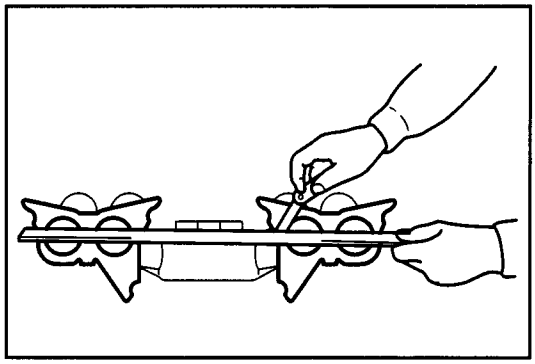

[Point 3]

Inspection:

Using a straight edge ruler and a thickness gauge, measure the amount of distortion of the intake manifold.

Limit: 0.40 mm (0.0157 in.)

www.truck-freeworkshop.com

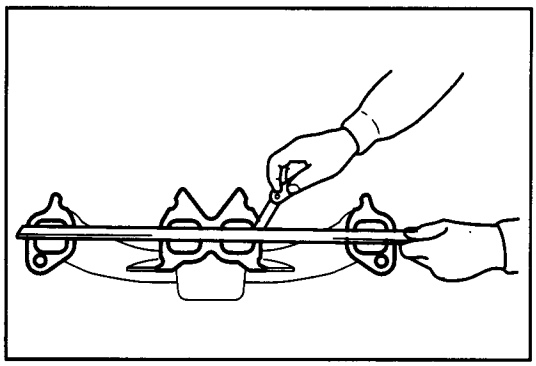

Inspection:

Using a straight edge ruler and a thickness gauge, measure the amount of distortion of the exhaust manifold.

Limit: 0.40 mm (0.0157 in.)

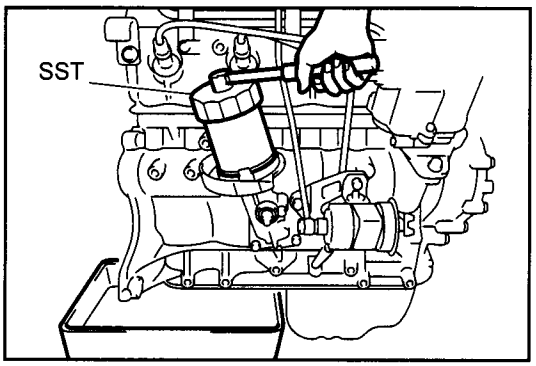

[Point 4]

Removal:

Use the SST and remove the oil filter.

SST 09228-76001-71
(09228-06501)

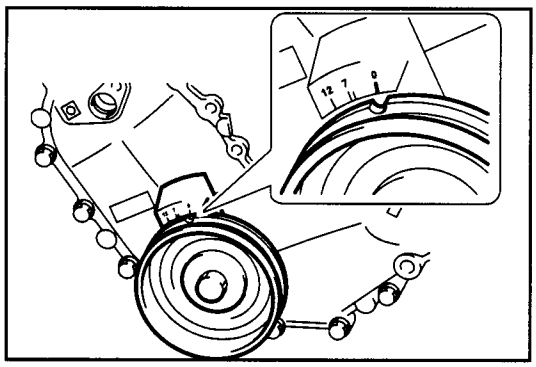

[Point 5]

Installation:

Install the distributor.

1. Align the TDC mark of the crank pully with the notch of the timing gear cover.

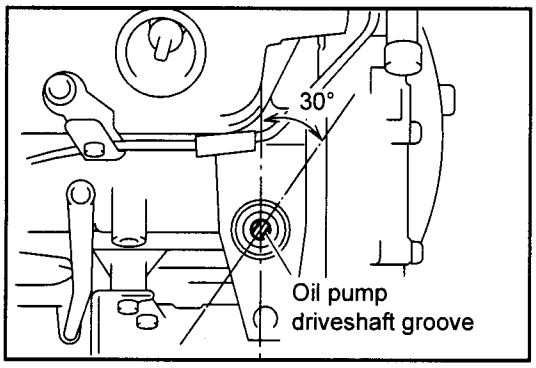

2. Set the position of the groove in the oil pump driveshaft at about 30° when seen from above.

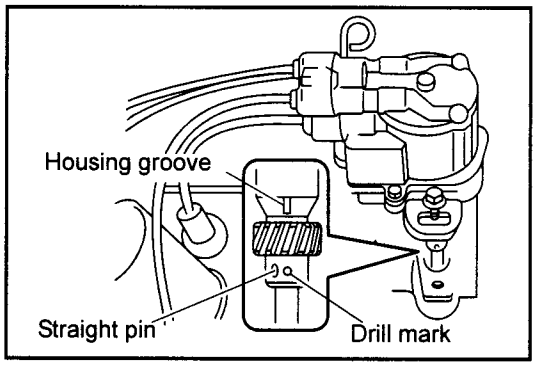

3. Align the housing groove with the drill mark of the gear, and insert the distributor.

Note:

- **Do not confuse the drill mark and the straight pin.**
- **When installing the distributor, align the screw hole for attaching the block with the center of the groove in the flange to install.**
- **After installation, adjust the ignition timing. (See P3-44)**

www.truck-freeworkshop.com

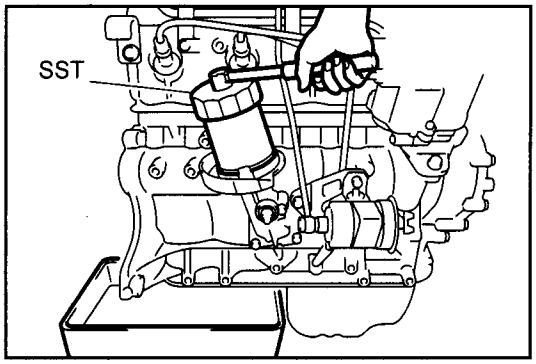

[Point 6]

Installation:

After cleaning the attachment surface of the oil filter, fit an O-ring and tighten the oil filter to the bracket by hand first, and then use the SST to further tighten by 3/4 turn.

SST 09228-76001-71
(09228-06501)

Caution:

- **Apply a small amount of engine oil to the O-ring.**
- **Clean the surface to which the O-ring will be attached.**

www.truck-freeworkshop.com

CYLINDER HEAD
COMPONENTS

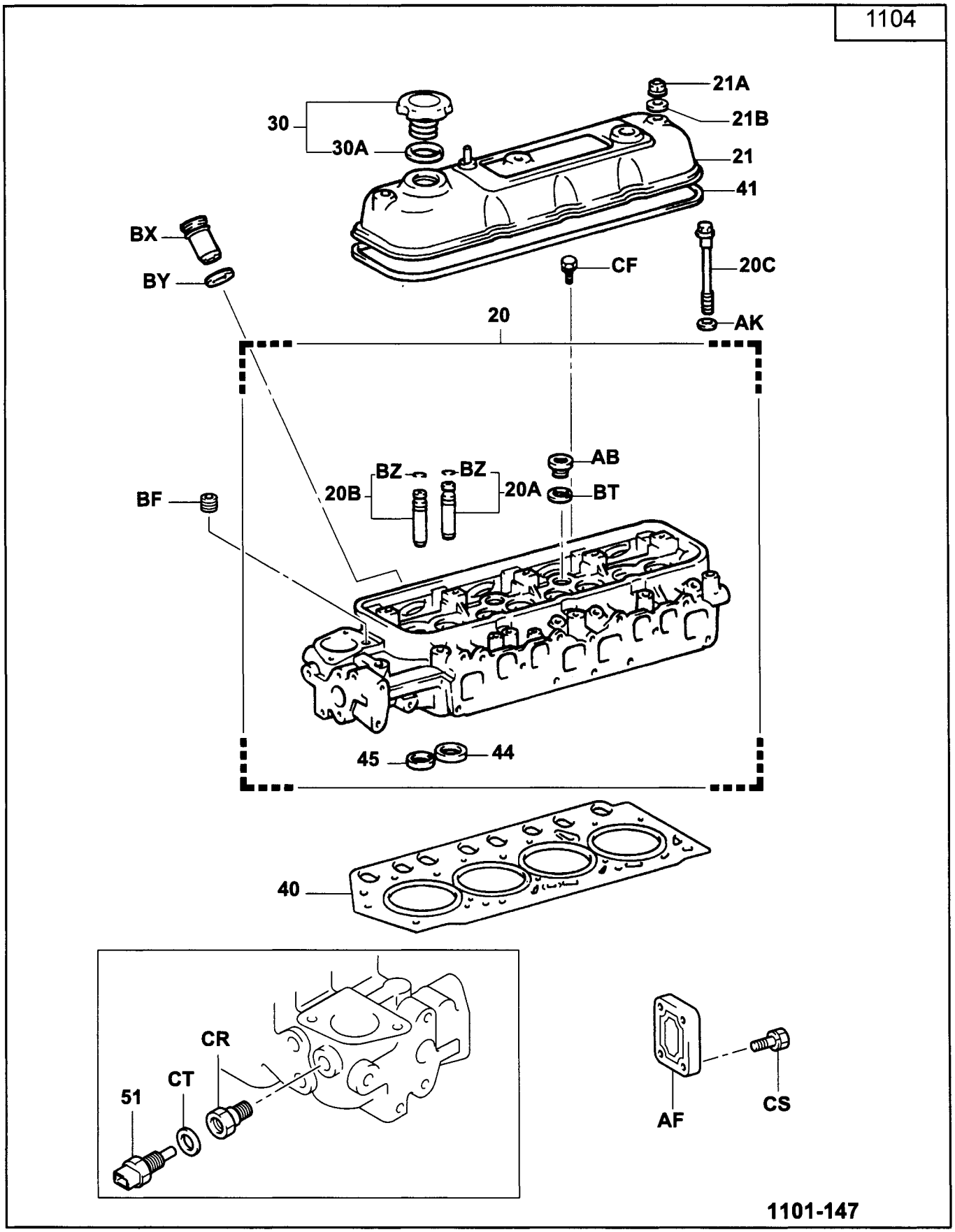

www.truck-freeworkshop.com

1302

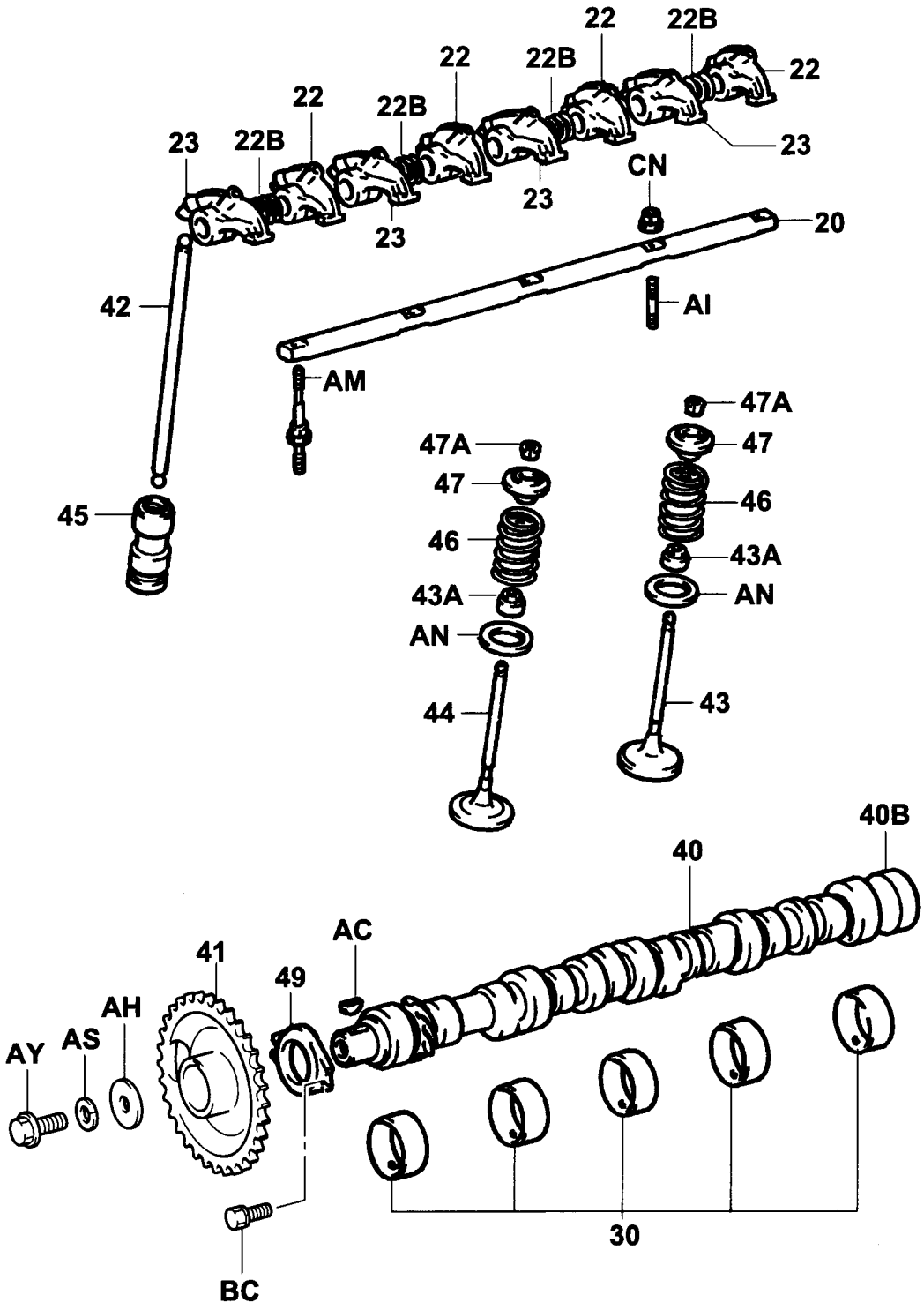

1302-130

www.truck-freeworkshop.com

1701

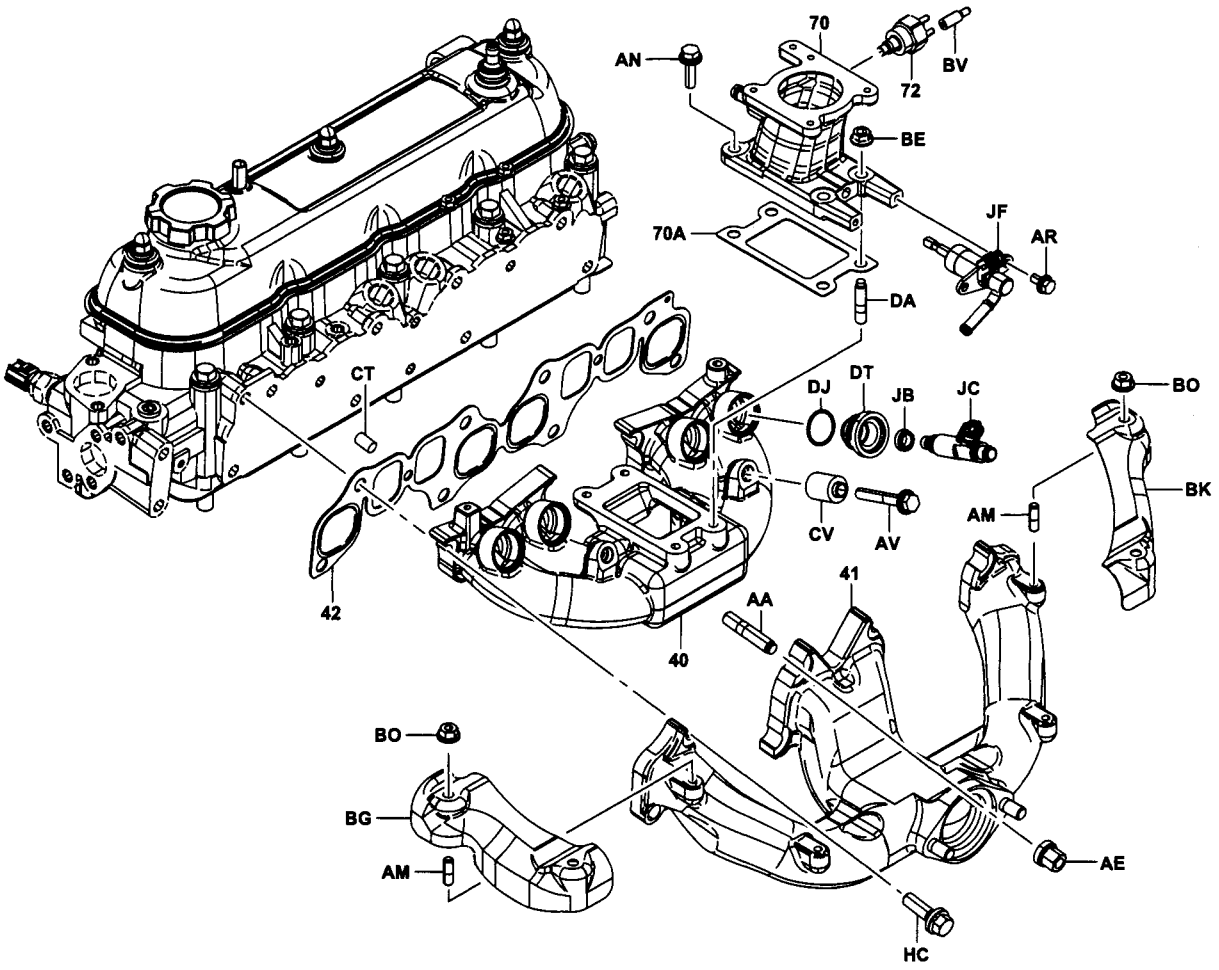

1701-181

www.truck-freeworkshop.com

DISASSEMBLY·INSPECTION·REASSEMBLY

T = N·m (kgf·cm) [ft·lbf]

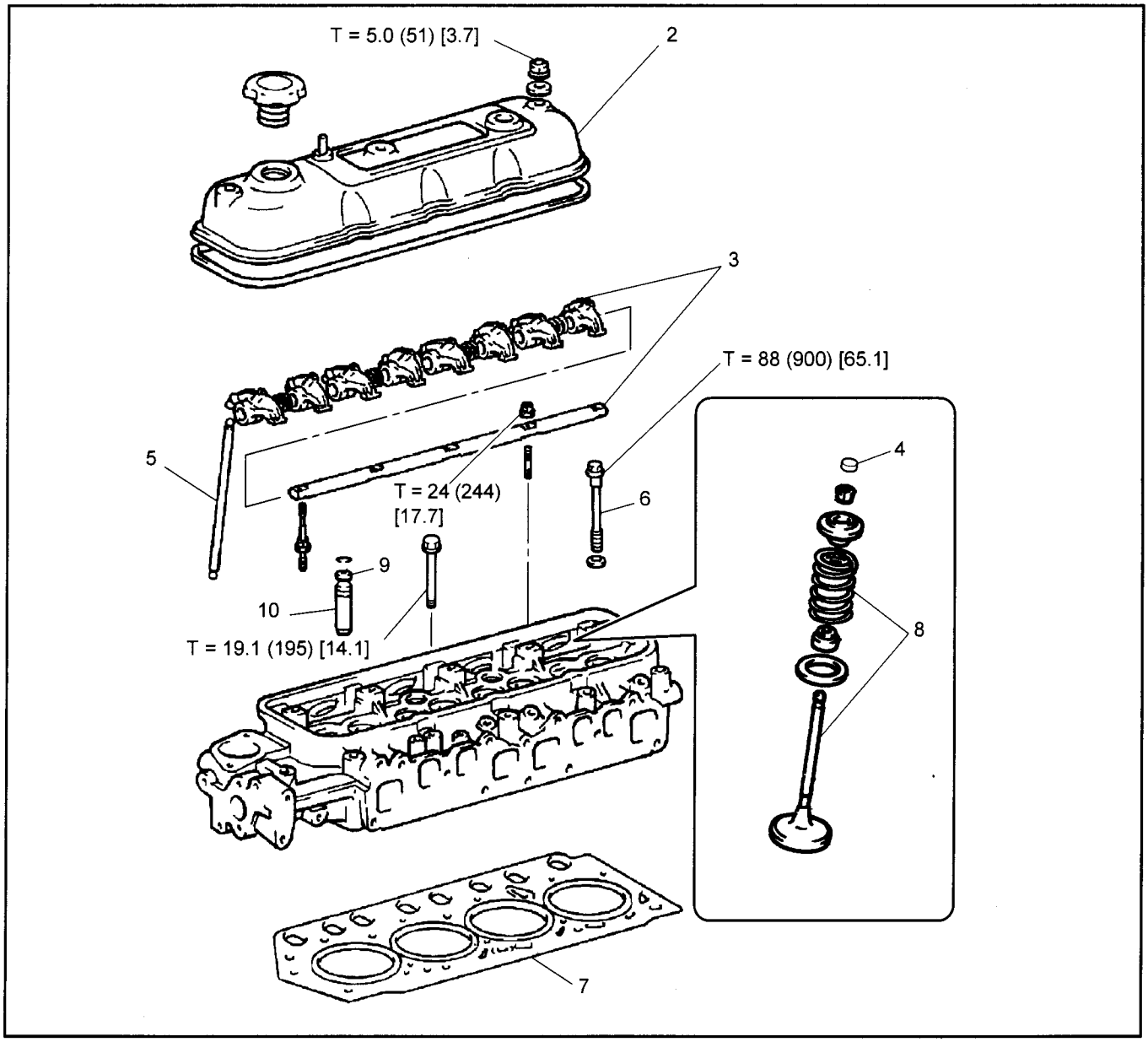

Disassembly·Reassembly Procedure

The reassembly procedure is the reverse of the disassembly procedure.

No.	Item	Disassembly	Inspection	Reassembly
1	Remove parts in procedures 1 to 11 on page P3-4.			
2	Cylinder head cover			
3	Rocker shaft ASSY	**[Point 1]**	**[Point 2]**	**[Point 18]**
4	Valve stem cap		**[Point 3]**	
5	Valve push rod	**[Point 4]**	**[Point 5]**	**[Point 17]**
6	Cylinder head bolt	**[Point 6]**		**[Point 16]**
7	Cylinder head gasket		**[Point 7]**	**[Point 15]**
8	Valve spring and valve	**[Point 8]**	**[Point 9]**	**[Point 14]**
9	Valve stem oil seal			**[Point 13]**
10	Valve guide bushing	**[Point 10]**	**[Point 11]**	**[Point 12]**

www.truck-freeworkshop.com

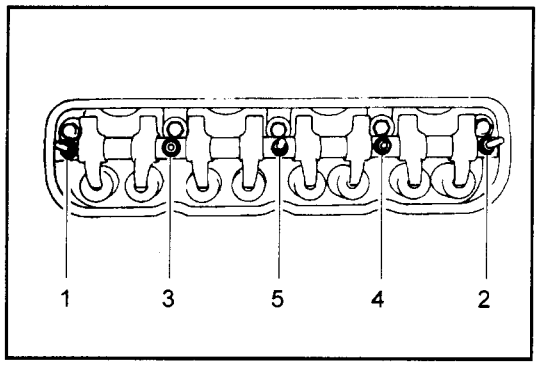

Point Operations

[Point 1]

Disassembly:

Evenly loosen the support set bolts in two or three times, following the order shown in the illustration.

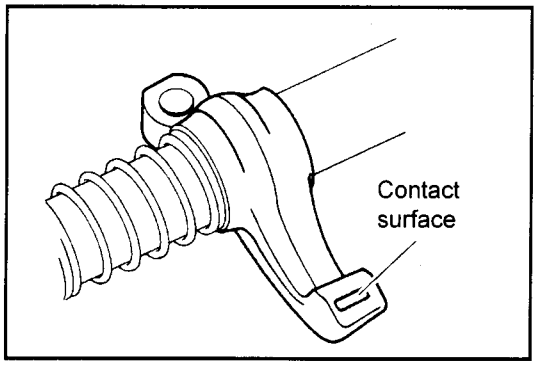

[Point 2]

Inspection:

Inspect for wear or damage to the contact surface for the rocker arm valve stem cap.

If there is a slight damage, correct it by polishing with oil stone, and replace if there is a considerable wear or damage.

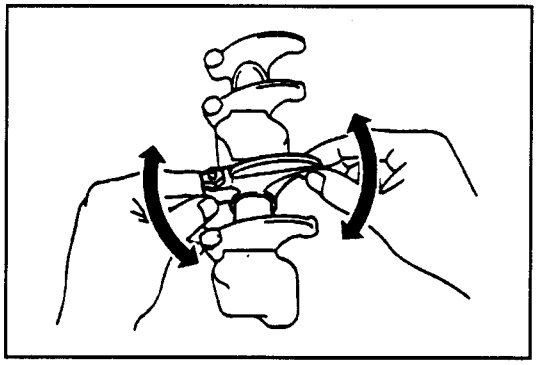

Inspection:

Move the rocker arm as shown in the illustration, and inspect the clearance between the rocker arm and the shaft. If the clearance is large, disassemble and inspect it.

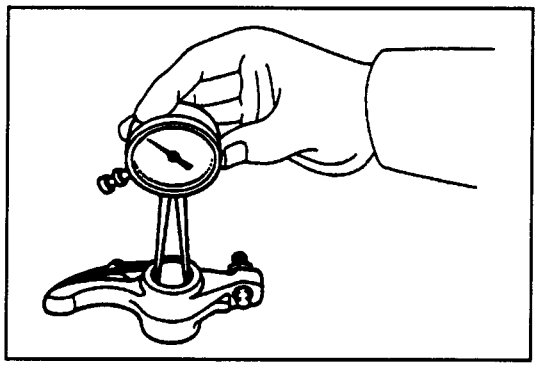

Inspection:

Inspect the oil clearance between the rocker arm and the rocker shaft.

1. Measure the rocker arm inside diameter with a caliper gauge.

   Standard: 18.500 to 18.515 mm (0.7283 to 0.7289 in.)

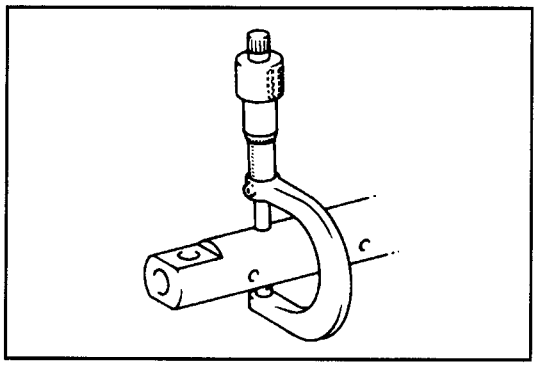

2. Measure the rocker shaft outside diameter with a micrometer.

   Standard: 18.474 to 18.487 mm (0.7273 to 0.7278 in.)

   Calculate the oil clearance by the difference between the arm inner diameter and the shaft outer diameter.

   Standard: 0.013 to 0.041 mm (0.0005 to 0.0016 in.)
   Limit: 0.08 mm (0.0031 in.)

   If it exceeds the limit, replace the rocker arm or the rocker shaft.

www.truck-freeworkshop.com

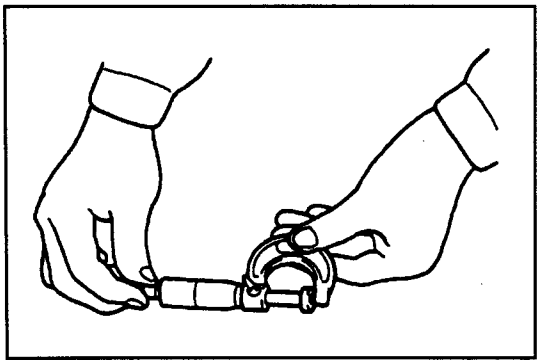

[Point 3]

Inspection:

Inspect the valve stem cap.

1. Measure the wall thickness of the valve stem cap.

   Standard: 1.31 to 1.49 mm (0.0516 to 0.0587 in.)

2. If there is a slight scratch on the contact surface with the rocker arm, correct it by polishing with oil stone, and if there is considerable wear or damage, replace with a new one.

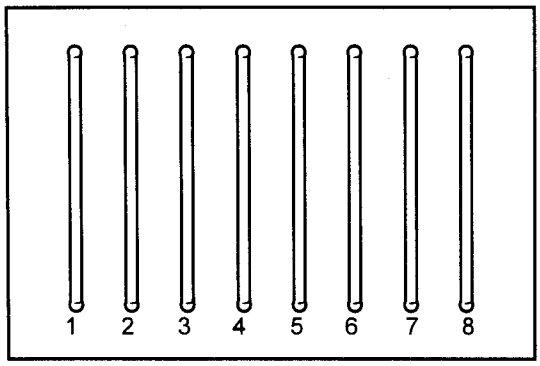

[Point 4]

Disassembly:

Store the removed push rods carefully so that their order will not be mixed up during reassembly.

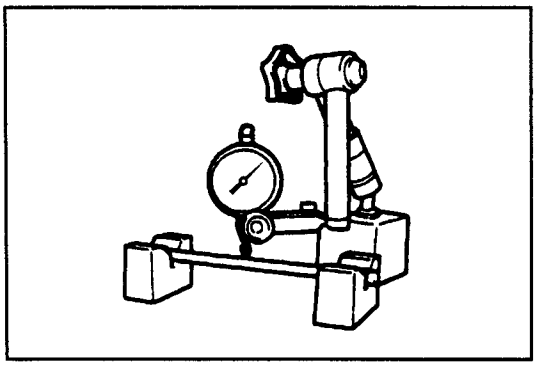

[Point 5]

Inspection:

Inspect the push rod.

1. Inspect the runout in the push rod.

   Limit: 0.30 mm (0.0118 in.)

   If it exceeds the limit, replace the push rod.

2. Inspect for blockage of the push rod oil hole.
   If there is a blockage, remove it with an air gun.

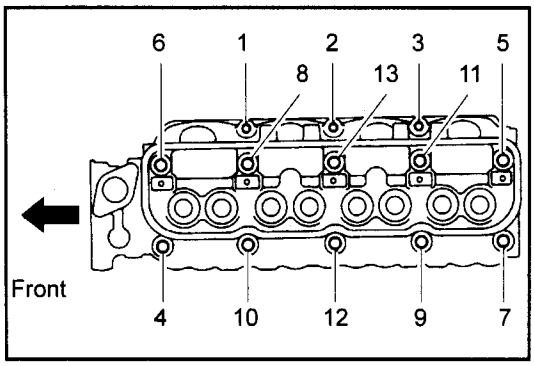

[Point 6]

Disassembly:

Loosen the cylinder head bolts in two or three times, following the order shown in the illustration.

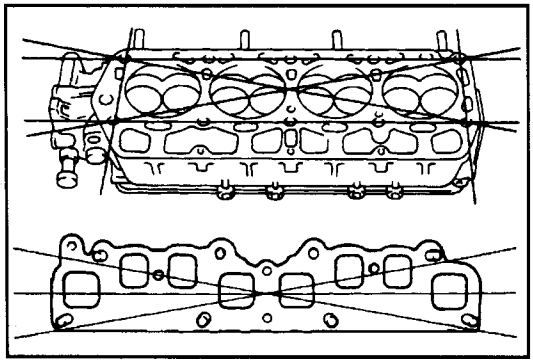

[Point 7]

Inspection:

Use a straight edge ruler and a thickness gauge to measure the distortion of the lower surface of the cylinder head and the attachment surface of the manifold.

Limit
Cylinder head lower surface: 0.15 mm (0.0059 in.)
Manifold attachment surface: 0.10 mm (0.0039 in.)

If it exceeds the limit, grind or replace.

www.truck-freeworkshop.com

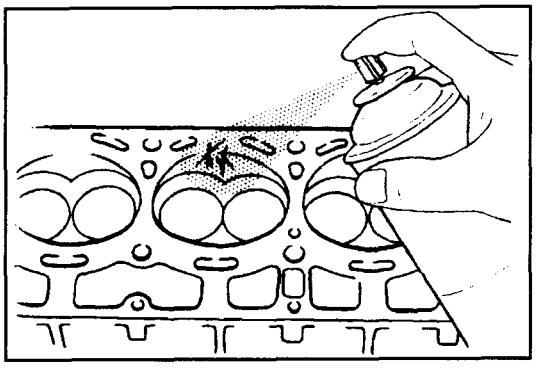

Inspection:

Inspection for cracking in the cylinder head.

With color check (dye penetrant inspection), inspect the combustion chambers, the intake ports, the exhaust ports, and the lower and upper faces of the heads.

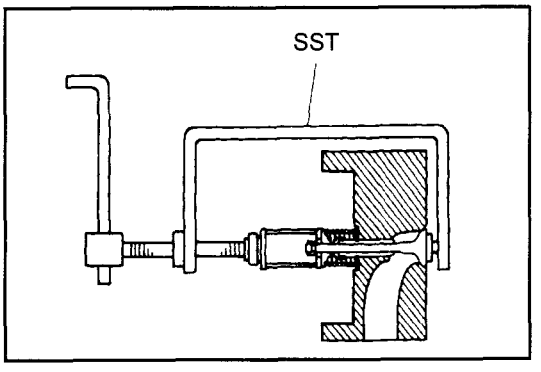

[Point 8]

Disassembly:

Use the SST to disassemble the valve spring and valve.

SST 09202-76001-71
(09202-43013)

Store the removed parts by sorting them out for each cylinder.

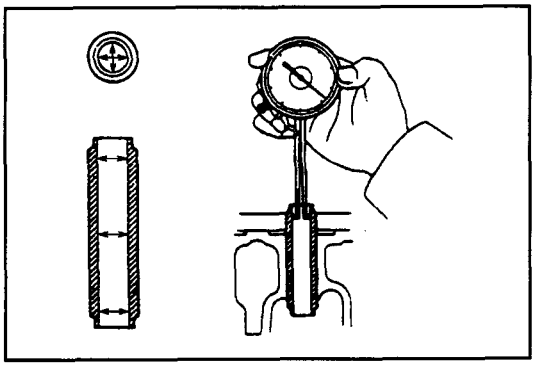

[Point 9]

Inspection:

Inspect the oil clearance between the valve guide bushing and the valve stem.

1. Measure the valve guide bushing inside diameter with a caliper gauge.

   Standard
   IN: 8.010 to 8.030 mm (0.3154 to 0.3161 in.)

2. Measure the outside diameter of the valve stem.

   Standard
   IN: 7.970 to 7.985 mm (0.3138 to 0.3144 in.)
   EX: 7.965 to 7.980 mm (0.3136 to 0.3142 in.)

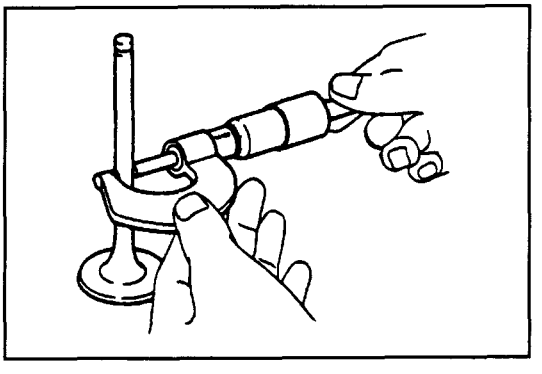

3. Calculate the oil clearance.

   Standard
   IN: 0.025 to 0.060 mm (0.0010 to 0.0024 in.)
   EX: 0.030 to 0.065 mm (0.0012 to 0.0026 in.)
   Limit
   IN: 0.10 mm (0.0039 in.)
   EX: 0.12 mm (0.0047 in.)

   If it exceeds the limit, replace the valve stem or the valve guide bushing. Also, if necessary, grind the inside diameter by using a reamer to correct the oil clearance between the valve guide bushing and the valve stem within the standard range.

www.truck-freeworkshop.com

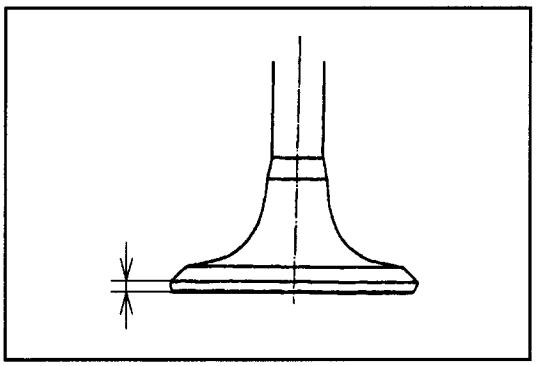

Inspection:

Inspect the valves.

1. Measure the wall thickness of the valve head.

   Standard
   IN: 1.0 to 1.4 mm (0.039 to 0.055 in.)
   EX: 1.3 to 1.7 mm (0.051 to 0.067 in.)
   Limit
   IN: 0.5 mm (0.020 in.)
   EX: 0.8 mm (0.031 in.)

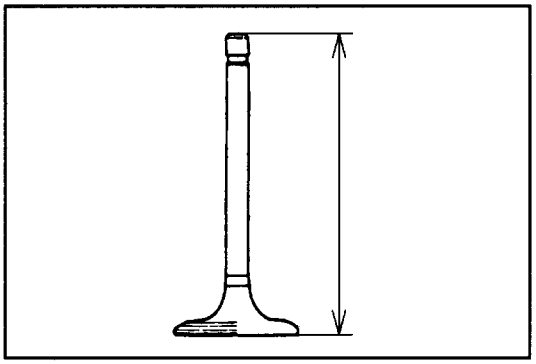

2. Measure the total length of the valves.

   Standard
   IN: 108.2 mm (4.260 in.)
   EX: 108.5 mm (4.272 in.)
   Limit
   IN: 107.7 mm (4.240 in.)
   EX: 108.0 mm (4.252 in.)

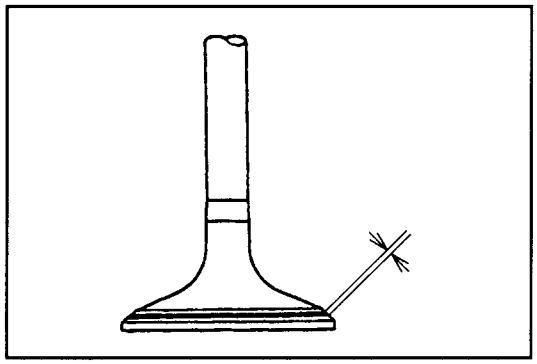

Inspection:

Inspect the valve seat.

1. Apply red lead primer thinly to the valve face.
2. Insert the valve into the valve guide bushing, and press the valve onto the valve seat. Do not rotate the valve while it is pressed onto the valve seat.
3. Inspect the width of the contact surface to see whether it is within the standard along the entire circumference.

   Standard
   Contact width: 1.2 to 1.6 mm (0.047 to 0.063 in.)

   If the width is not within the standard, replace the valve or correct the valve seat.

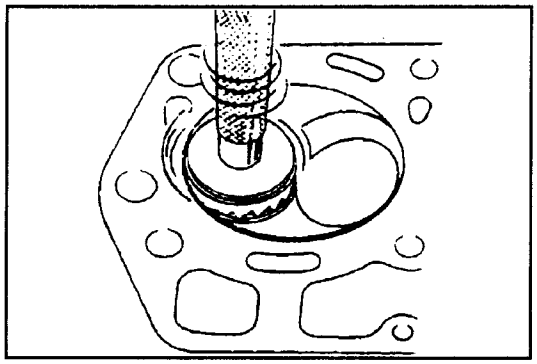

4. Correct the valve seat.

Caution:

- **Use a carbide tip cutter for the EX side.**
- **Cutting should be performed while constantly checking the contact point and contact width of the valve.**
- **In order not to create steps, gradually reduce the force towards the end of cutting.**
- **Make corrections after inspecting the valve guide bushing.**

www.truck-freeworkshop.com

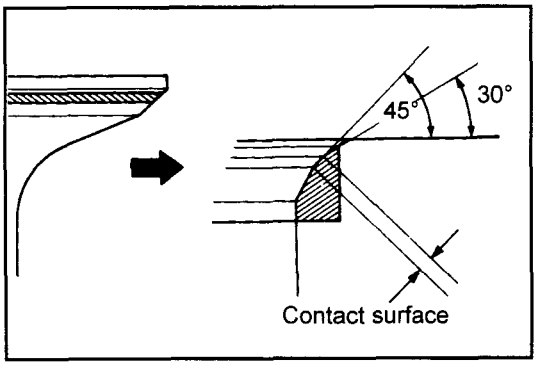

(1) Grind the valve seat with a 45° valve seat cutter.

(2) If the contact position is on the outward side, grind using a 30° cutter.

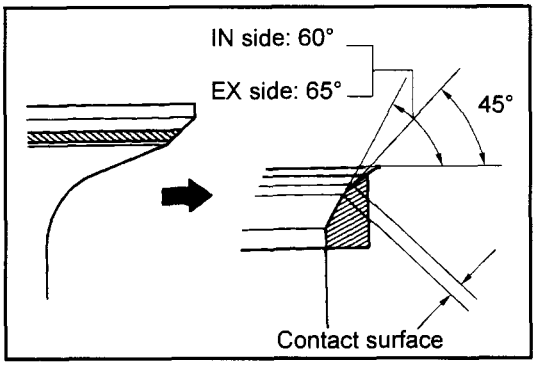

(3) If the contact position is on the inward side, grind using a 60° cutter on the IN side, and a 65° cutter on the EX side.

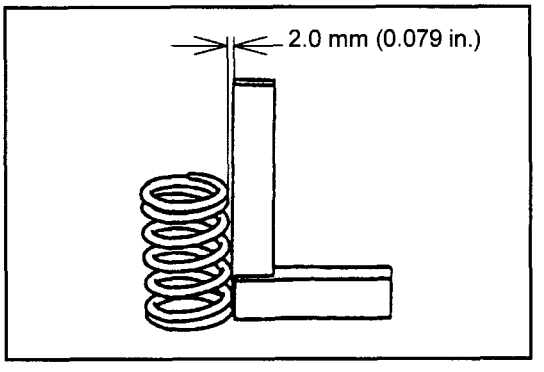

Inspection:

Inspect the valve spring.

1. Measure the squareness at the top end of the spring.

   Limit
   IN·EX: 2.0 mm (0.079 in.)

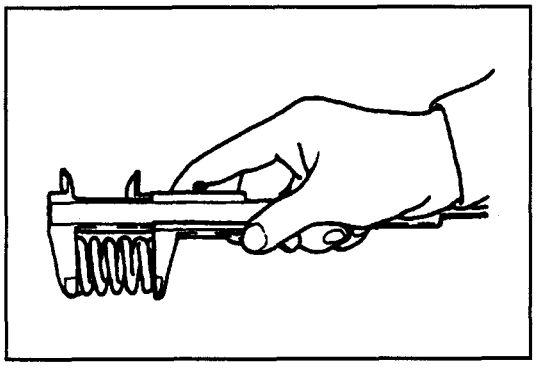

2. Measure the free length.

   Standard
   IN·EX: 46.0 mm (1.81 in.)
   Limit
   IN·EX: 45.5 mm (1.79 in.)

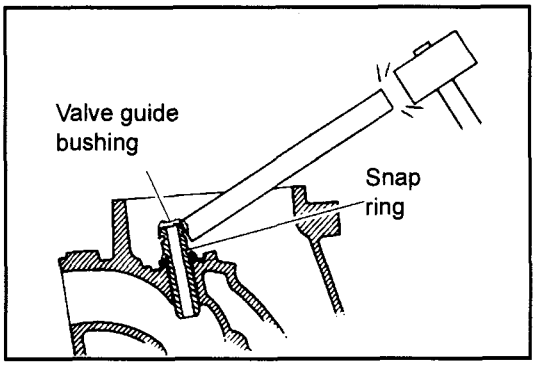

[Point 10]

Disassembly:

Remove the valve guide bushing.

1. Use a bar and hammer to break off the valve guide bushing.
2. Remove the snap ring.

www.truck-freeworkshop.com

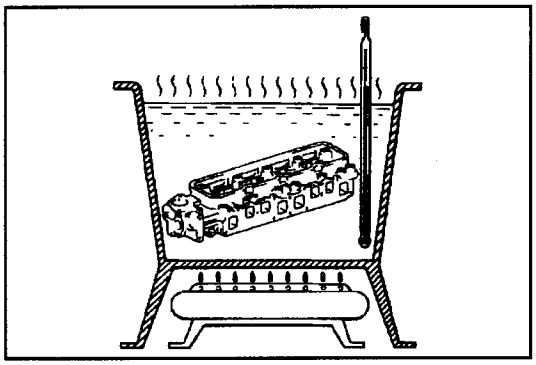

3. Gradually warm the cylinder head to between 80 and 100°C (176 to 212°F).

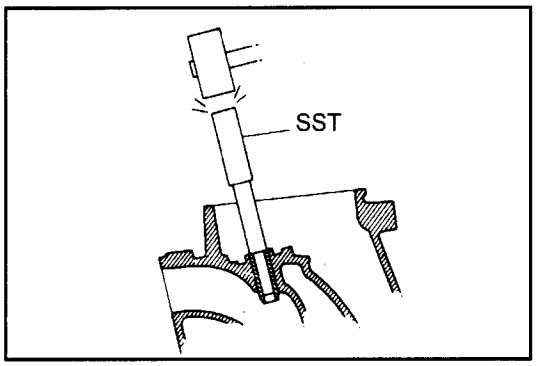

4. Use the SST and a hammer to tap out the valve guide bushing.

   SST 09201-76006-71
   (09201-60011)

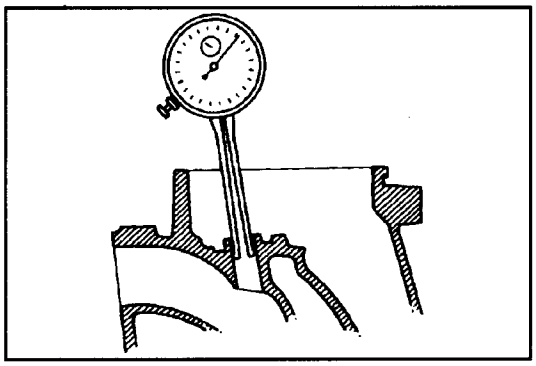

[Point 11]

Inspection:

Use a caliper gauge to measure the inside diameter of the bushing bottom hole, then select the bushing to be used.

Bushing inside diameter (mm) [in.]	Bushing size
13.000 to 13.027 (0.5118 to 0.5129)	STD bushing
13.027 (0.5129) or more	O/S 0.05 bushing

If the bushing bottom hole inside diameter is 13.027 mm (0.5129 in.) or more, correct the inside diameter of the bushing bottom hole with a reamer.

Bushing bottom hole inside diameter:
13.050 to 13.077 mm (0.5138 to 0.5148 in.)

If the bushing bottom hole inside diameter is 13.077 mm (0.5148 in.) or more, replace the cylinder head.

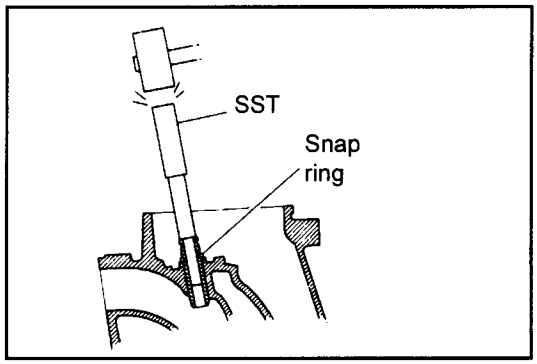

[Point 12]

Reassembly:

Install the valve guide bushing.

1. Gradually warm the cylinder head to between 80 and 100°C (176 to 212°F).
2. Use the SST and a hammer to tap the bushing in until the snap ring makes contact with the head.

   SST 09201-76006-71
   (09201-60011)

www.truck-freeworkshop.com

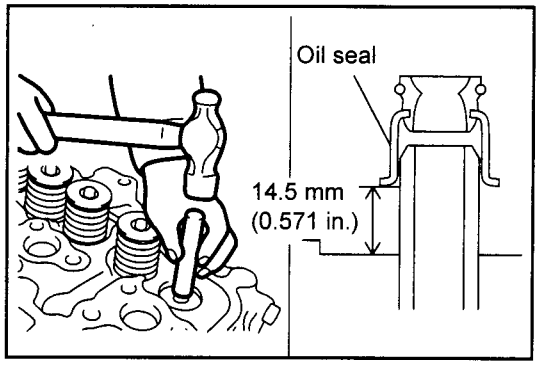

[Point 13]

Reassembly:

Apply engine oil to the valve stem oil seal lip portion and to the valve stem, and reassemble them.

Reassemble according to the dimensions shown in the illustration on the left.

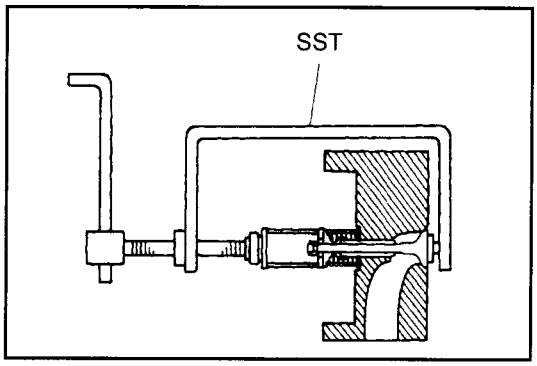

[Point 14]

Reassembly:

Use the SST to reassemble the valve spring and valve.

SST 09202-76002-71
(09202-70020)

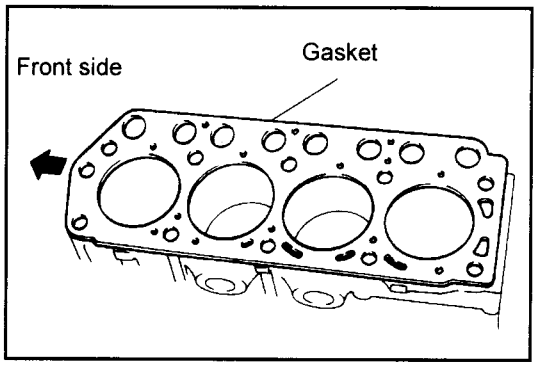

[Point 15]

Reassembly:

Check the direction of the gasket and install the gasket.

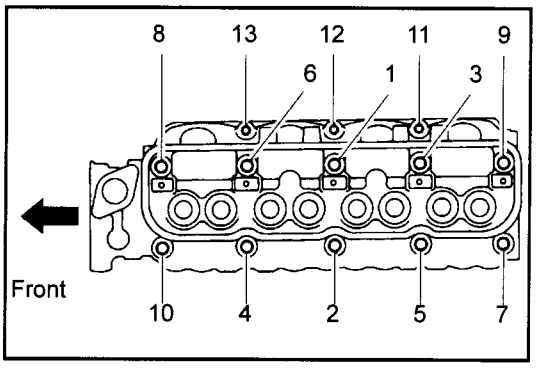

[Point 16]

Reassembly:

Tighten the cylinder head bolts in two or three times, following the order shown in the illustration.

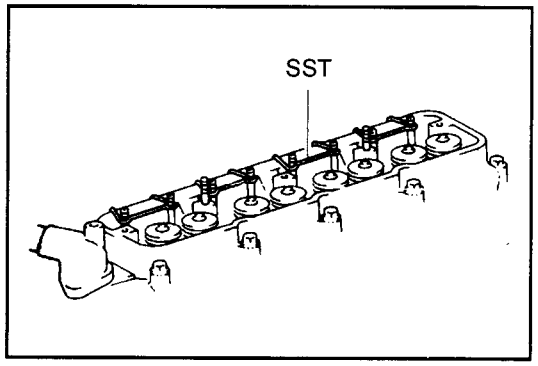

[Point 17]

Reassembly:

Use the SST to position and install the push rod.

SST 09270-76001-71
(09270-71010)

www.truck-freeworkshop.com

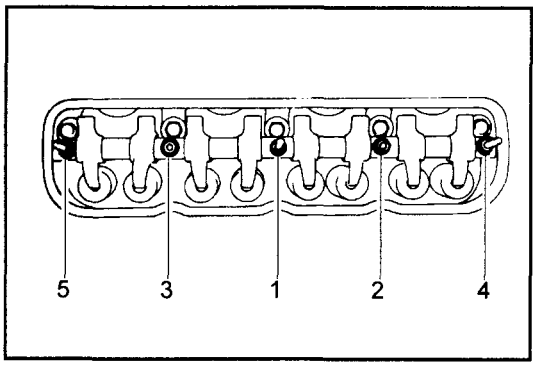

[Point 18]

Reassembly:

Evenly tighten the support set bolts in two or three times, following the order shown in the illustration.

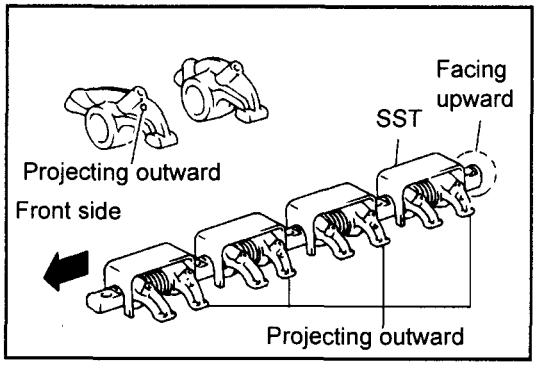

Reassembly:

Check the direction of the rocker arm shaft, then use the SST to position the rocker arm and install the rocker arm ASSY.

SST 09270-76001-71
(09270-71010)

www.truck-freeworkshop.com

TIMING GEAR
COMPONENTS

1106

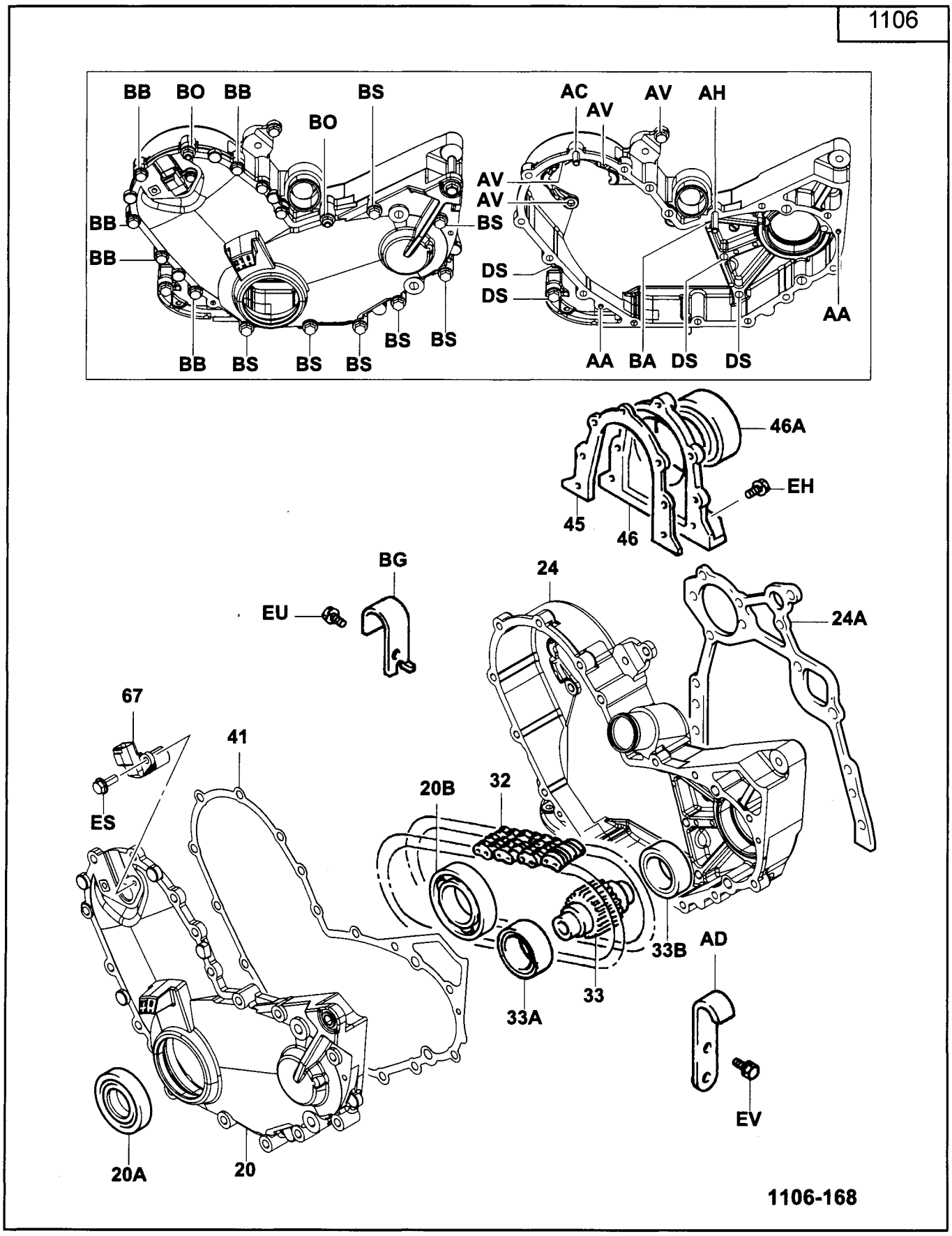

www.truck-freeworkshop.com

1302

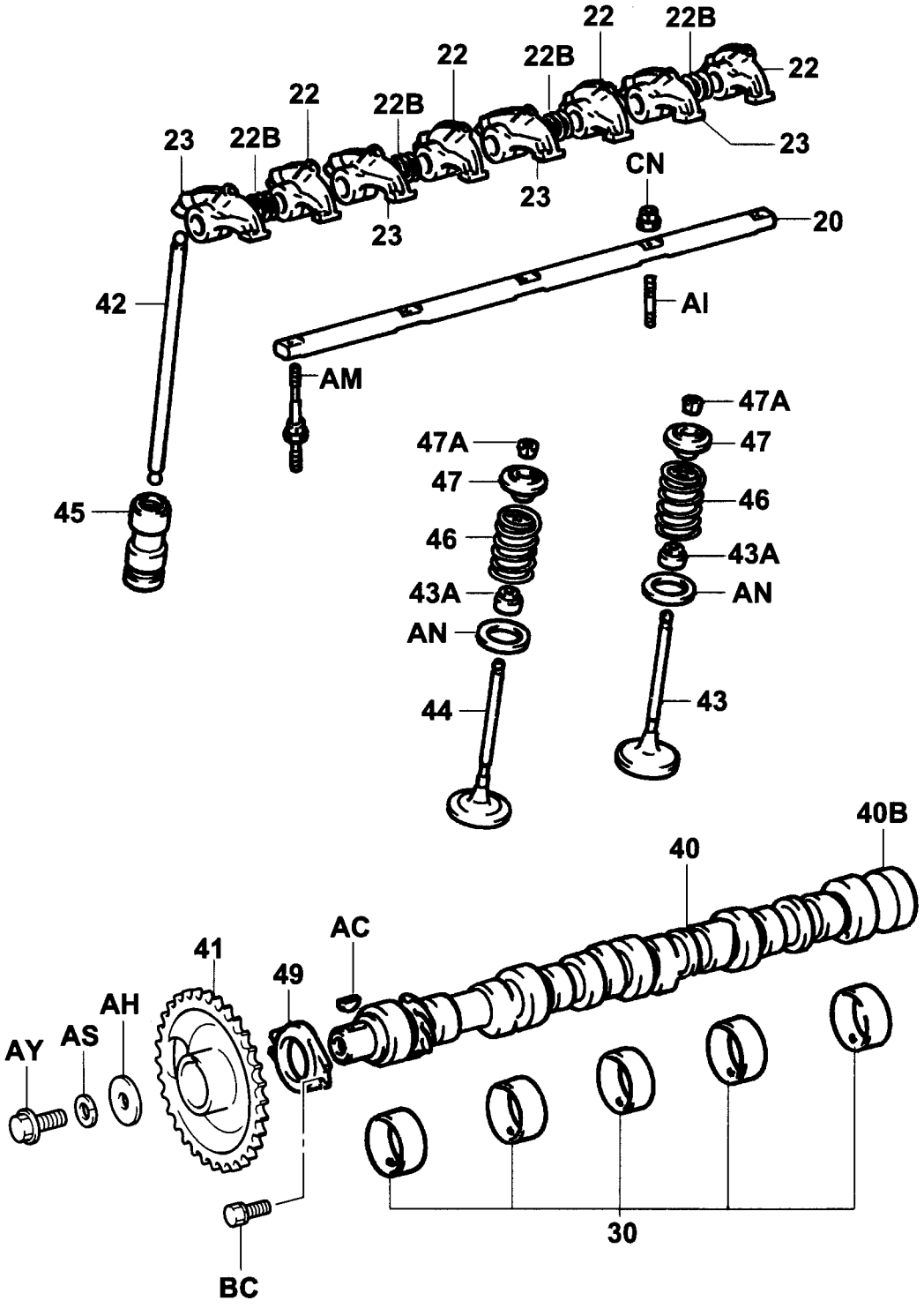

1302-130

www.truck-freeworkshop.com

1303

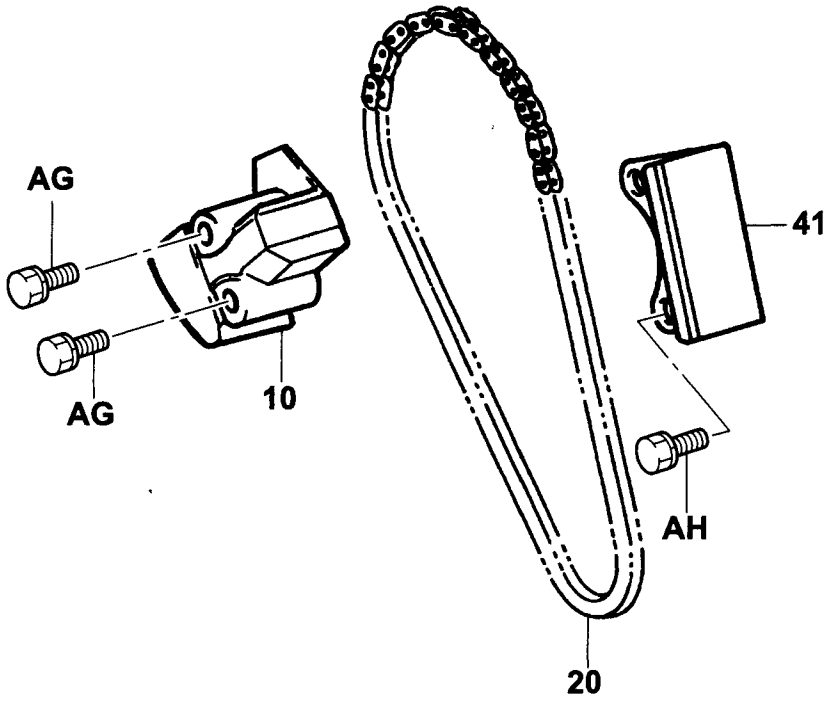

1303-012

www.truck-freeworkshop.com

DISASSEMBLY·INSPECTION·REASSEMBLY

T = N·m (kgf·cm) [ft·lbf]

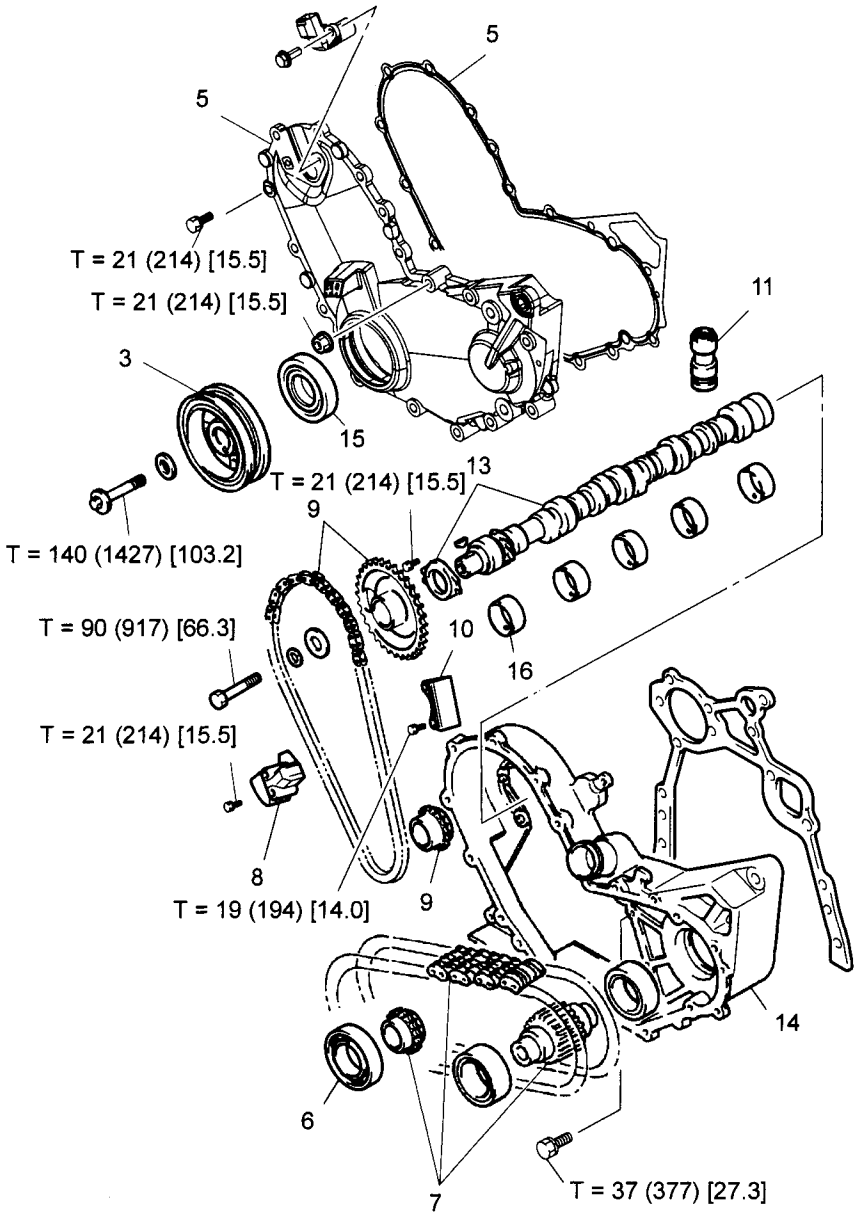

Disassembly·Reassembly Procedure

The reassembly procedure is the reverse of the disassembly procedure.

No.	Item	Disassembly	Inspection	Reassembly
1	Fan pulley, V-belt, alternator	See P3-43	←	←
2	Cylinder head ASSY*	See P3-11	←	←
3	Crankshaft pulley			
4	Crank position sensor			**[Point 20]**
5	Timing gear cover and gasket			
6	Crankshaft bearing	**[Point 1]**		**[Point 19]**
7	Pump drive sprocket and drive chain, crankshaft sprocket	**[Point 2]**		**[Point 18]**
8	Chain tensioner		**[Point 3]**	

www.truck-freeworkshop.com

No.	Item	Disassembly	Inspection	Reassembly
9	Timing chain, crankshaft sprocket, camshaft sprocket		**[Point 4]**	**[Point 17]**
10	Chain vibration damper		**[Point 5]**	
11	Valve lifter	**[Point 6]**	**[Point 7]**	
12	Oil pan	**[Point 8]**		**[Point 16]**
13	Thrust plate and camshaft	**[Point 9]**	**[Point 10]**	**[Point 15]**
14	Timing gear case			
15	Front oil seal	**[Point 11]**		**[Point 14]**
16	Camshaft bearing	**[Point 12]**		**[Point 13]**

*If you remove the parts other than the camshaft, you do not need to remove the cylinder head.

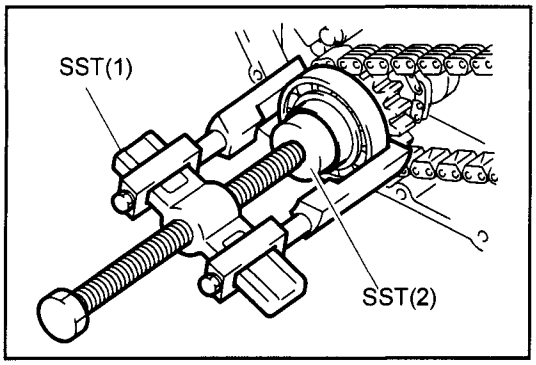

Point Operations

[Point 1]

Disassembly:

Use the SST to remove the crankshaft bearing.

SST 09950-76014-71 .....(1)
(09950-40011)
09950-76018-71 .....(2)
(09950-60010)

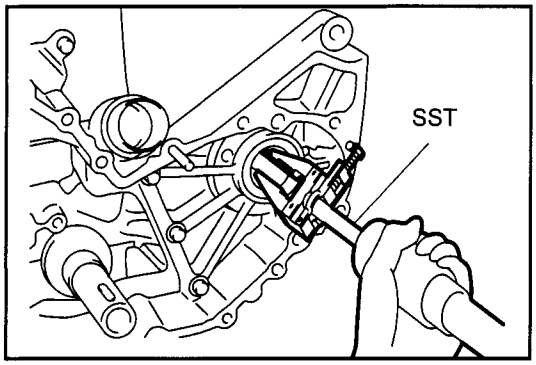

[Point 2]

Disassembly:

Use the SST to remove the bearing (case side).

SST 09320-23000-71

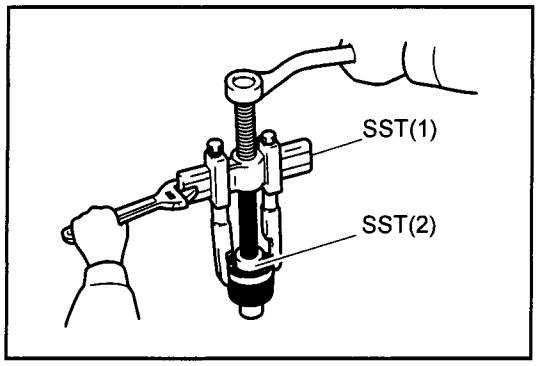

Disassembly:

Use the SST to remove the bearing (gear side).

SST 09950-76014-71 .....(1)
(09950-40011)
09950-76018-71 .....(2)
(09950-60010)

www.truck-freeworkshop.com

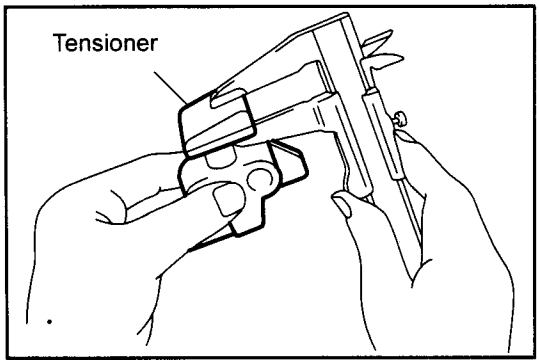

[Point 3]

Inspection:

Use a vernier caliper to measure the tensioner.

Standard: 15.0 mm (0.591 in.)
Limit: 12.5 mm (0.492 in.)

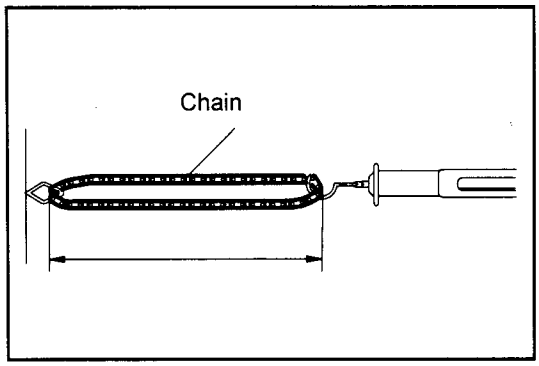

[Point 4]

Inspection:

Timing chain inspection

Tension the chain to 49 N (5 kgf) [11.0 lbf], then measure the chain length in at least 3 places at random to inspect the stretch of the chain.

Limit: 291.4 mm (11.472 in.)

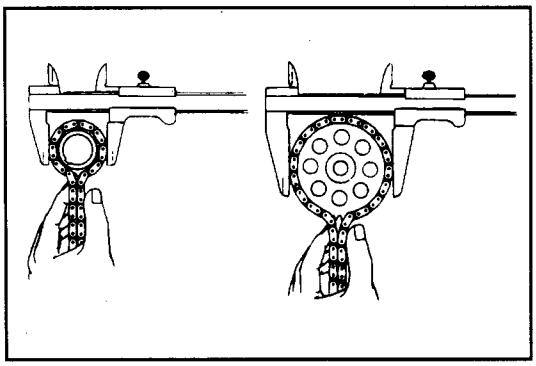

Inspection:

Timing gear inspection

Measure the outside diameter of the sprocket with the chain on.

Limit
Crankshaft: 59 mm (2.32 in.)
Camshaft: 114 mm (4.49 in.)

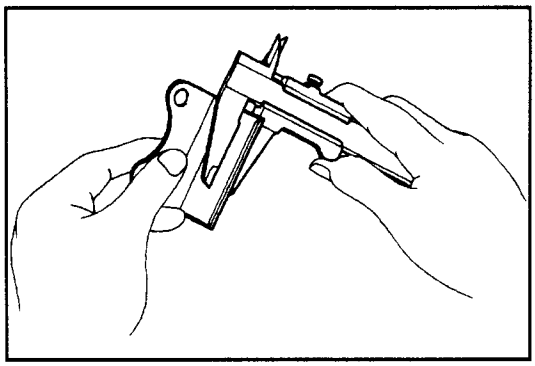

[Point 5]

Inspection:

Use a vernier caliper to measure the thickness of the damper.

Standard: 6.6 mm (0.260 in.)
Limit: 5.0 mm (0.197 in.)

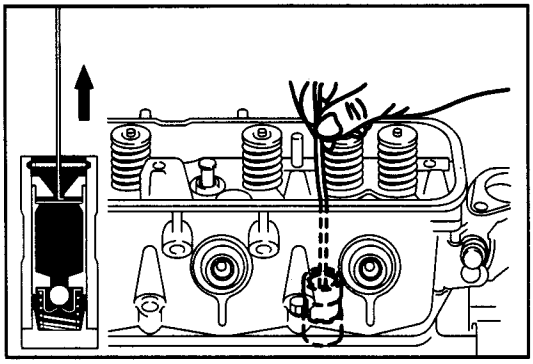

[Point 6]

Disassembly:

Use a wire with the end bent into an L shape to remove the valve lifter.

Note:

- **Bend the end of the wire about 1 mm (0.04 in.), and insert the wire into the center hole of the valve lifter to hook the valve lifter.**
- **Clean the wire thoroughly first.**

www.truck-freeworkshop.com

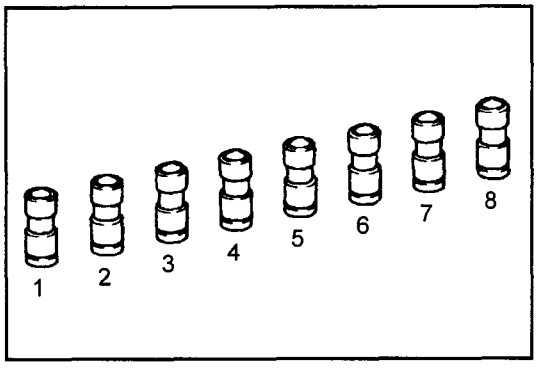

- **Line the removed valve lifters up in number order. Always store them with standing up with the hole facing upwards.**
- **Do not disassemble the valve lifters.**

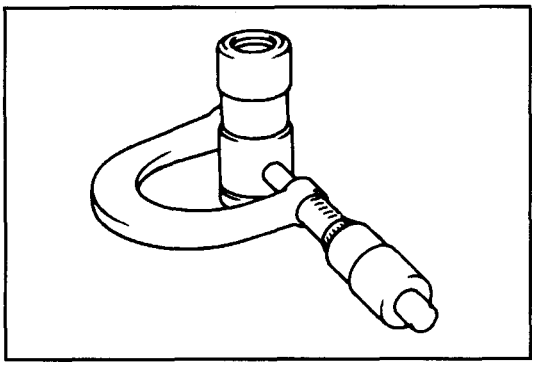

[Point 7]

Inspection:
Inspect the oil clearance of the valve lifter.

1. Measure the outside diameter of the valve lifter.

   Standard: 21.387 to 21.404 mm (0.8420 to 0.8427 in.)

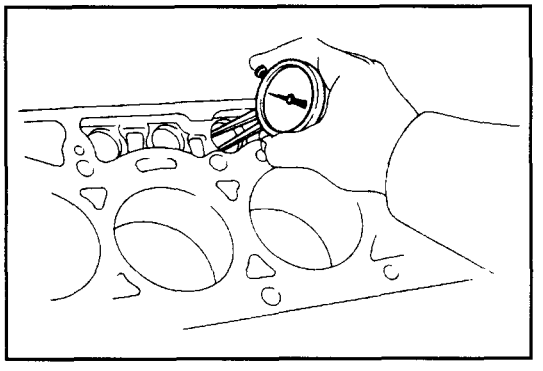

2. Measure the inside diameter of the cylinder block bottom hole.

   Standard: 21.417 to 21.443 mm (0.8432 to 0.8442 in.)

3. Calculate the oil clearance of the valve lifter.

   Standard: 0.012 to 0.056 mm (0.0005 to 0.0022 in.)
   Limit: 0.10 mm (0.0039 in.)

   If it exceeds the limit, replace the valve lifter.

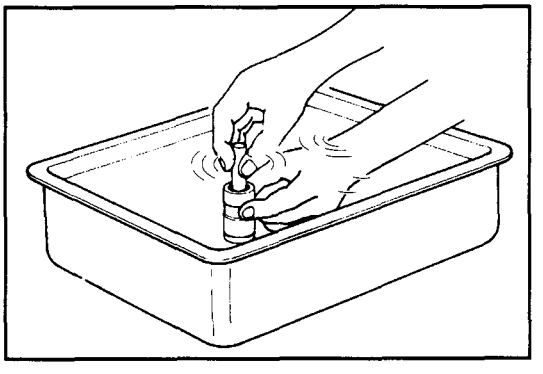

Inspection:
Valve lifter leak down test

1. Bleed the air from the valve lifter.
   Immerse the valve lifter in a container full of diesel oil, and use the SST to move the plunger up and down several times.

   SST 09276-76001-71
   (09276-71010)

Caution:
The diesel oil is used only for the test. When installing the valve lifter, perform bleeding again in engine oil.

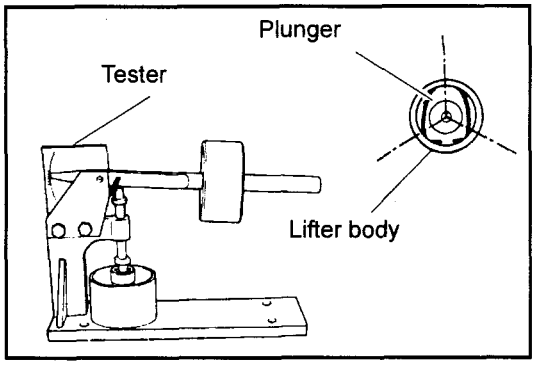

2. Use a tester and apply 196 N (20 kgf) [44.1 lbf] of force to the plunger of the air-bled lifter. After the plunger has dropped about 2 mm (0.08 in.), measure the time taken for the plunger dropping a further 1 mm (0.04 in.).

3. Measure 3 times, shifting the position of the plunger 120° each time, and find the average value.

   Standard: 7 to 28 sec./1 mm (0.04 in.)
   (oil temperature 20°C [68°F])

www.truck-freeworkshop.com

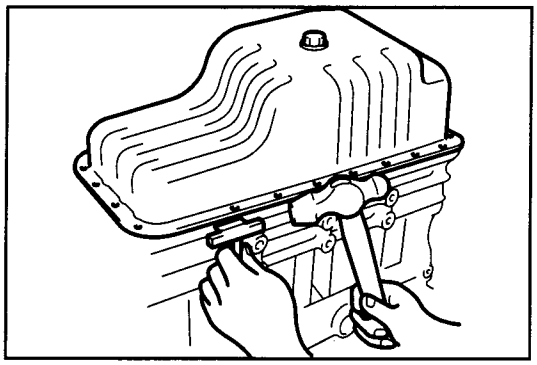

[Point 8]

Disassembly:

Do not deform the flange section of the oil pan during the operation.

SST 09032-76001-71
(09032-00100)

Caution:

- **Do not use the SST on the timing gear case side.**
- **Do not pry with a screwdriver.**

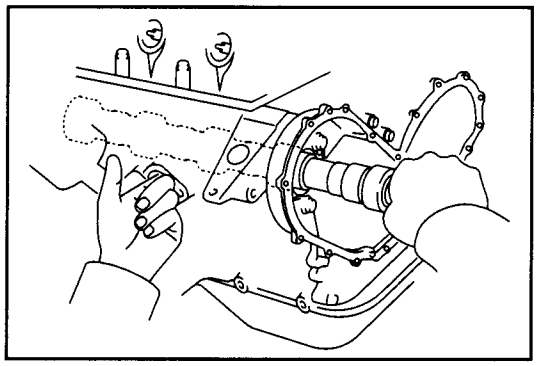

[Point 9]

Disassembly:

Remove the camshaft.

Caution:

- **When pulling out the camshaft, pull it out straight to avoid damaging the camshaft bearing.**

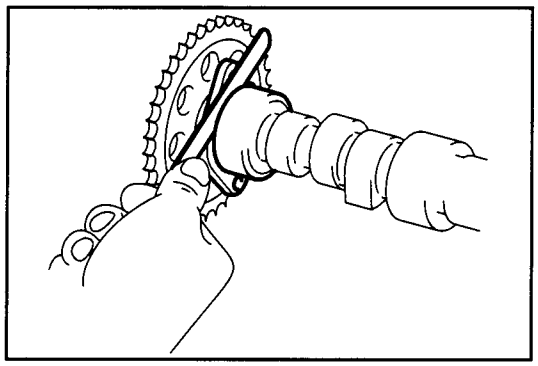

[Point 10]

Inspection:

Measure the thrust clearance of the camshaft.

Standard: 0.07 to 0.22 mm (0.0028 to 0.0087 in.)
Limit: 0.3 mm (0.012 in.)

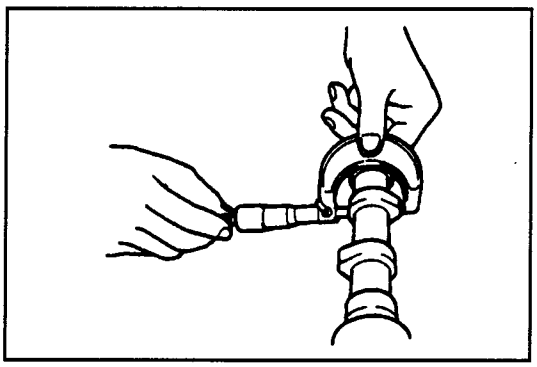

Inspection:

Measure the height of the cam.

Standard
IN: 38.620 to 38.720 mm (1.5205 to 1.5244 in.)
EX: 38.629 to 38.729 mm (1.5208 to 1.5248 in.)
Limit
IN: 38.26 mm (1.5063 in.)
EX: 38.27 mm (1.5067 in.)

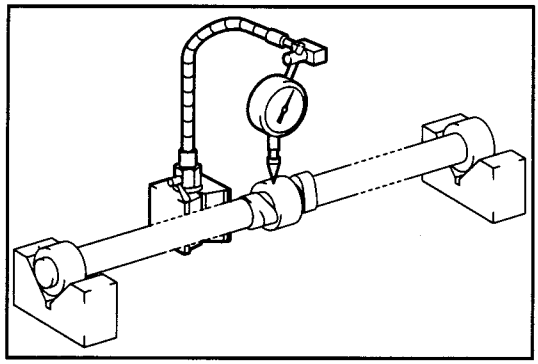

Inspection:

Inspect the bending of the camshaft.
Bending = runout of the dial gauge/2

Limit: 0.06 mm (0.0024 in.)

www.truck-freeworkshop.com

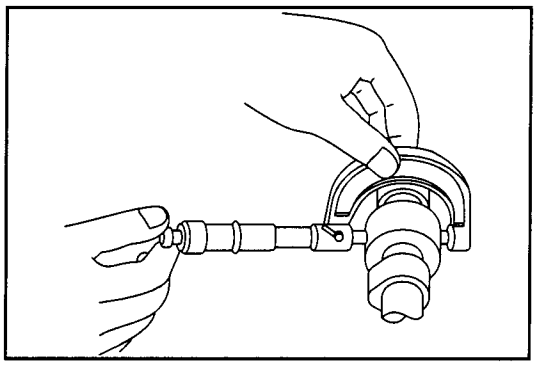

Inspection:

Inspect the oil clearance of the camshaft bearing.

1. Measure the outside diameter of the camshaft journal.

   Standard
   No.1: 46.459 to 46.475 mm (1.8291 to 1.8297 in.)
   No.2: 46.209 to 46.225 mm (1.8192 to 1.8199 in.)
   No.3: 45.959 to 45.975 mm (1.8094 to 1.8100 in.)
   No.4: 45.709 to 45.725 mm (1.7996 to 1.8002 in.)
   No.5: 45.459 to 45.475 mm (1.7897 to 1.7904 in.)

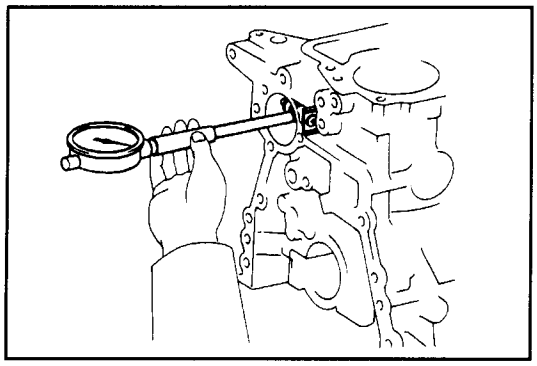

2. Measure the inside diameter of the camshaft bearing.

   Standard
   No.1: 46.500 to 46.540 mm (1.8307 to 1.8323 in.)
   No.2: 46.250 to 46.290 mm (1.8209 to 1.8224 in.)
   No.3: 46.000 to 46.040 mm (1.8110 to 1.8126 in.)
   No.4: 45.750 to 45.790 mm (1.8012 to 1.8028 in.)
   No.5: 45.500 to 45.540 mm (1.7913 to 1.7929 in.)

3. Calculate the oil clearance.

   Standard: 0.025 to 0.081 mm (0.0010 to 0.0032 in.)
   Limit: 0.1 mm (0.0039 in.)

   If it exceeds the limit, replace the bearing.

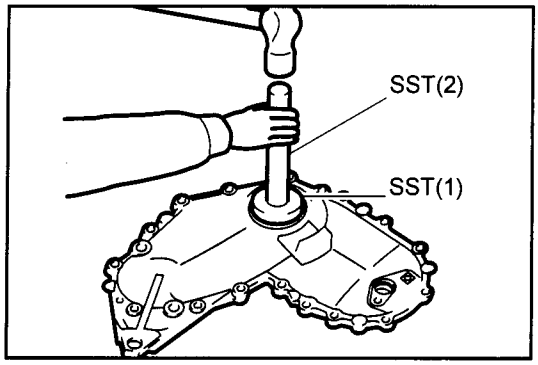

[Point 11]

Disassembly:

Use the SST to tap out the oil seal.

SST 09950-76018-71 .....(1)
(09950-60010)
09950-76020-71 .....(2)
(09950-70010)

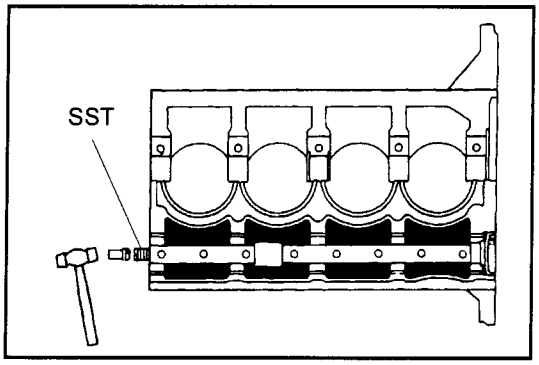

[Point 12]

Disassembly:

Remove the camshaft bearing.

1. Remove the oil pump w/ strainer. (See P8-6)
2. Use the SST to remove the rear tight plug.

   SST 09215-76004-71
   (09215-00101)

www.truck-freeworkshop.com

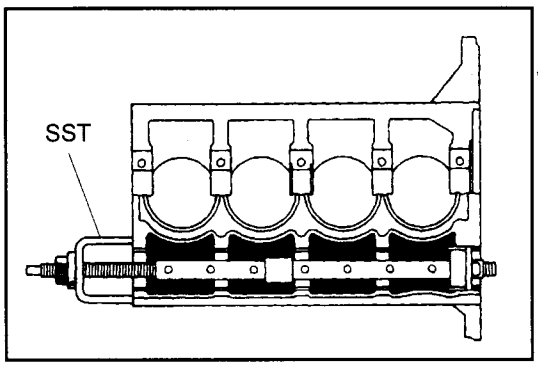

3. Use the SST to remove the camshaft bearing.

   SST 09215-76004-71
   (09215-00101)

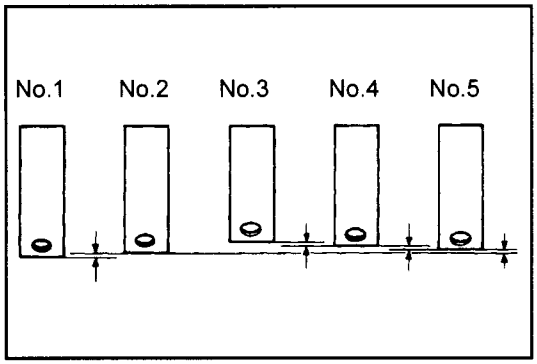

Note:
Each bearing has a different outside diameter, so take care when removing and reinstalling them.

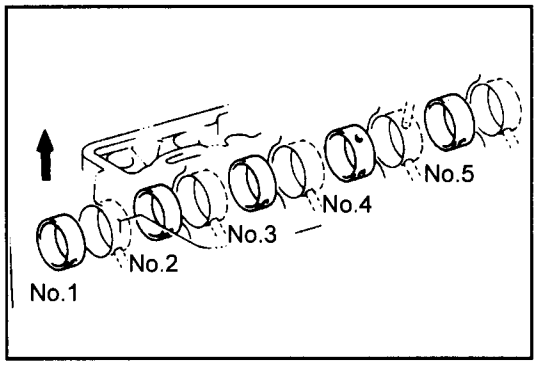

[Point 13]

Disassembly:
Install the camshaft bearing.

1. Align the oil holes of the cylinder block and the bearing.

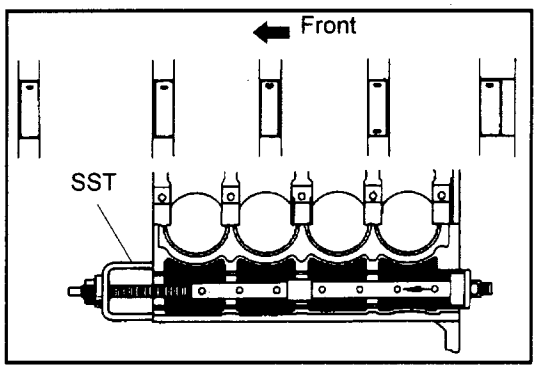

2. Use the SST and install the bearing.

   SST 09215-76004-71
   (09215-00101)

3. Use a new tight plug to apply ThreeBond 1386 to the outer circumference, and drive the tight plug into the cylinder block until the surface becomes even.

   SST 09215-76004-71
   (09215-00101)

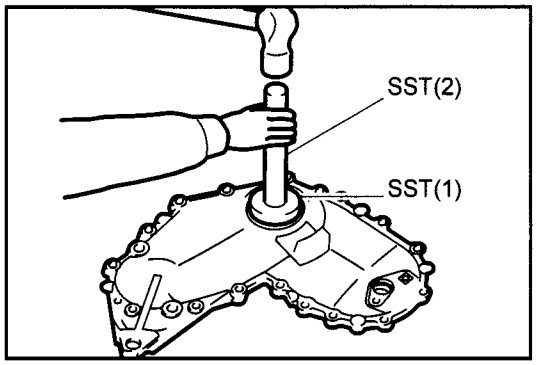

[Point 14]

Reassembly:
Using the SST, drive the oil seal into the timing gear cover until the surface becomes even.

SST 09950-76018-71 .....(1)
(09950-60010)
09950-76020-71 .....(2)
(09950-70010)

www.truck-freeworkshop.com

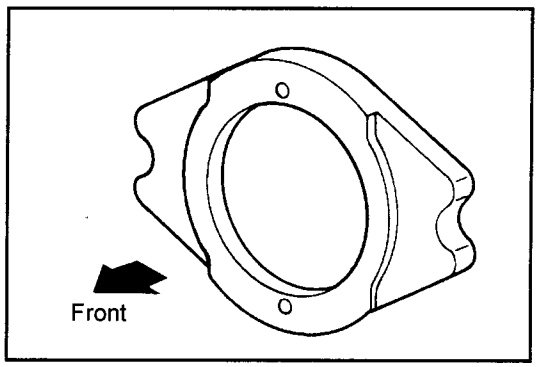

[Point 15]

Reassembly:

Take care as the thrust plate has a direction.

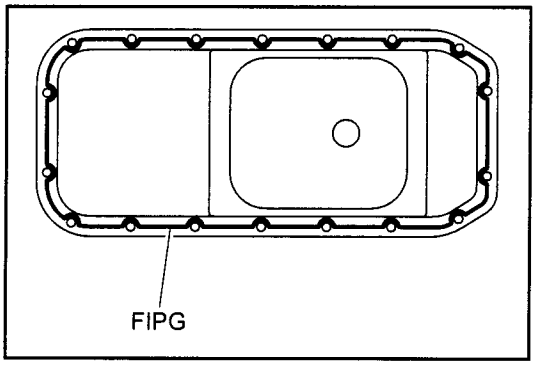

[Point 16]

Reassembly:

Apply FIPG to the seal section of the oil pan.
FIPG: 08826-76001-71
(For handling of FIPG, See P0-19)

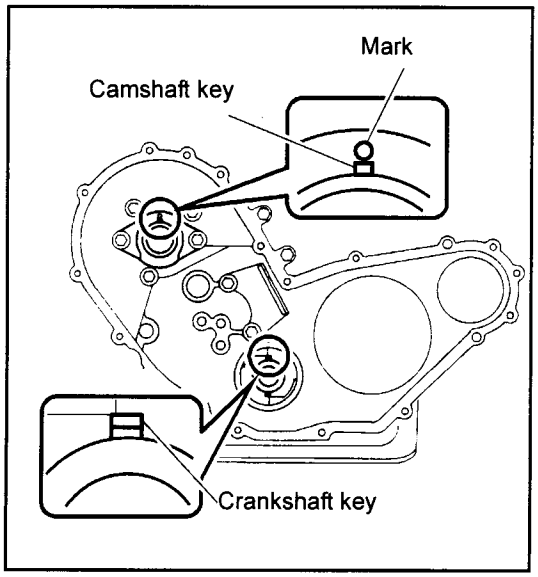

[Point 17]

Reassembly:

Install the timing chain, camshaft sprocket, and crankshaft sprocket.

1. Position the crankshaft key exactly at the top.
2. Align the camshaft key with the upper mark on the thrust plate.

www.truck-freeworkshop.com

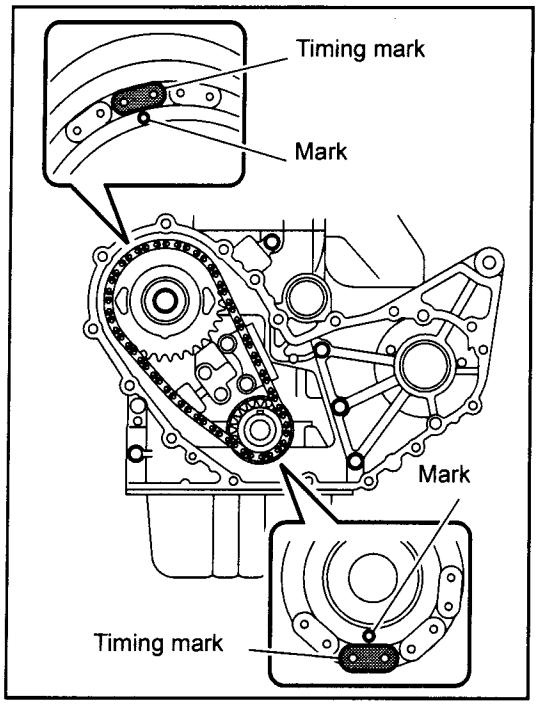

3. Assemble the timing chain, camshaft sprocket, and crankshaft sprocket at the same time.

Caution:
Be sure to align the marks of each sprocket with the marks on the timing chain.

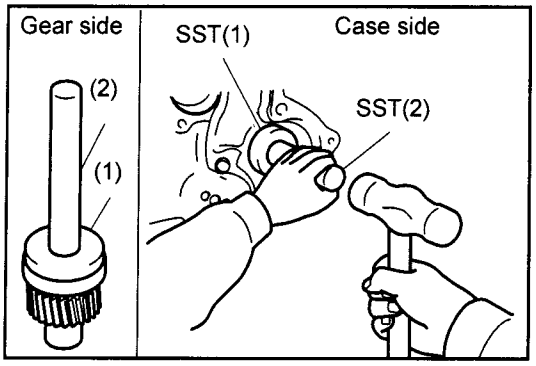

[Point 18]

Reassembly:
Use the SST to install the bearing.

SST 09950-76018-71 .....(1)
(09950-60010)
09950-76020-71 .....(2)
(09950-70010)

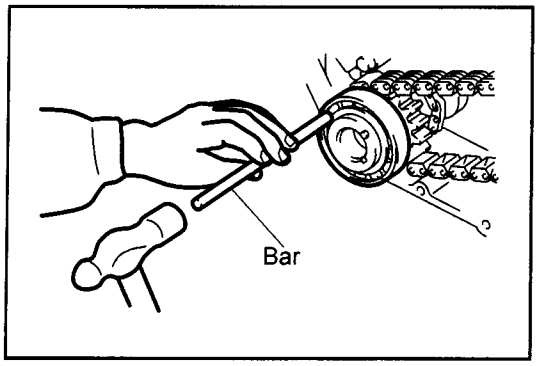

[Point 19]

Reassembly:
Tap the bearing inner race evenly around with a bar to fit it.

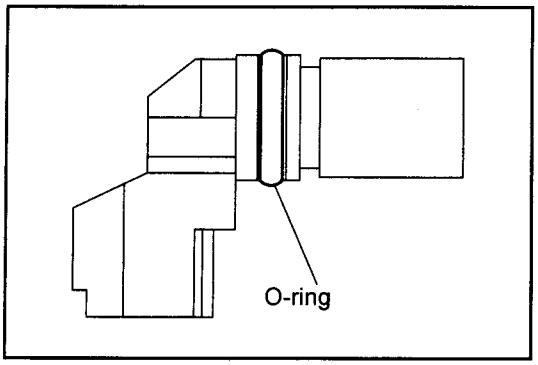

[Point 20]

Reassembly:
Apply engine oil to the entire circumference of the O-ring then assemble.

www.truck-freeworkshop.com

CYLINDER BLOCK
COMPONENTS

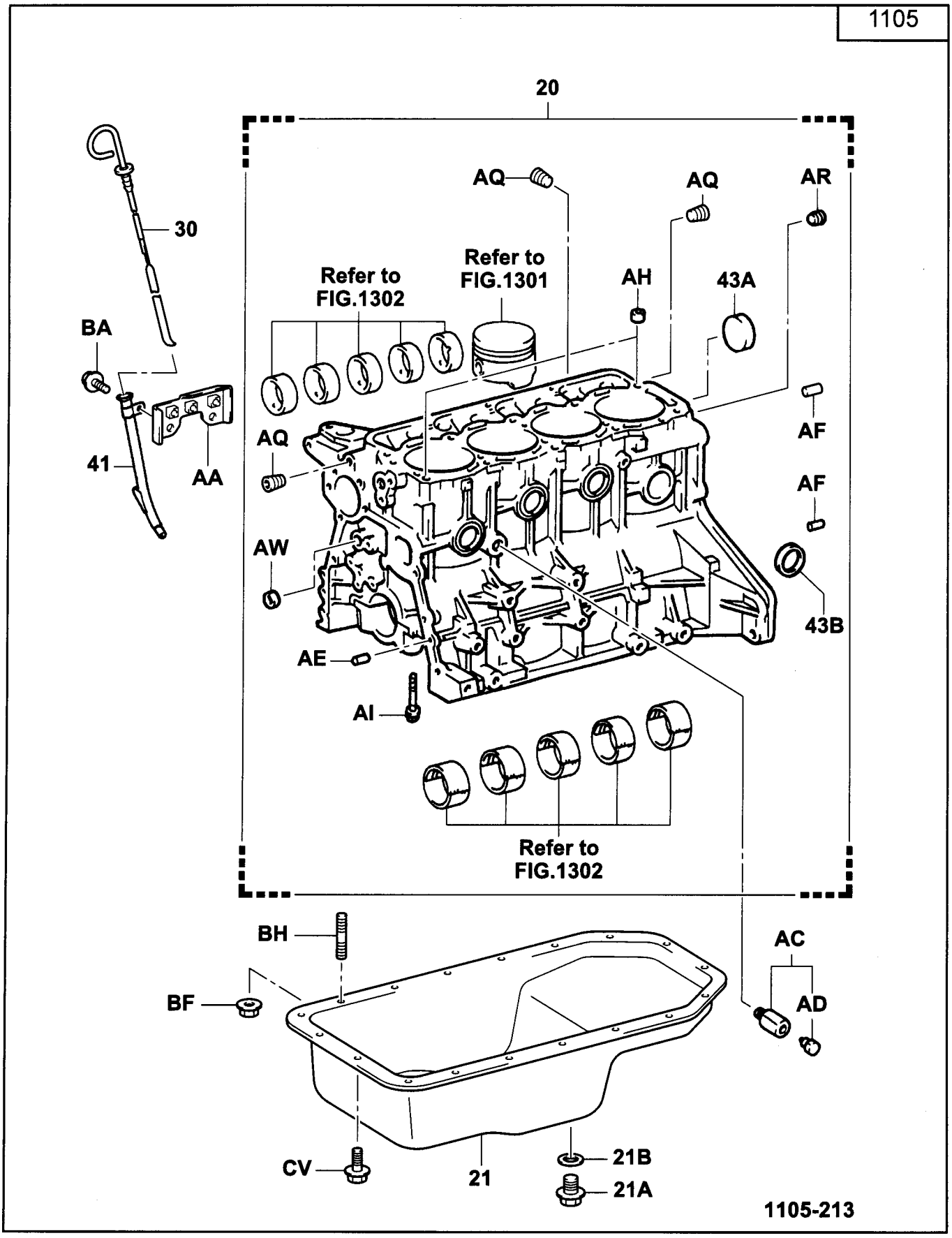

www.truck-freeworkshop.com

1301

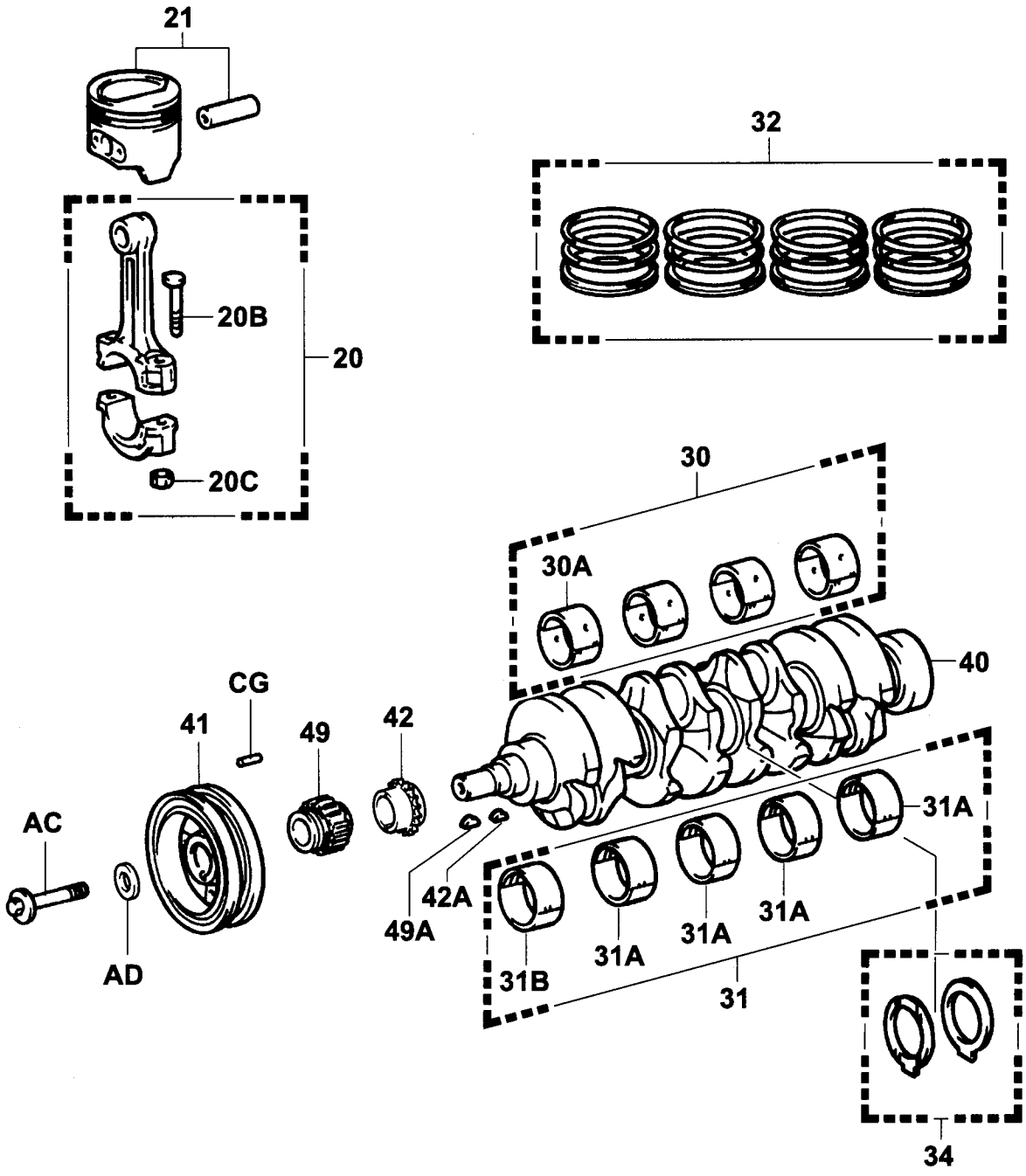

1301-159

www.truck-freeworkshop.com

DISASSEMBLY·INSPECTION·REASSEMBLY

T = N·m (kgf·cm) [ft·lbf]

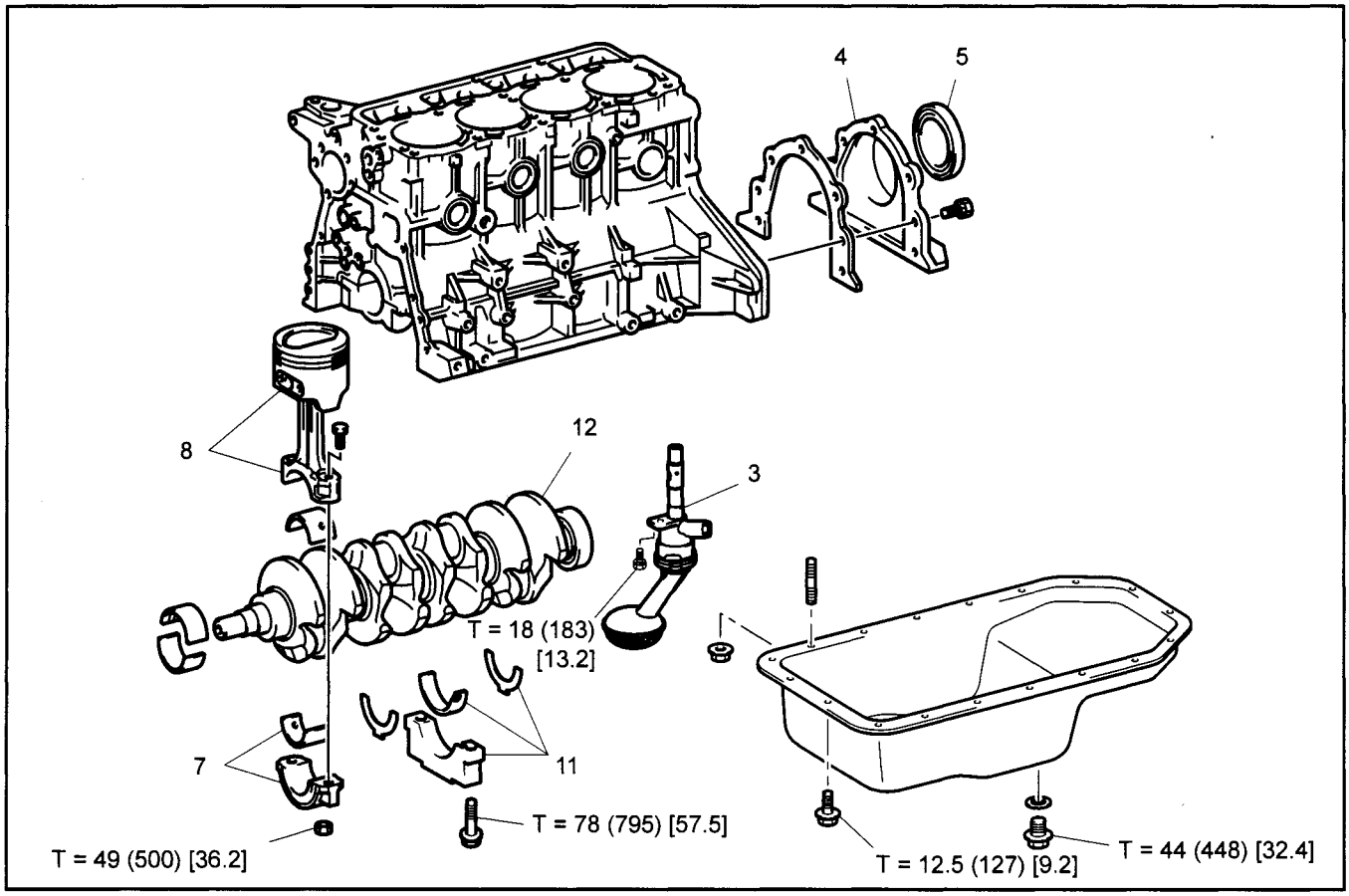

Disassembly·Reassembly Procedure

The reassembly procedure is the reverse of the disassembly procedure.

No.	Item	Disassembly	Inspection	Reassembly
1	Cylinder head ASSY	See P3-11	←	←
2	Timing gear-related	See P3-23	←	←
3	Oil pump ASSY W/ oil strainer			
4	Rear oil seal retainer W/ oil seal	**[Point 1]**		**[Point 14]**
5	Rear oil seal			
6	Measuring the thrust clearance of the connecting rod		**[Point 2]**	
7	Connecting rod cap W/ bearing	**[Point 3]**		**[Point 13]**
8	Piston W/ connecting rod	**[Point 4]**		**[Point 12]**
9	Piston disassembly	**[Point 5]**	**[Point 6]**	**[Point 11]**
10	Measuring the thrust clearance of the crankshaft	**[Point 7]**		
11	Crankshaft cap, bearing, thrust washer	**[Point 8]**		**[Point 10]**
12	Crankshaft		**[Point 9]**	

Caution:
Be sure that the parts for each cylinder are assembled in their correct combinations.

www.truck-freeworkshop.com

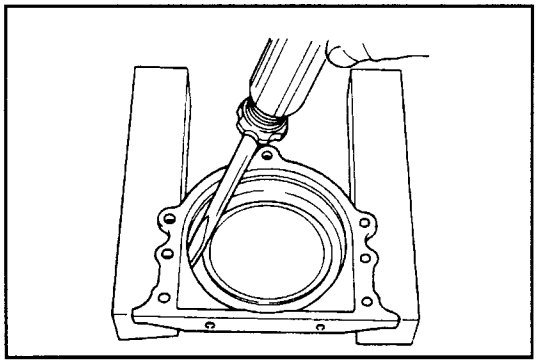

Point Operations

[Point 1]

Disassembly:

Use a screwdriver and a hammer to tap out the oil seal.

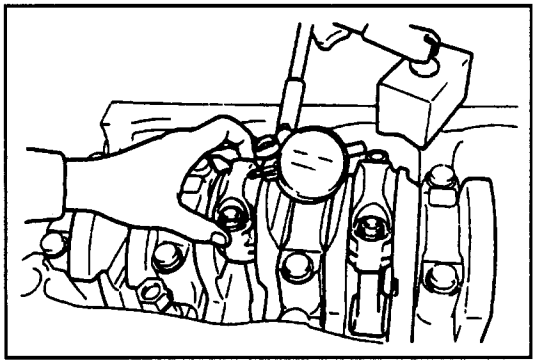

[Point 2]

Inspection:

Move the connecting rod back and forth to measure the thrust clearance.

Standard: 0.016 to 0.312 mm (0.0063 to 0.00123 in.)
Limit: 0.35 mm (0.0138 in.)

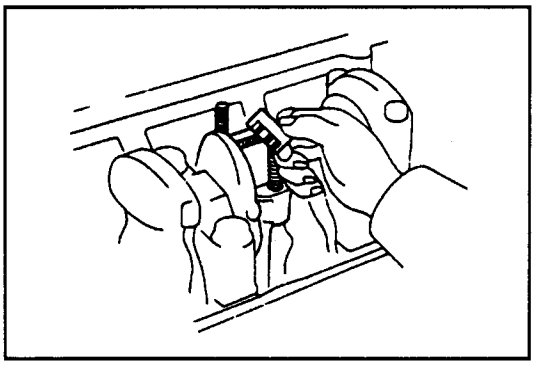

[Point 3]

Inspection:

Measure the oil clearance of the connecting rod bearing. Perform the measurement with a plastigage, and tighten the connecting rod cap set nut to the specified torque.
Do not turn the crankshaft during the measurement.

Standard: 0.020 to 0.051 mm (0.0008 to 0.0020 in.)
Limit: 0.10 mm (0.0039 in.)

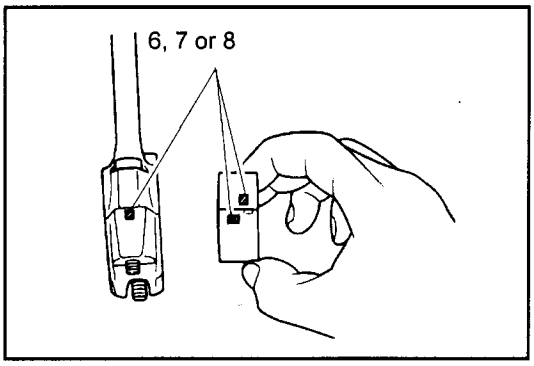

Caution:

- **When using STD bearings, use a bearing with the same reference number (6, 7, 8) as that punched into the connecting rod cap.**
- **Remove the plastigage completely after measuring.**

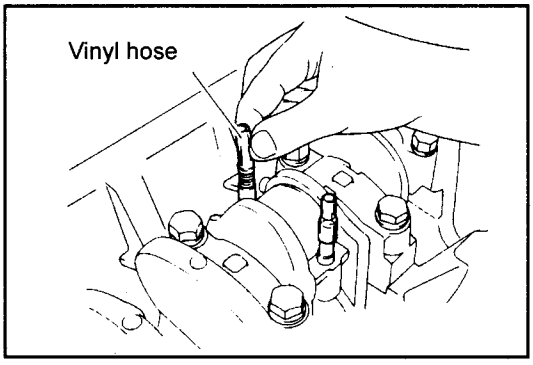

[Point 4]

Disassembly:

Attach a vinyl hose or similar to the connecting rod bolt to protect the cylinder inner wall and the crankshaft.

www.truck-freeworkshop.com

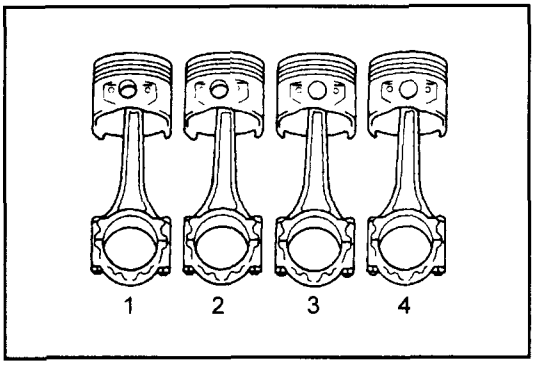

Note:
Sort the removed pistons, connecting rod caps, and bearings into the order of the cylinders.

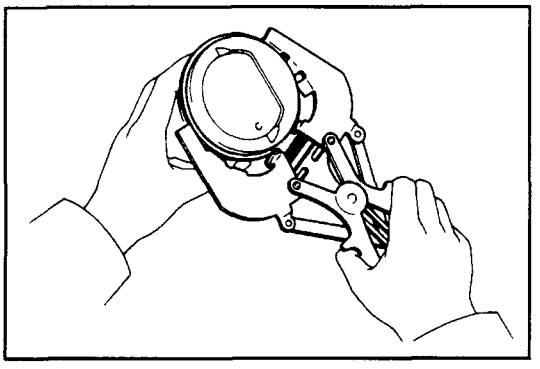

[Point 5]

Disassembly:
Disassemble the piston and the connecting rod.

1. Remove the piston ring and the oil ring.

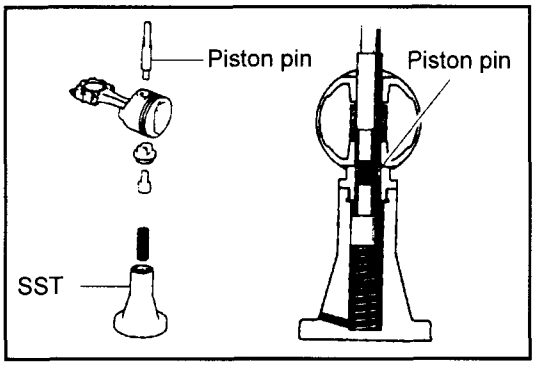

2. Use the SST and a press to push out and remove the piston pin.

   SST 09221-76002-71
   (09221-25018)

Note:
- **The removal should be performed at room temperature.**

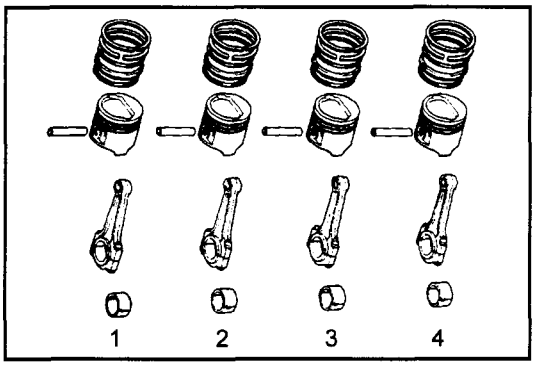

- **Sort out the removed parts for each cylinder, and be sure not to mix them up during reassembly.**

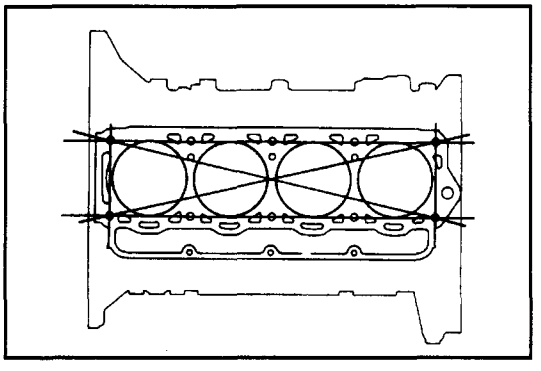

[Point 6]

Inspection:
Inspect the cylinder block.

1. Inspect for any distortions on the upper face of the cylinder block.

   Limit: 0.05 mm (0.0020 in.)

   Check that there are no considerable scratches on the cylinder wall surface. If there are scratches, rebore the cylinder.

www.truck-freeworkshop.com

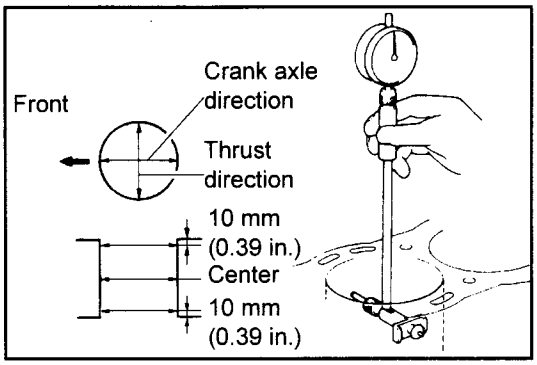

2. Measure the six points shown in the left illustration, and find the difference between the maximum and minimum values.

   Limit: 0.05 mm (0.0020 in.)

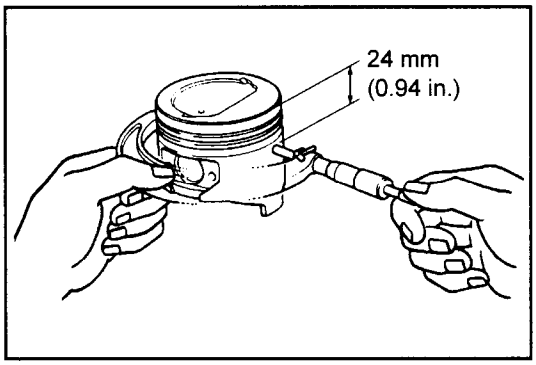

3. Measure the piston clearance.

   (1) Measure the outside diameter of the piston.

   Measurement position:
   Measure the diameter at the place in a position 24 mm (0.94 in.) from the top of the piston and orthogonal to the piston pin.

   Standard
   STD: 90.925 to 90.955 mm (3.5797 to 3.5809 in.)
   O/S 0.5: 91.425 to 91.455 mm (3.599 to 3.601 in.)

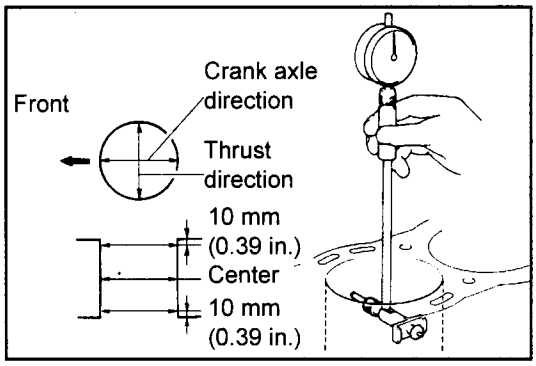

   (2) Measure the cylinder bore and calculate the piston clearance.

   Standard: 0.065 to 0.085 mm (0.0026 to 0.0033 in.)

   If the value exceeds the limit, replace the piston or rebore the cylinder and install an O/S piston.

Note:
Boring dimension = P + C - H
P: Outside diameter of the piston C: Piston clearance
H: Honing margin (0.02 mm [0.0008 in.] or less)

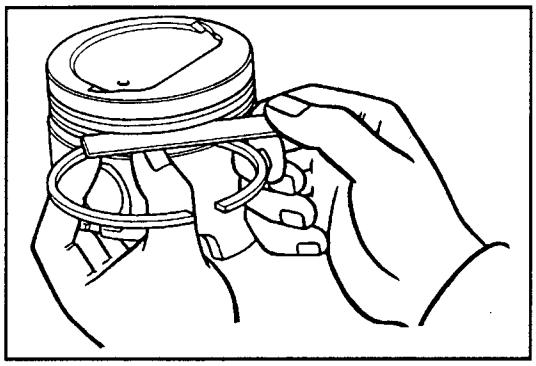

Inspection:
Inspect the piston and the connecting rod.

1. Measure the gap between the piston ring and the ring groove along the entire circumference.

   Standard: 0.03 to 0.07 mm (0.0012 to 0.0028 in.)

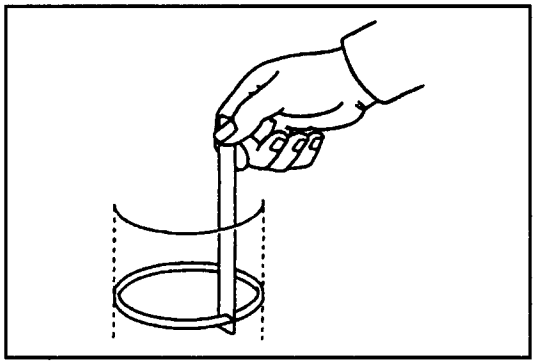

2. Press the piston ring into the sliding section of the piston, and measure the piston ring gap.

   Standard
   No.1: 0.23 to 0.48 mm (0.0091 to 0.0189 in.)
   No.2: 0.16 to 0.44 mm (0.0063 to 0.0173 in.)
   Oil ring: 0.13 to 0.47 mm (0.0051 to 0.0185 in.)

www.truck-freeworkshop.com

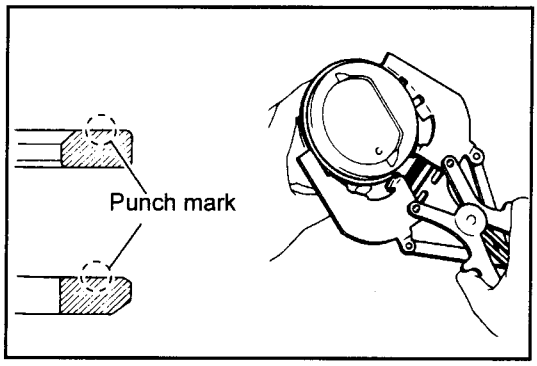

Reassembly:

Install the piston ring.

1. Install the oil ring expander.
2. Install the oil ring side rail using the piston ring tool.
   There is no difference between the top and bottom sides of the oil ring side rail.
3. Install each compression ring with the punch mark at the top using the piston ring tool.

   Punch mark
   Top ring: 1 T
   Second ring: 2 T
4. Align the ring gaps as shown in the illustration.

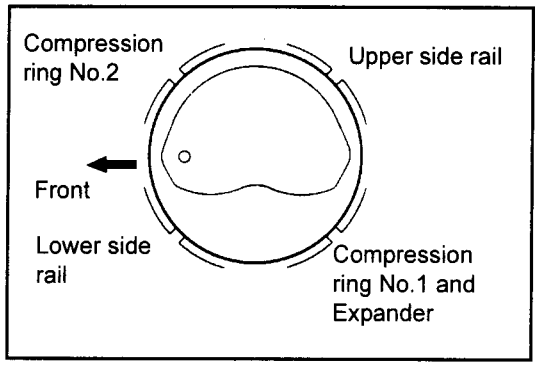

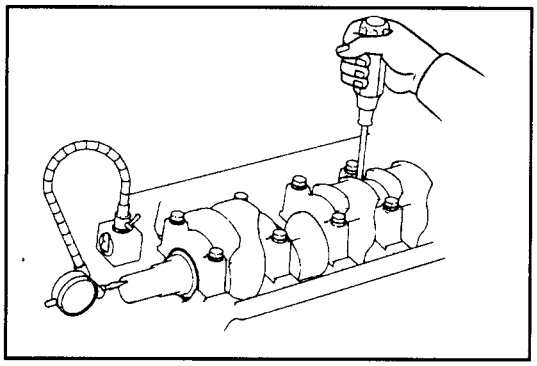

[Point 7]

Inspection:

Measure the thrust clearance of the crankshaft.

Standard: 0.020 to 0.220 mm (0.0008 to 0.0087 in.)
Limit: 0.30 mm (0.0118 in.)

If it exceeds the limit, replace the thrust washer.

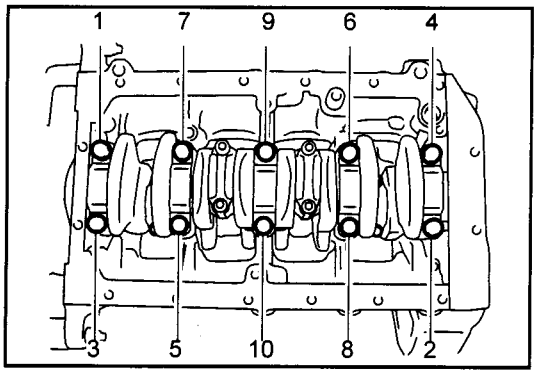

[Point 8]

Disassembly:

Evenly loosen the cap set bolts in several times, following the order shown in the left illustration.

www.truck-freeworkshop.com

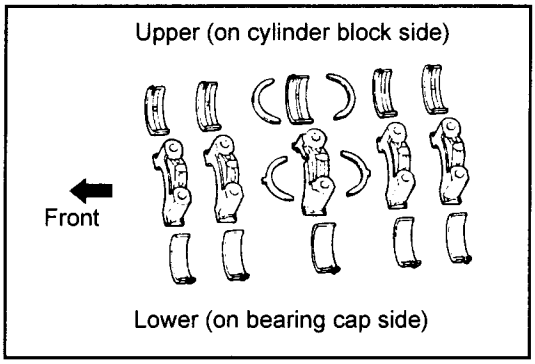

Note:
Store the caps, bearings and washers in correct order in order to reinstall them in the same position as when they were removed.

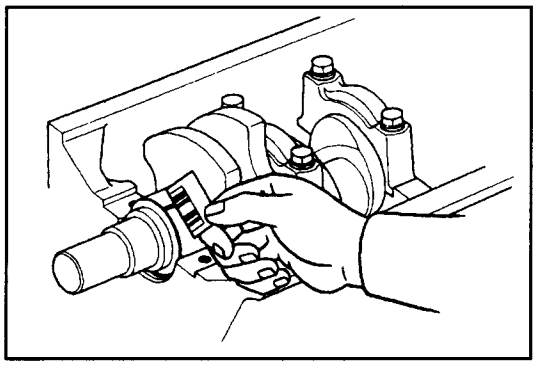

[Point 9]

Inspection:

Measure the oil clearance of the crankshaft by using a plastigage.
Do not turn the crankshaft during the measurement.

Standard: 0.02 to 0.051 mm (0.0008 to 0.0020 in.)
Limit: 0.10 mm (0.0039 in.)

If it exceeds the limit, replace the bearing. Or, if necessary, replace the crankshaft.

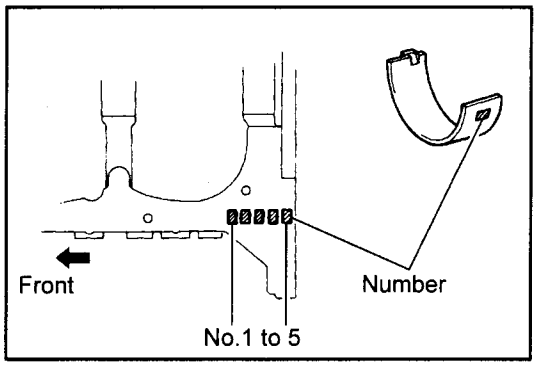

Note:
When using STD bearings, replace with a bearing with the same reference number (1 to 3) as that punched into the cylinder block.

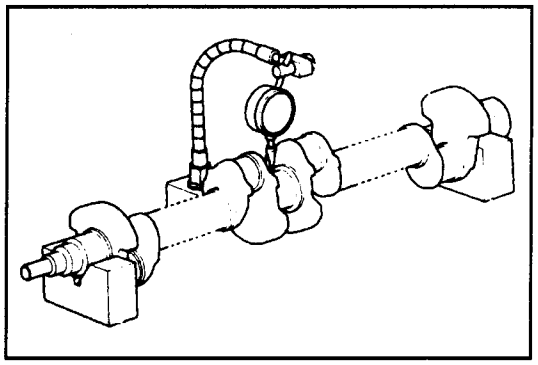

Inspection:

Inspect the bending of the crankshaft.
Inspect the bending when turning the crankshaft once.
Bending = runout of the dial gauge/2

Limit: 0.06 mm (0.0024 in.)

www.truck-freeworkshop.com

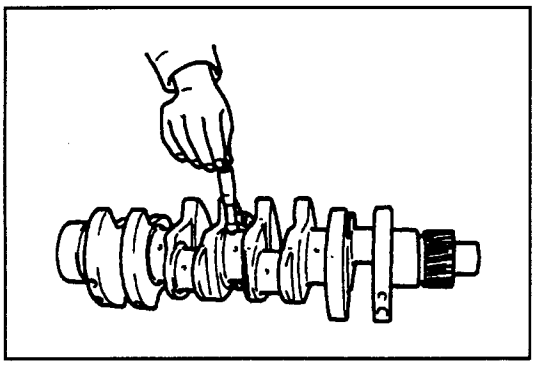

Inspection:
Inspect for crankshaft wear.

1. Measure the outside diameters of all of the crankshaft journals and pins.

   Standard
   Journal outside diameter: 57.985 to 58.000 mm (2.2829 to 2.2835 in.)
   Crank pin outside diameter: 47.985 to 48.000 mm (1.8892 to 1.8898 in.)

2. Calculate the ellipticity and taper degree.

   Limit
   Ellipticity: 0.02 mm (0.0008 in.)
   Taper degree: 0.02 mm (0.0008 in.)

   If it exceeds the limit, replace the crankshaft.

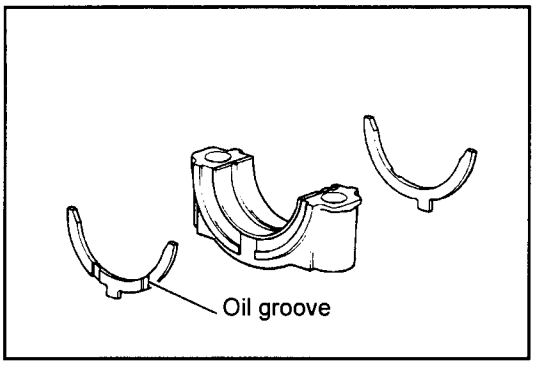

[Point 10]

Reassembly:
Install the bearing cap.

1. Install with the oil groove of the thrust washer facing the crankshaft.
2. Check the front mark, and install in the same place as before it was disassembled.

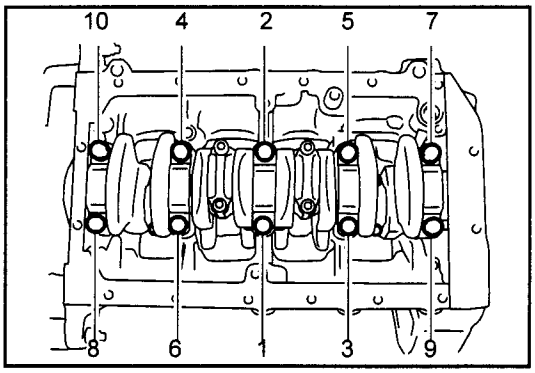

Disassembly:
Evenly tighten the bearing cap bolts in several times, following the order shown in the illustration.

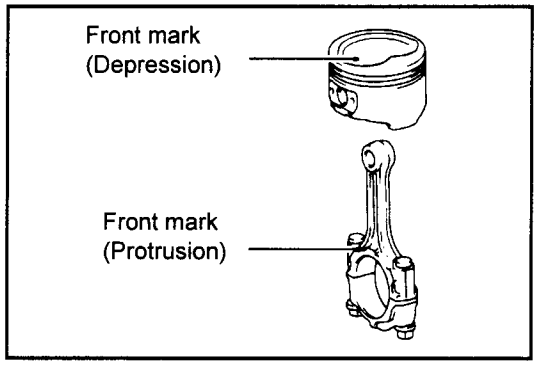

[Point 11]

Reassembly:
Reassemble the piston and connecting rod.

1. Align the front marks of the piston and the connecting rod.

www.truck-freeworkshop.com

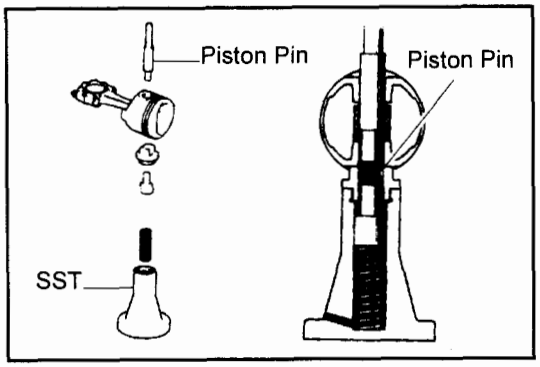

2. Apply engine oil to the piston pin and piston pin hole.
3. Use the SST and a press to press fit the piston pin.

   SST 09221-76002-71
   (09221-25018)

Note:
The assembly should be performed at room temperature.

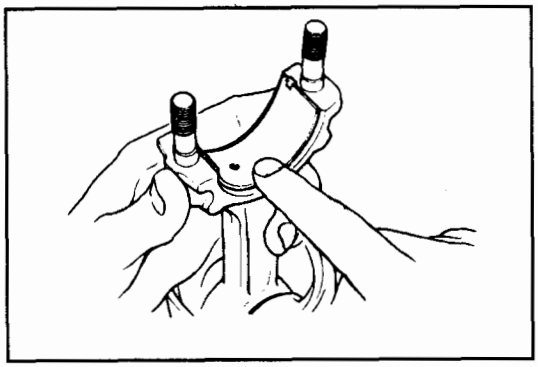

[Point 12]

Reassembly:
Install the bearing.
Ensure that no foreign matter, oil, etc., becomes attached to the contact surface between the bearing and the connecting rod.
Apply engine oil to the inner surface of the bearing.
Assemble the upper bearing to the locking groove of the connecting rod.
Install the lower bearing to the locking groove of the bearing cap.

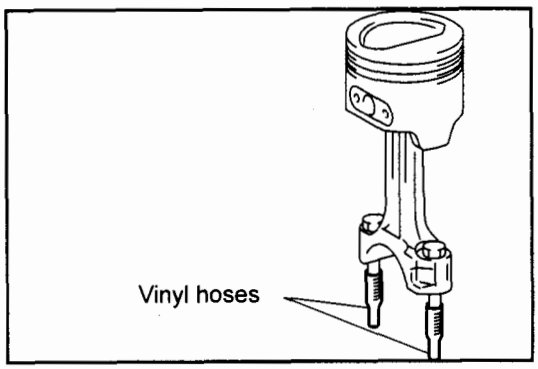

Reassembly:
Attach a vinyl hose or similar to the connecting rod bolt to protect the cylinder inner wall and the crankshaft.

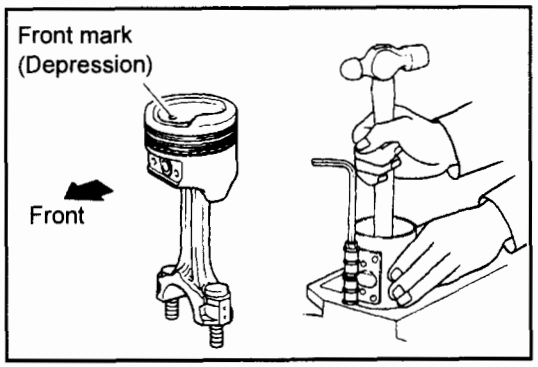

Reassembly:
When reinstalling the piston to the cylinder, be sure to install it in the same cylinder from which it was removed.
Apply engine oil to the sliding sections of the connecting rod and piston.
Use a piston ring compressor to assemble with the front mark facing front.

www.truck-freeworkshop.com

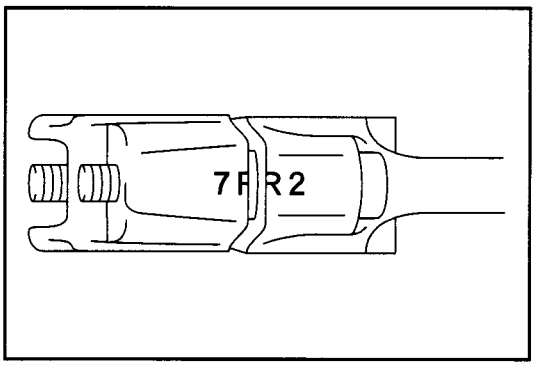

[Point 13]

Reassembly:

Install the connecting rod cap.

1. Install with the front mark of the bearing cap facing the front of the engine.
2. Align the punch marks of the connecting rod.

Note:

- **There are several kinds of alphabet punch marks.**
- **Each of the rotation angles of the punched alphabet marks differs. Be sure to align them when installing.**

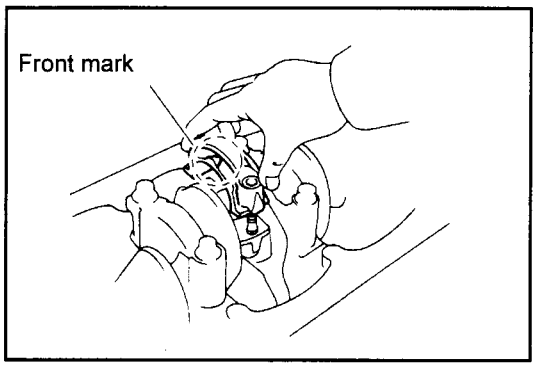

3. Make sure that no foreign matter or oil, etc., becomes attached to the back surface of the bearing.
4. Apply engine oil to the inner surface of the bearing.
5. Tighten the left and right bolts alternately in two or three times.

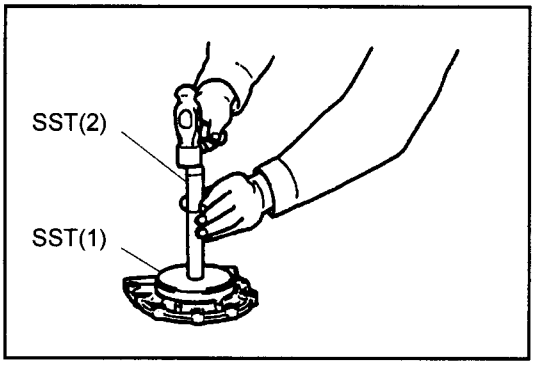

[Point 14]

Reassembly:

Use the SST to knock in the oil seal.

SST 09950-76019-71 .....(1)
(09950-60020)
09950-76020-71 .....(2)
(09950-70010)

www.truck-freeworkshop.com

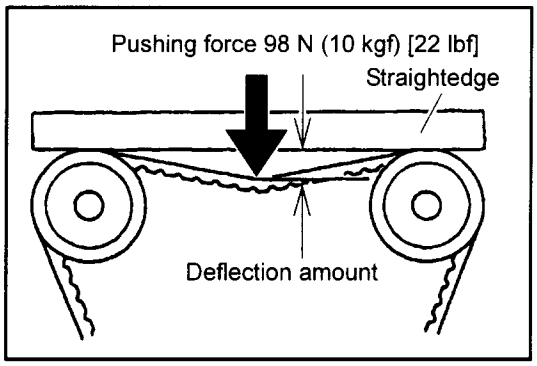

ENGINE ADJUSTMENT

V-BELT INSPECTION·ADJUSTMENT

V-belt Inspection

1. Check the belt for correct installation.
2. Apply a pushing force of 98 N (10 kgf) [22 lbf] between the alternator and the water pump and measure the amount of deflection.

   When installing a new part: 7 to 9 mm (0.28 to 0.35 in.)
   When inspecting: 8 to 13 mm (0.31 to 0.51 in.)

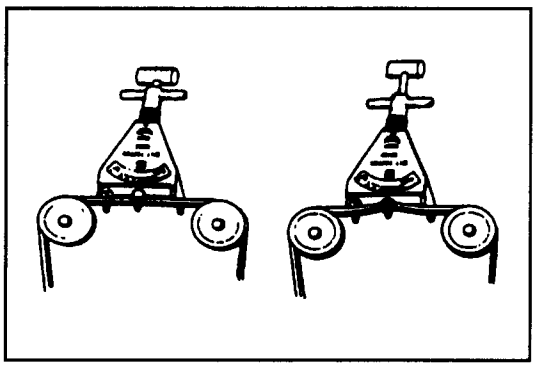

Caution:

- **Measure the belt deflection between specified pulleys.**
- **When replacing with a new belt, adjust the deflection to the middle value of the standard "When installing a new part".**
- **Apply the standard of "When inspecting" for the inspection of the belt if it is used for five minutes or more.**
- **When reassembling the belt that is used for 5 minutes or more, adjust to the mean value of the standard in "When inspecting".**

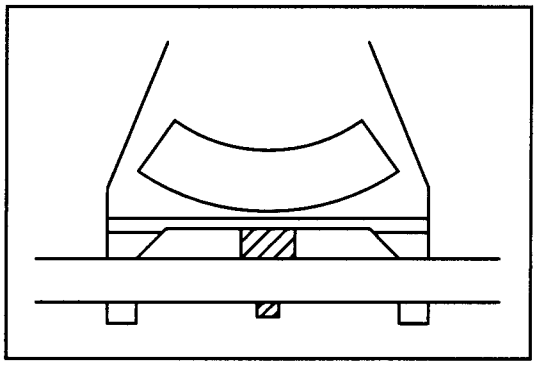

- **Tension standard when using SST**

  SST 09216-76001-71
  (09216-00020)

  When installing a new part: 392 to 588 N (38 to 62 kgf) [84 to 137 lbf]
  When inspecting: 294 to 490 N (30 to 50 kgf) [66 to 110 lbf]

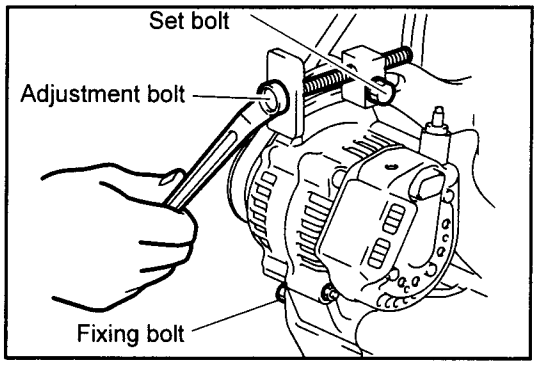

V-belt Deflection Adjustment

1. Loosen the fixing bolt.
2. Loosen the set bolt, then turn the adjustment bolt to adjust the tension.
3. Tighten the set bolt then re-check the belt tension.
4. Tighten the fixing bolt.

Caution:
Be careful not to apply too much tension to the belt.

Click here for SIB on Diagnostic connector
w.truck-freeworkshop.com

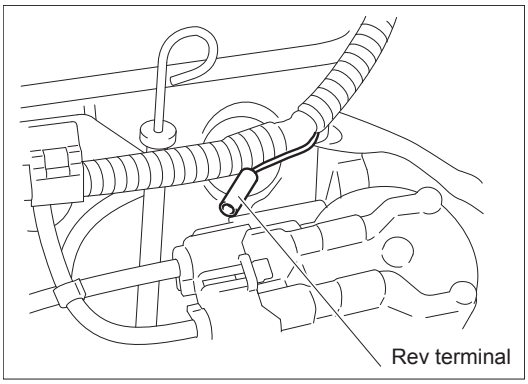

IDLE SPEED INSPECTION

1. Warm-up the engine.

   Standard

   Coolant temperature: 75 to 80°C (167 to 176°F) or more
2. Attach a rev counter to the terminal for measuring engine speed (Rev terminal).
3. Inspect the idle speed.

   Standard: Refer to repair manual for each vehicle model.

Note:

If the idle speed is outside the standard value, refer to the section on "Idle speed adjustment" in the repair manual for each vehicle model.

INSPECTION·ADJUSTMENT OF IGNITION TIMING

Note:

•Use the "timing light" as before when inspecting the ignition timing of the 4Y engine.

When you connect the terminals TC and E1 of the diagnostic connector by using the SST(09238-13130-71), the engine will be in the idle state and the ignition timing will be set to the standard value, 7° (BTDC)

If the terminals TC and E1 of the diagnostic connectors are not connected, or the engine is not in the idle state, the ignition timing will change depending on the engine load and engine speed.(Program ignition timing)

•The displayed value on the page [I/O ENGINE CTRL 7/10]of the Multi-function display or the plug-in ana-lyzer is the value of "Programmed ignition timing".

•Use the plug-in analyzer 3 seconds after the key is turned on. Operation within 3 seconds after the key is turned on is invalid.

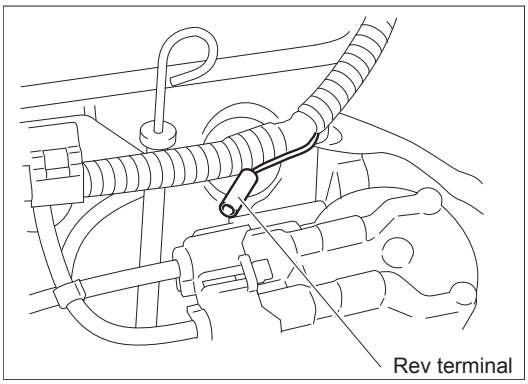

1. Warm-up the engine.

   Standard

   Coolant temperature: 75 to 80°C (167 to 176°F) or more
2. Attach a rev counter to the terminal for measuring engine speed (Rev terminal).
3. Inspect the idle speed.

   Standard: Refer to repair manual for each vehicle model.

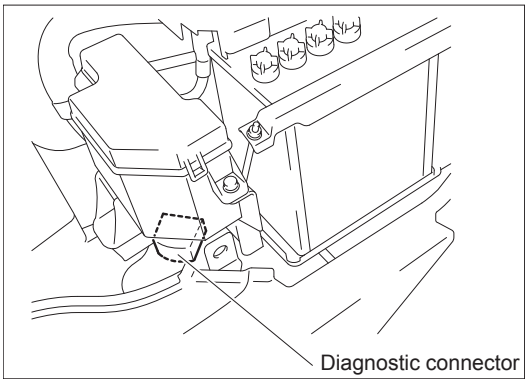

Note:

If the idle speed is outside the standard value, refer to the section on "Idle speed adjustment" in the repair manual for each vehicle model.

4. Install the timing light.

www.truck-freeworkshop.com

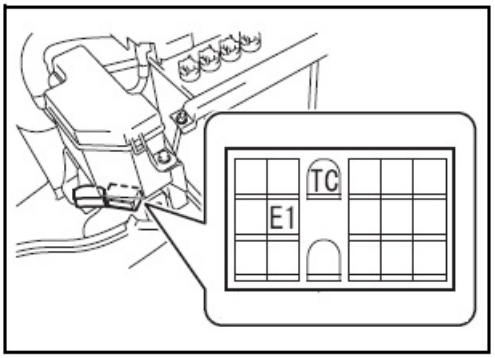

5. Use the SST to connect terminals TC and E1 of the diagnostic connector.

   SST 09238-13130-71

Caution:

If the wrong terminals are connected, a malfunction will occur. Be sure to connect the correct terminals.

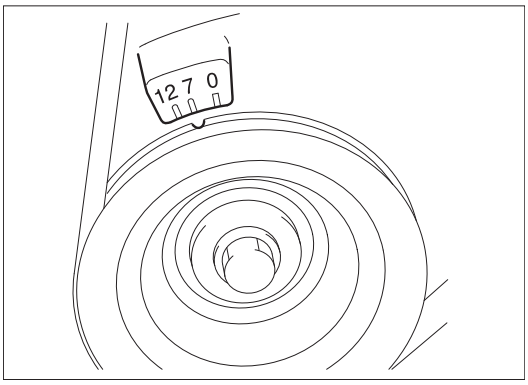

6. Inspect the ignition timing.

   Standard: 7° (BTDC)

7. If the ignition timing is outside the standard, loosen the distributor set bolt and rotate the distributor to adjust the ignition timing to the standard value.

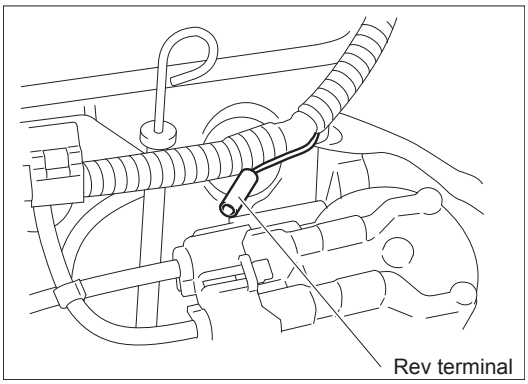

NO-LOAD MAXIMUM SPEED MEASUREMENT

1. Warm-up the engine.

   Standard Coolant temperature: 75 to 80°C (167 to 176°F) or more

2. Attach a rev counter to the terminal for measuring engine speed (Rev terminal).
3. Fully depress the accelerator pedal and measure the maximum speed.

   Standard: Refer to the repair manual for each vehicle model.

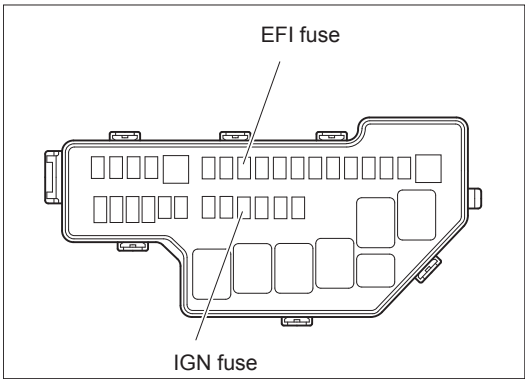

COMPRESSION INSPECTION

1. Warm-up the engine.

   Standard Coolant temperature: 75 to 80°C (167 to 176°F) or more

2. Disconnect the battery negative terminal.
3. Remove the spark plug.
4. Remove the IGN fuse and EFI fuse.

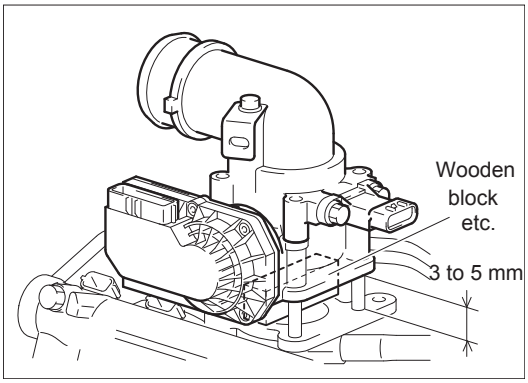

5. Remove the throttle body set nut and insert a wooden block etc. between the throttle body and the surge tank to maintain a clearance of 3 to 5 mm (0.12 to 0.20 in.).

Note:

Secure the intake air.

www.truck-freeworkshop.com

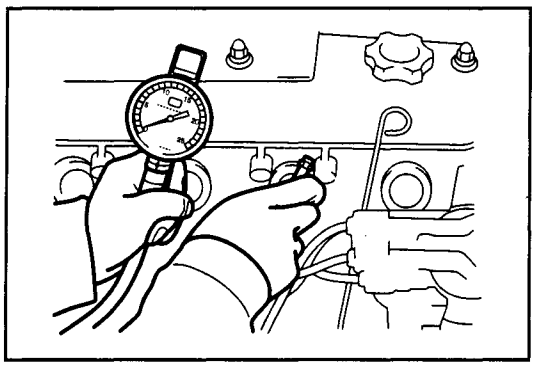

6. Connect the negative terminal of the battery and measure the compression pressure.

Note:

- **In order to ensure a cranking speed of more than 250 rpm, use a fully charged battery.**
- **Turn the starter before measuring the compression pressure in order to eliminate the foreign matter inside the cylinder.**

(1) Insert a compression gauge into the spark plug hole.

(2) Crank the engine with the starter and measure the compression pressure.

Standard: 1225 kPa (12.5 kgf/cm^2) [178 psi]
Limit: 883 kPa (9.0 kgf/cm^2) [128 psi]

(3) Measure the compression pressure of all four cylinders and inspect the difference.

Limit of pressure difference between cylinders:
98 kPa (1.0 kgf/cm^2) [14 psi]

(4) If some cylinders have a compression pressure less than the limit, or if their pressure differences are more than the limit, add a small amount of engine oil from the spark plug hole, and repeat the operations (1) to (3) above.

(a) If the pressure goes up by adding oil, there may be wear or damage on the piston ring or the cylinder wall.

(b) If the pressure remains low even after oil is added, there may be a burnout of the valve, defect in valve contact, or pressure leak from the gasket.

(5) Install the spark plugs.

T = 18 N·m (183 kgf·cm) [13.2 ft·lbf]

www.truck-freeworkshop.com

FUEL SYSTEM (4Y-M)

Page

SST TO BE USED 4-2
FUEL PUMP 4-3
COMPONENTS 4-3
REMOVAL 4-4
AIRTIGHTNESS INSPECTION 4-4
INSTALLATION 4-5
CARBURETOR 4-6
SCHEMATIC DIAGRAM 4-6
COMPONENTS 4-7
ON-VEHICLE INSPECTION 4-8
REMOVAL·INSTALLATION 4-9
DISASSEMBLY 4-9
INSPECTION 4-13
REASSEMBLY 4-15
CARBURETOR ADJUSTMENT 4-17
FAST IDLE CAM ADJUSTMENT 4-19
CHOKE VALVE ADJUSTMENT 4-19
AIR GOVERNOR 4-20
COMPONENTS 4-20
REMOVAL·INSTALLATION 4-21
DISASSEMBLY 4-21
INSPECTION 4-22
REASSEMBLY 4-23
ADJUSTMENT 4-24

www.truck-freeworkshop.com

SST TO BE USED

Illustration	Part No.	Part name
	09240-76002-71 (09240-00014)	Carburetor adjusting gauge set
	09240-76003-71 (09240-00020)	Wire gauge set
	09860-76001-71 (09860-11011)	Carburetor screwdriver set

www.truck-freeworkshop.com

FUEL PUMP

COMPONENTS

2301

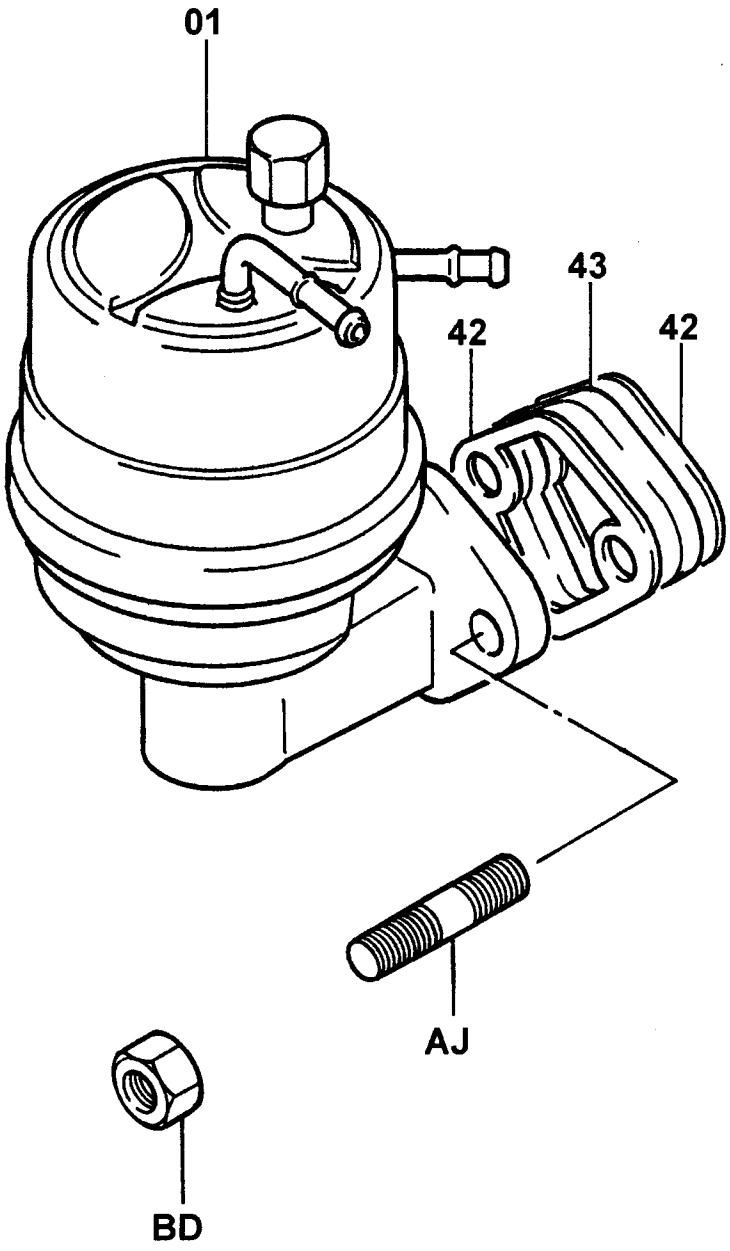

2301-017C

www.truck-freeworkshop.com

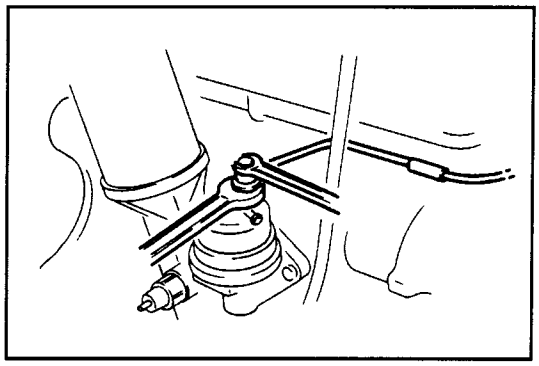

REMOVAL

1. Disconnect the fuel pump outlet and inlet pipes.

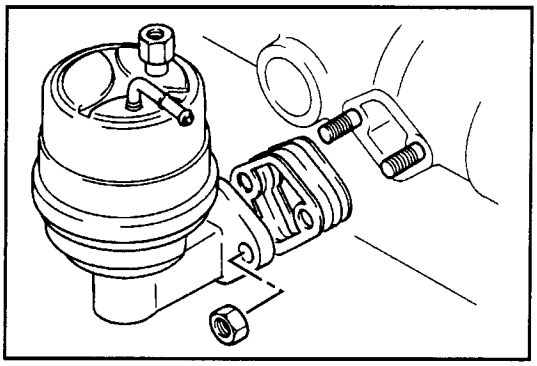

2. Fuel pump ASSY removal
   (1) Remove the fuel pump ASSY.
   (2) Remove the insulator.

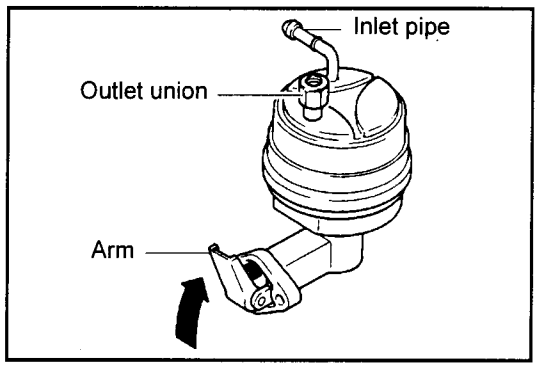

AIRTIGHTNESS INSPECTION

1. Preparation for inspection
   (1) Supply a small volume of gasoline to the fuel pump to keep the airtightness of the check valve.
   (2) Operate the arm without blocking the pipe, and check the arm travel and play.

Note:
The arm travel and play checked in the preparation shall be used as the basis for later inspections.

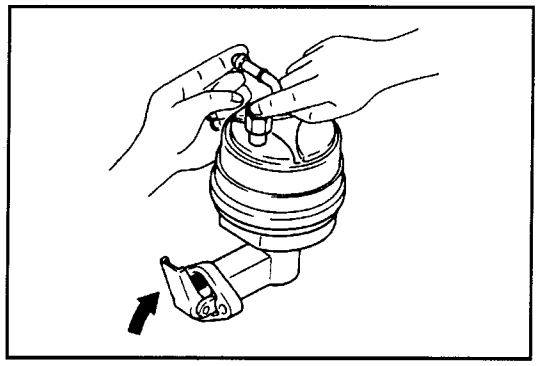

2. Diaphragm inspection
   (1) Block the inlet pipe and outlet union with fingers, and operate the arm to check that the arm movement becomes heavy.

Caution:
Do not operate the arm forcibly.

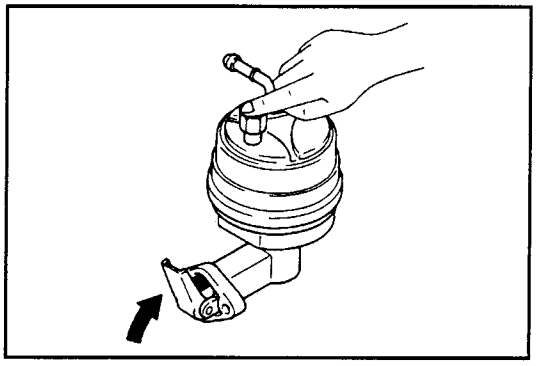

3. Inlet valve inspection
   Block the outlet union with a finger and operate the arm to check that it moves freely without reaction force and that the play of the arm increases.

www.truck-freeworkshop.com

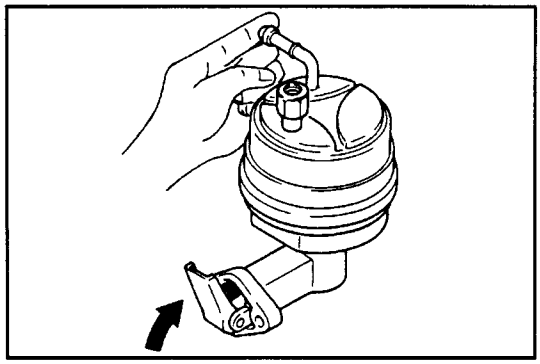

4. Outlet valve inspection
   Block the inlet pipe with a finger and operate the arm to check that the operating force becomes heavy.

Caution:
Do not operate the arm forcibly.

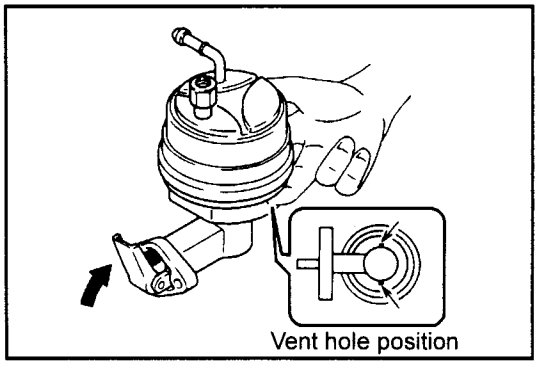

5. Oil seal inspection
   Block the vent hole with a finger and operate the arm to check that the operating force becomes heavy.

Caution:
Do not operate the arm forcibly.

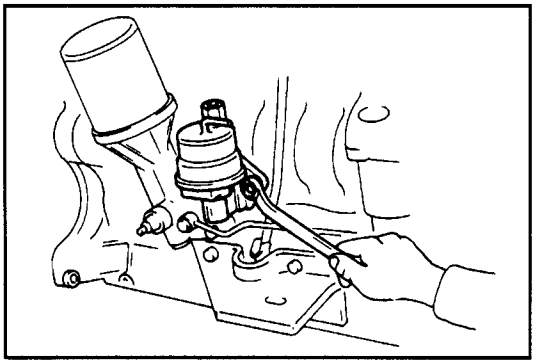

INSTALLATION

1. Fuel pump ASSY installation
   Install the fuel pump ASSY and insulator to the cylinder block by using two set nuts.

   T = 21 N·m (214 kgf·cm) [15.5 ft·lbf]

Caution:
Surely bring the rocker arm into contact with the camshaft.

2. Fuel pump piping connection

www.truck-freeworkshop.com

CARBURETOR

SCHEMATIC DIAGRAM

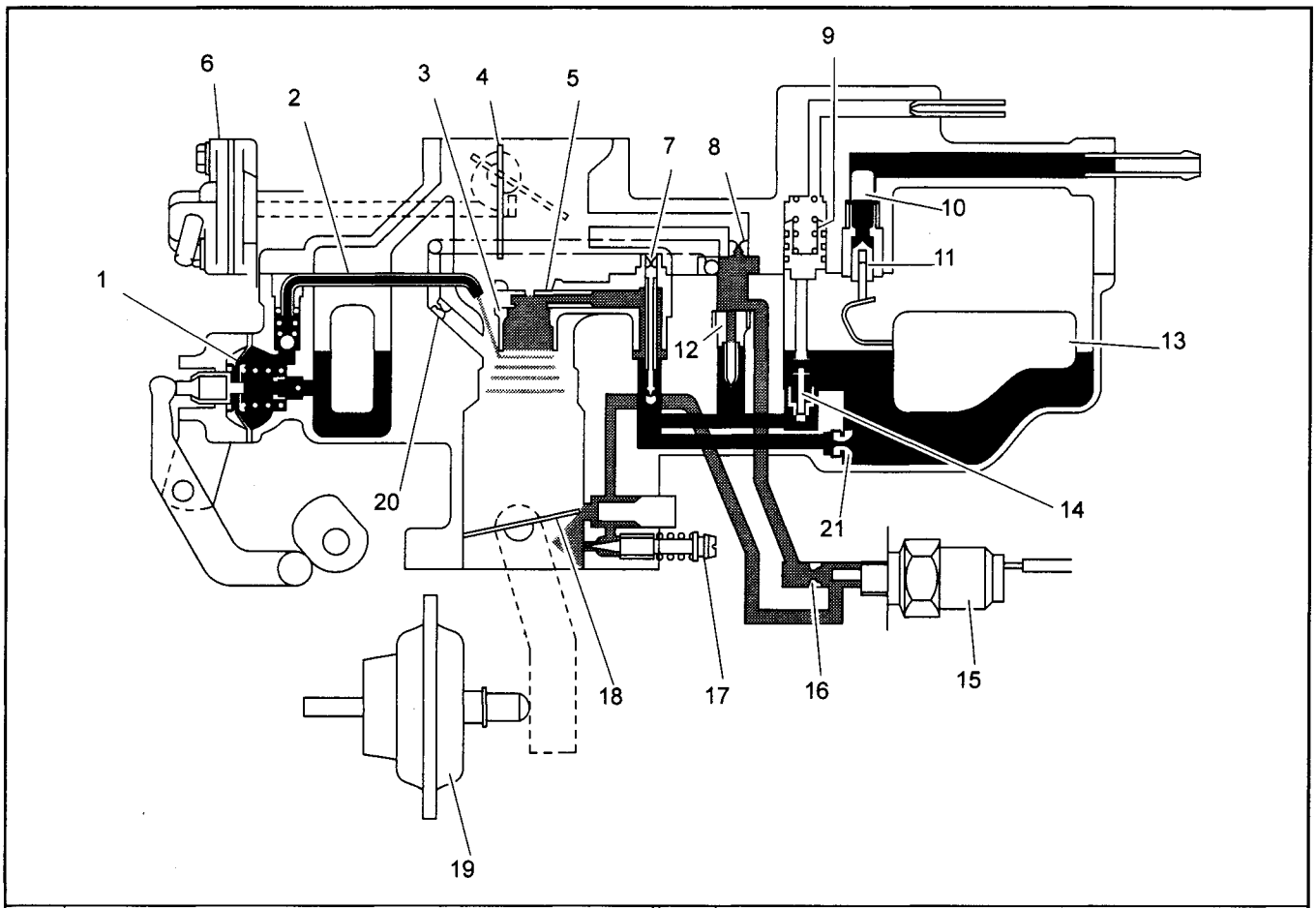

1	Accelerator pump diaphragm	12	Slow jet
2	Accelerator pump nozzle	13	Float
3	Small venturi tube	14	Power valve
4	Choke valve	15	Solenoid valve
5	Main nozzle	16	Economizer jet
6	Choke breaker	17	Idle adjusting screw
7	Main air bleed	18	Throttle valve
8	Slow air bleed No.2	19	Idle-up actuator
9	Power piston	20	Slow air bleed No.1
10	Strainer	21	Main jet
11	Needle valve		

www.truck-freeworkshop.com

COMPONENTS

2103

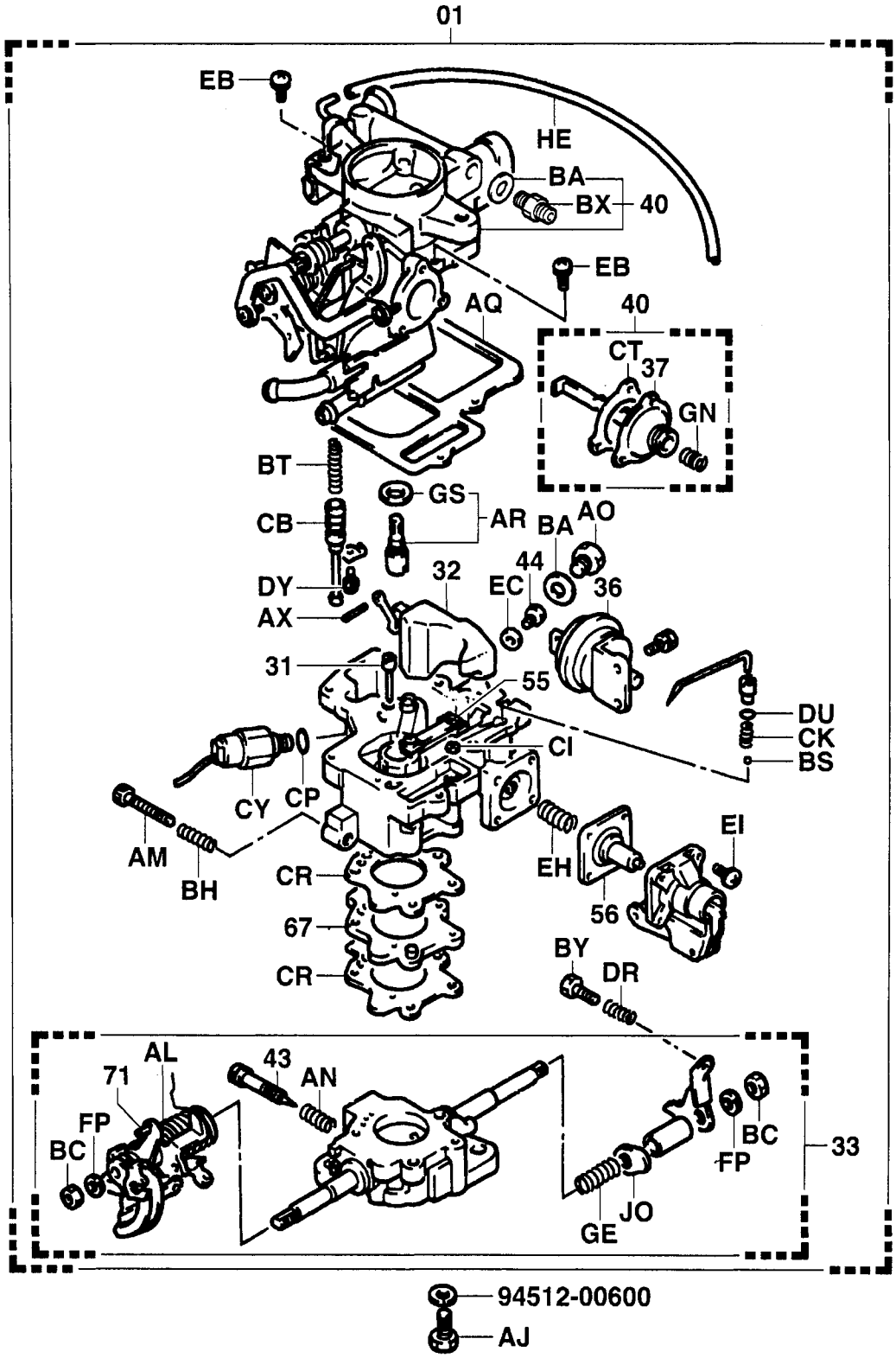

2103-064A

www.truck-freeworkshop.com

ON-VEHICLE INSPECTION

1. Remove the air cleaner connector.
2. Inspect the carburetor and the link.
   (1) Check the tightening of the set screw, plug, and union.
   (2) Inspect for the link wear and missing of the snap ring.
   (3) Check that the throttle valve fully opens when pressing the accelerator pedal fully.
   (4) Clean each part.

Warning:
- **Before handling the fuel system, disconnect the negative terminal of the battery.**
- **Do not put open flames nearby.**

Caution:
- **Separate between each component in order not to mix up with similar parts.**
- **Make sure to avoid gasoline to attach on rubbers.**

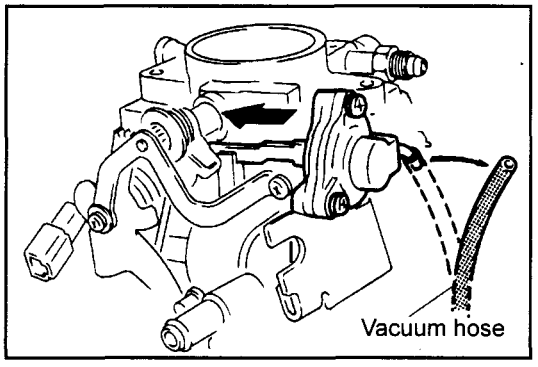

Inspection in Cold State

Choke breaker system inspection

1. Start the engine.
2. Check that the rod returns when the choke breaker vacuum hose is disconnected.

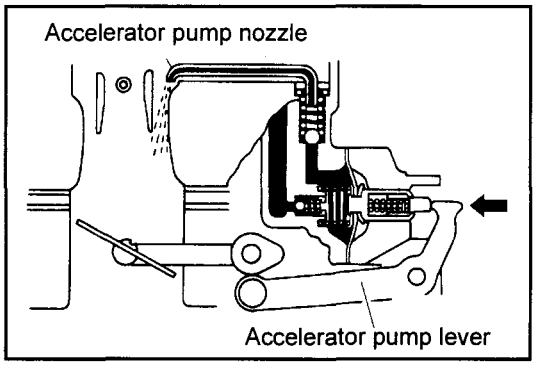

Inspection in Hot State

1. Choke valve full opening inspection
   Check that the choke valve is fully opened.
2. Accelerator pump inspection
   Operate the accelerator pump and check that the fuel is injected from the accelerator pump nozzle.
3. Air cleaner connector installation
4. Idle-up speed inspection (See P2-43)
5. Idle speed inspection (See P2-44)
6. No-load maximum speed and loaded maximum speed inspection (See P4-25)

www.truck-freeworkshop.com

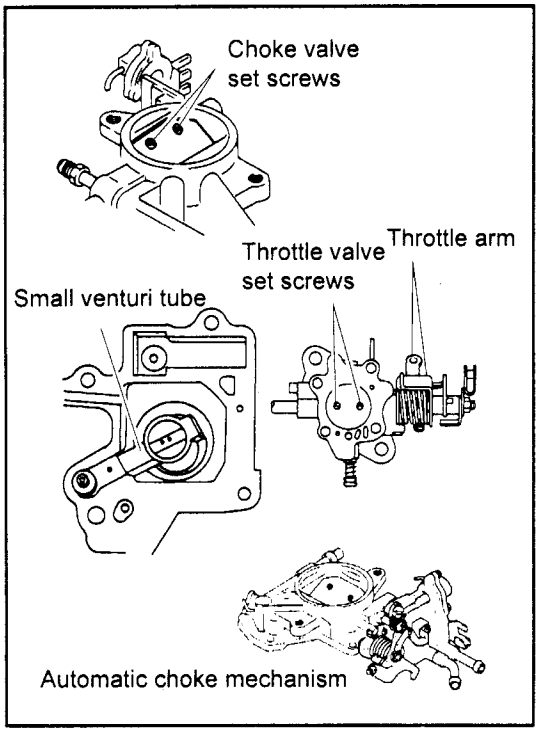

REMOVAL·INSTALLATION

Refer to P2-4

DISASSEMBLY

Caution:

- **Since there are many similar components, arrange the disassembled components orderly.**
- **Use the SST.**

  SST 09860-76001-71
  (09860-11011)
- **Do not disassemble the following parts:**
  Choke valve set screws
  Throttle valve set screws
  Throttle arm
  Automatic choke mechanism
  Small venturi tube
  Power valve

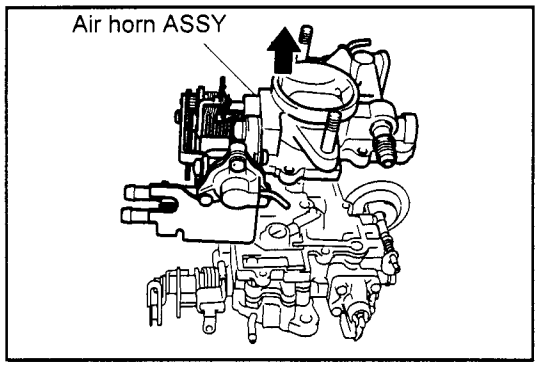

Air Horn Disassembly

Caution:
Do not separate the wax body from the air horn.

1. Air horn ASSY removal
   (1) Set screw
   (2) Air horn
   (3) Gasket

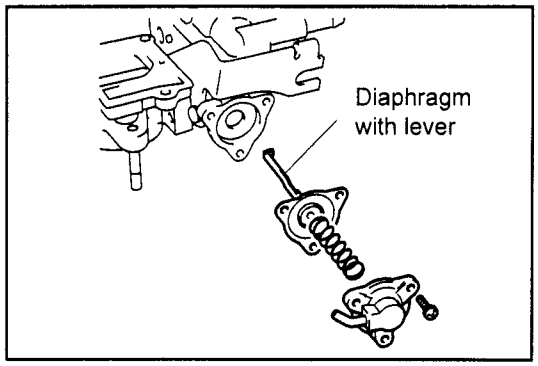

2. Choke breaker disassembly
   (1) Set screw
   (2) Cover
   (3) Spring
   (4) Diaphragm with lever
   (5) Gasket

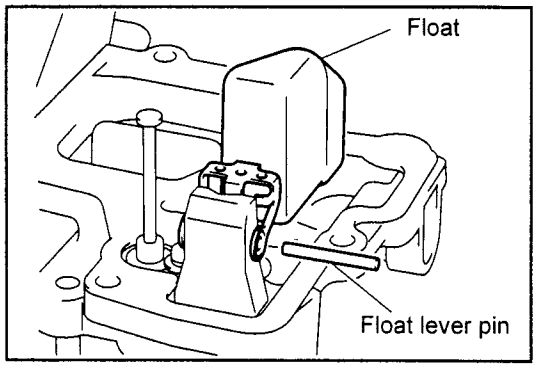

3. Float removal
   Remove the float lever pin, and remove the float.

www.truck-freeworkshop.com

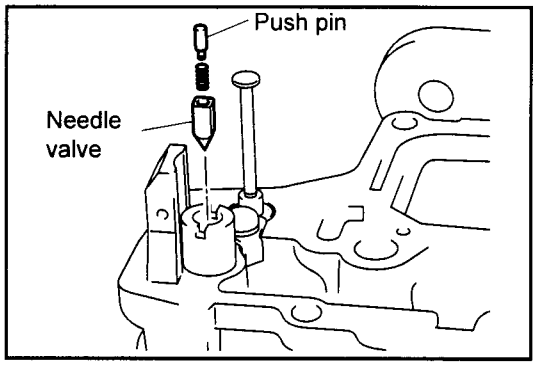

4. Needle valve removal
   (1) Needle valve push pin
   (2) Spring
   (3) Needle valve

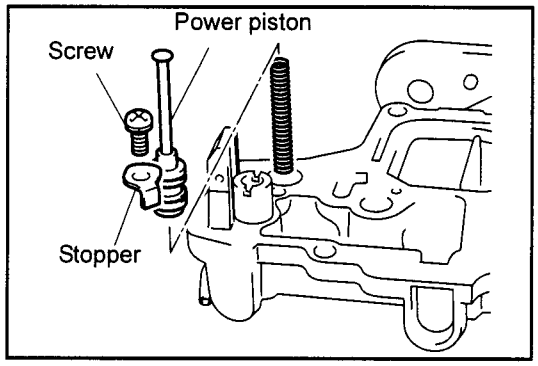

5. Power piston removal
   (1) Power piston stopper screw
   (2) Power piston stopper
   (3) Power piston
   (4) Spring

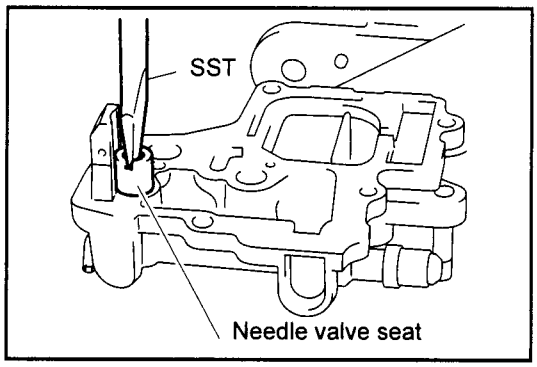

6. Needle valve seat removal
   (1) Needle valve seat
   (2) O-ring

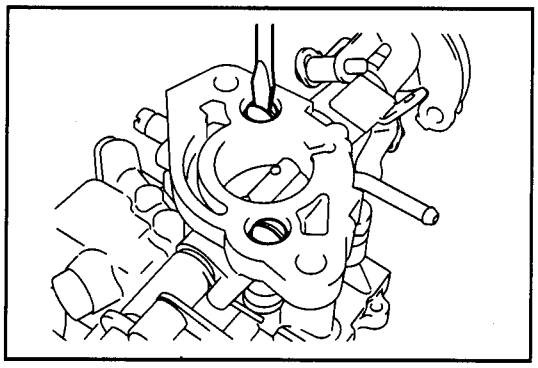

Carburetor Body Disassembly

1. Carburetor body removal
   (1) Remove two screws, and disconnect the carburetor body and the flange.
   (2) Remove the gasket and insulator.

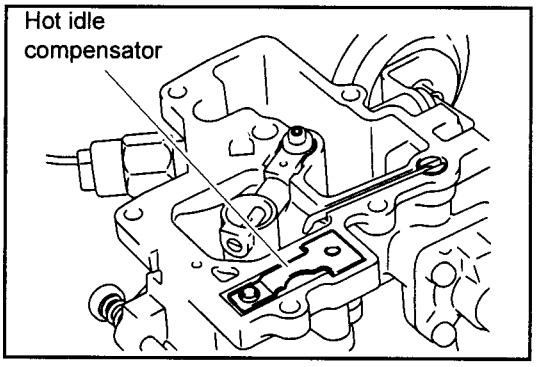

2. Hot idle compensator removal
   (1) Hot idle compensator
   (2) O-ring

www.truck-freeworkshop.com

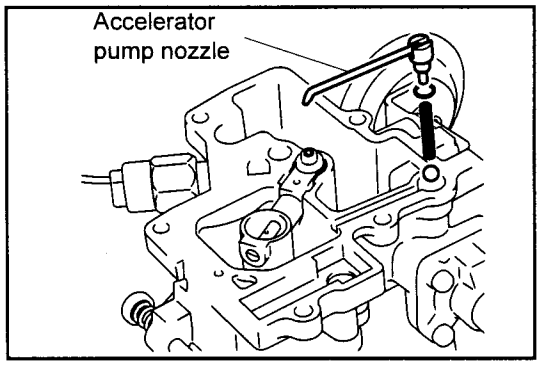

3. Accelerator pump nozzle and outlet check valve removal
   (1) Accelerator pump nozzle
   (2) O-ring
   (3) Spring
   (4) Steel ball

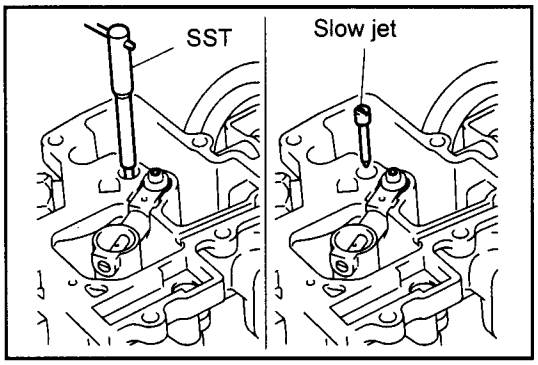

4. Slow jet removal

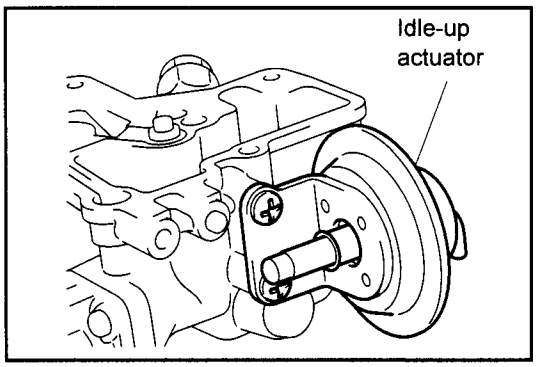

5. Idle-up actuator removal
   (1) Remove set screws and the idle-up actuator.

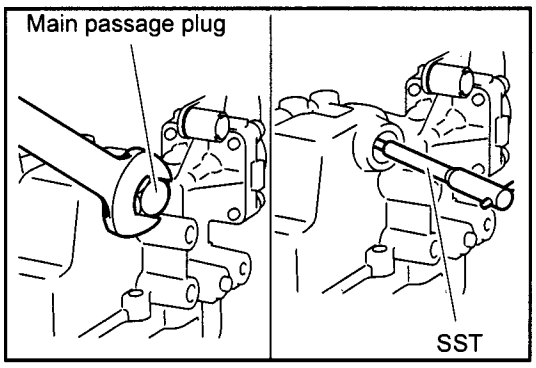

6. Main jet removal
   (1) Remove the main passage plug and gasket.
   (2) Remove the main jet and gasket from the main passage plug hole.

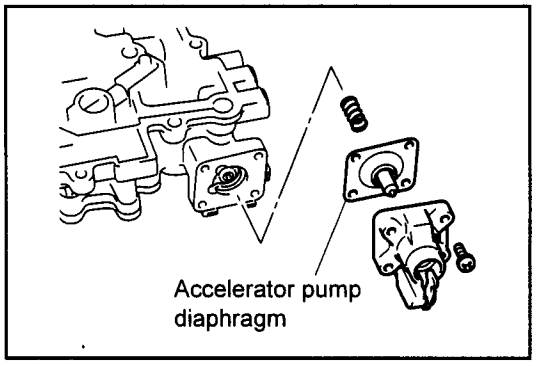

7. Accelerator pump diaphragm removal
   (1) Remove set screws, and remove the accelerator pump cover.
   (2) Remove the diaphragm and spring.
8. Throttle adjusting screw removal
   (1) Throttle adjusting screw
   (2) Spring

www.truck-freeworkshop.com

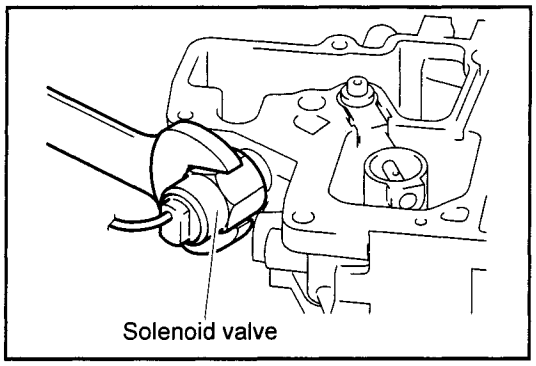

9. Solenoid valve removal

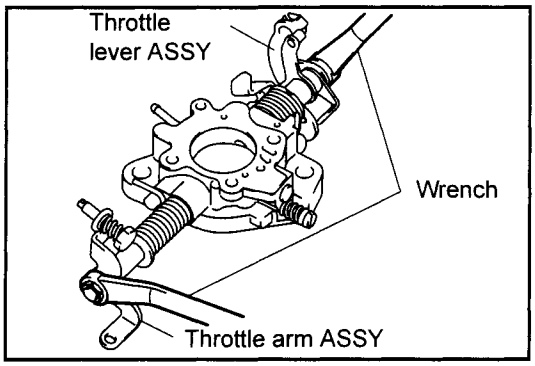

Flange Disassembly

1. Remove the lever and arm.
   Remove the throttle lever set nut, and then remove the throttle lever ASSY, throttle arm ASSY, bushing and spring.

Caution:
When removing the throttle lever set nut, put the rotation stopper at the accelerator pump cam side in order not to add force on the throttle valve.

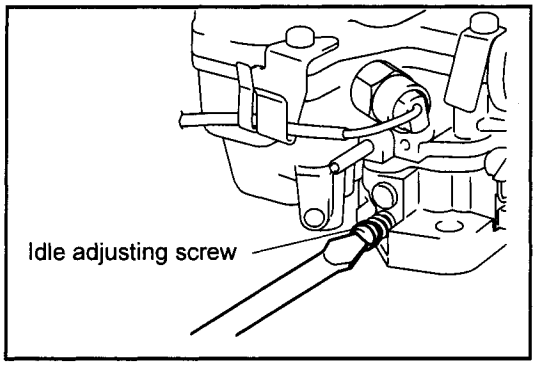

2. Remove the idle adjusting screw.
   (1) Idle adjusting screw
   (2) Spring

www.truck-freeworkshop.com

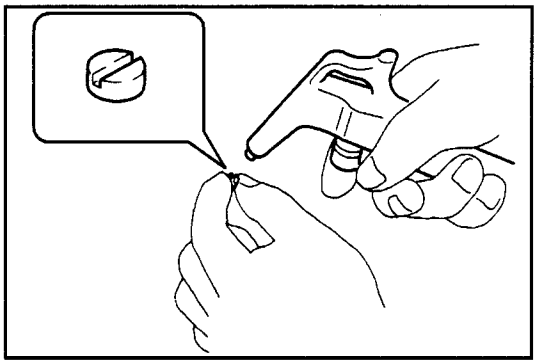

INSPECTION

Clean disassembled components before inspection.

(1) Use a soft brush to wash and clean casted components.

(2) Clean the carbon around the throttle valve.

(3) Wash other components.

(4) Blow off all dirt and foreign matters from the jets, fuel passage and body sliding contact surface.

Caution:
Do not clean the jets with a wire since the holes may be deformed.

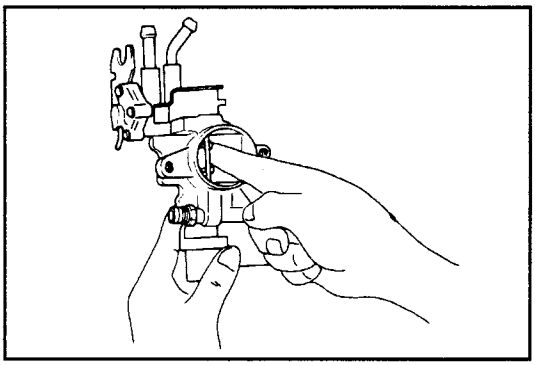

1. Choke valve and choke shaft inspection
   Push the choke valve with a finger and check that it is fully opened smoothly.

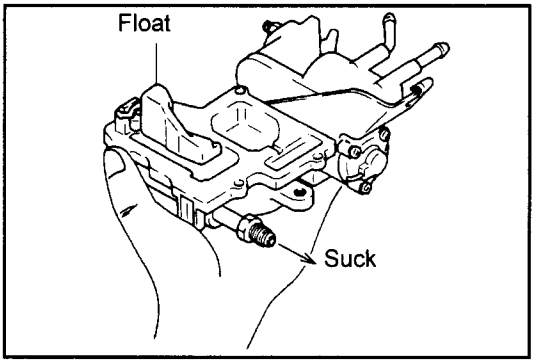

2. Needle valve inspection

   (1) Check the sliding motion of the needle valve.

   (2) Install the float, reverse the air horn, and check if air is leaking when sucked from the fuel inlet pipe side.

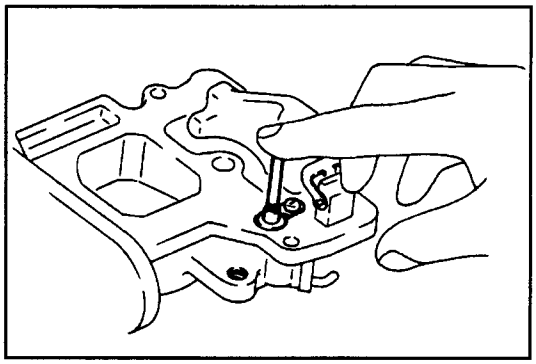

3. Power piston sliding status inspection

   (1) Install the spring and power piston to the carburetor body. Check that the piston slides smoothly without looseness when pushed with a finger.

www.truck-freeworkshop.com

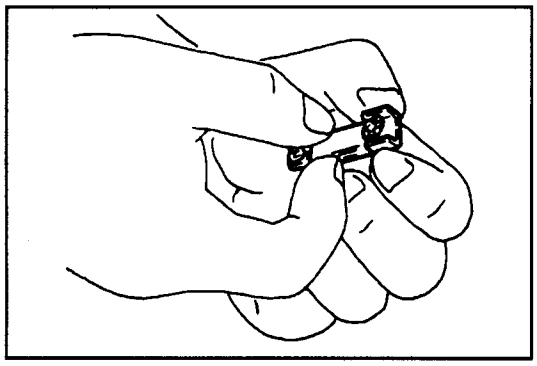

4. Hot idle compensator inspection
   Use fingers to move the valve of the hot idle compensator, and check that it moves lightly.

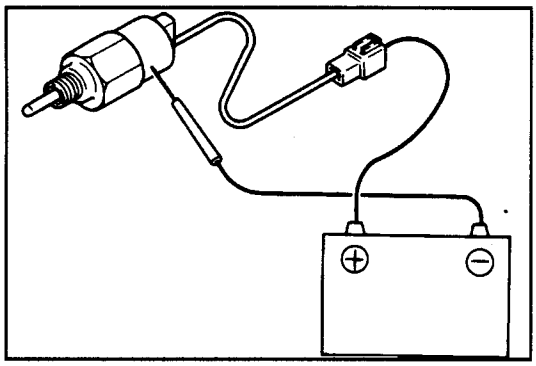

5. Solenoid valve function inspection
   (1) Connect the solenoid valve to the battery and set it to ON and OFF. Check that a clicking sound is heard.
   (2) Replace the valve if it does not function correctly.

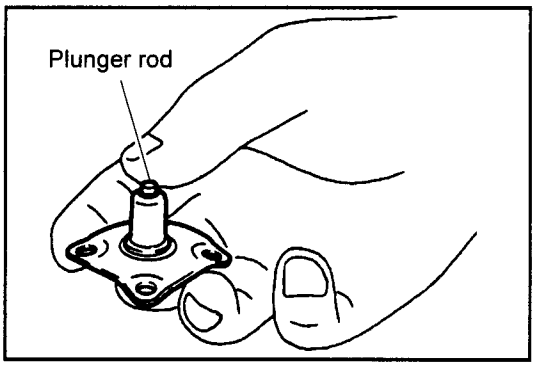

6. Accelerator pump diaphragm inspection
   (1) Check the diaphragm for any damage.
   (2) Push the plunger rod with a finger. Check that it moves smoothly.

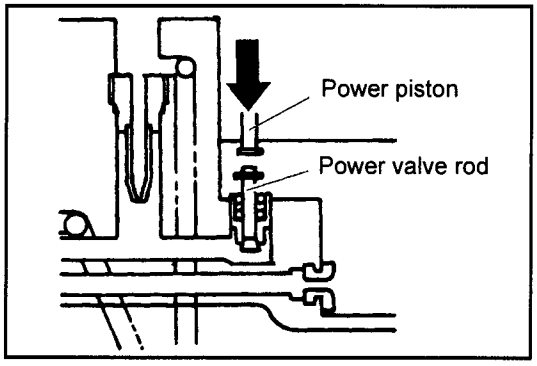

7. Power valve sliding inspection
   Push the power valve rod lightly with a finger, and check that it slides smoothly.

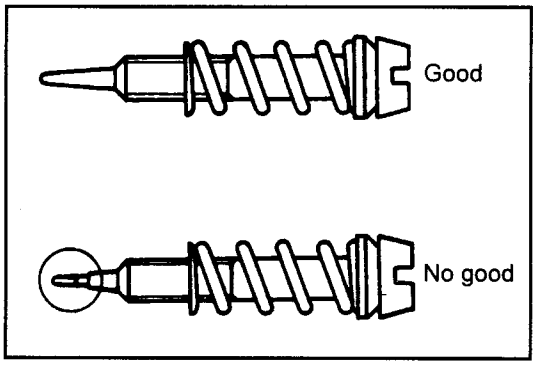

8. Idle adjusting screw inspection
   Check that the tapered portion of the idle adjusting screw is not stepped and that the threaded portion is not damaged.
9. Throttle valve and shaft inspection
   Operate the throttle lever, and check that the throttle shaft slides smoothly.

www.truck-freeworkshop.com

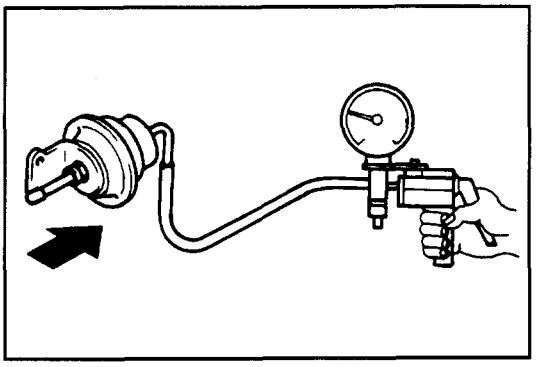

10. Idle-up actuator inspection
    (1) Check that the rod moves when negative pressure is applied to the diaphragm chamber.
    (2) Check that the rod quickly returns to the original position when the negative pressure is set from the state in (1) to zero.

REASSEMBLY

The reassembly procedure is the reverse of the disassembly procedure.

Caution:

- **Use new ones for all the gaskets and O-rings.**
- **Adjust the float with the following procedure before reassembling it.**

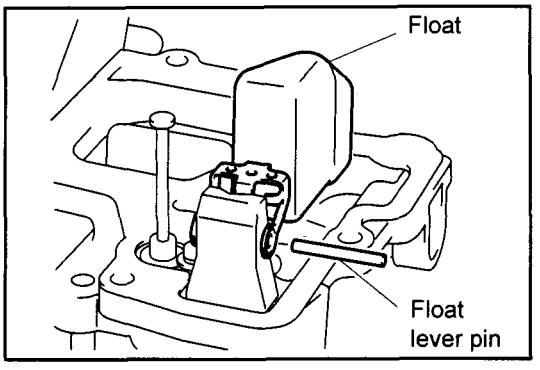

1. Install to the valve seat in the following order of the needle valve, spring and needle valve bushing pin.
2. Install the float and float lever pin.

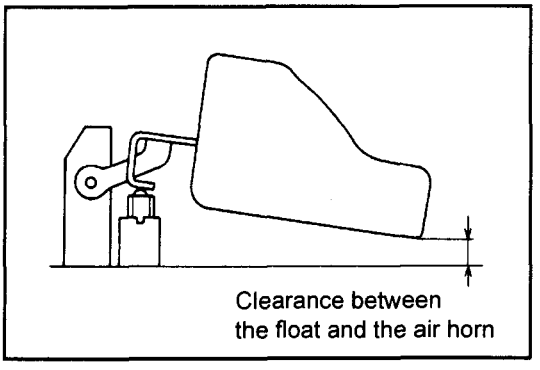

3. Turn the air horn upside down, and measure the gap between the tip of the float and the air horn using SST when the float goes down by its own weight.

   SST 09240-76002-71
   (09240-00014)

   Standard: 5.5 mm (0.217 in.)

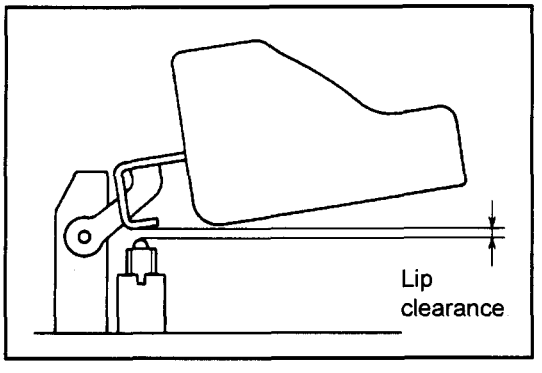

4. Lift the float, and measure the gap between the float lip section and the needle valve bushing pin using SST.

   SST 09240-76003-71
   (09240-00020)

   Standard: 1.1 to 1.3 mm (0.043 to 0.051 in.)

www.truck-freeworkshop.com

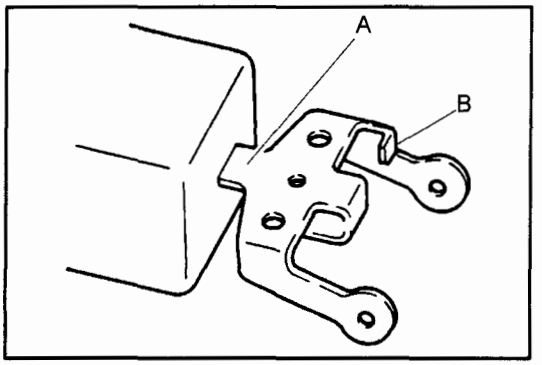

If the value is outside the standard in procedure 3, adjust by bending the float lever section A.
If the value is outside the standard in procedure 4, adjust by bending the float lever section B.

www.truck-freeworkshop.com

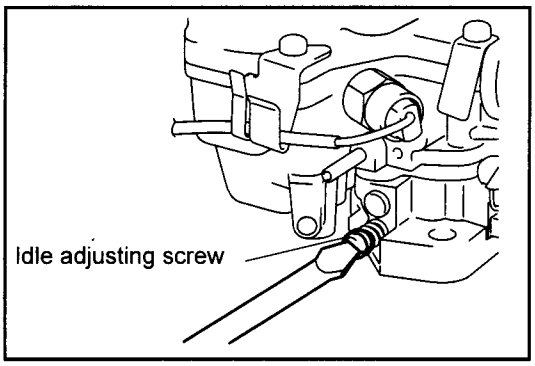

CARBURETOR ADJUSTMENT

1. Idle adjusting screw adjustment
   Fully tighten the idle adjusting screw, and then loosen it by about three turns.

Caution:
Do not tighten the screw too tightly.

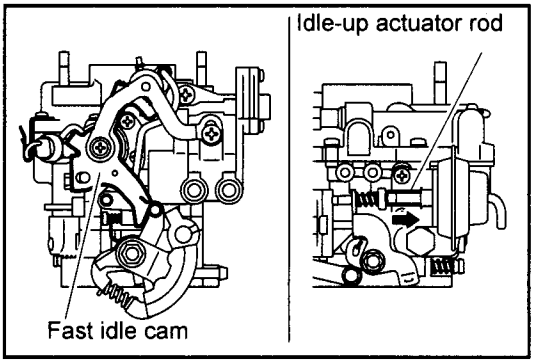

2. Throttle valve adjustment
   (1) Forcibly turn the fast idle cam clockwise to bring the cam into released state.
   (2) Retract the idle-up actuator rod.

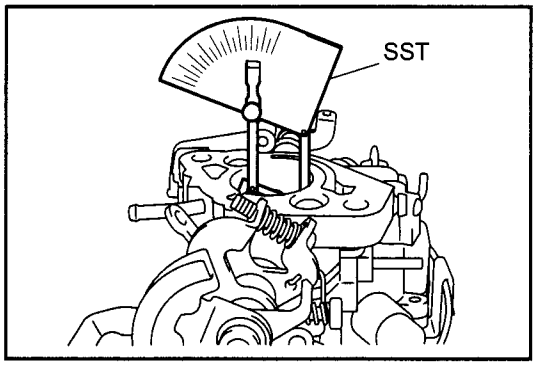

   (3) Measure throttle valve idle opening angle.
   SST 09240-76002-71
   (09240-00014)
   Standard (from horizontal level): 13.5°

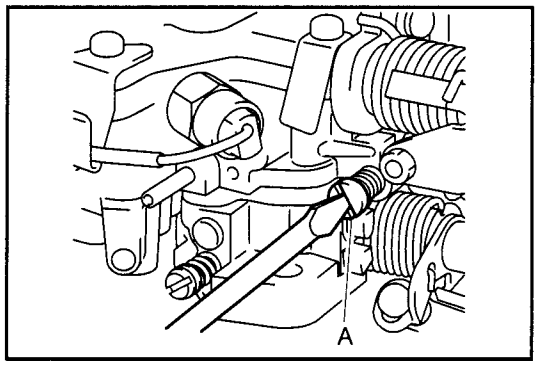

For adjustment, turn the throttle adjusting screw "A".

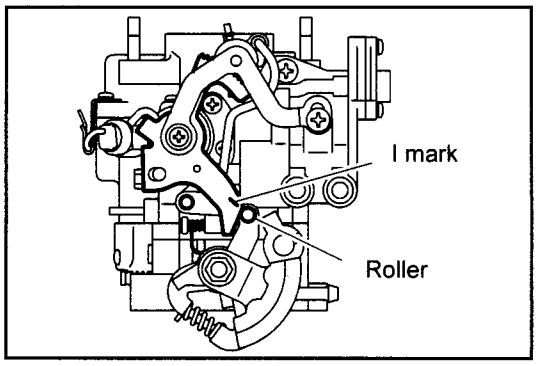

3. Inspection and adjustment of fast idle
   With the condition of an ambient temperature 25 ± 2°C (77 ± 35.6°F), adjust the fast idle cam (See P4-19), then align the I mark on the fast idle cam to the center of the roller, and measure the opening angle of the throttle valve.
   SST 09240-76002-71
   (09240-00014)
   Standard (from horizontal level): 23 to 25°

www.truck-freeworkshop.com

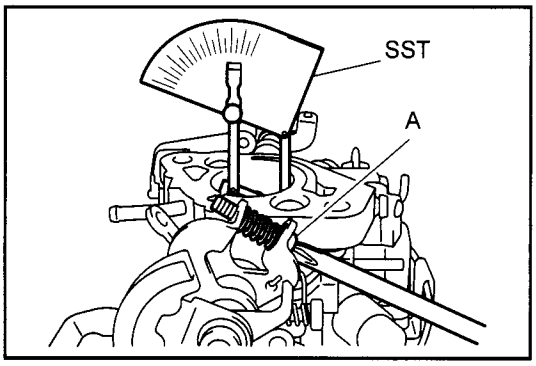

For adjustment, turn the fast idle adjusting screw "A".

Caution:

- **Inspection and adjustment must be carried out by the carburetor as a unit, and with an ambient temperature of 25 ± 2°C (77 ± 35.6°F).**
- **Do not adjust unless it is necessary.**

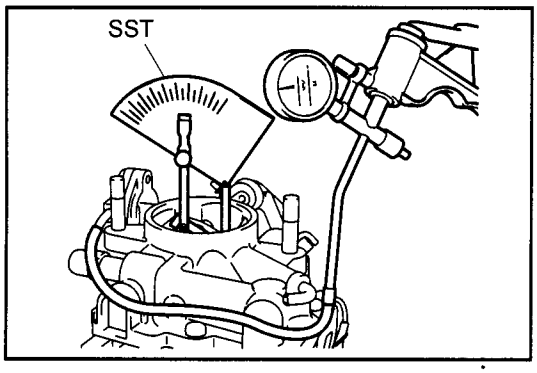

4. Choke breaker inspection and adjustment

   (1) Apply a pressure of 400 mmHg or more to the choke breaker diaphragm chamber, and measure the choke valve opening angle.

   SST 09240-76002-71
   (09240-00014)

   Standard (from horizontal level): 39 to 41°

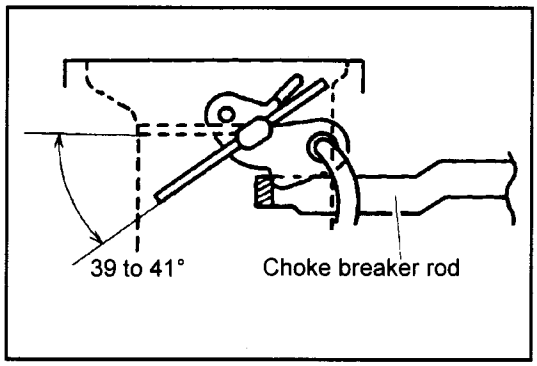

   For adjustment, bend the choke breaker rod end.

   (2) Check if the choke valve opens and the reading does not drop when a negative pressure is applied.

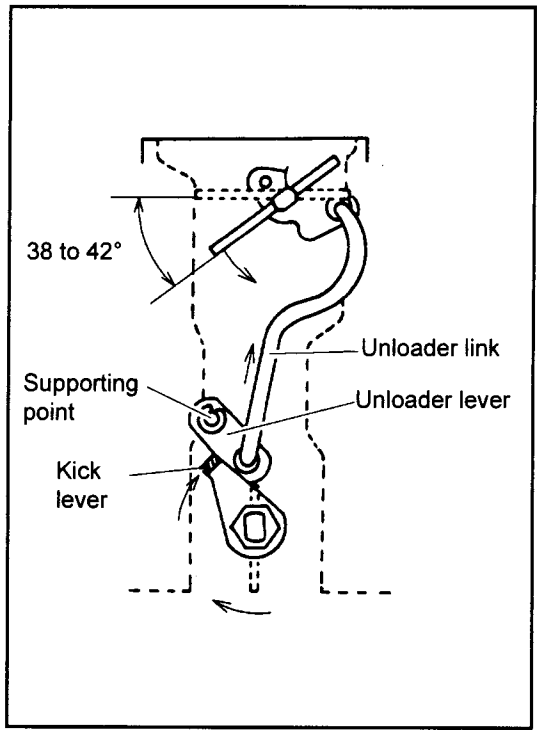

5. Unloader inspection and adjustment
   Measure the choke valve angle when the throttle valve is fully open.

   Standard (from horizontal level): 38 to 42°

   For adjustment, bend the kick lever.

www.truck-freeworkshop.com

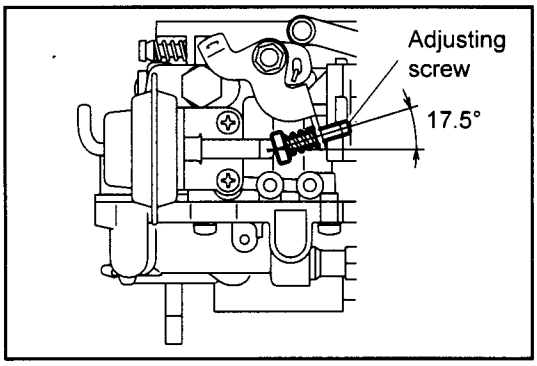

6. Idle-up actuator inspection and adjustment
   (1) Forcibly turn the fast idle cam clockwise to release the cam.
   (2) Measure the throttle valve angle (touch angle) when the idle-up actuator rod is in contact with the adjusting rod.

   Standard (from horizontal level): 17.5°

   For adjustment, turn the adjusting screw.

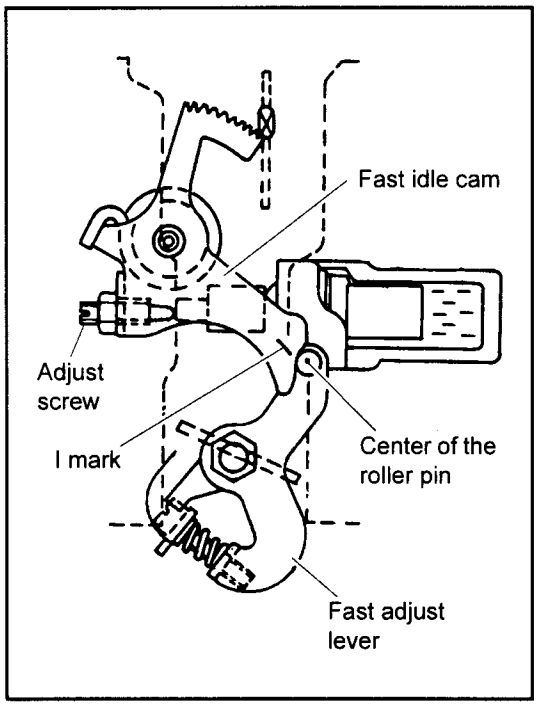

FAST IDLE CAM ADJUSTMENT

Caution:
- **Adjustment must be carried out with an ambient temperature of 25 ± 2°C (77 ± 35.6°F).**
- **Do not adjust unless it is necessary.**

1. Adjust with the adjust screw so I mark of the fast idle cam will come to the center of the roller pin of the fast adjust lever, and fix with the lock nut.
2. After completing the above I mark adjustment, adjust the fast idle opening angle. (See P4-18)

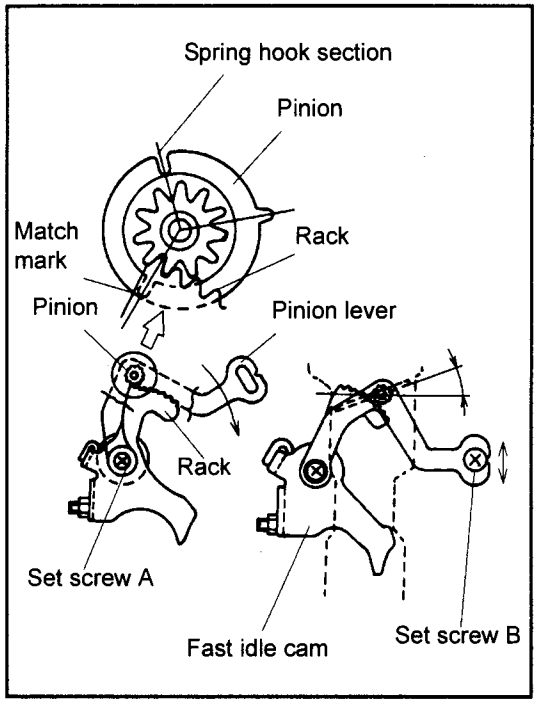

CHOKE VALVE ADJUSTMENT

Caution:
Do not adjust unless it is necessary.

1. After completing the adjustment of the I mark of the fast idle cam, adjust the positions of the rack and pinion at an ambient temperature of 25 ± 2°C (77 ± 35.6°F).
2. For the position adjustment, turn the pinion so that the left end bump of the rack fits to the cog directly opposite the match mark of the pinion.
3. Turn the pinion lever clockwise, tighten the set screw "A" and "B" when the choke valve opens 16 to 21° from the horizontal position.

www.truck-freeworkshop.com

AIR GOVERNOR

COMPONENTS

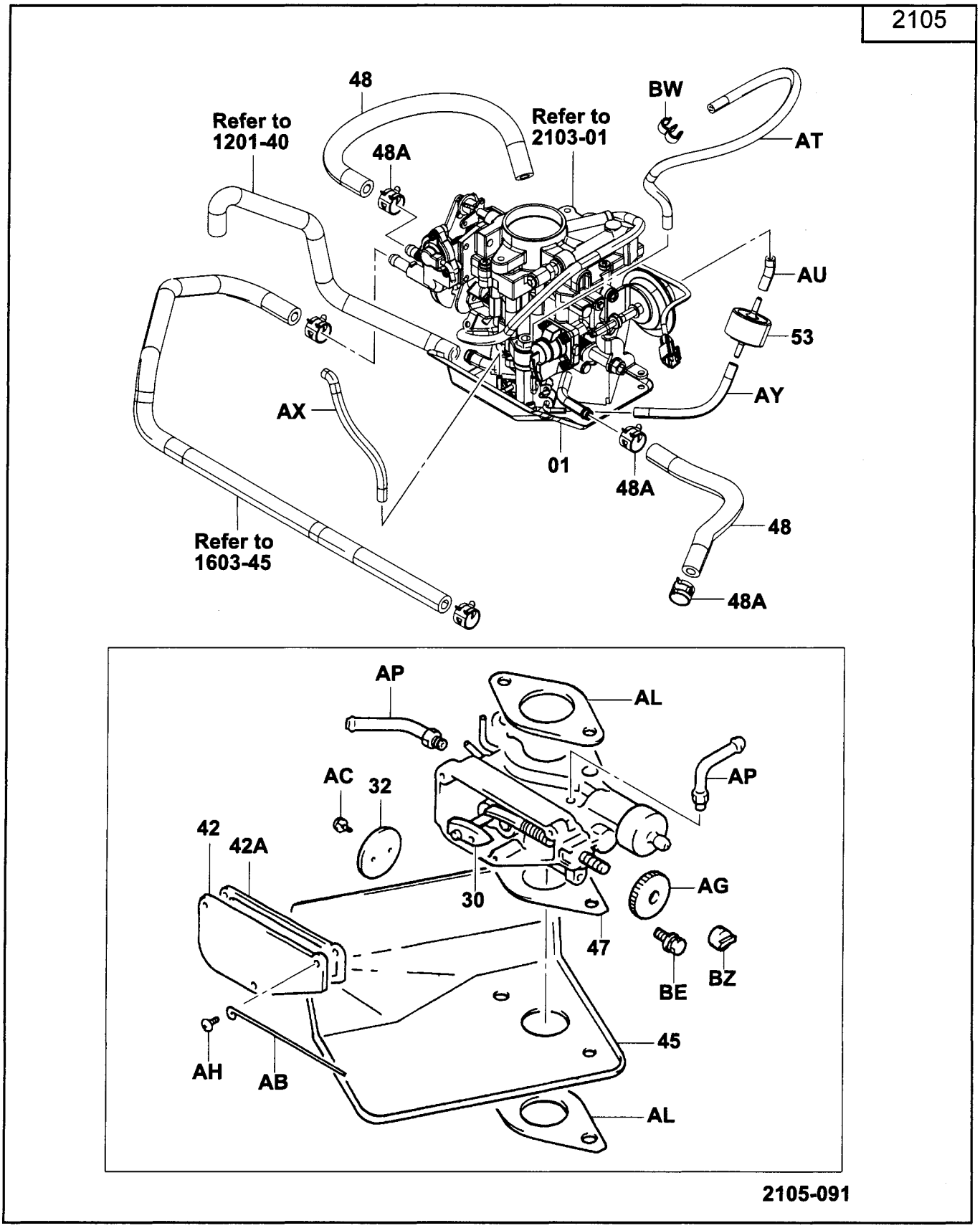

www.truck-freeworkshop.com

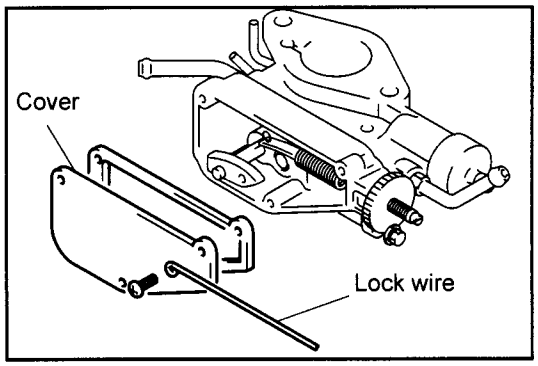

REMOVAL·INSTALLATION

Refer to P2-4

DISASSEMBLY

1. Governor cover removal
   (1) Untie the lock wire.
   (2) Remove three set screws. Remove the governor cover.

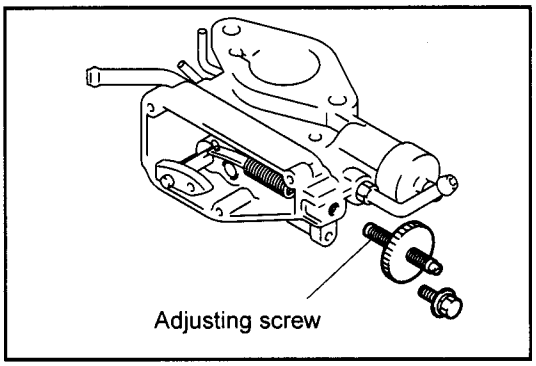

2. Bush w/ adjusting screw removal
   (1) Remove the lock bolt.
   (2) Turn the adjusting screw counterclockwise. Remove the bush w/ adjusting screw.

Note:
Note the screwed in depths of the screw and bush.

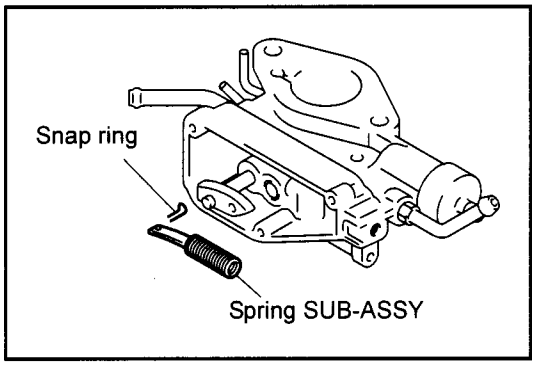

3. Spring SUB-ASSY removal
   Remove the snap ring. Remove the spring SUB-ASSY.

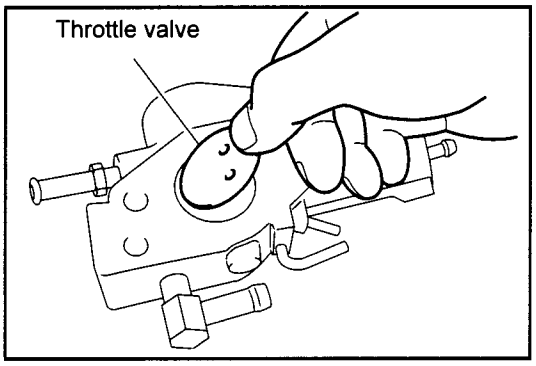

4. Throttle valve and valve shaft removal
   (1) Remove valve set screws. Remove the throttle valve.

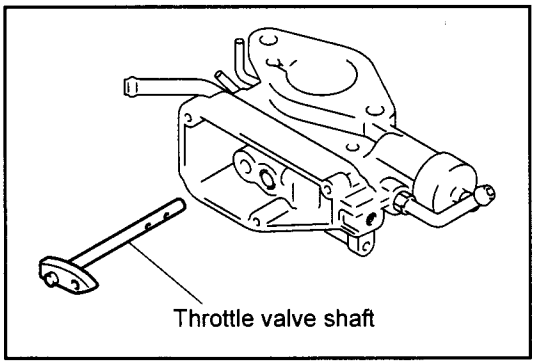

   (2) Remove the throttle valve shaft.

www.truck-freeworkshop.com

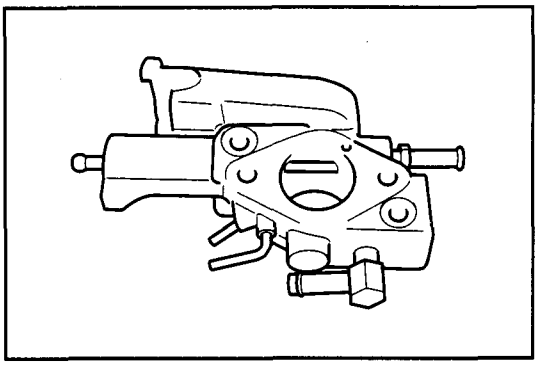

INSPECTION

1. Governor body inspection
   (1) Inspect the governor body for any corrosion. If corroded, remove rust with fine grained sandpaper.
   (2) Manually move the stabilizer piston. Check smooth sliding without sticking.
   (3) Inspect the body for distortion. Replace the body if distorted.

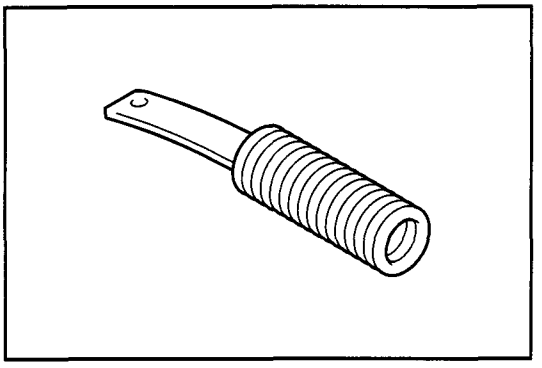

2. Governor spring and ribbon inspection
   (1) Replace the governor spring if any fatigue, deformation or other abnormality is found.
   (2) Replace the governor ribbon if any bending, deformation, crack, or other abnormality is found.

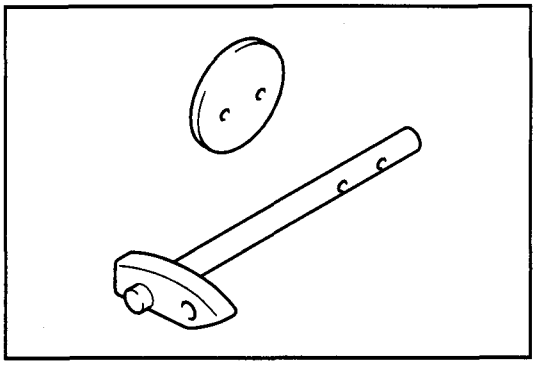

3. Throttle valve and the valve shaft inspection
   (1) Check for damage and deformation of the throttle valve.
   (2) Assemble the throttle valve shaft to the governor body. Turn the cam manually and check for any sticking or looseness caused by wear.
   (3) Check for wear (looseness when the shaft is inserted) or rusting of the governor body needle bearing.

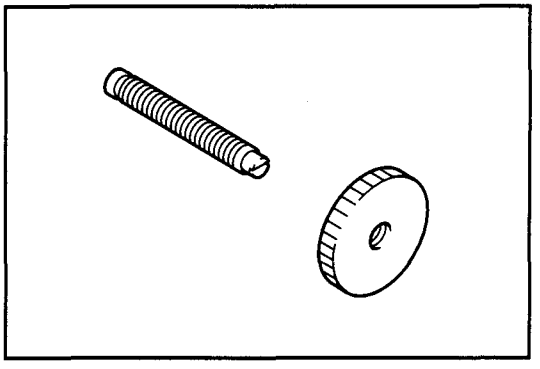

4. Adjusting screw and bush inspection
   (1) Check for bending of the adjusting screw and damage of the thread.
   (2) Check for damage of the bush thread.

www.truck-freeworkshop.com

REASSEMBLY

The reassembly procedure is the reverse of the disassembly procedure.

Caution:

- **Clean the governor body with compressed air prior to reassembling.**
- **When reassembling the throttle valve shaft, apply MP grease thinly to the governor body needle bearing.**
- **After completing the throttle valve shaft and valve reassembly, check for smooth operation.**
- **Temporarily install the air governor spring to the following dimension.**

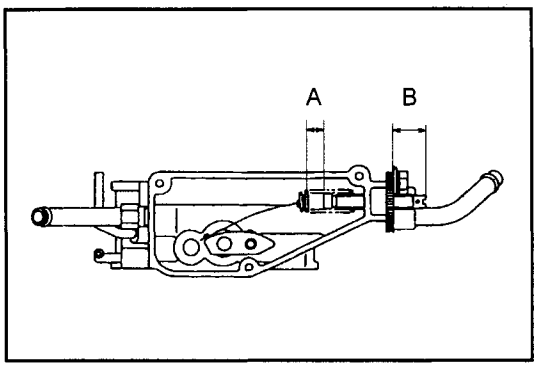

	1 ton vehicle	2 to 3 ton vehicle
Adjusting screw protrusion A	16.8 mm (0.661 in.)	21.9 mm (0.862 in.)
Effective spring turns B	11 turns	13 turns

www.truck-freeworkshop.com

ADJUSTMENT

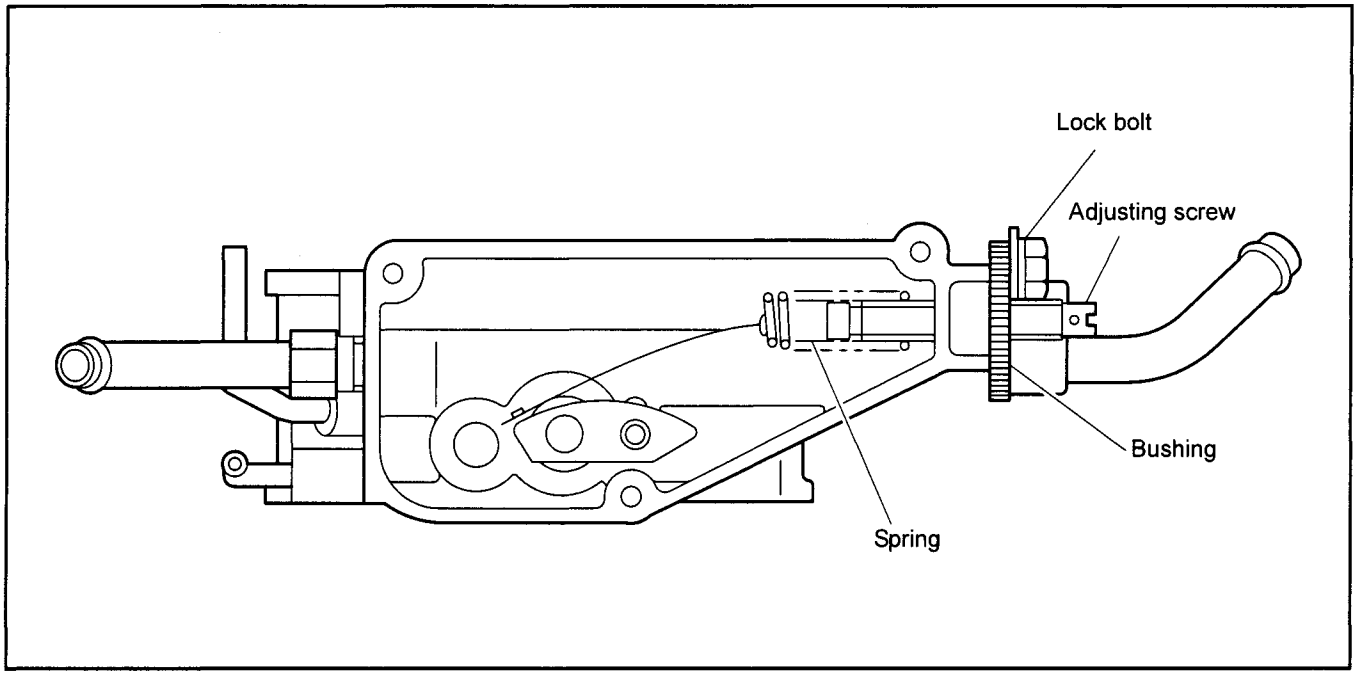

Tips for Adjusting Each Part

About the lock bolt

Counterclockwise turn..... unlocks the bushing.
Clockwise turn..... locks the bushing.

About bushing

Counterclockwise turn..... decreases no-load maximum speed.
Clockwise turn..... increases no-load maximum speed.

Caution:
When turning the bushing, make sure to fix the adjusting screw with a flat-blade screwdriver.

About adjusting screw

Counterclockwise turn..... reduces the relief down when the tilt lever of the oil control valve is operated. From the condition where the relief down is within the specified value, 1/10 clockwise turn will correct kinks in the spring.

Clockwise turn..... reduces hunting during no-load or load maximum speed. Turning the adjusting screw clockwise, 1/4 counterclockwise turn from the position where there is no hunting, and then 1/10 clockwise turn will correct kinks in the spring.

Air governor adjustment standard

Standard:
Refer to repair manual for each vehicle model.

www.truck-freeworkshop.com

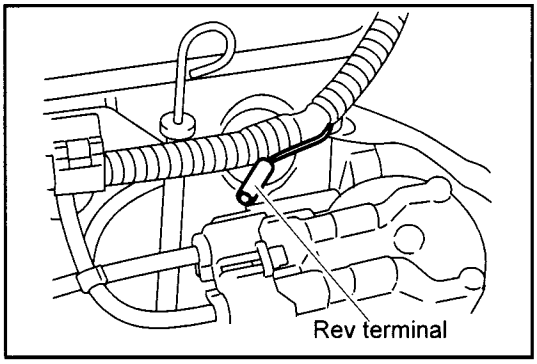

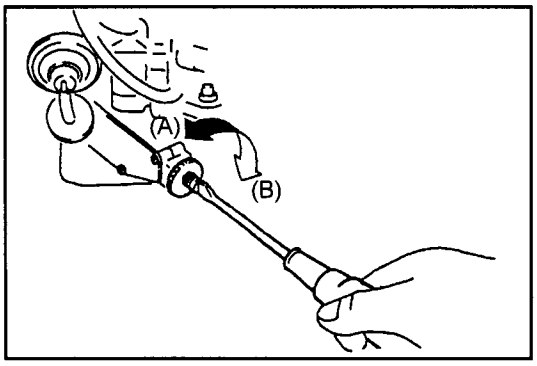

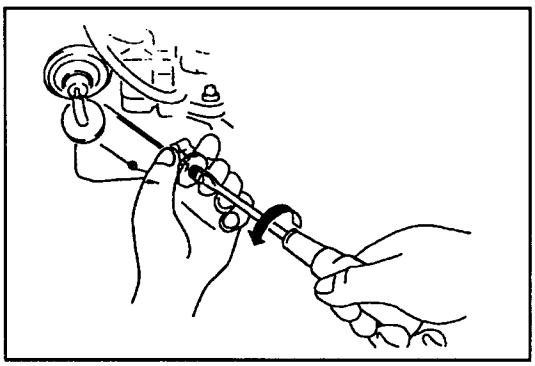

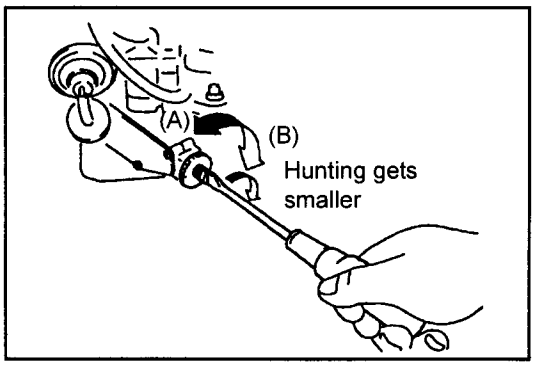

Air Governor Adjustment Procedures

Caution:
Be sure to complete the carburetor adjustment before adjusting the air governor.

1. Engine warming up

   Standard
   Coolant temperature: 75°C (167°F) or more
   Hydraulic oil temperature: 50°C (122°F) or more
   Engine oil temperature: 60°C (140°F) or more

2. Tachometer installation
3. No-load maximum speed
   (1) Remove the sealing.
   (2) Loosen the bushing lock bolt.
   (3) Fully depress the accelerator pedal to open the throttle valve fully. Measure the engine speed.
   If the engine speed is more than the standard, turn the bushing counterclockwise. (A)
   If the engine speed is less than the standard, turn the bushing clockwise. (B)

Note:
Refer to adjustment procedures of each section.

4. Loaded maximum speed adjustment
   (1) Fully depress the accelerator pedal and maintain the speed at the no-load maximum speed.
   (2) Operate the tilt lever backward and measure the relief down.

   Relief down: 300 rpm or less

   (3) If the relief down exceeds 250 rpm, turn the adjusting screw counterclockwise for adjustment.

Note:
Refer to adjustment procedures of each section.

5. Hunting adjustment
   (1) If hunting occurs at either the no-load or loaded maximum speed after completing the adjustments in steps 3 and 4, adjust hunting by the bushing and adjusting screw.

   Adjusting screw..... Hunting adjustment
   Bushing..... Maximum speed adjustment

Note:
- **If hunting disappears after several times, it should be judged no hunting.**
- **Repeat above steps 3 to 5 for setting to the standard values.**

www.truck-freeworkshop.com

www.truck-freeworkshop.com

FUEL SYSTEM (4Y-E)

Page

SST TO BE USED 5-2

THROTTLE BODY 5-3

COMPONENTS 5-3

REMOVAL·INSPECTION·INSTALLATION 5-4

INJECTOR 5-6

COMPONENTS 5-6

REMOVAL·INSPECTION·INSTALLATION 5-7

FUEL PRESSURE REGULATOR 5-10

FUEL PUMP 5-11

COMPONENTS 5-11

REMOVAL·INSPECTION·INSTALLATION 5-12

INTAKE TEMPERATURE SENSOR 5-15

REMOVAL 5-15

INSPECTION 5-15

INSTALLATION 5-15

www.truck-freeworkshop.com

SST TO BE USED

Illustration	Part No.	Part name
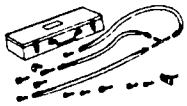	09268-76007-71 (09268-41047)	Injection measuring tool set
	09842-76001-71 (09842-30070)	EFI inspection wire

www.truck-freeworkshop.com

THROTTLE BODY

COMPONENTS

2103

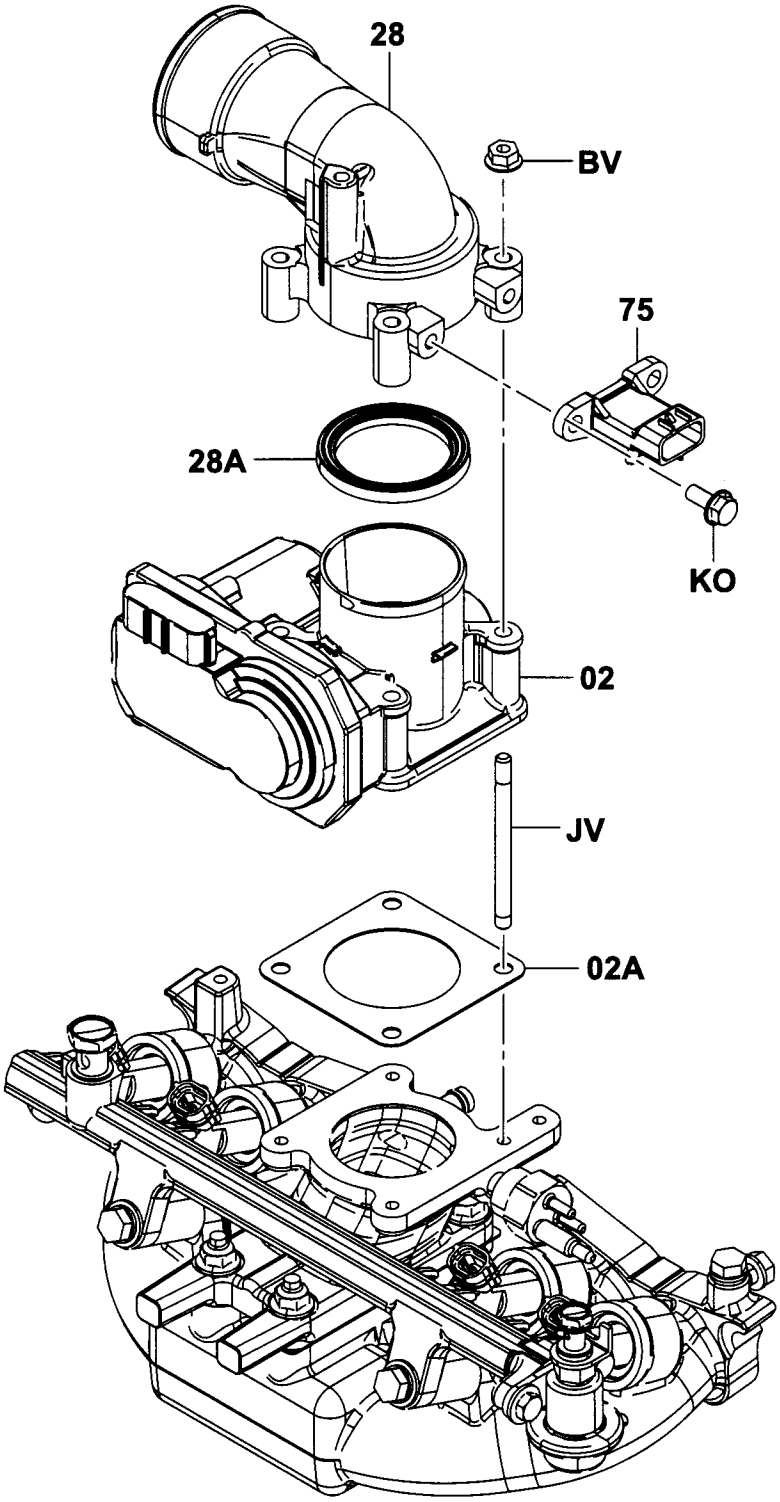

2103-074

www.truck-freeworkshop.com

REMOVAL·INSPECTION·INSTALLATION

T = N·m (kgf·cm) [ft·lbf]

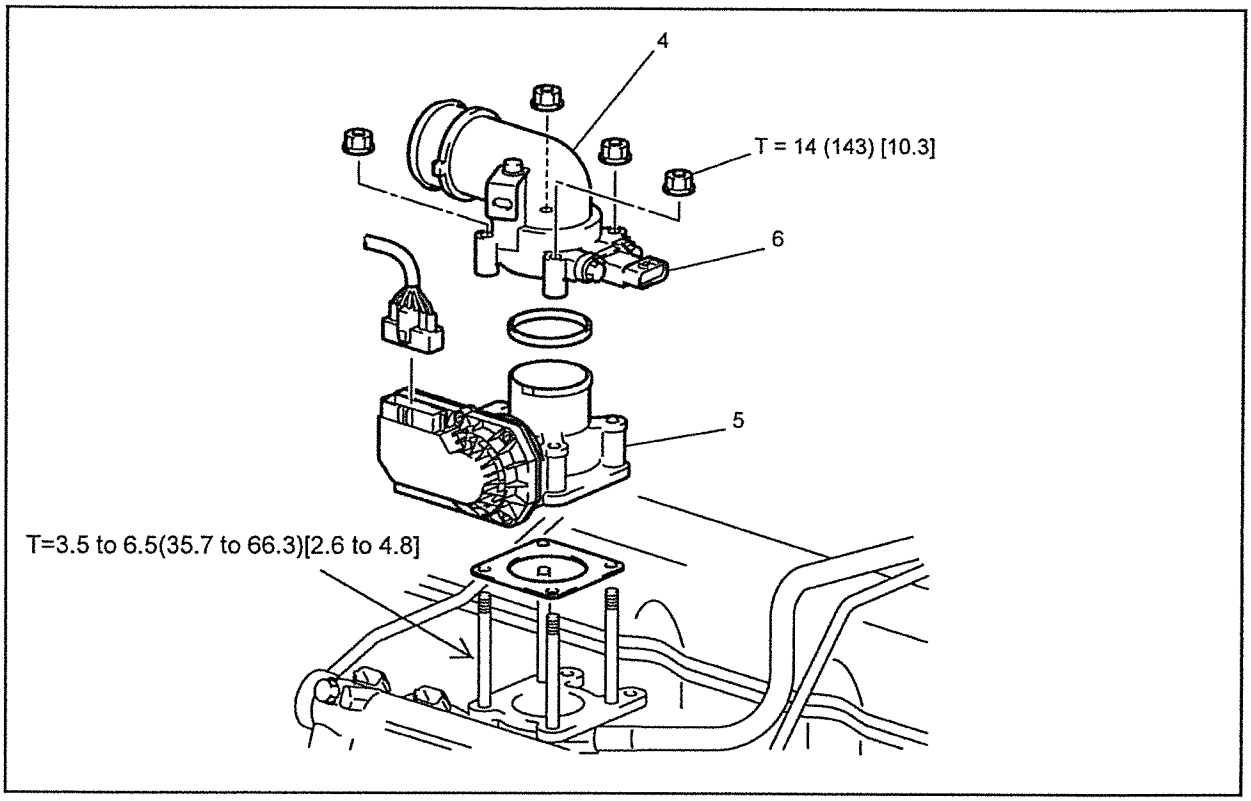

Removal·Installation Procedure

The installation procedure is the reverse of the removal procedure.

No.	Item	Removal	Inspection	Installation
1	Battery negative terminal			
2	Air cleaner hose			
3	Intake pipe			
4	Air intake connector			
5	Throttle body		**[Point 1]**	
6	Vacuum sensor			

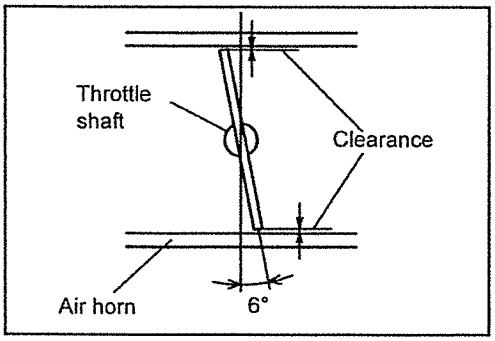

Point Operations

[Point 1]

Inspection:

Inspection of the throttle body

1. Make sure that the throttle shaft is not loose.
2. Firmly press the throttle valve with your finger to open and close.
3. When the throttle valve is in a free condition, there must be an appropriate angle and clearance between the air horn and the throttle valve.

   [Reference] Throttle angle is approx. 6°.

www.truck-freeworkshop.com

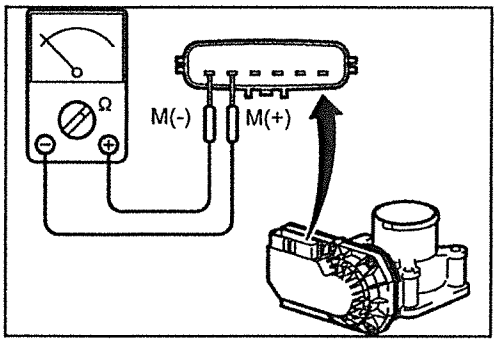

Inspection:

Inspection of the throttle motor

Measure the resistance value between the terminals.

Standard

Between M(+) and M(-): 0.3 to 100 Ω

Electronic Throttle Cleaning

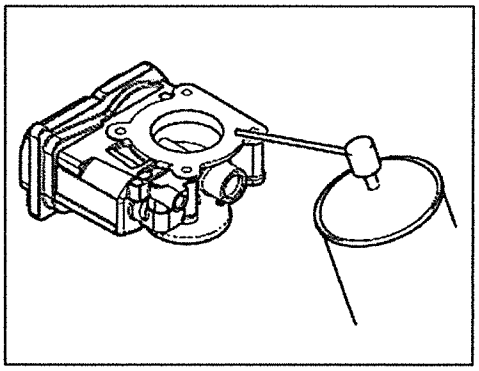

Step 1 Leave the electronic throttle for 1 to 5 minutes after spraying the following portions with engine conditioner.

(1) Around the throttle valve

(2) Around the bore

Note: Use Throttle Plate Cleaner Part Number 00591-95157-81 or equivalent.

Step 2 Wipe off the deposited materials like carbon which are dissolved from the engine conditioner.

www.truck-freeworkshop.com

INJECTOR

COMPONENTS

1701

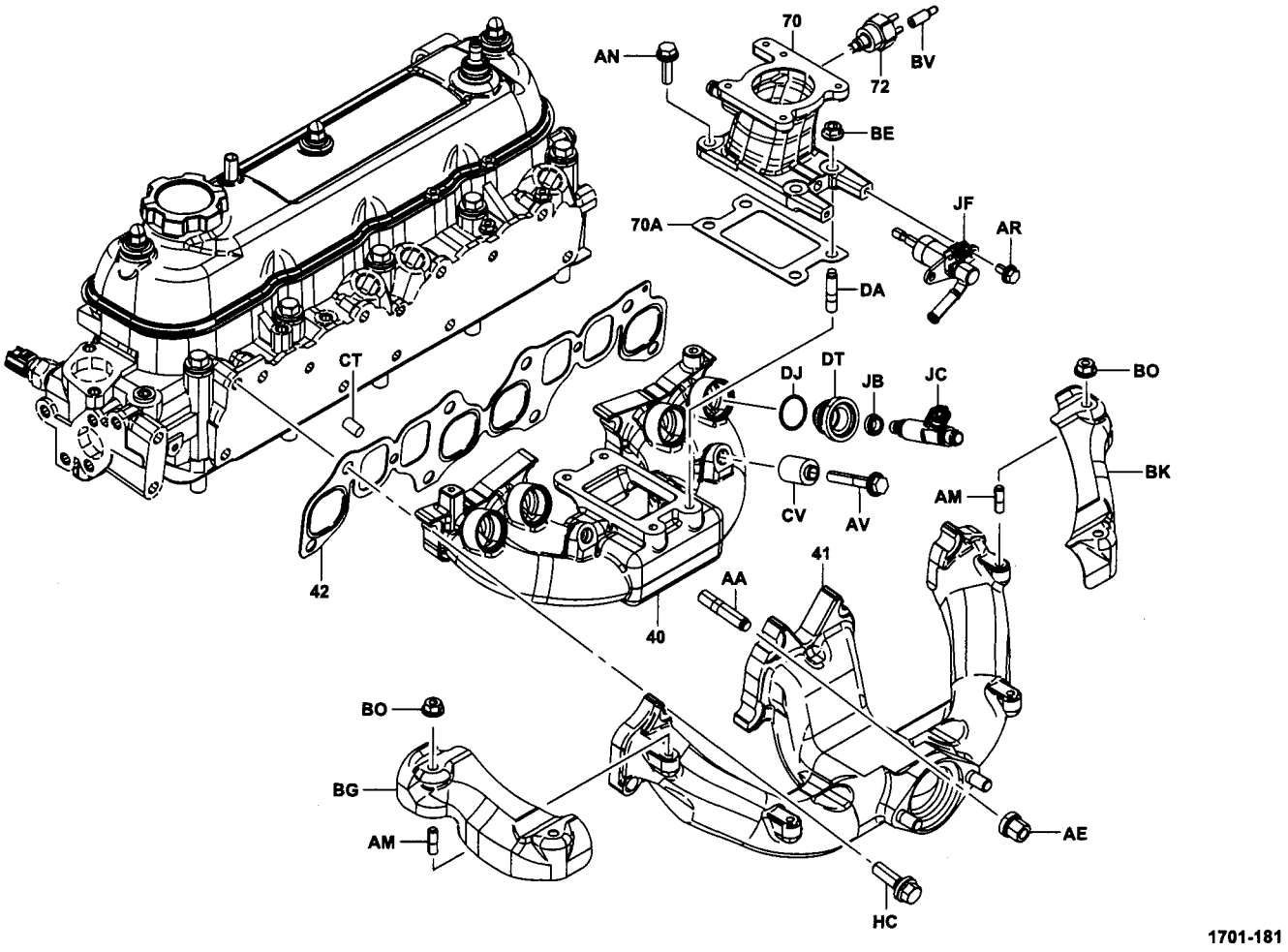

www.truck-freeworkshop.com

REMOVAL·INSPECTION·INSTALLATION

T = N·m (kgf·cm) [ft·lbf]

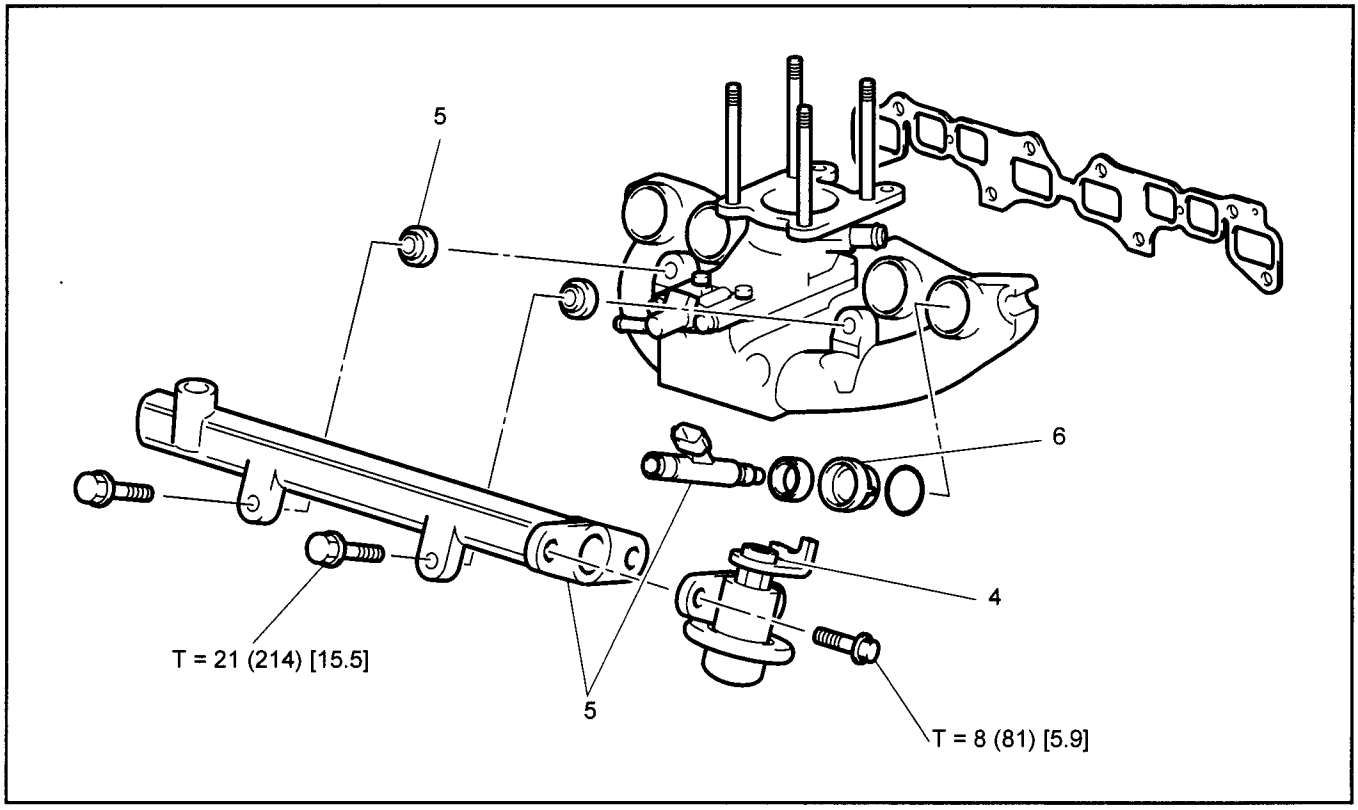

Removal·Installation Procedure

The installation procedure is the reverse of the removal procedure.

No.	Item	Removal	Inspection	Installation
1	Battery negative terminal			
2	Throttle body	See P3-4	←	←
3	Elimination of fuel pressure in fuel system	See P3-5	←	←
4	Pressure regulator	**[Point 1]**		**[Point 5]**
5	Delivery pipe, spacer, and injector	See P3-5	**[Point 2]**	**[Point 4]**
6	Injector spacer			**[Point 3]**

Note:
During the reassembly, use new gaskets and O-rings.

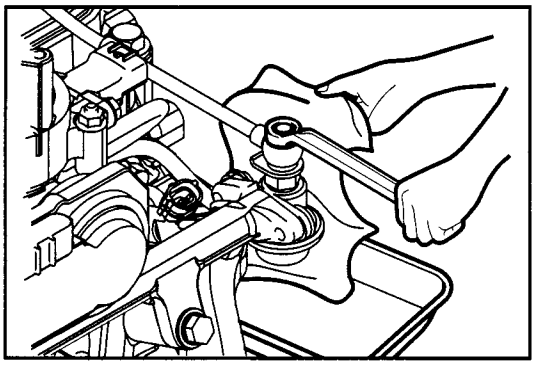

Point Operations

[Point 1]

Removal:

Place a fuel tray under the pressure regulator.
Wrap a small piece of waste cloth around the union section, and eliminate the fuel pressure by slowly loosening the union bolt.

Caution:

- **Put waste cloth in order to prevent the fuel from splashing.**
- **Do not allow any fire to come close during the operation.**

www.truck-freeworkshop.com

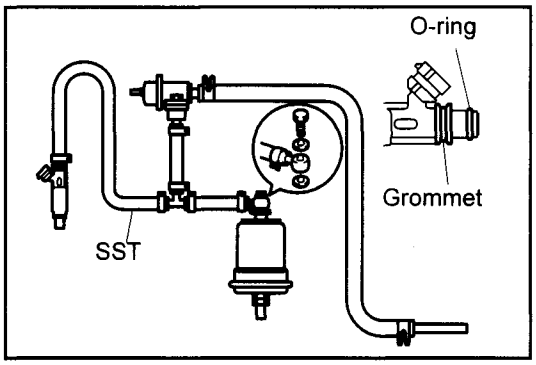

[Point 2]

Inspection:

Inspection of the injector injection amount and leakage

1. Install SST as shown in the left illustration to the injector with the O-ring and grommet installed, and install the injector with the fuel filter on the vehicle side and the single item of the pressure regulator.

   SST 09268-76007-71
   (09268-41047)

Caution:

- **Put waste cloth in order to prevent the fuel from splashing.**
- **Do not allow any fire to come close during the operation.**

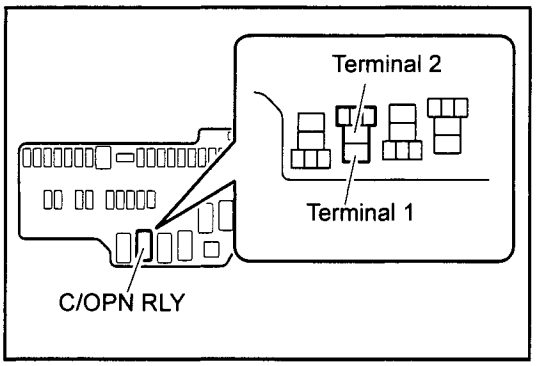

2. Disconnect the connector of the fuel pump relay inside the relay box.
3. Short circuit the terminal 1 and terminal 2 in the disconnected relay block.

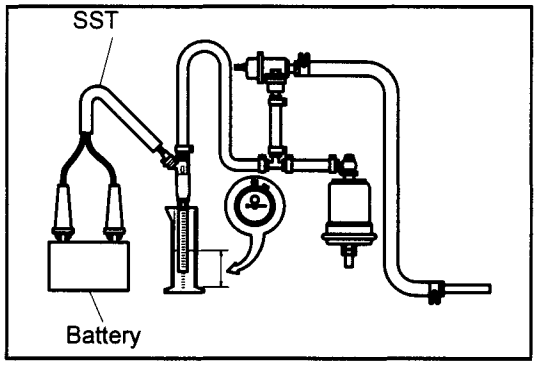

4. Connect SST to the injector.

   SST 09842-76001-71
   (09842-30070)

5. Turn the ignition key switch on to activate the fuel pump.
6. Connect SST to the battery, and measure the injection amount of the injector.

   Standard: 41 to 42 cc/15 seconds

Caution:
Fuel will be splashed when injecting, so put a vinyl hose with the inside diameter of 9 to 10ϕ to the tip of the injector nozzle and receive fuel in the measuring cylinder.

7. Maintain the condition in which the fuel pressure is applied, and inspect the leakage from the nozzle section.

   Standard: 1 drop or less/3 minutes

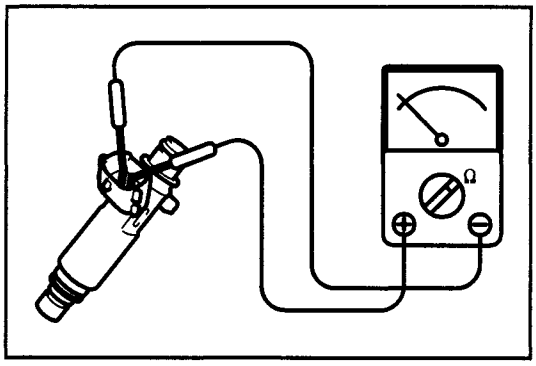

Inspection:

Inspection of the injector resistance

Standard: 13.8 ± 0.4 Ω (20°C) [68°F]

www.truck-freeworkshop.com

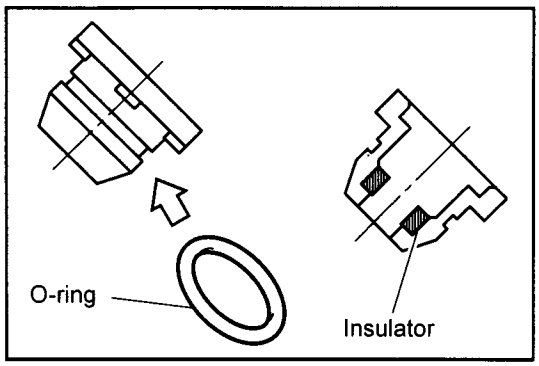

[Point 3]

Installation:

Firmly install the O-ring and the insulator to the injector spacer, and then install the spacer to the intake manifold.

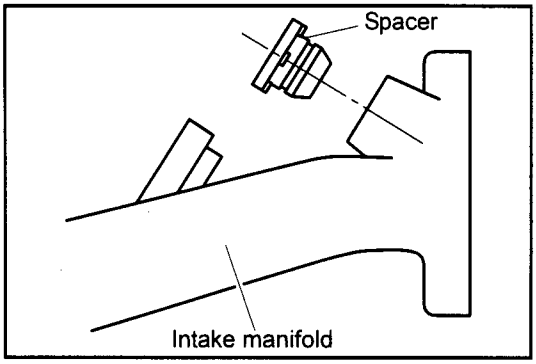

Note:

- **Apply E/G oil or grease to the O-ring portion of the spacer when inserting it.**
- **Insert the spacer straight and check that the spacer is firmly attached.**

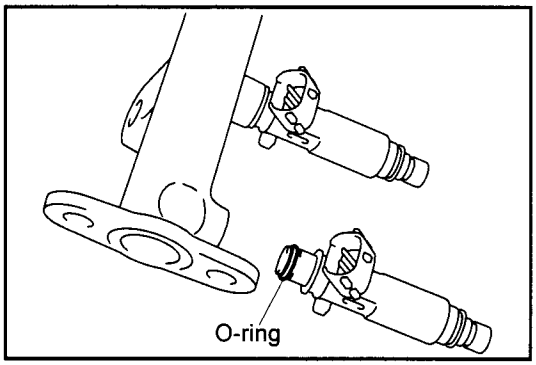

[Point 4]

Installation:

Apply gasoline to the O-ring, and firmly insert the injector to the delivery pipe as far as it will go.

Note:

- **While turning the injector to left and right, firmly insert the injector to the delivery pipe.**
- **Align all the four connector sections of the injector to face upward.**
- **After the reassembly, check that the injector rotates smoothly.**

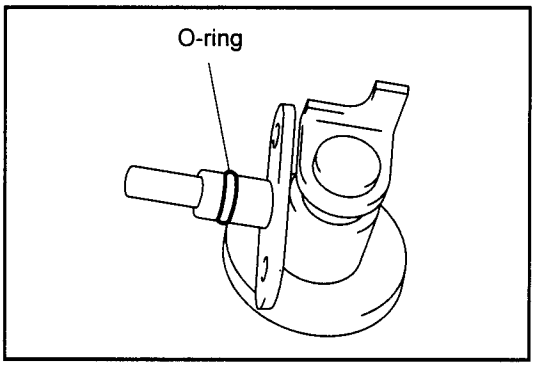

[Point 5]

Installation:

Install the pressure regulator to the delivery pipe.

Note:

Apply gasoline to the O-ring before insertion.

www.truck-freeworkshop.com

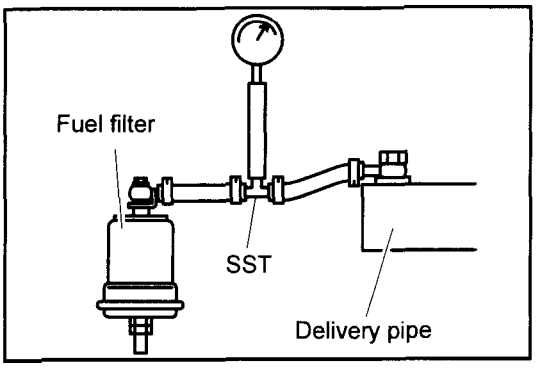

FUEL PRESSURE REGULATOR

Inspection

Caution:

- **Put waste cloth in order to prevent the fuel from splashing.**
- **Do not allow any fire to come close during the operation.**

1. Remove the negative terminal of the battery.
2. Eliminate the fuel pressure. (See P5-7)
3. Install the fuel pressure indicator between the fuel filter and the delivery pipe via SST.

   SST 09268-76007-71
   (09268-41047)

4. Turn the ignition key switch on to activate the fuel pump, and measure the fuel pressure at that moment.

   Standard: 284 ± 5 kPa (2.9 ± 0.1 kgf/cm^2) [41.2 ± 1.4 psi]

Note:
The above standard is applied when the vacuum port of the pressure regulator is an atmospheric discharge.

www.truck-freeworkshop.com

FUEL PUMP

COMPONENTS

2303

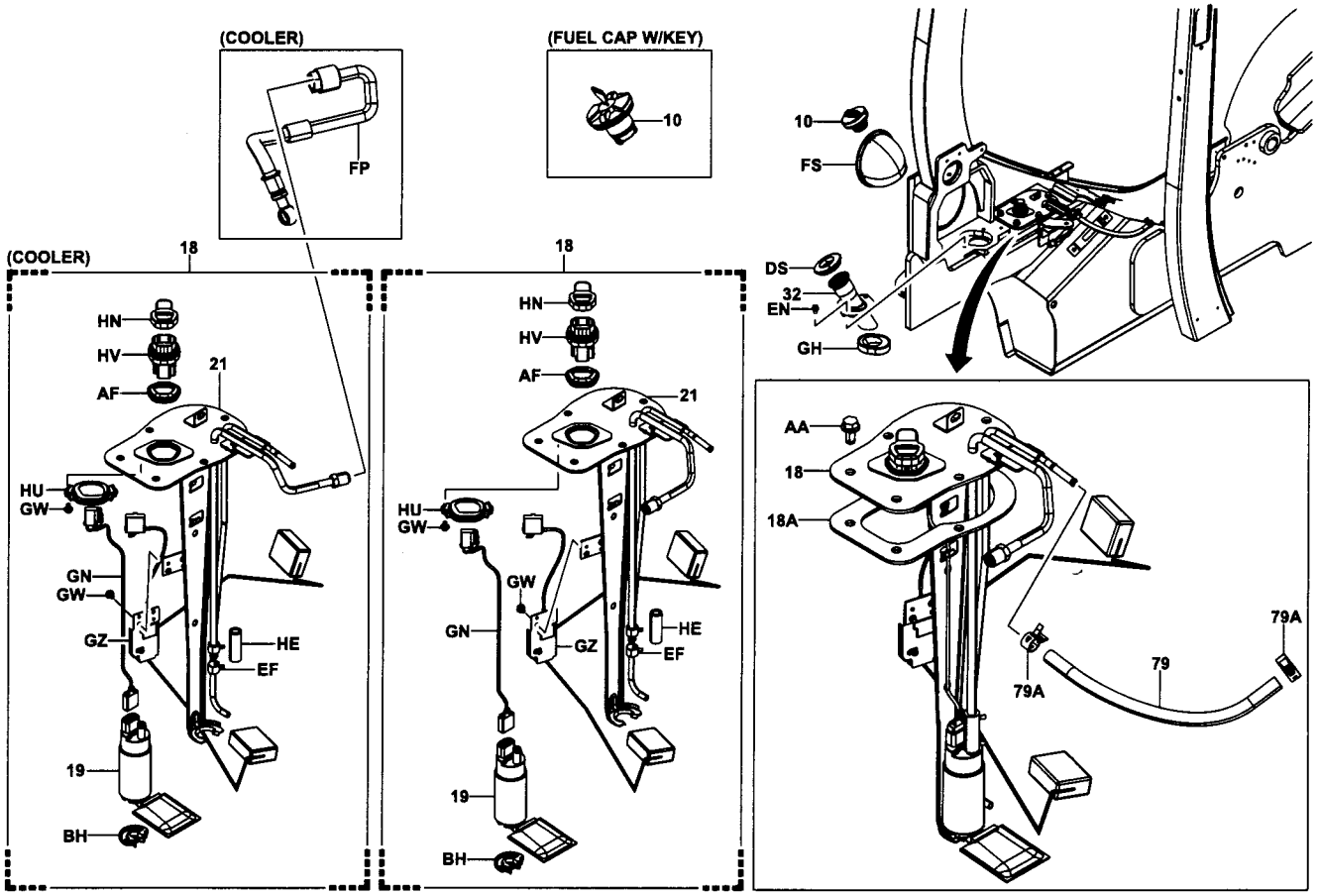

2303-320A

www.truck-freeworkshop.com

REMOVAL·INSPECTION·INSTALLATION

T = N·m (kgf·cm) [ft·lbf]

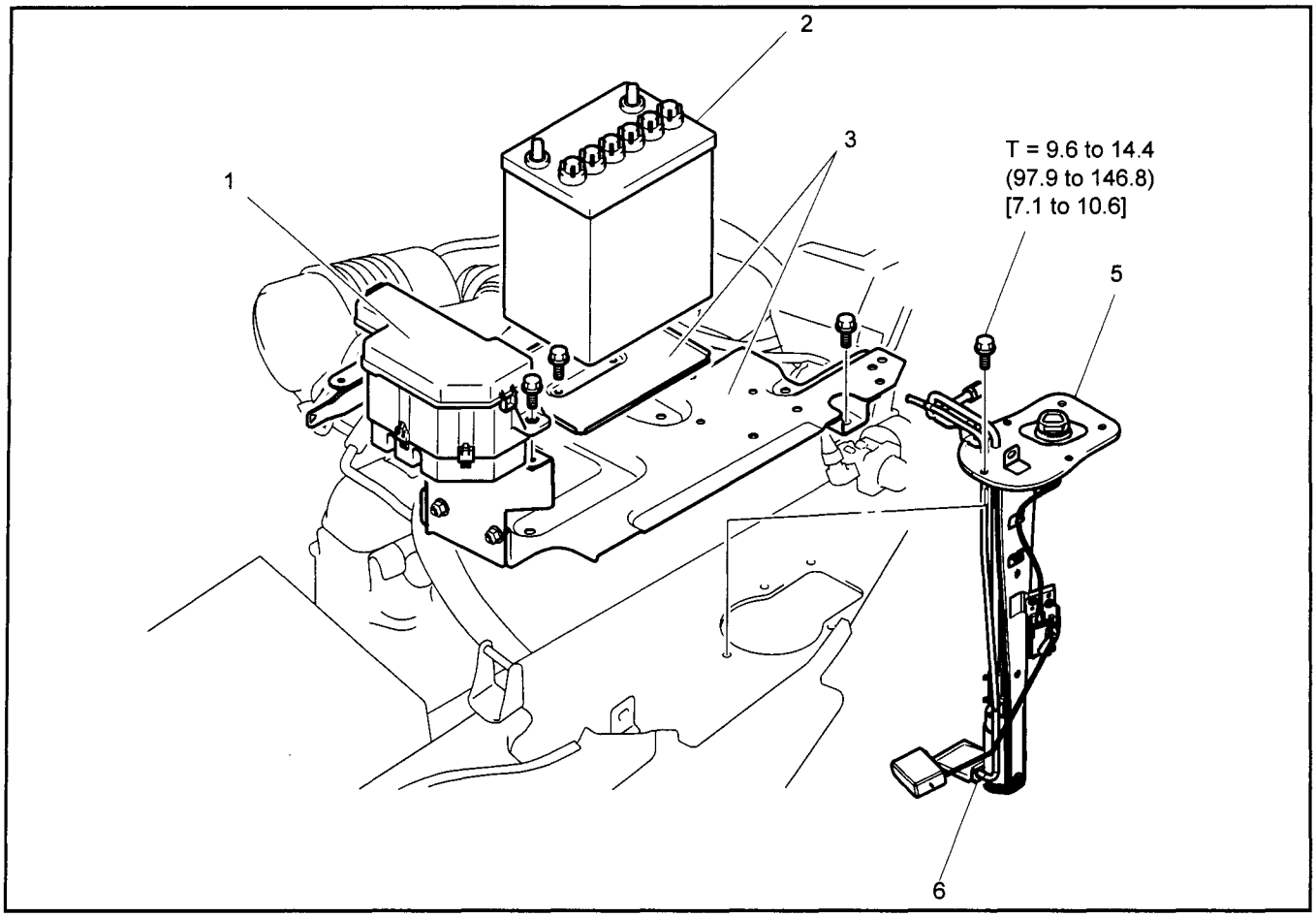

Removal·Installation Procedure

The installation procedure is the reverse of the removal procedure.

No.	Item	Removal	Inspection	Installation
1	Relay box			
2	Battery			
3	Battery set plate			
4	Fuel hose	**[Point 1]**		
5	Fuel tank cover	**[Point 2]**		**[Point 6]**
6	Fuel pump	**[Point 3]**	**[Point 4]**	**[Point 5]**

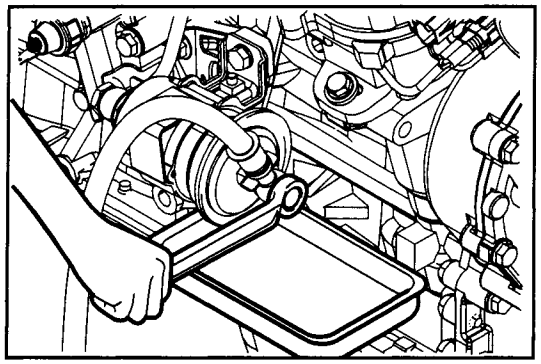

Point Operations

[Point 1]

Removal:

Place waste cloth and a fuel tray under the fuel filter, and then disconnect the fuel hose.

Caution:

- **Take measures to prevent the fuel from splashing.**
- **Do not allow any fire to come close during the operation.**
- **Drain the fuel from the filter and the hose side thoroughly.**

www.truck-freeworkshop.com

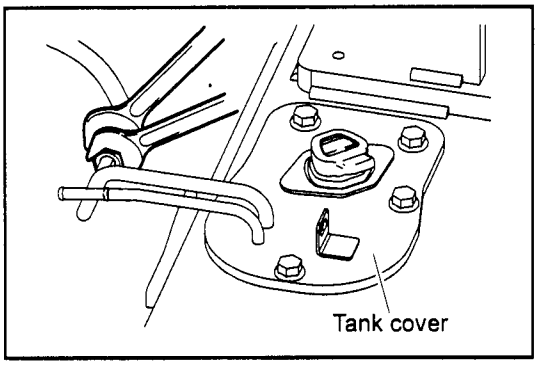

[Point 2]

Removal:
Disconnect the fuel tank cover pipe and the fuel hose.

Note:
Make sure to use two wrenches when loosening.

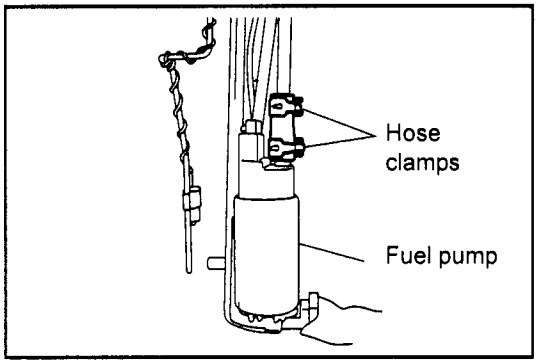

[Point 3]

Removal:
Loosen the hose clamps, and remove the fuel pump ASSY.

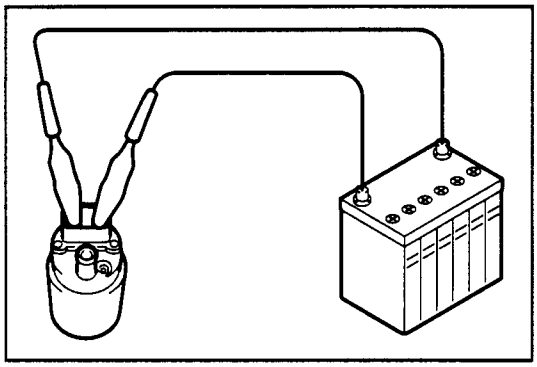

[Point 4]

Inspection:
Apply the battery voltage between the terminals, and check that the motor runs.

Caution:
- **Inspection should be performed in a short period of time (within 5 seconds).**
- **Bring the pump away from the battery as far as possible.**
- **Carry out the switching operation at the negative side of the battery.**

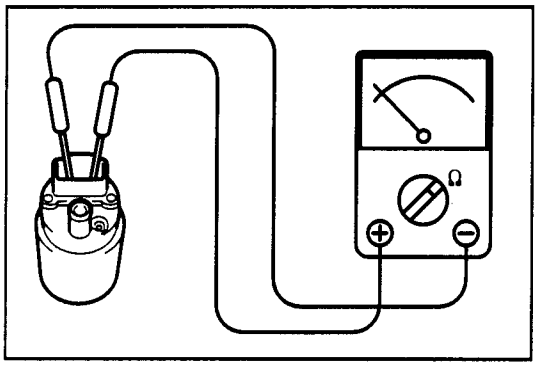

Inspection:
Using the tester, measure the resistance between the terminals.

Standard: 0.2 to 3.0 Ω

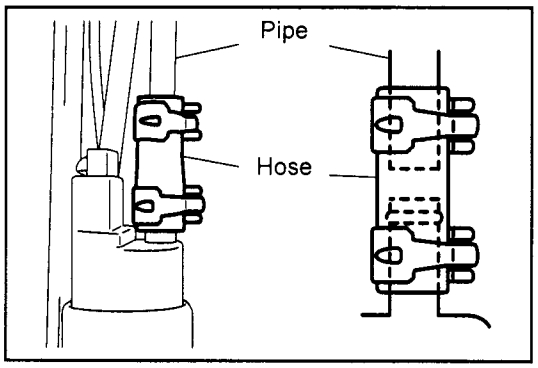

[Point 5]

Installation:
Install the fuel pump to the tank cover.

Caution:
The hose connecting the main unit of the pump and the pipe should be inserted thoroughly so that it will not lean to the one side.

www.truck-freeworkshop.com

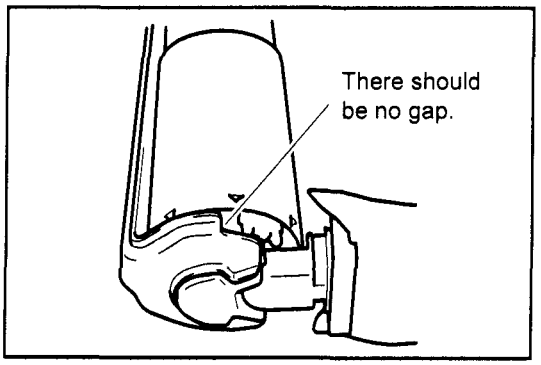

Caution:
In order to prevent a gap at the bottom of the tank cover when fixing the pump, adjust with the dimensions of the inserted pipe and the hose at the top of the pump.

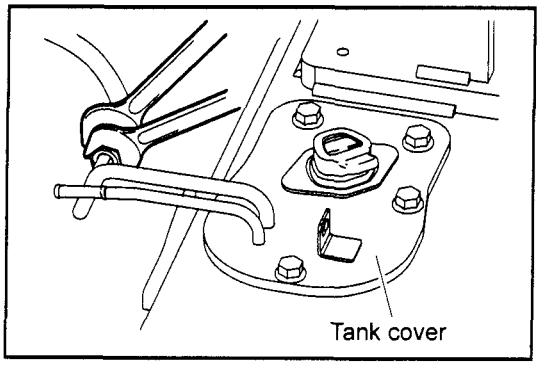

[Point 6]

Installation:
Install the fuel hose to the fuel pipe of the tank cover.

Caution:
- **Make sure to tighten using two wrenches.**
- **There should be no interference with other parts by a kinked hose.**

www.truck-freeworkshop.com

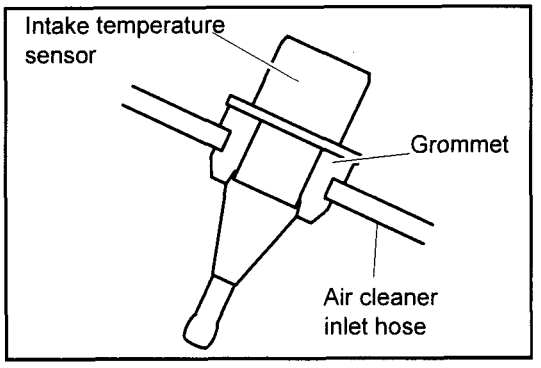

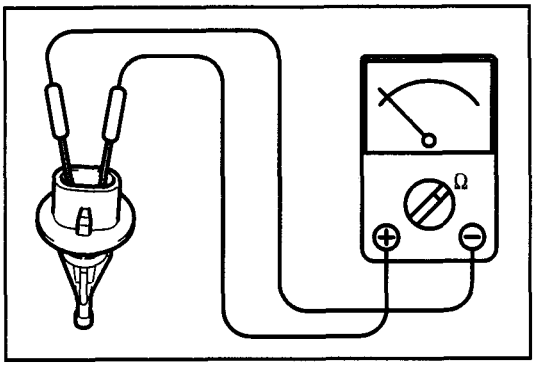

INTAKE TEMPERATURE SENSOR

REMOVAL

1. Hold the connector lock, and disconnect the connector.
2. Remove the intake temperature sensor.

INSPECTION

Measure the resistance value between the terminals.

Temperature (°C) [°F]	-20 [-4]	20 [68]	80 [176]
Resistance (kΩ)	16.2	2.45	0.32

INSTALLATION

Firmly press the intake temperature sensor into the grommet section of the air cleaner inlet hose.

Note:

- **After the installation, check its condition.**
- **Make sure that it is firmly inserted and not installed at an angle.**

www.truck-freeworkshop.com

www.truck-freeworkshop.com

PCV DEVICE

Page

VENTILATION VALVE 6-2

COMPONENTS 6-2

REMOVAL 6-3

INSPECTION 6-3

INSTALLATION 6-3

www.truck-freeworkshop.com

VENTILATION VALVE

COMPONENTS

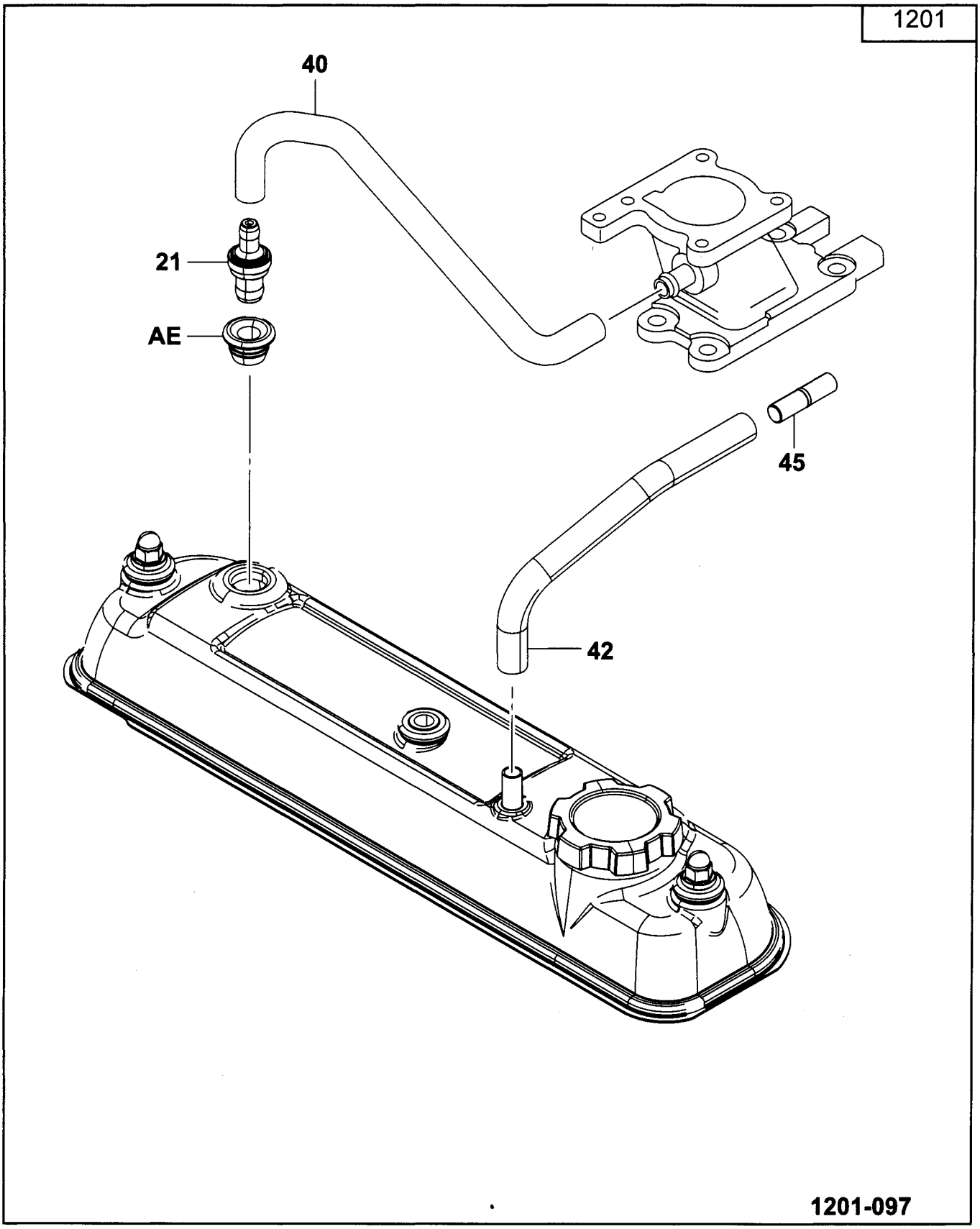

www.truck-freeworkshop.com

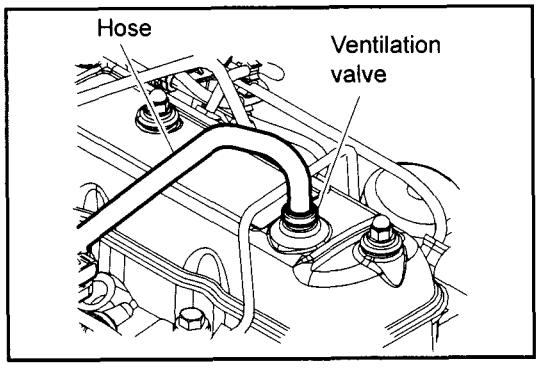

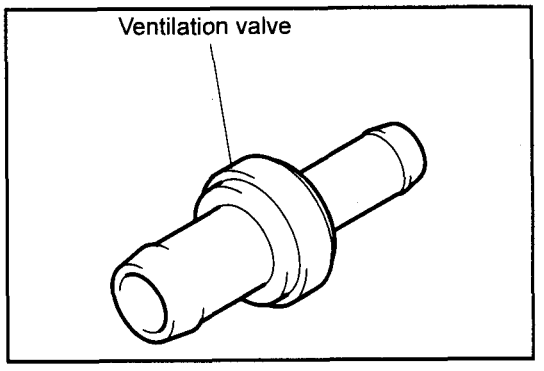

REMOVAL

1. Remove the hose between the ventilation valve and the throttle body.
2. Remove the ventilation valve from the cylinder head cover.

INSPECTION

1. Inspection of the ventilation valve
   Shake the ventilation valve with your hand, and inspect whether the rattling sound can be heard.

   If you can hear the rattling sound, then it is normal.
2. Inspection of the PCV device rubber hose
   Inspect for any damages, cracks or deterioration on the PCV device rubber hose. If there are any abnormalities, replace with a new one.

INSTALLATION

The installation procedure is the reverse of the removal procedure.

www.truck-freeworkshop.com

www.truck-freeworkshop.com

COOLING SYSTEM

Page

WATER PUMP 7-2

COMPONENTS 7-2

REMOVAL·INSPECTION·INSTALLATION 7-3

DISASSEMBLY·INSPECTION·REASSEMBLY 7-4

WATER TEMPERATURE SENSOR 7-6

REMOVAL 7-6

INSTALLATION 7-6

INSPECTION 7-6

www.truck-freeworkshop.com

WATER PUMP

COMPONENTS

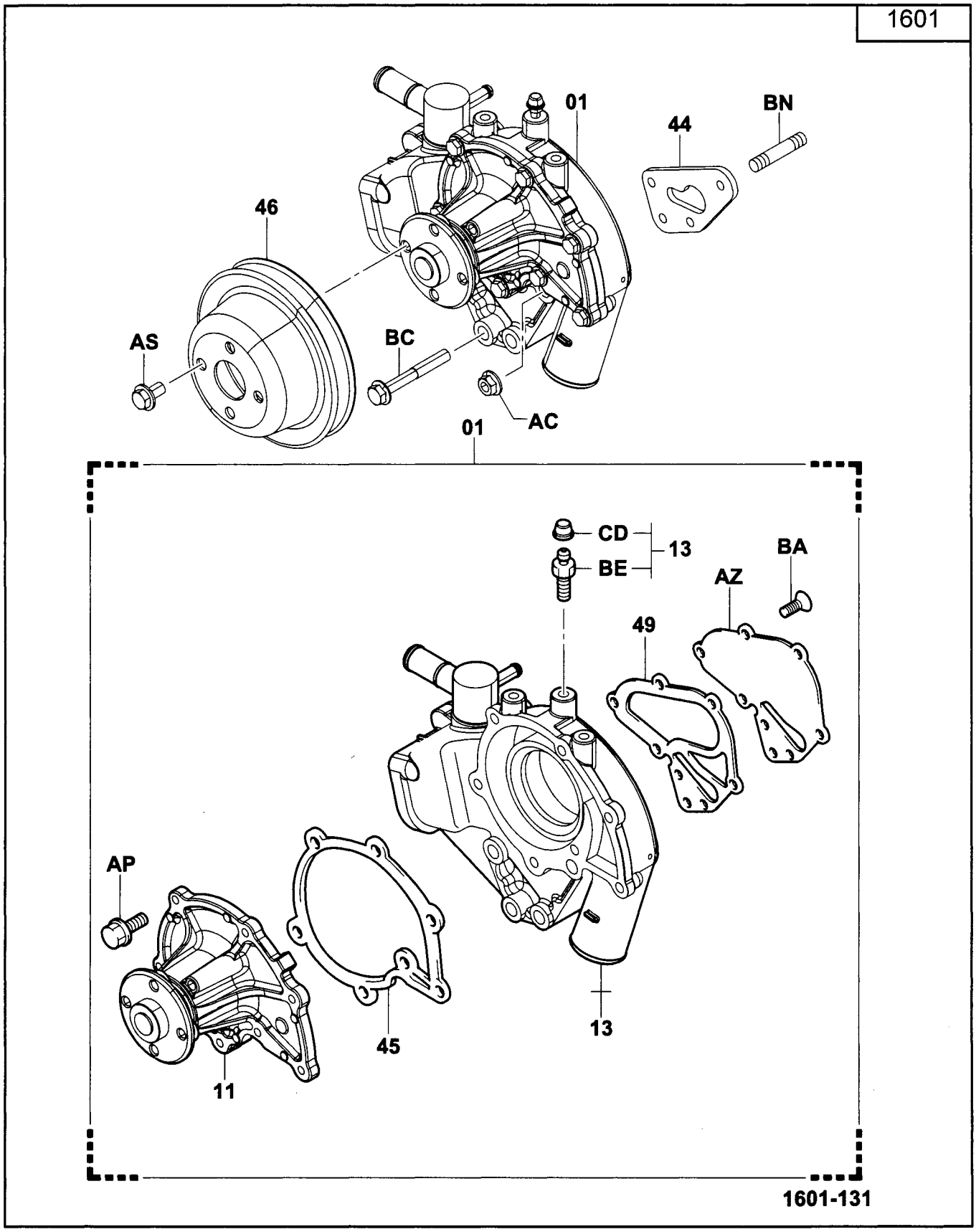

www.truck-freeworkshop.com

REMOVAL·INSPECTION·INSTALLATION

T = N·m (kgf·cm) [ft·lbf]

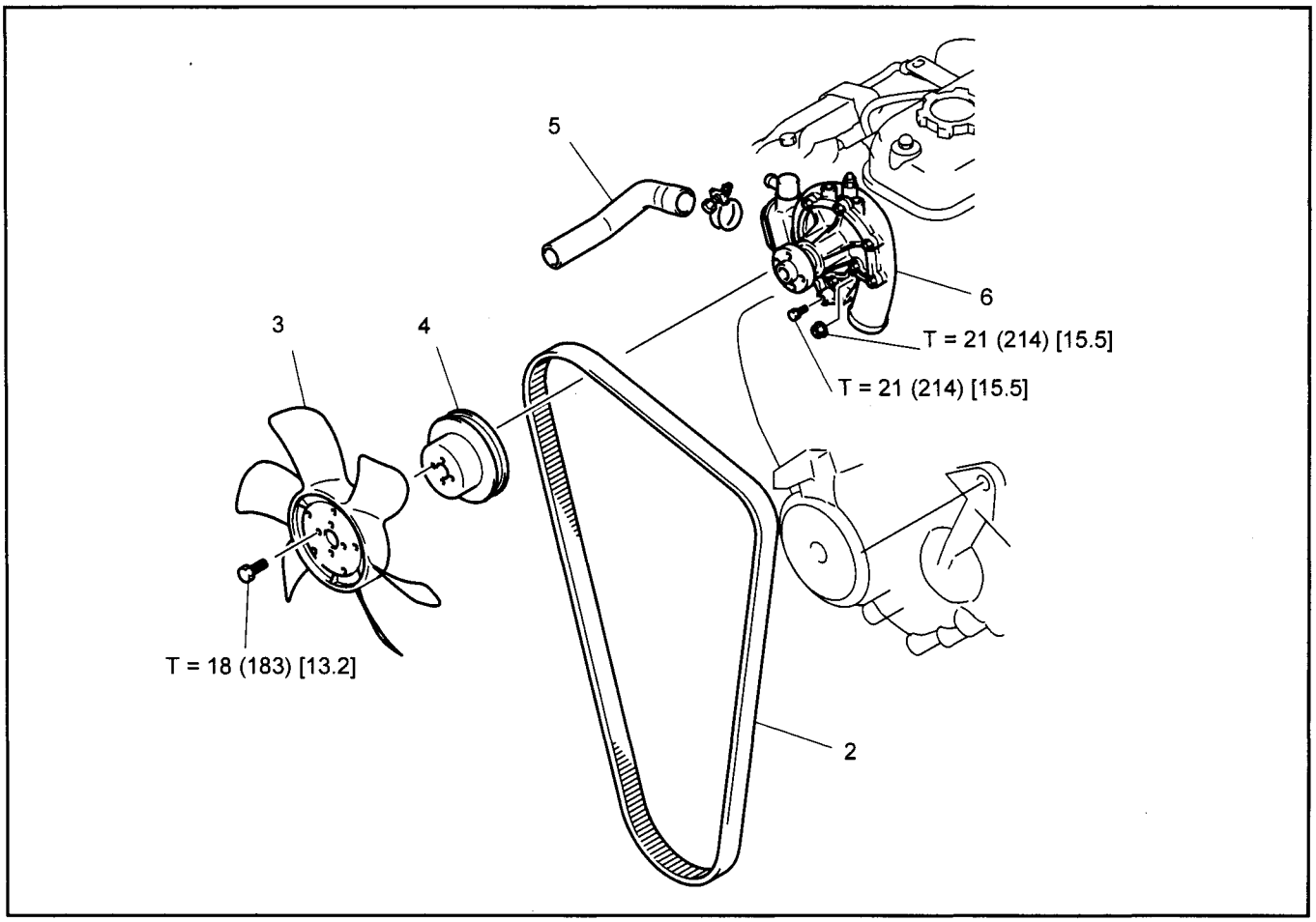

Removal·Installation Procedure

The installation procedure is the reverse of the removal procedure.

No.	Item	Removal	Inspection	Installation
1	Drain coolant.			
2	V-belt	See P3-4	←	←
3	Fan			
4	Fan pulley			
5	Radiator outlet hose			
6	Water pump			

www.truck-freeworkshop.com

DISASSEMBLY·INSPECTION·REASSEMBLY

T = N·m (kgf·cm) [ft·lbf]

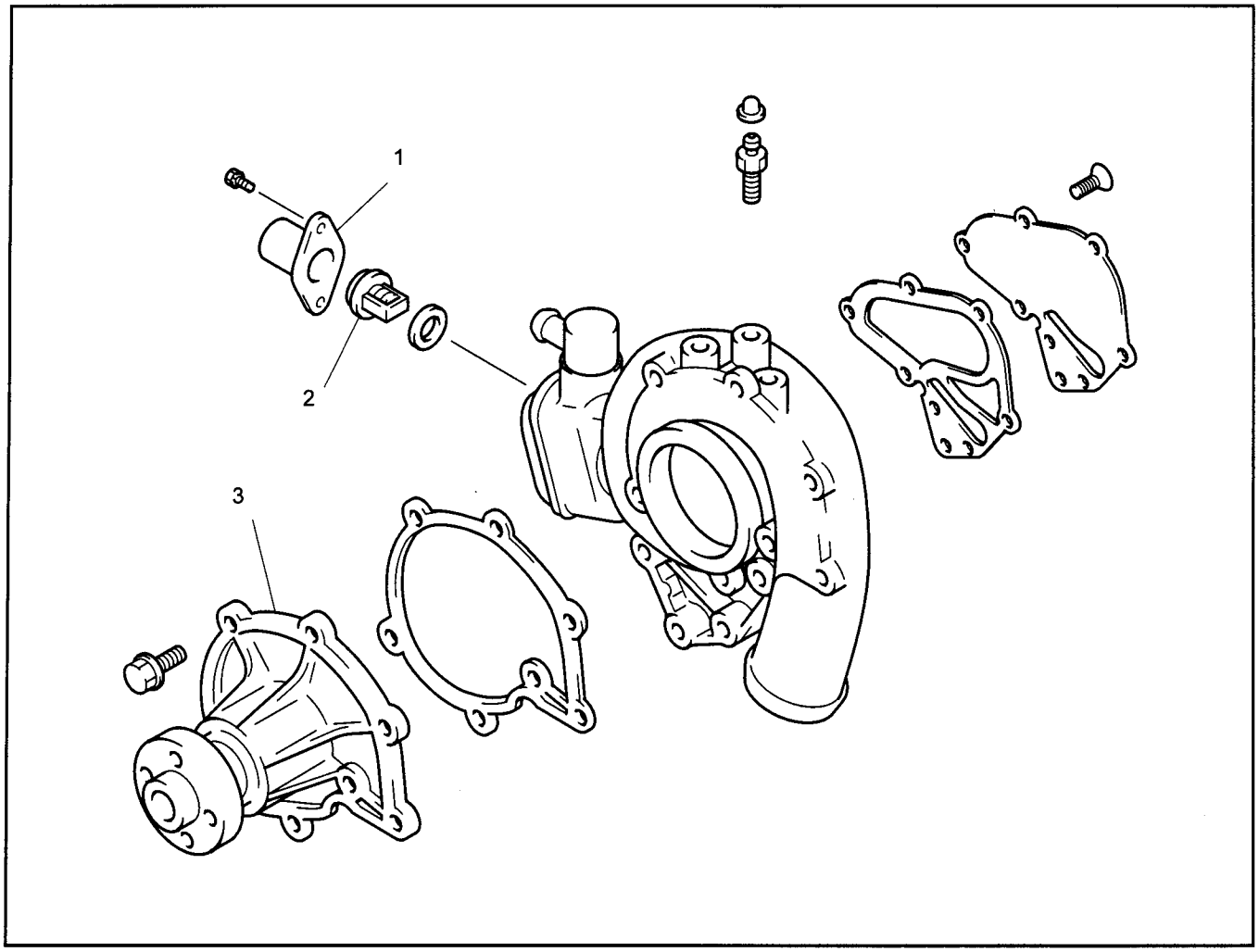

Disassembly·Reassembly Procedure

The reassembly procedure is the reverse of the disassembly procedure.

No.	Item	Disassembly	Inspection	Reassembly
1	Water inlet			
2	Thermostat		**[Point 1]**	**[Point 3]**
3	Water pump cover		**[Point 2]**	

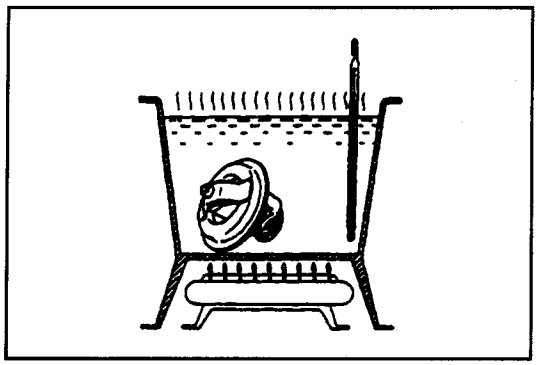

Point Operations

[Point 1]

Inspection:

Inspect the temperature when the valve starts to open, and the temperature when it is fully open.

1. Insert the thermostat into water and raise the temperature of water while stirring.

www.truck-freeworkshop.com

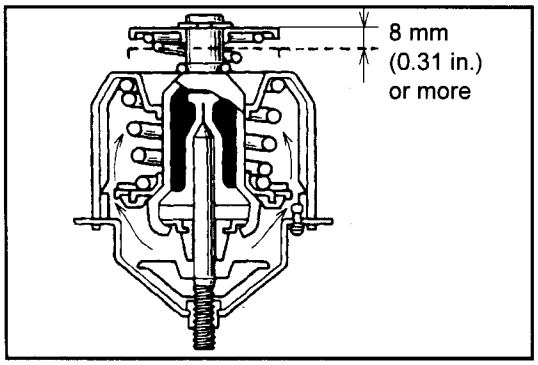

2. Measure the temperature at which the valve starts to open, and the temperature at which it is fully open.

   Standard
   Starts to open: 74.5 to 78.5°C (116 to 173°F)
   Fully open: 95°C (203°F)
   Lift amount when fully open: 8 mm (0.31 in.) or more

Note:
Replace the valve if it is open at room temperature, or if it does not seal well.

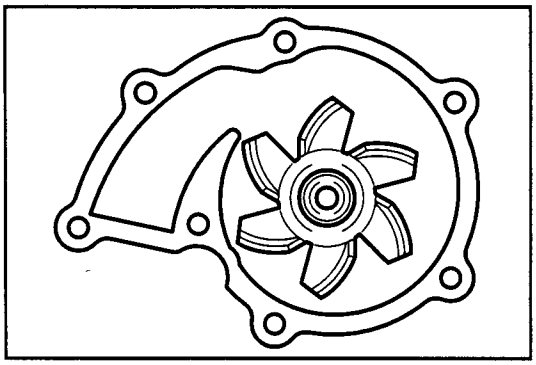

[Point 2]

Inspection:
Inspect the water pump.

1. Inspect the water pump rotor section for cracks, damage, and obvious rust.

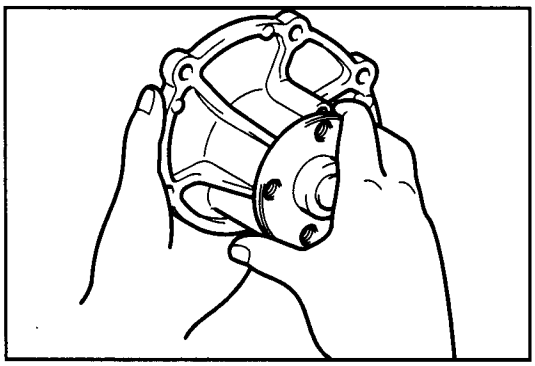

2. Manually rotate the water pump rotor to inspect for abnormal bearing noise, and to see that it turns smoothly.

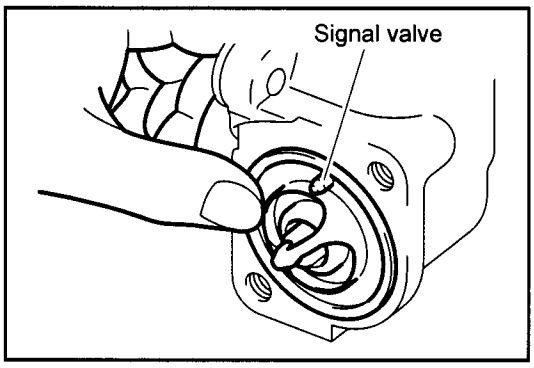

[Point 3]

Reassembly:
Install the gasket to the thermostat, and then install it to the water inlet.

Caution:
Make sure that the jiggle valve faces upward when installing the thermostat.

www.truck-freeworkshop.com

WATER TEMPERATURE SENSOR

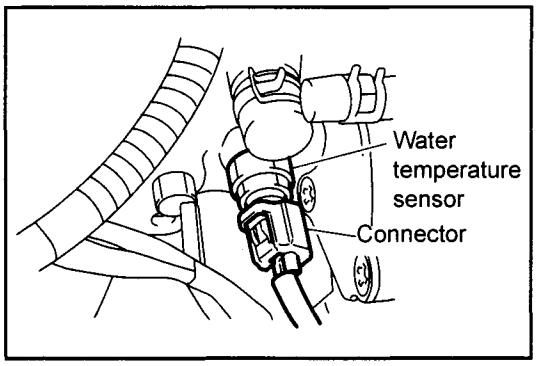

REMOVAL

1. Disconnect the connector.
2. Remove the water temperature sensor.

Note:

- **Set the offset wrenches on both the extension and the water temperature sensor, and remove the water temperature sensor without turning the extension.**
- **If the extension is loose, wrap the seal tape and install it to the cylinder head.**

  T = 29.10 ± 5.0 N·m (296 ± 50 kgf·cm) [21.4 ± 3.6 ft·lbf]

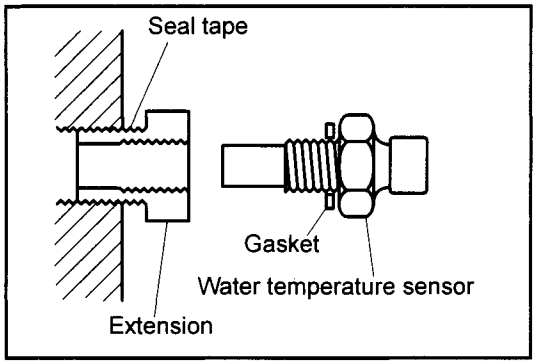

INSTALLATION

The installation procedure is the reverse of the removal procedure.

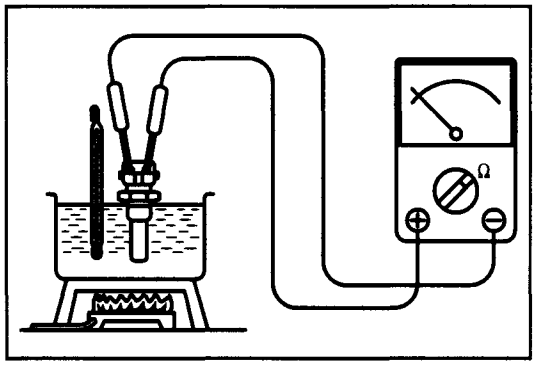

INSPECTION

Using the circuit tester, measure the resistance value between the terminals according to temperature changes.

Note:
By disconnecting the harness connector from the water temperature sensor, you can also measure the resistance while the engine is mounted.

( ) reference value

Temperature (°C) [°F]	-20 [-4]	0 [32]	20 [68]	80 [176]	110 [230]
Resistance (kΩ)	16.2 ± 1.6	(5.88)	2.45 ± 0.24	0.32 ± 0.03	(0.14)

www.truck-freeworkshop.com

LUBRICATION SYSTEM

Page

SST TO BE USED 8-2

OIL PRESSURE INSPECTION 8-3

ENGINE OIL·OIL FILTER REPLACEMENT 8-4

OIL PUMP·STRAINER 8-5

COMPONENTS 8-5

REMOVAL·INSPECTION·INSTALLATION 8-6

DISASSEMBLY·INSPECTION·REASSEMBLY..... 8-8

www.truck-freeworkshop.com

SST TO BE USED

Illustration	Part No.	Part name
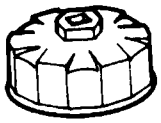	09228-76001-71 (09228-06501)	Oil filter wrench

www.truck-freeworkshop.com

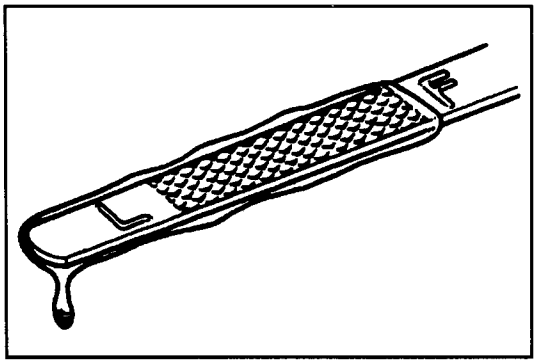

OIL PRESSURE INSPECTION

1. Inspect the oil.

   Standard:
   The level should read between F and L on the level gauge.
   The oil should not be markedly dirty and be of appropriate viscosity.
   There should be no contamination of coolant or gasoline.

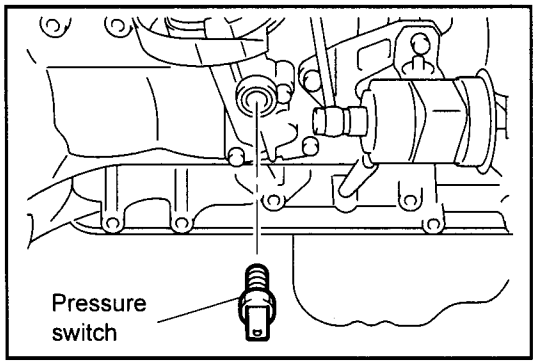

2. Measure the oil pressure.

   (1) Remove the pressure switch, and install the oil pressure gauge.

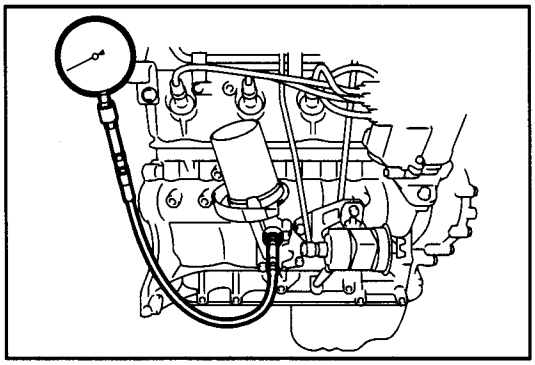

   (2) Warm up the engine and measure the oil pressure.

   Standard
   Coolant temperature: 75 to 85°C (167 to 185°F)
   Operating oil temperature: 50°C or more (122°F)

   Standard
   Idle speed: 29.42 kPa (0.3 kgf/cm^2) [4.3 psi] or more
   2000 rpm: 196 to 441 kPa (2.0 to 4.5 kgf/cm^2) [28.4 to 64.0 psi] or more

3. Install the pressure switch.

   T = 20 N·m (204 kgf·cm) [14.8 ft·lbf]

www.truck-freeworkshop.com

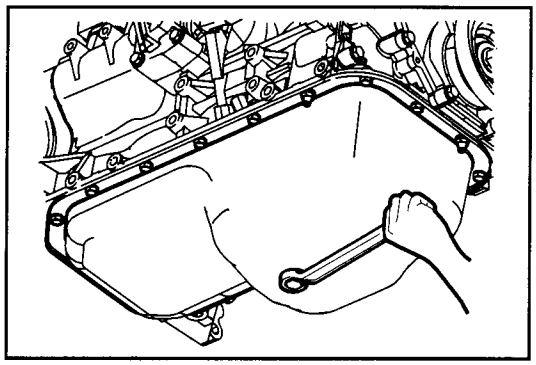

ENGINE OIL·OIL FILTER REPLACEMENT

1. Drain the engine oil.
   (1) Remove the oil filler cap.
   (2) Remove the oil drain plug and drain the oil.

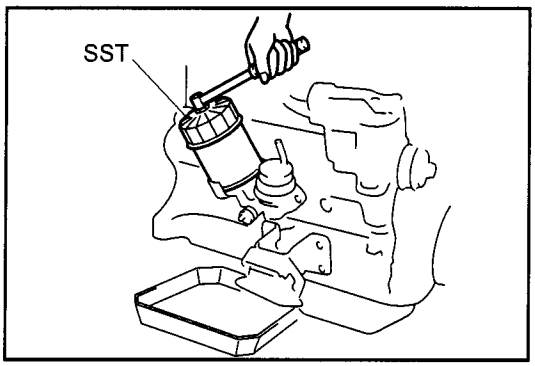

2. Use the SST and remove the oil filter.

   SST 09228-76001-71
   (09228-06501)

3. Install the oil filter.
   Hand tighten the oil filter with an O-ring fitted. Use the SST to tighten an additional 3/4 turn from the hand-tight position.

   SST 09228-76001-71
   (09228-06501)

Caution:
- **Apply a small amount of engine oil to the O-ring.**
- **Clean the surface to which the O-ring will be attached.**

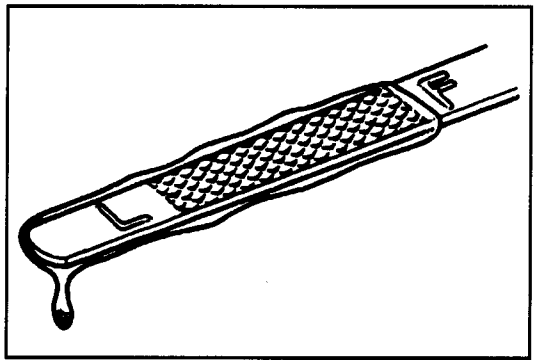

4. Pour in engine oil.
   (1) Install the oil drain plug with a new gasket.

Caution:
Before attaching the plug, remove the old gasket stuck on the oil pan and clean the surface to which the new gasket will be attached.

   (2) Pour in engine oil.
   Oil pan capacity: 4.0 ℓ (1.1 US gal)
   (3) Attach the oil filler cap.

5. Inspect the oil level.
   Check using the oil level gauge.
6. Inspect for oil leaks.
   Start the engine, and check that no oil is leaking.
7. Check the oil level.
   After inspecting for oil leaks, check the oil level again.

Note:
Wait 3 minutes after stopping the engine before checking the oil level.

www.truck-freeworkshop.com

OIL PUMP·STRAINER

COMPONENTS

1501

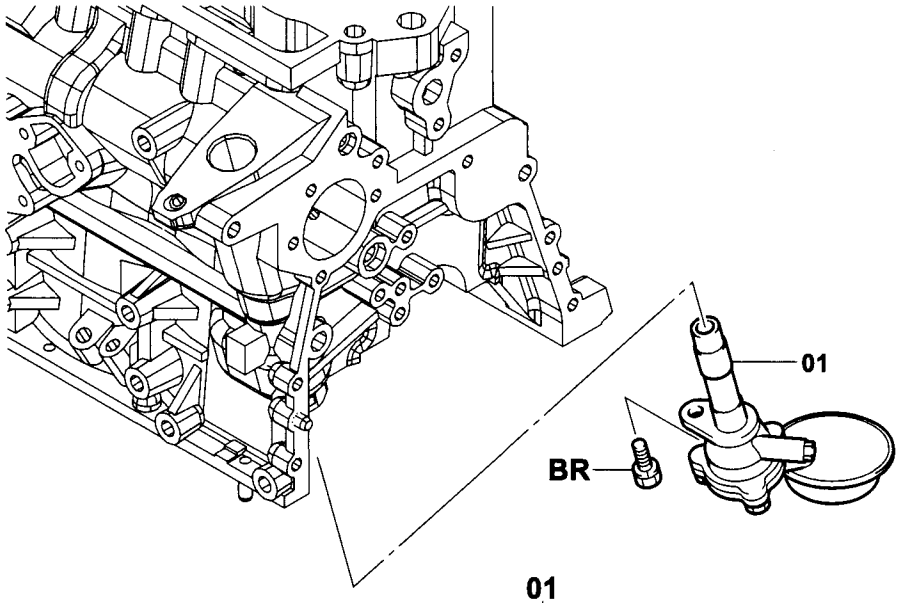

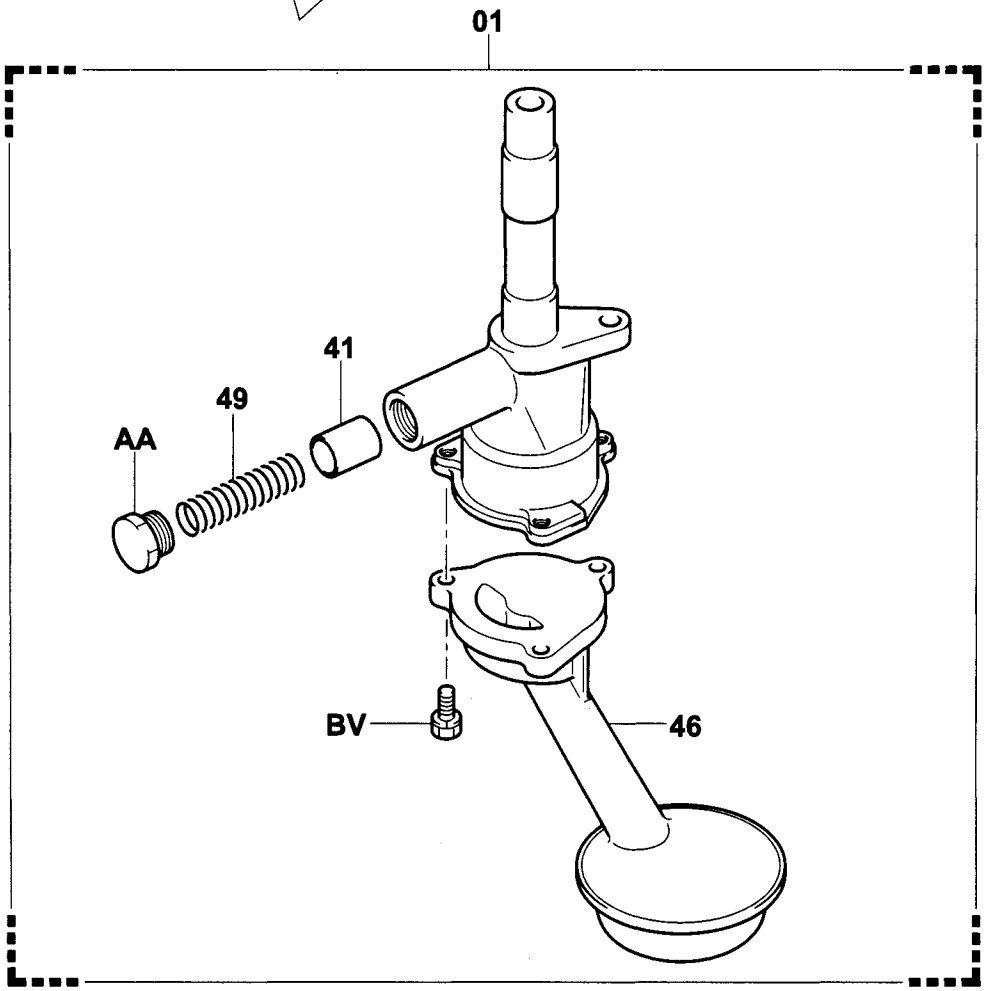

1501-086

www.truck-freeworkshop.com

REMOVAL·INSPECTION·INSTALLATION

T = N·m (kgf·cm) [ft·lbf]

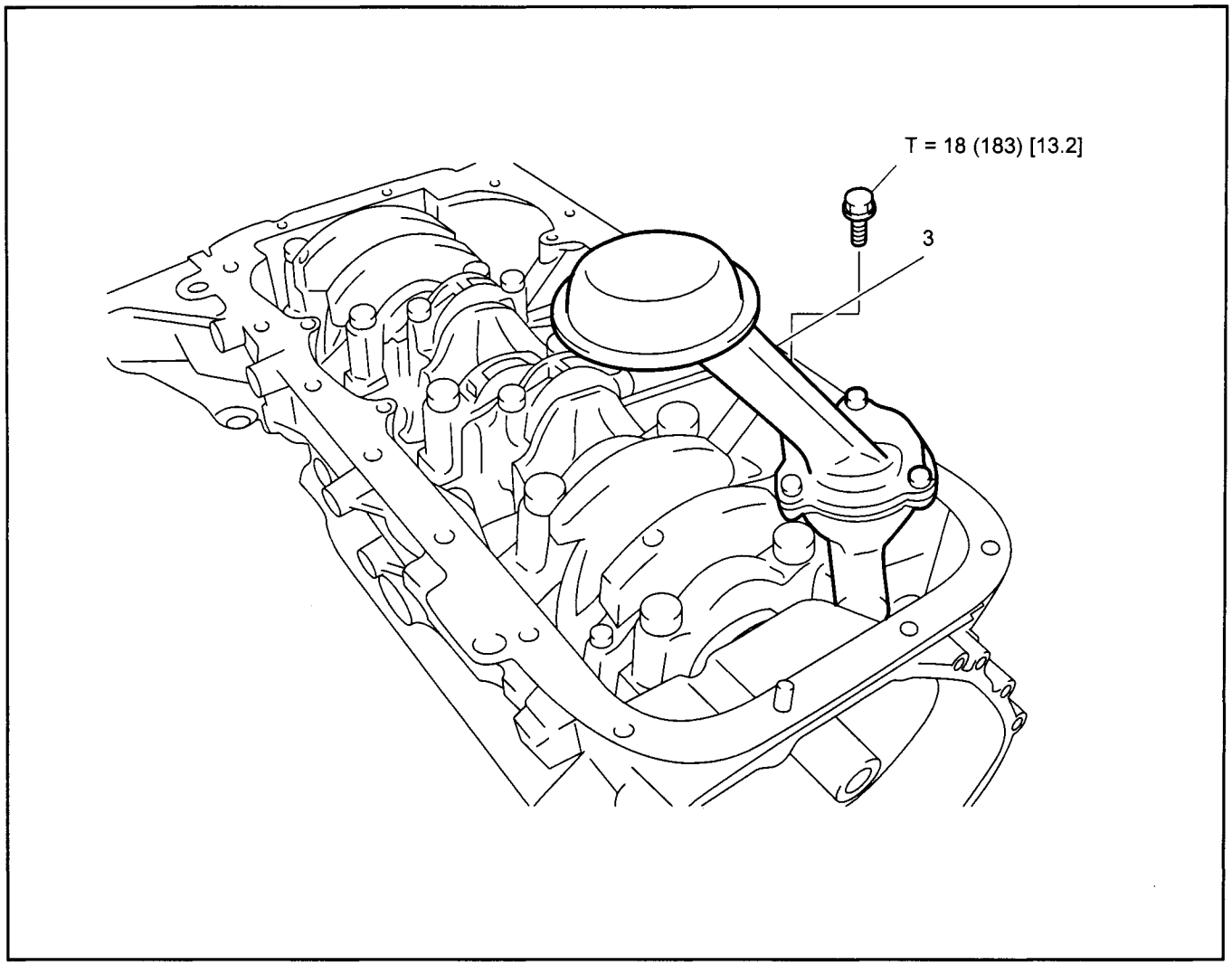

Removal·Installation Procedure

The installation procedure is the reverse of the removal procedure.

No.	Item	Removal	Inspection	Installation
1	Engine oil	See P8-4	←	←
2	Oil pan	See P2-22	←	←
3	Oil pump w/ strainer		**[Point 1]**	**[Point 2]**

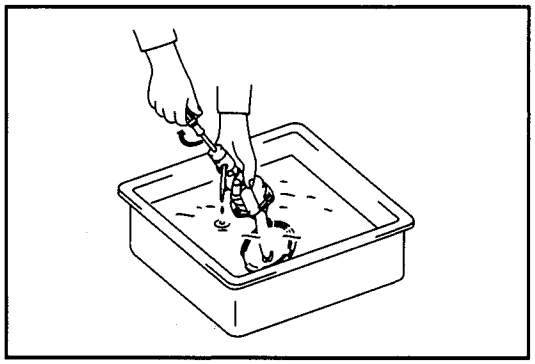

Point Operations

[Point 1]

Inspection:

Oil pump function inspection

1. As shown in the left illustration, soak the intake side (strainer side) of the oil pump in oil, and turn the pump shaft clockwise with a flat-blade screwdriver. Check that oil is discharged from the oil discharge hole.

www.truck-freeworkshop.com

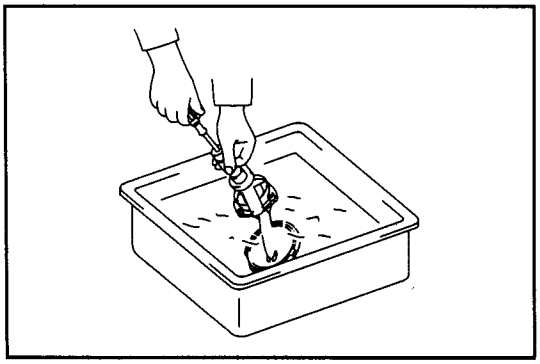

2. Block the discharge hole with your finger, and turn the oil pump shaft clockwise. Check that the shaft does not rotate.

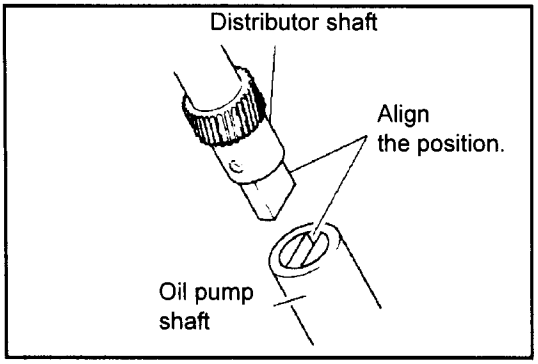

[Point 2]

Installation:

Install the oil pump w/ strainer to the cylinder block.

Caution:

Turn the pump shaft to align the position of the protruding portion at the tip of the distributor shaft and the slit at the tip of the oil pump shaft.

www.truck-freeworkshop.com

DISASSEMBLY·INSPECTION·REASSEMBLY

T = N·m (kgf·cm) [ft·lbf]

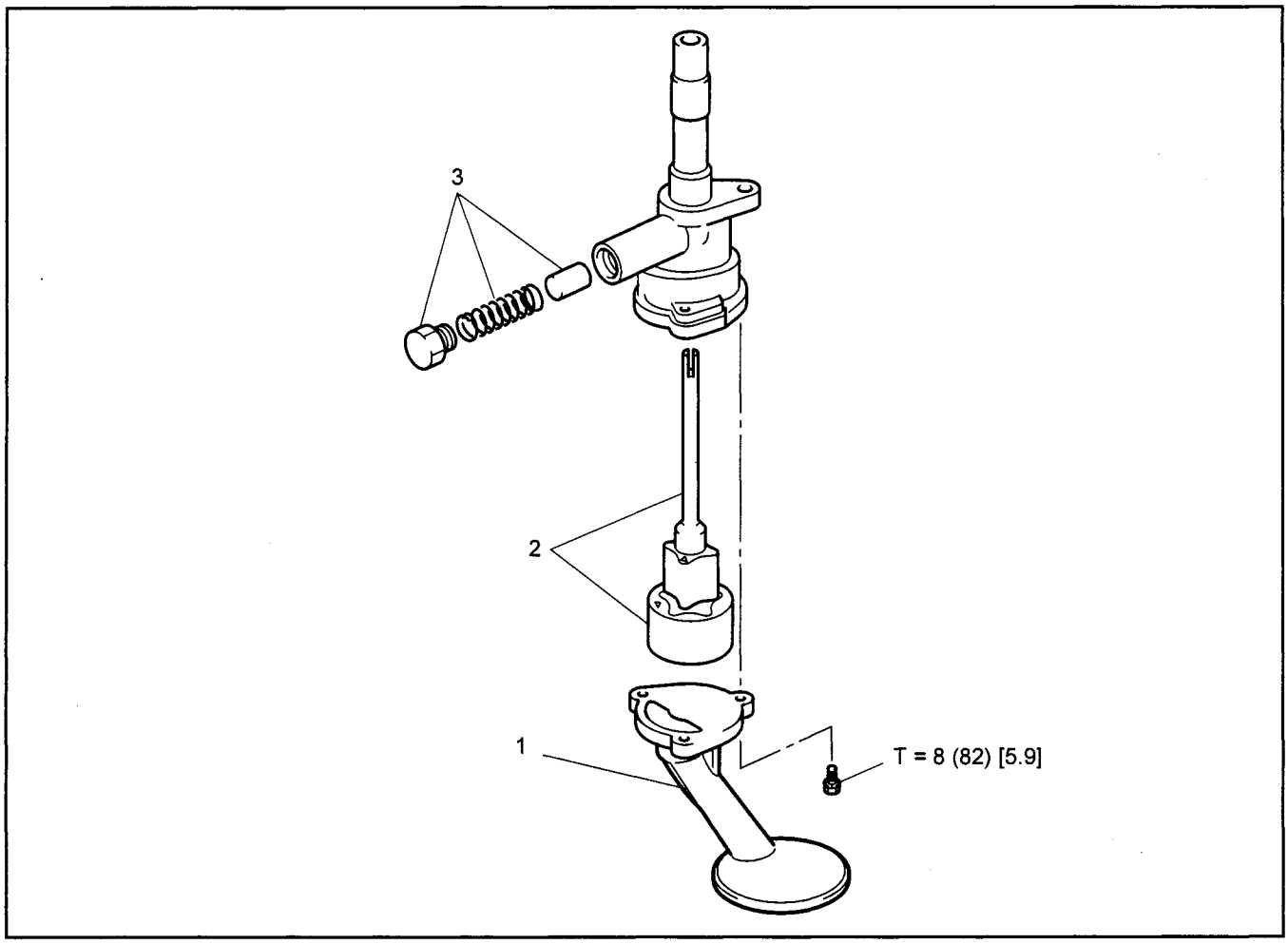

Disassembly·Reassembly Procedure

The reassembly procedure is the reverse of the disassembly procedure.

No.	Item	Disassembly	Inspection	Reassembly
1	Oil strainer			
2	Drive and driven rotors		**[Point 1]**	**[Point 2]**
3	Relief valve			

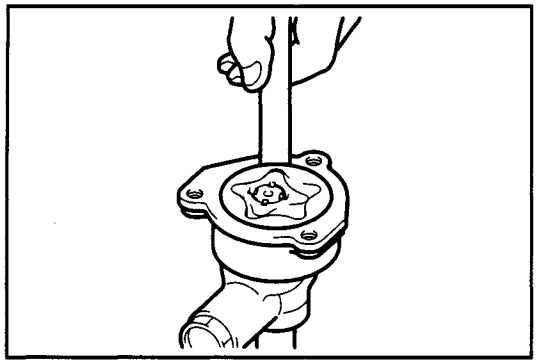

Point Operations

[Point 1]

Inspection:

Inspection of drive and driven rotors

1. Using the thickness gauge, measure the clearance (body clearance) between the driven rotor and the pump body.

   Standard: 0.10 to 0.16 mm (0.0039 to 0.0063 in.)
   Limit: 0.20 mm (0.008 in.)

www.truck-freeworkshop.com

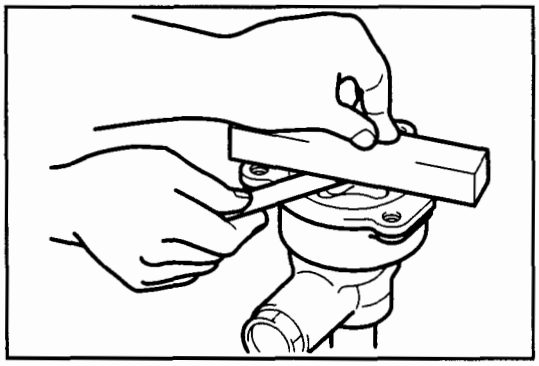

2. Measure the side clearance of the rotor using a straight edge ruler and the thickness gauge.

   Standard: 0.03 to 0.09 mm (0.0012 to 0.0035 in.)
   Limit: 0.15 mm (0.0059 in.)

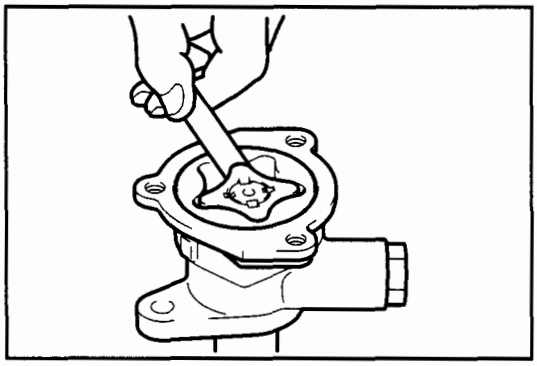

3. Using a thickness gauge, measure the tip clearance of the drive rotor and the driven rotor.

   Standard: 0.06 to 0.15 mm (0.0024 to 0.0059 in.)
   Limit: 0.2 mm (0.008 in.)

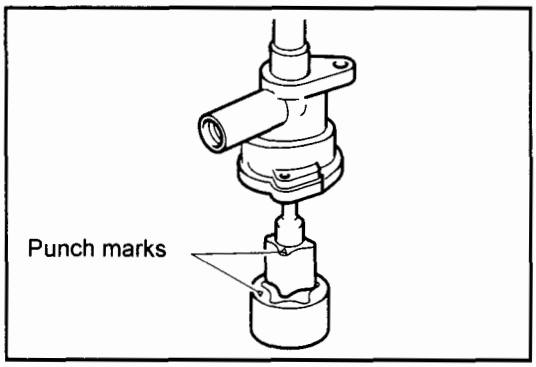

[Point 2]

Reassembly:

Install the drive and driven rotors with the punch marks on the drive rotor and the driven rotor facing the pump body.

www.truck-freeworkshop.com

www.truck-freeworkshop.com

IGNITION SYSTEM (4Y-M)

Page

CIRCUIT DIAGRAM 9-2

SPARK PLUGS 9-3

INSPECTION 9-3

DISTRIBUTOR 9-4

COMPONENTS 9-4

ON-VEHICLE INSPECTION 9-5

REMOVAL·INSPECTION·INSTALLATION 9-7

DISASSEMBLY·INSPECTION·REASSEMBLY 9-8

www.truck-freeworkshop.com

CIRCUIT DIAGRAM

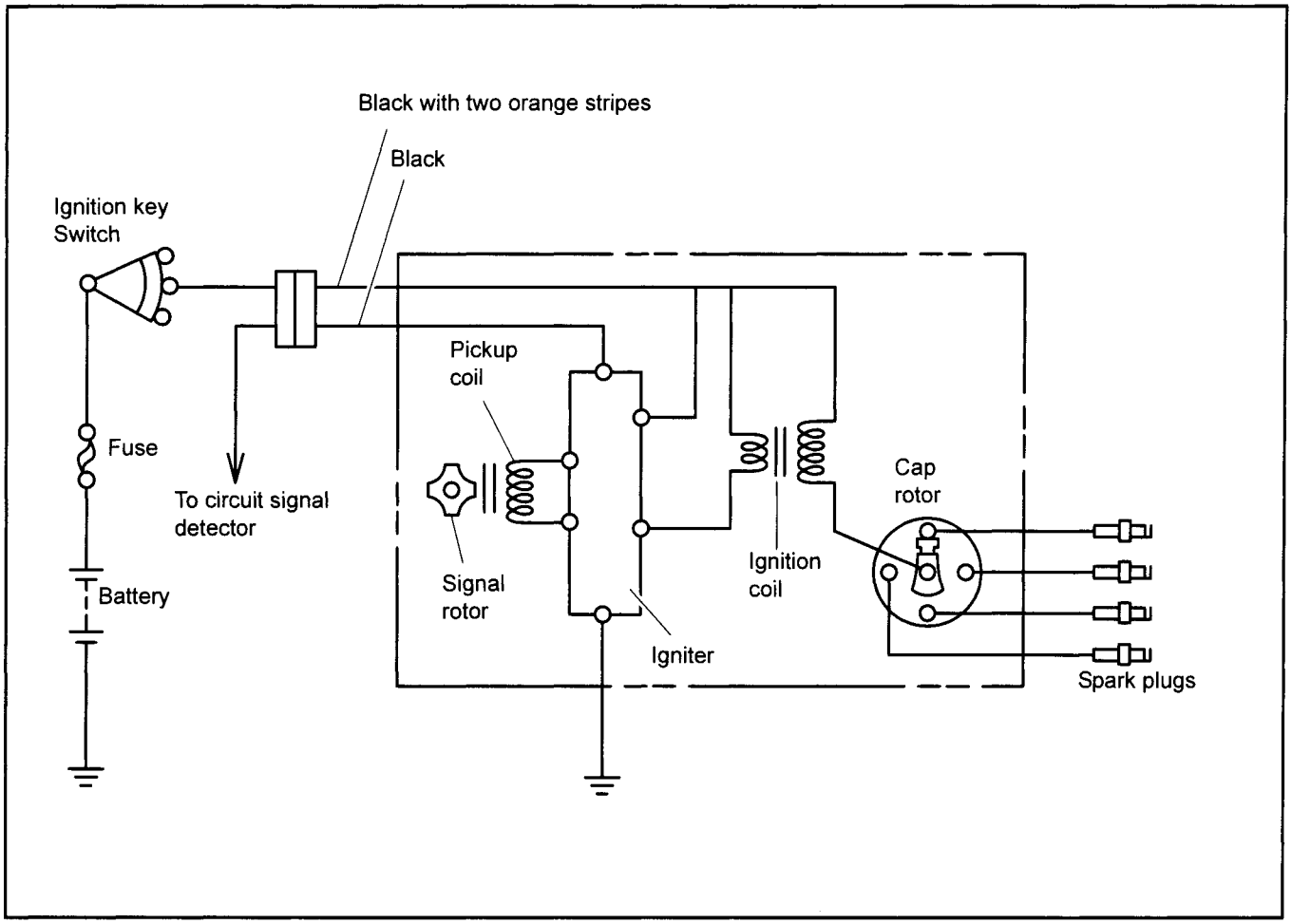

www.truck-freeworkshop.com

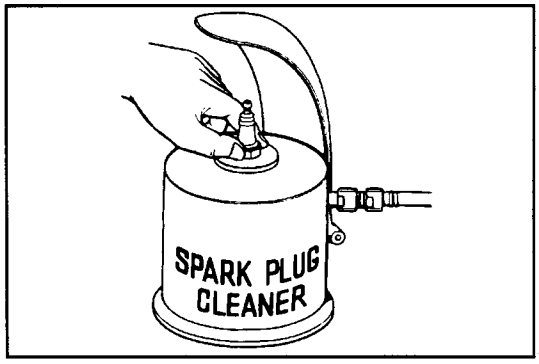

SPARK PLUGS

INSPECTION

1. Clean the spark plugs using the spark plug cleaner.
2. Inspect the spark plugs, and replace any that are abnormal.

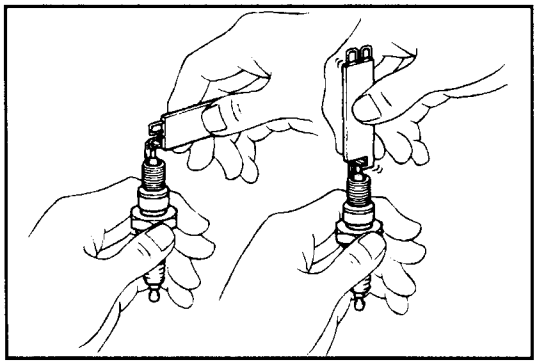

3. Inspection of the plug gap

   Standard: 0.7 to 0.8 mm (0.028 to 0.031 in.)

www.truck-freeworkshop.com

DISTRIBUTOR

COMPONENTS

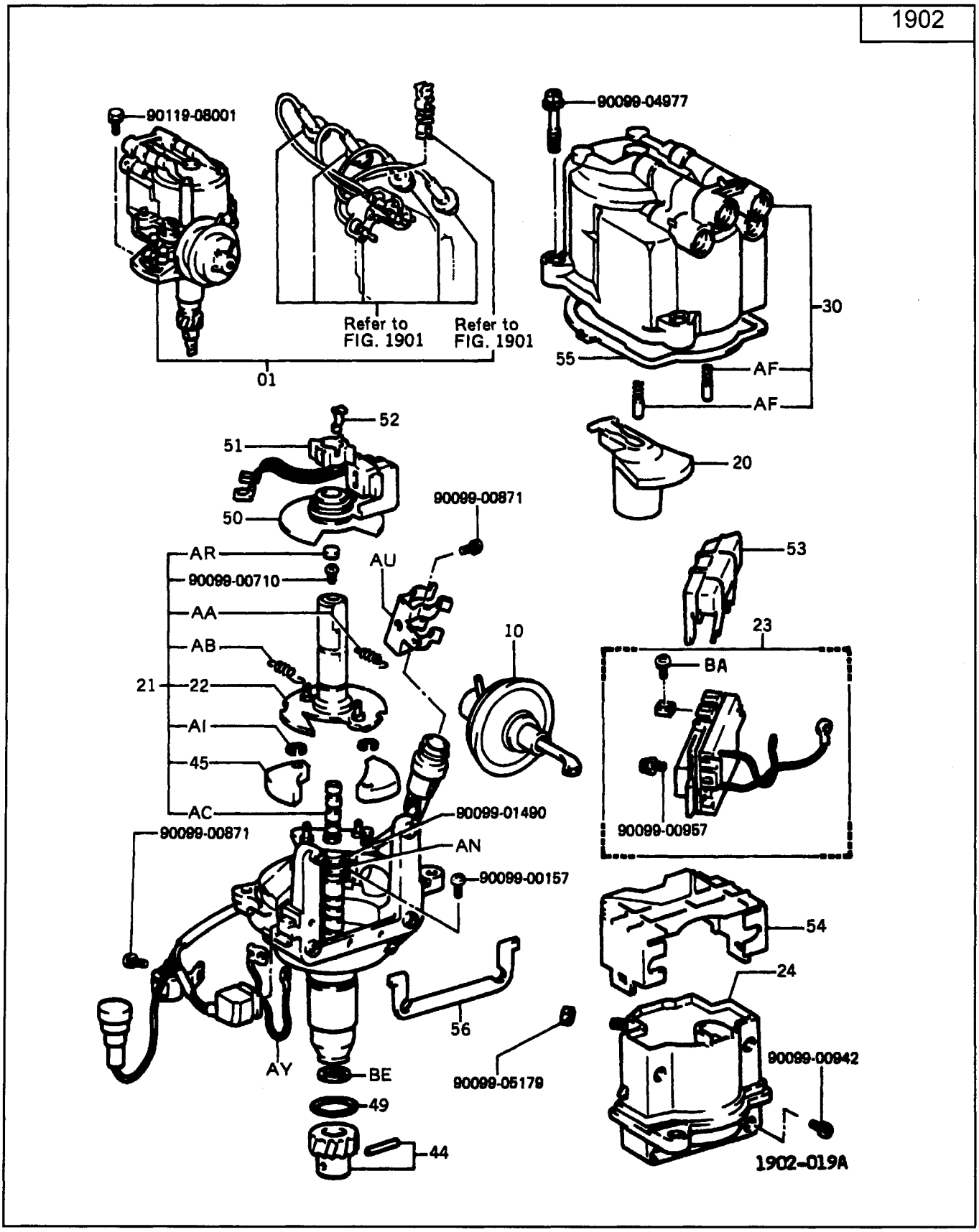

www.truck-freeworkshop.com

ON-VEHICLE INSPECTION

Caution:

- **Do not confuse the positive and negative terminals of the battery.**
- **Do not remove the battery cable while the engine is running.**
- **Do not perform any operations that generate destructive pulse.**
- **Make sure the firm connection without any wrong wiring.**
- **When pulling out the resistive cord, do not pull the cord section.**

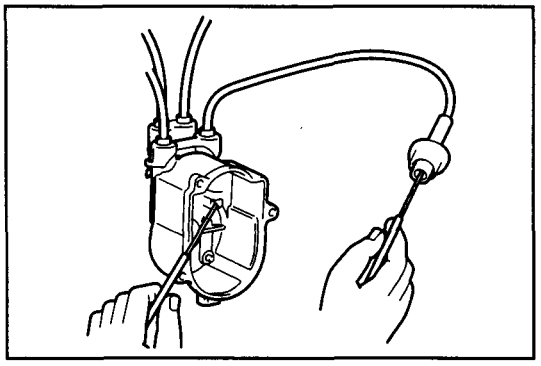

1. Inspection of the resistive cord
   (1) Remove the distributor cap.
   (2) Using the circuit tester, measure the resistance of the resistive cord.

   Limit: less than 25 kΩ/one cord

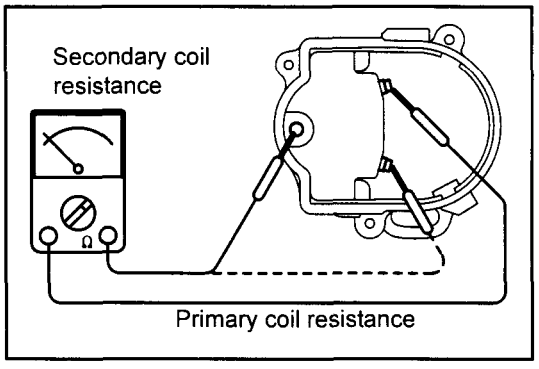

2. Inspection of the ignition coil
   (1) Measurement of the primary coil resistance

   Standard: 1.2 to 1.5 Ω

   (2) Measurement of the secondary coil resistance

   Standard: 7.7 to 10.4 kΩ

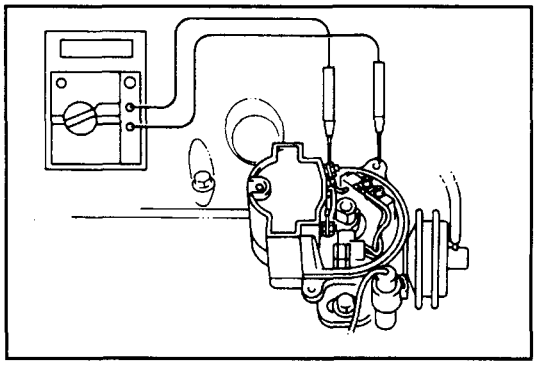

3. Inspection of the igniter
   Remove the distributor cap, the rotor, and the dust cover.
   (1) Inspection of the input voltage
      (a) Turn the ignition key switch on.
      (b) Measure the voltage between the positive terminal of the ignition coil and the earth.

      Standard: approx. 12 V

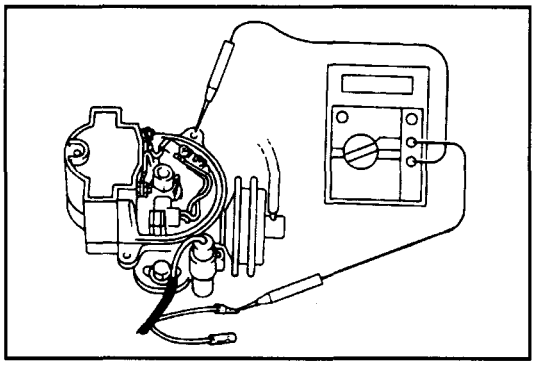

   (2) Inspection of the transistor OFF
      (a) Turn the ignition key switch on.
      (b) Disconnect the inspection connector.
      (c) Measure the voltage between the black wire side of the inspection connector and the earth.

      Standard: approx. 12 V

www.truck-freeworkshop.com

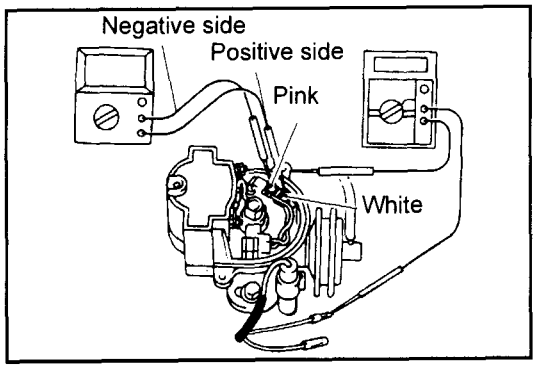

(3) Inspection of the transistor ON

(a) Turn the ignition key switch on.

(b) Measure the voltage between the inspection connector and the earth.

Standard: approx. 0 to 3 V

Caution:
- **Make sure that the polarity is correct.**
- **Perform the inspection within 10 seconds.**

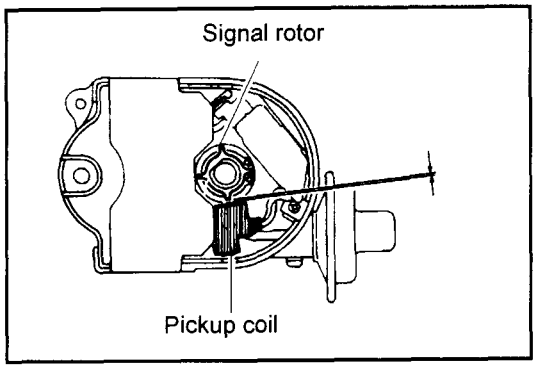

4. Inspection of the distributor

(1) Inspection of the air gap
Using the thickness gauge, measure the gap between the signal rotor and the pickup coil.

Standard: 0.2 to 0.4 mm (0.008 to 0.016 in.)

If it is outside the standard, replace the signal generator.

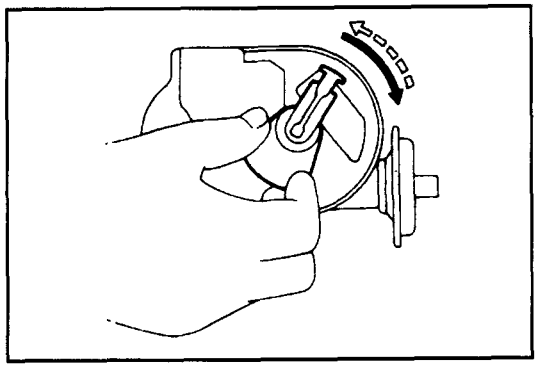

(2) Inspection of the governor process
Turn the rotor to the right, and inspect whether the rotor returns smoothly.

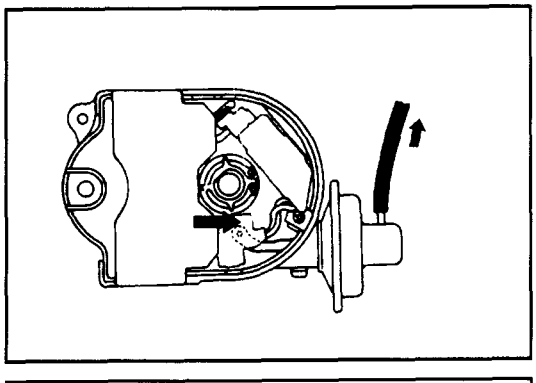

(3) Inspection of the vacuum advancer
Disconnect the vacuum hose, and apply approx. 400 mmHg negative pressure to the diaphragm, and check that the vacuum advancer moves. If the vacuum advancer does not move, replace the vacuum advancer.

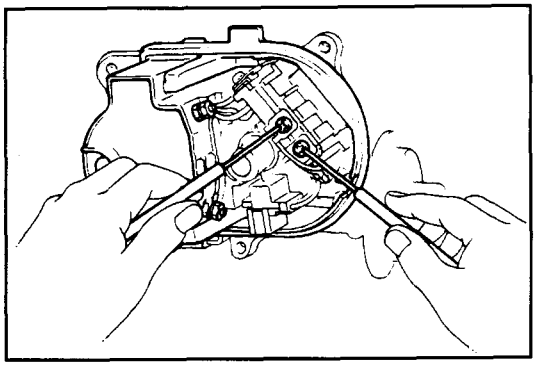

(4) Inspection of the pickup coil

(a) Turn the ignition key switch off.

(b) Using the circuit tester, measure the resistance of the pickup coil.

Standard: 140 to 180 Ω

If it is outside the standard, replace the signal generator.

www.truck-freeworkshop.com

REMOVAL·INSPECTION·INSTALLATION

T = N·m (kgf·cm) [ft·lbf]

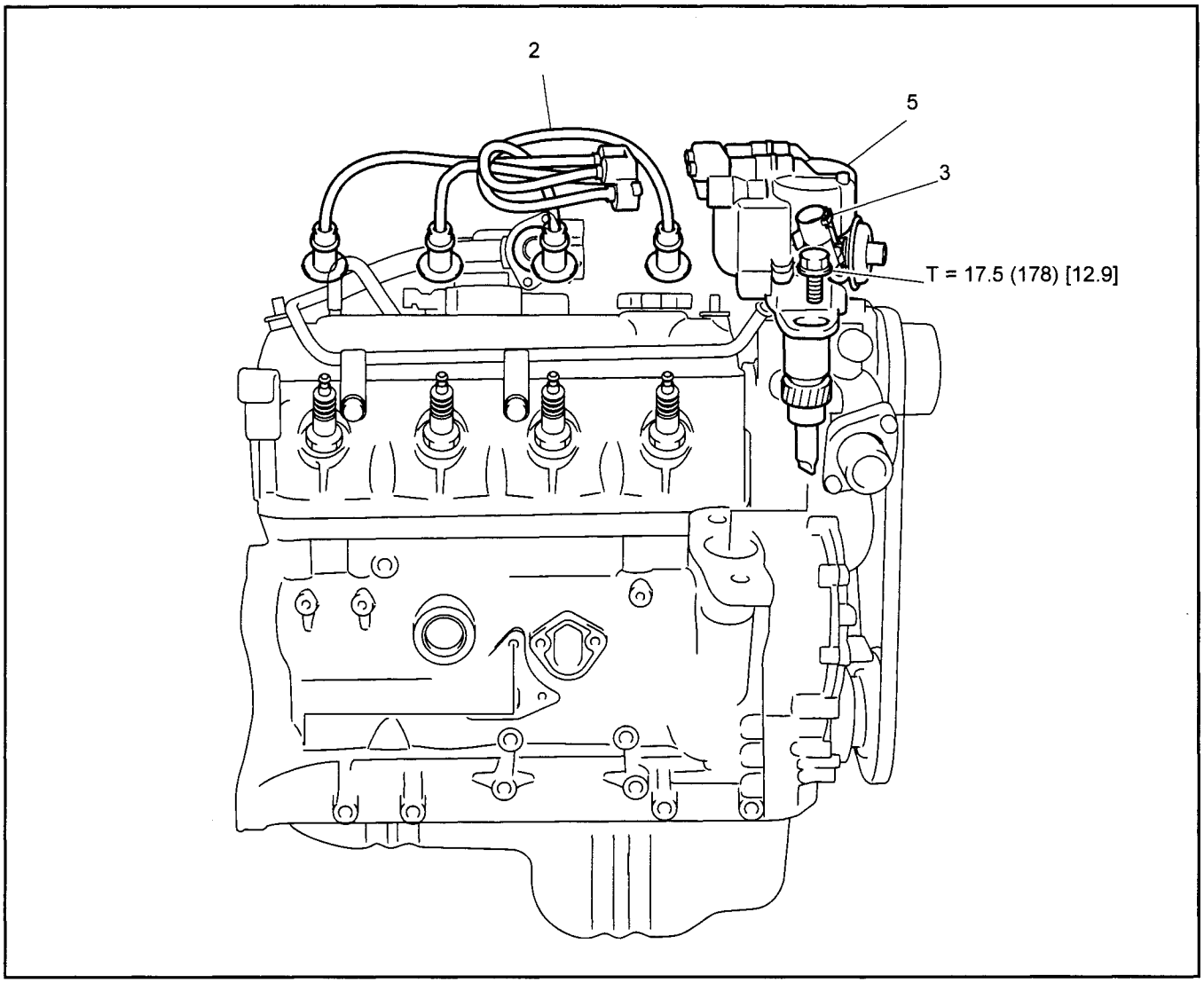

Removal·Installation Procedure

The installation procedure is the reverse of the removal procedure.

No.	Item	Removal	Inspection	Installation
1	Battery negative terminal			
2	Resistive cord			
3	Connector			
4	Vacuum advancer hose			
5	Distributor			See P2-4

www.truck-freeworkshop.com

DISASSEMBLY·INSPECTION·REASSEMBLY

T = N·m (kgf·cm) [ft·lbf]

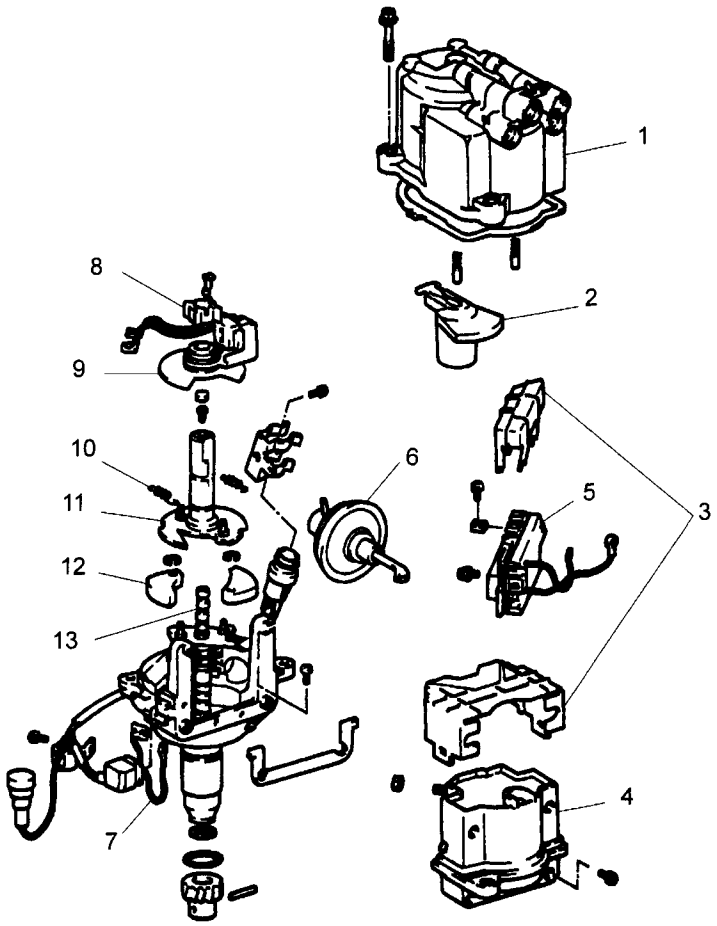

Disassembly·Reassembly Procedure

The reassembly procedure is the reverse of the disassembly procedure.

No.	Item	Disassembly	Inspection	Reassembly
1	Distributor cap			
2	Distributor rotor			
3	Dust cover			
4	Ignition coil			**[Point 15]**
5	Igniter			**[Point 14]**
6	Vacuum advancer	**[Point 1]**		**[Point 13]**
7	Distributor wire			
8	Signal rotor	**[Point 2]**		**[Point 12]**
9	Signal generator ASSY		**[Point 3]**	
10	Governor spring			
11	Signal rotor shaft	**[Point 4]**	**[Point 5]**	**[Point 11]**
12	Governor weight	**[Point 6]**		**[Point 10]**
13	Governor shaft	**[Point 7]**	**[Point 8]**	**[Point 9]**

www.truck-freeworkshop.com

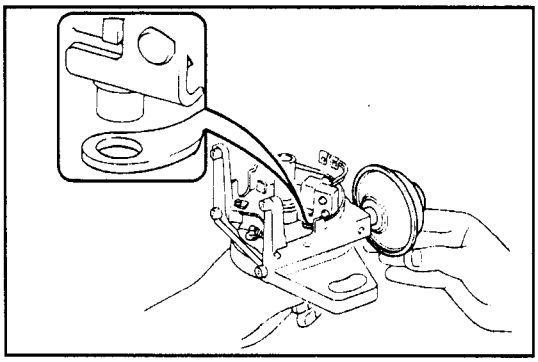

Point Operations

[Point 1]

Disassembly:

Disconnect the advancer link from the plate pin of the signal generator ASSY, and remove the advancer.

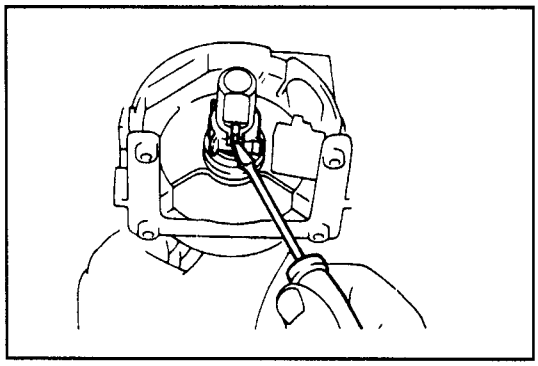

[Point 2]

Disassembly:

Remove the signal rotor.

1. Using the screwdriver, pull out the rotor set spring.
2. Remove the signal rotor.

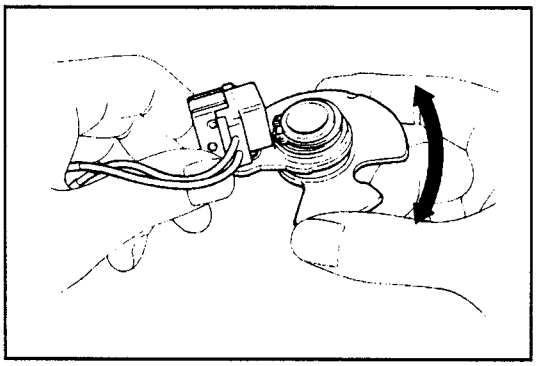

[Point 3]

Inspection:

Inspection of the breaker plate

Rotate the breaker plate, and check that there are no drags or jamming.

If there are any drags or jamming, replace the signal generator ASSY.

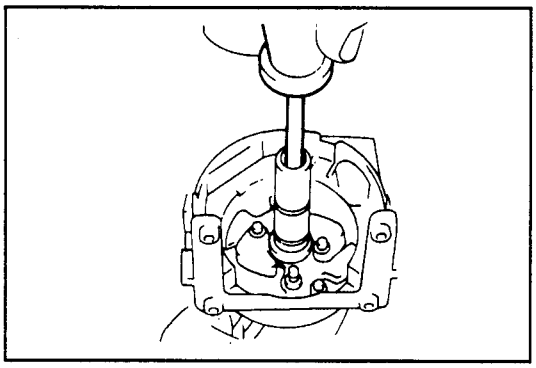

[Point 4]

Disassembly:

Remove the signal rotor shaft.

1. Remove the cam cap.
2. Remove the screw, and remove the signal rotor shaft.

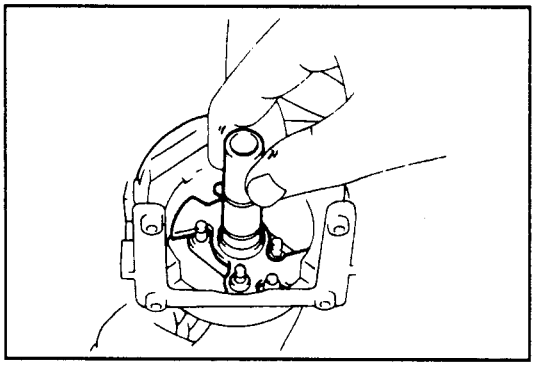

[Point 5]

Inspection:

Inspection of the signal rotor shaft

Install the signal rotor shaft to the governor shaft, and check for looseness.

If it is loose, replace the signal rotor or the governor shaft.

www.truck-freeworkshop.com

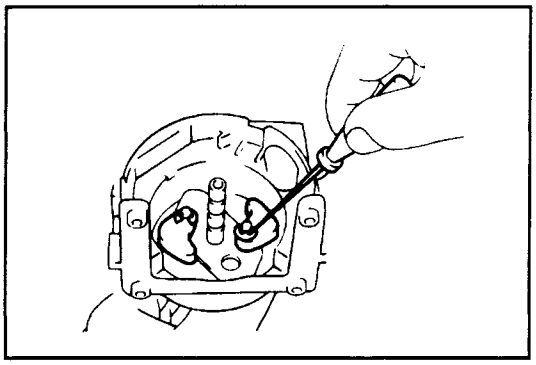

[Point 6]

Disassembly:

Remove the governor weight.

Using the screwdriver, remove the snap ring and two governor weights.

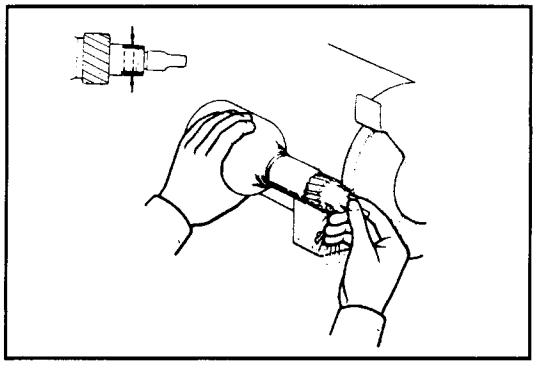

[Point 7]

Disassembly:

Remove the governor shaft.

1. Remove the spiral gear.
   (1) Using the grinder, shave off the caulking portion of the pin.

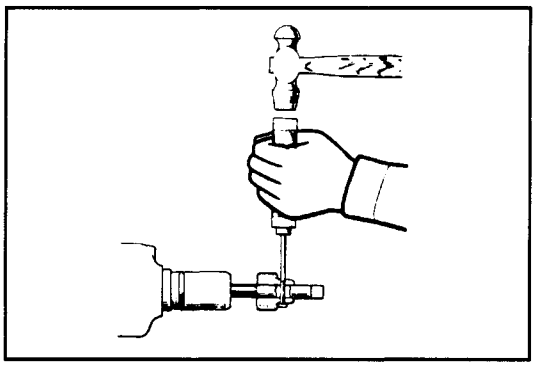

   (2) Using the pin punch, knock out the straight pin.
   (3) Remove the spiral gear and the thrust washer.
2. Remove the governor shaft and the thrust washer.

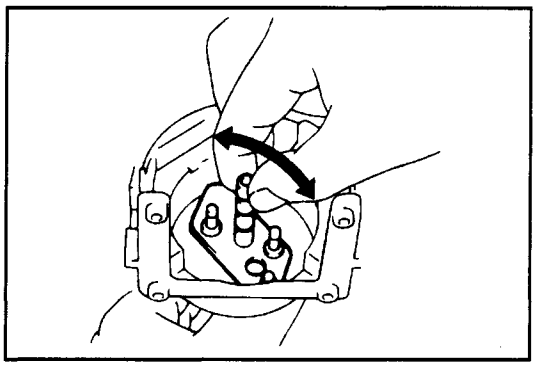

[Point 8]

Inspection:

Inspection of the governor shaft

1. Rotate the governor shaft, and check the condition of the governor shaft rotation.

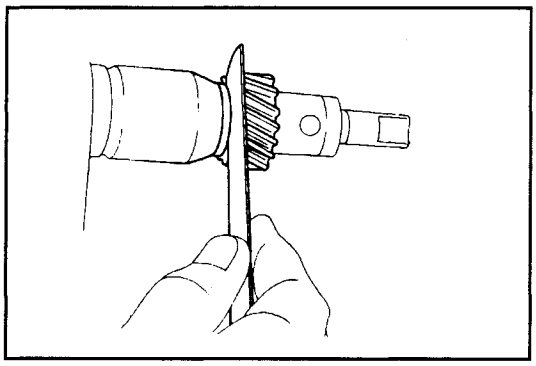

2. Using the thickness gauge, measure the governor shaft thrust clearance.

   Standard: 0.15 to 0.50 mm (0.0059 to 0.0197 in.)

   If it is outside the standard, adjust with the thrust washer.

www.truck-freeworkshop.com

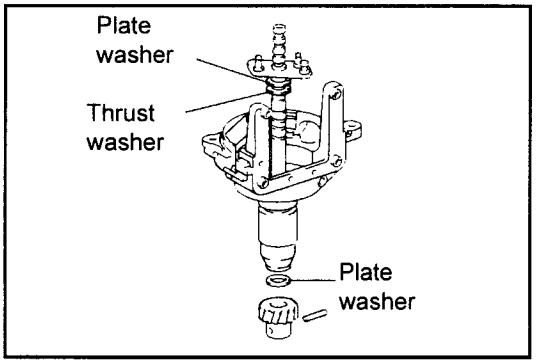

[Point 9]

Reassembly:

Install the governor shaft.

1. Apply grease thinly to the governor shaft.
2. Install the thrust washer on the governor shaft.
3. Reassemble the governor shaft to the housing.

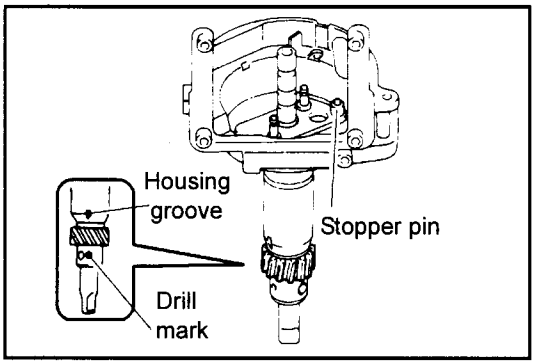

4. Install the plate washer and the spiral gear on the governor shaft.
5. Align the drill mark of the spiral gear and the housing groove.

Caution:
Check that the stopper pin is at the position shown in the illustration.

6. Install the straight pin.

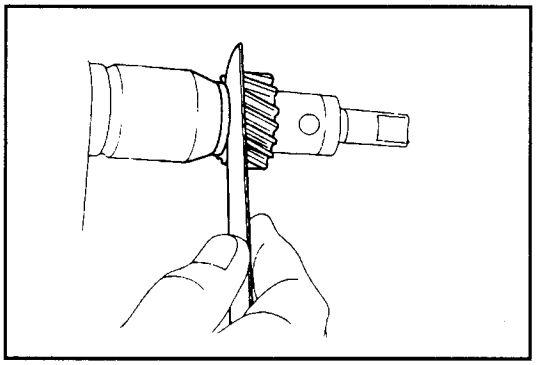

7. Using the thickness gauge, measure the governor shaft thrust clearance.

   Standard: 0.15 to 0.50 mm (0.0059 to 0.0197 in.)

   If it is outside the standard, adjust with the thrust washer.

   Thrust washer thickness: 0.3 mm (0.012 in.)
   0.4 mm (0.016 in.)
   0.5 mm (0.020 in.)
   0.6 mm (0.024 in.)

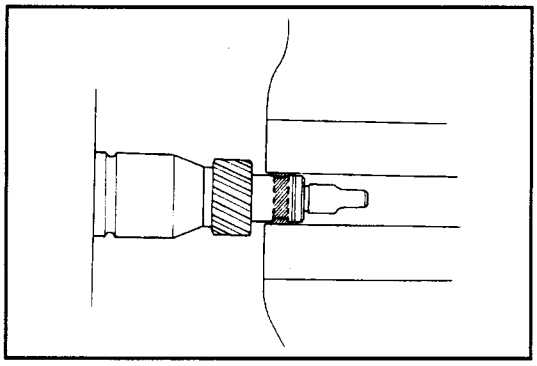

8. Pinch the both ends of the straight pin with the vise and caulk the pin.

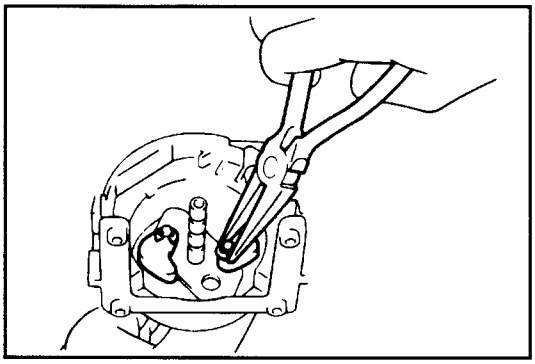

[Point 10]

Reassembly:

Install the governor weight.

1. Apply grease thinly to the governor shaft.
2. Install the governor weight.
3. Install the snap ring.

www.truck-freeworkshop.com

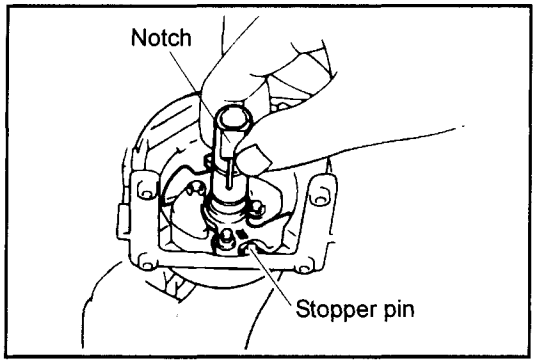

[Point 11]

Reassembly:
Install the signal rotor shaft.

1. Adjust the direction of the stopper pin and the notch on the shaft, and install the signal rotor shaft.

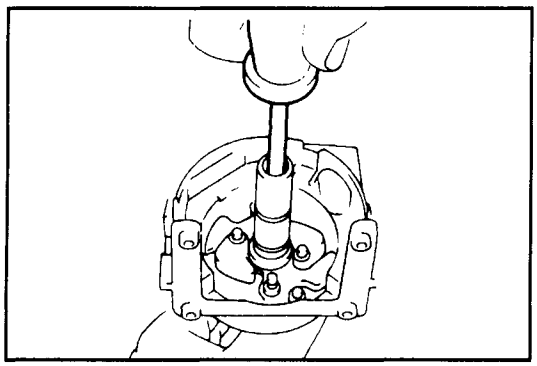

2. Install the screw.
3. Fill grease inside the shaft.
4. Install the cam cap.

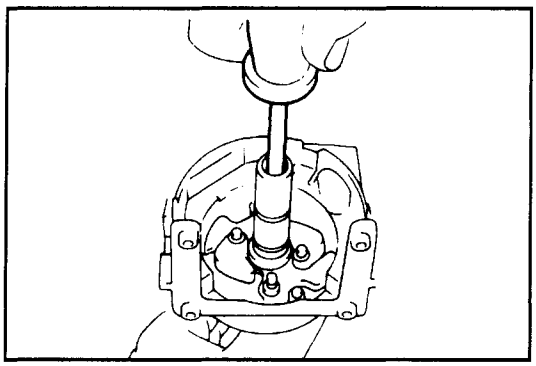

[Point 12]

Reassembly:
Install the signal rotor.

1. Insert the signal rotor into the rotor shaft, and adjust the notches.

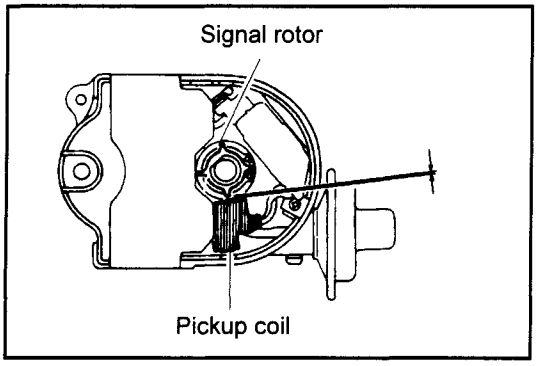

2. Inspection of the air gap
   (1) Measure the air gap.

   Standard: 0.2 to 0.4 mm (0.008 to 0.016 in.)

   If it is outside the standard as a result of the inspection, replace the signal generator ASSY.

   (2) During the replacement, wash the new magnet holding screw and the threaded portion of the coil with non-residue solvent, and then apply ThreeBond 1324 between 3 and 5 mm (0.12 to 0.20 in.) from the tip of the threaded portion.

www.truck-freeworkshop.com

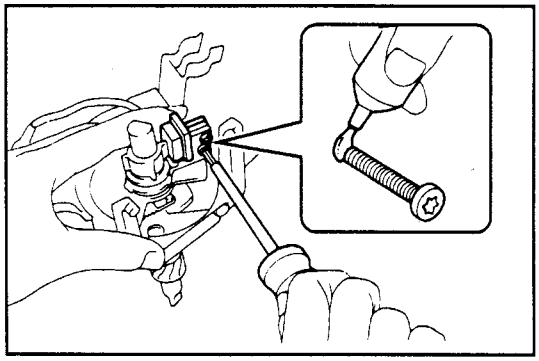

(3) Temporarily fasten to the coil SUB-ASSY threaded hole through the breaker plate and magnet mounting holes.

(4) Adjust the air gap between 0.2 and 0.4 mm (0.008 to 0.016 in.) with the thickness gauge, and fully tighten the screw.

Caution:

- **When replacing the signal generator ASSY, make sure to replace the rotor set spring with a new one.**
- **Make sure that oil or grease does not attach to the screw and the threaded portion of the coil.**
- **Make sure to remove any residue of ThreeBond 1324.**
- **Do not start the engine until ThreeBond 1324 is hardened.**

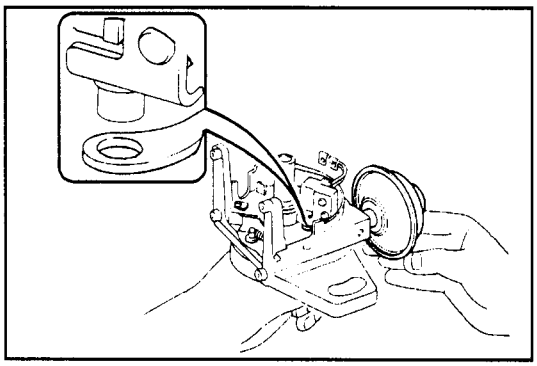

[Point 13]

Reassembly:

Install the vacuum advancer.

1. Insert the breaker plate pin to the advancer link hole.
2. Install the advancer and the wire clamp.

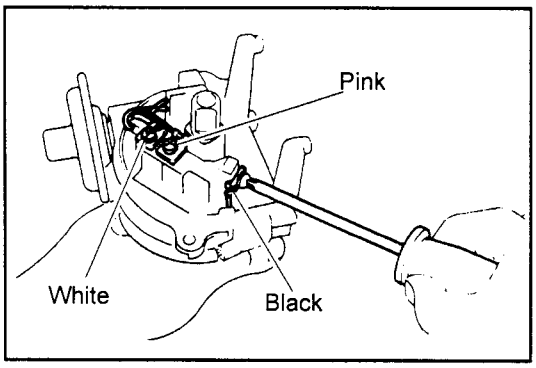

[Point 14]

Reassembly:

Install the igniter.

1. Install the igniter and tighten two screws.
2. Install three wires to the terminal of the igniter.

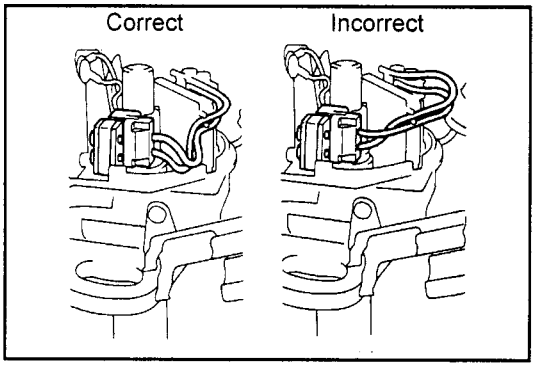

3. As shown in the left illustration, sufficiently slacken the pickup coil wire, and fix it to the clip.

www.truck-freeworkshop.com

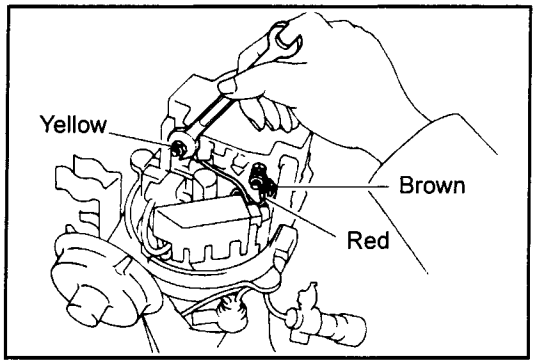

[Point 15]

Reassembly:

Install the ignition coil.

1. Install the ignition coil and the gasket.
2. Install the wire to the ignition coil terminal.

www.truck-freeworkshop.com

IGNITION SYSTEM (4Y-E)

Page

SPARK PLUGS 10-2
INSPECTION 10-2
DISTRIBUTOR 10-3
COMPONENTS 10-3
ON-VEHICLE INSPECTION 10-4
REMOVAL 10-4
INSTALLATION 10-5
IGNITER 10-6
GENERAL 10-6
REMOVAL·INSPECTION·INSTALLATION 10-7

www.truck-freeworkshop.com

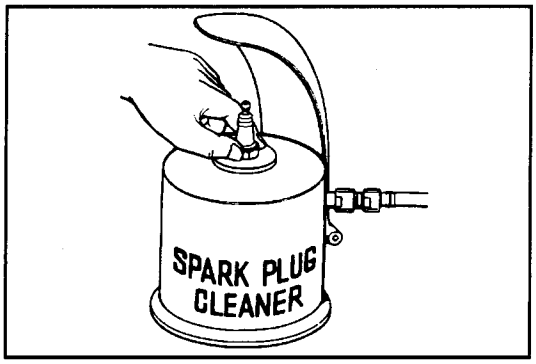

SPARK PLUGS

INSPECTION

1. Clean the spark plugs using the spark plug cleaner.
2. Inspect the spark plugs, and replace any that are abnormal.

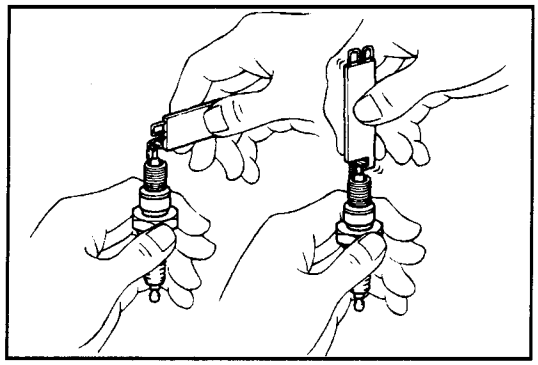

3. Inspection of the plug gap

   Standard: 0.7 to 0.8 mm (0.028 to 0.031 in.)

www.truck-freeworkshop.com

DISTRIBUTOR

COMPONENTS

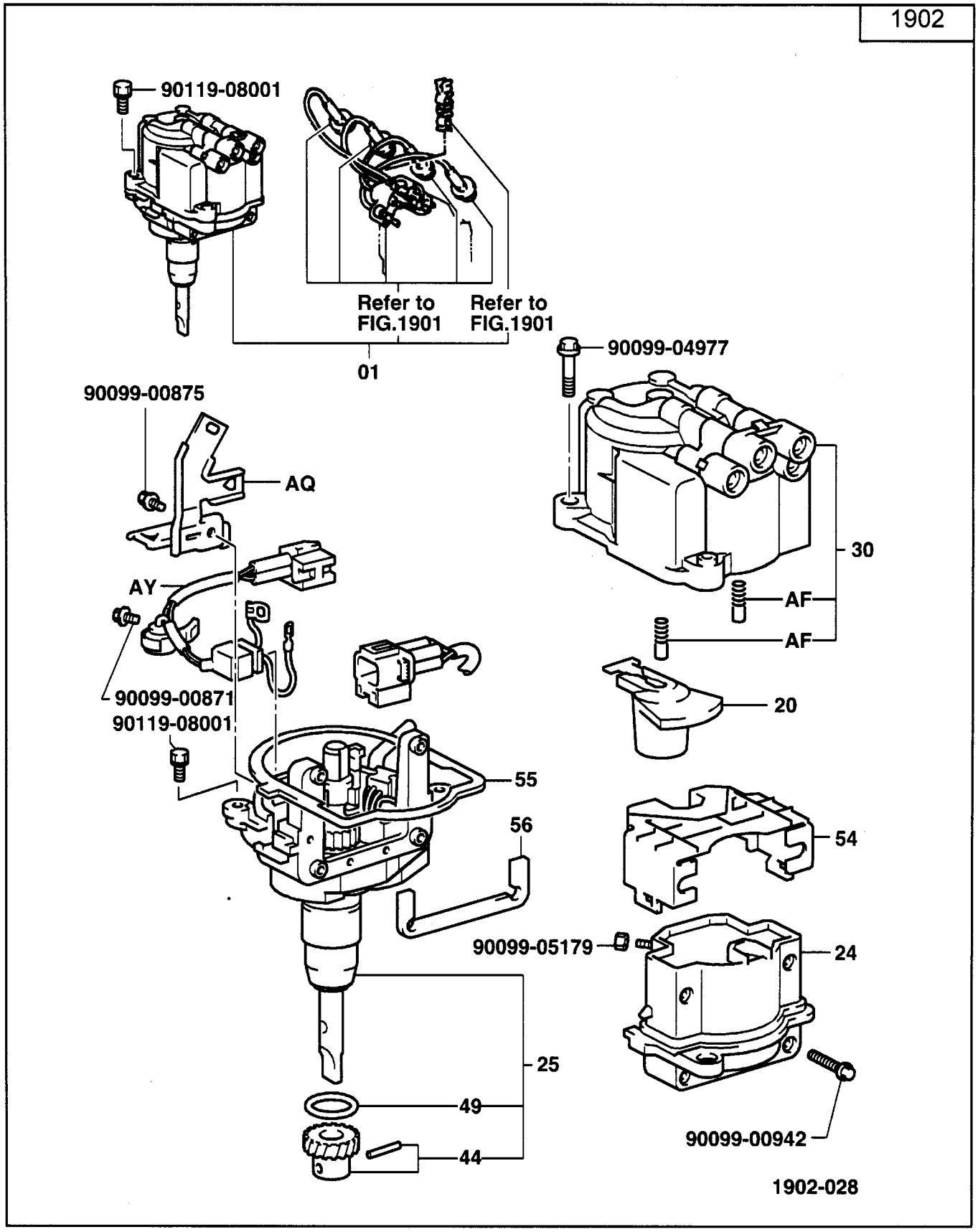

www.truck-freeworkshop.com

ON-VEHICLE INSPECTION

Caution:

- **Do not confuse the positive and negative terminals of the battery.**
- **Do not remove the battery cable while the engine is running.**
- **Do not perform any operations that generate destructive pulse.**
- **Make sure the firm connection without any wrong wiring.**
- **When pulling out the resistive cord, do not pull the cord section.**

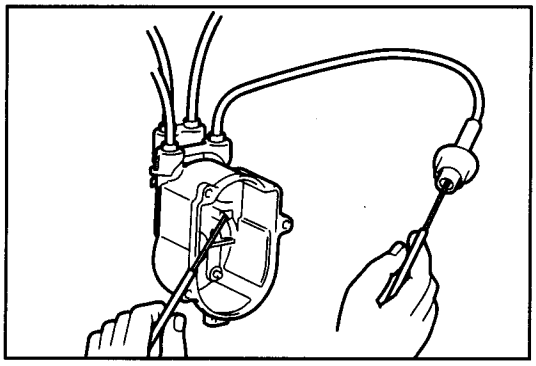

1. Inspection of the resistive cord
   (1) Remove the distributor cap.
   (2) Using the circuit tester, measure the resistance of the resistive cord.
   Limit: 25 kΩ or less cord

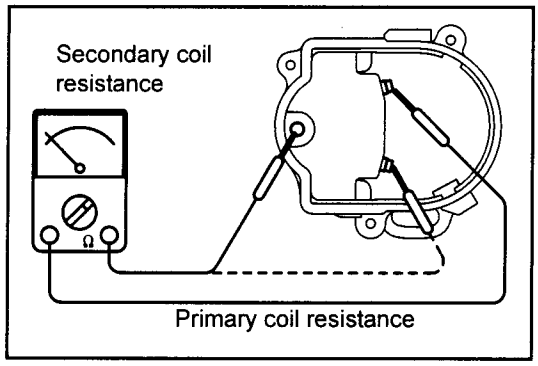

2. Inspection of the ignition coil
   (1) Measurement of the primary coil resistance
   Standard: 1.2 to 1.5 Ω
   (2) Measurement of the secondary coil resistance
   Standard: 7.7 to 10.4 kΩ

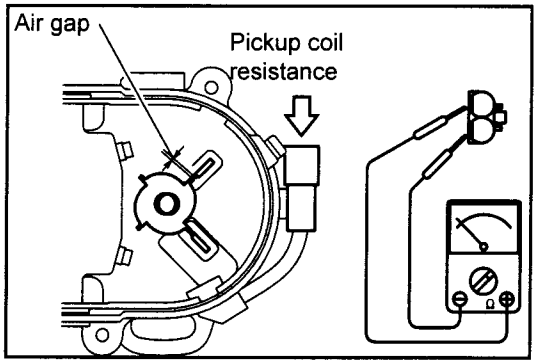

3. Measurement of the pickup coil resistance
   Standard: 460 ± 50 Ω

Note:
Pickup coil is measured by the total resistance value of the two serially connected coils, measured at the connector section.

4. Inspection of the air gap between the signal rotor and the pickup coil
   Standard: 0.2 to 0.4 mm (0.008 to 0.016 in.)

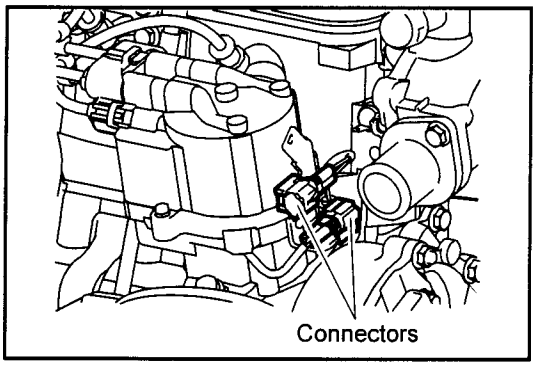

REMOVAL

1. Disconnect the negative terminal of the battery.
2. Disconnect the resistive cords from the spark plugs.
3. Disconnect the two connectors to the distributor.
4. Remove the distributor cap.

www.truck-freeworkshop.com

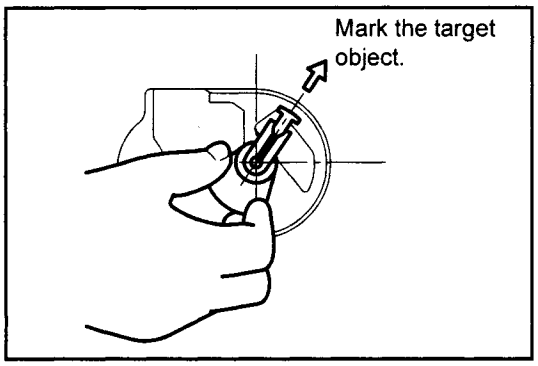

5. Check the direction of the distributor rotor.

Note:
When installing the distributor main unit to the engine, prevent a displacement resulting from a shaft gear fitting defect due to the direction of this rotor.

6. Remove the set bolt, and then remove the distributor.

INSTALLATION

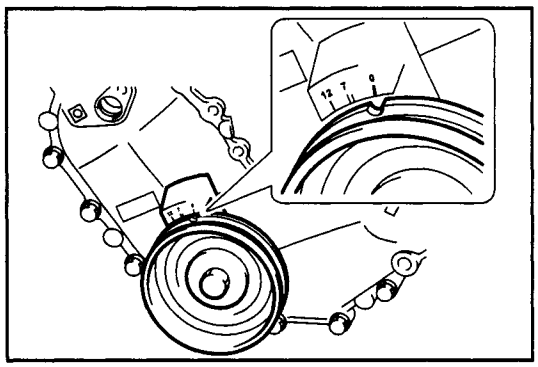

1. Align the TDC mark of the crank pulley with the notch of the timing gear cover.

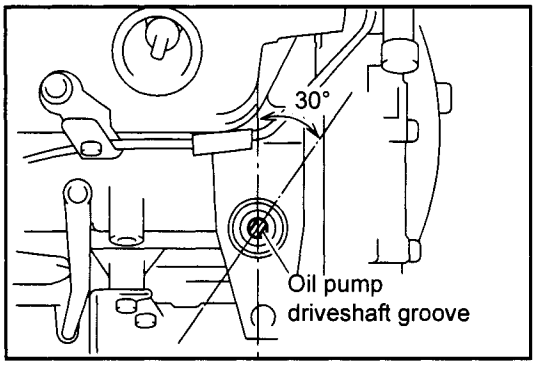

2. Set the position of the groove in the oil pump driveshaft at about 30° when viewed from the upper side.

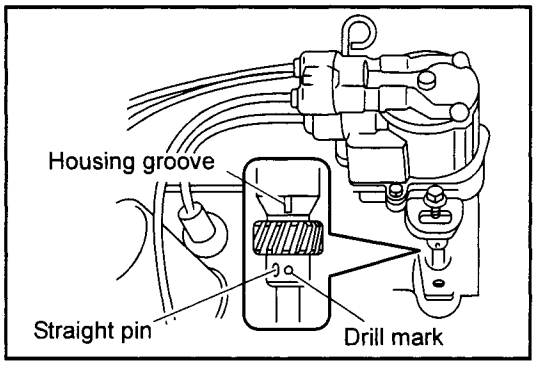

3. Align the housing groove with the drill mark of the gear, and insert the distributor.

Note:
- **Do not confuse the drill mark and the straight pin.**
- **When installing the distributor, align the screw hole for attaching the block with the center of the flange groove to install.**
- **When the distributor is completely set, the direction of the rotor must be correct.**

4. Install the distributor cap.
5. Connect the two connectors to the distributor.
6. Connect the resistive cord.
7. Connect the negative terminal of the battery.
8. Adjust the ignition timing. (See P3-44)

www.truck-freeworkshop.com

IGNITER

GENERAL

Caution:
Since the igniter contains several IC parts, inspection of the power transistor ON/OFF using the single unit of the ignitor is so difficult. Therefore, judge the quality by the inspection according to the troubleshooting in the repair manual for each vehicle model.

Note:
For the judgment of the igniter quality, the following items will be the observation points.

- **The ignition coil is normal, and the wiring to the igniter and the connecter are also normal.**
- **There is a normal output of IGt signal from the ECU to the igniter as well as IGt signal from the igniter to the ECU, and the wiring and connector are normal.**

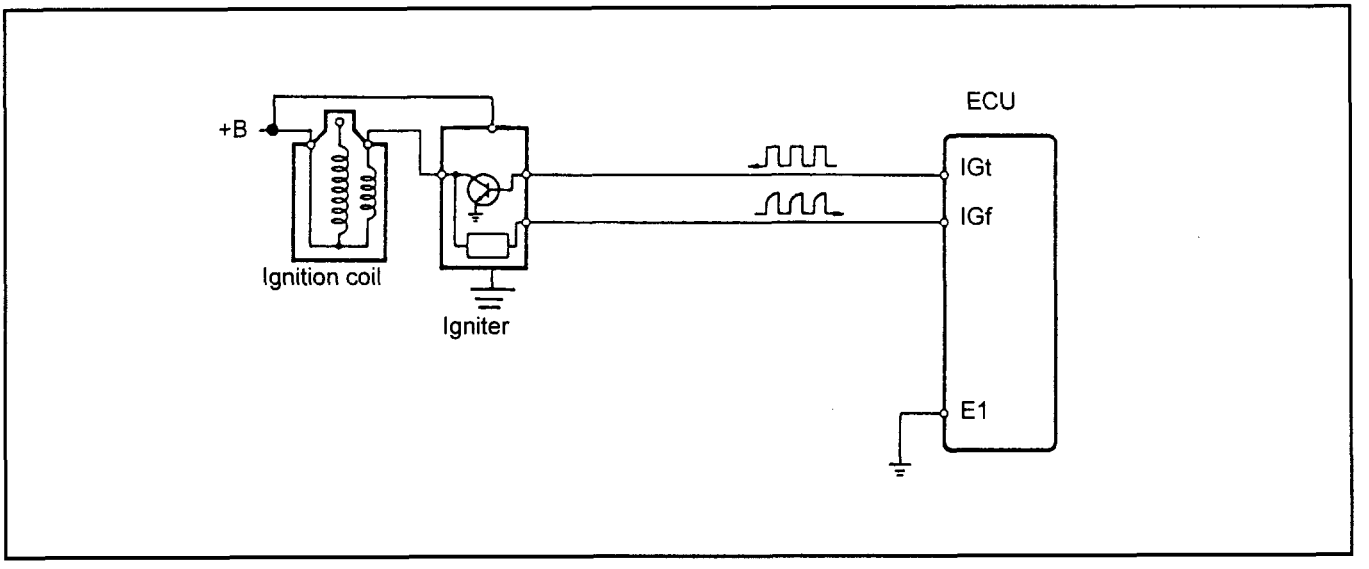

www.truck-freeworkshop.com

REMOVAL·INSPECTION·INSTALLATION

T = N·m (kgf·cm) [ft·lbf]

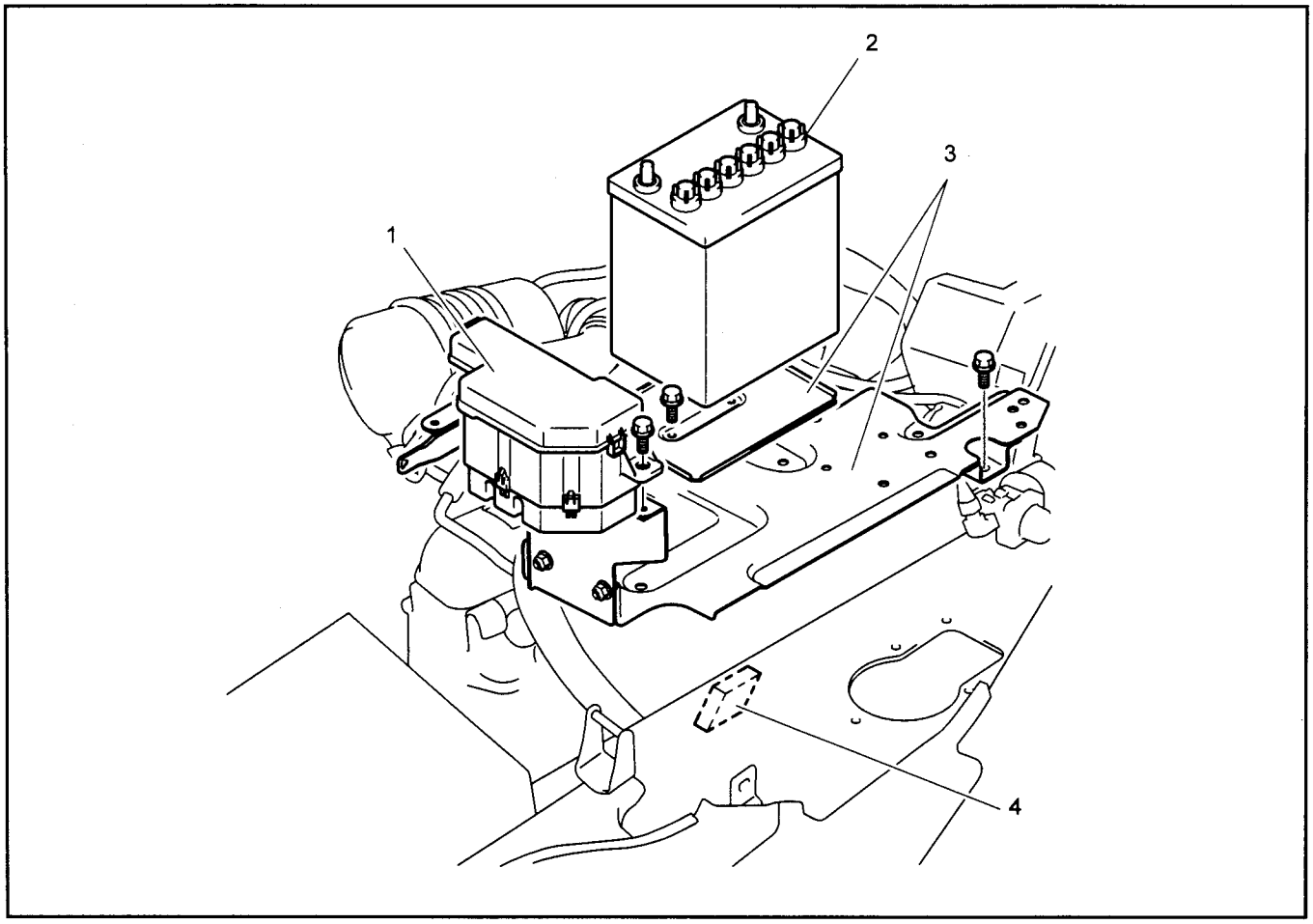

Removal·Installation Procedure

The installation procedure is the reverse of the removal procedure.

No.	Item	Removal	Inspection	Installation
1	Relay box			
2	Battery			
3	Battery set plate			
4	Igniter			

www.truck-freeworkshop.com

www.truck-freeworkshop.com

STARTING SYSTEM

Page

SST TO BE USED 11-2

STARTER MOTOR..... 11-3

COMPONENTS 11-3

REMOVAL·INSPECTION·INSTALLATION 11-4

DISASSEMBLY·INSPECTION·REASSEMBLY..... 11-5

STARTER MOTOR ASSY UNIT INSPECTION 11-10

www.truck-freeworkshop.com

SST TO BE USED

Illustration	Part No.	Part name
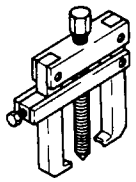	09286-76001-71 (09286-46011)	Injection pump spline shaft puller

www.truck-freeworkshop.com

STARTER MOTOR

COMPONENTS

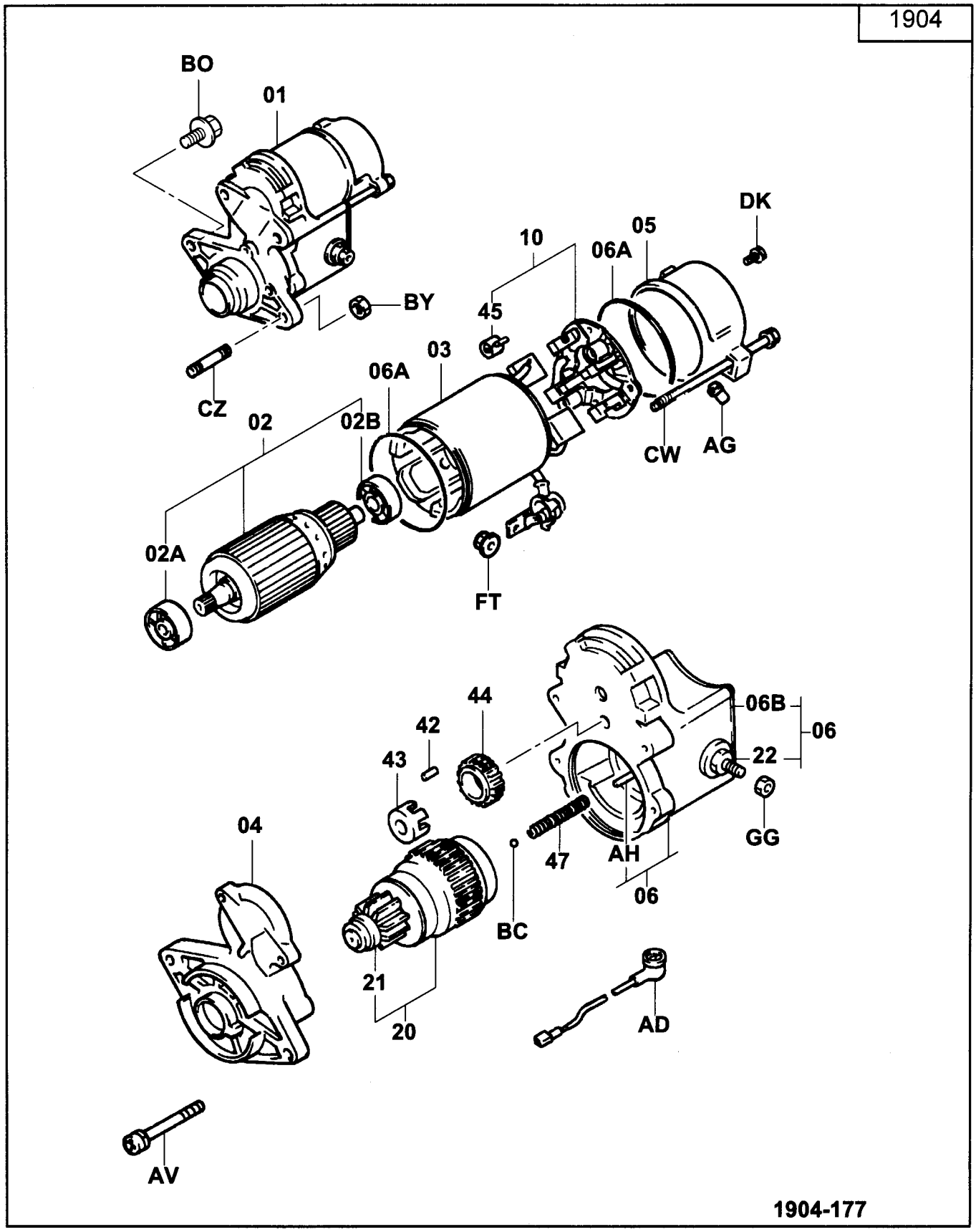

www.truck-freeworkshop.com

REMOVAL·INSPECTION·INSTALLATION

T = N·m (kgf·cm) [ft·lbf]

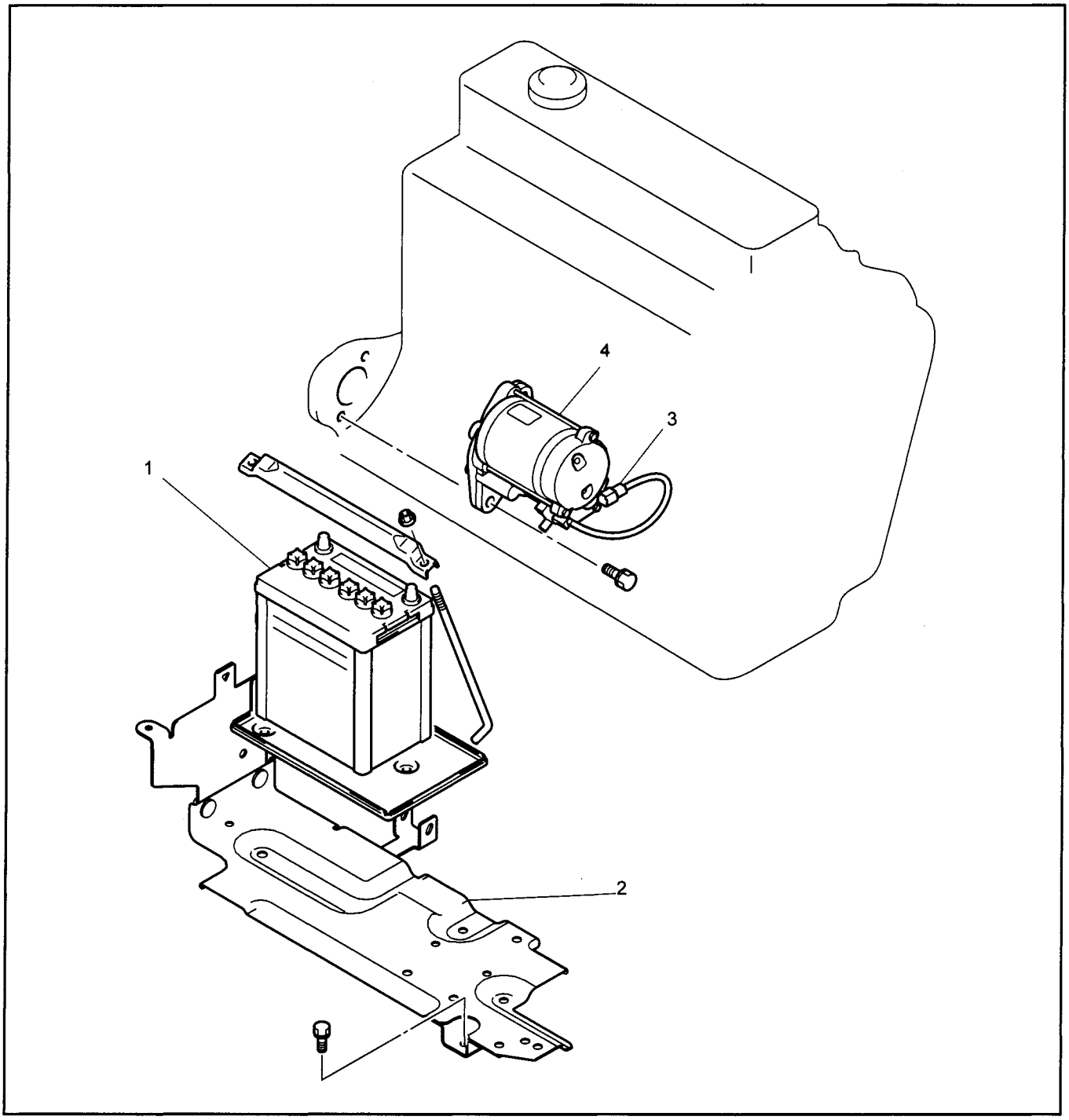

Removal·Installation Procedure

The installation procedure is the reverse of the removal procedure.

No.	Item	Removal	Inspection	Installation
1	Battery			
2	Battery set plate			
3	Disconnect the connectors and the terminals.			
4	Starter ASSY			

www.truck-freeworkshop.com

DISASSEMBLY·INSPECTION·REASSEMBLY

T = N·m (kgf·cm) [ft·lbf]

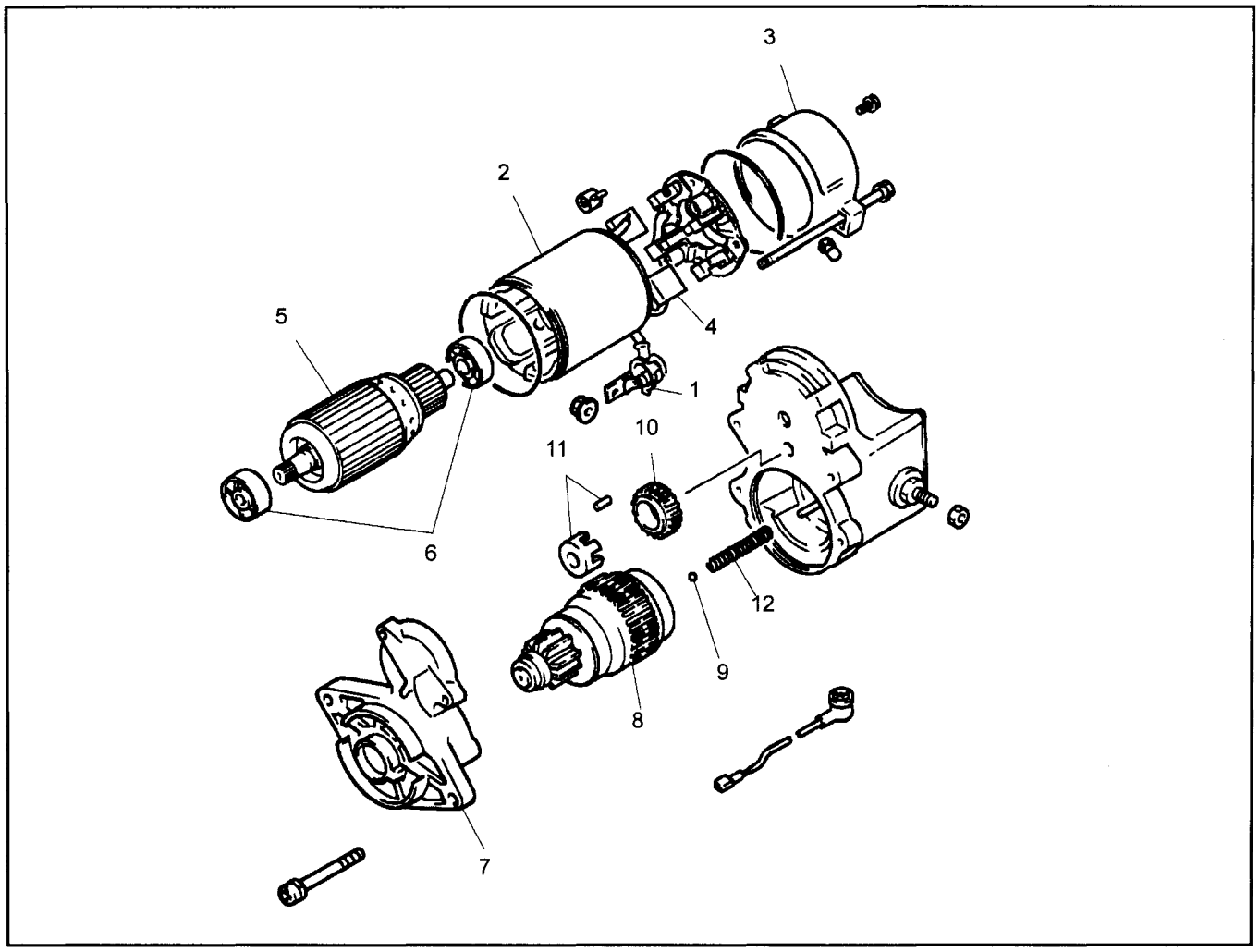

Disassembly·Reassembly Procedure

The reassembly procedure is the reverse of the disassembly procedure.

No.	Item	Disassembly	Inspection	Reassembly
1	Lead wire			
2	Yoke ASSY		**[Point 1]**	**[Point 11]**
3	End frame			**[Point 10]**
4	Brush	**[Point 2]**	**[Point 3]**	**[Point 9]**
5	Armature ASSY		**[Point 4]**	
6	Bearing	**[Point 5]**		**[Point 8]**
7	Housing ASSY		**[Point 6]**	
8	Clutch ASSY		**[Point 7]**	
9	Steel ball			
10	Idler gear			
11	Retainer, roller			
12	Return spring			

Caution:
Apply grease to the steel ball, idler, gear starter clutch and return spring on reassembly.

www.truck-freeworkshop.com

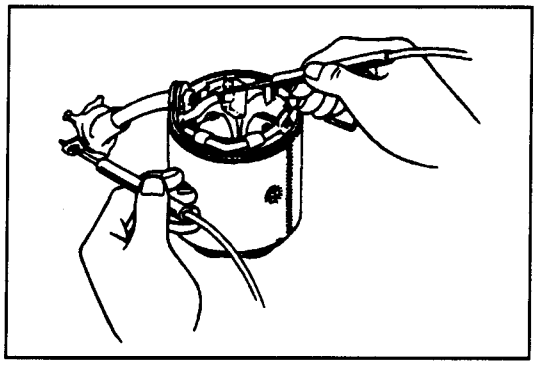

Point Operations

[Point 1]

Inspection:

Inspect for continuity between the field coil brush and C terminal.

Standard: Continuity exists.

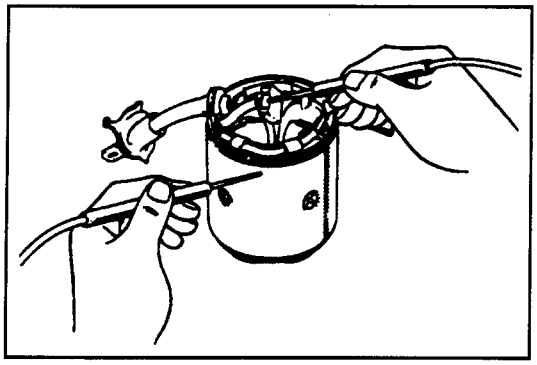

Inspection:

Inspect the insulation between the field coil brush and the field.

Standard: 0.1 MΩ or more

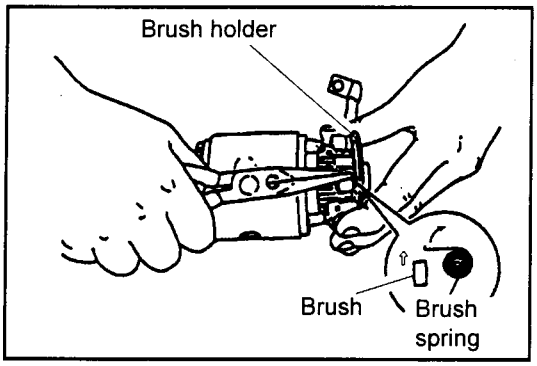

[Point 2]

Disassembly:

Lift up the brush spring on the plus side with long-nose pliers. Take care not to damage the brush or the commutator.

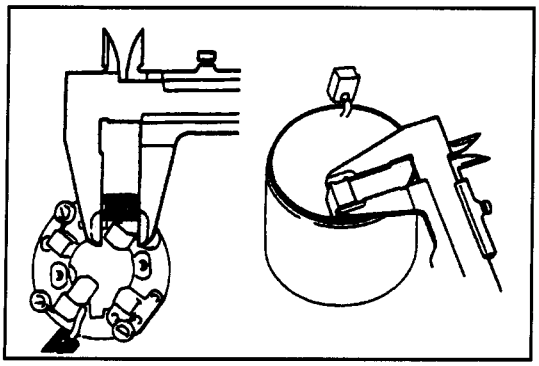

[Point 3]

Inspection:

Inspect the brush.

1. Inspect for roughness of the contact surface and the length of the brush.
   Measure the brush length in the center section (concave part).

   Standard: 20.5 mm (0.807 in.)
   Limit: 13.0 mm (0.512 in.)

2. When correcting the contact surface and replacing the brush, wrap sand paper around the commutator to correct the contact surface.

www.truck-freeworkshop.com

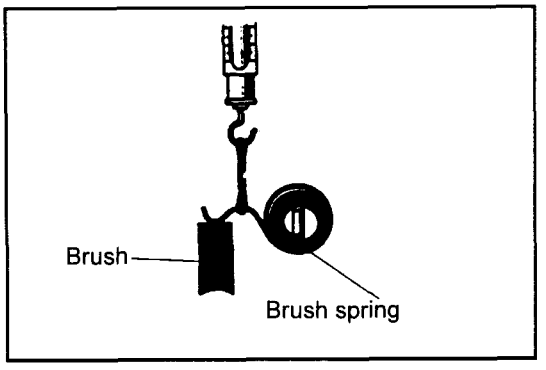

Inspection:

Check that the brush spring movement is smooth, then measure the applied load of the spring.

Standard: 31.4 to 39.2 N (3.2 to 4.0 kgf) [7.1 to 8.8 lbf]
Limit: 21.6 N (2.2 kgf) [4.9 lbf]

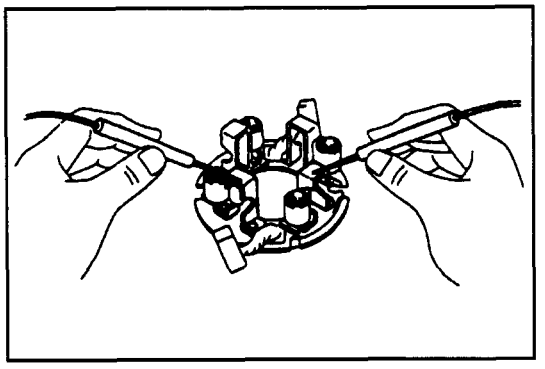

Inspection:

Inspect the insulation between the brush holder on the plus side and the brush holder on the minus side.

Standard: 0.1 MΩ or more

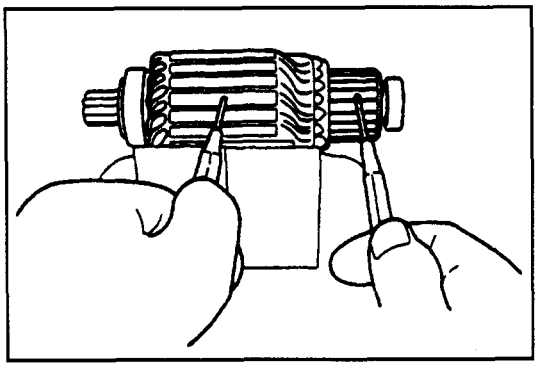

[Point 4]

Inspection:

Inspect the insulation between the commutator and the armature coil.

Standard: 1 MΩ or more

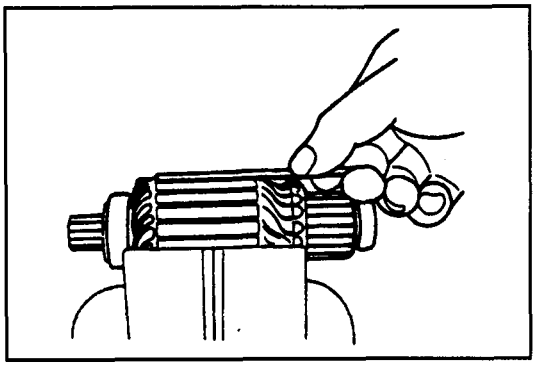

Inspection:

Perform a short circuit test on the armature coil.

1. Remove completely any deposits on the surface of the armature.
2. Using an armature tester, place an iron piece in parallel contact to the armature and turn the armature.

Standard: The iron piece should not be attracted or vibrate.

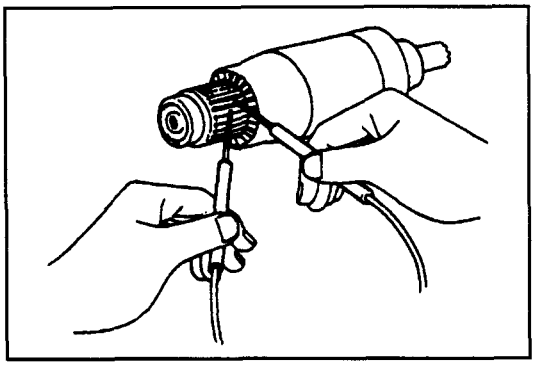

Inspection:

Inspect for continuity between each segment of the armature coil.

Standard: There should be continuity between all segments of the armature.

www.truck-freeworkshop.com

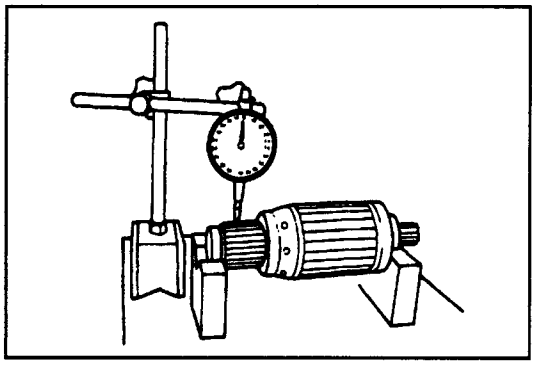

Inspection:
Inspect the commutator.

1. Measure the runout of the periphery.

   Limit: 0.05 mm (0.0020 in.) or less

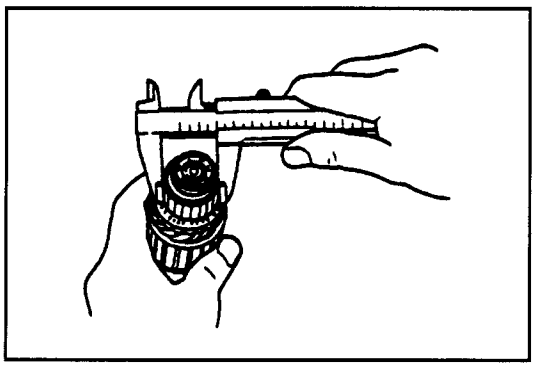

2. Measure the outside diameter.

   Standard: 30 mm (1.18 in.)
   Limit: 29 mm (1.14 in.)

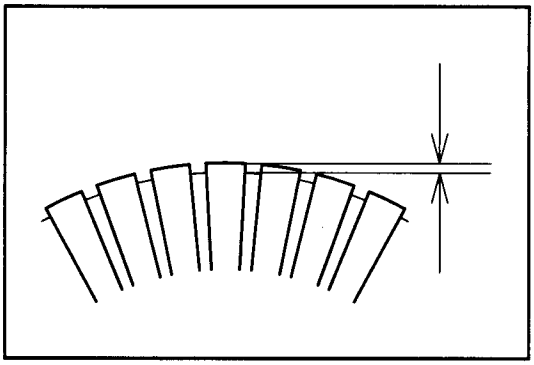

3. Measure the undercut depth between the segments.

   Standard: 0.5 to 0.8 mm (0.020 to 0.031 in.)
   Limit: 0.2 mm (0.008 in.)

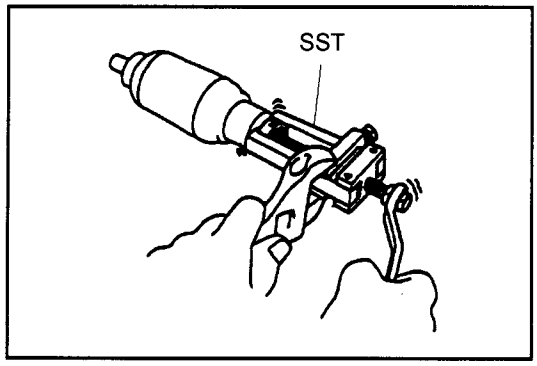

[Point 5]

Disassembly:
Use the SST to remove the bearing.

SST 09286-76001-71
(09286-46011)

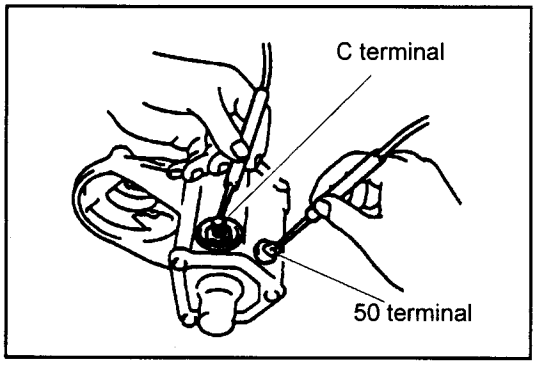

[Point 6]

Inspection:
Inspect the magnetic switch.

1. Inspect for continuity between the 50 terminal and the C terminal.

   Standard: Continuity exists.

www.truck-freeworkshop.com

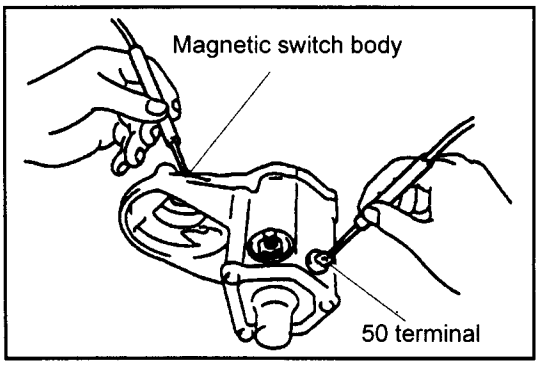

2. Inspect for continuity between the 50 terminal and the magnetic switch body.

   Standard: Continuity exists.

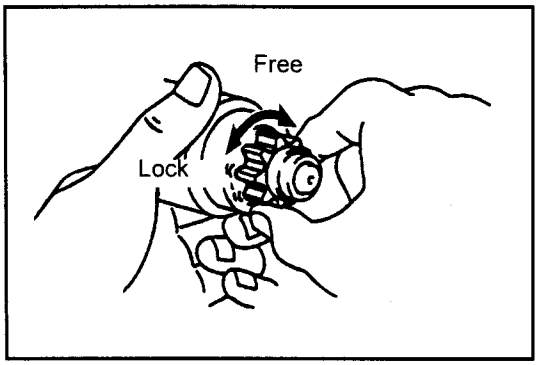

[Point 7]

Inspection:

Inspect the clutch and the gear.

1. Inspect for wear and damage to the gear.
2. Check that the gear locks when rotated in the drive direction (left) and rotates smoothly when rotated in the opposite direction (right).

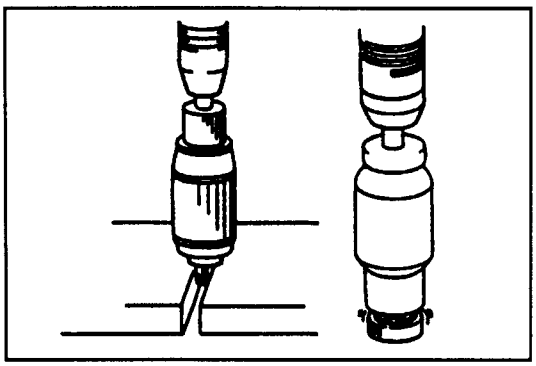

[Point 8]

Reassembly:

Use a press to press fit the bearing.

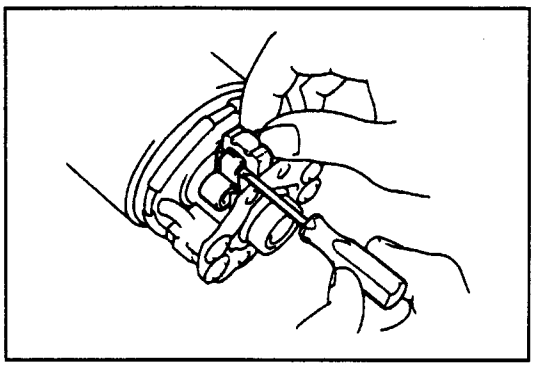

[Point 9]

Reassembly:

Reassemble the brushes.

1. Lift the brush spring up with a screwdriver etc, and reassemble the brush holder into the starter yoke.
2. Pull the brush spring up and reassemble the brush into the brush holder.

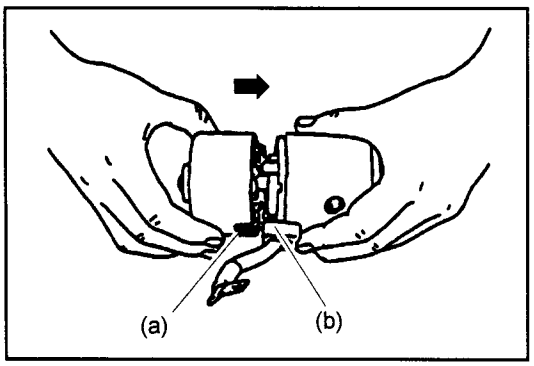

[Point 10]

Reassembly:

Align the notch (a) in the end frame and the lead wire grommet (b).

www.truck-freeworkshop.com

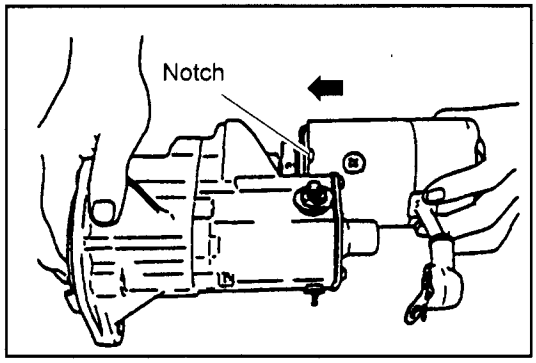

[Point 11]

Reassembly:

Align the notch in the yoke with the protruding section of the magnetic switch.

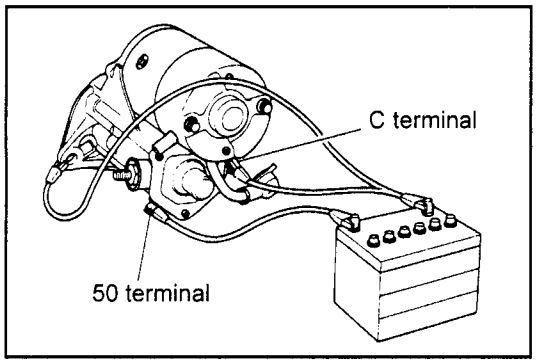

STARTER MOTOR ASSY UNIT INSPECTION

Note:
Perform each test for a short time (3 to 5 seconds).

1. Pull-in test
   Check that the pinion gear pops out when the ASSY is connected as shown in the illustration.

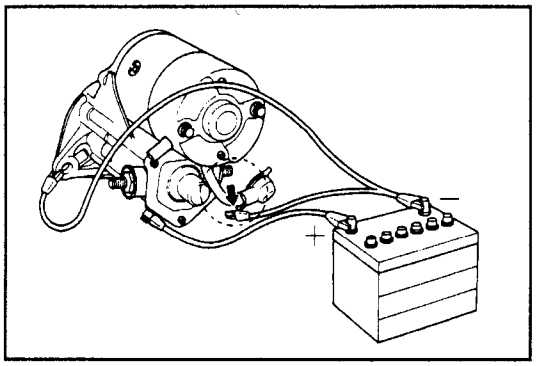

2. Holding coil holding test
   From the pull-in test status, check that the pinion gear remains popped out even after the C terminal wire is disconnected.

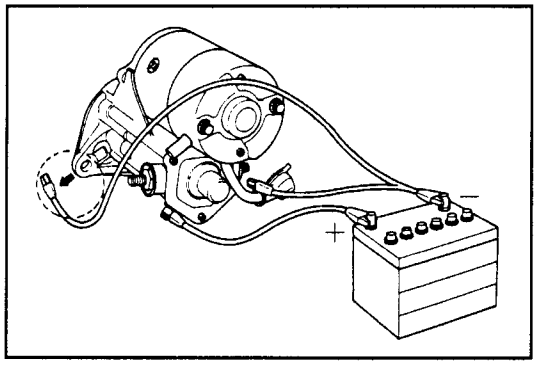

3. Plunger return test
   Check that the pinion gear returns from the holding test status of the holding coil when the terminal is disconnected as shown in the illustration on the left.

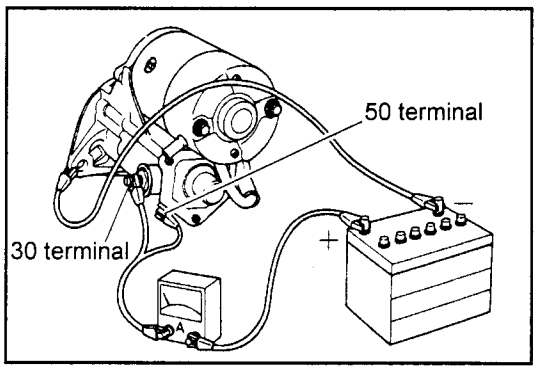

4. No-load test
   (1) Secure the starter motor with a vice.
   (2) During a no-load test, a large current will flow through the lead wire, so use a thick lead wire.
   (3) Read the ammeter once the display has settled.
   Standard: 90 A or less

www.truck-freeworkshop.com

CHARGING SYSTEM

Page

SST TO BE USED 12-2

ON-VEHICLE INSPECTION 12-3

ALTERNATOR 12-4

ELECTRICAL CIRCUIT DIAGRAM 12-4

COMPONENTS 12-4

DISASSEMBLY·INSPECTION·REASSEMBLY 12-5

www.truck-freeworkshop.com

SST TO BE USED

Illustration	Part No.	Part name
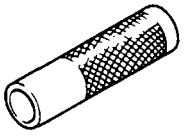	09381-41950-71	HST pump bearing replacer
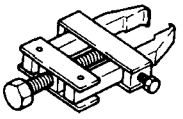	09820-76002-71 (09820-00021)	Alternator rear bearing puller
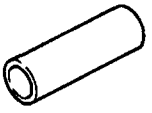	09820-76003-71 (09820-00030)	Alternator rear bearing replacer
	09950-76018-71 (09950-00010)	Replacer set
	09950-76020-71 (09950-70010)	Handle set

www.truck-freeworkshop.com

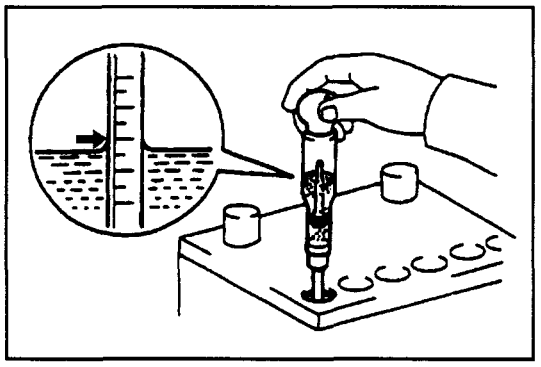

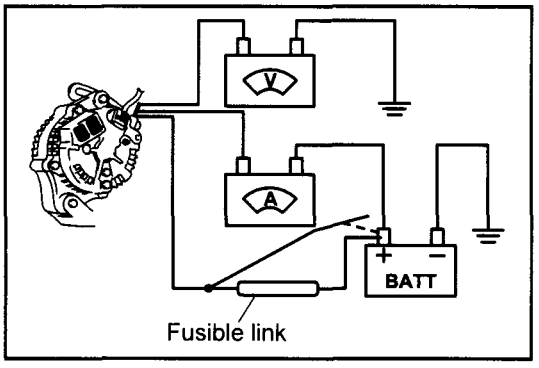

ON-VEHICLE INSPECTION

1. Inspect the specific gravity of the battery.

   Standard: 1.25 to 1.28 (20°C) [68°F]

2. Inspect the battery terminal.
3. Inspect the V-belt.
4. Inspect the fuse.
5. Inspect the wiring status.
6. Inspect for abnormal noise.

   (1) Check that there is no abnormal noise from the alternator when the engine is running.

7. Perform a no-load test.
   (Adjustment voltage·adjustment current inspection)

   (1) Connect an ammeter and voltmeter as shown in the illustration on the left.

   (2) Gradually increase the engine speed to 1500 rpm and measure the voltage.

   Standard: 12 V
   13.5 to 14.3 V (when warm)

   (3) Measure the current with the engine speed at 1500 rpm.

   Standard: 10 A or less

Note:
Directly after the engine starts, the current may briefly become 10 A or more, but this is not abnormal.

www.truck-freeworkshop.com

ALTERNATOR

ELECTRICAL CIRCUIT DIAGRAM

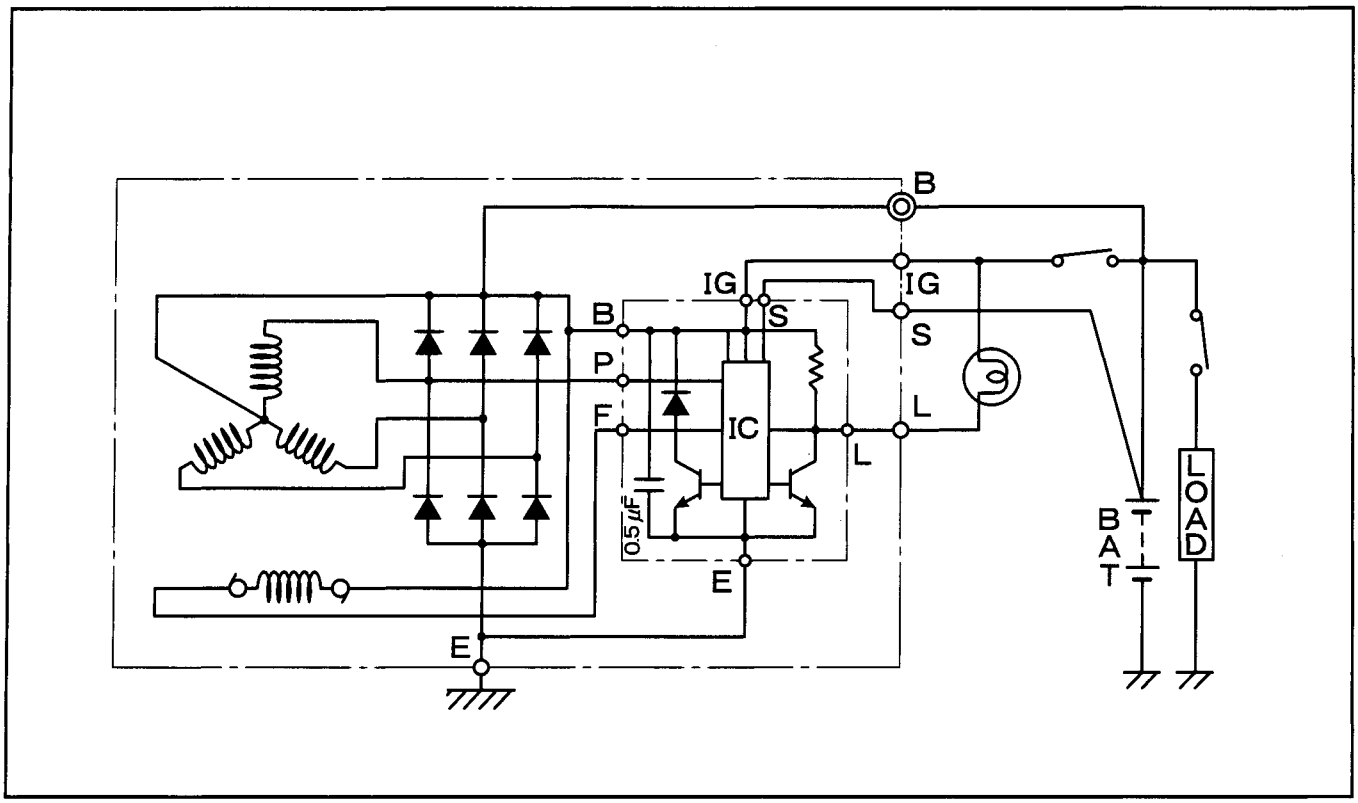

COMPONENTS

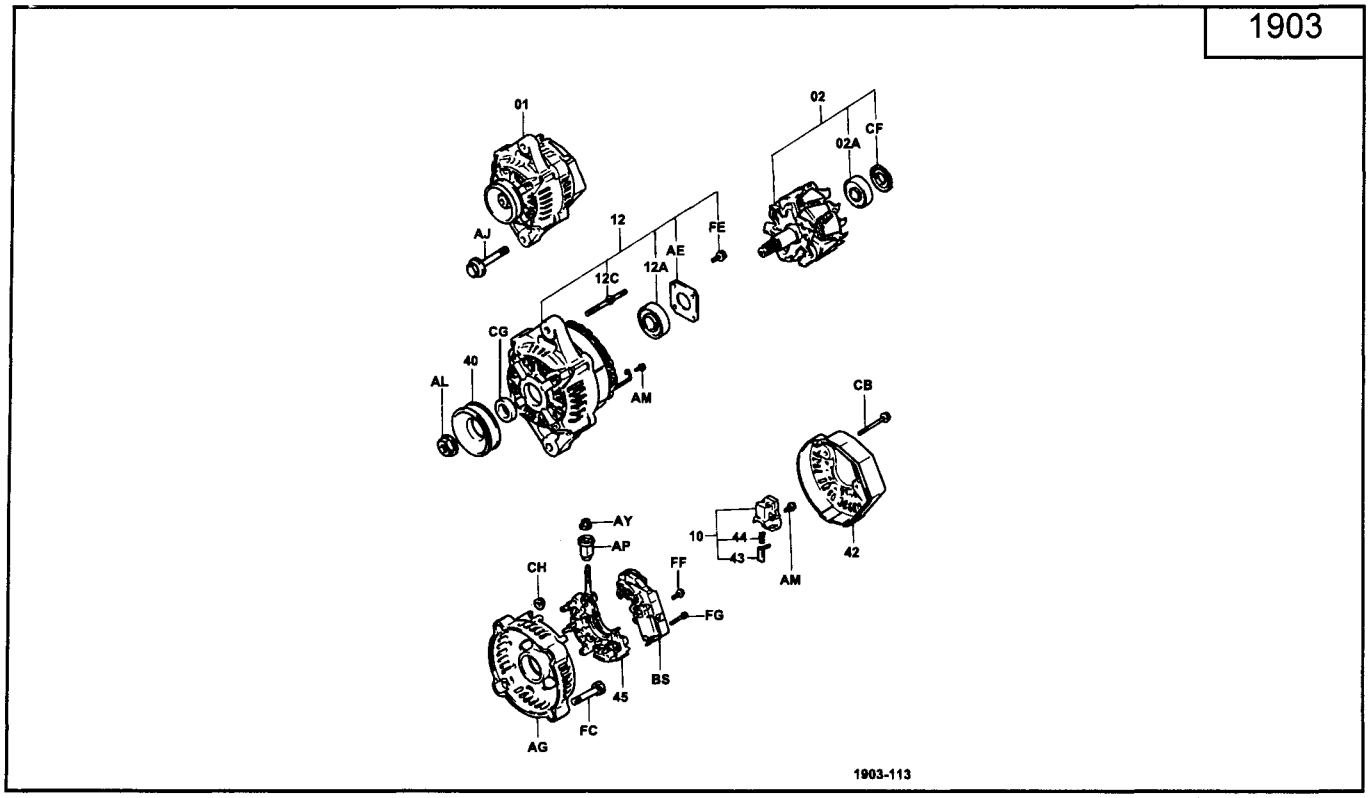

www.truck-freeworkshop.com

DISASSEMBLY·INSPECTION·REASSEMBLY

T = N·m (kgf·cm) [ft·lbf]

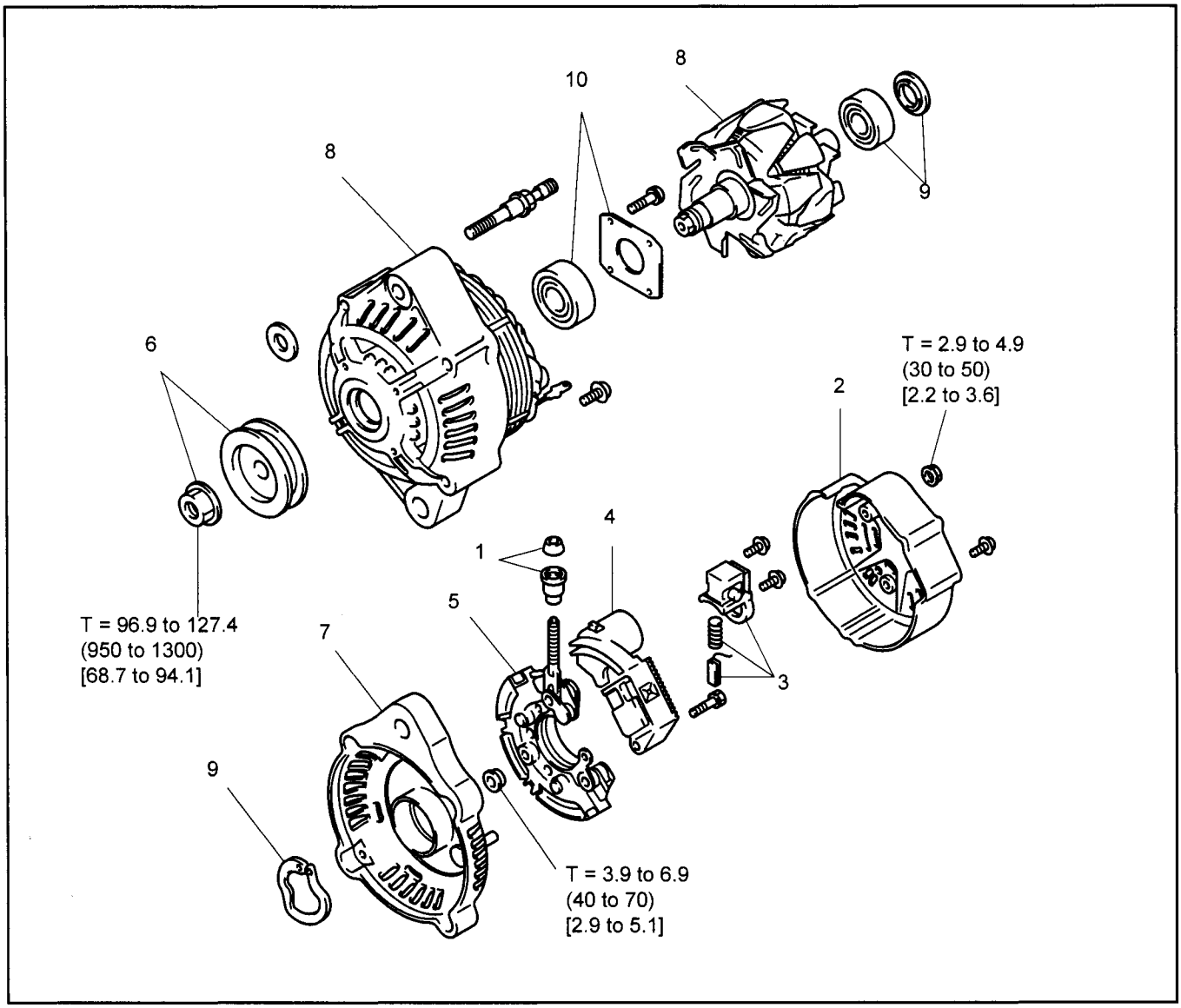

Disassembly·Reassembly Procedure

The reassembly procedure is the reverse of the disassembly procedure.

No.	Item	Disassembly	Inspection	Reassembly
1	Terminal insulators			
2	Rear end cover			
3	Brush holder W/ brush		**[Point 1]**	**[Point 15]**
4	IC regulator		**[Point 2]**	
5	Rectifier holder		**[Point 3]**	**[Point 14]**
6	Alternator pulley	**[Point 4]**		**[Point 13]**
7	Rear end frame	**[Point 5]**		
8	Rotor ASSY	**[Point 6]**	**[Point 7]**	**[Point 12]**
9	Rear bearing, spring washer	**[Point 8]**		**[Point 11]**
10	Bearing cover, front bearing	**[Point 9]**		**[Point 10]**

www.truck-freeworkshop.com

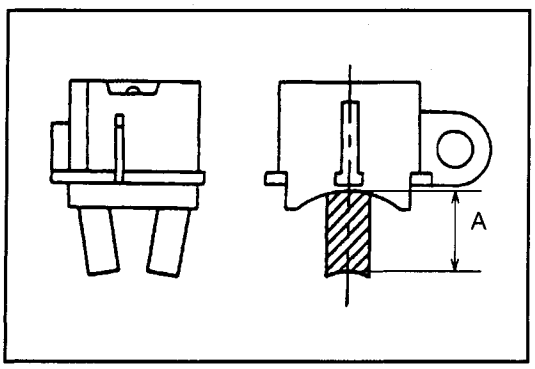

Point Operations

[Point 1]

Inspection:

Inspect the brush.

1. Measure length A of the protrusion of the brush.

   Standard: 10.5 mm (0.413 in.)
   Limit: 1.5 mm (0.059 in.)

2. If the length of the brush is below the limit, melt the solder part of the brush holder and remove the brush.
3. Attach the spring to the brush holder, and solder in place so that the brush length is 10.5 mm (0.413 in.).
4. Cut off the excess lead wire.
5. Apply insulation paint to the soldered section.

Caution:
Brush replacement should be carried out for both sides at the same time.

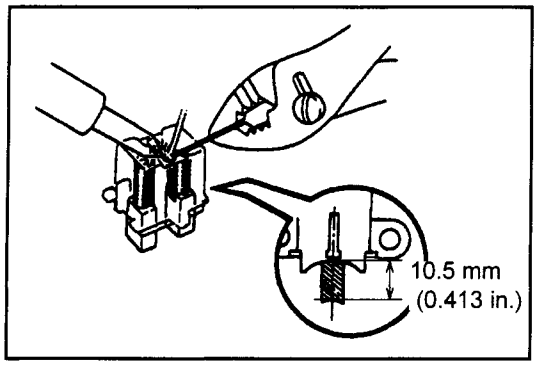

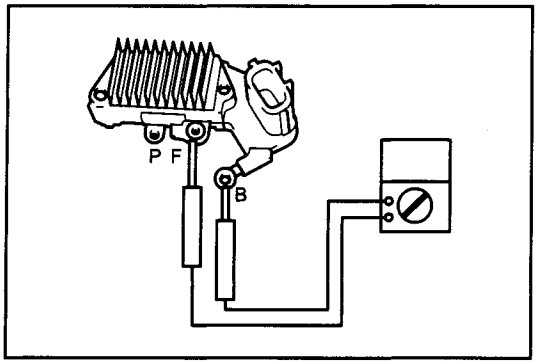

[Point 2]

Inspection:

Inspect the diode of the IC regulator.
Perform a continuity test on the diode between the B terminal and F terminal, with the tester set in the kΩ range.

Standard: When the polarity is changed between F and B, there should be continuity on one side and no continuity on the other.

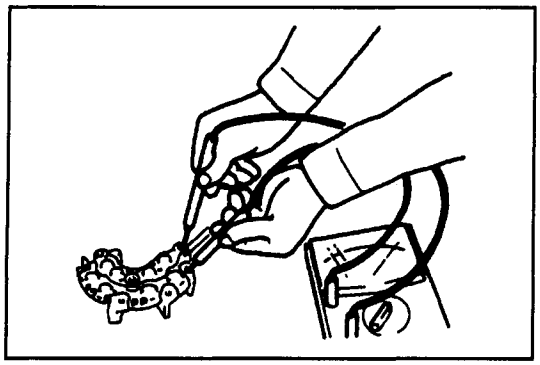

[Point 3]

Inspection:

Inspect the rectifier holder.

1. Perform a continuity test with the tester in the kΩ range.

   Standard: When the polarity is changed, there should be continuity on one side and no continuity on the other.

www.truck-freeworkshop.com

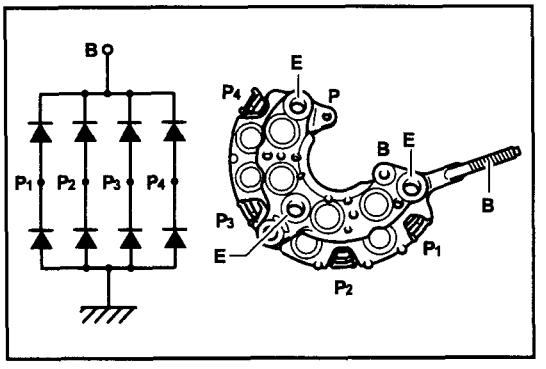

2. Refer to the illustration on the left for a circuit diagram of the rectifier.
   Whether the rectifier is working or not cannot be determined from the resistance in the forward direction. This is because the forward direction current varies greatly depending on the power supply voltage because of the diode characteristic, with the result that the tester indication differs with the type of tester and differences in the resistance range. Therefore, if the difference between the forward and reverse current resistance is large, the rectifier is judged to be functioning.

Caution:
A 500 V mega tester should never be used as this will destroy the rectifier.

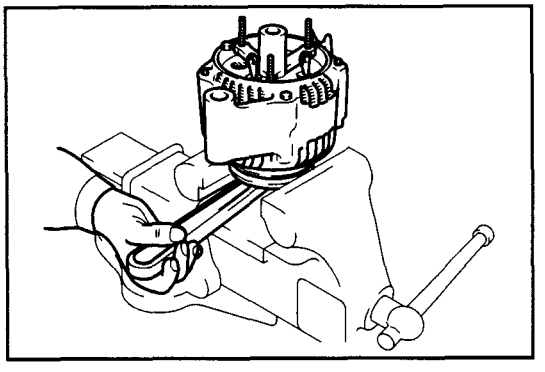

[Point 4]

Disassembly:
Set the alternator pulley in a vice and remove the set nut.

Caution:
Always use aluminum pads in the vice.

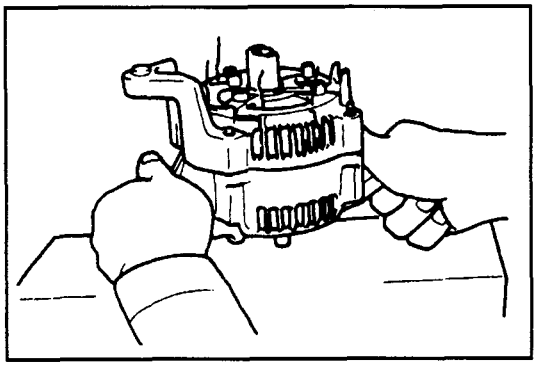

[Point 5]

Disassembly:
After removing the set nut and bolt, hold the rear end frame, and apply a shock to the tip of the rotor shaft to separate it.

Caution:
When applying a shock, do so over a wooden block etc.

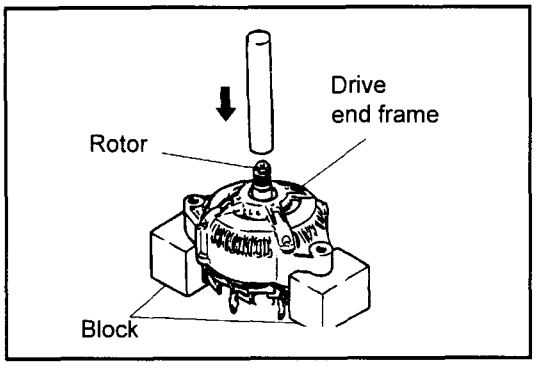

[Point 6]

Disassembly:
Use blocks as shown in the illustration to set the drive end frame horizontally, then use a press to remove the rotor.

Caution:
Take care that the rotor does not drop and damage the slip rings or the fan.

www.truck-freeworkshop.com

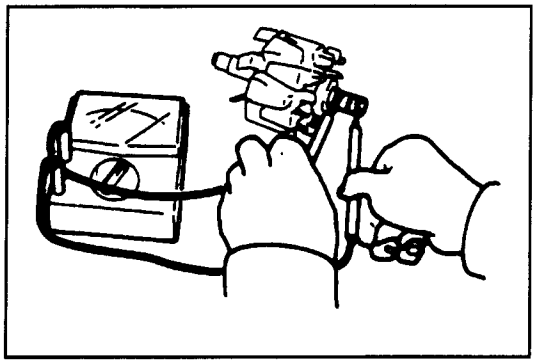

[Point 7]

Inspection:

Measure the resistance between the 2 slip rings.

Standard: 3.0 Ω or less

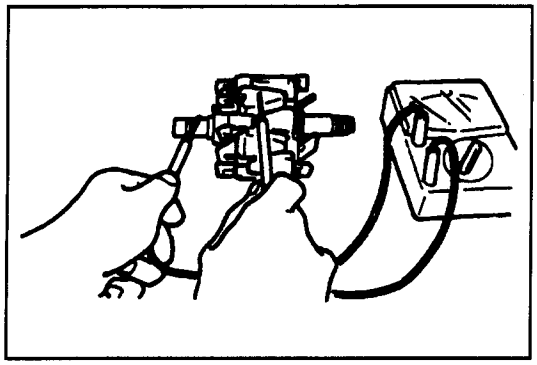

Inspection:

Measure the insulation resistance between the slip rings and the rotor core.

Standard: ∞ Ω

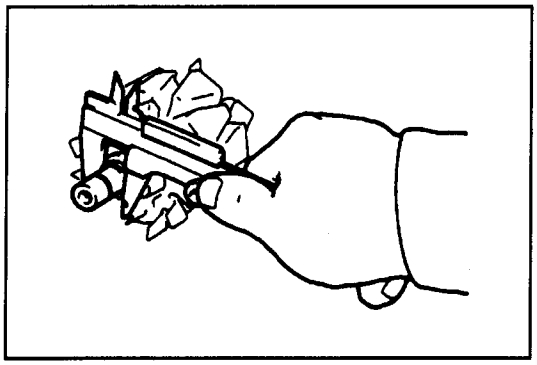

Inspection:

Inspect the slip rings.

1. If the slip rings are damaged, correct them with sand paper (#400).
2. Measure the outside diameter of the slip rings.

Standard: 14.4 mm (0.567 in.)
Limit: 14.0 mm (0.551 in.)

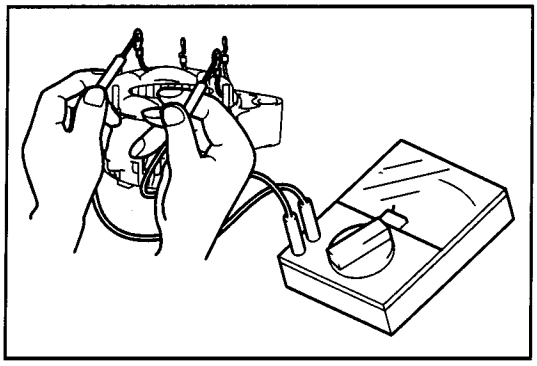

Inspection:

Inspect the stator coil of the drive end frame.
Measure the resistance between the phases.

Standard: Approx. 1.0 Ω

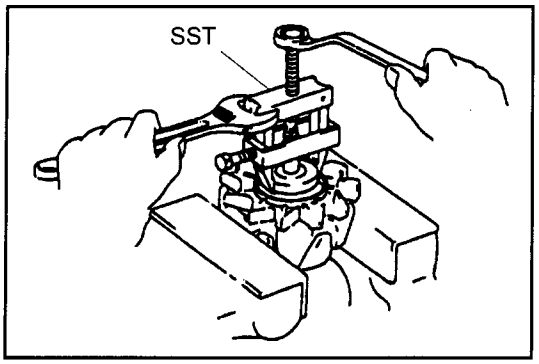

[Point 8]

Disassembly:

Remove the rear bearing and spring washer.

SST 09820-76002-71
(09820-00021)

www.truck-freeworkshop.com

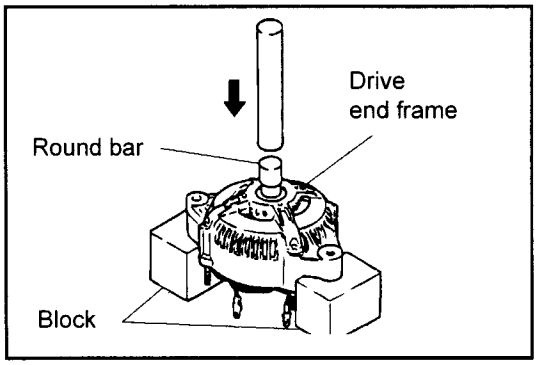

[Point 9]

Disassembly:

Use blocks as shown in the illustration to set the drive end frame horizontally, then use a press to remove the bearings.

Caution:
The bearings (2 pieces) used are for high speed use, therefore be sure to use the specified bearings when replacing them (DENSO part number is written clearly on them) and do not apply shock to the bearings.

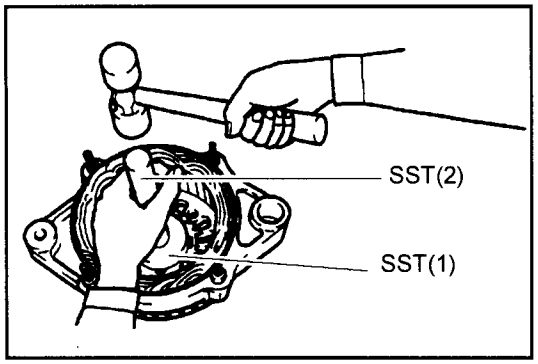

[Point 10]

Reassembly:

Install the front bearing.

SST 09950-76018-71 .....(1)
(09950-60010)
09950-76020-71 .....(2)
(09950-70010)

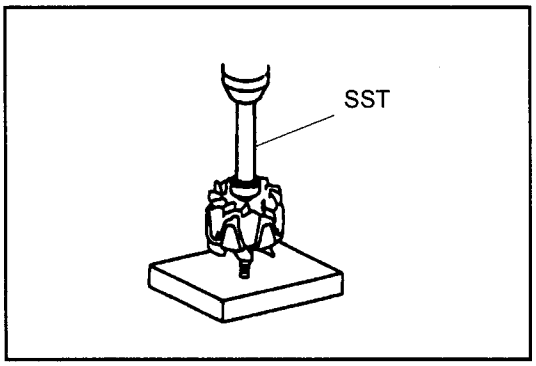

[Point 11]

Reassembly:

Reassemble the rear bearing and spring washer.

SST 09820-76003-71
(09820-00030)

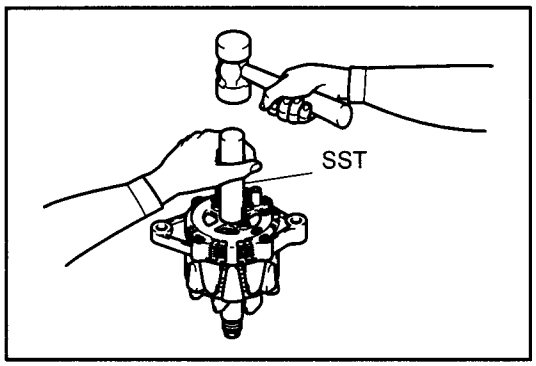

[Point 12]

Reassembly:

Insert a plate washer or similar into the clearance between the SST and the rear end frame, so that pressure is applied uniformly to the rear end frame.

SST 09381-41950-71

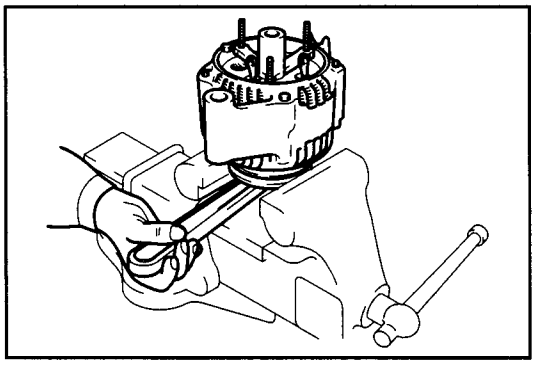

[Point 13]

Reassembly:

Set the alternator pulley in a vice and tighten the set nut.

Caution:
Always use aluminum pads in the vice.

www.truck-freeworkshop.com

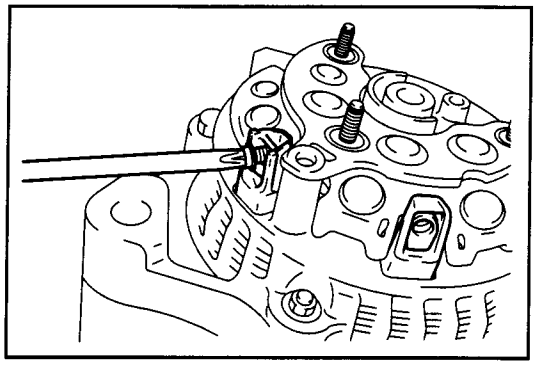

[Point 14]

Reassembly:

Reassemble the rectifier holder.

1. Check that the four terminal tips of the stator coil have been securely inserted into the end frame terminal holder.
2. Temporarily tighten all the terminal attachment bolts before fully tightening them.
3. Tighten the rectifier attachment bolt.

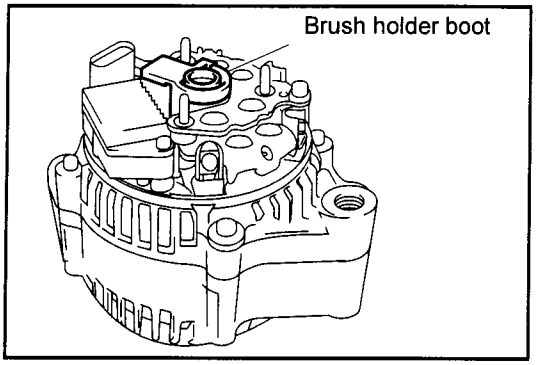

[Point 15]

Reassembly:

Check that the brush holder boot is correctly fitted.

www.truck-freeworkshop.com

APPENDIX

Page

SST LIST 13-2

SERVICE STANDARDS..... 13-5

ENGINE BODY 13-5

FUEL SYSTEM 13-8

COOLING SYSTEM 13-8

LUBRICATION SYSTEM 13-8

IGNITION SYSTEM..... 13-9

STARTING SYSTEM 13-9

CHARGING SYSTEM 13-10

TIGHTENING TORQUE FOR EACH PART 13-11

www.truck-freeworkshop.com

SST LIST

Illustration	Part No.	Part name	Section						
			3	4	5	6	9	12	13
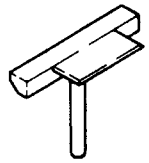	09032-76001-71 (09032-00100)	Oil pan seal cutter	○	○					
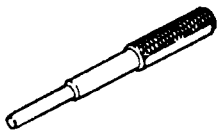	09201-76006-71 (09201-60011)	Valve guide bushing remover & replacer	○	○					
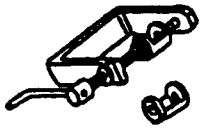	09202-76002-71 (09202-70020)	Valve spring compressor	○	○					
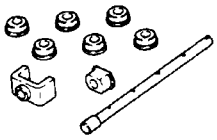	09215-76004-71 (09215-00101)	Camshaft bearing remover & replacer	○	○					
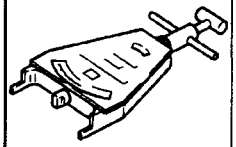	09216-76001-71 (09216-00020)	Belt tension gauge	○	○					
	09221-76062-71 (09221-25018)	Piston pin remover & replacer	○	○					
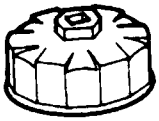	09228-76001-71 (09228-06501)	Oil filter wrench	○	○			○		
	09240-76002-71 (09240-00014)	Carburetor adjusting gauge set			○				

www.truck-freeworkshop.com

Illustration	Part No.	Part name	Section						
			3	4	5	6	9	12	13
	09240-76003-71 (09240-00020)	Wire gauge set			○				
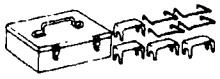	09270-76001-71 (09270-71010)	Rocker arm support tool set	○	○					
	09276-76001-71 (09276-71010)	Valve lifter tool	○	○					
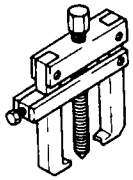	09286-76001-71 (09286-46011)	Injection pump spline shaft puller						○	
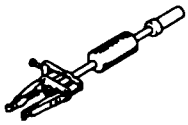	09320-23000-71	Bearing remover	○	○					
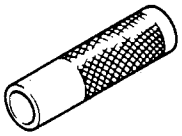	09381-41950-71	HST pump bearing replacer							○
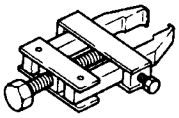	09820-76002-71 (09820-00021)	Alternator rear bearing puller							○
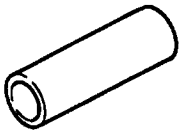	09820-76003-71 (09820-00030)	Alternator rear bearing replacer							○

www.truck-freeworkshop.com

Illustration	Part No.	Part name	Section						
			3	4	5	6	9	12	13
	09860-76001-71 (09860-11011)	Carburetor screwdriver set			○				
	09950-76014-71 (09950-40011)	Puller B set	○	○					
	09950-76018-71 (09950-60010)	Replacer set	○	○					○
	09950-76019-71 (09950-60020)	Replacer B set	○	○					
	09950-76020-71 (09950-70010)	Handle set	○	○					○
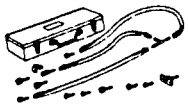	09268-76007-71 (09268-41047)	Injection measuring tool set				○			
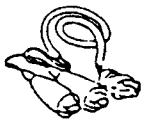	09842-76001-71 (09842-30070)	EFI inspection wire				○			

www.truck-freeworkshop.com

SERVICE STANDARDS

ENGINE BODY

Cylinder head

Lower surface distortion limit		mm (in.)	0.15 (0.0059)
Distortion limit for mounting surface of the manifold		mm (in.)	0.10 (0.0039)
Valve seat	Correction angle	IN	30° 45° 60°
		EX	30° 45° 65°
	Contact angle		45°
	Contact width standard	mm (in.)	1.2 to 1.6 (0.047 to 0.063)

Valve guide bushing

Bore	mm (in.)	Standard	8.010 to 8.030 (0.3154 to 0.3161)

Valve

Total length	mm (in.)	Standard	IN	108.2 (4.260)
			EX	108.5 (4.272)
		Limit	IN	107.7 (4.240)
			EX	108.0 (4.252)
Stem section outside diameter	mm (in.)	Standard	IN	7.970 to 7.985 (0.3138 to 0.3144)
			EX	7.965 to 7.980 (0.3136 to 0.3142)
Oil clearance with the valve guide bushing	mm (in.)	Standard	IN	0.025 to 0.060 (0.0010 to 0.0024)
			EX	0.030 to 0.065 (0.0012 to 0.0026)
		Limit	IN	0.10 (0.0039)
			EX	0.12 (0.0047)
Wall thickness of the valve head	mm (in.)	Standard	IN	1.0 to 1.4 (0.039 to 0.055)
			EX	1.3 to 1.7 (0.051 to 0.067)
		Limit	IN	0.5 (0.020)
			EX	0.8 (0.031)

Valve stem cap

Cap thickness	mm (in.)	Standard	1.31 to 1.49 (0.0516 to 0.0587)

Valve spring

Free length	mm (in.)	Standard	46.0 (1.81)
		Limit	45.5 (1.79)
Squareness		mm (in.)	2.0 (0.079)

Rocker arm & shaft

Rocker arm inside diameter	mm (in.)	Standard	18.500 to 18.515 (0.7283 to 0.7289)
Rocker shaft outside diameter	mm (in.)	Standard	18.474 to 18.487 (0.7273 to 0.7278)
Oil clearance between the rocker shaft and rocker arm	mm (in.)	Standard	0.013 to 0.041 (0.0005 to 0.0016)
		Limit	0.08 (0.0031)

Push rod

Face runout limit	mm (in.)	0.30 (0.0118)

Intake & exhaust manifold

Distortion limit for the mounting surface of the cylinder head IN & EX	mm (in.)	0.4 (0.0157)

www.truck-freeworkshop.com

Camshaft

Face runout limit			mm (in.)	0.06 (0.0024)
Cam height	mm (in.)	Standard	IN	38.620 to 38.720 (1.5205 to 1.5244)
			EX	38.629 to 38.729 (1.5208 to 1.5248)
		Limit	IN	38.26 (15.063)
			EX	38.27 (15.067)
Cam journal outside diameter	mm (in.)	Standard	No.1	46.459 to 46.475 (1.8291 to 1.8297)
			No.2	46.209 to 46.225 (1.8292 to 1.8199)
			No.3	45.959 to 45.975 (1.8094 to 1.8100)
			No.4	45.709 to 45.725 (1.7996 to 1.8002)
			No.5	45.459 to 45.475 (1.7897 to 1.7904)
Camshaft bearing inside diameter	mm (in.)	Standard	No.1	46.500 to 46.540 (1.8307 to 1.8323)
			No.2	46.250 to 46.290 (1.8209 to 1.8224)
			No.3	46.000 to 46.040 (1.8110 to 1.8126)
			No.4	45.750 to 45.790 (1.8012 to 1.8028)
			No.5	45.500 to 45.540 (1.7913 to 1.7929)
Camshaft journal oil clearance	mm (in.)	Standard		0.025 to 0.081 (0.0010 to 0.0032)
		Limit		0.10 (0.0039)
Thrust clearance	mm (in.)	Standard		0.07 to 0.22 (0.0028 to 0.0087)
		Limit		0.3 (0.012)

Timing chain, timing gear

Timing chain stretch limit	(tension 5 kg)	mm (in.)	291.4 (11.472)
Crankshaft timing gear outside diameter limit	(with the chain)	mm (in.)	59 (2.32)
Cam shaft timing gear outside diameter limit	(with the chain)	mm (in.)	114 (4.49)

Tension, damper

Wall thickness of the tensioner head section	mm (in.)	Standard	15 (0.591)
		Limit	12.5 (0.492)
Damper wall thickness	mm (in.)	Standard	6.6 (0.260)
		Limit	5.0 (0.197)

Valve lifter

Lifter outside diameter	mm (in.)	Standard	21.387 to 21.404 (0.8420 to 0.8427)
Cylinder block lifter hole diameter	mm (in.)	Standard	21.417 to 21.443 (0.8432 to 0.8442)
Oil clearance of the valve lifter	mm (in.)	Standard	0.012 to 0.056 (0.0005 to 0.0022)
		Limit	0.10 (0.0039)
Leak down test (oil temperature 20°C with 20 kg)		Standard	7 to 28 seconds/1 mm (0.04 in.)

Cylinder block

Upper surface distortion limit		mm (in.)	0.05 (0.0020)
Cylinder bore	mm (in.)	Standard	91.000 to 91.030 (3.5827 to 3.5839)
		Wear amount limit	0.20 (0.008)
		Honing allowance	0.02 (0.0008) or less

www.truck-freeworkshop.com

Piston, piston ring

Piston outside diameter mm (in.)	STD size		90.925 to 90.955 (3.5797 to 3.5809)
	O/S 0.50		91.425 to 91.455 (3.599 to 3.601)
Clearance with the cylinder mm (in.)			0.065 to 0.085 (0.0026 to 0.0033)
Clearance between the piston ring and ring groove mm (in.)			0.03 to 0.07 (0.0012 to 0.0028)
Piston ring gap mm (in.)	Standard	No.1	0.23 to 0.48 (0.0091 to 0.0189)
		No.2	0.16 to 0.44 (0.0063 to 0.0173)
		Oil	0.13 to 0.47 (0.0051 to 0.0185)

Connecting rod

Thrust clearance mm (in.)	Standard	0.160 to 0.312 (0.0063 to 0.00123)
	Limit	0.35 (0.0138)

Crankshaft

Thrust clearance mm (in.)	Standard	0.020 to 0.220 (0.0008 to 0.0087)
	Limit	0.30 (0.0118)
Journal outside diameter mm (in.)	Standard	57.985 to 58.000 (2.2829 to 2.2835)
Journal oil clearance mm (in.)	Standard	0.020 to 0.051 (0.0008 to 0.0020)
	Limit	0.10 (0.0039)
Crank pin outside diameter mm (in.)	Standard	47.985 to 48.00 (1.8892 to 1.8898)
Oil clearance of the crank pin mm (in.)	Standard	0.020 to 0.051 (0.0008 to 0.0020)
	Limit	0.10 (0.0039)
Face runout limit mm (in.)		0.06 (0.0024)
Taper and ellipticity of the journal and crank pin	Limit	0.02 (0.0008)

Engine adjustment

Coolant capacity		Refer to repair manual for each vehicle model.
Lubricating oil capacity ℓ (US gal)	Oil pan capacity	4.0 (1.1)
Specific gravity of the electrolyte (electrolyte temperature 20°C)		1.28
V-belt deflection standard (pressing force 10 kgf) [22 lbf] mm (in.)	When installing a new one	7 to 9 (0.28 to 0.35)
	When inspecting	8 to 13 (0.31 to 0.51)
V-belt tension standard (using a tension gauge) kgf (lbf)	When installing a new one	38 to 62 (84 to 137)
	When inspecting	30 to 50 (66 to 110)
Spark plug gap mm (in.)	Standard	0.7 to 0.8 (0.028 to 0.031)
Ignition timing	4Y-M	BTDC 7°/650
	4Y-E	BTDC 7°/750
Idle speed rpm		Refer to repair manual for each vehicle model.
No-load maximum speed		Refer to repair manual for each vehicle model.
Ignition order		1-3-4-2
Intake manifold vacuum (during idling) mmHg		400 or more
Compression kgf/cm^2 (psi)	Standard	12.5 (178)
	Limit	9.0 (128)
	Cylinder difference	1.0 (14)

www.truck-freeworkshop.com

FUEL SYSTEM

Carburetor (4Y-M only)

Float level	mm (in.)	Float elevation position	5.5 (0.217)
		Float declining position	1.1 to 1.3 (0.043 to 0.051)
Throttle valve fully closing angle			7° (from horizontal position)
Throttle valve idle opening angle			13.5° (from horizontal position)
Throttle valve fully opening angle			90° (from horizontal position)
Fast idle opening angle (with 25°C)			23 to 25° (from horizontal position)
Choke valve fully closing angle			15° (from horizontal position)
Unloader opening angle (with fully opened throttle)			38 to 42° (from horizontal position)
Choke breaker pulling angle (with -400 mmHg)			39 to 41° (from horizontal position)
Idle-up setting opening angle			19.5° (from horizontal position)

Injector (4Y-E only)

Injection amount	cc/15 seconds	41 to 42
Leakage from the nozzle		1 drop or less/3 minutes

Fuel pressure regulator (4Y-E only)

Fuel pressure	kPa (kgf/cm^2) [psi]	284 ± 5 (2.9 ± 0.1) [41.2 ± 1.4]

COOLING SYSTEM

Thermostat

Temperature when starting to open	°C (°F)	74.5 to 78.5 (166 to 173)
Temperature when fully open	°C (°F)	95 (203)
Lift amount when fully open	mm (in.)	8 (0.31) or more

LUBRICATION SYSTEM

Oil pump

Rotor side clearance	mm (in.)	Standard	0.03 to 0.09 (0.0012 to 0.0035)
		Limit	0.15 (0.0059)
Clearance between the driven rotor and pump body	mm (in.)	Standard	0.10 to 0.16 (0.0039 to 0.0063)
		Limit	0.2 (0.008)
Rotor tip clearance	mm (in.)	Standard	0.06 to 0.15 (0.0024 to 0.0059)
		Limit	0.2 (0.008)

www.truck-freeworkshop.com

IGNITION SYSTEM

Distributor (4Y-M)

Air gap mm (in.)		Standard	0.2 to 0.4 (0.008 to 0.016)
Pickup coil resistance		Standard	140 to 180 Ω
Governor shaft thrust clearance mm (in.)		Standard	0.15 to 0.50 (0.0059 to 0.0197)
Governor shaft thrust washer thickness mm (in.)			0.3 (0.012)
			0.4 (0.016)
			0.5 (0.020)
			0.6 (0.024)
Resistive cord resistance		Limit	25 kΩ/cord
Ignition coil primary coil resistance		Standard	1.2 to 1.5 Ω
Ignition coil secondary coil resistance		Standard	7.7 to 10.4 kΩ
Governor advance angle (on the crank axle)	Engine speed rpm	650 to 1250	0°
		1500	2°
		2000	76°
		2500	13.5°
Vacuum advance angle (on the crank axle)	Negative pressure mmHg	-100	0°
		-120	0.4 to 5°
		-240	14 to 18°
		-320 or more	18 to 22°

Distributor (4Y-E)

Air gap mm (in.)	Standard	0.2 to 0.4 (0.008 to 0.016)
Pickup coil resistance	Standard	460 ± 50 Ω
Resistive cord resistance	Limit	25 kΩ/cord
Ignition coil primary coil resistance	Standard	1.2 to 1.5 Ω
Ignition coil secondary coil resistance	Standard	7.7 to 10.4 kΩ

STARTING SYSTEM

Starter motor

Motor model			DC series-wound reduction model
Nominal voltage V			12
Nominal output kW			2.5
No-load characteristic	Voltage V		11
	Current A		90 or less
	Revolving speed rpm		3500 or more
Commutator	Ellipticity mm (in.)	Limit	0.05 (0.0020)
	Outside diameter mm (in.)	Standard	30 (1.18)
		Limit	29 (1.14)
	Mica depth mm (in.)	Standard	0.5 to 0.8 (0.020 to 0.031)
		Limit	0.2 (0.008)
Brush	Length mm (in.)	Standard	20.5 (0.807)
		Limit	13 (0.512)
	Spring mount load N (kgf) [lbf]	Standard	31.4 to 39.2 (3.2 to 4.0) [7.1 to 8.81]
		Limit	21.6 (2.2) [4.91]

www.truck-freeworkshop.com

CHARGING SYSTEM

Alternator

Nominal voltage		V	12
Maximum output		A	60
Output revolution speed		rpm	1500
Brush length	mm (in.)	Standard	10.5 (0.413)
		Limit	1.5 (0.059)
Slip ring outside diameter	mm (in.)	Standard	14.4 (0.567)
		Limit	14.0 (0.551)

www.truck-freeworkshop.com

TIGHTENING TORQUE FOR EACH PART

Tightening place				Tightening torque N·m (kgf·cm) [ft·lbf]
Cylinder block	×	Cylinder head	:M12	88 (900) [65.1]
			:M8	19 (194) [14.0]
Cylinder block	×	Timing gear case	:M10	37 (377) [27.3]
			:M8	21 (214) [15.5]
Cylinder block	×	Chain vibration damper		19 (194) [14.0]
Cylinder block	×	Chain tensioner		21 (214) [15.5]
Cylinder block	×	Camshaft thrust plate		21 (214) [15.5]
Cylinder block	×	Distributor		17.5 (178) [12.9]
Cylinder block	×	Oil filter		20 (204) [14.8]
Cylinder block	×	Fuel pump (4Y-M)		21 (214) [15.5]
Cylinder block	×	Fuel filter (4Y-E)		21 (214) [15.5]
Cylinder block	×	Drain plug		44 (448) [32.4]
Cylinder block	×	Oil pan		12.5 (127) [9.2]
Cylinder block	×	Oil pump		18 (183) [13.2]
Cylinder block	×	Crankshaft bearing cap		78 (795) [57.5]
Cylinder head	×	Cylinder head cover		5 (51) [3.7]
Cylinder head	×	Rocker shaft		24 (244) [17.7]
Cylinder head	×	Spark plug		18 (183) [13.2]
Cylinder head	×	Manifold		49 (500) [36.2]
Cylinder head	×	Water pump		21 (214) [15.5]
Crankshaft × Crankshaft pulley				140 (1427) [103.2]
Timing gear case × Timing gear cover				21 (214) [15.5]
Camshaft × Camshaft timing gear				90 (917) [66.3]
Connecting rod × Connecting rod cap				49 (500) [36.2]
Oil strainer × Oil pump				8 (82) [5.9]
Water inlet × Water pump				21 (214) [15.5]
Water pump × Fan, Fan pulley				18 (183) [13.2]
Carburetor × Manifold (4Y-M)				20 (204) [14.8]
Alternator × Timing gear case				25 (255) [18.4]
Alternator × Adjusting bar				19 (194) [14.0]

www.truck-freeworkshop.com

www.truck-freeworkshop.com

Published by

TOYOTA Material Handling Company
A Division of TOYOTA INDUSTRIES CORPORATION

1st Printing: Aug. 2006

Pub. No. CE663

Printed in USA

C

www.truck-freeworkshop.com

www.truck-freeworkshop.com

TOYOTA
MATERIAL HANDLING U.S.A.

SERVICE INFORMATION BULLETIN

Maintenance
MA16-011
May 31, 2016
Repair Manual 00700-X8880-71 and CE663 Update (Diagnostic Connector)
8FGCU15-32 / 8FGU15-32

MODEL APPLICATION:
8FGCU15-32 and 8FGU15-32

GENERAL INFORMATION:
Repair manuals 00700-X8880-71 and CE663 have been updated to show the correct illustration of the diagnoistic connector for ignition timing inspection and adjustment. The following pages have been updated in each manual:

00700-X8880-71: Section 1.1.3, page 3-44 and 3-45

CE-663: Pages 3-44 and 3-45

The updated repair manual pages have been attached to this bulletin.

www.truck-freeworkshop.com

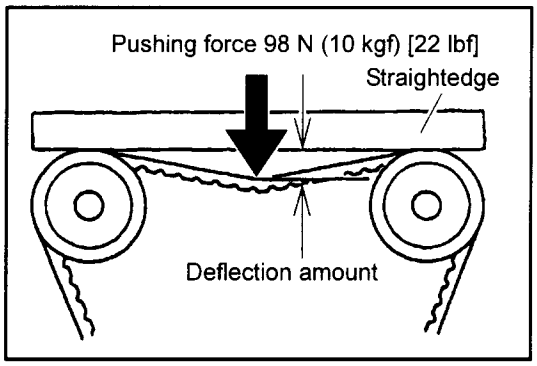

ENGINE ADJUSTMENT

V-BELT INSPECTION·ADJUSTMENT

V-belt Inspection

1. Check the belt for correct installation.
2. Apply a pushing force of 98 N (10 kgf) [22 lbf] between the alternator and the water pump and measure the amount of deflection.

   When installing a new part: 7 to 9 mm (0.28 to 0.35 in.)
   When inspecting: 8 to 13 mm (0.31 to 0.51 in.)

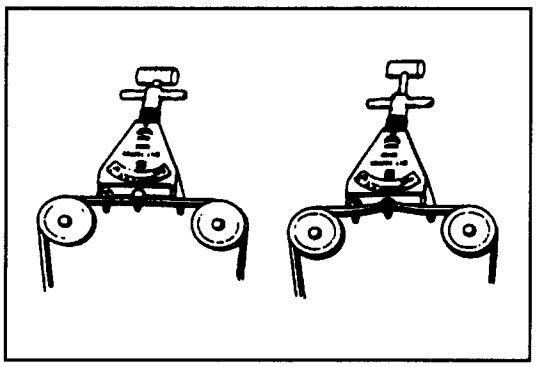

Caution:
- **Measure the belt deflection between specified pulleys.**
- **When replacing with a new belt, adjust the deflection to the middle value of the standard "When installing a new part".**
- **Apply the standard of "When inspecting" for the inspection of the belt if it is used for five minutes or more.**
- **When reassembling the belt that is used for 5 minutes or more, adjust to the mean value of the standard in "When inspecting".**

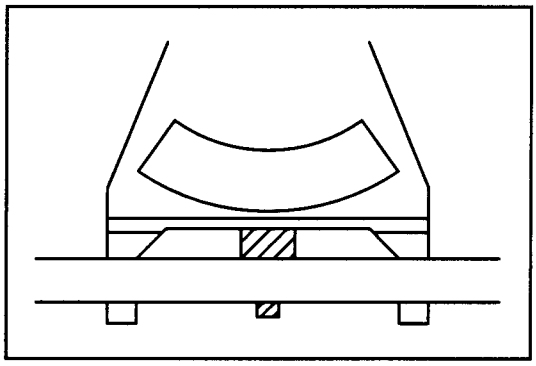

- **Tension standard when using SST**

  SST 09216-76001-71
  (09216-00020)

  When installing a new part: 392 to 588 N (38 to 62 kgf) [84 to 137 lbf]
  When inspecting: 294 to 490 N (30 to 50 kgf) [66 to 110 lbf]

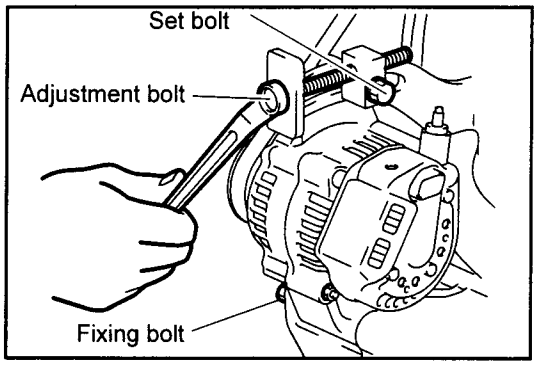

V-belt Deflection Adjustment

1. Loosen the fixing bolt.
2. Loosen the set bolt, then turn the adjustment bolt to adjust the tension.
3. Tighten the set bolt then re-check the belt tension.
4. Tighten the fixing bolt.

Caution:
Be careful not to apply too much tension to the belt.

www.truck-freeworkshop.com

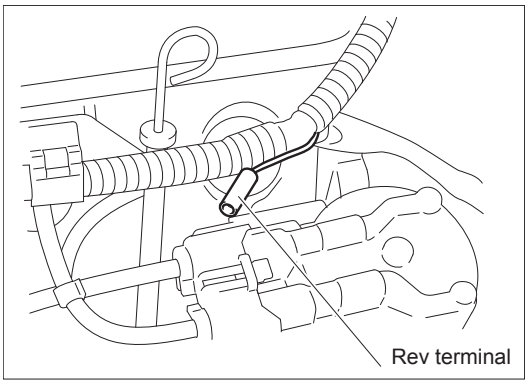

IDLE SPEED INSPECTION

1. Warm-up the engine.

   Standard

   Coolant temperature: 75 to 80°C (167 to 176°F) or more

2. Attach a rev counter to the terminal for measuring engine speed (Rev terminal).
3. Inspect the idle speed.

   Standard: Refer to repair manual for each vehicle model.

Note:

If the idle speed is outside the standard value, refer to the section on "Idle speed adjustment" in the repair manual for each vehicle model.

INSPECTION·ADJUSTMENT OF IGNITION TIMING

Note:

•Use the "timing light" as before when inspecting the ignition timing of the 4Y engine.

When you connect the terminals TC and E1 of the diagnostic connector by using the SST(09238-13130-71), the engine will be in the idle state and the ignition timing will be set to the standard value, 7° (BTDC)

If the terminals TC and E1 of the diagnostic connectors are not connected, or the engine is not in the idle state, the ignition timing will change depending on the engine load and engine speed.(Program ignition timing)

•The displayed value on the page [I/O ENGINE CTRL 7/10]of the Multi-function display or the plug-in ana-lyzer is the value of "Programmed ignition timing".

•Use the plug-in analyzer 3 seconds after the key is turned on. Operation within 3 seconds after the key is turned on is invalid.

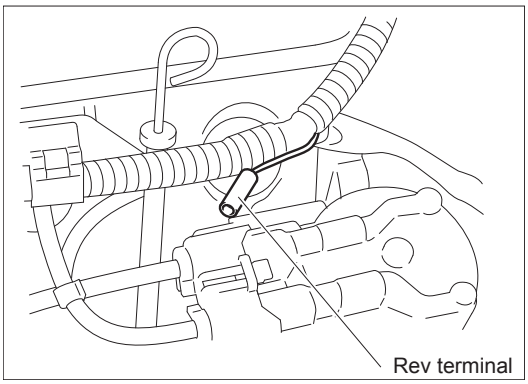

1. Warm-up the engine.

   Standard

   Coolant temperature: 75 to 80°C (167 to 176°F) or more

2. Attach a rev counter to the terminal for measuring engine speed (Rev terminal).
3. Inspect the idle speed.

   Standard: Refer to repair manual for each vehicle model.

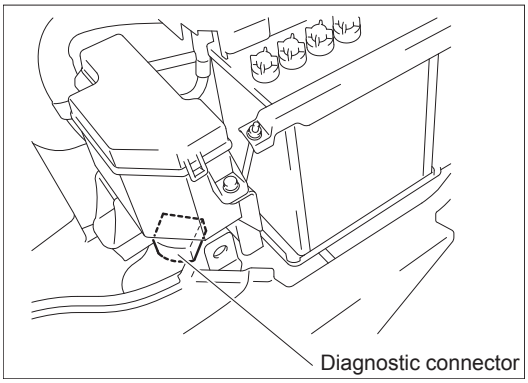

Note:

If the idle speed is outside the standard value, refer to the section on "Idle speed adjustment" in the repair manual for each vehicle model.

4. Install the timing light.

www.truck-freeworkshop.com

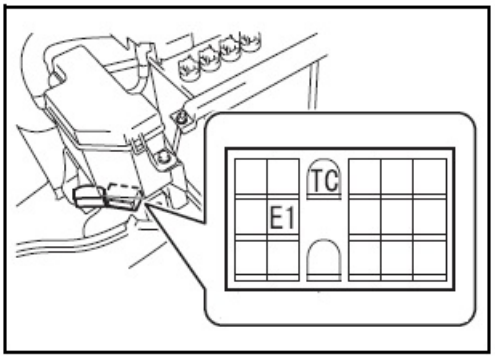

5. Use the SST to connect terminals TC and E1 of the diagnostic connector.

   SST 09238-13130-71

Caution:

If the wrong terminals are connected, a malfunction will occur. Be sure to connect the correct terminals.

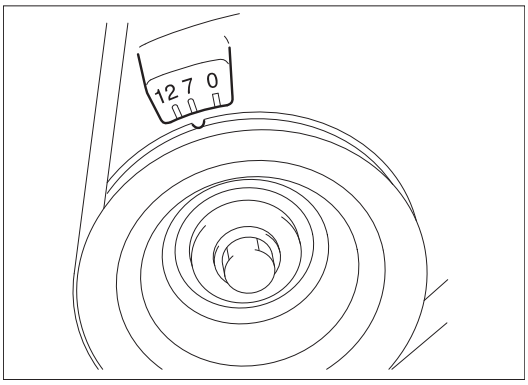

6. Inspect the ignition timing.

   Standard: 7° (BTDC)

7. If the ignition timing is outside the standard, loosen the distributor set bolt and rotate the distributor to adjust the ignition timing to the standard value.

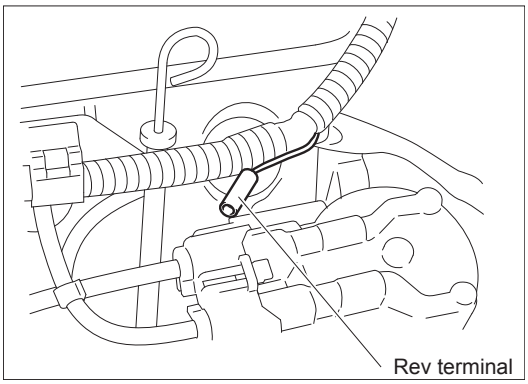

NO-LOAD MAXIMUM SPEED MEASUREMENT

1. Warm-up the engine.

   Standard Coolant temperature: 75 to 80°C (167 to 176°F) or more

2. Attach a rev counter to the terminal for measuring engine speed (Rev terminal).
3. Fully depress the accelerator pedal and measure the maximum speed.

   Standard: Refer to the repair manual for each vehicle model.

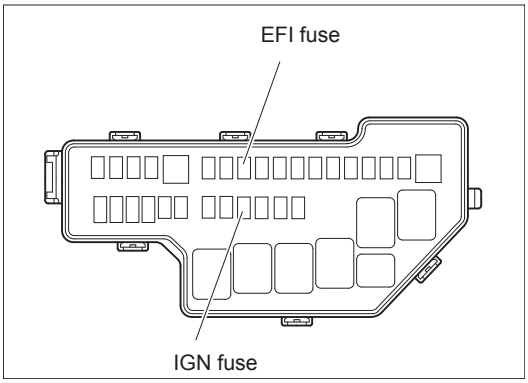

COMPRESSION INSPECTION

1. Warm-up the engine.

   Standard Coolant temperature: 75 to 80°C (167 to 176°F) or more

2. Disconnect the battery negative terminal.
3. Remove the spark plug.
4. Remove the IGN fuse and EFI fuse.

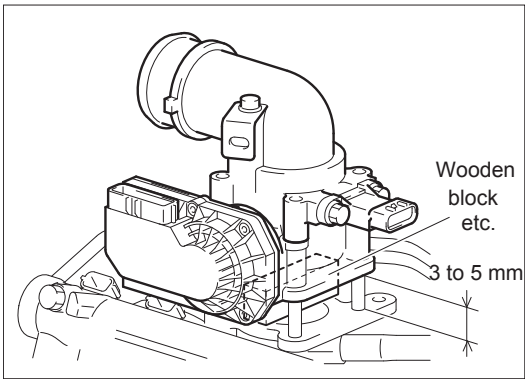

5. Remove the throttle body set nut and insert a wooden block etc. between the throttle body and the surge tank to maintain a clearance of 3 to 5 mm (0.12 to 0.20 in.).

Note:

Secure the intake air.

www.truck-freeworkshop.com

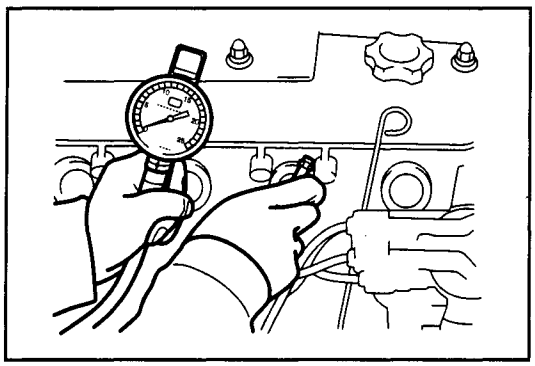

6. Connect the negative terminal of the battery and measure the compression pressure.

Note:

- **In order to ensure a cranking speed of more than 250 rpm, use a fully charged battery.**
- **Turn the starter before measuring the compression pressure in order to eliminate the foreign matter inside the cylinder.**

(1) Insert a compression gauge into the spark plug hole.

(2) Crank the engine with the starter and measure the compression pressure.

Standard: 1225 kPa (12.5 kgf/cm^2) [178 psi]
Limit: 883 kPa (9.0 kgf/cm^2) [128 psi]

(3) Measure the compression pressure of all four cylinders and inspect the difference.

Limit of pressure difference between cylinders:
98 kPa (1.0 kgf/cm^2) [14 psi]

(4) If some cylinders have a compression pressure less than the limit, or if their pressure differences are more than the limit, add a small amount of engine oil from the spark plug hole, and repeat the operations (1) to (3) above.

(a) If the pressure goes up by adding oil, there may be wear or damage on the piston ring or the cylinder wall.

(b) If the pressure remains low even after oil is added, there may be a burnout of the valve, defect in valve contact, or pressure leak from the gasket.

(5) Install the spark plugs.

T = 18 N·m (183 kgf·cm) [13.2 ft·lbf]

www.truck-freeworkshop.com

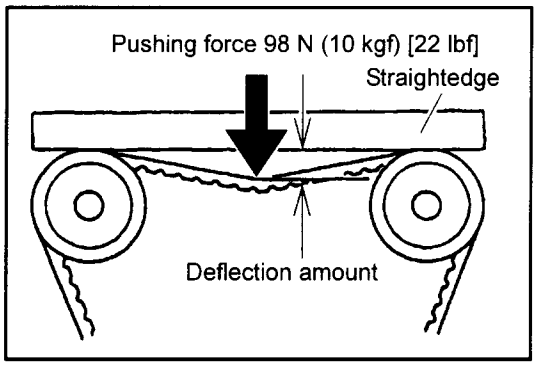

ENGINE ADJUSTMENT

V-BELT INSPECTION·ADJUSTMENT

V-belt Inspection

1. Check the belt for correct installation.
2. Apply a pushing force of 98 N (10 kgf) [22 lbf] between the alternator and the water pump and measure the amount of deflection.

   When installing a new part: 7 to 9 mm (0.28 to 0.35 in.)
   When inspecting: 8 to 13 mm (0.31 to 0.51 in.)

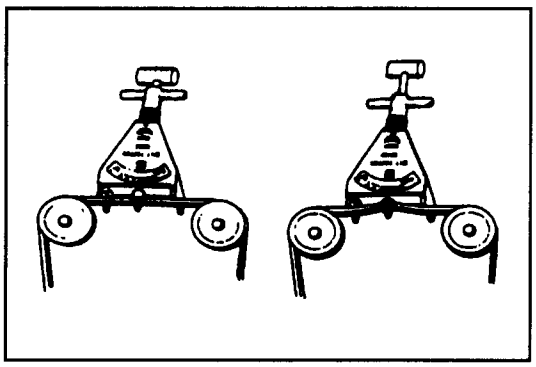

Caution:

- **Measure the belt deflection between specified pulleys.**
- **When replacing with a new belt, adjust the deflection to the middle value of the standard "When installing a new part".**
- **Apply the standard of "When inspecting" for the inspection of the belt if it is used for five minutes or more.**
- **When reassembling the belt that is used for 5 minutes or more, adjust to the mean value of the standard in "When inspecting".**

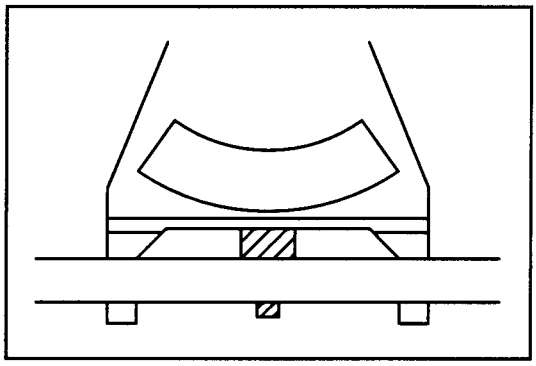

- **Tension standard when using SST**

  SST 09216-76001-71
  (09216-00020)

  When installing a new part: 392 to 588 N (38 to 62 kgf) [84 to 137 lbf]
  When inspecting: 294 to 490 N (30 to 50 kgf) [66 to 110 lbf]

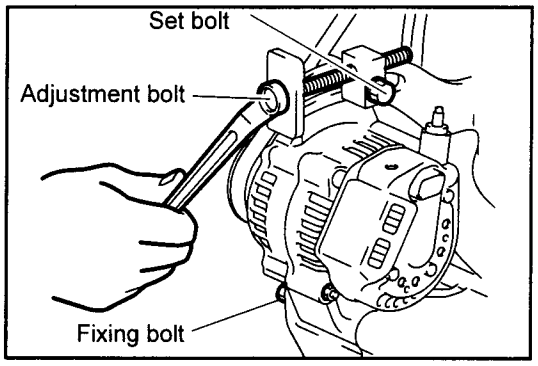

V-belt Deflection Adjustment

1. Loosen the fixing bolt.
2. Loosen the set bolt, then turn the adjustment bolt to adjust the tension.
3. Tighten the set bolt then re-check the belt tension.
4. Tighten the fixing bolt.

Caution:
Be careful not to apply too much tension to the belt.

www.truck-freeworkshop.com

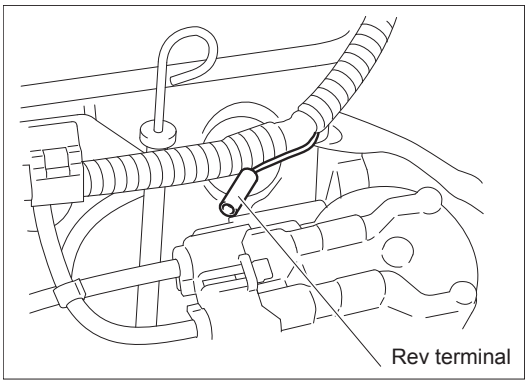

IDLE SPEED INSPECTION

1. Warm-up the engine.

   Standard

   Coolant temperature: 75 to 80°C (167 to 176°F) or more

2. Attach a rev counter to the terminal for measuring engine speed (Rev terminal).
3. Inspect the idle speed.

   Standard: Refer to repair manual for each vehicle model.

Note:

If the idle speed is outside the standard value, refer to the section on "Idle speed adjustment" in the repair manual for each vehicle model.

INSPECTION·ADJUSTMENT OF IGNITION TIMING

Note:

•Use the "timing light" as before when inspecting the ignition timing of the 4Y engine.

When you connect the terminals TC and E1 of the diagnostic connector by using the SST(09238-13130-71), the engine will be in the idle state and the ignition timing will be set to the standard value, 7° (BTDC)

If the terminals TC and E1 of the diagnostic connectors are not connected, or the engine is not in the idle state, the ignition timing will change depending on the engine load and engine speed.(Program ignition timing)

•The displayed value on the page [I/O ENGINE CTRL 7/10]of the Multi-function display or the plug-in ana-lyzer is the value of "Programmed ignition timing".

•Use the plug-in analyzer 3 seconds after the key is turned on. Operation within 3 seconds after the key is turned on is invalid.

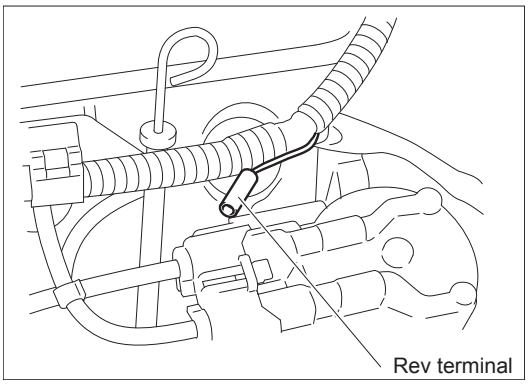

1. Warm-up the engine.

   Standard

   Coolant temperature: 75 to 80°C (167 to 176°F) or more

2. Attach a rev counter to the terminal for measuring engine speed (Rev terminal).
3. Inspect the idle speed.

   Standard: Refer to repair manual for each vehicle model.

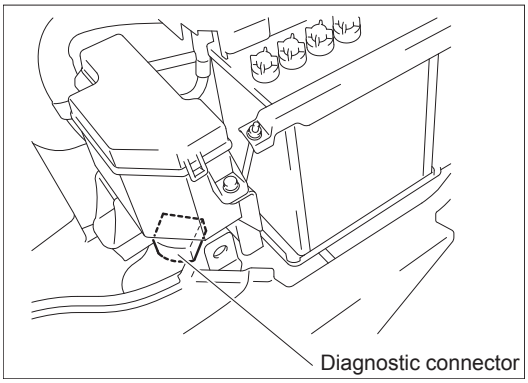

Note:

If the idle speed is outside the standard value, refer to the section on "Idle speed adjustment" in the repair manual for each vehicle model.

4. Install the timing light.

www.truck-freeworkshop.com

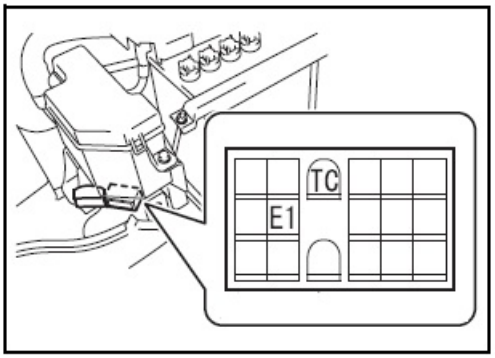

5. Use the SST to connect terminals TC and E1 of the diagnostic connector.

   SST 09238-13130-71

Caution:

If the wrong terminals are connected, a malfunction will occur. Be sure to connect the correct terminals.

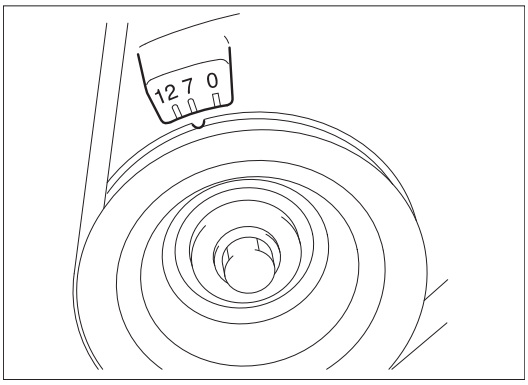

6. Inspect the ignition timing.

   Standard: 7° (BTDC)

7. If the ignition timing is outside the standard, loosen the distributor set bolt and rotate the distributor to adjust the ignition timing to the standard value.

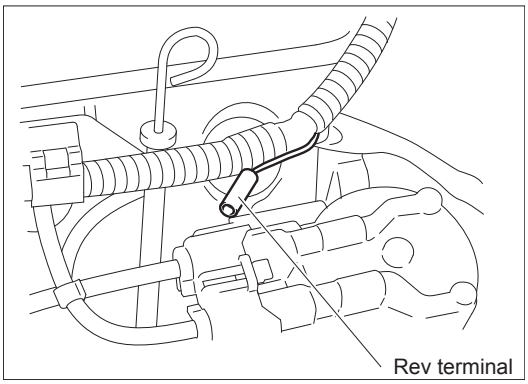

NO-LOAD MAXIMUM SPEED MEASUREMENT

1. Warm-up the engine.

   Standard Coolant temperature: 75 to 80°C (167 to 176°F) or more

2. Attach a rev counter to the terminal for measuring engine speed (Rev terminal).
3. Fully depress the accelerator pedal and measure the maximum speed.

   Standard: Refer to the repair manual for each vehicle model.

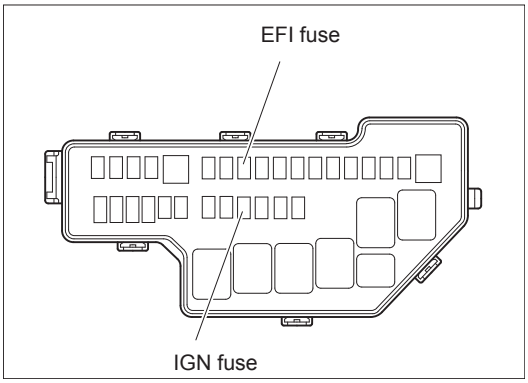

COMPRESSION INSPECTION

1. Warm-up the engine.

   Standard Coolant temperature: 75 to 80°C (167 to 176°F) or more

2. Disconnect the battery negative terminal.
3. Remove the spark plug.
4. Remove the IGN fuse and EFI fuse.

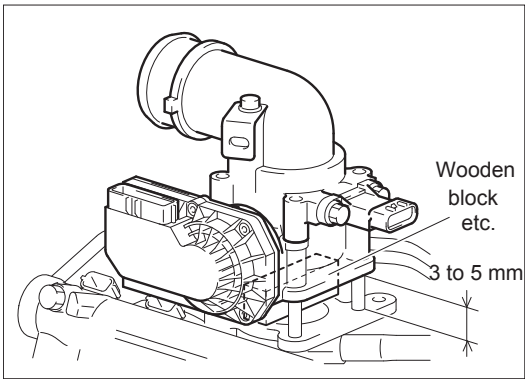

5. Remove the throttle body set nut and insert a wooden block etc. between the throttle body and the surge tank to maintain a clearance of 3 to 5 mm (0.12 to 0.20 in.).

Note:

Secure the intake air.

www.truck-freeworkshop.com

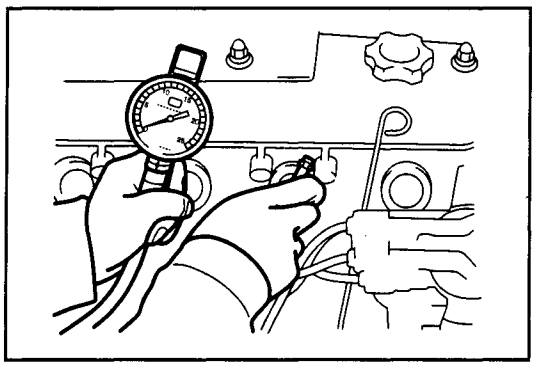

6. Connect the negative terminal of the battery and measure the compression pressure.

Note:

- **In order to ensure a cranking speed of more than 250 rpm, use a fully charged battery.**
- **Turn the starter before measuring the compression pressure in order to eliminate the foreign matter inside the cylinder.**

(1) Insert a compression gauge into the spark plug hole.

(2) Crank the engine with the starter and measure the compression pressure.

Standard: 1225 kPa (12.5 kgf/cm^2) [178 psi]
Limit: 883 kPa (9.0 kgf/cm^2) [128 psi]

(3) Measure the compression pressure of all four cylinders and inspect the difference.

Limit of pressure difference between cylinders:
98 kPa (1.0 kgf/cm^2) [14 psi]

(4) If some cylinders have a compression pressure less than the limit, or if their pressure differences are more than the limit, add a small amount of engine oil from the spark plug hole, and repeat the operations (1) to (3) above.

(a) If the pressure goes up by adding oil, there may be wear or damage on the piston ring or the cylinder wall.

(b) If the pressure remains low even after oil is added, there may be a burnout of the valve, defect in valve contact, or pressure leak from the gasket.

(5) Install the spark plugs.

T = 18 N·m (183 kgf·cm) [13.2 ft·lbf]