https://truckmanualshub.com/

PREFACE

1. This parts catalog is the last edition Yanmar crawler backhoe Model B3, B3-1 & B3-2.

2. Parts catalog history

	Parts catalog No.	Published	Remarks
1st edition	000Y00K2360	Nov., 1988	Disuse old edition
1st revised	000Y00K2362	Aug., 1994	Disuse old edition
last edition	000Y00K2363	May, 1998	

3. Model name

SECTION	Column	Model	Note
I (Vehicle)	(A)	B3(R)	
	(B)	B3(R) MULTI	mecha-multi spec.
	(C)	B3(R) PLT	hydraulic pilot spec.
	(D)	B3(R) PLT, MC	hydraulic pilot spec., multi change spec.
	(E)	B3-2(R) PLT	hydraulic pilot spec.
	(F)	B3-2(R) PLT, M	hydraulic pilot spec., multi change spec.
II (Engine)	(A)	3TN84L-RBA	

4. Machine No

Model	M/#	Manufactured
B3	00501~02444	88/7~91/4
B3-1	10501~11766	91/4~92/11
B3-2	20501~20901	93/9~96/1
3TN84L-RBA	06642~51185	88/7~96/1

5. Your understanding is asking that this parts catalog is not a technical data manual setting forth as servicing procedures, This parts catalog is using simplified illustration. Be sure to use Yanmar Genuine Parts in your maintenance servicing of Yanmar products. Be careful not to use the simple parts available in the market ; otherwise their use in repairing causes such as an early breakage, for instance.

https://truckmanualshub.com/

SPECIFICATIONS

Name			YANMAR CRAWLER BACKHOE	
Model			B3-P	B3-PR
Engine	Type		3TN84L-RBA	
	Model		Vertical 3-cylinder water-cooled diesel	
Dimensions	Overall length	mm	3750	
	Overall width	mm	1470	
	Overall height	mm	2390	
Bucket capacity (St'd)		m³	0.07	
Outside width of bucket (St'd)		mm	450	
Max. digging depth		mm	2700	
Max. cutting depth		mm	4940	
Max. dumping height		mm	3570	
Max. cutting radius at ground level		mm	4100	
Min. turning radius		mm	770	
Max. scoop capacity		kg	2050	
Traveling speeds (high•low)		km/hr	2.0	2.2
Climbing ability		—	30	
Distributed weight		kg/cm²	0.282	0.277
Crawler width (St'd)		mm	320	
Blade	Width × height	mm	1470×300	
	Capacity	m³	0.13	
Operating weight		kg	2900	2850

https://truckmanualshub.com/

塗装色一覧
TABLE OF PAINTED COLOR

旧塗装色 B3ｼﾘｰｽﾞ (B3 SERIES) M/# 00501～
PREVIOUS COLOR B3-1ｼﾘｰｽﾞ(B3-1 SERIES) M/# 10501～

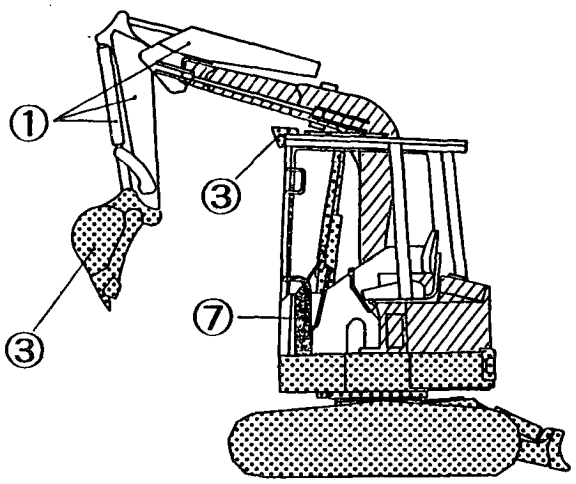

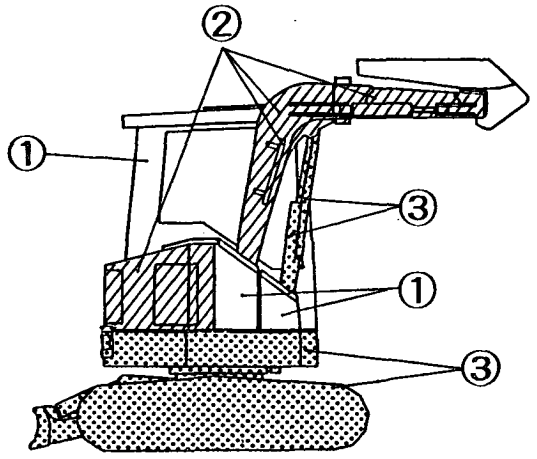

新塗装色 B3-2ｼﾘｰｽﾞ(B3-2 SERIES) M/# 20501～
NEW COLOR

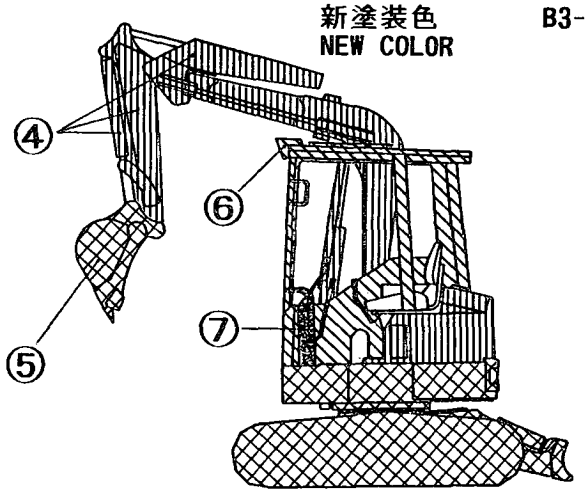

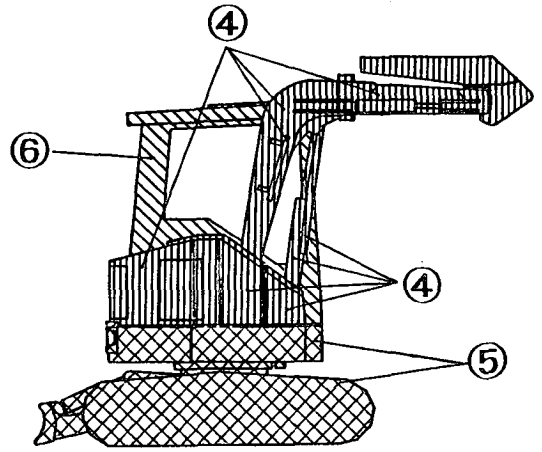

本機塗装色
Vehicle Painted Color

部所 Part	表示 Desc-ription	塗装色 ﾏﾝｾﾙ記号	Painted Color Munsel No.	色区分 Color Code
①		ヤンマークリームホワイト 5.0Y9/1	YANMAR Cream White 5.0Y9/1	40
②		ヤンマーニューライトイエロー 10YR6.5/8	YANMAR New Light Yellow 10YR6.5/8	36
③		ヤンマーダークオリーブII 7.5GY1/1	YANMAR Dark Olive II 7.5GY1/1	47
④		ヤンマーミントグリーン 1BG7/8	YANMAR Mint Green 1BG7/8	85
⑤		ヤンマー新ディープグリーン 0.6B2.2/4.2	YANMAR New Deep Green 0.6B2.2/4.2	88
⑥		ヤンマー新グレイッシュグリーン 2.9BG4.8/3.0	YANMAR New Grayish Green 2.9BG4.8/3.0	86
⑦		ヤンマーダークオリーブグレー 5.39Y2.97/0.78	YANMAR Dark Olive Gray 5.39Y2.97/0.78	72

https://truckmanualshub.com/

本機塗装色
Vehicle Painted Color

部所 Part	塗装色 Paint Color	塗料部品番号 (Paint Part No.)		
		16Lｶﾝ(16L Can)	4Lｶﾝ(4L Can)	ｽﾌﾟﾚｰ(SPRAY)
①	ヤンマークリームホワイト YANMAR Cream White	981101-09614	-------	981101-10140
②	ヤンマーニューライトイエロー YANMAR New Light Yellow	933110-91602	-------	981101-06041
③	ヤンマーダークオリーブII YANMAR Dark Olive II	981101-09515	-------	981101-10141
④	ヤンマーミントグリーン YANMAR Mint Green	981101-09700	977620-40850	977620-30851
⑤	ヤンマー新ディープグリーン YANMAR New Deep Green	981101-09588	977620-40880	977620-30881
⑥	ヤンマー新グレイッシュグリーン YANMAR New Grayish Green	981101-09616	977620-40860	977620-30861
⑦	ヤンマーダークオリーブグレー YANMAR Dark Olive Gray	-------	977620-40720	TOR-90460003

同一部品で塗装色が従来と異なるものの部品No. 表示
Description of part no., which color is different from previous one.

No.	部品番号 Part No.	部品名称 Part Name	塗装色	Paint Color
1.	XXXXXX-XXXXX -1	XXXXXXXXXXXX(85)	ﾔﾝﾏｰﾐﾝﾄｸﾞﾘｰﾝ	YANMAR Mint Green
2.	XXXXXX-XXXXX -2	XXXXXXXXXXXX(88)	ﾔﾝﾏｰ新ﾃﾞｨｰﾌﾟｸﾞﾘｰﾝ	YANMAR New Deep Green
3.	XXXXXX-XXXXX -3	XXXXXXXXXXXX(86)	ﾔﾝﾏｰ新ｸﾞﾚｲｯｼｭｸﾞﾘｰﾝ	YANMAR New Grayish Green

(注１)部品ｺｰﾄﾞ末尾の「-1」は塗装色がﾔﾝﾏｰﾐﾝﾄｸﾞﾘｰﾝであることを示す。
(注２)部品名末尾の(　)内は色区分を表す。
(NOTE 1) "1" at the end of part No shows YANMAR Mint Green.
(NOTE 2)(　) at the end of part name shows Color code.

主要部品の新・旧塗装色
New & previous color of main parts

旧 塗装色 previous color B3(M/# 00501～ B3-1(M/# 10501～	新 塗装色 new color B3-2(M/# 20501～	主な部品	main parts
ヤンマー クリームホワイト YANMAR Cream White	ﾔﾝﾏｰ新ｸﾞﾚｲｯｼｭｸﾞﾘｰﾝ YANMAR New Grayish Green	ｷｬﾉﾋﾟｰ式	canopy
	ﾔﾝﾏｰﾐﾝﾄｸﾞﾘｰﾝ YANMAR Mint Green	ﾌﾞｰﾑ(C), ｱｰﾑ ｱｰﾑｼﾘﾝﾀﾞｰ, ﾊﾞｹｯﾄｼﾘﾝﾀﾞｰ ﾊﾞｹｯﾄｱｰﾑ、ﾊﾞｹｯﾄﾘﾝｸ FO ﾀﾝｸ, 作動油ﾀﾝｸ	boom(C), arm, arm/bucket cylinder, bucket arm/link, fuel tank, hyd. oil tank
ヤンマー ニューライトイエロー YANMAR New Light Yellow		ﾌﾟﾚｰﾄ(ｶﾞｰﾄﾞ) ﾌﾞｰﾑ(A), ﾌﾞｰﾑ(B) ｵﾌｾｯﾄｼﾘﾝﾀﾞｰ, ﾎﾞﾝﾈｯﾄ	plate(guard), boom(A), boom(B), offset cylinder, bonnet
ヤンマーダークオリーブII YANMAR Dark Olive II		ﾌﾞｰﾑｼﾘﾝﾀﾞｰ ｶﾊﾞｰ(ﾌﾞｰﾑｼﾘﾝﾀﾞｰ)	boom cylinder cover(boom cylinder)
	ﾔﾝﾏｰ新ｸﾞﾚｲｯｼｭｸﾞﾘｰﾝ YANMAR New Grayish Green	ﾜｰｸﾗﾝﾌﾟｶﾊﾞｰ	work lamp cover
	ﾔﾝﾏｰ新ﾃﾞｨｰﾌﾟｸﾞﾘｰﾝ YANMAR New Deep Green	ﾊﾞｹｯﾄ 旋回ﾌﾚｰﾑ, 走行ﾌﾚｰﾑ	bucket, turning frame, driving frame
ヤンマーダークオリーブグレー YANMAR Dark Olive Gray		操作部	control equipment

https://truckmanualshub.com/

各部の名称
PARTS NAME

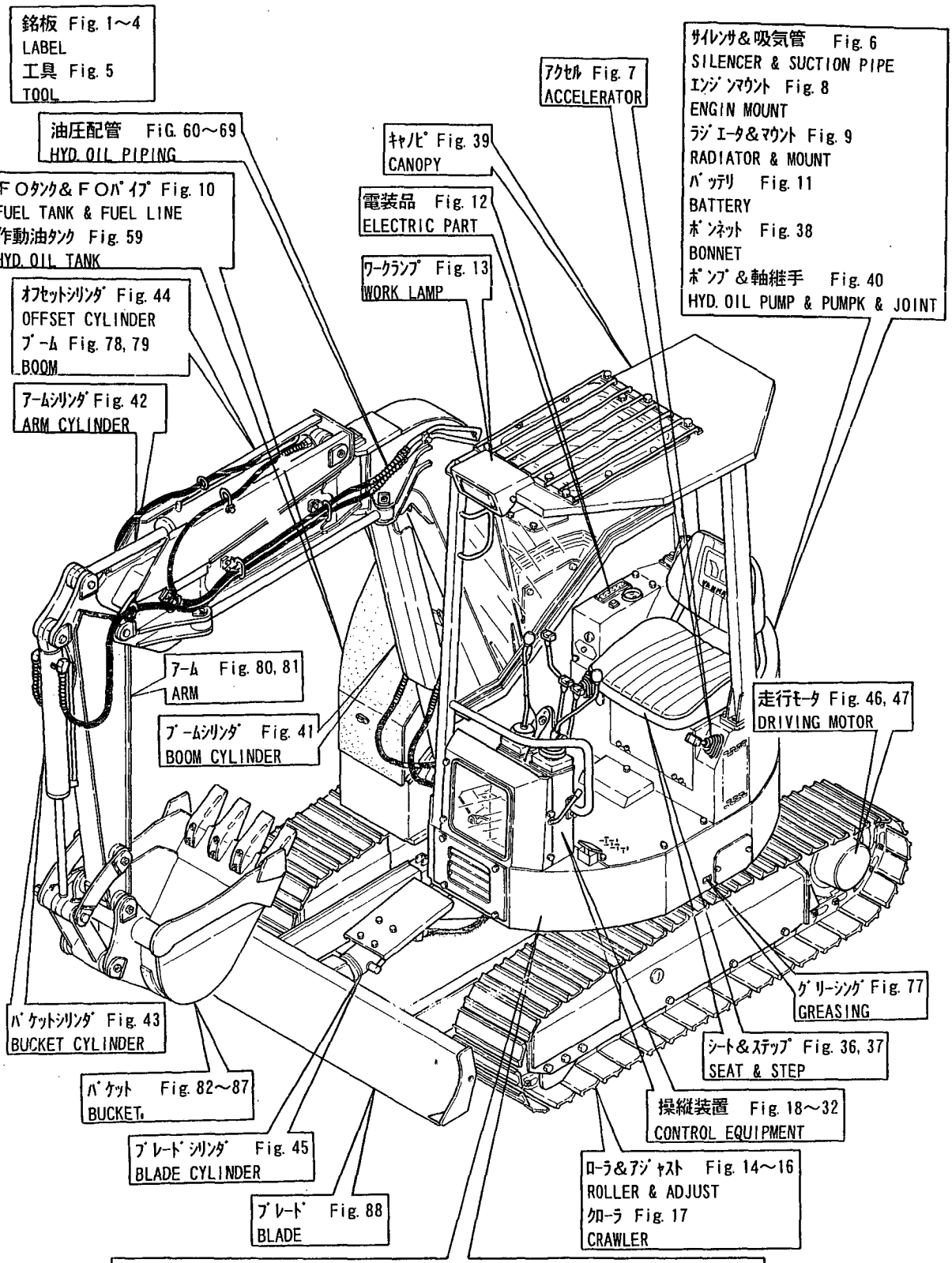

フレーム Fig. 33
FRAME
旋回ベアリング&旋回ロック Fig. 34
TURNING BEARING & TURNING LOCK
フレームカバー Fig. 35
FRAME COVER
旋回モータ Fig. 48
TURNING MOTOR
スイベルジョイント Fig. 49
SWIVEL JOINT
コントロールバルブ Fig. 50～53
CONTROL VALVE

リモコンバルブ Fig. 54
REMOTE CONTROL VALVE
ロータリバルブ Fig. 55
ROTARY VALVE
旋回ブレーキバルブ Fig. 56, 57
TURNING BRAKE VALVE
P. T. O. バルブ Fig. 58
P. T. O. VALVE
コントロール配管 Fig. 70～76
CONTROL PIPING

https://truckmanualshub.com/

配　線　図
WIRING DIAGRAM

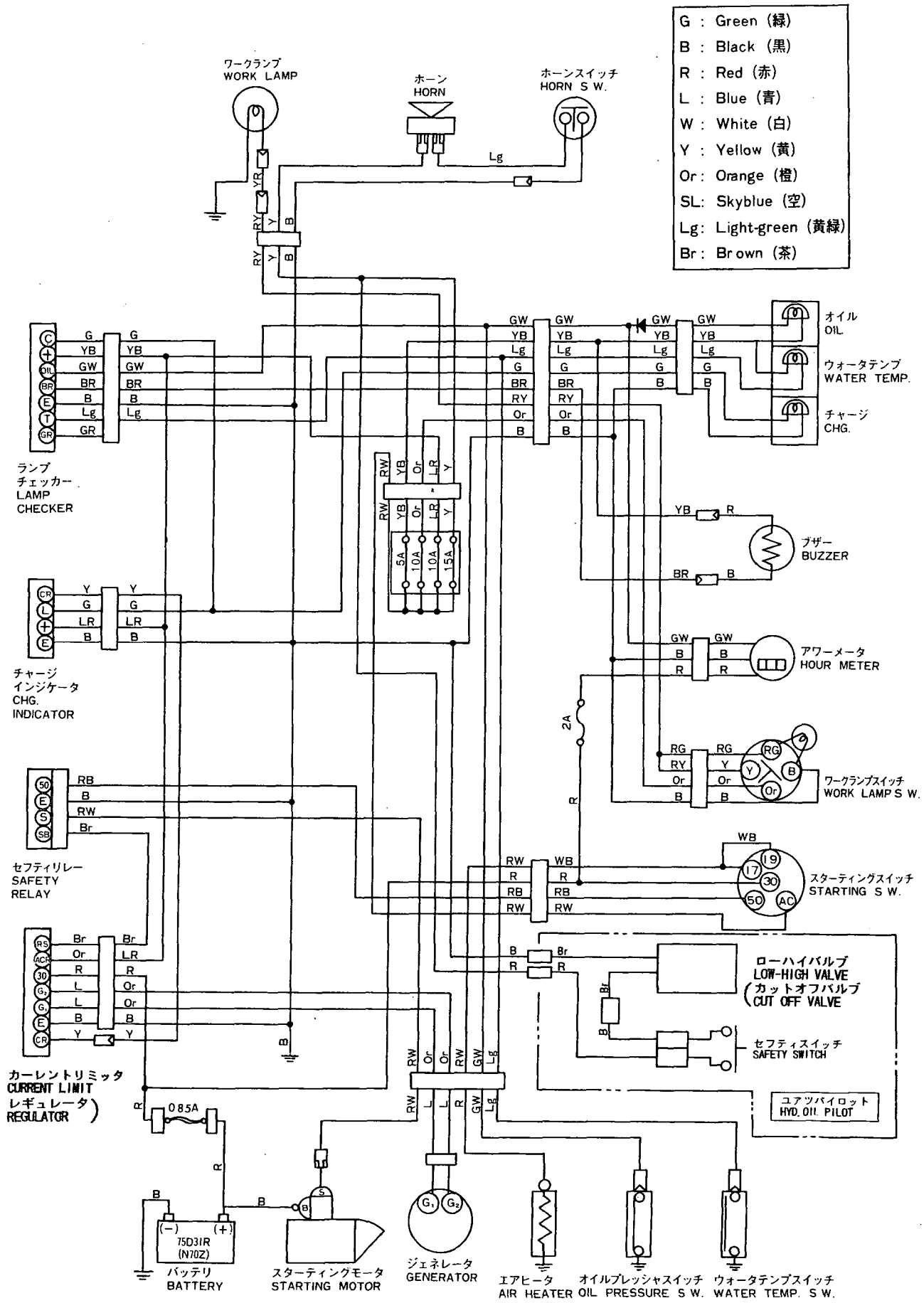

https://truckmanualshub.com/

```
1,1,,772146-03100,,"LABEL SET",1,1,,,,,,,,,,,,,,,
1-1,1,,772146-03101,,"LABEL SET",1,1,,,,,S,,,M00869,,M00869,,,,,,
2,2,,172146-03260,,LABEL,1,1,,,,,,,,,,,,,,,
2-1,2,,172146-03250,,"LABEL, OPERATION",1,1,,,,,S,,,M00869,,M00869,,,,,,
3,2,,172146-03110,,"LABEL, SPECIFICATION",1,1,,,,,,,,,,,,,,,
4,2,,172146-03120,,"LABEL, OIL/WATER",1,1,,,,,,,,,,,,,,,
5,2,,172146-03130,,"LABEL, GREASING",1,1,,,,,,,,,,,,,,,
6,2,,172146-03140,,LABEL,1,1,,,,,,,,,,,,,,,
7,2,,172146-03150,,LABEL,1,1,,,,,,,,,,,,,,,
8,2,,172146-03160,,LABEL,1,1,,,,,,,,,,,,,,,
9,2,,172141-03170,,"LABEL, RESTART",1,1,,,,,,,,,,,,,,,
10,2,,172146-03170,,LABEL,1,1,,,,,,,,,,,,,,,
11,2,,172141-03181,,"LABEL, RESERVER(C)",1,1,,,,,,,,,,,,,,,
12,2,,172146-03180,,LABEL,2,2,,,,,,,,,,,,,,,
13,2,,172519-03180,,"LABEL, LIFT ARM(R)",1,1,,,,,,,,,,,,,,,
14,2,,172141-03190,,LABEL(D,1,1,,,,,,,,,,,,,,,
15,2,,172141-03190,,LABEL(D,1,1,,,,,M,,,,,,,,,
15-1,2,,172146-03190,,LABEL,1,1,,,,,,,,,,,,,,,
16,2,,172519-03190,,"LABEL, LIFT ARM(L)",1,1,,,,,,,,,,,,,,,
17,2,,172141-03201,,"LABEL,ENGINE ROOM(C)",1,1,,,,,,,,,,,,,,,
18,2,,172146-03200,,LABEL,1,1,,,,,,,,,,,,,,,
19,2,,172146-03210,,LABEL,1,1,,,,,,,,,,,,,,,
20,2,,172146-03220,,LABEL,1,1,,,,,,,,,,,,,,,
21,2,,172146-03230,,LABEL,1,1,,,,,,,,,,,,,,,
22,2,,172146-03240,,LABEL,1,1,,,,,,,,,,,,,,,
23,2,,172141-03250,,"LABEL, OILING",1,1,,,,,,,,,,,,,,,
24,2,,172519-03290,,"LABEL, ENG.COVER",1,1,,,,,,,,,,,,,,,
25,2,,172141-03350,,"LABEL, QUICK(C)",1,1,,,,,,,,,,,,,,,
26,2,,172141-03360,,"LABEL, START SWITCH",1,1,,,,,,,,,,,,,,,
27,2,,172137-03730,,"LABEL, TURNING LOCK",1,1,,,,,,,,,,,,,,,
28,2,,172137-03780,,"LABEL, THROTTLE",1,1,,,,,,,,,,,,,,,
29,2,,933112-52400,,"LABEL, FUEL",1,1,,,,,,,,,,,,,,,
30,2,,933112-91901,,"LABEL, YANMAR",1,1,,,,,,,,,,,,,,,
31,1,,172141-03340,,"LABEL,ADJUST CRAWLER",1,,,,,,,1,,,,,,,,,
31-1,1,,172141-03341,,"LABEL,ADJUST CRAWLER",1,1,,,,,S,1,,M00595,,,,,,,,
```

https://truckmanualshub.com/

Fig. 1 銘板(初期タイプ) LABEL(INFANCY)

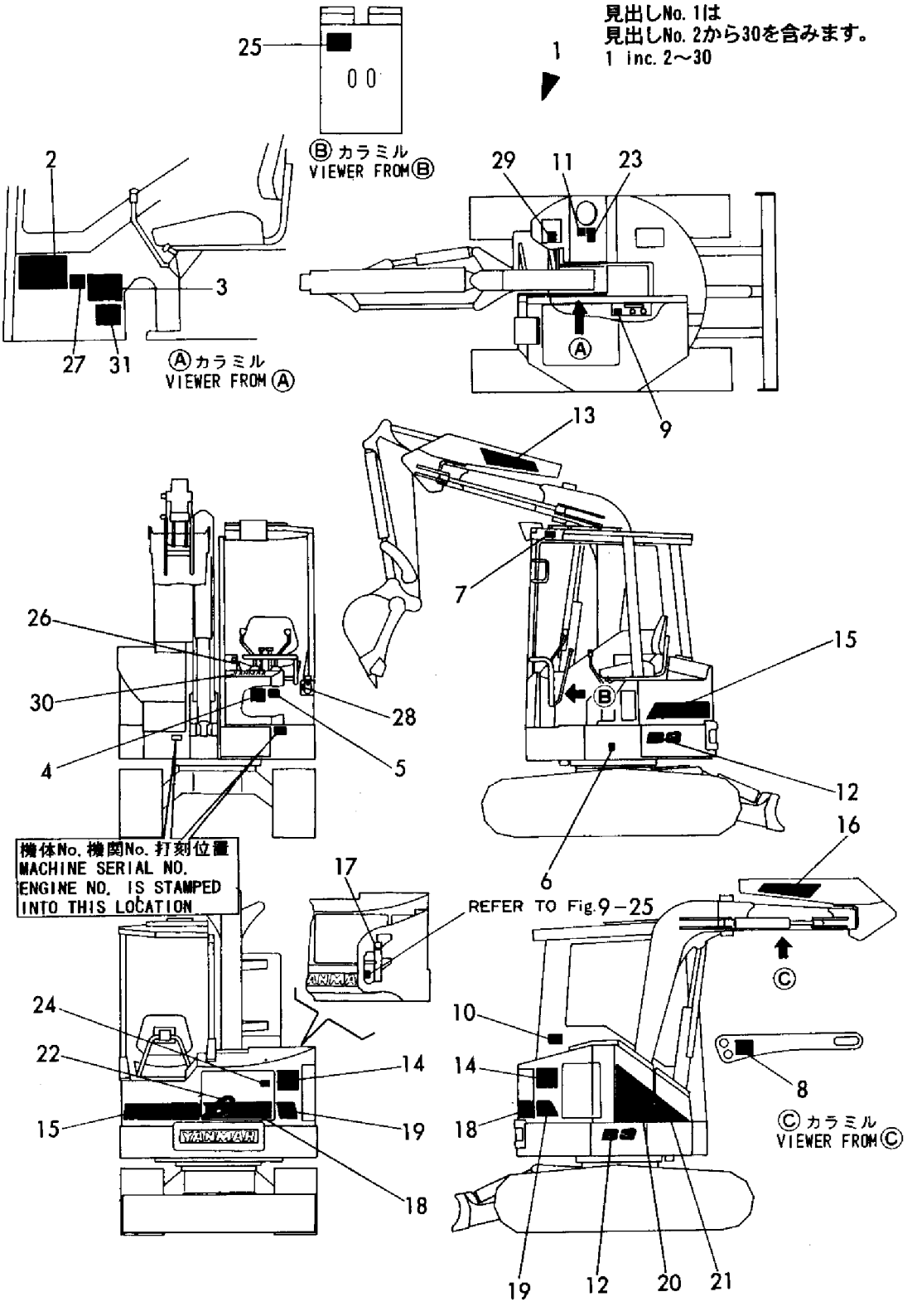

https://truckmanualshub.com/

```
1,1,,772146-03102,,"LABEL SET, (B3-1)",1,1,1,1,,,,,,,,,,,,,
1-1,1,,772146-03103,,"LABEL SET, (B3-1)",,,1,1,,,S,,,,,,,M10785,,M10785,,
2,2,,172146-03111,,"LABEL, SPECIFICATION",1,1,1,1,,,,,,,,,,,,,
2-1,2,,172146-03112,,"LABEL, SPECIFICATION",,,1,1,,,S,,,,,,,M10785,,M10785,,
3,2,,172146-03120,,"LABEL, OIL/WATER",1,1,1,1,,,,,,,,,,,,,
4,2,,172146-03130,,"LABEL, GREASING",1,1,1,1,,,,,,,,,,,,,
5,2,,172146-03140,,LABEL,1,1,1,1,,,,,,,,,,,,,
6,2,,172146-03150,,LABEL,1,1,1,1,,,,,,,,,,,,,
7,2,,172146-03160,,LABEL,1,1,1,1,,,,,,,,,,,,,
7-1,2,,172146-03161,,LABEL,,,1,1,,,S,,,,,,,M10785,,M10785,,
8,2,,172141-03170,,"LABEL, RESTART",1,1,1,1,,,,,,,,,,,,,
9,2,,172146-03170,,LABEL,1,1,1,1,,,,,,,,,,,,,
10,2,,172141-03181,,"LABEL, RESERVER(C)",1,1,1,1,,,,,,,,,,,,,
11,2,,172146-03181,,LABEL,2,2,2,2,,,,,,,,,,,,,
12,2,,172141-03190,,LABEL(D,1,1,1,1,,,,,,,,,,,,,
13,2,,172146-03191,,"LABEL, STRIPE REAR A",1,1,1,1,,,,,,,,,,,,,
14,2,,172141-03201,,"LABEL,ENGINE ROOM(C)",1,1,1,1,,,,,,,,,,,,,
15,2,,172146-03201,,"LABEL, STRIPE REAR B",1,1,1,1,,,,,,,,,,,,,
16,2,,172146-03211,,LABEL,1,1,1,1,,,,,,,,,,,,,
17,2,,172146-03221,,LABEL,1,1,1,1,,,,,,,,,,,,,
18,2,,172146-03231,,LABEL,1,1,1,1,,,,,,,,,,,,,
19,2,,172146-03290,,LABEL,1,1,1,1,,,,,,,,,,,,,
20,2,,172519-03290,,"LABEL, ENG.COVER",1,1,1,1,,,,,,,,,,,,,
21,2,,172146-03300,,LABEL,1,1,1,1,,,,,,,,,,,,,
22,2,,172141-03250,,"LABEL, OILING",1,1,1,1,,,,,,,,,,,,,
22-1,2,,172155-03310,,"LABEL, OILING",,,1,1,,,S,,,,,,,M11757,,M11757,,
23,2,,172141-03360,,"LABEL, START SWITCH",1,1,1,1,,,,,,,,,,,,,
24,2,,172131-03580,,"LABEL ""YANMAR"" R",1,1,1,1,,,,,,,,,,,,,
25,2,,172131-03590,,"LABEL ""YANMAR"" L",1,1,1,1,,,,,,,,,,,,,
26,2,,172137-03730,,"LABEL, TURNING LOCK",1,1,1,1,,,,,,,,,,,,,
27,2,,172137-03780,,"LABEL, THROTTLE",1,1,1,1,,,,,,,,,,,,,
28,2,,933112-52400,,"LABEL, FUEL",1,1,1,1,,,,,,,,,,,,,
29,2,,172146-03310,,LABEL,1,1,1,1,,,,,,,,,,,,,
31,1,,172141-03341,,"LABEL,ADJUST CRAWLER",1,1,1,1,,,,1,,,,,,,,,
31-1,1,,172165-03240,,LABEL,,,1,1,,,N,1,,,,,,M11757,,M11757,,
32,1,,172146-03250,,"LABEL, OPERATION",1,1,1,1,,,,,,,,,,,,,
32-1,1,,172146-03450,,"LABEL, OPERATION",,,1,1,,,S,,,,,,,M11861,,M11861,,
33,1,,172162-03250,,"LABEL,PATTERN A",,,1,1,,,,,,,,,,,,,
34,1,,172151-03531,,LABEL,,,1,1,,,,,,,,,,,,,
35,1,,172151-03550,,"LABEL,PATTERN B",,,,1,,,,,,,,,,,,,
36,1,,172141-03710,,"LABEL, MULTI",,2,2,2,,,,,,,,,,,,,
37,1,,172141-03350,,"LABEL, QUICK(C)",1,1,1,1,,,Z,,,,,,,M11685,,M11685,,
38,1,,172146-03400,,LABEL,,1,,,,,,,,,,,,,,,
39,1,,172148-03410,,LABEL,,1,,,,,,,,,,,,,,,
40,1,,172146-03270,,LABEL,,1,,1,,,,2,,,,,,,,,
```

https://truckmanualshub.com/

Fig. 2 銘板(-1) LABEL(-1)

FROM M/#10501

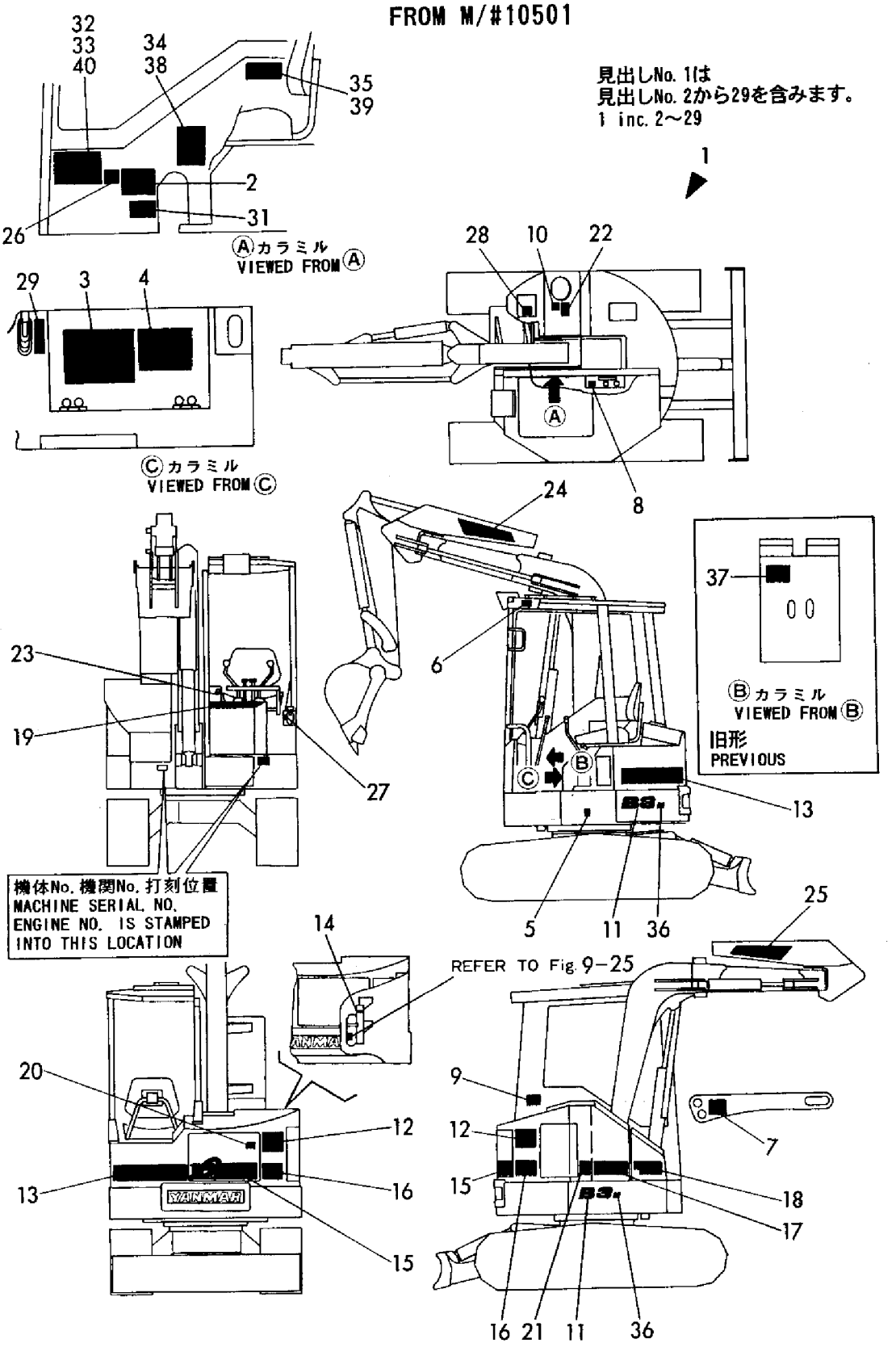

https://truckmanualshub.com/

```
1,1,,772146-03104,,"LABEL SET, (B3-2)",,,,,1,1,,,,,,,,,,,
2,2,,172146-03113,,"LABEL, SPECIFICATION",,,,,1,1,,,,,,,,,,,
3,2,,172146-03121,,LABEL,,,,,1,1,,,,,,,,,,,
4,2,,172146-03131,,LABEL,,,,,1,1,,,,,,,,,,,
5,2,,172146-03140,,LABEL,,,,,1,1,,,,,,,,,,,
6,2,,172146-03150,,LABEL,,,,,1,1,,,,,,,,,,,
7,2,,172146-03161,,LABEL,,,,,1,1,,,,,,,,,,,
8,2,,172141-03170,,"LABEL, RESTART",,,,,1,1,,,,,,,,,,,
9,2,,172146-03170,,LABEL,,,,,1,1,,,,,,,,,,,
10,2,,172141-03181,,"LABEL, RESERVER(C)",,,,,1,1,,,,,,,,,,,
11,2,,172146-03181,,LABEL,,,,,2,2,,,,,,,,,,,
12,2,,172141-03190,,LABEL(D,,,,,1,1,,,,,,,,,,,
13,2,,172146-03191,,"LABEL, STRIPE REAR A",,,,,1,1,,,,,,,,,,,
14,2,,172141-03201,,"LABEL,ENGINE ROOM(C)",,,,,1,1,,,,,,,,,,,
15,2,,172146-03201,,"LABEL, STRIPE REAR B",,,,,1,1,,,,,,,,,,,
16,2,,172146-03211,,LABEL,,,,,1,1,,,,,,,,,,,
17,2,,172146-03221,,LABEL,,,,,1,1,,,,,,,,,,,
18,2,,172146-03231,,LABEL,,,,,1,1,,,,,,,,,,,
19,2,,172146-03290,,LABEL,,,,,1,1,,,,,,,,,,,
20,2,,172519-03290,,"LABEL, ENG.COVER",,,,,1,1,,,,,,,,,,,
21,2,,172146-03300,,LABEL,,,,,1,1,,,,,,,,,,,
22,2,,172146-03310,,LABEL,,,,,1,1,,,,,,,,,,,
23,2,,172155-03310,,"LABEL, OILING",,,,,1,1,,,,,,,,,,,
24,2,,172141-03360,,"LABEL, START SWITCH",,,,,1,1,,,,,,,,,,,
25,2,,172519-03680,,"LABEL,BRAND",,,,,2,2,,,,,,,,,,,
26,2,,172137-03730,,"LABEL, TURNING LOCK",,,,,1,1,,,,,,,,,,,
27,2,,172137-03780,,"LABEL, THROTTLE",,,,,1,1,,,,,,,,,,,
28,2,,933112-52400,,"LABEL, FUEL",,,,,1,1,,,,,,,,,,,
29,2,,172183-03280,,"LABEL,LOCK",,,,,1,1,W,,,,,,,,,,,M20703,,M20703
30,1,,172165-03240,,LABEL,,,,,1,1,,1,,,,,,,,,
31,1,,172162-03250,,"LABEL,PATTERN A",,,,,1,1,,,,,,,,,,,
32,1,,172151-03531,,LABEL,,,,,,1,,,,,,,,,,,
33,1,,172141-03710,,"LABEL, MULTI",,,,,,2,,,,,,,,,,,
```

https://truckmanualshub.com/

Fig. 3 銘板(-2) LABEL(-2)

FROM M/#20501

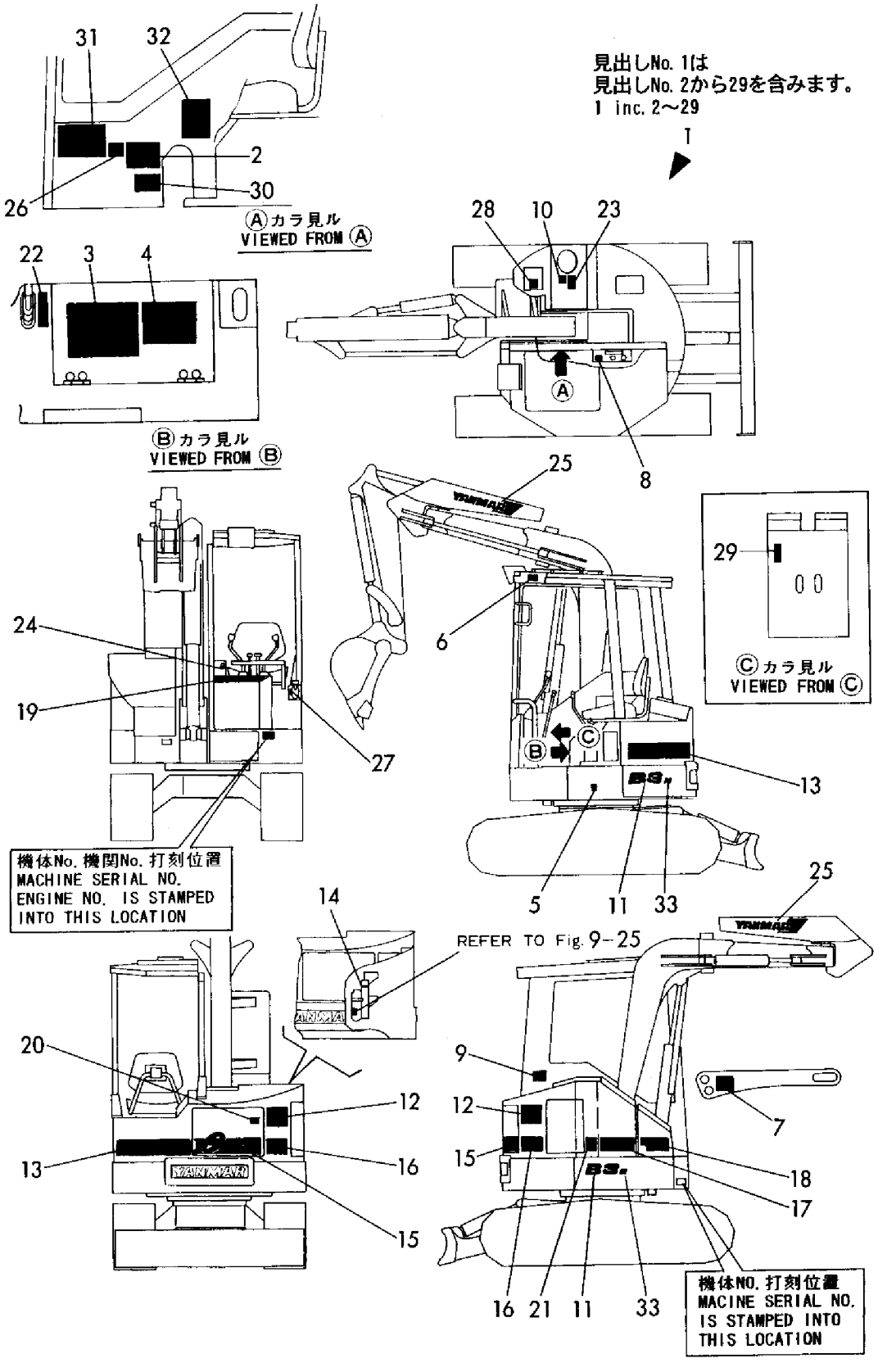

https://truckmanualshub.com/

```
1,1,,772146-03170,,"LABEL SET, (B3-2AS)",1,,,,,,,,,,,,,,,,
2,2,,172146-03090,,LABEL,1,,,,,,,,,,,,,,,,
3,2,,172146-03181,,LABEL,2,,,,,,,,,,,,,,,,
4,2,,172146-03191,,"LABEL, STRIPE REAR A",1,,,,,,,,,,,,,,,,,,
5,2,,172146-03201,,"LABEL, STRIPE REAR B",1,,,,,,,,,,,,,,,,,,
6,2,,172146-03211,,LABEL,1,,,,,,,,,,,,,,,,
7,2,,172146-03221,,LABEL,1,,,,,,,,,,,,,,,,
8,2,,172146-03231,,LABEL,1,,,,,,,,,,,,,,,,
9,2,,172146-03290,,LABEL,1,,,,,,,,,,,,,,,,
10,2,,172146-03300,,LABEL,1,,,,,,,,,,,,,,,,
11,2,,172146-03320,,"LABEL,GREASE E",1,,,,,,,,,,,,,,,,
12,2,,172146-03330,,"LABEL,OFFSET E",1,,,,,,,,,,,,,,,,
13,2,,172146-03340,,LABEL,1,,,,,,,,,,,,,,,,
14,2,,172141-03360,,"LABEL, START SWITCH",1,,,,,,,,,,,,,,,,,,
15,2,,172146-03360,,"LABEL,FENDER E",1,,,,,,,,,,,,,,,,
16,2,,172146-03370,,LABEL,1,,,,,,,,,,,,,,,,
17,2,,172146-03380,,"LABEL,GREASING E",1,,,,,,,,,,,,,,,,
18,2,,172141-03440,,LABEL,1,,,,,,,,,,,,,,,,
19,2,,172131-03580,,"LABEL ""YANMAR"" R",1,,,,,,,,,,,,,,,,
20,2,,172131-03590,,"LABEL ""YANMAR"" L",1,,,,,,,,,,,,,,,,
23,2,,172171-03720,,LABEL,1,,,,,,,,,,,,,,,,
24,2,,172137-03730,,"LABEL, TURNING LOCK",1,,,,,,,,,,,,,,,,,,
29,2,,172137-03780,,"LABEL, THROTTLE",1,,,,,,,,,,,,,,,,
30,2,,172171-03780,,LABEL,1,,,,,,,,,,,,,,,,
31,2,,172155-03790,,"LABEL,RE-FUELING",1,,,,,,,,,,,,,,,,
33,2,,172171-03800,,LABEL,1,,,,,,,,,,,,,,,,
34,2,,172171-03810,,LABEL,1,,,,,,,,,,,,,,,,
40,2,,933112-52100,,"LABEL, FUEL",1,,,,,,,,,,,,,,,,
41,2,,172146-03310,,LABEL,1,,,,,,,,,,,,,,,,
42,2,,172146-03450,,"LABEL, OPERATION",1,,,,,,,,,,,,,,,,
```

https://truckmanualshub.com/

Fig. 4 銘板(ＡＳ仕様) LABEL(AS SPEC.)

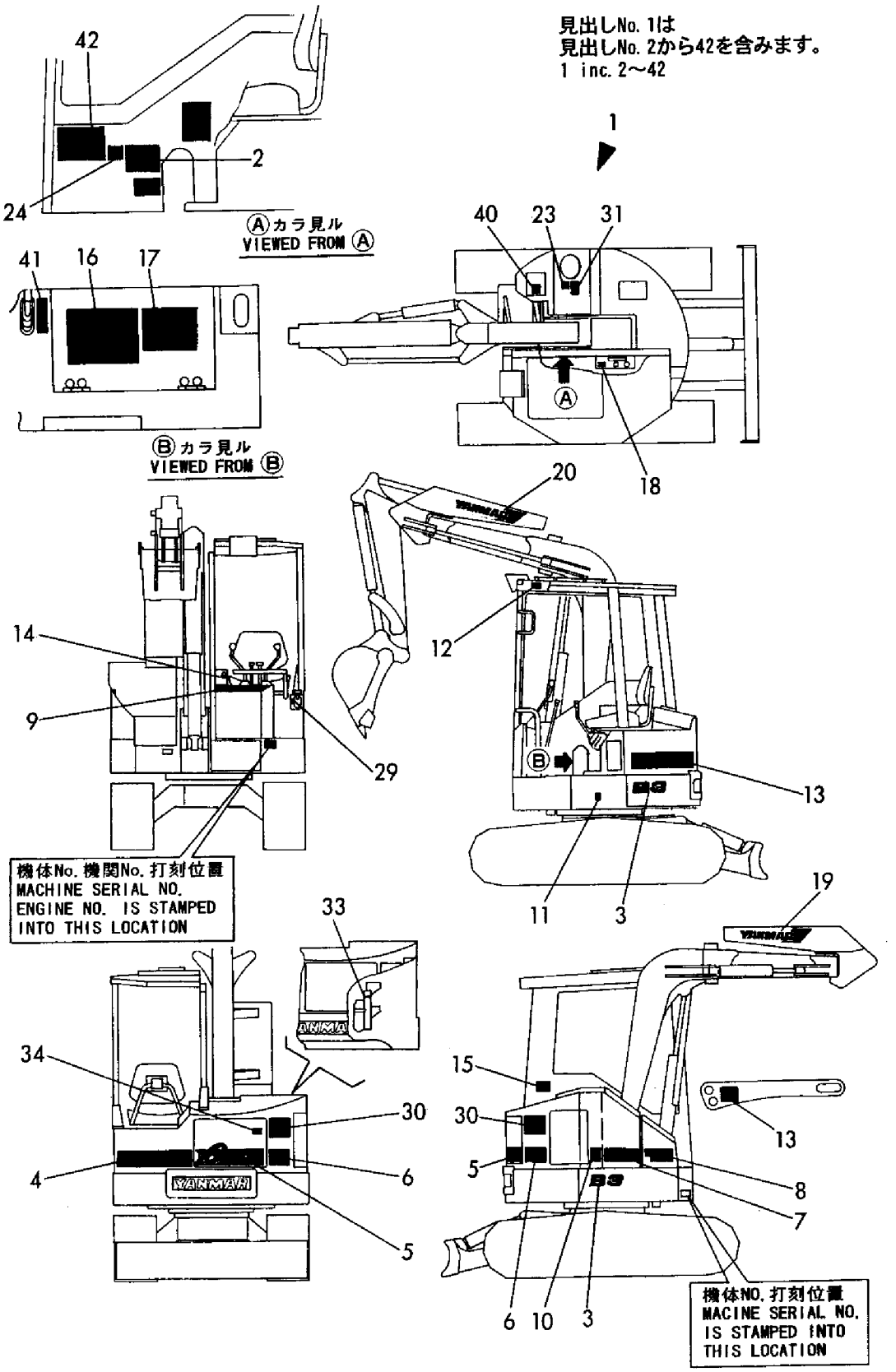

https://truckmanualshub.com/

```
1,1,,772146-05100,,"TOOL SET",1,1,1,1,1,1,,,,,,,,,,,
2,2,,172122-05100,,NOZZLE,1,1,1,1,1,1,,,,,,,,,,,
3,2,,172146-05100,,"BAR WRENCH",1,1,1,1,1,1,,,,,,,,,,,
4,2,,172614-38300,,"PIN 5X45, LOCK",4,4,4,4,4,4,,,,,,,,,,,
5,2,,104200-92350,,"DRIVER, SCREW",1,1,1,1,1,1,,,,,,,,,,,
6,2,,171301-92750,,"WRENCH, L.O. FILTER",1,1,1,1,1,1,,,,,,,,,,,
7,2,,22417-800500,,"COTTER PIN 8.0X50",4,4,4,4,,,,,,,,,,,,,
8,2,,28110-080100,,"WRENCH  8X10",1,1,1,1,1,1,,,,,,,,,,,
9,2,,28110-120140,,"WRENCH 12X14",1,1,1,1,2,2,,,,,,,,,,,
10,2,,28110-170190,,"WRENCH 17X19",1,1,1,1,1,1,,,,,,,,,,,
11,2,,28110-220240,,"WRENCH 22X24",1,1,1,1,1,1,,,,,,,,,,,
12,2,,28110-270300,,"WRENCH 27X30",1,1,1,1,1,1,,,,,,,,,,,
13,2,,28110-320360,,"WRENCH 32X36",1,1,1,1,1,1,Z,,,,,,,,,,,M20639,,M20639
14,2,,28150-060000,,"BAR WRENCH  6",1,1,1,1,1,1,W,,,M00515,,M00515,,,,,,
15,2,,28150-080000,,"BAR WRENCH  8",1,1,1,1,1,1,,,,,,,,,,,
16,2,,28227-271400,,"BOX SPANNER",1,1,1,1,1,1,,,,,,,,,,,
17,2,,28230-120250,,"TURNING HANDLE",1,1,1,1,1,1,,,,,,,,,,,
18,2,,933110-09700,,"GREASE HOSE",1,1,1,1,1,1,,,,,,,,,,,
19,2,,933110-09800,,"GUN 800, GREASE",1,1,1,1,1,1,,,,,,,,,,,
20,2,,933110-90000,,"BAG, TOOL",1,1,1,1,1,1,,,,,,,,,,,
21,2,,933171-00470,,"PLIERS 200",1,1,1,1,1,1,,,,,,,,,,,
22,2,,28150-140000,,"BAR WRENCH 14",1,,,,,,Z,,,M00515,,,,,,,,
```

https://truckmanualshub.com/

Fig. 5 工具 TOOL

見出しNo. 1は
見出しNo. 2から21を含みます。
1 inc. 2～21

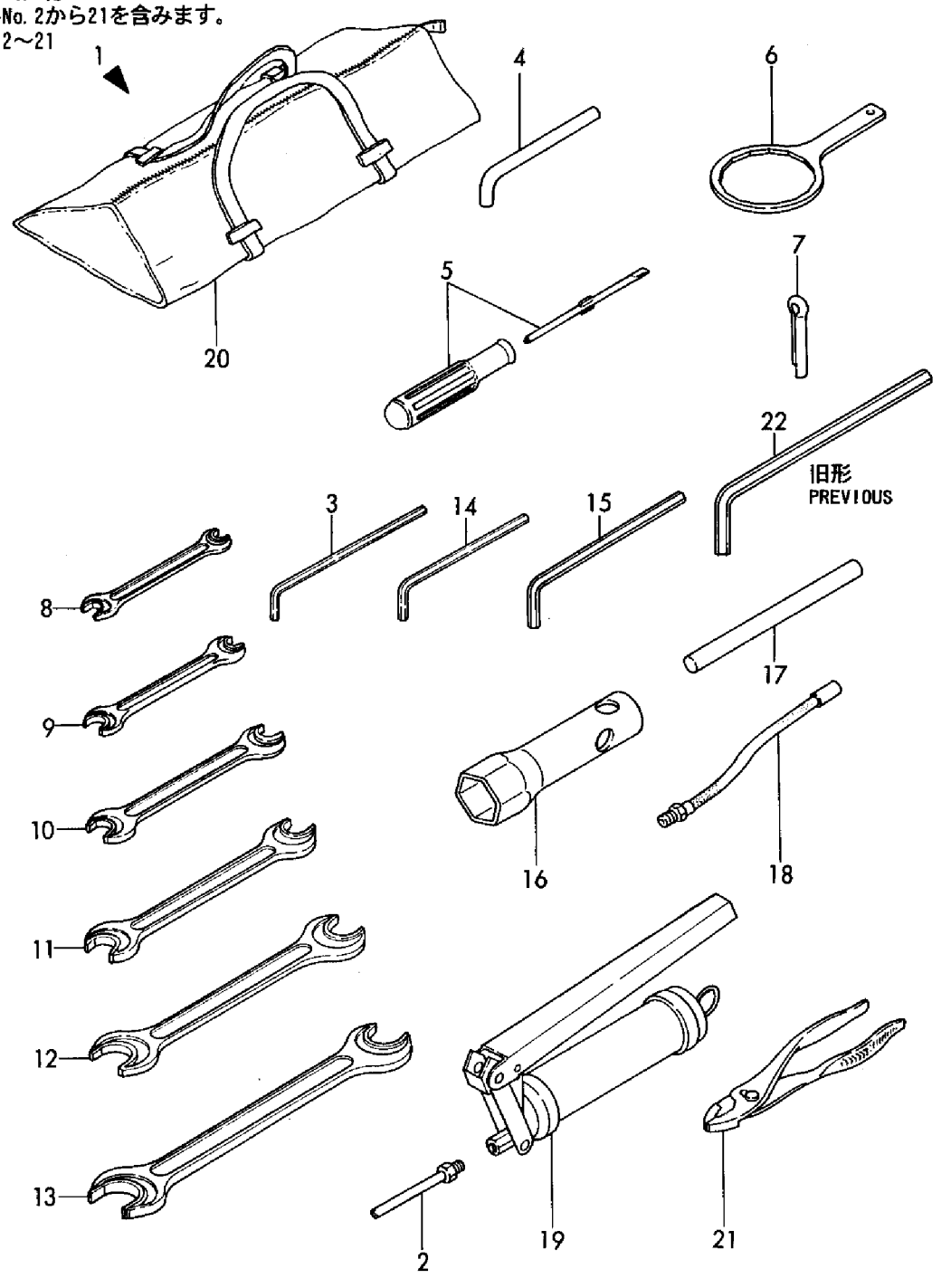

https://truckmanualshub.com/

```
1,1,,172146-11300,,"FLANGE, MUFFLER",1,1,1,1,1,1,,,,,,,,,,,
2,1,,172146-11310,,"PIPE, EXHAUST",1,1,1,1,1,1,,,,,,,,,,,
3,1,,172146-11320,,SUPPORT(L),1,1,1,1,1,1,,,,,,,,,,,
4,1,,172146-11330,,SUPPORT(R),1,1,1,1,1,1,,,,,,,,,,,
5,1,,124701-11910,,"GASKET, SILENCER",1,1,,,,,,,,,,,,,,,
5-1,1,,124701-11911,,"GASKET, (NON-
ASB.)",1,1,1,1,1,1,R,,,*1990.07,,*1990.07,,,,,,
6,1,,103954-13200,,"GASKET, SILENCER",2,2,2,2,2,2,,,,,,,,,,,
6-1,1,,103954-13201,,"GASKET, SILENCER",,,,,2,2,N,,,,,,,,,,,M20871,,M20871
7,1,,129136-13520,,SILENCER,1,1,1,1,1,1,,,,,,,,,,,
8,1,,129130-13560,,"PIPE, EXH.CONNECT",1,1,1,1,1,1,,,,,,,,,,,
9,1,,121120-13580,,CLAMP,1,1,1,1,1,1,,,,,,,,,,,
10,1,,129111-13670,,"BAND (UPPER)",2,2,2,2,2,2,,,,,,,,,,,
11,1,,129111-13680,,"BAND (LOWER)",2,2,2,2,2,2,,,,,,,,,,,
12,1,,22217-100000,,"SPRING WASHER 10",6,6,6,6,6,6,,,,,,,,,,,
13,1,,26013-080252,,"BOLT M 8X 25",2,2,2,2,2,2,,,,,,,,,,,
14,1,,26013-080302,,"BOLT M 8X 30",4,4,4,4,4,4,,,,,,,,,,,
15,1,,26013-080702,,"BOLT M 8X 70",2,2,2,2,2,2,,,,,,,,,,,
16,1,,26106-100652,,"BOLT M10X 65 PLATED",1,1,1,1,1,1,,,,,,,,,,,
17,1,,26706-100002,,"NUT M10",1,1,1,1,1,1,,,,,,,,,,,
18,1,,26716-100002,,"NUT 10",6,6,6,6,6,6,,,,,,,,,,,
19,1,,172146-11501,,"SUCTION HOSE",1,1,,,,,,,,,,,,,,,
19-1,1,,172146-11502,,"SUCTION HOSE",1,1,1,1,1,1,N,,,M00932,,M00932,,,,,,
20,1,,23000-070000,,"CLAMP 70",1,1,1,1,1,1,,,,,,,,,,,
```

https://truckmanualshub.com/

Fig. 6 サイレンサ & 吸気管 SILENCER & SUCTION PIPE

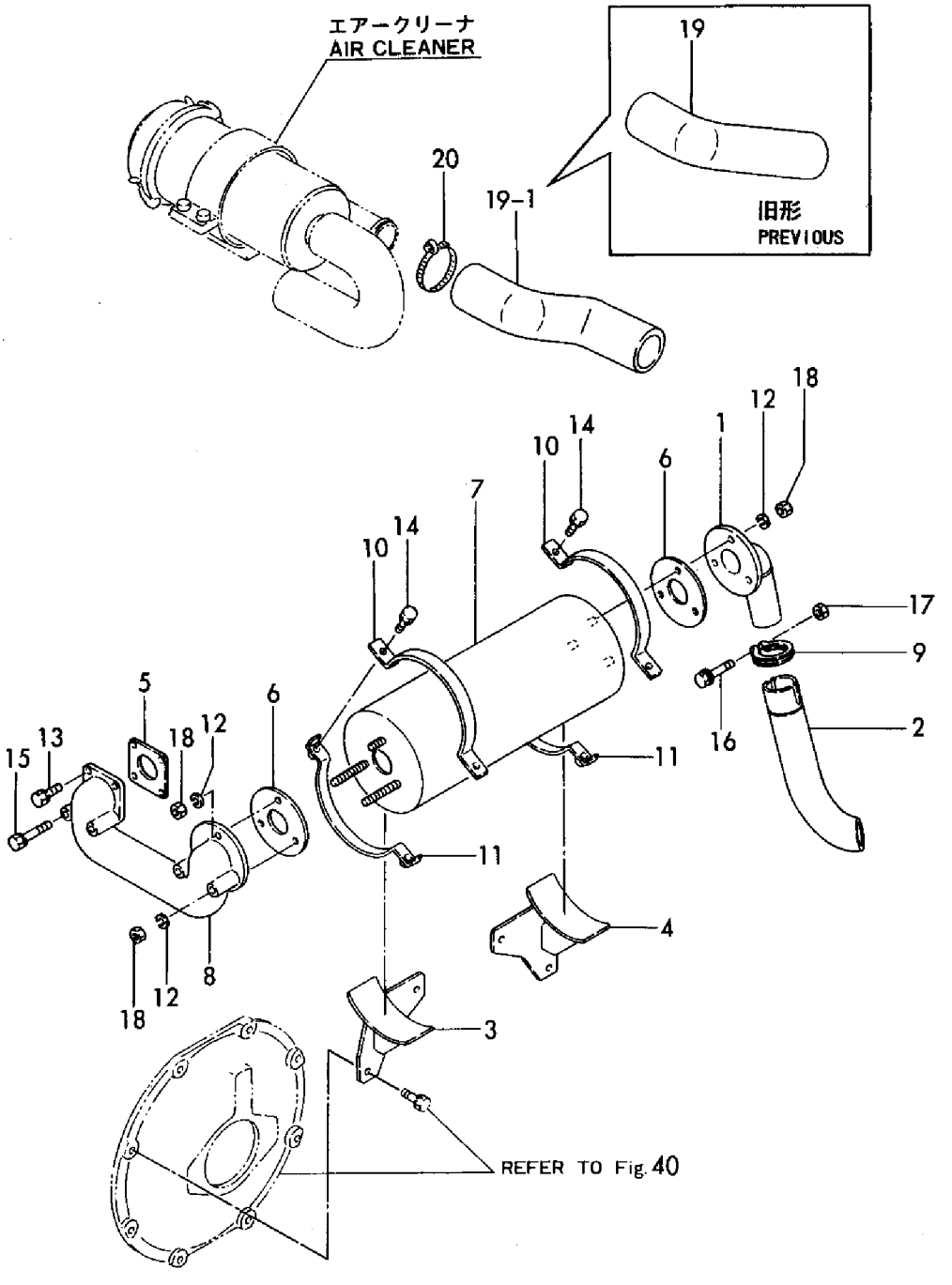

https://truckmanualshub.com/

```
1,1,,172142-12100,,"SUPPORT, CABLE",1,1,1,1,1,1,,,,,,,,,,,
2,1,,172146-12100,,LEVER,1,1,1,1,1,1,,,,,,,,,,,
3,2,,172141-12220,,"BUSH 30X10",2,2,2,2,2,2,,,,,,,,,,,
4,1,,172146-12130,,WIRE,1,1,1,1,1,1,,,,,,,,,,,
5,1,,172141-12160,,BRACKET,1,1,1,1,1,1,,,,,,,,,,,
6,1,,172141-12232,,SPRING,1,1,1,1,1,1,,,,,,,,,,,
7,1,,172141-12240,,SPRING,1,1,1,1,1,1,,,,,,,,,,,
8,1,,172141-12250,,PLATE,1,1,1,1,1,1,,,,,,,,,,,
9,1,,172141-12260,,PLATE,1,1,1,1,1,1,,,,,,,,,,,
10,1,,172137-12270,,"JOINT, CABLE",1,1,1,1,1,1,,,,,,,,,,,
11,1,,172113-12521,,"PIN, CABLE",1,1,1,1,1,1,,,,,,,,,,,
12,1,,172141-41340,,BOOTS,1,1,1,1,1,1,,,,,,,,,,,
13,1,,172122-46630,,"KNOB(D), LEVER",1,1,1,1,1,1,,,,,,,,,,,
13-1,1,,172146-12150,,"GRIP,ACCELERATOR",,,,,1,1,R,,,,,,,,,,,M20501,,M20501
14,1,,1C6281-52310,,"PIN 6,COME-OFF SNAP",2,2,2,2,2,2,,,,,,,,,,,
15,1,,1A1040-56900,,"PIN  6X 17",1,1,1,1,1,1,,,,,,,,,,,
16,1,,22137-060000,,"WASHER 6, POLISHED",1,1,1,1,1,1,,,,,,,,,,,
17,1,,24190-160001,,"BALL 1/2",1,1,1,1,1,1,,,,,,,,,,,
18,1,,26013-080202,,"BOLT W/WASHER M8X20",2,2,2,2,2,2,,,,,,,,,,,
19,1,,26013-100202,,"BOLT W/WASHER M10X20",2,2,2,2,2,2,,,,,,,,,,,
20,1,,26013-100302,,"BOLT M10X 30",1,1,1,1,1,1,,,,,,,,,,,
```

https://truckmanualshub.com/

Fig. 7 アクセル ACCELERATOR

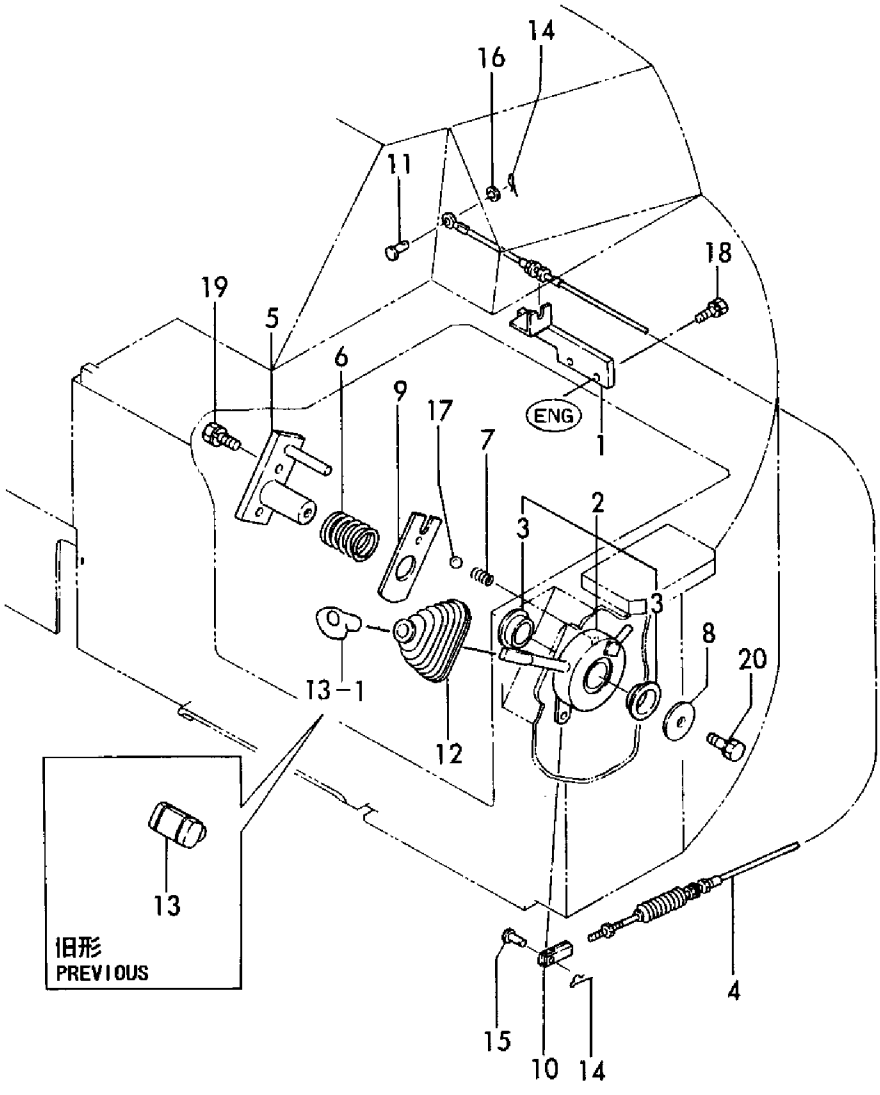

https://truckmanualshub.com/

```
1,1,,196420-02310,,"ABSORBER, SHOCK",4,4,4,4,4,4,,,,,,,,,,,
2,1,,172126-13101,,"BED (A), ENGINE",1,,,,,,,,,,,,,,,,,
2-1,1,,172126-13102,,"BED (A), ENGINE",1,1,1,1,1,1,F,1,,M00865,,,,,,,
3,1,,172142-13100,,"SUPPORT, ENGINE(L)",2,2,2,2,2,2,,,,,,,,,,,
4,1,,172146-13100,,BRACKET,1,1,1,1,1,1,,,,,,,,,,,
4-1,1,,172146-13101,,BRACKET,,,,,1,1,N,,,,,,,,,,,M20501,,M20501
5,1,,172146-13110,,BRACKET,1,1,1,1,1,1,,,,,,,,,,,
5-2,1,,172146-13200,,BRACKET,,,,,1,1,N,,,,,,,,,,,M20501,,M20501
6,1,,172142-13140,,"SUPPORT, ENGINE(R)",1,1,1,1,1,1,,,,,,,,,,,
7,1,,172146-13140,,"PLATE, STOPPER",1,1,1,1,1,1,W,,,M00518,,,,,,,
8,1,,172146-13150,,PLATE,1,1,1,1,1,1,W,,,M00518,,,,,,,
9,1,,172142-13170,,"BRACKET, ENGINE",1,,,,,,,,,,,,,,,,,
9-1,1,,172142-13171,,"BRACKET, ENGINE",1,1,1,1,1,1,F,1,,M00865,,,,,,,
10,1,,172124-13230,,"STOPPER, ENGINE",3,3,3,3,3,3,,,,,,,,,,,
11,1,,172142-13230,,"SUPPORT, ENGINE(RF)",1,1,1,1,1,1,,,,,,,,,,,
12,1,,22217-120000,,"SPRING WASHER",8,8,8,8,8,8,,,,,,,,,,,
13,1,,22217-120000,,"SPRING WASHER",4,4,4,4,4,4,W,,,M00518,,,,,,,
14,1,,26013-100252,,"BOLT W/WASHER M10X25",6,6,6,6,6,6,,,,,,,,,,,
15,1,,26013-100252,,"BOLT W/WASHER M10X25",8,8,8,8,8,8,,,,,,,,,,,
16,1,,26013-120252,,"BOLT M12X 25",16,,,,,,,,,,,,,,,,,
16-1,1,,26013-120252,,"BOLT M12X 25",8,8,8,8,8,8,K,,,M00865,,,,,,,
17,1,,26450-120302,,"BOLT         M12X30",4,4,4,4,4,4,W,,,M00518,,,,,,,
18,1,,26716-120002,,"NUT 12",8,8,8,8,8,8,,,,,,,,,,,
19,1,,26013-120302,,"BOLT W/WASHER M12X30",8,8,8,8,8,8,W,,,M00865,,M00865,,,,,,
```

https://truckmanualshub.com/

Fig. 8 エンジンマウント ENGINE MOUNT

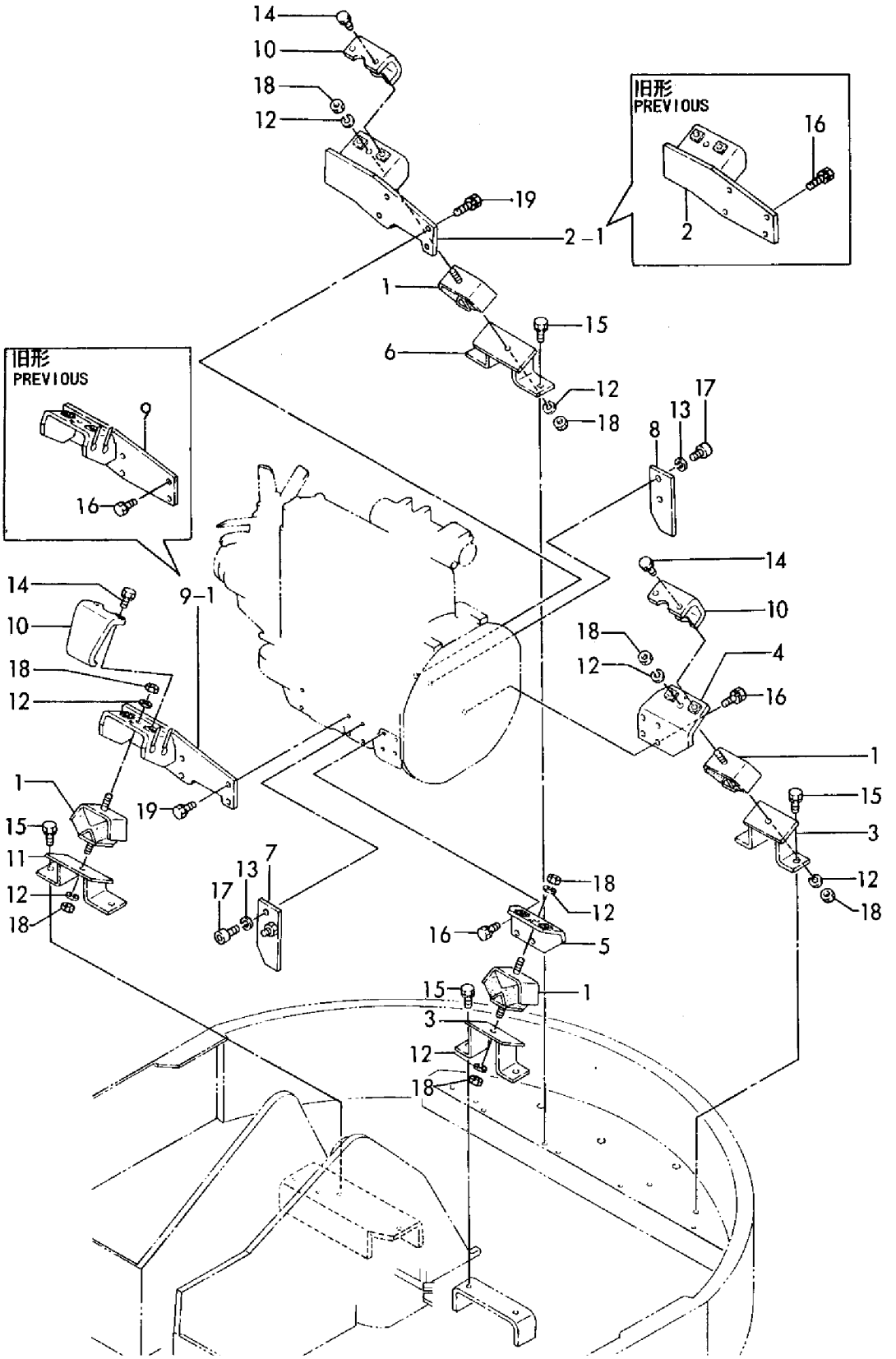

https://truckmanualshub.com/

```
1,1,,172116-13210,,"STOPPER SHIM T0.8",2,2,2,2,2,2,,,,,,,,,,,
2,1,,172116-13220,,"STOPPER SHIM T1.2",2,2,2,2,2,2,,,,,,,,,,,
3,1,,172122-13300,,"STAY, RADIATOR",4,4,4,4,4,4,,,,,,,,,,,
4,1,,172126-13300,,"MOUNT(A),RADIATOR",1,1,1,1,1,1,,,,,,,,,,,
5,1,,172142-13300,,"MOUNT(B),RADIATOR",1,1,1,1,1,1,,,,,,,,,,,
6,1,,172122-13310,,"MOUNT, RADIATOR",4,4,4,4,4,4,,,,,,,,,,,
7,1,,172126-13350,,"HOSE(A), WATER DRAIN",1,1,1,1,1,1,,,,,,,,,,,
8,1,,172122-13380,,"HOSE(A), WATER DRAIN",1,1,1,1,1,1,,,,,,,,,,,
9,1,,172122-13400,,"CLAMP,RADIATOR HOSE",1,1,1,1,1,1,,,,,,,,,,,
10,1,,172122-13410,,"HOSE(B), WATER DRAIN",1,1,1,1,1,1,,,,,,,,,,,
11,1,,171064-44501,,RADIATOR,1,1,1,1,1,1,,,,,,,,,,,
12,2,,121250-44590,,CLAMP,2,2,2,2,2,2,,,,,,,,,,,
13,2,,124450-44590,,"CAP, RADIATOR",1,1,1,1,1,1,,,,,,,,,,,
14,2,,171064-44610,,SHROUD,1,1,1,1,1,1,,,,,,,,,,,
16,2,,119631-44800,,"LABEL, RADIATOR",1,1,1,1,1,1,,,,,,,,,,,
17,2,,26014-080122,,"BOLT M 8X 12",4,4,4,4,4,4,,,,,,,,,,,
18,1,,171064-44510,,"SUB-TANK ASSY",1,1,1,1,1,1,,,,,,,,,,,
19,2,,171064-44520,,"BODY, SUB-TANK",1,1,1,1,1,1,,,,,,,,,,,
20,2,,171064-44530,,"CAP, SUB-TANK",1,,,,,,,,,,,,,,,,,
20-1,2,,121450-44531,,CAP,1,1,1,1,1,1,S,,,M00501,,,,,,,,
21,2,,124450-44560,,CLAMP,1,1,1,1,1,1,,,,,,,,,,,
22,2,,121470-44570,,SPACER,1,,,,,,Z,,,M00501,,,,,,,,
23,2,,121470-44580,,GASKET,1,,,,,,,,,,,,,,,,,
23-1,2,,121470-44581,,GASKET,1,1,1,1,1,1,S,,,M00501,,,,,,,,
24,2,,23065-070225,,"HOSE 7X 225",1,1,1,1,1,1,,,,,,,,,,,
25,1,,121470-44540,,"LABEL, SUB-TANK",1,1,1,1,1,1,,,,,,,,,,,
26,1,,124450-44550,,"CLAMP, SUB-TANK",1,1,1,1,1,1,,,,,,,,,,,
27,1,,121256-44600,,"BRACKET, SUB-TANK",1,1,1,1,1,1,,,,,,,,,,,
28,1,,171350-49010,,"PIPE(A),HEAD-RAD.",1,1,1,1,1,1,,,,,,,,,,,
29,1,,171350-49020,,"PIPE(B),RAD.-C.W.P.",1,1,1,1,1,1,,,,,,,,,,,
30,1,,121521-49100,,"BODY, COCK",1,1,1,1,1,1,,,,,,,,,,,
31,1,,121250-49121,,PLUG,1,1,1,1,1,1,,,,,,,,,,,
32,1,,124766-59050,,"CLAMP 12",4,4,4,4,4,4,,,,,,,,,,,
33,1,,22217-080000,,"SPRING WASHER  8",10,10,10,10,10,10,,,,,,,,,,,
34,1,,22217-080000,,"SPRING WASHER  8",2,2,2,2,2,2,Z,,,,,,,,,,,M20810,,M20810
35,1,,23010-038000,,"CLAMP 38",4,4,4,4,4,4,,,,,,,,,,,
36,1,,24311-000160,,"O-RING 1A P-16.0",1,1,1,1,1,1,,,,,,,,,,,
37,1,,26013-080162,,"BOLT W/WASHER M8X16",1,1,1,1,1,1,,,,,,,,,,,
38,1,,26013-080202,,"BOLT W/WASHER M8X20",8,8,8,8,8,8,,,,,,,,,,,
39,1,,26013-100252,,"BOLT W/WASHER M10X25",4,4,4,4,4,4,,,,,,,,,,,
40,1,,26116-080162,,"BOLT 8X16",2,2,2,2,2,2,,,,,,,,,,,
41,1,,26557-080162,,"SCREW M 8X 16",2,2,2,2,2,2,,,,,,,,,,,
41-1,1,,26022-080162,,"SCREW M 8X 16",,,,,2,2,N,,,,,,,,,,,M20810,,M20810
42,1,,26716-080002,,"NUT M 8",8,8,8,8,8,8,,,,,,,,,,,
43,1,,26716-080002,,"NUT M 8",1,1,1,1,1,1,,,,,,,,,,,
44,1,,933152-09280,,"BAND 170",2,2,2,2,2,2,,,,,,,,,,,
45,1,,172146-13300,,"NET, WIRE",,,,,1,1,W,,,,,,,,,,,M20872,,M20872
46,1,,22137-080000,,"WASHER 8, POLISHED",,,,,2,2,W,,,,,,,,,,,M20872,,M20872
47,1,,26013-080162,,"BOLT W/WASHER M8X16",,,,,2,2,W,,,,,,,,,,,M20872,,M20872
```

https://truckmanualshub.com/

Fig. 9 ラジエータ & マウント
RADIATOR & MOUNT

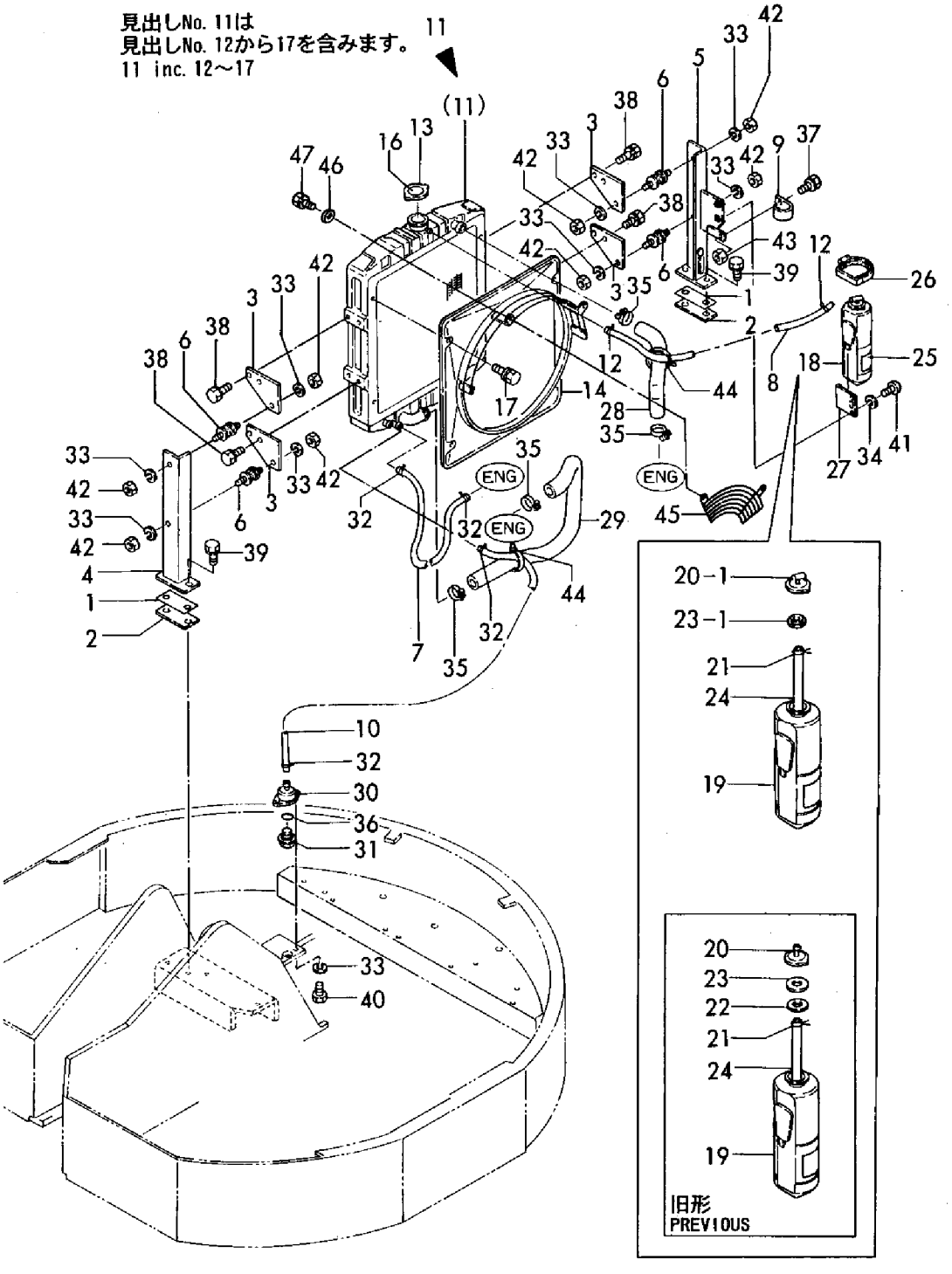

https://truckmanualshub.com/

```
1A,1,,772146-14100,,"TANK ASSY, FUEL",1,1,1,1,,,,,,,,,,,,
1B,1,,772146-14100-1,,"TANK ASSY, FUEL (85)",,,,,1,1,,,,,,,,,,,
3,2,,172146-14210,,"GAUGE, FUEL OIL",1,1,1,1,1,1,,,,,,,,,,,
3-1,2,,172142-14421,,"HOSE, FUEL GAUGE",,,,,1,1,N,,,,,,,,,,,M20501,,M20501
4,2,,172141-14260,,FLOAT,1,1,1,1,1,1,,,,,,,,,,,
5,2,,172122-14300,,"CAP, FUEL TANK",1,1,1,1,1,1,,,,,,,,,,,
7,3,,105430-55070,,GASKET,1,1,1,1,1,1,W,,,M00501,,M00501,,,,,,
8,2,,101504-55101,,"STRAINER,FUEL INLET",1,1,1,1,1,1,,,,,,,,,,,
9,2,,23010-014000,,"CLAMP 14",2,2,2,2,2,2,,,,,,,,,,,
10,2,,23491-140002,,"PLUG 14",1,1,1,1,1,1,,,,,,,,,,,
11,2,,24311-000160,,"O-RING 1A P-16.0",1,1,1,1,1,1,,,,,,,,,,,
12A,1,,172146-14160,,"COVER, FUEL TANK",1,1,1,1,,,,,,,,,,,,
12B,1,,172146-14160-1,,"COVER, FUEL TANK(85)",,,,,1,1,,,,,,,,,,,
13A,1,,172146-14230,,"PLATE(E) ASSY",1,1,1,1,,,,,,,,,,,,
13B,1,,172146-14230-1,,"PLATE(E) ASSY   (85)",,,,,1,1,,,,,,,,,,,
14,1,,172146-14260,,RUBBER,1,1,1,1,1,1,,,,,,,,,,,
15,1,,172137-66190,,CATCH,1,1,1,1,1,1,,,,,,,,,,,
16,1,,22137-080000,,"WASHER 8, POLISHED",2,2,2,2,2,2,,,,,,,,,,,
17,1,,22217-080000,,"SPRING WASHER  8",2,2,2,2,2,2,,,,,,,,,,,
18,1,,22217-140000,,"SPRING WASHER 14",4,4,4,4,4,4,,,,,,,,,,,
19,1,,26716-080002,,"NUT M 8",2,2,2,2,2,2,,,,,,,,,,,
20,1,,29311-204000,,GROMMET,1,,,,,,,,,,,,,,,,,
20-1,1,,933171-15680,,"GROMMET 40X13",1,1,1,1,1,1,S,,,M00842,,,,,,,
21,1,,172130-14600,,"HOSE(A),FUEL OIL",1,1,1,1,1,1,,,,,,,,,,,
22,1,,172122-14610,,"PIPE (B), FUEL",1,1,1,1,1,1,,,,,,,,,,,
23,1,,172312-14630,,HOSE,1,1,1,1,1,1,,,,,,,,,,,
24,1,,172126-16540,,"CLAMP 10X70",1,1,1,1,1,1,,,,,,,,,,,
25,1,,172126-16540,,"CLAMP 10X70",1,1,1,1,1,1,,,,,,,,,,,
26,1,,129335-55700,,"SEPARATOR, WATER",1,1,1,1,1,1,,,,,,,,,,,
27,2,,104200-55321,,"VALVE, TAPER",1,1,1,1,1,1,,,,,,,,,,,
28,2,,104200-55330,,"SPRING, TAPER VALVE",1,1,1,1,1,1,,,,,,,,,,,
29,2,,104200-55341,,"HANDLE, COCK",1,1,1,1,1,1,,,,,,,,,,,
30,2,,124064-55510,,"BOWL, FUEL STRAINER",1,1,1,1,1,1,,,,,,,,,,,
31,2,,102103-55520,,O-RING,1,1,1,1,1,1,,,,,,,,,,,
32,2,,110250-55610,,"RING, RETAINING",1,1,1,1,1,1,,,,,,,,,,,
33,2,,121257-55720,,"SPRING, SCREEN",1,1,1,1,1,1,,,,,,,,,,,
34,2,,121257-55731,,FLOAT,1,1,1,1,1,1,,,,,,,,,,,
36,2,,101720-55750,,"PLUG 6",2,2,2,2,2,2,,,,,,,,,,,
37,2,,104200-55750,,"SCREW M 4",1,1,1,1,1,1,,,,,,,,,,,
38,2,,171081-55910,,SCREEN,1,1,1,1,1,1,,,,,,,,,,,
39,2,,23418-060000,,"GASKET 6, NYLON",2,2,2,2,2,2,,,,,,,,,,,
40,2,,24311-240100,,"O-RING 1A P-10A",1,1,1,1,1,1,,,,,,,,,,,
41,1,,124766-59050,,"CLAMP 12",6,6,6,6,6,6,,,,,,,,,,,
42,1,,172122-79890,,"CLAMP 350",2,2,2,2,2,2,,,,,,,,,,,
43,1,,22217-080000,,"SPRING WASHER  8",1,1,1,1,1,1,,,,,,,,,,,
44,1,,22217-100000,,"SPRING WASHER 10",1,1,1,1,1,1,,,,,,,,,,,
45,1,,26116-080702,,"BOLT M 8X 70 PLATED",1,1,1,1,1,1,,,,,,,,,,,
46,1,,26116-100162,,"BOLT M10X 16 PLATED",1,1,1,1,1,1,,,,,,,,,,,
47,1,,933168-55770,,"BAND 146",2,2,2,2,2,2,,,,,,,,,,,
48,1,,26013-100162,,"BOLT M10X 16",6,6,6,6,6,6,,,,,,,,,,,
49,1,,26033-030122,,"SCREW M 3X12",2,2,2,2,2,2,,,,,,,,,,,
50,1,,26116-140402,,"BOLT M14X 40 PLATED",4,4,4,4,4,4,,,,,,,,,,,
```

https://truckmanualshub.com/

Fig. 10 FOタンク & FOパイプ FUEL TANK & FUEL LINE

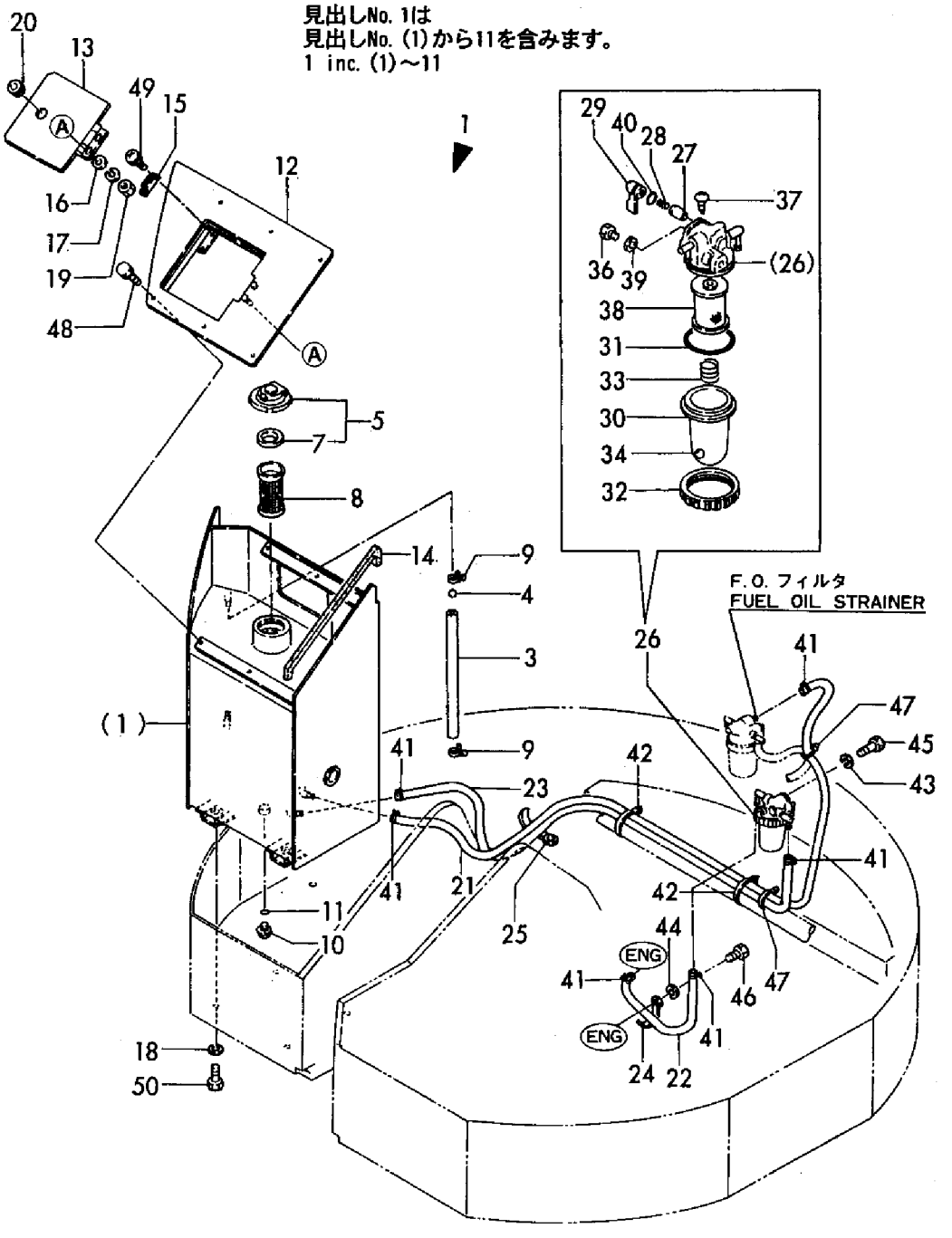

https://truckmanualshub.com/

```
1,1,,172146-16100,,"CORD (+), BATTERY",1,1,1,1,1,1,,,,,,,,,,,
2,1,,172142-16110,,"CORD(-), BATTERY",1,1,1,1,1,1,,,,,,,,,,,
3,1,,22217-100000,,"SPRING WASHER 10",1,1,1,1,1,1,,,,,,,,,,,
4,1,,26716-100002,,"NUT 10",1,1,1,1,1,1,,,,,,,,,,,
5,1,,933113-01500,,"BATTERY (N70Z)",1,1,1,1,1,1,,,,,,,,,,,
6,1,,172116-16310,,"RETAINER, BATTERY",1,1,1,1,1,1,,,,,,,,,,,
7,1,,22157-080000,,"WASHER  8",2,2,2,2,2,2,,,,,,,,,,,
8,1,,26716-080002,,"NUT M 8",4,4,4,4,4,4,,,,,,,,,,,
9,1,,933171-15710,,"ROD(B), BATTERY FIX",2,2,2,2,2,2,,,,,,,,,,,
```

https://truckmanualshub.com/

Fig. 11 バッテリ BATTERY

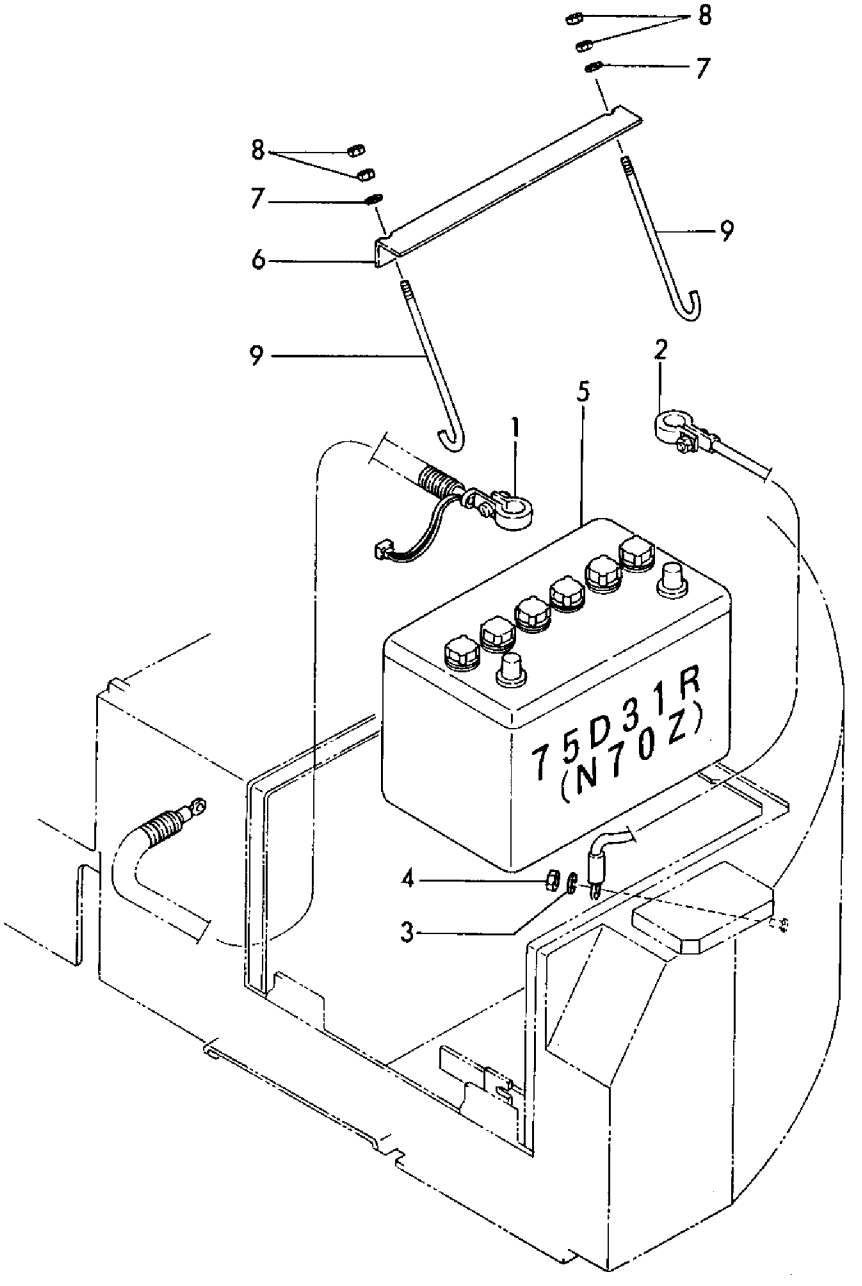

```
1,1,,172142-16500,,"HARNESS(A), WIRE",1,1,1,1,1,1,,,,,,,,,,,
2,1,,172146-16500,,"HARNESS (B), WIRE",1,1,1,1,1,1,,,,,,,,,,,
2-1,1,,172146-16501,,"WIRE HARNESS B",,,,,1,1,S,,,,,,,,,,M20501,,M20501
3,1,,172146-16510,,"HARNESS (D), WIRE",1,1,1,1,1,1,,,,,,,,,,,
3-1,1,,172146-16511,,"HARNESS, WIRE",,,,,1,1,S,,,,,,,,,,M20792,,M20792
4,1,,172142-16520,,"HARNESS(C), WIRE",1,1,1,1,1,1,,,,,,,,,,,
5,1,,172126-16540,,"CLAMP 10X70",1,1,1,1,1,1,,,,,,,,,,,
6,1,,172122-16570,,"LINK, FUSIBLE",1,1,1,1,1,1,,,,,,,,,,,
7,1,,22217-100000,,"SPRING WASHER 10",1,1,1,1,1,1,,,,,,,,,,,
8,1,,22217-100000,,"SPRING WASHER 10",1,1,1,1,1,1,,,,,,,,,,,
9,1,,22217-120000,,"SPRING WASHER",1,1,1,1,1,1,,,,,,,,,,,
10,1,,26116-100162,,"BOLT M10X 16 PLATED",1,1,1,1,1,1,,,,,,,,,,,
11,1,,26116-100162,,"BOLT M10X 16 PLATED",1,1,1,1,1,1,,,,,,,,,,,
12,1,,26116-120162,,"BOLT M12X 16 PLATED",1,,,,,,,,,,,,,,,,,
12-1,1,,26716-120002,,"NUT 12",1,1,1,1,1,1,S,,,M00518,,,,,,,
13,1,,933110-58400,,"GROMMET 43",1,1,1,1,1,1,,,,,,,,,,,
14,1,,933168-55770,,"BAND 146",2,2,2,2,2,2,,,,,,,,,,,
15,1,,933171-15801,,"WIRE, EARTH",1,1,1,1,1,1,,,,,,,,,,,
16,1,,22137-120000,,"WASHER 12,POLISHED",1,,,,,,Z,,,M00518,,,,,,,
17,1,,172146-17100,,"BRACKET COMPL.",1,1,1,1,1,1,,,,,,,,,,,
18,1,,172141-17141,,"UNIT, CHECKER",1,1,1,1,1,1,,,,,,,,,,,
19,1,,172141-17150,,BUZZER,1,1,1,1,1,1,,,,,,,,,,,
20,1,,172141-17160,,"BOX, FUSE",1,1,1,1,1,1,,,,,,,,,,,
20-1,1,,172141-17161,,"BOX, FUSE",,,,,1,1,N,,,,,,,,,,M20501,,M20501
21,2,,29411-050000,,"FUSE ( 5A),CARTRIDGE",1,1,1,1,,,,,,,,,,,,
22,2,,29411-100000,,"FUSE (10A),CARTRIDGE",2,2,2,2,,,,,,,,,,,,
23A,2,,29411-150000,,"FUSE (15A),CARTRIDGE",2,2,2,2,,,,,,,,,,,,
23B,2,,29411-150000,,"FUSE (15A),CARTRIDGE",,,,,5,5,,,,,,,,,,,
24,1,,172141-17170,,"BOX, PILOT",1,,,,,,,,,,,,,,,,,
24-1,1,,172141-17171,,"BOX, PILOT",1,1,1,1,1,1,N,,,M00531,,,,,,,
25,2,,933113-05120,,"BULB 12V 1.7W",3,3,3,3,3,3,,,,,,,,,,,
26,1,,172141-17190,,"SWITCH, WORK LAMP",1,1,1,1,1,1,,,,,,,,,,,
27,2,,933113-05120,,"BULB 12V 1.7W",1,1,1,1,,,,,,,,,,,,,
27-1,2,,172141-17230,,"BULB 24V- 6W",1,1,1,1,1,1,N,,,M01472,,M01472,,,,,,
28,1,,194440-51620,,"CLAMP, WIRE HARNESS",1,1,1,1,1,1,W,,,M01534,,M01534,,,,,,
29,1,,121522-77101,,RELAY,1,1,1,1,1,1,,,,,,,,,,,
29-1,1,,119247-77100,,"RELAY, SAFETY",,,,,1,1,S,,,,,,,,,,M20501,,M20501
30,1,,129132-77700,,"LIMITER, CURRENT",1,1,1,1,1,1,,,,,,,,,,,
31,1,,121522-77721,,"INDICATOR, CHARGING",1,1,1,1,1,1,,,,,,,,,,,
32,1,,26013-060122,,"BOLT M 6X 12",2,2,2,2,2,2,,,,,,,,,,,
33,1,,26013-080202,,"BOLT W/WASHER M8X20",2,2,2,2,2,2,,,,,,,,,,,
34,1,,26022-050162,,"SCREW M 5X 16",2,2,2,2,2,2,,,,,,,,,,,
35,1,,26022-060122,,"SCREW M 6X 12",2,2,2,2,2,2,,,,,,,,,,,
36,1,,26022-060162,,"SCREW M 6X 16",1,1,1,1,1,1,,,,,,,,,,,
37,1,,26022-060202,,"SCREW M 6X 20",1,1,1,1,1,1,,,,,,,,,,,
38,1,,26022-060202,,"SCREW M 6X 20",2,2,2,2,2,2,,,,,,,,,,,
39,1,,933110-00100,,"SWITCH ASSY, STARTER",1,1,1,1,1,1,,,,,,,,,,,
40,2,,933110-00301,,"KEY ASSY",1,1,1,1,1,1,,,,,,,,,,,
41,1,,933110-05300,,HORN,1,1,1,1,1,1,,,,,,,,,,,
42,1,,933113-15900,,"COVER, SWITCH TERMI.",1,1,1,1,1,1,,,,,,,,,,,
43,1,,172141-17220,,"METER, HOUR",1,1,,,,,,,,,,,,,,,
43-1,1,,172147-17200,,"METER, HOUR",1,1,1,1,1,1,N,,,M00658,,M00658,,,,,
44,2,,172147-17210,,"CASE, HOUR METER",1,1,1,1,1,1,W,,,M00658,,M00658,,,,,
45,2,,172147-17220,,"CAP, HOUR METER",1,1,1,1,1,1,W,,,M00658,,M00658,,,,,
46,2,,172147-17230,,NUT,2,2,2,2,2,2,W,,,M00658,,M00658,,,,,
47,2,,172147-17240,,SLEEVE,2,2,2,2,2,2,W,,,M00658,,M00658,,,,,
48,2,,172147-17250,,"WIRE,LEAD",1,1,1,1,1,1,W,,,M00658,,M00658,,,,,
49,2,,22217-050000,,"SPRING WASHER  5",2,2,2,2,2,2,W,,,M00658,,M00658,,,,,
50,1,,22217-080000,,"SPRING WASHER  8",1,1,1,1,1,1,W,,,M01534,,M01534,,,,,
51,1,,26116-080122,,"BOLT M 8X 12 PLATED",1,1,1,1,1,1,W,,,M01534,,M01534,,,,,
52,1,,933152-09280,,"BAND 170",1,1,1,1,1,1,W,,,M01534,,M01534,,,,,
52-1,1,,194202-56460,,BAND,1,1,1,1,1,1,S,,,M00501,,M00501,,,,,
53,1,,172147-16550,,"HARNESS, WIRE F",,,1,1,1,1,W,,,,,,M10501,,M10501,,
```

```
54,1,,172151-16580,,"LEAD WIRE, HORN",,,1,1,1,1,W,,,,,,,M10501,,M10501,,
55,1,,194440-51620,,"CLAMP, WIRE HARNESS",,,1,1,1,1,W,,,,,,,M10501,,M10501,,
56,1,,194202-56460,,BAND,,,2,2,2,2,W,,,,,,,M10501,,M10501,,
57,1,,194464-52190,,"SWITCH, SAFETY START",,,1,1,1,1,W,,,,,,,M10501,,M10501,,
57-1,1,,172164-17140,,SWITCH,,,,,1,1,S,1,,,,,,,,,,M20872,,M20872
58,1,,22137-180000,,"WASHER 18",,,1,1,1,1,W,,,,,,,M10501,,M10501,,
59,1,,26776-180002,,"NUT M18,LOCK",,,1,1,1,1,W,,,,,,,M10501,,M10501,,
59-1,1,,26776-160002,,"LOCK NUT M16 PLATED",,,,,1,1,S,,,,,,,,,,,M20872,,M20872
```

https://truckmanualshub.com/

Fig. 12 電装品 ELECTRIC PART

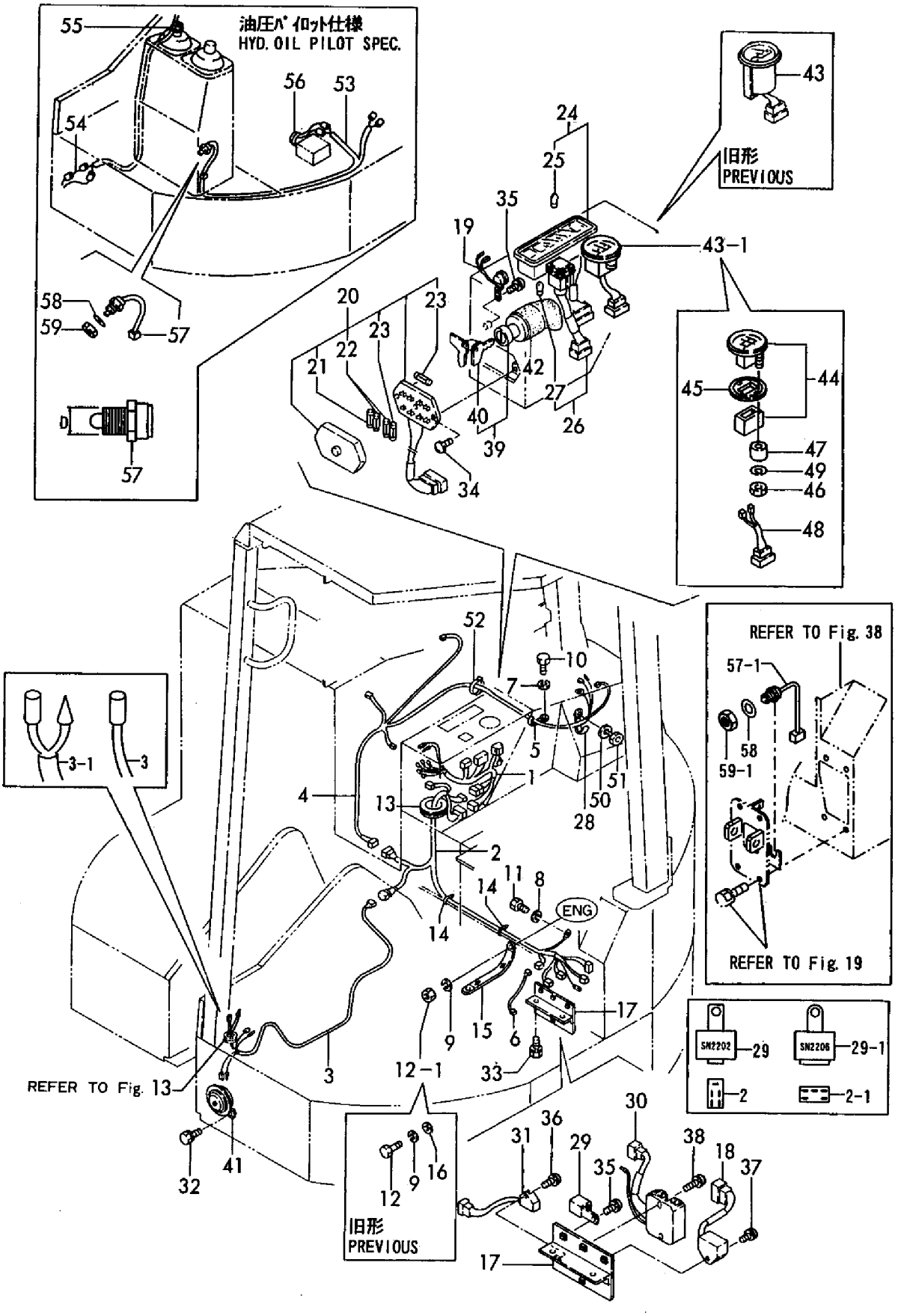

https://truckmanualshub.com/

```
1,1,,172122-16590,,"BAND 200F",4,4,,,,,,,,,,,,,,,
1-1,1,,172122-16590,,"BAND 200F",5,5,5,5,5,5,K,,,M00770,,M00770,,,,,,
2,1,,172146-17400,,COVER,1,1,,,,,,,,,,,,,,,
2-1,1,,172146-17401,,COVER,1,1,1,1,1,1,S,1,,M00530,,M00530,,,,,,
2-2,1,,172146-17402,,COVER,,,,,1,1,S,,,,,,,,,,,M20551,,M20551
3,1,,172146-17460,,PLATE,1,1,,,,,,,,,,,,,,,
3-1,1,,172146-17461,,PLATE,1,1,1,1,1,1,S,2,,M00530,,M00530,,,,,,
3-2,1,,172146-17462,,PLATE,,,,,1,1,S,3,,,,,,,,,,M20551,,M20551
4,1,,172146-17470,,"WORK LAMP",1,1,1,1,1,1,,,,,,,,,,,
4-1,1,,172146-17471,,"LAMP ASSY, WORK",,,,,1,1,S,,,,,,,,,,,M20551,,M20551
5,2,,172146-17500,,"WHEEL DCW10-24",1,1,1,1,1,1,Z,,,,,,,,,,,M20551,,M20551
6,2,,172146-17510,,"LENS,AIR CLEANER",1,1,1,1,1,1,,,,,,,,,,,
6-1,2,,172146-17511,,LENS,,,,,1,1,S,,,,,,,,,,,M20551,,M20551
7,2,,172146-17520,,REFLECTOR,1,1,1,1,1,1,Z,,,,,,,,,,,M20551,,M20551
8,2,,172146-17530,,"BULVE (15V 55W",1,1,1,1,1,1,,,,,,,,,,,
8-1,2,,172146-17531,,"BULB 12V 60W",,,,,1,1,S,,,,,,,,,,,M20551,,M20551
9,2,,172146-17540,,"SEAL GASKET",1,1,1,1,1,1,,,,,,,,,,,
9-1,2,,172146-17541,,"GASKET, SEAL",,,,,1,1,S,,,,,,,,,,,M20551,,M20551
10,2,,172146-17550,,"SCREW  4* 10",2,2,2,2,2,2,Z,,,,,,,,,,,M20551,,M20551
11,1,,172146-17480,,"WIRE, LAMP",1,1,1,1,1,1,,,,,,,,,,,
11-1,1,,172146-17481,,WIRE(LUMP,,,,,1,1,S,,,,,,,,,,,M20792,,M20792
12,1,,22137-080000,,"WASHER 8, POLISHED",2,2,2,2,2,2,Z,,,,,,,,,,,M20551,,M20551
13,1,,22217-080000,,"SPRING WASHER  8",7,7,7,7,7,7,,,,,,,,,,,
14,1,,22217-080000,,"SPRING WASHER  8",2,2,2,2,2,2,Z,,,,,,,,,,,M20551,,M20551
15,1,,22857-400120,,"SCREW 4X12",4,4,,,,,,,,,,,,,,,
15-1,1,,22857-400120,,"SCREW 4X12",5,5,5,5,5,5,K,,,M00770,,M00770,,,,,,
16,1,,26116-080162,,"BOLT 8X16",7,7,7,7,7,7,,,,,,,,,,,
17,1,,26702-080002,,"NUT M 8",2,2,2,2,2,2,Z,,,,,,,,,,,M20551,,M20551
18,1,,933160-09240,,"GROMMET 9X10.5",1,1,1,1,1,1,,,,,,,,,,,
18-1,1,,1A1380-58050,,"GROMMET 16X20X4.5",,,,,1,1,S,,,,,,,,,,,M20792,,M20792
19,1,,933168-56000,,"GROMMET 17X19",1,1,1,1,1,1,,,,,,,,,,,
20,1,,22157-060000,,"WASHER  6",,,,,2,2,W,,,,,,,,,,,M20551,,M20551
21,1,,26013-060162,,"BOLT M 6X 16",,,,,2,2,W,,,,,,,,,,,M20551,,M20551
22,1,,172146-17390,,"HARNESS, WIRE",1,1,1,1,1,1,Z,,,,,,,,,,,M20792,,M20792
```

https://truckmanualshub.com/

Fig. 13 ワークランプ WORK LAMP

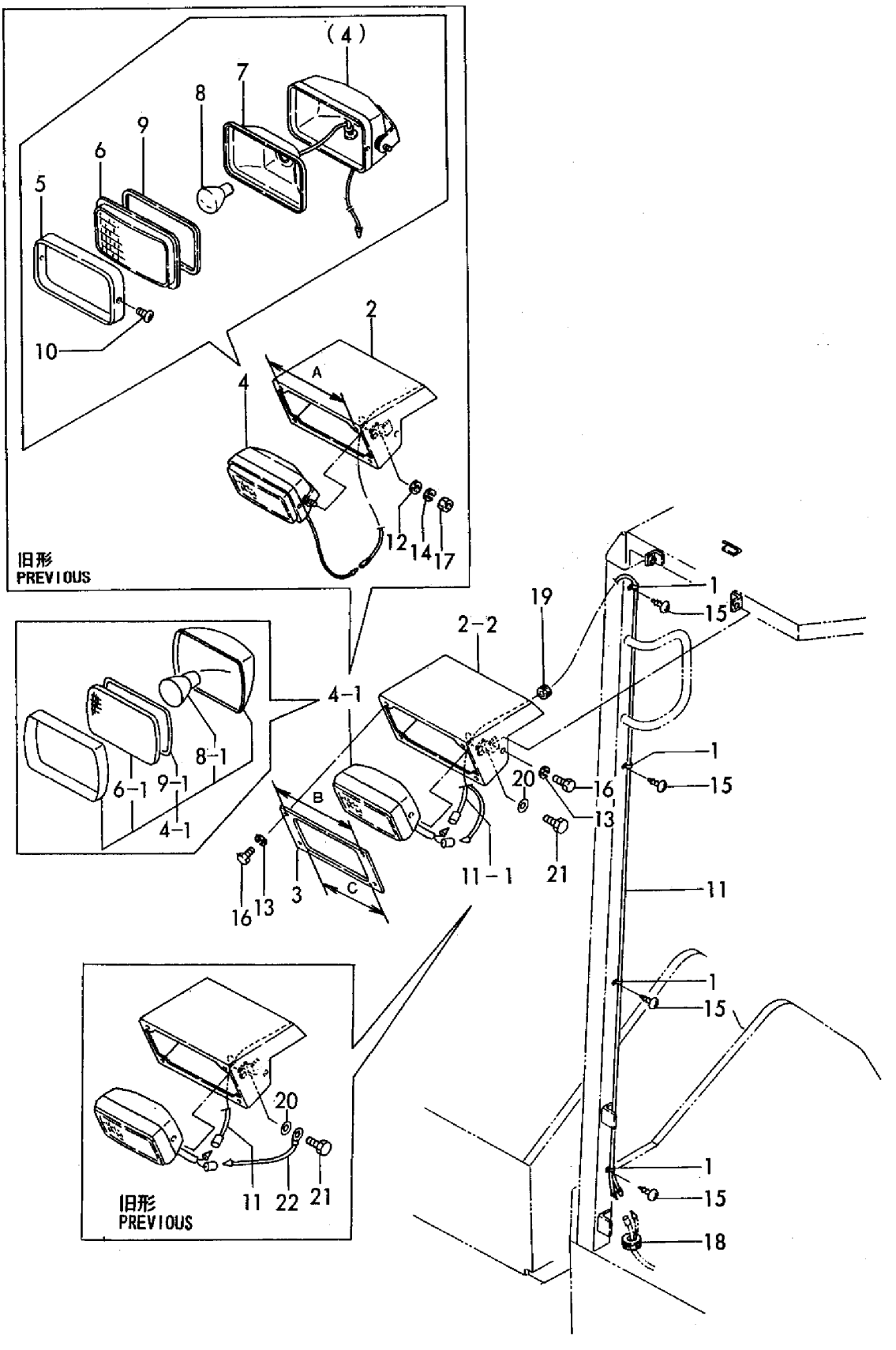

https://truckmanualshub.com/

```
1,1,,172141-29110,,SPROCKET,2,,,,,,,,,,,,,,,,
2,1,,172141-37120,,"FORK(R), IDLER",2,,,,,,,,,,,,,,,,
3,1,,172141-37100,,"IDLER 280",2,,,,,,,,,,,,,,,,
4,1,,172141-37110,,"FORK(L), IDLER",2,,,,,,,,,,,,,,,,
5,1,,172141-99490,,"IDLER KIT, FRONT",2,,,,,,,,,,,,,,,,
6,2,,172141-37130,,"SHAFT, IDLER",2,,,,,,,,,,,,,,,,
7,2,,172141-37140,,"SEAL 357220",4,,,,,,,,,,,,,,,,
8,2,,22242-000300,,"CIRCLIP   30",2,,,,,,,,,,,,,,,,
9,2,,22252-000720,,"CIRCLIP   72",4,,,,,,,,,,,,,,,,
10,2,,24101-062074,,"BALL BEARING",4,,,,,,,,,,,,,,,,
11,1,,772141-37300,,"ROLLER ASSY, TRACK",8,,,,,,,,,,,,,,,,
12,2,,172141-37311,,"SHAFT, ROLLER",8,,,,,,,,,,,,,,,,
13,2,,172141-37320,,"SPACER 75X2.6",16,,,,,,,,,,,,,,,,
14,2,,1A1030-48250,,"SEAL QLF30621218,OIL",16,,,,,,,,,,,,,,,,
15,2,,22252-000550,,"CIRCLIP   55",16,,,,,,,,,,,,,,,,
16,2,,22252-000750,,"CIRCLIP   75",16,,,,,,,,,,,,,,,,
17,2,,24101-060064,,"BALL BEARING",32,,,,,,,,,,,,,,,,
18,1,,172113-36050,,"BOLT, ROLLER ADJUST",8,,,,,,,,,,,,,,,,
19,1,,22217-160000,,"SPRING WASHER 16",8,,,,,,,,,,,,,,,,
20,1,,26657-160002,,"CAP NUT M16",8,,,,,,,,,,,,,,,,
21,1,,772116-37500,,"ROLLER ASSY, CARIA",2,,,,,,,,,,,,,,,,
21-1,1,,772116-37501,,"ROLLER ASSY, CARIA",2,,,,,,R,,,*1993.01,,,,,,,
21-2,1,,772116-37502,,"ROLLER ASSY, CARIA",2,,,,,,N,,,*1993.06,,,,,,,
22,2,,172614-21820,,COLLER,2,,,,,,Z,,,*1993.06,,,,,,,
23,2,,172614-23190,,"COLLER 25X34X2",2,,,,,,Z,,,*1993.01,,,,,,,
24,2,,172116-37520,,"SHAFT, UPPER ROLLER",2,,,,,,,,,,,,,,,,
24-1,2,,172146-37510,,"SHAFT, CARIA ROLLER",2,,,,,,N,,,*1993.06,,,,,,,
25,2,,172116-37540,,"COVER, BLIND",2,,,,,,,,,,,,,,,,
26,2,,22242-000250,,"CIRCLIP 25S",2,,,,,,Z,,,*1993.06,,,,,,,
27,2,,22252-000520,,"CIRCLIP   52",4,,,,,,,,,,,,,,,,
28,2,,24101-062054,,"BEARING #6205",4,,,,,,,,,,,,,,,,
29,2,,24311-000460,,"O-RING 1A P-46.0",2,,,,,,,,,,,,,,,,
30,2,,933171-13691,,"PLUG PT1/8",2,,,,,,Z,,,*1993.01,,,,,,,
31,2,,933172-13990,,"SEAL S255218,WATER",2,,,,,,,,,,,,,,,,
31-1,2,,1E6140-73420,,"SEAL QLF255218, OIL",2,,,,,,S,,,*1993.01,,,,,,,
32,1,,22451-160170,,"WIRE 1.6X170",2,,,,,,,,,,,,,,,,
33,1,,933110-21600,,"BOLT M 8X 18",2,,,,,,,,,,,,,,,,
34,1,,172141-37700,,"SPRING, CRAWLER",2,,,,,,,,,,,,,,,,
35,1,,172141-37800,,"PISTON, ADJUST",2,,,,,,,,,,,,,,,,
36,1,,172122-37842,,"VALVE ASSY, NIPPLE",2,,,,,,,,,,,,,,,,
37,2,,24315-000140,,"O-RING 1B P-14.0",2,,,,,,,,,,,,,,,,
38,2,,24761-020000,,"NIPPLE PT1/8,GREASE",2,,,,,,,,,,,,,,,,
39,1,,172141-37850,,"RING G35, BACK UP",2,,,,,,,,,,,,,,,,
40,1,,24325-000350,,"O-RING 1B G 35.0",2,,,,,,,,,,,,,,,,
41,1,,26013-100402,,"BOLT M10X 40",8,,,,,,,,,,,,,,,,
42,1,,933126-34300,,"SEAL 3547710",2,,,,,,,,,,,,,,,,
43,1,,933171-13691,,"PLUG PT1/8",2,,,,,,,,,,,,,,,,
44,1,,26013-120302,,"BOLT W/WASHER M12X30",18,,,,,,,,,,,,,,,,
```

https://truckmanualshub.com/

Fig. 14 ローラ & アジャスト(鉄クローラ, 旧形) ROLLER & ADJUST(IRON CRAWLER, PREVIOUS)

UP TO M/#00594

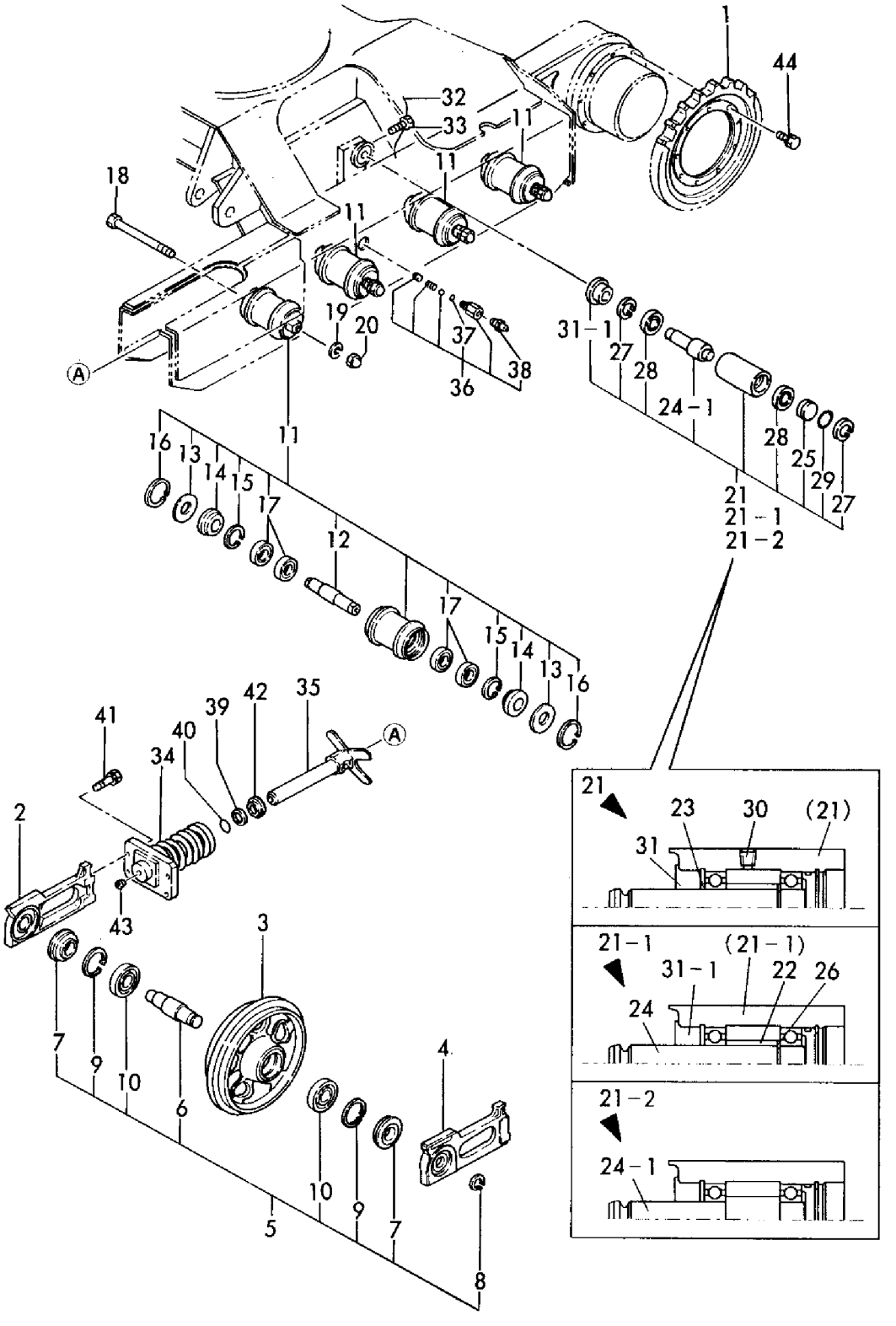

https://truckmanualshub.com/

```
1,1,,172141-29210,,"SPROCKET R",2,,,,,,,,,,,,,,,,
2,1,,772141-37110,,"IDLER 358 ASSY",2,,,,,,,,,,,,,,,,
2A,2,,172141-37120,,"FORK(R), IDLER",2,,,,,,,,,,,,,,,,
3,2,,172141-37150,,"IDLER 358",2,,,,,,,,,,,,,,,,
4,2,,172141-37110,,"FORK(L), IDLER",2,,,,,,,,,,,,,,,,
5,2,,172141-99490,,"IDLER KIT, FRONT",2,,,,,,,,,,,,,,,,
6,3,,172141-37130,,"SHAFT, IDLER",2,,,,,,,,,,,,,,,,
7,3,,172141-37140,,"SEAL 357220",4,,,,,,,,,,,,,,,,
8,3,,22242-000300,,"CIRCLIP   30",2,,,,,,,,,,,,,,,,
9,3,,22252-000720,,"CIRCLIP   72",4,,,,,,,,,,,,,,,,
10,3,,24101-062074,,"BALL BEARING",4,,,,,,,,,,,,,,,,
11,1,,772141-37311,,"ROLLER(R)ASSY, TRACK",8,,,,,,,,,,,,,,,,
12,2,,172141-37311,,"SHAFT, ROLLER",8,,,,,,,,,,,,,,,,
13,2,,172141-37320,,"SPACER 75X2.6",16,,,,,,,,,,,,,,,,
14,2,,1A1030-48250,,"SEAL QLF30621218,OIL",16,,,,,,,,,,,,,,,,
15,2,,22252-000550,,"CIRCLIP   55",16,,,,,,,,,,,,,,,,
16,2,,22252-000720,,"CIRCLIP   72",16,,,,,,,,,,,,,,,,
17,2,,24101-060064,,"BALL BEARING",32,,,,,,,,,,,,,,,,
18,1,,172113-36050,,"BOLT, ROLLER ADJUST",8,,,,,,,,,,,,,,,,
19,1,,22217-160000,,"SPRING WASHER 16",8,,,,,,,,,,,,,,,,
20,1,,26657-160002,,"CAP NUT M16",8,,,,,,,,,,,,,,,,
21,1,,772122-37500,,"ROLLER ASSY, CARIA",2,,,,,,,,,,,,,,,,
22,2,,172614-21820,,COLLER,2,,,,,,,,,,,,,,,,
23,2,,172614-23190,,"COLLER 25X34X2",2,,,,,,,,,,,,,,,,
24,2,,172116-37520,,"SHAFT, UPPER ROLLER",2,,,,,,,,,,,,,,,,
25,2,,22242-000250,,"CIRCLIP 25S",2,,,,,,,,,,,,,,,,
26,2,,22252-000520,,"CIRCLIP   52",2,,,,,,,,,,,,,,,,
27,2,,24101-062054,,"BEARING #6205",4,,,,,,,,,,,,,,,,
28,2,,933171-13691,,"PLUG PT1/8",2,,,,,,,,,,,,,,,,
29,2,,933172-13990,,"SEAL S255218,WATER",2,,,,,,,,,,,,,,,,
30,1,,22451-160170,,"WIRE 1.6X170",2,,,,,,,,,,,,,,,,
31,1,,933110-21600,,"BOLT M 8X 18",2,,,,,,,,,,,,,,,,
32,1,,172141-37700,,"SPRING, CRAWLER",2,,,,,,,,,,,,,,,,
33,1,,172141-37800,,"PISTON, ADJUST",2,,,,,,,,,,,,,,,,
34,1,,172122-37842,,"VALVE ASSY, NIPPLE",2,,,,,,,,,,,,,,,,
35,2,,24315-000140,,"O-RING 1B P-14.0",2,,,,,,,,,,,,,,,,
36,2,,24761-020000,,"NIPPLE PT1/8,GREASE",2,,,,,,,,,,,,,,,,
37,1,,172141-37850,,"RING G35, BACK UP",2,,,,,,,,,,,,,,,,
38,1,,24325-000350,,"O-RING 1B G 35.0",2,,,,,,,,,,,,,,,,
39,1,,26013-100402,,"BOLT M10X 40",8,,,,,,,,,,,,,,,,
40,1,,933126-34300,,"SEAL 3547710",2,,,,,,,,,,,,,,,,
41,1,,933171-13691,,"PLUG PT1/8",2,,,,,,,,,,,,,,,,
42,1,,26013-120302,,"BOLT W/WASHER M12X30",18,,,,,,,,,,,,,,,,
```

https://truckmanualshub.com/

Fig. 15 ローラ & アジャスト(ゴムクローラ, 旧形)
ROLLER & ADJUST(RUBBER CRAWLER, PREVIOUS)

UP TO M/#00594

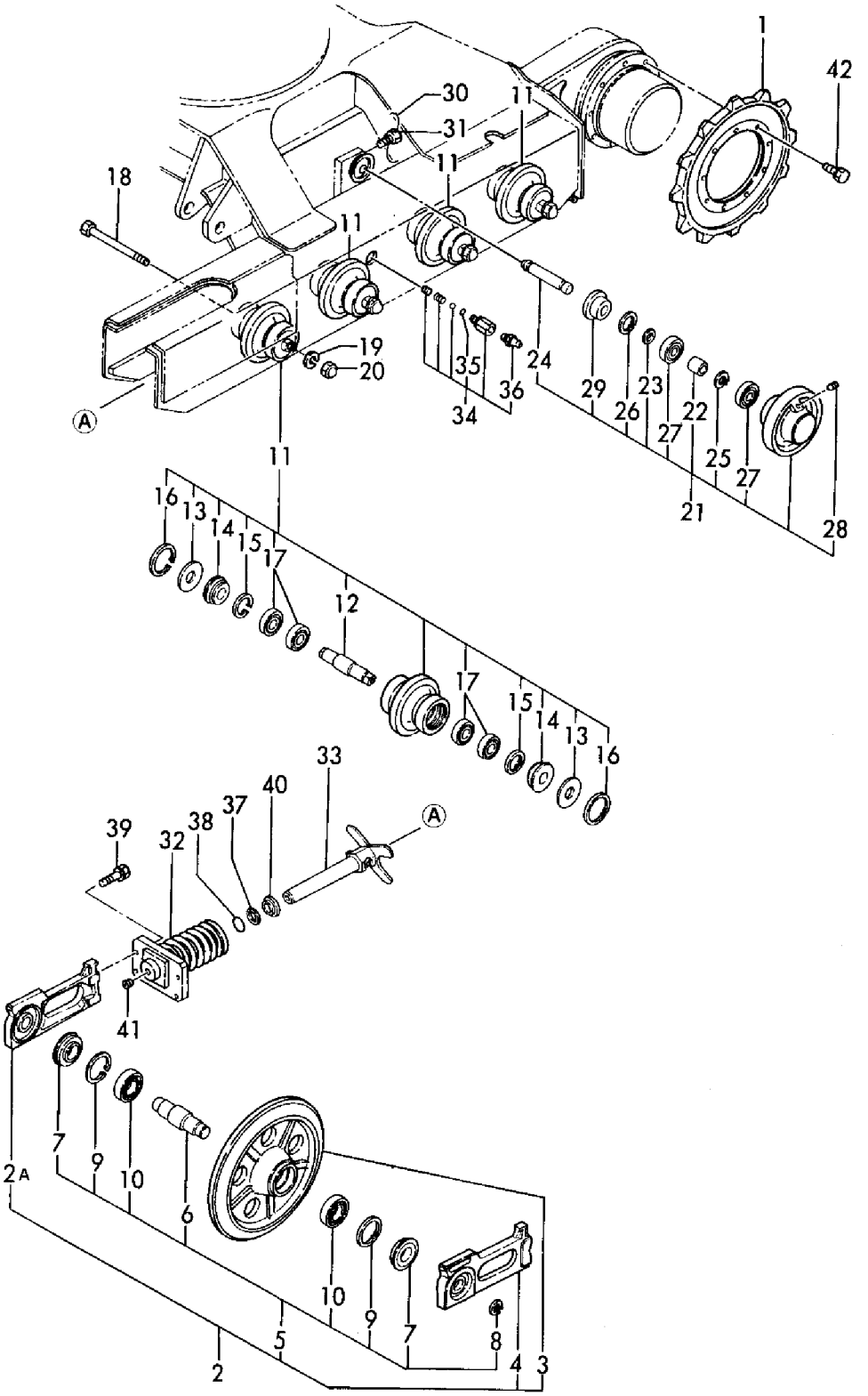

https://truckmanualshub.com/

```
1,1,,172141-29110,,SPROCKET,2,2,2,2,2,2,,,,,,,,,,,
2,1,,26013-120302,,"BOLT W/WASHER M12X30",18,18,18,18,18,18,,,,,,,,,,,
3,1,,172141-37110,,"FORK(L), IDLER",2,2,2,2,2,2,,,,,,,,,,,
3-1,1,,172141-37111,,"FORK(L), IDLER",,,,,2,2,R,,,,,,,,,,,M20639,,M20639
4,1,,172141-37120,,"FORK(R), IDLER",2,2,2,2,2,2,,,,,,,,,,,
4-1,1,,172141-37121,,"FORK(R), IDLER",,,,,1,1,R,,,,,,,,,,,M20639,,M20639
5,1,,172141-99490,,"IDLER KIT, FRONT",2,2,2,2,2,2,,,,,,,,,,,
6,2,,172141-37130,,"SHAFT, IDLER",2,2,2,2,2,2,,,,,,,,,,,
7,2,,172141-37140,,"SEAL 357220",4,4,4,4,4,4,,,,,,,,,,,
8,2,,22242-000300,,"CIRCLIP   30",2,2,2,2,2,2,,,,,,,,,,,
9,2,,22252-000720,,"CIRCLIP   72",4,4,4,4,4,4,,,,,,,,,,,
10,2,,24101-062074,,"BALL BEARING",4,4,4,4,4,4,,,,,,,,,,,
11,1,,172141-37100,,"IDLER 280",2,2,2,2,2,2,,1,,,,,,,,,
12,1,,172146-37100,,"IDLER 280",2,2,2,2,2,2,,2,,,,,,,,,
13,1,,172141-37850,,"RING G35, BACK UP",2,2,2,2,2,2,,,,,,,,,,,
14,1,,24325-000350,,"O-RING 1B G 35.0",2,2,2,2,2,2,,,,,,,,,,,
15,1,,26013-100402,,"BOLT M10X 40",8,8,8,8,8,8,,,,,,,,,,,
16,1,,933126-34300,,"SEAL 3547710",2,2,2,2,2,2,,,,,,,,,,,
17,1,,933171-13691,,"PLUG PT1/8",2,2,2,2,2,2,,,,,,,,,,,
18,1,,172113-36050,,"BOLT, ROLLER ADJUST",8,8,8,8,8,8,,,,,,,,,,,
19,1,,22217-160000,,"SPRING WASHER 16",8,8,8,8,8,8,,,,,,,,,,,
20,1,,26657-160002,,"CAP NUT M16",8,8,8,8,8,8,,,,,,,,,,,
21,1,,772142-37300,,"ROLLER ASSY, TRACK",8,8,8,8,8,8,,,,,,,,,,,
22,2,,1A1030-48250,,"SEAL QLF30621218,OIL",16,16,16,16,16,16,,,,,,,,,,,
23,2,,22252-000620,,"CIRCLIP 62(H)",16,16,16,16,16,16,,,,,,,,,,,
24,2,,22252-000750,,"CIRCLIP   75",16,16,16,16,16,16,,,,,,,,,,,
25,2,,933111-73800,,BEARING,16,16,16,16,16,16,,,,,,,,,,,
27,2,,172141-37130,,"SHAFT, IDLER",8,8,8,8,8,8,,M,,,,,,,,,
27-1,2,,172146-37310,,"SHAFT, ROLLER",8,8,8,8,8,8,,,,,,,,,,,
28,2,,172141-37320,,"SPACER 75X2.6",16,16,16,16,16,16,,,,,,,,,,,
29,1,,772146-37500,,"ROLLER ASSY, CARIA",2,2,,,,,,,,,,,,,,,
29-1,1,,772146-37501,,"ROLLER ASSY, CARIA",2,2,2,2,2,2,N,,,M00725,,M00725,,,,,,
30,2,,172614-23190,,"COLLER 25X34X2",2,2,,,,,Z,,,M00725,,M00725,,,,,,
31,2,,172146-37510,,"SHAFT, CARIA ROLLER",2,2,2,2,2,2,,,,,,,,,,,
32,2,,172116-37540,,"COVER, BLIND",2,2,2,2,2,2,,,,,,,,,,,
33,2,,22252-000520,,"CIRCLIP   52",4,4,4,4,4,4,,,,,,,,,,,
34,2,,24101-062054,,"BEARING #6205",4,4,4,4,4,4,,,,,,,,,,,
35,2,,24311-000460,,"O-RING 1A P-46.0",2,2,2,2,2,2,,,,,,,,,,,
36,2,,933171-13691,,"PLUG PT1/8",2,2,,,,,Z,,,M00725,,M00725,,,,,,
37,2,,933172-13990,,"SEAL S255218,WATER",2,2,,,,,,,,,,,,,,,
37-1,2,,1E6140-73420,,"SEAL QLF255218, OIL",2,2,2,2,2,2,S,,,M00725,,M00725,,,,,,
39,1,,933110-21600,,"BOLT M 8X 18",2,2,2,2,2,2,,,,,,,,,,,
40,1,,172146-37700,,SPRING,2,2,2,2,2,2,,,,,,,,,,,
41,1,,172141-37800,,"PISTON, ADJUST",2,2,,,,,,,,,,,,,,,
41-1,1,,172141-37801,,"PISTON, ADJUST",2,2,2,2,2,2,S,3,,M01166,,M01166,,,,,,
42,1,,172122-37842,,"VALVE ASSY, NIPPLE",2,2,,,,,,,,,,,,,,,
42-1,1,,172122-37843,,"VALVE ASSY, NIPPLE",2,2,2,2,2,2,S,,,M01166,,M01166,,,,,,
43,2,,24315-000120,,"O-RING 1B P-12.0",2,2,,,,,,,,,,,,,,,
43-1,2,,24315-000140,,"O-RING 1B P-14.0",2,2,2,2,2,2,S,,,M01166,,M01166,,,,,,
44,2,,24761-020000,,"NIPPLE PT1/8,GREASE",2,2,2,2,2,2,,,,,,,,,,,
49,1,,22451-160170,,"WIRE 1.6X170",2,2,2,2,2,2,,,,,,,,,,,
```

https://truckmanualshub.com/

Fig. 16 ローラ & アジャスト(新形) ROLLER & ADJUST(NEW)

FROM M/#00595

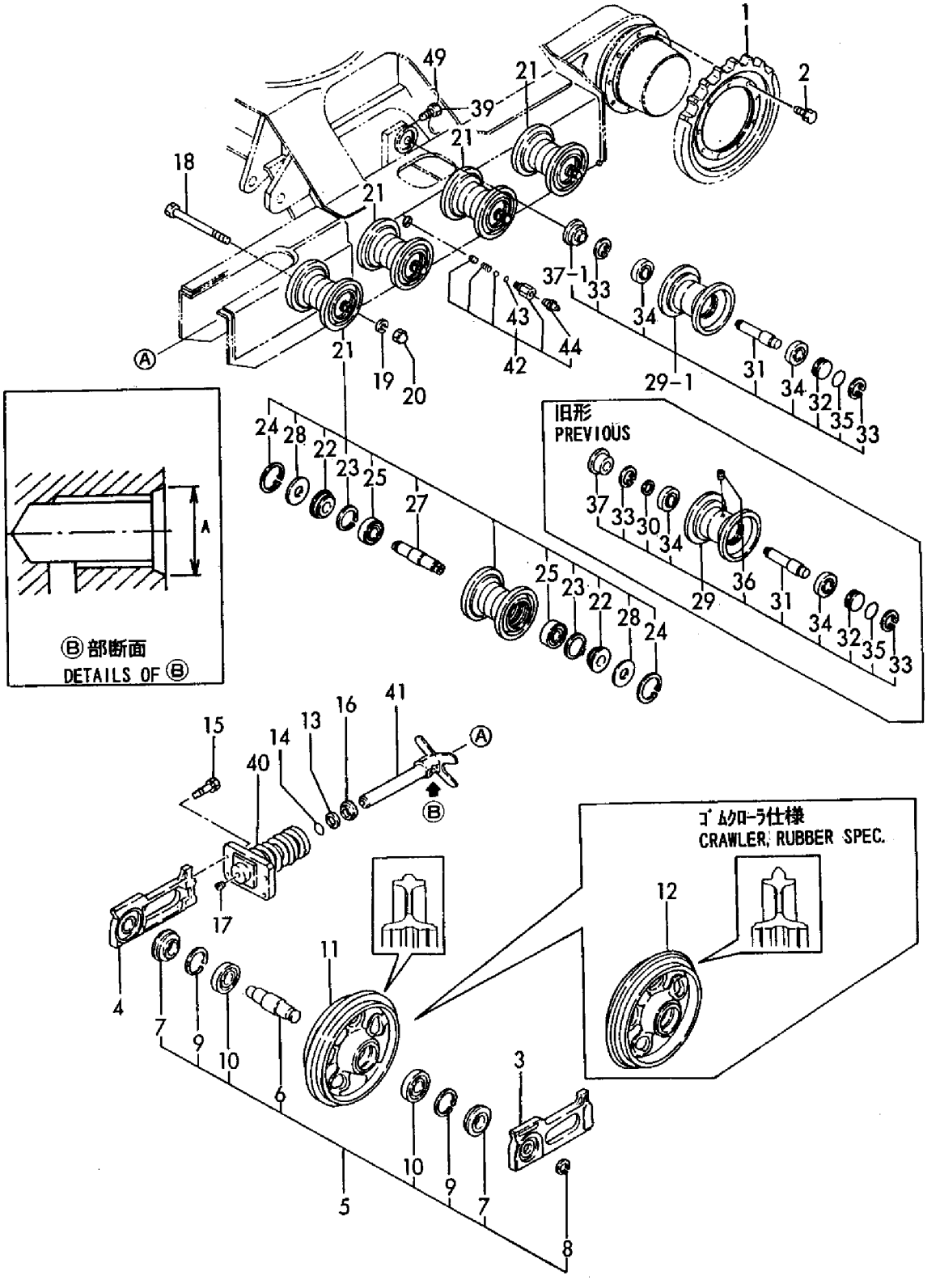

https://truckmanualshub.com/

```
1,1,,172142-38100,,"CRAWLER 320 ASSY",2,2,2,2,2,2,,,,,,,,,,,
1-1,1,,172142-38101,,"CRAWLER 320 ASSY",,,,,2,2,N,,,,,,,,,,,M20902,,M20902
2,2,,172072-13790,,"PLATE, SHOE",80,80,80,80,80,80,,,,,,,,,,,
2-1,2,,172072-13791,,"PLATE,SHOE",,,,,80,80,N,,,,,,,,,,,M20902,,M20902
3,2,,172142-38110,,"LINK ASSY, TRACK",2,2,2,2,2,2,,,,,,,,,,,
4,3,,172141-38200,,BUSH,80,80,80,80,80,80,,,,,,,,,,,
5,3,,172141-38210,,"PIN, CRAWLER",78,78,78,78,78,78,,,,,,,,,,,
6,1,,172141-38220,,"PIN, MASTER",2,2,2,2,2,2,,,,,,,,,,,
7,1,,172614-38300,,"PIN 5X45, LOCK",2,2,2,2,2,2,,,,,,,,,,,
8,1,,172141-38250,,"TRACK 320, MASTER",2,2,2,2,,,,M,,,,,,,,,
8-1,1,,172142-38170,,"TRACK 320G CMP.,MSTR",2,2,2,2,2,2,,,,,,,,,,,
8-2,1,,172141-38251,,"TRACK, MASTER ASSY",,,,,2,2,S,4,,,,,,,,,M20902,,M20902
9,1,,172142-38600,,"CRAWLER, RUBBER",2,,,,,,,,,,,,,,,,
9-1,1,,172146-38600,,"CRAWLER, RUBBER",2,2,2,2,2,2,S,,,M00595,,,,,,,
9-2,1,,172146-38601,,"CRAWLER, RUBBER",,,,,2,2,N,,,,,,,,,,,M20501,,M20501
10,1,,172142-38120,,"CRAWLER 370 ASSY",2,2,2,2,2,2,,1,,,,,,,,,
10-1,1,,172142-38121,,"CRAWLER 370 ASSY",,,,,1,1,N,,,,,,,,,,,M20902,,M20902
11,2,,172142-38110,,"LINK ASSY, TRACK",2,2,2,2,2,2,,,,,,,,,,,
12,3,,172141-38200,,BUSH,80,80,80,80,80,80,,,,,,,,,,,
13,3,,172141-38210,,"PIN, CRAWLER",78,78,78,78,78,78,,,,,,,,,,,
14,2,,172071-61020,,"PLATE, SHOE 370",80,80,80,80,80,80,,,,,,,,,,,
14-1,2,,172071-61021,,"PLATE, SHOE
370",80,80,80,80,80,80,N,,,MXXXXX,,MXXXXX,,MXXXXX,,MXXXXX,,MXXXXX,,MXXXXX
14-2,2,,172071-61022,,"PLATE,SHOE 370",,,,,80,80,N,,,,,,,,,,,M20902,,M20902
15,1,,172142-38160,,"TRACK 270, MASTER",2,2,2,2,,,,M,,,,,,,,,
15-1,1,,172122-38741,,"TRACK 370G(L),MASTER",2,2,2,2,2,2,,3,,,,,,,,,
15-2,1,,172122-38742,,"TRACK
370L,MASTER",2,2,2,2,2,2,S,5,,,,,,,,,M20902,,M20902
16,1,,172142-38141,,"CRAWLER, TRIANGLE",4,4,4,4,4,4,,1,,,,,,,,,
17,2,,172142-38180,,"LINK ASSY, TRACK",4,4,4,4,4,4,,,,,,,,,,,
18,3,,172141-38200,,BUSH,80,80,80,80,80,80,,,,,,,,,,,
19,3,,172141-38210,,"PIN, CRAWLER",76,76,76,76,76,76,,,,,,,,,,,
20,2,,172614-38550,,"SHOE ASSY, TRIANGLE",80,80,80,80,80,80,,,,,,,,,,,
21,1,,172141-38220,,"PIN, MASTER",4,4,4,4,4,4,,,,,,,,,,,
22,1,,172614-38300,,"PIN 5X45, LOCK",4,4,4,4,4,4,,,,,,,,,,,
23,1,,172141-38260,,"TRACK 350, MASTER",2,2,2,2,2,2,,2,,,,,,,,,
```

https://truckmanualshub.com/

Fig. 17 クローラ CRAWLER

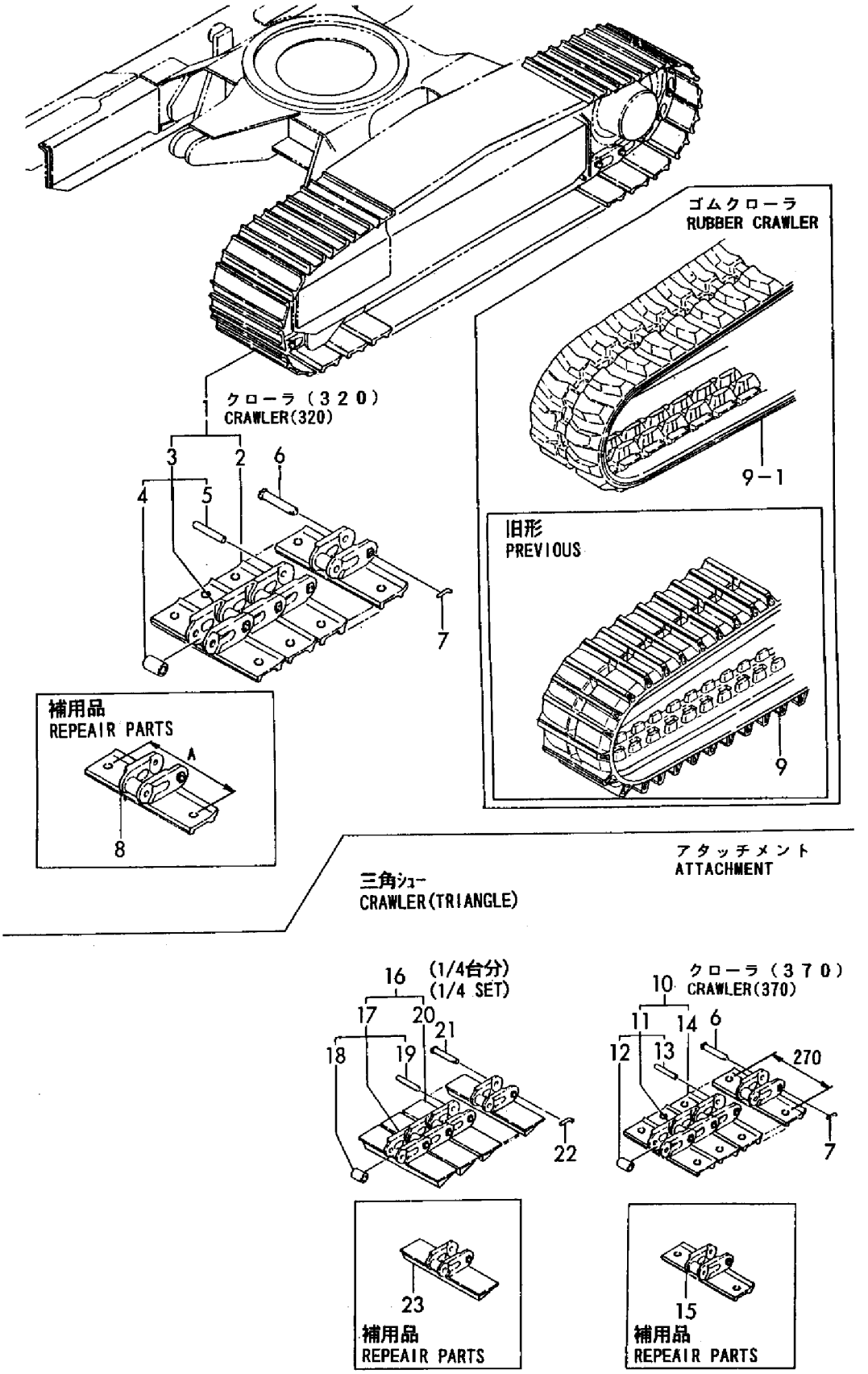

https://truckmanualshub.com/

```
1,1,,172146-45401,,"LINK STAND ASSY",1,,,,,,,,,,,,,,,,
1-1,1,,172146-45402,,"STAND ASSY, LINK",1,,,,,,N,,,M01606,,,,,,,,
2,1,,26013-100202,,"BOLT W/WASHER M10X20",2,2,,,,,,,,,,,,,,,,
3,1,,26013-100352,,"BOLT M10X 35",2,2,,,,,,,,,,,,,,,,
4,1,,172141-42600,,"PIPE, LOCK",2,2,,,,,,,,,,,,,,,,
5,1,,172141-42700,,"LINK, LOCK",4,4,,,,,,,,,,,,,,,,
6,1,,172141-42750,,"BOLT, STOPPER",8,8,,,,,,,,,,,,,,,,
7,1,,172146-45510,,"LEVER, LOCK",1,1,,,,,,,,,,,,,,,,
8,1,,172146-45520,,"ARM, LOCK",1,1,,,,,,,,,,,,,,,,
9,1,,172116-46630,,"KNOB, LOCK LEVER",1,1,,,,,,,,,,,,,,,,
10,1,,1C6281-52310,,"PIN 6,COME-OFF SNAP",4,4,,,,,,,,,,,,,,,,
11,1,,22137-120000,,"WASHER 12,POLISHED",2,2,,,,,,,,,,,,,,,,
12,1,,26116-080252,,"BOLT M 8X 25 PLATED",1,1,,,,,,,,,,,,,,,,
13,1,,26116-080454,,"BOLT M 8X 45 PLATED",4,4,,,,,,,,,,,,,,,,
14,1,,26716-080002,,"NUT M 8",1,1,,,,,,,,,,,,,,,,
15,1,,26716-080002,,"NUT M 8",4,4,,,,,,,,,,,,,,,,
16,1,,26756-080002,,"LOCK NUT M 8 PLATED",8,8,,,,,,,,,,,,,,,,
17,1,,26756-120002,,"LOCK NUT 12",2,2,,,,,,,,,,,,,,,,
18,1,,933110-54100,,"PIN 4.75X14",4,4,,,,,,,,,,,,,,,,
19,1,,933170-01490,,"SPRING 12",2,2,,,,,,,,,,,,,,,,
20,1,,194150-24270,,"SCREW CAP 13",2,2,,,,,W,,,M00627,,M00627,,,,,,
21,1,,172146-46700,,"STAND ASSY, LINK",,1,,,,,W,,,,,M01920,,,,,,
```

https://truckmanualshub.com/

Fig. 18 操縦装置(リンク台 & レバーストッパ)(メカリンク) CONTROL EQUIP. (LINK STAND & LEVER STOPPER) (MECHANICAL LINK)

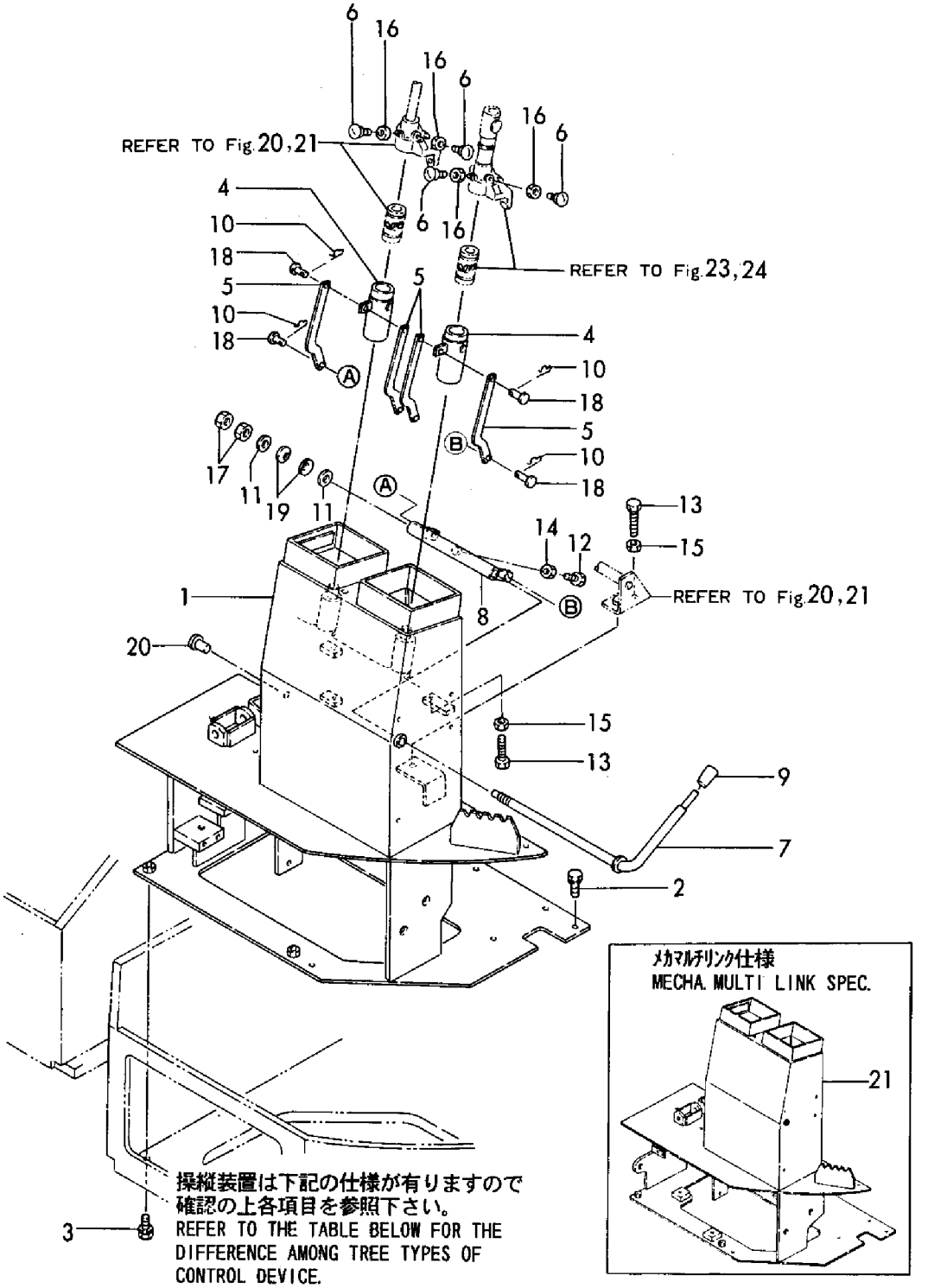

仕様 TYPE / Fig	18	19	20	21	22	23	24	25	26	27	28	29	30	31	32
メカ MECHANICAL	○		○		○	○		○			○	○	○		○
メカマルチリンク MECHA MULTI TYPE LINK	○			○			○		○		○	○	○		○
油圧パイロット HYD. OIL PILOT		○								○	○	○	○	○	

https://truckmanualshub.com/

```
1,1,,172151-45010,,"BOOT P,LEVER",,,2,2,2,2,,,,,,,,,,,
2,1,,172165-45071,,"KNOB (L) ASSY",,,1,1,1,1,,,,,,,,,,,
3,1,,172165-45081,,"KNOB R COMPL.",,,1,1,1,1,,,,,,,,,,,
4,1,,172162-45121,,"LEVER R ASSY",,,1,1,1,1,,,,,,,,,,,
5,1,,172162-45740,,"LEVER L ASSY",,,1,1,1,1,,,,,,,,,,,
6,1,,26587-040062,,"SCREW M 4X  6",,,2,2,2,2,,,,,,,,,,,
7,1,,26736-140002,,"NUT M14",,,2,2,2,2,,,,,,,,,,,
8,1,,194150-24270,,"SCREW CAP 13",,,2,2,2,2,,,,,,,,,,,
9A,1,,172146-45000,,"STAND, LINK",,,1,1,,,,,,,,,,,,,
9B,1,,172146-45001,,"STAND, LINK",,,,,1,1,W,,,,,,,,,,,M20501,,M20501
9B-1,1,,172146-45002,,"STANK, LINK",,,,,1,1,F,1,,,,,,,,,M20627,,M20627
9B-2,1,,172146-45003,,"STAND, LINK",,,,,1,1,S,2,,,,,,,,,M20872,,M20872
10,1,,172146-47320,,"BRACKET ASSY",,,1,1,,,,,,,,,,,,,
11,1,,26013-080202,,"BOLT W/WASHER M8X20",,,2,2,2,2,,,,,,,,,,,
12,1,,26013-100202,,"BOLT W/WASHER M10X20",,,2,2,2,2,,,,,,,,,,,
13,1,,26013-100352,,"BOLT M10X 35",,,2,2,2,2,,,,,,,,,,,
14,1,,172147-45110,,"BRACKET ASSY",,,1,1,1,1,,,,,,,,,,,
15,1,,172147-45140,,"LEVER ASSY",,,1,1,1,1,,,,,,,,,,,
16,1,,172151-45550,,"ARM L, STOPPER",,,1,1,1,1,,,,,,,,,,,
17,1,,172116-46630,,"KNOB, LOCK LEVER",,,1,1,1,1,,,,,,,,,,,
18,1,,172614-47550,,"SPRING, RETURN",,,1,1,1,1,,,,,,,,,,,
19,1,,26013-080162,,"BOLT W/WASHER M8X16",,,1,1,1,1,,,,,,,,,,,
20,1,,26013-080202,,"BOLT W/WASHER M8X20",,,2,2,2,2,,,,,,,,,,,
21,1,,26116-080454,,"BOLT M 8X 45 PLATED",,,4,4,4,4,,,,,,,,,,,
22,1,,26716-080002,,"NUT M 8",,,4,4,4,4,,,,,,,,,,,
23,1,,933152-02900,,WASHER,,,1,1,1,1,,,,,,,,,,,
24,1,,172151-45320,,"PLATE,BOOT",,,2,2,2,2,,,,,,,,,,,
25,1,,26013-080162,,"BOLT W/WASHER M8X16",,,8,8,8,8,,,,,,,,,,,
26,1,,933168-55770,,"BAND 146",,,2,2,2,2,,,,,,,,,,,
27,1,,172158-45610,,PIN(14-70,,,,,1,1,W,3,,,,,,,,,M20872,,M20872
28,1,,172146-45800,,"LEVER ASSY, LOCK",,,,,1,1,,3,,,,,,,,,
29,2,,172141-41360,,"BUSH 1415",,,,,2,2,W,3,,,,,,,,,M20872,,M20872
31,1,,172146-45850,,"BRACKET ASSY",,,,,1,1,,3,,,,,,,,,
32,1,,172165-45970,,SPRING,,,,,1,1,,3,,,,,,,,,
33,1,,22417-400400,,"COTTER PIN 4.0X40",,,,,1,1,W,3,,,,,,,,,M20872,,M20872
34,1,,24311-000210,,"O-RING 1A P-21.0",,,,,2,2,W,3,,,,,,,,,M20872,,M20872
35,1,,26013-100202,,"BOLT W/WASHER M10X20",,,,,4,4,W,3,,,,,,,,,M20872,,M20872
```

https://truckmanualshub.com/

Fig. 19 操縦装置(リンク台 & レバーストッパ)(油圧パイロット) CONTROL EQUIP. (LINK STAND & LEVER STOPPER) (HYD. OIL PILOT)

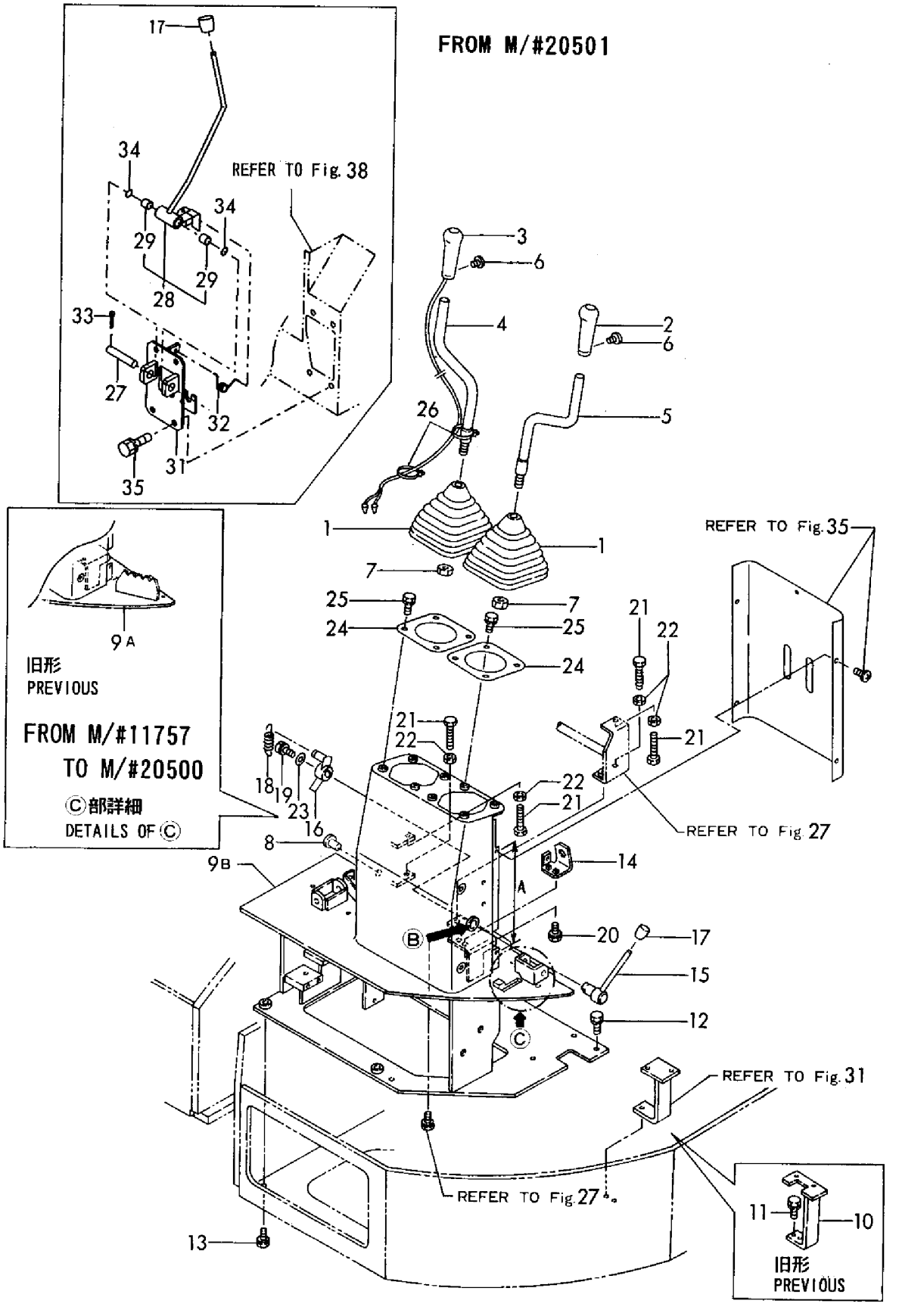

https://truckmanualshub.com/

```
1,1,,172146-41110,,"LEVER(R) ASSY",1,,,,,,,,,,,,,,,,
2,1,,172141-41160,,JOINT,1,,,,,,,,,,,,,,,,
3,1,,172141-41310,,GROMMET,1,,,,,,,,,,,,,,,,
3-1,1,,172141-41311,,GROMMET,1,,,,,,F,3,,M10501,,,,,,,
4,1,,172141-41330,,"BOOTS, LEVER (BLACK)",1,,,,,,,,,,,,,,,,
4-1,1,,172141-41331,,"BOOTS, LEVER (GRAY)",1,,,,,,F,2,,M10501,,,,,,,
5,1,,172312-46301,,KNOB(A),1,,,,,,,,,,,,,,,,
6,1,,26757-100002,,"LOCK NUT M10",1,,,,,,,,,,,,,,,,
7,1,,933168-55770,,"BAND 146",2,,,,,,,,,,,,,,,,
8,1,,933168-56000,,"GROMMET 17X19",1,,,,,,,,,,,,,,,,
9,1,,172146-41491,,"LINK ASSY",1,,,,,,,,,,,,,,,,
10,2,,172141-41370,,"BUSH 2015",2,,,,,,,,,,,,,,,,
11,1,,172146-41551,,"LINK ASSY",1,,,,,,,,,,,,,,,,
12,2,,172141-41370,,"BUSH 2015",2,,,,,,,,,,,,,,,,
13,1,,172146-41370,,SUPPORT,1,,,,,,M,,,,,,,,,
13-1,1,,172146-41730,,SUPPORT,1,,,,,,,,,,,,,,,,
13-2,1,,172146-41371,,SUPPORT,1,,,,,,M,,,,,,,,,
13-3,1,,172146-41731,,SUPPORT,1,,,,,S,,M00621,,,,,,,
14,1,,172146-41740,,BRACKET,1,,,,,,,,,,,,,,,,
14-1,1,,172146-41741,,BRACKET,1,,,,,F,1,,M00621,,,,,,,
15,1,,172146-41790,,"SHAFT(B) ASSY",1,,,,,,,,,,,,,,,,
16,1,,172124-46200,,"O-RING 27X5.7",4,,,,,,,,,,,,,,,,
17,1,,22137-100000,,"WASHER 10,POLISHED",4,,,,,,,,,,,,,,,,
18,1,,22242-000200,,"CIRCLIP   20",2,,,,,,,,,,,,,,,,
19,1,,24761-040000,,"NIPPLE B,GREASE",1,,,,,,,,,,,,,,,,
20,1,,24761-050000,,"NIPPLE C,GREASE",1,,,,,,,,,,,,,,,,
21,1,,26013-100202,,"BOLT W/WASHER M10X20",4,,,,,,,,,,,,,,,,
22,1,,26013-100252,,"BOLT W/WASHER M10X25",2,,,,,,,,,,,,,,,,
23,1,,194990-20170,,"NUT W/WASHER  8",2,,,,,,,,,,,,,,,,
24,1,,172734-41300,,"BALL, LINK 8L",2,,,,,,,,,,,,,,,,
25,1,,172146-45610,,"ROD(R), LINK",2,,,,,,,,,,,,,,,,
26,1,,172146-45690,,"ROD(C), SPOOL",2,,,,,,,,,,,,,,,,
26-1,1,,172146-45691,,"ROD(C), SPOOL",2,,,,,R,,,M00501,,,,,,,
27,1,,172122-46590,,"ELBALL 8",2,,,,,,,,,,,,,,,,
28,1,,172122-46590,,"ELBALL 8",2,,,,,,,,,,,,,,,,
29,1,,22217-080000,,"SPRING WASHER  8",2,,,,,Z,,,M10785,,,,,,,
30,1,,22217-080000,,"SPRING WASHER  8",4,,,,,Z,,,M10785,,,,,,,
31,1,,22417-160160,,"COTTER PIN 1.6X16",2,,,,,,,,,,,,,,,,
32,1,,26716-080002,,"NUT M 8",2,,,,,,,,,,,,,,,,
32-1,1,,26051-080002,,"NUT M 8",2,,,,,N,,,M10785,,,,,,,
33,1,,26716-080002,,"NUT M 8",8,,,,,,,,,,,,,,,,
33-1,1,,26051-080002,,"NUT M 8",8,,,,,N,,,M10785,,,,,,,
34,1,,933110-54100,,"PIN 4.75X14",2,,,,,,,,,,,,,,,,
35,1,,22137-080000,,"WASHER 8, POLISHED",2,,,,,W,,,M10785,,,,,,,
36,1,,22137-080000,,"WASHER 8, POLISHED",4,,,,,W,,,M10785,,,,,,,
```

https://truckmanualshub.com/

Fig. 20 操縦装置(ブーム & バケット)(メカリンク) CONTROL EQUIP. (BOOM & BUCKET) (MECHANICAL LINK)

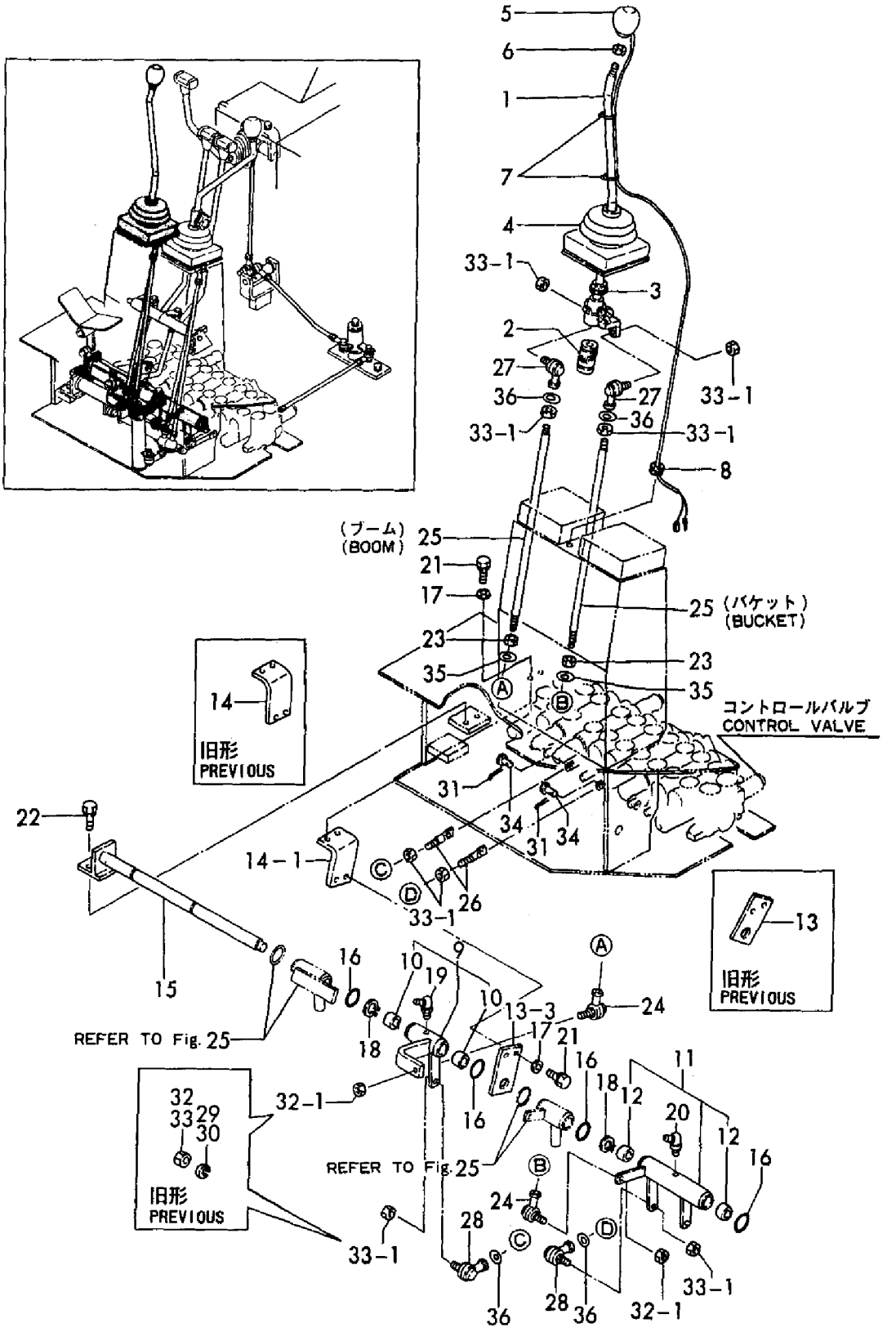

```
1,1,,172146-41110,,"LEVER(R) ASSY",,1,,,,,,,,,,,,,,,
2,1,,172141-41160,,JOINT,,1,,,,,,,,,,,,,,,
3,1,,172141-41311,,GROMMET,,1,,,,,,,,,,,,,,,
4,1,,172141-41331,,"BOOTS, LEVER (GRAY)",,1,,,,,,,,,,,,,,,
5,1,,172312-46301,,KNOB(A),,1,,,,,,,,,,,,,,,
6,1,,26757-100002,,"LOCK NUT M10",,1,,,,,,,,,,,,,,,
7,1,,933168-55770,,"BAND 146",,2,,,,,,,,,,,,,,,
8,1,,933168-56000,,"GROMMET 17X19",,1,,,,,,,,,,,,,,,
9,1,,172146-41731,,SUPPORT,,1,,,,,,,,,,,,,,,
10,1,,172124-46200,,"O-RING 27X5.7",,4,,,,,,,,,,,,,,,
11,1,,172146-46300,,"LINK, BUCKET",,1,,,,,,,,,,,,,,,
12,2,,172141-41370,,"BUSH 2015",,2,,,,,,,,,,,,,,,
13,1,,172151-46330,,"LINK, SPOOL C",,1,,,,,,,,,,,,,,,
14,1,,172146-46360,,"LINK, BOOM",,1,,,,,,,,,,,,,,,
15,2,,172141-41370,,"BUSH 2015",,2,,,,,,,,,,,,,,,
16,1,,172148-46520,,SPRING,,2,,,,,,,,,,,,,,,
17,1,,172146-46530,,"SHAFT B ASSY",,1,,,,,,,,,,,,,,,
18,1,,172148-46530,,"LINK, SPOOL A",,1,,,,,,,,,,,,,,,
19,1,,172148-46590,,"PIN CMP",,2,,,,,,,,,,,,,,,
20,1,,172146-46630,,BRACKET,,1,,,,,,,,,,,,,,,
21,1,,22137-040000,,"WASHER 4, POLISHED",,4,,,,,,,,,,,,,,,
22,1,,22137-100000,,"WASHER 10,POLISHED",,4,,,,,,,,,,,,,,,
23,1,,22217-040000,,"SPRING WASHER  4",,4,,,,,,,,,,,,,,,
24,1,,22242-000200,,"CIRCLIP   20",,2,,,,,,,,,,,,,,,
25,1,,24761-020000,,"NIPPLE PT1/8,GREASE",,1,,,,,,,,,,,,,,,
26,1,,24761-040000,,"NIPPLE B,GREASE",,1,,,,,,,,,,,,,,,
27,1,,26013-100202,,"BOLT W/WASHER M10X20",,4,,,,,,,,,,,,,,,
28,1,,26013-100252,,"BOLT W/WASHER M10X25",,1,,,,,,,,,,,,,,,
29,1,,26557-040062,,"SCREW 4X6",,4,,,,,,,,,,,,,,,
30,1,,194990-20170,,"NUT W/WASHER  8",,2,,,,,,,,,,,,,,,
31,1,,172734-41300,,"BALL, LINK 8L",,2,,,,,,,,,,,,,,,
32,1,,172146-45610,,"ROD(R), LINK",,2,,,,,,,,,,,,,,,
33,1,,172151-46360,,"ROD, SPOOL",,2,,,,,,,,,,,,,,,
34,1,,172122-46590,,"ELBALL 8",,2,,,,,,,,,,,,,,,
35,1,,26716-080002,,"NUT M 8",,2,,,,,,,,,,,,,,,
36,1,,22137-080000,,"WASHER 8, POLISHED",,2,,,,,,,,,,,,,,,
37,1,,22217-080000,,"SPRING WASHER  8",,2,,,,,,,,,,,,,,,
38,1,,22417-160160,,"COTTER PIN 1.6X16",,2,,,,,,,,,,,,,,,
39,1,,933110-54100,,"PIN 4.75X14",,2,,,,,,,,,,,,,,,
40,1,,26051-080002,,"NUT M 8",,6,,,,,,,,,,,,,,,
```

https://truckmanualshub.com/

Fig. 21 操縦装置(ブーム & バケット)(メカマルチリンク) CONTROL EQUIP. (BOOM & BUCKET) (MECHANICAL MULTI LINK)

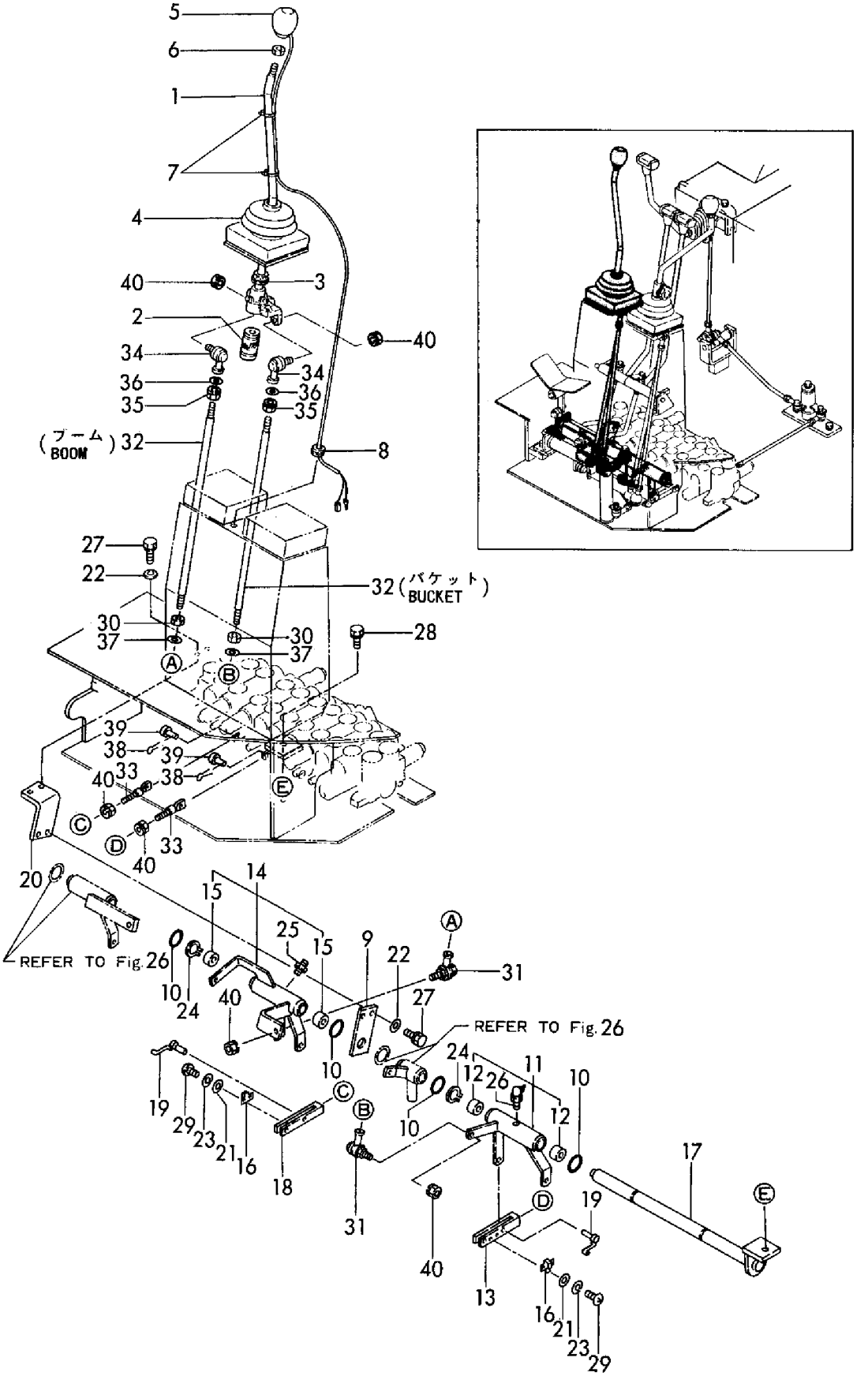

https://truckmanualshub.com/

```
1,1,,772146-45210,,"LINK ASSY",1,1,1,1,,,,,,,,,,,,,
2,2,,172146-45200,,"LINK ASSY",1,1,1,1,,,,,,,,,,,,,
3,3,,172141-41370,,"BUSH 2015",2,2,2,2,,,,,,,,,,,,,
4,2,,172146-45230,,ROD,1,1,1,1,,,,,,,,,,,,,
5,2,,172146-45240,,ROD,1,1,1,1,,,,,,,,,,,,,
6,2,,172146-45250,,SHAFT,1,1,1,1,,,,,,,,,,,,,
7,2,,1A1040-45890,,"WASHER 10 36 4.5",1,1,1,1,,,,,,,,,,,,,
8,2,,172124-46200,,"O-RING 27X5.7",2,2,2,2,,,,,,,,,,,,,
9,2,,172122-46571,,"ROD-END  8",2,2,2,2,,,,,,,,,,,,,
10,2,,22137-080000,,"WASHER 8, POLISHED",2,2,2,2,,,,,,,,,,,,,
11,2,,22137-080000,,"WASHER 8, POLISHED",2,2,2,2,,,,,,,,,,,,,
12,2,,22217-100000,,"SPRING WASHER 10",3,3,3,3,,,,,,,,,,,,,
13,2,,24761-020000,,"NIPPLE PT1/8,GREASE",1,1,1,1,,,,,,,,,,,,,
14,2,,26013-080302,,"BOLT M 8X 30",1,1,1,1,,,,,,,,,,,,,
15,2,,26013-080402,,"BOLT M 8X 40",1,1,1,1,,,,,,,,,,,,,
16,2,,26051-080002,,"NUT M 8",2,2,2,2,,,,,,,,,,,,,
17,2,,26116-100202,,"BOLT M10X 20 PLATED",3,3,3,3,,,,,,,,,,,,,
18,2,,172146-03280,,LABEL,1,1,1,1,,,,,,,,,,,,,
```

https://truckmanualshub.com/

Fig. 22 操縦装置(Dパターン)(メカリンク)(オプション) CONTROL EQUIP. (D PATTERN) (MECHANICAL LINK) (OPTIONAL)

見出しNo. 1は
見出しNo. 2から18を含みます。
1 inc. 2～18

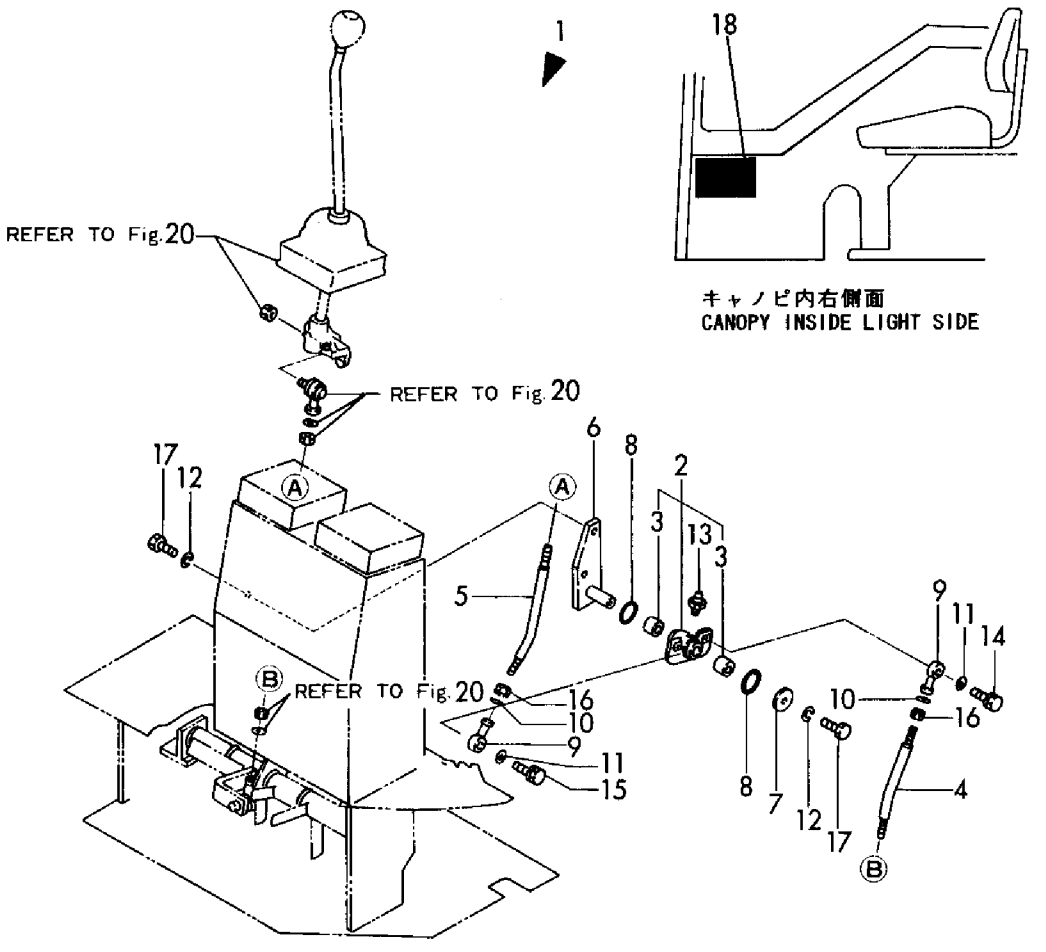

https://truckmanualshub.com/

```
1,1,,172146-41100,,LEVER(L),1,,,,,,,,,,,,,,,,
2,1,,172141-41150,,"LINK(L), LEVER",1,,,,,,,,,,,,,,,,
3,1,,172141-41160,,JOINT,1,,,,,,,,,,,,,,,,
4,1,,172141-41330,,"BOOTS, LEVER (BLACK)",1,,,,,,,,,,,,,,,,
4-1,1,,172141-41331,,"BOOTS, LEVER (GRAY)",1,,,,,,F,1,,M10501,,,,,,,,
5,1,,172141-41380,,NUT,1,,,,,,,,,,,,,,,,
5-1,1,,26756-080002,,"LOCK NUT M 8 PLATED",1,,,,,,S,,,M11861,,,,,,,,
6,1,,172312-46321,,KNOB(B),1,,,,,,,,,,,,,,,,
7,1,,22351-030010,,"SPRING PIN 3X10",1,,,,,,,,,,,,,,,,
8,1,,24311-000140,,"O-RING 1A P-14.0",1,,,,,,,,,,,,,,,,
9,1,,26063-080201,,"BOLT M 8X 20",1,,,,,,,,,,,,,,,,
9-1,1,,26979-080162,,"SCREW M 8X16",1,,,,,,S,,,M11861,,,,,,,,
10,1,,26757-100002,,"LOCK NUT M10",1,,,,,,,,,,,,,,,,
11,1,,172146-41401,,"LINK,ARM ASSY",1,,,,,,,,,,,,,,,,
12,2,,172141-41370,,"BUSH 2015",2,,,,,,,,,,,,,,,,
13,1,,172146-41451,,"LINK ASSY",1,,,,,,,,,,,,,,,,
14,2,,172141-41370,,"BUSH 2015",2,,,,,,,,,,,,,,,,
15,1,,172146-41770,,"SHAFT(A) ASSY",1,,,,,,,,,,,,,,,,
16,1,,172124-46200,,"O-RING 27X5.7",3,,,,,,,,,,,,,,,,
17,1,,24761-020000,,"NIPPLE PT1/8,GREASE",1,,,,,,,,,,,,,,,,
18,1,,24761-040000,,"NIPPLE B,GREASE",1,,,,,,,,,,,,,,,,
19,1,,26013-100252,,"BOLT W/WASHER M10X25",1,,,,,,,,,,,,,,,,
20,1,,172146-45600,,"ROD(L), LINK",2,,,,,,,,,,,,,,,,
21,1,,172146-45700,,"ROD(D), SPOOL",2,,,,,,,,,,,,,,,,
21-1,1,,172146-45740,,"ROD(D), SPOOL",2,,,,,,N,,,M10785,,,,,,,,
22,1,,172122-46590,,"ELBALL 8",2,,,,,,,,,,,,,,,,
23,1,,172122-46590,,"ELBALL 8",2,,,,,,,,,,,,,,,,
24,1,,172122-47250,,"BALL 8, LINK",2,,,,,,,,,,,,,,,,
25,1,,22217-080000,,"SPRING WASHER  8",2,,,,,,Z,,,M10785,,,,,,,,
26,1,,22217-080000,,"SPRING WASHER  8",4,,,,,,Z,,,M10785,,,,,,,,
27,1,,22417-160160,,"COTTER PIN 1.6X16",2,,,,,,,,,,,,,,,,
28,1,,26716-080002,,"NUT M 8",4,,,,,,,,,,,,,,,,
28-1,1,,26051-080002,,"NUT M 8",4,,,,,,N,,,M10785,,,,,,,,
29,1,,26716-080002,,"NUT M 8",8,,,,,,,,,,,,,,,,
29-1,1,,26051-080002,,"NUT M 8",8,,,,,,N,,,M10785,,,,,,,,
30,1,,933110-54100,,"PIN 4.75X14",2,,,,,,,,,,,,,,,,
31,1,,22137-080000,,"WASHER 8, POLISHED",2,,,,,,W,,,M10785,,,,,,,,
32,1,,22137-080000,,"WASHER 8, POLISHED",4,,,,,,W,,,M10785,,,,,,,,
```

https://truckmanualshub.com/

Fig. 23 操縦装置(アーム & 旋回)(メカリンク) CONTROL EQUIP. (ARM & TURNING) (MECHANICAL LINK)

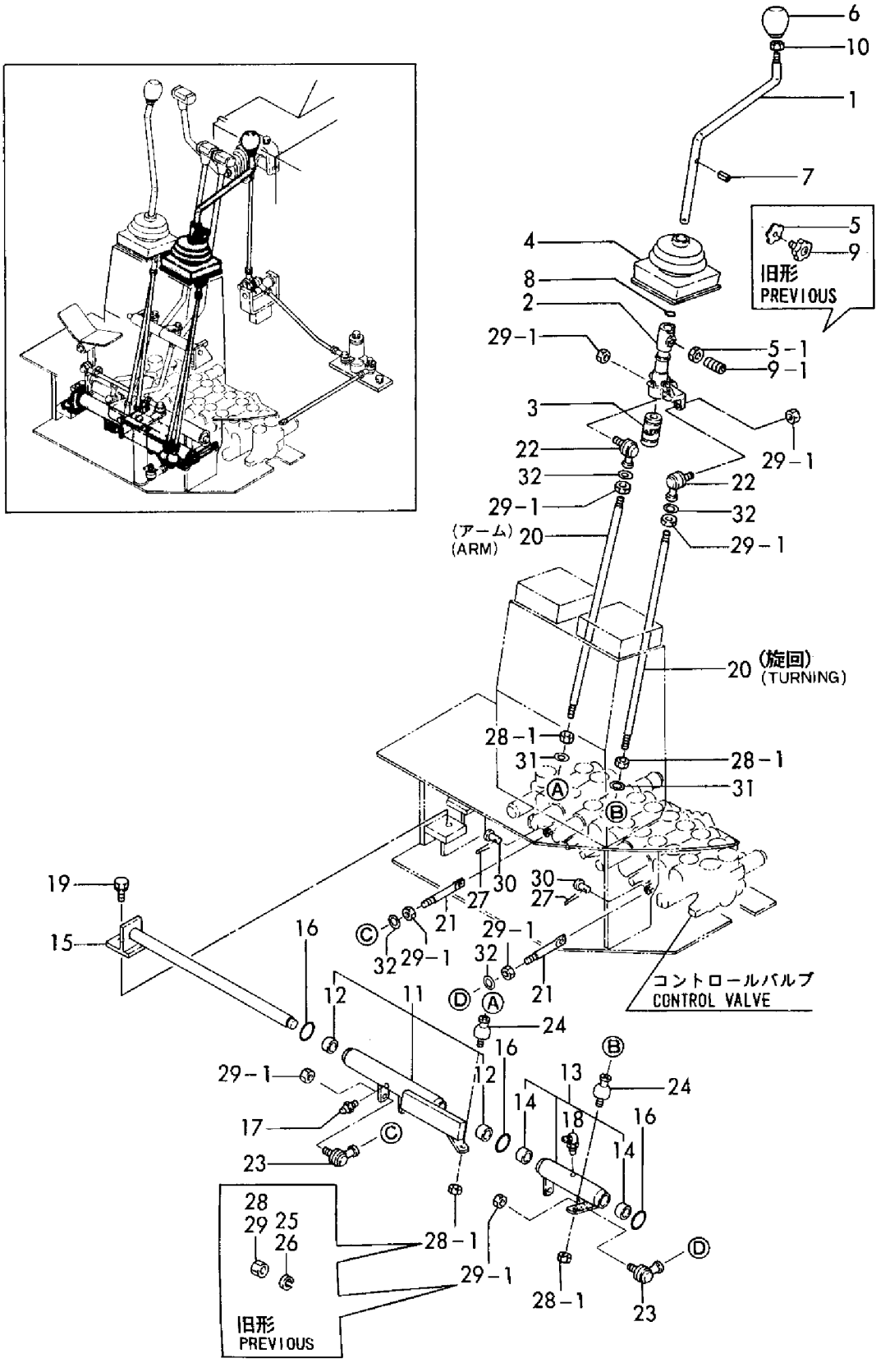

```
1,1,,172146-41100,,LEVER(L),,1,,,,,,,,,,,,,,,
2,1,,172141-41150,,"LINK(L), LEVER",,1,,,,,,,,,,,,,,,
3,1,,172141-41160,,JOINT,,1,,,,,,,,,,,,,,,
4,1,,172141-41331,,"BOOTS, LEVER (GRAY)",,1,,,,,,,,,,,,,,,
5,1,,172312-46321,,KNOB(B),,1,,,,,,,,,,,,,,,
6,1,,22351-030010,,"SPRING PIN 3X10",,1,,,,,,,,,,,,,,,
7,1,,24311-000140,,"O-RING 1A P-14.0",,1,,,,,,,,,,,,,,,
8,1,,26756-080002,,"LOCK NUT M 8 PLATED",,1,,,,,,,,,,,,,,,
9,1,,26757-100002,,"LOCK NUT M10",,1,,,,,,,,,,,,,,,
10,1,,26979-080162,,"SCREW M 8X16",,1,,,,,,,,,,,,,,,
11,1,,172143-45670,,"ROD, END 8",,2,,,,,,,,,,,,,,,
12,1,,172124-46200,,"O-RING 27X5.7",,8,,,,,,,,,,,,,,,
13,1,,172146-46200,,"LINK A",,1,,,,,,,,,,,,,,,
14,2,,172141-41370,,"BUSH 2015",,2,,,,,,,,,,,,,,,
15,1,,172146-46230,,"LINK B",,1,,,,,,,,,,,,,,,
16,2,,172141-41370,,"BUSH 2015",,2,,,,,,,,,,,,,,,
17,1,,172146-46270,,"LINK, ARM",,1,,,,,,,,,,,,,,,
18,2,,172141-41370,,"BUSH 2015",,2,,,,,,,,,,,,,,,
19,1,,172146-46450,,"LINK C",,1,,,,,,,,,,,,,,,
20,2,,172141-41370,,"BUSH 2015",,2,,,,,,,,,,,,,,,
21,1,,172146-46480,,"LINK D",,1,,,,,,,,,,,,,,,
22,2,,172141-41370,,"BUSH 2015",,2,,,,,,,,,,,,,,,
23,1,,172146-46500,,"SHAFT A ASSY",,1,,,,,,,,,,,,,,,
24,1,,172148-46520,,SPRING,,3,,,,,,,,,,,,,,,
25,1,,172146-46570,,"SHAFT F",,1,,,,,,,,,,,,,,,
26,1,,172122-46590,,"ELBALL 8",,1,,,,,,,,,,,,,,,
27,1,,172148-46590,,"PIN CMP",,2,,,,,,,,,,,,,,,
28,1,,172146-46600,,"SHAFT G",,1,,,,,,,,,,,,,,,
29,1,,172146-46640,,LINK,,1,,,,,,,,,,,,,,,
30,1,,172148-46730,,"BOLT M8",,1,,,,,,,,,,,,,,,
31,1,,172146-46780,,"LINK, SPOOL",,1,,,,,,,,,,,,,,,
32,1,,172122-47250,,"BALL 8, LINK",,3,,,,,,,,,,,,,,,
33,1,,22137-040000,,"WASHER 4, POLISHED",,6,,,,,,,,,,,,,,,
34,1,,22137-080000,,"WASHER 8, POLISHED",,2,,,,,,,,,,,,,,,
35,1,,22217-040000,,"SPRING WASHER  4",,6,,,,,,,,,,,,,,,
36,1,,24761-020000,,"NIPPLE PT1/8,GREASE",,1,,,,,,,,,,,,,,,
37,1,,24761-050000,,"NIPPLE C,GREASE",,3,,,,,,,,,,,,,,,
38,1,,26013-080252,,"BOLT M 8X 25",,2,,,,,,,,,,,,,,,
39,1,,26013-100202,,"BOLT W/WASHER M10X20",,1,,,,,,,,,,,,,,,
40,1,,26013-100252,,"BOLT W/WASHER M10X25",,2,,,,,,,,,,,,,,,
41,1,,26557-040062,,"SCREW 4X6",,6,,,,,,,,,,,,,,,
42,1,,172151-46360,,"ROD, SPOOL",,2,,,,,,,,,,,,,,,
43,1,,172122-46590,,"ELBALL 8",,2,,,,,,,,,,,,,,,
44,1,,172122-47250,,"BALL 8, LINK",,2,,,,,,,,,,,,,,,
45,1,,22137-080000,,"WASHER 8, POLISHED",,5,,,,,,,,,,,,,,,
46,1,,22417-160160,,"COTTER PIN 1.6X16",,2,,,,,,,,,,,,,,,
47,1,,26051-080002,,"NUT M 8",,5,,,,,,,,,,,,,,,
48,1,,26051-080002,,"NUT M 8",,8,,,,,,,,,,,,,,,
49,1,,933110-54100,,"PIN 4.75X14",,2,,,,,,,,,,,,,,,
50,1,,172146-45600,,"ROD(L), LINK",,2,,,,,,,,,,,,,,,
51,1,,26346-080002,,"U-NUT M 8 PLATED",,1,,,,,,,,,,,,,,,
52,1,,26716-080002,,"NUT M 8",,3,,,,,,,,,,,,,,,
53,1,,22217-080000,,"SPRING WASHER  8",,3,,,,,,,,,,,,,,,
```

https://truckmanualshub.com/

Fig. 24 操縦装置(アーム & 旋回)(メカマルチリンク)
CONTROL EQUIP. (ARM & TURNING) (MECHANICAL MULTI LINK)

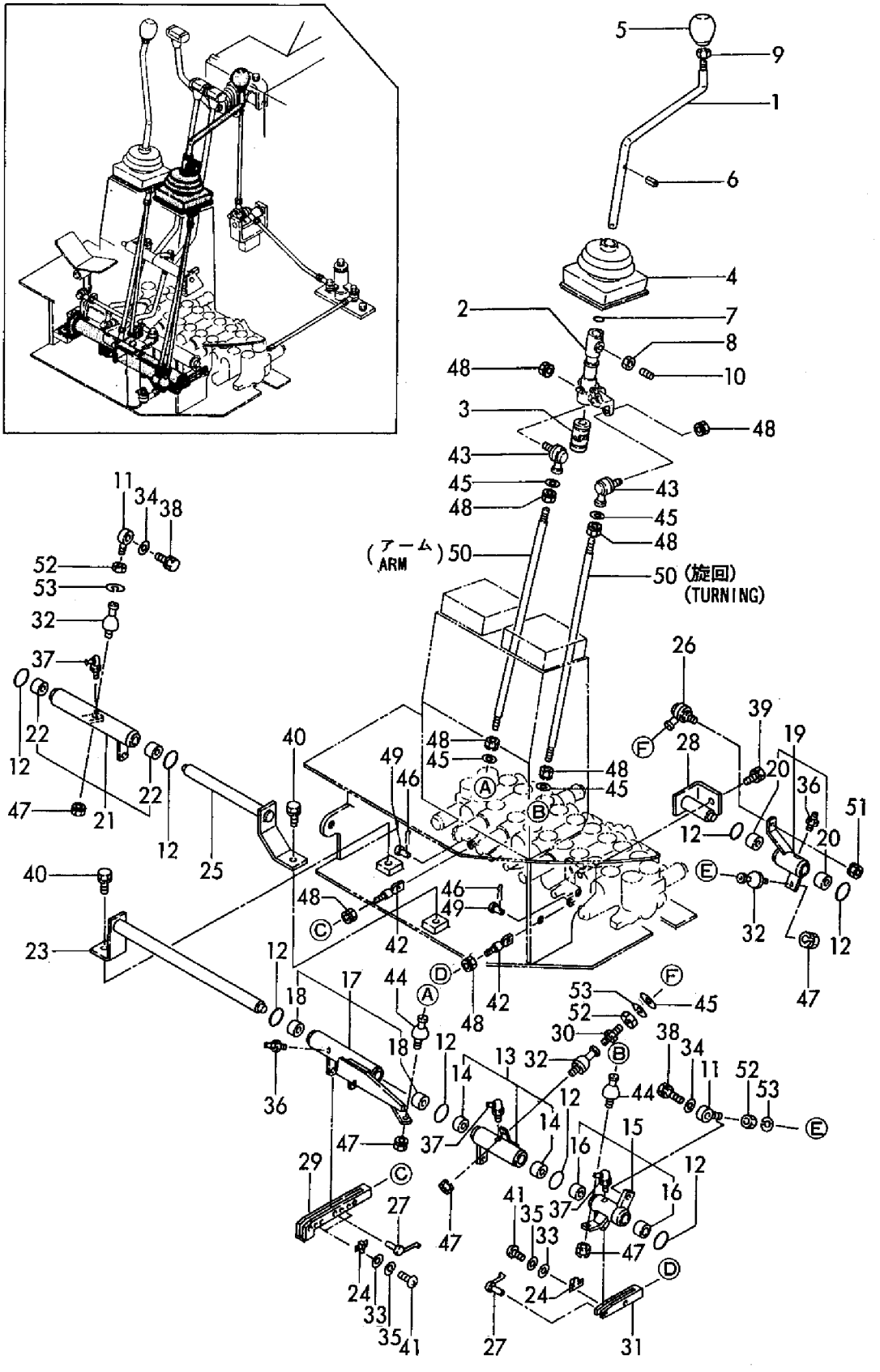

https://truckmanualshub.com/

```
1,1,,172146-41130,,"LEVER(L) ASSY",1,,,,,,,,,,,,,,,
2,2,,172141-41360,,"BUSH 1415",2,,,,,,,,,,,,,,,
3,1,,172146-41170,,"LEVER(R) ASSY",1,,,,,,,,,,,,,,,
4,2,,172141-41360,,"BUSH 1415",2,,,,,,,,,,,,,,,
5,1,,172137-45080,,"KNOB, LEVER",2,,,,,,,,,,,,,,,
6,1,,172146-41600,,"LINK ASSY",1,,,,,,,,,,,,,,,
7,2,,172141-41370,,"BUSH 2015",2,,,,,,,,,,,,,,,
8,1,,172146-41631,,"LINK ASSY",1,,,,,,,,,,,,,,,
9,2,,172141-41370,,"BUSH 2015",2,,,,,,,,,,,,,,,
10,1,,172146-41870,,"SHAFT(D) ASSY",1,,,,,,,,,,,,,,,
11,1,,172124-46200,,"O-RING 27X5.7",2,,,,,,,,,,,,,,,
12,1,,24761-040000,,"NIPPLE B,GREASE",1,,,,,,,,,,,,,,,
13,1,,24761-050000,,"NIPPLE C,GREASE",1,,,,,,,,,,,,,,,
14,1,,26013-100252,,"BOLT W/WASHER M10X25",1,,,,,,,,,,,,,,,
15,1,,172146-45620,,ROD,2,,,,,,,,,,,,,,,
16,1,,172146-45690,,"ROD(C), SPOOL",2,,,,,,,,,,,,,,,
16-1,1,,172146-45691,,"ROD(C), SPOOL",2,,,,,,R,,,M00501,,,,,,,
17,1,,172122-46590,,"ELBALL 8",2,,,,,,,,,,,,,,,
18,1,,172122-46590,,"ELBALL 8",2,,,,,,,,,,,,,,,
19,1,,172122-47250,,"BALL 8, LINK",2,,,,,,,,,,,,,,,
20,1,,22217-080000,,"SPRING WASHER  8",2,,,,,,Z,,,M10785,,,,,,,
21,1,,22217-080000,,"SPRING WASHER  8",2,,,,,,Z,,,M10785,,,,,,,
22,1,,22417-160160,,"COTTER PIN 1.6X16",2,,,,,,,,,,,,,,,
23,1,,26716-080002,,"NUT M 8",4,,,,,,,,,,,,,,,
23-1,1,,26051-080002,,"NUT M 8",4,,,,,,N,,,M10785,,,,,,,
24,1,,26716-080002,,"NUT M 8",6,,,,,,,,,,,,,,,
24-1,1,,26051-080002,,"NUT M 8",6,,,,,,N,,,M10785,,,,,,,
25,1,,933110-54100,,"PIN 4.75X14",2,,,,,,,,,,,,,,,
26,1,,22137-080000,,"WASHER 8, POLISHED",2,,,,,,W,,,M10785,,,,,,,
27,1,,22137-080000,,"WASHER 8, POLISHED",4,,,,,,W,,,M10785,,,,,,,
```

https://truckmanualshub.com/

Fig. 25 操縦装置(走行)(メカリンク) CONTROL EQUIP. (DRIVE) (MECHANICAL LINK)

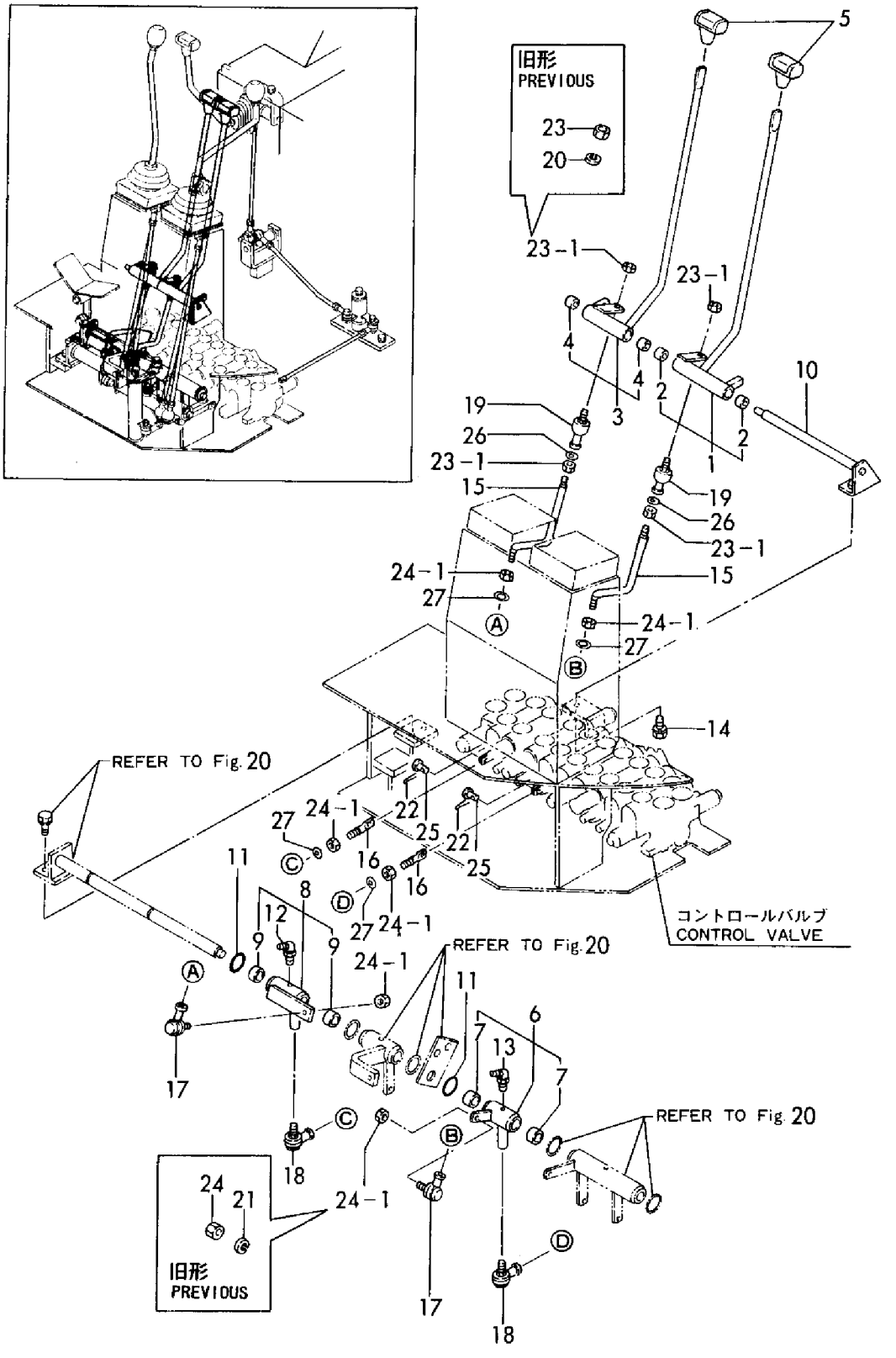

https://truckmanualshub.com/

```
1,1,,172146-41130,,"LEVER(L) ASSY",,1,,,,,,,,,,,,,,,
2,2,,172141-41360,,"BUSH 1415",,2,,,,,,,,,,,,,,,
3,1,,172146-41170,,"LEVER(R) ASSY",,1,,,,,,,,,,,,,,,
4,2,,172141-41360,,"BUSH 1415",,2,,,,,,,,,,,,,,,
5,1,,172137-45080,,"KNOB, LEVER",,2,,,,,,,,,,,,,,,
6,1,,172146-41870,,"SHAFT(D) ASSY",,1,,,,,,,,,,,,,,,
7,1,,172124-46200,,"O-RING 27X5.7",,2,,,,,,,,,,,,,,,
8,1,,172146-46330,,"LINK L",,1,,,,,,,,,,,,,,,
9,2,,172141-41370,,"BUSH 2015",,2,,,,,,,,,,,,,,,
10,1,,172146-46410,,"LINK R",,1,,,,,,,,,,,,,,,
11,2,,172141-41370,,"BUSH 2015",,2,,,,,,,,,,,,,,,
12,1,,24761-020000,,"NIPPLE PT1/8,GREASE",,1,,,,,,,,,,,,,,,
13,1,,24761-040000,,"NIPPLE B,GREASE",,1,,,,,,,,,,,,,,,
14,1,,26013-100252,,"BOLT W/WASHER M10X25",,1,,,,,,,,,,,,,,,
15,1,,172146-45620,,ROD,,2,,,,,,,,,,,,,,,
16,1,,172146-45691,,"ROD(C), SPOOL",,2,,,,,,,,,,,,,,,
17,1,,172122-46590,,"ELBALL 8",,4,,,,,,,,,,,,,,,
18,1,,172122-47250,,"BALL 8, LINK",,2,,,,,,,,,,,,,,,
19,1,,22137-080000,,"WASHER 8, POLISHED",,4,,,,,,,,,,,,,,,
20,1,,22137-080000,,"WASHER 8, POLISHED",,2,,,,,,,,,,,,,,,
21,1,,22417-160160,,"COTTER PIN 1.6X16",,2,,,,,,,,,,,,,,,
22,1,,26051-080002,,"NUT M 8",,11,,,,,,,,,,,,,,,
23,1,,933110-54100,,"PIN 4.75X14",,2,,,,,,,,,,,,,,,
```

https://truckmanualshub.com/

Fig. 26 操縦装置(走行)(メカマルチリンク) CONTROL EQUIP. (DRIVE) (MECHANICAL MULTI LINK)

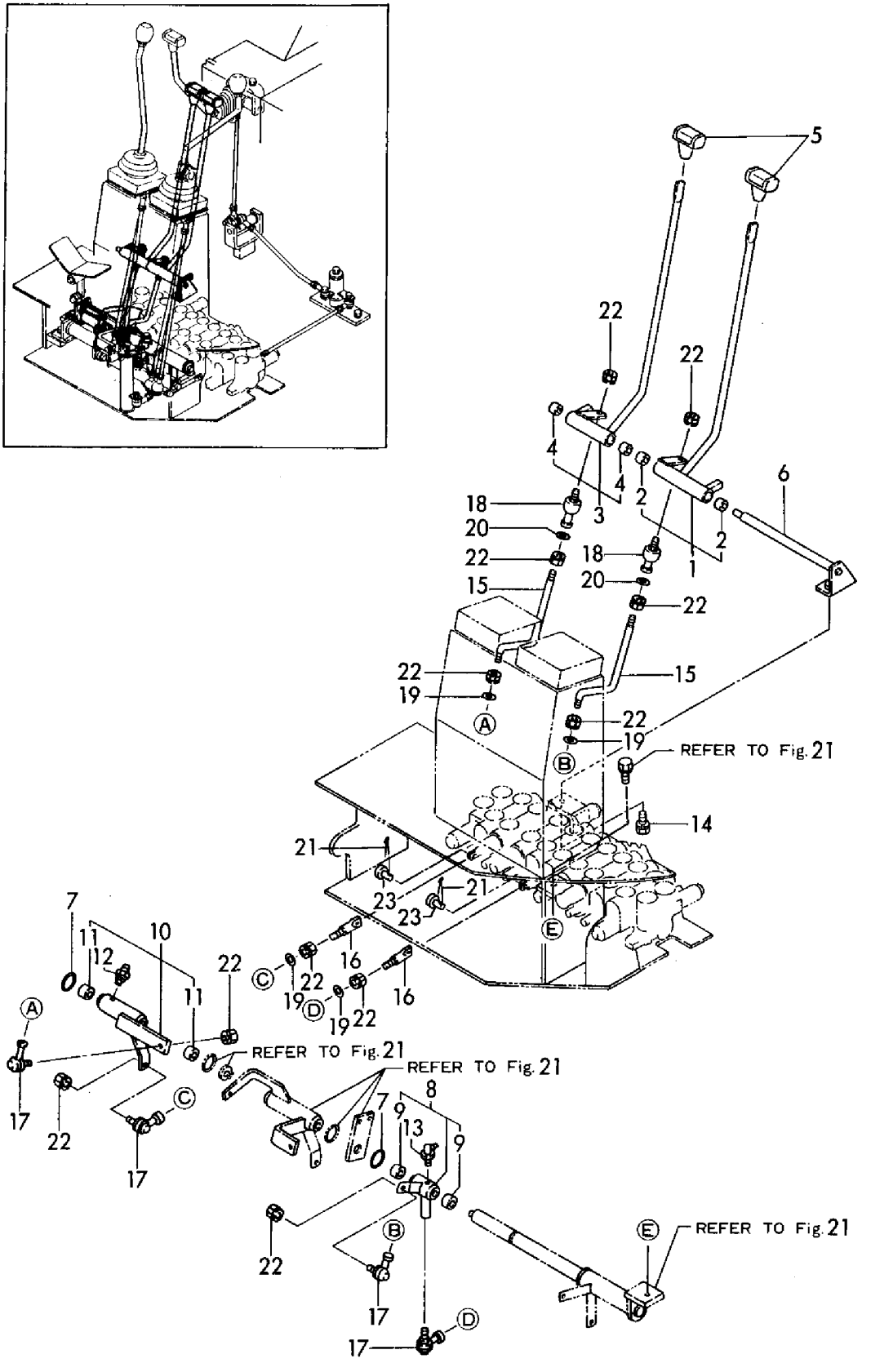

https://truckmanualshub.com/

```
1A,1,,172146-41170,,"LEVER(R) ASSY",,,1,1,,,,,,,,,,,,,
1B,1,,172146-41171,,LEVER,,,,,1,1,,,,,,,,,,,
2,2,,172141-41360,,"BUSH 1415",,,2,2,2,2,,,,,,,,,,,
3,1,,172137-45080,,"KNOB, LEVER",,,2,2,,,,,,,,,,,,,
4A,1,,172147-45080,,"LEVER (L) ASSY",,,1,1,,,,,,,,,,,,,
4B,1,,172147-45081,,"LEVER (L) ASSY",,,,,1,1,,,,,,,,,,,
5,2,,172141-41360,,"BUSH 1415",,,2,2,2,2,,,,,,,,,,,
6,1,,22137-100000,,"WASHER 10,POLISHED",,,1,1,1,1,,,,,,,,,,,
7,1,,172146-41631,,"LINK ASSY",,,1,1,1,1,,,,,,,,,,,
8,2,,172141-41370,,"BUSH 2015",,,2,2,2,2,,,,,,,,,,,
9,1,,172147-41660,,"LINK L",,,1,1,1,1,,,,,,,,,,,
10,2,,172141-41370,,"BUSH 2015",,,2,2,2,2,,,,,,,,,,,
11,1,,172146-41790,,"SHAFT(B) ASSY",,,1,1,1,1,,,,,,,,,,,
12,1,,172147-45040,,"BRACKET ASSY",,,1,1,1,1,,,,,,,,,,,
13,1,,172124-46200,,"O-RING 27X5.7",,,3,3,3,3,,,,,,,,,,,
14,1,,24761-040000,,"NIPPLE B,GREASE",,,1,1,1,1,,,,,,,,,,,
15,1,,24761-050000,,"NIPPLE C,GREASE",,,1,1,1,1,,,,,,,,,,,
16,1,,26013-100252,,"BOLT W/WASHER M10X25",,,1,1,1,1,,,,,,,,,,,
17,1,,26013-100252,,"BOLT W/WASHER M10X25",,,2,2,2,2,,,,,,,,,,,
18,1,,172146-45620,,ROD,,,2,2,2,2,,,,,,,,,,,
19,1,,172146-45691,,"ROD(C), SPOOL",,,2,2,2,2,,,,,,,,,,,
20,1,,172122-46590,,"ELBALL 8",,,4,4,4,4,,,,,,,,,,,
21,1,,172122-47250,,"BALL 8, LINK",,,2,2,2,2,,,,,,,,,,,
22,1,,22137-080000,,"WASHER 8, POLISHED",,,6,6,6,6,,,,,,,,,,,
23,1,,22417-160160,,"COTTER PIN 1.6X16",,,2,2,2,2,,,,,,,,,,,
24,1,,26051-080002,,"NUT M 8",,,10,10,10,10,,,,,,,,,,,
25,1,,933110-54100,,"PIN 4.75X14",,,2,2,2,2,,,,,,,,,,,
26,1,,172164-45950,,"GRIP L, DRIV.",,,,,1,1,,,,,,,,,,,
26-1,1,,172164-45951,,"GRIP L, DRIV.",,,,,1,1,N,,,,,,,,,,,M20902,,M20902
27,1,,172164-45960,,"GRIP R, DRIV.",,,,,1,1,,,,,,,,,,,
27-1,1,,172164-45961,,"GRIP R, DRIV.",,,,,1,1,N,,,,,,,,,,,M20902,,M20902
28,1,,26716-100002,,"NUT 10",,,,,2,2,,,,,,,,,,,
```

https://truckmanualshub.com/

Fig. 27 操縦装置(走行)(油圧パイロット) CONTROL EQUIP. (DRIVE) (HYD. OIL PILOT)

FROM M/#20501

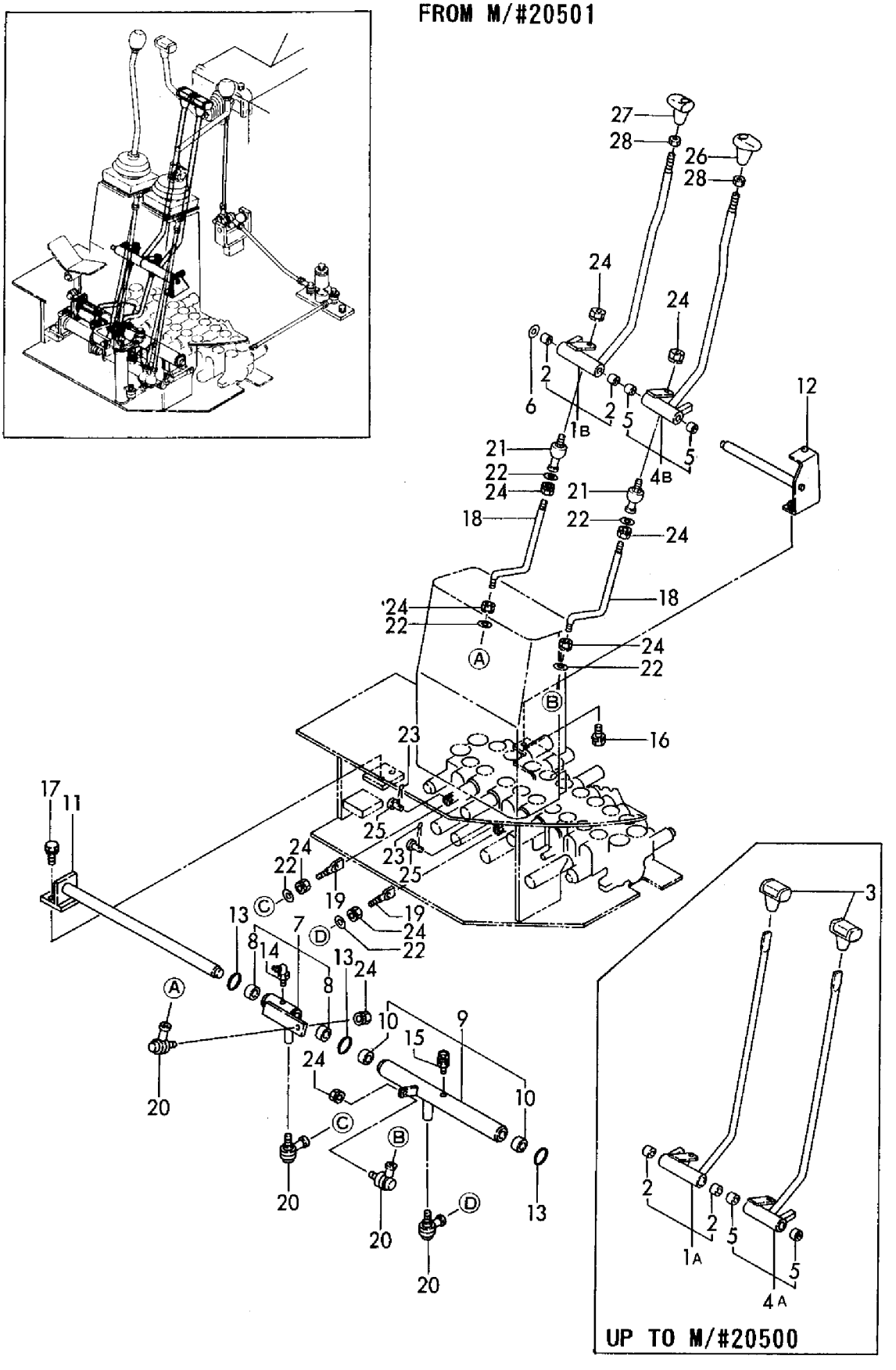

https://truckmanualshub.com/

```
1,1,,172146-41690,,"LINK ASSY",1,1,1,1,1,1,,,,,,,,,,,
2,2,,172141-41370,,"BUSH 2015",2,2,2,2,2,2,,,,,,,,,,,
3,1,,172146-41821,,"SHAFT(C) ASSY",1,1,1,1,1,1,,,,,,,,,,,
4,1,,172124-46200,,"O-RING 27X5.7",2,2,2,2,2,2,,,,,,,,,,,
5,1,,24761-040000,,"NIPPLE B,GREASE",1,1,1,1,1,1,,,,,,,,,,,
6,1,,26013-100302,,"BOLT M10X 30",1,1,1,1,1,1,,,,,,,,,,,
7,1,,26013-120252,,"BOLT M12X 25",1,1,1,1,1,1,,,,,,,,,,,
8,1,,172146-45300,,"PEDAL, OFFSET ASSY",1,1,1,1,1,1,,,,,,,,,,,
9,2,,172141-41360,,"BUSH 1415",2,2,2,2,2,2,,,,,,,,,,,
10,1,,172146-45340,,SHAFT(14-70,1,1,1,1,1,1,,,,,,,,,,,
11,1,,172137-46820,,"LOCK ASSY, PEDAL",1,1,1,1,1,1,,,,,,,,,,,
12,1,,22217-100000,,"SPRING WASHER 10",2,2,2,2,2,2,,,,,,,,,,,
13,1,,22417-250200,,"COTTER PIN 2.5X20",1,1,1,1,1,1,,,,,,,,,,,
14,1,,22417-400400,,"COTTER PIN 4.0X40",1,1,1,1,1,1,,,,,,,,,,,
15,1,,24311-000210,,"O-RING 1A P-21.0",2,2,2,2,2,2,,,,,,,,,,,
16,1,,24761-050000,,"NIPPLE C,GREASE",1,1,1,1,1,1,,,,,,,,,,,
17,1,,26116-100504,,"BOLT M10X 50 PLATED",2,2,2,2,2,2,,,,,,,,,,,
18,1,,26716-100002,,"NUT 10",2,2,2,2,2,2,,,,,,,,,,,
19,1,,933171-18390,,"PIN, FOOT BAR",1,1,1,1,1,1,,,,,,,,,,,
20,1,,194990-20170,,"NUT W/WASHER  8",1,1,1,1,1,1,,,,,,,,,,,
21,1,,172734-41300,,"BALL, LINK 8L",1,1,1,1,1,1,,,,,,,,,,,
22,1,,172146-45630,,"ROD, OFFSET",1,1,1,1,1,1,,,,,,,,,,,
23,1,,172146-45661,,"ROD (A), SPOOL",1,1,1,1,,,,,,,,,,,,,
23-1,1,,172146-45720,,"ROD(A), SPOOL",,,1,1,1,1,N,,,,,,,M10785,,M10785,,
24,1,,172122-46590,,"ELBALL 8",1,1,1,1,1,1,,,,,,,,,,,
25,1,,172122-46590,,"ELBALL 8",1,1,1,1,1,1,,,,,,,,,,,
26,1,,22217-080000,,"SPRING WASHER  8",1,1,1,1,,,Z,,,,,,,M10785,,M10785,,
27,1,,22217-080000,,"SPRING WASHER  8",2,2,2,2,,,Z,,,,,,,M10785,,M10785,,
28,1,,22417-160160,,"COTTER PIN 1.6X16",1,1,1,1,1,1,,,,,,,,,,,
29,1,,26716-080002,,"NUT M 8",1,1,1,1,,,,,,,,,,,,,
29-1,1,,26051-080002,,"NUT M 8",,,1,1,1,1,N,,,,,,,M10785,,M10785,,
30,1,,26716-080002,,"NUT M 8",4,4,4,4,,,,,,,,,,,,,
30-1,1,,26051-080002,,"NUT M 8",,,4,4,4,4,N,,,,,,,M10785,,M10785,,
31,1,,933110-54100,,"PIN 4.75X14",1,1,1,1,1,1,,,,,,,,,,,
32,1,,22137-080000,,"WASHER 8, POLISHED",,,1,1,1,1,W,,,,,,,M10785,,M10785,,
33,1,,22137-080000,,"WASHER 8, POLISHED",,,2,2,2,2,W,,,,,,,M10785,,M10785,,
```

https://truckmanualshub.com/

Fig. 28 操縦装置(オフセット) CONTROL EQUIP. (OFFSET)

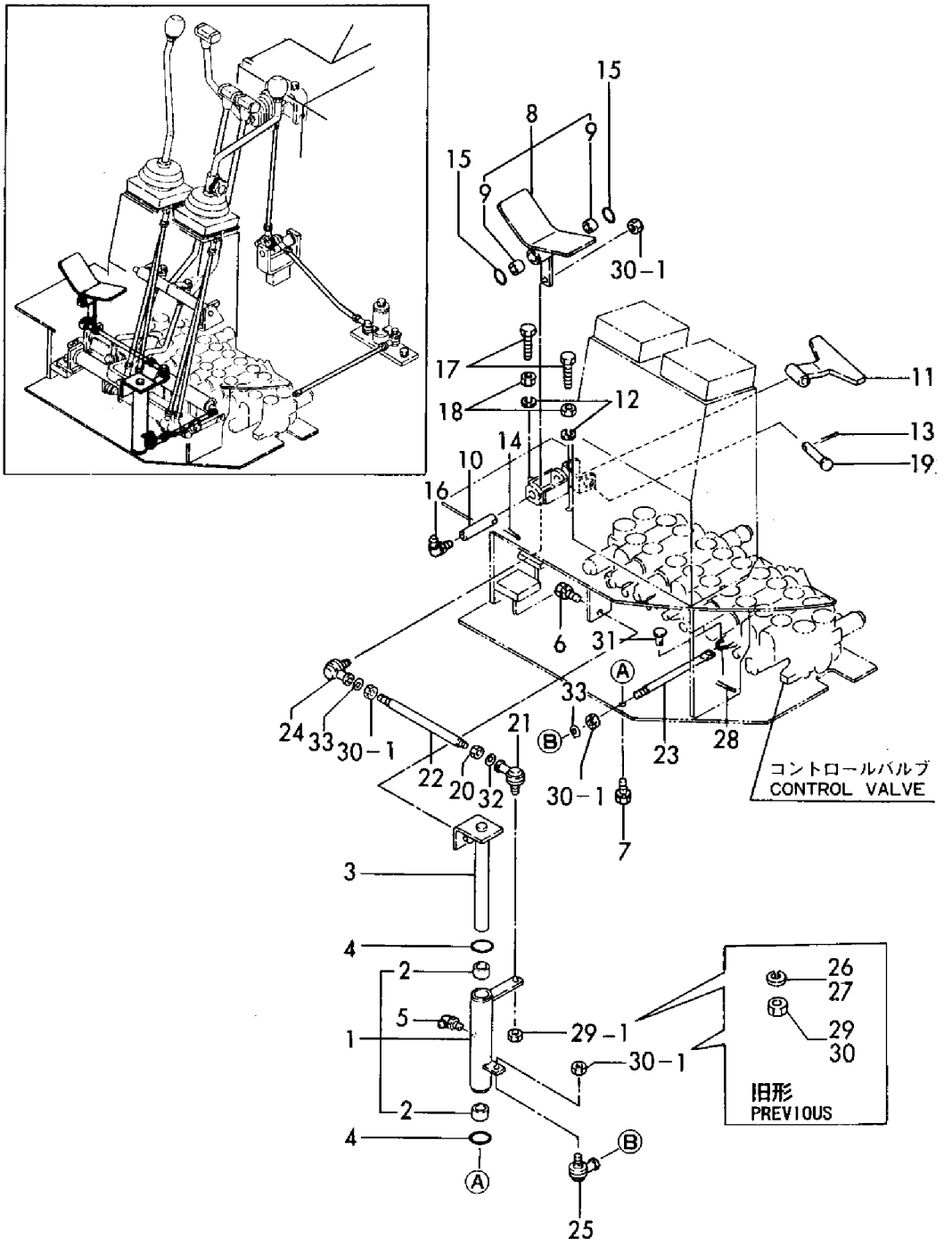

https://truckmanualshub.com/

```
1,1,,172146-41210,,"LEVER ASSY",1,1,1,1,1,1,,,,,,,,,,,
2,2,,172141-41360,,"BUSH 1415",2,2,2,2,2,2,,,,,,,,,,,
3,1,,172146-41300,,"BOSS WITH BUSH",1,1,,,,,1,,,,,,,,,
4,2,,172141-41360,,"BUSH 1415",2,2,,,,,1,,,,,,,,,
5,1,,172146-41320,,GROMMET,1,1,,,,,1,,,,,,,,,
6,1,,172141-41340,,BOOTS,1,1,1,1,1,1,,,,,,,,,,,
7A,1,,172116-45940,,"KNOB (C), LEVER",1,1,1,1,,,,,,,,,,,,
7B,1,,172164-45970,,"GRIP, BLADE",,,,,1,1,W,,,,,,,,,,M20501,,M20501
8,1,,24311-000210,,"O-RING 1A P-21.0",3,3,3,3,3,3,,,,,,,,,,,
9,1,,172146-41300,,"BOSS WITH BUSH",1,,,,,,,1,,,,,,,,,
10,2,,172141-41360,,"BUSH 1415",2,,,,,,,1,,,,,,,,,
11,1,,172146-41910,,"PIN 14-100",2,2,2,2,2,2,,,,,,,,,,,
12,1,,172146-41920,,BRACKET,1,1,1,1,1,1,,,,,,,,,,,
13,1,,172146-42500,,"LINK ASSY",1,1,1,1,1,1,,,,,,,,,,,
14,2,,172141-41370,,"BUSH 2015",2,2,2,2,2,2,,,,,,,,,,,
15,1,,172146-42550,,"LINK ASSY",1,1,1,1,1,1,,,,,,,,,,,
16,2,,172141-41360,,"BUSH 1415",2,2,2,2,2,2,,,,,,,,,,,
17,1,,172146-42661,,"BRACKET ASSY",1,,,,,,,1,,,,,,,,,
17-1,1,,172146-42662,,"BRACKET ASSY",1,1,1,1,1,1,S,2,,M00869,,,,,,,
18,1,,172146-42700,,"BRACKET ASSY",1,1,1,1,1,1,,,,,,,,,,,
19,1,,1A1040-45890,,"WASHER 10 36 4.5",1,1,1,1,1,1,,,,,,,,,,,
20,1,,172124-46200,,"O-RING 27X5.7",2,2,2,2,2,2,,,,,,,,,,,
21,1,,22217-100000,,"SPRING WASHER 10",2,2,2,2,2,2,,,,,,,,,,,
22,1,,22217-100000,,"SPRING WASHER 10",3,3,3,3,3,3,,,,,,,,,,,
23,1,,22417-400400,,"COTTER PIN 4.0X40",2,2,2,2,2,2,,,,,,,,,,,
24,1,,24311-000210,,"O-RING 1A P-21.0",3,3,3,3,3,3,,,,,,,,,,,
25,1,,24761-040000,,"NIPPLE B,GREASE",1,1,1,1,1,1,,,,,,,,,,,
26,1,,26013-100302,,"BOLT M10X 30",2,2,2,2,2,2,,,,,,,,,,,
27,1,,26116-100162,,"BOLT M10X 16 PLATED",2,2,2,2,2,2,,,,,,,,,,,
28,1,,26116-100202,,"BOLT M10X 20 PLATED",1,1,1,1,1,1,,,,,,,,,,,
29,1,,26116-100702,,"BOLT M10X 70 PLATED",2,2,2,2,2,2,,,,,,,,,,,
30,1,,172146-45640,,ROD,1,1,1,1,1,1,,,,,,,,,,,
31,1,,172146-45650,,ROD,1,,,,,,,,,,,,,,,,
31-1,1,,172146-45651,,ROD,1,1,1,1,1,1,N,,,M01486,,,,,,,
32,1,,172146-45671,,"ROD (B), SPOOL",1,,,,,,,,,,,,,,,,
32-1,1,,172146-45730,,"ROD(B), SPOOL",1,1,1,1,1,1,N,,,M10785,,,,,,,
33,1,,172122-46590,,"ELBALL 8",4,4,4,4,4,4,,,,,,,,,,,
34,1,,172122-46590,,"ELBALL 8",1,1,1,1,1,1,,,,,,,,,,,
35,1,,22217-080000,,"SPRING WASHER  8",5,,,,,Z,,,M10785,,,,,,,
36,1,,22417-160160,,"COTTER PIN 1.6X16",1,1,1,1,1,1,,,,,,,,,,,
37,1,,26716-080002,,"NUT M 8",10,10,10,10,,,,,,,,,,,,
37-1,1,,26051-080002,,"NUT M 8",,,10,10,10,10,N,,,,,,M10785,,M10785,,
38,1,,933110-54100,,"PIN 4.75X14",1,1,1,1,1,1,,,,,,,,,,,
39,1,,22137-080000,,"WASHER 8, POLISHED",,,5,5,5,5,W,,,,,,M10785,,M10785,,
40,1,,1A1380-59480,,"CLAMP A,SM.&DYN.CORD",,,,,1,1,W,,,,,,,,,,M20503,,M20503
41,1,,22137-100000,,"WASHER 10,POLISHED",,,,,1,1,W,,,,,,,,,,M20503,,M20503
```

https://truckmanualshub.com/

Fig. 29 操縦装置(ブレード) CONTROL EQUIP. (BLADE)

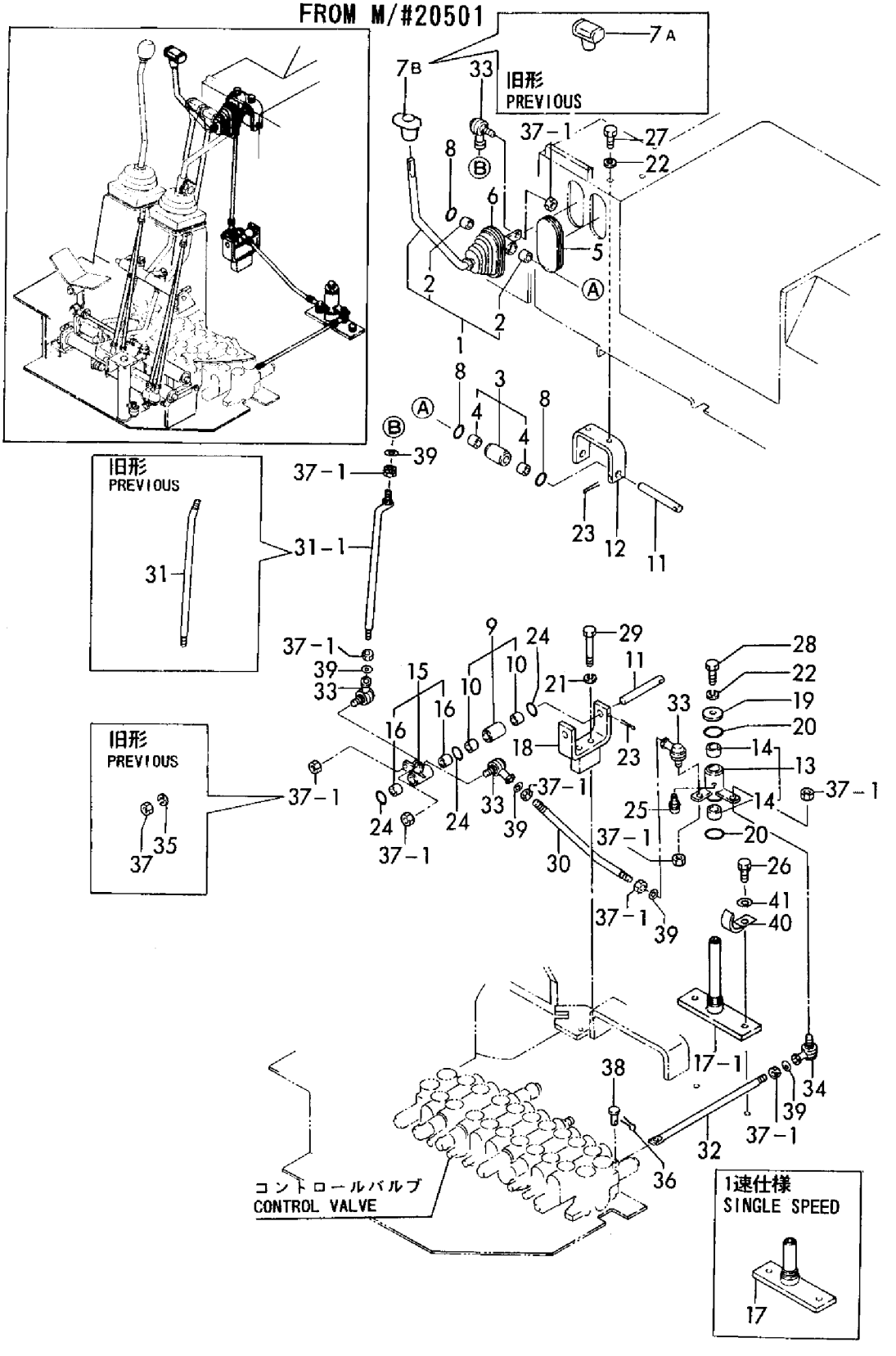

https://truckmanualshub.com/

```
1,1,,194150-01190,,"KNOB, THROTTLE LEVER",1,1,1,1,1,1,,,,,,,,,,,
2,1,,172146-41250,,LEVER,1,1,1,1,1,1,,,,,,,,,,,
3,2,,172141-41360,,"BUSH 1415",2,2,2,2,2,2,,,,,,,,,,,
4,1,,172141-41340,,BOOTS,1,1,1,1,1,1,,,,,,,,,,,
5,1,,172146-42521,,LINK,1,1,1,1,1,1,,,,,,,,,,,
6,2,,172141-41370,,"BUSH 2015",2,2,2,2,2,2,,,,,,,,,,,
7,1,,172146-42580,,LINK,1,1,1,1,1,1,,,,,,,,,,,
8,2,,172141-41360,,"BUSH 1415",2,2,2,2,2,2,,,,,,,,,,,
9,1,,24761-040000,,"NIPPLE B,GREASE",1,1,1,1,1,1,,,,,,,,,,,
10,1,,172141-42970,,"PIN 6X15",1,1,1,1,1,1,,,,,,,,,,,
11,1,,172146-45640,,ROD,1,1,1,1,1,1,,,,,,,,,,,
12,1,,172146-45650,,ROD,1,,,,,,,,,,,,,,,,
12-1,1,,172146-45651,,ROD,1,1,1,1,1,1,N,,,M01486,,,,,,,
13,1,,172146-45680,,"LINK, PLATE",1,1,1,1,1,1,,,,,,,,,,,
14,1,,172122-46590,,"ELBALL 8",4,4,4,4,4,4,,,,,,,,,,,
15,1,,1C6281-52310,,"PIN 6,COME-OFF SNAP",1,1,1,1,1,1,,,,,,,,,,,
16,1,,22137-080000,,"WASHER 8, POLISHED",4,4,4,4,4,4,,,,,,,,,,,
17,1,,22417-200160,,"COTTER PIN 2.0X16",1,1,1,1,1,1,,,,,,,,,,,
18,1,,26051-080002,,"NUT M 8",8,8,8,8,8,8,,,,,,,,,,,
19,1,,933171-21700,,"PIN (B), SPOOL LINK",1,1,1,1,1,1,,,,,,,,,,,
```

https://truckmanualshub.com/

Fig. 30 操縦装置(旋回２速) CONTROL EQUIP. (TURNING DOUBLE SPEED)

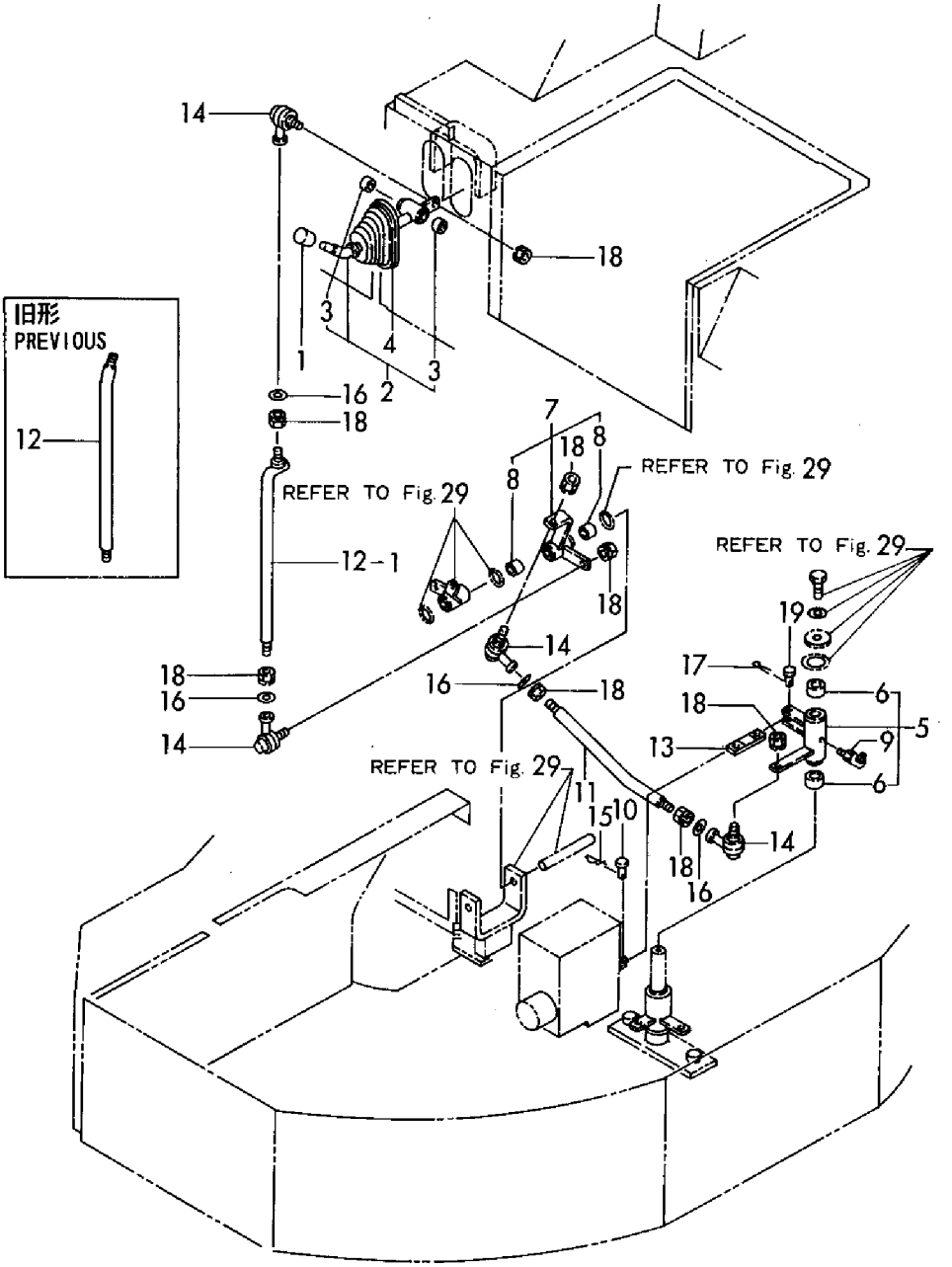

https://truckmanualshub.com/

```
1,1,,172147-41140,,PEDAL,,,,1,1,,,,,,,,,,,
2,1,,172147-41180,,"LOCK, PEDAL",,,,1,1,,,,,,,,,,,
3,1,,172734-42220,,"PAD, PEDAL",,,,1,1,,,,,,,,,,,
4,1,,172146-42400,,LINK,,,,1,1,,,,,,,,,,,
5,2,,172141-41360,,"BUSH 1415",,,,2,2,,,,,,,,,,,
7,1,,172146-42750,,"BRACKET ASSY",,,,1,1,,,,,,,,,,,
8,1,,172146-42800,,"BRACKET ASSY",,,,1,1,,,,,,,,,,,
9,1,,172146-45340,,SHAFT(14-70,,,,1,1,,,,,,,,,,,
10,1,,172142-45680,,"ROD(A), SPOOL",,,,1,1,,,,,,,,,,,
11,1,,172122-46590,,"ELBALL 8",,,,1,1,,,,,,,,,,,
12,1,,22137-080000,,"WASHER 8, POLISHED",,,,1,1,,,,,,,,,,,
13,1,,22417-160160,,"COTTER PIN 1.6X16",,,,1,1,,,,,,,,,,,
14,1,,22417-250200,,"COTTER PIN 2.5X20",,,,1,1,,,,,,,,,,,
15,1,,22417-400400,,"COTTER PIN 4.0X40",,,,1,1,,,,,,,,,,,
16,1,,24311-000210,,"O-RING 1A P-21.0",,,,2,2,,,,,,,,,,,
17,1,,24761-050000,,"NIPPLE C,GREASE",,,,1,1,,,,,,,,,,,
18,1,,26013-080202,,"BOLT W/WASHER M8X20",,,,2,2,,,,,,,,,,,
19,1,,26013-100202,,"BOLT W/WASHER M10X20",,,,2,2,,,,,,,,,,,
20,1,,26013-100352,,"BOLT M10X 35",,,,2,2,,,,,,,,,,,
21,1,,26051-080002,,"NUT M 8",,,,2,2,,,,,,,,,,,
22,1,,933110-54100,,"PIN 4.75X14",,,,1,1,,,,,,,,,,,
23,1,,933171-18390,,"PIN, FOOT BAR",,,,1,1,,,,,,,,,,,
```

https://truckmanualshub.com/

Fig. 31 操縦装置(走行２速) CONTROL EQUIP. (DRIVING DOUBLE SPEED)

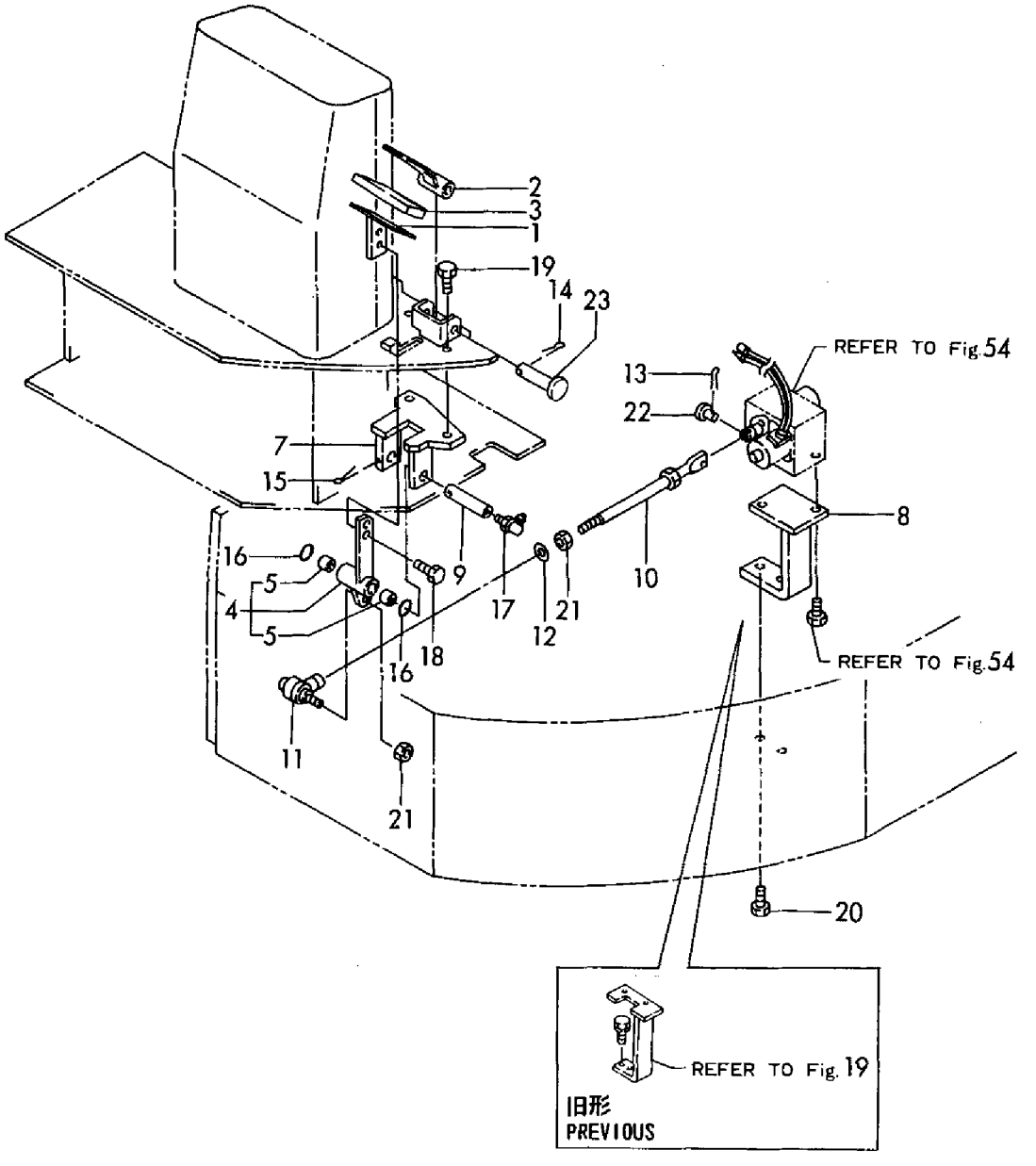

https://truckmanualshub.com/

```
1,1,,772146-46100,,"3RD VALVE ASSY",1,1,,,,,1,,,,,,,,,
2,2,,194990-20170,,"NUT W/WASHER  8",1,1,,,,,,,,,,,,,,
3,2,,172734-41300,,"BALL, LINK 8L",1,1,,,,,,,,,,,,,,,
4,2,,172141-41700,,"LINK, SWING",1,1,,,,,,,,,,,,,,,
5,2,,172150-42650,,"ROD(B), TURNING",1,1,,,,,,,,,,,,,,
6,2,,172149-42890,,"LEVER, LOCK",1,1,,,,,,,,,,,,,,,
7,2,,172146-45691,,"ROD(C), SPOOL",1,1,,,,,,,,,,,,,,
8,2,,1A1040-45890,,"WASHER 10 36 4.5",2,2,,,,,,,,,,,,,,,
9,2,,172146-46100,,"ROD, LINK",1,1,,,,,,,,,,,,,,,
10,2,,172147-46100,,"PEDAL, 3RD",1,1,,,,,,,,,,,,,,,
11,2,,172147-46150,,"BRACKET ASSY, 3RD",1,1,,,,,,,,,,,,,,,
12,3,,172141-41370,,"BUSH 2015",2,2,,,,,,,,,,,,,,,
14,2,,172147-46180,,"SHAFT(A), 3RD",1,1,,,,,,,,,,,,,,,
15,2,,172124-46200,,"O-RING 27X5.7",6,6,,,,,,,,,,,,,,,
16,2,,172147-46200,,"SHAFT(B), 3RD",1,1,,,,,,,,,,,,,,,
17,2,,172147-46220,,"LINK(A)ASSY, 3RD",1,1,,,,,,,,,,,,,,,
18,3,,172141-41370,,"BUSH 2015",2,2,,,,,,,,,,,,,,,
20,2,,172147-46240,,"LINK(B)ASSY, 3RD",1,1,,,,,,,,,,,,,,,
21,3,,172141-41370,,"BUSH 2015",2,2,,,,,,,,,,,,,,,
23,2,,172147-46260,,"SHAFT, PEDAL",1,1,,,,,,,,,,,,,,,
24,2,,172147-46300,,"LOCK, COVER",1,1,,,,,,,,,,,,,,,
25,2,,172122-46590,,"ELBALL 8",4,4,,,,,,,,,,,,,,,
26,2,,22137-100000,,"WASHER 10,POLISHED",1,1,,,,,,,,,,,,,,,
27,2,,22217-080000,,"SPRING WASHER  8",5,5,,,,,,,,,,,,,,,
28,2,,22217-100000,,"SPRING WASHER 10",6,6,,,,,,,,,,,,,,,
29,2,,22217-100000,,"SPRING WASHER 10",5,5,,,,,,,,,,,,,,,
30,2,,22217-100000,,"SPRING WASHER 10",2,2,,,,,,,,,,,,,,,
31,2,,22351-050036,,"SPRING PIN 5X36",1,1,,,,,,,,,,,,,,,
32,2,,22417-160160,,"COTTER PIN 1.6X16",1,1,,,,,,,,,,,,,,,
33,2,,24761-020000,,"NIPPLE PT1/8,GREASE",1,1,,,,,,,,,,,,,,,
34,2,,24761-040000,,"NIPPLE B,GREASE",2,2,,,,,,,,,,,,,,,
35,2,,26013-100252,,"BOLT W/WASHER M10X25",2,2,,,,,,,,,,,,,,,
36,2,,26013-100302,,"BOLT M10X 30",2,2,,,,,,,,,,,,,,,
37,2,,26013-100302,,"BOLT M10X 30",1,1,,,,,,,,,,,,,,,
38,2,,26116-100162,,"BOLT M10X 16 PLATED",5,5,,,,,,,,,,,,,,,
39,2,,26116-100162,,"BOLT M10X 16 PLATED",2,2,,,,,,,,,,,,,,,
40,2,,26116-100202,,"BOLT M10X 20 PLATED",4,4,,,,,,,,,,,,,,,
41,2,,26116-100754,,"BOLT M10X 75 PLATED",2,2,,,,,,,,,,,,,,,
42,2,,26346-080002,,"U-NUT M 8 PLATED",5,5,,,,,,,,,,,,,,,
43,2,,26716-080002,,"NUT M 8",4,4,,,,,,,,,,,,,,,
44,2,,26716-100002,,"NUT 10",2,2,,,,,,,,,,,,,,,
45,2,,26716-100002,,"NUT 10",1,1,,,,,,,,,,,,,,,
46,2,,933110-54100,,"PIN 4.75X14",1,1,,,,,,,,,,,,,,,
47,2,,172146-62200,,"NOISE, ABSORBER",1,1,,,,,,,,,,,,,,,
48,1,,22217-100000,,"SPRING WASHER 10",7,7,,,,,W,,,M00501,,M00501,,,,,,
49,1,,26116-100202,,"BOLT M10X 20 PLATED",7,7,,,,,W,,,M00501,,M00501,,,,,,
```

https://truckmanualshub.com/

Fig. 32 操縦装置(P. T. O.) CONTROL EQUIP. (P. T. O.)

FROM M/#01525

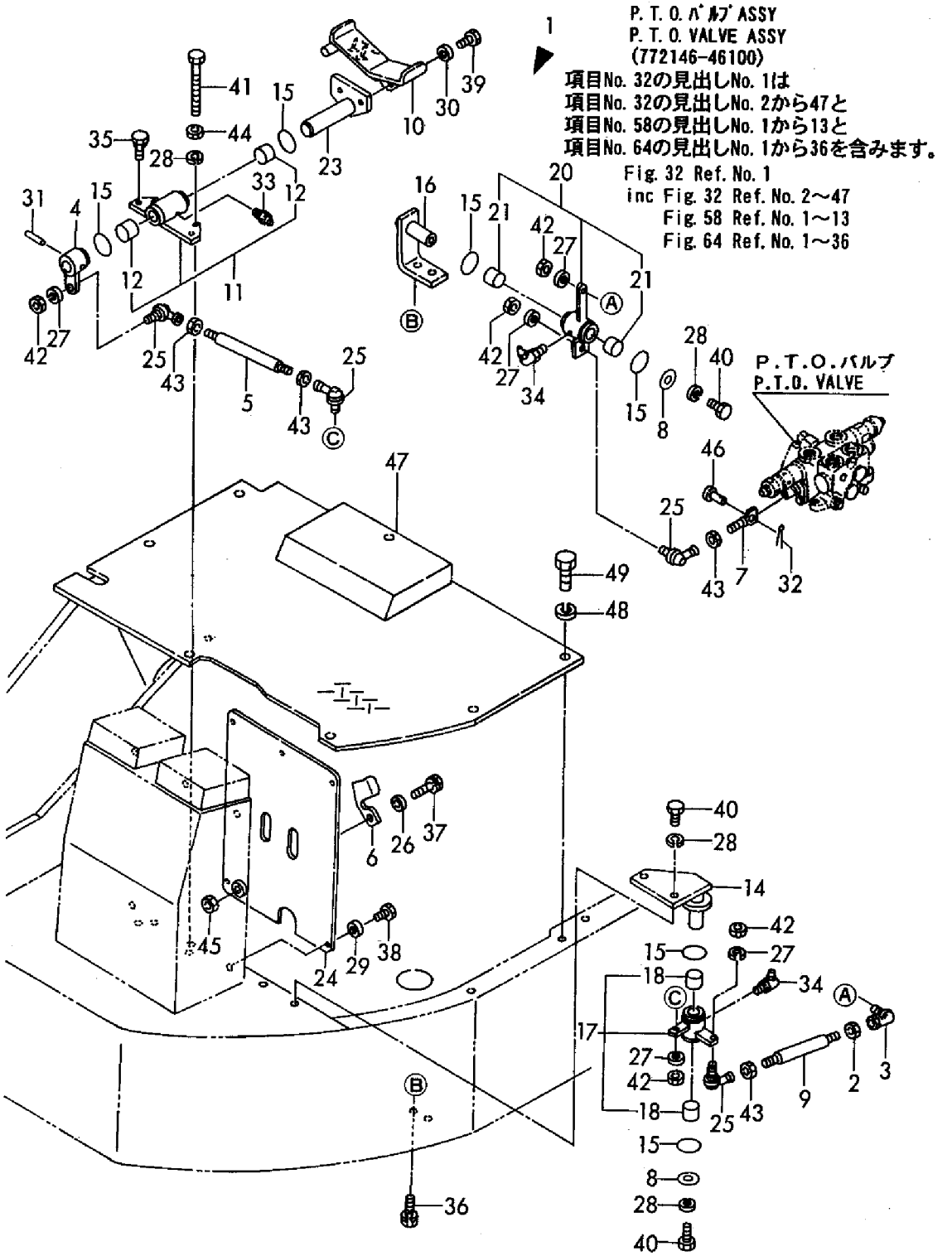

https://truckmanualshub.com/

```
1,1,,172146-05300,,MOUNT,1,1,1,1,1,1,,,,,,,,,,,
2,1,,172112-14710,,"CLAMP, GREASE GUN",1,1,1,1,1,1,,,,,,,,,,,
3,1,,22217-080000,,"SPRING WASHER  8",2,2,2,2,2,2,,,,,,,,,,,
4,1,,22217-100000,,"SPRING WASHER 10",2,2,2,2,2,2,,,,,,,,,,,
5,1,,26116-080162,,"BOLT 8X16",2,2,2,2,2,2,,,,,,,,,,,
6,1,,26116-100162,,"BOLT M10X 16 PLATED",2,2,2,2,2,2,,,,,,,,,,,
7,1,,172146-50100,,"FRAME, LOWER",1,1,,,,,,1,,,,,,,,,
7-1,1,,172146-50101,,"FRAME, LOWER",1,1,,,,,S,,,M00595,,M00595,,,,,,
7-2,1,,172146-50102,,"FRAME, LOWER",1,1,1,1,1,1,S,,,M00808,,M00808,,,,,,
8,1,,172141-50890,,GROMMET,2,2,2,2,2,2,,,,,,,,,,,
9,1,,172730-05250,,"WASHER 12",12,12,12,12,12,12,,,,,,,,,,,
10,1,,172141-50901,,"GUARD, SHOE",4,4,4,4,4,4,,,,,,,,,,,
11,1,,26013-120452,,"BOLT M12X 45",12,12,12,12,12,12,,,,,,,,,,,
12,1,,172122-50851,,"GUARD(L), SPROCKET",1,1,1,1,,,,,,,,,,,,,
12-1,1,,172122-50852,,"GUARD(L), SPROCKET",1,1,1,1,1,1,Q,,,M00501,,M00501,,,,,,
13,1,,172122-50861,,"GUARD(R), SPROCKET",1,1,1,1,,,,,,,,,,,,,
13-1,1,,172122-50862,,"GUARD(R), SPROCKET",1,1,1,1,1,1,Q,,,M00501,,M00501,,,,,,
14,1,,26013-120252,,"BOLT M12X 25",6,6,6,6,6,6,,,,,,,,,,,
15,1,,172122-17190,,CLIP,2,2,2,2,2,2,,,,,,,,,,,
16,1,,172146-53300,,"WEIGHT, COUNTER",1,1,1,1,1,1,,,,,,,,,,,
17,1,,1A1700-66010,,"BOLT 14X165",2,2,2,2,2,2,,,,,,,,,,,
18,1,,22217-140000,,"SPRING WASHER 14",2,2,2,2,2,2,,,,,,,,,,,
19,1,,933169-23040,,"WASHER 15X40",2,2,2,2,2,2,,,,,,,,,,,
20,1,,172146-50180,,"WEIGHT, LOWER",2,2,,,,,Z,,,M00595,,M00595,,,,,,
21,1,,172146-53350,,"WEIGHT, 2ND LEVER",1,1,1,1,1,1,W,,,M00595,,M00595,,,,,,
22,1,,22137-160000,,"WASHER 16,POLISHED",4,4,,,,,Z,,,M00595,,M00595,,,,,,
23,1,,22217-140000,,"SPRING WASHER 14",2,2,2,2,2,2,W,,,M00595,,M00595,,,,,,
24,3,,22217-160000,,"SPRING WASHER 16",4,4,,,,,Z,,,M00595,,M00595,,,,,,
25,1,,26116-140402,,"BOLT M14X 40 PLATED",2,2,2,2,2,2,W,,,M00595,,M00595,,,,,,
26,3,,26116-160302,,"BOLT M16X 30 PLATED",4,4,,,,,Z,,,M00595,,M00595,,,,,,
27,1,,172146-54100,,FLAME,1,1,,,,,,,,,,,,,,,,
27-1,1,,172146-54101,,"FRAME ASSY, TURNING",1,1,,,,,S,,,M01712,,M01712,,,,,,
27-2,1,,172146-54102,,"FRAME ASSY, TURNING",1,1,1,1,,,S,,,M01606,,M01606,,,,,,
27-3,1,,172146-54103,,"FRAME ASSY, TURNING",,,1,1,,,N,,,,,,,M01606,,M01606,,
28,1,,172146-50103,,"FRAME ASSY, LOWER",,,,,1,1,W,,,,,,,,,,,M20501,,M20501
29,1,,172146-54104,,"FRAME ASSY, TURNING",,,,,1,1,W,,,,,,,,,,,M20501,,M20501
```

https://truckmanualshub.com/

Fig. 33 フレーム FRAME

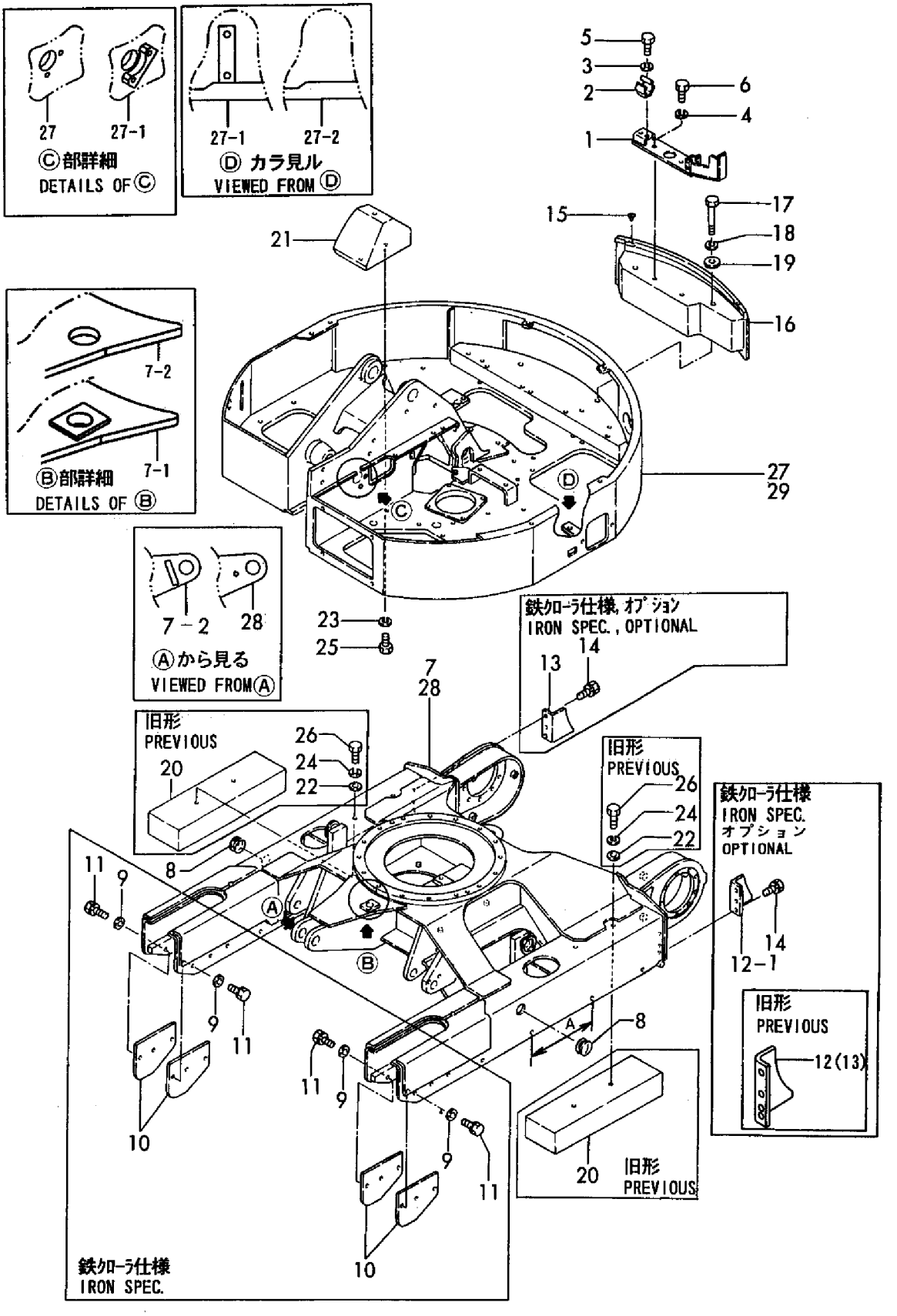

https://truckmanualshub.com/

```
1,1,,172142-57600,,"BEARING, TURNING",1,1,1,1,1,1,,,,,,,,,,,
1-1,1,,172142-57601,,"BEARING, SWING",,,,,1,1,R,,,,,,,,,,,M20501,,M20501
2,2,,172142-57610,,"SEAL SET",1,1,1,1,1,1,,,,,,,,,,,
3,3,,172122-57630,,"SEAL, UPPER",1,1,1,1,1,1,,,,,,,,,,,
4,3,,172122-57640,,"SEAL, LOWER",1,1,1,1,1,1,,,,,,,,,,,
5,1,,172122-57610,,BOLT,32,32,32,32,32,32,,,,,,,,,,,
6,1,,172122-57620,,"PARALLEL PIN 13X36",4,4,4,4,4,4,,,,,,,,,,,
7,1,,172116-46630,,"KNOB, LOCK LEVER",1,1,1,1,1,1,,,,,,,,,,,
8,1,,172146-58800,,"PIN, LOCK",1,1,,,,,,,,,,,,,,,
8-1,1,,172146-58801,,"PIN, LOCK",1,1,1,1,1,1,S,1,,M00808,,M00808,,,,,,
```

https://truckmanualshub.com/

Fig. 34 旋回ベアリング & 旋回ロック TURNING BEARING & TURNING LOCK

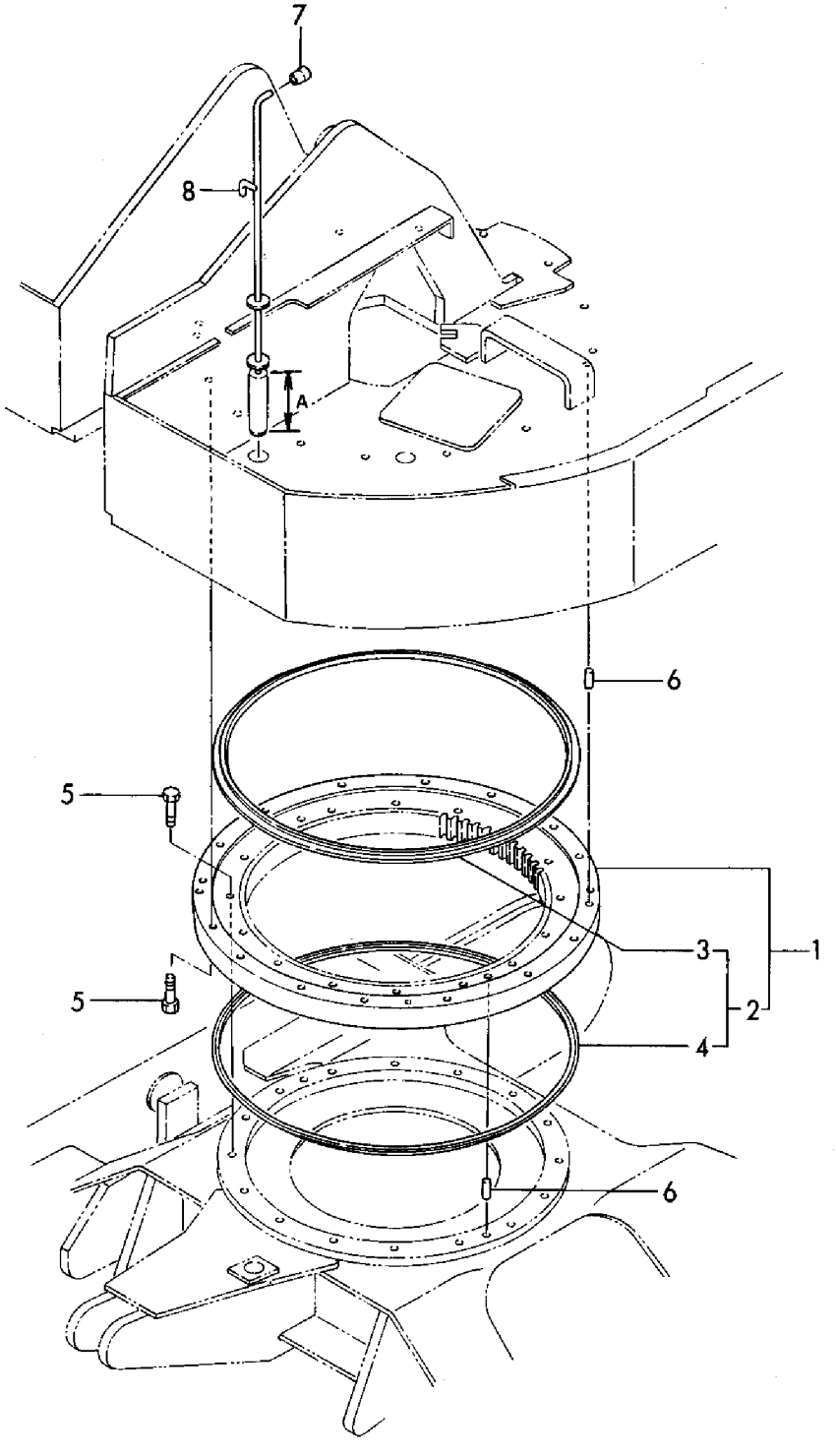

https://truckmanualshub.com/

```
1,1,,172141-50750,,"COVER, MOTOR",2,2,2,2,2,2,,,,,,,,,,,
1-1,1,,172148-61100,,"COVER,TRAVEL",,,,,2,2,S,,,,,,,,,,,M20501,,M20501
2,1,,172141-50761,,"COVER, UNDER",1,1,1,1,1,1,,,,,,,,,,,
3,1,,172146-61100,,"COVER (A)",1,1,1,1,1,1,,,,,,,,,,,
4,1,,172146-61110,,"COVER (B)",1,1,1,1,1,1,,,,,,,,,,,
5,1,,172146-61120,,"COVER (C)ASSY",1,1,1,1,1,1,,,,,,,,,,,
6,1,,172146-61130,,"COVER(D) ASSY",1,1,1,1,1,1,,,,,,,,,,,
7A,1,,172146-61160,,COVER(E),1,1,1,1,,,,,,,,,,,,,
7B,1,,172146-61160-1,,"COVER (E)",,,,,1,1,,,,,,,,,,,
8,1,,172146-61180,,COVER(G),1,1,,,,,,,,,,,,,,,
9,1,,172146-61190,,"COVER (H)",1,,1,1,1,1,,,,,,,,,,,
10A,1,,172146-61200,,"PLATE, GUARD",1,1,1,1,,,,,,,,,,,,
10B,1,,172146-61200-1,,"PLATE, GUARD",,,,,1,1,,,,,,,,,,,
11,1,,172146-61240,,"PLATE ASSY",1,1,1,1,1,1,,,,,,,,,,,
12,1,,172146-61270,,"COVER, RUBBER",1,1,1,1,1,1,,,,,,,,,,,
13A,1,,172146-61280,,COVER(I),1,1,1,1,,,,,,,,,,,,,
13B,1,,172146-61280-1,,"COVER (I)",,,,,1,1,,,,,,,,,,,
14A,1,,172146-61290,,COVER,1,1,1,1,,,,,,,,,,,,,
14B,1,,172146-61290-1,,COVER,,,,,1,1,,,,,,,,,,,
15,1,,172146-61310,,"COVER, RUBBER",1,1,1,1,1,1,,,,,,,,,,,
16,1,,172146-61330,,"PLATE ASSY",1,1,1,1,1,1,,,,,,,,,,,
17,1,,172146-61360,,"RUBBER, SEAL",1,1,1,1,1,1,,,,,,,,,,,
18,1,,172146-61370,,"RUBBER, SEAL",1,1,1,1,1,1,,,,,,,,,,,
19,1,,22137-080000,,"WASHER 8, POLISHED",2,2,2,2,2,2,,,,,,,,,,,
20,1,,22157-100000,,"WASHER 10",2,2,,,,,,,,,,,,,,,
20-1,1,,1S0130-46750,,"WASHER 10X40X4.5",2,2,2,2,2,2,S,,,M01495,,M01495,,,,,,
21,1,,22217-080000,,"SPRING WASHER  8",14,14,14,14,14,14,,,,,,,,,,,
22,1,,22217-080000,,"SPRING WASHER  8",2,2,2,2,2,2,,,,,,,,,,,
23,1,,22217-100000,,"SPRING WASHER 10",18,18,18,18,18,18,,,,,,,,,,,
24,1,,22217-100000,,"SPRING WASHER 10",5,5,5,5,5,5,,,,,,,,,,,
25,1,,22217-100000,,"SPRING WASHER 10",2,2,2,2,2,2,,,,,,,,,,,
26,1,,22217-100000,,"SPRING WASHER 10",6,6,6,6,6,6,,,,,,,,,,,
26-1,1,,22217-100000,,"SPRING WASHER 10",,,,,8,8,K,,,,,,,,,,,M20501,,M20501
27,1,,22217-120000,,"SPRING WASHER",4,4,4,4,4,4,,,,,,,,,,,
28,1,,26013-100202,,"BOLT W/WASHER M10X20",4,4,4,4,4,4,,,,,,,,,,,
29,1,,26013-100252,,"BOLT W/WASHER M10X25",3,3,3,3,3,3,,,,,,,,,,,
30,1,,26013-100252,,"BOLT W/WASHER M10X25",3,3,3,3,3,3,,,,,,,,,,,
31,1,,26116-080162,,"BOLT 8X16",14,14,14,14,14,14,,,,,,,,,,,
32,1,,26116-100162,,"BOLT M10X 16 PLATED",18,18,18,18,18,18,,,,,,,,,,,
33,1,,26116-100162,,"BOLT M10X 16 PLATED",5,5,5,5,5,5,,,,,,,,,,,
34,1,,26116-100162,,"BOLT M10X 16 PLATED",2,2,,,,,,,,,,,,,,,
34-1,1,,26116-100202,,"BOLT M10X 20 PLATED",2,2,2,2,2,2,S,,,M01495,,M01495,,,,,,
35A,1,,26116-100202,,"BOLT M10X 20 PLATED",6,6,6,6,,,,,,,,,,,,
36,1,,26116-120252,,"BOLT M12X 25 PLATED",4,4,4,4,4,4,,,,,,,,,,,
37,1,,26716-080002,,"NUT M 8",2,2,2,2,2,2,,,,,,,,,,,
38,1,,194145-04810,,"WASHER 10",,3,,,,,,,,,,,,,,,
39,1,,172146-61600,,"COVER (H)",,1,,,,,,,,,,,,,,,
40,1,,26116-100202,,"BOLT M10X 20 PLATED",,4,,,,,,,,,,,,,,,
41A,1,,172147-45880,,COVER,,,1,1,,,,,,,,,,,,,
41B,1,,172147-45881,,COVER,,,,,1,1,,1,,,,,,,,,
41B-1,1,,172147-45882,,COVER,,,,,1,1,S,1,,,,,,,,,M20627,,M20627
42,1,,26589-060162,,"SCREW M6,BINDING",,,5,5,5,5,,,,,,,,,,,
```

https://truckmanualshub.com/

Fig. 35 フレームカバー FRAME COVER

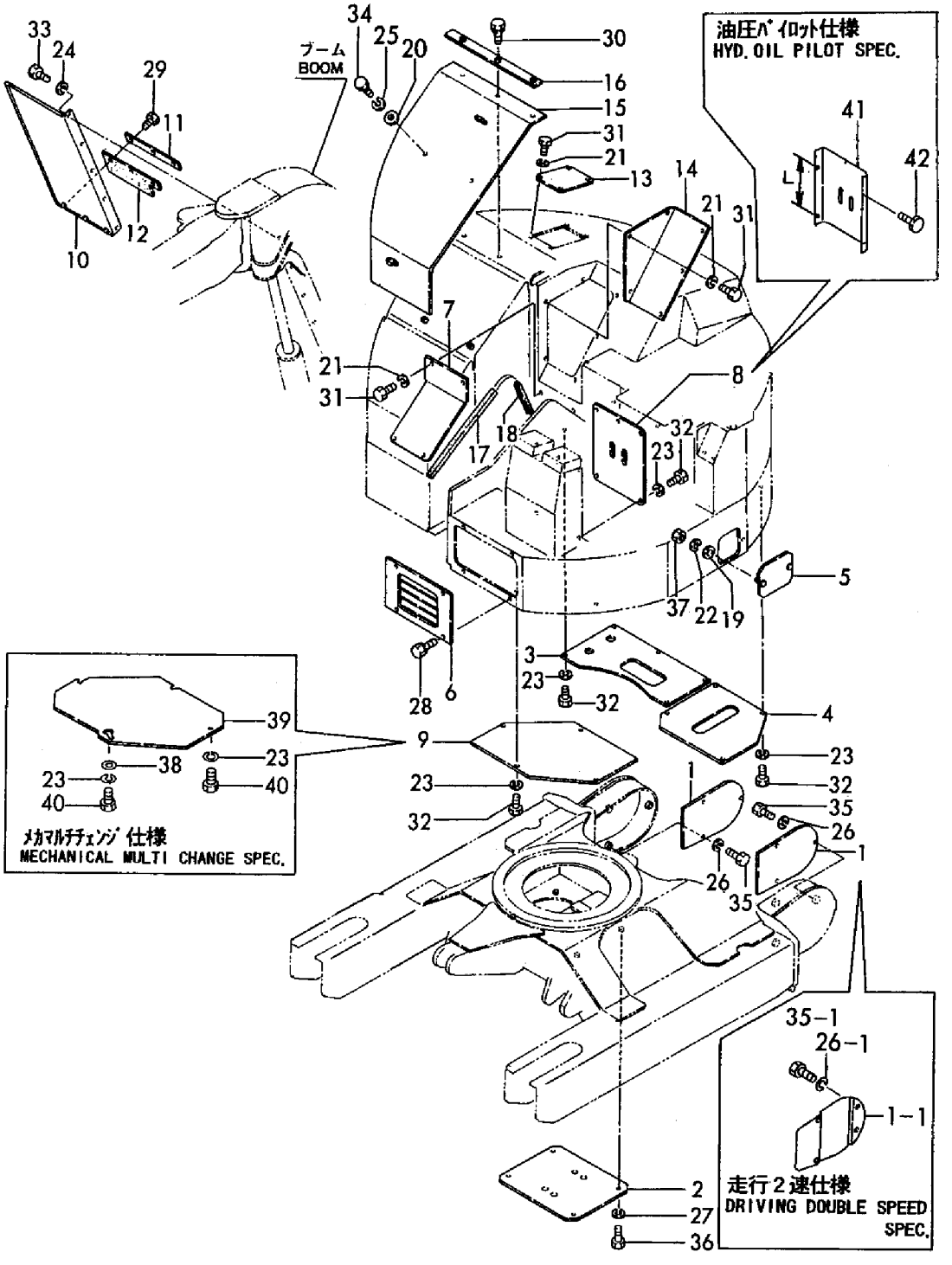

https://truckmanualshub.com/

```
1,1,,172146-62100,,STEP,1,1,,,,,,,,,,,,,,,
1-1,1,,172146-62101,,STEP,1,1,1,,,,S,1,,M00869,,M00869,,,,,,
1-2,1,,172146-62102,,STEP,,,1,,,,N,,,,,,,M11757,,,,
2,1,,22217-100000,,"SPRING WASHER 10",7,7,7,6,,,,,,,,,,,,,
3,1,,26116-100202,,"BOLT M10X 20 PLATED",7,7,7,6,,,,,,,,,,,,,
4,1,,172146-62800,,"RUBBER, PLATE(A)",1,1,1,1,,,,,,,,,,,,,
5,2,,172146-62860,,"RUBBER, RADIATOR(A)",3,3,3,3,,,,,,,,,,,,,
6,1,,172146-62820,,"RUBBER, PLATE(B)",1,1,1,1,,,,,,,,,,,,,
7,2,,172146-62860,,"RUBBER, RADIATOR(A)",1,1,1,1,,,,,,,,,,,,,
8,2,,172146-62870,,"RUBBER, RADIATOR(B)",2,2,2,2,,,,,,,,,,,,,
9,1,,172146-62840,,PLATE(C),1,1,1,1,,,,,,,,,,,,,
10,1,,172146-62880,,RUBBER,1,1,1,1,,,,,,,,,,,,,
11,1,,172146-62890,,RUBBER,1,1,1,1,,,,,,,,,,,,,
12,1,,22137-080000,,"WASHER 8, POLISHED",2,2,2,2,,,,,,,,,,,,,
13,1,,22137-100000,,"WASHER 10,POLISHED",3,3,3,3,,,,,,,,,,,,,
14,1,,22157-060000,,"WASHER  6",4,4,4,4,,,,,,,,,,,,,
15,1,,22217-060000,,"SPRING WASHER  6",4,4,4,4,,,,,,,,,,,,,
16,1,,22217-080000,,"SPRING WASHER  8",4,4,4,4,,,,,,,,,,,,,
17,1,,22217-100000,,"SPRING WASHER 10",3,3,3,3,,,,,,,,,,,,,
18,1,,26116-060122,,"BOLT 6X12",4,4,4,4,,,,,,,,,,,,,
19,1,,26116-080162,,"BOLT 8X16",4,4,4,4,,,,,,,,,,,,,
20,1,,26116-100162,,"BOLT M10X 16 PLATED",3,3,3,3,,,,,,,,,,,,,
21,1,,172146-61360,,"RUBBER, SEAL",2,2,2,2,,,,,,,,,,,,,
22,1,,172146-63100,,"PANEL BOX ASSY.",1,1,1,1,,,,,,,,,,,,,
23,1,,22217-100000,,"SPRING WASHER 10",4,4,4,4,,,,,,,,,,,,,
24,1,,26116-100162,,"BOLT M10X 16 PLATED",4,4,4,4,,,,,,,,,,,,,
25,1,,172146-64200,,"SEAT ASSY",1,1,,,,,,,,,,,,,,,
25-1,1,,172146-64201,,"SEAT COMPL.,DRIVER",1,1,1,1,,,N,,,M00658,,M00658,,,,,,
26,2,,172116-64180,,"BACK (A), SEAT",1,1,,,,,,,,,,,,,,,
26-1,2,,172116-64181,,"BACK(A), SEAT",1,1,1,1,,,N,,,M00658,,M00658,,,,,,
27,2,,172116-64210,,"CUSHION, SEAT B",1,1,,,,,,,,,,,,,,,
27-1,2,,172116-64211,,"CUSHION, SEAT B",1,1,1,1,,,N,,,M00658,,M00658,,,,,,
28,2,,26013-060162,,"BOLT M 6X 16",4,4,4,4,,,,,,,,,,,,,
29,1,,22137-080000,,"WASHER 8, POLISHED",4,4,4,4,,,,,,,,,,,,,
30,1,,26013-080202,,"BOLT W/WASHER M8X20",4,4,4,4,,,,,,,,,,,,,
31,1,,22137-100000,,"WASHER 10,POLISHED",2,2,2,2,,,W,,,M00658,,M00658,,,,,,
32,1,,172212-61230,,"FASTENER, DIAL",,,,1,,,W,,,,,,,,,M11757,,
33,1,,172147-62250,,RIB,,,,1,,,W,,,,,,,,,M11757,,
34,1,,172146-62300,,EV(STEP,,,,1,,,W,,,,,,,,,M11757,,
35,2,,172146-62370,,"SEAL, STEP A",,,,1,,,W,,,,,,,,,M11757,,
36,2,,172146-62380,,"SEAL, STEP B",,,,1,,,W,,,,,,,,,M11757,,
37,1,,22137-100000,,"WASHER 10,POLISHED",,,,2,,,W,,,,,,,,,M11757,,
38,1,,22217-050000,,"SPRING WASHER  5",,,,2,,,W,,,,,,,,,M11757,,
39,1,,26013-100202,,"BOLT W/WASHER M10X20",,,,2,,,W,,,,,,,,,M11757,,
40,1,,26557-050122,,"SCREW M 5X 12",,,,2,,,W,,,,,,,,,M11757,,
41,1,,26716-050002,,"NUT M 5",,,,2,,,W,,,,,,,,,M11757,,
```

https://truckmanualshub.com/

Fig. 36 シート & ステップ SEAT & STEP

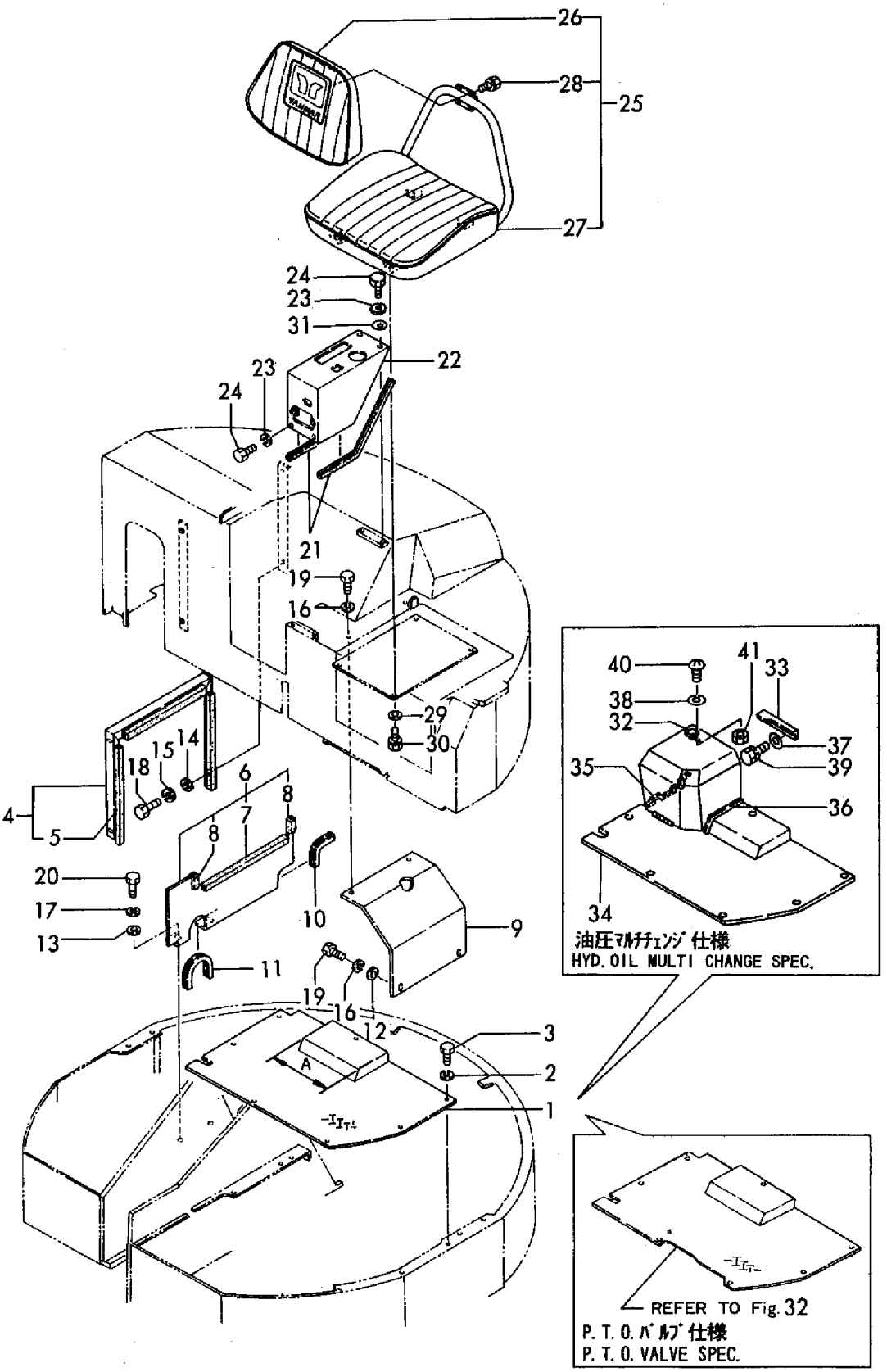

https://truckmanualshub.com/

```
1,2,,172212-61230,,"FASTENER, DIAL",,,,,1,1,,,,,,,,,,,
2,2,,172147-62250,,RIB,,,,,1,1,,,,,,,,,,,
3,2,,172146-62301,,STEP,,,,,1,1,,,,,,,,,,,
4,2,,172146-62370,,"SEAL, STEP A",,,,,1,1,,,,,,,,,,,
5,2,,172146-62380,,"SEAL, STEP B",,,,,1,1,,,,,,,,,,,
6,2,,22137-100000,,"WASHER 10,POLISHED",,,,,2,2,,,,,,,,,,,
7,2,,22217-050000,,"SPRING WASHER  5",,,,,2,2,,,,,,,,,,,
8,2,,26013-100202,,"BOLT W/WASHER M10X20",,,,,2,2,,,,,,,,,,,
9,2,,26557-050122,,"SCREW M 5X 12",,,,,2,2,,,,,,,,,,,
10,2,,26716-050002,,"NUT M 5",,,,,2,2,,,,,,,,,,,
11,1,,172146-62103,,STEP,,,,,1,,,,,,,,,,,,
12,1,,22217-100000,,"SPRING WASHER 10",,,,,7,,,,,,,,,,,,
13,1,,26116-100202,,"BOLT M10X 20 PLATED",,,,,7,,,,,,,,,,,,
14,1,,22137-080000,,"WASHER 8, POLISHED",,,,,4,4,,,,,,,,,,,
15,1,,26013-080202,,"BOLT W/WASHER M8X20",,,,,4,4,,,,,,,,,,,
16,1,,172146-62800,,"RUBBER, PLATE(A)",,,,,1,1,,,,,,,,,,,
18,2,,172146-62860,,"RUBBER, RADIATOR(A)",,,,,3,3,,,,,,,,,,,
19,1,,172146-62820,,"RUBBER, PLATE(B)",,,,,1,1,,,,,,,,,,,
21,2,,172146-62860,,"RUBBER, RADIATOR(A)",,,,,1,1,,,,,,,,,,,
22,2,,172146-62870,,"RUBBER, RADIATOR(B)",,,,,2,2,,,,,,,,,,,
23,1,,172146-62840,,PLATE(C),,,,,1,1,,,,,,,,,,,
24,1,,172146-62880,,RUBBER,,,,,1,1,,,,,,,,,,,
25,1,,172146-62890,,RUBBER,,,,,1,1,,,,,,,,,,,
26,1,,22137-080000,,"WASHER 8, POLISHED",,,,,2,2,,,,,,,,,,,
27,1,,22137-100000,,"WASHER 10,POLISHED",,,,,3,3,,,,,,,,,,,
28,1,,22157-060000,,"WASHER  6",,,,,4,4,,,,,,,,,,,
29,1,,22217-060000,,"SPRING WASHER  6",,,,,4,4,,,,,,,,,,,
30,1,,22217-080000,,"SPRING WASHER  8",,,,,4,4,,,,,,,,,,,
31,1,,22217-100000,,"SPRING WASHER 10",,,,,3,3,,,,,,,,,,,
32,1,,26116-060122,,"BOLT 6X12",,,,,4,4,,,,,,,,,,,
33,1,,26116-080162,,"BOLT 8X16",,,,,4,4,,,,,,,,,,,
34,1,,26116-100162,,"BOLT M10X 16 PLATED",,,,,3,3,,,,,,,,,,,
35,1,,172146-61360,,"RUBBER, SEAL",,,,,2,2,,,,,,,,,,,
36,1,,172146-63100,,"PANEL BOX ASSY.",,,,,1,1,,,,,,,,,,,
37,1,,22137-100000,,"WASHER 10,POLISHED",,,,,2,2,,,,,,,,,,,
38,1,,22217-100000,,"SPRING WASHER 10",,,,,4,4,,,,,,,,,,,
39,1,,26116-100162,,"BOLT M10X 16 PLATED",,,,,4,4,,,,,,,,,,,
40,1,,172146-64300,,"SEAT, OPERATOR",,,,,1,1,,,,,,,,,,,
41,2,,172162-64210,,"CUSHION ASSY",,,,,1,1,,,,,,,,,,,
42,2,,172162-64220,,"BACK ASSY",,,,,1,1,,,,,,,,,,,
43,2,,172162-64230,,"BACK (B) ASSY",,,,,1,1,,,,,,,,,,,
44,2,,172162-64240,,"PANEL,BACK",,,,,1,1,,,,,,,,,,,
45,3,,172162-64320,,"RUBBER A,EDGE",,,,,1,1,,,,,,,,,,,
46,3,,172162-64330,,"RUBBER B,EDGE",,,,,1,1,,,,,,,,,,,
47,2,,172162-64250,,"BRACKET L,SIDE",,,,,1,1,,,,,,,,,,,
48,2,,172162-64260,,"BRACKET R,SIDE",,,,,1,1,,,,,,,,,,,
51,2,,172162-64310,,"SCREW M5X10,TAPPING",,,,,3,3,,,,,,,,,,,
52,2,,26013-080202,,"BOLT W/WASHER M8X20",,,,,8,8,,,,,,,,,,,
```

https://truckmanualshub.com/

Fig. 37 シート & ステップ(-2) SEAT & STEP (-2)

FROM M/#20501

見出しNo. 40は
見出しNo. 41から52を含みます。
40 inc. 41～52

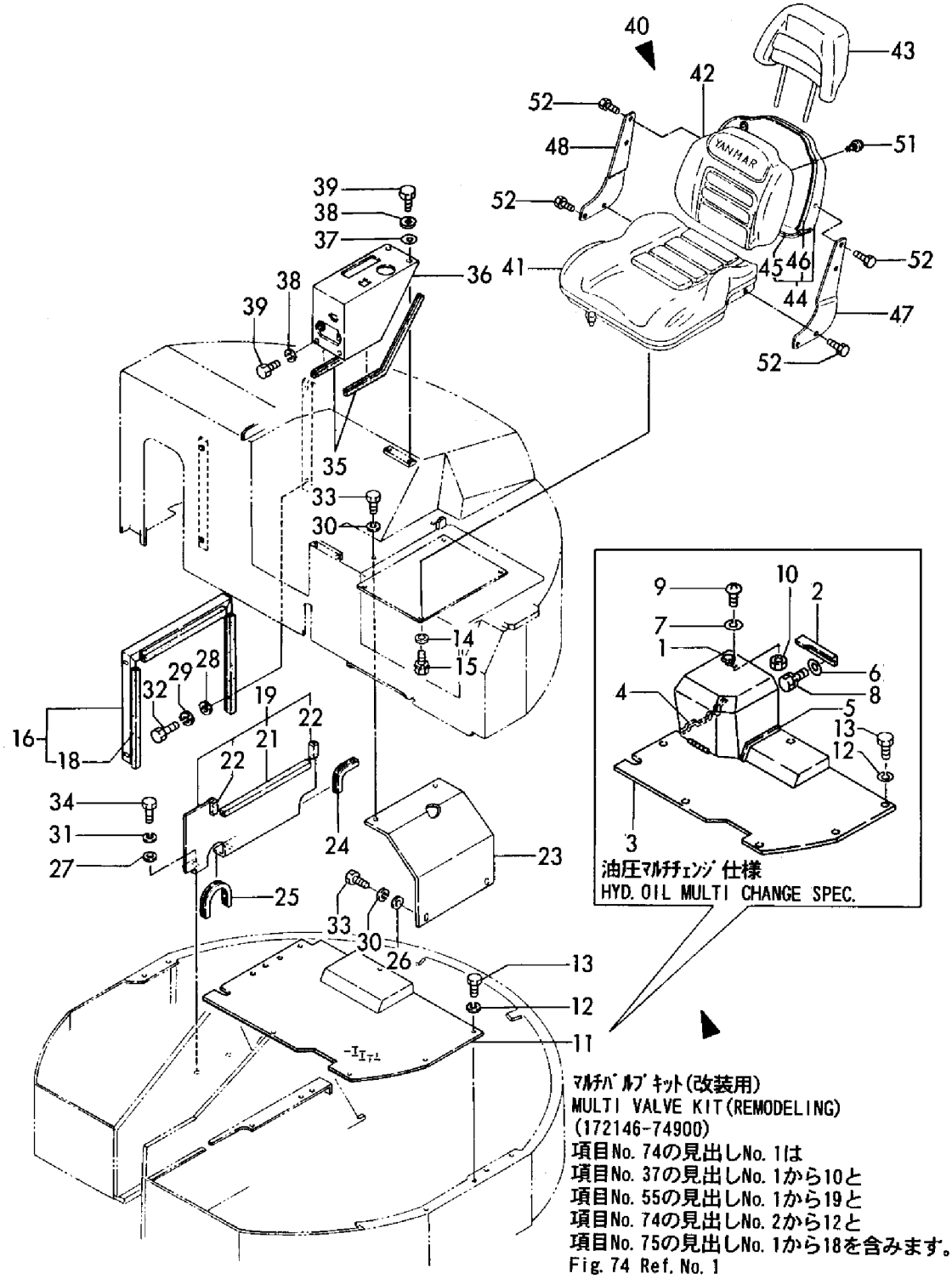

マルチバルブキット(改装用)
MULTI VALVE KIT(REMODELING)
(172146-74900)
項目No. 74の見出しNo. 1は
項目No. 37の見出しNo. 1から10と
項目No. 55の見出しNo. 1から19と
項目No. 74の見出しNo. 2から12と
項目No. 75の見出しNo. 1から18を含みます。
Fig. 74 Ref. No. 1
inc. Fig. 37 Ref. No. 1～10
Fig. 55 Ref. No. 1～19
Fig. 74 Ref. No. 2～12
Fig. 75 Ref. No. 1～18

https://truckmanualshub.com/

```
1,1,,194145-04810,,"WASHER 10",7,7,7,7,7,7,,,,,,,,,,,
2A,1,,172146-65100,,"MOUNT, SEAT",1,1,,,,,,,,,,,,,,,
2A-1,1,,172146-65101,,"MOUNT, SEAT",1,1,1,1,,,S,1,,M00869,,M00869,,,,,,
2B,1,,172146-65101-1,,"MOUNT, SEAT",,,,,1,1,,,,,,,,,,,
2B-1,1,,172146-65102,,"BONNET ASSY (EV",,,,,1,1,S,,,,,,,,,,,M20872,,M20872
3,1,,172126-65500,,KEY,1,1,1,1,1,1,,,,,,,,,,,
4,1,,172146-65670,,RUBBER,2,2,2,2,2,2,,,,,,,,,,,
5,1,,172146-65680,,STOPPER,1,1,1,1,1,1,,,,,,,,,,,
6A,1,,172146-65690,,"PLATE ASSY",1,1,1,1,,,,,,,,,,,,,
6B,1,,172146-65691,,"PLATE ASSY",,,,,1,1,,,,,,,,,,,
7A,1,,172146-65740,,COVER,1,1,1,1,,,,,,,,,,,,,
7B,1,,172146-65740-1,,COVER,,,,,1,1,,,,,,,,,,,
8,1,,172146-65750,,"COVER, LOCK",1,1,1,1,1,1,,,,,,,,,,,
9,1,,172146-65760,,STOPPER,1,1,1,1,1,1,,,,,,,,,,,
10A,1,,172146-65770,,"COVER, MOUNT",1,1,1,1,,,,,,,,,,,,,
10B,1,,172146-65770-1,,"COVER, MOUNT",,,,,1,1,,,,,,,,,,,
11,1,,172146-65840,,RUBBER,1,1,1,1,1,1,,,,,,,,,,,
12,1,,22137-080000,,"WASHER 8, POLISHED",2,2,2,2,2,2,,,,,,,,,,,
13,1,,22137-080000,,"WASHER 8, POLISHED",4,4,4,4,4,4,,,,,,,,,,,
14,1,,22137-080000,,"WASHER 8, POLISHED",4,4,4,4,4,4,,,,,,,,,,,
15,1,,22217-080000,,"SPRING WASHER  8",4,4,4,4,4,4,,,,,,,,,,,
16,1,,22217-080000,,"SPRING WASHER  8",2,2,2,2,2,2,,,,,,,,,,,
17,1,,22217-080000,,"SPRING WASHER  8",4,4,4,4,4,4,,,,,,,,,,,
18,1,,22217-080000,,"SPRING WASHER  8",4,4,4,4,4,4,,,,,,,,,,,
19,1,,22217-080000,,"SPRING WASHER  8",4,4,4,4,4,4,,,,,,,,,,,
20,1,,26013-100252,,"BOLT W/WASHER M10X25",7,7,7,7,7,7,,,,,,,,,,,
21,1,,26064-080201,,"WING BOLT M 8X 20",1,1,1,1,1,1,,,,,,,,,,,
22,1,,26116-080162,,"BOLT 8X16",4,4,4,4,4,4,,,,,,,,,,,
23,1,,26116-080162,,"BOLT 8X16",2,2,2,2,2,2,,,,,,,,,,,
24,1,,26577-040082,,"SCREW M 4 X  8",6,6,6,6,6,6,,,,,,,,,,,
25,1,,26716-080002,,"NUT M 8",4,4,4,4,4,4,,,,,,,,,,,
26,1,,26716-080002,,"NUT M 8",4,4,4,4,4,4,,,,,,,,,,,
27,1,,26716-080002,,"NUT M 8",4,4,4,4,4,4,,,,,,,,,,,
28,1,,172122-17190,,CLIP,,,2,2,,,W,,,,,,,M11757,,M11757,,
29,1,,933110-00301,,"KEY ASSY",1,1,1,1,1,1,W,,,M00501,,M00501,,M00501,,M00501,,
```

https://truckmanualshub.com/

Fig. 38 ボンネット BONNET

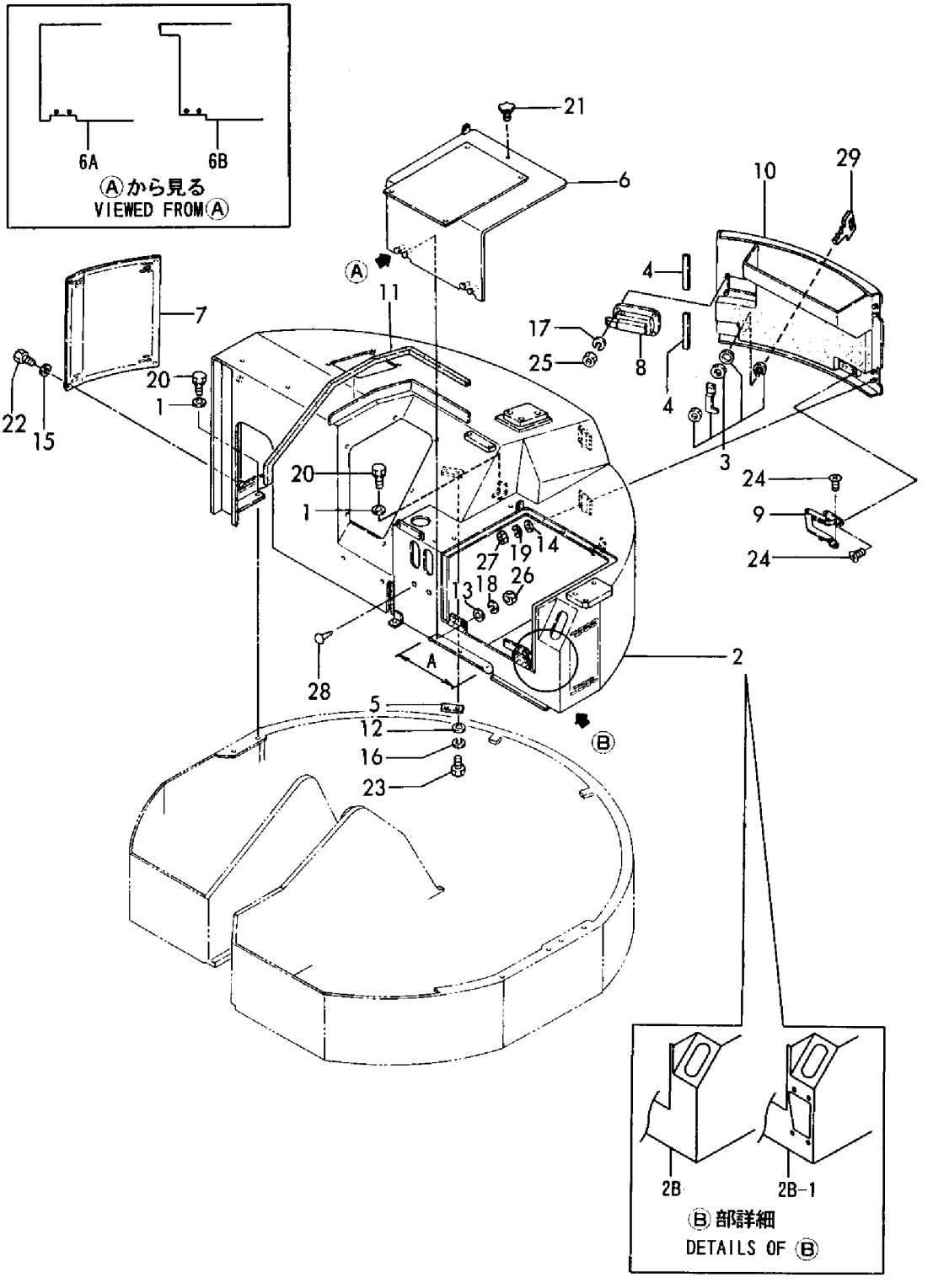

https://truckmanualshub.com/

```
1,1,,772146-68100,,"CANOPY ASSY.",1,,,,,,,,,,,,,,,,,
1-1,1,,772146-68101,,"CANOPY ASSY.",1,1,,,,,N,,,M00530,,,,,,,,
2A,1,,772146-68110,,"CANOPY ASSY",,,1,1,,,W,,,,,,,M11757,,M11757,,
2B,1,,772146-68110-3,,"CANOPY ASSY",,,,,1,1,W,,,,,,,,,,,M20501,,M20501
3A,2,,172146-68220,,"POLE(L), CANOPY",1,,,,,,,,,,,,,,,,,,
3A-1,2,,172146-68221,,"POLE(L), CANOPY",1,,,,,,S,,,M00530,,,,,,,,
3A-2,2,,172147-68220,,"POLE, CANOPY    (40)",1,1,1,1,,,R,,,M00501,,,,,,,,
3B,2,,172147-68220-3,,"POLE, CANOPY",,,,,1,1,W,,,,,,,,,,,M20501,,M20501
4A,2,,172146-68260,,"ROOF, CANOPY",1,,,,,,,,,,,,,,,,,,
4A-1,2,,172146-68262,,"ROOF, CANOPY",1,1,1,1,,,S,,,M00546,,,,,,,,
4B,2,,172146-68260-3,,"ROOF, CANOPY",,,,,1,1,W,M,,,,,,,,,,M20501,,M20501
4B-1,2,,172146-68262-3,,"ROOF, CANOPY
(GREEN)",,,,,1,1,W,,,,,,,,,,M20501,,M20501
5,2,,172146-68390,,"WINDOW, SIDE",1,,,,,,,,,,,,,,,,,,
5-1,2,,172146-68391,,"WINDOW, SIDE",1,1,1,1,1,1,S,,,M00530,,,,,,,,
6,2,,172146-68400,,"SEAL, ROOF",1,1,1,1,1,1,,,,,,,,,,,
7,2,,172146-68410,,"WINDOW, ROOF",1,1,1,1,1,1,,,,,,,,,,,
8,2,,172146-68420,,"SEAL, SIDE",1,,,,,,,,,,,,,,,,,,
8-1,2,,172146-68421,,"SEAL, SIDE",1,1,1,1,1,1,S,,,M00530,,,,,,,,
9,2,,172146-68430,,SPACER,8,8,8,8,8,8,,,,,,,,,,,
10,2,,172146-68440,,"RUBBER, SEAL",1,1,1,1,1,1,,,,,,,,,,,
11,2,,172146-68450,,"COVER,FRONT",1,1,,,,,,,,,,,,,,,,
12,2,,172146-68460,,"GRIP ASSY, FUEL.TANK",1,1,,,,,,,,,,,,,,,,
13,2,,172146-68500,,"SEAL, FRONT",1,1,1,1,1,1,,,,,,,,,,,
14,2,,172146-68510,,"WINDOW, FRONT",1,1,1,1,1,1,,,,,,,,,,,
15,2,,172146-68650,,GUARD,1,,,,,,,,,,,,,,,,,,
15-1,2,,172146-68651,,GUARD,1,1,1,1,,,S,,,M00530,,,,,,,,
15-1A,2,,172146-68651-3,,GUARD,,,,,1,1,W,,,,,,,,,,M20501,,M20501
16,2,,22137-100000,,"WASHER 10,POLISHED",4,,,,,,,,,,,,,,,,,,
16-1,2,,194145-04810,,"WASHER 10",5,5,5,5,5,5,N,,,M00996,,,,,,,,
17,2,,22137-100000,,"WASHER 10,POLISHED",4,4,4,4,4,4,,,,,,,,,,,
18,2,,22137-100000,,"WASHER 10,POLISHED",4,,,,,,,,,,,,,,,,,,
18-1,2,,22137-100000,,"WASHER 10,POLISHED",8,8,8,8,8,8,K,,,M00530,,,,,,,,
19,2,,22217-100000,,"SPRING WASHER 10",4,,,,,,,,,,,,,,,,,,
19-1,2,,22217-100000,,"SPRING WASHER 10",3,3,3,3,3,3,K,,,M00996,,,,,,,,
20,2,,22217-100000,,"SPRING WASHER 10",4,4,4,4,4,4,,,,,,,,,,,
21,2,,26013-100202,,"BOLT W/WASHER M10X20",5,5,5,5,5,5,W,,,M00530,,,,,,,,
22,2,,26013-100252,,"BOLT W/WASHER M10X25",5,,,,,,,,,,,,,,,,,,
22-1,2,,26013-100202,,"BOLT W/WASHER M10X20",5,5,5,5,5,5,R,,,M00546,,,,,,,,
23,2,,26013-100252,,"BOLT W/WASHER M10X25",4,,,,,,,,,,,,,,,,,,
23-1,2,,26116-100202,,"BOLT M10X 20 PLATED",4,4,4,4,4,4,Q,,,M00630,,,,,,,,
24,2,,26013-100252,,"BOLT W/WASHER M10X25",4,,,,,,,,,,,,,,,,,,
24-1,2,,26013-100252,,"BOLT W/WASHER M10X25",8,8,8,8,8,8,K,,,M00530,,,,,,,,
25,2,,26013-120252,,"BOLT M12X 25",6,6,6,6,6,6,,,,,,,,,,,
26,2,,26116-100202,,"BOLT M10X 20 PLATED",4,,,,,,,,,,,,,,,,,,
26-1,2,,26116-100202,,"BOLT M10X 20 PLATED",3,3,3,3,3,3,K,,,M00996,,,,,,,,
27,2,,26116-100202,,"BOLT M10X 20 PLATED",4,4,4,4,4,4,,,,,,,,,,,
28,2,,29311-164000,,GROMMET,8,8,8,8,8,8,,,,,,,,,,,
29,2,,172146-68100,,"SIDE, CANOPY",1,1,,,,,,,,,,,,,,,,,,
29-1,2,,172146-68101,,"SIDE, CANOPY(WHITE40",1,1,,,,,S,,,M00530,,M00530,,,,,,
29-2,2,,172146-68102,,"SIDE, CANOPY",1,1,1,1,,,R,,,M00808,,M00808,,,,,,
29-2A,2,,172146-68102-3,,"SIDE, CANOPY",,,,,1,1,W,,,,,,,,,,M20501,,M20501
30,2,,26013-100352,,"BOLT M10X 35",4,,,,,,Z,,,M00530,,,,,,,,
31,2,,22217-100000,,"SPRING WASHER 10",4,4,4,4,4,4,W,,,M00630,,M00630,,,,,,
32,2,,26013-100252,,"BOLT W/WASHER M10X25",2,2,2,2,2,2,W,,,M00996,,M00996,,,,,,
33A,2,,172146-68750,,COVER,,,1,1,,,W,,,,,,,M11757,,M11757,,
33B,2,,172146-68750-3,,COVER,,,,,1,1,W,,,,,,,,,,M20501,,M20501
34,2,,172146-68760,,"GRIP ASSY",,,1,1,1,1,W,,,,,,,M11757,,M11757,,
```

https://truckmanualshub.com/

Fig. 39 キャノピ CANOPY

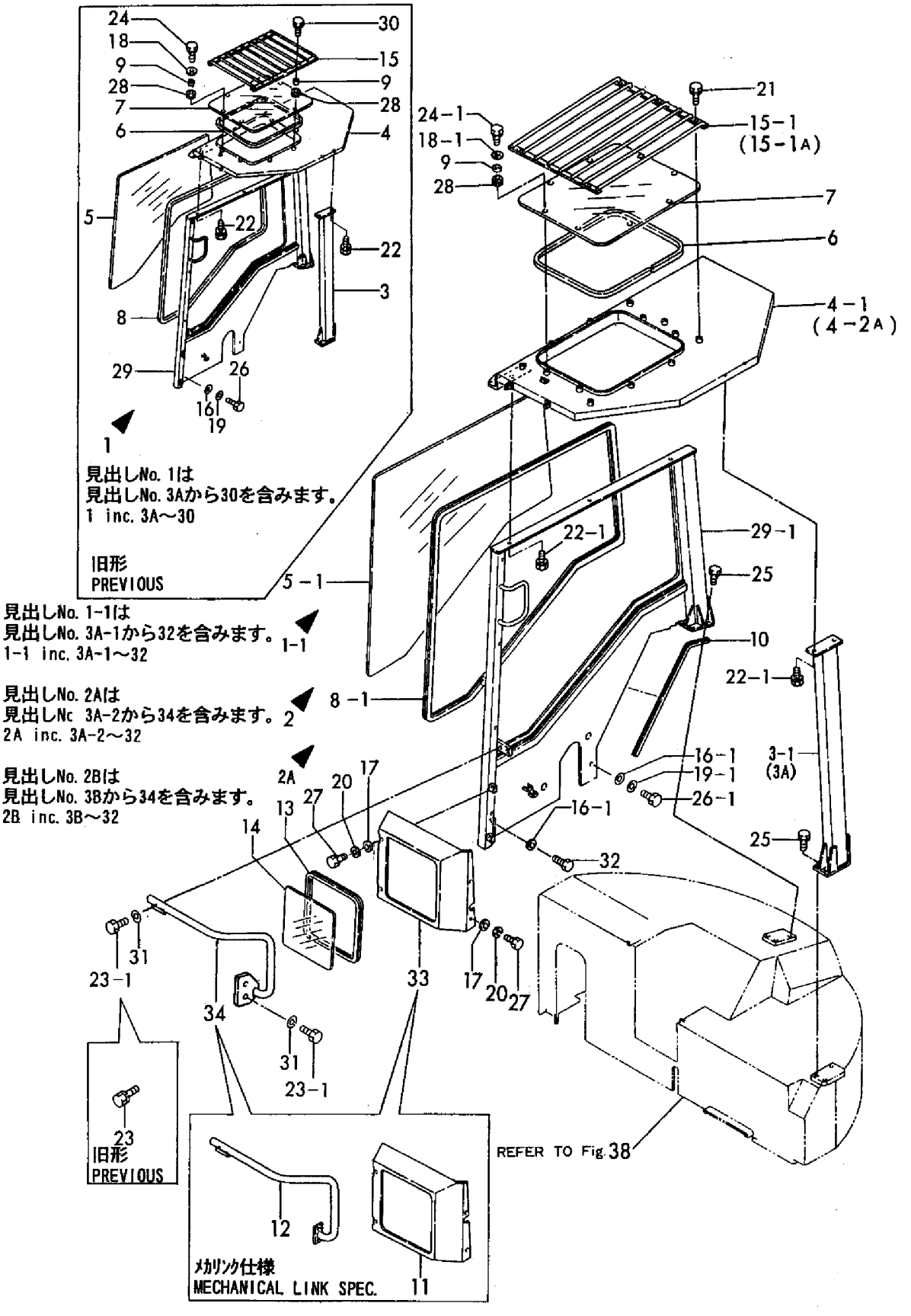

https://truckmanualshub.com/

```
1,1,,172146-71101,,"COVER, FLYWHEEL",1,1,1,1,1,1,,,,,,,,,,,
2,1,,26013-100302,,"BOLT M10X 30",4,4,4,4,4,4,,,,,,,,,,,
3,1,,26013-100352,,"BOLT M10X 35",4,4,4,4,4,4,,,,,,,,,,,
4,1,,172122-71121,,"JOINT, PUMP SHAFT",1,1,1,1,1,1,,,,,,,,,,,
5,1,,22351-050010,,"SPRING PIN 5X10",6,6,6,6,6,6,,,,,,,,,,,
6,1,,22351-050025,,"SPRING PIN 5X25",3,3,3,3,3,3,,,,,,,,,,,
7,1,,26450-120402,,"BOLT M12X 40",6,6,6,6,6,6,,,,,,,,,,,
8,1,,933171-23101,,"COUPLING CF16",1,1,1,1,1,1,,,,,,,,,,,
9,1,,172122-71130,,"BOLT M10X 30",2,2,2,2,2,2,,,,,,,,,,,
10,1,,172146-73100,,"PUMP ASSY, HYD.OIL",1,1,1,1,1,1,,,,,,,,,,,
11,2,,172146-73110,,"PUMP ASSY, FRONT",1,1,1,1,1,1,,,,,,,,,,,
12,2,,172146-73120,,"PUMP, CENTER",1,1,1,1,1,1,,,,,,,,,,,
13,2,,172146-73130,,"PUMP, REAR",1,1,1,1,1,1,,,,,,,,,,,
14,2,,172122-73140,,COVER,1,1,1,1,1,1,,,,,,,,,,,
15,2,,172146-73140,,"PLATE, CENTER",2,2,2,2,2,2,,,,,,,,,,,
16,2,,172146-73150,,BOLT,4,4,4,4,4,4,,,,,,,,,,,
17,2,,172122-73160,,"FLANGE, MOUNTING",1,1,1,1,1,1,,,,,,,,,,,
18,2,,172122-73190,,"WASHER, SPRING",4,4,4,4,4,4,,,,,,,,,,,
19,2,,172122-73200,,"SEAL SET",1,1,1,1,1,1,,,,,,,,,,,
```

https://truckmanualshub.com/

Fig. 40 ポンプ & 軸継手 HYD. OIL PUMP & JOINT

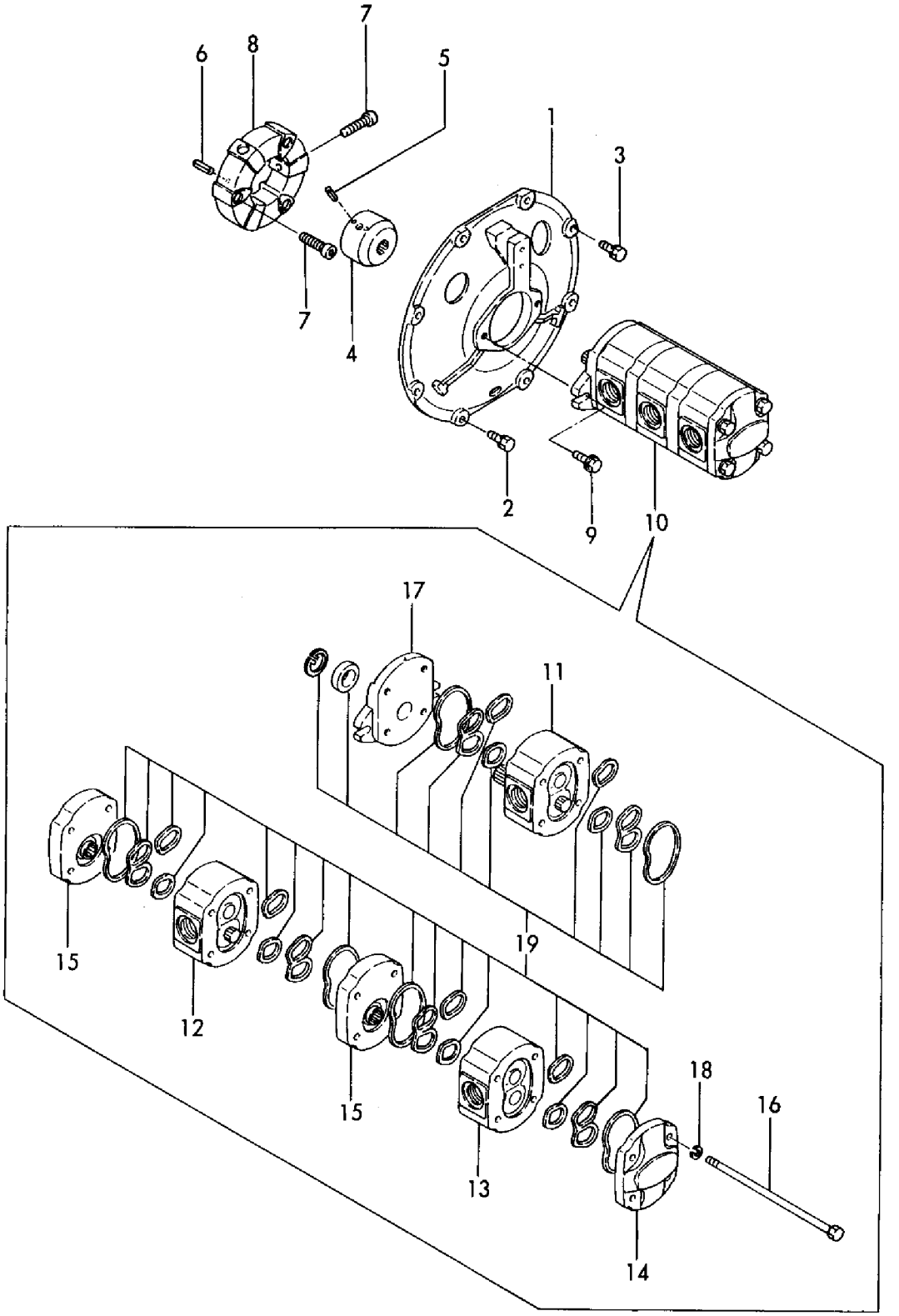

https://truckmanualshub.com/

```
1,1,,172146-72100,,"CYLINDER ASSY, BOOM",1,1,,,,,,,,,,,,,,,,
1-1,1,,172146-72101,,"CYLINDER ASSY, BOOM",1,1,1,1,1,1,S,,,M00904,,M00904,,,,,,
1-2,1,,172146-72102,,"CYLINDER ASSY, BOOM",,,,,1,1,N,,,,,,,,,,,M20501,,M20501
2,2,,772146-72110,,"TUBE ASSY, BOOM",1,1,1,1,1,1,,,,,,,,,,,,
2-1,2,,172146-72111,,"TUBE ASSY, BOOM",,,,,1,1,N,,,,,,,,,,,M20501,,M20501
3,3,,933125-30000,,"BUSH 45 50",1,1,,,,,,,,,,,,,,,,,,
3-1,3,,172146-72310,,"BUSH 45 50",1,1,1,1,1,1,N,,,M00644,,M00644,,,,,,
3-2,3,,172168-72400,,"BUSH 45X55X40",,,,,1,1,F,2,,,,,,,,,,M20501,,M20501
4,3,,172168-81410,,"SEAL 45X55X4, DUST",,,,,2,2,W,,,,,,,,,,,M20501,,M20501
5,2,,172146-99340,,"KIT, BOOM CYLINDER",1,1,,,,,W,,,MXXX,,MXXX,,,,,,
5-1,2,,172146-99341,,"CYLINDER KIT, BOOM",1,1,1,1,1,1,N,,,M00926,,M00926,,,,,,
6,3,,172146-72910,,"SEAL SET, HEAD",1,1,1,1,1,1,,,,,,,,,,,
12,3,,172146-72920,,"SEAL SET, PISTON",1,1,,,,,,,,,,,,,,,,,
12-1,3,,172146-72921,,"SEAL SET, PISTON",1,1,1,1,1,1,N,,,M00926,,M00926,,,,,,
16,3,,172146-72270,,"LOCK WASHER 85",1,1,1,1,1,1,,,,,,,,,,,
17,3,,22252-000561,,"CIRCLIP   56",1,1,1,1,1,1,,,,,,,,,,,
18,3,,933111-26600,,"RING 55, SPRING",1,1,1,1,1,1,,,,,,,,,,,
19,2,,772146-72190,,"ROD W/BUSH, BOOM",1,1,,,,,,,,,,,,,,,,,
19-1,2,,772146-72191,,"ROD W/BUSH, BOOM",1,1,1,1,1,1,S,3,,M00904,,M00904,,,,,,
19-2,2,,172146-72192,,"ROD W/BUSH, BOOM",,,,,1,1,N,,,,,,,,,,,M20501,,M20501
21,3,,933125-30000,,"BUSH 45 50",1,1,,,,,,,,,,,,,,,,,,
21-1,3,,172146-72310,,"BUSH 45 50",1,1,1,1,1,1,N,,,M00644,,M00644,,,,,,
21-2,3,,172168-72400,,"BUSH 45X55X40",,,,,1,1,F,2,,,,,,,,,,M20501,,M20501
22,3,,172168-81410,,"SEAL 45X55X4, DUST",,,,,2,2,W,,,,,,,,,,,M20501,,M20501
23,2,,172146-72220,,"HEAD 85 40 W/BUSH",1,1,1,1,,,,,,,,,,,,
24,3,,933135-14600,,"BUSH 40 30, ROD",1,1,1,1,1,1,,,,,,,,,,,
25,2,,172141-72250,,"U-NUT M27",1,1,1,1,1,1,,,,,,,,,,,
26,2,,172146-72250,,"PISON 85 C",1,1,,,,,,,,,,,,,,,,,
26-1,2,,172146-72251,,"PISTON 85 27 A",1,1,1,1,1,1,F,1,,M00926,,M00926,,,,,,
27,2,,933127-27102,,"PLUNGER 44A, CUSHION",1,1,,,,,,,,,,,,,,,
27-1,2,,172146-72670,,"PLUNGER 44C,
CUSHION",1,1,1,1,1,1,S,,,M00521,,M00521,,,,,,
28,2,,172137-72730,,"RING 44B, CUSHION",1,1,1,1,1,1,,,,,,,,,,,
29,2,,24761-020000,,"NIPPLE PT1/8,GREASE",2,2,2,2,2,2,,,,,,,,,,,
30,2,,172146-72240,,"SPACER 85 8",1,1,,,,,,,,,,,,,,,,,
30-1,2,,172146-72241,,"PISTON 85 27 B",1,1,1,1,1,1,S,,,M00926,,M00926,,,,,,
31,1,,22157-100000,,"WASHER 10",1,1,,,,,,,,,,,,,,,,,
31-1,1,,933147-03400,,"WASHER, BRAKE ARM",1,1,1,1,1,1,N,,,M00904,,M00904,,,,,,
32,1,,22217-100000,,"SPRING WASHER 10",1,1,1,1,1,1,,,,,,,,,,,
33,1,,26116-100162,,"BOLT M10X 16 PLATED",1,1,1,1,1,1,,,,,,,,,,,
34,1,,933168-14170,,"SPRING 16",2,2,2,2,2,2,W,,,M00904,,M00904,,,,,,
35,1,,172146-72280-1,,"COVER, SLIDE(GLAY:47",1,1,1,1,,,,,,,,,,,,,
35A,1,,172146-72280-3,,"COVER, SLIDE(GREEN85",,,,,1,1,,,,,,,,,,,
```

https://truckmanualshub.com/

Fig. 41 ブームシリンダ BOOM CYLINDER

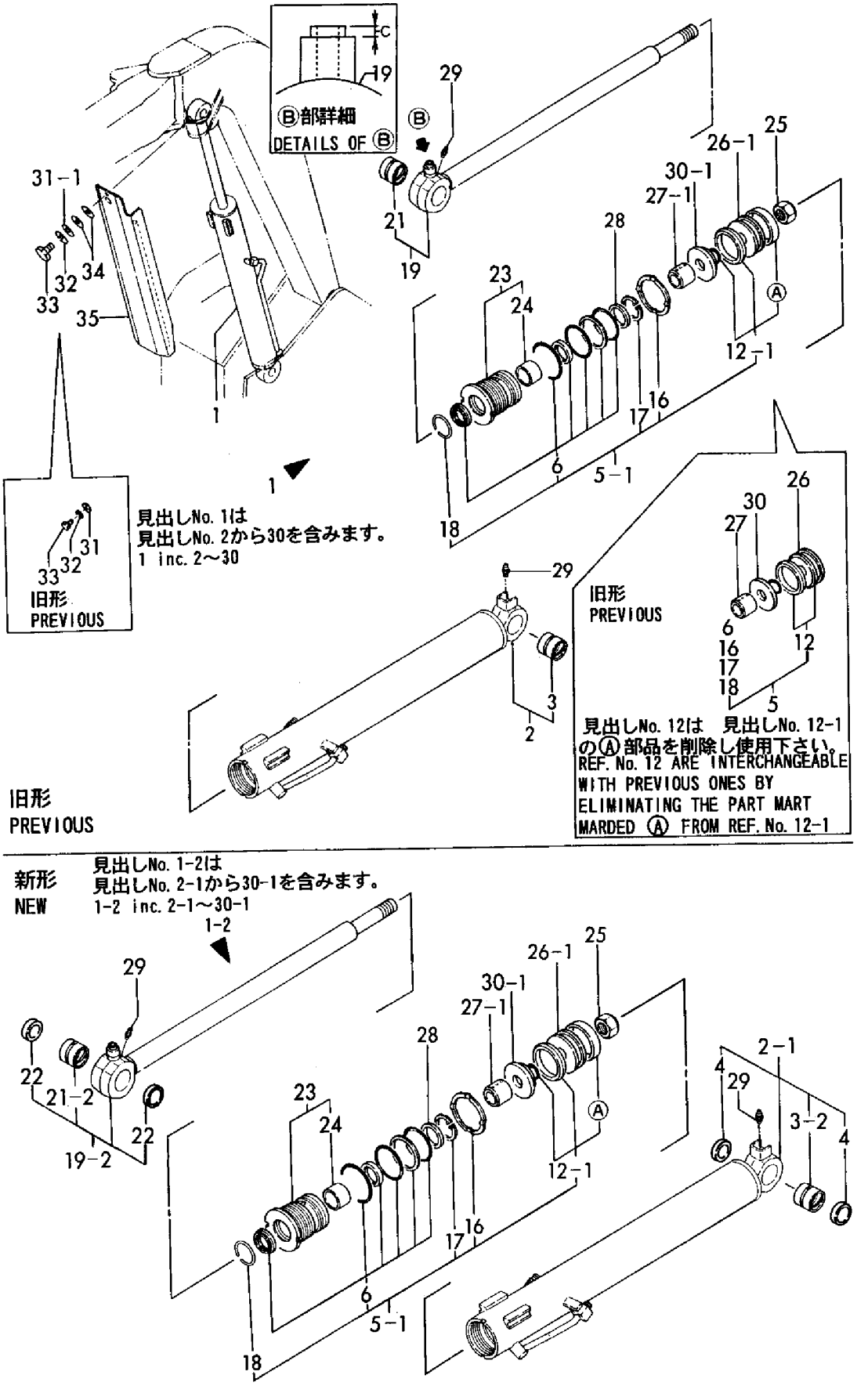

https://truckmanualshub.com/

```
1,1,,172146-72350,,"ARM CYLINDER",1,1,,,,,,,,,,,,,,,
1-1,1,,172146-72351,,"CYLINDER ASSY, ARM",1,1,1,1,1,1,N,,,M00521,,M00521,,,,,,
1-2,1,,172146-72352,,"CYLINDER ASSY, ARM",,,,,1,1,N,,,,,,,,,,,M20501,,M20501
2,2,,172146-99380,,"KIT, ARM CYLINDER",1,1,,,,,W,,,MXXX,,MXXX,,,,,,
2-1,2,,172146-99381,,"CYLINDER KIT, ARM",1,1,1,1,1,1,N,,,M00926,,M00926,,,,,,
3,3,,172142-72900,,"SEAL SET, HEAD",1,1,1,1,1,1,,,,,,,,,,,
10,3,,172142-72910,,"SEAL SET, PISTON",1,1,,,,,,,,,,,,,,,
10-1,3,,172142-72911,,"SEAL SET, PISTON",1,1,1,1,1,1,N,,,M00926,,M00926,,,,,,
14,3,,172142-72260,,"WASHER 80 B",1,1,1,1,1,1,,,,,,,,,,,
15,3,,22252-000561,,"CIRCLIP   56",1,1,1,1,1,1,,,,,,,,,,,
16,3,,933111-26600,,"RING 55, SPRING",1,1,1,1,1,1,,,,,,,,,,,
17,2,,172142-72210,,"HEAD 80 40 C W/BUSH",1,1,1,1,1,1,,,,,,,,,,,
18,3,,933135-14600,,"BUSH 40 30, ROD",1,1,1,1,1,1,,,,,,,,,,,
19,2,,172142-72230,,"SPACER 80 8 A",1,1,,,,,,,,,,,,,,,
19-1,2,,172142-72231,,"PISTON 80 27 B",1,1,1,1,1,1,S,,,M00926,,M00926,,,,,,
19-2,2,,172142-72232,,"PISTON 80 27 B",,,,,1,1,N,,,,,,,,,,,M20872,,M20872
20,2,,172142-72240,,"PISTON 80 E",1,1,,,,,,,,,,,,,,,
20-1,2,,172142-72241,,"PISTON 80 27 A",1,1,1,1,1,1,F,1,,M00926,,M00926,,,,,,
20-2,2,,172142-72242,,"PISTON 80 27 A",,,,,1,1,N,,,,,,,,,,,M20872,,M20872
21,2,,172141-72250,,"U-NUT M27",1,1,1,1,1,1,,,,,,,,,,,
22,2,,772146-72360,,"CYL. W/BUSH, ARM",1,1,,,,,,,,,,,,,,,
22-1,2,,772146-72361,,"CYL. W/BUSH, ARM",1,1,1,1,1,1,S,,,M00521,,M00521,,,,,,
22-2,2,,172146-72362,,"CYL. W/BUSH, ARM",,,,,1,1,N,,,,,,,,,,,M20501,,M20501
24,3,,172141-72260,,"BUSH 38 50",1,1,,,,,,,,,,,,,,,
24-1,3,,933125-12701,,"BUSH 38 50A",1,1,1,1,1,1,R,,,M00725,,M00725,,,,,,
24-2,3,,172171-72150,,"BUSH 38X50X40",,,,,1,1,F,2,,,,,,,,,,M20501,,M20501
25,3,,172168-81720,,"SEAL 38X50X4,DUST",,,,,2,2,W,M,,,,,,,,,,M20501,,M20501
25-1,3,,172168-81270,,"SEAL,DUST 38X50X4",2,2,2,2,2,2,,,,,,,,,,,
26,2,,772146-72400,,"ROD ASSY, PISTON",1,1,1,1,1,1,,,,,,,,,,,
26-1,2,,172146-72401,,"ROD ASSY, ARM",,,,,1,1,N,,,,,,,,,,,M20501,,M20501
28,3,,172141-72260,,"BUSH 38 50",1,1,,,,,,,,,,,,,,,
28-1,3,,933125-12701,,"BUSH 38 50A",1,1,1,1,1,1,R,,,M00725,,M00725,,,,,,
28-2,3,,172171-72150,,"BUSH 38X50X40",,,,,1,1,F,2,,,,,,,,,,M20501,,M20501
29,3,,172168-81270,,"SEAL,DUST 38X50X4",,,,,2,2,W,,,,,,,,,,,M20501,,M20501
30,2,,172137-72730,,"RING 44B, CUSHION",1,1,1,1,1,1,,,,,,,,,,,
31,2,,24761-040000,,"NIPPLE B,GREASE",2,2,2,2,2,2,,,,,,,,,,,
32,2,,933127-27102,,"PLUNGER 44A, CUSHION",1,1,1,1,1,1,,,,,,,,,,,
```

https://truckmanualshub.com/

Fig. 42 アームシリンダ ARM CYLINDER

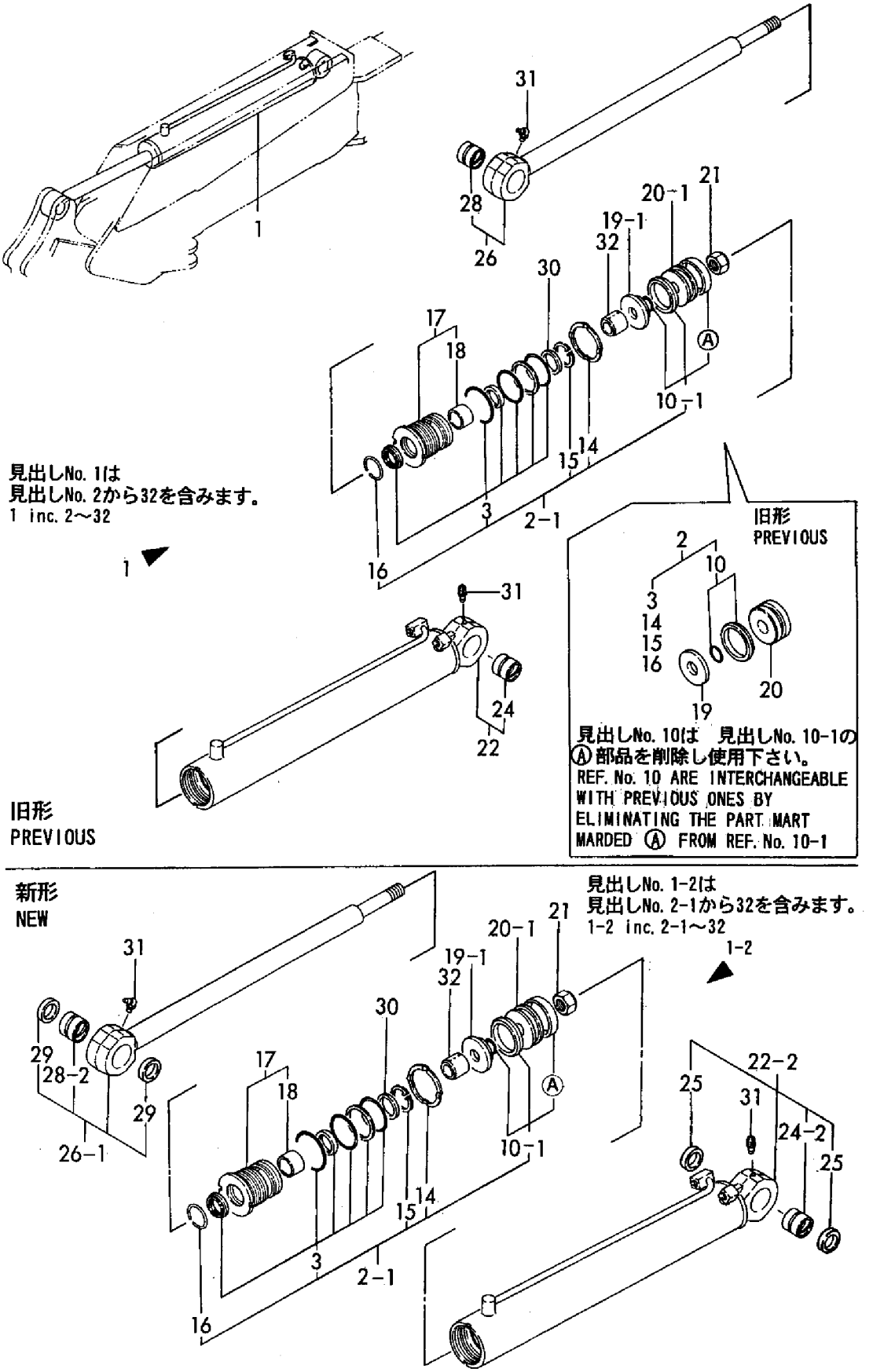

https://truckmanualshub.com/

```
1,1,,172142-72430-2,,"BUCKET CYL.(WHITE:40",1,1,1,1,1,1,,,,,,,,,,,
1-1,1,,172142-72431-1,,"CYLINDER,BUCKET(GREE",,,,,1,1,N,,,,,,,,,,M20501,,M20501
2,2,,172142-99430,,"KIT, BUCKET CYLINDER",1,1,,,,,W,,,MXXX,,MXXX,,,,,,
2-1,2,,172142-99431,,"CYLINDER KIT, BUCKET",1,1,1,1,1,1,N,,,M00926,,M00926,,,,,,
3,2,,172142-72920,,"SEAL SET, HEAD",1,1,1,1,1,1,,,,,,,,,,,
8,3,,172142-72550,,GASKET,1,1,,,,,,,,,,,,,,,
8-1,3,,172148-72940,,"SEAL SET, PISTON",1,1,1,1,1,1,N,,,M00926,,M00926,,,,,,
11,3,,172142-72560,,"WASHER 65, LOCK",1,1,1,1,1,1,,,,,,,,,,,
12,3,,933111-26600,,"RING 55, SPRING",1,1,1,1,1,1,,,,,,,,,,,
13,2,,772142-72440-2,,"BUCKET TUBE(WHITE:40",1,1,1,1,1,1,,,,,,,,,,,
13-1,2,,172142-72441-1,,"TUBE,BUCKET (GREEN)",,,,,1,1,N,,,,,,,,,,M20501,,M20501
15,3,,172141-72260,,"BUSH 38 50",1,1,,,,,,,,,,,,,,,
15-1,3,,933125-12701,,"BUSH 38 50A",1,1,1,1,1,1,R,,,M00725,,M00725,,,,,,
15-2,3,,172168-72240,,"BUSH 38X50X40",,,,,1,1,F,1,,,,,,,,,M20501,,M20501
16,3,,172168-81270,,"SEAL,DUST 38X50X4",,,,,2,2,W,,,,,,,,,,M20501,,M20501
17,2,,772142-72500,,"ROD W/BUSH, BUCKET",1,1,1,1,1,1,,,,,,,,,,,
17-1,2,,172142-72501,,"ROD, BUCKET",,,,,1,1,N,,,,,,,,,,M20501,,M20501
19,3,,172141-72260,,"BUSH 38 50",1,1,,,,,,,,,,,,,,,
19-1,3,,933125-12701,,"BUSH 38 50A",1,1,1,1,1,1,R,,,M00725,,M00725,,,,,,
19-2,3,,172168-72240,,"BUSH 38X50X40",,,,,1,1,F,1,,,,,,,,,M20501,,M20501
20,3,,172168-81270,,"SEAL,DUST 38X50X4",,,,,2,2,W,,,,,,,,,,M20501,,M20501
21,2,,172142-72510,,"HEAD 65 40 W/BUSH",1,1,1,1,1,1,,,,,,,,,,,
22,3,,933135-14600,,"BUSH 40 30, ROD",1,1,1,1,1,1,,,,,,,,,,,
23,2,,24761-040000,,"NIPPLE B,GREASE",2,2,2,2,2,2,,,,,,,,,,,
24,2,,172141-72250,,"U-NUT M27",1,1,1,1,1,1,,,,,,,,,,,
25,2,,172142-72540,,"PISTON 65",1,1,,,,,,,,,,,,,,,
25-1,2,,172148-72790,,"PISTON 65",1,1,1,1,1,1,S,,,M00926,,M00926,,,,,,
26,2,,172142-72530,,"SPACER 65 8",1,1,,,,,Z,,,M00926,,M00926,,,,,,
```

https://truckmanualshub.com/

Fig. 43 バケットシリンダ BUCKET CYLINDER

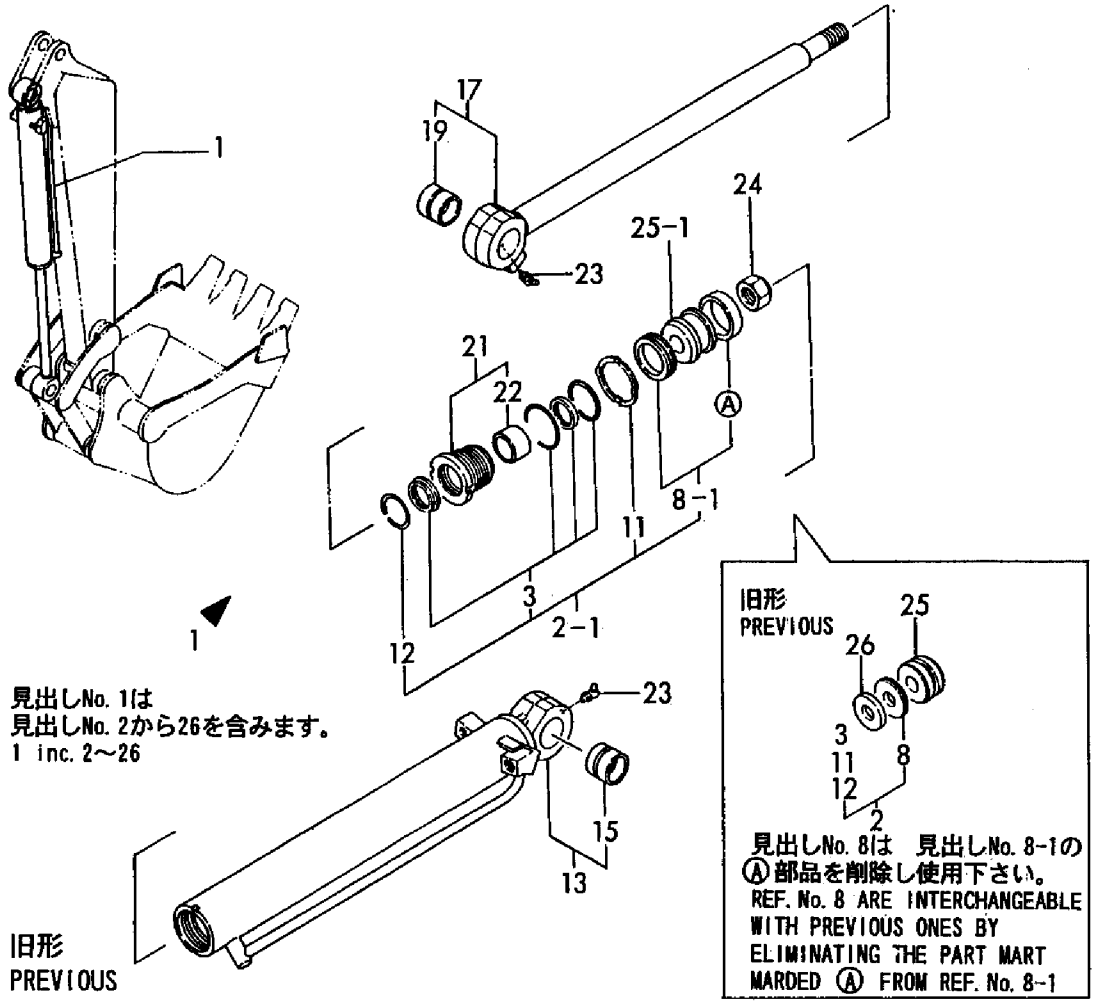

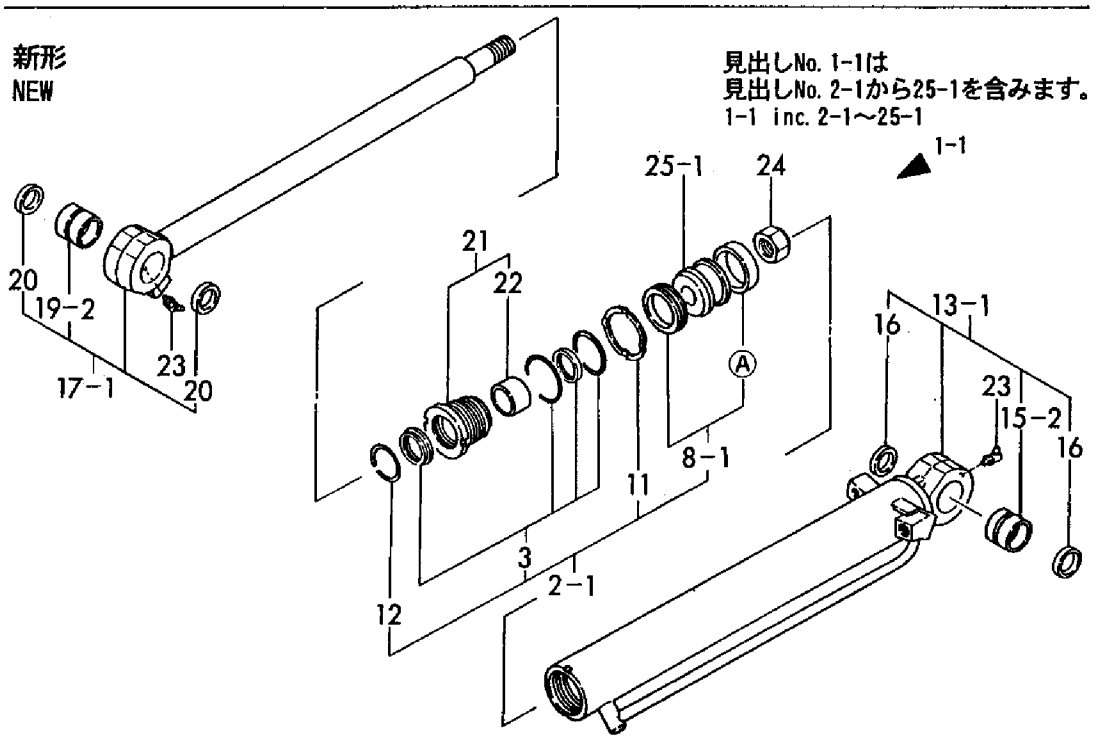

https://truckmanualshub.com/

```
1,1,,172146-72450,,"OFFSET CYLINDER",1,1,1,1,1,1,,,,,,,,,,,
1-1,1,,172146-72451,,"CYLINDER ASSY,OFFSET",,,,,1,1,N,,,,,,,,,,,M20501,,M20501
2,2,,172146-72930,,"SEAL SET, HEAD",1,1,1,1,1,1,,,,,,,,,,,
3,2,,172141-72250,,"U-NUT M27",1,1,1,1,1,1,,,,,,,,,,,
4,2,,172143-72400,,"HEAD 70 40",1,1,1,1,1,1,,,,,,,,,,,
5,3,,933135-14600,,"BUSH 40 30, ROD",1,1,1,1,1,1,,,,,,,,,,,
6,2,,172141-72420,,"WASHER 70, LOCK",1,1,1,1,1,1,,,,,,,,,,,
7,2,,772146-72460,,"TUBE W/BUSH, OFFSET",1,1,1,1,1,1,,,,,,,,,,,
7-1,2,,172146-72461,,"TUBE W/BUSH, OFFSET",,,,,1,1,N,,,,,,,,,,,M20501,,M20501
8,3,,172141-72260,,"BUSH 38 50",1,1,,,,,,,,,,,,,,,
8-1,3,,933125-12701,,"BUSH 38 50A",1,1,1,1,1,1,R,,,M00725,,M00725,,,,,
8-2,3,,172168-72240,,"BUSH 38X50X40",,,,,1,1,F,2,,,,,,,,,M20501,,M20501
9,3,,172168-81270,,"SEAL,DUST 38X50X4",,,,,2,2,W,,,,,,,,,,M20501,,M20501
10,2,,772146-72500,,"ROD W/BUSH, OFFSET",1,1,1,1,1,1,,,,,,,,,,,
10-1,2,,172146-72501,,"ROD W/BUSH, OFFSET",,,,,1,1,N,,,,,,,,,,,M20501,,M20501
12,3,,172141-72260,,"BUSH 38 50",1,1,,,,,,,,M00725,,M00725,,,,,
12-2,3,,172168-72240,,"BUSH 38X50X40",,,,,1,1,F,2,,,,,,,,,M20501,,M20501
13,3,,172168-81270,,"SEAL,DUST 38X50X4",,,,,2,2,W,,,,,,,,,,M20501,,M20501
14,2,,24761-040000,,"NIPPLE B,GREASE",2,2,2,2,2,2,,,,,,,,,,,
15,2,,933111-26600,,"RING 55, SPRING",1,1,1,1,1,1,,,,,,,,,,,
16,2,,172141-73020,,"PISTON 70",1,1,,,,,,,,,,,,,,,
16-1,2,,172141-73021,,"PISTON 70 27 A",1,1,1,1,1,1,F,1,,M00926,,M00926,,,,,
17,2,,172141-73040,,"SPACER 70 8 B",1,1,,,,,,,,,,,,,,,
17-1,2,,172141-73041,,"PISTON 70 27 C",1,1,1,1,1,1,S,,,M00926,,M00926,,,,,
18,2,,172141-72980,,"GASKET 70 55 10.4",1,1,,,,,,,,,,,,,,,
18-1,2,,172143-72010,,"SEAL SET, PISTON",1,1,1,1,1,1,N,,,M00926,,M00926,,,,,
```

https://truckmanualshub.com/

Fig. 44 オフセットシリンダ OFFSET CYLINDER

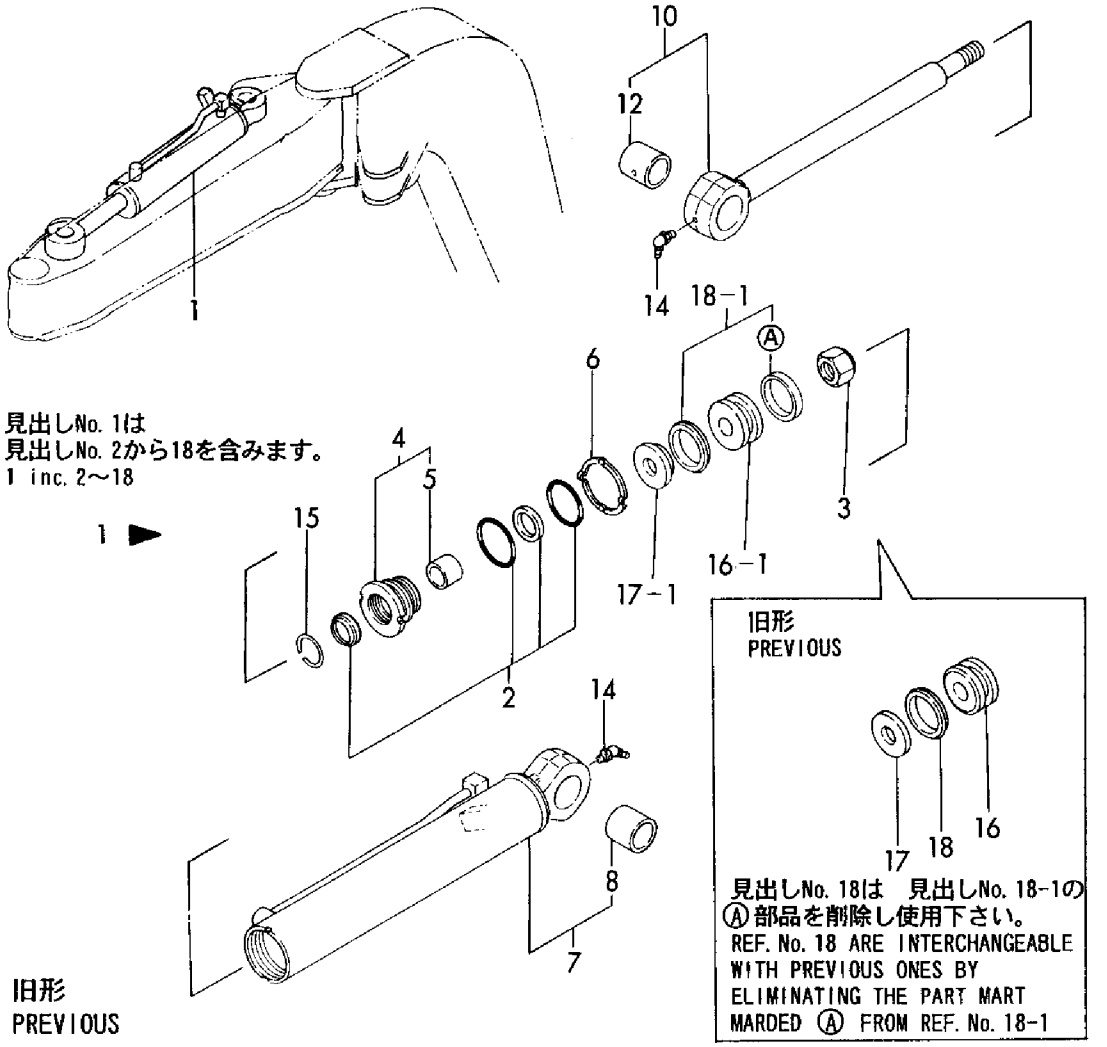

新形
NEW

見出しNo. 1-1は
見出しNo. 2から18-1を含みます。
1-1 inc. 2～18-1

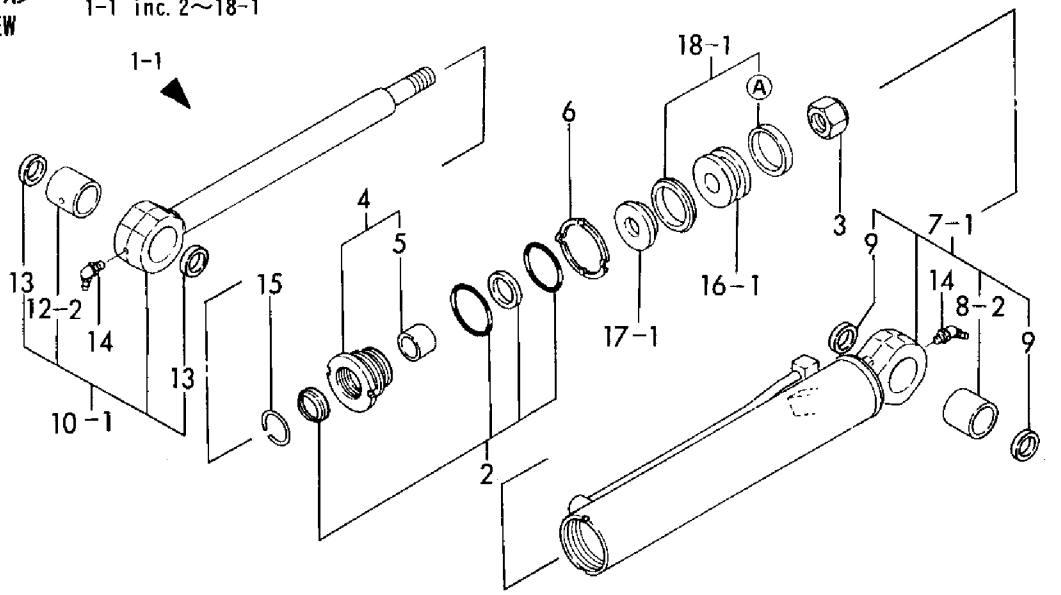

https://truckmanualshub.com/

```
1,1,,172146-72550,,"CYLINDER ASSY",1,1,1,1,1,1,,,,,,,,,,,
1-1,1,,172146-72551,,"CYLINDER ASSY, BLADE",,,,,1,1,N,,,,,,,,,,,M20501,,M20501
2,2,,172142-72930,,"SEAL SET, HEAD",1,1,1,1,1,1,,,,,,,,,,,
3,2,,172142-72240,,"PISTON 80 E",1,1,,,,,,,,,,,,,,,,
3-1,2,,172142-72241,,"PISTON 80 27 A",1,1,1,1,1,1,F,1,,M00926,,M00926,,,,,,
3-2,2,,172175-72480,,"PISTON 80",,,,,1,1,N,,,,,,,,,,,M20703,,M20703
4,2,,172142-72250,,"PACKING 80 65 10.4",1,1,,,,,,,,,,,,,,,,
4-1,2,,172142-72950,,"SEAL SET, PISTON",1,1,1,1,1,1,W,,,M00926,,M00926,,,,,,
7,2,,772146-72560,,"TUBE ASSY, BLADE",1,1,1,1,1,1,,,,,,,,,,,
7-1,2,,172146-72561,,"TUBE ASSY, BLADE",,,,,1,1,N,,,,,,,,,,,M20501,,M20501
8,3,,172142-72850,,"BUSH 40 50 C",1,1,1,1,1,1,,,,,,,,,,,
8-1,3,,172168-72410,,"BUSH 40X50X40",,,,,1,1,F,2,,,,,,,,,,M20501,,M20501
9,3,,172165-81750,,"SEAL 40X50X5, DUST",,,,,2,2,W,,,,,,,,,,,M20501,,M20501
10,2,,772142-72620,,"ROD W/BUSH, BLADE",1,1,1,1,1,1,,,,,,,,,,,
10-1,2,,172142-72621,,"ROD, BLADE",,,,,1,1,N,,,,,,,,,,,M20501,,M20501
11,3,,172142-72850,,"BUSH 40 50 C",1,1,1,1,1,1,,,,,,,,,,,
11-1,3,,172168-72410,,"BUSH 40X50X40",,,,,1,1,F,2,,,,,,,,,,M20501,,M20501
12,3,,172165-81750,,"SEAL 40X50X5, DUST",,,,,2,2,W,,,,,,,,,,,M20501,,M20501
13,2,,172142-72660,,"SPACER 80 8 B",1,1,,,,,,,,,,,,,,,,
13-1,2,,172142-72661,,"PISTON 80 27 C",1,1,1,1,1,1,S,,,M00926,,M00926,,,,,,
13-2,2,,172142-72661,,"PISTON 80 27 C",,,,,1,1,Z,,,,,,,,,,,M20703,,M20703
14,2,,933111-26600,,"RING 55, SPRING",1,1,1,1,1,1,,,,,,,,,,,
15,2,,172141-72250,,"U-NUT M27",1,1,1,1,1,1,,,,,,,,,,,
16,2,,172142-72260,,"WASHER 80 B",1,1,1,1,1,1,,,,,,,,,,,
17,2,,172142-72640,,"HEAD 80 40 W/BUSH",1,1,1,1,1,1,,,,,,,,,,,
18,3,,933135-14600,,"BUSH 40 30, ROD",1,1,1,1,1,1,,,,,,,,,,,
19,1,,172146-72580,,"PLATE, GUARD",1,1,1,1,1,1,,,,,,,,,,,
20,1,,26013-100162,,"BOLT M10X 16",4,4,4,4,4,4,,,,,,,,,,,
```

https://truckmanualshub.com/

Fig. 45 ブレードシリンダ BLADE CYLINDER

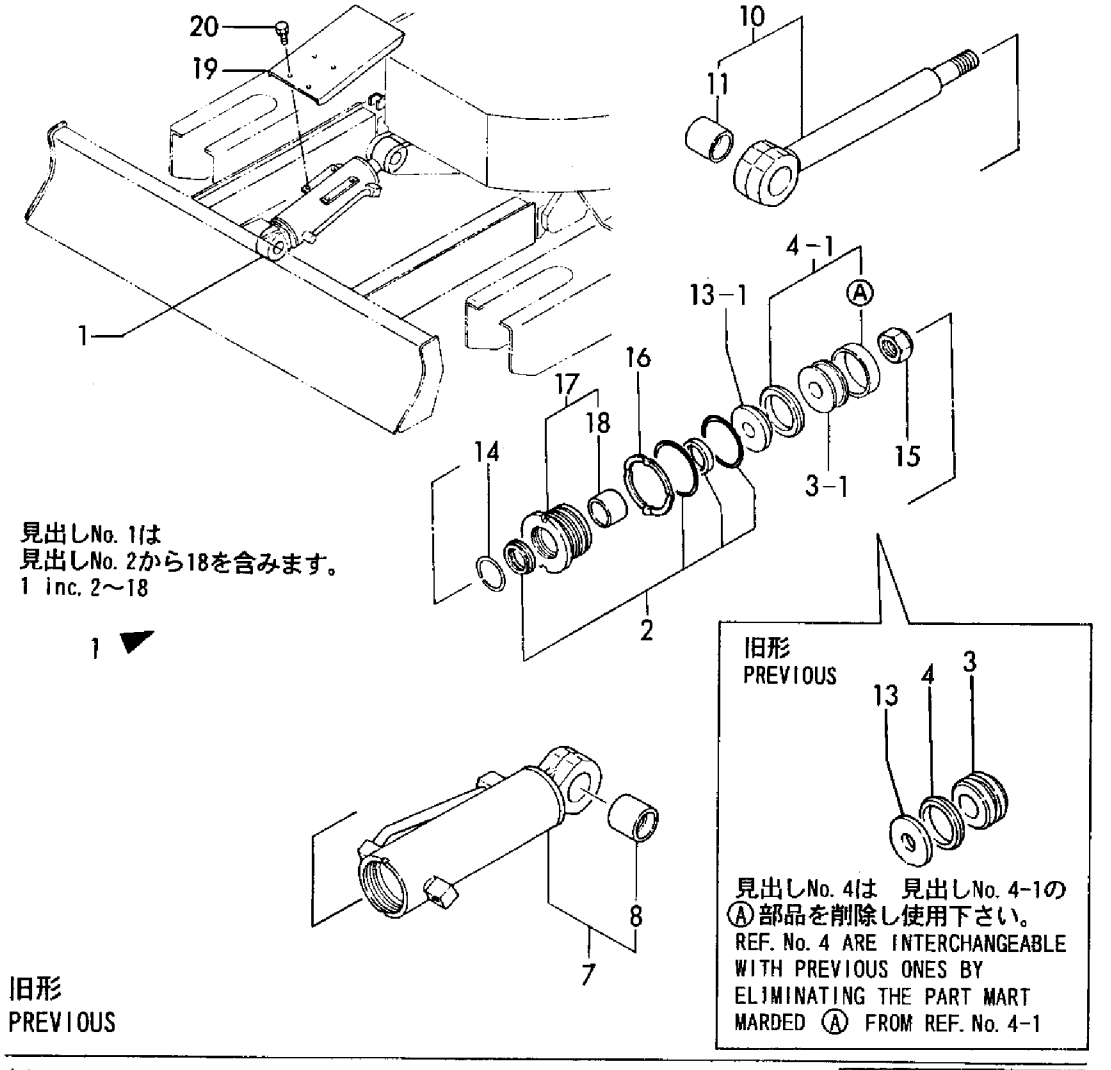

新形 NEW

見出しNo. 1-1は
見出しNo. 2から18を含みます。
1-1 inc. 2～18

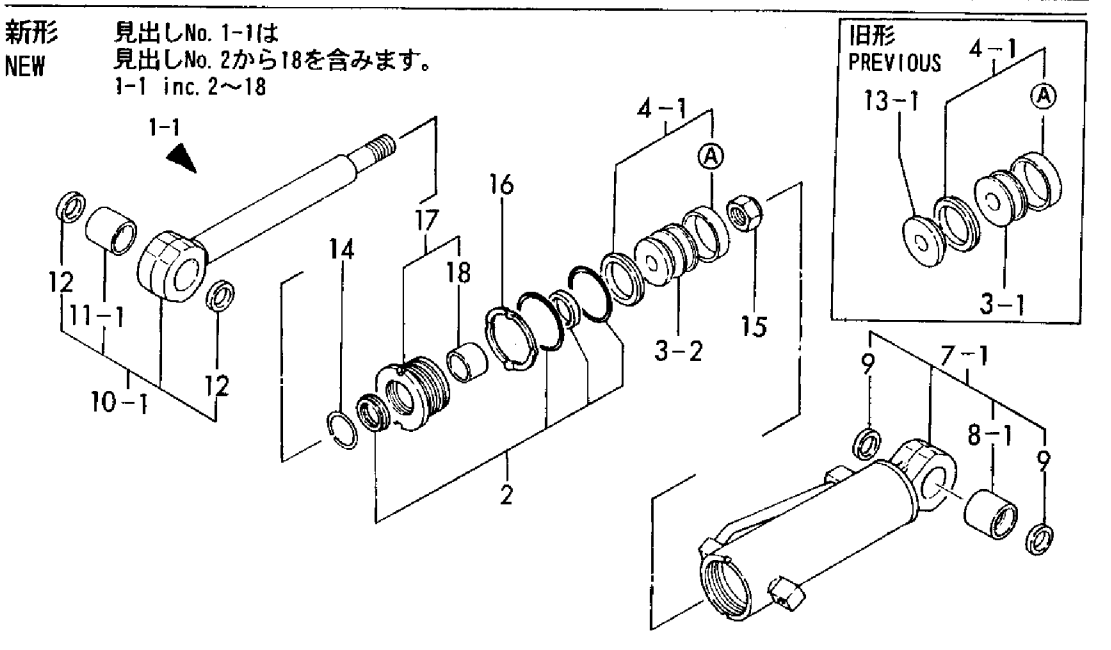

https://truckmanualshub.com/

```
1,1,,172142-73300,,"MOTOR ASSY, DRIVING",2,2,2,2,,,,,,,,,,,,,
2,2,,172141-70030,,"BEARING, ANGULAR",2,2,2,2,,,,,,,,,,,,,
3,2,,172141-70040,,"NUT, RING",2,2,2,2,,,,,,,,,,,,,
4,2,,172141-70060,,"GEAR(B), PLANETARY",8,8,8,8,,,,,,,,,,,,,
5,2,,172141-70070,,"CAGE & ROLLER",8,8,8,8,,,,,,,,,,,,,
6,2,,172141-70080,,COLLAR,8,8,8,8,,,,,,,,,,,,,
7,2,,172141-70090,,"WASHER, THRUST",8,8,8,8,,,,,,,,,,,,,
8,2,,172141-70100,,"PLATE, THRUST",2,2,2,2,,,,,,,,,,,,,
9,2,,172141-70110,,SCREW,8,8,8,8,,,,,,,,,,,,,
10,2,,172141-70120,,"GEAR, SUN",2,2,2,2,,,,,,,,,,,,,
11,2,,172141-70130,,HOLDER,2,2,2,2,,,,,,,,,,,,,
12,2,,172141-70140,,"GEAR(A), PLANETARY",6,6,6,6,,,,,,,,,,,,,
13,2,,172141-70150,,"CAGE & ROLLER",6,6,6,6,,,,,,,,,,,,,
14,2,,172141-70160,,"INNER LACE",6,6,6,6,,,,,,,,,,,,,
15,2,,172141-70170,,"GEAR, DRIVE",2,2,2,2,,,,,,,,,,,,,
16,2,,172141-70180,,"PLATE(T1.8), THRUST",2,2,2,2,,,,1,,,,,,,,,
17,2,,172141-70190,,"PLATE(T2.3), THRUST",2,2,2,2,,,,1,,,,,,,,,
18,2,,172141-70200,,"PLATE(T2.8), THRUST",2,2,2,2,,,,1,,,,,,,,,
19,2,,172141-70210,,COVER,2,2,2,2,,,,,,,,,,,,,
20,2,,172141-70230,,WIRE,2,2,2,2,,,,,,,,,,,,,
21,2,,172122-73430,,PLUG,4,4,4,4,,,,,,,,,,,,,
22,2,,22242-000350,,"CIRCLIP   35",2,2,2,2,,,,,,,,,,,,,
23,2,,22351-050016,,"SPRING PIN 5X16",6,6,6,6,,,,,,,,,,,,,
24,2,,23871-020000,,"PLUG PT1/4,SCREW",4,4,4,4,,,,,,,,,,,,,
25,2,,23871-030000,,"PLUG PT3/8,SCREW",4,4,4,4,,,,,,,,,,,,,
26,2,,24190-050001,,"BALL 5/32",262,262,262,262,,,,,,,,,,,,,
27,2,,172141-70240,,SHAFT,2,2,2,2,,,,,,,,,,,,,
27-1,2,,172142-73590,,"SHAFT W/OIL
SEAL",2,2,2,2,,,N,,,*1990.10,,*1990.10,,*1990.10,,*1990.10,,
28,2,,172141-70270,,PIN,2,2,2,2,,,,,,,,,,,,,
29,2,,172141-70290,,"HOLDER, SPRING",4,4,4,4,,,,,,,,,,,,,
30,2,,172141-70300,,SPRING,2,2,2,2,,,,,,,,,,,,,
31,2,,172141-70310,,"SNAP RING",2,2,2,2,,,,,,,,,,,,,
32,2,,172141-70320,,PIN,6,6,6,6,,,,,,,,,,,,,
33,2,,172141-70330,,"HOLDER, RETAINER",2,2,2,2,,,,,,,,,,,,,
34,2,,172141-70360,,"PLATE, VALVE",2,2,2,2,,,,,,,,,,,,,
35,2,,172141-70400,,PLUNGER,2,2,2,2,,,,,,,,,,,,,
36,2,,172141-70410,,"VALVE, CHECK",4,4,4,4,,,,,,,,,,,,,
37,2,,172141-70420,,SPRING,4,4,4,4,,,,,,,,,,,,,
38,2,,172141-70430,,PLUG,4,4,4,4,,,,,,,,,,,,,
39,2,,172141-70450,,"SEAT, SPRING",4,4,4,4,,,,,,,,,,,,,
40,2,,172141-70460,,SPRING,4,4,4,4,,,,,,,,,,,,,
41,2,,172141-70470,,CAP,4,4,4,4,,,,,,,,,,,,,
42,2,,172141-70480,,PIN,2,2,2,2,,,,,,,,,,,,,
43,2,,172141-70490,,PIN,4,4,4,4,,,,,,,,,,,,,
44,2,,172142-73600,,PLATE,2,2,2,2,,,,,,,,,,,,,
45,2,,172142-73610,,"PLATE, RETAINER",2,2,2,2,,,,,,,,,,,,,
46,2,,172141-70500,,"SEAL ASSY",2,2,2,2,,,,,,,,,,,,,
47,3,,172141-70510,,"SEAL SET, REDUCTION",2,2,2,2,,,,,,,,,,,,,
48,3,,172141-70520,,"SEAL SET, MOTOR",2,2,2,2,,,,,,,,,,,,,
49,3,,172141-70530,,"SEAL SET, BASE PLATE",2,2,2,2,,,,,,,,,,,,,
50,2,,172141-70540,,"CYLINDER BLOCK S/A",2,2,2,2,,,,,,,,,,,,,
51,2,,23871-020000,,"PLUG PT1/4,SCREW",8,8,8,8,,,,,,,,,,,,,
52,2,,24101-060024,,"BALL BEARING",2,2,2,2,,,,,,,,,,,,,
53,2,,24101-060044,,"BALL BEARING 6004",2,2,2,2,,,,,,,,,,,,,
54,2,,26450-080202,,"BOLT M 8X 20",12,12,12,12,,,,,,,,,,,,,
55,1,,26013-120302,,"BOLT W/WASHER M12X30",18,18,18,18,,,,,,,,,,,,,
```

https://truckmanualshub.com/

Fig. 46 走行モータ(1速) DRIVING MOTOR(SINGLE SPEED)

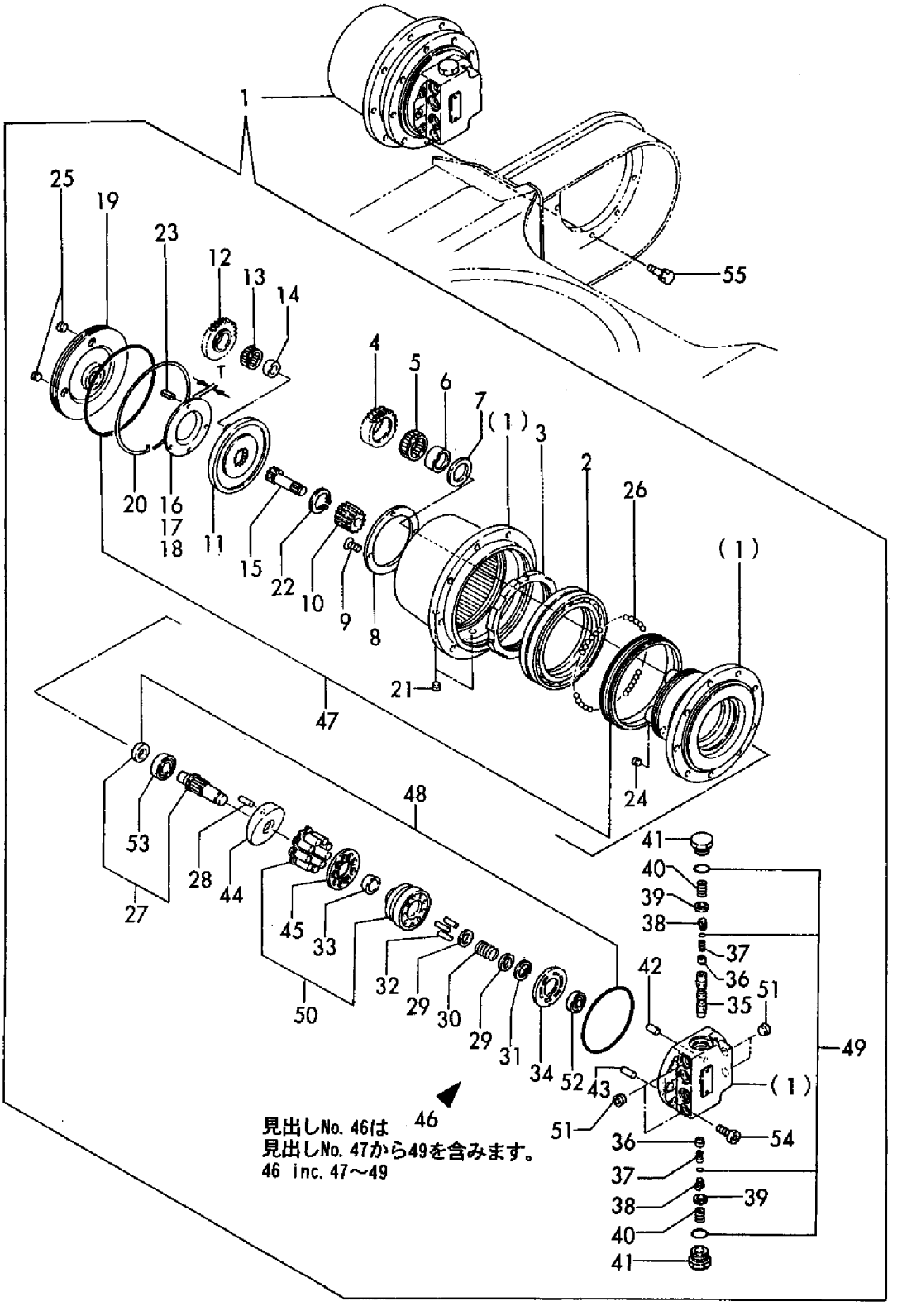

https://truckmanualshub.com/

```
1,1,,172168-73300,,"MOTOR ASSY,DRIVING",,,,,2,2,,,,,,,,,,,
2,2,,172148-70240,,ORIFICE,,,,,4,4,,,,,,,,,,,
3,2,,172148-70250,,SPOOL,,,,,2,2,,,,,,,,,,,
4,2,,172141-70290,,"HOLDER, SPRING",,,,,2,2,,,,,,,,,,,
5,2,,172148-70301,,PLUG,,,,,4,4,,,,,,,,,,,
6,2,,172168-71790,,"SEAL KIT, BLOCK",,,,,2,2,,,,,,,,,,,
15,2,,172141-70310,,"SNAP RING",,,,,2,2,,,,,,,,,,,
16,2,,172122-70410,,PIN,,,,,4,4,,,,,,,,,,,
17,2,,172147-70440,,"SEAT, SPRING",,,,,4,4,,,,,,,,,,,
18,2,,172147-70450,,SPRING,,,,,4,4,,,,,,,,,,,
19,2,,172147-70460,,CAP,,,,,4,4,,,,,,,,,,,
20,2,,172141-70480,,PIN,,,,,2,2,,,,,,,,,,,
21,2,,172147-70490,,SPRING,,,,,2,2,,,,,,,,,,,
22,2,,172147-70500,,PLUG,,,,,4,4,,,,,,,,,,,
23,2,,172147-70510,,PLUG,,,,,6,6,,,,,,,,,,,
24,2,,172122-70540,,"BOLT, SOCKET",,,,,12,12,,,,,,,,,,,
25,2,,172168-71780,,"SEAL SET, MOTOR",,,,,2,2,,,,,,,,,,,
32,2,,172168-71800,,REDUCTION,,,,,2,2,,,,,,,,,,,
33,3,,172141-70030,,"BEARING, ANGULAR",,,,,2,2,,,,,,,,,,,
34,3,,172141-70040,,"NUT, RING",,,,,2,2,,,,,,,,,,,
35,3,,172141-70060,,"GEAR(B), PLANETARY",,,,,8,8,,,,,,,,,,,
36,3,,172141-70070,,"CAGE & ROLLER",,,,,8,8,,,,,,,,,,,
37,3,,172141-70080,,COLLAR,,,,,8,8,,,,,,,,,,,
38,3,,172141-70090,,"WASHER, THRUST",,,,,8,8,,,,,,,,,,,
39,3,,172141-70100,,"PLATE, THRUST",,,,,2,2,,,,,,,,,,,
40,3,,172141-70110,,SCREW,,,,,8,8,,,,,,,,,,,
41,3,,172141-70120,,"GEAR, SUN",,,,,2,2,,,,,,,,,,,
42,3,,172141-70150,,"CAGE & ROLLER",,,,,6,6,,,,,,,,,,,
43,3,,172141-70160,,"INNER LACE",,,,,6,6,,,,,,,,,,,
44,3,,172141-70180,,"PLATE(T1.8), THRUST",,,,,2,2,,1,,,,,,,,,
45,3,,172141-70190,,"PLATE(T2.3), THRUST",,,,,2,2,,1,,,,,,,,,
46,3,,172141-70200,,"PLATE(T2.8), THRUST",,,,,2,2,,1,,,,,,,,,
47,3,,172147-70220,,PLUG,,,,,4,4,,,,,,,,,,,
48,3,,172141-70230,,WIRE,,,,,2,2,,,,,,,,,,,
49,3,,172122-70350,,BALL,,,,,264,264,,,,,,,,,,,
50,3,,172168-71770,,"SEAL SET, REDUCTION",,,,,2,2,,,,,,,,,,,
53,3,,172168-71810,,HOLDER,,,,,2,2,,,,,,,,,,,
54,3,,172168-71820,,"GEAR(A), PLANETARY",,,,,6,6,,,,,,,,,,,
55,3,,172168-71830,,"GEAR, DRIVE",,,,,2,2,,,,,,,,,,,
56,3,,172168-71840,,COVER,,,,,2,2,,,,,,,,,,,
57,3,,172122-73430,,PLUG,,,,,4,4,,,,,,,,,,,
58,3,,22351-050016,,"SPRING PIN 5X16",,,,,6,6,,,,,,,,,,,
59,3,,22242-000350,,"CIRCLIP   35",,,,,2,2,,,,,,,,,,,
60,3,,23871-020000,,"PLUG PT1/4,SCREW",,,,,4,4,,,,,,,,,,,
61,3,,23871-030000,,"PLUG PT3/8,SCREW",,,,,6,6,,,,,,,,,,,
62,2,,172168-71850,,SHAFT,,,,,2,2,,,,,,,,,,,
63,2,,172168-71860,,PLATE,,,,,2,2,,,,,,,,,,,
64,2,,172168-71870,,BALL,,,,,2,2,,,,,,,,,,,
65,2,,172168-71750,,"BLOCK ASSY, CYLINDER",,,,,2,2,,,,,,,,,,,
67,2,,172168-71900,,"SEAT,SPRING",,,,,2,2,,,,,,,,,,,
68,2,,172168-71910,,PIN,,,,,6,6,,,,,,,,,,,
69,2,,172168-71920,,"HOLDER,RETAINER",,,,,2,2,,,,,,,,,,,
70,2,,172168-71930,,"PLATE, RETAINER",,,,,2,2,,,,,,,,,,,
71,2,,172168-71890,,SPRING,,,,,2,2,,,,,,,,,,,
72,2,,172168-71950,,SPRING,,,,,4,4,,,,,,,,,,,
73,2,,172168-71960,,PLATE,,,,,2,2,,,,,,,,,,,
74,2,,172168-71970,,"PLUNGER W/BARREL",,,,,2,2,,,,,,,,,,,
75,3,,172147-70420,,PLUNGER,,,,,2,2,,,,,,,,,,,
76,3,,172122-70430,,"VALVE, CHECK",,,,,4,4,,,,,,,,,,,
77,3,,172147-70430,,PLUG,,,,,4,4,,,,,,,,,,,
78,3,,172122-70440,,SPRING,,,,,4,4,,,,,,,,,,,
79,2,,172168-71980,,"BLOCK ASSY.,RELIEF",,,,,2,2,,,,,,,,,,,
80,3,,172148-70350,,BOLT,,,,,8,8,,,,,,,,,,,
```

https://truckmanualshub.com/

```
81,3,,172162-70690,,"VALVE ASSY, RELIEF",,,,,4,4,,,,,,,,,,,
82,4,,172153-70140,,"GUIDE, SPRING",,,,,4,4,,,,,,,,,,,
83,4,,172162-70750,,PISTON,,,,,4,4,,,,,,,,,,,
84,4,,24315-000090,,"O-RING 1B P- 9.0",,,,,4,4,,,,,,,,,,,
85,3,,172168-71990,,"VALVE BODY",,,,,2,2,,,,,,,,,,,
86,3,,23871-020000,,"PLUG PT1/4,SCREW",,,,,4,4,,,,,,,,,,,
87,2,,172638-73330,,PLATE,,,,,2,2,,,,,,,,,,,
88,2,,172312-74790,,ORIFICE,,,,,8,8,,,,,,,,,,,
89,2,,24101-060024,,"BALL BEARING",,,,,2,2,,,,,,,,,,,
90,2,,24101-060040,,"BALL BEARING",,,,,2,2,,,,,,,,,,,
91,1,,26013-120302,,"BOLT W/WASHER M12X30",,,,,18,18,,,,,,,,,,,
```

https://truckmanualshub.com/

Fig. 47 走行モータ(2速) DRIVING MOTOR(DOUBLE SPEED)

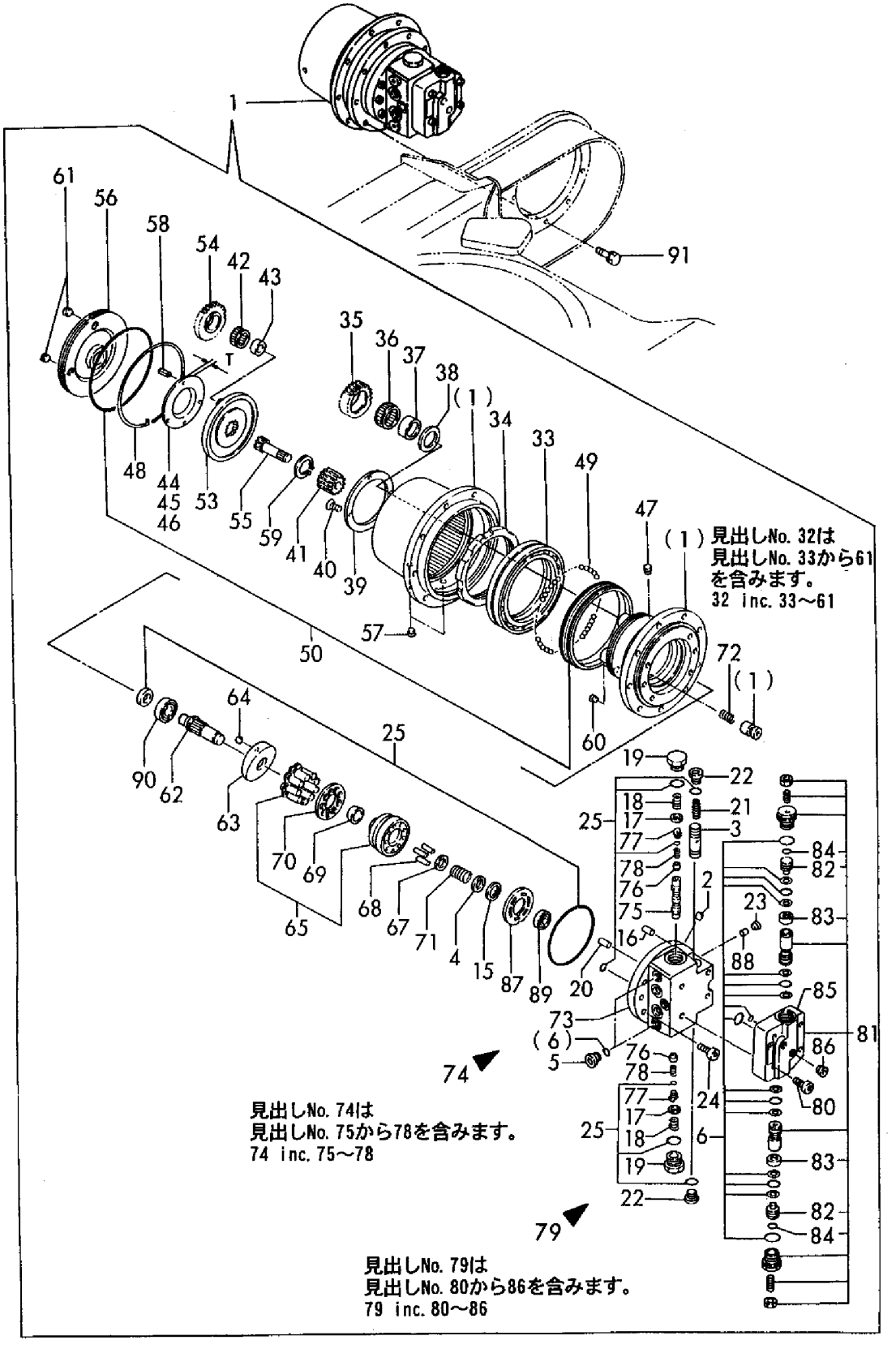

https://truckmanualshub.com/

```
1,1,,172142-73310,,"MOTOR ASSY, TURNING",1,1,,,,,,,,,,,,,,,,
1-1,1,,172146-73310,,"MOTOR ASSY, TURNING",1,1,1,1,1,1,N,,,M00869,,M00869,,,,,,
2,2,,172137-70490,,PLUG,1,1,1,1,1,1,,,,,,,,,,,,
3,2,,172137-70520,,PLUG,2,2,2,2,2,2,,,,,,,,,,,,
4,2,,172137-70530,,BALL,2,2,2,2,2,2,,,,,,,,,,,,
5,2,,172137-70540,,"DRIVE, VALVE",1,1,1,1,1,1,,,,,,,,,,,,
6,2,,172137-70570,,PIN,2,2,2,2,2,2,,,,,,,,,,,,
7,2,,172137-70580,,SPRING,2,2,2,2,2,2,,,,,,,,,,,,
8,2,,172137-70590,,PLATE,1,1,1,1,1,1,,,,,,,,,,,,
9,2,,172137-70600,,VALVE,1,1,1,1,1,1,,,,,,,,,,,,
10,2,,172137-70610,,"PLATE, VALVE",1,1,,,,,,,,,,,,,,,,
10-1,2,,172148-73350,,"PLATE, VALVE",1,1,1,1,1,1,S,,,M00869,,M00869,,,,,,
11,2,,172137-70620,,"PLATE, SPACER",1,1,1,1,1,1,,,,,,,,,,,,
12,2,,172142-73320,,"REDUCTION GEAR ASSY",1,1,,,,,,,,,,,,,,,,
12-1,2,,172148-73320,,"REDUCTION GEAR ASSY",1,1,1,1,1,1,S,,,M00869,,M00869,,,,,,
13,3,,172142-73330,,PLUG,1,1,1,1,1,1,,,,,,,,,,,,
14,3,,172142-73340,,COVER,1,1,1,1,1,1,,,,,,,,,,,,
15,3,,172142-73350,,PLUG,1,1,1,1,1,1,,,,,,,,,,,,
16,3,,172142-73360,,RETAINER,1,1,1,1,1,1,,,,,,,,,,,,
17,3,,172142-73370,,BEARING,1,1,1,1,1,1,,,,,,,,,,,,
18,3,,172142-73380,,"BEARING, NEEDLE",1,1,1,1,1,1,,,,,,,,,,,,
19,3,,172142-73390,,"GEAR, INPUT",1,1,,,,,,,,,,,,,,,,
19-1,3,,172148-73330,,"GEAR, INPUT",1,1,1,1,1,1,S,,,M00869,,M00869,,,,,,
20,3,,172142-73400,,PLUG,1,1,1,1,1,1,,,,,,,,,,,,
21,3,,172142-73410,,BEARING,1,1,1,1,1,1,,,,,,,,,,,,
22,3,,172142-73420,,"SHAFT ASSY, PINION",1,1,1,1,1,1,,,,,,,,,,,,
23,3,,172142-73430,,"CASE, GEAR",1,1,,,,,,,,,,,,,,,,
23-1,3,,172142-73431,,"CASE, GEAR",1,1,1,1,1,1,S,,,M00869,,M00869,,,,,,
24,3,,172142-73440,,"GEAR, OUTPUT",1,1,,,,,,,,,,,,,,,,
24-1,3,,172148-73340,,"GEAR, OUTPUT",1,1,1,1,1,1,S,,,M00869,,M00869,,,,,,
25,3,,172142-73450,,SPACER,1,1,1,1,1,1,,,,,,,,,,,,
26,3,,172142-73460,,SOCKET,1,1,1,1,1,1,,,,,,,,,,,,
27,3,,172142-73470,,SHIM,1,1,1,1,1,1,,,,,,,,,,,,
28,3,,172142-73520,,"SEAL SET",1,1,1,1,1,1,,,,,,,,,,,,
29,3,,22252-000900,,"CIRCLIP   90",1,1,1,1,1,1,,,,,,,,,,,,
30,3,,22312-080280,,"PARALLEL PIN 8X28",2,2,2,2,2,2,,,,,,,,,,,,
31,3,,24217-040002,,"LOCK NUT M40",1,1,1,1,1,1,,,,,,,,,,,,
32,3,,24237-040000,,"WASHER 40",1,1,1,1,1,1,,,,,,,,,,,,
33,3,,26450-080252,,"BOLT M 8X 25",6,6,6,6,6,6,,,,,,,,,,,,
34,3,,26450-080502,,"BOLT M8X 50",3,3,3,3,3,3,,,,,,,,,,,,
35,2,,172142-73480,,DRIVE,1,1,,,,,,,,,,,,,,,,
35-1,2,,172148-73360,,DRIVE,1,1,1,1,1,1,S,,,M00869,,M00869,,,,,,
36,2,,172142-73490,,ROLLER,1,1,,,,,,,,,,,,,,,,
36-1,2,,172142-73540,,ROLLER,1,1,1,1,1,1,S,,,M00869,,M00869,,,,,,
37,2,,172142-73500,,"HOUSING, VALVE",1,1,1,1,1,1,,,,,,,,,,,,
38,2,,172142-73510,,BOLT,4,4,4,4,4,4,,,,,,,,,,,,
39,2,,172142-73530,,"SEAL SET",1,1,1,1,1,1,,,,,,,,,,,,
40,1,,26013-120402,,"BOLT M12X 40",4,4,,,,,,,,,,,,,,,,
40-1,1,,26013-120452,,"BOLT M12X 45",4,4,4,4,4,4,S,,,M00869,,M00869,,,,,,
```

https://truckmanualshub.com/

Fig. 48 旋回モーター TURNING MOTOR

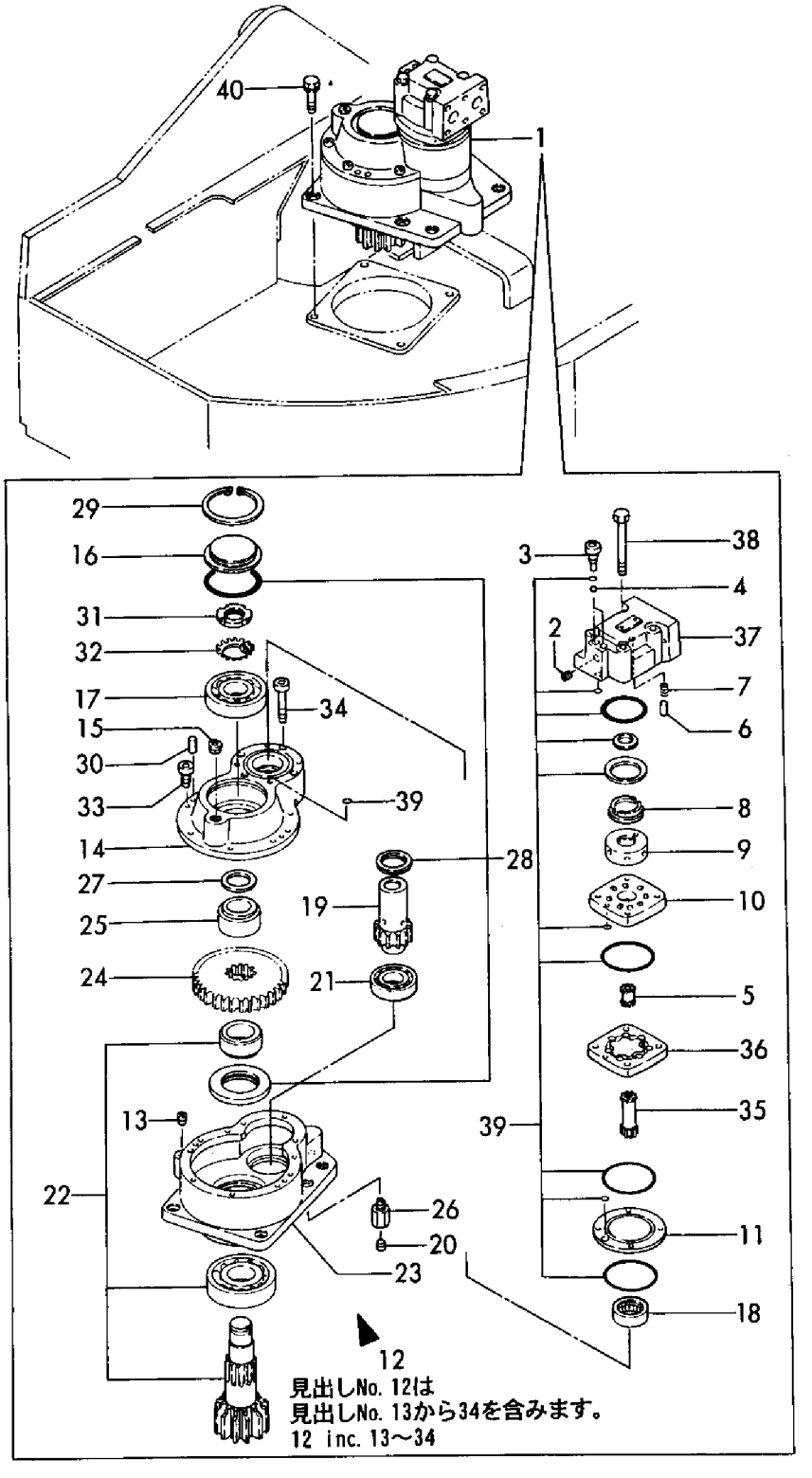

https://truckmanualshub.com/

```
1,1,,172141-73800,,"JOINT, SWIVEL",1,1,1,1,,,,,,,,,,,,,
2,2,,194630-31910,,"LINER 22.5X40X2",1,1,1,1,,,,,,,,,,,,,
3,2,,172141-73810,,"SHAFT, SWIVEL",1,1,1,1,,,,,,,,,,,,,
4,2,,172131-73830,,"FLANGE,SWIVEL",1,1,1,1,,,,,,,,,,,,,
5,2,,172141-73830,,"HUB, SWIVEL",1,1,1,1,,,,,,,,,,,,,
6,2,,172137-73860,,"SPACER, SWIVEL",1,1,1,1,,,,,,,,,,,,,
7,2,,172141-73890,,"SEAL SET, SWIVEL",1,1,1,1,,,,,,,,,,,,,
8,3,,24315-000560,,"O-RING 1B P 56.0",8,8,,,,,,,,,,,,,,,
8-1,3,,172142-73800,,"O-RING 55.76X5.7",8,8,8,8,,,R,,,M00515,,M00515,,,,,,
9,3,,24311-000750,,"O-RING 1A P-75.0",1,1,1,1,,,,,,,,,,,,,
10,3,,24321-000700,,"O-RING 1A G-70.0",1,1,1,1,,,,,,,,,,,,,
11,2,,22242-000451,,"CIRCLIP   45",1,1,1,1,,,,,,,,,,,,,
12,2,,23871-020000,,"PLUG PT1/4,SCREW",6,6,6,6,,,,,,,,,,,,,
13,2,,26013-100252,,"BOLT W/WASHER M10X25",3,3,3,3,,,,,,,,,,,,,
14,1,,26013-100302,,"BOLT M10X 30",4,4,4,4,4,4,,1,,,,,,,,,
15,1,,172168-73800,,"JOINT COMP.,SWIVEL",,,,,1,1,,,,,,,,,,,
16,2,,172148-73810,,"SHAFT, SWIVEL",,,,,1,1,,,,,,,,,,,
17,2,,172148-73830,,"FLANGE, SWIVEL",,,,,1,1,,,,,,,,,,,
18,2,,172148-73840,,"HUB, SWIVEL",,,,,1,1,,,,,,,,,,,
19,2,,172137-73860,,"SPACER, SWIVEL",,,,,1,1,,,,,,,,,,,
20,2,,22242-000451,,"CIRCLIP   45",,,,,1,1,,,,,,,,,,,
21,2,,23871-020000,,"PLUG PT1/4,SCREW",,,,,7,7,,,,,,,,,,,
22,2,,172148-73880,,"SEAL KIT, SWIVEL",,,,,1,1,,,,,,,,,,,
23,3,,172142-73800,,"O-RING 55.76X5.7",,,,,1,1,,,,,,,,,,,
24,3,,172142-73800,,"O-RING 55.76X5.7",,,,,7,7,,,,,,,,,,,
25,3,,172148-73870,,"LING EL, BUCK UP",,,,,1,1,,,,,,,,,,,
26,3,,24311-000750,,"O-RING 1A P-75.0",,,,,1,1,,,,,,,,,,,
27,3,,24321-000700,,"O-RING 1A G-70.0",,,,,1,1,,,,,,,,,,,
28,2,,26013-100352,,"BOLT M10X 35",,,,,3,3,,,,,,,,,,,
```

https://truckmanualshub.com/

Fig. 49 スイベルジョイント SWIVEL JOINT

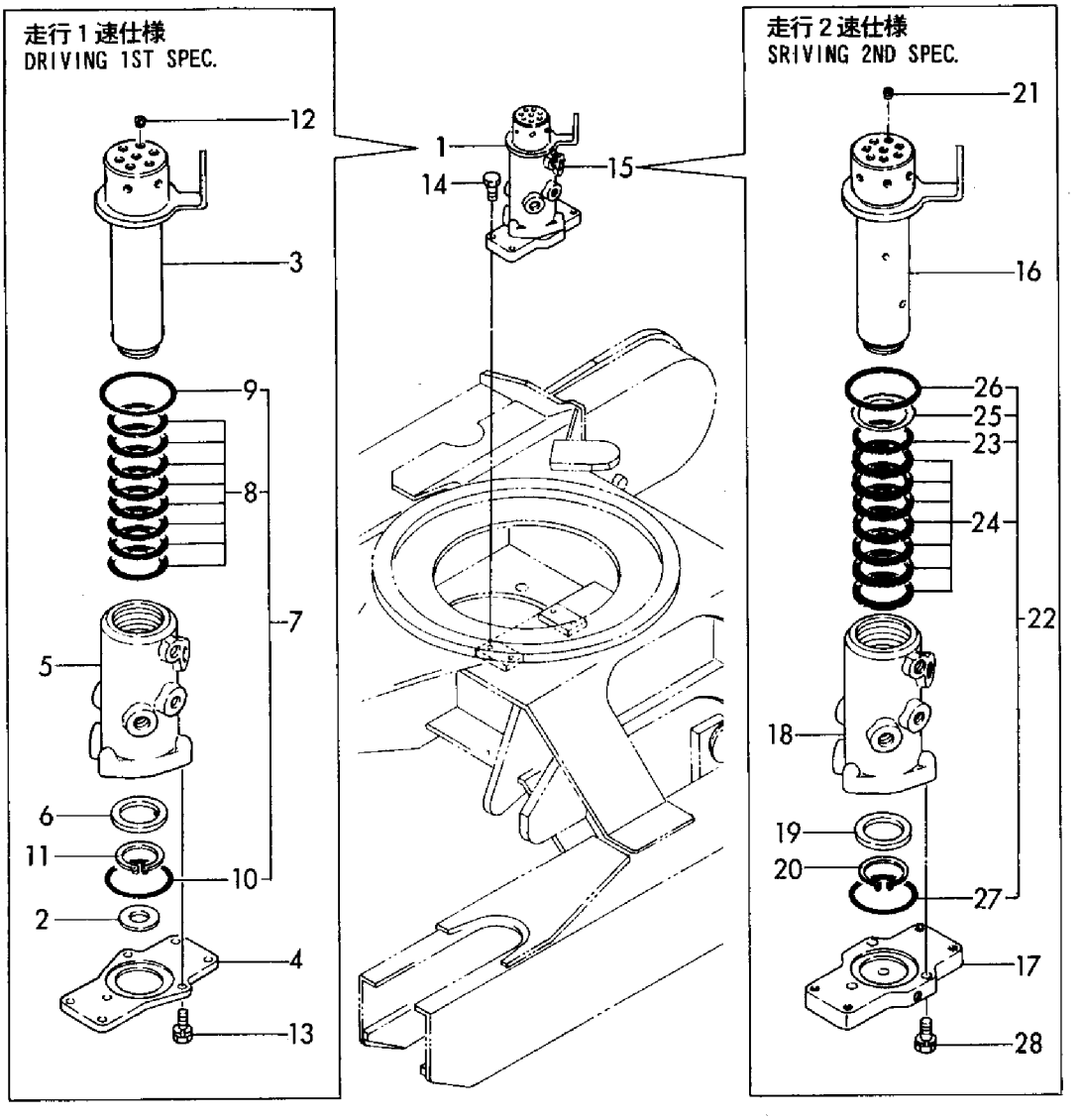

https://truckmanualshub.com/

```
1,1,,172146-74101,,"VALVE ASSY, CONTROL",1,1,,,,,,,,,,,,,,,
2,2,,172124-74120,,TIE-ROD,1,1,,,,,,,,,,,,,,,
3,2,,172124-74130,,TIE-ROD,2,2,,,,,,,,,,,,,,,
4,2,,172124-74180,,"SECTION ASSY, SPOOL",1,1,,,,,,,,,,,,,,,
5,3,,172122-74050,,SPRING,1,1,,,,,,,,,,,,,,,
6,3,,172116-74190,,"PLATE, SEAL",2,2,,,,,,,,,,,,,,,
7,3,,172116-74220,,SCREW,2,2,,,,,,,,,,,,,,,
8,3,,172116-74230,,"HEAD BOLT, SOCKET",2,2,,,,,,,,,,,,,,,
9,3,,933166-80520,,WIPER,2,2,,,,,,,,,,,,,,,
10,3,,933166-80530,,CAP,1,1,,,,,,,,,,,,,,,
11,3,,933166-80550,,"SCREW, CAP",1,1,,,,,,,,,,,,,,,
12,3,,933171-80510,,"SEAT, SPRING",2,2,,,,,,,,,,,,,,,
13,3,,933171-80590,,O-RING,1,1,,,,,,,,,,,,,,,
14,3,,933171-80610,,O-RING,2,2,,,,,,,,,,,,,,,
15,2,,172146-74630,,"SECTION ASSY, SPOOL",1,1,,,,,,,,,,,,,,,
16,3,,172122-74050,,SPRING,1,1,,,,,,,,,,,,,,,
17,3,,172116-74190,,"PLATE, SEAL",2,2,,,,,,,,,,,,,,,
18,3,,172116-74220,,SCREW,2,2,,,,,,,,,,,,,,,
19,3,,172116-74230,,"HEAD BOLT, SOCKET",2,2,,,,,,,,,,,,,,,
20,3,,933166-80520,,WIPER,2,2,,,,,,,,,,,,,,,
21,3,,933166-80530,,CAP,1,1,,,,,,,,,,,,,,,
22,3,,933166-80550,,"SCREW, CAP",1,1,,,,,,,,,,,,,,,
23,3,,933171-80510,,"SEAT, SPRING",2,2,,,,,,,,,,,,,,,
24,3,,933171-80590,,O-RING,1,1,,,,,,,,,,,,,,,
25,3,,933171-80610,,O-RING,2,2,,,,,,,,,,,,,,,
26,2,,172146-74690,,SPACER,1,1,,,,,,,,,,,,,,,
27,2,,172146-74800,,"SECTION ASSY, VALVE",1,1,,,,,,,,,,,,,,,
28,3,,172116-74160,,"SECTION, INLET",1,1,,,,,,,,,,,,,,,
29,4,,933171-80590,,O-RING,1,1,,,,,,,,,,,,,,,
30,3,,172146-74700,,"VALVE, RELIEF",1,1,,,,,,,,,,,,,,,
31,4,,172116-74150,,O-RING,1,1,,,,,,,,,,,,,,,
32,2,,172146-74810,,"SECTION ASSY, VALVE",1,1,,,,,,,,,,,,,,,
33,3,,172116-74150,,O-RING,1,1,,,,,,,,,,,,,,,
34,3,,172116-74320,,PLUG,1,1,,,,,,,,,,,,,,,
35,3,,172146-74600,,"SECTION ASSY, INLET",1,1,,,,,,,,,,,,,,,
36,4,,933171-80590,,O-RING,1,1,,,,,,,,,,,,,,,
37,3,,172146-74700,,"VALVE, RELIEF",1,1,,,,,M,,,,,,,,,
37-1,3,,172146-74760,,"VALVE, RELIEF",1,1,,,,,,,,,,,,,,,
38,4,,172116-74150,,O-RING,1,1,,,,,,,,,,,,,,,
39,2,,172146-74820,,"SECTION ASSY, VALVE",1,1,,,,,,,,,,,,,,,
40,3,,172112-06480,,PLUG,1,1,,,,,,,,,,,,,,,
41,3,,172112-06490,,O-RING,1,1,,,,,,,,,,,,,,,
42,3,,172146-74680,,"SECTION ASSY, SPACER",1,1,,,,,,,,,,,,,,,
43,4,,172122-73430,,PLUG,1,1,,,,,,,,,,,,,,,
44,4,,172146-74750,,SPACER,1,1,,,,,,,,,,,,,,,
45,4,,23871-030000,,"PLUG PT3/8,SCREW",1,1,,,,,,,,,,,,,,,
46,4,,933171-80590,,O-RING,1,1,,,,,,,,,,,,,,,
47,3,,172146-74700,,"VALVE, RELIEF",1,1,,,,,,,,,,,,,,,
48,4,,172116-74150,,O-RING,1,1,,,,,,,,,,,,,,,
49,3,,172146-74720,,"VALVE ASSY, SHUT-OFF",1,1,,,,,,,,,,,,,,,
50,4,,172116-74150,,O-RING,1,1,,,,,,,,,,,,,,,
51,4,,24311-240100,,"O-RING 1A P-10A",1,1,,,,,,,,,,,,,,,
52,2,,26716-080002,,"NUT M 8",4,4,,,,,,,,,,,,,,,
53,2,,26716-100002,,"NUT 10",2,2,,,,,,,,,,,,,,,
54,1,,22217-100000,,"SPRING WASHER 10",3,3,,,,,,,,,,,,,,,
55,1,,26116-100302,,"BOLT 10X30",3,3,,,,,,,,,,,,,,,
56,1,,26716-100002,,"NUT 10",3,3,,,,,,,,,,,,,,,
```

https://truckmanualshub.com/

Fig. 50 コントロールバルブ(Pポート & 走行)(メカリンク) CONTROL VALVE(P PORT & DRIVE)(MECHANICAL LINK)

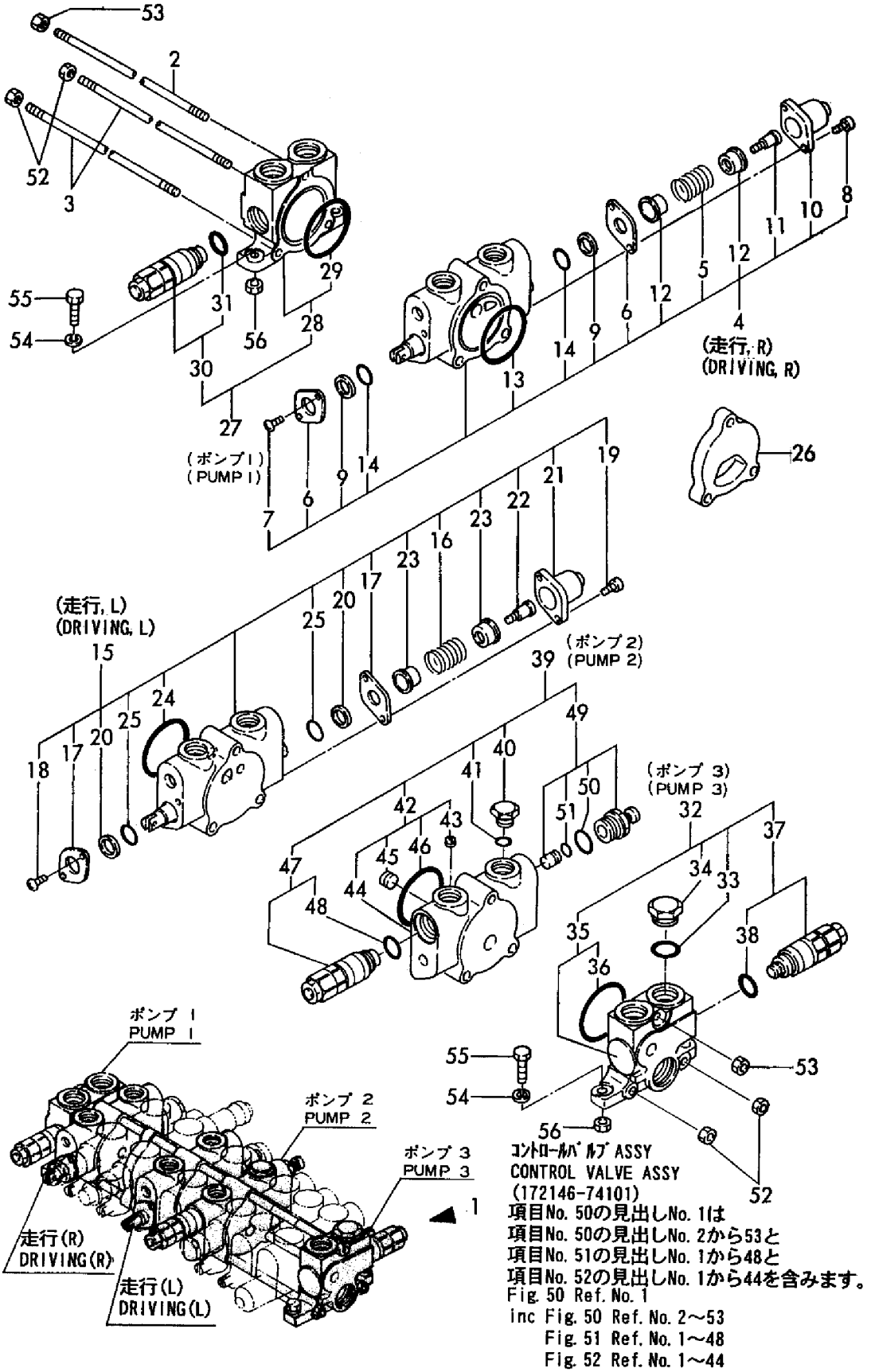

コントロールバルブ ASSY
CONTROL VALVE ASSY
(172146-74101)

項目No. 50の見出しNo. 1は
項目No. 50の見出しNo. 2から53と
項目No. 51の見出しNo. 1から48と
項目No. 52の見出しNo. 1から44を含みます。

Fig. 50 Ref. No. 1
inc Fig. 50 Ref. No. 2～53
Fig. 51 Ref. No. 1～48
Fig. 52 Ref. No. 1～44

```
1,2,,172146-74830,,"SECTION ASSY, VALVE",1,1,,,,,,,,,,,,,,,
2,3,,172146-74610,,"SECTION ASSY, SPOOL",1,1,,,,,,,,,,,,,,,
3,4,,172112-06330,,"SPRING,CONTROL VALVE",1,1,,,,,,,,,,,,,,,,
4,4,,172122-74050,,SPRING,1,1,,,,,,,,,,,,,,,
5,4,,172122-74130,,POPPET,1,1,,,,,,,,,,,,,,,
6,4,,172116-74190,,"PLATE, SEAL",2,2,,,,,,,,,,,,,,,
7,4,,172116-74220,,SCREW,2,2,,,,,,,,,,,,,,,
8,4,,172116-74230,,"HEAD BOLT, SOCKET",2,2,,,,,,,,,,,,,,,
9,4,,933166-80520,,WIPER,2,2,,,,,,,,,,,,,,,
10,4,,933166-80530,,CAP,1,1,,,,,,,,,,,,,,,
11,4,,933166-80550,,"SCREW, CAP",1,1,,,,,,,,,,,,,,,
12,4,,933171-80510,,"SEAT, SPRING",2,2,,,,,,,,,,,,,,,
13,4,,933171-80590,,O-RING,1,1,,,,,,,,,,,,,,,
14,4,,933171-80610,,O-RING,2,2,,,,,,,,,,,,,,,
15,3,,172146-74710,,"VALVE, RELIEF",1,1,,,,,,,,,,,,,,,
16,4,,172116-74150,,O-RING,1,1,,,,,,,,,,,,,,,
17,2,,172146-74840,,"SECTION ASSY, VALVE",1,1,,,,,,,,,,,,,,,
18,3,,172146-74620,,"SECTION ASSY, SPOOL",1,1,,,,,,,,,,,,,,,
19,4,,172112-06330,,"SPRING,CONTROL VALVE",1,1,,,,,,,,,,,,,,,,
20,4,,172122-74050,,SPRING,1,1,,,,,,,,,,,,,,,
21,4,,172122-74130,,POPPET,1,1,,,,,,,,,,,,,,,
22,4,,172116-74190,,"PLATE, SEAL",2,2,,,,,,,,,,,,,,,
23,4,,172116-74220,,SCREW,2,2,,,,,,,,,,,,,,,
24,4,,172116-74230,,"HEAD BOLT, SOCKET",2,2,,,,,,,,,,,,,,,
25,4,,933166-80520,,WIPER,2,2,,,,,,,,,,,,,,,
26,4,,933166-80530,,CAP,2,2,,,,,,,,,,,,,,,
27,4,,933166-80550,,"SCREW, CAP",1,1,,,,,,,,,,,,,,,
28,4,,933171-80510,,"SEAT, SPRING",2,2,,,,,,,,,,,,,,,
29,4,,933171-80590,,O-RING,1,1,,,,,,,,,,,,,,,
30,4,,933171-80610,,O-RING,2,2,,,,,,,,,,,,,,,
31,3,,172146-74710,,"VALVE, RELIEF",2,2,,,,,,,,,,,,,,,
32,4,,172116-74150,,O-RING,2,2,,,,,,,,,,,,,,,
33,2,,172146-74850,,"SECTION ASSY, VALVE",1,1,,,,,,,,,,,,,,,
34,3,,172146-74640,,"SECTION ASSY, SPOOL",1,1,,,,,,,,,,,,,,,
35,4,,172112-06330,,"SPRING,CONTROL VALVE",1,1,,,,,,,,,,,,,,,,
36,4,,172122-74050,,SPRING,1,1,,,,,,,,,,,,,,,
37,4,,172122-74130,,POPPET,1,1,,,,,,,,,,,,,,,
38,4,,172116-74190,,"PLATE, SEAL",2,2,,,,,,,,,,,,,,,
39,4,,172116-74220,,SCREW,2,2,,,,,,,,,,,,,,,
40,4,,172116-74230,,"HEAD BOLT, SOCKET",2,2,,,,,,,,,,,,,,,
41,4,,933166-80520,,WIPER,2,2,,,,,,,,,,,,,,,
42,4,,933166-80530,,CAP,1,1,,,,,,,,,,,,,,,
43,4,,933166-80550,,"SCREW, CAP",1,1,,,,,,,,,,,,,,,
44,4,,933171-80510,,"SEAT, SPRING",2,2,,,,,,,,,,,,,,,
45,4,,933171-80590,,O-RING,1,1,,,,,,,,,,,,,,,
46,4,,933171-80610,,O-RING,2,2,,,,,,,,,,,,,,,
47,3,,172310-79180,,VALVE,1,1,,,,,,,,,,,,,,,
48,4,,172116-74150,,O-RING,1,1,,,,,,,,,,,,,,,
```

https://truckmanualshub.com/

Fig. 51 コントロールバルブ(アーム、ブーム & バケット)(メカリンク) CONTROL VALVE(ARM, BOOM & BUCKET)(MECHANICAL LINK)

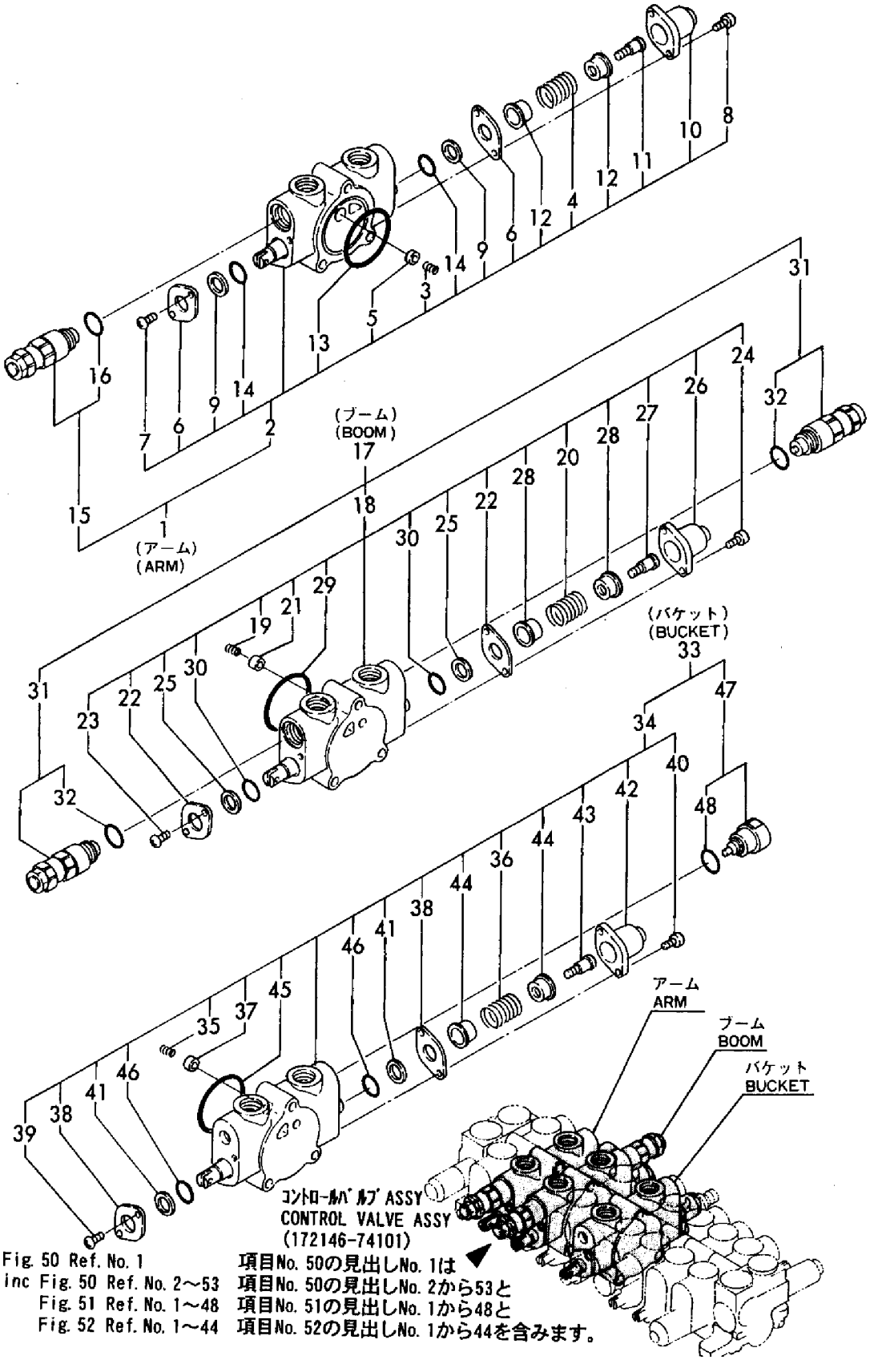

Fig. 50 Ref. No. 1 項目No. 50の見出しNo. 1は
inc Fig. 50 Ref. No. 2～53 項目No. 50の見出しNo. 2から53と
Fig. 51 Ref. No. 1～48 項目No. 51の見出しNo. 1から48と
Fig. 52 Ref. No. 1～44 項目No. 52の見出しNo. 1から44を含みます。

```
1,2,,172146-74660,,"SECTION ASSY, SPOOL",1,1,,,,,,,,,,,,,,,
2,3,,172112-06330,,"SPRING,CONTROL VALVE",1,1,,,,,,,,,,,,,,,,
3,3,,172122-74050,,SPRING,1,1,,,,,,,,,,,,,,,
4,3,,172122-74130,,POPPET,1,1,,,,,,,,,,,,,,,
5,3,,172116-74190,,"PLATE, SEAL",2,2,,,,,,,,,,,,,,,
6,3,,172116-74220,,SCREW,2,2,,,,,,,,,,,,,,,
7,3,,172116-74230,,"HEAD BOLT, SOCKET",2,2,,,,,,,,,,,,,,,
8,3,,172146-74740,,WASHER,1,1,,,,,,,,,,,,,,,
9,3,,933166-80520,,WIPER,2,2,,,,,,,,,,,,,,,
10,3,,933166-80530,,CAP,1,1,,,,,,,,,,,,,,,
11,3,,933166-80550,,"SCREW, CAP",1,1,,,,,,,,,,,,,,,
12,3,,933171-80510,,"SEAT, SPRING",2,2,,,,,,,,,,,,,,,
13,3,,933171-80590,,O-RING,1,1,,,,,,,,,,,,,,,
14,3,,933171-80610,,O-RING,2,2,,,,,,,,,,,,,,,
15,2,,172146-74670,,"SECTION ASSY, SPOOL",1,1,,,,,,,,,,,,,,,
16,3,,172112-06330,,"SPRING,CONTROL VALVE",1,1,,,,,,,,,,,,,,,,
17,3,,172122-74050,,SPRING,1,1,,,,,,,,,,,,,,,
18,3,,172122-74130,,POPPET,1,1,,,,,,,,,,,,,,,
19,3,,172116-74190,,"PLATE, SEAL",2,2,,,,,,,,,,,,,,,
20,3,,172116-74220,,SCREW,2,2,,,,,,,,,,,,,,,
21,3,,172116-74230,,"HEAD BOLT, SOCKET",2,2,,,,,,,,,,,,,,,
22,3,,933166-80520,,WIPER,2,2,,,,,,,,,,,,,,,
23,3,,933166-80530,,CAP,1,1,,,,,,,,,,,,,,,
24,3,,933166-80550,,"SCREW, CAP",1,1,,,,,,,,,,,,,,,
25,3,,933171-80510,,"SEAT, SPRING",2,2,,,,,,,,,,,,,,,
26,3,,933171-80590,,O-RING,1,1,,,,,,,,,,,,,,,
27,3,,933171-80610,,O-RING,2,2,,,,,,,,,,,,,,,
28,2,,172146-74860,,"SECTION ASSY, VALVE",1,1,,,,,,,,,,,,,,,
29,3,,172146-74650,,"SECTION ASSY, SPOOL",1,1,,,,,,,,,,,,,,,
30,4,,172112-06330,,"SPRING,CONTROL VALVE",1,1,,,,,,,,,,,,,,,,
31,4,,172122-74050,,SPRING,1,1,,,,,,,,,,,,,,,
32,4,,172122-74130,,POPPET,1,1,,,,,,,,,,,,,,,
33,4,,172116-74190,,"PLATE, SEAL",2,2,,,,,,,,,,,,,,,
34,4,,172116-74220,,SCREW,2,2,,,,,,,,,,,,,,,
35,4,,172116-74230,,"HEAD BOLT, SOCKET",2,2,,,,,,,,,,,,,,,
36,4,,172146-74740,,WASHER,1,1,,,,,,,,,,,,,,,
37,4,,933166-80520,,WIPER,2,2,,,,,,,,,,,,,,,
38,4,,933166-80530,,CAP,1,1,,,,,,,,,,,,,,,
39,4,,933166-80550,,"SCREW, CAP",1,1,,,,,,,,,,,,,,,
40,4,,933171-80510,,"SEAT, SPRING",2,2,,,,,,,,,,,,,,,
41,4,,933171-80590,,O-RING,1,1,,,,,,,,,,,,,,,
42,4,,933171-80610,,O-RING,2,2,,,,,,,,,,,,,,,
43,3,,172146-74730,,"VALVE ASSY",1,1,,,,,,,,,,,,,,,
44,4,,172116-74150,,O-RING,1,1,,,,,,,,,,,,,,,
```

https://truckmanualshub.com/

Fig. 52 コントロールバルブ(旋回,ブレード & オフセット)(メカリンク) CONTROL VALVE(TURNING, BLADE & OFFSET)(MECHANICAL LINK)

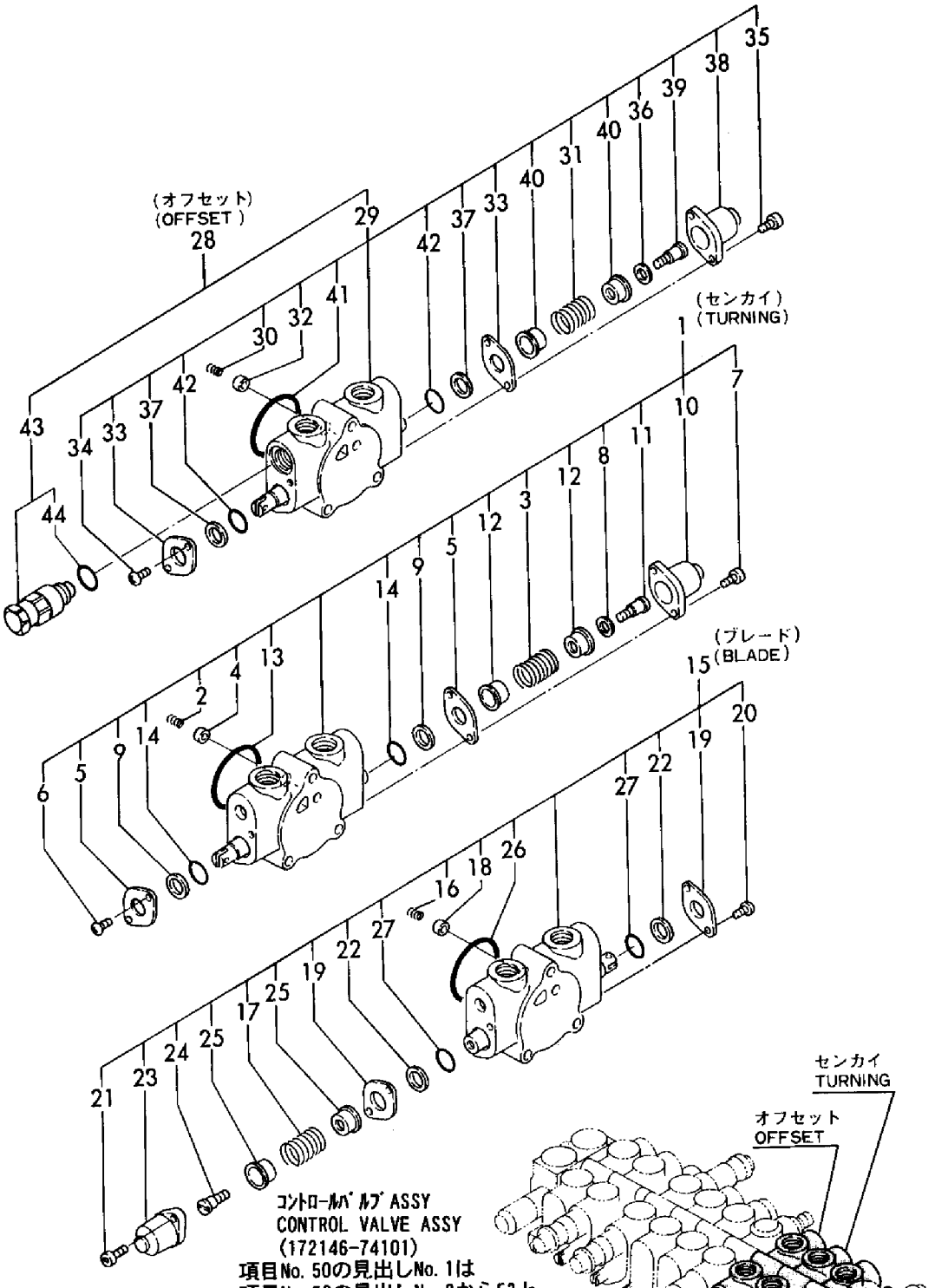

コントロールバルブ ASSY
CONTROL VALVE ASSY
(172146-74101)
項目No. 50の見出しNo. 1は
項目No. 50の見出しNo. 2から53と
項目No. 51の見出しNo. 1から48と
項目No. 52の見出しNo. 1から44を含みます。
Fig. 50 Ref. No. 1
inc Fig. 50 Ref. No. 2～53
Fig. 51 Ref. No. 1～48
Fig. 52 Ref. No. 1～44

https://truckmanualshub.com/

```
1,1,,172146-74000,,"VALVE ASSY, CONTROL",,,1,1,1,1,,,,,,,,,,,
2,2,,172146-74800,,"SECTION ASSY, VALVE",,,1,1,1,1,,,,,,,,,,,
3,3,,172116-74160,,"SECTION, INLET",,,1,1,1,1,,,,,,,,,,,
4,4,,933171-80590,,O-RING,,,1,1,1,1,,,,,,,,,,,
5,3,,172146-74700,,"VALVE, RELIEF",,,1,1,1,1,,,,,,,,,,,
6,4,,172116-74150,,O-RING,,,1,1,1,1,,,,,,,,,,,
7,2,,172124-74180,,"SECTION ASSY, SPOOL",,,1,1,1,1,,,,,,,,,,,
8,3,,933171-80590,,O-RING,,,1,1,1,1,,,,,,,,,,,
9,2,,172146-74010,,"SECTION ASSY, VALVE",,,1,1,1,1,,,,,,,,,,,
10,3,,172146-74020,,"SECTION ASSY, SPOOL",,,1,1,1,1,,,,,,,,,,,
11,4,,933171-80590,,O-RING,,,1,1,1,1,,,,,,,,,,,
12,3,,172146-74710,,"VALVE, RELIEF",,,1,1,1,1,,,,,,,,,,,
13,4,,172116-74150,,O-RING,,,1,1,1,1,,,,,,,,,,,
14,2,,172146-74690,,SPACER,,,1,1,1,1,,,,,,,,,,,
15,2,,172146-74030,,"SECTION ASSY, VALVE",,,1,1,1,1,,,,,,,,,,,
16,3,,172146-74040,,"SECTION ASSY, SPOOL",,,1,1,1,1,,,,,,,,,,,
17,4,,933171-80590,,O-RING,,,1,1,1,1,,,,,,,,,,,
18,3,,172146-74710,,"VALVE, RELIEF",,,2,2,2,2,,,,,,,,,,,
19,4,,172116-74150,,O-RING,,,2,2,2,2,,,,,,,,,,,
20,2,,172146-74630,,"SECTION ASSY, SPOOL",,,1,1,1,1,,,,,,,,,,,
21,3,,933171-80590,,O-RING,,,1,1,1,1,,,,,,,,,,,
22,2,,172146-74050,,"SECTION ASSY, VALVE",,,1,1,1,1,,,,,,,,,,,
23,3,,172146-74060,,"SECTION ASSY, SPOOL",,,1,1,1,1,,,,,,,,,,,
24,4,,933171-80590,,O-RING,,,1,1,1,1,,,,,,,,,,,
25,3,,172310-79180,,VALVE,,,1,1,1,1,,,,,,,,,,,
26,4,,172116-74150,,O-RING,,,1,1,1,1,,,,,,,,,,,
27,2,,172146-74820,,"SECTION ASSY, VALVE",,,1,1,1,1,,,,,,,,,,,
28,3,,172112-06480,,PLUG,,,1,1,1,1,,,,,,,,,,,
29,3,,172112-06490,,O-RING,,,1,1,1,1,,,,,,,,,,,
30,3,,172146-74680,,"SECTION ASSY, SPACER",,,1,1,1,1,,,,,,,,,,,
31,4,,933171-80590,,O-RING,,,1,1,1,1,,,,,,,,,,,
32,3,,172146-74700,,"VALVE, RELIEF",,,1,1,1,1,,,,,,,,,,,
33,4,,172116-74150,,O-RING,,,1,1,1,1,,,,,,,,,,,
34,3,,172146-74720,,"VALVE ASSY, SHUT-OFF",,,1,1,1,1,,,,,,,,,,,
35,4,,172116-74150,,O-RING,,,1,1,1,1,,,,,,,,,,,
36,4,,24311-240100,,"O-RING 1A P-10A",,,1,1,1,1,,,,,,,,,,,
37,2,,172146-74860,,"SECTION ASSY, VALVE",,,1,1,1,1,,,,,,,,,,,
38,3,,172146-74650,,"SECTION ASSY, SPOOL",,,1,1,1,1,,,,,,,,,,,
39,4,,933171-80590,,O-RING,,,1,1,1,1,,,,,,,,,,,
40,3,,172146-74730,,"VALVE ASSY",,,1,1,1,1,,,,,,,,,,,
41,4,,172116-74150,,O-RING,,,1,1,1,1,,,,,,,,,,,
42,2,,172146-74070,,"SECTION ASSY, SPOOL",,,1,1,1,1,,,,,,,,,,,
43,3,,933171-80590,,O-RING,,,1,1,1,1,,,,,,,,,,,
44,2,,172146-74670,,"SECTION ASSY, SPOOL",,,1,1,1,1,,,,,,,,,,,
45,3,,933171-80590,,O-RING,,,1,1,1,1,,,,,,,,,,,
46,2,,172146-74810,,"SECTION ASSY, VALVE",,,1,1,1,1,,,,,,,,,,,
47,3,,172116-74150,,O-RING,,,1,1,1,1,,,,,,,,,,,
48,3,,172116-74320,,PLUG,,,1,1,1,1,,,,,,,,,,,
49,3,,172146-74600,,"SECTION ASSY, INLET",,,1,1,1,1,,,,,,,,,,,
50,4,,933171-80590,,O-RING,,,1,1,1,1,,,,,,,,,,,
51,3,,172146-74760,,"VALVE, RELIEF",,,1,1,1,1,,,,,,,,,,,
52,4,,172116-74150,,O-RING,,,1,1,1,1,,,,,,,,,,,
53,2,,172124-74120,,TIE-ROD,,,1,1,1,1,,,,,,,,,,,
54,2,,172124-74130,,TIE-ROD,,,2,2,2,2,,,,,,,,,,,
55,2,,26716-080002,,"NUT M 8",,,4,4,4,4,,,,,,,,,,,
56,2,,26716-100002,,"NUT 10",,,2,2,2,2,,,,,,,,,,,
57,1,,22217-100000,,"SPRING WASHER 10",,,3,3,3,3,,,,,,,,,,,
58,1,,26116-100302,,"BOLT 10X30",,,3,3,3,3,,,,,,,,,,,
59,1,,26716-100002,,"NUT 10",,,3,3,3,3,,,,,,,,,,,
```

https://truckmanualshub.com/

Fig. 53 コントロールバルブ(油圧パイロット) CONTROL VALVE(HYD. OIL PILOT)

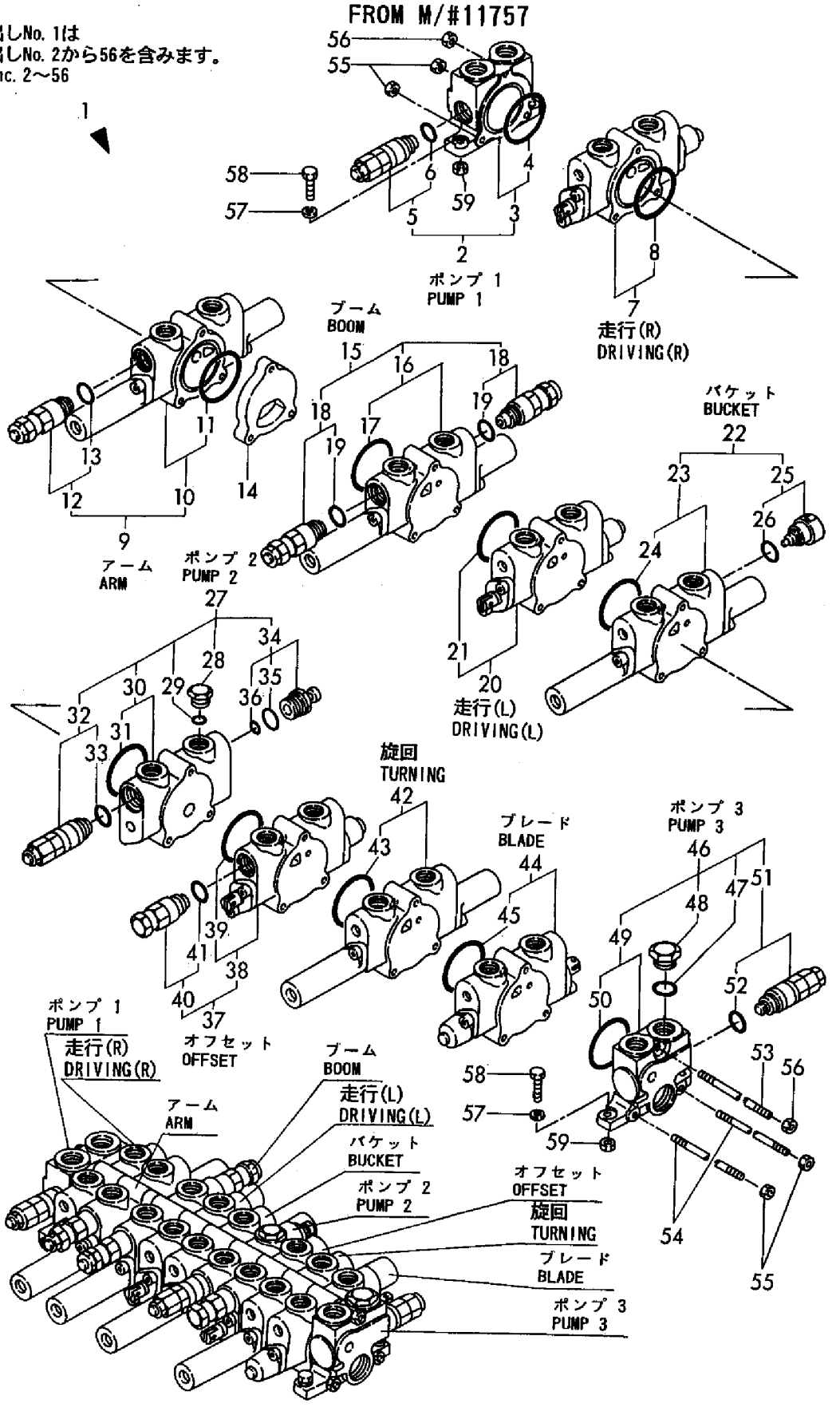

https://truckmanualshub.com/

```
1,1,,172151-74610,,"VALVE ASSY,RMT.CONT.",,,2,2,2,2,,1,,,,,,,,,
1-1,1,,172151-74611,,"VALVE ASSY,RMT.CONT.",,,,,2,2,R,4,,,,,,,,,,M20902,,M20902
2,2,,172151-74860,,"SHIM(COUNT. SET",,,8,8,8,8,,,,,,,,,,,
3,2,,172151-74870,,SPRING,,,8,8,8,8,,,,,,,,,,,
4,2,,172151-74880,,RETAINER,,,8,8,8,8,,,,,,,,,,,
5,2,,172151-74890,,"SP (SYN.",,,8,8,8,8,,,,,,,,,,,
6,2,,172151-74900,,PISTON,,,8,8,8,8,,,,,,,,,,,
7,2,,172151-74910,,SEAL,,,8,8,8,8,,,,,,,,,,,
8,2,,172151-74920,,COLLAR,,,8,8,8,8,,,,,,,,,,,
8-1,2,,172164-74610,,COLLAR,,,,,8,8,S,,,,,,,,,,,M20902,,M20902
9,2,,172151-74930,,BOOT,,,2,2,2,2,,,,,,,,,,,
10,2,,172151-74940,,PLATE,,,2,2,2,2,,,,,,,,,,,
11,2,,172151-74950,,UNION,,,2,2,2,2,,,,,,,,,,,
12,2,,172151-74960,,DISK,,,2,2,2,2,,,,,,,,,,,
12-1,2,,172164-74620,,DISC,,,,,2,2,S,,,,,,,,,,,M20902,,M20902
13,2,,172151-74970,,NUT,,,2,2,2,2,,,,,,,,,,,
13-1,2,,172164-74630,,NUT,,,,,2,2,S,,,,,,,,,,,M20902,,M20902
14,2,,172151-74980,,PLATE,,,2,2,2,2,,,,,,,,,,,
15,2,,172151-74990,,PLUG,,,4,4,4,4,,,,,,,,,,,
16,2,,24311-000200,,"O-RING 1A P-20.0",,,8,8,8,8,,,,,,,,,,,
17,2,,24311-000700,,"O-RING 1A P-70.0",,,2,2,2,2,,,,,,,,,,,
17-1,2,,24321-000700,,"O-RING 1A G-70.0",,,,,2,2,S,,,,,,,,,,,M20872,,M20872
18,2,,26116-060202,,"BOLT M 6X 20",,,8,8,8,8,,,,,,,,,,,
19,2,,172164-74560,,PLUG,,,,,4,4,W,,,,,,,,,,,M20902,,M20902
20,2,,172164-74650,,PLUG,,,,,4,4,W,,,,,,,,,,,M20872,,M20872
21,1,,172151-74620,,"CUT-OFF VALVE",,,1,1,,,,1,,,,,,,,,
22,2,,172151-74390,,SOLENOID,,,1,1,,,,,,,,,,,,,
23,2,,172151-74420,,"BOLT M 4X 10",,,2,2,,,,,,,,,,,,,
24,2,,24311-000220,,"O-RING 1A P-22.0",,,1,1,,,,,,,,,,,,,
25,1,,172165-74704,,"VALVE ASSY, LOW-HIGH",,,,,1,1,,2,,,,,,,,,
25-1,1,,172165-74705,,"VALVE ASSY LOW-HIGH",,,,,1,1,S,3,,,,,,,,,,,M20872,,M20872
26,2,,172151-74420,,"BOLT M 4X 10",,,,,3,3,,,,,,,,,,,
27,2,,172165-74710,,SOLENOID,,,,,1,1,,,,,,,,,,,
28,2,,172165-74720,,"BOLT M5X16,HEX.SCKT.",,,,,2,2,,,,,,,,,,,
29,2,,172165-74730,,"BOLT M5X8,HEX.SCKT.",,,,,2,2,,,,,,,,,,,
30,2,,172165-74740,,SPRING,,,,,1,1,,,,,,,,,,,
31,2,,172165-74760,,SPRING,,,,,1,1,,,,,,,,,,,
32,2,,172165-74770,,PACKING,,,,,2,2,,,,,,,,,,,
33,2,,172165-74780,,PLATE,,,,,2,2,,,,,,,,,,,
34,2,,172165-74790,,COVER,,,,,1,1,,,,,,,,,,,
35,2,,23871-010000,,"PLUG PT1/8,SCREW",,,,,1,1,,,,,,,,,,,
36,2,,24311-000160,,"O-RING 1A P-16.0",,,,,1,1,,,,,,,,,,,
37,1,,26013-080202,,"BOLT W/WASHER M8X20",,,,,2,2,,,,,,,,,,,
38,1,,22217-060000,,"SPRING WASHER  6",,,2,2,,,,,,,,,,,,,
39,1,,26116-060552,,"BOLT M 6X 55 PLATED",,,2,2,,,,,,,,,,,,,
```

https://truckmanualshub.com/

Fig. 54 リモコンバルブ(カットオフバルブ & ローハイバルブ) REMOTE CONTROL VALVE(CUT-OFF V. & LOW-HIGH V.)

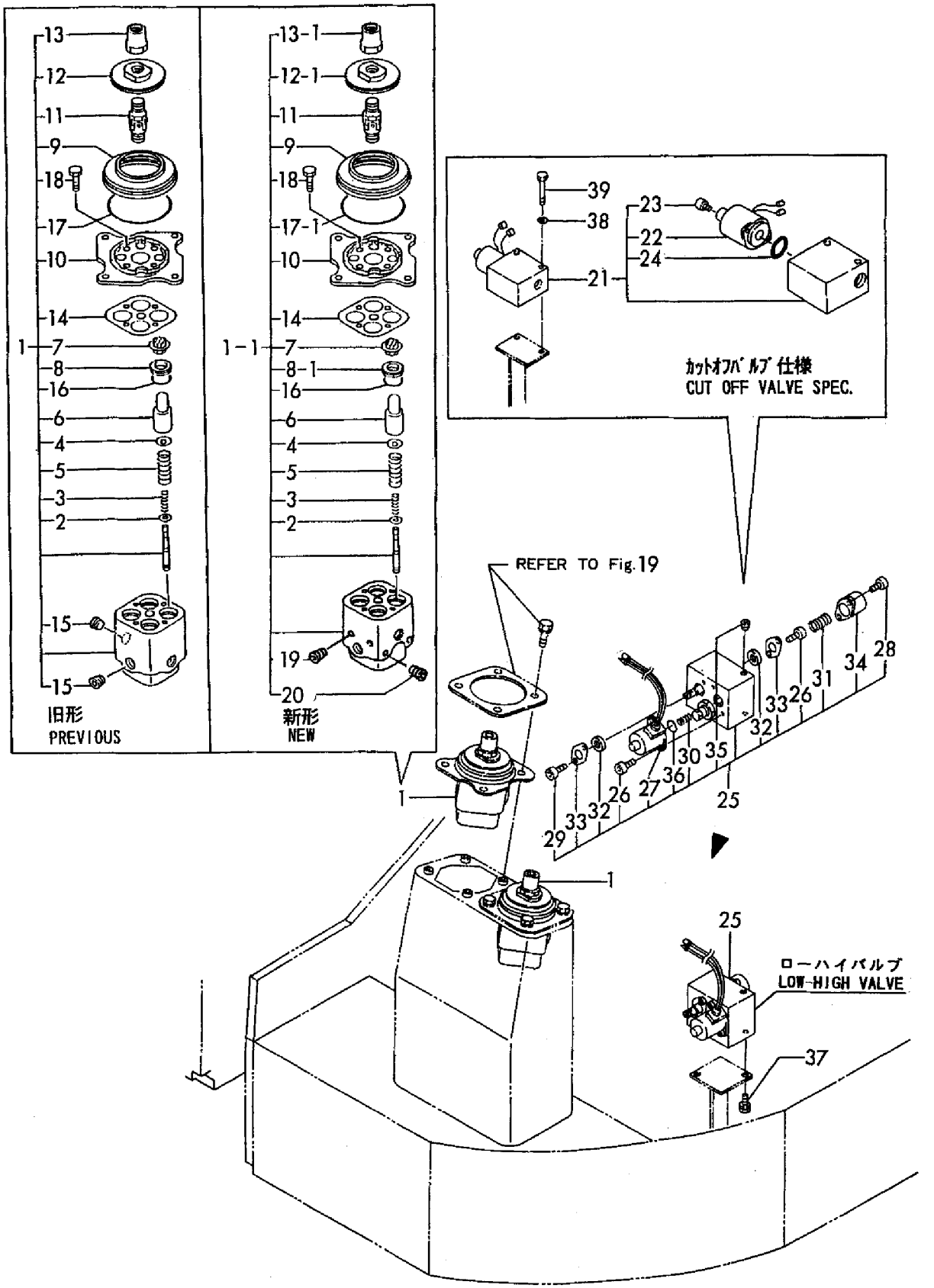

https://truckmanualshub.com/

```
1,1,,172151-74600,,"VALVE CMP,MULTICHNG.",,,,1,1,1,,,,,,,,,,,
2,2,,172151-74700,,LEVER,,,,1,1,1,,,,,,,,,,,
3,2,,172151-74710,,COVER,,,,1,1,1,,,,,,,,,,,
4,2,,172151-74720,,COVER,,,,1,1,1,,,,,,,,,,,
5,2,,172151-74730,,SPRING,,,,1,1,1,,,,,,,,,,,
6,2,,172151-74740,,"PLATE, MARK",,,,1,1,1,,,,,,,,,,,
7,2,,172151-74750,,"PLATE, MARK",,,,1,1,1,,,,,,,,,,,
8,2,,172151-74760,,WASHER,,,,2,2,2,,,,,,,,,,,
9,2,,172151-74760,,WASHER,,,,1,1,1,,,,,,,,,,,
10,2,,172151-74770,,"GASKET, CYL. HEAD",,,,1,1,1,,,,,,,,,,,
11,2,,23871-010000,,"PLUG PT1/8,SCREW",,,,1,1,1,,,,,,,,,,,
12,2,,24190-100001,,"BALL 5/16, STEEL",,,,1,1,1,,,,,,,,,,,
13,2,,24311-000280,,"O-RING 1A P-28.0",,,,1,1,1,,,,,,,,,,,
14,2,,24321-000600,,"O-RING 1A G-60.0",,,,2,2,2,,,,,,,,,,,
15,2,,26450-060162,,"BOLT M 6X 16",,,,2,2,2,,,,,,,,,,,
16,2,,26450-060162,,"BOLT M 6X 16",,,,8,8,8,,,,,,,,,,,
17,2,,26450-060162,,"BOLT M 6X 16",,,,8,8,8,,,,,,,,,,,
18,2,,26647-060202,,"WING BOLT M 6X20",,,,1,1,1,,,,,,,,,,,
19,1,,26013-100252,,"BOLT W/WASHER M10X25",,,,4,4,4,,,,,,,,,,,
```

https://truckmanualshub.com/

Fig. 55 ロータリバルブ(油圧パイロット, マルチ) ROTARY VALVE(HYD. OIL PILOT, MULTI)

マルチバルブキット(改装用)
MULTI VALVE KIT(REMODELING)
(172146-74900)
項目No. 74の見出しNo. 1は
項目No. 37の見出しNo. 1から10と
項目No. 55の見出しNo. 1から19と
項目No. 74の見出しNo. 2から12と
項目No. 75の見出しNo. 1から18を含みます。
Fig. 74 Ref. No. 1
inc. Fig. 37 Ref. No. 1～10
Fig. 55 Ref. No. 1～19
Fig. 74 Ref. No. 2～12
Fig. 75 Ref. No. 1～18

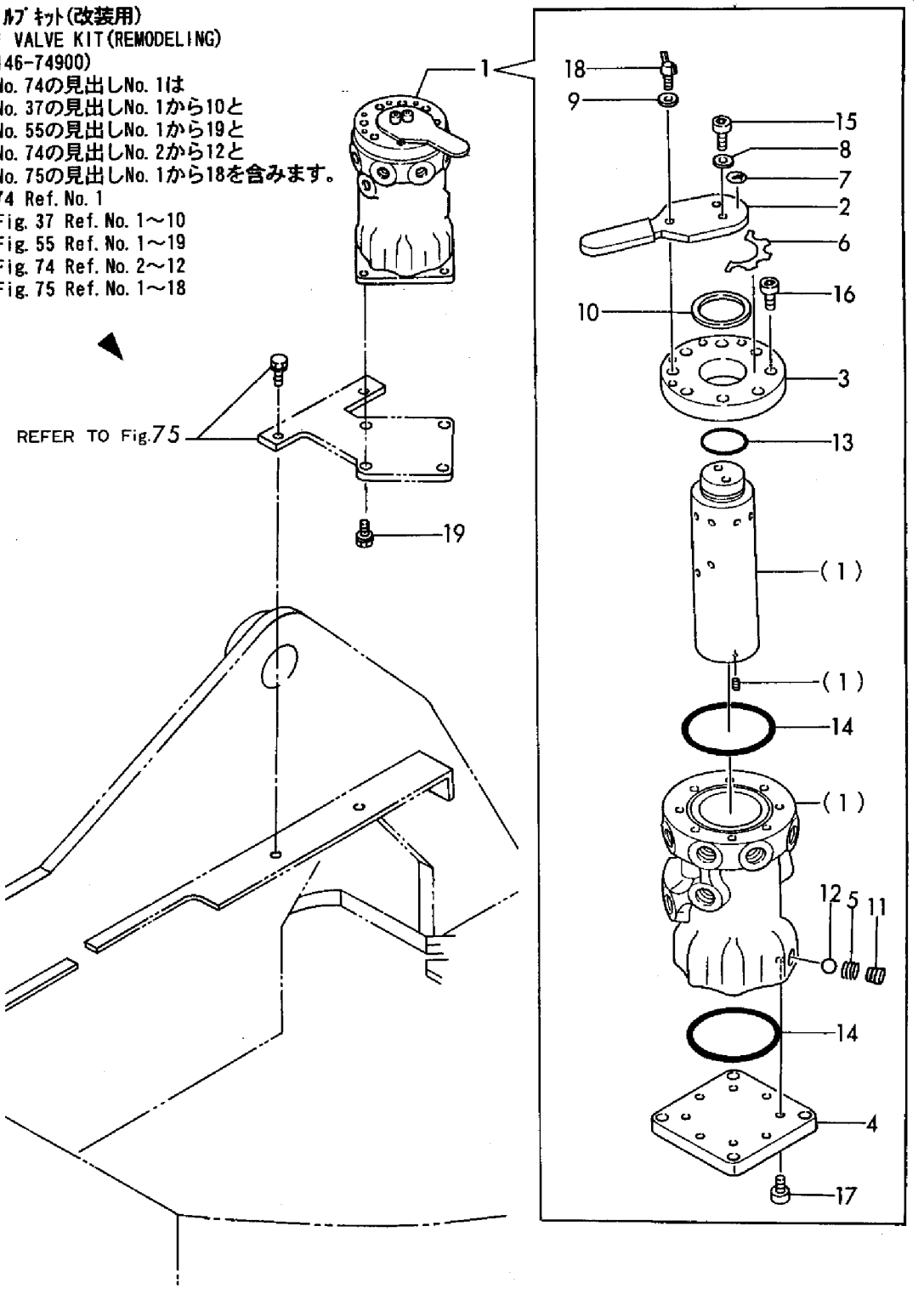

https://truckmanualshub.com/

```
1,1,,172146-74400,,VALVE,1,1,1,1,,,,,,,,,,,,,
2,2,,172122-70720,,PLUG,2,2,2,2,,,,,,,,,,,,,
3,2,,172146-74420,,"REPAIR SET",1,1,1,1,,,,,,,,,,,,,
4,3,,172146-74430,,"SEAL SET, RELIEF",1,1,1,1,,,,,,,,,,,,,
5,2,,172146-74440,,SPRING,2,2,2,2,,,,,,,,,,,,,
6,2,,172146-74450,,PISTON,2,2,2,2,,,,,,,,,,,,,
7,2,,172146-74460,,"VALVE COMPL.,RELIEF",2,2,2,2,,,,,,,,,,,,,
8,2,,172146-74470,,PLUG,2,2,2,2,,,,,,,,,,,,,
9,2,,172146-74480,,SPRING,2,2,2,2,,,,,,,,,,,,,
10,2,,172146-74490,,VALVE,2,2,2,2,,,,,,,,,,,,,
11,1,,172146-74410,,"PLATE, SUB",1,1,1,1,,,,,,,,,,,,,
12,1,,23871-030000,,"PLUG PT3/8,SCREW",2,2,2,2,,,,,,,,,,,,,
13,1,,24325-000250,,"O-RING 1B G-25.0",2,2,2,2,,,,,,,,,,,,,
14,1,,26450-100352,,"BOLT M10X 35",5,5,5,5,,,,,,,,,,,,,
15,1,,26450-120752,,"BOLT M12X 75",3,3,3,3,,,,,,,,,,,,,
```

https://truckmanualshub.com/

Fig. 56 旋回ブレーキバルブ(1速) TURNING BRAKE VALVE(SINGLE SPEED)

TO M/#00868

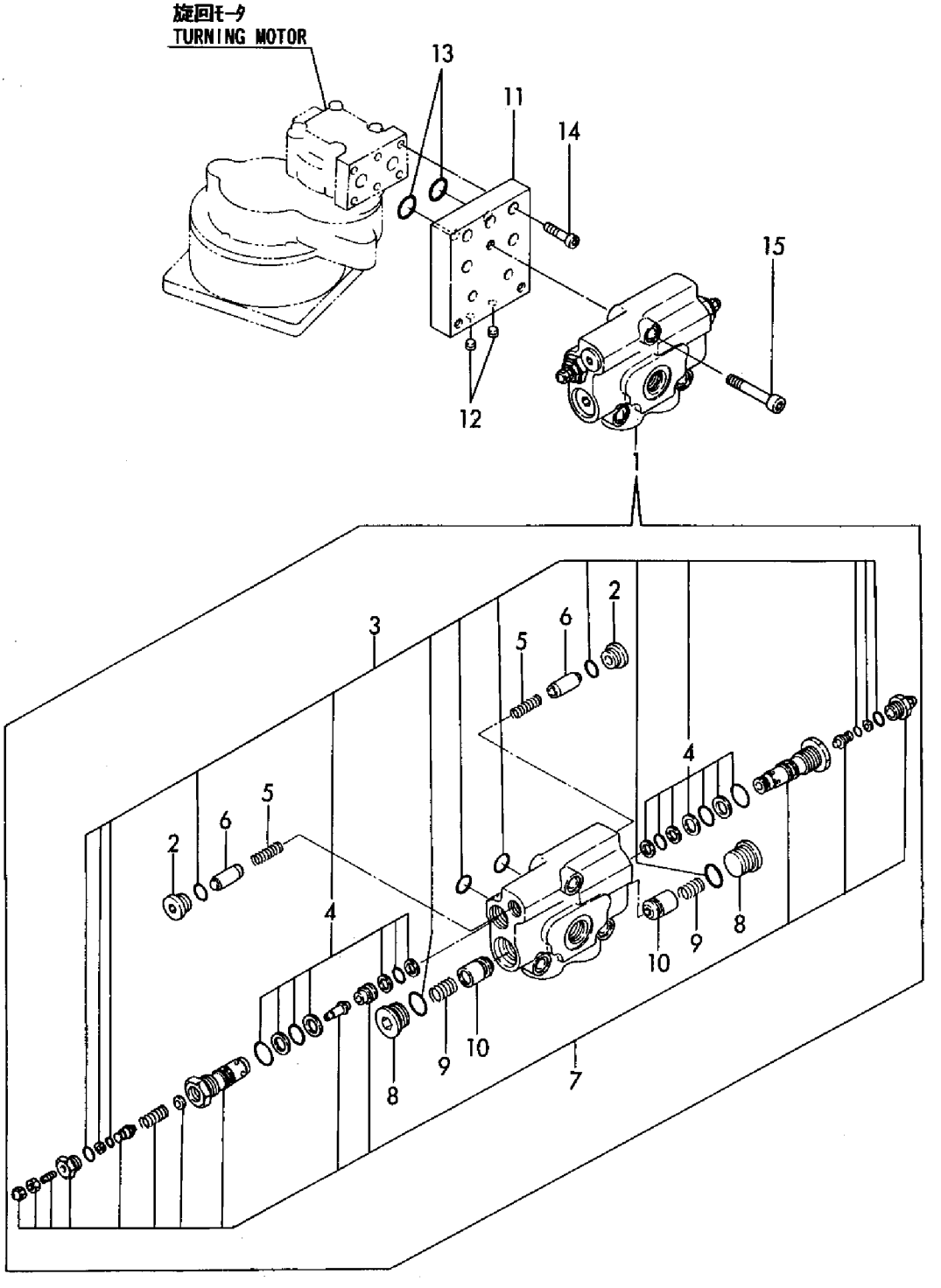

https://truckmanualshub.com/

```
1,1,,172146-74500,,"VALVE ASSY, BRAKE",1,1,1,1,1,1,,,,,,,,,,,
2,2,,172147-70500,,PLUG,2,2,2,2,2,2,,,,,,,,,,,
3,2,,172122-70710,,SPRING,2,2,2,2,2,2,,,,,,,,,,,
4,2,,172122-70720,,PLUG,2,2,2,2,2,2,,,,,,,,,,,
5,2,,172148-71500,,DETENT,1,1,1,1,1,1,,,,,,,,,,,
6,2,,172146-71510,,"VALVE ASSY, RELIEF",2,2,2,2,2,2,,,,,,,,,,,
7,2,,172148-71510,,PISTON,1,1,1,1,1,1,,,,,,,,,,,
8,2,,172148-71520,,PLUG(A),1,1,1,1,1,1,,,,,,,,,,,
9,2,,172148-71530,,PLUG(B),1,1,1,1,1,1,,,,,,,,,,,
10,2,,172148-71540,,BALL,2,2,2,2,2,2,,,,,,,,,,,
11,2,,172148-71550,,"GUIDE, SPRING",2,2,2,2,2,2,,,,,,,,,,,
12,2,,172148-71560,,SPRING,2,2,2,2,2,2,,,,,,,,,,,
13,2,,172148-71570,,"VALVE, CHECK",2,2,2,2,2,2,,,,,,,,,,,
14,2,,172148-71580,,SPRING,2,2,2,2,2,2,,,,,,,,,,,
15,2,,172148-71590,,SPRING,2,2,2,2,2,2,,,,,,,,,,,
16,2,,172148-71620,,PLUG,2,2,2,2,2,2,,,,,,,,,,,
17,2,,172148-71630,,PLUG,2,2,2,2,2,2,,,,,,,,,,,
18,2,,172148-71640,,ORIFICE,2,2,2,2,2,2,,,,,,,,,,,
19,2,,172148-71650,,"SEAL, DUST",2,2,2,2,2,2,,,,,,,,,,,
20,2,,172148-71660,,"SCREW, SET",2,2,2,2,2,2,,,,,,,,,,,
21,2,,172148-71670,,"SEAL SET, RELIEF",1,1,1,1,1,1,,,,,,,,,,,
27,2,,172148-71680,,"REPAIR KIT",1,1,1,1,1,1,,,,,,,,,,,
36,1,,26116-100952,,"BOLT M10X 95 PLATED",6,6,6,6,6,6,,,,,,,,,,,
```

https://truckmanualshub.com/

Fig. 57 旋回ブレーキバルブ(2速) TURNING BRAKE VALVE(DOUBLE SPEED)

FROM M/#00869

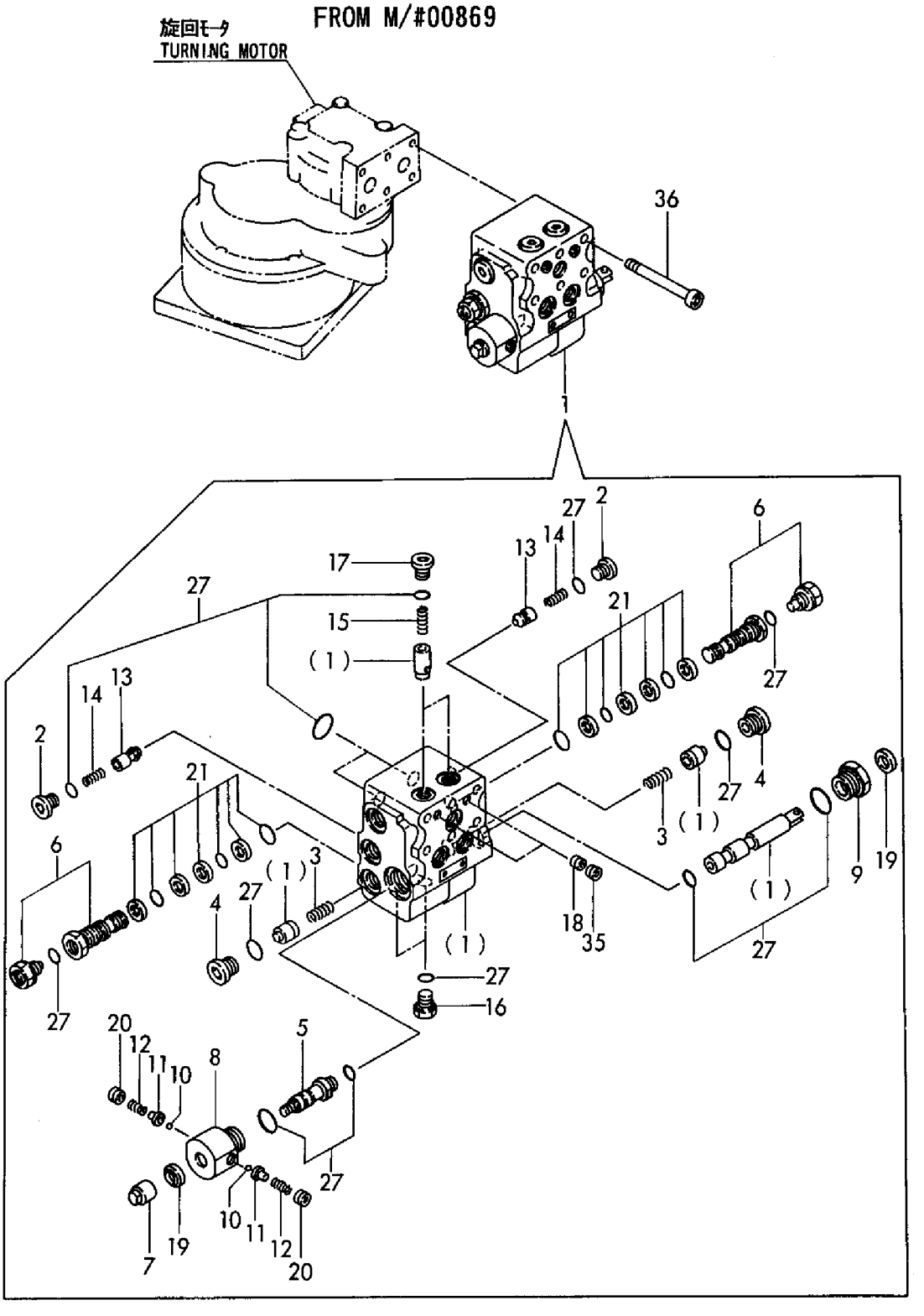

https://truckmanualshub.com/

```
1,2,,172147-74800,,VALVE,1,1,,,,,,,,,,,,,,,
2,3,,172614-74410,,TIE-ROD,2,2,,,,,,,,,,,,,,,
3,3,,172147-74810,,TIE-ROD,1,1,,,,,,,,,,,,,,,
4,3,,172147-74820,,"SECTION ASSY, INLET",1,1,,,,,,,,,,,,,,,
5,3,,172147-74830,,"SECTION, OUTLET",1,1,,,,,,,,,,,,,,,
6,3,,172147-74840,,"SECTION ASSY, SPOOL",1,1,,,,,,,,,,,,,,,
7,3,,172147-74850,,"VALVE ASSY, RELIEF",2,2,,,,,,,,,,,,,,,
8,3,,172147-74860,,PLUG,2,2,,,,,,,,,,,,,,,
9,3,,26716-080002,,"NUT M 8",4,4,,,,,,,,,,,,,,,
10,3,,26716-100002,,"NUT 10",2,2,,,,,,,,,,,,,,,
11,2,,22217-100000,,"SPRING WASHER 10",3,3,,,,,,,,,,,,,,,
12,2,,26116-100452,,"BOLT M10X 45 PLATED",3,3,,,,,,,,,,,,,,,
13,2,,26716-100002,,"NUT 10",3,3,,,,,,,,,,,,,,,
```

https://truckmanualshub.com/

Fig. 58 P. T. O. バルブ
P. T. O. VALVE

FROM M/#01525

P. T. O. ﾊﾞﾙﾌﾞ ASSY
P. T. O. VALVE ASSY
(772146-46100)
項目No. 32の見出しNo. 1は
項目No. 32の見出しNo. 2から47と
項目No. 58の見出しNo. 1から13と
項目No. 64の見出しNo. 1から36を含みます。
Fig. 32 Ref. No. 1
inc Fig. 32 Ref. No. 2～47
Fig. 58 Ref. No. 1～13
Fig. 64 Ref. No. 1～36

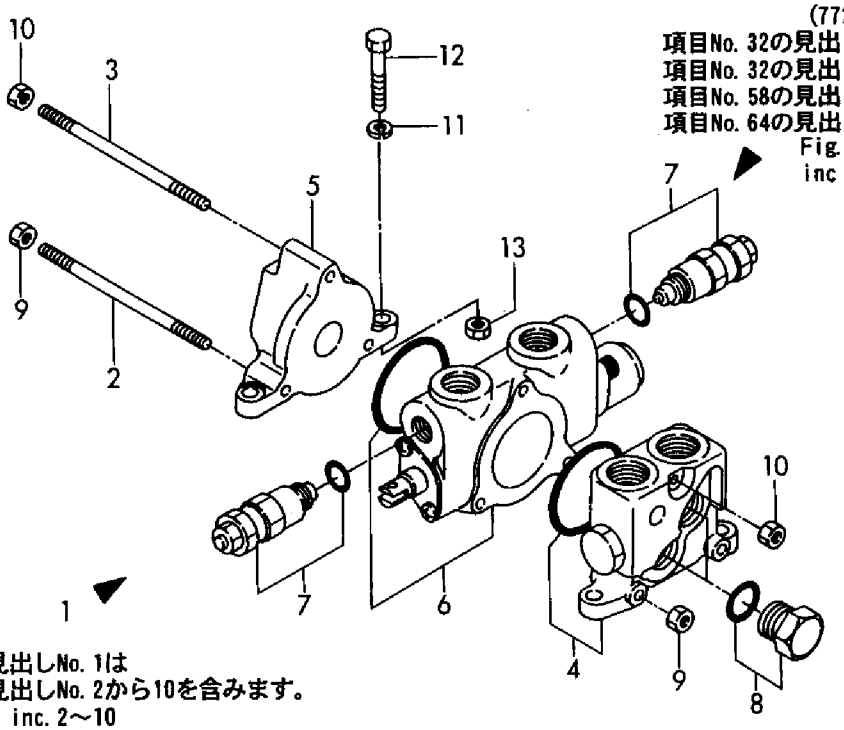

見出しNo. 1は
見出しNo. 2から10を含みます。
1 inc. 2～10

https://truckmanualshub.com/

```
1,1,,772146-75100,,"RESERVOIR ASSY",1,1,1,1,,,,,,,,,,,,,
1-1,1,,772146-75100-1,,"RESERVOIR (GREEN:85)",,,,,1,1,,,,,,,,,,,
2,2,,172146-73700,,"FILTER, RETURN",1,1,1,1,1,1,,,,,,,,,,,
3,3,,172146-73710,,"ELEMENT, FILTER",1,1,1,1,1,1,,,,,,,,,,,
4,3,,172146-73740,,BOLT,1,1,1,1,1,1,,,,,,,,,,,
5,3,,22190-080002,,"SEAL WASHER  8S",1,1,1,1,1,1,,,,,,,,,,,
6,2,,172146-73730,,"FILTER, SUCTION",1,1,1,1,1,1,,,,,,,,,,,
8,3,,172146-75250,,"RUBBER, SEAL",1,1,1,1,1,1,,,,,,,,,,,
9,3,,172146-75270,,"RUBBER, SEAL",1,1,1,1,1,1,,,,,,,,,,,
10,2,,172146-75220,,"FLANGE, SUCTION",1,1,1,1,,,,,,,,,,,,,
10-1,2,,172146-75220-1,,"FLANGE, SUCTION (85)",,,,,1,1,,,,,,,,,,,
11,2,,172122-75310-4,,"COVER, HYD. TANK(40)",1,1,1,1,,,,,,,,,,,,,
11-1,2,,172122-75310-1,,"COVER, HYD. TANK(85)",,,,,1,1,,,,,,,,,,,
12,2,,172122-75600,,"GAUGE, OIL LEVEL",1,1,1,1,1,1,,,,,,,,,,,
13,3,,172122-75620,,BOLT,2,2,2,2,2,2,,,,,,,,,,,
14,3,,172122-75630,,GASKET,4,4,4,4,4,4,,,,,,,,,,,
15,2,,22134-240000,,"WASHER 24",1,1,1,1,1,1,Z,,,,,,,,,,,M20639,,M20639
16,2,,22417-200160,,"COTTER PIN 2.0X16",1,1,1,1,1,1,Z,,,,,,,,,,,M20902,,M20902
17,2,,24321-001350,,"O-RING 1A G-135.0",2,2,2,2,2,2,,,,,,,,,,,
18,2,,26013-100202,,"BOLT W/WASHER M10X20",8,8,8,8,8,8,,,,,,,,,,,
19,2,,933171-23042,,MAGNET,1,1,1,1,1,1,Z,,,,,,,,,,,M20902,,M20902
20,2,,933171-23062,,"PLUG 24, DRAIN",1,1,1,1,1,1,,,,,,,,,,,
20-1,2,,172187-75500,,"PLUG 24",,,,,1,1,R,,,,,,,,,,,M20902,,M20902
21,1,,22217-140000,,"SPRING WASHER 14",4,4,4,4,4,4,,,,,,,,,,,
22,1,,26116-140402,,"BOLT M14X 40 PLATED",4,4,4,4,4,4,,,,,,,,,,,
23,1,,24341-000300,,"O-RING 1A S-30.0",,,,,1,1,W,,,,,,,,,,,M20639,,M20639
```

https://truckmanualshub.com/

Fig. 59 作動油タンク HYD. OIL TANK

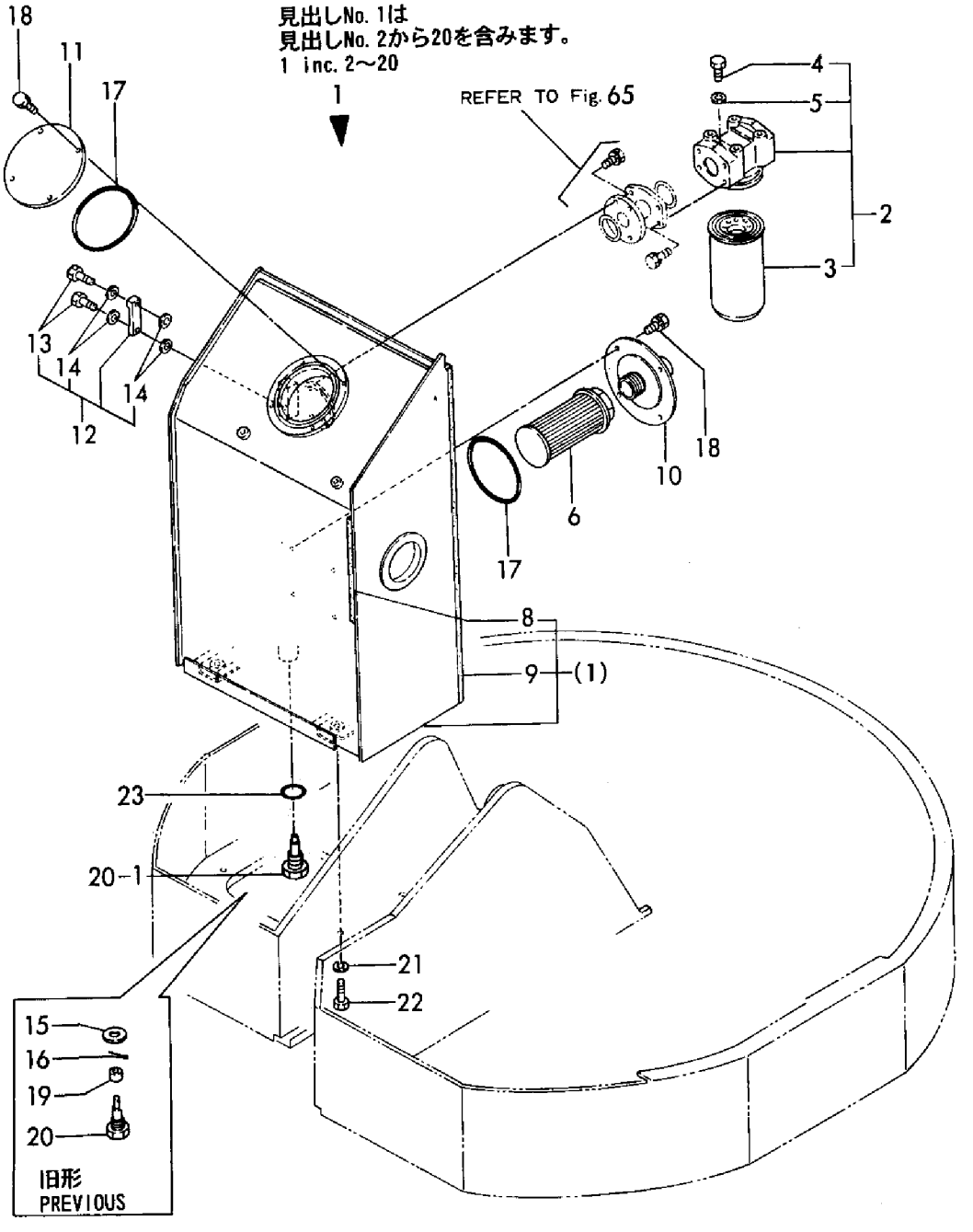

https://truckmanualshub.com/

```
1,1,,172142-76100,,CONNECTOR,3,3,3,3,3,3,,,,,,,,,,,
2,1,,172142-76110,,"ELBOW PF1/2",3,3,3,3,3,3,,,,,,,,,,,
3,2,,24315-000180,,"O-RING 1B P-18.0",3,3,3,3,3,3,,,,,,,,,,,
4,1,,172146-76151,,JOINT,1,1,1,1,1,1,,,,,,,,,,,
5,1,,172124-76350,,"CONNECTOR 1/2",1,1,1,1,2,2,,,,,,,,,,,
6,2,,933152-07400,,"O-RING (A)",1,1,1,1,2,2,,,,,,,,,,,
7,1,,24315-000240,,"O-RING 1B P-24.0",3,3,3,3,3,3,,,,,,,,,,,
8,1,,933152-07274,,CONNECTOR,1,1,1,1,,,,,,,,,,,,,
9,1,,933152-07400,,"O-RING (A)",1,1,1,1,,,,,,,,,,,,,
10,1,,933152-24120,,"O-RING (B)",1,1,1,1,,,,,,,,,,,,,
11,1,,933166-24120,,"CONNECTOR PF1/2-10",1,1,1,1,,,,,,,,,,,,,
12,1,,933166-25420,,ADAPTER,3,3,,,,,,,,,,,,,,,
12-1,1,,23391-040000,,"JOINT RGI 1/2",3,3,3,3,3,3,R,,,M01078,,M01078,,,,,,
13,1,,933171-24740,,"PLUG PT3/8",3,3,3,3,3,3,,,,,,,,,,,
14,1,,172146-76401,,"PIPE, SUCTION",1,1,,,,,,,,,,,,,,,
15,1,,26013-100252,,"BOLT W/WASHER M10X25",2,2,2,2,2,2,,,,,,,,,,,
16,1,,172146-78100,,"HOSE A",1,1,1,1,1,1,,,,,,,,,,,
17,1,,172146-78110,,"HOSE (B), SUCTION",3,3,3,3,3,3,,,,,,,,,,,
17-1,1,,172146-78111,,"HOSE (B), SUCTION",,,,,3,3,S,,,,,,,,,,,M20872,,M20872
18,1,,172146-78120,,CLAMP,1,1,1,1,1,1,,,,,,,,,,,
19,1,,172146-78130,,"PLATE, CLAMP",1,1,1,1,1,1,,,,,,,,,,,
20,1,,172146-78340,,HOSE,1,1,,,,,,,,,,,,,,,
20-1,1,,172146-78341,,HOSE,1,1,1,1,1,1,S,,,M01606,,M01606,,,,,,
21,2,,172146-78680,,"CHUBE, SPIRAL",1,1,,,,,,,,,,,,,,,
21-1,2,,172146-78681,,"TUBE, SPIRAL",1,1,1,1,1,1,S,,,M01606,,M01606,,,,,,
22,1,,172146-78351,,HOSE,1,1,,,,,,,,,,,,,,,
22-1,1,,172146-78352,,HOSE,1,1,1,1,,,S,,,M01606,,M01606,,,,,,
23,2,,172146-78680,,"CHUBE, SPIRAL",1,1,,,,,,,,,,,,,,,
23-1,2,,172146-78681,,"TUBE, SPIRAL",1,1,1,1,,,S,,,M01606,,M01606,,,,,,
24,1,,172146-78361,,HOSE,1,1,1,1,,,,,,,,,,,,,
25,2,,172146-78680,,"CHUBE, SPIRAL",1,1,1,1,,,,,,,,,,,,,
26,1,,23000-041000,,"CLAMP 41",12,12,12,12,12,12,,,,,,,,,,,
27,1,,23000-070000,,"CLAMP 70",4,4,4,4,4,4,,,,,,,,,,,
28,1,,26013-100252,,"BOLT W/WASHER M10X25",2,2,2,2,2,2,,,,,,,,,,,
29,1,,172146-76700,,"TUBE ASSY, SUCTION A",,,1,1,1,1,W,,,,,,,M11757,,M11757,,
29-1,1,,172146-76701,,"TUBE ASSY, SUCTION A",,,,,1,1,S,,,,,,,,,,,M20872,,M20872
30,1,,172112-77261,,"CONNECTOR PF1/2L-42",,,,,1,1,,1,,,,,,,,,
30-1,1,,172124-76350,,"CONNECTOR 1/2",,,,,1,1,N,,,,,,,,,,,M20501,,M20501
31,2,,933152-24120,,"O-RING (B)",,,,,1,1,,1,,,,,,,,,
32,1,,23391-040000,,"JOINT RGI 1/2",,,,,1,1,,1,,,,,,,,,
33,1,,23393-040000,,"JOINT 90RGI 1/2",,,,,1,1,,1,,,,,,,,,
34,1,,172146-78353,,HOSE,,,,,1,1,,1,,,,,,,,,
35,1,,172146-78362,,HOSE,,,,,1,1,,1,,,,,,,,,
```

https://truckmanualshub.com/

Fig. 60 油圧配管(ﾀﾝｸ～ﾎﾟﾝﾌﾟ～ﾊﾞﾙﾌﾞ) HYD. OIL PIPING(TANK～PUMP～VALVE)

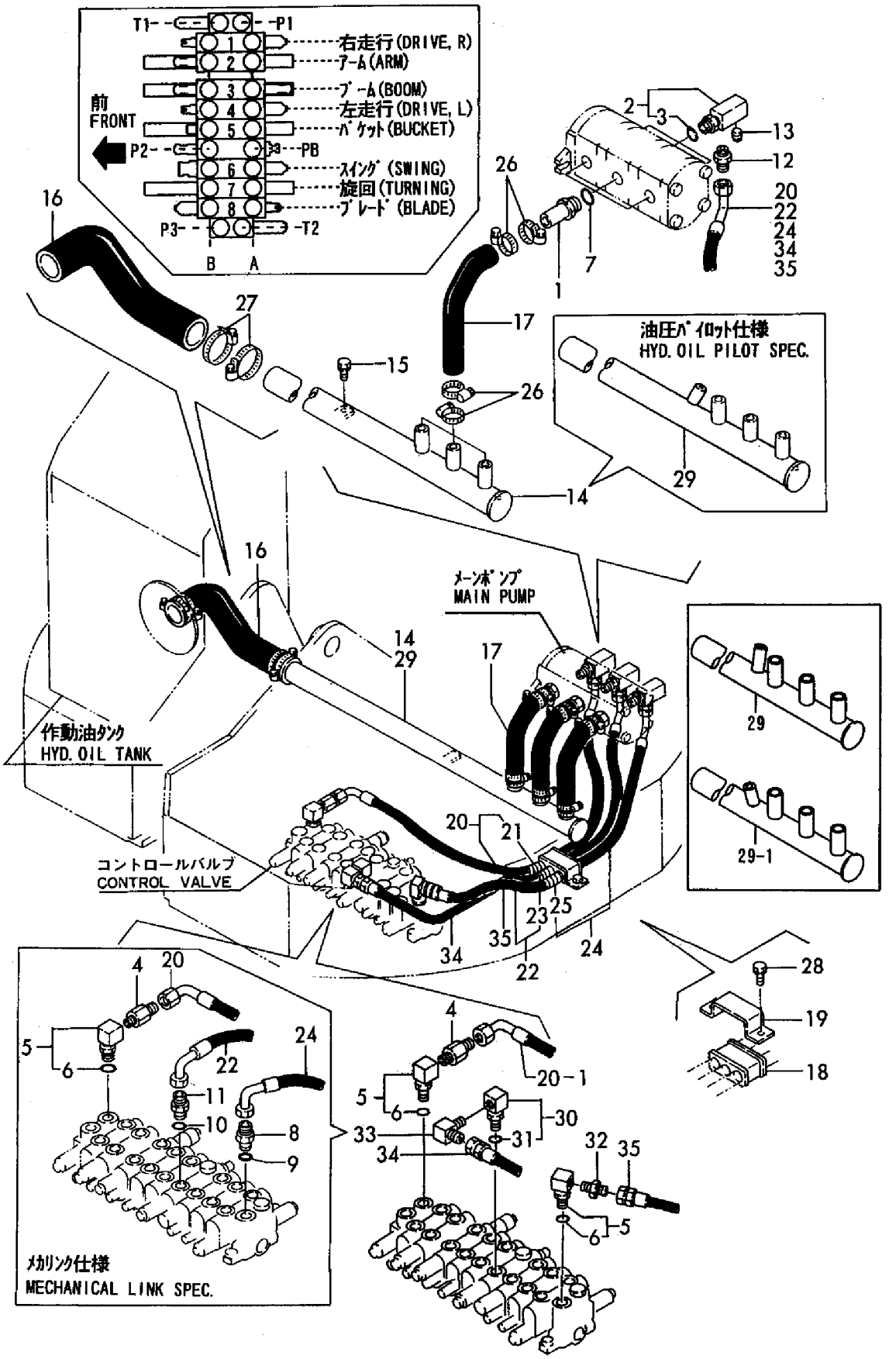

https://truckmanualshub.com/

```
1,1,,172122-76140,,"CONNECTOR PF3/8-55",2,2,2,2,2,2,,,,,,,,,,,
2,1,,933152-24120,,"O-RING (B)",8,8,8,8,8,8,,,,,,,,,,,
3,1,,933171-24530,,"CONNECTOR 3/8-88",3,3,3,3,3,3,,,,,,,,,,,
4,1,,933171-24530,,"CONNECTOR 3/8-88",3,3,3,3,3,3,,,,,,,,,,,
5,1,,172146-78140,,"PLATE, CLAMP",2,2,2,2,2,2,,,,,,,,,,,
6,1,,172146-78200,,CLAMP,1,1,,,,,,,,,,,,,,,
6-1,1,,172146-78201,,CLAMP,1,1,1,1,1,1,N,,,M01606,,M01606,,,,,,
7,2,,172146-78230,,CLAMP,1,1,1,1,1,1,,,,,,,,,,,
8,1,,172146-78240,,"PLATE, RUBBER",1,1,1,1,1,1,,,,,,,,,,,
9,2,,172146-78230,,CLAMP,1,1,1,1,1,1,,,,,,,,,,,
10,1,,172146-78250,,"GUIDE, HOSE",2,2,2,2,2,2,,,,,,,,,,,
11,1,,172146-78380,,HOSE,2,2,2,2,2,2,,,,,,,,,,,
12,1,,172146-78390,,HOSE,1,1,1,1,1,1,,,,,,,,,,,
13,1,,172146-78400,,HOSE,1,1,1,1,1,1,,,,,,,,,,,
14,1,,172146-78410,,HOSE,1,1,1,1,1,1,,,,,,,,,,,
15,1,,172146-78420,,HOSE,1,1,1,1,1,1,,,,,,,,,,,
16,1,,172146-78430,,HOSE,2,2,2,2,2,2,,,,,,,,,,,
17,1,,172146-78730,,HOSE,1,1,1,1,1,1,W,,,M00531,,M00531,,,,,,
18,1,,172122-79890,,"CLAMP 350",1,1,1,1,1,1,W,,,M00531,,M00531,,,,,,
19,1,,22217-080000,,"SPRING WASHER  8",2,2,2,2,2,2,,,,,,,,,,,
20,1,,22217-100000,,"SPRING WASHER 10",2,2,2,2,2,2,,,,,,,,,,,
21,1,,26116-100162,,"BOLT M10X 16 PLATED",2,2,2,2,2,2,,,,,,,,,,,
22,1,,26450-080452,,"BOLT M 8X 45",2,2,,,,,,,,,,,,,,,
22-1,1,,26450-080202,,"BOLT M 8X 20",2,2,2,2,2,2,S,,,M01606,,M01606,,,,,,
```

https://truckmanualshub.com/

Fig. 61 油圧配管(バルブ～ブーム) HYD. OIL PIPING(VALVE～BOOM)

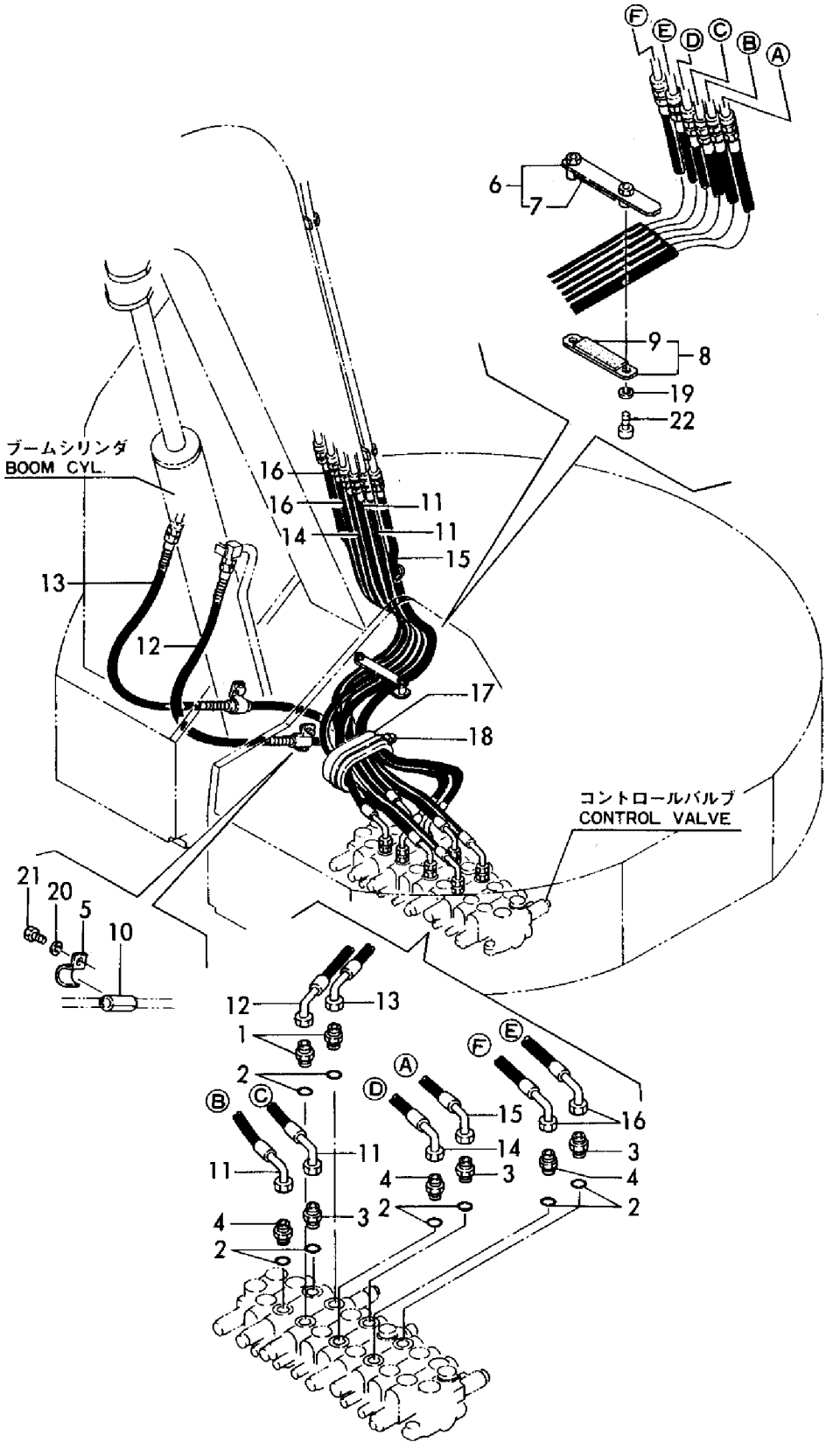

https://truckmanualshub.com/

```
1,1,,172122-76131,,"CONNECTOR PT1/2-45",2,2,,,,,,,,,,,,,,,
1-1,1,,172730-75140,,ADAPTOR,2,2,2,2,,,S,,,M00869,,M00869,,,,,,
2,2,,24315-000180,,"O-RING 1B P-18.0",2,2,,,,,Z,,,M00869,,M00869,,,,,,
3,1,,172122-76140,,"CONNECTOR PF3/8-55",2,2,2,2,,,,,,,,,,,,,
4,1,,172142-76150,,"JOINT 3/4UN-1/4",2,2,2,2,,,,,,,,,,,,,
5,1,,172312-76180,,"NIPPLE 1/2X3/8",2,2,,,,,Z,,,M00869,,M00869,,,,,,
6,1,,172110-76440,,ELBOW,2,2,,,,,,,,,,,,,,,,
6-1,1,,23393-020000,,"JOINT 90RGI1/4",2,2,2,2,,,R,,,M01078,,M01078,,,,,,
7,1,,933152-22771,,"ELBOW (90ß)",4,4,,,,,,,,,,,,,,,,
7-1,1,,23393-030000,,"JOINT 90RGI 3/8",4,4,4,4,,,R,,,M01078,,M01078,,,,,,
8,1,,933152-24062,,"CONNECTOR (C)",1,1,1,1,,,,,,,,,,,,,
9,2,,933152-24120,,"O-RING (B)",1,1,1,1,,,,,,,,,,,,,
10,1,,933152-24120,,"O-RING (B)",7,7,7,7,,,,,,,,,,,,,
11,1,,933152-24410,,"CONNECTOR (A)",1,1,1,1,,,,,,,,,,,,,
12,1,,933155-08481,,"CONNECTOR (A)",3,3,3,3,,,,,,,,,,,,,
13,1,,172146-78450,,HOSE,1,1,1,1,,,,,,,,,,,,,
14,2,,172137-78860,,"TUBE, SPIRAL",1,1,1,1,,,,,,,,,,,,,
15,1,,172146-78660,,HOSE,1,1,,,,,,,,,,,,,,,
15-1,1,,172146-78582,,HOSE,1,1,1,1,,,S,,,M00869,,M00869,,,,,,
16,1,,172146-78480,,HOSE,1,1,1,1,,,,,,,,,,,,,
17,2,,172312-78700,,"TUBE, SPIRAL",1,1,1,1,,,,,,,,,,,,,
18,1,,172146-78510,,HOSE,1,1,1,1,,,,,,,,,,,,,
19,2,,172312-78700,,"TUBE, SPIRAL",1,1,1,1,,,,,,,,,,,,,
20,1,,172146-78530,,HOSE,1,1,1,1,,,,,,,,,,,,,
21,2,,172312-78700,,"TUBE, SPIRAL",1,1,1,1,,,,,,,,,,,,,
22,1,,172146-78550,,HOSE,2,2,2,2,,,,,,,,,,,,,
23,2,,172312-78700,,"TUBE, SPIRAL",2,2,2,2,,,,,,,,,,,,,
24,1,,172146-78581,,HOSE,1,1,,,,,,,,,,,,,,,
24-1,1,,172142-78670,,HOSE,1,1,1,1,,,S,,,M00869,,M00869,,,,,,
25,1,,933152-09280,,"BAND 170",1,1,1,1,,,,,,,,,,,,,
26,1,,24315-000140,,"O-RING 1B P-14.0",2,2,2,2,,,W,,,M00869,,M00869,,,,,,
```

https://truckmanualshub.com/

Fig. 62 油圧配管(ﾊﾞﾙﾌﾞ～ﾓｰﾀ、ｽｲﾍﾞﾙ) HYD. OIL PIPING(VALVE～MOTOR, SWIVEL)

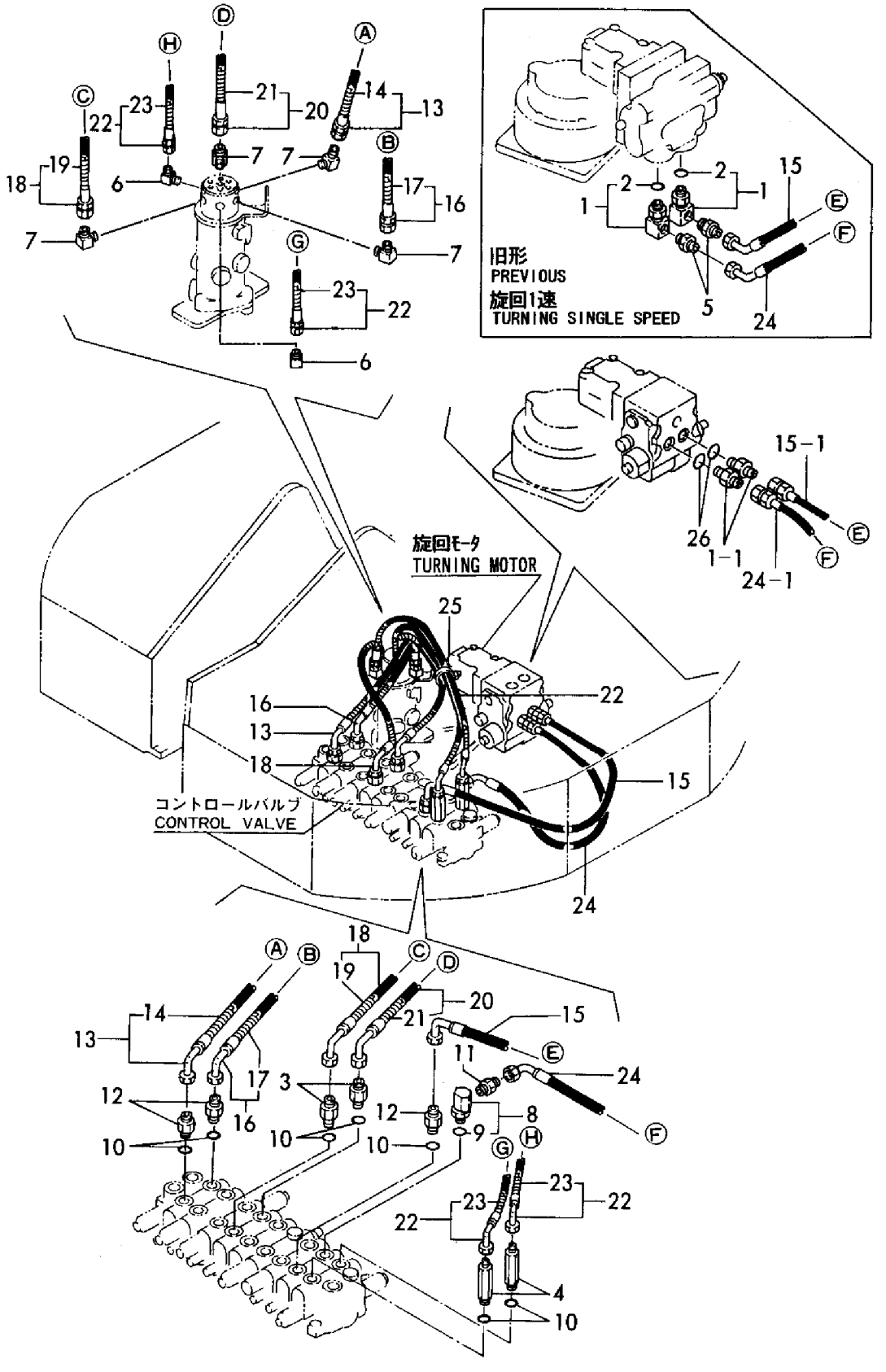

https://truckmanualshub.com/

Fig. 63 油圧配管(ﾊﾞﾙﾌﾞ～ﾓｰﾀ、ｽｲﾍﾞﾙ)(-2)
HYD. OIL PIPING(VALVE～MOTOR, SWIVEL)(-2)

FROM M/#20501

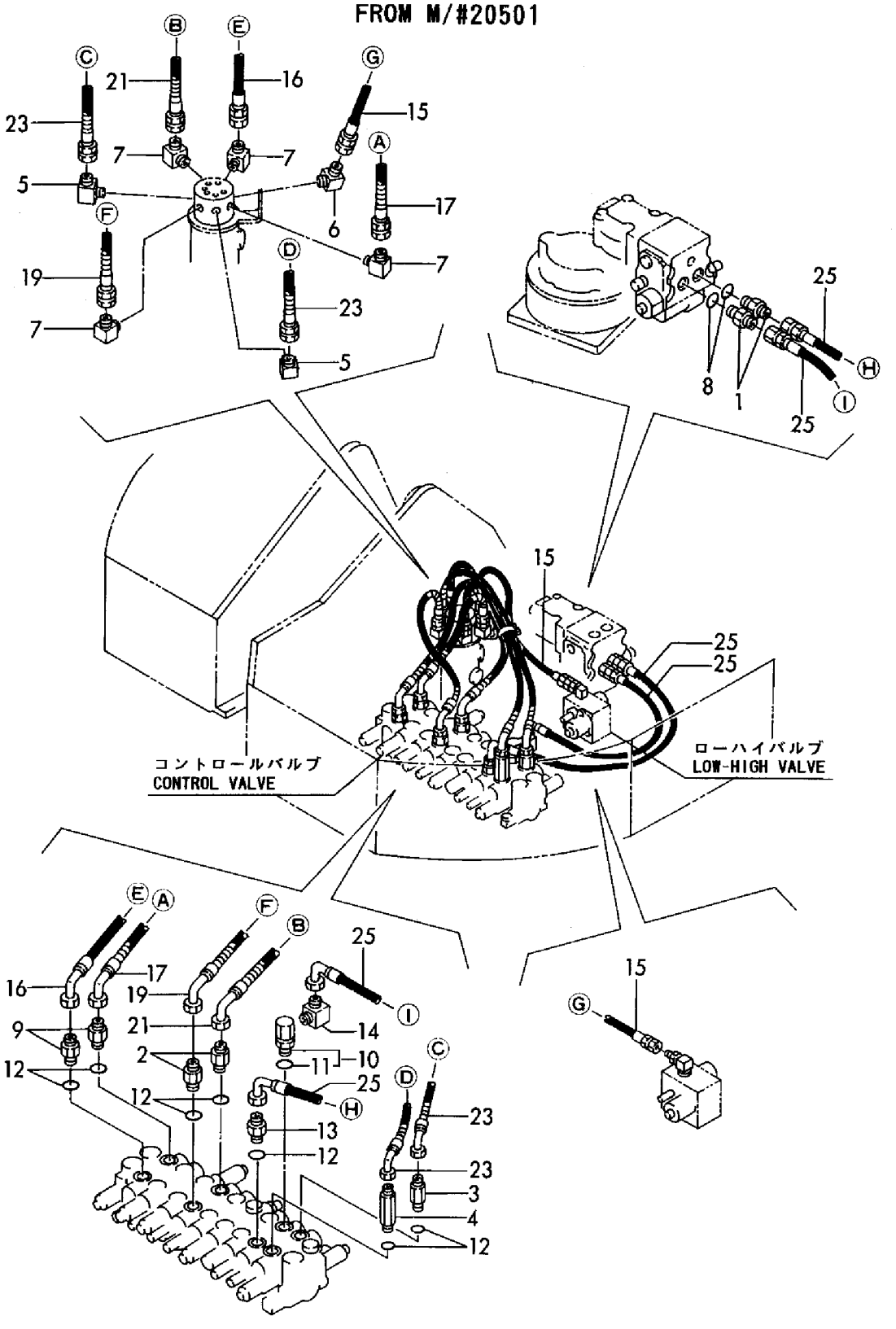

https://truckmanualshub.com/

Fig. 64 油圧配管(P. T. O.) HYD. OIL PIPING(P. T. O.)

P. T. O. ﾊﾞﾙﾌﾞ ASSY
P. T. O. VALVE ASSY
(772146-46100)
項目No. 32の見出しNo. 1は
項目No. 32の見出しNo. 2から47と
項目No. 58の見出しNo. 1から13と
項目No. 64の見出しNo. 1から36を含みます。
Fig. 32 Ref. No. 1
inc Fig. 32 Ref. No. 2～47
Fig. 58 Ref. No. 1～13
Fig. 64 Ref. No. 1～36

FROM M/#01525

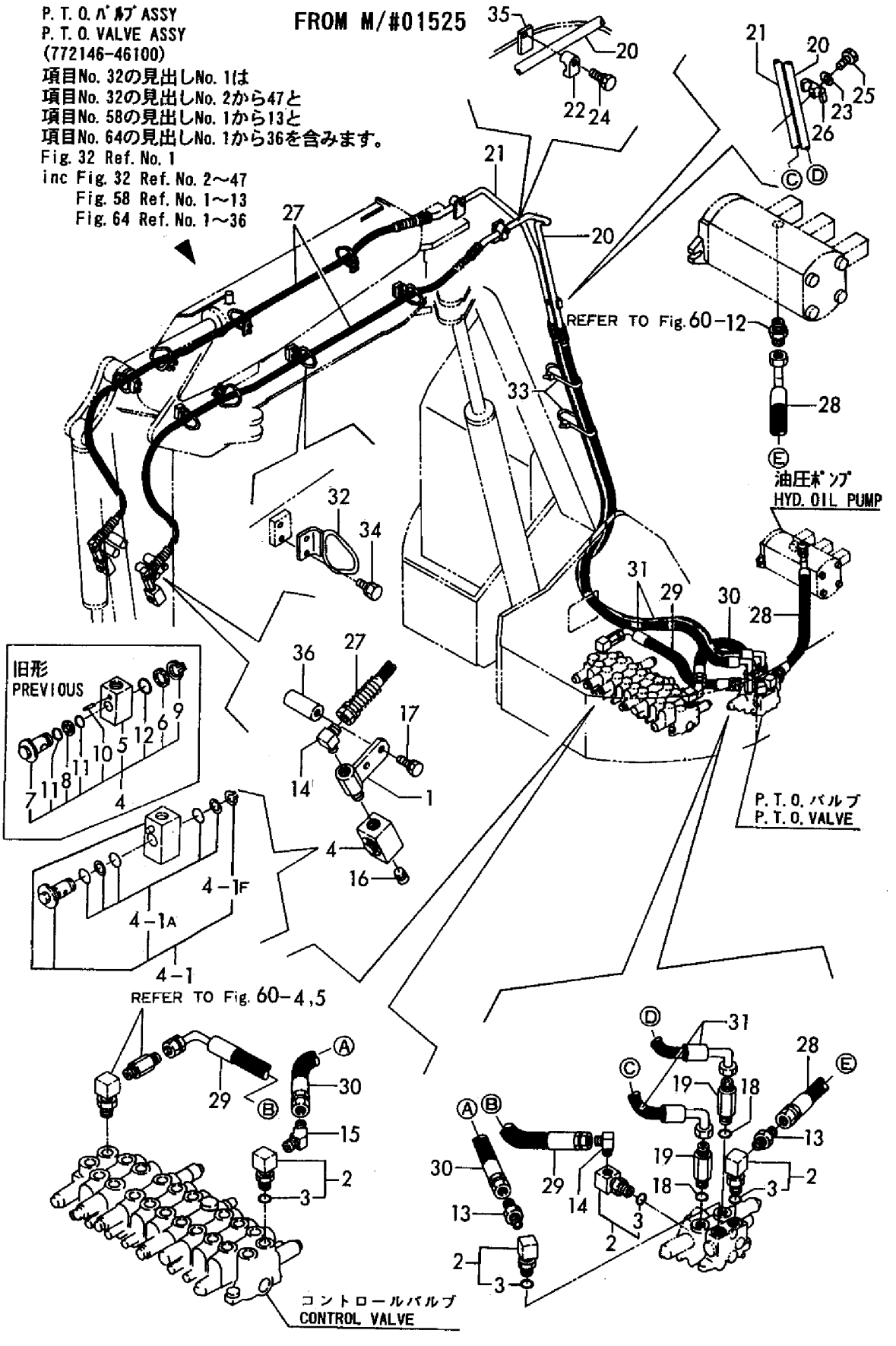

https://truckmanualshub.com/

Fig. 65 油圧配管(リターン)(メカリンク) HYD. OIL PIPING(RETURN) (MECHANICAL LINK)

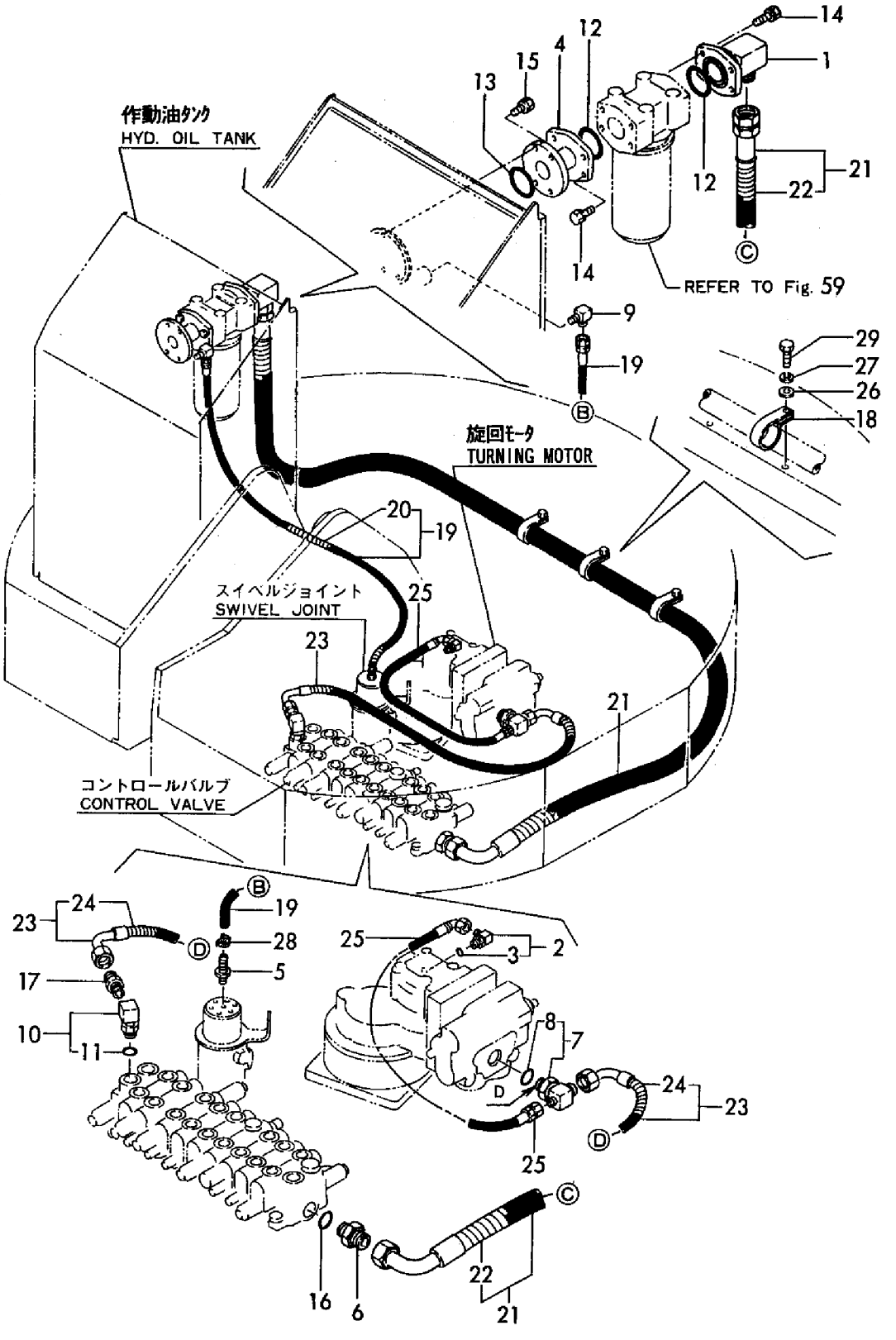

https://truckmanualshub.com/

Fig. 66 油圧配管(リターン)(油圧パイロット) HYD. OIL PIPING(RETURN) (HYD. OIL PILOT)

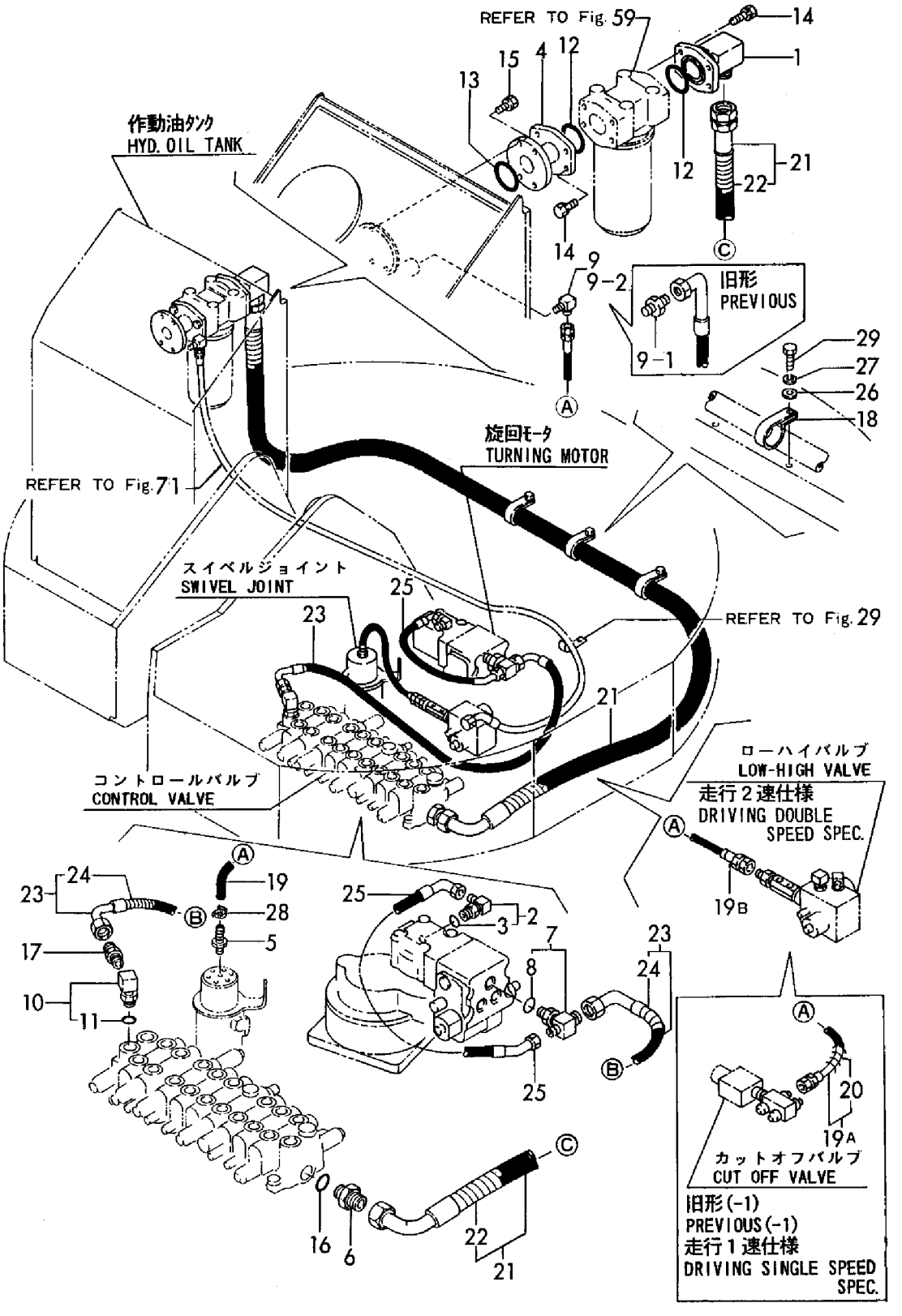

https://truckmanualshub.com/

Fig. 67 油圧配管(トラックフレーム)(走行1速) HYD. OIL PIPING(TRACK FRAME)(DRIVING SINGLE SPEED)

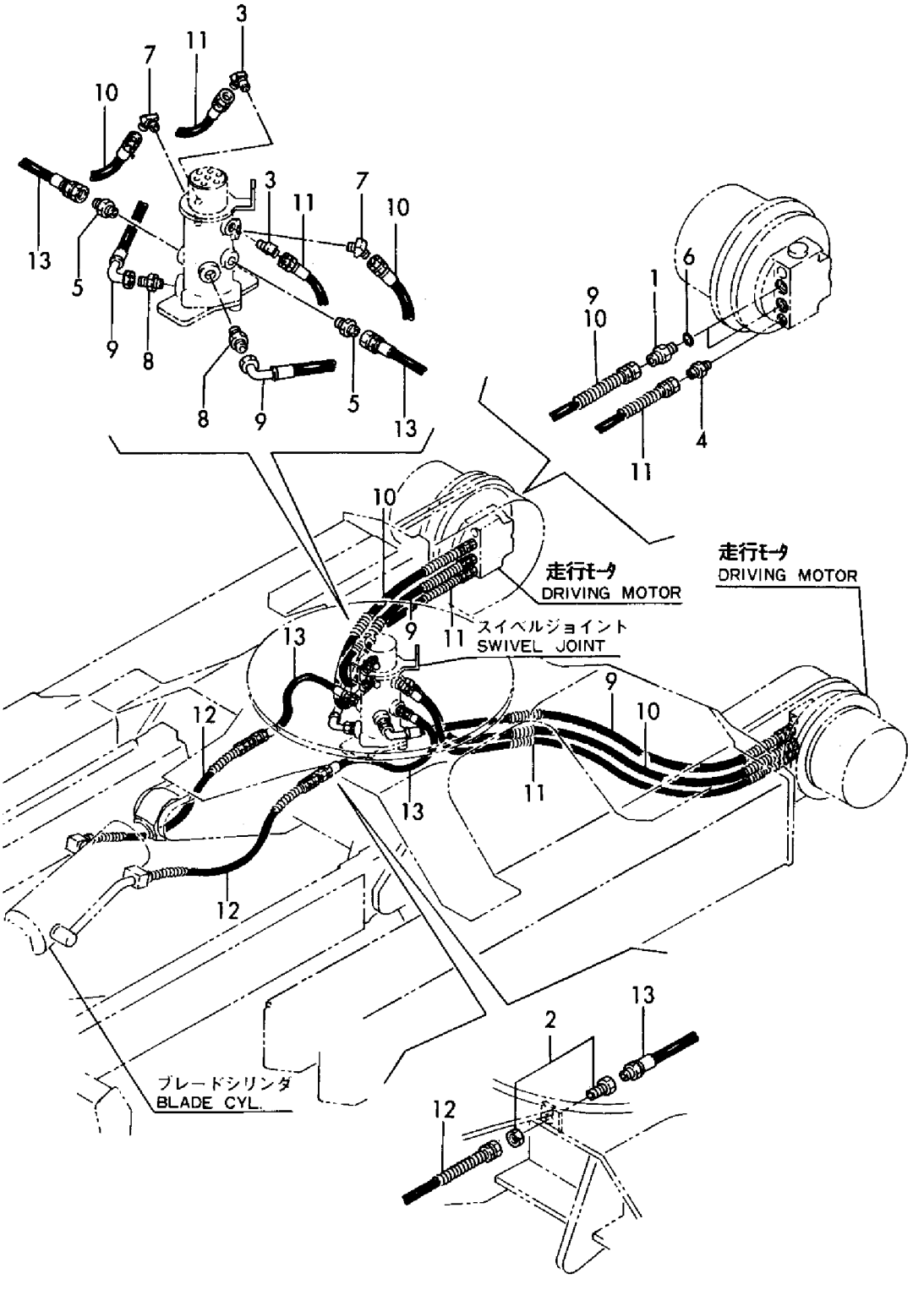

https://truckmanualshub.com/

Fig. 68 油圧配管(トラックフレーム)(走行２速) HYD. OIL PIPING(TRACK FRAME)(DRIVING DOBLE SPEED)

FROM M/#20501

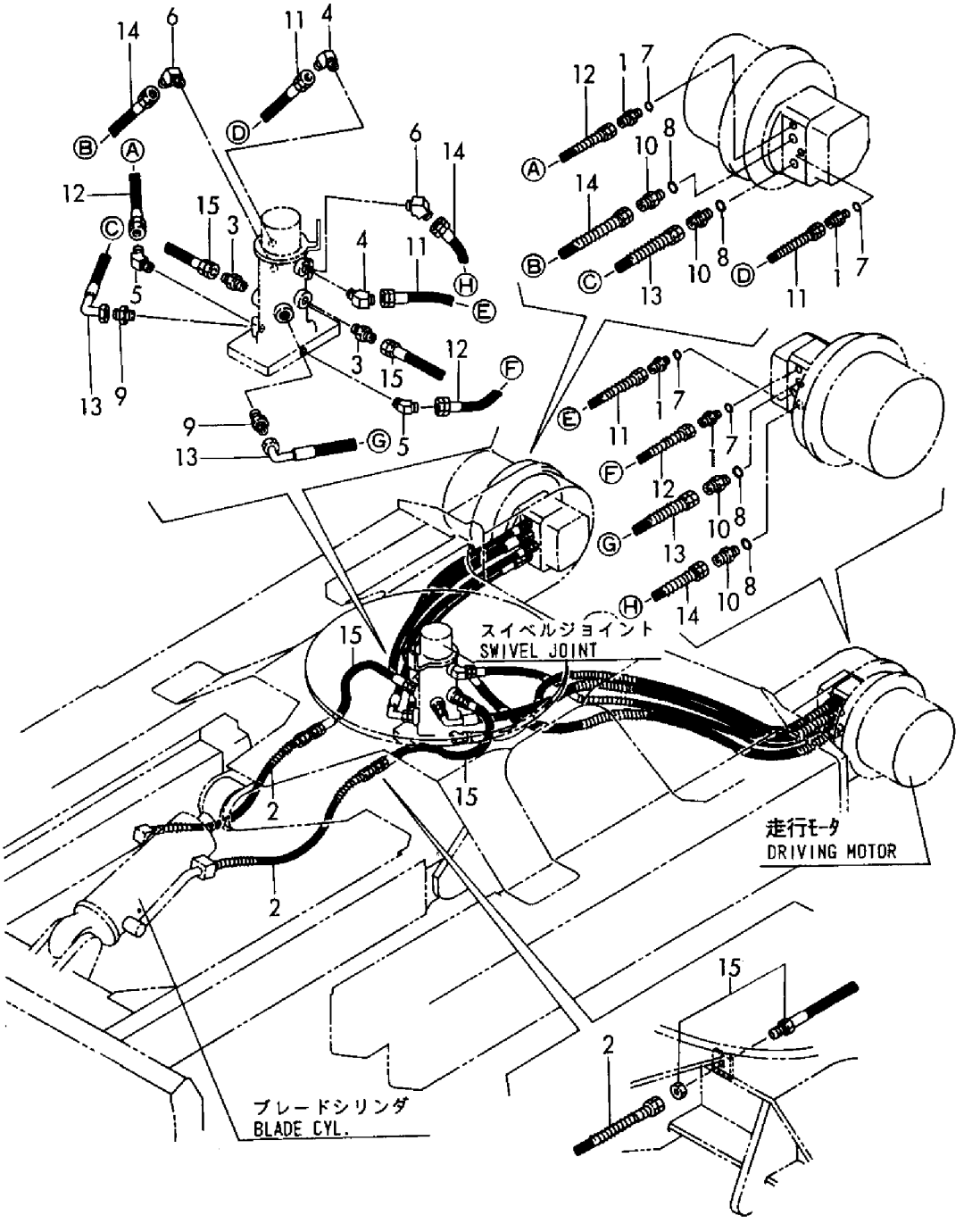

https://truckmanualshub.com/

Fig. 69 油圧配管(ブーム) HYD. OIL PIPING(BOOM)

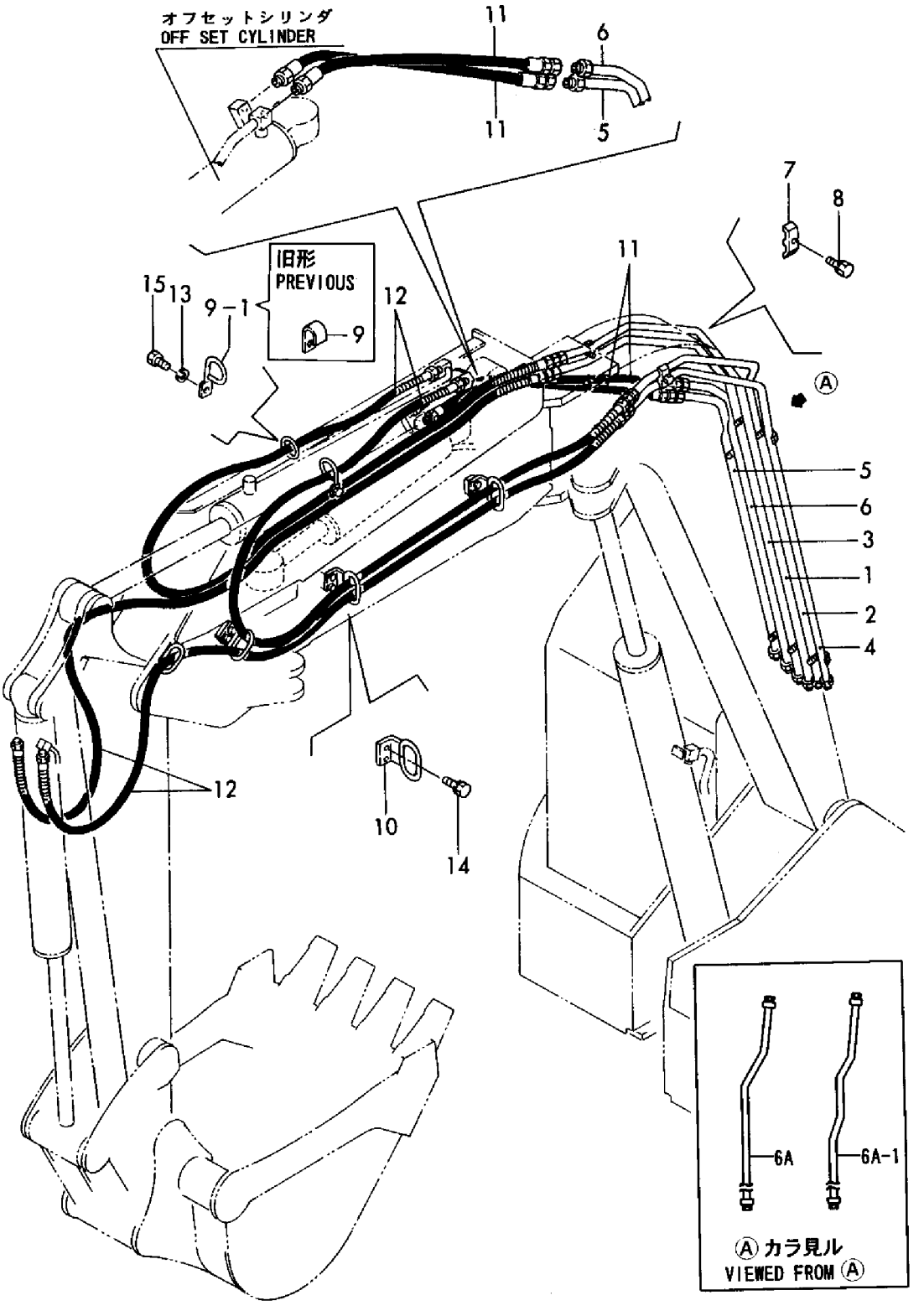

https://truckmanualshub.com/

Fig. 70 コントロール配管(ポンプ～カットオフV. ～リターン) CONTROL PIPING(PUMP～CUT OFF V. ～RETURN)

FROM M/#10501

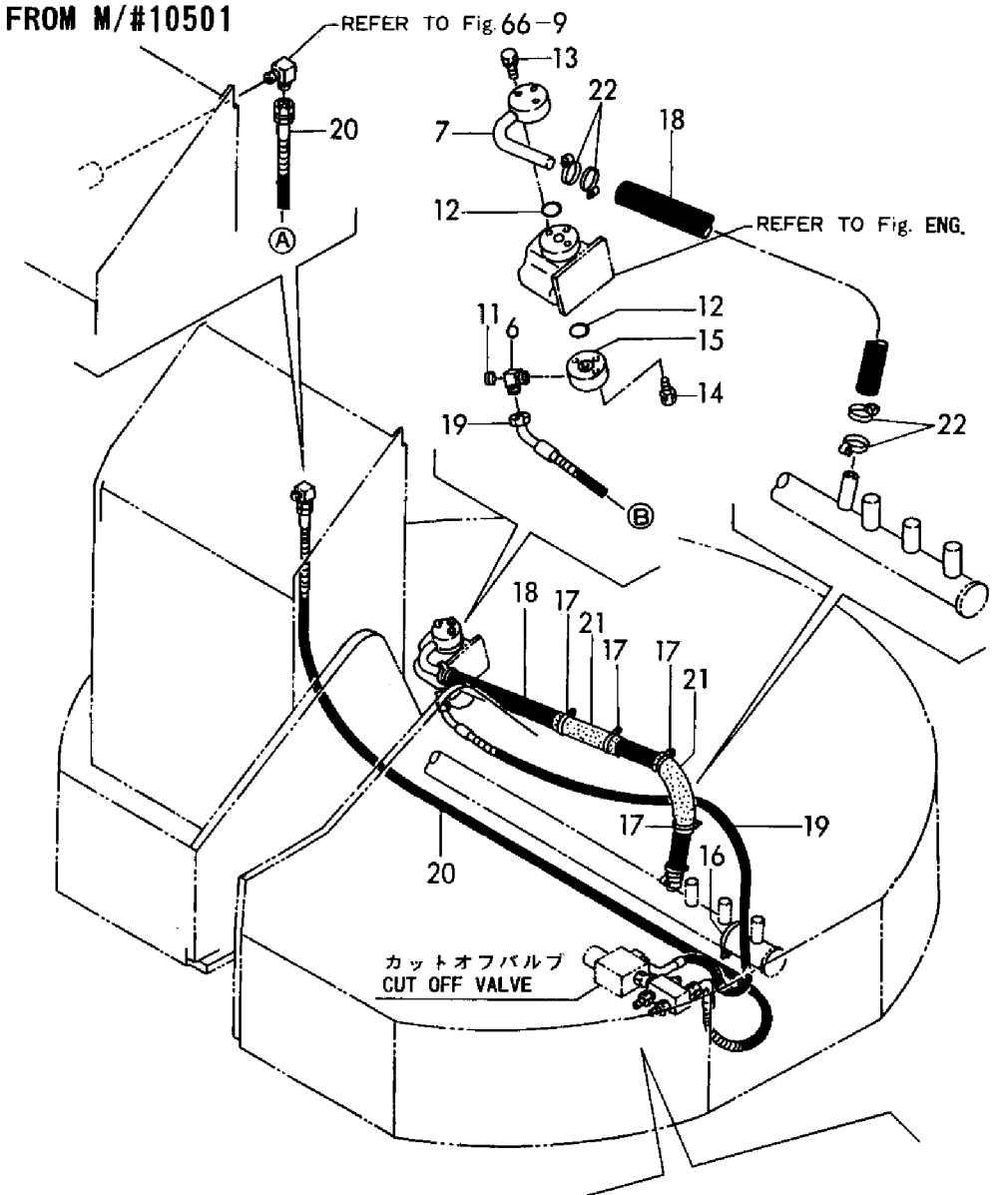

油圧コントロール仕様において
コントロール配管は下記の仕様が
有りますので確認の上各項目を
参照下さい。
AS FOR HYD. OIL CONTROL,
REFER TO THE TABLE BELOW FOR THE
DIFFERENCE AMONG TREE TYPES OF
CONTROL PIPING.

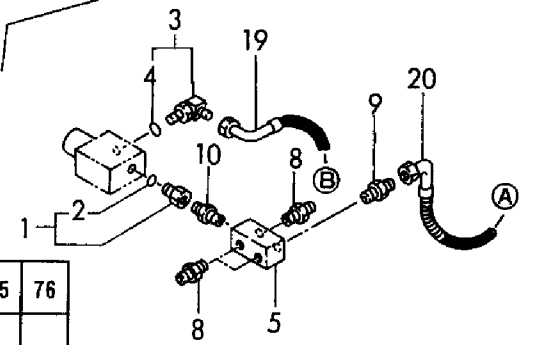

仕様 TYPE / Fig.	70	71	72	73	74	75	76
隔壁配管(-1) PLATE PIPING(-1)	○		○	○			
ﾏﾙﾁﾁｪﾝｼﾞ(-1) MULTI CHANGE(-1)	○				○	○	
ﾀﾞｲﾚｸﾄ配管(-2) DIRECT PIPING(-2)		○					○
ﾏﾙﾁﾁｪﾝｼﾞ(-2) MULTI CHANGE(-2)		○			○	○	

https://truckmanualshub.com/

Fig. 71 コントロール配管(ポンプ～ローハイV. ～リターン) CONTROL PIPING(PUMP～LOW-HIGH V. ～RETURN)

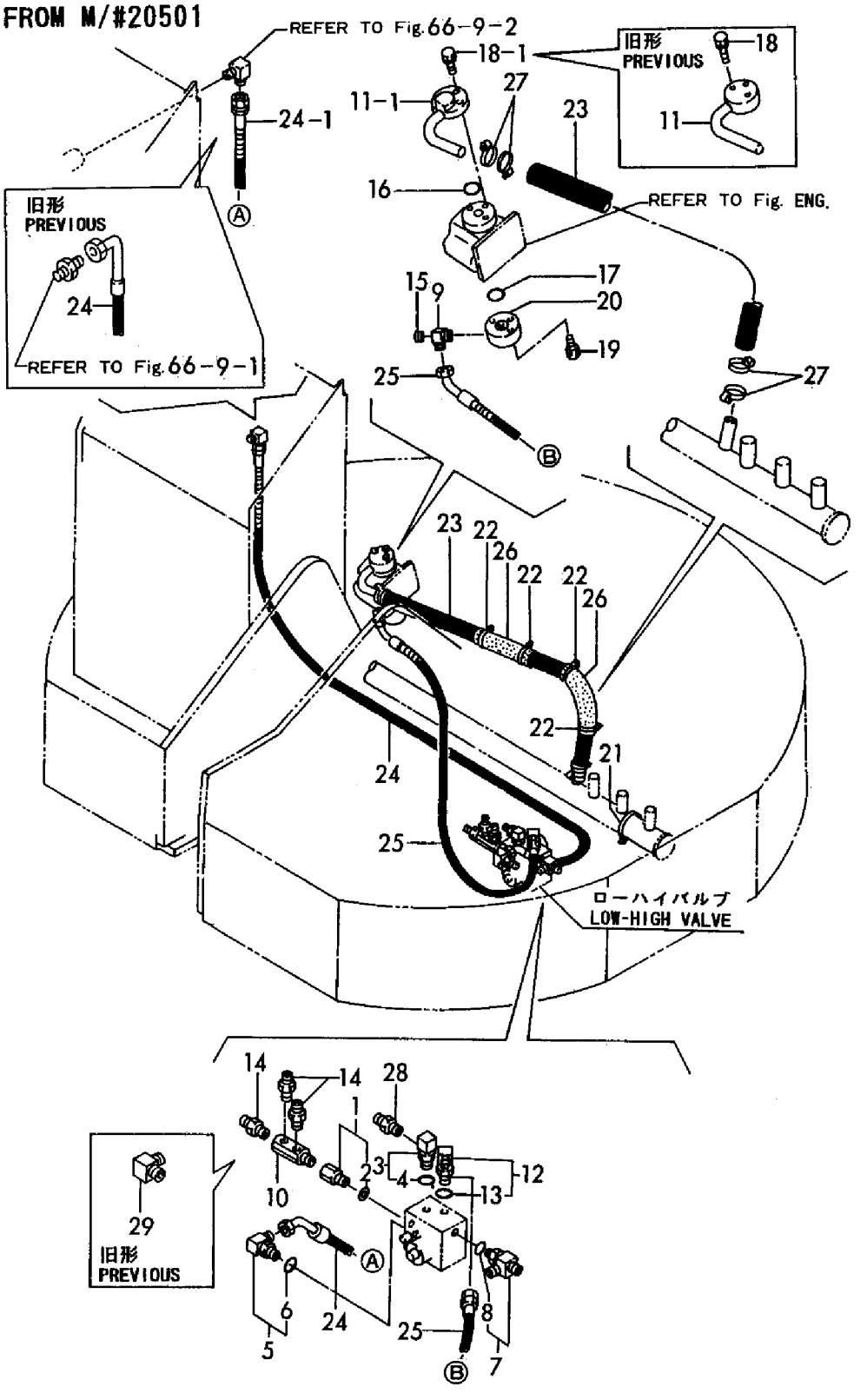

https://truckmanualshub.com/

Fig. 72 コントロール配管(カットオフV. ～リモコンV. ～隔壁)
CONTROL PIPING(CUT OFF V. ～RMOTE CONTROL V. ～PLATE)

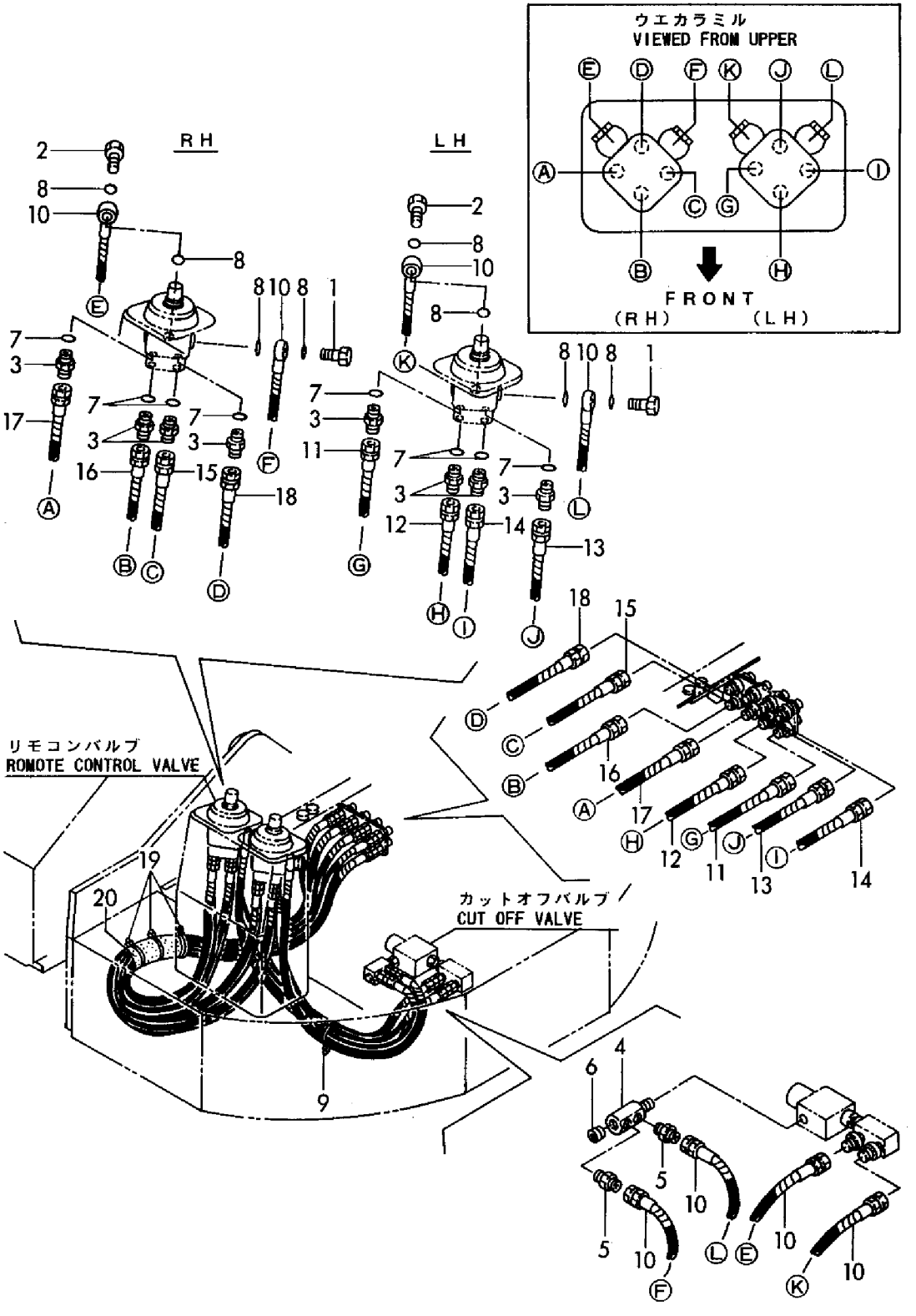

https://truckmanualshub.com/

Fig. 73 コントロール配管(隔壁～コントロールバルブ)
CONTROL PIPING(PLATE～CONTROL V.)

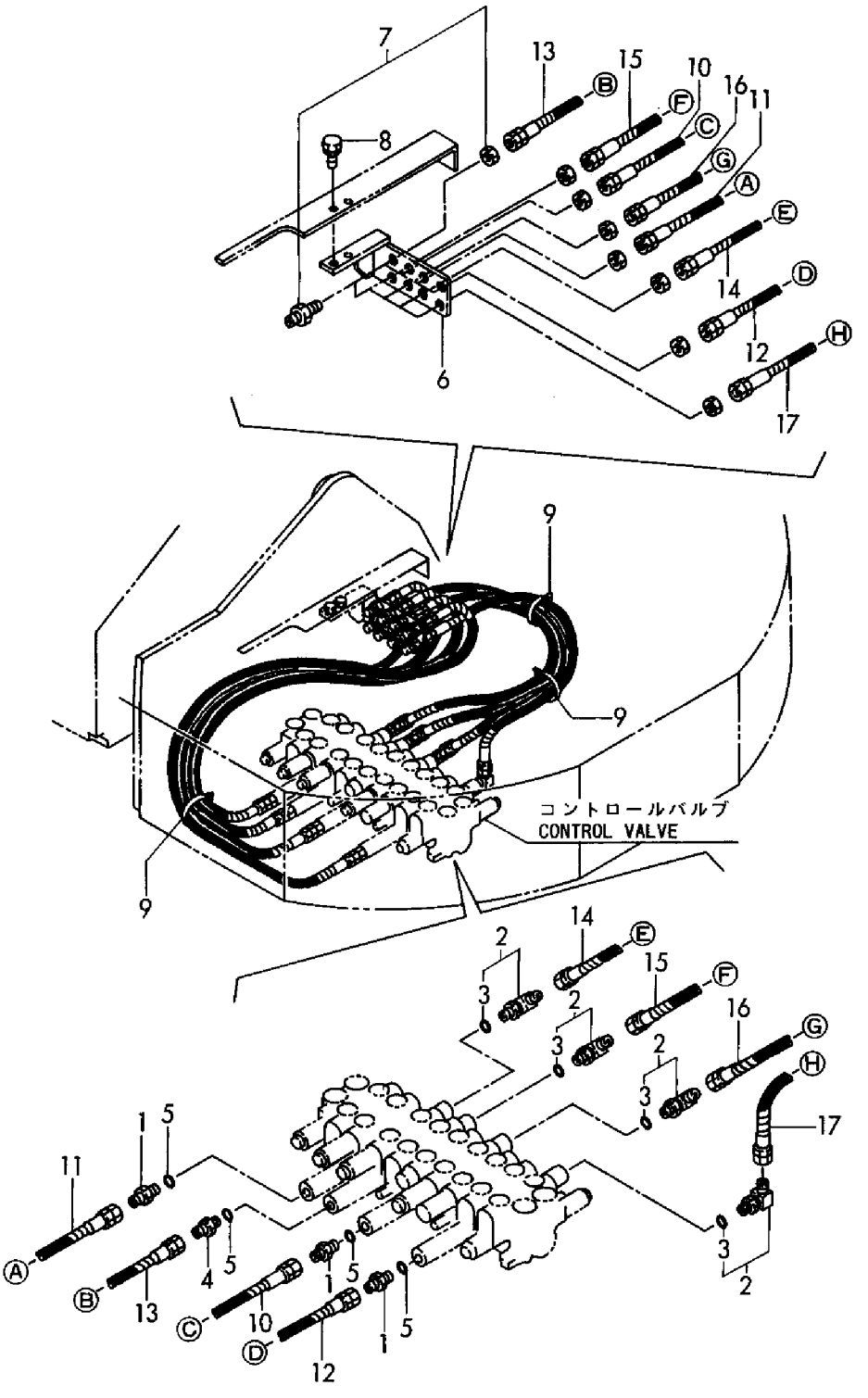

https://truckmanualshub.com/

Fig. 74 コントロール配管(カットオフ、ローハイV. ～リモコンV, ～マルチチェンジV.)
CONTROL PIPING(CUT OFF, LOW-HIGH V. ～ REMOTE CONTROL V. ～MULTI CHANGE V.)

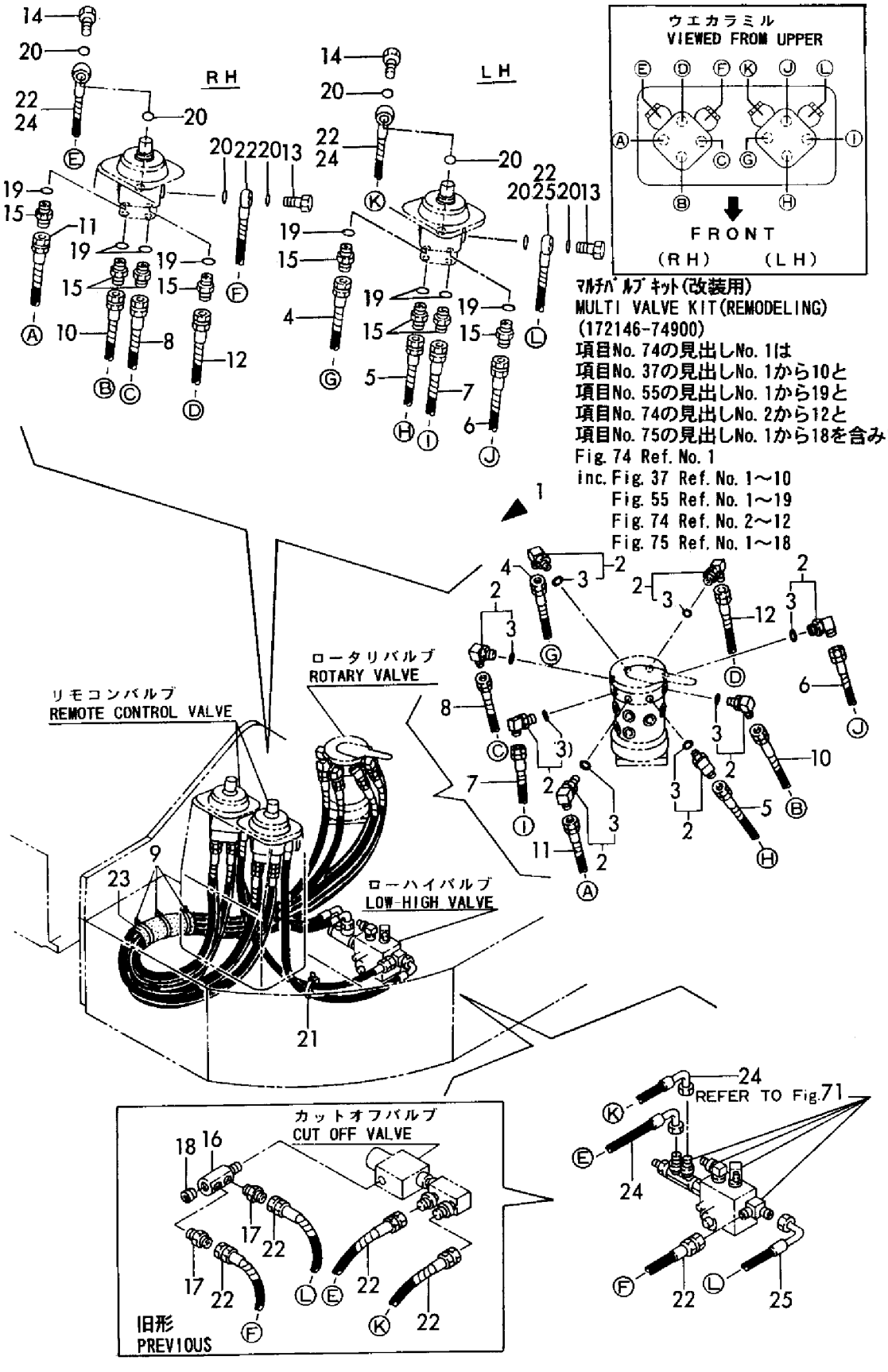

https://truckmanualshub.com/

Fig. 75 コントロール配管(ﾏﾙﾁﾁｪﾝｼﾞﾊﾞﾙﾌﾞ～ｺﾝﾄﾛｰﾙﾊﾞﾙﾌﾞ) CONTROL PIPING(MULTI CHANGE V. ～CONTROL V.)

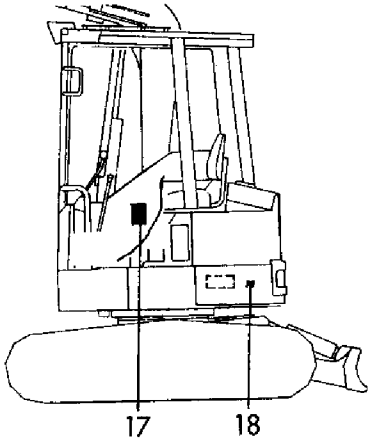

ﾏﾙﾁﾊﾞﾙﾌﾞｷｯﾄ (改装用)
MULTI VALVE KIT(REMODELING)
(172146-74900)
項目NO. 74の見出しNO. 1は
項目NO. 37の見出しNO. 1から10と
項目NO. 55の見出しNO. 1から19と
項目NO. 74の見出しNO. 2から12と
項目NO. 75の見出しNO. 1から18を含みます。
Fig. 74 Ref. NO. 1
inc. Fig. 37 Ref. NO. 1～10
Fig. 55 Ref. NO. 1～19
Fig. 74 Ref. NO. 2～12
Fig. 75 Ref. NO. 1～18

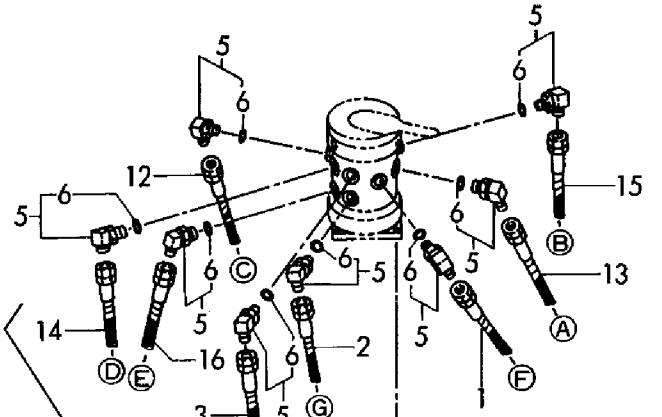

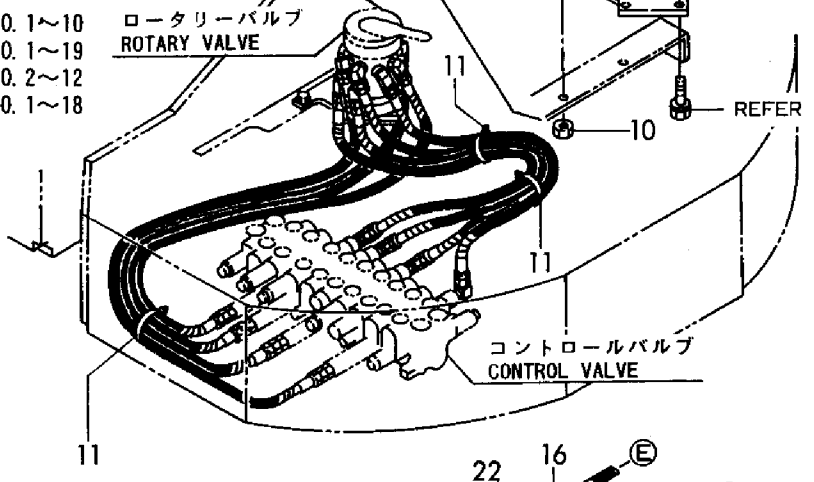

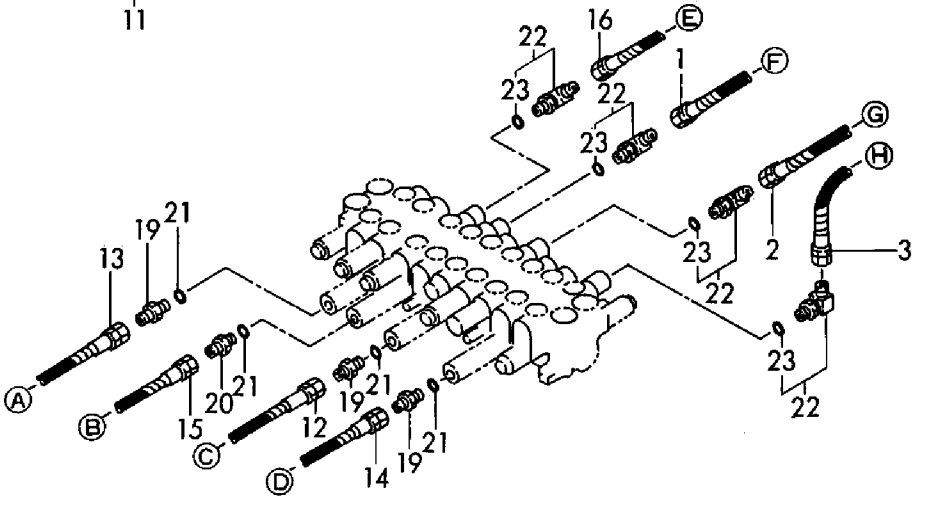

https://truckmanualshub.com/

Fig. 76 コントロール配管(ダイレクト)(-2) CONTROL PIPING(DIRECT)(-2)

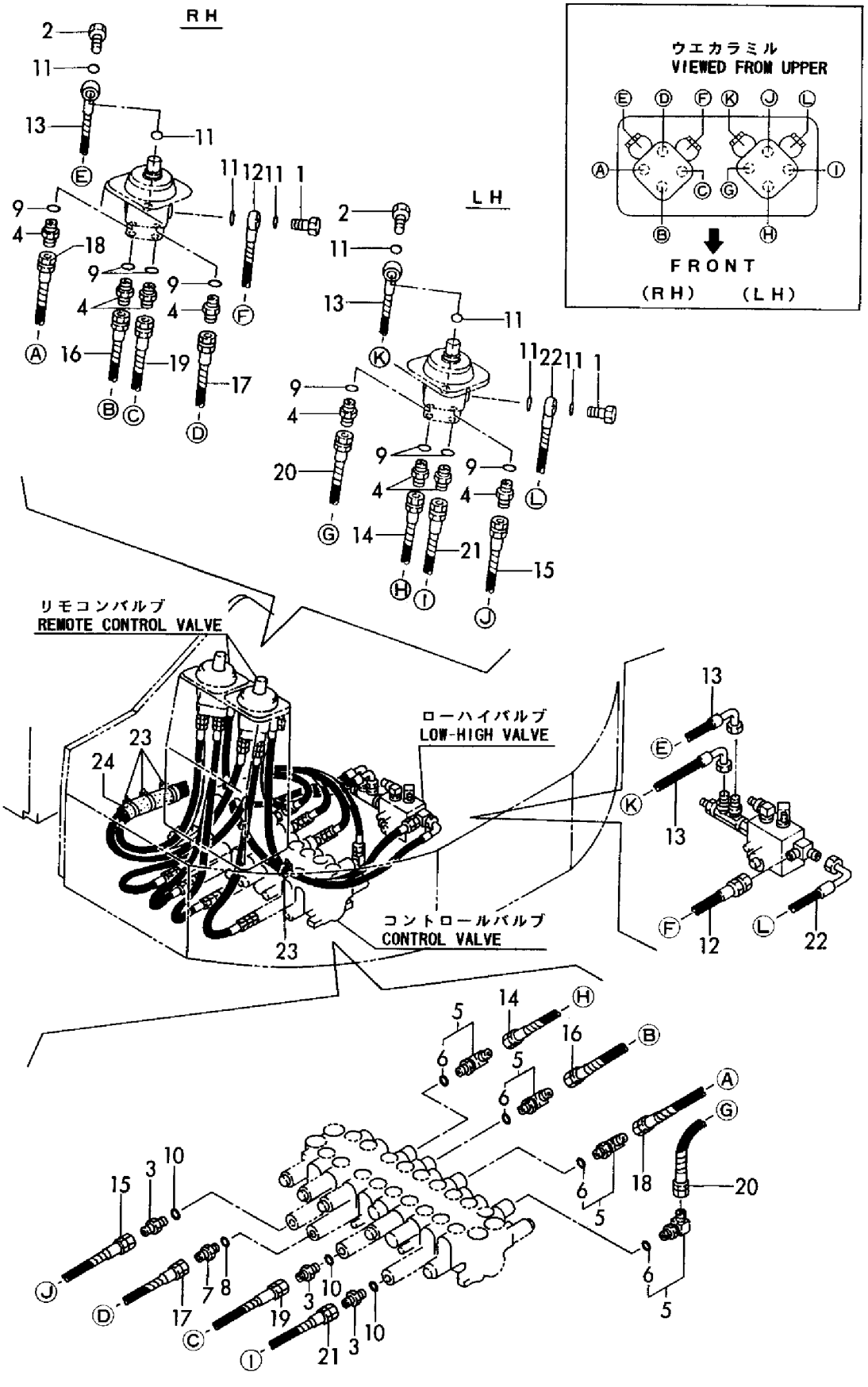

https://truckmanualshub.com/

Fig. 77 グリーシング GREASING

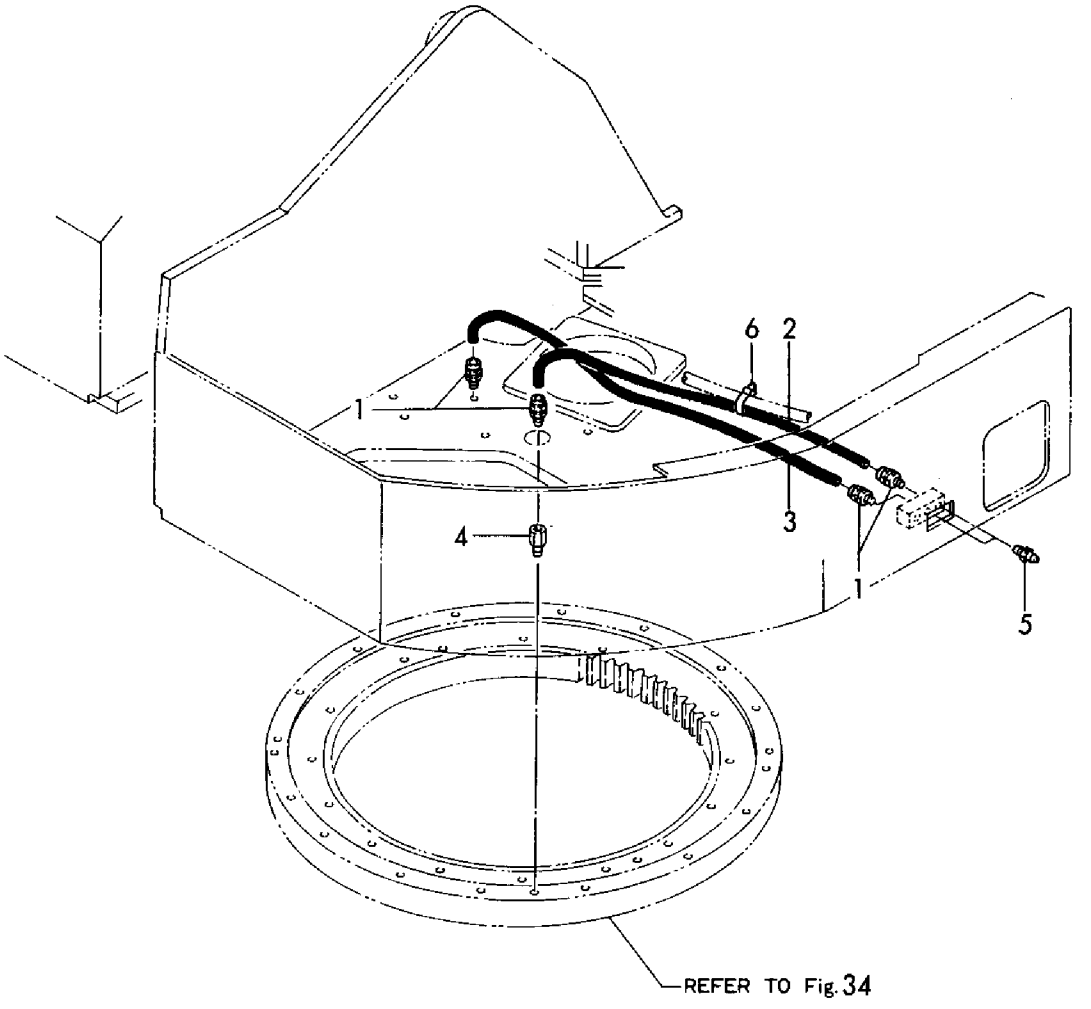

https://truckmanualshub.com/

Fig. 78 ブーム(旧形) BOOM(PREVIOUS)

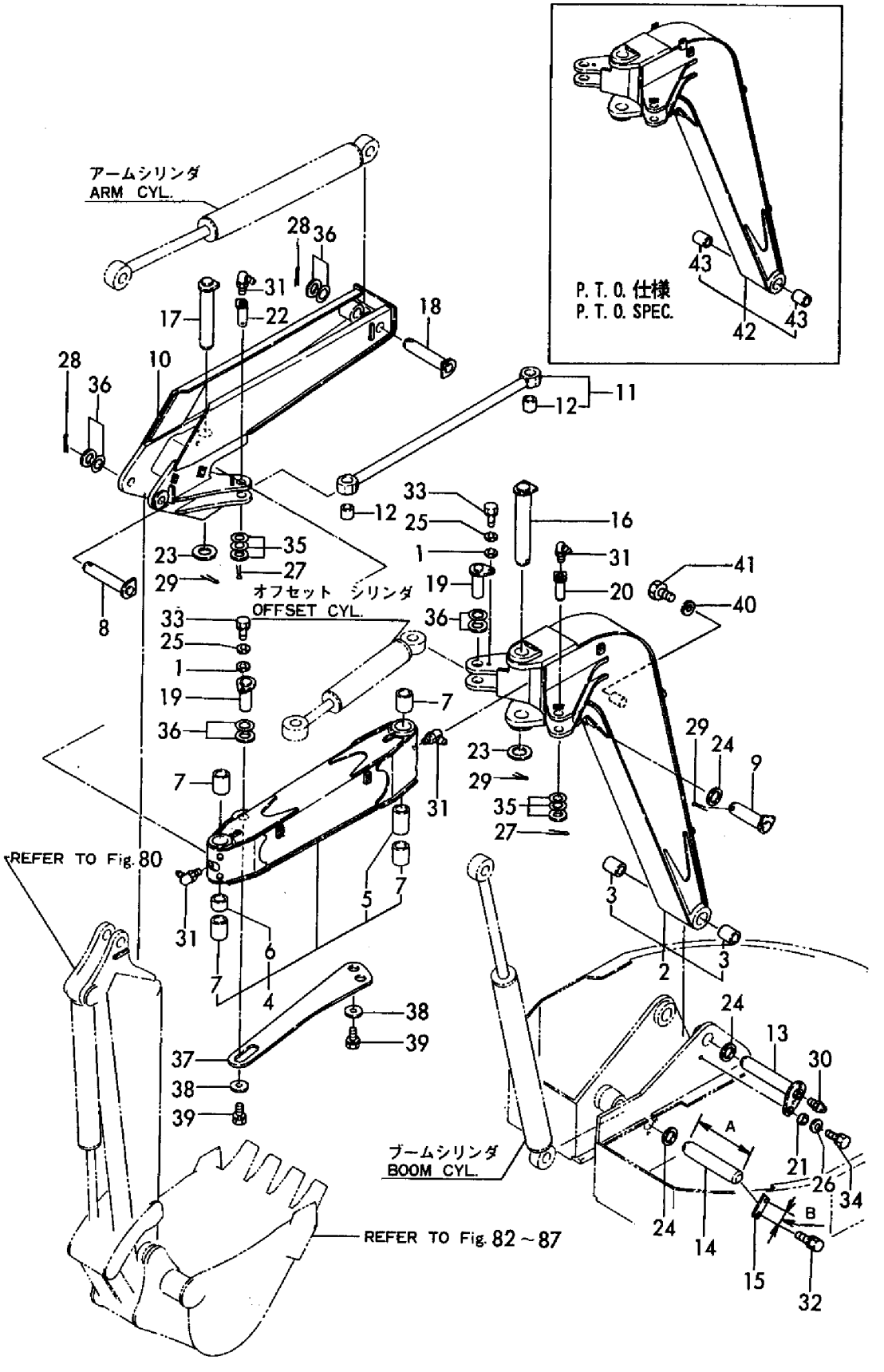

https://truckmanualshub.com/

Fig. 79 ブーム(新形)(-2) BOOM(NEW)(-2)

FROM M/#20501

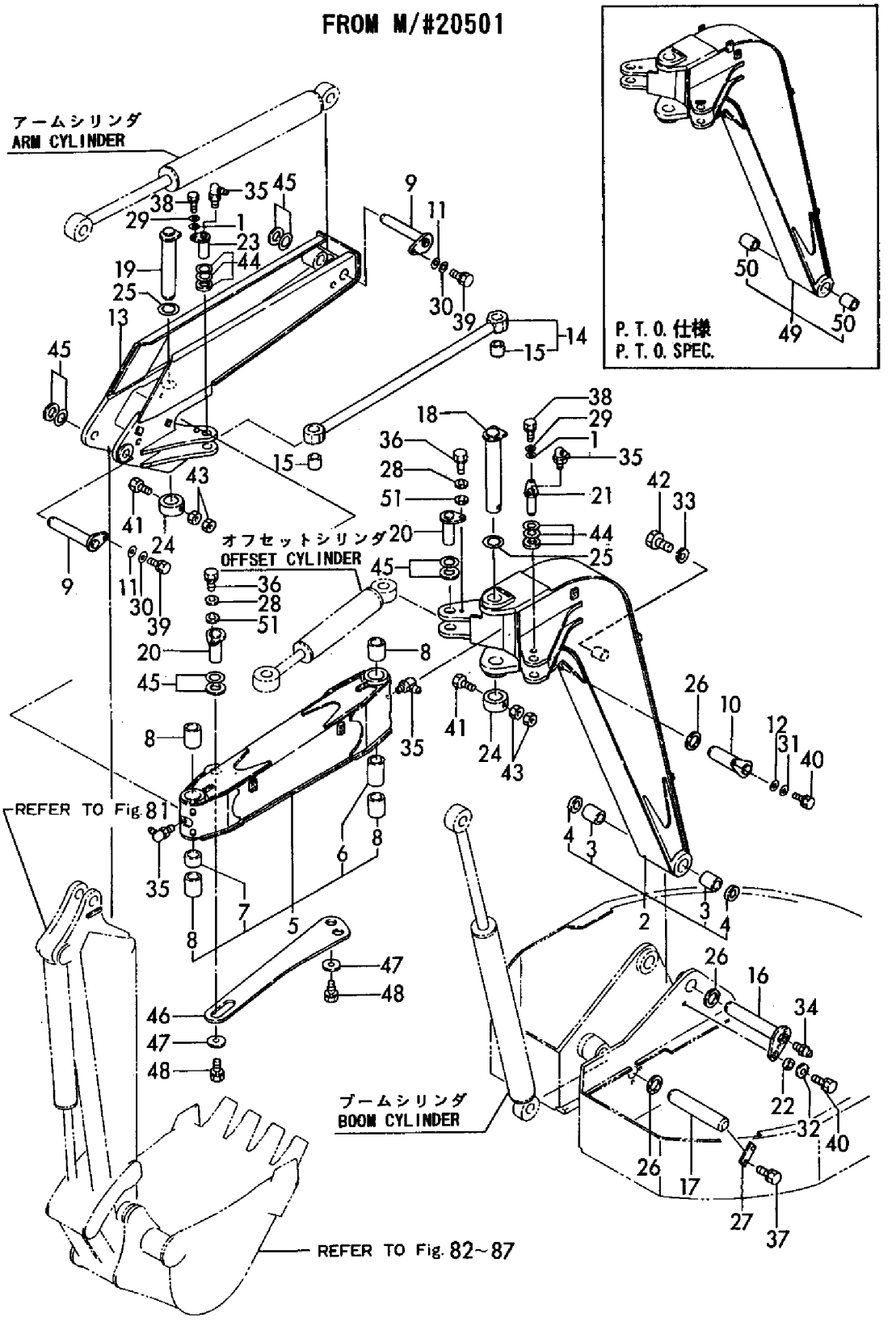

https://truckmanualshub.com/

Fig. 80 アーム(旧形) ARM(PREVIOUS)

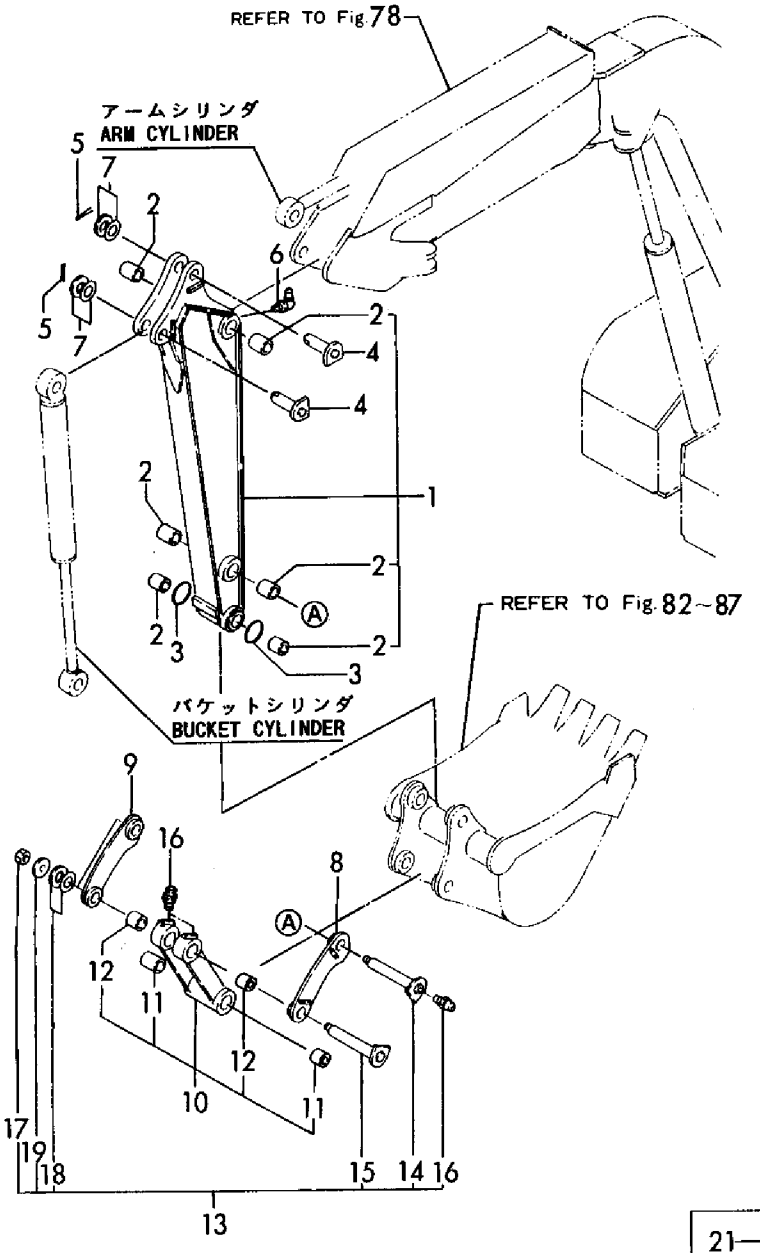

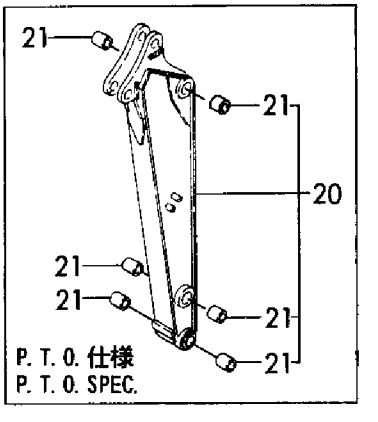

https://truckmanualshub.com/

Fig. 81 アーム(新形)(-2) ARM(NEW)(-2)

FROM M/#20501

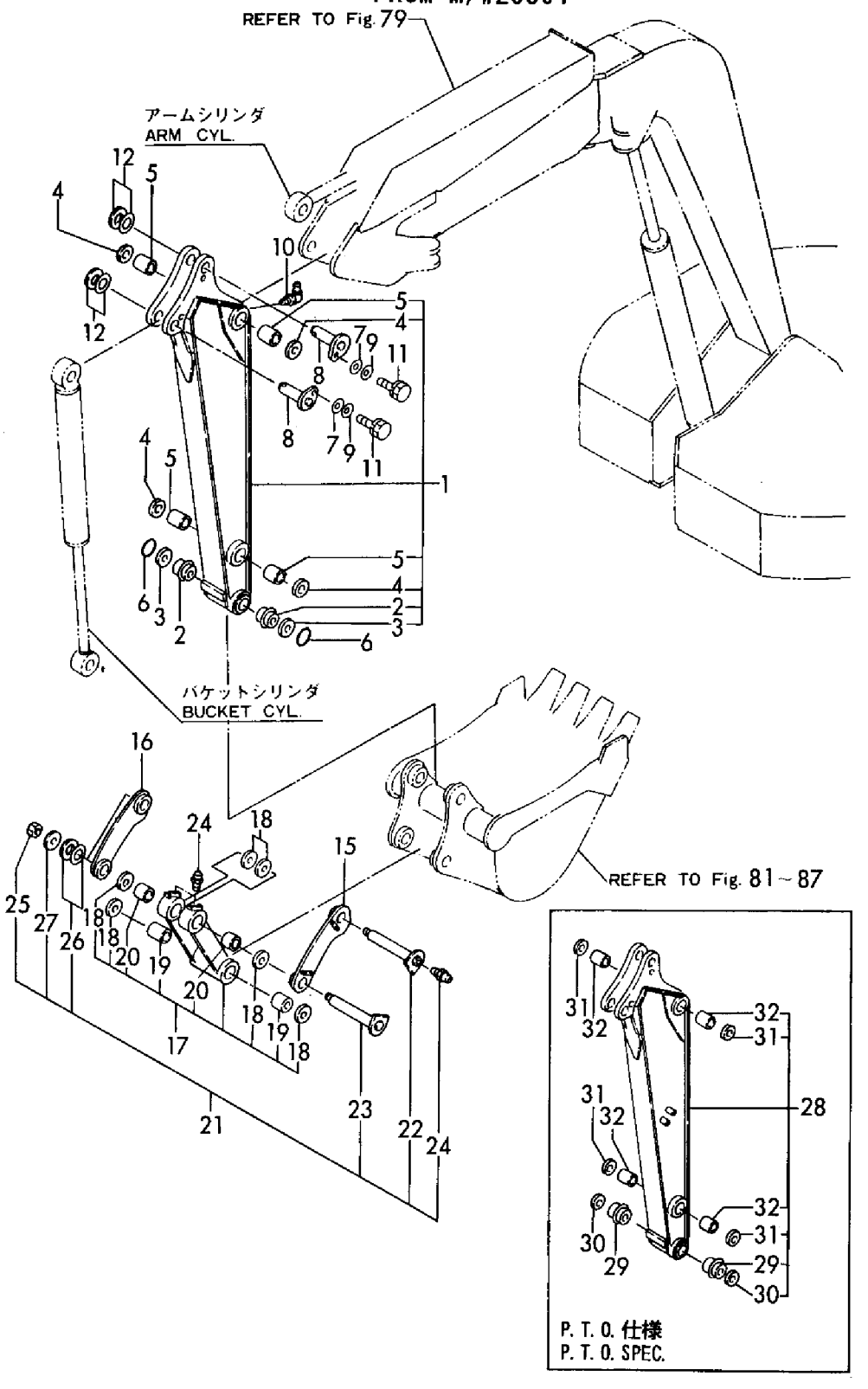

https://truckmanualshub.com/

Fig. 82 バケット(450, 490) BUCKET(450. 490)

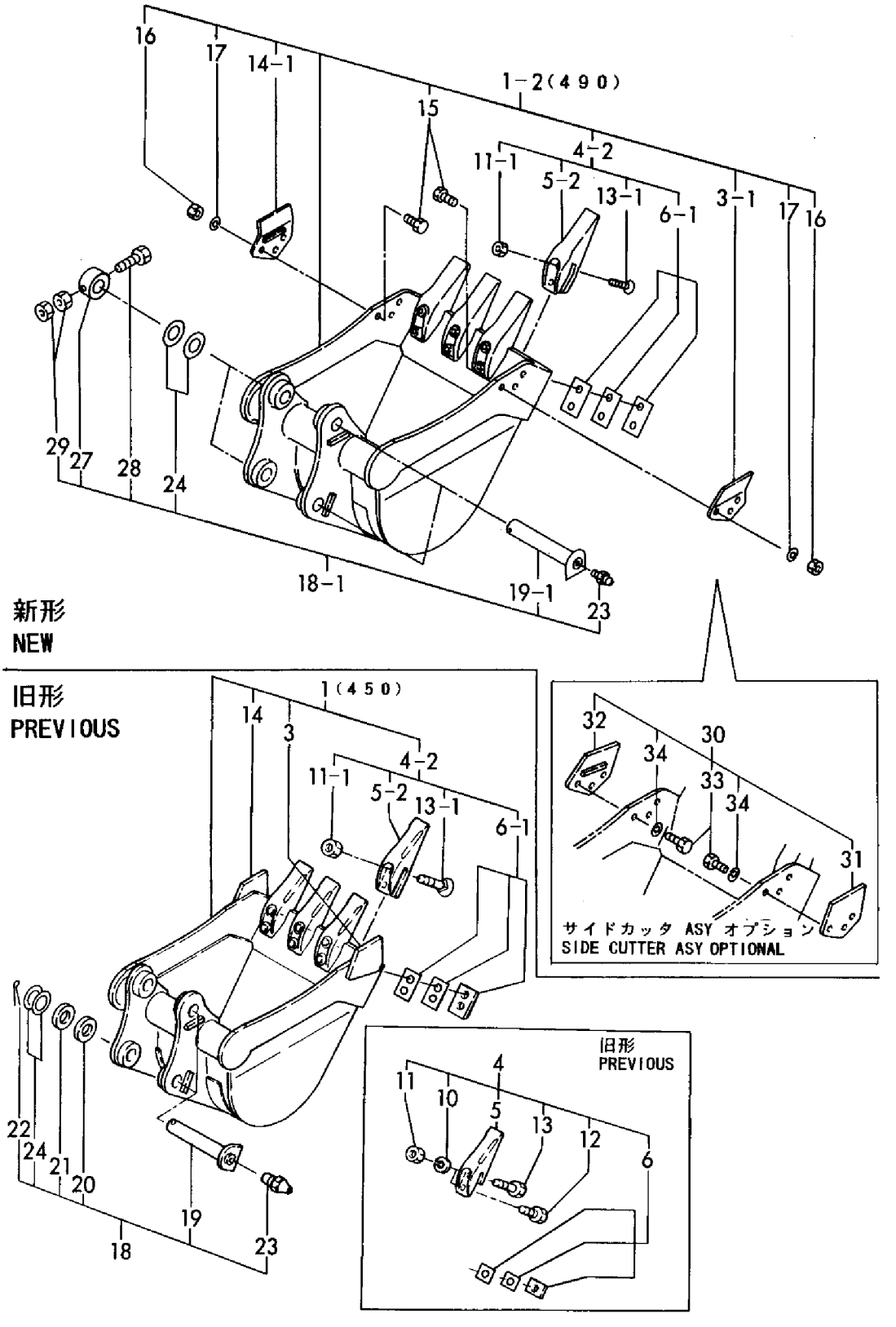

https://truckmanualshub.com/

Fig. 83 バケット(300, 340)(アタッチメント) BUCKET(300, 340)(ATTACHMENT)

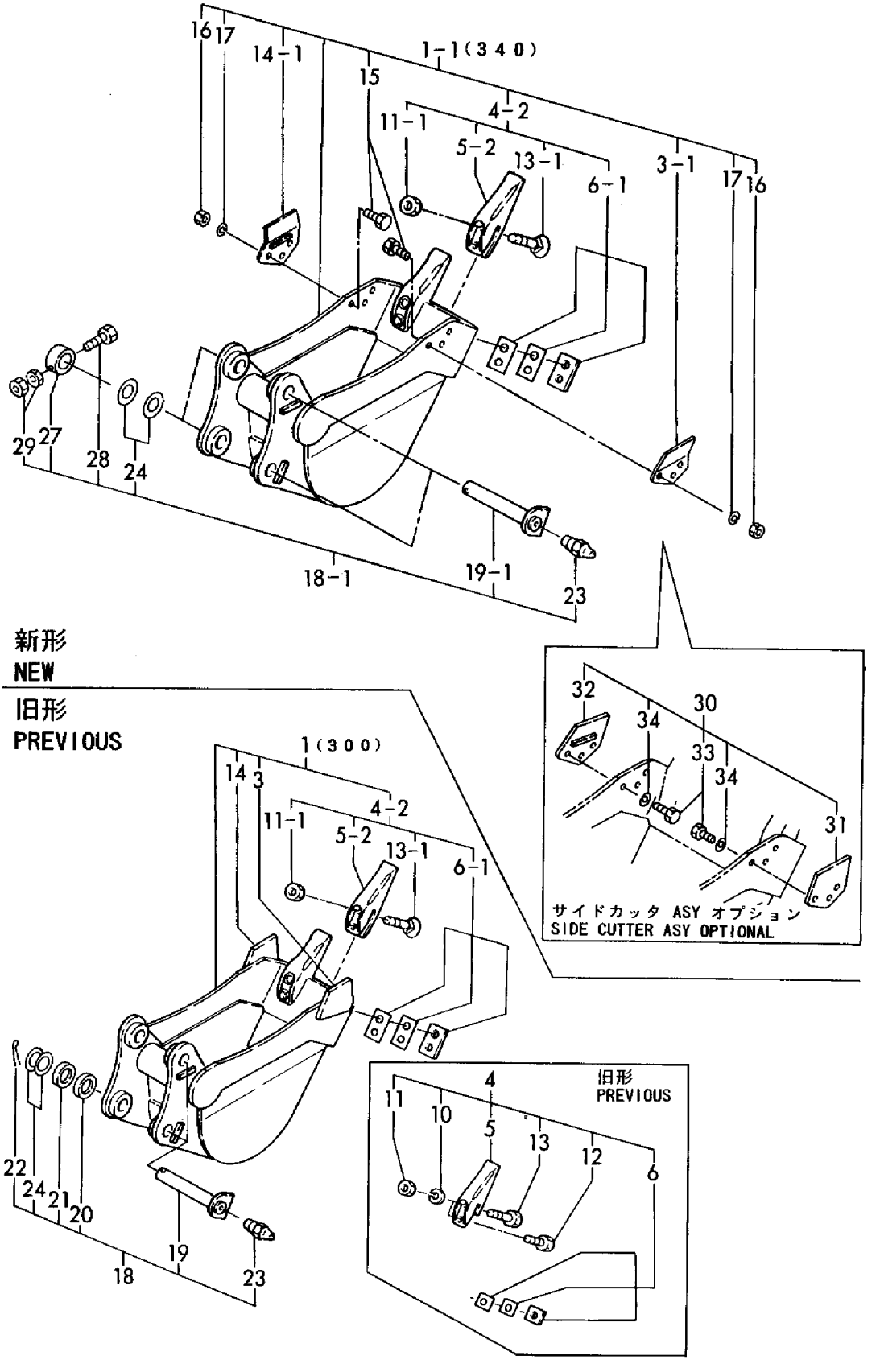

https://truckmanualshub.com/

Fig. 84 バケット(500, 540) (アタッチメント) BUCKET (500, 540) (ATTACHMENT)

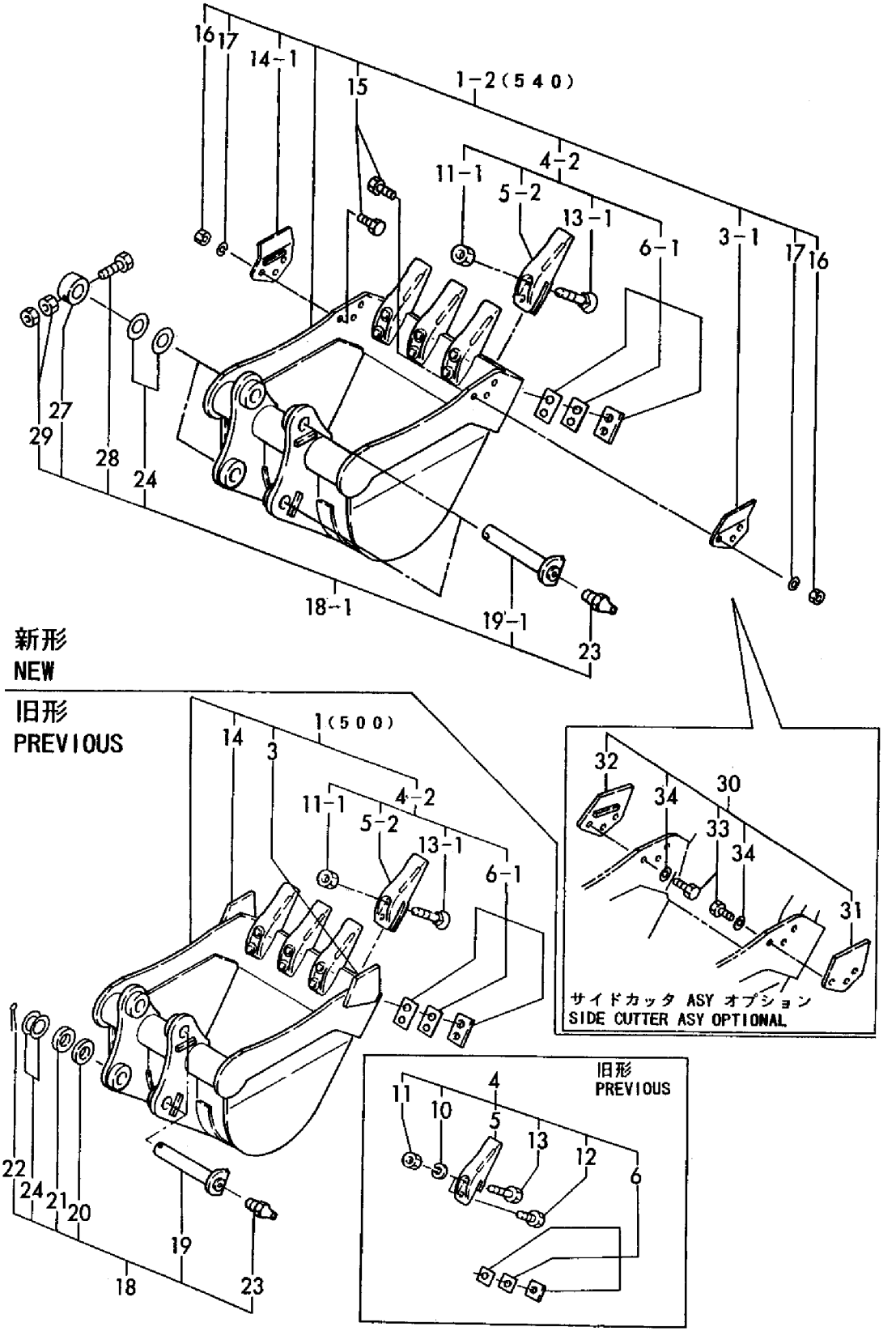

https://truckmanualshub.com/

Fig. 85 バケット(550, 590)(アタッチメント) BUCKET(550, 590)(ATTACHMENT)

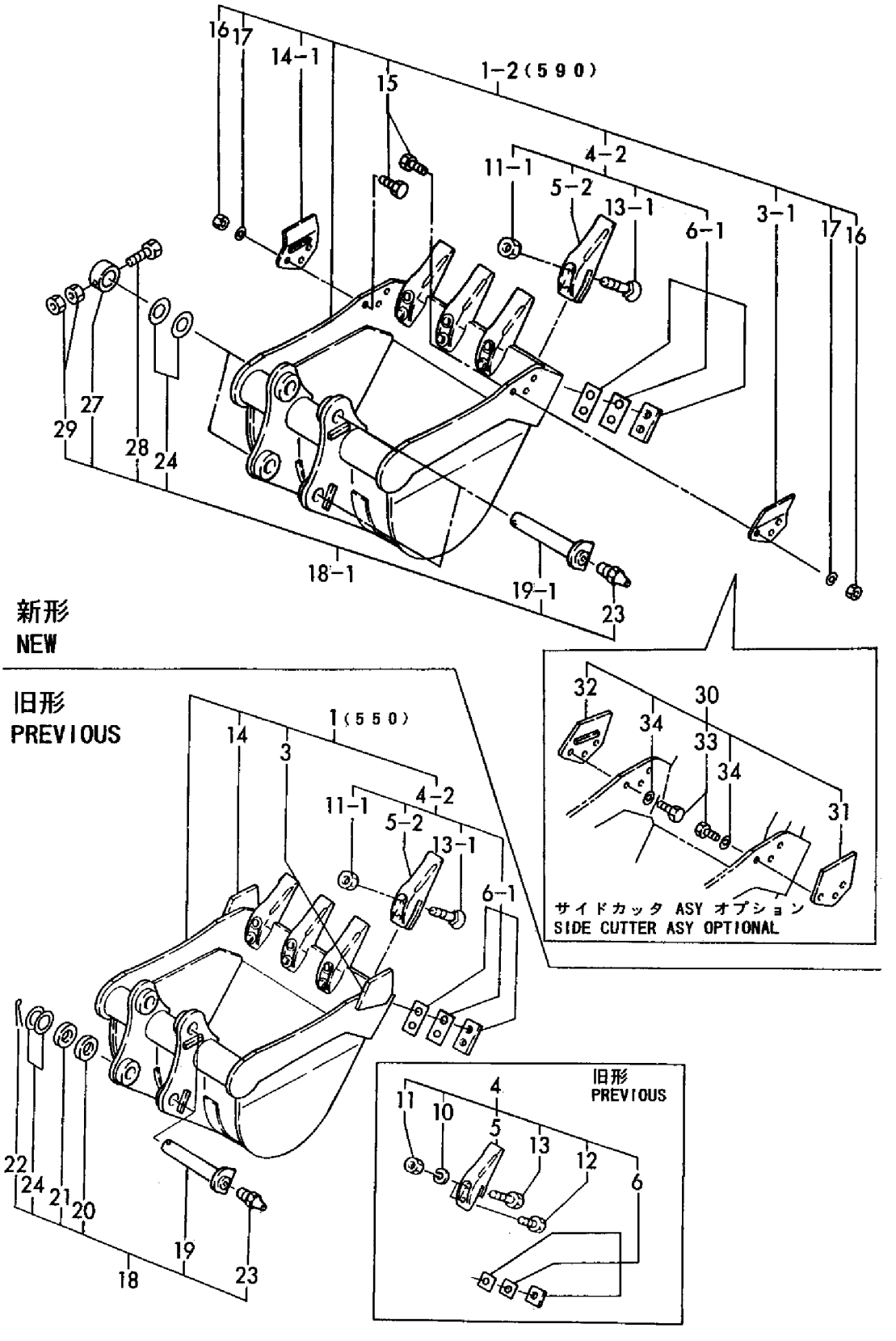

https://truckmanualshub.com/

Fig. 86 バケット(600, 640) (アタッチメント) BUCKET (600, 640) (ATTACHMENT)

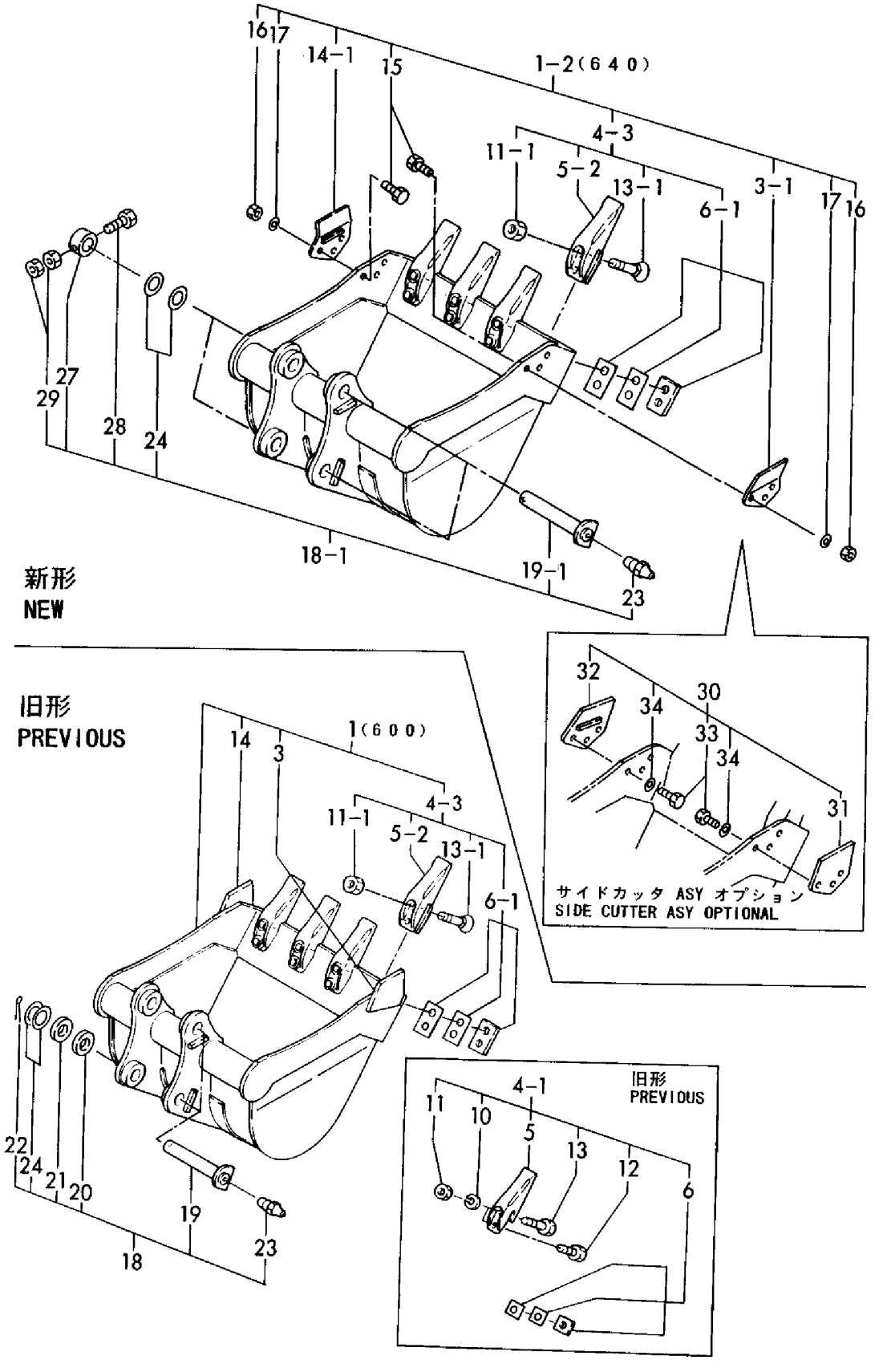

https://truckmanualshub.com/

Fig. 87 バケット(Sタイプ)(アタッチメント) BUCKET(S TYPE)(ATTACHMENT)

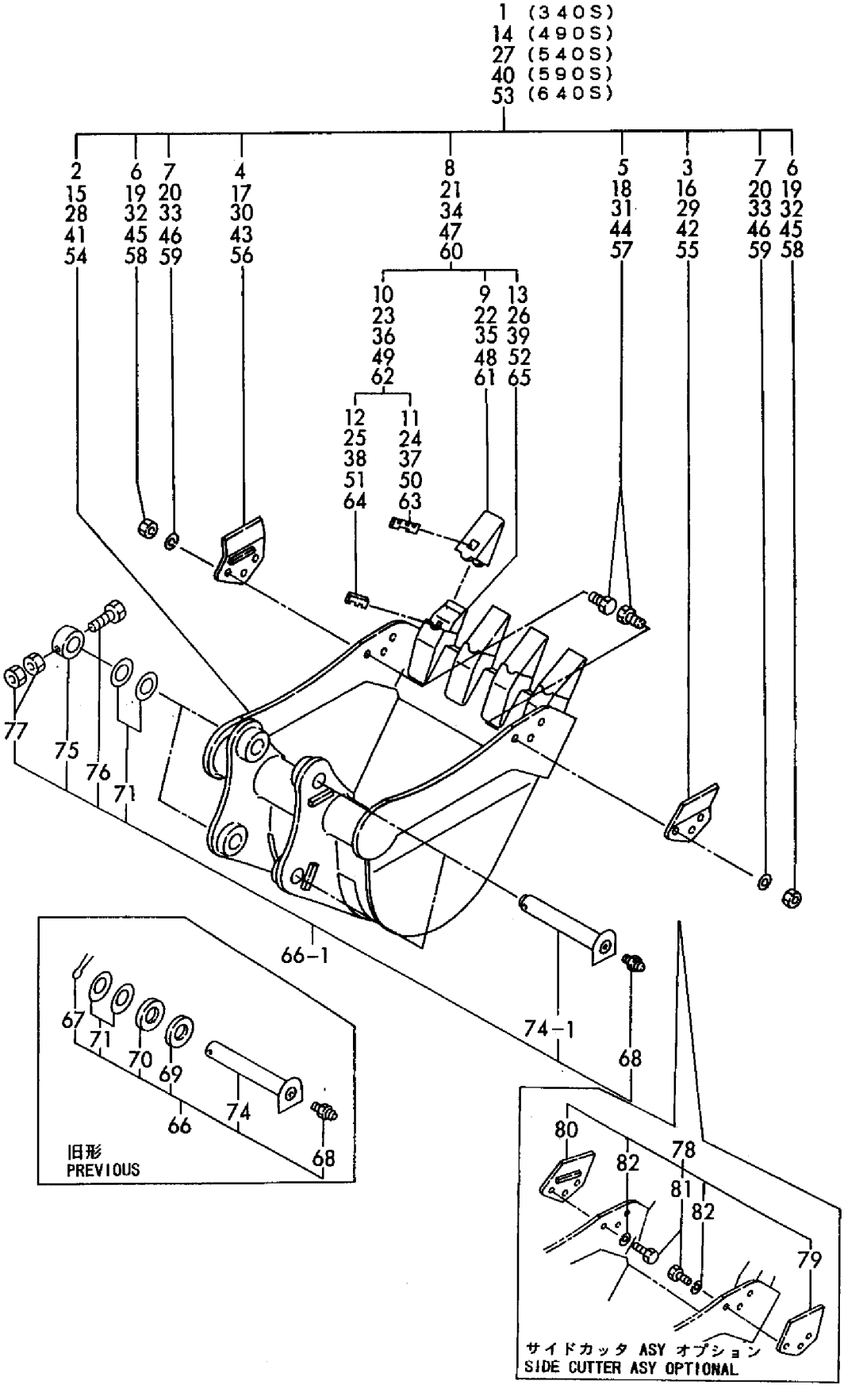

https://truckmanualshub.com/
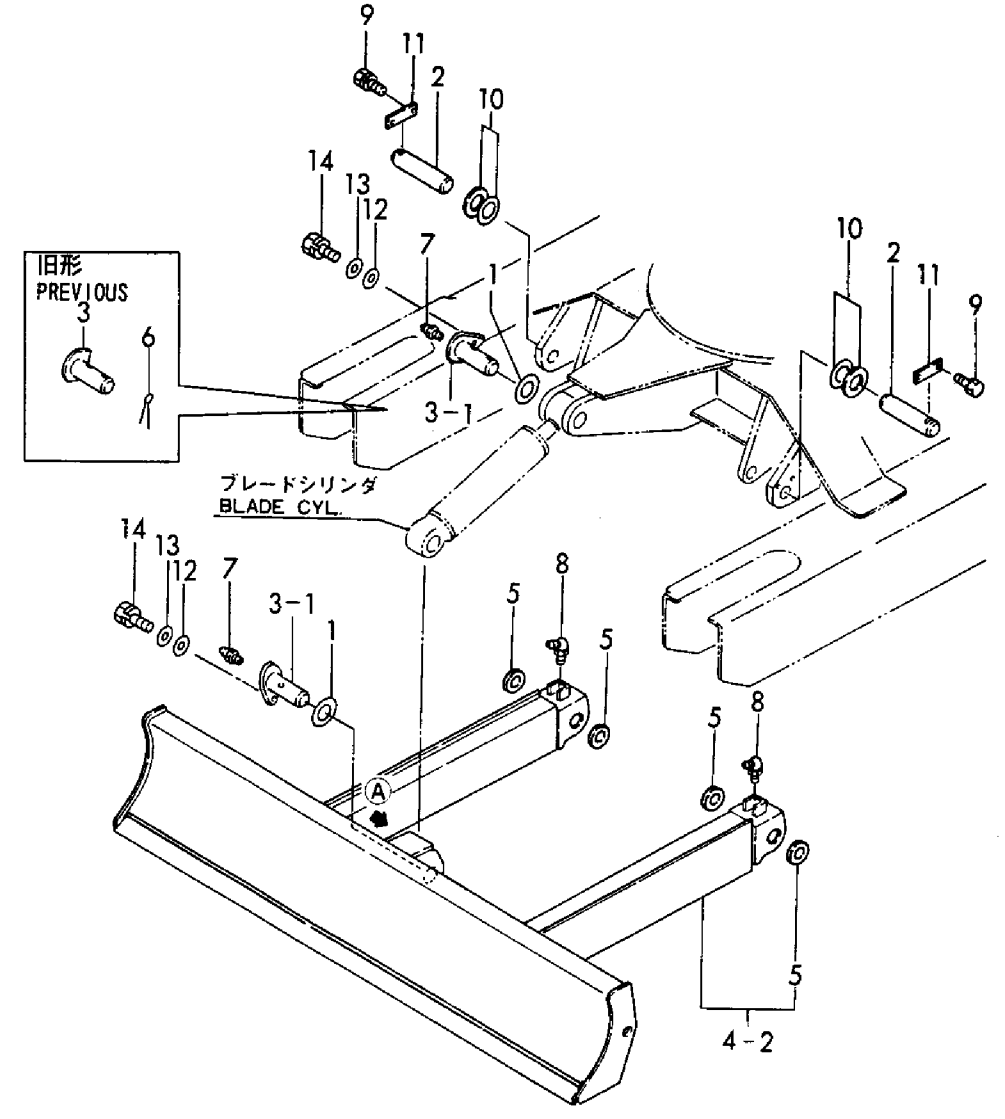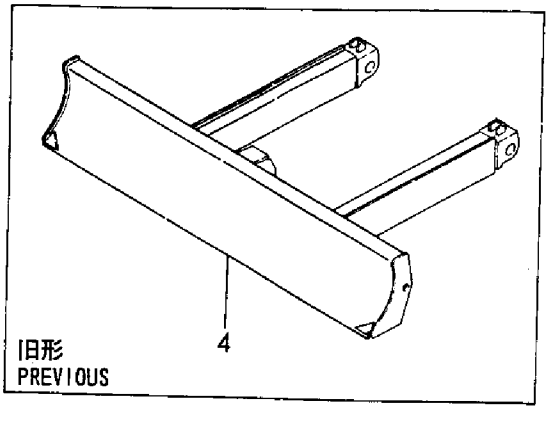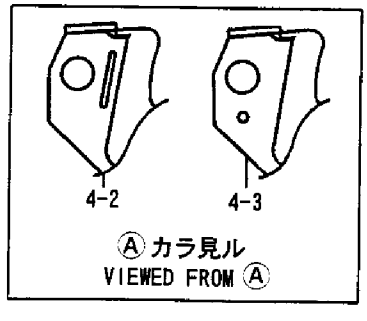
Fig. 88 ブレード BLADE