https://truckmanualshub.com/

MONTINI Revolution

THE NEW **COMPACT** FORKLIFT TRUCKS

MR 1.7 COMPACT **MR 2.0 COMPACT** **MR 2.5 COMPACT**

https://truckmanualshub.com/

After the “Revolution” in its range of heavy-duty forklifts, MONTINI presents **the new electric 4-wheel forklift trucks of the “MR COMPACT” series**: a new “Revolution” in the field of compact forklifts.

UNRIVALLED COMPACTNESS

WHY SO COMPACT?

Because these forklifts are standard equipped with **MONTINI SUPER STEERING**, i.e. rear axle steering up to 101 degrees so it can steer in the same space as a 3-wheel forklift.

MR COMPACT forklifts are ideal vehicles for meeting the compactness required by users who need an **unbeatable turning radius for maximum efficiency when operating in fruit and vegetables warehouses, narrow storage aisles, cold stores and confined spaces**.

MR 1.7 COMPACT

(48V - 1750 kg nominal capacity at load centre 500 mm)

Length (l2): 1945 mm
Width (b1): 1030 mm
Turning radius (Wa): 1558 mm

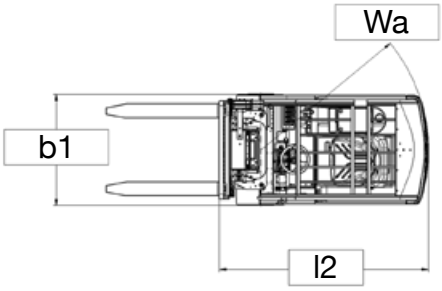

MR 2.0 COMPACT

(48V - 2000 kg nominal capacity at load centre 500 mm)

Length (l2): 1945 mm
Width (b1): 1050 mm
Turning radius (Wa): 1558 mm

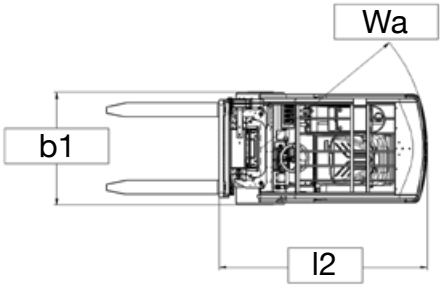

MR 2.5 COMPACT

(80V - 2500 kg nominal capacity at load centre 500 mm)

Length (l2): 2120 mm
Width (b1): 1180 mm
Turning radius (Wa): 1685 mm

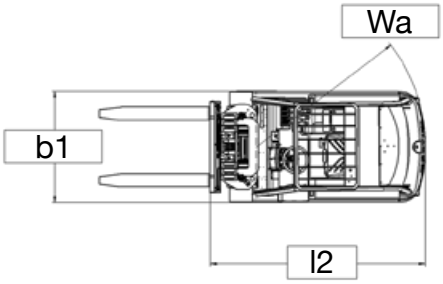

https://truckmanualshub.com/

EQUIPPED WITH BATTERIES WITH A HIGH AMP/H CAPACITY

FOR PROLONGED OPERATING AUTONOMY

The forklifts in the “MR COMPACT” range can be equipped with **high Amp/h capacity batteries**, up to 1100Ah (for 48V forklifts) and 860Ah (for 80V forklifts), so as to:

- meet **any kind of work requirement** (wide range of batteries for demanding applications; low water consumption; for very heavy and intensive applications, in particular for forklifts fitted with auxiliary equipment);
- guarantee **unbeatable work autonomy** (up to 14 hours/day);
- **work better, work more**, while safeguarding health and the environment.

MR 1.7 COMPACT	MR 2.0 COMPACT	MR 2.5 COMPACT
48V - maximum battery 1100Ah	48V - maximum battery 1100Ah	80V - maximum battery 860Ah

Battery box and cover are designed so as to convey any fumes out of the driver’s cab.

New catch for easy opening of the battery cover.

https://truckmanualshub.com/

RECORD LOAD CAPACITIES

AT MAXIMUM LIFT HEIGHT, IN TOTAL SAFETY

The **lifting units**, designed and manufactured by MONTINI, are **available in Duplex (DX) and Triplex (TX) versions, with total visibility (T.V.) and total free lift (T.F.L.)**, so as to:

- have maximum smoothness and greater stability;
- meet the most varied working requirements;
- ensure total safety during high lifts and optimum load capacity.

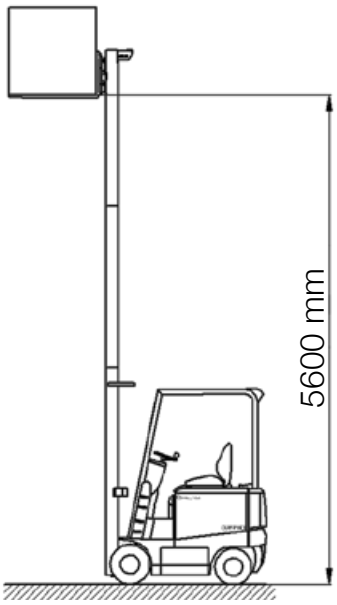

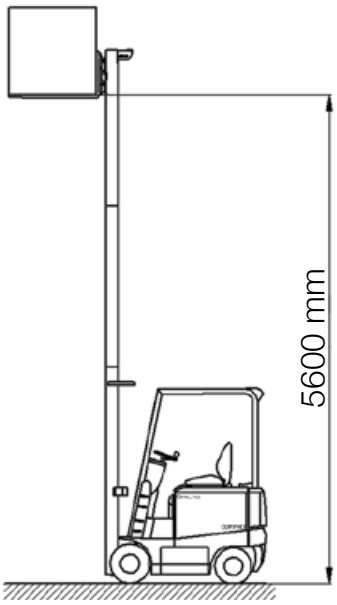

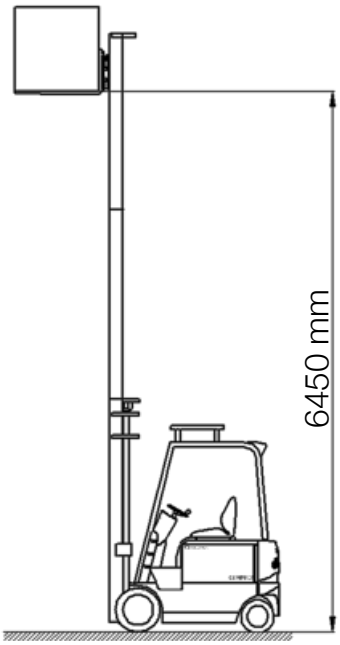

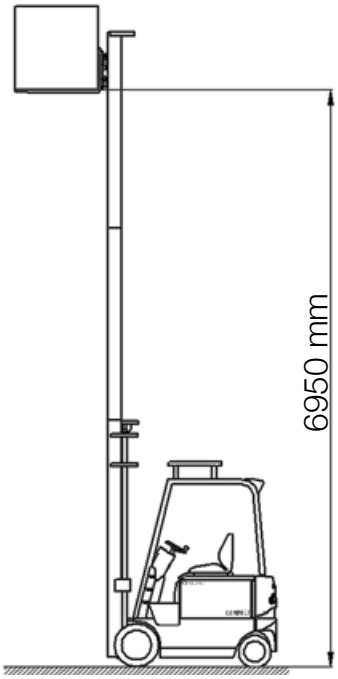

MR 1.7 COMPACT

1350 kg
lift height 5600 mm
load centre 500 mm

MR 2.0 COMPACT

1500 kg
lift height 5600 mm
load centre 500 mm

MR 2.5 COMPACT.P

1650 kg
lift height 6450 mm
load centre 500 mm

MR 2.5 COMPACT.P

1600 kg
lift height 6950 mm
load centre 500 mm

https://truckmanualshub.com/

SAFETY, COMFORT, MANOEUVRABILITY, AUTONOMY

THE BEST WAY TO WORK

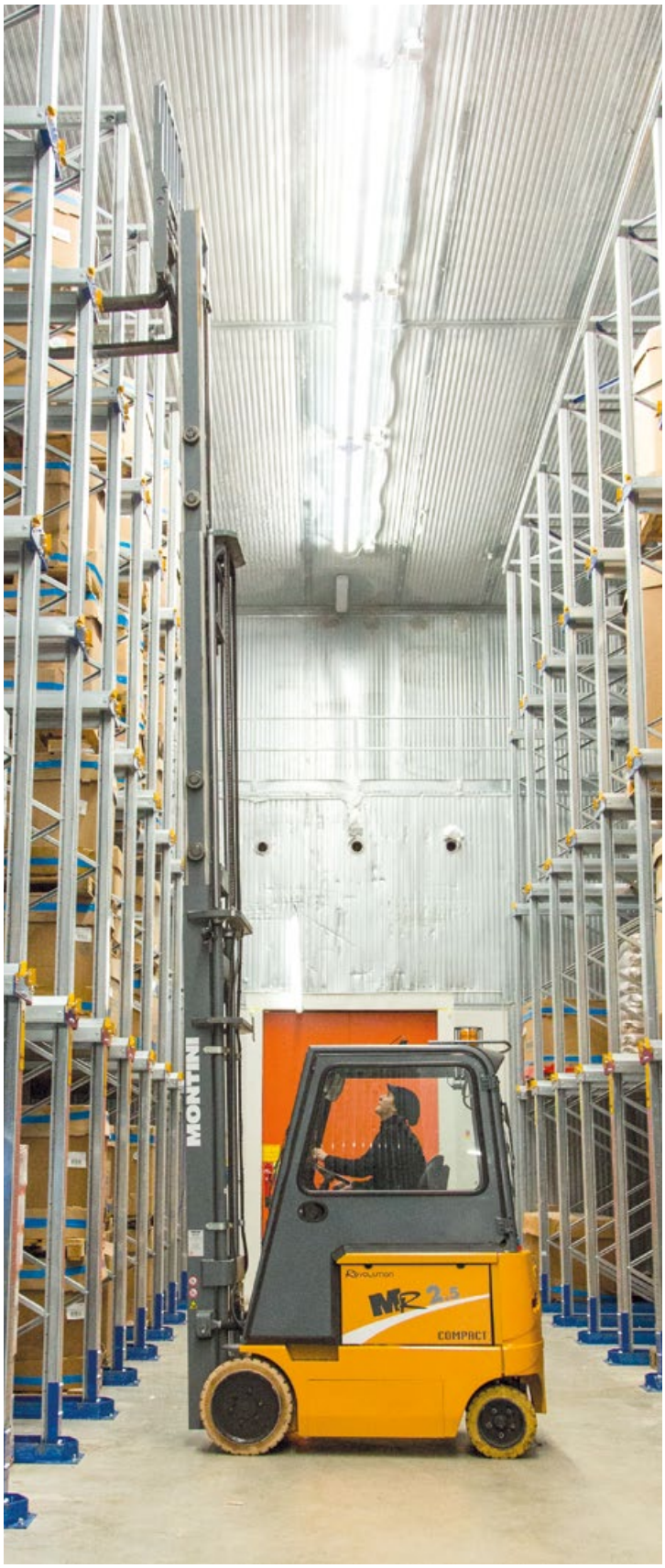

https://truckmanualshub.com/

MORE ERGONOMIC JOYSTICK, MORE PRODUCTIVE WORK

- Joystick (optional) with proportional control valve with 3 or 4 hydraulic functions.
- As standard, all lifting unit functions are inhibited when the operator is not in the correct driving position.
- Higher lowering speed of the lifting unit, both laden and unladen.
- Maximum productivity thanks to the use of two simultaneous operating functions of the lifting unit.

Tilt 1

Forward 2

Reverse 3

Horn 4

4th function 5
for the installation
of auxiliary equipment

https://truckmanualshub.com/

THE BETTER YOU WORK, THE MORE YOU WORK

Standard equipped with hydraulic control valve with 3 handy levers, made of pleasant to handle soft material, for lifting, sideshifting and tilting operations.

1. Possibility to add a 4th and 5th levers to the control valve, with hydraulic piping up to the fork carriage, for the 4th and 5th functions if required for the installation of auxiliary equipment on the forklift truck.

JOYSTICK FUNCTIONS

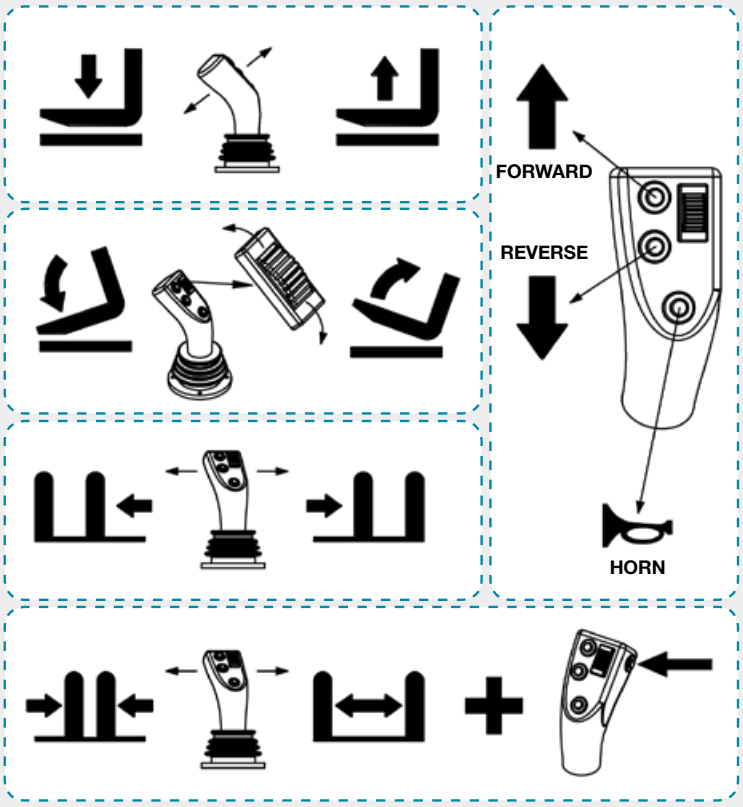

https://truckmanualshub.com/

ELECTRONIC TECHNOLOGY

The **innovative electronic technology**, developed in German research laboratories, **with alternating current inverters and Can Bus communication**, guarantees high efficiency and low energy consumption; it comes with a new diagnosis system for keeping everything under control and reducing any machine downtime.

The large colour display, with multifunction buttons, **ensure accessibility and control of the forklift's basic functions**.

The functions are defined by icons displayed on the relative bar, for example:

- handbrake locked;
- seat belt not fastened;
- seat switch open;
- rear wheel not straight;
- brake fluid level too low;
- maintenance hour meter expired;
- activates "tortoise speed";
- deactivates "tortoise speed".

Access password personalised for the operator.

https://truckmanualshub.com/

SERVICES AND SAFETY

Possibility to equip the forklifts with **GPRS system** (General Packet Radio System), mobile phone technology, installed on the battery of the forklift, **to check**:

- **correct battery use and management** (to check regular charge and discharge of the battery, correct operation of the battery charger during charging and the electrolyte level inside the battery cells);
- **the registration of possible forklift collisions**.

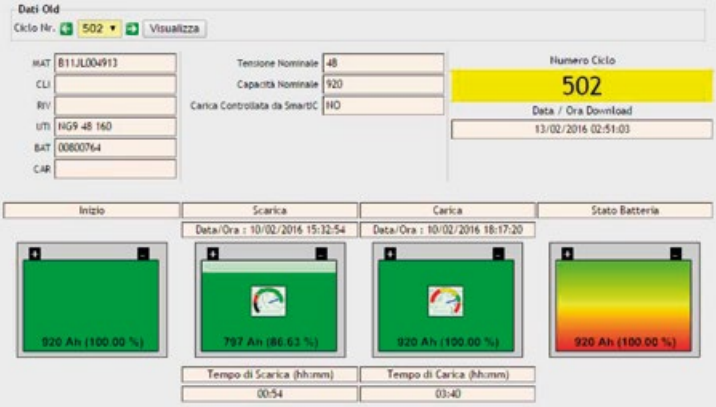

Possibility to equip forklifts with the **innovative "Remote Control" system for rapidly detecting any electric faults** through remote data transmission, **to localize the forklift, activate the anti-theft device** and **block the forklift functions**.

https://truckmanualshub.com/

EQUIPMENT VARIATIONS

OVERHEAD GUARD

Overhead guard designed to be equipped easily with cab at any time, without having to modify or replace the original structure.

It can be cabbed:

- with full panelling, complete with windows and windscreen wipers, also on the overhead guard;
- with or without heating system.

HEATED WINDOWS

As an optional, cabs can be with **innovative heated (or thermal) windows**.

The heated window is made from “coated” glass, with anti-fogging as its main feature.

Coated glass is made by depositing metal oxides with good electric conductivity and optical transparency on the surface.

Electricity is passed through the coating and guarantees total resistance to fogging while at the same time creating the ideal temperature inside the cab for the operator.

SAFETY GRID

Overhead guard safety grid for protection against accidental load dropping.

https://truckmanualshub.com/

SOUNDPROOFED OVERHEAD GUARD

The overhead guard on the MR 2.5 COMPACT XL forklift, is joined to the forklift chassis **using 6 special vibration dampers (silent block)** which reduce vibrations and noises inside the cab for increased operator comfort.

SPECIAL OVERHEAD GUARD

Special overhead guard for **drive-in** version, with adequately protected LED lights.

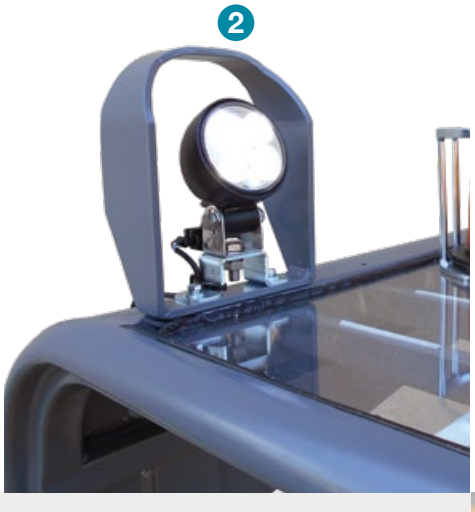

HEATER

Heating system:
fast and direct heating with air vents **inside the cab**.

The heater ensures a cab temperature which is always comfortable.

https://truckmanualshub.com/

HYDRAULIC FORK POSITIONER

The MONTINI lifting unit has been designed to offer the best visibility in all working conditions.

A newly designed sideshift has been incorporated into the lifting unit which is very compact and provides excellent visibility.

The optional MONTINI hydraulic fork positioner allows precise movement and positioning of the forks.

LIGHTING EQUIPMENT

Adjustable LED working lights.

Blue LED device to signal the forklift's presence (blue spotlight).

https://truckmanualshub.com/

SEATS

“Grammer Primo M” standard seat.
Standard equipped with “Primo M” PVC seat
which reduces vibrations transmitted to the operator.

1. Lumbar support
2. Seat belt
3. Backrest adjustment
4. Weight adjustment
5. Longitudinal adjustment

**“Grammer Primo M” seat kit
complete with armrests and headrest,
in fabric (optional)**.

New design concept applied to the seat.
“Grammer Primo L” seat (optional).
Seat kit with armrests and headrest,
in PVC or fabric, also with heating.

1. Headrest
2. Heating system
3. Tilting left armrest
4. Tilting right armrest
5. Fabric cover
6. Pneumatic suspension

https://truckmanualshub.com/

Characteristics	1.1	Manufacturer		MONTINI	MONTINI
	1.2	Model		MR 1.7 COMPACT	MR 2.0 COMPACT
	1.3	Drive: electric, diesel, petrol, L.P. gas, electric mains		electric	electric
	1.4	Operation: manual, pedestrian, stand-on, seated, order picker		seated	seated
	1.5	Capacity/Load	Q (t)	1,75	2
	1.6	Load centre	c (mm)	500	500
	1.8	Load distance	x (mm)	391	391
	1.9	Wheelbase	y (mm)	1180	1180
Weights	2.1	Weight	Kg	3430	3700
	2.2	Axle loading, laden, front/rear	Kg	4517/663	4935/765
	2.3	Axle loading, unladen, front/rear	Kg	1450/1980	1430/2270
Equipment	3.1	Tyres: superelastic (SE), cushion (C), pneumatic (PN)		SE/C/PN	SE/C/PN
	3.2	Tyre size, front		18x7-8 (1)	200/50-10 (2)
	3.3	Tyre size, rear		16x6-8 (4)	16x6-8 (5)
	3.5	Wheels, number front/rear (x=driven wheel)		2x/2	2x/2
	3.6	Tread width, front	b10 (mm)	874 (6)	854 (7)
	3.7	Tread width, rear	b11 (mm)	838,5 (9)	838,5 (9)
Basic dimensions	4.1	Max. tilt of mast/fork carriage, forward/backward (α-β)	Degrees	3°/8°	3°/8°
	4.2	Lowered mast height	h1 (mm)	2165	2165
	4.3	Free lift	h2 (mm)	-	-
	4.4	Lift height	h3 (mm)	3300	3300
	4.5	Extended mast height	h4 (mm)	3850	3850
	4.7	Overhead guard height	h6 (mm)	2239	2239
	4.8	Seat height	h7 (mm)	1160	1160
	4.12	Tow coupling height	h10 (mm)	555	555
	4.19	Total length	ℓ1 (mm)	2945	2945
	4.20	Length to face of forks	ℓ2 (mm)	1945	1945
	4.21	Overall width	b1/b2 (mm)	1030/1010 (11)	1050/1010 (12)
	4.22	Forks dimensions	s/e/ℓ (mm)	35/100/1000	35/130/1000
	4.23	Fork carriage ISO 2330, class/type A, B		ISO 2A	ISO 2A
	4.24	Min. fork carriage width	b3 (mm)	910	910
	4.31	Ground clearance, under mast, laden	m1 (mm)	85	85
	4.32	Ground clearance, centre of wheelbase, laden	m2 (mm)	100	100
	4.33	Aisle width with pallet 1000x1200 (l6xb12), pick-up side 1200	Ast (mm)	3149 (15)	3149 (15)
	4.34	Aisle width with pallet 800x1200 (b12xl6), pick-up side 800	Ast (mm)	3349 (15)	3349 (15)
	4.35	Turning radius	Wa (mm)	1558	1558
	4.36	Distance from turning centre and truck centre axis	b13 (mm)	0	0
Performance data	5.1	Travel speed, laden/unladen	Km/h	15	15
	5.2	Lift speed, laden/unladen	m/s	0,30/0,45	0,30/0,45
	5.3	Lowering speed, laden/unladen	m/s	0,52/0,50	0,52/0,50
	5.5	Drawbar pull, laden/unladen	daN	3790/4090	3790/4090
	5.6	Max. drawbar pull, laden/unladen	daN	10000/10230	10000/10230
	5.7	Gradeability, laden/unladen	%	9,2/17,2	9,2/17,2
	5.8	Max. gradeability, laden/unladen	%	24,5/36,8	24,5/36,8
	5.9	Acceleration time, laden/unladen	s	5,8/4,9	5,8/4,9
	5.10	Service brake		hydraulic/electric	hydraulic/electric
Electric motor	6.1	Drive motor, output S2 60 min.	Kw	2x3,8	2x3,8
	6.2	Lift motor, output at S3 15%	Kw	11	11
	6.3	Battery according to DIN 43531/35/36 A, B, C		not provided	not provided
	6.4	Rated voltage/capacity 5h	V/Ah	48/630-1100	48/630-1100
	6.5	Battery weight, min./max.	Kg	1360/1460	1360/1460
	6.6	Energy consumption according to VDI cycle	KWh/h	-	-
Misc.	8.1	Type of electronic control		inverter	inverter
	8.2	Working pressure for auxiliary equipment	bar	150	150
	8.3	Oil volume for auxiliary equipment	l/min	-	-
	8.4	Sound pressure level at operator's ear	db (A)	< 80 db (A)	< 80 db (A)
	8.5	Tow coupling, model/type		-	-

1) Optional cushion tyres 457x152-308; 2) Optional cushion tyres 457x178-308; 3) Optional cushion tyres 533x203-381;
4) Optional cushion tyres 394x127-254; 5) Optional cushion tyres 394x152-254; 6) With cushion tyres 878;
7) With cushion tyres 872; 8) With cushion tyres 910;

https://truckmanualshub.com/

MONTINI	MONTINI	MONTINI	MONTINI
MR 2.5 COMPACT	MR 2.5 COMPACT.P	MR 2.5 COMPACT XL	MR 2.5 COMPACT.P XL
electric	electric	electric	electric
seated	seated	seated	seated
2,5	2,5	2,5	2,5
500	500	500	500
435	455	435	455
1420	1420	1420	1420
4600	5100	4600	5100
6345/755	6830/770	6345/755	6830/770
2200/2400	2650/2450	2200/2400	2650/2450
SE/C	C	SE/C	C
21x8-9 (3)	533x203-381	21x8-9 (3)	533x203-381
16x6-8 (5)	394x152-254	16x6-8 (5)	394x152-254
2x/2	2x/2	2x/2	2x/2
948 (8)	910	948 (8)	910
854 (10)	854	854 (10)	854
3,5°/6°	3°/6,5°	3,5°/6°	3°/6°
2307	2630	2307	2630
-	-	-	-
3405	6000	3405	6000
4012	6597	4012	6597
2265	2265	2424	2424
1170	1170	1329	1329
600	600	600	600
3120	3140	3120	3140
2120	2140	2120	2140
1180/1100 (13)	1110/1100	1180/1100 (13)	1110/1100
40/130/1000	40/130/1000	40/130/1000	40/130/1000
ISO 2A	ISO 2A	ISO 2A	ISO 2A
910 (14)	910 (14)	910 (14)	910 (14)
95	95	95	95
110	110	110	110
3320 (15)	3340 (15)	3320 (15)	3340 (15)
3520 (15)	3540 (15)	3520 (15)	3540 (15)
1685	1685	1685	1685
0	0	0	0
16	15	16	15
0,40/0,46	0,38/0,45	0,40/0,46	0,38/0,45
0,58/0,56	0,57/0,38	0,58/0,56	0,57/0,38
7210/7570	7210/7570	7210/7570	7210/7570
10750/11620	10750/11620	10750/11620	10750/11620
10/16	10/16	10/16	10/16
14/23,5	14/23,5	14/23,5	14/23,5
5,2/5	5,2/5	5,2/5	5,2/5
hydraulic/electric	hydraulic/electric	hydraulic/electric	hydraulic/electric
2x8	2x8	2x8	2x8
16,2	16,2	16,2	16,2
not provided	not provided	not provided	not provided
80/625-690	80/625-690	80/700-860	80/700-860
1330/1530	1330/1530	1915/2106	1915/2106
-	-	-	-
inverter	inverter	inverter	inverter
150	150	150	150
-	-	-	-
< 75 db (A)	< 75 db (A)	< 75 db (A)	< 75 db (A)
-	-	-	-

MR 1.7 COMPACT
MR 2.0 COMPACT

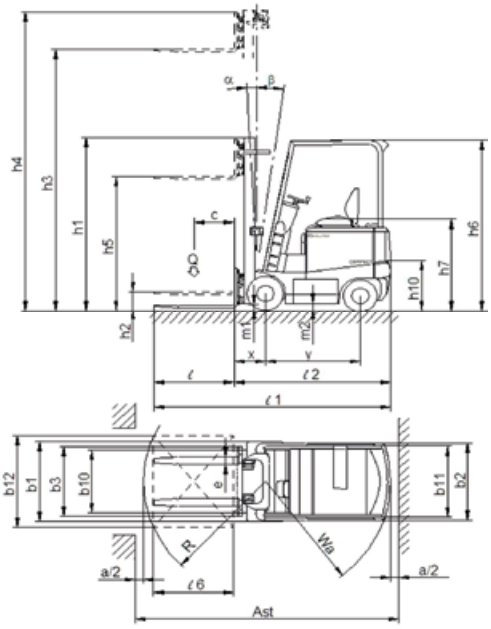

MR 2.5 COMPACT

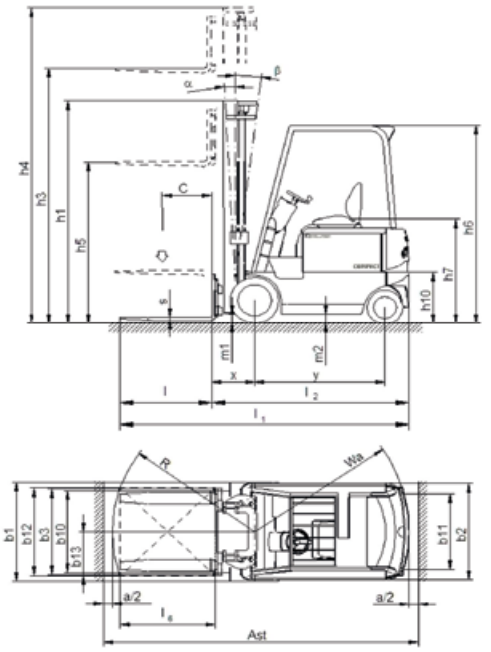

All Montini products comply with Machinery Directive 2006/42/EC and Directives 2006/95/EC and 2004/108/EC.

9) With cushion tyres 842,5; 10) With cushion tyres 858; 11) With cushion tyres 1030/1010;
12) With cushion tyres 1050/1010; 13) With cushion tyres 1110/1100; 14) With load backrest 940;
15) Ast = Wa + x + l6 + a (a = 200 mm).

https://truckmanualshub.com/

MONTINI Revolution

Depliant MR COMPACT - 10-2018 - Cod. 5014115.EN - Graphic Design: 3pix
The data provided herein is purely indicative and is not binding, the manufacturer therefore reserves the right to make changes as and when deemed appropriate.

MONTINI di Garotti Francesco & C. s.n.c.

HEAD OFFICE

IT - 48033 Cotignola RA
Via G. Bentini, 7/9
Tel. +39 0545 991001
Fax +39 0545 42150

SALES MANAGEMENT

IT - 48033 Cotignola RA
Corso Sforza, 32
Tel. +39 0545 991051
Fax +39 0545 42127

SPARE PARTS WAREHOUSE

IT - 48022 Lugo RA
Via A. da Barbiano, 8
Tel. +39 0545 991081
Fax +39 0545 902988

www.montini.biz
info@montini.biz