duma rent
https://truckmanualshub.com/
Torkonjestraat 23
8510 Marke
België
056 / 222 111
info@dumarent.be
www.dumarent.be

MANITOU

BP 249
44158 ANCENIS CEDEX - FRANCE
TEL: 33 (0)2 40 09 10 11

YOUR DEALER

547896 EN (17/12/20007)

MT 523 Série B-E2
MT 523 MONO-ULTRA Série B-E2
MLT 523 Turbo Série B-E2
MLT 523 Turbo MONO-ULTRA Série B-E2
MT 620 Série B-E2

OPERATOR'S MANUAL

THIS OPERATOR'S MANUAL MUST BE KEPT IN THE LIFT TRUCK AND MUST BE READ AND UNDERSTOOD BY OPERATORS.

https://truckmanualshub.com/
Torkonjestraat 23
8510 Marke
België
056 / 222 111
info@dumarent.be
www.dumarent.be

https://truckmanualshub.com/
Torkonjestraat 23
8510 Marke
België
056 / 222 111
info@dumarent.be
www.dumarent.be

1 - OPERATING AND SAFETY INSTRUCTIONS

2 - DESCRIPTION

3 - MAINTENANCE

4 - ADAPTABLE ATTACHMENTS IN OPTION ON THE RANGE

17/07/2004	1ST DATE OF ISSUE
13/05/2005	UP DATING
16/09/2005	UP DATING (1-9)
02/02/2007	UP DATING (2-6 – 2-12 ; 2-15 ; 2-25 ; 2-34 – 2-40 ; 3-8 ; 3-10 ; 3-11 ; 3-20 ; 3-37 ; 4-18)
17/12/2007	UP DATING (2-39 ; 3-6 ; 3-7) ADDING : MT 620 Série B-E2

THE TEXTS AND ILLUSTRATIONS IN THIS DOCUMENT MUST NOT BE REPRODUCED EITHER WHOLLY OR IN PART.

https://truckmanualshub.com/

Torkonjestraat 23
8510 Marke
België

056 / 222 111
info@dumarent.be
www.dumarent.be

https://truckmanualshub.com/
Torkonjestraat 23
8510 Marke
België
056 / 222 111
info@dumarent.be
www.dumarent.be

1 - OPERATING AND SAFETY INSTRUCTIONS

https://truckmanualshub.com/
Torkonjestraat 23
8510 Marke
België
056 / 222 111
info@dumarent.be
www.dumarent.be

Torkonjestraat 23
8510 Marke
België
056 / 222 111
info@dumarent.be
www.dumarent.be

TABLE OF CONTENTS

INSTRUCTIONS TO THE COMPANY MANAGER 1 - 4

THE OPERATOR **1 - 4**
THE LIFT TRUCK **1 - 4**
A - THE LIFT TRUCK'S SUITABILITY FOR THE JOB 1 - 4
B - ADAPTATION OF THE LIFT TRUCK TO STANDARD ENVIRONMENTAL CONDITIONS 1 - 4
C - MODIFICATION OF THE LIFT TRUCK 1 - 5
THE INSTRUCTIONS **1 - 5**
THE MAINTENANCE **1 - 5**

INSTRUCTIONS FOR THE OPERATOR 1 - 6

PREAMBULE **1 - 6**
GENERAL INSTRUCTIONS **1 - 6**
A - OPERATOR'S MANUAL 1 - 6
B - AUTHORIZATION FOR USE IN FRANCE (or see current legislation in other countries) 1 - 6
C - MAINTENANCE 1 - 6
D - MODIFICATION OF THE LIFT TRUCK 1 - 6
E - LIFTING PEOPLE 1 - 7
OPERATING INSTRUCTIONS UNLADEN AND LADEN **1 - 8**
A - BEFORE STARTING THE LIFT TRUCK 1 - 8
B - DRIVER'S OPERATING INSTRUCTIONS 1 - 8
C - ENVIRONMENT 1 - 9
D - VISIBILITY 1 - 9
E - STARTING THE LIFT TRUCK 1 - 10
F - DRIVING THE LIFT TRUCK 1 - 10
G - STOPPING THE LIFT TRUCK 1 - 11
H - DRIVING THE LIFT TRUCK ON THE PUBLIC HIGHWAY 1 - 12
INSTRUCTIONS FOR HANDLING A LOAD **1 - 14**
A - CHOICE OF ATTACHMENTS 1 - 14
B - MASS OF LOAD AND CENTRE OF GRAVITY 1 - 14
C - LONGITUDINAL STABILITY ALARM 1 - 14
D - TRANSVERSE ATTITUDE OF THE LIFT TRUCK 1 - 15
E - TAKING UP A LOAD ON THE GROUND 1 - 15
F - TAKING UP AND LAYING A HIGH LOAD ON TYRES 1 - 16
G - TAKING UP AND LAYING A HIGH LOAD ON STABILIZERS 1 - 18
OPERATING INSTRUCTIONS THE PLATFORM **1 - 20**
A - DISPOSITION IN THE PLATFORM 1 - 20
B - OPERATING THE PLATFORM 1 - 20
C - ENVIRONMENT 1 - 20
INSTRUCTIONS FOR USING THE RADIO-CONTROL **1 - 21**

MAINTENANCE INSTRUCTIONS OF THE LIFT TRUCK 1 - 22

GENERAL INSTRUCTIONS **1 - 22**
MAINTENANCE **1 - 22**
LUBRICANT AND FUEL LEVELS **1 - 22**
HYDRAULIC **1 - 22**
ELECTRICITY **1 - 22**
WELDING **1 - 23**
WASHING THE LIFT TRUCK **1 - 23**

IF THE LIFT TRUCK IS NOT TO BE USED FOR A LONG TIME 1 - 24

INTRODUCTION **1 - 24**
PREPARING THE LIFT TRUCK **1 - 24**
PROTECTING THE I.C. ENGINE **1 - 24**
PROTECTING THE LIFT TRUCK **1 - 24**
BRINGING THE LIFT TRUCK BACK INTO SERVICE **1 - 25**

INSTRUCTIONS TO THE COMPANY MANAGER

THE OPERATOR

- Only qualified, authorized personnel can use the lift truck. This authorization is given in writing by the appropriate person in the establishment with respect to the use of lift trucks and must be carried permanently by the operator.

On the basis of experience, there are a number of possible situations in which operating the lift truck is contra-indicated. Such foreseeable abnormal uses, the main ones being listed below, are strictly forbidden.

- The foreseeable abnormal behaviour resulting from ordinary neglect, but does not result from any wish to put the machinery to any improper use.
- The reflex reactions of a person in the event of a malfunction, incident, fault, etc. during operation of the lift truck.
- Behaviour resulting from application of the «principle of least action» when performing a task.
- For certain machines, the foreseeable behaviour of such persons as: apprentices, teenagers, handicapped persons, trainees tempted to drive a lift truck, operator tempted to operate a truck to win a bet, in competition or for their own personal experience.
The person in charge of the equipment must take these criteria into account when assessing whether or not a person will makea suitable driver.

THE LIFT TRUCK

A - THE TRUCK'S SUITABILITY FOR THE JOB

- MANITOU has ensured that this lift truck is suitable for use under the standard operating conditions defined in this operator's manual, with a **STATIC** test coefficient **OF 1.33** and a **DYNAMIC** test coefficient **OF 1**, as specified in harmonized norm **EN 1459** for variable range trucks.
- Before commissioning, the company manager must make sure that the lift truck is appropriate for the work to be done, and perform certain tests (in accordance with current legislation).

B - ADAPTATION OF THE LIFT TRUCK TO STANDARD ENVIRONMENTAL CONDITIONS

- In addition to series equipment mounted on your lift truck, many options are available, such as: road lighting, stop lights, flashing light, reverse lights, reverse buzzer alarm, front light, rear light, light at the jib head, etc.
- The operator must take into account the operating conditions to define the lift truck's signalling and lighting equipment. Contact your dealer.
- Take into account climatic and atmospheric conditions of the site of utilisation.
  . Protection against frost (see: 3 - MAINTENANCE: LUBRICANTS AND FUEL).
  . Adaptation of lubricants (ask your dealer for information).
  . I.C. engine filtration (see: 3 - MAINTENANCE: FILTERS CARTRIDGES AND BELTS).

For operation under average climatic conditions, i.e.: between - 15 °C and + 35 °C, correct levels of lubricants in all the circuits are checked in production. For operation under more severe climatic conditions, before starting up, it is necessary to drain all the circuits, then ensure correct levels of lubricants using lubricants properly suited to the relevant ambient temperatures. It is the same for the cooling liquid.

- A lift truck operating in an area without fire extinguishing equipment must be equipped with an individual extinguisher. There are solutions, consult your dealer.

Your lift truck is designed for outdoor use under normal atmospheric conditions and indoor use in suitably aerated and ventilated premises. It is prohibited to use the lift truck in areas where there is a risk of fire or which are potentially explosive (e.g. Refineries, fuel or gas depots, stores of inflammable products...). For use in these areas, specific equipment is available (ask your dealer for information).

- Our trucks comply with Directive 89/336/EC concerning electromagnetic compatibility (EMC), and with the corresponding harmonized norm EN 12895. Their proper operation is no longer guaranteed if they are used within areas in which the electromagnetic fields exceed the limit specified by that norm (10 V/m).
- Directive 2002/44/EC requires company managers to not expose their employees to excessive vibration doses. There is no recognized code of measurement for comparing the machines of different manufacturers. The actual doses received can therefore be measured only under actual operating conditions at the user's premises.
- The following are some tips for minimizing these vibration doses:
  - Select the most suitable lift truck and attachment for the intended use.
  - Adapt the seat adjustment to the operator's weight (according to lift truck model) and maintain it in good condition, as well as the cab suspension. Inflate the tires in accordance with recommendations.
  - Ensure that the operators adapt their operating speed to suit the conditions on site.
  - As far as possible, arrange the site in such a way as to provide a flat running surface and remove obstacles and harmful potholes.

C - MODIFICATION OF THE LIFT TRUCK

- For your safety and that of others, you must not change the structure and settings of the various components used in your lift truck (hydraulic pressure, calibrating limiters, I.C. engine speed, addition of extra equipment, addition of counterweight, unapproved attachments, alarm systems, etc.) yourself. In this event, the manufacturer cannot be held responsible.

THE INSTRUCTIONS

- The operator's manual must always be in good condition and kept in the place provided on the lift truck and in the language used by the operator.
- The operator's manual and any plates or stickers which are no longer legible or are damaged, must be replaced immediately.

THE MAINTENANCE

- Maintenance or repairs other than those detailed in part: 3 - MAINTENANCE must be carried out by qualified personnel (consult your dealer) and under the necessary safety conditions to maintain the health of the operator and any third party.

Your lift truck must be inspected periodically to ensure that it remains in compliance. The frequency of this inspection is defined by current legislation in the country in which the lift truck is used.

Torkonjestraat 23
8510 Marke
België
056 / 222 111
info@dumarent.be
www.dumarent.be

INSTRUCTIONS FOR THE OPERATOR

PREAMBULE

WHENEVER YOU SEE THIS SYMBOL IT MEANS:

WARNING ! BE CAREFUL ! YOUR SAFETY OR THE SAFETY OF THE LIFT TRUCK IS AT RISK.

The risk of accident while using, servicing or repairing your lift truck can be restricted if you follow the safety instructions and safety measures detailed in these instruction.

- Only the operations and manœuvres described in these operator's manual must be performed. The manufacturer cannot predict all possible risky situations. Consequently, the safety instructions given in the operator's manual and on the lift truck itself are not exhaustive.
- At any time, as an operator, you must envisage, within reason, the possible risk to yourself, to others or to the lift truck itself when you use it.

Failure to respect the safety and operating instructions, or the instructions for repairing or servicing your lift truck may lead to serious, even fatal accident.

GENERAL INSTRUCTIONS

A - OPERATOR'S MANUAL
- Read the operator's manual carefully.
- The operator's manual must always be in good condition and in the place provided for it on the lift truck.
- You must report any plates and stickers which are no longer legible or which are damaged.

B - AUTHORIZATION FOR USE IN FRANCE
(or see current legislation in other countries)
- Only qualified, authorized personnel may use the lift truck. This authorization is given in writing by the appropriate person in the company, in charge of using the lift truck, and must be permanently carried by the operator.
- The operator is not competent to authorise the driving of the lift truck by another person.

C - MAINTENANCE
- The operator must immediately advise his superior if his lift truck is not in good working order or does not comply with the safety notice.
- The operator is prohibited from carrying out any repairs or adjustments himself, unless he has been trained for this purpose. He must keep the lift truck properly cleaned if this is among his responsibilities.
- The operator must carry out daily maintenance (see: 3 - MAINTENANCE: A - DAILY OR EVERY 10 HOURS SERVICE).
- The operator must ensure tyres are adapted to the nature of the ground (see area of the contact surface of the tyres in the chapter: 2 - DESCRIPTION: CHARACTERISTICS). There are optional solutions, consult your dealer.
  . SAND tyres.
  . LAND tyres.
  . Snow chains.

Do not use the lift truck if the tyres are incorrectly inflated, damaged or excessively worn, because this could put your own safety or that of others at risk, or cause damage to the lift truck itself. The fitting of foam inflated tyres is prohibited and is not guaranteed by the manufacturer, excepting prior authorisation.

D - MODIFICATION OF THE LIFT TRUCK
- For your safety and that of others, you must not change the structure and settings of the various components used in your lift truck (hydraulic pressure, calibrating limiters, I.C. engine speed, addition of extra equipment, addition of counterweight, unapproved attachments, alarm systems, etc.) yourself. In this event, the manufacturer cannot be held responsible.

E - LIFTING PEOPLE

- The use of working equipment and load lifting attachments to lift people is:
  - either forbidden
  - or authorized exceptionally and under certain conditions (see current regulations in the country in which the lift truck is used).
- The pictogram posted at the operator station reminds you that:
  - Left-hand column
    - It is forbidden to lift people, with any kind of attachment, using a non-ORH lift truck.
  - Right-hand column
    - With an ORH lift truck, people can only be lifted using platforms designed by MANITOU for the purpose.
- MANITOU sells equipment specifically designed for lifting people (OPTION ORH lift truck, contact your dealer).

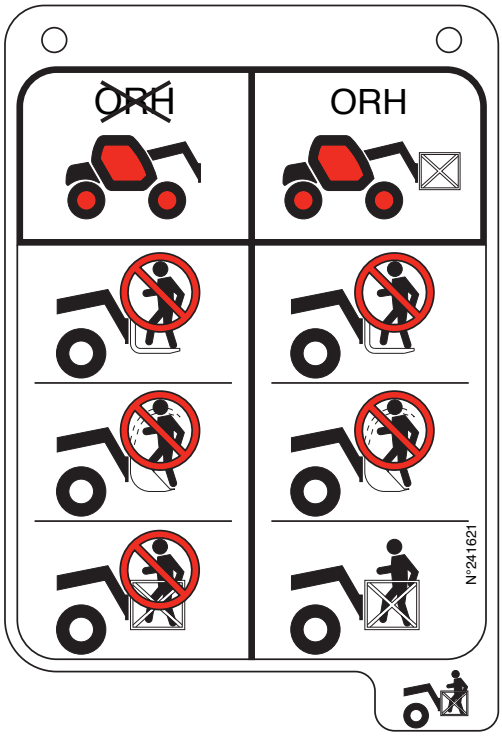

https://truckmanualshub.com/
Torkonjestraat 23
8510 Marke
België
056 / 222 111
info@dumarent.be
www.dumarent.be

OPERATING INSTRUCTIONS UNLADEN AND LADEN

A - BEFORE STARTING THE LIFT TRUCK

- Carry out daily maintenance (see: 3 - MAINTENANCE: A - DAILY OR EVERY 10 HOURS SERVICE).
- Make sure the lights, indicators and windscreen wipers are working properly.
- Make sure the rear view mirrors are in good condition, clean and properly adjusted.
- Make sure the horn works.

B - DRIVER'S OPERATING INSTRUCTIONS

- Whatever his experience, the operator is advised to familiarize himself with the position and operation of all the controls and instruments before operating the lift truck.
- Wear clothes suited for driving the lift truck, avoid loose clothes.
- Make sure you have the appropriate protective equipment for the job to be done.
- Prolonged exposure to high noise levels may cause hearing problems. It is recommended to wear ear muffs to protect against excessive noise.
- Always face the lift truck when getting into and leaving the driving seat and use the handle(s) provided for this purpose. Do not jump out of the seat to get down.
- Always pay attention when using the lift truck. Do not listen to the radio or music using headphones or earphones.
- Never operate the lift truck when hands or feet are wet or soiled with greasy substances.
- For increased comfort, adjust the seat to your requirements and adopt the correct position in the driver's cab.

Under no circumstances must the seat be adjusted while the lift truck is moving.

- The operator must always be in his normal position in the driver's cab. It is prohibited to have arms or legs, or generally any part of the body, protruding from the driver's cab of the lift truck.
- The safety belt must be worn and adjusted to the operator's size.
- The control units must never in any event be used for any other than their intended purposes (e.g. climbing onto or down from the lift truck, portmanteau, etc.).
- If the control components are fitted with a forced operation (lever lock) device, it is forbidden to leave the cab without first putting these controls in neutral.
- It is prohibited to carry passengers either on the lift truck or in the cab.

C - ENVIRONMENT

- Comply with site safety regulations.
- If you have to use the lift truck in a dark area or at night, make sure it is equipped with working lights.
- During handling operations, make sure that no one is in the way of the lift truck and its load.
- Do not allow anybody to come near the working area of the lift truck or pass beneath an elevated load.
- When using the lift truck on a transverse slope, before lifting the jib, follow the instructions given in the paragraph: INSTRUCTIONS FOR HANDLING A LOAD: D - TRANSVERSE ATTITUDE OF THE LIFT TRUCK.
- Travelling on a longitudinal slope:
  - Drive and brake gently.
  - Moving without load: Forks or attachment facing downhill. 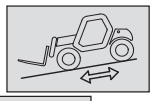
  - Moving with load: Forks or attachment facing uphill. 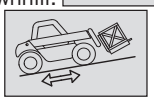
- Take into account the lift truck's dimensions and its load before trying to negotiate a narrow or low passageway.
- Never move onto a loading platform without having first checked:
  - That it is suitably positioned and made fast.
  - That the unit to which it is connected (wagon, lorry, etc.) will not shift.
  - That this platform is prescribed for the total weight of the lift truck to be loaded.
  - That this platform is prescribed for the size of the lift truck.
- Never move onto a foot bridge, floor or freight lift, without being certain that they are prescribed for the weight and size of the lift truck to be loaded and without having checked that they are in sound working order.
- Be careful in the area of loading bays, trenches, scaffolding, soft land and manholes.
- Make sure the ground is stable and firm under the wheels and/or stabilizers before lifting or removing the load. If necessary, add sufficient wedging under the stabilizers.
- Make sure that the scaffolding, loading platform, pilings or ground is capable of bearing the load.
- Never stack loads on uneven ground, they may tip over.

If the load or the attachment must remain above a structure for a long time, there is the risk that it will rest on the structure because of the jib descending owing to the oil in the cylinders cooling down.
To eliminate this risk:
- Regularly check the distance between the load or the attachment and the structure and readjust this if necessary.
- If possible use the lift truck at an oil temperature as close as possible to ambient temperature.

- In the case of work near aerial lines, ensure that the safety distance is sufficient between the working area of the lift truck and the aerial line.

You must consult your local electrical agency. You could be electrocuted or seriously injured if you operate or park the lift truck too close to power cables.

In the event of high winds, do not carry out handling work that jeopardizes the stability of the lift truck and its load, particularly if the load catches the wind badly.

D - VISIBILITY

- The safety of people within the lift truck's working area, as well as that of the lift truck itself and the operator are depend on good operator visibility of the lift truck's immediate vicinity in all situations and at all times.
- This lift truck has been designed to allow good operator visibility (direct or indirect by means of rear-view mirrors) of the immediate vicinity of the lift truck while traveling with no load and with the jib in the transport position.
- Special precautions must be taken if the size of the load restricts visibility towards the front:
  - moving in reverse,
  - site layout,
  - assisted by a person directing the maneuver (while standing outside the truck's area of travel), making sure to keep this person clearly in view at all times.
  - in any case, avoid reversing over long distances.
- Certain special accessories may require the truck to travel with the jib in the raised position. In such cases, visibility on the right hand side is restricted, and special precautions must be taken:
  - site layout,
  - assisted by a person directing the maneuver (while standing outside the truck's area of travel).
- If visibility of your road is inadequate, ask someone to assist by directing the maneuver (while standing outside the truck's area of travel), making sure to keep this person clearly in view at all times.
- Keep all components affecting visibility in a clean, properly adjusted state and in good working order (e.g. windscreens, windows, windscreen wipers, windscreen washers, driving and work lights, rear-view mirrors).

E - STARTING THE LIFT TRUCK

SAFETY NOTICE

The lift truck must only be started up or manoeuvred when the operator is sitting in the driver's cab, with his seat belt adjusted and fastened.

- Never try to start the lift truck by pushing or towing it. Such operation may cause severe damage to the transmission. If necessary, to tow the lift truck in an emergency, the transmission must be placed in the neutral position (see: 3 - MAINTENANCE: G - OCCASIONAL MAINTENANCE).
- If using an emergency battery for start-up, use a battery with the same characteristics and respect battery polarity when connecting it. Connect at first the positive terminals before the negative terminals.

Failure to respect polarity between batteries can cause serious damage to the electrical circuit. The electrolyte in the battery may produce an explosive gas. Avoid flames and generation of sparks close to the batteries. Never disconnect a battery while it is charging.

INSTRUCTIONS

- Check the closing and locking of the hood(s).
- Make sure that the forward/reverse lever is in neutral.
- Turn the ignition key to the position I to activate the electrical system.
- Whenever you switch on the lift truck, perform the automatic check on the longitudinal stability alarm system (see: 2 - DESCRIPTION: INSTRUMENTS AND CONTROLS). Do not use the lift truck if it does not conform to the regulations.
- Make sure the signal lights on the instrument control panel and fuel level indicators are working properly (see: 2 - DESCRIPTION: INSTRUMENTS AND CONTROLS).
- Turn the ignition key to position II to preheat for 5 seconds and turn the ignition key fully: the I.C. engine should then start. Release the ignition key and let the I.C. engine run at idle.
- Do not engage the starter motor for more than 15 seconds and carry out the preheating for 5 seconds between unsuccessful attempts.
- Make sure all the signal lights on the control instrument panel are off.
- Check all control instruments when the I.C. engine is warm and at regular intervals during use, so as to quickly detect any faults and to be able to correct them without any delay.
- If an instrument does not show the correct display, stop the I.C. engine and immediately carry out the necessary operations.

F - DRIVING THE LIFT TRUCK

SAFETY NOTICE

Operators' attention is drawn to the risks involved in using the lift truck, in particular:
- Risk of losing control.
- Risk of losing lateral and frontal stability of the lift truck.
The operator must remain in control of the lift truck.
In the event of the lift truck overturning, do not try to leave the cabin during the incident. YOUR BEST PROTECTION IS TO STAY FASTENED IN THE CABIN.

- Observe the company's traffic regulations or, by default, the public highway code.
- Do not carry out operations which exceed the capacities of your lift truck or attachments.
- Always drive the lift truck with the forks or attachment to the transport position, i.e. at 300 mm from the ground, the jib retracted and the carriage sloping backwards.
- Only carry loads which are balanced and properly anchored to avoid any risk of a load falling off.
- Ensure that palettes, cases, etc, are in good order and suitable for the load to be lifted.
- Familiarise yourself with the lift truck on the terrain where it will be used.
- Ensure that the service brakes are working properly.
- The loaded lift truck must not travel at speeds in excess of 12 km/h.
- Drive smoothly at an appropriate speed for the operating conditions (land configuration, load on the lift truck).
- Do not use the hydraulic jib controls when the lift truck is moving.
- Do not manoeuvre the lift truck with the jib in the raised position unless under exceptional circumstances and then with extreme caution, at very low speed and using gentle braking. Ensure that visibility is adequate.
- Take bends slowly.
- In all circumstances make sure you are in control of your speed.
- On damp, slippery or uneven terrain, drive slowly.
- Brake gently, never abruptly.
- Only use the lift truck's forward/reverse lever from a stationary position and never do so abruptly.
- Do not drive with your foot on the brake pedal.
- Always remember that hydrostatic type steering is extremely sensitive to movement of the steering wheel, so turn it gently and not jerkily.
- Never leave the I.C. engine on when the lift truck is unattended.
- Do not leave the cab when the lift truck has a raised load.
- Look where you are going and always make sure you have good visibility along the route.

- Use the rear-view mirrors frequently.
- Drive round obstacles.
- Never drive on the edge of a ditch or steep slope.
- It is dangerous to use two lift trucks simultaneously to handle heavy or voluminous loads, since this operation requires particular precautions to be taken. It must only be used exceptionally and after risk analysis.
- The ignition switch has an emergency stop mechanism in case of an operating anomaly occurring in the case of lift trucks not fitted with a punch-operated cut-out.

INSTRUCTIONS
- Always drive the lift truck with the forks or attachment to the transport position, i.e. at 300 mm from the ground, the jib retracted and the carriage sloping backwards.
- For lift trucks with gearboxes, use the recommended gear (see: 2 - DESCRIPTION: INSTRUMENTS AND CONTROLS).
- Select the steering mode appropriate for its use and/or working conditions (see: 2 - DESCRIPTION: INSTRUMENTS AND CONTROLS) (as model of lift truck).
- Release the parking brake.
- Shift the forward/reverse lever to the selected direction of travel and accelerate gradually until the lift truck moves off.

G - STOPPING THE LIFT TRUCK

SAFETY NOTICE
- Never leave the ignition key in the lift truck during the operator's absence.
- When the lift truck is stationary, or if the operator has to leave his cab (even for a moment), place the forks or attachment on the ground, apply the parking brake and put the forward/reverse lever in neutral.
- Make sure that the lift truck is not stopped in any position that will interfere with the traffic flow and at less than one meter from the track of a railway.
- In the event of prolonged parking on a site, protect the lift truck from bad weather, particularly from frost (check the level of antifreeze), close and lock all the lift truck accesses (doors, windows, cowls...).

INSTRUCTIONS
- Park the lift truck on flat ground or on an incline lower than 15 %.
- Place the forward/reverse lever in neutral.
- Apply the parking brake.
- For lift trucks with gearboxes, place the gear lever in neutral.
- Retract entirely the jib.
- Lower the forks or attachment to rest on the ground.
- When using an attachment with a grab or jaws, or a bucket with hydraulic opening, close the attachment fully.
- Before stopping the lift truck after a long working period, leave the I.C. engine idling for a few moments, to allow the coolant liquid and oil to lower the temperature of the I.C. engine and transmission. Do not forget this precaution, in the event of frequent stops or warm stalling of the I.C. engine, or else the temperature of certain parts will rise significantly due to the stopping of the cooling system, with the risk of badly damaging such parts.
- Stop the I.C. engine with the ignition switch.
- Remove the ignition key.
- Lock all the accesses to the lift truck (doors, windows, cowls...).

H - DRIVING THE LIFT TRUCK ON THE PUBLIC HIGHWAY

SAFETY INSTRUCTIONS

- Operators driving on the public highway must comply with current highway code legislation.
- The lift truck must comply with current road legislation. If necessary, there are optional solutions. Contact your dealer.

INSTRUCTIONS

- Make sure the revolving light is in place, switch it on and verify its operation.
- Check the good working order and cleanness of lights, indicators and windscreen wiper.
- Switch off the working headlights if the lift truck is fitted with them.
- Select the steering mode «HIGHWAY TRAFFIC» (as model of lift truck) (see: 2 - DESCRIPTION: INSTRUMENTS AND CONTROLS).
- Retract entirely the jib and put the attachment at 300 mm from the ground.
- Place the slope correctors in the central position, i.e. the transverse shaft of the axles parallel to the chassis (as model of lift truck).
- Lift up the stabilizers to the maximum and turn the blocks inwards (as model of lift truck).
- For lift trucks with gearboxes:
  On the road, set off in 3rd gear and go into 4th (as model of lift truck) when the conditions and state of the road allow. In hilly areas, set off in 2nd gear and go into 3rd when the conditions and state of the road allow.

Never move in neutral (gear reverser or gear lever in neutral or transmission cut-off button pressed) to preserve the lift truck engine brake. Failure to respect this instruction on a slope will lead to excessive speed which may make the lift truck uncontrollable (steering, brakes) and may cause severe mechanical damage.

https://truckmanualshub.com/
Torkonjestraat 23
8510 Marke
België
056 / 222 111
info@dumarent.be
www.dumarent.be

DRIVING THE LIFT TRUCK WITH A FRONT-MOUNTED ATTACHMENT

- You must comply with current regulations in your country, covering the possibility of driving on the public highway with a front-mounted attachment on your lift truck.
- If road legislation in your country authorizes circulation with a front-mounted attachment, you must at least:
    - Protect and report any sharp and/or dangerous edges on the attachment (see: 4 - ADAPTABLE ATTACHMENTS IN OPTION ON THE RANGE: ATTACHMENT SHIELDS).
    - The attachment must not be loaded.
    - Make sure that the attachment does not mask the lighting range of the forward lights.
    - Make sure that current legislation in your country does not require other obligations.

OPERATING THE LIFT TRUCK WITH A TRAILER

- For using a trailer, observe the regulations in force in your country (maximum travel speed, braking, maximum weight of trailer, etc.).
- Do not forget to connect the trailer's electrical equipment to that of the lift truck.
- The trailer's braking system must comply with current legislation.
- If pulling a trailer with assisted braking, the tractor lift truck must be equipped with a trailer braking mechanism. In this case, do not forget to connect the trailer braking equipment to the lift truck.
- The maximum vertical pull on the trailer hook must not exceed 1500 daN.
- The authorised maximum train weight must not exceed the maximum weight authorised by the manufacturer (consult the manufacturer's plate on your lift truck).
- For lift trucks with gearboxes:
  When driving with a trailer, set off in 2nd gear and go into 3rd when the conditions and state of the road allow. Do not exceed 4th gear to avoid overheating the internal combustion engine and the transmission.

IF NECESSARY, CONSULT YOUR DEALER.

INSTRUCTIONS FOR HANDLING A LOAD

A - CHOICE OF ATTACHMENTS

- Only attachments approved by MANITOU can be used on its lift trucks.
- Make sure the attachment is appropriate for the work to be done (see: 4 - ADAPTABLE ATTACHMENTS IN OPTION ON THE RANGE).
- Make sure the attachment is correctly installed and locked onto the lift truck carriage.
- Make sure that your lift truck attachments work properly.
- Comply with the load chart limits for the lift truck for the attachment used.
- Do not exceed the rated capacity of the attachment.
- Never lift a load in a sling without the attachment provided for the purpose. There are optional solutions ; contact your dealer.

B - MASS OF LOAD AND CENTRE OF GRAVITY

- Before taking up a load, you must know its mass and its centre of gravity.
- The load chart for your lift truck is valid for a load in which the longitudinal position of the centre of gravity is 500 mm from the base of the forks (fig. B1). For a higher centre of gravity, contact your dealer.
- For irregular loads, determine the transverse centre of gravity before any movement (fig. B2) and set it in the longitudinal axis of the lift truck.

It is forbidden to move a load heavier than the effective capacity defined on the lift truck load chart.

For loads with a moving centre of gravity (e.g. liquids), take account of the variations in the centre of gravity in order to determine the load to be handled and be vigilant and take extra care to limit these variations as far as possible.

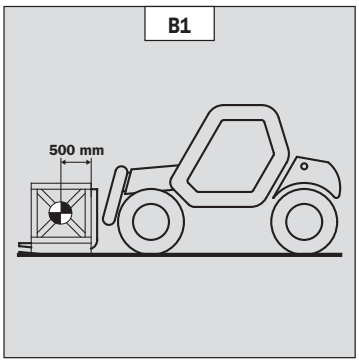

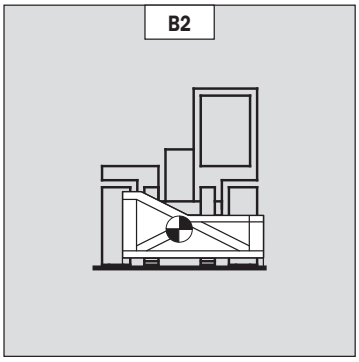

C - LONGITUDINAL STABILITY ALARM

- This device gives an indication of the lift truck's longitudinal stability. Move the jib very carefully when approaching the authorized load limit (see: 2 - DESCRIPTION: INSTRUMENTS AND CONTROLS).
- Always watch this device during handling operations.
- When the device is in alert mode, it is forbidden to perform so-called «AGGRAVATING» movements, these being:
  - A - Extending the jib.
  - B - Lowering the jib.
- Perform movements to relieve aggravation in the following order (fig. C): if necessary, raise the jib (1), retract the jib as far as possible (2) and lower the jib (3) to release the load.

The instrument reading may be erroneous when the steering is at its maximum limit or the rear axle oscillated to its limit. Before lifting a load, make sure that the lift truck is not in either of these situations.

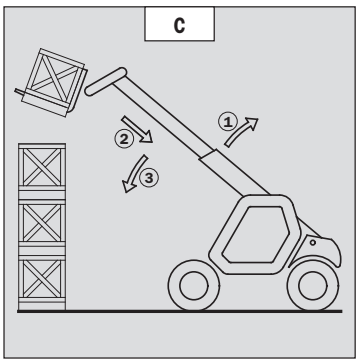

D - TRANSVERSE ATTITUDE OF THE LIFT TRUCK

Depending on the model of lift truck

The transverse attitude is the transverse slope of the chassis with respect to the horizontal.
Raising the jib reduces the lift truck's lateral stability. The transverse attitude must be set with the jib in down position as follows:

1 - LIFT TRUCK WITHOUT SLOPE CORRECTOR USED ON TYRES
- Position the lift truck so that the bubble in the level is between the two lines (see: 2 - DESCRIPTION: INSTRUMENTS AND CONTROLS).

2 - LIFT TRUCK WITH SLOPE CORRECTOR USED ON TYRES
- Correct the slope using the hydraulic control and verify the horizontality via the level. The bubble in the level must be between the two lines (see: 2 - DESCRIPTION: INSTRUMENTS AND CONTROLS).

3 - LIFT TRUCK USED ON STABILIZERS
- Set the two stabilizers on the ground and raise the two front wheels of the lift truck (fig. D1).
- Correct the slope using the stabilizers (fig. D2) and make sure the truck is horizontal by checking the level. The bubble of the level must be between the two lines (see: 2 - DESCRIPTION: INSTRUMENTS AND CONTROLS). In this position, the two front wheels must be off the ground.

D1

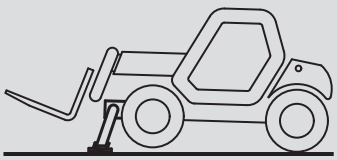

D2

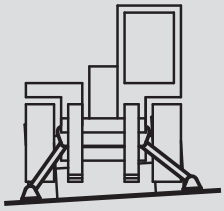

E - TAKING UP A LOAD ON THE GROUND

- Approach the lift truck perpendicular to the load, with the jib retracted and the forks in a horizontal position (fig. E1).
- Adjust the fork spread and centering in connection with the load (fig. E2) (optional solutions exist, consult your dealer).
- Never lift a load with a single fork.

Beware of the risks of trapping or squashing limbs when manually adjusting the forks.

- Move the lift truck forward slowly (1) and bring the forks to stop in front of the load (fig. E3), if necessary, slightly lift the jib (2) while taking up the load.
- Bring the load into the transport position.
- Tilt the load far enough backwards to ensure stability (loss of load on braking or going downhill).

FOR A NON-PALLETIZED LOAD
- Tilt the carriage (1) forwards and move the lift truck slowly forwards (2), to insert the fork under the load (fig. E4) (block the load if necessary).
- Continue to move the lift truck forwards (2) tilting the carriage (3) (fig. E4) backwards to position the load on the forks and check the load's longitudinal and lateral stability.

E1

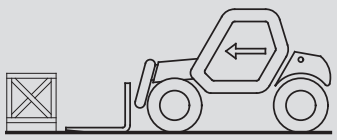

E2

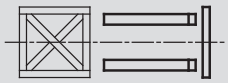

E3

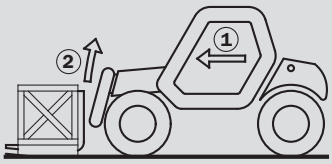

E4

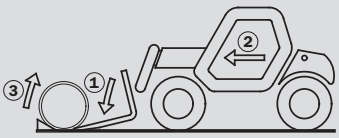

F - TAKING UP AND LAYING A HIGH LOAD ON TYRES

You must not raise the jib if you have not checked the transverse attitude of the lift truck (see: INSTRUCTIONS FOR HANDLING A LOAD: D - TRANSVERSE ATTITUDE OF THE LIFT TRUCK).

REMINDER: Make sure that the following operations can be performed with good visibility (see: OPERATIONS INSTRUCTIONS UNLADEN AND LADEN: D - VISIBILITY).

TAKING UP A HIGH LOAD ON TYRES

- Ensure that the forks will easily pass under the load.
- Lift and extend the jib (1) (2) until the forks are level with the load, moving the lift truck (3) forward if necessary (fig. F1), moving very slowly and carefully.
- Always think about keeping the distance necessary to fit the forks under the load, between the pile and the lift truck (fig. F1) and use the shortest possible length of jib.
- Stop the forks in front of the load by alternately extending and retracting the jib (1) or, if necessary, moving the lift truck forward (2) (fig. F2). Put the handbrake on and set the reverse gear to neutral.
- Slightly lift the load (1) and incline the carriage (2) backwards to stabilize the load (fig. F3).
- Tilt the load sufficiently backwards to ensure its stability.
- Watch the longitudinal stability alarm (see: INSTRUCTIONS FOR HANDLING A LOAD: C - LONGITUDINAL STABILITY ALARM). If it is overloaded, replace the load in the place from which it was taken.
- If possible lower the load without shifting the lift truck. Lift the jib (1) to release the load, retract (2) and lower the jib (3) to bring the load into the transport position (fig. F4).
- If this is not possible, back up the lift truck (1), manoeuvring very gently and carefully to release the load. Retract (2) and lower the jib (3) to bring the load into the transport position (fig. F5).

F1

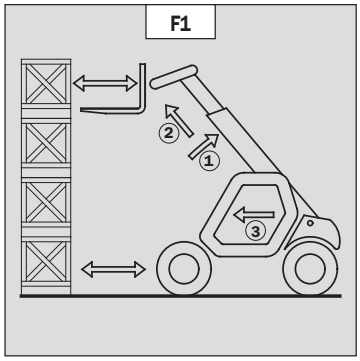

F2

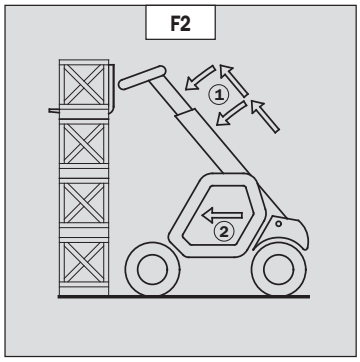

F3

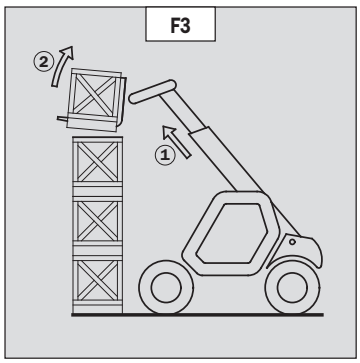

F4

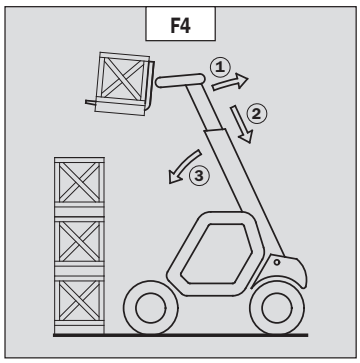

F5

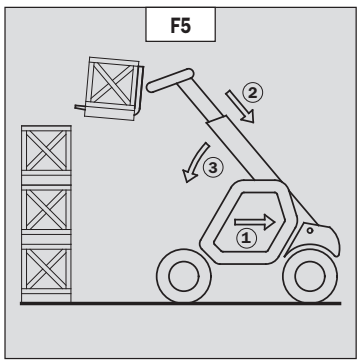

LAYING A HIGH LOAD ON TYRES

- Approach the load in the transport position in front of the pile (fig. F6).
- Put the handbrake on and set the reversing lever to neutral.
- Lift and extend the jib (1) (2) until the load is above the pile, while keeping an eye on the longitudinal stability alarm (see: INSTRUCTIONS FOR HANDLING A LOAD: C - LONGITUDINAL STABILITY ALARM). If necessary, move the lift truck (3) forward (fig. F7), driving very slowly and carefully.
- Place the load in a horizontal position and lay it down on the pile by lowering and retracting the jib (1) (2) in order to position the load correctly (fig. F8).
- If possible, release the fork by alternately retracting and raising the jib (1) (fig. F9). Then set the forks into transport position.
- If this is not possible, reverse the lift truck (1) very slowly and carefully to release the forks (fig. F10). Then set them into transport position.

F6

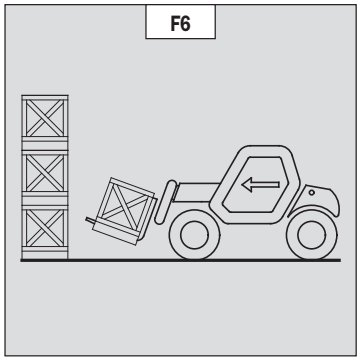

F7

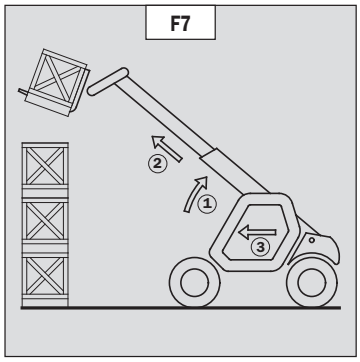

F8

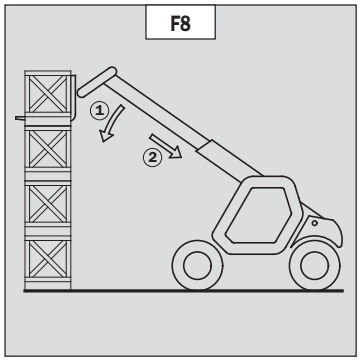

F9

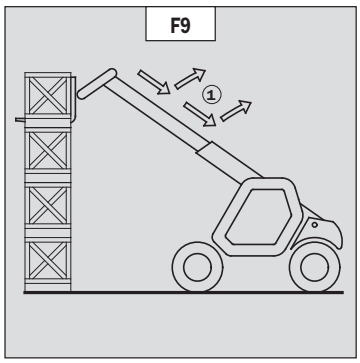

F10

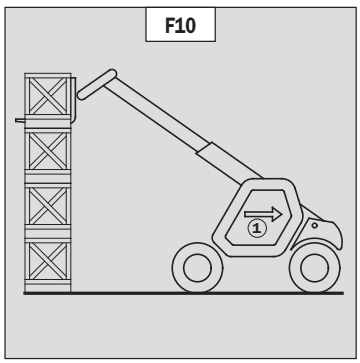

G - TAKING UP AND LAYING A HIGH LOAD ON STABILIZERS

Depending on the model of lift truck

You must not raise the jib if you have not checked the transverse attitude of the lift truck (see: INSTRUCTIONS FOR HANDLING A LOAD: D - TRANSVERSE ATTITUDE OF THE LIFT TRUCK).

REMINDER: Make sure that the following operations can be performed with good visibility (see: OPERATIONS INSTRUCTIONS UNLADEN AND LADEN: D - VISIBILITY).

USING THE STABILIZERS

The stabilizers are used to optimise the lift truck's lifting performances (see: 2 - DESCRIPTION: INSTRUMENTS AND CONTROLS).

POSITION THE STABILIZERS WITH THE FORKS IN TRANSPORT POSITION (UNLADEN AND LADEN)

- Set the forks in transport position in front of the elevation.
- Stay far enough away to have room for the jib to be raised.
- Put on the parking brake and set the gear reverser lever to neutral.
- Set the two stabilizers on the ground and lift the two front wheels of the lift truck (fig. G1), while maintaining its transverse stability.

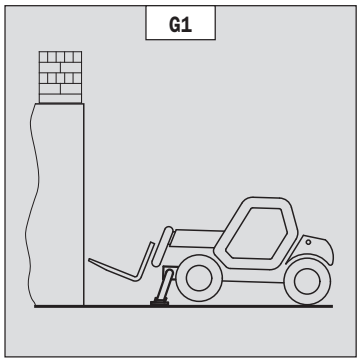

RAISE THE STABILIZERS WITH THE FORKS IN TRANSPORT POSITION (UNLADEN AND LADEN)

- Raise both stabilizers fully and at the same time.

SETTING THE STABILIZERS WITH THE JIB UP (UNLADEN AND LADEN)

This operation must be exceptional and performed with great care.

- Raise the jib and retract the telescopes completely.
- Set the lift truck in position in front of the elevation (fig. G2) moving very slowly and carefully.
- Put on the parking brake and set the gear reverser lever to neutral.
- Move the stabilizers very slowly and gradually as soon as they are close to the ground or in contact with it.
- Lower the two stabilizers and lift the two front wheels of the lift truck (fig. G3). During this operation, transverse attitude must be permanently maintained: the bubble in the level must be kept between the two lines.

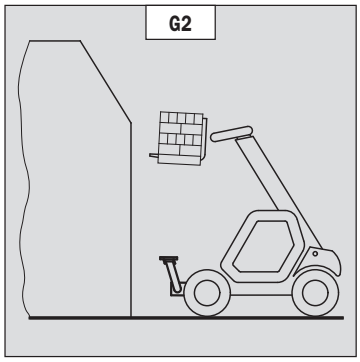

RAISING THE STABILIZERS WITH THE JIB UP (UNLADEN AND LADEN)

This operation must be exceptional and performed with great care.

- Keep the jib up and retract the telescopes completely (fig. G3).
- Move the stabilizers very slowly and gradually as soon as they are in contact with the ground and when they leave the ground. During this operation, the transverse attitude must be permanently maintained: the bubble in the level must be kept between the two lines.
- Raise both stabilizers completely.
- Release the parking brake and reverse the lift truck (1) very slowly and carefully, to release it and lower the forks (2) into transport position (fig. G4).

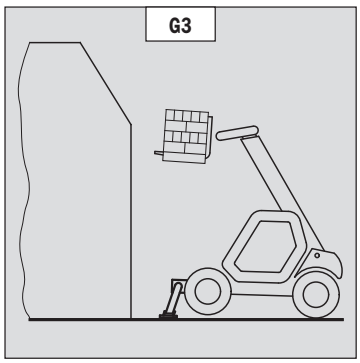

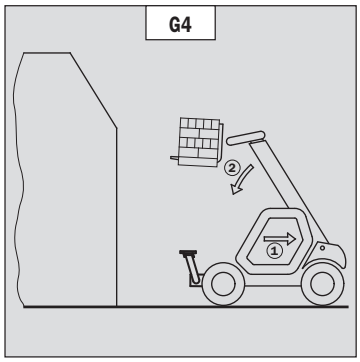

TAKING UP A HIGH LOAD ON STABILIZERS
- Make sure the forks will fit easily under the load.
- Check the position of the lift truck with respect to the load and make a test run, if necessary, without taking the load.
- Raise and extend the jib (1) (2) until the forks are at the level of the load (fig. G5).
- Block the forks in front of the load by alternately using the controls to extend and lower the jib (1) (fig. G6).
- Lift the load slightly (1) and tilt the carriage (2) backwards to stabilise the load (fig. G7).
- Monitor the longitudinal stability alarm (see: INSTRUCTIONS FOR HANDLING A LOAD: C - LONGITUDINAL STABILITY ALARM). If it is overloaded, set the load down in the place from where it was taken.
- If possible lower the load without moving the lift truck. Raise the jib (1) to release the load, retract (2) and lower the jib (3) to set the load into transport position (fig. G8).

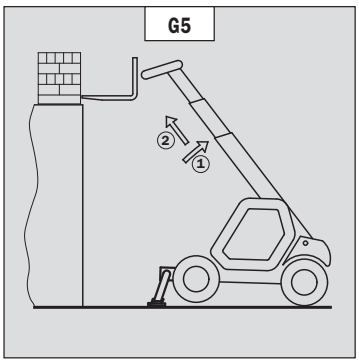

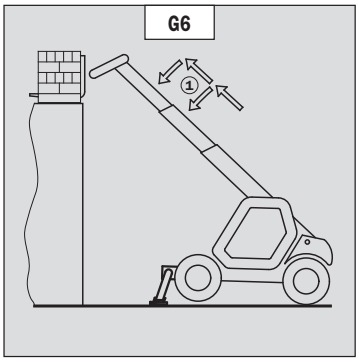

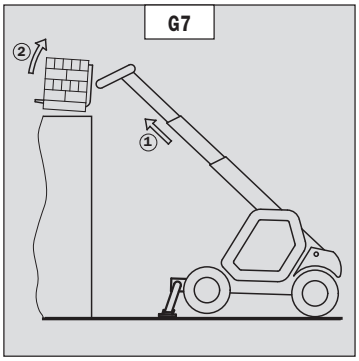

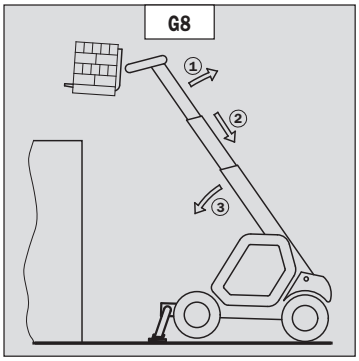

LAYING A HIGH LOAD ON STABILIZERS
- Raise and extend the jib (1) (2) until the load is above the elevation (fig. G9), while monitoring the longitudinal stability alarm (see: INSTRUCTIONS FOR HANDLING A LOAD: C - LONGITUDINAL STABILITY ALARM).
- Position the load horizontally and release it by lowering and retracting the jib (1) (2) to position the load correctly (fig. G10).
- Release the forks by alternating retracting and raising the jib (3) (fig. G11).
- If possible, set the jib in transport position without moving the lift truck.

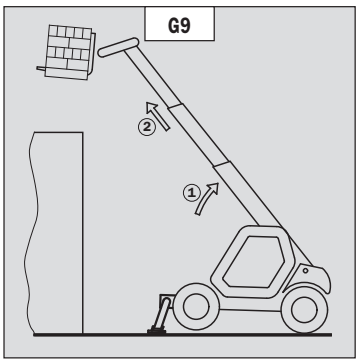

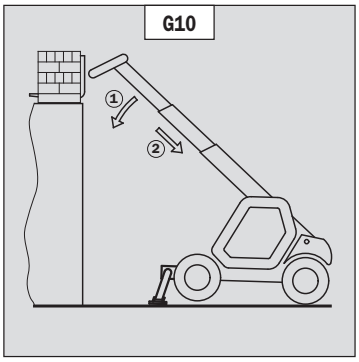

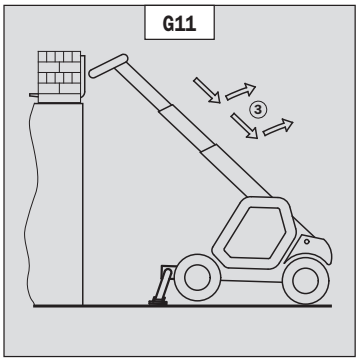

OPERATING INSTRUCTIONS THE PLATFORM

For ORH lift trucks

Installation of the platform on the lift truck is only possible if the shields «operating the platform» of the lift truck and the platform are identical (see: 2 - DESCRIPTION: OPERATING THE PLATFORM).

A - DISPOSITION IN THE PLATFORM

- Wear clothes suited for operating the platform, avoid loose clothes.
- Never operate the platform when hands or feet are wet or soiled with greasy substances.
- It is highly recommended that a safety harness be worn and hooked onto the ring placed there for this purpose.
- The controls must not be used for any other than their intended purpose (e.g. getting in and out of the lift truck, coat hanger etc.).
- Safety helmets must be worn.

B - OPERATING THE PLATFORM

- However experienced they may be, operators must acquaint themselves with the emplacement and operation of all control instruments prior to operating the platform.
- Check before operating that the platform has been correctly assembled and locked onto the lift truck.
- Check before operating the platform that the access gate has been properly locked.
- The platform should be operated in an area free of any obstructions or danger when it is lowered to the ground.
- The operator using the platform must be aided on the ground by a person with adequate training.
- You should stay within the limits set out in the platform load chart.
- The lateral stresses are limited pressure (see: 2 - DESCRIPTION: CHARACTERISTICS).
- It is strictly forbidden to suspend a load from the platform or from the lift truck jib.
- The lift truck must not be moved with one (or more) person(s) in the platform.
- It is forbidden to transport people on the platform using the hydraulic controls in the lift truck's driver's cab (except in case of rescue).
- The operator must not get in or out of the platform when it is not on ground level (jib retracted and in the down position).
- The platform must not be fitted with attachments that increase the unit's wind load.
- Do not use ladders or improvised structures in the platform to gain extra height.
- Do not climb onto the sides of the platform to gain extra height.
- Remember to unlock the rear axle oscillation before moving the lift truck (as model of lift truck).

C - ENVIRONMENT

Operating the platform close to electricity cables is forbidden.

- In the event of wind speeds of between 45 and 90 km/h, the rear axle oscillation must be locked (as model of lift truck).

Operation of the platform is strictly forbidden in the event of wind speeds of over 90 km/h.

Torkonjestraat 23
8510 Marke
België
056 / 222 111
info@dumarent.be
www.dumarent.be

INSTRUCTIONS FOR USING THE RADIO-CONTROL

For lift trucks with RC radio control

HOW TO USE THE RADIO-CONTROL

SAFETY INSTRUCTIONS

- This radio-control consists of electronic and mechanical safety elements. It cannot receive commands from another transmitter because the internal encoding is unique to each radio-control.

If it is used improperly or incorrectly, there is a risk of danger to:
- The physical and mental health of the user or others.
- The lift truck and other neighbouring items.

Everyone working with this radio-control:
- Must be qualified in line with current regulations and therefore appropriately trained.
- Must follow this instruction manual as closely as possible.

- The system is used to control the lift truck remotely via radio waves. Commands are also transmitted if the lift truck is out of sight (behind an obstacle or a building for example) ; this is why:
  - After stopping the truck and removing the key button (only possible when it is stationary), always place the transmitter in a safe, dry place.
  - Before performing any installation, servicing or repair work, always switch off power sources (in particular, electric welding devices and electric head units on hydraulic distributors must be disconnected at each section).
  - Never remove or alter the safety devices (such as the hand-guard frame, key, emergency stop button, etc.).

Never drive the lift truck if it is not continuously and perfectly within view of the operator !

- Before leaving the transmitter, the operator must make sure that it cannot be used by an unauthorized third person: either by removing the key button from the transmitter or locking it in an inaccessible place.
- The user must ensure that the instruction manual is accessible at all times and that operators have read and understood it.

INSTRUCTIONS

- Take up position in a stable place with no risk of slipping.
- Before using the transmitter, make sure there is nobody within the working area.
- Only use the transmitter with its carrying device or installed correctly on the platform.

When you remove the transmitter, remove the accumulator and key button so that it cannot be used accidentally or deliberately by anyone else.

PROTECTIVE DEVICES

- The lift truck will be immobilised within 450 milliseconds (approx. 0.5 second) at most:
  - If the transmitter emergency stop button (50 milliseconds), or the one on the lift is pressed.
  - If the transmission distance of the radio waves is exceeded.
  - If the transmitter is faulty.
  - If an interfering radio signal is received from elsewhere.
  - If the accumulator is removed from its housing in the transmitter.
  - If the accumulator reaches the end of its autonomy.
  - If the transmitter is switched off by turning the key button to stop.
- These protective devices are provided for the safety of personnel and property and must never be altered, removed or bypassed in any way whatsoever !
- The hand-guard frame prevents external action on a manipulator (if the transmitter falls, for example, or if the operator leans on a guard-rail).
- An electronic safety device prevents radio transmission from being initiated if the manipulators are not mechanically and electrically at rest and if the internal combustion engine speed selector is not set to idle.

In an emergency, press the transmitter emergency stop button immediately ; then follow the manual's instructions (see: 2 - DESCRIPTION: INSTRUMENTS AND CONTROLS).

MAINTENANCE INSTRUCTIONS OF THE LIFT TRUCK

GENERAL INSTRUCTIONS

- Ensure the area is sufficiently ventilated before starting the lift truck.
- Wear clothes suitable for the maintenance of the lift truck, avoid wearing jewellery and loose clothes. Tie and protect your hair, if necessary.
- Stop the I.C. engine and remove the ignition key, when an intervention is necessary.
- Read the operator's manual carefully.
- Carry out all repairs immediately, even if the repairs concerned are minor.
- Repair all leaks immediately, even if the leak concerned is minor.
- Make sure that the disposal of process materials and of spare parts is carried out in total safety and in a ecological way.
- Be careful of the risk of burning and splashing (exhaust, radiator, I.C. engine, etc.).

MAINTENANCE

- Perform the periodic service (see: 3 - MAINTENANCE) to keep your lift truck in good working conditions. Failure to perform the periodic service may cancel the contractual guarantee.

LUBRICANT AND FUEL LEVELS

- Use the recommended lubricants (never use contaminated lubricants).
- Do not fill the fuel tank when the I.C. engine is running.
- Only fill up the fuel tank in areas specified for this purpose.
- Do not fill the fuel tank to the maximum level.
- Do not smoke or approach the lift truck with a flame, when the fuel tank is open or is being filled.

HYDRAULIC

- Any work on the load handling hydraulic circuit is forbidden except for the operations described in part: 3 - MAINTENANCE.
- Do not attempt to loosen unions, hoses or any hydraulic component with the circuit under pressure.

BALANCING VALVE: For inspection, see: 3 – MAINTENANCE: D - EVERY 500 HOURS SERVICE. It is dangerous to change the setting and remove the balancing valves or safety valves which may be fitted to your lift truck cylinders. These operations must only be performed by approved personnel (consult your dealer).

The HYDRAULIC ACCUMULATORS that may be fitted on your lift truck are pressurised units. Removing these accumulators and their pipework is a dangerous operation and must only be performed by approved personnel (consult your dealer).

ELECTRICITY

- Do not short-circuit the starter relay to start the IC engine. If the gear reverser is not in neutral and the parking brake is not engaged, the lift truck may suddenly start to move.
- Do not drop metallic items on the battery.
- Disconnect the battery before working on the electrical circuit.

https://truckmanualshub.com/
Torkonjestraat 23
8510 Marke
België
056 / 222 111
info@dumarent.be
www.dumarent.be

WELDING

- Disconnect the battery before any welding operations on the lift truck.
- When carrying out electric welding work on the lift truck, connect the negative cable from the equipment directly to the part being welded, so as to avoid high tension current passing through the alternator.
- Never carry out welding or work which gives off heat on an assembled tyre. The heat would increase the pressure which could cause the tyre to explode.
- If the lift truck is equipped with an electronic control unit, disconnect this before starting to weld, to avoid the risk of causing irreparable damage to electronic components.

WASHING THE LIFT TRUCK

- Clean the lift truck or at least the area concerned before any intervention.
- Remember to close and lock all accesses to the lift truck (doors, windows, cowls…).
- During washing, avoid the articulations and electrical components and connections.
- If necessary, protect against penetration of water, steam or cleaning agents, components susceptible of being damaged, particularly electrical components and connections and the injection pump.
- Clean the lift truck of any fuel, oil or grease trace.

FOR ANY INTERVENTION OTHER THAN REGULAR MAINTENANCE, CONSULT YOUR DEALER.

IF THE LIFT TRUCK IS NOT TO BE USED FOR A LONG TIME

INTRODUCTION

The following recommendations are intended to prevent the lift truck from being damaged when it is withdrawn from service for an extended period.
For these operations, we recommend the use of a MANITOU protective product, reference 603726.
Instructions for using the product are given on the packaging.

LesProcedures to follow if the lift truck is not to be used for a long time and for starting it up again afterwards must be performed by your dealership.

PREPARING THE LIFT TRUCK

- Clean the lift truck thoroughly.
- Check and repair any leakage of fuel, oil, water or air.
- Replace or repair any worn or damaged parts.
- Wash the painted surfaces of the lift truck in clear and cold water and wipe them.
- Touch up the paintwork if necessary.
- Shut down the lift truck (see: OPERATING INSTRUCTIONS UNLADEN AND LADEN).
- Make sure the jib cylinder rods are all in retracted position.
- Release the pressure in the hydraulic circuits.

PROTECTING THE I.C. ENGINE

- Fill the tank with fuel (see: 3 - MAINTENANCE: A - DAILY OR EVERY 10 HOURS SERVICE).
- Empty and replace the cooling liquid (see: 3 - MAINTENANCE: F - EVERY 2000 HOURS SERVICE).
- Leave the I.C. engine running at idling speed for a few minutes, then switch off.
- Replace the I.C. engine oil and oil filter (see: 3 - MAINTENANCE: D - EVERY 500 HOURS SERVICE).
- Add the protective product to the engine oil.
- Run the I.C. engine for a short time so that the oil and cooling liquid circulate inside.
- Disconnect the battery and store it in a safe place away from the cold, after charging it to a maximum.
- Remove the injectors and spray the protective product into each cylinder for two seconds with the piston in low neutral position.
- Turn the crankshaft once slowly and refit the injectors (see I.C. engine REPAIR MANUAL).
- Remove the intake hose from the manifold or turbocharger and spray the protective product into the manifold or turbocharger.
- Cap the intake manifold or turbocharger hole with waterproof adhesive tape.
- Remove the exhaust pipe and spray the protective product into the exhaust manifold or turbocharger.
- Refit the exhaust pipe and block the outlet with waterproof adhesive tape.

NOTE: The spray time is noted on the product packaging and must be increased by 50 % for turbo engines.

- Open the filler plug, spray the protective product around the rocker arm shaft and refit the filler plug.
- Cap the fuel tank using waterproof adhesive tape.
- Remove the drive belts and store them in a safe place.
- Disconnect the engine cut-off solenoid on the injection pump and carefully insulate the connection.

PROTECTING THE LIFT TRUCK

- Set the lift truck on axle stands so that the tyres are not in contact with the ground and release the handbrake.
- Protect cylinder rods which will not be retracted, from corrosion.
- Wrap the tyres.

NOTE: If the lift truck is to be stored outdoors, cover it with a waterproof tarpaulin.

https://truckmanualshub.com/
Torkonjestraat 23
8510 Marke
België
056 / 222 111
info@dumarent.be
www.dumarent.be

BRINGING THE LIFT TRUCK BACK INTO SERVICE

- Remove the waterproof adhesive tape from all the holes.
- Refit the intake hose.
- Refit and reconnect the battery.
- Remove the protection from the cylinder rods.
- Perform the daily service (see: 3 - MAINTENANCE: A - DAILY OR EVERY 10 HOURS SERVICE).
- Put the handbrake on and remove the axle stands.
- Empty and replace the fuel and replace the fuel filter (see: 3 - MAINTENANCE: D - EVERY 500 HOURS SERVICE).
- Refit and set the tension in the drive belts (see: 3 - MAINTENANCE: C - EVERY 250 HOURS SERVICE).
- Turn the I.C. engine using the starter, to allow the oil pressure to rise.
- Reconnect the engine cut-off solenoid.
- Lubricate the lift truck completely (see: 3 - MAINTENANCE: SERVICING SCHEDULE).

Make sure the area is adequately ventilated before starting up the lift truck.

- Start up the lift truck, following the safety instructions and regulations (see: OPERATING INSTRUCTIONS UNLADEN AND LADEN).
- Run all the jib's hydraulic movements, concentrating on the ends of travel for each cylinder.

https://truckmanualshub.com/
Torkonjestraat 23
8510 Marke
België
056 / 222 111
info@dumarent.be
www.dumarent.be

2 - DESCRIPTION

https://truckmanualshub.com/
Torkonjestraat 23
8510 Marke
België
056 / 222 111
info@dumarent.be
www.dumarent.be

https://truckmanualshub.com/
Torkonjestraat 23
8510 Marke
België
056 / 222 111
info@dumarent.be
www.dumarent.be

TABLE OF CONTENTS

IDENTIFICATION OF THE LIFT TRUCK		***2 - 4***
CHARACTERISTICS		***2 - 6***
	MT 523 Série B-E2	2 - 6 and 2 - 8
	MT 523 MONO-ULTRA Série B-E2	2 - 6 and 2 - 8
	MLT 523 Turbo Série B-E2	2 - 6 and 2 - 10
	MLT 523 Turbo MONO-ULTRA Série B-E2	2 - 6 and 2 - 10
	MT 620 Série B-E2	2 - 6 and 2 - 12
DIMENSIONS AND LOAD CHART		***2 - 14***
	MT 523 Série B-E2	2 - 14
	MT 523 MONO-ULTRA Série B-E2	2 - 14
	MLT 523 Turbo Série B-E2	2 - 15
	MLT 523 Turbo MONO-ULTRA Série B-E2	2 - 15
	MT 620 Série B-E2	2 - 16
INSTRUMENTS AND CONTROLS		***2 - 18***
TOWING PIN AND HOOK		***2 - 36***
DESCRIPTION AND USE OF ELECTRIC AND HYDRAULIC OPTIONS		***2 - 38***

IDENTIFICATION OF THE LIFT TRUCK

As our policy is to promote a constant improvement of our products, our range of telescopic lift trucks may undergo certain modifications, without obligation for us to advise our customers.

When you order parts, or when you require any technical information, always specify:

NOTE: For the owner's convenience, it is recommended that a note of these numbers is made in the spaces provided, at the time of the delivery of the lift truck.

PLATE MANUFACTURER OF THE LIFT TRUCK (FIG. A)

- Model _____
- Series _____
- Serial Nr _____
- Chassis Nr _____
- Year of manufacture _____

For any further technical information regarding your lift truck refer to chapter: 2 - DESCRIPTION: CHARACTERISTICS.

A

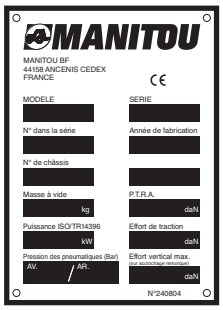

I.C. ENGINE (FIG. B)

- I.C. engine Nr _____

B

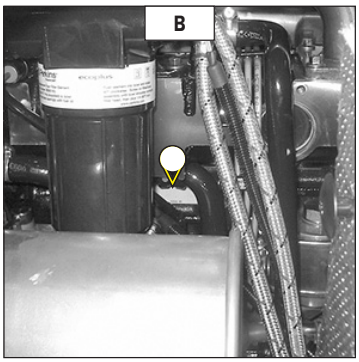

HYDROSTATIC PUMP (FIG. C)

- MANITOU reference _____
- Type of codification _____
- Serial Nr _____
- Manufacturer's Nr _____
- Year of manufacture _____

C

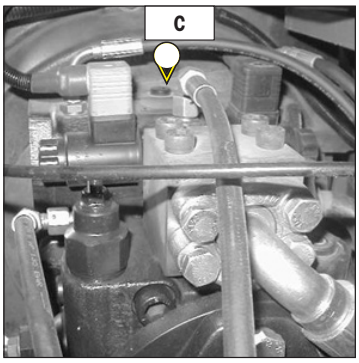

HYDROSTATIC MOTOR (FIG. D)

- MANITOU reference _____
- Type of codification _____
- Serial Nr _____
- Manufacturer's Nr _____
- Year of manufacture _____

D

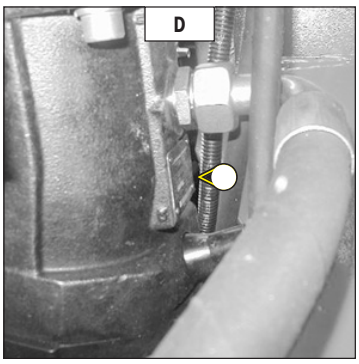

FRONT AXLE (FIG. E)

- Type _____
- Serial Nr _____
- MANITOU reference _____

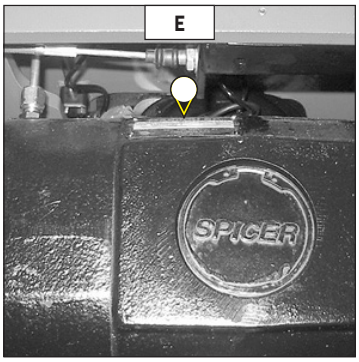

REAR AXLE (FIG. F)

- Type _____
- Serial Nr _____
- MANITOU reference _____

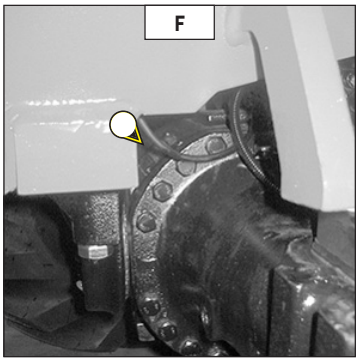

OVERHEAD GUARD (FIG. G)

MT 523 Série B-E2
MT 523 MONO-ULTRA Série B-E2
MT 620 Série B-E2

- Type _____
- Serial Nr _____

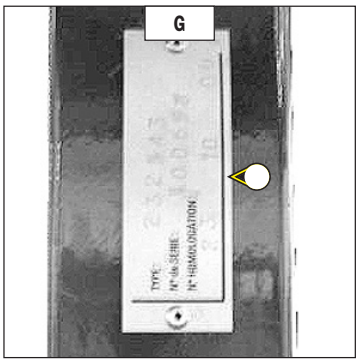

CAB (FIG. H)

MLT 523 Turbo Série B-E2
MLT 523 Turbo MONO-ULTRA Série B-E2

- Type _____
- Serial Nr _____

JIB (FIG. I)

- MANITOU reference _____
- Date of manufacture _____

PLATE MANUFACTURER OF THE ATTACHMENT (FIG. J)

- Model _____
- Serial Nr _____
- Year of manufacture _____

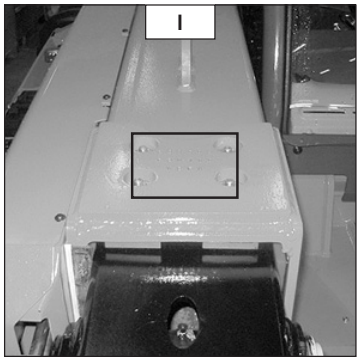

Torkonjestraat 23
8510 Marke
België
056 / 222 111
info@dumarent.be
www.dumarent.be

CHARACTERISTICS

I.C. ENGINE

- Type	
MT 523 Série B-E2	**PERKINS 1103C-33 DC38182**
MT 523 MONO-ULTRA Série B-E2	**PERKINS 1103C-33 DC38182**
MLT 523 Turbo Série B-E2	**PERKINS 1103C-33T DD38220**
MLT 523 Turbo MONO-ULTRA Série B-E2	**PERKINS 1103C-33T DD38220**
MT 620 Série B-E2	**PERKINS 1103C-33 DC38182**

	1103C-33	**1103C-33T**
- Number of cylinders	3 in line	3 in line
- Number of strokes	4	4
- Suction	Natural	Turbocharged
- Injection system	Direct	Direct
- Ignition sequence	1.2.3.	1.2.3.
- Clearance of rocker valve (cold)		
. Inlet	0,20 mm	0,20 mm
. Exhaust	0,45 mm	0,45 mm
- Capacity	3300 cm3	3300 cm3
- Bore	105 mm	105 mm
- Stroke	127 mm	127 mm
- Compression ratio	19,2/1	18,25/1
- Nominal rating loaded	2200 rpm	2200 rpm
- Rating slow unladen	900 ± 10 rpm	900 ± 10 rpm
- Max. rating unladen	2350 rpm	2350 rpm
- Power ISO/TR 14396	58 cv/43 kw	75 cv/55 kw
- Maximum torque ISO/TR 14396	222 Nm à 1400 rpm	291 Nm à 1400 rpm
- Air cleaner	Sec 3 µm	Sec 3 µm

COOLING CIRCUIT

- Type	By water
- Fan	Puller
. Number of blades	10
. Diameter	508 mm
- Thermostat	
. Start opening	79 °C/84 °C
. Full opening	93 °C

HYDROSTATIC TRANSMISSION

HYDROSTATIC PUMP

- Type	**MANNESMANN REXROTH A4VG56DA1D7/32R** with variable cubic capacity and with automatic power governor
- Gear reverser	Electromagnetic 12V
. Number of forward gears	1
. Number of reverse gears	1
- Main pump	
. Max. / Mini displacement	0 to 56 cm3/r
. Max. flow rate	119,9 L/mn
. Working pressure	475 Bar
- Boost pump	
. Displacement	37 cm3
. Max. flow rate	87 L/mn
. Boost pressure Max. R.P.M.	26 Bar (transmission in neutral)

HYDROSTATIC MOTOR

- Type	**MANNESMANN REXROTH A6VM80DA1/63W** with variable cubic capacity
. Max. / Mini displacement	28 to 80 cm3/r

FRONT AXLE

- Type	**DANA**
- Limited slip differential	45%
- Hub reducers	Épicycloïdal

REAR AXLE

- Type	**DANA**
- Hub reducers	Épicycloïdal

BRAKE

- Service brake	Foot pedal. Hydraulic brake, applied on the front wheels.
. Type	Multidisc brake immersed in oil.
- Parking brake	Mechanical hand lever applied on the front wheels.
. Type	Multidisc brake immersed in oil.

ELECTRIC CIRCUIT

- Earth	Negative
- Battery	12 V - 110 Ah - 750 A EN
- Alternator	12 V - 75 A
. Type	Denso A115i
. Tension regulator	Incorporated into the alternator
- Starter	12 V - 3,0 kW
. Type	Denso E95RL

https://truckmanualshub.com/
Torkonjestraat 23
8510 Marke
België
056 / 222 111
info@dumarent.be
www.dumarent.be

CHARACTERISTICS

MT 523 Série B-E2
MT 523 MONO-ULTRA Série B-E2

FRONT AND REAR TYRES

DIMENSIONS	PRESSURE	TYRE LOAD		PRESSURE ON THE CONTACT SURFACE HARD GROUND	PRESSURE ON THE CONTACT SURFACE LIGHT GROUND	AREA OF THE CONTACT SURFACE HARD GROUND	AREA OF THE CONTACT SURFACE LIGHT GROUND
12.0-18 12PR T86 STABILARGE DUNLOP	4,2 BAR	FRONT UNLADEN	1150 KG	7,82 KG/CM2	2,50 KG/CM2	147 CM2	460 CM2
		FRONT LADEN	3150 KG	10,92 KG/CM2	3,77 KG/CM2	288 CM2	834 CM2
		REAR UNLADEN	1400 KG	8,28 KG/CM2	2,60 KG/CM2	169 CM2	528 CM2
		REAR LADEN	550 KG	5,96 KG/CM2	2,10 KG/CM2	91 CM2	260 CM2
10,5-18 10PR MPT TG42 TUBELESS DUNLOP	3,75 BAR	FRONT UNLADEN	1150 KG	KG/CM2	KG/CM2	KG/CM2	KG/CM2
		FRONT LADEN	3150 KG	KG/CM2	KG/CM2	KG/CM2	KG/CM2
		REAR UNLADEN	1400 KG	KG/CM2	KG/CM2	KG/CM2	KG/CM2
		REAR LADEN	550 KG	KG/CM2	KG/CM2	KG/CM2	KG/CM2
12,5/80-18 10PR SGI GOODYEAR	4,2 BAR	FRONT UNLADEN	1150 KG	KG/CM2	KG/CM2	KG/CM2	KG/CM2
		FRONT LADEN	3150 KG	KG/CM2	KG/CM2	KG/CM2	KG/CM2
		REAR UNLADEN	1400 KG	KG/CM2	KG/CM2	KG/CM2	KG/CM2
		REAR LADEN	550 KG	KG/CM2	KG/CM2	KG/CM2	KG/CM2
12,5/80-18 10PR SGL TUBELESS GOODYEAR	4,2 BAR	FRONT UNLADEN	1150 KG	KG/CM2	KG/CM2	KG/CM2	KG/CM2
		FRONT LADEN	3150 KG	KG/CM2	KG/CM2	KG/CM2	KG/CM2
		REAR UNLADEN	1400 KG	KG/CM2	KG/CM2	KG/CM2	KG/CM2
		REAR LADEN	550 KG	KG/CM2	KG/CM2	KG/CM2	KG/CM2
12-16,5 NHS 12PR TUBELESS ALLIANCE	5 BAR	FRONT UNLADEN	1150 KG	KG/CM2	KG/CM2	KG/CM2	KG/CM2
		FRONT LADEN	3150 KG	KG/CM2	KG/CM2	KG/CM2	KG/CM2
		REAR UNLADEN	1400 KG	KG/CM2	KG/CM2	KG/CM2	KG/CM2
		REAR LADEN	550 KG	KG/CM2	KG/CM2	KG/CM2	KG/CM2

HYDRAULIC CIRCUIT

- Type of pump	Gear pump with flow divider
. Capacity	37 cm3
. Max. rating capacity unladen	87 L/min
. Flow rate at 2300 rpm	85 L/min
. Flow rate at 1600 rpm	59 L/min
- Pressure	
. Lifting, tilting, telescoping, attachment circuit	230 Bar
. Steering circuit	140 Bar
- Filtration	
. Return	10 µm
. Suction	125 µm

https://truckmanualshub.com/
Torkonjestraat 23
8510 Marke
België
056 / 222 111
info@dumarent.be
www.dumarent.be

SPECIFICATIONS

- Level of sound pressure in the driver's cab LpA **(according to standard prEN 12053: 1995)**	80 dB	
- Level of sound power in the LwA environment **(according to directive 2000/14/EC modified by directive 2005/88/EC)**	104 dB	
- Average weighted acceleration on driver's body **(according to standard NF EN 13059)**	m/s2	
- The average weighted acceleration trannsmitted to the driver's hand/arm system **(in accordance with ISO 5349-2)** is less than 2.5 m/s2		
- Speed of movement of lift truck in standard configuration on horizontal ground **(except particular conditions)**		
. Forward unladen	25,5 km/h	
. Reverse unladen	25,5 km/h	
- Standard lift height	4970 mm	
- Rated capacity with standard attachment	2300 kg	
- Load center	500 mm	
- Weight of forks (each)	62 kg	
- Lifting motions (jib retracted)		
. Unladen lifting	6 s	34,4 m/mn
. Laden lifting	6,7 s	30,8 m/mn
. Unladen lowering	4 s	51,5 m/mn
. Laden lowering	4 s	51,5 m/mn
- Telescoping motions (lifting jib)		
. Unladen extending	4,5 s	21,3 m/mn
. Laden extending	4,6 s	20,9 m/mn
. Unladen retracting	3 s	32 m/mn
. Laden retracting	2,4 s	40 m/mn
- Reverse tilt time unladen	2,7 s	49 °/s
- Forward tilt time unladen	2,3 s	57,5 °/s
- Lift truck weight with standard attachment		
. Unladen	5090 kg	
. Rated load	7390 kg	
- Axle weight with attached equipment (transport position)		
. Front unladen	2265 kg	
rated load	6305 kg	
. Rear unladen	2825 kg	
rated load	1085 kg	
- Tensible strain at coupling hook		
. Unladen	3150 daN	
. Rated load	3400 daN	
- Break out force with bucket **(according to standard iso 8313)**	4050 daN	

https://truckmanualshub.com/
Torkonjestraat 23
8510 Marke
België
056 / 222 111
info@dumarent.be
www.dumarent.be

CHARACTERISTICS

MLT 523 Turbo Série B-E2
MLT 523 Turbo MONO-ULTRA Série B-E2

FRONT AND REAR TYRES

DIMENSIONS	PRESSURE	TYRE LOAD		PRESSURE ON THE CONTACT SURFACE HARD GROUND	PRESSURE ON THE CONTACT SURFACE LIGHT GROUND	AREA OF THE CONTACT SURFACE HARD GROUND	AREA OF THE CONTACT SURFACE LIGHT GROUND
12.0-18 12PR T86 STABILARGE DUNLOP	4,2 BAR	FRONT UNLADEN	1150 KG	7,82 KG/CM2	2,50 KG/CM2	147 CM2	460 CM2
		FRONT LADEN	3200 KG	11,00 KG/CM2	3,80 KG/CM2	291 CM2	842 CM2
		REAR UNLADEN	1450 KG	8,36 KG/CM2	2,64 KG/CM2	172 CM2	546 CM2
		REAR LADEN	550 KG	5,96 KG/CM2	2,10 KG/CM2	91 CM2	260 CM2
10,5-18 10PR MPT TG42 TUBELESS DUNLOP	4,2 BAR	FRONT UNLADEN	1150 KG	KG/CM2	KG/CM2	KG/CM2	KG/CM2
		FRONT LADEN	3150 KG	KG/CM2	KG/CM2	KG/CM2	KG/CM2
		REAR UNLADEN	1400 KG	KG/CM2	KG/CM2	KG/CM2	KG/CM2
		REAR LADEN	550 KG	KG/CM2	KG/CM2	KG/CM2	KG/CM2
12,5/80-18 10PR SGI GOODYEAR	4,2 BAR	FRONT UNLADEN	1150 KG	KG/CM2	KG/CM2	KG/CM2	KG/CM2
		FRONT LADEN	3150 KG	KG/CM2	KG/CM2	KG/CM2	KG/CM2
		REAR UNLADEN	1400 KG	KG/CM2	KG/CM2	KG/CM2	KG/CM2
		REAR LADEN	550 KG	KG/CM2	KG/CM2	KG/CM2	KG/CM2
12,5/80-18 10PR SGL TUBELESS GOODYEAR	4,2 BAR	FRONT UNLADEN	1150 KG	KG/CM2	KG/CM2	KG/CM2	KG/CM2
		FRONT LADEN	3150 KG	KG/CM2	KG/CM2	KG/CM2	KG/CM2
		REAR UNLADEN	1400 KG	KG/CM2	KG/CM2	KG/CM2	KG/CM2
		REAR LADEN	550 KG	KG/CM2	KG/CM2	KG/CM2	KG/CM2

HYDRAULIC CIRCUIT

- Type of pump	Gear pump with flow divider
. Capacity	37 cm3
. Max. rating capacity unladen	87 L/min
. Flow rate at 2300 rpm	85 L/min
. Flow rate at 1600 rpm	59 L/min
- Pressure	
. Lifting, tilting, telescoping, attachment circuit	260 Bar
. Steering circuit	140 Bar
- Filtration	
. Return	10 µm
. Suction	125 µm

SPECIFICATIONS

- Level of sound pressure in the driver's cab LpA **(according to standard prEN 12053: 1995)**	79 dB	
- Level of sound power in the LwA environment **(according to directive 2000/14/EC modified by directive 2005/88/EC)**	104 dB	
- Average weighted acceleration on driver's body **(according to standard NF EN 13059)**	m/s2	
- The average weighted acceleration trannsmitted to the driver's hand/arm system **(in accordance with ISO 5349-2)** is less than 2.5 m/s2		
- Speed of movement of lift truck in standard configuration on horizontal ground **(except particular conditions)**		
. Forward unladen	26 km/h	
. Reverse unladen	26 km/h	
- Standard lift height	4970 mm	
- Rated capacity with standard attachment	2300 kg	
- Load center	500 mm	
- Weight of forks (each)	76 kg	
- Lifting motions (jib retracted)		
. Unladen lifting	6 s	34,2 m/mn
. Laden lifting	6,7 s	30,6 m/mn
. Unladen lowering	4 s	51,3 m/mn
. Laden lowering	4 s	51,3 m/mn
- Telescoping motions (lifting jib)		
. Unladen extending	4,5 s	21,3 m/mn
. Laden extending	4,6 s	20,9 m/mn
. Unladen retracting	3 s	32 m/mn
. Laden retracting	2,4 s	40 m/mn
- Reverse tilt time unladen	2,7 s	49 °/s
- Forward tilt time unladen	2,3 s	57,5 °/s
- Lift truck weight with standard attachment		
. Unladen	5182 kg	
. Rated load	7482 kg	
- Axle weight with attached equipment (transport position)		
. Front unladen	2310 kg	
rated load	6400 kg	
. Rear unladen	2872 kg	
rated load	1082 kg	
- Tensible strain at coupling hook		
. Unladen	3200 daN	
. Rated load	3400 daN	
- Break out force with bucket **(according to standard iso 8313)**	4550 daN	

https://truckmanualshub.com/
Torkonjestraat 23
8510 Marke
België
056 / 222 111
info@dumarent.be
www.dumarent.be

CHARACTERISTICS MT 620 Série B-E2

FRONT AND REAR TYRES

DIMENSIONS	PRESSURE	TYRE LOAD		PRESSURE ON THE CONTACT SURFACE HARD GROUND	PRESSURE ON THE CONTACT SURFACE LIGHT GROUND	AREA OF THE CONTACT SURFACE HARD GROUND	AREA OF THE CONTACT SURFACE LIGHT GROUND
12.0-18 12PR T86 STABILARGE DUNLOP	4,2 BAR	FRONT UNLADEN	KG	KG/CM2	KG/CM2	KG/CM2	KG/CM2
		FRONT LADEN	KG	KG/CM2	KG/CM2	KG/CM2	KG/CM2
		REAR UNLADEN	KG	KG/CM2	KG/CM2	KG/CM2	KG/CM2
		REAR LADEN	KG	KG/CM2	KG/CM2	KG/CM2	KG/CM2
12-16,5 NHS 12PR TUBELESS ALLIANCE	5 BAR	FRONT UNLADEN	KG	KG/CM2	KG/CM2	KG/CM2	KG/CM2
		FRONT LADEN	KG	KG/CM2	KG/CM2	KG/CM2	KG/CM2
		REAR UNLADEN	KG	KG/CM2	KG/CM2	KG/CM2	KG/CM2
		REAR LADEN	KG	KG/CM2	KG/CM2	KG/CM2	KG/CM2

HYDRAULIC CIRCUIT

- Type of pump	Gear pump with flow divider
. Capacity	37 cm3
. Max. rating capacity unladen	87 L/min
. Flow rate at 2300 rpm	85 L/min
. Flow rate at 1600 rpm	59 L/min
- Pressure	
. Lifting, tilting, telescoping, attachment circuit	230 Bar
. Steering circuit	140 Bar
- Filtration	
. Return	10 µm
. Suction	125 µm

SPECIFICATIONS

- Level of sound pressure in the driver's cab LpA **(according to standard prEN 12053: 1995)**	80 dB	
- Level of sound power in the LwA environment **(according to directive 2000/14/EC modified by directive 2005/88/EC)**	104 dB	
- Average weighted acceleration on driver's body **(according to standard NF EN 13059)**	m/s2	
- The average weighted acceleration trannsmitted to the driver's hand/arm system **(in accordance with ISO 5349-2)** is less than 2.5 m/s2		
- Speed of movement of lift truck in standard configuration on horizontal ground **(except particular conditions)**		
. Forward unladen	25,5 km/h	
. Reverse unladen	25,5 km/h	
- Standard lift height	5560 mm	
- Rated capacity with standard attachment	2000 kg	
- Load center	500 mm	
- Weight of forks (each)	62 kg	
- Lifting motions (jib retracted)		
. Unladen lifting	6 s	34,4 m/mn
. Laden lifting	6,7 s	30,8 m/mn
. Unladen lowering	4 s	51,5 m/mn
. Laden lowering	4 s	51,5 m/mn
- Telescoping motions (lifting jib)		
. Unladen extending	4,5 s	21,3 m/mn
. Laden extending	4,6 s	20,9 m/mn
. Unladen retracting	3 s	32 m/mn
. Laden retracting	2,4 s	40 m/mn
- Reverse tilt time unladen	2,7 s	49 °/s
- Forward tilt time unladen	2,3 s	57,5 °/s
- Lift truck weight with standard attachment		
. Unladen	5160 kg	
. Rated load	7160 kg	
- Axle weight with attached equipment (transport position)		
. Front unladen	1925kg	
rated load	5850kg	
. Rear unladen	2950kg	
rated load	1250kg	
- Tensible strain at coupling hook		
. Unladen	daN	
. Rated load	daN	
- Break out force with bucket **(according to standard iso 8313)**	4320 daN	

DIMENSIONS AND LOAD CHART

MT 523 Série B-E2
MT 523 MONO-ULTRA Série B-E2

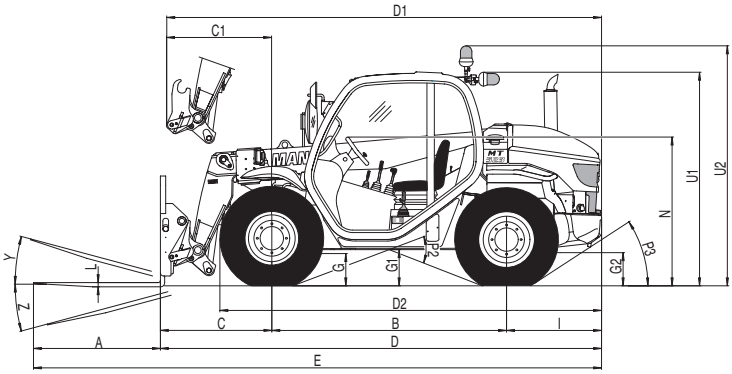

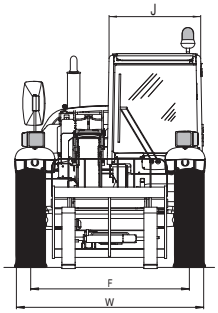

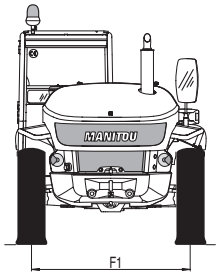

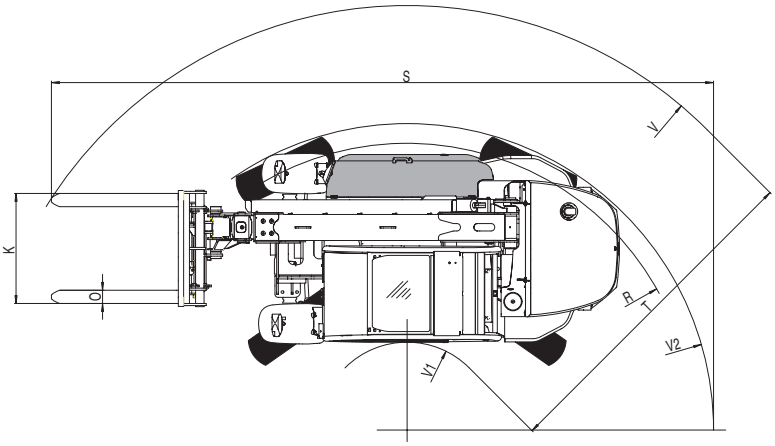

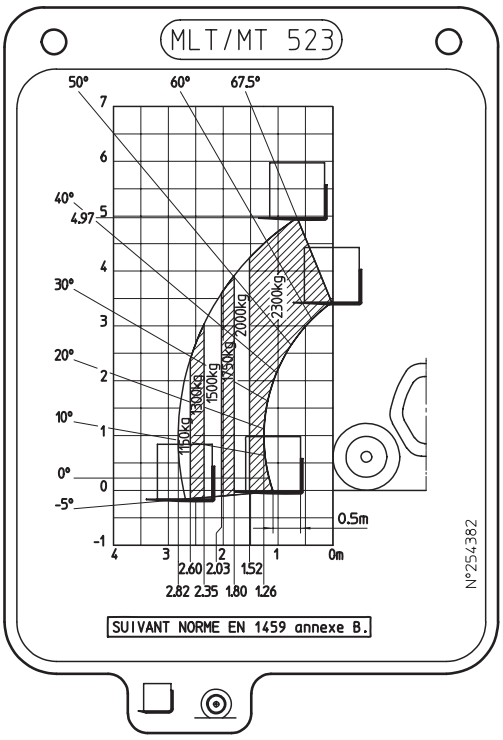

A	1200 mm
B	2230 mm
C	1066 mm
C1	1005 mm
D	4201 mm
D1	4140 mm
D2	3605 mm
E	5401 mm
F	1500 mm
F1	1500 mm
G	290 mm
G1	335 mm
G2	305 mm
I	905 mm
J	865 mm
K	1040 mm
L	40 mm
N	1390 mm
O	125 mm
P2	39 °
P3	31 °
R	2875 mm
S	6470 mm
T	3125 mm
U1	1990 mm
U2	2280 mm
V	4130 mm
V1	1005 mm
V2	3090 mm
W	1815 mm
Y	12 °
Z	120,2 °

DIMENSIONS AND LOAD CHART

MLT 523 Turbo Série B-E2
MLT 523 Turbo MONO-ULTRA Série B-E2

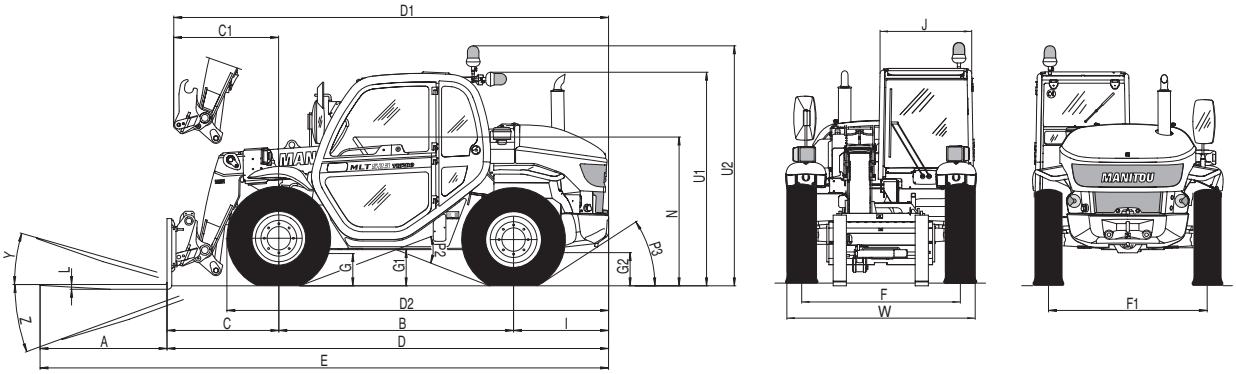

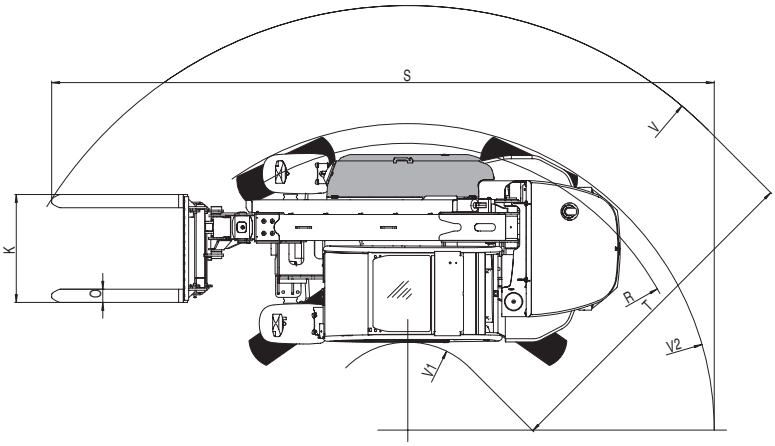

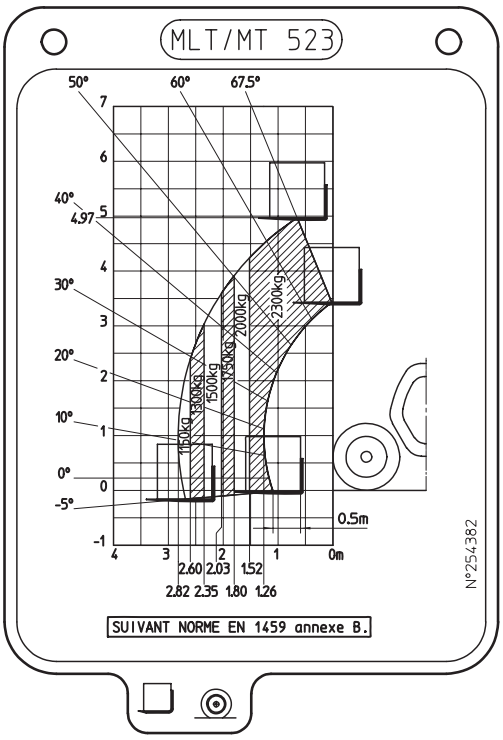

A	1200 mm
B	2230 mm
C	1070 mm
C1	1005 mm
D	4205 mm
D1	4140 mm
D2	3626 mm
E	5405 mm
F	1500 mm
F1	1500 mm
G	305 mm
G1	355 mm
G2	325 mm
I	905 mm
J	865 mm
K	1020 mm
L	45 mm
N	1410 mm
O	125 mm
P2	39 °
P3	31 °
R	2870 mm
S	6470 mm
T	3130 mm
U1	2010 mm
U2	2300 mm
V	4125 mm
V1	995 mm
V2	3085 mm
W	1810 mm
Y	11,8 °
Z	120,4 °

DIMENSIONS AND LOAD CHART MT 620 Série B-E2

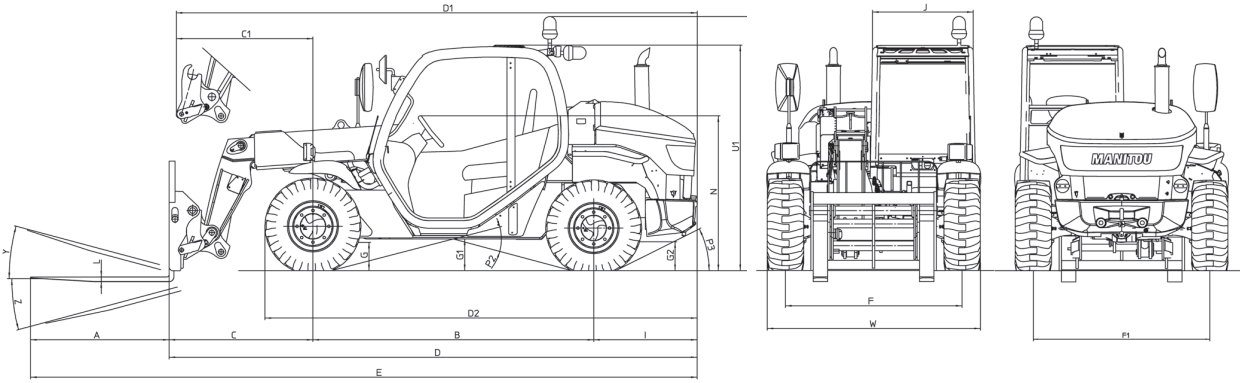

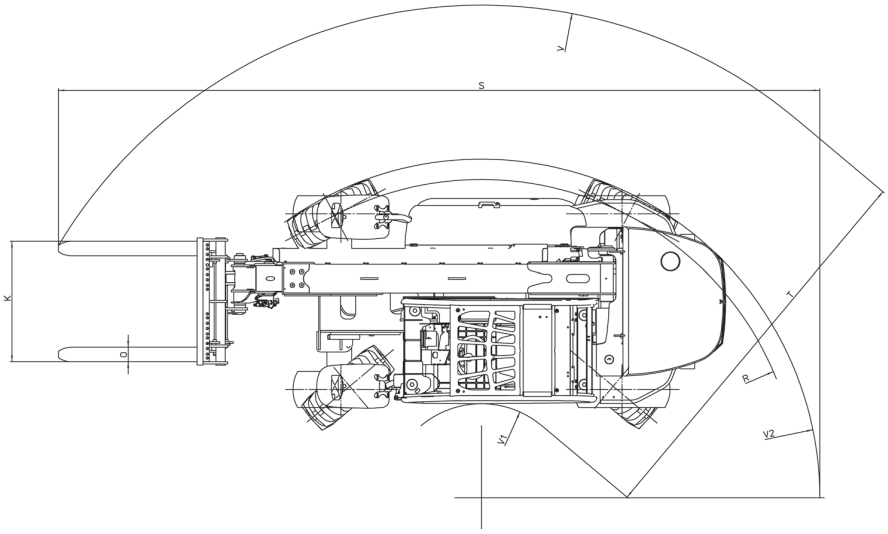

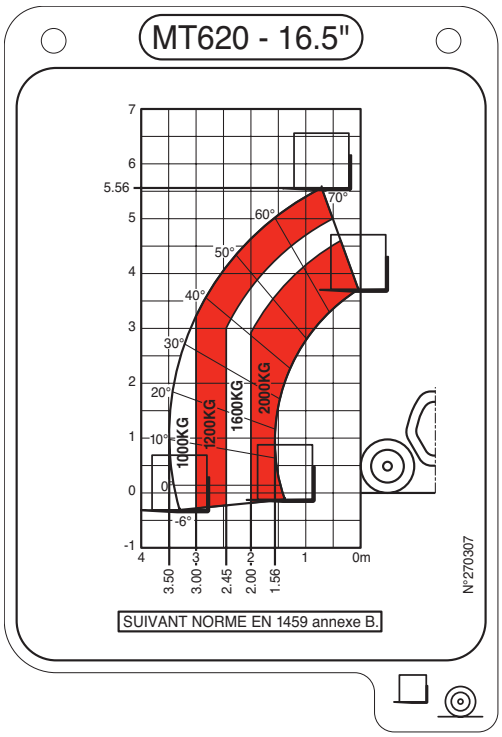

A	1200 mm
B	2430 mm
C	1245 mm
C1	1184 mm
D	4571 mm
D1	4510 mm
D2	3741 mm
E	5771 mm
F	1520 mm
F1	1520 mm
G	245 mm
G1	273 mm
G2	249 mm
I	905 mm
J	865 mm
K	1040 mm
L	40 mm
N	1337 mm
O	125 mm
P2	29,5 °
P3	31 °
R	3190 mm
S	6588 mm
T	3475 mm
U1	1949 mm
U2	2195 mm
V	4290 mm
V1	815 mm
V2	3144 mm
W	1834 mm
Y	12 °
Z	120,2 °

INSTRUMENTS AND CONTROLS

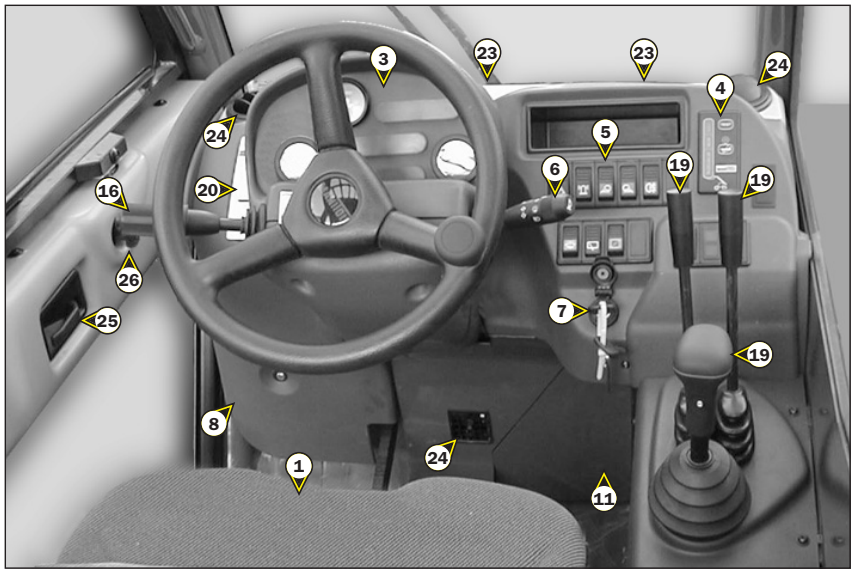

MT/MLT 523 . . . MONO-ULTRA Série B-E2

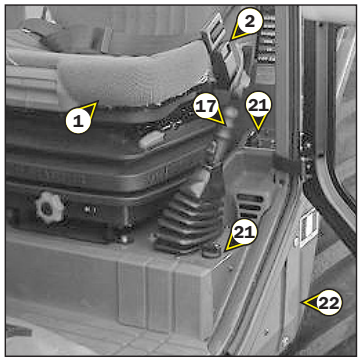

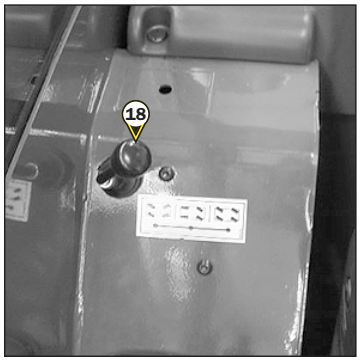

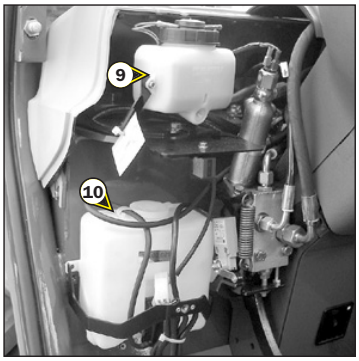

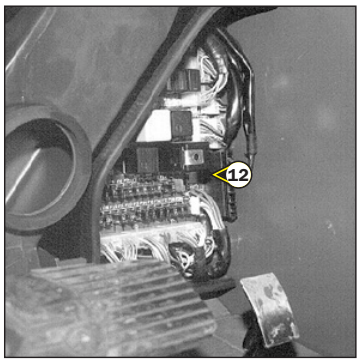

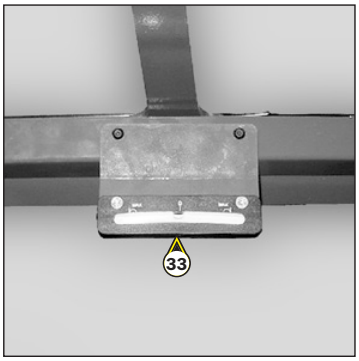

https://truckmanualshub.com/
Torkonjestraat 23
8510 Marke
België
056 / 222 111
info@dumarent.be
www.dumarent.be

DESCRIPTION

1 - DRIVER'S SEAT
2 - SAFETY BELT
3 - CONTROL AND SIGNAL LIGHTS PANEL
4 - LONGITUDINAL STABILITY ALARM
5 - SWITCHS PANEL
6 - LIGHT SWITCH, HORN AND INDICATOR SWITCH
7 - IGNITION SWITCH
8 - BRAKING OIL TANK AND WINDSCREEN WASHER ACCESS PANEL
9 - BRAKING OIL TANK
10 - WINDSCREEN WASHER TANK
11 - FUSES AND RELAY ACCESS PANEL
12 - FUSE AND RELAY
13 - ROOF LIGHT
14 - ACCELERATOR PEDAL
15 - SERVICE BRAKE PEDAL AND TRANSMISSION CUT-OFF
16 - FORWARD/REVERSE LEVER
17 - PARKING BRAKE LEVER
18 - STEERING SELECTION
19 - HYDRAULIC CONTROLS
20 - LOAD CHARTS FILE
21 - HEATER CONTROL
21 - AIR CONDITIONING CONTROLS (OPTION AIR CONDITIONING)
22 - CAB FILTER VENTILATORS
23 - WINDSCREEN DEMIST VENTS
24 - HEATING VENTS
25 - DOOR LOCK
26 - LOCKING HANDLE FOR UPPER HALF DOOR
27 - RELEASING BUTTON FOR UPPER HALF DOOR
28 - HANDLE FOR REAR WINDOW OPENING
29 - DOCUMENT HOLDER
30 - FRONT LIGHTS (NOT ILLUSTRATED)
31 - REAR LIGHTS (NOT ILLUSTRATED)
32 - FLASHING LIGHT (NOT ILLUSTRATED)
33 - SPIRIT LEVEL
34 - ARM-REST

NOTE: All the terms such as: RIGHT, LEFT, FRONT, REAR are meant for an observer seated on driver's seat and looking in front of him.

1 - DRIVER'S SEAT

STANDARD	**MT 523 Série B-E2**
	MT 523 Série MONO-ULTRA B-E2
	MT 620 Série B-E2

DESIGNED FOR MAXIMUM COMFORT, THIS SEAT CAN BE ADJUSTED AS FOLLOWS.

LONGITUDINAL ADJUSTMENT
- Pull locking lever 1 towards the right.
- Slide the seat to the required position.
- Release the lever and be sure it returns to the lock position.

SEAT SUSPENSION ADJUSTMENT
- Refer to the seat's graduation.
- Turn handle 2 depending on the driver's weight.

ADJUSTMENT OF THE ANGLE OF THE BACK-REST
- Pull locking lever 3 upwards.
- Slide the back-rest to the required position.
- Release the lever and be sure it returns to the lock position.

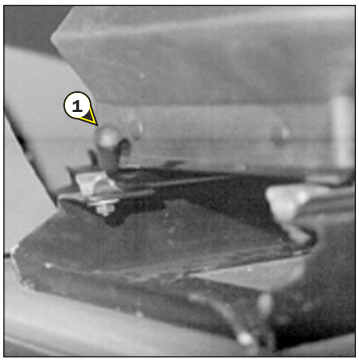

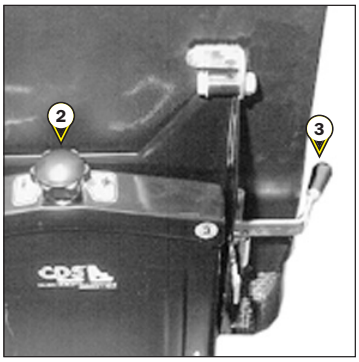

1 - DRIVER'S SEAT

STANDARD	**MLT 523 Turbo Série B-E2**
	MLT 523 Turbo MONO-ULTRA Série B-E2
OPTION	**MT 523 Série B-E2**
	MT 523 Série MONO-ULTRA B-E2
	MT 620 Série B-E2

DESIGNED FOR MAXIMUM COMFORT, THIS SEAT CAN BE ADJUSTED AS FOLLOWS.

WEIGHT ADJUSTMENT (FIG. A)
It is advised that the weight be adjusted when the driver is not sitting in the cab.
- Refer to graduation 1 of the seat.
- Turn handle 2 according to the driver's weight.

NOTE: To avoid any health problems, it is recommended that the weight should be checked and adjusted before starting up the lift truck.

SEAT HEIGHT ADJUSTMENT (FIG. B)
Raise the seat to the desired position, until you hear the ratchet click. If you raise the seat above the last notch (stop), the seat drops down to the lowest position.

SEAT BACK-REST ANGLE ADJUSTMENT (FIG. C)
The back-rest angle of the seat may be adjusted to suit the individual.
- Press the left-hand button while pushing on the seat or relaxing pressure on the seat to find a comfortable position.

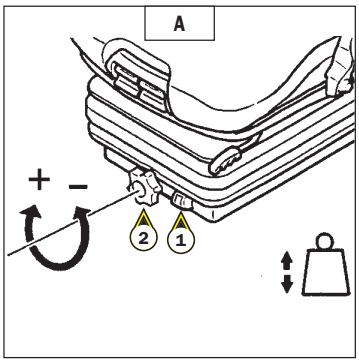

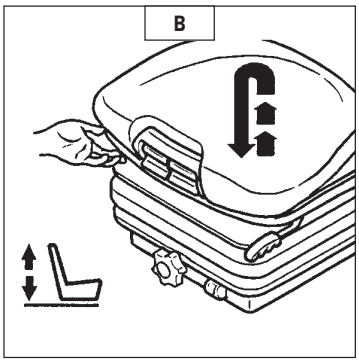

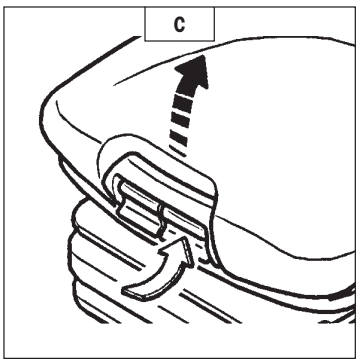

SEAT DEPTH ADJUSTMENT (FIG. D)
The depth of the seat may be adjusted to suit the individual.
- Press the right-hand button while raising or lowering the seat to find the desired position.

EXTENDING THE HEAD-REST (FIG. E)
- The height of the back-rest can be adjusted by pulling it upwards (the notches will click) up to the stop.
- The head-rest can be removed by applying sufficient pressure to pull it off the stop.

LUMBAR ADJUSTMENT (FIG. F)
This increases the comfort of the seat and the driver's freedom of movement.
- Turn the handle either left or right to adjust the height or depth of the lumbar support.

ADJUSTMENT OF THE ANGLE OF THE BACK-REST (FIG. G)
- Support the back-rest, pull the lever and position the back-rest to find the desired position.

If you do not support the back-rest when making adjustments, it swings completely forwards.

LONGITUDINAL ADJUSTMENT (FIG. H)
- Adjust the locking lever until you reach the position required. This then locks and the seat will not shift into another position.

MAINTENANCE (FIG. I)
Dirt may adversely affect the correct functioning of the seat. For this reason, make sure your seat is always clean.
- To clean or change the cushions, simply remove them from the seat frame.

A rocking head-rest increases the risk of an accident !

Avoid wetting the cushion fabric when cleaning. Check the resistance of the fabric on a small hidden area before using any fabric or plastic cleaner.

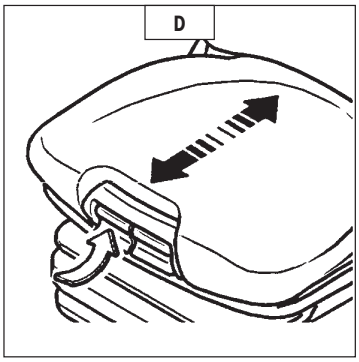

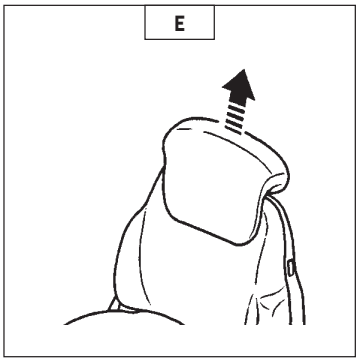

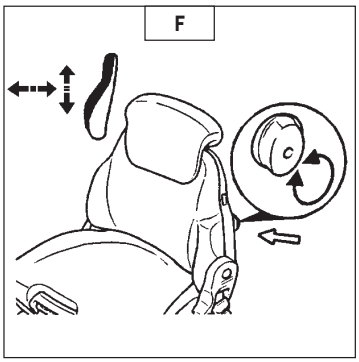

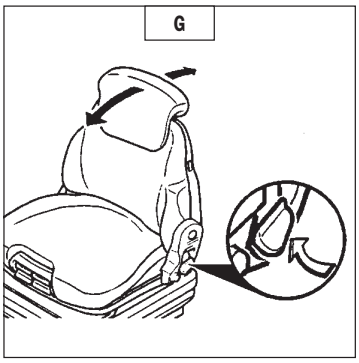

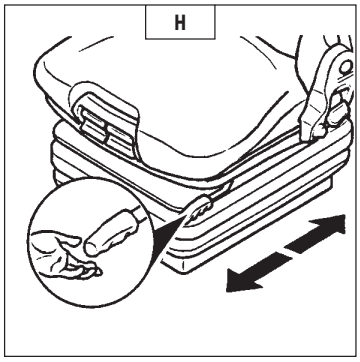

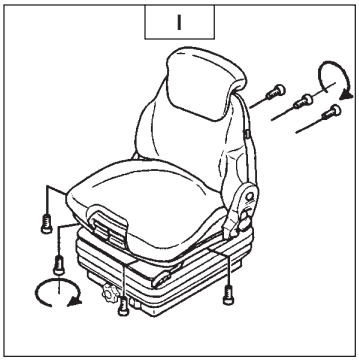

1 - PNEUMATIC DRIVER'S SEAT (OPTION)

DESIGNED FOR MAXIMUM COMFORT, THIS SEAT CAN BE ADJUSTED AS FOLLOWS.

WEIGHT AND SEAT HEIGHT ADJUSTMENT

WEIGHT ADJUSTMENT (FIG. A)
It is advised that you adjust the seat according to your weight when sitting.
- Switch on lift truck ignition.
- Push or pull lever 1 until green appears in display 2 indicating correct adjustment according to your weight.

NOTE: To avoid any health problems, it is recommended that the weight should be checked and adjusted before starting up the lift truck.

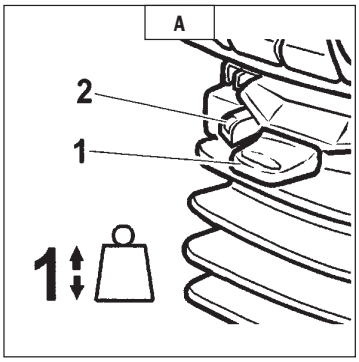

SEAT HEIGHT ADJUSTMENT (FIG. B)
When weight adjustment has been carried out, you can then modify seat height.
- Keep the ignition switched on.
- Push or pull lever 1 until green appears and adjust the height of the seat while checking that the green in display 2 remains visible.

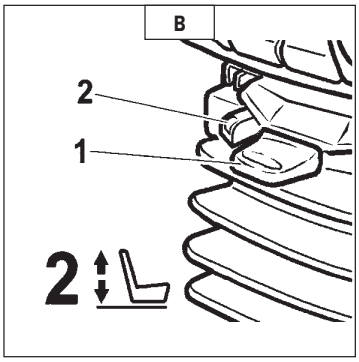

To avoid causing any damage, do not activate the compressor for over 1 minute.

SEAT BACK-REST ANGLE ADJUSTMENT (FIG. C)
The back-rest angle of the seat may be adjusted to suit the individual.
- Press the left-hand button while pushing on the seat or relaxing pressure on the seat to find a comfortable position.

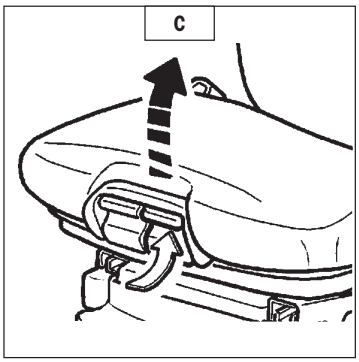

SEAT DEPTH ADJUSTMENT (FIG. D)
The depth of the seat may be adjusted to suit the individual.
- Press the right-hand button while raising or lowering the seat to find the desired position.

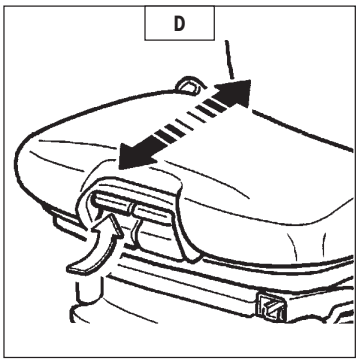

EXTENDING THE HEAD-REST (FIG. E)
- The height of the back-rest can be adjusted by pulling it upwards (the notches will click) up to the stop.
- The head-rest can be removed by applying sufficient pressure to pull it off the stop.

LUMBAR ADJUSTMENT (FIG. F)
This increases the comfort of the seat and the driver's freedom of movement.
- Turn the handle either left or right to adjust the height or depth of the lumbar support.

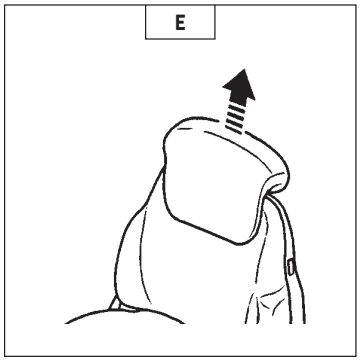

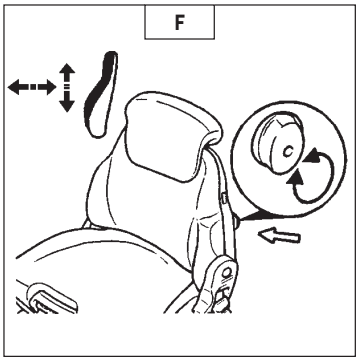

ADJUSTMENT OF THE ANGLE OF THE BACK-REST (FIG. G)

- Support the back-rest, pull the lever and position the back-rest to find the desired position.

If you do not support the back-rest when making adjustments, it swings completely forwards.

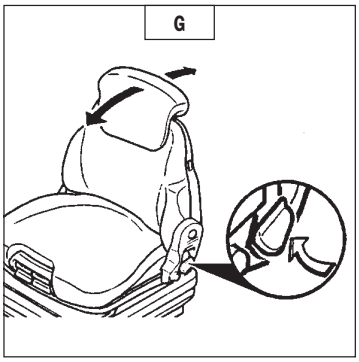

HORIZONTAL SHOCK ABSORBER (FIG. H)

In certain conditions (e.g. driving with a trailer) it is advised that a horizontal shock absorber be used. The driver's seat is thus better able to absorb jerks in the direction of travel.

- Position 1: Horizontal shock absorber fitted.
- Position 2: Horizontal shock absorber removed.

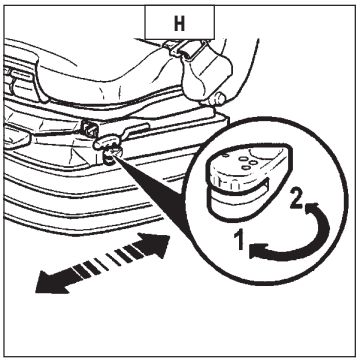

LONGITUDINAL ADJUSTMENT (FIG. I)

- Adjust the locking lever until you reach the position required. This then locks and the seat will not shift into another position.

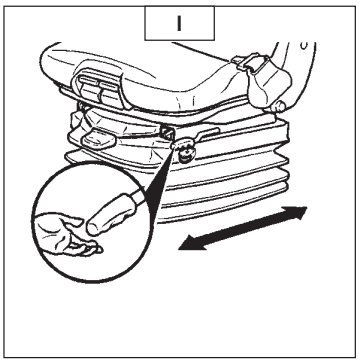

MAINTENANCE (FIG. J)

Dirt may adversely affect the correct functioning of the seat. For this reason, make sure your seat is always clean.

- To clean or change the cushions, simply remove them from the seat frame.

A rocking head-rest increases the risk of an accident!

Avoid wetting the cushion fabric when cleaning. Check the resistance of the fabric on a small hidden area before using any fabric or plastic cleaner.

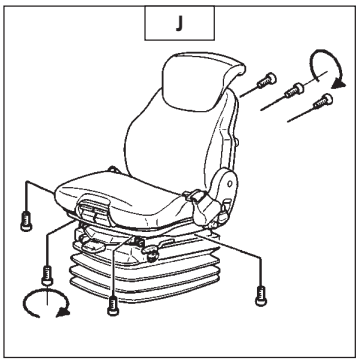

2 - SAFETY BELT

- Sit correctly on the seat.
- Check that seat belt is not twisted.
- Place the seat belt at hip level.
- Attach the seat belt and check that it locks.
- Adjust the seat belt to your body shape without squeezing your hip and without over-slack.

In no event should the lift truck be used if the seat belt is defective (fixing, locking, cuts, tears, etc.). Repair or replace the seat belt immediately.

3 - CONTROL AND SIGNAL LIGHTS PANEL

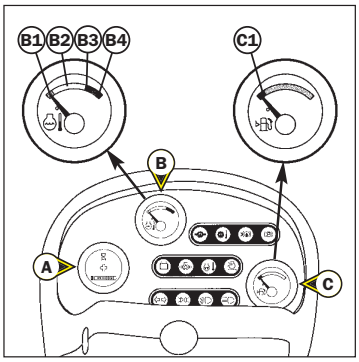

CONTROL INSTRUMENTS

A - HOURMETER

B - I.C. ENGINE WATER TEMPERATURE

Temperature zone
B1 - Blue zone (0° - 50°)
B2 - Green zone (50° - 100°)
B3 - Black/red zone (100° - 105°)
B4 - Red zone (105° - 120°)

NOTE: Red indicator light "J" comes on between zone B3 and B4.

C - FUEL LEVEL

Red zone C1 indicates that you are using the reserve supply and that time of use is limited.

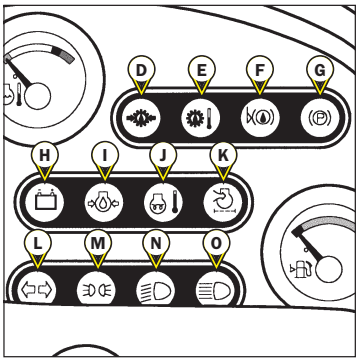

SIGNAL LIGHTS

When activating the electrical system of the lift truck, all the red lamps and the panel's buzzer must light to indicate their good working order. If one of the red lamps or the buzzer does not function, carry out the necessary repairs.

D - NOT USED

E - NOT USED

F - RED BRAKING OIL LEVEL LAMP

If the lamp and the buzzer come on, when the lift truck is running, stop the I.C. engine immediately and check the braking oil level. In the event of an abnormal dropping of the level, consult your dealer.

G - RED PARKING BRAKE LAMP

This lamp comes on when the parking brake is applied.

H - RED ALTERNATOR CHARGE LAMP

If the lamps F - H - I - J - K and the buzzer come on, when the lift truck is running, stop the I.C. engine immediately and check the electrical circuit as well as the alternator belt.

I - RED I.C. ENGINE OIL PRESSURE LAMP

If the lamp and the buzzer come on when the lift truck is running, stop the I.C. engine immediately and look for the cause (see oil level in I.C. engine crankcase).

J - RED I.C. ENGINE WATER TEMPERATURE LAMP

If the lamp and the buzzer come on when the lift truck is running, stop the I.C. engine immediately and investigate the cooling system for the cause of the malfunction.

K - RED LAMP - AIR FILTER OR HYDRAULIC RETURN FILTER CLOGGED

The lamp and buzzer come on when the air filter cartridge or the hydraulic return oil filter cartridge is clogged up. Stop the lift truck and carry out the necessary repairs (see cleaning and replacement requirements in chapter: 3 - MAINTENANCE: FILTERS CARTRIDGES AND BELTS).

L - GREEN INDICATOR LAMP

M - GREEN SIDELIGHTS LAMP

N - GREEN LOW BEAM LAMP

O - BLUE MAIN BEAM LAMP

4 - LONGITUDINAL STABILITY ALARM

This device warns the operator that the lift truck is approaching the limit of longitudinal stability. However, lateral stability can reduce the load chart in the upper part, and this reduction is not detected by the longitudinal stability alarm.

The operator must always respect the lift truck load chart.

OPERATION
When the lift truck is switched on a control test is automatically carried out.
- Correct operation: All leds and the sound alarm function continuously for 2 seconds.
- Faulty operation: All leds and sound alarm function intermittently (stop the lift truck and consult your dealer, never attempt a repair yourself).

A - LEDS (VISUAL ALARM) (FIG. A)

A1 - 4 green leds: There is a large reserve of longitudinal stability.
A2 - 2 yellow leds: The lift truck is approaching the limit of longitudinal stability, move carefully.
A3 - 1 red led: The lift truck is very near at the limit of longitudinal stability. The alarm sounds simultaneously with a slow intermittent sound. Move very carefully.
A4 - 1 red led: The lift truck is at the authorized limit of longitudinal stability. The alarm sounds simultaneously with a speed intermittent sound. Only make de-aggravating hydraulic movements in the following order; retract and raise the jib.

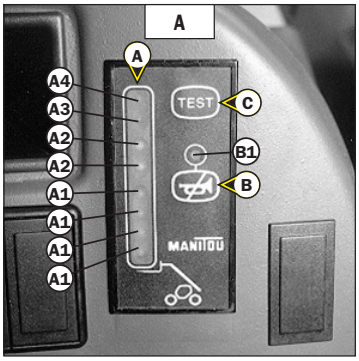

B - SOUND ALARM SWITCH (FIG. A)
Used to switch off the sound alarm when using the lift truck with loading and earth moving buckets. When it is switched off, the red led B1 indicates that the sound alarm has been cut off and only the visual alarm is working. Under other operating conditions, the sound alarm must be switched on.

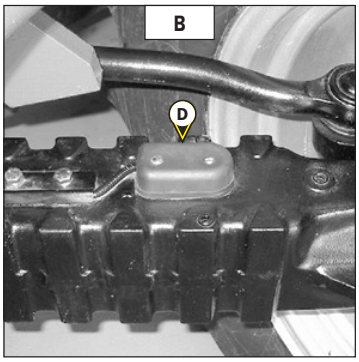

C - TEST SWITCH (FIG. A)
Press the switch to verify at any time that the longitudinal stability alarm is working.
NOTE: This test does not verify that the alarm is correctly set; this must be checked at every periodic service.
- Correct operation: All leds and the sound alarm function continuously.
- Faulty operation: All leds and the sound alarm function intermittently (stop the lift truck and consult your dealer, never attempt a repair yourself).

D - STRAIN GAUGE (FIG. B)

Disassembly or adjustment of the strain gauge is prohibited, this must only be done by specially trained personnel, consult your dealer.

5 - SWITCHS PANEL

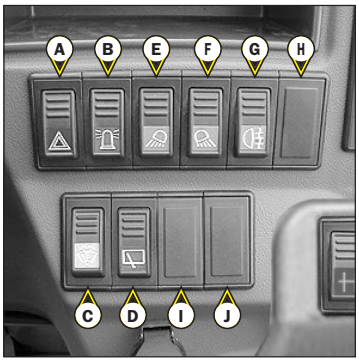

The location of the switches may vary depending on the options.

A - WARNING LIGHTS
This switch enables the L.H. and R.H. Indicators to be switched on simultaneously, with the ignition off. The signal light indicates that the switch is being used.

B - FLASHING LIGHT

C - FRONT WINDSCREEN WIPER AND WINDSCREEN WASHER
This switch, when set on on the "intermediate" position, the windscreen wiper to be operated and the "down" position and simultaneously pressed, the windscreen-washer to be operated.

D - REAR WINDSCREEN WIPER + ROOF WINDSCREEN WIPER

E - OPTION
- OPTION Working head light.

F - OPTION
- OPTION Working tail light.

G - OPTION
- OPTION Jib head light.
- OPTION Blue front working light.

H - OPTION
MLT 523 Turbo Série B-E2
MLT 523 Turbo MONO-ULTRA Série B-E2
- OPTION Rear window defrosting.

I - OPTION
- OPTION Electrovalve on jib head.
- OPTION Attachment hydraulic locking device.
- OPTION Electrical jib provision.
- OPTION Electrovalve on jib head + attachment hydraulic locking device.

See: 2 - DESCRIPTION: DESCRIPTION AND USE OF ELECTRIC AND HYDRAULIC OPTIONS.

J - OPTION

K - OPTION
MT 523 MONO-ULTRA Série B-E2
MLT 523 Turbo MONO-ULTRA Série B-E2

L - OPTION
MT 523 MONO-ULTRA Série B-E2
MLT 523 Turbo MONO-ULTRA Série B-E2
- OPTION Dual effect hydraulic towing hook.
- OPTION Single or dual effect rear hydraulic predisposition.

See: 2 - DESCRIPTION: DESCRIPTION AND USE OF ELECTRIC AND HYDRAULIC OPTIONS.

M - OPTION
MT 523 MONO-ULTRA Série B-E2
MLT 523 Turbo MONO-ULTRA Série B-E2

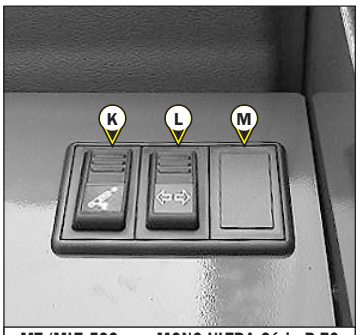

MT/MLT 523 . . . MONO-ULTRA Série B-E2

6 - LIGHT SWITCH, HORN AND INDICATOR SWITCH

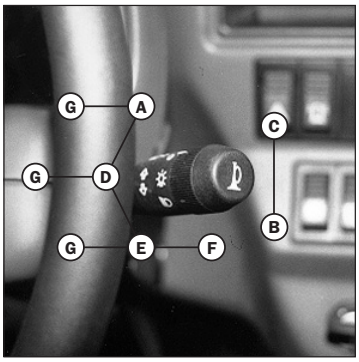

The switch controls the visual and sound alarms.

A - All lights are off, the direction indicators do not flash.
B - The right hand direction indicators flash.
C - The left hand direction indicators flash.
D - The sidelights and the rear lights are on.
E - The dipped headlights and the rear lights are on.
F - The main beam headlights and the rear lights are on.
G - Headlight signal.

Pressing the switch sounds the horn.
NOTE: The positions D - E - F - G can be carried out without the ignition being on.

7 - IGNITION SWITCH

The key switch has five positions:

P - Ignition off, parking position.
O - Ignition switched off and I.C. engine stopped.
I - Ignition on.
II - Heating.
III - The I.C. engine starts, return to position i as soon as the key is released.

8 - BRAKING OIL TANK AND WINDSCREEN WASHER ACCESS PANEL

- Loosen screw 1 and lift up the brake fluid and windscreen washer access panel.

9 - BRAKING OIL TANK

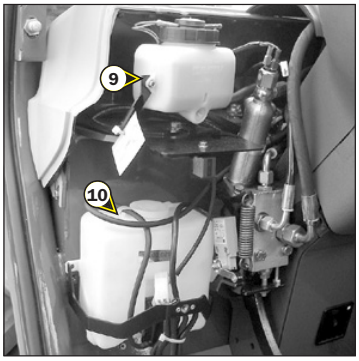

See: 3 - MAINTENANCE: B - EVERY 50 HOURS SERVICE.

10 - WINDSCREEN WASHER TANK

See: 3 - MAINTENANCE: B - EVERY 50 HOURS SERVICE.

11 - FUSE AND RELAY ACCESS PANEL

- Lift up the fuse and relay access panel 11.

12 - FUSE AND RELAY

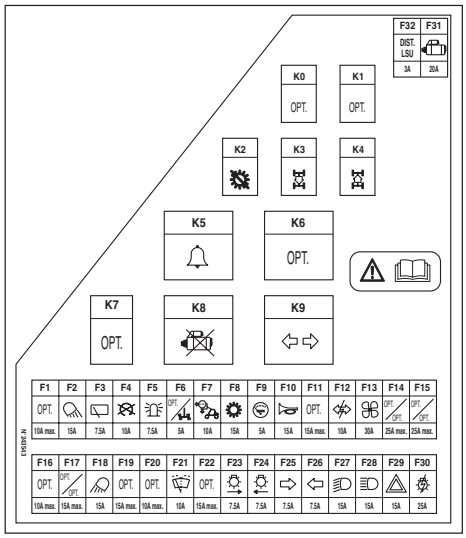

A sticker on the inside of the access panel gives a clear display of the use of the components described below.

K0 - OPTION Air conditioning.
K1 - OPTION.
K2 - Transmission cut-off relay.
K3 - Reverse gear relay.
K4 - Forward gear relay.
K5 - Buzzer.
K6 - OPTION Electrovalve on jib head.
- OPTION Electrical jib provision.
- OPTION Electrovalve on jib head + attachment hydraulic locking device.
K7 - OPTION Hydraulic movements cut-off.
K8 - Safety system starting switch relay.
K9 - Flashing unit.
K16 - Preheating I.C. engine relay.
K17 - Control panel lighting relay.

NOTE: Replace a used fuse with a new fuse of the same quality and capacity. Never reuse a repaired fuse.

F1 - (10A MAXI) - OPTION.
F2 - (15A MAX.) - OPTION Working tail light (10A).
F3 - (10A MAX.) - Rear windscreen wiper (7,5A).
- OPTION Roof windscreen wiper (7,5A).
F4 - (10A MAX.) - Stop I.C. engine electrovalve (7,5A).
F5 - (10A MAX.) - Flashing light (7,5A).
F6 - (7,5A MAX.) - Alignment of the wheels (5A).
F7 - (15A MAX.) - Longitudinal stability alarm (10A).
- OPTION Hydraulic movements cut-off (10A).
F8 - (15A MAX.) - Gear reverser (15A).
- Transmission cut-off (15A).
- Reverse buzzer alarm (15A).
MT 523 Série B-E2
MT 523 Série MONO-ULTRA B-E2
MT 620 Série B-E2
- OPTION Reverse buzzer alarm (15A).
MLT 523 Turbo Série B-E2
MLT 523 Turbo MONO-ULTRA Série B-E2
F9 - (10A MAX.) - Control instruments panel (5A).
F10 - (15A MAX.) - Sound alarm (15A).
- Stop switch (15A).
F11 - (15A MAX.) - OPTION Jib head light (10A).
- OPTION Blue front and rear working lights (10A).
F12 - (10A MAX.) - Indicator power supply (10A).
F13 - (35A MAX.) - Heating (30A).
F14 - (25A MAX.) - OPTION.
F15 - (25A MAX.) - OPTION.
F16 - (10A MAX.) - OPTION Air conditioning (7,5A).
F17 - (15A MAX.) - OPTION Electrovalve on jib head (10A).
- OPTION Electrovalve on jib head + attachment hydraulic locking device (10A).
- OPTION Electrical jib provision (10A).
- OPTION Anti-theft device provision (10A).
- OPTION Cutting off "simple" hydraulic movements (10A).
F18 - (15A MAX.) - OPTION Front working head light (15A).
F19 - (15A MAX.) - OPTION Rear window defrosting (15A).
F20 - (10A MAX.) - OPTION Pneumatic seat (10A).
- OPTION Blue front and rear working lights (10A).
F21 - (10A MAX.) - Front windscreen wiper and windscreen washer (10A).
F22 - (15A MAX.) - OPTION Jib suspension (10A).
F23 - (10A MAX.) - Right sidelight (7,5A).
- Sidelight indicator light (7,5A).
- Control panel lighting (7,5A).
F24 - (10A MAX.) - Left sidelights (7,5A).
F25 - (10A MAX.) - Right indicators (7,5A).
F26 - (10A MAX.) - Left indicators (7,5A).

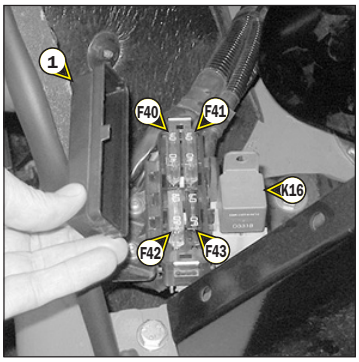

F27 - (15A MAX.) - Low beam (15A).
- Low beam indicator light (15A).
- OPTION Rear fog light (15A).
F28 - (15A MAX.) - Main beam (15A).
- Main beam lamp (15A).
F29 - (25A MAX.) - Hazard warning lights power supply (15A).
- Roof light (15A).
- OPTION (+)permanent (15A).
F30 - (25A MAX.) - Light switch power supply, horn and indicators (25A).
F31 - (20A MAX.) - Starter (20A).

Remove cap 1 for access to fuses F40 to F43.
F40 - (40A MAX.) - Lift truck electrical equipment (40A).
F41 - (40A MAX.) - Lift truck electrical equipment (40A).
F42 - (80A MAX.) - Preheating I.C. engine (80A).
F43 - (80A MAX.) - Alternator (80A).

13 - ROOF LIGHT

14 - ACCELERATOR PEDAL

15 - SERVICE BRAKE PEDAL AND TRANSMISSION CUT-OFF

The pedal applies on the front and rear wheels by an hydraulic brake system, and allows the lift truck to be slowed down and stopped. Depending on the position of the transmission cut-off switch, it enables the free travel to cut off transmission (see: 2 - DESCRIPTION: 5 - SWITCHS PANEL).

16 - FORWARD/REVERSE LEVER

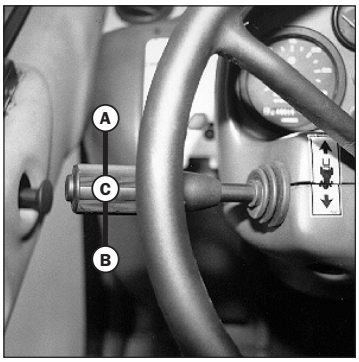

When operating this control, the lift truck should be travelling at slow speed and not accelerating. When the reverser is in the neutral position a mechanical lock prevents an accidental shifting movement.

FORWARD: Lift slightly and push the lever forwards (position A).
REVERSE: Lift slightly and pull the lever backwards (position B).
NEUTRAL: To start the lift truck, the lever must be in neutral (position C).

NOTE: The sound alarm on reverse motion indicate that the lift truck is running in reverse motion.

SAFETY FOR MOVING THE LIFT TRUCK
(from machine no 212106)

Authorization to move the lift truck is controlled by an electronic unit. The operator must observe the following sequence to move the truck forwards or backwards:
1 - sit down correctly in the driver's seat,
2 - release the parking brake,
3 - engage forward or reverse movement.

To stop the lift truck, he must observe the following sequence:
1 - set the reversing gear in neutral,
2 - engage the parking brake,
3 - get out of the lift truck.

If these sequences are not observed (e.g.: leaving the driver's seat without setting the parking brake), a buzzer sounds. You must then return the reversing gear to the neutral position and repeat the sequence.

17 - PARKING BRAKE LEVER

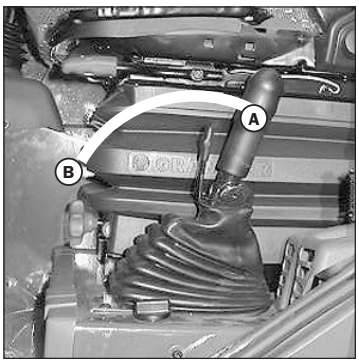

To prevent accidental loosening or release, the lever is fitted with safety locking.

- To apply the parking brake, pull the lever backwards (position A).
- To loosen the parking brake, release and push the lever forwards (position B).

18 - STEERING SELECTION

Before selecting one of the three possible steering positions, bring the 4 wheels into alignment, i.e., in the straight ahead position.

A - STEERING SELECTION LEVER

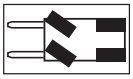
A1 - Front wheel steer (highway traffic).

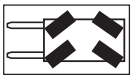
A2 - Front and rear wheels steer in opposite direction (4 wheel steer).

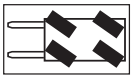
A3 - Front and rear wheels steer in the same direction (crab steer).

B - GREEN LAMPS FOR ALIGNMENT OF THE WHEELS
These lamps come on to indicate the alignment of the wheels, in relation to the axle of the lift truck. The lamp B1 for the front wheels and the lamp B2 for the rear wheels.

C - SWITCH FOR ALIGNMENT OF THE WHEELS
This switch enables the use or not of the device for alignment of the wheels.The indicator light indicates its use.

WHEEL ALIGNMENT PROCEDURE
- Connect the switch (signal light ON).
- Shift the distributor control lever for steering selection A in position A2 (4 wheel steering).
- Turn the steering wheel and bring the rear wheels into alignment until the lamp B2 is on.
- Shift the distributor control lever for steering selection A in position A1 (highway traffic).
- Turn the steering wheel and bring the front wheels into alignment until the lamp B1 is on.

Before driving on roads, it is necessary to check the alignment of the rear wheels and to drive in front wheel steer. The control of the alignment of the rear wheels must be regularly done with the help of the green lamps, while driving the lift truck. In case of anomalies, consult your dealer.

19 - HYDRAULIC CONTROLS

Do not attempt to alter the hydraulic system pressure by interfering with the pressure regulating valve. In the event of suspected malfunction, contact your dealer. ANY ALTERATION MAY RENDER THE WARRANTY NULL AND VOID.

Use the hydraulic controls carefully without jerking, to avoid accidents caused by shaking the lift truck.

MT 523 Série B-E2
MLT 523 Turbo Série B-E2
MT 620 Série B-E2

LIFTING OF THE LOAD
- The lever A backwards when lifting.
- The lever A forwards when lowering.

TILT OF THE CARRIAGE
- The lever A to the left for reverse tilt.
- The lever A to the right for forward tilt.

TELESCOPING
- The lever B forwards for the extension.
- The lever B backwards for the retraction.

ATTACHMENT
- The lever C forwards or backwards.

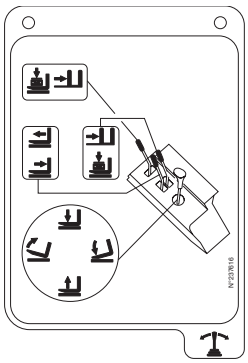

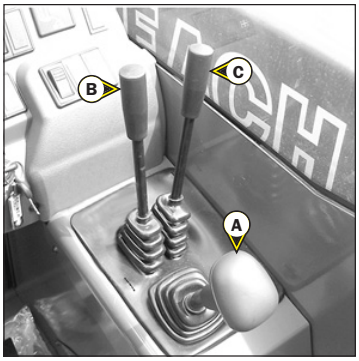

MT 523 MONO-ULTRA Série B-E2
MLT 523 Turbo MONO-ULTRA Série B-E2

NOTE: If necessary use the steering to reset the hydraulic control steering accumulator.

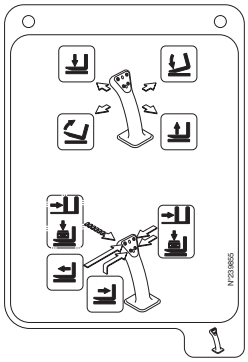

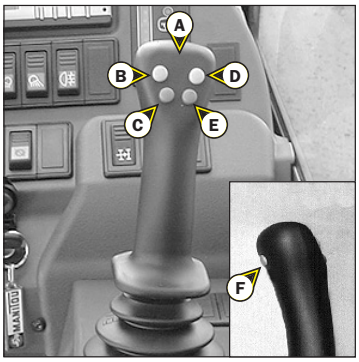

LIFTING OF THE LOAD
- The lever A backwards when lifting.
- The lever A forwards when lowering.

TILT OF THE CARRIAGE
- The lever A to the left for reverse tilt.
- The lever A to the right for forward tilt.

TELESCOPING
- Press button B for the extension.
- Press button C for the retraction.

ATTACHMENT
- Press buttons D or E.

OPTION JIB HEAD ELECTROVALVE
- Button F (see: 2 - DESCRIPTION: DESCRIPTION AND USE OF ELECTRIC AND HYDRAULIC OPTIONS).

20 - LOAD CHARTS FILE

This file includes the description of the hydraulic controls and the load charts of the attachments used on the lift truck.

21 - HEATER CONTROL

MLT 523 Turbo Série B-E2
MLT 523 Turbo MONO-ULTRA Série B-E2

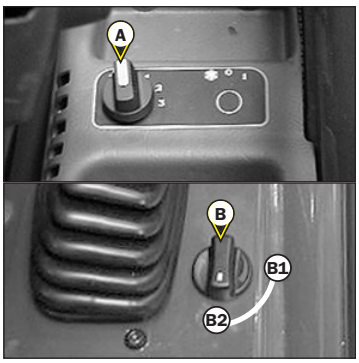

A - HEATING FAN CONTROL
This 3-speed control regulates warm or cold air through the heating ventilators.

B - HEATING TEMPERATURE CONTROL
Allows the temperature inside the cab to be adjusted.
B1 - With the valve closed, the fan delivers fresh air.
B2 - With the valve opened completely, the fan delivers warm air.
The intermediate positions allow the temperature to be adjusted.

21 - AIR CONDITIONING CONTROLS (OPTION AIR CONDITIONING)

MLT 523 Turbo Série B-E2
MLT 523 Turbo MONO-ULTRA Série B-E2

The air conditioning only comes on when the forklift truck has been started up. When using your air conditioning, you must work with the doors and windows closed.

In winter: So as to ensure correct operation and complete efficiency of the air conditioning unit, start up the compressor once a week, if only for a short spell, so as to lubricate the internal seals.

In cold weather: Warm the I.C. engine before switching on the compressor, so as to allow the coolant that has collected in the liquid state at the lowest point of the compressor circuit to turn into gas under the effect of the heat given off by the I.C. engine, as the compressor is liable to be damaged by coolant in the liquid state.

If your air conditioning does not seem to be working regularly, have it examined by your dealer (see: 3 - MAINTENANCE: H - EVERY TWO YEARS "OPTION AIR CONDITIONING"). Never try to repair any anomalies yourself.

DESCRIPTION OF THE AIR CONDITIONING CONTROLS

A - Control with signal light indicating start-up and cutout of the air conditioning system, if control "C" is in position 1, 2 or 3.
B - Heating air temperature control.
C - Air flow setting and fan speed control. In position "0" the air conditioning system no longer functions.

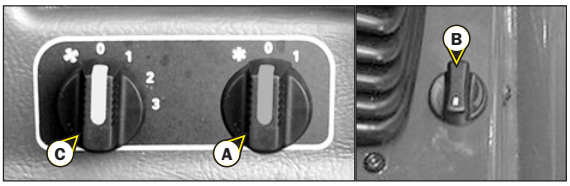

NOTE: Possible losses of water under the forklift truck are due to condensate discharges caused by the drying effect of the installation, especially with high outside temperatures and high relative humidity.
For the air conditioning to perform properly, the air intakes must not be blocked by frost, snow or leaves.
When the facility is running, at least one of the cab air grilles must be open so as to avoid any risk of freezing to the evaporator.

HEATING MODE

The controls must be adjusted in the following way:
A - Control with signal light off.
B - At the required temperature.
C - At the required temperature 1, 2 or 3.

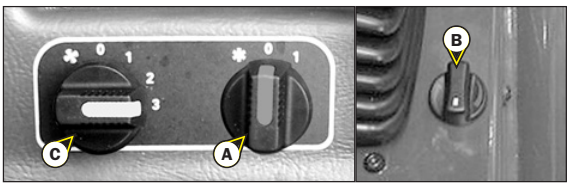

CONDITIONED AIR MODE

The controls must be adjusted in the following way:
A - Control with signal light on.
B - At the required temperature.
C - At the required temperature 1, 2 or 3.

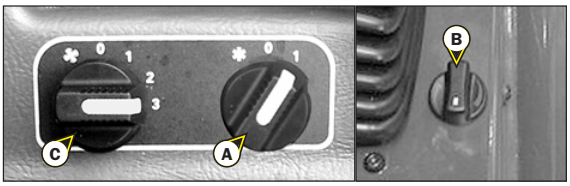

DEMISTING MODE

The controls must be adjusted in the following way:
A - Control with signal light on.
B - At the required temperature.
C - At the required temperature 1, 2 or 3.

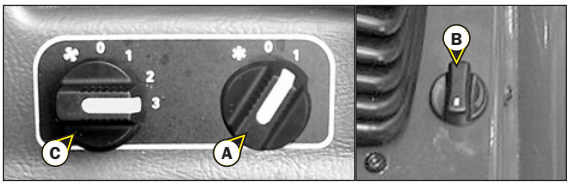

22 - CAB FILTER VENTILATORS

MLT 523 Turbo Série B-E2
MLT 523 Turbo MONO-ULTRA Série B-E2

See: 3 - MAINTENANCE: D - EVERY 500 HOURS SERVICE.

23 - WINDSCREEN DEMIST VENTS

MLT 523 Turbo Série B-E2
MLT 523 Turbo MONO-ULTRA Série B-E2

For optimum effectiveness, close the heating ventilators.

24 - HEATING VENTS

MLT 523 Turbo Série B-E2
MLT 523 Turbo MONO-ULTRA Série B-E2

These heating vents enable the air to be directed to the interior of the cabin and onto the side windows.

25 - DOOR LOCK

STANDARD MLT 523 Turbo Série B-E2
MLT 523 Turbo MONO-ULTRA Série B-E2

OPTION MT 523 Série B-E2
MT 523 Série MONO-ULTRA B-E2
MT 620 Série B-E2

Two keys are provided with the lift truck to enable the cab to be locked.

26 - LOCKING HANDLE FOR UPPER HALF DOOR

STANDARD MLT 523 Turbo Série B-E2
MLT 523 Turbo MONO-ULTRA Série B-E2

OPTION MT 523 Série B-E2
MT 523 MONO-ULTRA Série B-E2
MT 620 Série B-E2

27 - RELEASING BUTTON FOR UPPER HALF DOOR

STANDARD MLT 523 Turbo Série B-E2
MLT 523 Turbo MONO-ULTRA Série B-E2

OPTION MT 523 Série B-E2
MT 523 MONO-ULTRA Série B-E2
MT 620 Série B-E2

28 - HANDLE FOR REAR WINDOW OPENING

EMERGENCY EXIT
Use the rear window as an emergency exit, if it is impossible to leave the cab by the door.

29 - DOCUMENT HOLDER

Ensure that the operator's manual is in its place in the document holder.

NOTE: There is an OPTIONAL document holder net.

30 - FRONT LIGHTS

A - Left front indicator.
B - Left front dipped headlight.
C - Left front main beam.
D - Left front sidelight.
E - Right front indicator.
F - Right front dipped headlight.
G - Right front main beam.
H - Right front sidelight.

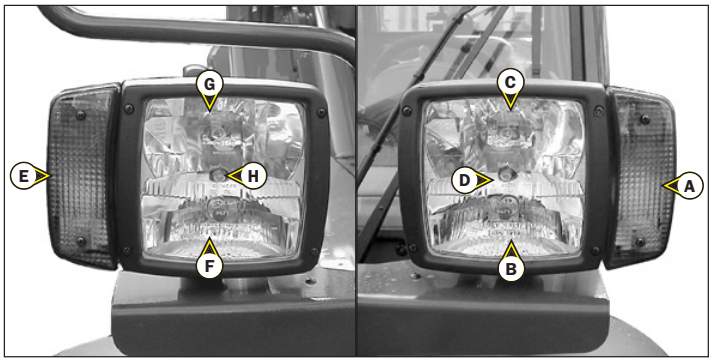

31 - REAR LIGHTS

A - Left rear indicator.
B - Left rear stoplight.
Left tail light.
C - Right tail light.
Right rear stoplight.
D - Right rear indicator.

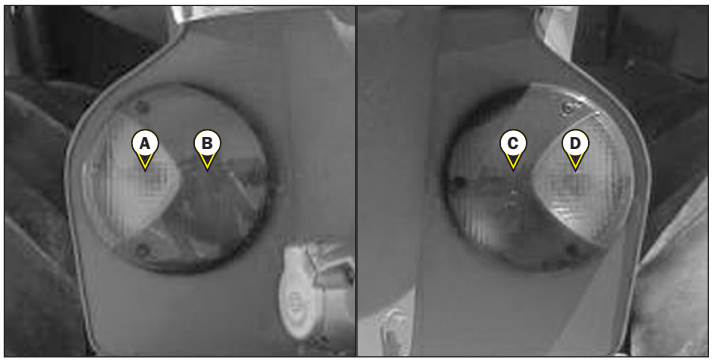

32 - REVOLVING LIGHT

The revolving light pivots for space-saving on the lift truck and can be detached to prevent theft.
- Loosen nut 1 and remove the revolving light.
- Protect mounting 2 with cap 3.

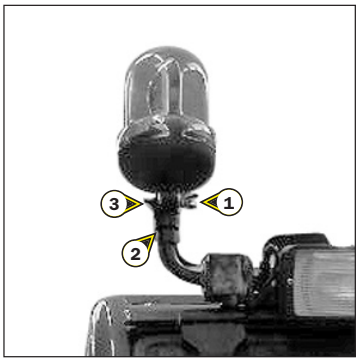

33 - SPIRIT LEVEL

Enables the operator to check that the lift truck is in the horizontal position.

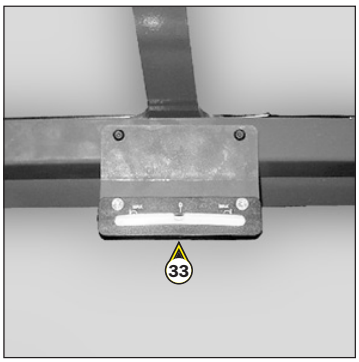

34 - ARM-REST

MT 523 Série MONO-ULTRA B-E2
MLT 523 Turbo MONO-ULTRA Série B-E2

The arm-rest can be adjusted in height.
- Untighten screws 1 and adjusting arm-rest in the height required.
- Retighten screws 1.

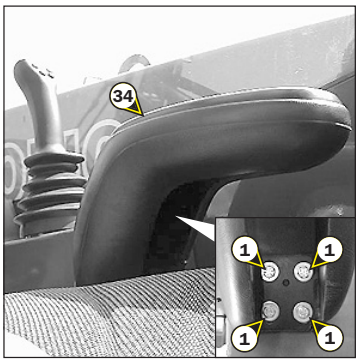

https://truckmanualshub.com/
Torkonjestraat 23
8510 Marke
België
056 / 222 111
info@dumarent.be
www.dumarent.be

TOWING PIN AND HOOK

Located at the rear of the lift truck, this device is used to attach a trailer. Its capacity is limited for each lift truck by the authorised gross vehicle weight, tractive effort and maximum vertical force on the coupling point. This information is given on the manufacturer's plate fixed to each lift truck (see: 2 - DESCRIPTION: IDENTIFICATION OF THE LIFT TRUCK).

- To use a trailer, see current regulations in your country (maximum running speed, braking, maximum weight of trailer, etc.).
- Verify the trailer's condition before using it (tyre condition and pressures, electrical connection, hydraulic hose, braking system…).

Do not tow a trailer or accessory which is not in perfect working order. Using a trailer in poor condition may effect the lift truck's steering and braking, and hence safety.

If a third party helps in coupling or uncoupling the trailer, this person must be permanently visible to the driver and wait until the lift truck has stopped, the handbrake is on and the I.C. engine is switched off before performing the operation.

NOTE: There is an OPTIONAL rear-view mirror which allows the lift truck to be approached more closely to the trailer ring.

A - TOWING PIN (STANDARD)

COUPLING AND UNCOUPLING THE TRAILER

- To couple the trailer, position the lift truck as close as possible to the trailer ring.
- Put the handbrake on and switch off the I.C. engine.
- Remove the clip 1, lift the trailer pin 2 and place or remove the trailer ring.

Be careful not to get your fingers caught or crushed during this operation.
Do not forget to put clip 1 back in place.
When uncoupling, make sure that the trailer is supported independently.

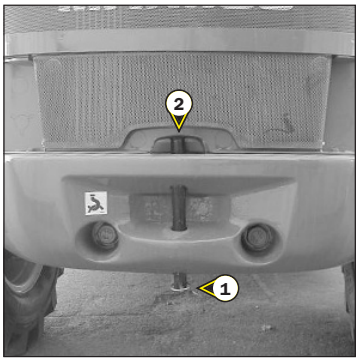

B - PROJECTING HOOK (OPTION)

COUPLING AND UNCOUPLING THE TRAILER

- To couple the trailer, position the lift truck as close as possible to the trailer ring.
- Put the handbrake on and switch off the I.C. engine.
- Remove the clip 1, lift the trailer pin 2 and place or remove the trailer ring.

Be careful not to get your fingers caught or crushed during this operation.
Do not forget to put clip 1 back in place.
When uncoupling, make sure that the trailer is supported independently.

C - COUPLING LADDER (OPTION)

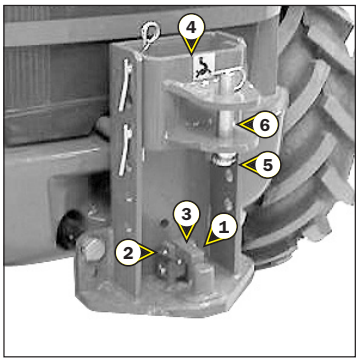

COUPLING AND UNCOUPLING THE TRAILER

- To couple the trailer, position the lift truck as close as possible to the trailer ring.
- Put the handbrake on and switch off the I.C. engine.

ON THE FIXED PIN

- Remove pin 1, remove rod 2 and raise latch 3.
- Insert or remove the trailer ring, lower latch 3 and refit rod 2.

Be careful not to get your fingers caught or crushed during this operation.
Do not forget to put clip 1 back in place.
When uncoupling, make sure that the trailer is supported independently.

ON THE COUPLING LADDER

- Set the coupling fitting 4 according to the height of the trailer ring.

Do not forget to put rods and clip back in place.

- Remove pin 5, lift the towing pin 6 and insert or remove the trailer ring.

Be careful not to get your fingers caught or crushed during this operation.
Do not forget to put clip 5 back in place.
When uncoupling, make sure that the trailer is supported independently.

F - ELECTRICAL CONNECTION (OPTION)

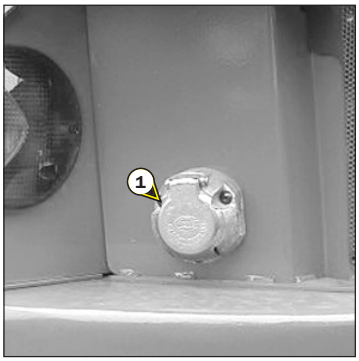

- Connect the male plug to the female socket 1 on the lift truck and make sure the trailer lights work properly.

DESCRIPTION AND USE OF ELECTRIC AND HYDRAULIC OPTIONS

1 - REAR ELECTRIC SOCKET

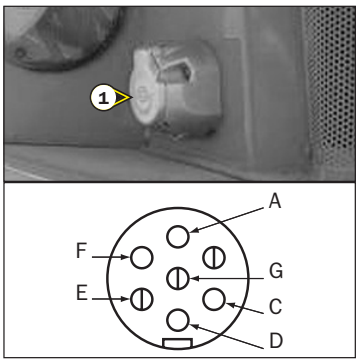

Enables power supply connection for a trailer (see: 2 - DESCRIPTION: TOWING PIN AND HOOK) or signalling bar.

A - Left rear indicator.
C - Earth.
D - Right rear indicator.
E - Right tail light.
F - Rear stoplight.
G - Left tail light.

2 - BATTERY CUT-OFF

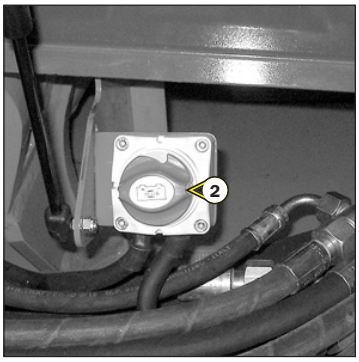

3 - REVERSE BUZZER ALARM

MLT 523 Turbo Série B-E2
MLT 523 Turbo MONO-ULTRA Série B-E2

4 - PREHEATING ROD

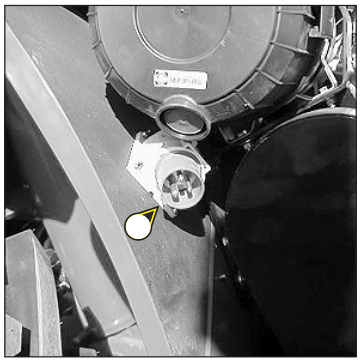

Enables the motor unit to be kept warm during prolonged periods of stoppage and thus, ensures the improved start-up of the I.C. engine.

SUPPLY CHARACTERISTICS OF PREHEATING SYSTEM:

- Rated range of power: 220-240V ; 50-60Hz
- Current consumed: 4,5A
- Equipment in class 1
- Equipment connectable only on feeder circuit TT or TN
- Category of insulation 2

ENVIRONMENTAL CONDITIONS IN USE:

- Maximum ambient temperature for using preheating: + 25° C
- Pollution level 2

CONDITIONS FOR CONNECTION AND USE OF PREHEATING:

- The preheating system should not be used for an external ambient temperature higher than + 25° C.
- It is essential that the power supply to the preheating system is:
  - Effected with a cable that conforms to the installation standards in force and contains a protective earth conductor.
  - Contains an appropriate sectioning system.
  - Incorporates an appropriate safety system against short circuits (fuses or circuit breaker) and a differential circuit breaker with 30mA sensitivity.
- Only connect to and disconnect from the power supply while the unit is off and the I.C. engine is stopped.

5A - DIGICODE ANTI-THEFT SYSTEM

1ST FITTING

FUNCTIONING

- Switch on the lift truck: LED A flashes red.
- Enter your user code followed by "VAL": LED A goes out.
- The entry of each figure in your code is confirmed by LED A lighting up green. If you make an error, press the “ANN” key and re-enter your code completely.
- Start the lift truck within the next 30 seconds ; otherwise the anti-theft system will react and LED A flashes red.

NOTE: You can restart the lift truck within 12 seconds of stopping it: after this time, the anti-theft system reacts and LED A flashes red.

5B - MODCOD ANTI-THEFT SYSTEM

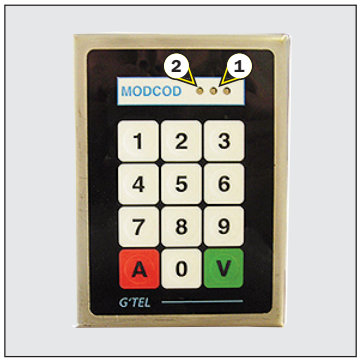

2ND FITTING

FUNCTIONING

- Switch on the lift truck: the red indicator 1 will flash.
- Enter your user code followed by "V" to validate: the green indicator 2 will come on.
- Start the lift truck within the next 60 seconds; otherwise the anti-theft system will be reactivated and the red indicator 1 will flash.

NOTE:
- If you make a mistake when entering the code, press key "A" to cancel and re-enter the code in full.
- If you wait more than 5 seconds between key presses or do not complete entering the code, the anti-theft system will be reactivated and the red indicator will flash.

6 - FINTRONIC ANTI-START SYSTEM

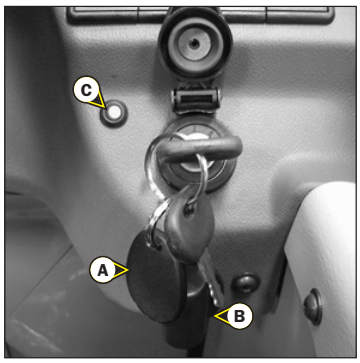

FUNCTIONING

- Switch on the lift truck and set the black key A next to the antenna B (maximum 80 mm).
- Wait a few seconds for red LED C to go out before starting the lift truck.

NOTE: You can restart the lift truck within 20 seconds of stopping it: after this time, the anti-start system reacts and LED C flashes red.

7 - ELECTRICAL JIB PROVISION

Enables an electrical function to be used at the head of the jib.

FUNCTIONING

MT 523 Série B-E2
MLT 523 Turbo Série B-E2
MT 620 Série B-E2

- Hold button 1 down and move the lever forwards or backwards.

FUNCTIONING

MT 523 MONO-ULTRA Série B-E2
MLT 523 Turbo MONO-ULTRA Série B-E2

- Hold button 1 down and switch on button 2 or 3.

NOTE: Switch 4 enables the function controlled by button 1 to be locked. Indicator 5 lights up to show when it is in use.

8 - EXTERIOR DRAIN-BACK

Enables connection of an attachment for which drain-back is required.

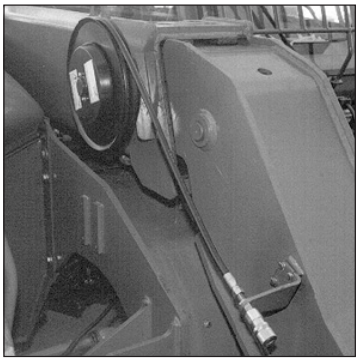

9 - HYDRAULIC ATTACHMENT LOCKING

Enables attachment locking to be controlled on the carriage and the use of a hydraulic attachment on the same hydraulic circuit (see: 4 - ADAPTABLE ATTACHMENTS IN OPTION ON THE RANGE: PICKING UP THE ATTACHMENTS).

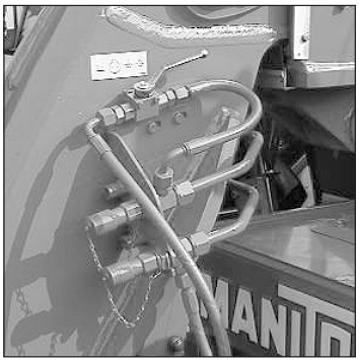

10 - JIB HEAD ELECTROVALVE

Enables use of two hydraulic functions on the attachment circuit.

To make connection of the rapid connectors easier, decompress the hydraulic circuit by pressing button 1 on the electrovalve.

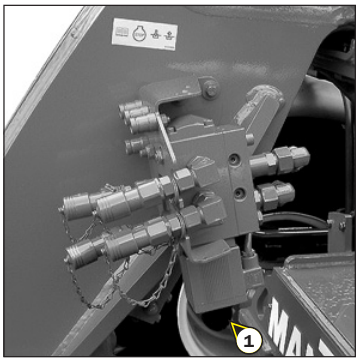

FUNCTIONING

MT 523 Série B-E2
MLT 523 Turbo Série B-E2
MT 620 Série B-E2

- Button 1 not engaged, the lever controls a hydraulic function.
- Hold button 1 down, the lever controls another hydraulic function.

FUNCTIONING

MT 523 MONO-ULTRA Série B-E2
MLT 523 Turbo MONO-ULTRA Série B-E2

- Button 1 not engaged, buttons 2 and 3 control a hydraulic function.
- Hold button 1 down, buttons 2 and 3 control another hydraulic function.

NOTE: Switch 4 enables the hydraulic function controlled by button 1 to be locked. Indicator 5 lights up to show when it is in use.

11 - JIB HEAD ELECTROVALVE + PREARRANGED HYDRAULIC ATTACHMENT LOCKING

The addition of these two options enables the combining of several hydraulic functions.

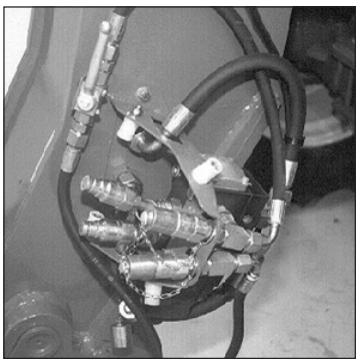

12 - CUTTING OFF "SIMPLE" HYDRAULIC MOVEMENTS

The function which cuts hydraulic movements is used to automatically stop dangerous movement of the jib when you are close to the limit of longitudinal stability. However, lateral stability can reduce the load chart in its upper part and this reduction is not detected by the longitudinal stability alarm.

The operator must respect the lift truck's load chart.

All attachments with a suspended load (winch, crane jib, crane jib with winch, hook, etc.) MUST be used with a lift truck equipped with a working hydraulic movement cut-out device.

1st FITTING

OPERATION

Switch A allows you to cut off "SIMPLE" hydraulic movements or not.

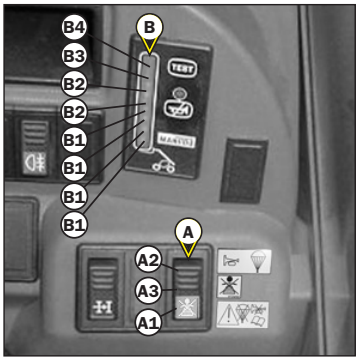

WITH CUT-OUT OF "SIMPLE" HYDRAULIC MOVEMENTS: SWITCH A IN POSITION A2 (VISUAL INDICATOR OFF):

Led B4 indicates that the lift truck has reached the authorized limit of longitudinal stability and all hydraulic movements are neutralised.

The sound alarm goes off at the same time.
- To restart hydraulic movement, proceed as follows:
- Hold switch A in position A1.
- Only perform de-aggravating hydraulic movements in the following order: jib retracted and raised.
- Reset switch A to position A2.

NOTE: When the jib is retracted, the function for switching off "SIMPLE" hydraulic movements is disconnected.

WITHOUT CUTTING-OUT "SIMPLE" HYDRAULIC MOVEMENTS: SWITCH A IN POSITION A1 (VISUAL INDICATOR ON):
To allow the use of loading or earth moving buckets, for example.

In this case, the user is only informed by the longitudinal stability alarm system B (see: 2 - DESCRIPTION: 5 - LONGITUDINAL STABILITY ALARM SYSTEM).

Hydraulic movements are not cut off.

The sound alarm is disconnected.

See operator's manual for use and description.

NEUTRALIZATION OF HYDRAULIC MOVEMENTS: SWITCH A IN POSITION A3 (VISUAL INDICATOR PARTIALLY ON): When driving on the road, it is highly recommended (mandatory in Germany) that you cut-off all the hydraulic movements.

2nd FITTING

OPERATION

Switch A allows you to cut off "SIMPLE" hydraulic movements or not. The cutting-off of "SIMPLE" hydraulic movements is automatically enabled when the lift truck is started-up.

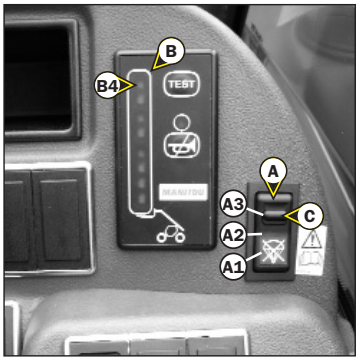

WITH CUT-PUT OF "SIMPLE" HYDRAULIC MOVEMENTS: VISUAL INDICATOR A1 OFF:
- Led B4 indicates that the lift truck has reached the authorized limit of longitudinal stability and all hydraulic movements are neutralized.
- The sound alarm goes off at the same time.
- To restart hydraulic movement, proceed as follows:
- Press the bottom of switch A, visual indicator A1 comes on and indicates that the hydraulic movement cut-out is disabled.
- Only perform de-aggravating hydraulic movements in the following order: jib retracted and raised.
- Re-enable the hydraulic movement cut-out by pressing the top of switch A, visual indicator A1 will go out.

NOTE: When the jib is retracted, the function for switching off "SIMPLE" hydraulic movements is disconnected.

WITHOUT CUTTING-OUT "SIMPLE" HYDRAULIC MOVEMENTS: TAB C HELD DOWNWARDS AND SWITCH 'A' IN POSITION A1 (VISUAL INDICATOR ON):
- To allow the use of loading or earth moving buckets, for example.
- In this case, the user is only informed by the longitudinal stability alarm system B (see: 2 - DESCRIPTION: SPECIAL ADAPTATIONS: 2 - LONGITUDINAL STABILITY ALARM SYSTEM).

NEUTRALIZATION OF HYDRAULIC MOVEMENTS: SWITCH 'A' IN POSITION 'A3' (VISUAL INDICATOR OFF):
- When driving on the road, it is highly recommended (mandatory in Germany) that you cut-off all the hydraulic movements.

13 - CUTTING-OFF "AGGRAVATING" HYDRAULIC MOVEMENTS

The function which cuts hydraulic movements is used to automatically stop dangerous movement of the jib when you are close to the limit of longitudinal stability. However, lateral stability can reduce the load chart in its upper part and this reduction is not detected by the longitudinal stability alarm.

The operator must respect the lift truck's load chart.

All attachments with a suspended load (winch, crane jib, crane jib with winch, hook, etc.) MUST be used with a lift truck equipped with a working hydraulic movement cut-out device.

1st FITTING

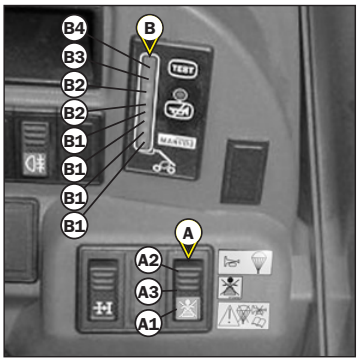

OPERATION
Switch A allows you to cut off "AGGRAVATING" hydraulic movements or not.

WITH CUT-OUT OF "AGGRAVATING" HYDRAULIC MOVEMENTS: SWITCH A IN POSITION A2 (VISUAL INDICATOR OFF):

Led B4 indicates that the lift truck has reached the authorized limit of longitudinal stability and all aggravating hydraulic movements are neutralised.

The sound alarm goes off at the same time.
- To restart hydraulic movements, only perform de-aggravating hydraulic movements in the following order: jib retracted and raised.

NOTE: When the jib is retracted, the function for switching off "AGGRAVATING" hydraulic movements is disconnected.

WITHOUT CUTTING-OUT "AGGRAVATING" HYDRAULIC MOVEMENTS: SWITCH A IN POSITION A1 (VISUAL INDICATOR ON):
To allow the use of loading or earth moving buckets, for example.

In this case, the user is only informed by the longitudinal stability alarm system B (see: 2 - DESCRIPTION: 5 - LONGITUDINAL STABILITY ALARM SYSTEM).

Hydraulic movements are not cut off.

The sound alarm is disconnected.

See operator's manual for use and description.

NEUTRALIZATION OF HYDRAULIC MOVEMENTS: SWITCH A IN POSITION A3 (VISUAL INDICATOR PARTIALLY ON): When driving on the road, it is highly recommended (mandatory in Germany) that you cut-off all the hydraulic movements.

2nd FITTING

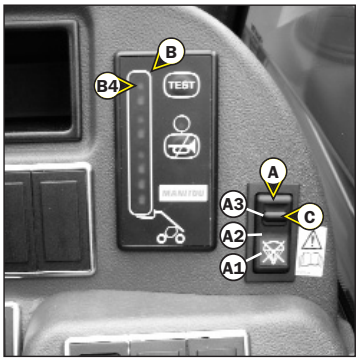

OPERATION
Switch A allows you to cut-off "AGGRAVATING" hydraulic movements or not. The cutting-off of "AGGRAVATING" hydraulic movements is automatically enabled when the lift truck is started-up.

WITH CUT-OUT OF "AGGRAVATING" HYDRAULIC MOVEMENTS: VISUAL INDICATOR A1 OFF:
- Led B4 indicates that the lift truck has reached the authorized limit of longitudinal stability and all aggravating hydraulic movements are neutralized.
- The sound alarm goes off at the same time.
- To restart hydraulic movements, only perform de-aggravating hydraulic movements in the following order: jib retracted and raised.

NOTE: When the jib is retracted, the function for switching off "AGGRAVATING" hydraulic movements is disconnected.

WITHOUT CUTTING-OUT "AGGRAVATING" HYDRAULIC MOVEMENTS: TAB 'C 'HELD DOWNWARDS AND SWITCH 'A' IN POSITION 'A1' (VISUAL INDICATOR ON):
- To allow the use of loading or earth moving buckets, for example.
- In this case, the user is only informed by the longitudinal stability alarm system B (see: 2 - DESCRIPTION: SPECIAL ADAPTATIONS: 2 - LONGITUDINAL STABILITY ALARM SYSTEM).

NEUTRALIZATION OF HYDRAULIC MOVEMENTS: SWITCH 'A' IN POSITION 'A3' (VISUAL INDICATOR OFF):
- When driving on the road, it is highly recommended (mandatory in Germany) that you cut-off all the hydraulic movements.

14 - SINGLE OR DUAL EFFECT REAR HYDRAULIC CONTROL PREDISPOSITION

Enables the use of a hydraulic accessory at the rear of the lift truck (e.g. a trailer with hydraulic tipping).

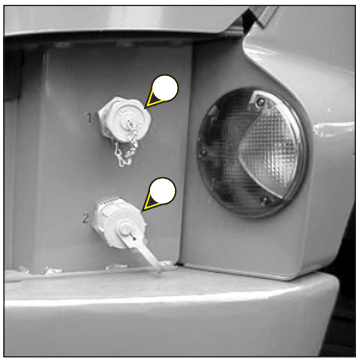

FUNCTIONING

MT 523 Série B-E2
MLT 523 Turbo Série B-E2
MT 620 Série B-E2

- Lever 1 controls this predisposition.

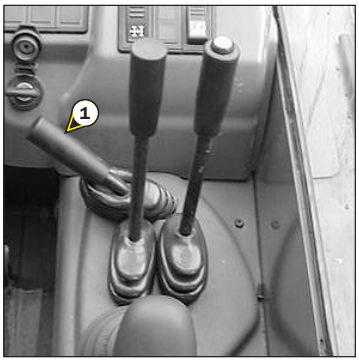

FUNCTIONING

MT 523 MONO-ULTRA Série B-E2
MLT 523 Turbo MONO-ULTRA Série B-E2

- Switch 1 controls this predisposition.

https://truckmanualshub.com/
Torkonjestraat 23
8510 Marke
België
056 / 222 111
info@dumarent.be
www.dumarent.be

3 - MAINTENANCE

https://truckmanualshub.com/
Torkonjestraat 23
8510 Marke
België
056 / 222 111
info@dumarent.be
www.dumarent.be

https://truckmanualshub.com/
Torkonjestraat 23
8510 Marke
België
056 / 222 111
info@dumarent.be
www.dumarent.be

TABLE OF CONTENTS

MANITOU ORIGINAL SPARE PARTS AND EQUIPMENT		**3 - 5**
FILTERS CARTRIDGES AND BELTS		**3 - 6**
	MT 523 Série B-E2	3 - 6
	MT 523 MONO-ULTRA Série B-E2	3 - 6
	MLT 523 Turbo Série B-E2	3 - 7
	MLT 523 Turbo MONO-ULTRA Série B-E2	3 - 7
	MT 620 Série B-E2	3 - 6
LUBRICANTS AND FUEL		**3 - 8**
SERVICING SCHEDULE		**3 - 10**
A - DAILY OR EVERY 10 HOURS SERVICE		**3 - 12**
B - EVERY 50 HOURS SERVICE		**3 - 14**
C - EVERY 250 HOURS SERVICE		**3 - 20**
D - EVERY 500 HOURS SERVICE		**3 - 24**
E - EVERY 1000 HOURS SERVICE		**3 - 30**
F - EVERY 2000 HOURS SERVICE		**3 - 34**
G - OCCASIONAL MAINTENANCE		**3 - 36**
H - EVERY TWO YEARS (OPTION AIR CONDITIONING)		**3 - 40**

https://truckmanualshub.com/
Torkonjestraat 23
8510 Marke
België
056 / 222 111
info@dumarent.be
www.dumarent.be

https://truckmanualshub.com/
Torkonjestraat 23
8510 Marke
België
056 / 222 111
info@dumarent.be
www.dumarent.be

MANITOU ORIGINAL SPARE PARTS AND EQUIPMENT

OUR LIFT TRUCKS MUST BE SERVICED USING ORIGINAL MANITOU PARTS.

IF YOU USE PARTS WHICH ARE NOT ORIGINAL MANITOU PARTS,

YOU RISK

- Legally - to be held responsible in the event of an accident.
- Technically - to generate operating failure or shorten the life of the lift truck.

THE USE OF COUNTERFEIT PARTS OR COMPONENTS NOT APPROVED BY THE MANUFACTURER, MEANS YOU LOSE THE BENEFIT OF THE CONTRACTUAL GUARANTEE.

BY USING ORIGINAL MANITOU PARTS FOR MAINTENANCE OPERATIONS,

YOU BENEFIT EXPERTISE

THROUGH ITS NETWORK, MANITOU PROVIDES THE USER WITH

- Know-how and competence.
- The guarantee of high-quality work.
- Original replacement components.
- Help with preventive maintenance.
- Efficient help with diagnosis.
- Improvements due to experience feedback.
- Operator training.
- Only the MANITOU network has detailed knowledge of the design of the lift truck and therefore the best technical ability to provide maintenance.

ORIGINAL REPLACEMENT PARTS ARE DISTRIBUTED EXCLUSIVELY BY MANITOU AND ITS DEALER NETWORK.
The dealer network list is available on MANITOU web site www.manitou.com

Torkonjestraat 23
8510 Marke
België
056 / 222 111
info@dumarent.be
www.dumarent.be

FILTERS CARTRIDGES AND BELTS

MT 523 Série B-E2
MT 523 MONO-ULTRA Série B-E2
MT 620 Série B-E2

I.C. ENGINE

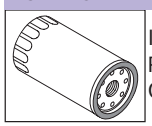

I.C. ENGINE OIL FILTER
Part number: 133755
Change: 500 H

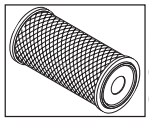

DRY AIR FILTER CARTRIDGE
Part number: 227959
Clean: 50 H*
Change: 500 H*

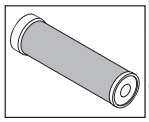

SAFETY DRY AIR FILTER CARTRIDGE
Part number: 227960
Change: 1000 H*

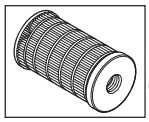

FUEL FILTER CARTRIDGE
Part number: 704601
Change: 500 H

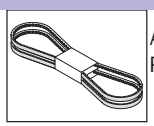

ALTERNATOR BELT
Part number: 705401
(up to the engine N° U031799M)

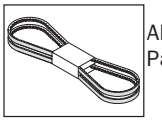

ALTERNATOR BELT
Part number: 702974
(from the engine N° U031800M)

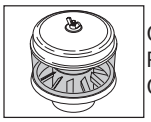

CYCLONIC PRE-FILTER
Part number: 489768
Clean: 10 H

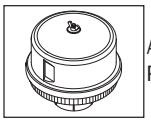

AUTOMATIC VACUUM-CLEANING PRE-FILTER (OPTION)
Part number: 240334

*: This periodicity is given for information only (see: 3 - MAINTENANCE: SERVICING SCHEDULE) for cleaning and changing.

HYDRAULICS

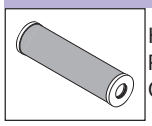

HYDRAULIC RETURN OIL FILTER CARTRIDGE
Part number: 602096
Change: 500 H

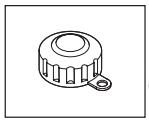

FILTER CAP FOR HYDRAULIC OIL TANK
Part number: 62415
Change: 1000 H

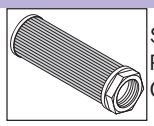

SUCTION STRAINER FOR HYDRAULIC OIL TANK
Part number: 224726
Clean: 1000 H

CAB

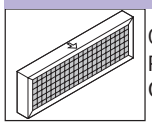

CAB VENTILATION FILTER (OPTION)
Part number: 601645
Clean: 500 H

Torkonjestraat 23
8510 Marke
België
056 / 222 111
info@dumarent.be
www.dumarent.be

FILTERS CARTRIDGES AND BELTS

MLT 523 Turbo Série B-E2
MLT 523 Turbo MONO-ULTRA Série B-E2

I.C. ENGINE

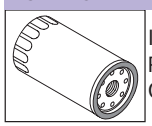

I.C. ENGINE OIL FILTER
Part number: 133755
Change: 500 H

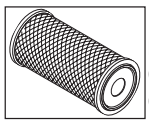

DRY AIR FILTER CARTRIDGE
Part number: 227959
Clean: 50 H*
Change: 500 H*

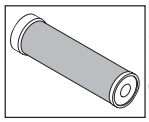

SAFETY DRY AIR FILTER CARTRIDGE
Part number: 227960
Change: 1000 H*

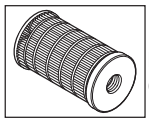

FUEL FILTER CARTRIDGE
Part number: 704601
Change: 500 H

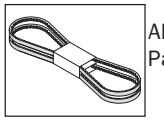

ALTERNATOR BELT
Part number: 705401
(up to the engine N° U031799M)

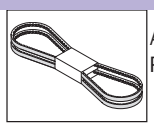

ALTERNATOR BELT
Part number: 702974
(from the engine N° U031800M)

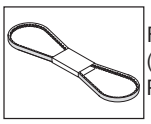

FAN/COMPRESSEUR BELT
(OPTION AIR CONDITIONING)
Part number: 216125

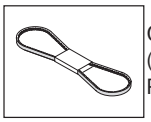

COMPRESSOR/ALTERNATOR BELT
(OPTION AIR CONDITIONING)
Part number: 251759

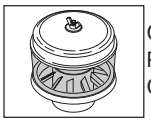

CYCLONIC PRE-FILTER
Part number: 489768
Clean: 10 H

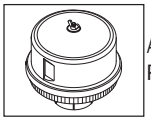

AUTOMATIC VACUUM-CLEANING PRE-FILTER (OPTION)
Part number: 240334

*: This periodicity is given for information only (see: 3 - MAINTENANCE: SERVICING SCHEDULE) for cleaning and changing.

HYDRAULICS

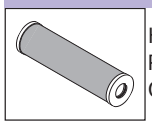

HYDRAULIC RETURN OIL FILTER CARTRIDGE
Part number: 602096
Change: 500 H

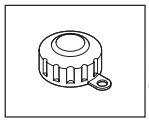

FILTER CAP FOR HYDRAULIC OIL TANK
Part number: 62415
Change: 1000 H

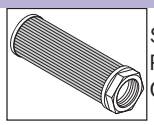

SUCTION STRAINER FOR HYDRAULIC OIL TANK
Part number: 224726
Clean: 1000 H

CAB

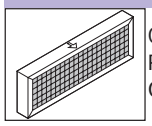

CAB VENTILATION FILTER (WITHOUT AIR CONDITIONING)
Part number: 601645
Clean: 500 H

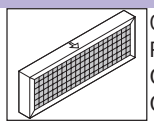

CAB VENTILATION FILTER (WITH AIR CONDITIONING)
Part number: 601645
Clean: 50 H
Change: 250 H

Torkonjestraat 23
8510 Marke
België
056 / 222 111
info@dumarent.be
www.dumarent.be

LUBRICANTS AND FUEL

USE THE RECOMMENDED LUBRICANTS AND FUEL:
- For topping up, oils may not be miscible.
- For oil changes, MANITOU oils are perfectly appropriate.

DIAGNOSTIC ANALYSIS OF OILS
If a service or maintenance contract has been organized with the dealer, a diagnostic analysis of engine, transmission and axle oils may be requested depending on the rate of use.

(*) FUEL CHARACTERISTICS
Use a high-quality fuel to obtain optimal performance of the I.C. engine.

CHARACTERISTICS OF RECOMMENDED FUEL:
- DERV à EN590
- BS2869 Class A2
- ASTM D975 - 91 Class 2D
- JIS K2204 (1992) Grades 1, 2, 3 and Special Grade 3.

I.C. ENGINE				
ORGANS TO BE LUBRICATED	CAPACITY	RECOMMENDATION	PACKAGING	PART NUMBER
I.C. ENGINE	6,9 Liters	MANITOU Oil API CH4	5 L. 20 L. 55 L. 209 L.	661706 582357 582358 582359
COOLING CIRCUIT	24 Liters	Cooling liquid (protection - 30°)	2 L. 5 L. 20 L.	473076 470077 470078
		Cooling liquid (protection - 25°)	2 L. 5 L. 20 L.	554002 554003 554004
FUEL TANK	94 Liters	Diesel fuel (*)		

TRANSMISSION				
ORGANS TO BE LUBRICATED	CAPACITY	RECOMMENDATION	PACKAGING	PART NUMBER
TRANSMISSION UNIVERSAL JOINT		MANITOU Grease Multipurpose HD NLGI 2	400 g. 1 Kg. 5 Kg. 20 Kg. 50 Kg.	161589 554973 554974 499233 489670

JIB			
ORGANS TO BE LUBRICATED	RECOMMENDATION	PACKAGING	PART NUMBER
JIB PADS	MANITOU Grease Multipurpose NLGI 2	400 g. 1 Kg. 50 Kg.	545996 161590 499235
GREASING OF THE JIB	MANITOU Grease Multipurpose HD NLGI 2	400 g. 1 Kg. 5 Kg. 20 Kg. 50 Kg.	161589 554973 554974 499233 489670

HYDRAULICS				
ORGANS TO BE LUBRICATED	CAPACITY	RECOMMENDATION	PACKAGING	PART NUMBER
HYDRAULIC OIL TANK	123 Liters	MANITOU Oil Hydraulic ISO 46	5 L. 20 L. 55 L. 209 L.	545500 582297 546108 546109

BRAKE			
ORGANS TO BE LUBRICATED	RECOMMENDATION	PACKAGING	PART NUMBER
BRAKE CIRCUIT	MANITOU Oil Mineral brake fluid	1 L.	490408

CAB			
ORGANS TO BE LUBRICATED	RECOMMENDATION	PACKAGING	PART NUMBER
CAB DOOR **STANDARD** MLT 523 Turbo Série B-E2 MLT 523 Turbo MONO-ULTRA Série B-E22 **OPTION** MT 523 Série B-E2 MT 523 Série MONO-ULTRA B-E2 MT 620 Série B-E2	MANITOU Grease Multipurpose HD NLGI 2	400 g. 1 Kg. 5 Kg. 20 Kg. 50 Kg.	161589 554973 554974 499233 489670
WINDSCREEN WASHER TANK	Windscreen washer fluid	1 L. 5 L.	490402 486424

FRONT AXLE				
ORGANS TO BE LUBRICATED	CAPACITY	RECOMMENDATION	PACKAGING	PART NUMBER
TRANSFER BOX	0,75 Liter	MANITOU Oil Special immersed brakes	5 L. 20 L. 209 L.	545976 582391 546222
FRONT AXLE DIFFERENTIAL	4 Liters	MANITOU Oil Special immersed brakes	5 L. 20 L. 209 L.	545976 582391 546222
FRONT WHEELS REDUCERS	0,8 Liter	MANITOU Oil Special immersed brakes	5 L. 20 L. 209 L.	545976 582391 546222
FRONT WHEELS REDUCERS PIVOTS		MANITOU Grease Multipurpose NLGI 2	400 g. 1 Kg. 50 Kg.	545996 161590 499235

REAR AXLE				
ORGANS TO BE LUBRICATED	CAPACITY	RECOMMENDATION	PACKAGING	PART NUMBER
REAR AXLE DIFFERENTIAL	3,8 Liters	MANITOU Oil Special immersed brakes	5 L. 20 L. 209 L.	545976 582391 546222
REAR WHEELS REDUCERS	0,9 Liter	MANITOU Oil Special immersed brakes	5 L. 20 L. 209 L.	545976 582391 546222
REAR WHEELS REDUCERS PIVOTS		MANITOU Grease Multipurpose NLGI 2	400 g. 1 Kg. 50 Kg.	545996 161590 499235
REAR AXLE OSCILLATION		MANITOU Grease Multipurpose HD NLGI 2	400 g. 1 Kg. 5 Kg. 20 Kg. 50 Kg.	161589 554973 554974 499233 489670

SERVICING SCHEDULE

A = AJUST	N = CLEAN
C = CHECK	P = BLEED
D = DESCALE	R = CHANGE
G = GREASE	V = DRAIN

	After the first 50 hours	Day or 10 hours	50 hours	250 hours	1 year or 500 hours	1 year or 1000 hours	2000 hours	4000 hours	PAGE
I.C. ENGINE									
I.C. engine oil level		C							3-12
Cooling liquid level		C							3-12
Fuel level		C							3-13
Cyclonic prefilter		N							3-13
Dry air filter cartridge			N		R				3-14/3-25
Radiator core			N						3-14
Condenser core (OPTION Air conditioning)			N						3-14
Alternator/crankshaft belt tension	A			A					3-20
Compressor belts tension (OPTION Air conditioning)				A					3-20
I.C. engine oil	V				V				3-24
I.C. engine oil filter	R				R				3-24
Fuel filter cartridge	R				R				3-25
Fuel tank						N			3-30
Safety dry air filter cartridge						R			3-30
I.C. engine silent blocks						C**			
I.C. engine rates						C**			
Valves clearances	C**					C**			
Cooling liquid							V		3-34
Radiator							N/D**		
Water pump and the thermostat							C**		
Alternator and the starter motor							C**		
Turbocompressor							C**		
Bleed the fuel system									3-36
TRANSMISSION									
Transmission universal joint			G					G/C**	3-19
Transmission controls						C*			
Hydrostatic transmission circuit pressures							C*		
Governing start of the hydrostatic transmission							C*		
Working order of the transmission cut-off hydraulic valve							C*		
TYRES									
Tyres pressure		C							3-13
Wheel nuts torque		C							3-13
Condition of wheels and tyres						C**			
Change a wheel									3-37
JIB									
Jib pads		G*							3-13
Jib			G						3-15
Jib pads wear						C**			
Condition of jib unit							C**		
Bearings and articulation rings							C**		
HYDRAULICS									
Hydraulic oil level			C						3-16
Hydraulic return oil filter cartridge	R				R				3-26
Balancing valve	C				C				3-26
Hydraulic oil						V			3-31
Suction strainer for hydraulic oil tank						N			3-31
Filter cap for hydraulic oil tank						R			3-31
Speeds of hydraulic movements						C**			
Hydraulic pump pipe filter						N**			
Condition of hoses and flexibles pipes						C**			
Condition of cylinders (leakage, shafts)						C**			
Hydraulic circuit pressures							C**		
Hydraulic circuit outputs							C**		
Hydraulic oil tank							N**		

A = AJUST	N = CLEAN
C = CHECK	P = BLEED
D = DESCALE	R = CHANGE
G = GREASE	V = DRAIN

	After the first 50 hours	Day or 10 hours	50 hours	250 hours	1 year or 500 hours	1 year or 1000 hours	2000 hours	4000 hours	
BRAKE									
Brake oil level			C						3-16
Parking brake				C/A					3-21
Parking brake lever mechanism					G				3-27
Brake oil						V**			
Brake circuit						P**			
Brake circuit pressure						C**			
Brake						A**			
STEERING									
Steering							C**		
Steering swivel joints								C**	
CAB									
Windscreen washer liquid level			C						3-17
Cab door			G						3-17
Cab ventilation filter (OPTION Air conditioning)			N	R					3-17/3-22
Cab ventilation filter					N				3-27
Seat belt						C			3-32
Condition of the rear view mirrors						C**			
Structure						C**			
OPTION Air conditioning									3-40
ELECTRICITY									
Battery electrolyte level			C						3-18
Battery electrolyte density					C				3-27
Longitudinal stability alarm						C**			
Condition of wiring harness and cables						C**			
Lights and signals						C**			
Warning indicators						C**			
Adjust the front headlamps									3-39
FRONT AXLE									
Front wheels reducers pivots			G					G/C**	3-18
Transfer box oil level				C					3-21
Front axle differential oil level				C					3-22
Front wheels reducers oil level				C					3-22
Transfer box oil	V				V				3-28
Front axle differential oil	V				V				3-28
Front wheels reducers oil	V					V			3-32
Wearing of front axle brake discs								C**	
Front wheels reducers universal joint								C**	
Front wheels reducers clearance								C**	
Bearings clearance of the transfer box								C**	
REAR AXLE									
Rear wheels reducers pivots			G					G/C**	3-18
Rear axle oscillation			G				G/C**		3-18
Rear axle differential oil level				C					3-22
Rear wheels reducers oil level				C					3-22
Rear axle differential oil	V				V				3-28
Rear wheels reducers oil	V					V			3-32
Rear wheels reducers clearance								C**	
CHASSIS									
Structure						C**			
Bearings and articulation rings							C**		
ATTACHMENTS									
Forks wear					C**				
Attachment carriage						C**			
Condition of attachments						C**			
LIFT TRUCK									
Tow the lift truck									3-37
Sling the lift truck									3-38
Transport the lift truck on a platform									3-38

(*): Every 10 hours during the first 50 hours, then once at 250 hours.
(**): Consult your dealer.

A - DAILY OR EVERY 10 HOURS SERVICE

A1 - I.C. ENGINE OIL LEVEL

CHECK

Place the lift truck on level ground with the I.C. engine stopped, and let the oil drain into the sump.

- Open the I.C. engine bonnet.
- Remove the dipstick 1 (fig. A1).
- Clean the dipstick and check the correct level between the two notches.
- If necessary, add oil (see: 3 - MAINTENANCE: LUBRICANTS AND FUEL) by the filler port 2 (fig. A1).
- Check visually that there is no leakage or seepage of oil in the I.C. engine.

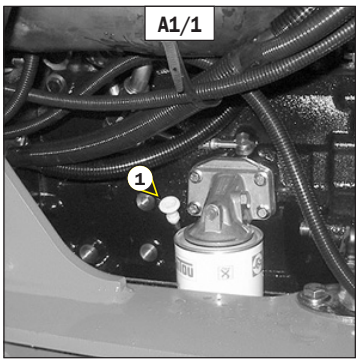

A1/1

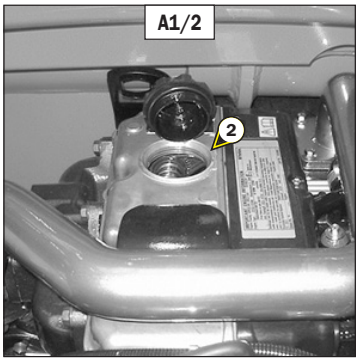

A1/2

A2 - COOLING LIQUID LEVEL

CHECK

Place the lift truck on level ground with the I.C. engine stopped, and allow the I.C. engine to cool.

- Open the I.C. engine bonnet.
- Check the correct level in the middle of expansion chamber 1 (fig. A2).
- If necessary, add cooling liquid (see: 3 - MAINTENANCE: LUBRICANTS AND FUEL) by the filler port 2 (fig. A2).
- Check visually that there is no leakage in the radiator and pipes.

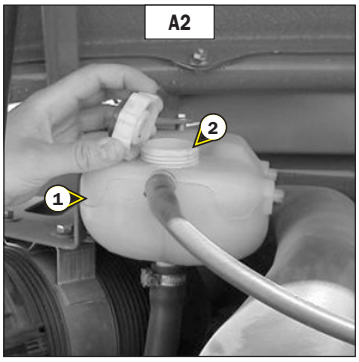

A2

To avoid any risk of spraying or burning, wait until the I.C. engine has cooled down before removing the cooling circuit filler plug. If the cooling liquid is very hot, add only hot cooling liquid (80°C). In an emergency, you can use water as a cooling liquid, then change the cooling circuit liquid as soon as possible (see: 3 - MAINTENANCE: F1 - COOLING LIQUID).

A3 - FUEL LEVEL

CHECK

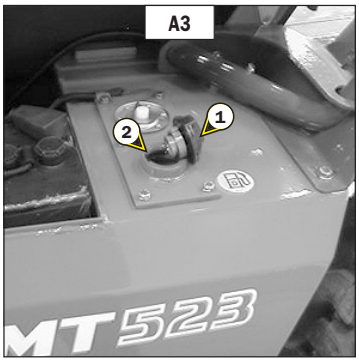

Keep the fuel tank full, to reduce as much as possible any condensation due to the atmospheric conditions.

- Open the side bonnet.
- Remove cap 1 (fig. A3).
- Fill the fuel tank with clean fuel (see: 3 - MAINTENANCE: LUBRICANTS AND FUEL), filtered through a strainer or a clean, lint free cloth, through filler port 2 (fig. A3).
- Put the cap back 1 (fig. A3).
- Check visually that there is no leakage in the tank and pipes.

Never smoke or approach with a flame during filling operations or when the tank is open. Never refill while I.C. engine is running.

The fuel tank is degassed via the filler plug. When changing it, always use an original part, with degassing hole.

A4 - CYCLONIC PREFILTER

CLEAN

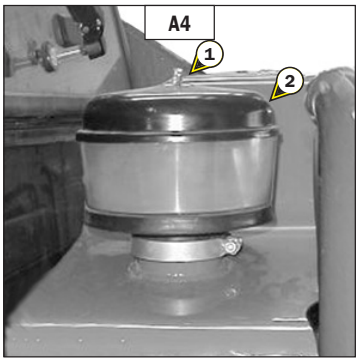

STANDARD	**MLT 523 Turbo Série B-E2**
	MLT 523 Turbo MONO-ULTRA Série B-E2
OPTION	**MT 523 Série B-E2**
	MT 523 MONO-ULTRA Série B-E2
	MT 620 Série B-E2

The cleaning interval is given as a guide, however the prefilter must be emptied as soon as impurities reach the MAXI level on the tank.

- Loosen nut 1 (fig. A4), remove cover 2 (fig. A4) and empty the tank.
- Clean the prefilter unit with a clean dry cloth and reassemble the unit.

When cleaning, take care not to let impurities into the dry air filter.

A5 - TYRES PRESSURE AND WHEEL NUTS TORQUE

CHECK

- Check the condition of the tyres, to detect cuts, protuberances, wear, etc.
- Check the torque load of the wheel nuts. Non compliance with this instruction can cause damage and rupture to the wheel bolts and distortion to the wheels.

  Wheel nuts tightening torque
  - Front tyres: 630 N.m ± 15 %
  - Rear tyres: 630 N.m ± 15 %
- Check and adjust the tyre pressures if necessary (see: 2 - DESCRIPTION: CHARACTERISTICS).

Check that the air hose is correctly connected to the tyre valve before inflating and keep all persons at a distance during inflation. Respect the recommended tyre pressures given.

NOTE: There is an OPTIONAL wheel toolkit.

A6 - JIB PADS

CLEAN - GREASE

To be carried out every 10 hours during the first 50 hours service, then once at 250 hours.

- Extend the jib completely.
- With a brush, apply a coat of grease (see: 3 - MAINTENANCE: LUBRICANTS AND FUEL) on the 4 sides of the telescope(s) (fig. A67).
- Telescope the jib several times in order to spread the coat of grease evenly.
- Remove the surplus of grease.

If the lift truck is used in an abrasive environment (dust, sand, coal...) Use lubricating varnish (MANITOU reference: 483536). In this respect, consult your dealer.

NOTE: A jib sealing kit is available as an OPTION. **MLT 523 Turbo Série B-E2**
MLT 523 Turbo MONO-ULTRA Série B-E2

B - EVERY 50 HOURS SERVICE

Carry out the operations described previously as well as the following operations.

B1 - DRY AIR FILTER CARTRIDGE

CHECK - CLEAN

In case of use in a heavily dust laden atmosphere, there are pre-filtration cartridges (see: 3 - MAINTENANCE: FILTERS CARTRIDGES AND BELTS). Also, the checking and cleaning periodicity of the cartridge must be reduced.

If the clogging indicator light comes on, this operation must be carried out as quickly as possible (1 hour maximum). The cartridge must not be cleaned more than seven times, after which the cartridge must be changed.

- For the disassembly and reassembly of the cartridge, see: 3 - MAINTENANCE: D3 - DRY AIR FILTER CARTRIDGE.
- Clean the filter cartridge using a compressed air jet (max. pressure 3 bar) directed from the top to the bottom and from the inside towards the outside at a minimum distance of 30 mm from the cartridge wall.
- Cleaning is completed when there is no more dust on the cartridge.

Respect the safety distance of 30 mm between the air jet and the cartridge to avoid tearing or making a hole in the cartridge. The cartridge must not be blown anywhere near the air filter box. Never clean the cartridge by tapping it against a hard surface. Your eyes must be protected during this intervention.

- Clean the cartridge seal surfaces with a damp, clean lint-free cloth and grease with a silicone lubricant (MANITOU reference: 479292).
- Check visually the outer condition of the air filter and its mounts. Verify the condition of the hoses and their mounts also.

Do not clean the dry air filter cartridge by washing it in liquid. Do not clean by any means the safety cartridge located inside the filter cartridge, change it for a new one if it is dirty or damaged.

B2 - RADIATOR CORE

CLEAN

In a polluting atmosphere, clean the radiator core every day. Do not use a water jet or high-pressure steam as this could damage the radiator fins.

- Open the I.C. engine bonnet.
- In order to prevent the radiator becoming clogged, clean the radiator with a compressed air jet directed from inside to outside. This is the only way to clean the core of debris.
- If necessary, clean the suction grid on the engine bonnet.

B3 - CONDENSER CORE (OPTION AIR CONDITIONING)

CLEAN

MLT 523 Turbo Série B-E2
MLT 523 Turbo MONO-ULTRA Série B-E2

In a polluting atmosphere, clean the radiator core every day. Do not use a water jet or high-pressure steam as this could damage the radiator fins.

- Open the I.C. engine bonnet.
- Loosen the knurled screw 1 (fig. B3/1) and swing round the filter and condenser unit.
- Clean the core with a blast of compressed air aimed from the inside towards the outside (fig. B3/2). This is the only effective way of removing the impurities.

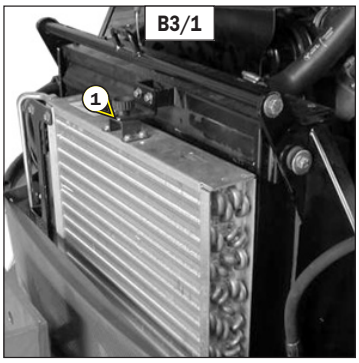

B3/1

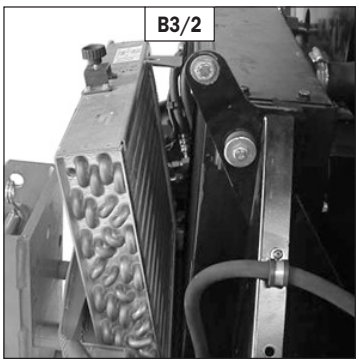
B3/2

B4 - JIB

GREASE

To be carried out weekly, if the lift truck has been operated for less than 50 hours during the week.

In the event of prolonged use in an extremely dusty or oxidising atmosphere, reduce this interval to 10 working hours or every day.

Clean and lubricate the following points with grease (see: 3 - MAINTENANCE: LUBRICANTS AND FUEL) and remove the surplus of grease.

1 - Lubricators of the jib axle (1 lubricator) (fig. B4/1).
2 - Lubricators of the carriage axle (2 lubricators) (fig. B4/2).
3 - Lubricator of the tilt cylinder foot axle (1 lubricator) (fig. B4/3).
4 - Lubricator of the tilt cylinder head axle (1 lubricator) (fig. B4/4).
5 - Lubricators of the carriage connecting rod axle (2 lubricators) (fig. B4/5).
6 - Lubricator of the lifting cylinder foot axle (1 lubricator) (fig. B4/6).
7 - Lubricator of the lifting cylinder head axle (1 lubricator) (fig. B4/7).
8 - Lubricator of the compensation cylinder foot axle (1 lubricator) (fig. B4/6).
9 - Lubricator of the compensation cylinder head axle (1 lubricator) (fig. B4/8).

B4/1

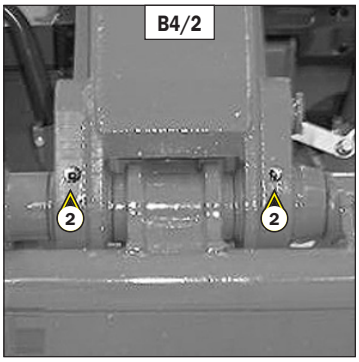

B4/2

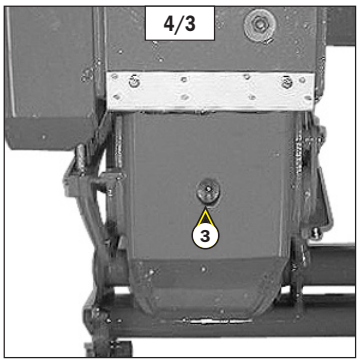

4/3

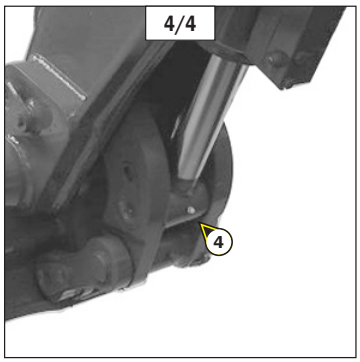

4/4

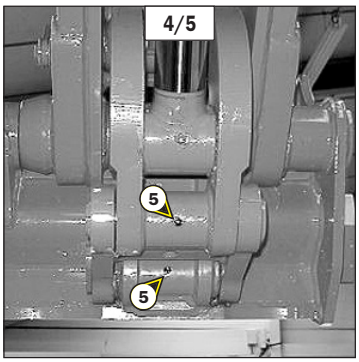

4/5

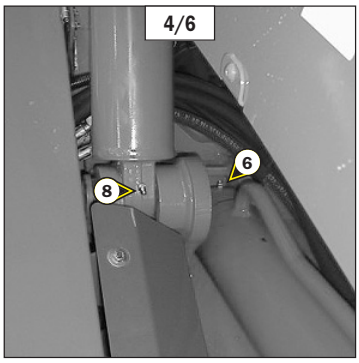

4/6

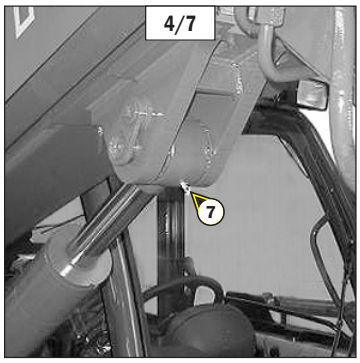

4/7

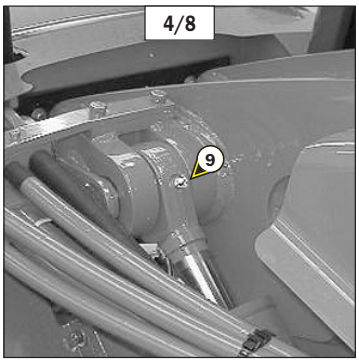

4/8

B5 - HYDRAULIC OIL LEVEL

CHECK

Place the lift truck on level ground with the I.C. engine stopped, and the jib retracted and lowered as far as possible.

- Refer to gauge 1 (fig. B5/1).
- The oil level is correct when it is at the level of the red point.
- If necessary, add oil (see: 3 - MAINTENANCE: LUBRICANTS AND FUEL).
- Open the side bonnet.
- Remove cap 2 (fig. B5/2).
- Add oil by filler port 3 (fig. B5/2).

Use a clean funnel and clean the underside of the oil drum before filling.

- Put the cap back.
- Check visually that there is no leakage in the tank and pipes.

Always maintain the oil level at maximum as cooling depends on the oil flowing through the tank.

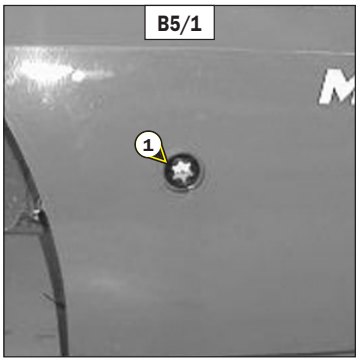

B5/1

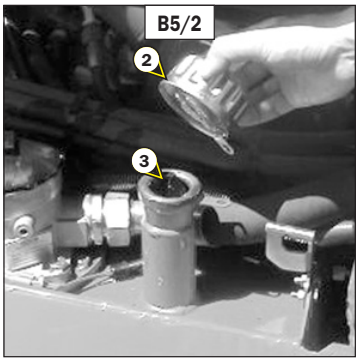

B5/2

B6 - BRAKE OIL LEVEL

CHECK

Place the lift truck on level ground.

- Loosen screw 1 (fig. B6/1) and remove the access panel for braking oil tank and windscreen washer tank 2 (fig. B6/1).
- The level is correct when it is at the MAXI level on the tank.
- If necessary, add oil (see: 3 - MAINTENANCE: LUBRICANTS AND FUEL) by the filler port 3 (fig. B6/2).
- Check visually that there is no leakage in the tank and pipes.

If the braking oil level is abnormally low, consult your dealer.

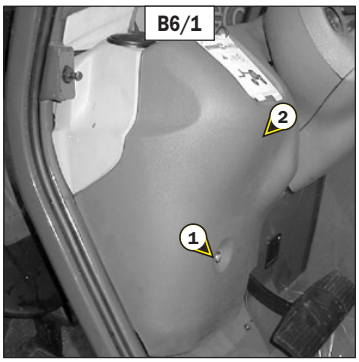

B6/1

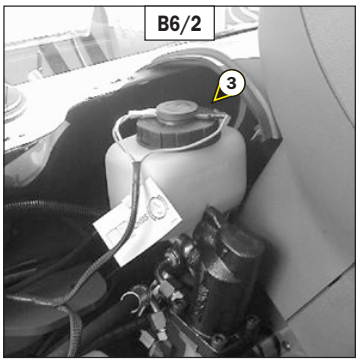

B6/2

B7 - WINDSCREEN WASHER LIQUID LEVEL

CHECK

- Loosen screw 1 (fig. B7/1) and remove the access panel for braking oil tank and windscreen washer tank 2 (fig. B7/1).
- Check visually the level.
- If necessary add windscreen washer liquid (see: 3 - MAINTENANCE: LUBRICANTS AND FUEL) by filler port 3 (fig. B7/2).

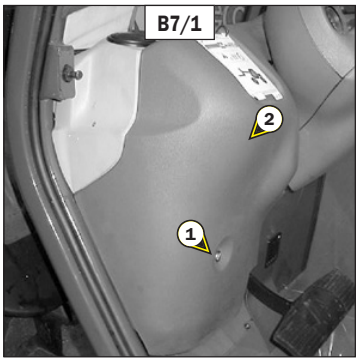

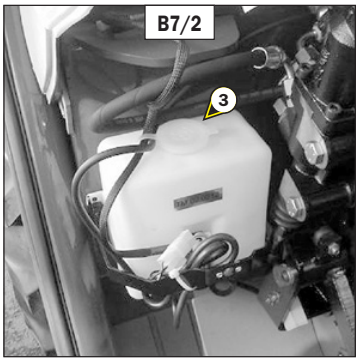

B8 - CAB DOOR

GREASE

STANDARD **MLT 523 Turbo Série B-E2**
MLT 523 Turbo MONO-ULTRA Série B-E2

OPTION **MT 523 Série B-E2**
MT 523 Série MONO-ULTRA B-E2
MT 620 Série B-E2

Clean and lubricate the points 1 (4 lubricators) (fig. B8) with grease (see: 3 - MAINTENANCE: LUBRICANTS AND FUEL) and remove the surplus of grease.

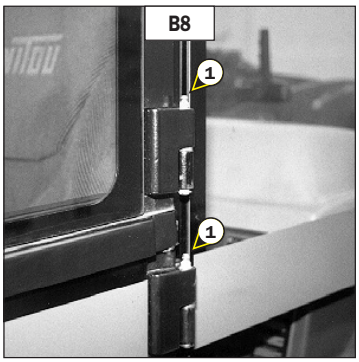

B9 - CAB VENTILATION FILTER (OPTION AIR CONDITIONING)

CLEAN

MLT 523 Turbo Série B-E2
MLT 523 Turbo MONO-ULTRA Série B-E2

- Lift up protective casing 1 (fig. B9).
- Lift out cabin ventilation filter 2 (fig. B9).
- Clean the filter with a compressed air jet.
- Check its condition and change if necessary (see: 3 - MAINTENANCE: FILTERS CARTRIDGES AND BELTS).
- Refit the filter and protective casing.

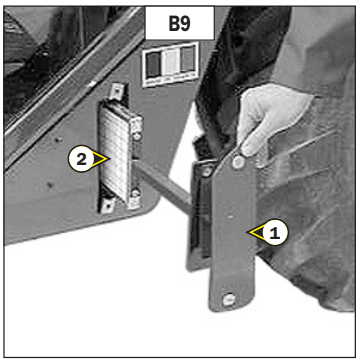

B10 - BATTERY ELECTROLYTE LEVEL

CHECK

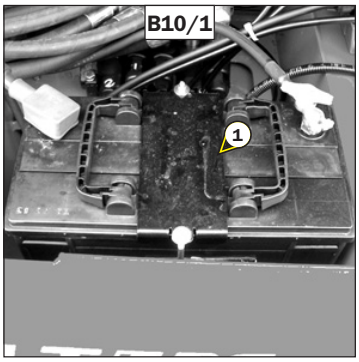

Check the electrolyte level in each cell of the battery.
If the lift truck is working in a high temperature environment, check the level more frequently than every 50 hours service.

- Open the side bonnet.
- Disassemble the fastening plate 1 (fig. B10/1).
- Remove caps 2 (fig. B10/2) from each cell of the battery.
- The level is correct when it is 1,5 cm above the top of the plates in the battery.
- If necessary, top up the cells with clean distilled water that has been stored in a glass container.
- Clean and dry caps 2 (fig. B10/2) and refit in place and screw in firmly.
- Check the terminal connections and lightly smear them with petroleum jelly to prevent the formation of verdigris.
- Reassemble the fastening plate 1 (fig. B10/1).

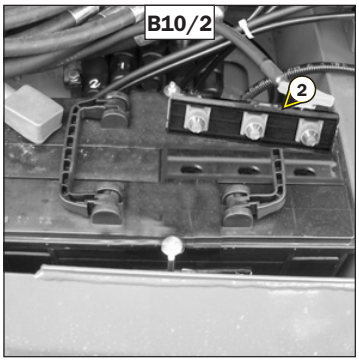

Handling and servicing a battery can be dangerous, take the following precautions:
- Wear protective goggles.
- Keep the battery horizontal.
- Never smoke or work near a naked flame.
- Work in a well-ventilated area.
- In the event of electrolyte being spilled onto the skin or splashed in the eyes, rinse thoroughly with cold water for 15 minutes and call a doctor.

B11 - FRONT AND REAR WHEELS REDUCERS PIVOTS

GREASE

Clean and lubricate the points 1 (8 lubricators) (fig. B11) with grease (see: 3 - MAINTENANCE: LUBRICANTS AND FUEL) and remove the surplus of grease.

B12 - REAR AXLE OSCILLATION

GREASE

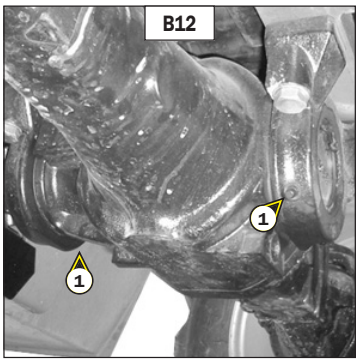

Clean and lubricate the points 1 (2 lubricators) (fig. B12) with grease (see: 3 - MAINTENANCE: LUBRICANTS AND FUEL) and remove the surplus of grease.

B13 - TRANSMISSION UNIVERSAL JOINT

GREASE

Clean and lubricate the following points with grease (see: 3 - MAINTENANCE: LUBRICANTS AND FUEL) and remove the surplus of grease.

- Remove access panel 1 (fig. B13/1).
  - 3 - Lubricators of the universal joint Front axle (fig. B13/2) / Rear axle (fig. B13/3) (3 lubricators).

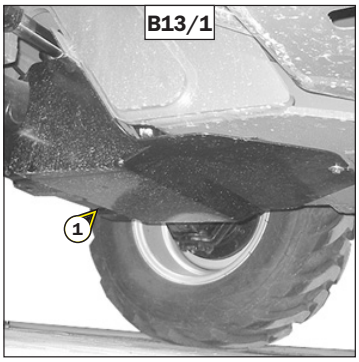

B13/1

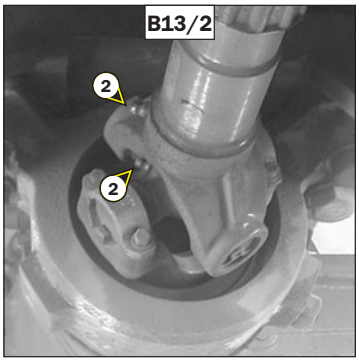

B13/2

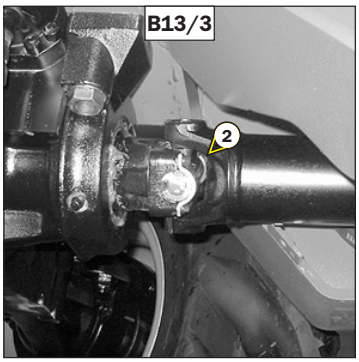

B13/3

C - EVERY 250 HOURS SERVICE

Carry out the operations described previously as well as the following operations.

C1 - ALTERNATOR/CRANKSHAFT BELT TENSION

CHECK - ADJUST

- Open the I.C. engine bonnet.
- Unscrew the fastening screws 1 (fig. C1/1).
- Lay down the protective guard 2 (fig. C1/1).
- Check the belt for signs of wear and cracks and change if necessary (see: 3 - MAINTENANCE: FILTERS CARTRIDGES AND BELTS).
- Check the belt tension between the pulleys of the crankshaft and of the alternator.
- Under a normal pressure exerted with the thumb (45 N), the tension should be approximately 10 mm.
- Carry out adjustments if necessary.
- Untighten screws 3 (fig. C1/2) with two to three thread turns.
- Swivel the alternator assembly so as to obtain the belt tension required.
- Retighten screws 3 (fig. C1/2) (tightening torque 22 N.m).
- Put the protective guard back 2 (fig. C1/1).

If the alternator belt has to be changed, check the tension again after the first 20 hours of operation.

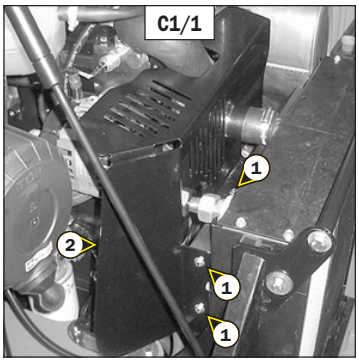

C1/1

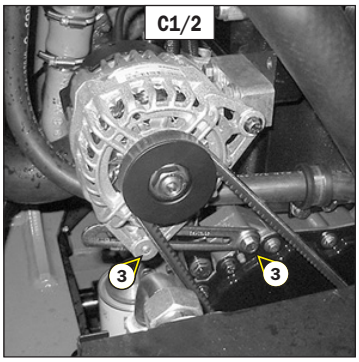

C1/2

C2 - COMPRESSOR BELT TENSION (OPTION AIR CONDITIONING)

CHECK - ADJUST

MLT 523 Turbo Série B-E2
MLT 523 Turbo MONO-ULTRA Série B-E2

- Open the I.C. engine bonnet.
- Unscrew the fastening screws 1 (fig. C2/1).
- Lay down the protective guard 2 (fig. C2/1).
- Check the belts for signs of wear and cracks and change if necessary (see: 3 - MAINTENANCE: FILTERS CARTRIDGES AND BELTS).

FAN/COMPRESSOR BELT
- Check the belt tension between the pulleys of the fan and the compressor.
- Under a normal pressure exerted with the thumb (45 N), the tension should be approximately 10 mm.
- Carry out adjustments if necessary.
- Unscrew the screws 3 (fig. C2/2) and the lock-nut 4 (fig. C2/2) by two to three turns.
- Tighten the screw 5 (fig. C2/2) so as to obtain the required belt tension.
- Retighten lock nut 4 (fig. C2/2).
- Retighten screws 3 (fig. C2/2).

COMPRESSOR/ALTERNATOR BELT.
- Check the belt tension between the pulleys of the compressor and the alternator.
- Under a normal pressure exerted with the thumb (45 N), the tension should be approximately 10 mm.
- Carry out adjustments if necessary.
- Unscrew the nut 6 (fig. C2/2) and the lock-nut 7 (fig. C2/2) by two to three turns.
- Tighten the screw 8 (fig. C2/2) so as to obtain the required belt tension.
- Retighten the nut 6 (fig. C2/2) and the lock-nut 7 (fig. C2/2).
- Put the protective guard back 2 (fig. C2/1).

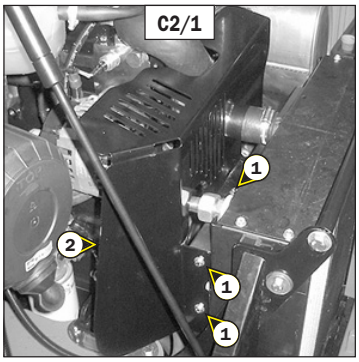

C2/1

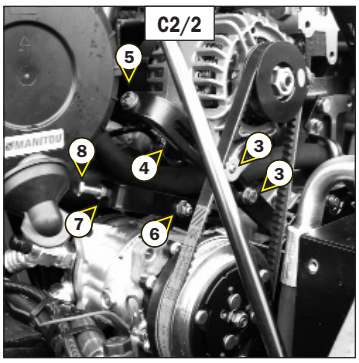

C2/2

If the compressor belt has to be changed, check the tension again after the first 20 hours of operation.

C3 - LEVEL OF THE TRANSFER BOX OIL

CHECK

Place the lift truck on level ground with the engine stopped.

- Remove access panel 1 (fig. C3/1).
- Remove level plug 2 (fig. C3/2). The oil should be flush with the edge of the filler port.
- If necessary, add oil (see: 3 - MAINTENANCE: LUBRICANTS AND FUEL) by the same filler port.
- Set back and tighten the level plug 3 (fig. C3/2) (tightening torque 34 to 49 N.m).

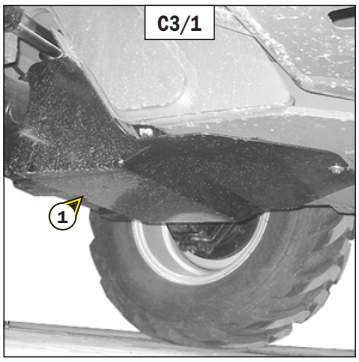

C3/1

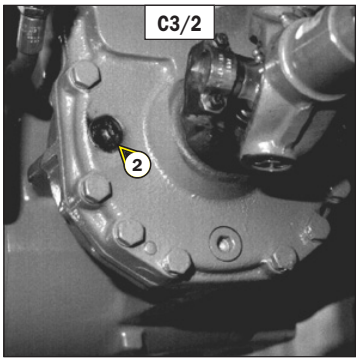

C3/2

C4 - PARKING BRAKE

CHECK - ADJUST

Place the lift truck on a slope less than 15 % with the rated load in the transport position.
- Check the tightening adjustment by locking the parking brake in position A (fig. C4/1).
- The adjustment is correct when the lift truck is held stationary on a slope.
- Carry out adjustments if necessary.

Adjustment of the parking brake cable on the front axle
- Press and release the brake pedal, then release the parking brake, putting it in position B (fig. C4/1).
- Remove the cover plate 1 (fig. C4/2).
- Unscrew nut 2 and screws 3 (fig. C4/3).
- Adjust the cable by untightening screw 4 (fig. C4/3), until a clearance of 1.5 mm between cams 5 (fig. C4/4) and stops 6 (fig. C4/4) is obtained.

The adjustment of the stops performed by the manufacturer must not be modified under any circumstances.

ADJUSTMENT OF THE PARKING BRAKE
- Leave the parking brake in position B (fig. C4/1).
- Progressively tighten the end piece of the lever 7 (fig. C4/1) and recheck braking.
- Repeat the operation until the correct braking adjustment is obtained.

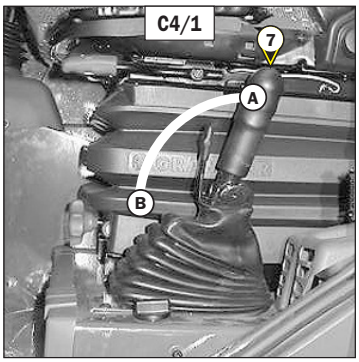

C4/1

C4/2

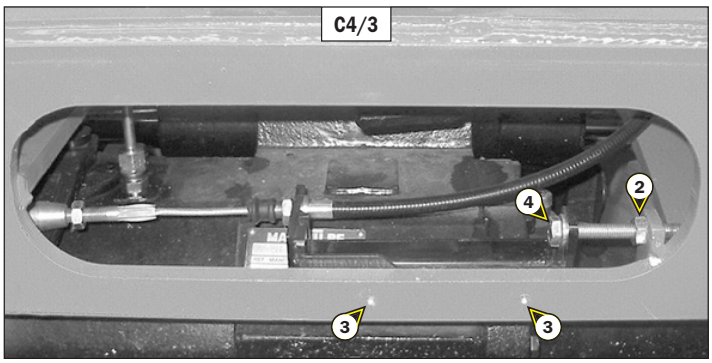

C4/3

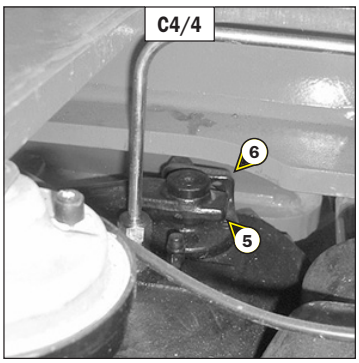

C4/4

C5 - CAB VENTILATION FILTER (OPTION AIR CONDITIONING)

CHANGE

MLT 523 Turbo Série B-E2
MLT 523 Turbo MONO-ULTRA Série B-E2

- Lift up protective casing 1 (fig. C5).
- Lift out cabin ventilation filter 2 (fig. C5) and fit new replacement filter (see: 3 - MAINTENANCE: FILTERS CARTRIDGES AND BELTS).
- Refit the protective casing.

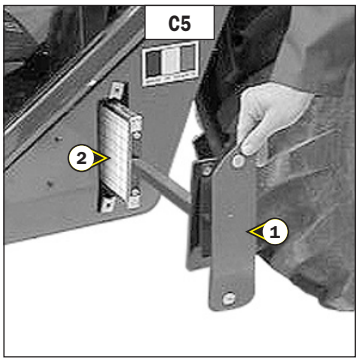

C6 - FRONT AND REAR AXLE DIFFERENTIAL OIL LEVEL

CHECK

Place the lift truck on level ground with the I.C. engine stopped.

- Remove level plug 1 (fig. C6). The oil should be flush with the edge of the hole.
- If necessary, add oil (see: 3 - MAINTENANCE: LUBRICANTS AND FUEL) by the same filler port.
- Replace and tighten the level plug 1 (fig. C6) (tightening torque 34 to 49 N.m).
- Repeat this operation for the rear axle differential.

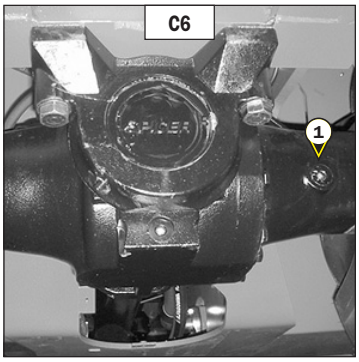

C7 - FRONT AND REAR WHEELS REDUCERS OIL LEVEL

CHECK

Place the lift truck on level ground with the I.C. engine stopped.

- Check the level on each front wheel reducer.
- Place level plug 1 (fig. C7) in the horizontal position.
- Remove the level plug ; the oil should be flush with the edge of the hole.
- If necessary, add oil (see: 3 - MAINTENANCE: LUBRICANTS AND FUEL) by the same hole.
- Replace and tighten the level plug 1 (fig. C7) (tightening torque 34 to 49 N.m).
- Repeat the same operation on each rear wheel reducer.

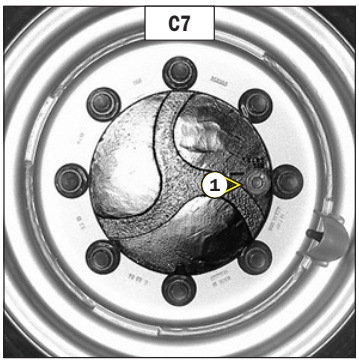

https://truckmanualshub.com/
Torkonjestraat 23
8510 Marke
België
056 / 222 111
info@dumarent.be
www.dumarent.be

D - EVERY 500 HOURS SERVICE

Carry out the operations described previously as well as the following operations.

D1 - I.C. ENGINE OIL

DRAIN

D2 - I.C. ENGINE OIL FILTER

CHANGE

Place the lift truck on level ground, let the I.C. engine run at idle for a few minutes, then stop the I.C. engine.

DRAINING THE OIL
- Open the I.C. engine bonnet.
- Remove access panel 1 (fig. D1/1).
- Place a container under drain plug 2 (fig. D1/2) and unscrew the plug.
- Take drain hose 3 (fig. D1/3).
- Screw fully the union on draining port 4 (fig. D1/4).
- Remove filler cap 5 (fig. D1/5) in order to ensure that the oil is drained properly.

Dispose of the drain oil in an ecological manner.

REPLACEMENT OF THE FILTER
- Remove I.C. engine oil filter 6 (fig. D1/2) ; discard the filter and the filter seal.
- Clean the filter bracket with a clean, lint-free cloth.
- Lightly grease the new oil filter seal and refit the oil filter (see: 3 - MAINTENANCE: FILTERS CARTRIDGES AND BELTS) on the filter bracket.

Tighten the oil filter by hand pressure only and lock the filter in place by a quarter turn.

FILLING UP THE OIL
- Loosen, clean and put back in place the drain hose 3 (fig. D1/3).
- Refit and tighten drain plug 2 (fig. D1/2).
- Refit access panel 1 (fig. D1/1).
- Fill up with oil (see: 3 - MAINTENANCE: LUBRICANTS AND FUEL) by filler port 7 (fig. D1/5).
- Wait a few minutes to allow the oil to flow into the sump.
- Start the I.C. engine and let it run for a few minutes.
- Check for possible leaks at the drain plug and the oil filter.
- Stop the I.C. engine, wait a few minutes and check the level between the two notches on dipstick 8 (fig. D1/2).
- Top up the level if necessary.

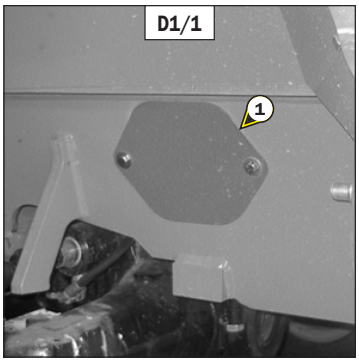

D1/1

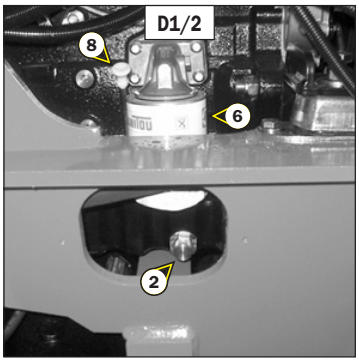

D1/2

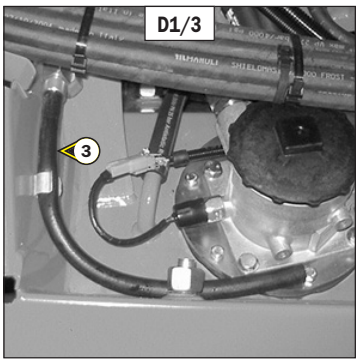

D1/3

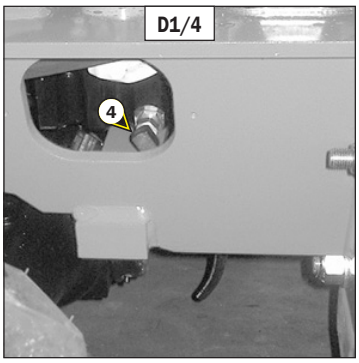

D1/4

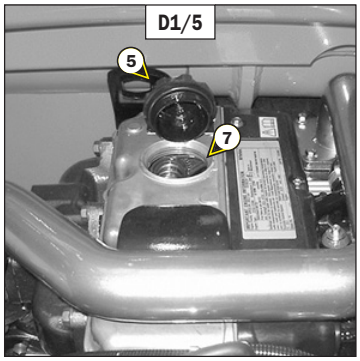

D1/5

D3 - DRY AIR FILTER CARTRIDGE

CHANGE

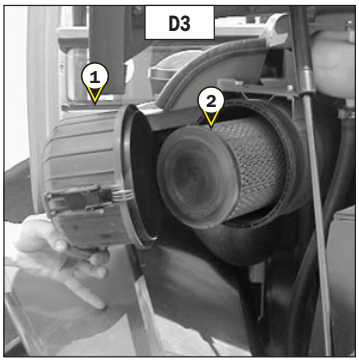

In case of use in a heavily dust laden atmosphere, there are pre-filtration cartridges, see: 3 - MAINTENANCE: FILTERS CARTRIDGES AND BELTS. Also, the checking and cleaning periodicity of the cartridge must be reduced (up to 250 hours in a heavily laden dust atmosphere and with pre-filtration).

Change the cartridge in a clean location, with the I.C. engine stopped. Never run the I.C. engine with the air filter removed or damaged.

- Open the I.C. engine bonnet.
- Loosen the bolts and remove cover 1 (fig. D3).
- Gently remove the cartridge 2 (fig. D3), taking care to avoid spilling the dust.
- Leave the safety cartridge in place.
- The following parts must be cleaned with a damp, clean lint-free cloth.
    - The inside of the filter and cover.
    - The inside of the filter inlet hose.
    - The gasket surfaces in the filter and in the cover.
- Check pipes and connections between the air filter and the I.C. engine and the connection and state of the clogging indicator on the filter.
- Before mounting check the state of the new cartridge (see: 3 - MAINTENANCE: FILTERS CARTRIDGES AND BELTS).
- Introduce the cartridge into the filter axis and push it in, pressing the edges and not the middle.
- Reassemble the cover, guiding the valve downwards.

D4 - FUEL FILTER CARTRIDGE

CHANGE

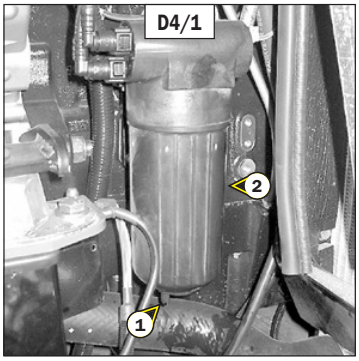

Make sure the electrical contact on the lift truck is cut, otherwise fuel will be released if the lift pump is on.

- Open the I.C. engine bonnet.
- Open battery cowl.
- Carefully clean the outside of the filter and its holder, to prevent dust from getting into the system.
- Place a container under the filter and drain it via drain plug 1 (fig. D4/1).
- Loosen the body of filter 2 (fig. D4/1).
- Remove the filter cartridge by pressing the cartridge 3 (fig. D4/2) down against the pressure of the spring and turn it to the left to extract it.
- Insert a new cartridge (see: 3 - MAINTENANCE: FILTERS CARTRIDGES AND BELTS), by pressing the cartridge 3 (fig. D4/2) down against the pressure of the spring and turn it to the right to lock it into the body of the filter.
- Place the new seal 4 (fig. D4/2) onto the body of the filter and lubricate the contact surface using clean engine oil.
- Remount the body of the filter onto its holder, hand-tighten it only and lock it with a quarter-turn.
- Close drain plug 1 (fig. D4/1) and remove the container.
- Before starting the I.C. engine, leave the ignition on for three minutes on the lift truck, to give the lift pump time to release air from the filter.
- Start up the I.C. engine and make sure there is no leakage.
- If necessary, bleed the fuel circuit (see: 3 - MAINTENANCE: G1 - FUEL SYSTEM).

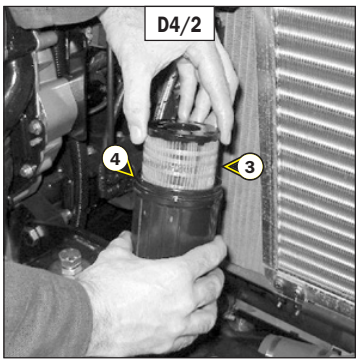

D5 - HYDRAULIC RETURN OIL FILTER CARTRIDGE

CHANGE

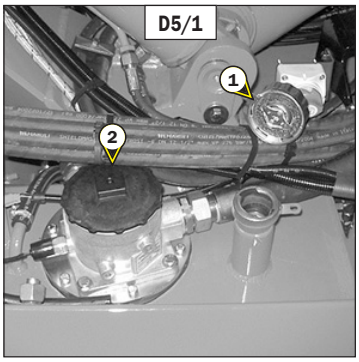

Stop the I.C. engine and remove the pressure from the circuits by acting on the hydraulic controls.

Thoroughly clean the outside of the filter and its surroundings before any intervention in order to prevent any risk of polluting the hydraulic circuit.

- Open the side bonnet.
- Remove cap 1 (fig. D5/1) andunscrew the cover 2 (fig. D5/1) two or three turns
- Wait a few moments while the oil flows into the tank.
- Remove the cover and take out the filter cartridge assembly 3 (fig. D5/2).
- Place the assembly in a clean container and empty the bowl.
- Remove the bowl 4 and the top 5 of the filter cartridge 6 (fig. D5/3) by a movement of rotation.
- Refit the bowl and the top onto a new cartridge (see: 3 - MAINTENANCE: FILTER ELEMENTS AND BELTS).
- Fit the assembly in place and retighten the cover 2 (fig D5/1).
- Put the cap back 1 (fig. D5/1).

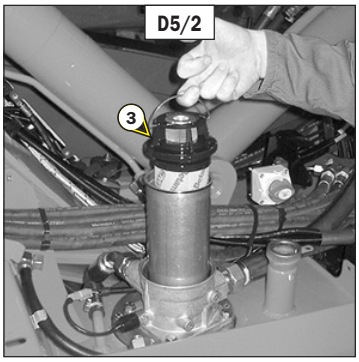

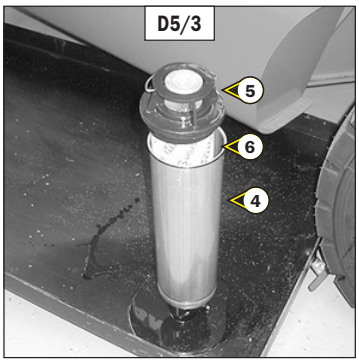

D6 - BALANCING VALVE

CHECK

To be performed after the first 50 hours of operation and then every 500 hours.
Stop the lift truck on horizontal ground, put the handbrake on and set the reverse gear to neutral.

ROLE OF BALANCING VALVES

- The balancing valves protect the user from any risk due to a fall in hydraulic pressure or an exploding hose during hydraulic operations.

Keep everyone well away during these inspections.
In all cases, the balancing valve(s) concerned must be repaired or replaced if hydraulic movement continues after the I.C. engine has been switched off.
Never use the lift truck with a defective balancing valve.

TESTING EACH HYDRAULIC MOVEMENT

LIFTING CIRCUIT:
- Start up the lift truck and raise the jib by about 45°.
- With the I.C. engine running at mid- speed, lower the jib. While the jib is being lowered, switch off the I.C. engine; movement should slow down as the I.C. engine speed falls and stop when the I.C. engine stops.

TELESCOPING CIRCUIT:
- Start up the lift truck and raise the jib as far as it will go, extending the telescope(s) completely.
- With the I.C. engine running at mid- speed, retract the telescope(s). When retracting the jib, switch off the I.C. engine; movement should slow down as the I.C. engine speed falls and stop when the I.C. engine stops.

TILT CIRCUIT:
- Place the nominal load on the forks, anchor it correctly to prevent it from falling off during the test.
- Start up the lift truck and tilt the carriage backwards, lifting the jib sufficiently to allow the carriage to tilt.
- With the I.C. engine running at mid-speed, tilt the carriage forwards. While it is tilting, switch off the I.C. engine; movement should slow down as the I.C. engine speed falls and stop when the I.C. engine stops.

D7 - PARKING BRAKE LEVER MECHANISM

GREASE

- Clean and grease articulation axles 1 (fig. D7) with grease (see: 3 - MAINTENANCE: LUBRICANTS AND FUEL).

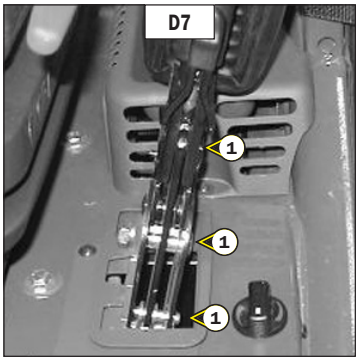

D8 - CAB VENTILATION FILTER

CLEAN

MLT 523 Turbo Série B-E2
MLT 523 Turbo MONO-ULTRA Série B-E2

- Lift up protective casing 1 (fig. D8).
- Lift out cabin ventilation filter 2 (fig. D8).
- Clean the filter with a compressed air jet.
- Check its condition and change if necessary (see: 3 - MAINTENANCE: FILTERS CARTRIDGES AND BELTS).
- Refit the filter and protective casing.

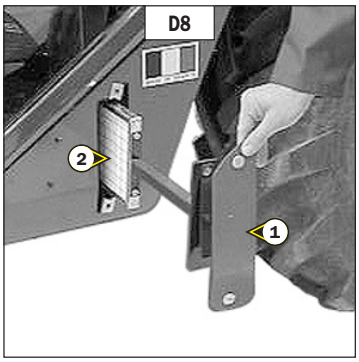

D9 - BATTERY ELECTROLYTE DENSITY

CHECK

The electrolyte density varies depending on the temperature concerned, but a minimum of 1260 at 16°C must be maintained. In the shaded area (fig. D9), the battery is in a normal charge condition. Readings above this zone indicate that the battery needs to be recharged.
The density should not vary more than 0.025 units between cells.

- Check the electrolyte density in each battery cell using a hydrometer.
- Do not carry out this check immediately after topping up with distilled water. Recharge the battery for at least an hour before checking the battery electrolyte density.

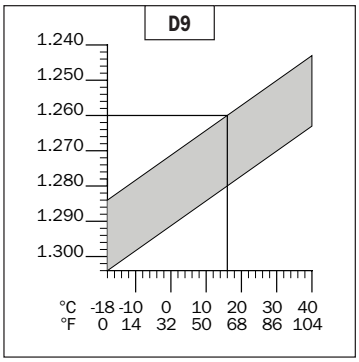

Handling and servicing a battery can be dangerous, take the following precautions:
- ***Wear protective goggles.***
- ***Keep the battery horizontal.***
- ***Never smoke or work near a naked flame.***
- ***Work in a well-ventilated area.***
- ***In the event of electrolyte being spilled onto the skin or splashed in the eyes, rinse thoroughly with cold water for 15 minutes and call a doctor.***

D10 - TRANSFER BOX OIL

DRAIN

Place the lift truck on level ground with the engine stopped and the transfer box oil still warm.

Dispose the drain oil in an ecological manner.

- Remove access panel 1 (fig. D10/1).
- Place a container under drain plug 2 (fig. D10/2) and unscrew the plug.
- Remove level and filler cap 3 (fig. D10/2) in order to ensure that the oil is drained properly.
- Refit and tighten drain plug 2 (fig. D10/2) (tightening torque 34 to 49 N.m).
- Fill up with oil (see: 3 - MAINTENANCE: LUBRICANTS AND FUEL) by filler port 3 (fig. D10/2).
- The level is correct when the oil is flush with the edge of the hole.
- Check for any possible leaks at the drain plug.
- Refit and tighten level and filler cap 3 (fig. D10/2) (tightening torque 34 to 49 N.m).

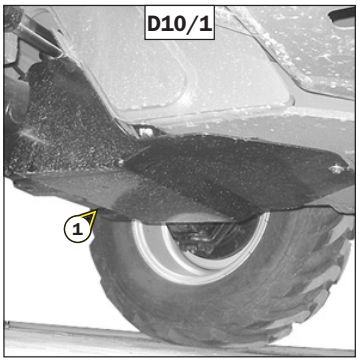

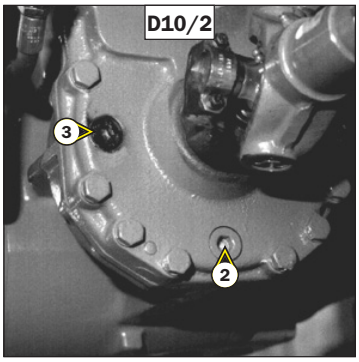

D11 - FRONT AND REAR AXLE DIFFERENTIAL OIL

DRAIN

Place the lift truck on level ground with the I.C. engine stopped and the differential oil still warm.

Dispose the drain oil in an ecological manner.

- Place a container under drain plug 1 (fig. D11) and unscrew the plug.
- Remove level and filler cap 2 (fig. D11) in order to ensure that the oil is drained properly.
- Refit and tighten drain plug 1 (fig. D11) (tightening torque 34 to 49 N.m).
- Fill up with oil (see: 3 - MAINTENANCE: LUBRICANTS AND FUEL) by filler port 2 (fig. D11).
- The level is correct when the oil is flush with the edge of the hole.
- Check for any possible leaks at the drain plug.
- Refit and tighten level and filler cap 2 (fig. D11) (tightening torque 34 to 49 N.m).
- Repeat this operation for the rear axle differential.

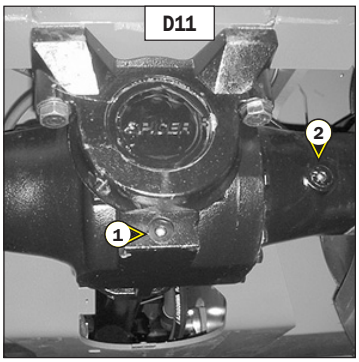

E - EVERY 1000 HOURS SERVICE

Carry out the operations described previously as well as the following operations.

E1 - FUEL TANK

CLEAN

While carrying out these operations, do not smoke or work near a flame.

Place the lift truck on level ground with the I.C. engine stopped.

- Inspect the parts susceptible to leaks in the fuel circuit and in the tank.
- In the event of a leak, contact your dealer.

Never try to carry out a weld or any other operation by yourself, this could provoke an explosion or a fire.

- Place a container under drain plug 1 (fig. E1/1) and unscrew the plug.
- Open the side bonnet.
- Remove cap 2 (fig. E1/2).
- Let the fuel flow and clean with 10 litres of clean fuel by filler port 3 (fig. E1/2).
- Refit and tighten drain plug 1 (fig. E1/1) (tightening torque 29 to 39 N.m).
- Fill the fuel tank with clean fuel (see: 3 - MAINTENANCE: LUBRICANTS AND FUEL) filtered through a strainer or a clean, lint-free cloth and refit the filler plug 2 (fig. E1/2).
- Bleed the fuel system if necessary (see: 3 - MAINTENANCE: G1 - FUEL SYSTEM).

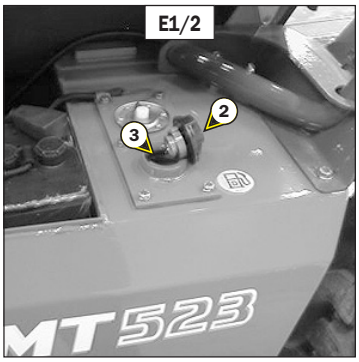

E2 - SAFETY DRY AIR FILTER CARTRIDGE

CHANGE

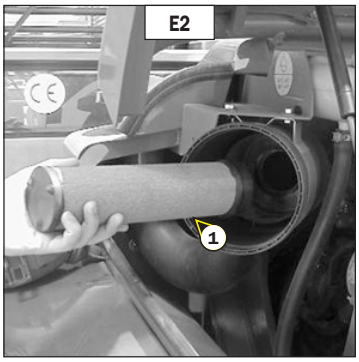

- For the disassembly and reassembly of the cartridge, see: 3 - MAINTENANCE: D3 - DRY AIR FILTER CARTRIDGE.
- Gently remove the dry air filter safety cartridge 1 (fig. E2), taking care to avoid spilling the dust.
- Clean the gasket surface on the filter with a damp, clean lint-free cloth.
- Before mounting check the state of the new safety cartridge (see: 3 - MAINTENANCE: FILTERS CARTRIDGES AND BELTS).
- Introduce the cartridge into the filter axis and push it in, pressing the edges and not the middle.

NOTE: The periodicity for changing the safety cartridge is given for information only. The safety cartridge must be changed for every two changes of the air filter cartridge.

E3 - HYDRAULIC OIL

DRAIN

E4 - SUCTION STRAINER FOR HYDRAULIC OIL TANK

CLEAN

E5 - FILTER CAP FOR HYDRAULIC OIL TANK

CHANGE

Place the lift truck on level ground with the I.C. engine stopped and telescope jib retracted and lowered as far as possible.

Before any intervention, thoroughly clean the area surrounding the drain plugs and the suction cover on the hydraulic tank.

DRAINING THE OIL

- Place a container under drain plug 1 (fig. E3/1) and unscrew the plug.
- Open the side bonnet.
- Remove filler cap 2 (fig. E3/2) in order to ensure that the oil is drained properly.

Dispose the drain oil in an ecological manner.

CLEANING THE STRAINER

- Remove the inspection panel 3 (fig. E3/3).
- Remove and clean the strainer using a compressed air jet, check its condition and replace if necessary (see: 3 - MAINTENANCE: FILTERS CARTRIDGES AND BELTS).
- Refit the strainer and tighten the inspection panel 3 (fig. E3/3) making sure the seal is in the correct position.

FILLING UP THE OIL

- Clean and refit drain plug 1 (fig. E3/1) (tightening torque 29 to 39 N.m).
- Fill up with oil (see: 3 - MAINTENANCE: LUBRICANTS AND FUEL) by filler port 4 (fig. E3/2).

Use a clean container and funnel and clean the underside of the oil drum before filling.

- Observe the oil level on dipstick 5 (fig. E3/4) ; the oil level should be at the level of the red point.
- Check for any possible leaks at the drain plug.
- Replace filler plug 2 (fig. E3/2) with a new filler plug (see: 3 - MAINTENANCE: FILTERS CARTRIDGES AND BELTS).
- Close the side bonnet.

POLLUTION ABATEMENT OF THE HYDRAULIC CIRCUIT

- Let the I.C. engine run (accelerator pedal at halfway travel) for 5 minutes without using anything on the lift truck, then for 5 more minutes while using completely the hydraulic movements (except the steering system).
- Accelerate the I.C. engine at full speed for 1 minute, then activate the steering system.
- This operation makes a pollution abatement of the circuit possible through the hydraulic return oil filter.

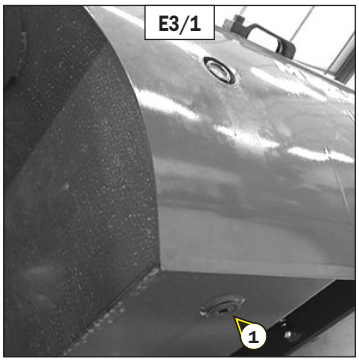

E3/1

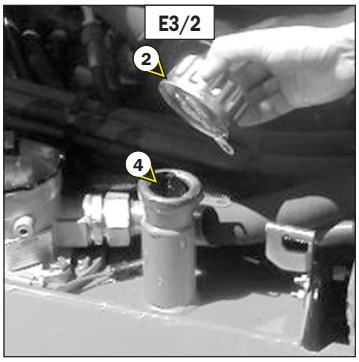

E3/2

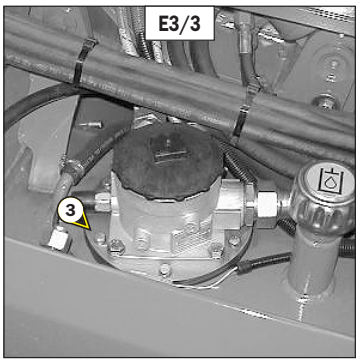

E3/3

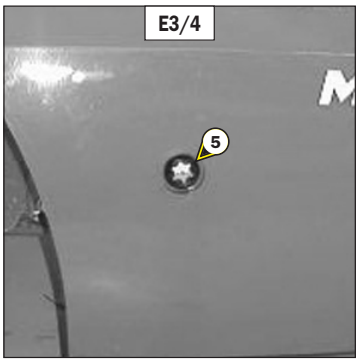

E3/4

E6 - SEAT BELT

CHECK

SEAT BELT WITH TWO ANCHORING POINTS
- Check the following points:
  - Fixing of the anchoring points on the seat.
  - Cleanness of the strap and the locking mechanism.
  - Triggering of the locking mechanism.
  - Condition of the strap (cuts, curled edges).

REELED SEAT BELT WITH TWO ANCHORING POINTS
- Check the points listed above together with the following points:
  - The correct winding of the belt.
  - Condition of the reel guards.
  - Roller locking mechanism when the strap is given a sharp tug.

NOTE: After an accident, replace the seat belt.

Under no circumstances should you use the lift truck if the seat belt is faulty (fixing, locking, it has cuts or tears, etc). Repair or replace the seat belt immediately.

E7 - FRONT AND REAR WHEELS REDUCERS OIL

DRAIN

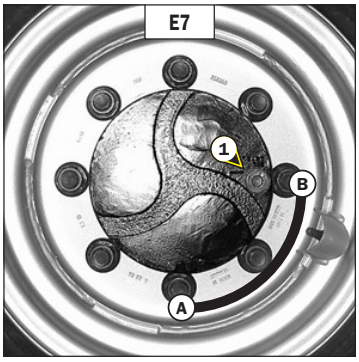

Place the lift truck on level ground with the I.C. engine stopped and the reducers oil still warm.

Dispose the drain oil in an ecological manner.

- Drain and change each front wheel reducer.
- Place drain plug 1 (fig. E7) in position A.
- Place a container under the drain plug and unscrew the plug.
- Let the oil drain fully.
- Place the drain port in position B, i.e. in a level port.
- Fill up with oil (see: 3 - MAINTENANCE: LUBRICANTS AND FUEL) by level port 1 (fig. E7).
- The level is correct when the oil level is flush with the edge of the hole.
- Refit and tighten the drain plug 1 (fig. E7) (tightening torque 34 to 49 N.m).
- Repeat this operation on each rear wheel reducer.

F - EVERY 2000 HOURS SERVICE

Carry out the operations described previously as well as the following operations.

F1 - COOLING LIQUID

DRAIN

These operations are to be carried out if necessary or every two years at the beginning of winter. Place the lift truck on level ground with the I.C. engine stopped and cold.

DRAINING THE LIQUID

- Open the I.C. engine bonnet.
- Place a container under drain plug 1 (fig. F1/1) of the radiator and drain plug 2 (fig. F1/2) of the I.C. engine block and unscrew the plugs.
- Remove filler cap 3 (fig. F1/3) of the expansion pan 4 (fig. F1/3).
- Let the cooling circuit drain entirely while ensuring that the ports do not get clogged.
- Check the condition of the hoses as well as the fastening devices and change the hoses if necessary.
- Rinse the circuit with clean water and use a cleaning agent if necessary.

FILLING THE LIQUID

- Retighten drain plug 1 (fig. F1/1) (tightening torque 20 N.m) and 3 (fig. F1/3) (tightening torque 40 N.m).
- Slowly fill up the cooling circuit (see: 3 - MAINTENANCE: LUBRICANTS AND FUEL) to half way up the expansion pan 5 (fig. F1/3) through filler port 5 (fig. F1/3).
- Put back filler cap 3 (fig. F1/3).
- Run the I.C. engine at idle for a few minutes.
- Check for any possible leaks.
- Check the level and refill if necessary.

The I.C. engine does not contain any corrosion resistor and must be filled during the whole year with a mixture containing 25 % of ethylene glycol-based antifreeze.

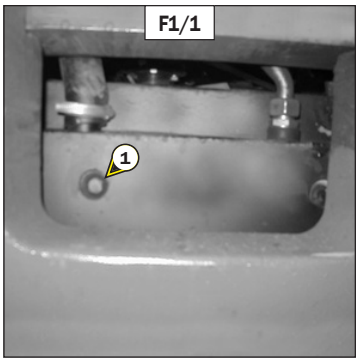

F1/1

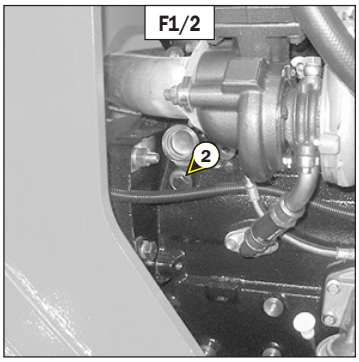

F1/2

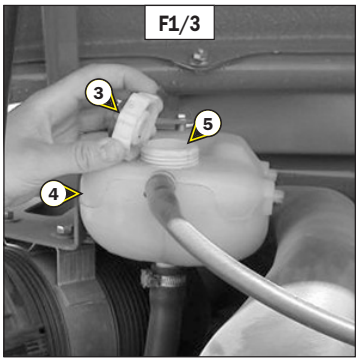

F1/3

https://truckmanualshub.com/
Torkonjestraat 23
8510 Marke
België
056 / 222 111
info@dumarent.be
www.dumarent.be

G - OCCASIONAL MAINTENANCE

G1 - FUEL SYSTEM

BLEED

These operations are to be carried out only in the following cases:

- A component of the fuel system replaced.
- A drained tank.
- Running out of fuel.

Ensure that the level of fuel in the tank is sufficient and bleed in the following order:

- Open the I.C. engine bonnet.
- Put the ignition on for three minutes on the lift truck, to give the lift pump time to release air from the filter.
- Switch off the ignition with the ignition key.

BLEEDING THE INJECTORS

- Remove the injectors cover 1 (fig. G1/1).
- Loosen high pressure connectors 2 (fig. G1/2) of all the injectors.
- Activate the starter until the diesel fuel flows out free of air at high pressure connectors 2 (fig. G1/2).

Do not engage the starter motor on a continual basis for more than 30 seconds and let it cool between unsuccessful attempts.

- Tighten the connection while the diesel fuel is flowing out (tightening torque 30 N.m).

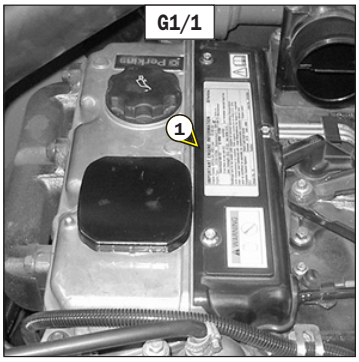

G1/1

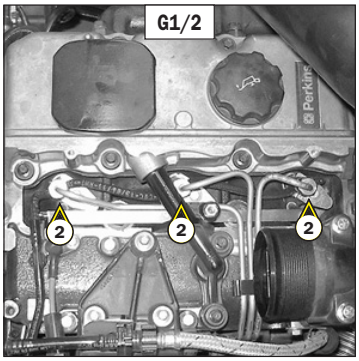

G1/2

- The I.C. engine is then ready to be started up.
- Turn the I.C. engine over slowly for 5 minutes immediately after bleeding the fuel feed circuit, in order to ensure that the injection pump has been bled thoroughly.

NOTE: If the I.C. engine functions correctly for a short time then stops or functions irregularly, check for possible leaks in the low pressure circuit. If in doubt, contact your dealer.

G2 - WHEEL

CHANGE

In the event of a wheel being changed on the public highway, make sure of the following points:

For this operation, we advise you to use the hydraulic jack MANITOU reference 505507 and the safety support MANITOU reference 554772.

- Stop the lift truck, if possible on even and hard ground.
- To pass on stop of lift truck (see: 1 - OPERATING AND SAFETY INSTRUCTIONS: DRIVING INSTRUCTIONS UNLADEN AND LADEN).
- Put the warning lights on.
- Immobilise the lift truck in both directions on the axle opposite to the wheel to be changed.
- Unlock the nuts of the wheel to be changed.
- Place the jack under the flared axle tube, as near as possible to the wheel and adjust the jack (fig. G2/1).
- Lift the wheel until it comes off the ground and put in place the safety support under the axle (fig. G2/2).
- Completely unscrew the wheel nuts and remove them.
- Free the wheel by reciprocating movements and roll it to the side.
- Slip the new wheel on the wheel hub.
- Refit the nuts by hand, if necessary grease them.
- Remove the safety support and lower the lift truck with the jack.
- Tighten the wheel nuts with a torque wrench (see: 3 - MAINTENANCE: A - DAILY OR EVERY 10 HOURS SERVICE for tightening torque).

G2/1

G2/2

G3 - LIFT TRUCK

TOW

The lift truck must be towed very slowly (less than 5 km/h) and for as short a distance as possible (less than 100 m).

- To tow a lift truck, the high pressure limiters 2 (fig. G3/2 and fig. G3/3) must be unlocked to avoid deteriorating the hydrostatic transmission.
- Raise the jib.
- Remove the inspection cover 1 (fig. G3/1).
- Untighten screws HC 3 (fig. G3/2 and fig. G3/3) by three turns.
- Put the warning lights on.
- Untighten the hand brake.
- After towing, proceed in the reverse order to lock the high pressure limiters.

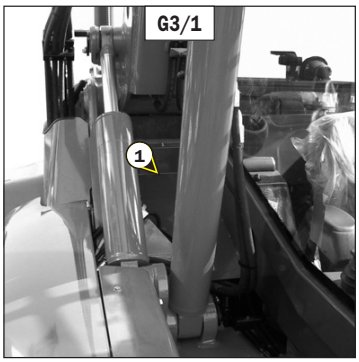

G3/1

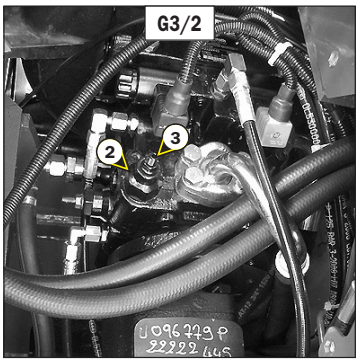

G3/2

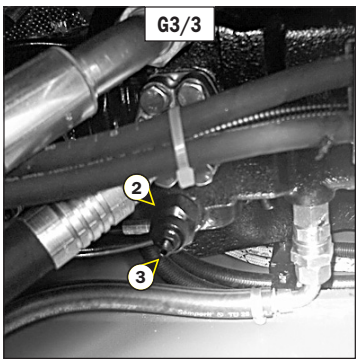

G3/3

G4 - LIFT TRUCK

SLING

- Take into account the position of the lift truck gravity center for lifting (Fig. G4/1).

A = 1170 mm	**B = 1050 mm**	**MT 523 Série B-E2**
A = 1170 mm	**B = 1050 mm**	**MT 523 MONO-ULTRA Série B-E2**
A = 1210 mm	**B = 1010 mm**	**MLT 523 Turbo Série B-E2**
A = 1210 mm	**B = 1010 mm**	**MLT 523 Turbo MONO-ULTRA Série B-E2**
A = 1523 mm	**B = 906 mm**	**MT 620 Série B-E2**

- Place the hooks in the fastening points provided (Fig. G4/2 and G4/3).

G4/1

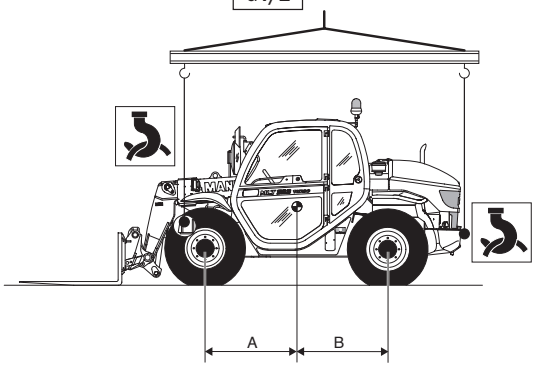

G4/2

G4/3

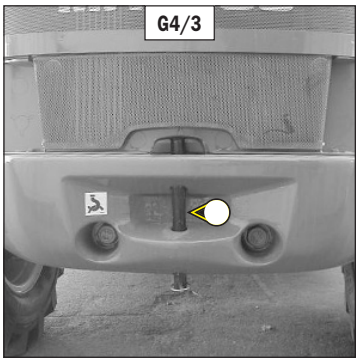

G5 - LIFT TRUCK ON A PLATFORM

TRANSPORT

Ensure that the safety instructions connected to the platform are respected before the loading of the lift truck and that the driver of the means of transport is informed about the dimensions and the weight of the lift truck (see: 2 - DESCRIPTION: CHARACTERISTICS).

Ensure that the platform has got dimensions and a load capacity sufficient for transporting the lift truck. Check also the pressure on the contact surface allowable for the platform in connection with the lift truck.

For lift trucks equipped with a turbo-charged I.C. engine, block off the exhaust outlet to avoid rotation of the turbo shaft without lubrication when transporting the vehicle.

G5/1

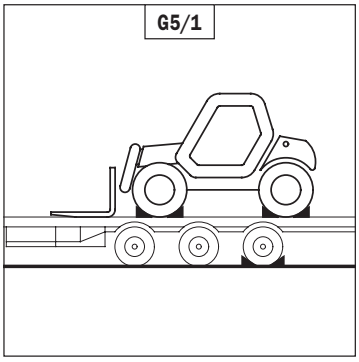

LOAD THE LIFT TRUCK

- Block the wheels of the platform.
- Fix the loading ramps so that you obtain an angle as little as possible to lift the lift truck.
- Load the lift truck parallel to the platform.
- Stop the lift truck (see: 1 - OPERATING AND SAFETY INSTRUCTIONS: DRIVING INSTRUCTIONS UNLADEN AND LADEN).

STOW THE LIFT TRUCK

- Fix the chocks to the platform at the front and at the back of each tyre (fig. G5/1).
- Fix also the chocks to the platform in the inside of each tyre (fig. G5/2).
- Stow the lift truck on the platform with enough resisting ropes. At the front of the lift truck, on the fastening points (fig. G5/3) and at the back, on the towing pin (fig. G5/4).
- Tighten the ropes (fig. G5/5).

G5/2

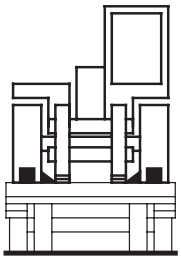

G4/2

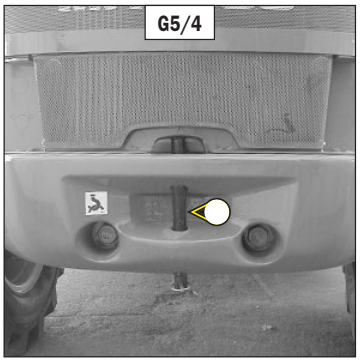
G5/4

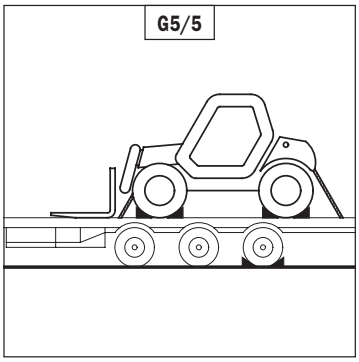
G5/5

G6 - FRONT HEADLAMPS

ADJUST

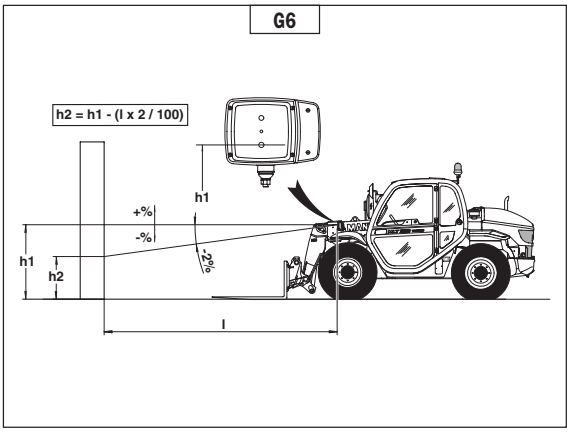

G6

RECOMMENDED SETTING
(as per standard ECE-76/756 76/761 ECE20)
Set to - 2% of the dipped beam in relation to the horizontal line of the headlamp.

ADJUSTING PROCEDURE
- Place the lift truck unloaded and in the transport position and perpendicular to a white wall on flat, level ground (fig. G6).
- Check the tyre pressures (see: 2 - DESCRIPTION: CHARACTERISTICS).
- Put the gear reverser lever in neutral and release the parking brake.

CALCULATING THE HEIGHT OF THE DIPPED BEAM (H2)
- h1 = Height of the dipped beam in relation to the ground.
- h2 = Height of the adjusted beam.
- l = Distance between the dipped beam and the white wall.

H - EVERY TWO YEARS (OPTION AIR CONDITIONING)

MLT 523 Turbo Série B-E2
MLT 523 Turbo MONO-ULTRA Série B-E2

WARNING: NEVER TRY TO REPAIR ANY ANOMALIES YOURSELF. TO RECHARGE A CIRCUIT, ALWAYS CONTACT YOUR DEALER WHO HAS THE APPROPRIATE SPARE PARTS, TECHNICAL TRAINING AND NECESSARY TOOLS.

- Do not open the circuit under any circumstances as this would cause the coolant to be lost.
- The cooling circuit contains a gas which can be dangerous under certain conditions. This gas, coolant R 134a, is colourless, odourless and heavier than air.

• If this gas is inhaled, take the victim into fresh air, give oxygen or artificial respiration if necessary and call a doctor.
• If the gas is in contact with the skin, wash it immediately under running water and remove any contaminated garments.
• If the gas is in contact with the eyes, rinse them in clear water for 15 minutes and call a doctor.

- The charger has an oil level gauge ; never unscrew this gauge because it would depressurise the installation. The oil level is only checked when changing the oil in the circuit.

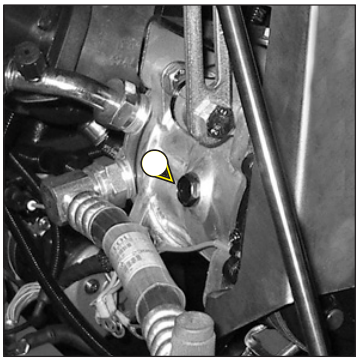

H1 - CLEANING THE CONDENSER AND EVAPORATOR COILS (*)

H2 - CLEANING THE HOTWELL AND THE PRESSURE RELIEF VALVE (*)

H3 - COLLECTING THE COOLANT TO REPLACE THE FILTER-DRIER (*)

H4 - RELOADING COOLANT AND CHECKING THE THERMOSTATIC CONTROL AND PRESSURE SWITCHES (*)

NOTE: When opening the evaporator unit, remember to replace the cover seal.

(*): (CONSULT YOUR DEALER).

https://truckmanualshub.com/
Torkonjestraat 23
8510 Marke
België
056 / 222 111
info@dumarent.be
www.dumarent.be

4 - ADAPTABLE ATTACHMENTS IN OPTION ON THE RANGE

https://truckmanualshub.com/
Torkonjestraat 23
8510 Marke
België
056 / 222 111
info@dumarent.be
www.dumarent.be

https://truckmanualshub.com/
Torkonjestraat 23
8510 Marke
België
056 / 222 111
info@dumarent.be
www.dumarent.be

TABLE OF CONTENTS

INTRODUCTION 4 - 5

PICKING UP THE ATTACHMENTS 4 - 6

A - ATTACHMENT WITHOUT HYDRAULICS AND HAND LOCKING DEVICE 4 - 6

B - ATTACHMENT WITHOUT HYDRAULICS AND HYDRAULIC LOCKING DEVICE (OPTION)
- MT 523 Série B-E2 4 - 7
- MT 523 MONO-ULTRA Série B-E2 4 - 8
- MLT 523 Turbo Série B-E2 4 - 7
- MLT 523 Turbo MONO-ULTRA Série B-E2 4 - 8
- MT 620 Série B-E2 4 - 7

C - HYDRAULIC ATTACHMENT AND HAND LOCKING DEVICE
- MT 523 Série B-E2 4 - 9
- MT 523 MONO-ULTRA Série B-E2 4 - 10
- MLT 523 Turbo Série B-E2 4 - 9
- MLT 523 Turbo MONO-ULTRA Série B-E2 4 - 10
- MT 620 Série B-E2 4 - 9

D - HYDRAULIC ATTACHMENT AND HYDRAULIC LOCKING DEVICE (OPTION)
- MT 523 Série B-E2 4 - 11
- MT 523 MONO-ULTRA Série B-E2 4 - 12
- MLT 523 Turbo Série B-E2 4 - 11
- MLT 523 Turbo MONO-ULTRA Série B-E2 4 - 12
- MT 620 Série B-E2 4 - 11

TECHNICAL SPECIFICATIONS OF ATTACHMENTS 4 - 14

ATTACHMENT SHIELDS 4 - 20

https://truckmanualshub.com/
Torkonjestraat 23
8510 Marke
België
056 / 222 111
info@dumarent.be
www.dumarent.be

INTRODUCTION

- Your lift truck must be used with interchangeable equipment. These items are called: ATTACHMENTS.

- A wide range of attachments, specially designed and perfectly suitable for your lift truck is available and guaranteed by MANITOU.

- The attachments are delivered with a load chart concerning your lift truck. The operator's manual and the load chart should be kept in the places provided in the lift truck. For standard attachments, their use is governed by the instructions contained on this notice.

- Some particular uses require the adaptation of the attachment which is not provided in the price-listed options. Optional solutions exist, consult your dealer.

All attachments with a suspended load (winch, crane jib, crane jib with winch, hook, etc.) MUST be used with a lift truck equipped with a hydraulic movement cut-out device. In this case, the movement cut-out must be switched on and the transverse attitude perfectly horizontal.

Only attachments approved by MANITOU are to be used on our lift trucks (see: 4 - ADAPTABLE ATTACHMENTS IN OPTION ON THE RANGE: TECHNICAL SPECIFICATIONS OF ATTACHMENTS). The manufacturer's liability will be denied in case of modification or of attachment adaptation carried out without his knowing it.

Depending on their size, certain attachments may, when the jib is lowered and retracted, come into contact with the front tyres and cause damage to them, if reverse tilt is activated in the forward tilt direction. TO REMOVE THIS RISK, EXTEND THE TELESCOPE TO A SUFFICIENT EXTENT FOR THE PARTICULAR LIFT TRUCK AND ATTACHMENT SO THAT THIS CONTACT IS NOT POSSIBLE.

Maximum loads are defined by the capacity of a lift truck taking account of the attachment's mass and centre of gravity. In the event of the attachment having less capacity than the lift truck, never exceed this limit.

https://truckmanualshub.com/
Torkonjestraat 23
8510 Marke
België
056 / 222 111
info@dumarent.be
www.dumarent.be

PICKING UP THE ATTACHMENTS

A - ATTACHMENT WITHOUT HYDRAULICS AND HAND LOCKING DEVICE

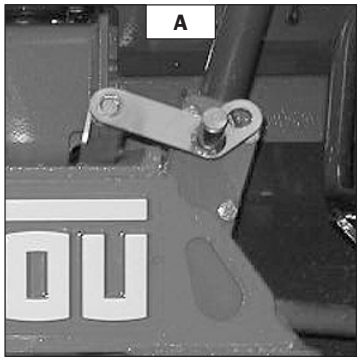

TAKING UP AN ATTACHMENT

- Ensure that the attachment is in a position facilitating the locking to the carriage. If it is not correctly oriented, take the necessary precautions in order to move it safely.
- Check that the locking pin and the clip are in position in the bracket (fig. A).
- Place the lift truck with the jib lowered in front of and parallel to the attachment, tilt the carriage forwards (fig. B).
- Bring the carriage under the locking tube of the attachment, slightly lift the jib, incline the carriage backwards in order to position the attachment (fig. C).
- Lift the attachment off the ground to facilitate locking.

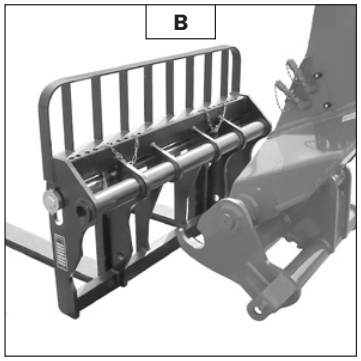

HAND LOCKING

- Take the locking pin and the clip on the bracket (fig. A) and lock the attachment (fig. D). Do not forget to refit the clip.

HAND RELEASING

- Proceed in the reverse order of paragraph HAND LOCKING while making sure you put back the locking pin and the clip in the bracket (fig. A).

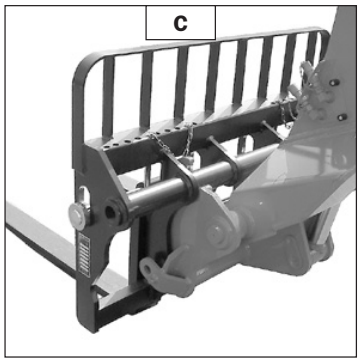

LAYING AN ATTACHMENT

- Proceed in the reverse order of paragraph TAKING UP AN ATTACHMENT while making sure you place the attachment flat on the ground and in closed position.

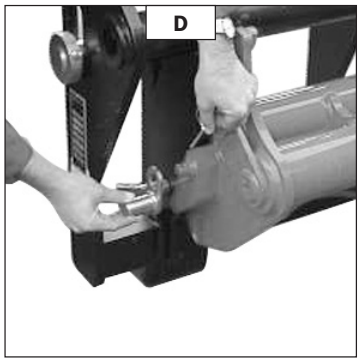

B - ATTACHMENT WITHOUT HYDRAULICS AND HYDRAULIC LOCKING DEVICE (OPTION)

MT 523 Série B-E2
MLT 523 Turbo Série B-E2
MT 620 Série B-E2

TAKING UP AN ATTACHMENT

- Ensure that the attachment is in a position facilitating the locking to the carriage. If it is not correctly oriented, take the necessary precautions in order to move it safely.
- Check that the rods on the locking cylinder are retracted (fig. A).
- Place the lift truck with the jib lowered in front of and parallel to the attachment, tilt the carriage forwards (fig. B).
- Bring the carriage under the locking tube of the attachment, slightly lift the jib, incline the carriage backwards in order to position the attachment (fig. C).
- Lift the attachment off the ground to facilitate locking.

HYDRAULIC LOCKING

- Put the valve in position A (fig. D), that is to say, the hydraulic circuit of the attachment locking open.
- Push the lever of the distributor 1 (fig. E) forwards in order to completely lock the attachment on the carriage.
- Close the valve in position B (fig. D), that is to say, the hydraulic circuit of the attachment locking closed.

Always close the valve in position B (fig. D) after the locking of the attachment, in order to avoid accidental unlocking and use the attachment safety.

HYDRAULIC RELEASING

- Put the valve in position A (fig. D), that is to say, the hydraulic circuit of the attachment locking open.
- Pull the lever of the distributor 1 (fig. E) backwards in order to unlock the attachment.

LAYING AN ATTACHMENT

- Proceed in the reverse order of paragraph TAKING UP AN ATTACHMENT while making sure you place the attachment flat on the ground and in closed position.

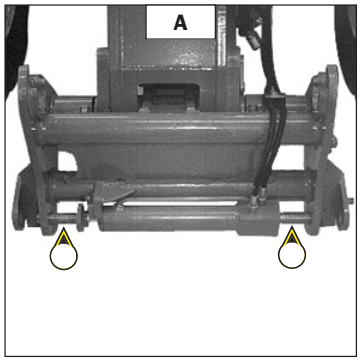

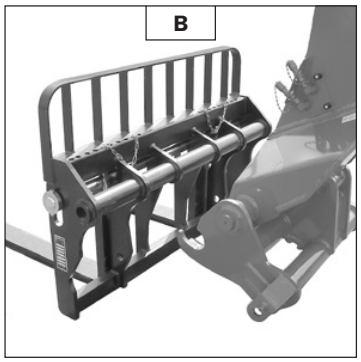

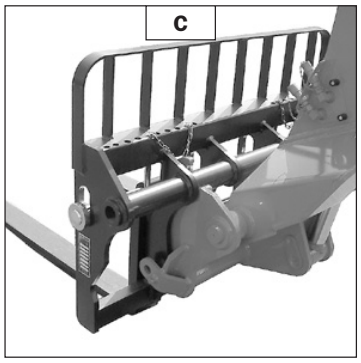

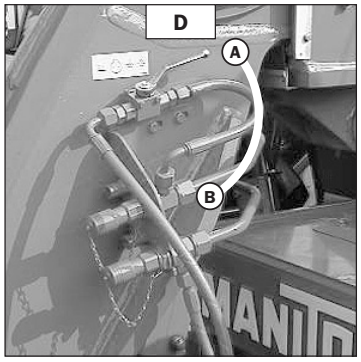

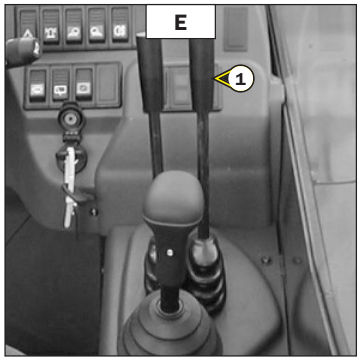

B - ATTACHMENT WITHOUT HYDRAULICS AND HYDRAULIC LOCKING DEVICE (OPTION)

MT 523 MONO-ULTRA Série B-E2
MLT 523 Turbo MONO-ULTRA Série B-E2

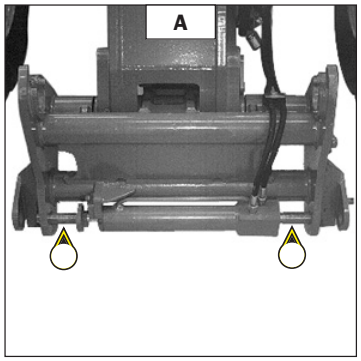

TAKING UP AN ATTACHMENT

- Ensure that the attachment is in a position facilitating the locking to the carriage. If it is not correctly oriented, take the necessary precautions in order to move it safely.
- Check that the rods on the locking cylinder are retracted (fig. A).
- Place the lift truck with the jib lowered in front of and parallel to the attachment, tilt the carriage forwards (fig. B).
- Bring the carriage under the locking tube of the attachment, slightly lift the jib, incline the carriage backwards in order to position the attachment (fig. C).
- Lift the attachment off the ground to facilitate locking.

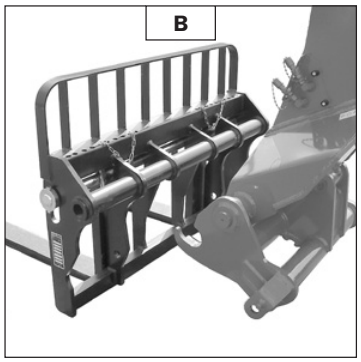

HYDRAULIC LOCKING

- Put the valve in position A (fig. D), that is to say, the hydraulic circuit of the attachment locking open.
- Press button 1 (fig. E) on the distributor lever to completely lock the attachment to the carriage.
- Close the valve in position B (fig. D), that is to say, the hydraulic circuit of the attachment locking closed.

Always close the valve in position B (fig. D) after the locking of the attachment, in order to avoid accidental unlocking and use the attachment safety.

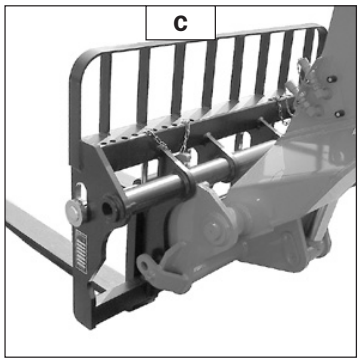

HYDRAULIC RELEASING

- Put the valve in position A (fig. D), that is to say, the hydraulic circuit of the attachment locking open.
- Press button 2 (fig. E) on the distributor lever to completely unlock the attachment.

LAYING AN ATTACHMENT

- Proceed in the reverse order of paragraph TAKING UP AN ATTACHMENT while making sure you place the attachment flat on the ground and in closed position.

INACTIVATE THE HYDRAULIC RELEASE CONTROL

You can change an attachment without leaving the control post, by cutting the electricity supply to the hydraulic control.

- Leave the valve in position A (fig. D).
- Use switch 3 (fig. F) to cut the electricity supply to the hydraulic control. The circuit is out of action when indicator 4 (fig. F) is on.

Always cut the electrical power to the circuit using switch 3 (fig. F) after each change of attachment to avoid involuntary release and use the attachment in complete safety.

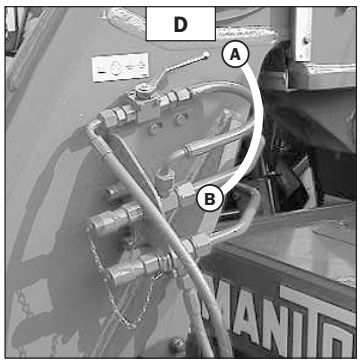

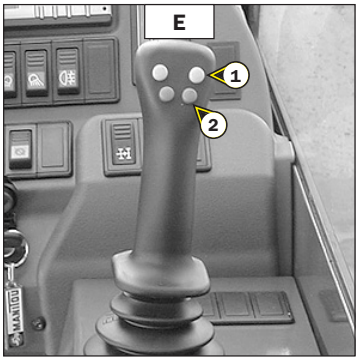

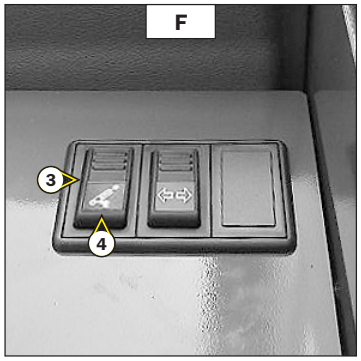

C - HYDRAULIC ATTACHMENT AND HAND LOCKING DEVICE

MT 523 Série B-E2
MLT 523 Turbo Série B-E2
MT 620 Série B-E2

TAKING UP AN ATTACHMENT

- Ensure that the attachment is in a position facilitating the locking to the carriage. If it is not correctly oriented, take the necessary precautions in order to move it safely.
- Check that the locking pin and the clip are in position in the bracket (fig. A).
- Place the lift truck with the jib lowered in front of and parallel to the attachment, tilt the carriage forwards (fig. B).
- Bring the carriage under the locking tube of the attachment, slightly lift the jib, incline the carriage backwards in order to position the attachment (fig. C).
- Lift the attachment off the ground to facilitate locking.

HAND LOCKING AND CONNECTING THE ATTACHMENT

- Take the locking pin and the clip on the bracket (fig. A) and lock the attachment (fig. D). Do not forget to refit the clip.
- Stop the I.C. engine.
- Remove the pressure of the hydraulic circuit by using the lever of the distributor 1 (fig. E).
- Connect the rapid connectors according to the logic of the attachment's hydraulic movements.

Make sure that the rapid connectors are clean and protect the holes which are not used, with the caps provided.

HAND RELEASING AND DISCONNECTING THE ATTACHMENT

- Proceed in the reverse order of paragraph HAND LOCKING AND CONNECTING THE ATTACHMENT while making sure you put back the locking pin and the clip in the bracket (fig. A).

LAYING AN ATTACHMENT

- Proceed in the reverse order of paragraph TAKING UP AN ATTACHMENT while making sure you place the attachment flat on the ground and in closed position.

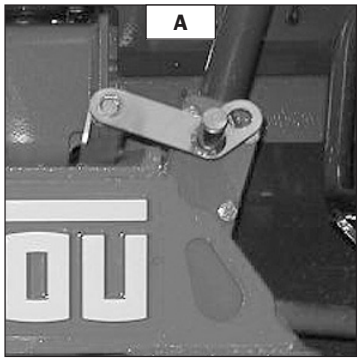

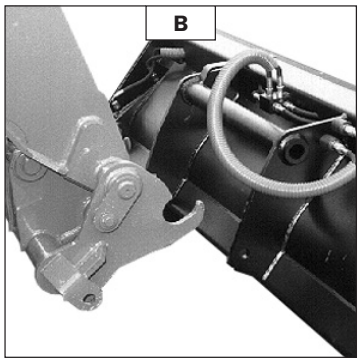

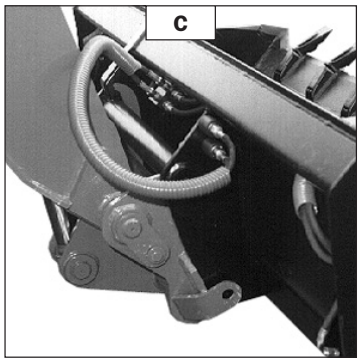

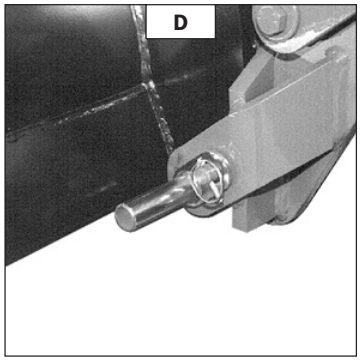

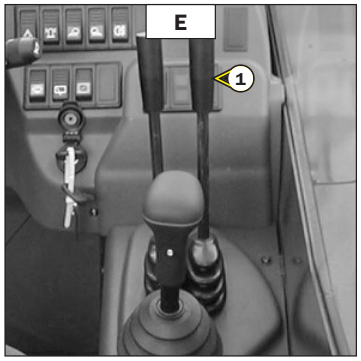

C - HYDRAULIC ATTACHMENT AND HAND LOCKING DEVICE

MT 523 MONO-ULTRA Série B-E2
MLT 523 Turbo MONO-ULTRA Série B-E2

TAKING UP AN ATTACHMENT

- Ensure that the attachment is in a position facilitating the locking to the carriage. If it is not correctly oriented, take the necessary precautions in order to move it safely.
- Check that the locking pin and the clip are in position in the bracket (fig. A).
- Place the lift truck with the jib lowered in front of and parallel to the attachment, tilt the carriage forwards (fig. B).
- Bring the carriage under the locking tube of the attachment, slightly lift the jib, incline the carriage backwards in order to position the attachment (fig. C).
- Lift the attachment off the ground to facilitate locking.

HAND LOCKING AND CONNECTING THE ATTACHMENT

- Take the locking pin and the clip on the bracket (fig. A) and lock the attachment (fig. D). Do not forget to refit the clip.
- Stop the I.C. engine and keep the ignition on the lift truck.
- Remove the pressure of the hydraulic circuit by pressing buttons 1 and 2 (fig. E) on the distributor lever 4 or 5 times.
- Connect the rapid connectors according to the logic of the attachment's hydraulic movements.

Make sure that the rapid connectors are clean and protect the holes which are not used, with the caps provided.

HAND RELEASING AND DISCONNECTING THE ATTACHMENT

- Proceed in the reverse order of paragraph HAND LOCKING AND CONNECTING THE ATTACHMENT while making sure you put back the locking pin and the clip in the bracket (fig. A).

LAYING AN ATTACHMENT

- Proceed in the reverse order of paragraph TAKING UP AN ATTACHMENT while making sure you place the attachment flat on the ground and in closed position.

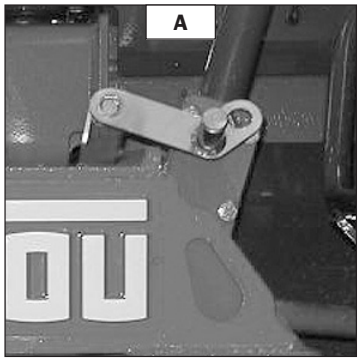

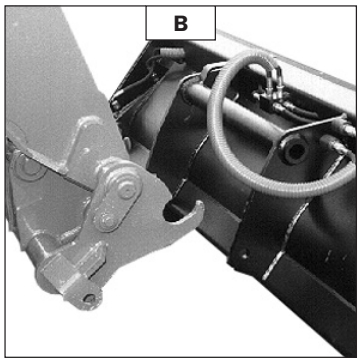

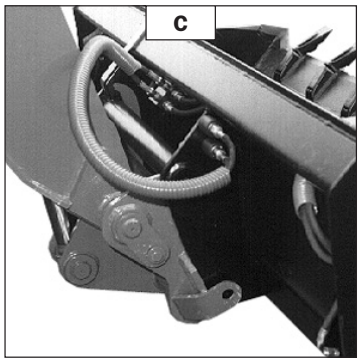

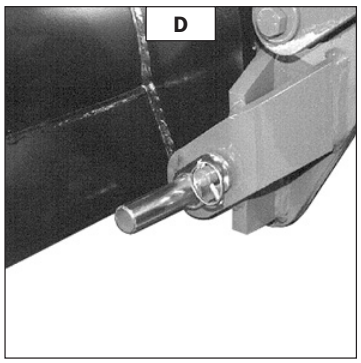

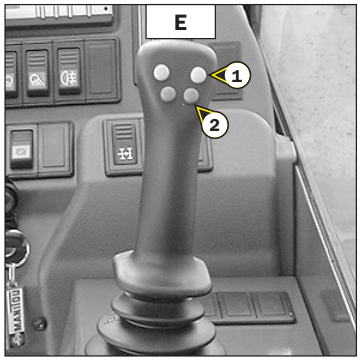

D - HYDRAULIC ATTACHMENT AND HYDRAULIC LOCKING DEVICE (OPTION)

MT 523 Série B-E2
MLT 523 Turbo Série B-E2
MT 620 Série B-E2

TAKING UP AN ATTACHMENT

- Ensure that the attachment is in a position facilitating the locking to the carriage. If it is not correctly oriented, take the necessary precautions in order to move it safely.
- Check that the rods on the locking cylinder are retracted (fig. A).
- Place the lift truck with the jib lowered in front of and parallel to the attachment, tilt the carriage forwards (fig. B).
- Bring the carriage under the locking tube of the attachment, slightly lift the jib, incline the carriage backwards in order to position the attachment (fig. C).
- Lift the attachment off the ground to facilitate locking.

HYDRAULIC LOCKING AND CONNECTING THE ATTACHMENT

- Put the valve in position A (fig. D), that is to say, the hydraulic circuit of the attachment locking open.
- Push the lever of the distributor 1 (fig. E) forwards in order to completely lock the attachment on the carriage.
- Stop the I.C. engine.
- Remove the pressure of the attachment hydraulic circuit by using the lever of the distributor 1 (fig. E).
- Connect the rapid connectors according to the logic of the attachment's hydraulic movements.

Make sure that the rapid connectors are clean and protect the holes which are not used, with the caps provided.

- Close the valve in position B (fig. D), that is to say, the hydraulic circuit of the attachment locking closed.

Always close the valve in position B (fig. D) after the locking of the attachment, in order to avoid accidental unlocking and use the attachment safety.

HYDRAULIC RELEASING AND DISCONNECTING THE ATTACHMENT

- Close the attachment.
- Put the valve in position A (fig. D), that is to say, the hydraulic circuit of the attachment locking open.
- Push the lever of the distributor 1 (fig. E) backwards in order to completely unlock the attachment.
- Stop the I.C. engine.
- Remove the pressure of the attachment hydraulic circuit by using the lever of the distributor 1 (fig. E).
- Disconnect the rapid connectors of the attachment.

Make sure that the rapid connectors are clean and protect the holes which are not used, with the caps provided.

LAYING AN ATTACHMENT

- Proceed in the reverse order of paragraph TAKING UP AN ATTACHMENT while making sure you place the attachment flat on the ground and in closed position.

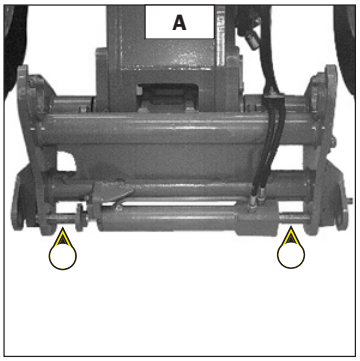

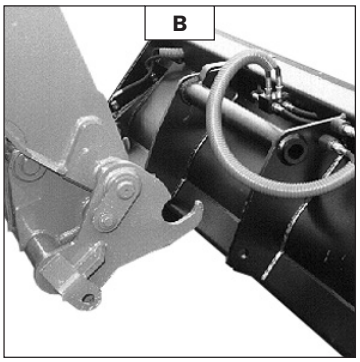

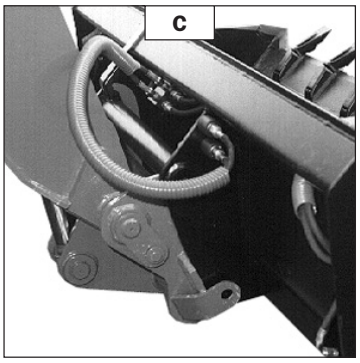

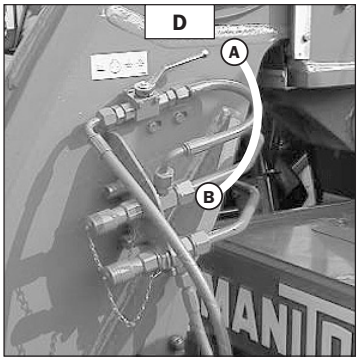

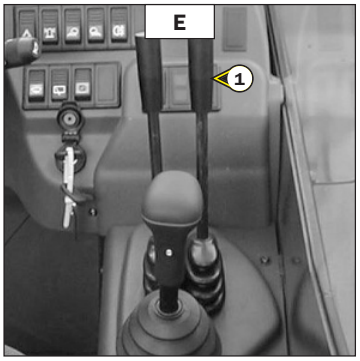

D - HYDRAULIC ATTACHMENT AND HYDRAULIC LOCKING DEVICE (OPTION)

MT 523 MONO-ULTRA Série B-E2
MLT 523 Turbo MONO-ULTRA Série B-E2

TAKING UP AN ATTACHMENT

- Ensure that the attachment is in a position facilitating the locking to the carriage. If it is not correctly oriented, take the necessary precautions in order to move it safely.
- Check that the rods on the locking cylinder are retracted (fig. A).
- Place the lift truck with the jib lowered in front of and parallel to the attachment, tilt the carriage forwards (fig. B).
- Bring the carriage under the locking tube of the attachment, slightly lift the jib, incline the carriage backwards in order to position the attachment (fig. C).
- Lift the attachment off the ground to facilitate locking.

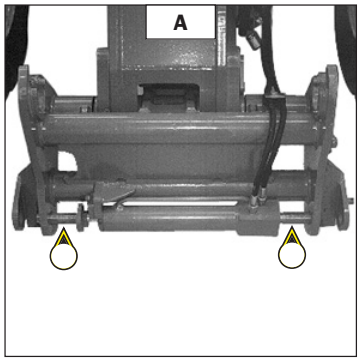

HYDRAULIC LOCKING AND CONNECTING THE ATTACHMENT

- Put the valve in position A (fig. D), that is to say, the hydraulic circuit of the attachment locking open.
- Press button 1 (fig. E) on the distributor lever to completely lock the attachment to the carriage.
- Stop the I.C. engine and keep the ignition on the lift truck.
- Remove the pressure of the hydraulic circuit by pressing buttons 1 and 2 (fig. E) on the distributor lever 4 or 5 times.
- Connect the rapid connectors according to the logic of the attachment's hydraulic movements.

Make sure that the rapid connectors are clean and protect the holes which are not used, with the caps provided.

- Close the valve in position B (fig. D), that is to say, the hydraulic circuit of the attachment locking closed.

Always close the valve in position B (fig. D) after the locking of the attachment, in order to avoid accidental unlocking and use the attachment safety.

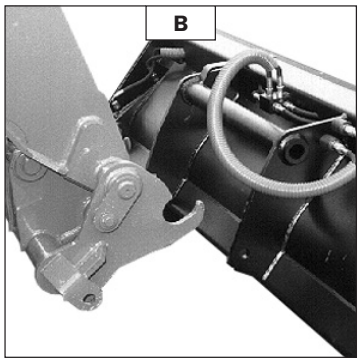

HYDRAULIC RELEASING AND DISCONNECTING THE ATTACHMENT

- Close the attachment.
- Put the valve in position A (fig. D), that is to say, the hydraulic circuit of the attachment locking open.
- Press button 2 (fig. E) on the distributor lever to completely unlock the attachment.
- Stop the I.C. engine and keep the ignition on the lift truck.
- Remove the pressure of the attachment hydraulic circuit by pressing buttons 1 and 2 (fig. E) on the distributor lever 4 or 5 times.
- Disconnect the rapid connectors of the attachment.

Make sure that the rapid connectors are clean and protect the holes which are not used, with the caps provided.

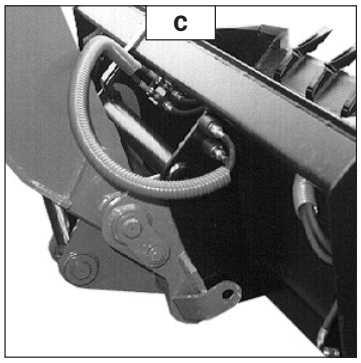

LAYING AN ATTACHMENT

- Proceed in the reverse order of paragraph TAKING UP AN ATTACHMENT while making sure you place the attachment flat on the ground and in closed position.

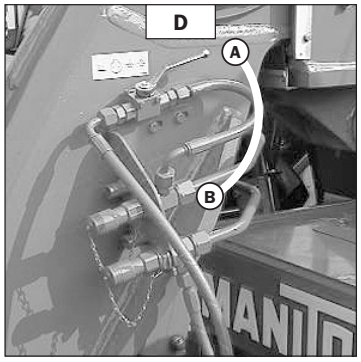

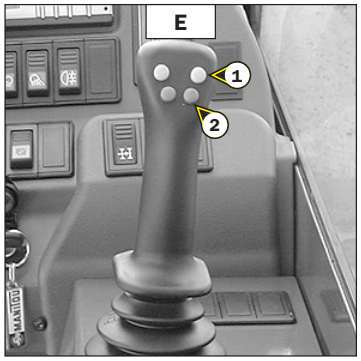

https://truckmanualshub.com/
Torkonjestraat 23
8510 Marke
België
056 / 222 111
info@dumarent.be
www.dumarent.be

https://truckmanualshub.com/
Torkonjestraat 23
8510 Marke
België
056 / 222 111
info@dumarent.be
www.dumarent.be

TECHNICAL SPECIFICATIONS OF ATTACHMENTS

FLOATING FORK CARRIAGE				
	TFF 29 MT-1040 S2	TFF 29 MT-1300 S2		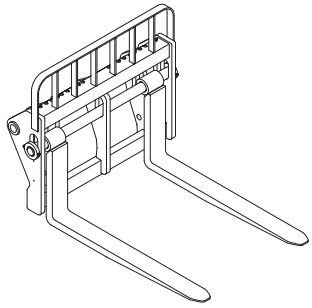
REFERENCE	**654340**	**654341**		
Nominal load capacity	2300 Kg	2300 Kg		
Width	1040 mm	1300 mm		
Weight	285 Kg	325 Kg		

FLOATING FORK SIDE-SHIFT CARRIAGE				
	TFF 29 MT-1040 DL	TFF 29 MT-1300 DL		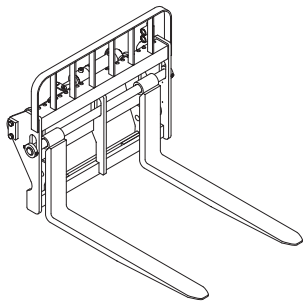
REFERENCE	**570729**	**570730**		
Nominal load capacity	2300 Kg	2300 Kg		
Side-shift	2 x 100 mm	2 x 100 mm		
Width	1040 mm	1300 mm		
Weight	330 Kg	370 Kg		

FLOATING FORK				
				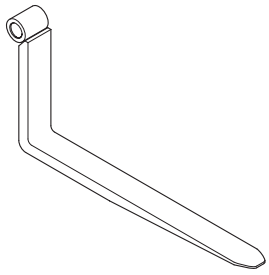
REFERENCE	**211919**			
Section	125 x 40 x 1200 mm			
Weight	62 Kg			

https://truckmanualshub.com/
Torkonjestraat 23
8510 Marke
België
056 / 222 111
info@dumarent.be
www.dumarent.be

STANDARDISED TILTING FORK CARRIAGE				
	PFB 25 N MT-1020	PFB 25 N MT-1260		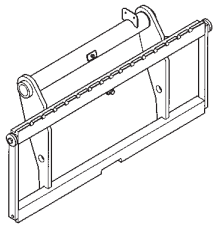
REFERENCE	**571958**	**571959**		
Nominal load capacity	2300 Kg	2300 Kg		
Width	1020 mm	1260 mm		
Weight	80 Kg	90 Kg		

STANDARDISED SIDE-SHIFT CARRIAGE				
	TDL 2,5T L1020 FEM2	TDL 2,5T L1260 FEM2		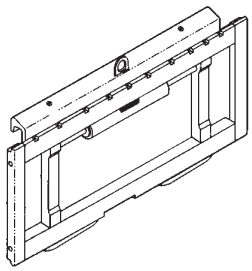
REFERENCE	**653013**	**653014**		
Nominal load capacity	2300 Kg	2300 Kg		
Side-shift	2 x 100 mm	2 x 100 mm		
Width	1020 mm	1260 mm		
Weight	54 Kg	67 Kg		

STANDARDISED FORK				
				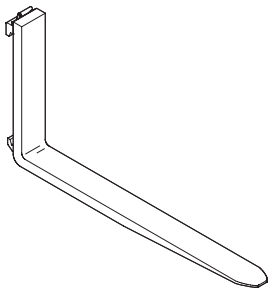
REFERENCE	**415835**			
Section	125 x 45 x 1200 mm			
Weight	76 Kg			

DOSSERET DE CHARGE				
				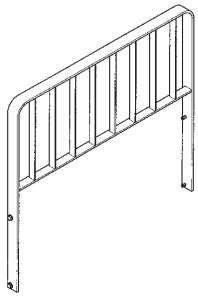
REFERENCE	**555320**	**570518**		
Width	1020 mm	1260 mm		
Weight	31 Kg	35 Kg		

https://truckmanualshub.com/
Torkonjestraat 23
8510 Marke
België
056 / 222 111
info@dumarent.be
www.dumarent.be

BUILDING BUCKET

	CBC 650 L1850	CBC 700 L1950	
REFERENCE	**654473**	**654472**	
Nominal load capacity	676 L	697 L	
Width	1850 mm	1950 mm	
Weight	317 Kg	326 Kg	

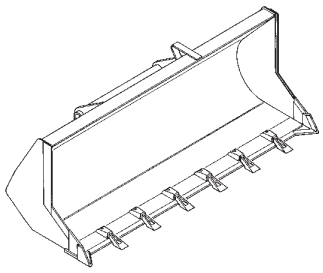

LOADING BUCKET

	CBR 730 L1850	CBR 780 L1950	
REFERENCE	**571831**	**570613**	
Nominal load capacity	735 L	778 L	
Width	1850 mm	1950 mm	
Weight	318 Kg	328 Kg	

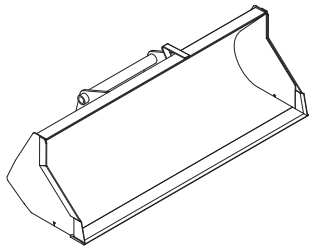

GRAIN BUCKET

	CBA 900 S3 L1500	CBA 1100 S3 L1850	CBA 1500 S3 L2050
REFERENCE	**570543**	**653036**	**570546**
Nominal load capacity	878 L	1108 L	1505 L
Width	1500 mm	1850 mm	2050 mm
Weight	367 Kg	412 Kg	509 Kg

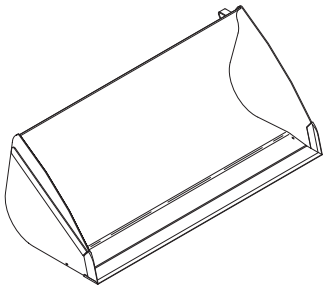

GRAIN BUCKET (MANURE OF CHICKEN)

	CBA 1500 S3 L2050 FP		
REFERENCE	**653035**		
Nominal load capacity	1507 L		
Width	2050 mm		
Weight	492 Kg		

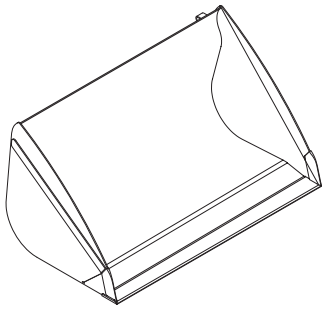

https://truckmanualshub.com/
Torkonjestraat 23
8510 Marke
België
056 / 222 111
info@dumarent.be
www.dumarent.be

4 X 1 MULTIPURPOSE BUCKET

	CB4X1-700 L1950		
REFERENCE	**654434**		
Nominal load capacity	700 L		
Width	1950 mm		
Weight	615 Kg		

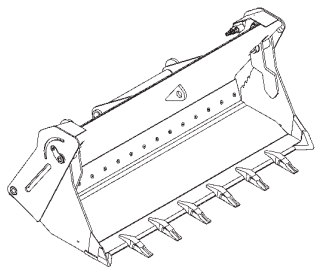

BUCKET WITH GRAB

	CBG 1800 S4	CBG 1950 DA S4	
REFERENCE	**653004**	**653007**	
Nominal load capacity	0,9 m3	1 m3	
Width	1800 mm	1950 mm	
Grab	7	7	
Weight	538 Kg	560 Kg	

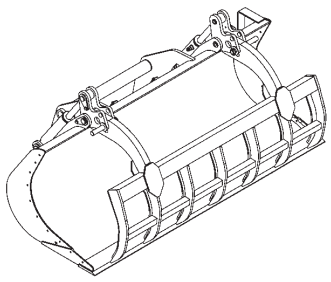

BUCKET WITH GRAB (SIDES CLOSED AND REVERSING AND DISMOUNTABLE CUTTING EDGE)

	CBG 1800 JFD-LDR S4	CBG 1950 JFD-LDR S4	
REFERENCE	**653015**	**653017**	
Nominal load capacity	0,9 m3	1 m3	
Width	1800 mm	1950 mm	
Grab	7	7	
Weight	632 Kg	652 Kg	

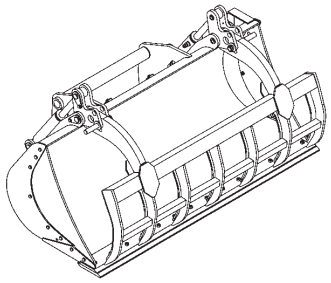

https://truckmanualshub.com/
Torkonjestraat 23
8510 Marke
België
056 / 222 111
info@dumarent.be
www.dumarent.be

CONCRETE BUCKET (ADAPTABLE ON FORKS)				
	BB 500 S4	BBH 500 S4		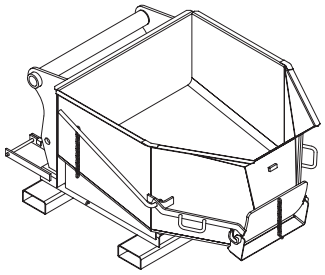
REFERENCE	654409	654410		
Nominal load capacity	500 L/1300 Kg	500 L/1300 Kg		
Width	1100 mm	1100 mm		
Weight	210 Kg	230 Kg		

CONCRETE BUCKET WITH SPOUT (ADAPTABLE ON FORKS)				
	BBG 500 S4	BBHG 500 S4		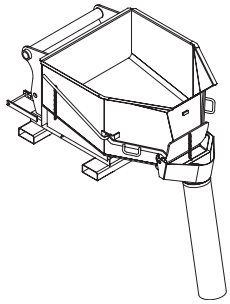
REFERENCE	654411	654412		
Nominal load capacity	500 L/1300 Kg	500 L/1300 Kg		
Width	1100 mm	1100 mm		
Weight	210 Kg	230 Kg		

SPOUT BUCKET (ADAPTABLE ON FORKS)				
	GL 300 S2	GL 400 S2	GL 600 S2	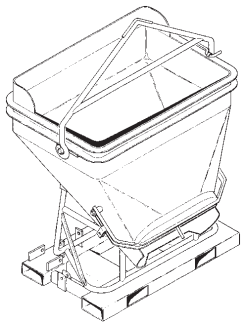
REFERENCE	174371	174372	174373	
Nominal load capacity	300 L/660 Kg	400 L/880 Kg	600 L/1320 Kg	
Weight	149 Kg	157 Kg	277 Kg	
	GL 800 S2			
REFERENCE	174374			
Nominal load capacity	800 L/1760 Kg			
Weight	308 Kg			
HYDRAULIC KIT TO OPEN THE SPOUT				
REFERENCE	653750			

SPOUT BUCKET (ADAPTABLE ON FORKS)				
	GL 1000 S2	GL 1500 S2		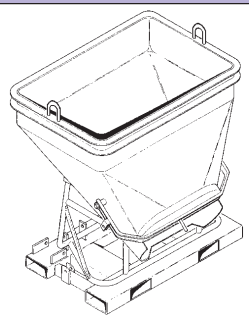
REFERENCE	174375	174376		
Nominal load capacity	1000 L/2200 Kg	1500 L/3300 Kg		
Weight	325 Kg	375 Kg		
HYDRAULIC KIT TO OPEN THE SPOUT				
REFERENCE	653750			

https://truckmanualshub.com/
Torkonjestraat 23
8510 Marke
België
056 / 222 111
info@dumarent.be
www.dumarent.be

MANURE FORK WITH GRAB

	FFGR 1700 DA	FFGR 1950 DA	
REFERENCE	**653012**	**653048**	
Nominal load capacity	2,5 m3	2,9 m3	
Width	1700 mm	1950 mm	
Finger	8	9	
Grab	7	7	
Weight	505 Kg	530 Kg	

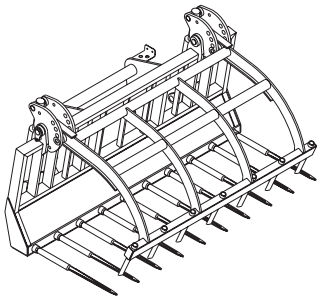

CRANE JIB

MUST be used with a lift truck equipped with an operational hydraulic movement cut-out device.

	PC 50		
REFERENCE	**708544**		
Nominal load capacity	5000 Kg		
Weight	120 Kg		

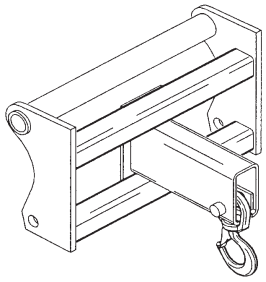

https://truckmanualshub.com/
Torkonjestraat 23
8510 Marke
België
056 / 222 111
info@dumarent.be
www.dumarent.be

ATTACHMENT SHIELDS

FORK PROTECTOR

REFERENCE	**227801**		

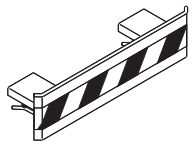

BUCKET PROTECTOR

NOTE: Always ensure that the width of the protector you choose is less than or equal to the width of the bucket.

REFERENCE	**206734**	**206732**	**206730**
Width	1375 mm	1500 mm	1650 mm
REFERENCE	**235854**	**206728**	**206726**
Width	1850 mm	1950 mm	2000 mm
REFERENCE	**223771**	**223773**	**206724**
Width	2050 mm	2100 mm	2150 mm
REFERENCE	**206099**	**206722**	**223775**
Width	2250 mm	2450 mm	2500 mm

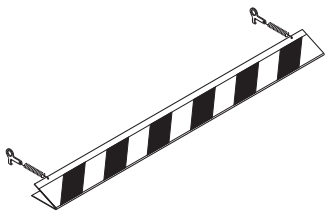

MANURE FORK PROTECTOR
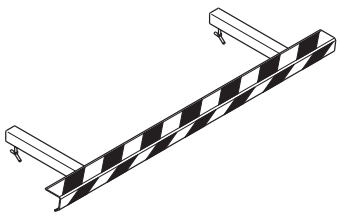
REFERENCE	**230689**