https://truckmanualshub.com/

OPERATOR'S CAB

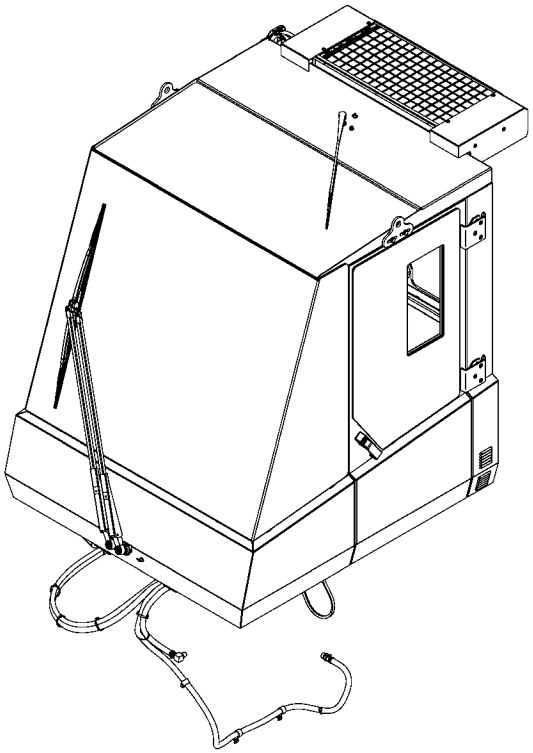

HYSTER

PART NO. 4186391

0100 SRM 2043

https://truckmanualshub.com/

SAFETY PRECAUTIONS
MAINTENANCE AND REPAIR

- The Service Manuals are updated on a regular basis, but may not reflect recent design changes to the product. Updated technical service information may be available from your local authorized Hyster® dealer. Service Manuals provide general guidelines for maintenance and service and are intended for use by trained and experienced technicians. Failure to properly maintain equipment or to follow instructions contained in the Service Manual could result in damage to the products, personal injury, property damage or death.
- When lifting parts or assemblies, make sure all slings, chains, or cables are correctly fastened, and that the load being lifted is balanced. Make sure the crane, cables, and chains have the capacity to support the weight of the load.
- Do not lift heavy parts by hand, use a lifting mechanism.
- Wear safety glasses.
- DISCONNECT THE BATTERY CONNECTOR before doing any maintenance or repair on electric lift trucks. Disconnect the battery ground cable on internal combustion lift trucks.
- Always use correct blocks to prevent the unit from rolling or falling. See HOW TO PUT THE LIFT TRUCK ON BLOCKS in the **Operating Manual** or the **Periodic Maintenance** section.
- Keep the unit clean and the working area clean and orderly.
- Use the correct tools for the job.
- Keep the tools clean and in good condition.
- Always use **HYSTER APPROVED** parts when making repairs. Replacement parts must meet or exceed the specifications of the original equipment manufacturer.
- Make sure all nuts, bolts, snap rings, and other fastening devices are removed before using force to remove parts.
- Always fasten a DO NOT OPERATE tag to the controls of the unit when making repairs, or if the unit needs repairs.
- Be sure to follow the **WARNING** and **CAUTION** notes in the instructions.
- Gasoline, Liquid Petroleum Gas (LPG), Compressed Natural Gas (CNG), and Diesel fuel are flammable. Be sure to follow the necessary safety precautions when handling these fuels and when working on these fuel systems.
- Batteries generate flammable gas when they are being charged. Keep fire and sparks away from the area. Make sure the area is well ventilated.

NOTE: The following symbols and words indicate safety information in this manual:

WARNING

Indicates a hazardous situation which, if not avoided, could result in death or serious injury.

CAUTION

Indicates a hazardous situation which, if not avoided, could result in minor or moderate injury and property damage.

On the lift truck, the WARNING symbol and word are on orange background. The CAUTION symbol and word are on yellow background.

https://truckmanualshub.com/

TABLE OF CONTENTS

Series Code / Model Designation Reference Table 1
General 1
Description of Operation 1
Cab Structure 1
Remove and Install 2
Cab Door Assembly 3
Cab Door 3
Remove 3
Install 3
Door Hinge 4
Remove 4
Install 4
Door Handle 4
Remove 4
Install 5
Door Latch 5
Remove 5
Install 6
Pedals 6
Brake and Inching Pedal 6
Remove 6
Install 6
Accelerator Pedal and Sensor 7
Seat Assembly 7
Seat 7
Remove 7
Install 8
Seat Cushion 8
Remove 8
Install 8
Back Cushion 9
Remove 9
Install 9
Boot Replacement 9
Seat Suspension Replacement 9
Suspension Scissor and Shock Absorber Replacement 10
Remove 10
Install 15
Compressor 22
Remove 22
Install 27
Power Assist Armrest 33
Release Cable 33
Remove 33
Install 33
Gas Spring 34
Remove 34
Install 34
Joystick 34
Remove 34
Install 34
Armrest Rocker Switches 35

©2018 HYSTER COMPANY

https://truckmanualshub.com/

TABLE OF CONTENTS (Continued)

Remove 35
Install 35
Armrest Top Cover 35
Remove 35
Install 35
Cab Fuse Panel 35
Override Key Switch 35
Remove 35
Install 36
12V Power Socket 37
Remove 37
Install 37
Climate Control Panel 37
Air Recirculation Control Switch and Air Conditioning Switch 37
Remove 37
Install 37
Heater Control knob (Cable-Operated) 38
Remove 38
Install 38
Information Display 38
Remove 38
Install 38
Steering Wheel and Column Assembly 39
Steering Column 39
Remove 39
Install 41
Adjustment Handle 41
Remove 41
Install 41
Shift Lever and Turn Signal Lever 42
Remove 42
Install 42
Window Wipers 42
Window Wiper Assembly Replacement 42
Remove 42
Install 42
Window Wiper Motor Replacement 42
Front Window Wiper Motor 42
Remove 42
Install 43
Rear Window Wiper Motor Assembly 43
Remove 43
Install 43
Top Window Wiper Motor Assembly 44
Remove 44
Install 44
Window Washer System 44
Window Washer Reservoir and Pumps 44
Remove 44
Install 45
Window Washer Hoses and Spray Nozzles 45
Top Window Washer Hose and Spray Nozzle 45

https://truckmanualshub.com/

TABLE OF CONTENTS (Continued)

Remove 45
Install 45
Rear Window Washer Hose and Spray Nozzle 46
Remove 46
Install 46
Front Window Washer Hose and Spray Nozzle 46
Remove 46
Install 46
Window Replacement 47
Cab Windows 48
Remove 48
Install 48
Door Window 48
Remove 48
Install 48
Sliding Window Frame 49
Remove 49
Install 49
Floor Mat 50
Remove 50
Install 50
Roof Liner 50
Remove 50
Install 51
Accessories 51
Mirror Replacement 51
Map Light Replacement 51
Interior Fan Replacement 51
Sunshade Replacement 52
Top 52
Rear 52
Training Seat 52
Field Installation 52
Remove 53
Label Replacement 53
Checks and Adjustments 53
Door Striker Pin Adjustment 53
Brake Pedal Adjustment 54
Pedal and Sensor Adjustment for Braking and Inching 55
Inching Sensor Calibration 56

This section is for the following models:

https://truckmanualshub.com/

"THE QUALITY KEEPERS"

HYSTER APPROVED PARTS

https://truckmanualshub.com/

Series Code / Model Designation Reference Table

This table consist of the following Series Codes used in this manual.

Series Code	Model Designation Europe	Model Designation America
A404	RS45-27CH, RS45-31CH	RS45-27CH, RS45-31CH

General

This SRM describes the functions of the cab and the replacement instructions for the cab components. See Figure 1. Some of the described components are options that may not be present on each cab. The operation of the various switches and controls can be found in the **Operating Manual**.

The description and repair instructions for the heater assembly are in **Cab Heater and Air Conditioner** 0100SRM2044.

The remove and replace instructions for the cab as an assembly are in the **Frame and Main Components** 0100SRM2042.

Information on systems that are related to the cab can be found in the SRM's:

- **Electrical System** 2200SRM2052
- **Brake System** 1800SRM2048
- **Steering System** 1600SRM2047
- **Diagrams** 8000SRM2058

Description of Operation

CAB STRUCTURE

The cab frame is a welded structure. The overhead guard is an integral part of the cab frame. See Figure 1. In order to maintain maximum overhead protection do not make changes to the cab frame and integrated overhead guard.

https://truckmanualshub.com/

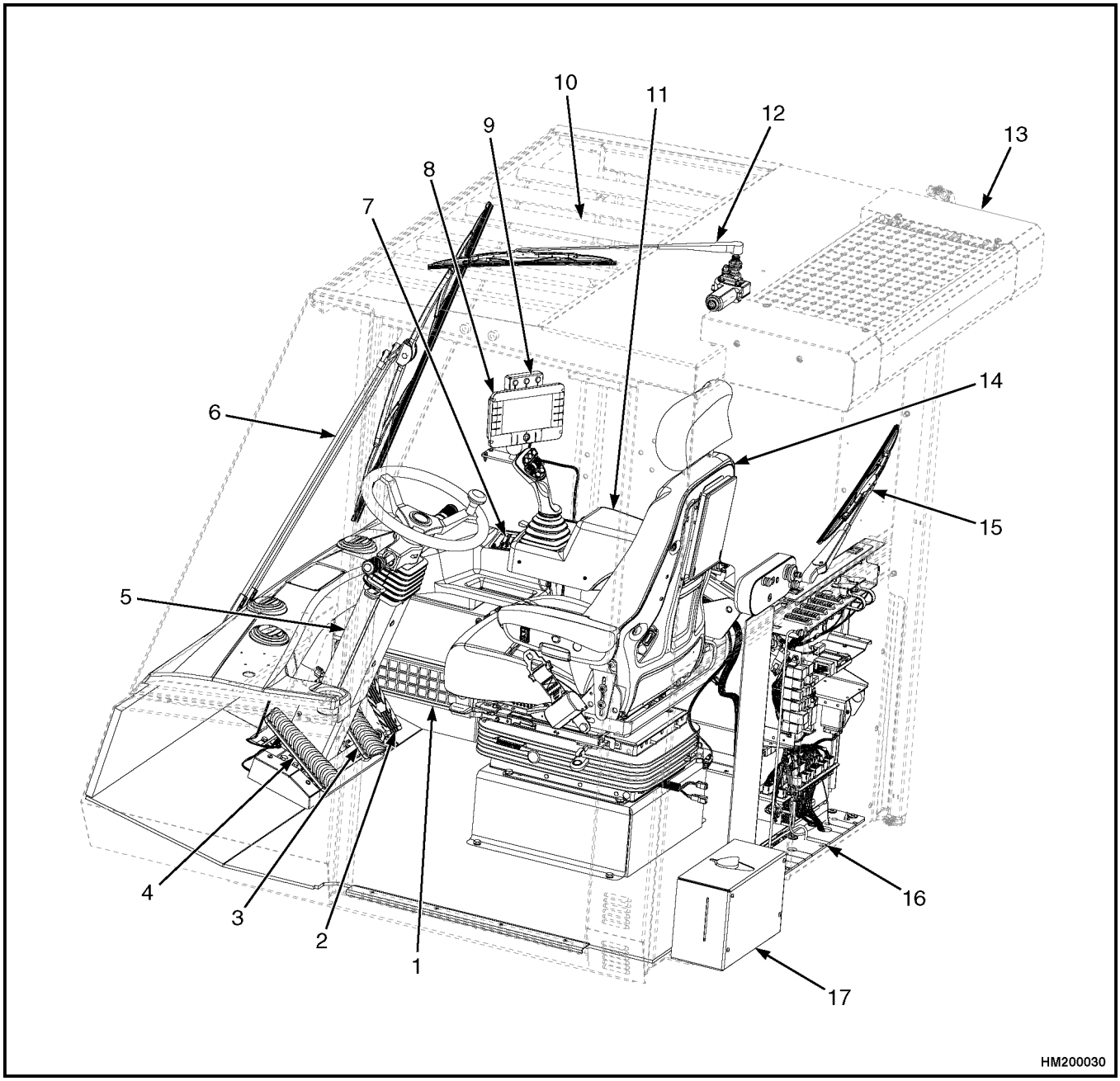

1. HEATER SECTION
2. ACCELERATOR PEDAL
3. BRAKE PEDAL
4. INCHING PEDAL
5. STEERING COLUMN
6. FRONT WIPER
7. CLIMATE PANEL
8. INFORMATION DISPLAY
9. LLMS INDICATOR
10. INTEGRATED OVERHEAD GUARD
11. ARMREST
12. TOP WIPER
13. AIR CONDITIONING ASSEMBLY
14. SEAT
15. REAR WIPER
16. E-CONSOLE
17. WINDOW WASHER FLUID RESERVOIR

Figure 1. Operator's Cab

https://truckmanualshub.com/

Remove and Install

Before making any repairs to the lift truck, complete the following procedures:

- Place the lift truck on a solid, level surface.
- Retract and lower the boom completely.
- Place the shift lever in **NEUTRAL**.
- Apply the parking brake.
- Shut down the engine.

CAB DOOR ASSEMBLY

Cab Door

Remove

1. Open the sliding window.

2. Detach the gas spring.

3. Open the cab door as far as possible and position the door at a 90° angle to the frame.

CAUTION

Use caution when lifting the cab door to avoid damage to the cab frame.

4. Attach two lifting straps through the sliding window opening. Place a cushion between the sliding window frame and the lifting straps to prevent damage.

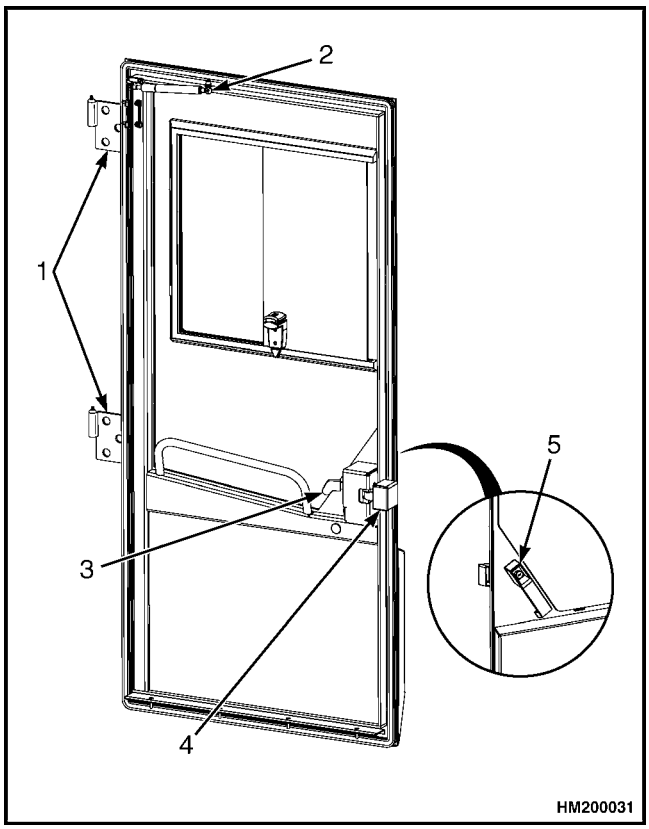

1. DOOR HINGE
2. GAS SPRING
3. INNER DOOR HANDLE
4. STRIKER PIN
5. OUTER DOOR HANDLE

Figure 2. Cab Door

5. Lift the cab door out of the cab door hinges. See Figure 2.

6. Move the cab door away from the lift truck and place it on the ground.

7. Close the sliding window.

Install

1. Open the sliding window.

2. Attach two lifting straps through the sliding window opening. Place a cushion between the sliding window frame and the lifting straps to prevent damage.

https://truckmanualshub.com/

3. Raise the cab door and place it in position above the hinges.
4. Slowly lower the cab door until the cab door is seated on the hinges.
5. Remove the lifting strap.
6. Make sure the cab door is moving properly on the hinges.
7. If necessary, adjust the hinges. See Figure 3.
8. Make sure the door opens and closes correctly and the locking system functions properly.
9. Attach the gas spring.

Door Hinge

Remove

1. Remove the cab door. See the section Cab Door.
2. Mark the location of the two hinges on the cab frame.
3. Remove the six capscrews retaining the two hinges to the cab frame and remove the two hinges. See Figure 3.

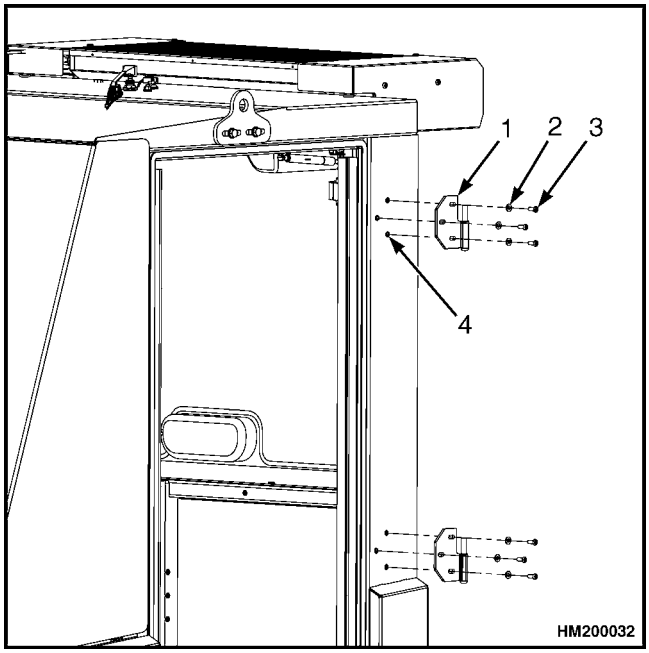

1. DOOR HINGE
2. WASHER
3. CAP SCREW
4. THREAD

Figure 3. Door Hinge

Install

1. Position the two hinges to the cab frame as marked and install the six capscrews strong enough to hold the weight of the door, and loose enough to allow alignment of the hinges.
2. Install the cab door. Refer to the section Cab Door.
3. Align the door lock with the striker pin and close the door.
4. Use a nylon hammer to move the lowest hinge up until it supports the door.
5. Tighten al cap screws for the door hinges to 20 N•m (15 lbf ft).

Door Handle

Remove

1. Remove the plastic plug at the inside of the door frame. See Figure 4.

https://truckmanualshub.com/

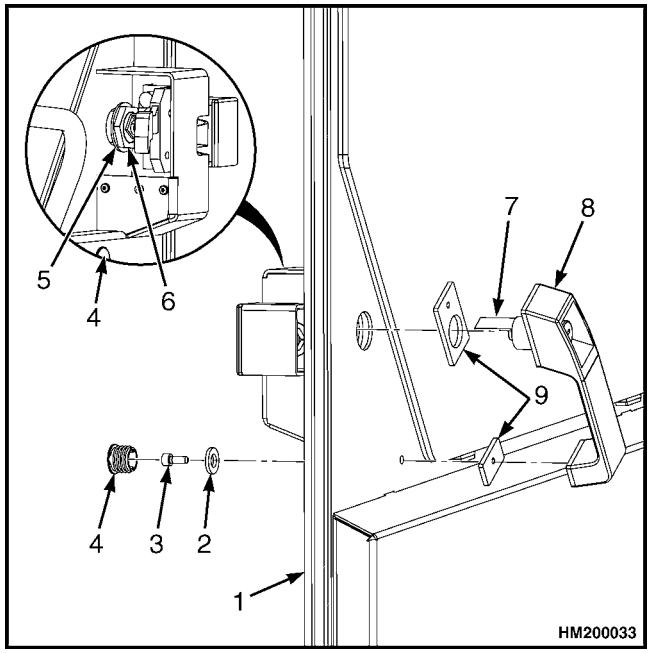

1. CAB DOOR
2. CAP SCREW
3. HEXAGON SOCKET SCREW
4. PLASTIC PLUG
5. LARGE NUT
6. WASHER
7. DOOR LOCKING PLATE
8. DOOR HANDLE
9. RUBBER CUSHION

Figure 4. Door Handle

2. Remove the capscrew and washer that retain the door handle, through the hole from the plastic plug.

3. Remove the large nut and washer that retain the door handle inside the door latch.

4. Remove the door handle and two rubber cushions.

Install

1. Position the door handle and two rubber cushions on the door. See Figure 4.

2. Install the washer and large nut inside the door latch.

3. Install the washer and capscrew through the hole from the plastic plug.

4. Install the plastic plug at the inside of the door frame.

5. Make sure the locking system functions correctly.

Door Latch

Remove

1. Remove the door handle. See Door Handle, Remove.

2. Remove the cap screws that retain the cover to the door latch. See Figure 5.

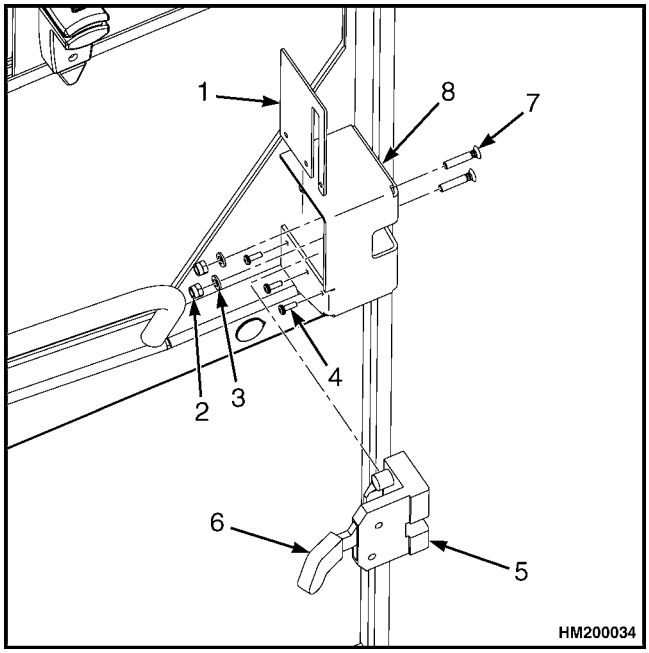

1. LATCH COVER
2. NUT
3. WASHER
4. CAP SCREW
5. DOOR LATCH
6. DOOR HANDLE
7. BOLT
8. DOOR LATCH HOUSING

Figure 5. Door Latch

3. Remove the nuts that retain the door latch to the door latch housing.

4. Remove the door latch from the housing.

5. Remove the bolts.

https://truckmanualshub.com/

Install

1. Insert the bolts in the door latch housing.
2. Install the door latch and install the nuts.
3. Install the cap screw and washer that retain the cover to the door latch.
4. Install the door handle. See Door Handle, Install.
5. Make sure the locking system functions correctly.

PEDALS

Brake and Inching Pedal

Remove

1. Remove the cover that protects the inch sensor and switch. See Figure 6.
2. Remove the rod, located under the inching pedal.
3. Disconnect the rod, located under the brake pedal.
4. Remove the cap screws, washers, and nuts that retain the brake pedal and inching pedal assembly to the bracket at the floor of the cab.
5. Remove the inching and brake pedal assembly.
6. Separate the inching pedal from the brake pedal and remove the three shims.
7. Remove the two bearings from the inching pedal.

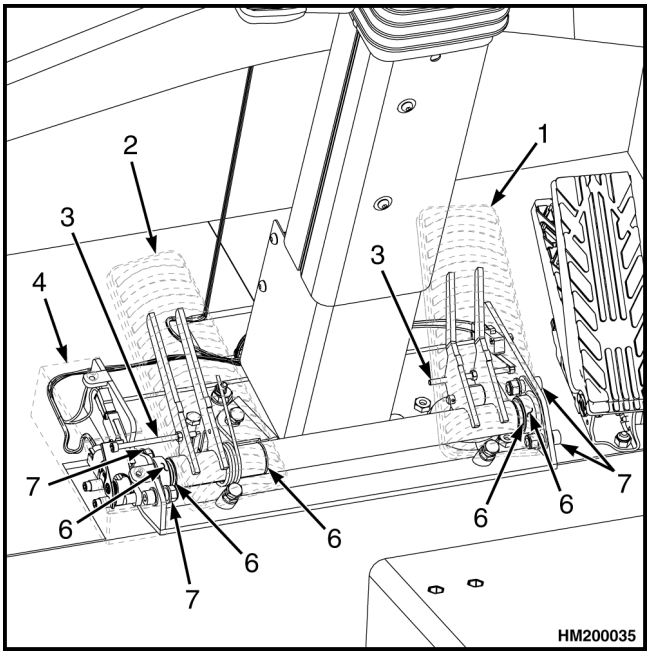

1. BRAKE PEDAL
2. INCHING PEDAL
3. ROD
4. PROTECTION COVER
5. BEARING
6. SHIMS
7. CAP SCREWS, WASHERS AND NUTS

Figure 6. Brake and Inching Pedals Assembly

Install

1. Install the two bearings on the inching pedal. See Figure 6.

NOTE: Make sure the three shims are positioned correctly.

2. Position the three shims and install the inching pedal to the brake pedal. Check if the roller under the brake pedal is centered above the bolt head of the brake valve, adjust number of shims on each side if needed.
3. Position the inching and brake pedal assembly between the brackets at the floor of the cab.
4. Install the two cap screws, washers, and nuts that retain the brake pedal to the bracket at the floor of the cab.
5. Install the two cap screws, washers, and nuts that retain the inching pedal to the bracket, at the floor of the cab.

https://truckmanualshub.com/

6. Connect the rod to the inching pedal.

7. Connect the rod to the brake pedal.

8. Check if adjustments to the inching and brake pedals are required, and adjust as needed. Refer to the sections Brake Pedal Adjustment and Inching Pedal Adjustment.

9. Install the protection cover over the inch sensor and switch.

Accelerator Pedal and Sensor

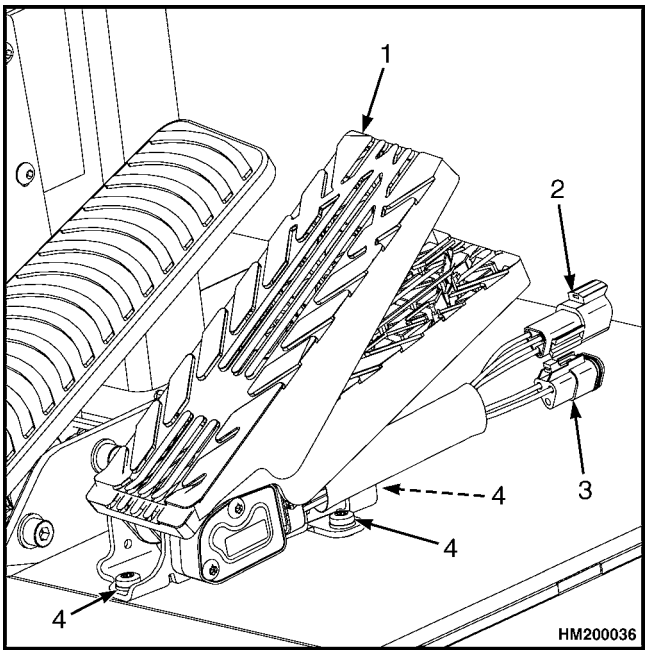

1. ACCELERATOR PEDAL
2. CPS04 THROTTLE POSITION
3. IDLE VALIDATION SIGNAL
4. CAP SCREW

Figure 7. Accelerator Pedal

1. Disconnect the connectors for Throttle Position and Idle Validation. See Figure 7.

2. Remove the three cap screws retaining the accelerator pedal to the cab floor.

3. Install a new pedal and connect the connectors.

SEAT ASSEMBLY

Seat

Remove

NOTE: Use a lifting device for the removal of the seat.

NOTE: The ground cable is attached with a capscrew at the right rear corner of the suspension.

1. Disconnect the battery ground cable.

NOTE: There is one electrical connector on the mechanical seat. There are two electrical connectors on the air suspension seat.

2. Disconnect the electrical connector(s).

3. Turn the electrical plug counterclockwise and disconnect the electrical plug located at the instrument panel side console.

NOTE: The seat must be positioned completely to the front to allow access to the two front capscrews inside the sliding system. The seat must be positioned completely to the rear to allow access to the two rear capscrews inside the sliding system.

4. Remove the four capscrews, washers, and nuts located above the sliding system that retain the seat to the seat suspension.

5. Remove the seat. See Figure 8.

https://truckmanualshub.com/

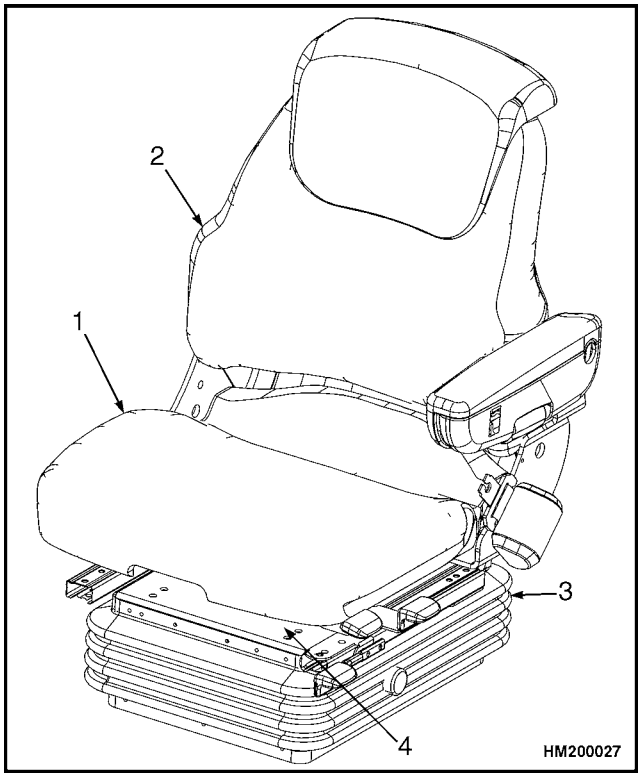

1. SEAT CUSHION
2. BACK CUSHION
3. BOOT
4. SEAT SUSPENSION

Figure 8. Seat

Install

NOTE: Use a lifting device to install the seat.

1. Position the seat onto the seat suspension.

NOTE: The seat must be positioned completely to the front to allow access to the two front capscrews inside the sliding system. The seat must be positioned completely to the rear to allow access to the two rear capscrews inside the sliding system.

2. Install the four capscrews, washers, and nuts located above the sliding system that retain the seat to the seat suspension.

3. Connect the electrical plug located at the instrument panel side console.

NOTE: There is one electrical connector on the mechanical seat. There are two electrical connectors on the air suspension seat.

4. Connect the connector(s).

NOTE: The ground cable is attached with the capscrew at the right rear corner of the suspension.

5. Connect the battery ground cable.

Seat Cushion

Remove

1. Slide the seat forward. See Figure 8.

2. Adjust the steering wheel upward to its maximum height position.

3. Remove and discard the screw from the front right side.

4. Remove and discard the three clips from the cushion front.

5. Slide the seat fully backward.

6. Grip the seat cushion on the front right corner.

7. Lift the seat cushion until the guide block becomes detached.

8. Rotate the seat cushion clockwise.

9. Lift the cushion upward to detach the front of the seat cushion.

10. Grip the seat cushion at about the halfway point toward the rear of the cushion.

NOTE: Increase the lifting force until the rear of the cushion detaches.

11. Lift the seat cushion from right to left.

12. Cut the cable tie securing the connector block to the seat cushion.

13. Disconnect the spade connectors from the connector block.

14. Remove and discard the seat cushion.

Install

1. Feed the cables of the new cushion through the hole in the armrest bracket.

2. Connect the spade connectors to the connector block.

https://truckmanualshub.com/

3. Use a cable tie to attach the connector block to the seat cushion.
4. Locate the rear tab on the underside of the seat cushion over the rectangular hole in the metal pan.
5. Apply downward pressure over the tab.
6. Slide the cushion around until the tab is partially located in the rectangular hole.
7. With the cushion angled at approximately 35° to 45°, apply a sharp blow to the front of the seat cushion. The tab will enter the hole with an audible click.
8. Pull the cushion upward to make sure the cushion is correctly locked into position.
9. Install three new clips to the cushion front.
10. Install a new screw to the front right side.

Back Cushion

Remove

1. Slide the seat assembly to the maximum forward position. See Figure 8.
2. If equipped, remove the headrest out of the two guides.
3. Remove the two guides, located at the top side of the back cushion, that retain the back cushion to the back pan.
4. Remove the two screws that retain the back cushion to the back pan.
5. Remove the back cushion.

Install

1. Position the back cushion.
2. Install the two screws that retain the back cushion to the back pan.
3. Install the two guides, located at the top side of the back cushion, that retain the back cushion to the back pan.
4. If equipped, install the headrest in the two guides.
5. Reposition the seat assembly to the correct operating position.

Boot Replacement

1. Remove seat See Seat, Remove.
2. Use a small pry bar to remove the 22 plastic plugs that retain the boot to the seat suspension. See Figure 8.
3. Remove the boot.
4. Install the new boot.
5. Install the 22 plastic plugs that retain the boot to the seat suspension.

Seat Suspension Replacement

1. Remove seat. See Seat, Remove.
2. Remove boot. See Boot, Remove.
3. Remove the four capscrews that retain the seat suspension to the cab floor. See Figure 8.
4. Remove the seat suspension from the cab floor.
5. Position the new seat suspension onto the cab floor.
6. Install the four capscrews that retain the seat suspension to the cab floor.

https://truckmanualshub.com/

Suspension Scissor and Shock Absorber Replacement

Remove

NOTE: Replacement instructions for the air seat and mechanical seat are similar.

STEP 1.
Remove the seat from the suspension. Refer to Seat.

STEP 2.
Remove the seat suspension from the cab. Refer to the section Seat Suspension Replacement.

STEP 3.
Remove the boot. Refer to Boot Replacement.

STEP 4.
Position the suspension on a workbench with the lower housing facing upward.

STEP 5.
For air seats remove the retaining screws for the air bladder.

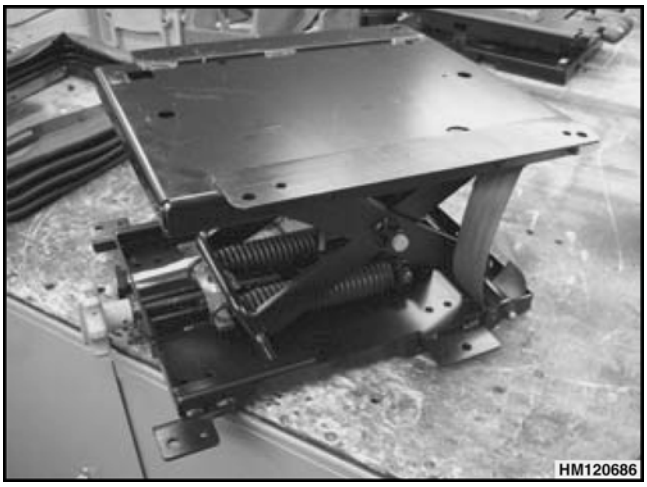

STEP 6.
Using a 9/16” Allen wrench, remove the lower housing pivot shaft nut.

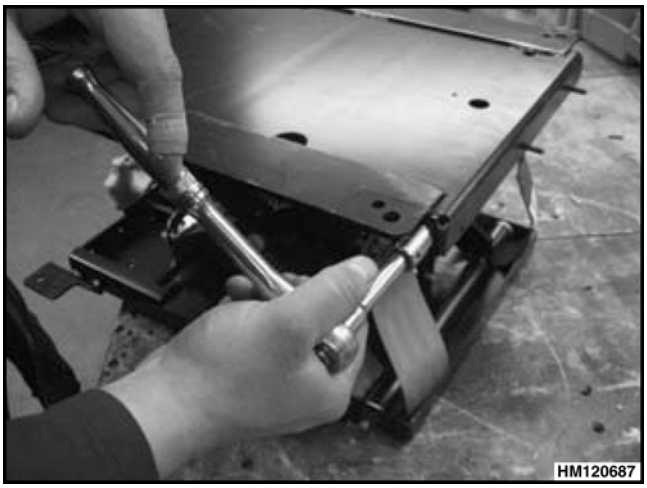

https://truckmanualshub.com/

STEP 7.
Remove the pivot shaft.

STEP 8.
For mechanical seats: Lift the lower housing and place the suspension scissor in the highest raised position.

STEP 9.
For mechanical seats: Lift the rear of the lower housing while sliding the lower housing forward to disengage the height adjustment rollers from the roller channels of the lower housing.

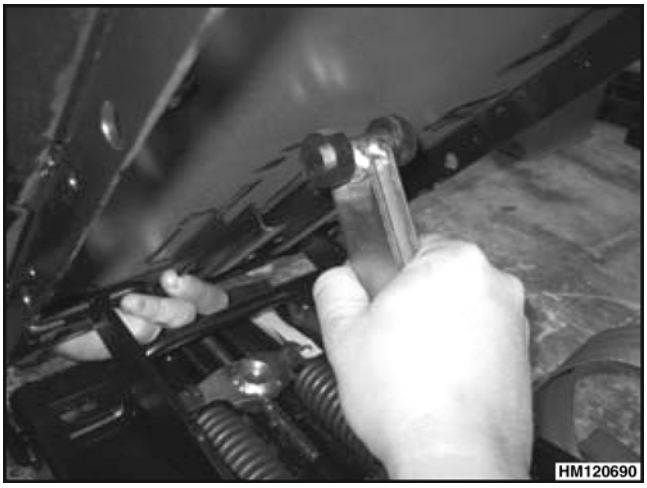

https://truckmanualshub.com/

STEP 10.
Rotate the rear of the lower housing clockwise to disengage the front suspension scissor rollers from the roller channels of the lower housing.

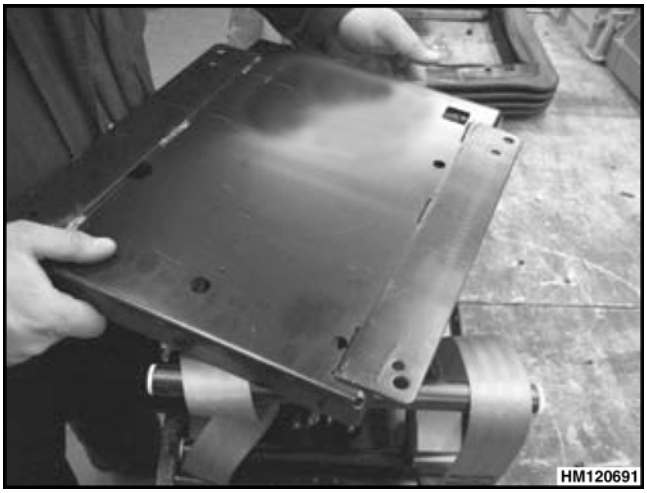

STEP 11.
Remove the lower housing from the suspension.

STEP 12.
For mechanical seats: Remove the tether belts from the suspension scissor lower pivot tubes.

STEP 13.
Using a 9/16” Allen wrench, remove the upper housing pivot shaft nut.

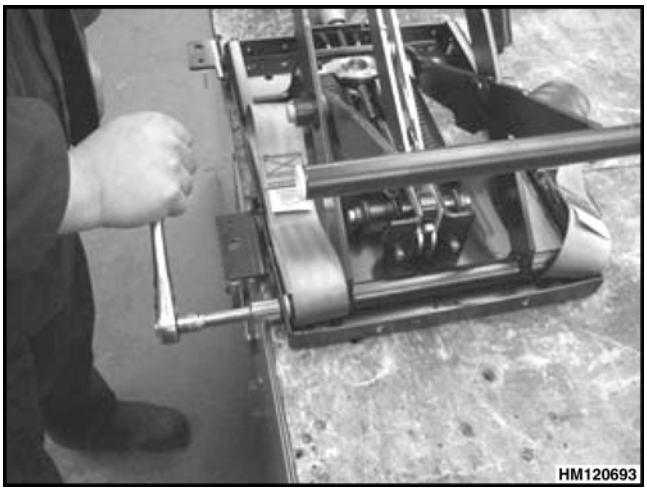

https://truckmanualshub.com/

STEP 14.
Remove the pivot shaft.

STEP 15.
Remove the weight indicator tension spring from the suspension scissor to avoid damage to the weight indicator tension spring.

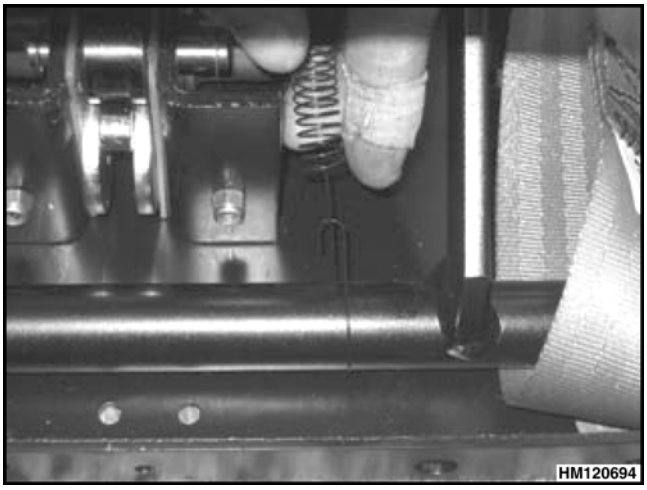

STEP 16.
Lift the suspension scissor while sliding the suspension scissor forward to disengage the front suspension scissor rollers from the roller channels of the upper housing.

STEP 17.
For both types: Remove the suspension scissor from the upper housing and place the suspension scissor on one side. For air seats: Remove the bladder.

https://truckmanualshub.com/

STEP 18.
Remove the tether belts from the suspension scissor upper pivot tubes.

STEP 19.
Remove the rear bearing tubes from the suspension scissor.

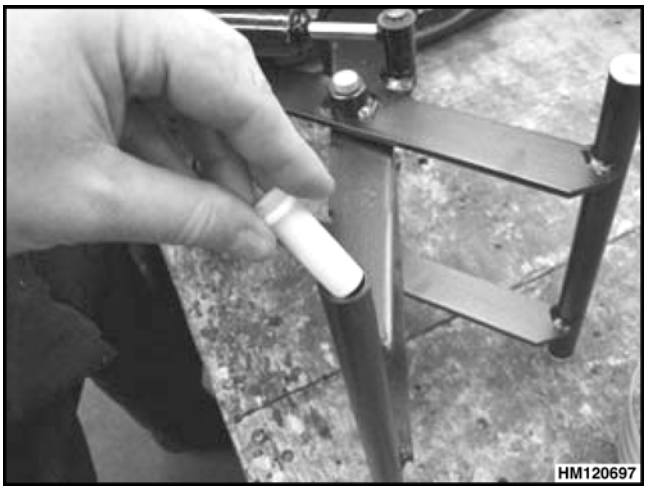

STEP 20.
Remove the front suspension scissor rollers from the suspension scissor.

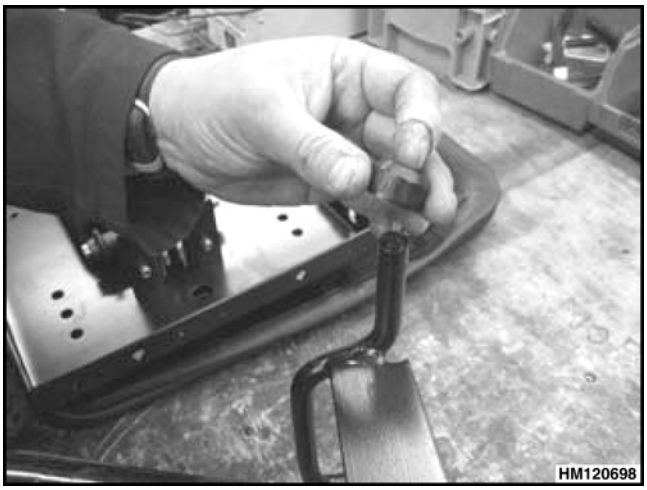

STEP 21.
Remove the push-on PAL nut that retains the upper shock absorber bearing to the suspension scissor.

https://truckmanualshub.com/

Thanks for your reading.
Please click here to download complete manual instantly.
And can also choose other manuals.

Feel free --->write to me with any questions.
Our service email:
manuals007@hotmail.com