https://truckmanualshub.com/

CANYCOM

Off-road Rubber Track Dumper

S25A

Operator's Manual

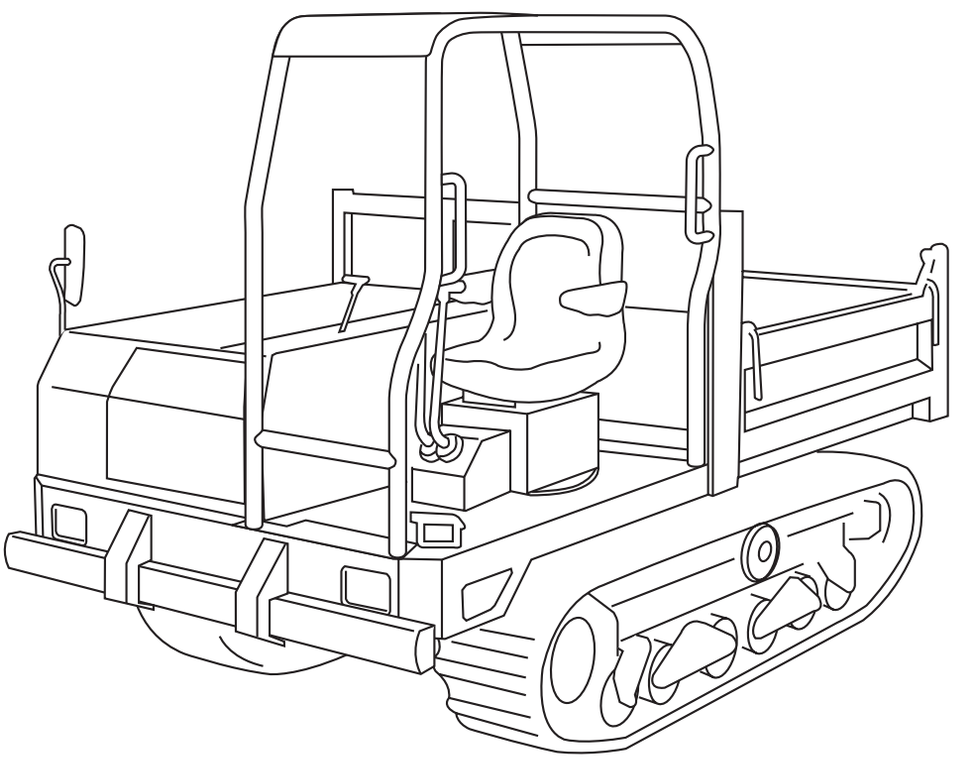

⚠WARNING!

Read this manual completely before operating or maintaining this machine. Failure to follow safety precautions could result in serious injury or death. Keep this manual for future reference by you and by all those who operate and maintain this machine.

3670 5601 004

Original Instructions (in English)

https://truckmanualshub.com/

CHIKUSUI CANYCOM, INC.

http://www.canycom.co.jp/

CHIKUSUI CANYCOM, INC.
90-1 Fukumasu, Yoshii-machi,
Ukiha-shi, Fukuoka, Japan 839-1396

Sales Headquarters (International) TEL +81-(0)943-75-2195
FAX +81-(0)943-75-4396

Authorized Dealer

All rights reserved. Unauthorized use or reproduction of this material is prohibited.

https://truckmanualshub.com/

Notice to Users and Maintenance Personnel

Thank you for purchasing this machine.
This manual provides information needed for safe and effective use of this machine to those who operate or maintain the machine. Make sure to read and understand the manual thoroughly before operating this product. Also make sure to read the separate operator's manual for the engine.

⚠WARNING!

- **This machine can be very dangerous if the safety precautions in this manual and on the labels attached to this machine are not followed. Read and understand this manual and the safety labels on the machine thoroughly before using this machine. Always follow the instructions and safety precautions, or serious injury or death could result.**

- **This machine should only be used for its intended purpose: hauling and dumping. Any other use could be dangerous.**

- **This machine may not be operated on public road or what is considered to be public road. It is the sole responsibility of the operator to consult the local regulations.**

- **Do not modify this machine, or do not operate this machine with the safety covers removed or open. A serious accident could result.**

⚠CAUTION!

- **Store this manual in a safe, accessible place for easy reference.**

https://truckmanualshub.com/

Notice to Owner

⚠CAUTION!

- **Be sure that everyone who uses this machine, including those who rent or lease this machine, receives a copy of this Operator's Manual and understands the importance of reading and following the information in this manual.**

Warning Terms Used in this Manual

In this manual, the following four warning terms are used to signal the four levels of hazard (or seriousness of possible accidents). Read and understand what they mean and always follow the instructions in this manual.

Warning Term	Definition
⚠DANGER!	**Indicates an imminently hazardous situation which will result in death or serious injury if the user does not follow the procedures or the instructions.**
⚠WARNING!	**Indicates a potentially hazardous situation which could result in death or serious injury if the user does not follow the procedures or the instructions.**
⚠CAUTION!	**Indicates a potentially hazardous situation which could result in minor to moderate injury or damage to the machine if the user does not follow the procedures or the instructions.**
NOTE	**Indicates important information which needs particular attention.**

https://truckmanualshub.com/

Warranty and After-Sales Service

Warranty

CHIKUSUI CANYCOM, INC. guarantees this product, based on the terms of warranty. A copy of this warranty is reproduced in the back of this manual.

After-Sales Service

Consult your local CANYCOM dealer or our company's sales department regarding service orders or any questions or problems that may arise when using this machine. Please make sure to have the product name, serial number, and the make and type of the engine handy at the time of contact. The model and serial number can be found on the model label as shown below, and the make and type of the engine can be found in Chapter3 "Specifications" of this manual (Page17).

Location of Model Label

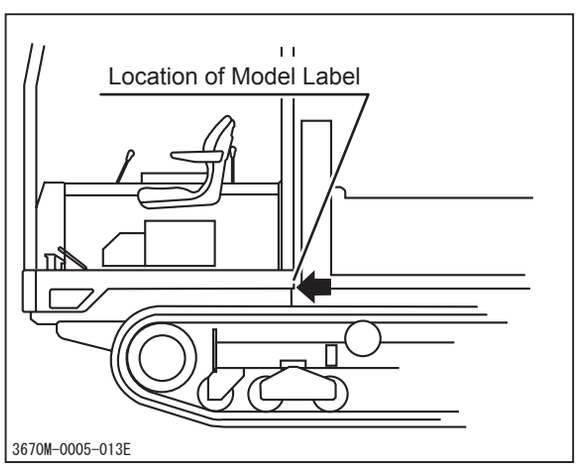

Model Label

Availability of Spare Parts

The replacement or repair parts for this product shall remain available for seven years after the production of this type of machine is discontinued.

https://truckmanualshub.com/

Contents

1. Safety 1

Safety Labels 1

Safety Precautions 7

Training 7
Preparation 8
Operation 8
Servicing 13

2. Controls and Components 14

Name and Function of Controls 14

3. Specifications 17

Product Specifications 17

Contents of the Tool Bag 18

4. Operation 19

Preparation 19

Pre-start up Inspection 19
Checking and Filling Fuel 19
Adjusting Seat 20
Using Seat Belt 21

https://truckmanualshub.com/

Driving 21

Starting 21
Driving 24
Stopping 28
Stopping with Fuel Cutoff Lever 28
Parking 29

Working 30

Dumping 31
Dumping and Turning Bucket 31
Using Safety Prop 32

5. Maintenance 33

Maintenance Schedule 33

List of Fluids and Lubricants 38

List of Consumables and Spares 39

Engine 42

Engine Oil 42
Oil Filter 43
Air Cleaner 44
Coolant 45
Fan Belt 47
Fuel System 48

Drive Train 50

Tracks 50
HST (Hydrostatic Transmission) Fluid 52
Steering Lever 55
Travel Motor 56
Greasing 57

https://truckmanualshub.com/

Electrical System 58
Battery 58
Fuses 61
After Use Care 62
After Normal Use 62
After Cold Weather Use 62
Storage 63

6. Troubleshooting 64
Troubleshooting 64

7. Transporting 68
Hauling 68
Loading and Unloading 68
Hoisting and Towing 70
Hoisting 70
Towing 71

https://truckmanualshub.com/

Warranty

Warranty Certificate is attached at the end of this manual.

* Have the warranty certificate signed and sealed after you have received and fully understood the instructions for handling this machine and received the receipt.

Appendix

• Operator's Manual for the Engine

* Be sure to read and understand it together with this manual .

https://truckmanualshub.com/

Safety Labels

The safety labels shown on the next page are attached to the machine. See the illustration below for the location and the illustration on the next page for the content of each label on the machine.

- **Locate all the warning labels attached to this machine. Read and follow the instructions and precautions in them. Failure to do so could result in serious injury or death to the operator or bystanders.**

- **Keep the labels clean and legible. Do not use solvents or gasoline to clean the labels.**

- **Replace these labels immediately if they have been removed, have fallen off or become illegible. Use the part number, on the label or shown in this manual, to order a replacement label from your CANYCOM representative.**

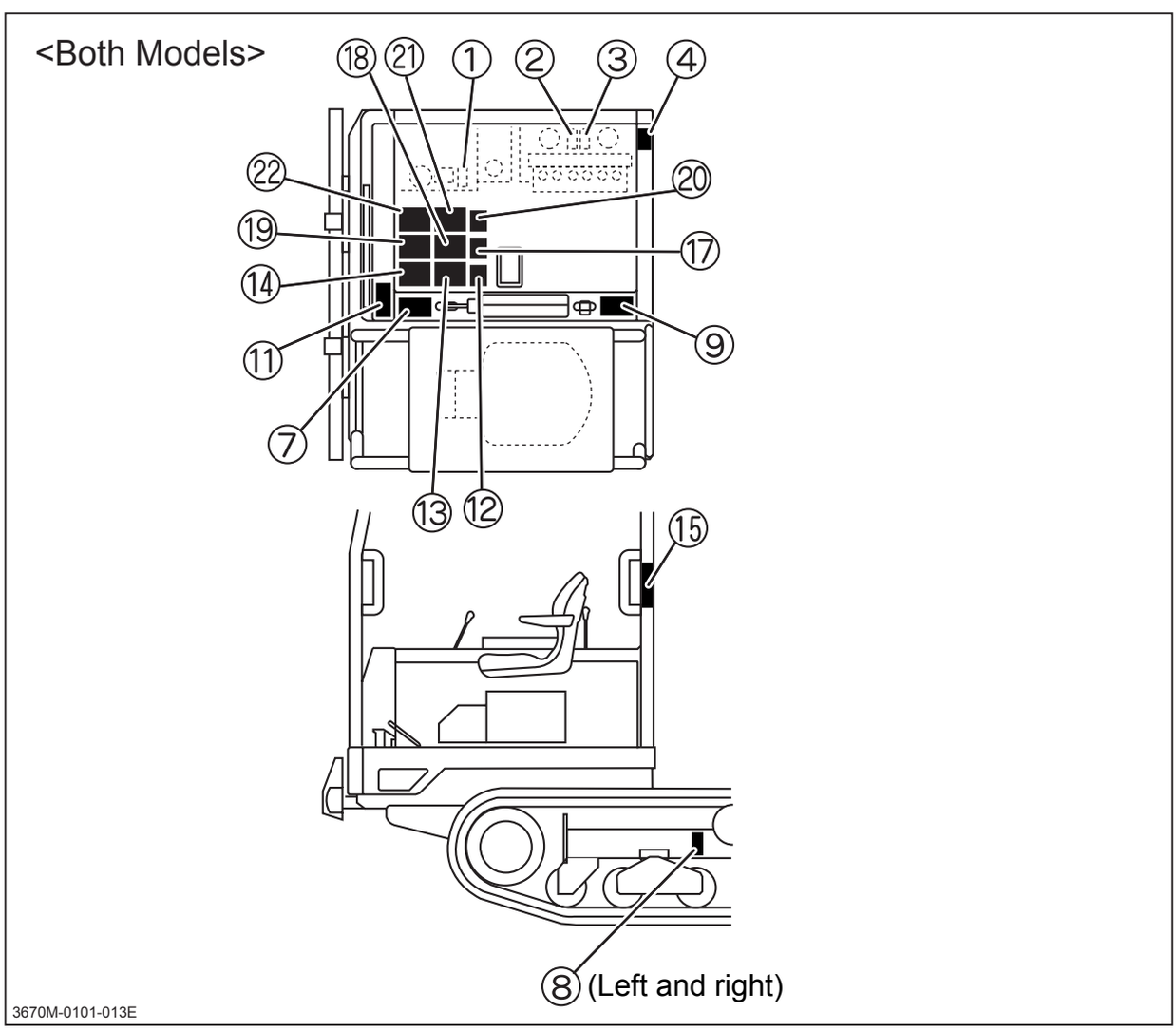

https://truckmanualshub.com/

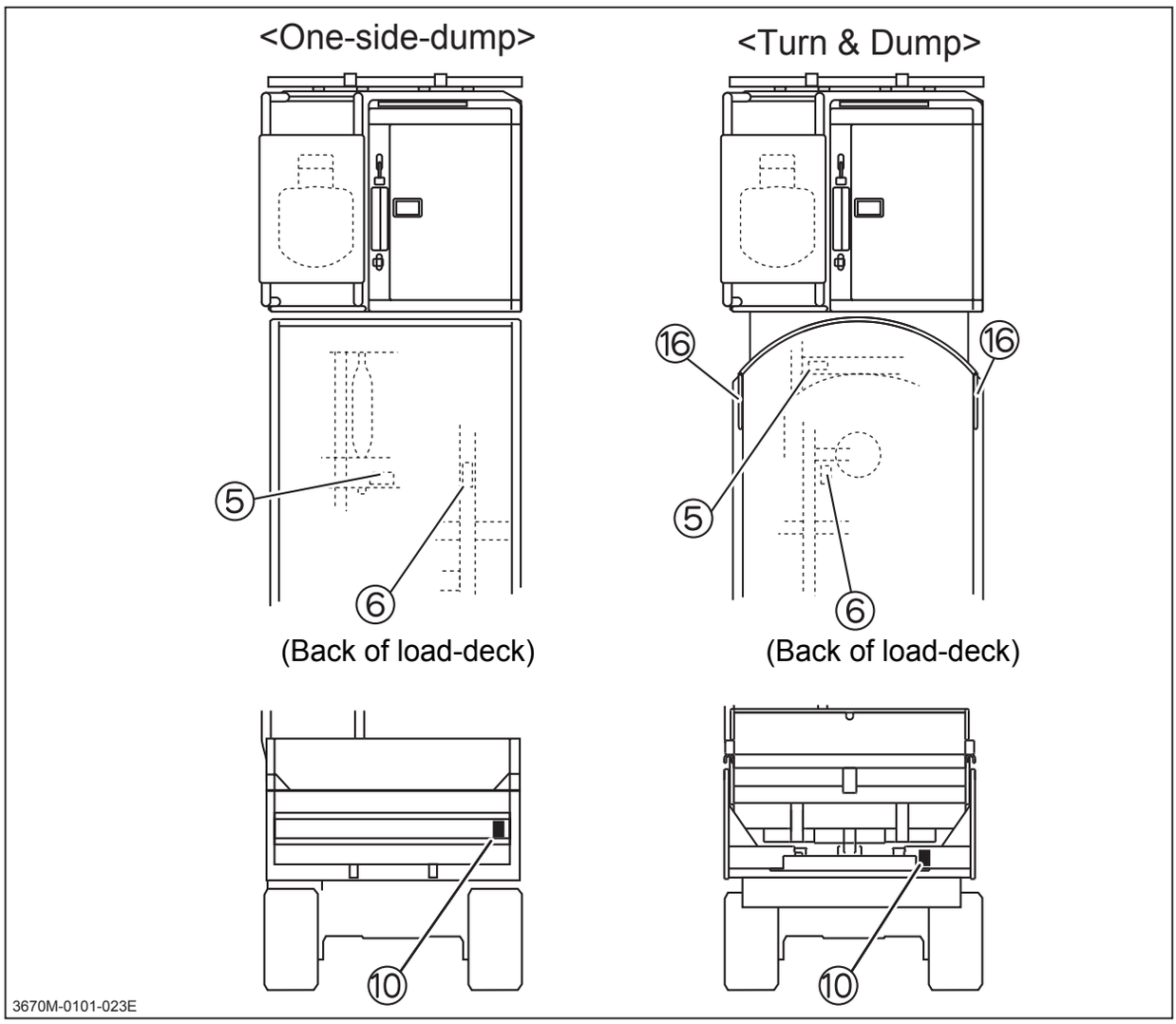

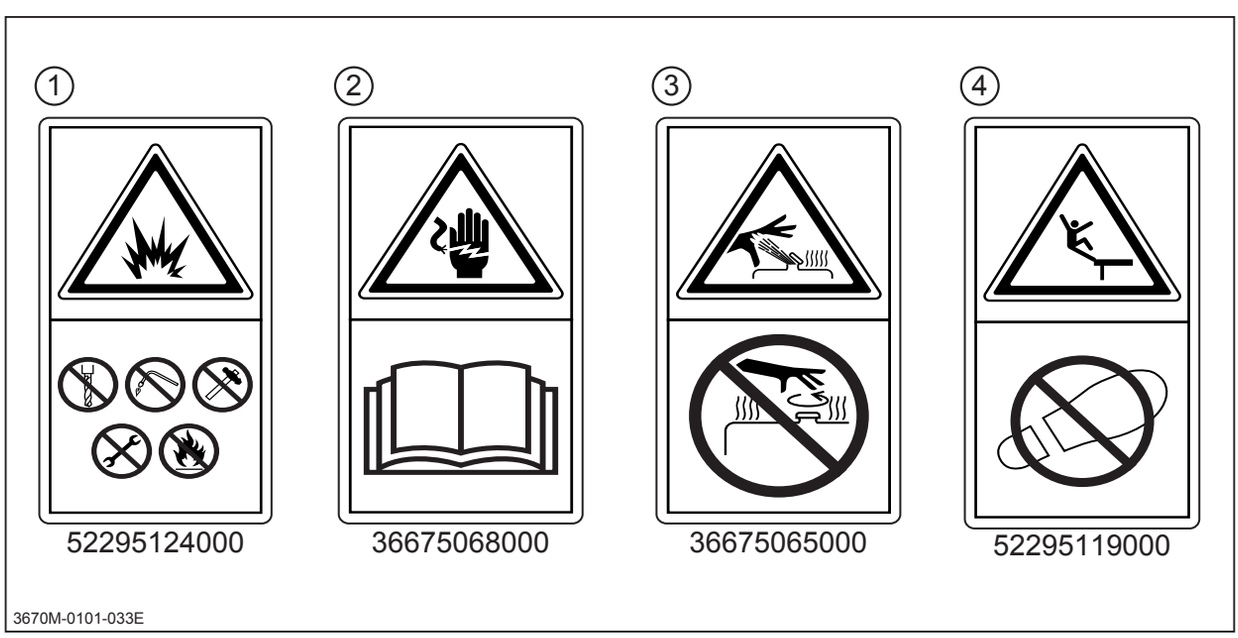

https://truckmanualshub.com/

5

36675063000

6

36675066000

7

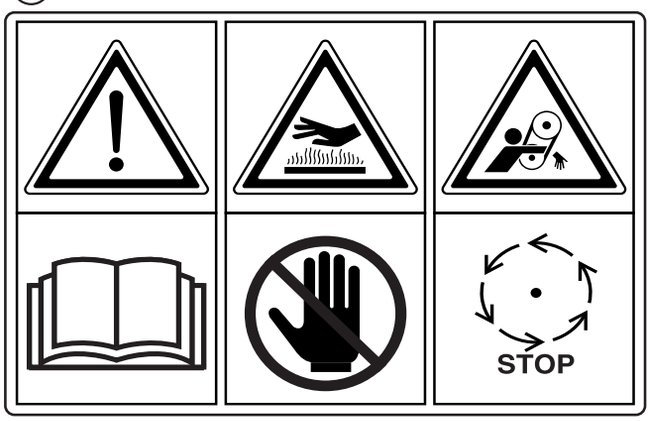

52295104000

8

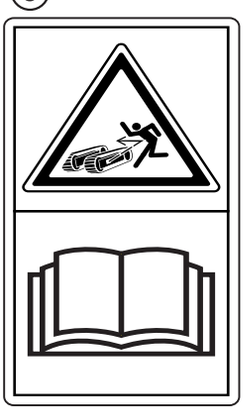

52295116000

9

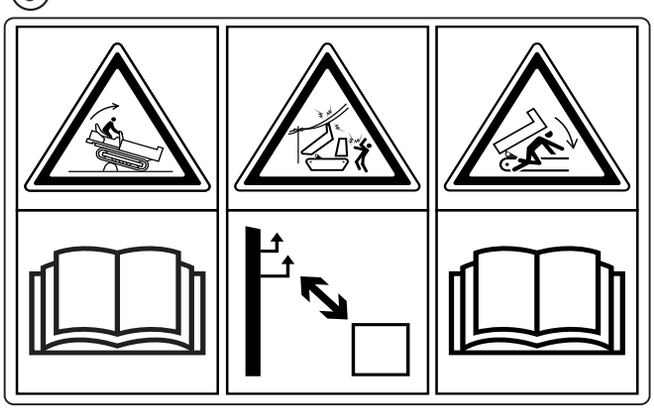

52295107000

10

36675064000

11

⚠ WARNING! AVERTISSEMENT! WARNUNG! AVVERTENZA!

Always stop the engine and apply the parking brake before leaving the machine.
When the steering lever is touched while the engine is running, the machine will move.

Arrêtez toujours le moteur et serrez le frein de parking avant de quitter la machine. Une action sur les leviers de translation alors que le moteur tourne engendre le déplacement de la machine.

Stellen Sie den Motor ab und betätigen Sie aus Sicherheitsgründen immer die Parkbremse bevor Sie die Maschine verlassen. Wenn Sie bei laufendem Motor die Fahrpedalhebel betätigen, beachten Sie bitte, dass die Maschine sich entsprechend in Bewegung setzt.

Spegnere sempre il motore ed azionare il freno di parcheggio prima di scendere dalla macchina. Toccare le leve dello sterzo quando il motore è in moto causa il movimento della macchina.

52345067000

3670M-0101-043E

https://truckmanualshub.com/

⑫

⚠ CAUTION

Never overload dump body. Do not exceed speed limits in chart below when traveling down a steep slope.

If you are going too fast,the brake may not be able to stop the machine.

When traveling downhill with a load, lower speed as slope becomes steeper.

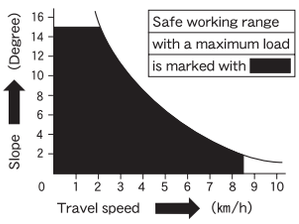

52295138000

⑬

⚠ WARNING	⚠ WARNING	⚠ WARNING
Do not start the engine in a closed room. Exhaust gas may cause gas poisoning.	When a load is put on in an unbalanced way,it could cause the machine to turn over. Therefore,be sure to put a load on equally. 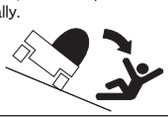	Loading and unloading of this machine should be done slowly on a horizontal and solid ground at slow speed and in an empty state of the vehicle by using running boards. The vehicle should go up in forward gear and go down in backward gear. Loading and unloading of this machine should be done carefully because the center of gravity may move suddenly. Changing the direction on the running boards could cause the machine to fall off and therefore should not be done.

⚠ WARNING

- When checking is done with the load-carrying deck body raised , you could get caught in the load-carrying deck body. Therefore,extend the dump cylinder completely and stop the engine,and then , lock the dump lever and support the load-carrying deck body securely with the load-carrying deck body drop prevention rod.
- Operation of the dump lever should be performed on a horizontal and solid ground as much as possible. In sloped areas and uneven areas , the center of gravity moves and the machine could turn over.
- Before operating the dump lever , make sure that there is no person around the load-carrying deck body.
- Before operating the dump lever to lower it , remove the drop prevention rod located below the load-carrying deck body. If the dump lever is operated with the drop prevention rod not removed , the frame and drop prevention rod could be damaged.
- Do not drive the machine with the load-carrying deck body raised. Not only the field of view is bad , but also the center of gravity becomes high and the machine could turn over.
- With the load-carrying deck body raised , do not leave the machine as it is. If another person touches the dump lever by mistake , the load-carrying deck body will go down and could cause an accident.

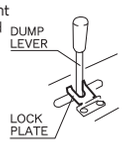

52295112000

⑭

⚠ CAUTION

1. This machine does not fall under the " car " category in the Road Transportation Vehicle Act. Do not drive it on public roads.
2. Before moving the machine , make sure that there is no person around it. In joint work , be sure to give a signal with the horn.
3. Do not carry out work with the indicated load capacity exceeded.
4. Do not allow anyone other than the operator to ride on the machine.
5. Exercise caution when driving the machine on a shoulder of a road,cliffy area, and soft ground.
6. Turning the machine at high speed may cause it to turn abruptly and turn over.
7. When parking the machine,observe the following points.
   1) Apply the parking brake.
   2) Stop the engine and pull out the key.
   3) Use stopper for the crawlers.
8. When storing the machine,wait until the exhaust pipe cools down completely, and then,store it in a place with no combustible material located nearby.

⚠ CAUTION	⚠ CAUTION	⚠ CAUTION
Driving the machine in an inclined area may cause a serious accident resulting in injury or death due to overturning or runaway machine. Therefore,observe the following points strictly. 1) Do not drive the machine in sloped areas with an inclination of 15 degrees or more. 2) When going down sloped areas with an inclination of 10 to 15 degrees,set the high speed/low speed change-over switch at the "low speed" position to reduce the engine speed,and then, drive the machine at low speed.	When the outside air temperature is 0℃ or less , perform warming-up for five minutes or more before using the machine. Driving the machine before the engine and hydraulic equipment become warm enough will not only shorten the lives of the engine and hydraulic equipment , but also cause erroneous operation.	When turning the seat , take care not to touch the operation lever. Moving the operation lever while the seat is being turned may cause the linkage to break down.

52295111000

⑯

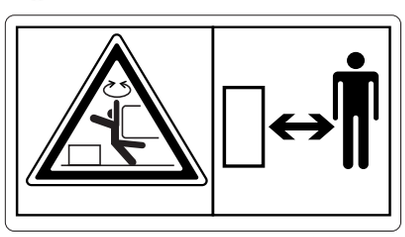

36705114000

⑰

⚠ ATTENTION

Ne surchargez jamais la benne.
Ne dépassez pas la vitesse limite décrite sur la graphe ci-dessous lorsque vous vous déplacez sur une pente raide.
Si vous allez trop vite, vous risquez de ne pas pouvoir freiner la machine avec le frein.
Si vous decendez une pente avec une charge, ralentissez si la pente devient plus raide.

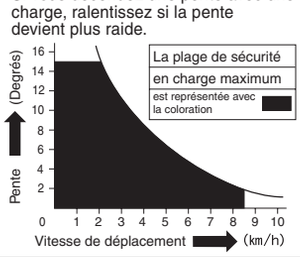

36705111000

3670M-0101-053E

https://truckmanualshub.com/

⑮

WARNING!
AVERTISSEMENT!
AVVERTENZA!
WARNUNG!

The protection offered by this ROPS will be impaired if it has been altered, damaged, or has been involved in an overturn. Inspect ROPS, seatbelts, and their attaching components daily for cracks, deformations or other unsafe conditions. Seatbelts must be worn while operating vehicle. Failure to properly use and maintain ROPS, seatbelts, and their attaching components may result in severe injury or death to the operator or a bystander.

La protection offerte par ce ROPS sera diminuée s'il a été altéré, endommagé ou a été impliqué lors d'un renversement. Inspecter le ROPS, les ceintures de sécurité, leurs fixations ou autres conditions d'insécurité. Il faut porter les ceintures de sécurité lors de l'utilisation du véhicule. Négliger l'utilisation correcte et l'entretien du ROPS, des ceintures de sécurité et de leurs fixations, peut entraîner de graves blessures ou la mort de l'opérateur ou du spectateur.

La protezione offerta da questo ROLL-BAR diminuisce qualora esso venga modificato, danneggiato o la macchina si sia ribaltata. Controllate giornalmente il ROLL-BAR, le cinture e le loro componenti affinchè non ci siano rotture, deformazioni o altre condizioni di pericolo. Le cinture di sicurezza devono essere allacciate durante l'utilizzo della macchina. Un uso improprio e la mancata manutenzione del ROLL-BAR, delle cinture e delle loro componenti possono causare serie lesioni corporee o la morte dell'operatore o della persone circostanti.

Der Schutz des ROPS-Daches ist nicht mehr gewährleistet, wenn dieses beschädigt oder verformt ist. Überprüfen Sie täglich, den Zustand des ROPS-Daches, der Sicherheitsgurte und deren Befestigung auf Beschädigung, Verschleiss oder Defekt. Die Sicherheitsgurte muss getragen werden! Missachtung kann zu schweren Verletzungen führen.

36775063000

⑱

⚠ AVERTISSEMENT	⚠ AVERTISSEMENT	⚠ AVERTISSEMENT
Ne faites pas d marrer le moteur dans un local clos. Les gaz d' chappement peuvent provoquer un empoisonnement gazeux.	Si une charge est pos e sur la machine avec un quilibre mal r parti, ceci peut faire renverser la machine. Assurez vous que la charge est bien r partie.	La machine doit tre charg e et d charg e lentement,sur un terrain ferme et bien horizontal. Le v hicule doit tre vide, les op rations se faire lentement et on doit utiliser des planches de roulage. Le v hicule doit monter en marche Avant et descendre en marche Arri re. Le chargement et le d chargement de la machine doit se faire prudemment, parce que le centre de gravit peut bouger brusquement. Si vous changez brusquement la direction alors que vous tes sur les planches de roulage, cela risque de faire tomber la machine. Ceci est donc ˆ viter.

⚠ AVERTISSEMENT

- Lorsque des v rifications sont en cours avec la benne relev e, vous riquez de vous laisser prendre par la benne. Il faut donc tendre le v rin au maximum de sa course,arr ter le moteur, puis verrouiller le levier de benne et soutenir celle-ci fermement au moyen de la tige anti-chute de benne.
- Les op rations avec le levier de benne doivent se faire autant que possible sur des terrains plats et fermes. Sur des zones en pente ou de plan in gal, le centre de gravit se d place et la machine risque de se renverser.
- Avant d' actionner le levier de benne, assurez vous qu' il n' y a personne autour.
- Avant d' actionner le levier de benne, retirez la tige anti-chute qui est sous la benne. Si la benne est actionn e alors que la tige anti-chute n ' est pas enlev e, le cadre ainsi que la tige anti-chute risquent d' tre ab"m s.
- Ne pas conduire la machine avec la benne relev e. Cesi rend non seulement la visibilit mauvaise, mais le centre de gravit devient plus haut, ce qui peut provoquer le renversement de la machine.
- Ne laissez pas la machine avec la benne relev e tel quel. En effet,si quelqu' un venait ˆ toucher au levier de benne par erreur, celle-ci pourrait descendre et causer un accident.

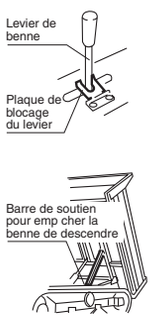

36705105000

⑲

⚠ ATTENTION

1. Cette machine n'entre pas dans la catégorie "automobile" au regard de la Loi sur les véhicules destinés au transport routier. Ne la conduisez pas sur des voies publiques.
2. Avant de la déplacer assurez vous qu'il n'y a personne autor. Lorsque vous travaillez avec d'autres personnes, n'oubliez pas de donner un signal de klaxon.
3. N'effectuez pas d'opérations en surcharge par rapport a la charge nominale indiqúee.
4. N'autorisez que le conducteur de la machine à monter dessus.
5. Faites particulièrement attention lorsque vous conduisez le véhicule sur une bordure latérale de route, en zone de déclivité ou sur un terrain mou.
6. Si vous tournez la machine à haute vitesse, cela peut entraîner un virement brutal de la machine; elle risqué alors de se renverser.
7. Lorsque vous garez la machine, respectez les precautions suivantes:
   1) Mettre le frein de stationnement.
   2) Arrêter le ,oteur et retirer la clé.
   3) Mettre des butées d'arrêt aux chenilles.
8. Lorsque vous mettez la machine au garage, attendez jusqu' à ce que le tuyau d' échappement soit complétement refroidi, placez la en un lieu sans presence de materiel combustible à proximité.

⚠ ATTENTION	⚠ ATTENTION	⚠ ATTENTION
Ne conduisez pas la machine sur une zone incline. Ceci risqué de causer un accident sérieux pouvant provoquer des blessures ou meme la mort à cause d'un renversement ou d'un emballement de la machine. Vous devez donc respecter scrupuleusement les points suivants: 1) Ne conduisez pas la machine sur des pentes de 15 degrés de déclivité ou plus. 2) Si vous êtes amenés à descendre des pentes de 10 à 15 degrés, mettre le permutateur haute vitesse / basse vitesse sur "basse vitesse", abaissez le régime moteur et conduisez la machine à basse vitesse.	Si la temperature extérieure est inférieure ou égale à 0 degrés centigrades oumoins, vous devrez laisser le moteur chaufferpendant cinq minutes ou plus avant de vous server de la machine. Si vous conduisez la machine avant que le moteur et les dispositifs hydrauliques ne soient suffisamment chauds, cela va non seulement raccoursir la durée de vie du moteur et de ces dispositifs, mais générer aussi des erreurs dans les operations meme de la machine.	Larque vous tournez le siege, prenez soin de ne pas toucher au levier de marche. Si vous actionnez ce levier alors que le siege est en rotation, ceci peut provoquer la un défaut (panne) au niveau du mécanisme de liaison.

36705103000

3670M-0101-063E

https://truckmanualshub.com/

20

⚠ ACHTUNG

Kipper niemals überladen.
Bei Fahrten im Gefälle keinesfalls die unten angegebene Höchstgeschwindigkeit überschreiten.
Bei Überschreiten der Höchstgeschwindigkeit besteht Gefahr dass Bremsen das Fahrzeug nicht zum Stehen bringen können.
Bei Gefällefahrten unter Last, Fahrgeschwindigkeit zurücknehmen wenn Gefälle zunimmt.

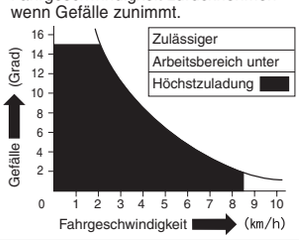

36705112000

21

⚠ WARNUNG	⚠ WARNUNG	⚠ WARNUNG
Motor nicht in geschlossenen RŠumen laufen lassen. Vergiftungsgefahr durch Motorabgase.	Kipper nur gleichmŠssig beladen. Bei einseitiger Beladung besteht Gefahr dass Maschine sich ŸberschlŠgt.	Be-und Entladen des Kippers nur auf ebenen, festem Untergrund vornehmen. Langsam beladen,und eine Rampe verwenden. Wenn Rampe verwendet wird , auf Schwerpunktverlagerung achten. Rasche Verlagerung des Schwerpunktes kann zum Umschlagen der Maschine fŸhren. BergwŠrts im VorwŠrtsgang, TalwŠrts im RŸckwŠrtsgang fahren.

⚠ WARNUNG

- Niemals zwischen ungesicherten Kipper und Maschine aufhalten. MŸssen Wartungen durchgefŸhrt werden erst Hubzylinder bis zum Anschlag ausfahren, dann Kipphebel mit Kulissensicherung blockieren. Danach Kipper mit Sicherungsblock abstŸtzen. Erst danach Wartung durchfŸhren.
- Sicherungsblock vor Einfahren des Kippers abrŸsten. Einfahren des Kippers gegen Sicherungsblock fŸhrt zu BeschŠdigung von Kipper, Sicherungsblock und Hydraulikzylinder.
- Maschine nicht mit aufgestelltem Kipper fahren. Der erhobene Kipper engt das Sichtfeld ein, und fŸhrt zu hoher Schwerpunktlage. Dies kann zum Umschlagen der Maschine fŸhren.
- Maschine niemals mit erhobenem Kipper abstellen. Andere Personen kšnnten irrtŸmlich den Kipphebel betŠtigen und zwischen Maschine und einfahrenden Kipper geraten.
- Vor Einfahren des Kippers sicherstellen dass sich niemand im Gefahrenbereich des Kippers aufhŠlt.
- Kippvorgang mšglichst nur auf ebenem, festem Grund durchfŸhren. Im GefŠlle und auf unebenem Boden besteht Gefahr dass die Maschine aufgrund der Schwerpunktverlagerung umschlŠgt.

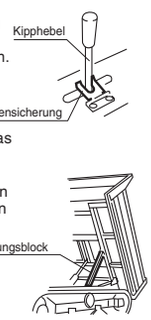

36705106000

22

⚠ ACHTUNG

1. Diese Maschine ist kein Fahrzeug im Sinne der Strassenverkehrsordung. Die Maschine ist nicht zum verkehr auf öffentlichen Strassen zugelassen.
2. Vor Ingangsetzen der Maschine sicherstellen, dass sich niemand im Gefahrbereich aufhält. Bei Arbeiten mit mehreren Personen Hupsignal geben.
3. Niemals Arbeiten unter Überschreitung der Höchstzuladung durchführen.
4. Ausser dem Fahrer dürfen sich keine weiteren Personen auf der Maschine befinden.
5. Bei Fahrten in unebenem Gelände, oder an Böschungen und Gräben, stets vorsichtig sein.
6. Abrupte Lenkbewegungen bei hohen Geschwindingkeiten können zum Umschlagen der Maschine führen und sind zu vermeiden.
7. Abstellen der Maschine wie folgt.
   1) Bremse anziehen.
   2) Motor abstellen und Zündsclüssel abziehen.
   3) Maschine gegen Abrollen mit Keilen sichern.
8. Bei Abstellen der Maschine erst warten bis Auspuffanlage abgekühlt ist. Danach nicht in unmittelbarer Nähe von brennbarem Material parken.

⚠ ACHTUNG	⚠ ACHTUNG	⚠ ACHTUNG
Fahrten im Gefälle können dazu führen, dass die Maschine ausser Kontrolle great oder sich überschlägt. Bei solchen Unfallen kann es zu schweren Verletzungen oder Tod kommen. HaltenSie sich an folgende Regeln: 1) Niemals in Gefälle von mehr als 15 Grad fahren. 2) Bei Talfahrten in Gefählle von 10 – 15 Grad immer die langsame Gangruppe verwenden. Drehzahl vermindern und langsam talwärts fahren.	Bei Umgebungstemperraturen von unter 0 C muss Maschine im Stand mindestens fünf Minuten warmlaufen. Wird Maschine verfahren bevor Hydrauliköl und Motor ausreichend warmgelaufen sind, verkürzt sich Lebensdauer von Motor und Hydraulikelementen erhedlich. Ausserdem führt nicht ausreichend erwärmtes Hydrauliköl zu ungleichmässigem Fahrverhalten.	Bei Drehen des Fahrersitzes nicht die Fahrhebel bedienen. Betätigung der Fafrhebel während der Sitz gedreht wird führt zu Beschädigung des Steuergestänges.

36705104000

3670M-0101-073E

https://truckmanualshub.com/

Safety Precautions

This section contains safety precautions to follow when operating and maintaining the machine. Read and understand the precautions in this section as well as throughout this manual and follow them when operating or maintaining the machine. Failure to follow safety precautions could result in property damage, serious injury or death to the operator or bystanders.

Training

All operators and mechanics should receive practical instructions from their employer or renter. Such instructions should cover the following issues:

- **It is essential to familiarize yourself with the controls, safety labels and the proper use of the machine.**

- **Never allow people unfamiliar with these instructions to operate or service the machine. Do not let anyone under 18 years of age to operate this machine. Local regulations may restrict the minimum age for operating the machine. Consult your local authority.**

- **The operator is responsible for the accidents or hazards caused to other people or their property.**

- **This machine has a riding capacity for one person only. Do not carry passengers other than the operator.**

- **Always keep in mind that care and concentration is required when working with ride-on machines.**

- **Loss of control on a slope cannot be regained by the application of the brake. The main reasons for loss of control are:**

→ insufficient grip of tracks.
→ excessive speed.
→ misjudging of the ground conditions, especially slopes.
→ excessive load.
→ incorrect distribution of load.

https://truckmanualshub.com/

Preparation

⚠WARNING!

- **Fuel is highly flammable. See Checking and Filling Fuel, page 19, for important safety information on handling fuel.**

- **Always wear protective footwear, long trousers, hardhat, safety glasses and ear protection when operating or servicing the machine. Proper clothing will minimize the chance of injury. Do not operate the equipment if you have long hair, loose clothing, or jewelry; all of which may get tangled in moving parts. Do not operate the machine barefoot or with open sandals.**

- **Prepare beforehand the working rules and procedures such as signaling and trafic control for the work place. Following such rules will reduce the risk of accidents.**

- **Never handle fuel or grease, service the engine, or recharge the battery in the presence of fire or spark.**

- **Perform the daily pre-startup inspection (see Preparation, pages 19) before starting the machine. Repair or replace damaged parts before starting the machine.**

Operation

This machine is intended for carrying sand and dirt. Carrying other materials may damage the machine. Avoid carrying liquid concrete. That will damage the machine.

The stability of the machine is affected by the speed, rate of steering, terrain and the load. Always pay close attention to these factors or a loss of control or tip over could occur, resulting in property damage, serious injury or death.

General Driving

- **Do not operate the engine in a confined space where dangerous carbon monoxide fumes can accumulate.**

- **Do not touch the engine, muffler or exhaust pipe while the engine is running or soon after it has stopped. These areas will be very hot and can cause burns.**

https://truckmanualshub.com/

- Do not operate the machine under the influence of alcohol or drugs. Do not operate the machine when you are tired, ill, or not feeling well.

- Always check for obstacles before operating on new terrain.

- Before starting the engine and moving the machine, scan around your surroundings and make sure all persons and other vehicles are a safe distance away from the machine. Sound the horn to warn bystanders.

- On the machine equipped with the ROPS, always wear the seat belt when in use.

- Always stay seated in the operator's seat when driving the machine. Never operate the steering lever off of the machine.

- On a slippery surface, travel slowly and exercise caution to reduce the chance of skidding or sliding out of control. Never operate on ice.

- Always make certain that there is no obstacle or a person behind the machine when backing up. After confirming that it is safe to back up, move slowly and avoid sharp turns.

- To reduce the risk of tip over, pay special attention when encountering an obstacle or a slope, or when braking on a slope or during a turn. See Driving on a Slope on the next page.

- Never attempt to drive over a large obstacle such as rock or fallen tree.

- Always travel slowly and use extra caution when operating on unfamiliar terrain. Be alert when traveling on changing terrain.

- Never operate on terrain that you are not comfortable with. Avoid terrain that is so rough, slippery or loose that you feel like you could tip over.

- Do not operate the machine near the edge of a cliff, an overhang or a slide area.

- Do not make sudden maneuvers. A sudden start, stop, or turn can make the machine lose control and could cause a tip over. Be especially cautious when traveling on soft or wet ground.

https://truckmanualshub.com/

- Drive at a safe speed, taking into account the surface gradient, surface conditions and load.

- Use an observer to help direct the machine when the visibility is poor, terrain is rugged or hilly, or maneuvering room is limited. The observer should be able to see the machine and its immediate surroundings, and should give pre-arranged signals to direct the operator.

Driving on a Slope

⚠WARNING!

- Never use on a slope steeper than 20 degrees.

- Driving on a slope can be dangerous. It can result in a tip over and cause serious injury or death. Take the following precautions.

- Always follow proper procedures for driving on a slope as described in this manual.

- Driving on a slope in a wrong manner can cause a loss of control or a vehicle tip over. Check the terrain carefully before attempting to drive on a slope.

- Never drive on a slope that you are not comfortable with. Avoid a slope that is so rough, slippery, or loose that you feel like you could tip over.

- When driving up a slope, proceed at a steady rate of speed and throttle position.

- Never move the throttle lever or the control lever suddenly.

- If the engine stalls or loses traction during a climb and cannot make it to the top of the slope, do not try to turn the machine around. Carefully back down slowly, straight down the slope.

- Drive straight up or down slopes. Avoid turning on a slope.

- When going over the top of a slope, go slow; an obstacle, a sharp drop, or another vehicle or person could be on the other side of the crest.

https://truckmanualshub.com/

- Avoid driving the machine across a slope.

- Without a load, drive the machine backwards up a slope (operator's seat toward the top) when climbing, and drive it forward when going down a slope.

- With a load, drive the machine forward up a slope (operator's seat away from the top) when climbing, and drive it backwards when going down a slope. Be especially cautious when operating on a slope with a load.

- When driving down a slope, use the steering levers so that the machine travels down at the minimum speed. Use the engine speed to help keep the machine speed low.

Loading and Driving with a Load

- The maximum payload for this machine is 24.5kN (2500kg). Do not exceed this maximum payload under any circumstance.

- Do not operate on a slope steeper than 20 degrees when carrying a load. Do not carry more than 1250 kg when operating on a slope between 15 and 20 degrees.

- Load cargo in the bucket so the weight is evenly distributed. When carrying a cargo, strap the cargo to the load deck to prevent the cargo from shifting. Ensure that cargo does not obstruct the operator's field of view.

- When carrying a load, drive at a reduced speed. Allow a greater distance for braking.

- Before crossing a bridge or an overpass, make certain that the total combined weight of the machine, the load and the driver is within the stated weight limit for the bridge or the overpass. Then, proceed carefully and at a constant speed.

https://truckmanualshub.com/

Dumping/Turning

When turning the bucket and dumping material from the bucket, take the following precautions.

- **Always follow the proper procedures for dumping or turining as described in this manual.**
- **Only operate the bucket with the engine running.**
- **Always stay seated in the operator's seat when dumping or turning the bucket. Never operate the dump or turn lever off of the machine.**
- **Perform the dump operation on a flat, level and stable surface whenever possible. Raising or lowering the load deck on a slope or rough terrain could result in a tip over.**
- **Pay special care when dumping with the bucket turned to a side. Be tentative when raising the bucket which is turned to a side.**
- **Make certain that all persons are at a safe distance away from the machine when raising, lowering, or turning the bucket.**
- **Do not move the machine or leave it unattended with the bucket in the raised position.**
- **Engage the bucket safety prop if you must place any part of your body under the bucket in the raised position.**

Parking

- **Park the machine on a flat, level and stable surface. Never park on a slope steeper than 15 degrees. Avoid parking on a slope less than 15 degrees. If parking on a slope less than 15 degrees is unavoidable, turn the bucket straight, apply the parking brake and block the tracks at the lower end of the machine.**

→ Without a load, park the machine with the operator's seat facing downhill
→ With a load, park the machine with the operator's seat facing uphill
→ Do not park sideways on a slope.

- **Observe all the previous precautions for driving, driving on a slope, loading and driving with a load, and dumping.**

https://truckmanualshub.com/

- Whenever you park the machine, apply the parking brake and stop the engine. Remove the key whenever you leave the machine unattended to prevent unauthorized use or accidental starting.

- Diesel fuel is flammable and can be explosive. When parking the machine indoors, make certain that the building is well ventilated and that the machine is not close to any source of flame or spark, including appliances with pilot lights.

Servicing

- Do not service the machine when the engine is running. If it is absolutely necessary to run the engine while servicing, pay attention to the moving parts; keep hands, feet, clothing and any part of the body away from any moving part, especially the cooling fan and the belts at the side of the engine.

- Do not operate the engine in a confined space where dangerous carbon monoxide fumes can accumulate.

- Make sure all hydraulic line connectors are tight and all hydraulic hoses and lines are in good condition and leak-free before applying hydraulic pressure to the system.

- Keep your body and hands away from pinhole leaks or nozzles that eject hydraulic fluid under high pressure. Use paper or cardboard, not your hands, to search for leaks. Hydraulic fluid escaping under pressure can have sufficient force to penetrate the skin and cause serious injury.

- Check all fuel lines on a regular basis for tightness and wear. Tighten or repair them as needed.

- Do not touch the engine, muffler, or exhaust pipe while the engine is running or soon after it has stopped. These areas will be very hot and can cause burns.

- The engine must be shut off before checking or adding oil.

https://truckmanualshub.com/

Name and Function of Controls

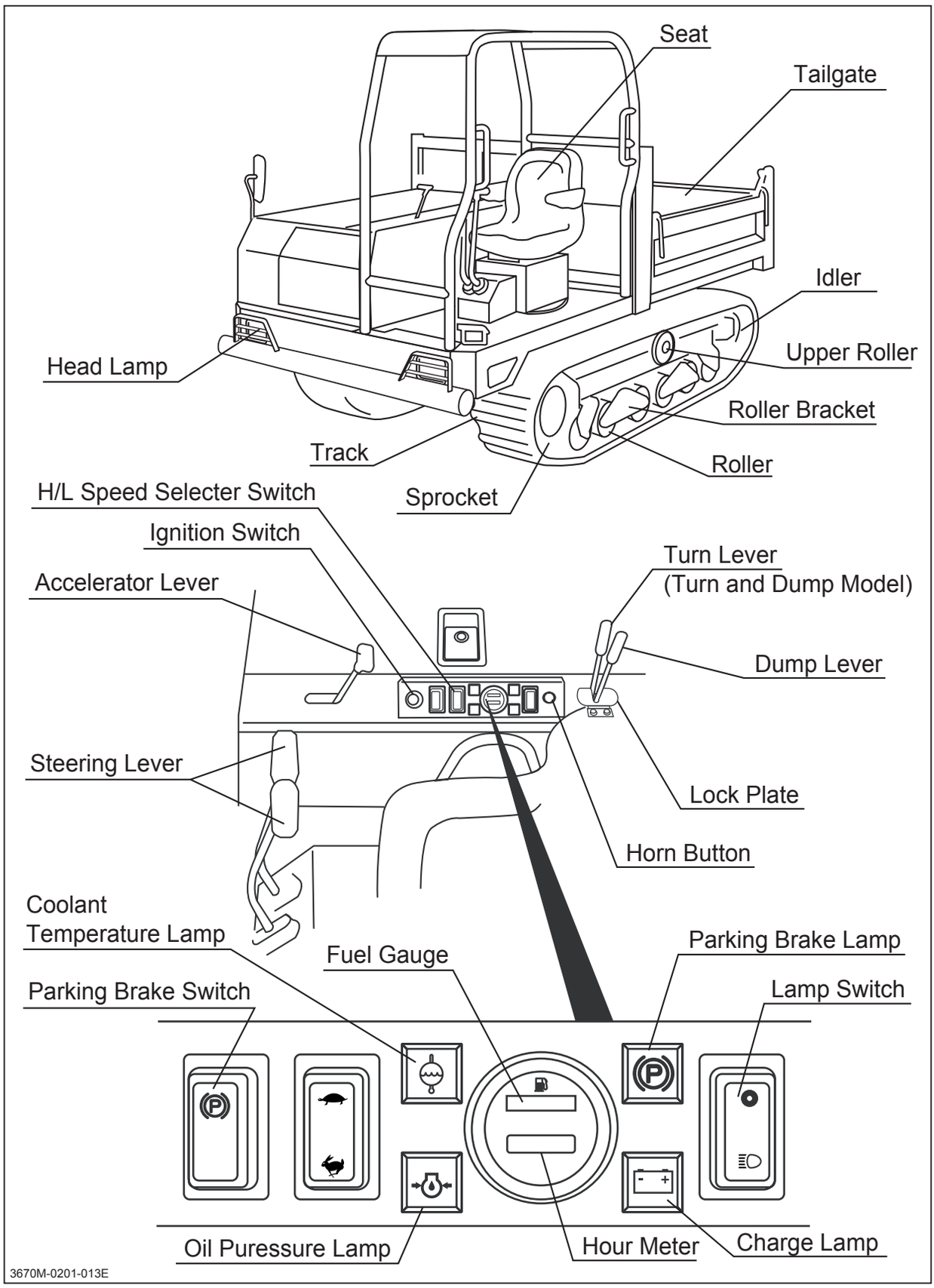

https://truckmanualshub.com/

Accelerator Lever . . . . . This increases or decreases the engine speed.

Steering Lever . . . . . This is used when turning the machine and when changing the direction or travel (FORWARD or REVERSE).

Dump Lever . . . . . This is used to raise or lower the dump body.

Lock Plate . . . . . This is used to lock the dump lever.

H/L Speed Selecter Switch . . . This is used to switch the travel speed between [HI] and [LO].

Parking Brake Switch . . . . . This is used when parking the machine. (When the parking brake switch is at the [P] position, the machine does not move even when the steering lever is operated.)

Lamp Switch . . . . . Pressing this button lights up the head lamps.

Horn Button . . . . . Pressing this switch sounds the horn.

Turn Lever . . . . . This lever is used when turning the load deck body (turn and dump model).

Dump Lever . . . . . This lever is used when dumping the load deck body.

Ignition Switch . . . . . This also acts as the main switch. When the key is turned to the [I] position, electric current passes through the electrical circuits of the machine. If the key is turned further to the [I] position, the starting motor is cranked. If the key is turned to the [I] position, electricity flows to the glow lamp.

Coolant Temperature Lamp . . This lights up when the engine cooling water temperature rises abnormally (overheats).

https://truckmanualshub.com/

Oil Pressure Lamp. . . . . This shows if the engine oil pressure is normal. When the engine starting switch is turned to the [I] position,it lights up, and if the conditions are normal it will go out after the engine starts.

Parking Brake Lamp . . . . . This lights up when the parking brake switch is at the [P (parking)] position.

Charge Lamp . . . . . This displays the condition of the battery charge. When the engine starting switch is turned to the [I] position, it lights up, and if the condition is normal, it will go out after the engine starts.

Fuel Gauge. . . . . This shows the remaining amount of fuel.

Hour Meter . . . . . This displays the total number of hours that the machine has been working in units of 0.1 hour.

https://truckmanualshub.com/

Product Specifications

⚠CAUTION!

· **Use this product properly after understanding its specifications thoroughly.**

Model and Type				S25A	
				One-Side-Dump	Turn & Dump
Machine Mass			kg	2230	2430
Maximum Payload			kN(kgf)	24.5(2500)	
Dimensions	Overall Length		mm	3295	3665
	Overall Width		mm	1775	1775
	Overall Height		mm	2370	
	Track Contact Length		mm	1960	
	Track Tread		mm	1230	
	Ground Clearance		mm	295	
	Loading Deck Height		mm	770	910
Loading Deck	Inside Dimensions	Length	mm	1685	2155
		Width	mm	1420	1300
		Height	mm	370	495
	Payload	Struck	m^3	0.89	1.03
		Heaped	m^3	1.26	1.40
Engine	Model			Kubota V2203	
	Type			4-cycle, Water-cooled Diesel, in-line 4 cylinder	
	Cylinder (Bore×Stroke)		mm	87 X 92.4	
	Displacement		cm^3	2197	
	Rated Output		kw(PS)	34.1 (46.4)	
	Maximum Torque		N•m(kgf•m)/rpm	139.6/1600 to 1800 (14.2/1600 to 1800)(7.2)	
	Starter System			Electric	
	Fuel			Diesel Fuel	
	Fuel Consumption		g/kW•h(g/PS•h)	251 (185)	
	Fuel Tank Capacity		L	45	
	Oil Capacity		L	9.7	
	Coolant Capacity		L	7.2	
	Battery Type			100E41R	
	Battery Capacity		V/AH	12/80	

https://truckmanualshub.com/

3 Specifications

Model and Type				S25A	
				One-side-Dump	Turn & Dump
Performance and Operating Range	Travel Speed	High Speed	km/h	0 to 11	
		Low Speed	km/h	0 to 6	
	Minimum Turning Radius		m	2.0	
	Gradability		Degrees	30 (unloaded)	
HST Oil Capacity			L	36	
Drive Train	Main Transmission			HST (2-Speed Motor)	
	Steering System			2-Pump/2-Motor System	
	Brakes			Hydraulic	
Dumping System	Dump System			Hydraulic Dump	
	Load Deck Type			One-side-Dump	Turn & Dump
	Hydraulic Pump	Type		Gear Pump	
		Max. Speed	rpm	2,800	
		Max. Discharge	L/min	31	
	Relief Pressure		MPa(kgf/cm^2)	15.7 (160)	11.8 (120)
	Cylinder(Bore X Stroke)		mm	80 X 407	
	Performance	Max. Angle	Degrees	60	85
		Lifting Time	Sec	approx. 4.0	approx. 7.4
		Lowering Time	Sec	approx. 3.0	approx. 5.3
	Hydraulic Fluid Capacity		L	Shared with HST System	
Swivel System	Swivel System			-	Hydraulic (Twin cylinder)
	Swiveling Angle		Degrees	-	90(Right) - 90 (Left)
	Swiveling Time		Sec	-	approx. 6.0
	Cylinder(Bore X Stroke)		mm	-	60 X 250

*These specifications are subject to change without notice.

Contents of the Tool Bag

No.	Content	Quantitiy	Note
1	Operator's Manual	1	This Manual
2	Operator's Manual for the Engine	1	

https://truckmanualshub.com/

Preparation

Pre-start up Inspection

Always perform an inspection before use.
Refer to **Maintenance Schedule** (page 33) for the inspection schedule and procedure.

Checking and Filling Fuel

⚠WARNING!

- **Keep fire and spark away when handling fuel.**
- **Always stop the engine before refueling.**
- **Do not overfill fuel so that fuel will not overflow. Check fuel gauge when filling. In case fuel is spilt, wipe out immediately.**

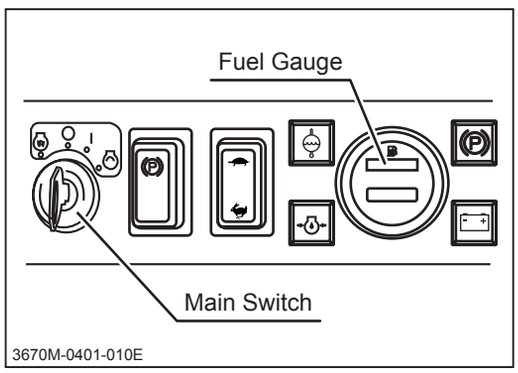

Checking Fuel

1. Insert key into main switch.
2. Turn main switch to [| (on)] position and wait a few seconds.
3. Check fuel gauge.
4. Turn main switch to [◯(off)] position and remove key.

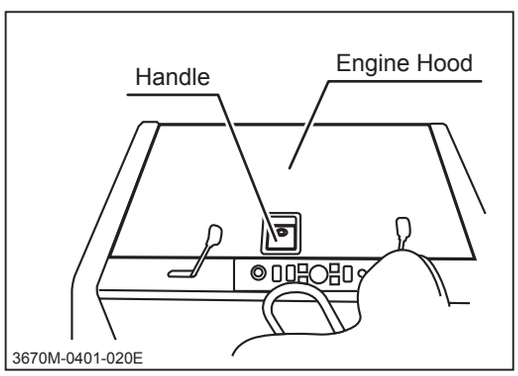

Filling Fuel

1. Open engine hood.

https://truckmanualshub.com/

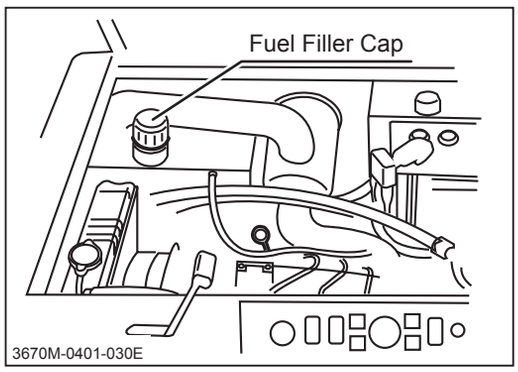

2. Open fuel filler cap.
3. Insert key in main switch and turn it to [| (On)] position.
4. Fill fuel. Check fuel gauge when filling.
5. Turn main switch to [◯ (Off)] position and remove key.
6. Put fuel filler cap back and tighten it securely.
7. Close engine hood.

NOTE

- **Fuel : Diesel Fuel.**
- **Fuel Tank Capacity : 45L**

Adjusting Seat

⚠WARNING!

- **When adjusting seat, make certain the seat is securely locked.**

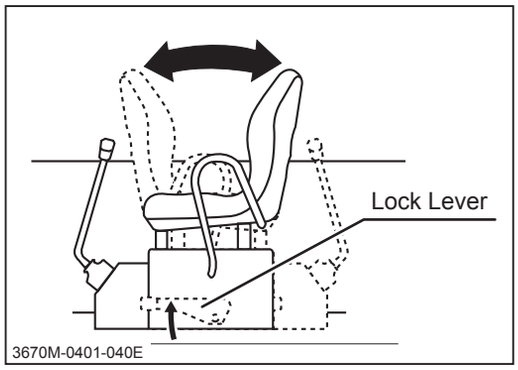

Turning seat

1. Pull up lock lever to turn seat.

NOTE

- **When seat is turned, the direction that seat is facing is FORWARD for the operation of steering levers.**

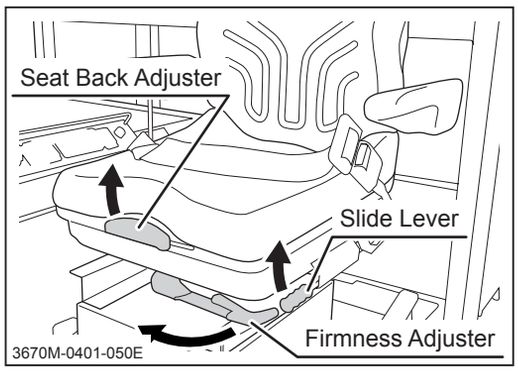

Adjusting seat

1. Pull slide lever to slide seat to a desired position.
2. Pull seat back adjuster to adjust seat back to the desired position.
3. Pull firmness adjuster lever to adjust the seat firmness to suit operator's weight and preference. Pull firmness adjuster lever fuilly to undo it.

https://truckmanualshub.com/

Using Seat Belt

⚠WARNING!

- **On machine equipped with ROPS, Always wear seat belt.**

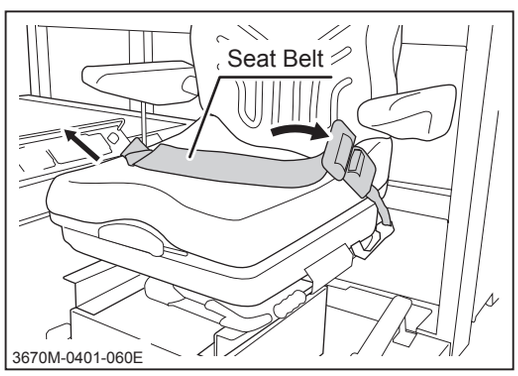

1. Buckle up seat belt. Adjust seat belt so that it fits snugly over the pelvis.

Driving

Starting

⚠WARNING!

- **Always start and run the engine in a well ventilated place.**
- **Always make certain of the safety of your surroundings when starting the engine.**
- **An engine that has been running is very hot. Avoid touching the engine and its ancillaries, or severe burns may result.**
- **Do not open engine hood while engine is running.**

https://truckmanualshub.com/

⚠CAUTION!

- **Do not turn the starter when the engine is running. Starter motor and/or the engine may be damaged.**
- **Do not turn the starter for more than 15 seconds. If the engine does not start, wait for 30 seconds or more before attempting to start again.**
- **Do not use this machine in temperatures above 40ºC or below -15ºC. This machine cannot perform adequately in these temperature ranges. Using this machine under such conditions may result in an accident or cause damage to the machine.**
- **In the winter or cold climate, warm up the engine thoroughly before driving the machine. A cold engine delivers poor performance, which may result in an accident. It also causes excessive wear.**
- **Do not use this product in dusty places such as desert. Dust may clog the air cleaner or enter the engine, which may reslt in loss of performance and an accident. It also causes excessive wear.**
- **Do not use this machine in the altitude above 1500m in its original configuration. This machine cannot perform adequately above that altitude. Using this machine under such conditions may result in an accident or cause damage to the machine. If you need to use this machine above that altitude, contact your CANYCOM representative.**

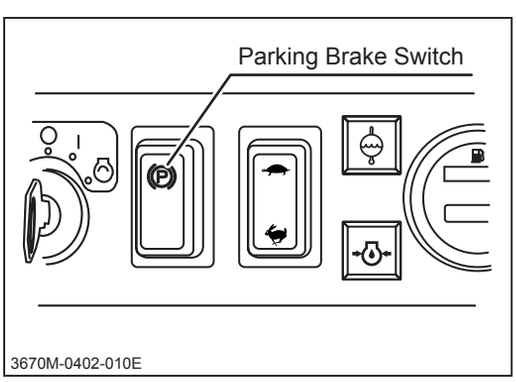

1. Make sure parking brake switch is in [Ⓟ (parking)] position.

https://truckmanualshub.com/

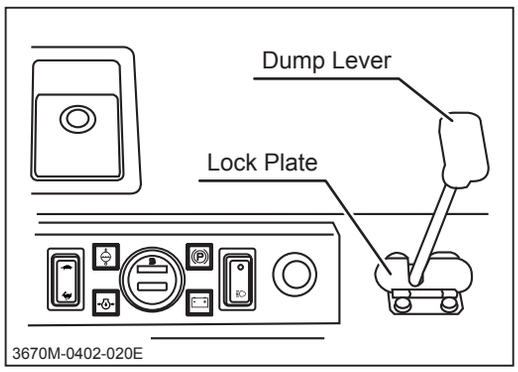

2. Make sure dump and turn (Turn & Dump model) levers are in the neutral position and lock plate is in the locked position (around the base of the levers).

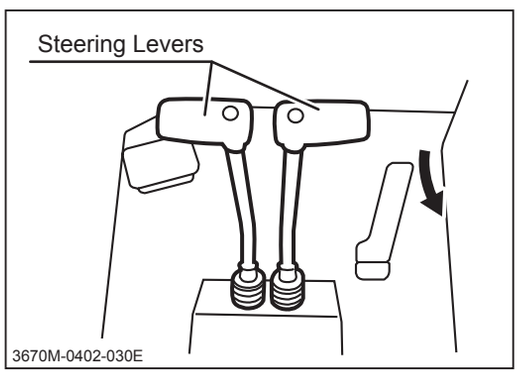

3. Make sure steering levers are in the neutral position.

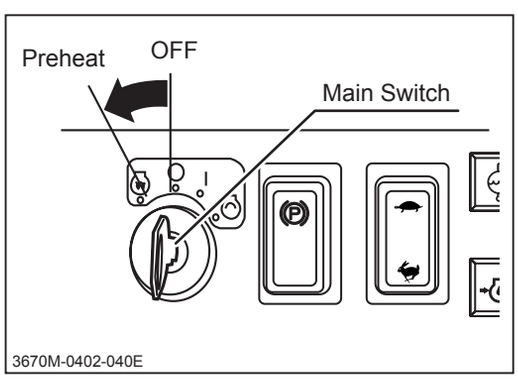

4. Insert key into main switch.
5. Turn main switch to [(preheat)] position.

NOTE

- **Preheat engine for about 10 seconds when starting in normal temperature and for about 20 to 30 seconds when starting in cold weather (ambient temperature below -5 °C).**
- **There is no need to preheat if the engine is already warm.**

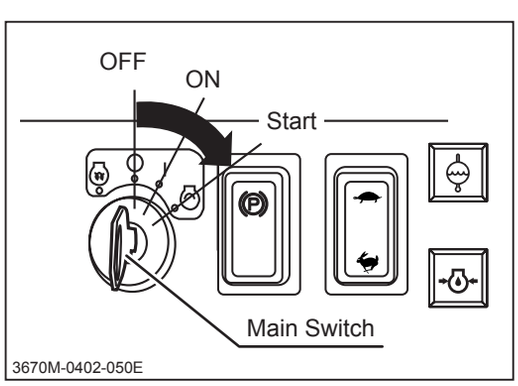

7. Turn main switch to [(start)] position to start the engine. Once the engine starts, release key immediately; switch will automatically return to [| (on)] position.

https://truckmanualshub.com/

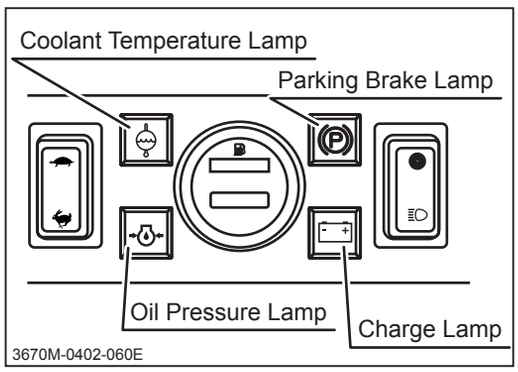

8. Move throttle lever to [(slow)] position.
9. Make certain the warning lamps are not lit.
10. Allow the engine to warm up by running it for 3-5 minutes without any load. (It is not necessary when the engine is already warm.)

NOTE

- **Drive the machine gently in the first 40 to 50 hours of use after purchase for breaking-in.**
- **If any of warning lamps is lit, stop the engine immediately and investigate the cause.**

Driving

⚠WARNING!

- **Do not allow bystanders to come near the machine when driving.**
- **Always make certain of the safety of your surroundings before driving; start slow.**
- **Always stay seated in the operator's seat when driving the machine. Never operate the steering lever off of the machine. This may cause the machine to run over or crush the operator.**
- **Always make certain of the safety of your surroundings before turning**
- **Do not make sudden starts, acceralation, change of speed, change of direction, or stop. Do not turn at speed. Avoid sudden maneuvers; this may cause the operator to fall or to be thrown, or the machine to tip over.**
- **Do not turn the key to [○ (off)] position while traveling. Machine can lose stability and tip over.**

https://truckmanualshub.com/

⚠WARNING!

- **Always move the steering levers back to the neutral position before releasing. Letting it go from other operating positions may result in sudden deceleration and can cause the machine to tip over or the operator to fall or to be thrown.**

⚠CAUTION!

- **Do not operate steering levers when the parking brake is engaged (parking brake pedal is pressed down). It can wear out the brake.**

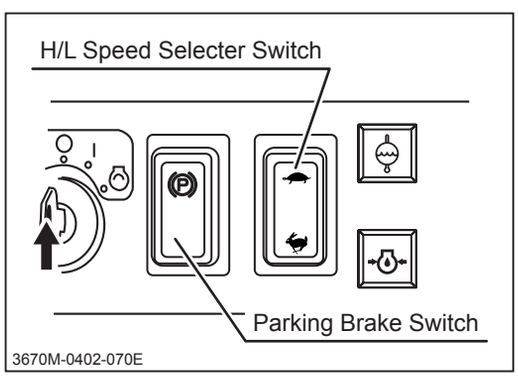

1. Make certain of the safety of your surroundings.
2. Turn parking brake switch to [TRAVEL] position.
3. Push H/L speed selecter switch to either [(LO)] or [(HI)] position. For the speed range in either position, see "Product Specification (page 17-18)."
3. Move the throttle lever toward [(fast)] position or depress throttle pedal to increase the engine speed.

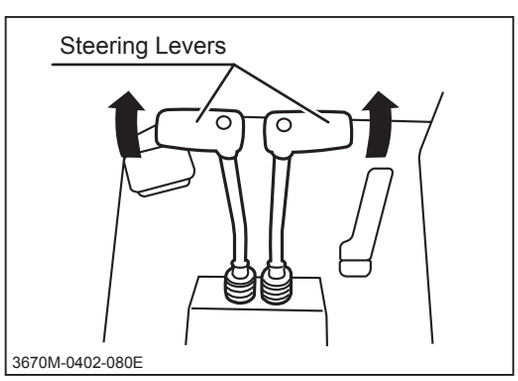

Moving Forward

4. Move left and right steering levers gradually forward together to move the machine forward. The angle of steering levers controls the machine speed.

NOTE

- **When seat is turned, the direction that seat is facing is FORWARD for the operation of steering levers.**

https://truckmanualshub.com/

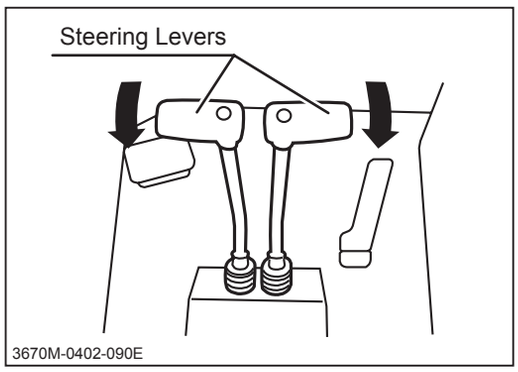

Moving Backward

5. Move both steering levers gradually backward together to move the machine backward. The angle of steering levers controls the machine speed.

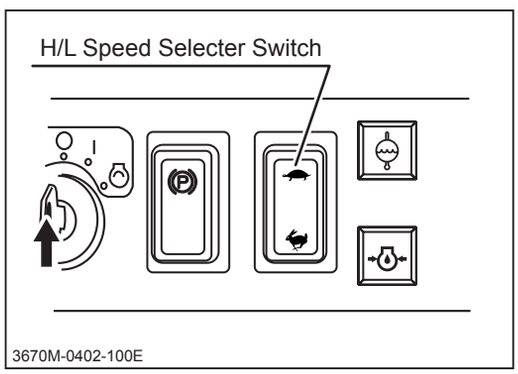

Selecting Speed

6. Push H/L speed selecter switch to either [(LO)] or [(HI)] position. This can be done while machine is in travel.

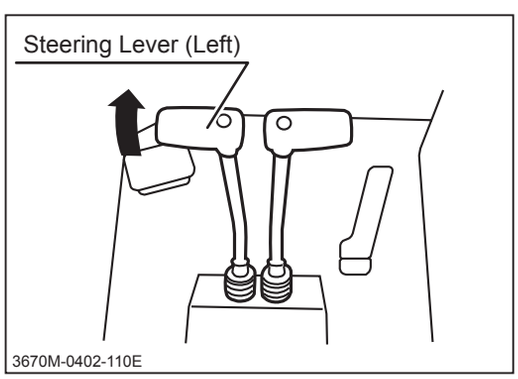

Turning Forward

7. Move left steering lever gradually forward to turn right.

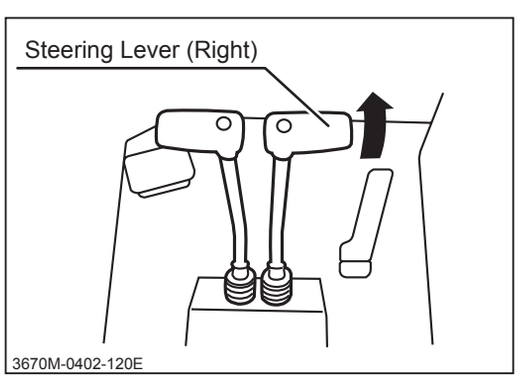

8. Move right steering lever gradually forward to turn left.

https://truckmanualshub.com/

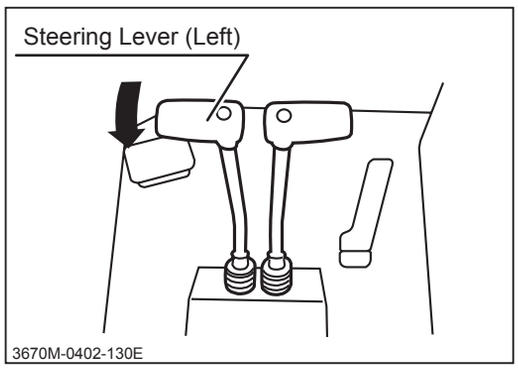

Turning Backward

9. Move left steering lever gradually backward to turn right backwards.

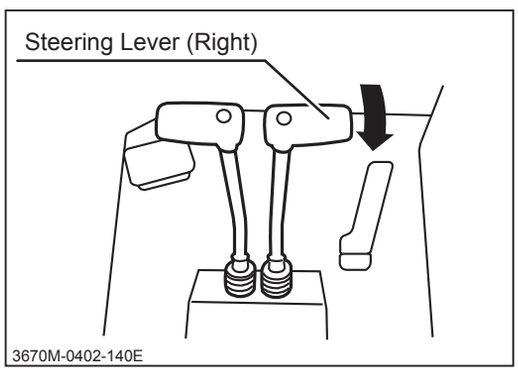

10. Move right steering lever gradually backward to turn left backwards.

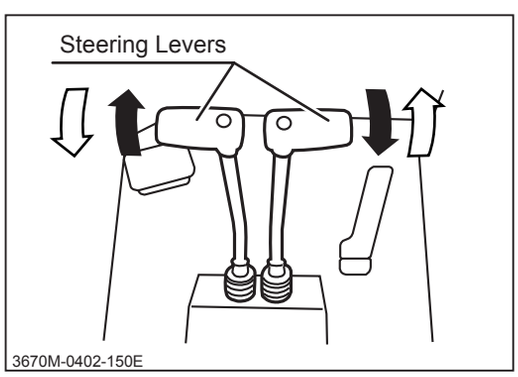

Pivot Turning

11. Move steering levers in opposite directions to make a turn on spot (pivot turn).

https://truckmanualshub.com/

Stopping

⚠WARNING!

- **Do not make a sudden stop. The machine may skid or tip over.**
- **Do not release steering levers suddenly. The machine may stop suddenly and skid or tip over.**
- **Always park on a firm, level place. Never park on a potentially dangerous place.**

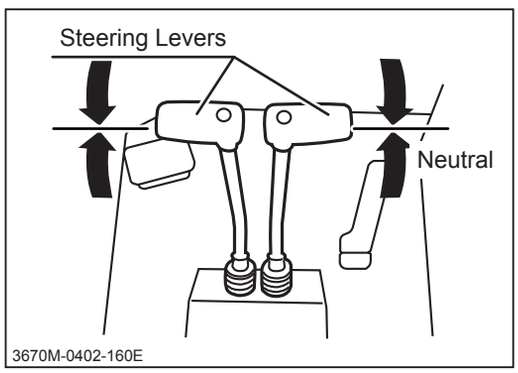

1. Move steering levers gradually to the neutral position to stop machine.

Stopping with Fuel Cutoff Lever

⚠WARNING!

- **Do not open engine hood while engine iw running. If it is absolutely necessary to open engine hood while engine is still running, keep away from moving or hot parts.**

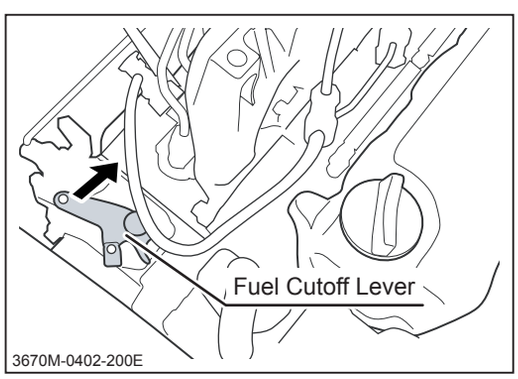

1. Open engine hood.
2. Move fuel cutoff lever to stop engine.

https://truckmanualshub.com/

Parking

⚠WARNING!

- **Always park on a firm, level place. Never park on a potentially dangerous place.**
- **Avoid parking on a slope. Never park on a slope with an incline of 15 degrees or steeper. If it is absolutely necessary to park the machine on a slope less than 15 degrees, make certain to apply parking brake firmly and block the tracks with chocks.**

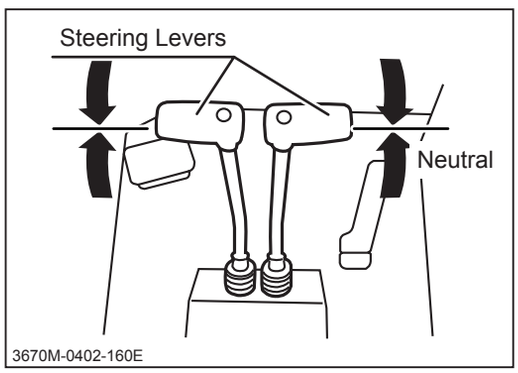

1. Move steering levers gradually to the neutral position to stop machine.

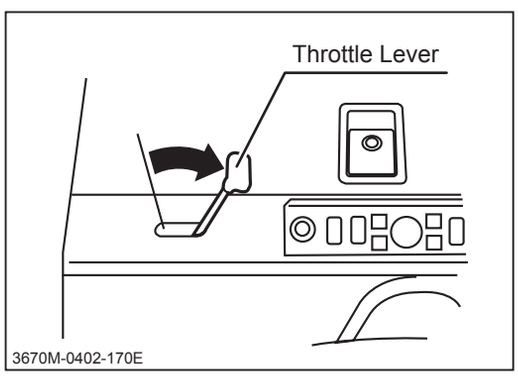

2. Move throttle lever toward [(slow)] position to decrease the engine speed.

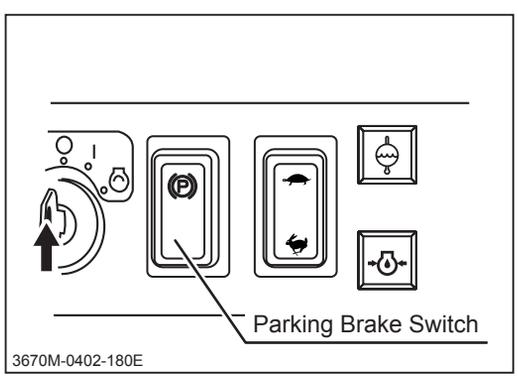

3. Turn parking brake switch to [P (parking)] position.

https://truckmanualshub.com/

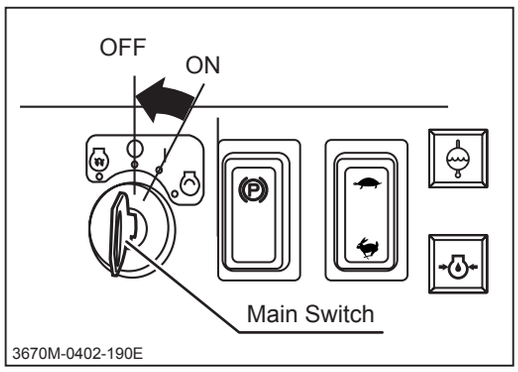

4. Turn main switch to [○ (off)] position. Remove the key from main switch.

NOTE

- **Leaving the main switch in [| (on)] position drains the battery and cause it to discharge.**

Working

⚠WARNING!

- **Always make certain of the safety of your surroundings when dumping or turning bucket.**
- **Never operate the dumping or turning lever off of the machine. This may cause the bucket to hit or cruch the operator or bystander.**
- **Avoid dumping or turning bucket on a slope. The machine may tip over.**

⚠CAUTION!

- **Always run the engine when dumping or turning bucket.**
- **When lowering the loaded bucket, slow the engine speed and lower the bucket gently.**

https://truckmanualshub.com/

Dumping

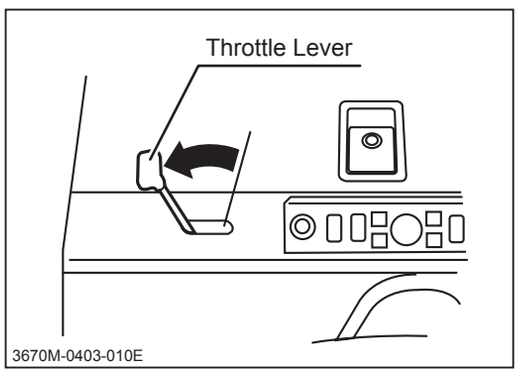

1. Move the throttle lever to [(fast)] position to increase the engine speed.

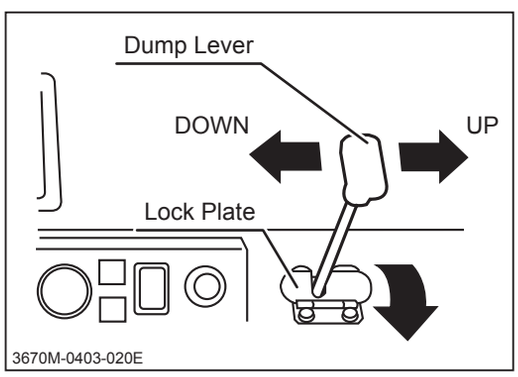

2. Turn the lock plate to the side so that the dump lever can be operated.
3. Move dump lever gradually toward [(up)] to raise bucket.
4. When bucket reaches its upper limit, a hissing noise is heard; move dump lever back to [● (neutral)] position.
5. Move dump lever gradually toward [(down)] to lower bucket.
6. When bucket reaches its lower limit, a hissing noise is heard; move dump lever back to [● (neutral)] position.
7. Turn lock plate back in place to lock dump lever.

Dumping and Turning Bucket

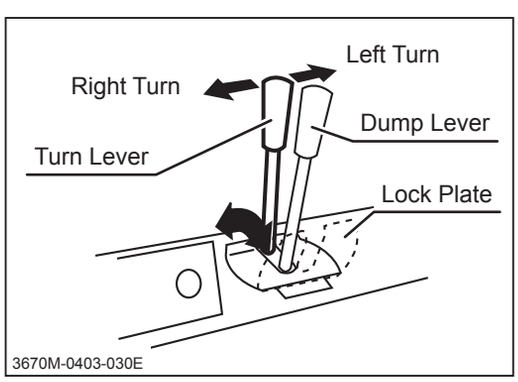

8. Turn lock plate to the side so that turn lever can be operated.
9. Move turn lever gradually toward [(left)] to turn bucket left.
10. When bucket reaches its limit, a hissing noise is heard; move turn lever back to [● (neutral)] position.
11. Move turn lever gradually toward [(right)] to turn bucket right.

https://truckmanualshub.com/

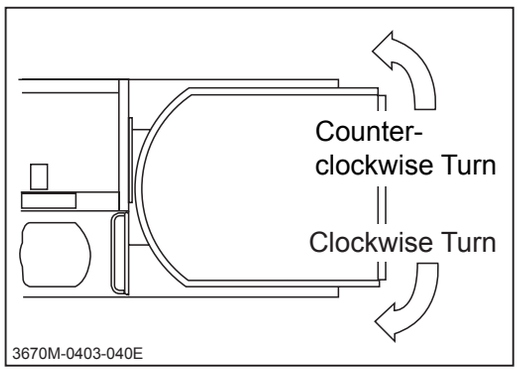

12. When bucket reaches its limit, a hissing noise is heard; move turn lever back to [● (neutral)] position.
13. Turn lock plate back in place to lock turn lever.

Using Safety Prop

⚠WARNING!

- **Place safety prop under bucket when inspecting or working under bucket.**

⚠CAUTION!

- **Make certain to undo safety prop before lowering bucket.**

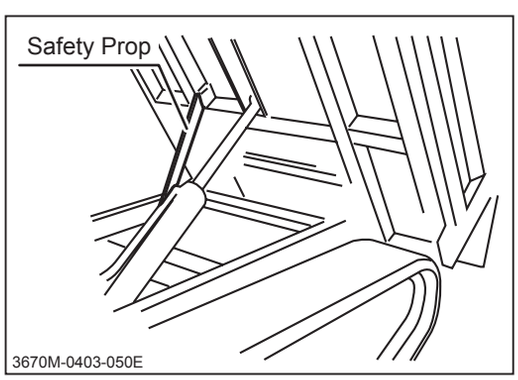

1. Raise bucket.
2. Hold the bucket with safety prop.

https://truckmanualshub.com/

Maintenance Schedule

⚠WARNING!

- **Follow the scheduled maintenance as described below. Failure to do so may result in mechanical or property damage, injury or death.**

- **Perform a pre-startup inspection (PSI) before each use, a monthly inspection once a month, and a yearly inspection once a year.**

- **Some maintenance procedures described below may require special knowledge or tools and instruments. Contact your CANYCOM representative to perform such procedures.**

Item			Description	Schedule			Note
				PSI	Mon	Year	
Engine	General	Starting	Engine shall start easily without making any irregular noise.	√	√	√	
			Glow plugs work correctly.	√	√	√	
		Running	Engine speed shall be set properly at idle and at full without loading. Engine shall stay running smoothly.		√	√	Contact your CANYCOM representative for inspection.
			When accelerating engine, throttle lever shall move smoothly, and engine shall accelerate smoothly without stopping or knocking.	√	√	√	
		Exhaust	Warm up engine thoroughly, and observe exhaust sound and gas from idle to fast speed; exhaust sound shall be normal and smoke shall not be excessive.	√	√	√	
			There shall be no leak in exhaust system or muffler.		√	√	
		Air Cleaner	Air cleaner case shall not be deformed or cracked. Case lid and connecting air hose shall be firmly in place.		√	√	
			Cleaner element shall be in good shape without damage or excessive dust.		√	√	Cleaning/Replacing: Page 44
		Fasteners	Bolts and nuts fastening cylinder head, intake and exhaust manifolds shall be tightly fastened. * this may be skipped if there is no gas or water leaks found in these areas.			√	

https://truckmanualshub.com/

Item			Description	Schedule PSI	Schedule Mon	Schedule Year	Note
Engine	General	Valve Clearance	Valve clearance shall be correct. * this may be skipped if there is no noise due to incorrect valve clearance, and engine runs normally.			√	Contact your CANYCOM representative for inspection.
Engine	General	Compression	Compression shall be normal * this may be skipped if running and exhaust condition is normal at idle and under acceleration.			√	Contact your CANYCOM representative for inspection.
Engine	General	Engine Mount	Engine base shall be free of cracks or deformation.	√	√	√	
Engine	General	Engine Mount	Mounting bolts and nuts shall not be loose or missing.	√	√	√	
Engine	Lubrication System		Oil shall be clean and at correct level.	√	√	√	Inspecting/Changing: Page 42
Engine	Lubrication System		No noticable oil leaks shall be found in head cover, oil pan, or pipes.	√	√	√	
Engine	Fuel System		There shall not be any leaks in fuel tank, hoses, or pipes.	√	√	√	
Engine	Fuel System		Fuel hoses shall be free of damage or deterioration.	√	√	√	
Engine	Fuel System		Fuel filter shall not be excessively dirty or clogged.		√	√	Inspecting: Page 49
Engine	Fuel System		There shall not be sediment or water in fuel tank.		√	√	Inspecting/Removing water: Page 49
Engine	Fuel System		Injection puressure and injection condition from the nozzle shall be normal. * this may be skipped if running and exhaust condition is normal at idle and under acceleration.			√	Contact your CANYCOM representative for inspection.
Engine	Cooling System		Coolant shall be clean and at the correct level.	√	√	√	Inspecting/Filling: Page 45
Engine	Cooling System		There shall not be any leaks from radiator, engine, water pump, or hoses.	√	√	√	
Engine	Cooling System		Radiator fins shall be free of clogging.	√	√	√	
Engine	Cooling System		Radiator cap valve shall function properly.			√	
Engine	Cooling System		Fan belt shall be free of wear and damage, and shall be properly tensioned.			√	Adjusting: Page 47
Engine	Cooling System		Cooling fan, duct, and cover shall be free of cracks, damage, or deformation.			√	
Engine	Cooling System		Mounting bolts and nuts on cooling fan, duct, and covers shall not be loose or missing.			√	

https://truckmanualshub.com/

Item			Description	Schedule			Note
				PSI	Mon	Year	
Engine	Electrical System	Charge System	Charge system is working correctly.			√	Contact your CANYCOM representative for inspection.
		Battery	Battery electrolyte level shall be correct.		√	√	Inspecting/Filling: Page 58
			Terminals shall be free of marked corrosion and are tightly secured.		√	√	
		Wiring	Connections shall be securely connected.		√	√	
			Wiring shall be free of damages.		√	√	
Drive Train	HST Pump		Drive the machine forward and backward, turn left and right in both directions; machine shall move normally and free of irregular noise or overheating.	√	√	√	
			Hydraulic fluid shall be filled to a proper level.		√	√	Inspecting/Changing: Page 52
			Hydraulic fluid shall be clean and free of dirt or contamination.		√	√	Inspecting/Changing: Page 52
			There shall be no fluid leaks in or around fluid tank.		√	√	
	Linkage		Rods, links, and wires in linkage shall be free of deformation or damage.		√	√	
			Connections shall be free of looseness, excessive play, or missing cotter pins.		√	√	
Undercarriage	Wheels Sprockets Idlers		Shall be free of cracks, defromation, or excessive wear.	√	√	√	
			There shall not be excessive play in axle. Irregular noise or overheating shall not be observed when traveling.	√	√	√	
			Mounting bolt or nut shall not be loose or missing.	√	√	√	
			There shall be no oil leak in or around axle.		√	√	
	Tracks		There shall not be marked cut, deterioration, or wear.	√	√	√	
			Track shall be properly tensioned; shall not be too loose or too tight.	√	√	√	Adjusting: Page 50
			Track core shall not be missing or damaged.	√	√	√	
			Tension bolt shall be free of deformation or corrosion.	√	√	√	

https://truckmanualshub.com/

Item		Description	Schedule			Note
			PSI	Mon	Year	
Brake System	Parking Brake	Parking brake shall work properly.	√	√	√	
		Parking brake shall be able to hold the machine on a 20-degree slope.		√	√	
	Linkage	Rods, links, and wires in linkage shall be free of deformation or damage.		√	√	
		Connections shall be free of looseness, excessive play, or missing cotter pins.		√	√	
Hydraulic System	Hydraulic Pump	There shall be no leak in or around hydraulic pump.		√	√	
		Fastening bolts and nuts shall not be loose or missing.		√	√	
		No irregular vibration, noise, or heat shall be observed when hydraulic pump is in operation.		√	√	
		Amount and pressure of discharge under load shall be within the standard range specified by the manufacturer. *this may be skipped if irregular vibration, noise, or heat described above is not observed.			√	
	Hydraulic Valve	There shall be no leak in or around hydraulic valve.		√	√	
Hydraulic System	Plumbing	Plumbing shall be free of cracks, damage, twists, or deterioration.		√	√	
		There shall be no leaks in pipes, hoses, joints, or seals.		√	√	
		Plumbing shall be mounted properly, and fastening bolts and nuts shall not be loose or missing.		√	√	
		Breather shall not be clogged.		√	√	
	Hydraulic Cylinders	Shall work smoothly.		√	√	
		There shall be no leaks when extending and contracting cylinder.		√	√	
		Extend dump cylinder fully under load and hold. Stroke shall be within the range specified by manufacturer.			√	
		Cylinder tube and rod shall be free of dents, cracks, bends, or scratches.		√	√	
		Cylinder mounting pins shall be free of damage or excessive wear.		√	√	

https://truckmanualshub.com/

Item		Description	Schedule			Note
			PSI	Mon	Year	
Body, Chassis, Loading Deck	Chassis Frame	Shall be free of cracks, deformation, or corrosion.		√	√	
		Fastening bolts or nuts shall not be loose or missing.		√	√	
	Body Panels	Shall be free of cracks or deformation.		√	√	
		Doors shall open, close, and lock properly.	√	√	√	
		Fastening bolts or nuts shall not be loose or missing.		√	√	
	Loading Deck	Loading deck shall be raised,lowered and turned smoothly.		√	√	
		Shall be free of cracks, deformation, or corrosion.		√	√	
		Fastening bolts or nuts shall not be loose or missing.		√	√	
	Safety Prop	Safety prop shall be free of any deformation.		√	√	
	Labels	Warning labels and instruction plates shall be clean, legible, and free of damage.	√	√	√	
Safety Devices	Work Lamp	Work lamp shall work.	√	√	√	
		Lamp lens shall be free of cracks or chipping and water shall not be in the lamp.		√	√	
	Horn	Horn shall work.	√	√	√	

https://truckmanualshub.com/

List of Fluids and Lubricants

Item	Schedule	Grade	Cap.
Fuel	As needed.	Diesel Fuel	45L
Engine Oil	Fill Inspect daily. Fill as needed. Change Initially - After 50 hours of use. Every 200 hours afterwards.	Diesel Engine Oil API rating: CD or better. SAE rating: 10W-30	9.7L
HST Fluid	Change Initially - After 500 hours. Every 1000 hours afterwards.	High viscosity index hydraulic fluid, ISO VG46 or Engine Oil API rating: CD or better. SAE rating: 10W-30 *When using in cold areas (below -15°C), use wear resistant hydraulic fluid VG32	36L
Travel Motor Oil	Change Initially - After 200 hours. Every 1000 hours afterwards.	Gear Oil API rating: GL-4 SAE rating: 90	0.6L
Cylinder Pin, Roller Support Shaft	Every 1000 hours.	Lithium all-round grease (NGL No.2 or equivalent)	-
Engine Coolant	Check Everyday Add as needed Change every 2 years	Long Life Coolant (LLC) and pure water Mixture	7.2L
Battery Electrolyte	Inspect daily.	Distilled Water	-

https://truckmanualshub.com/

List of Consumables and Spares

⚠CAUTION!

- **When replacing consumable or spare, always use CANYCOM genuine part.**

Item	Part No.	Schedule	Qty.
Engine			
Air Cleaner Element (Outer)	R1401-4227-0	Replace every 1000 hours or if defective.	1
Air Cleaner Element (Inner)	R2401-4228-0	Replace every 1000 hours or if defective.	
Oil Filter	3661 0001 300	Initially: 50 hours. Every 200 hours afterwards.	1
Fuel Filter	3664 0221 500	Replace every 450 hours or if defective.	1
Push-Pull Wire (Engine Control)	3707 3321 000	Replace if defective.	1
Wire	3655 0105 100	Replace if defective.	1
Drive Train			
Track	3663 2111 999	Replace if defective or reaches the wear limit.	2
Sprocket 15T	3663 2106 0X0	Replace if defective.	2
Track Roller A Assembly	5232 2201 000	Replace if defective.	8
Track Roller B Assembly	5232 2211 000	Replace if defective.	4
Carrier Roller Assembly	3640 2218 0X0	Replace if defective.	2
Idler Assembly	3640 2331 0X0	Replace if defective.	2
Electrical System			
Battery (100E41R)	3661 0502 000	Replace if defective.	1
Hydraulic System			
Hydraulic Hoses (Dump, Turn, Oil Cooler, HST)	Contact your CANYCOM representative for parts information.	Every 2 years or if defective.	1
Suction Filter	3663 6029 000	Every 1000 hours.	1
Line Filter	3661 6036 300	Every 500 hours.	1

NOTE

- **Track wear limit: 5mm of lug height**

https://truckmanualshub.com/

Item	Part No.	Schedule	Qty.
Hydraulic Hoses			
HST Pump Front Right A1 to HST Motor Top Left P1	5229 6101 000	Replace every 2 years or if defective.	1
HST Pump Front Left B1 to HST Motor Bottom Left P2	5229 6102 000		1
HST Pump Front Left B2 to HST Motor Bottom Right P2	3664 6101 200		1
HST Pump Front Right A2 to HST Motor Top Right P1	5229 6104 000		1
HST Motor Left Drain Bottom T1 to Oil Tank	5229 6111 000		1
HST Motor Right Drain Bottom T1 to Oil Tank	5229 6112 000		1
Pump Top Front Drain to Oil Cooler Top	5229 6115 000		1
Oil Cooler Bottom to Oil Tank (Pipe)	5229 6116 000		1
Solenoid Valve A2 to T-Junction (PS)	5229 6117 000		1
T-Junction (Solenoid Valve A1) to T-Junction (P3)	5229 6118 000		1
T-Junction (Solenoid Valve A1) to T-Junction (Servo)	5229 6119 000		1
T-Junction (Motor Right PS) to Motor Left PS	5229 6121 000		1
T-Junction (Motor Right P3) to Motor Left P3	5229 6122 000		1
T-Junction (Motor Left PS) to Motor Right PS	5229 6123 000		1
T-Junction (Motor Left PS) to Motor Right P3	5229 6124 000		
Solenoid Valve T to Oil Tank	5229 6125 000		1
Gear Pump Discharge Top Rear to Control Valve P	3664 6128 000		1
Gear Pump Suction Bottom Rear to Oil Tank (Flange)	5229 6126 000		1
Solenoid Valve P to T-Junction (Line Filter OUT)	5229 6131 000		1
Control Valve T to Line Filter IN	5229 6132 000		1

https://truckmanualshub.com/

Item	Part No.	Schedule	Qty.
Hydraulic Hoses			
HST Servo Front to T-Junction (Servo)	3664 6141 000	Replace every 2 years or if defective.	1
HST Searvo Rear to T-Junction (Servo)	5229 6119 000		1
Control Valve A to Cylinder Bottom	3661 6163 000		1
Control Valve B to Cylinder Top	5229 6142 000		1

NOTE

- **Rubber products such as the hydraulic hose deteriorate over time. Replace them every 2 years.**

https://truckmanualshub.com/

Engine

⚠WARNING!

- **Always stop the engine before servicing.**
- **An engine that has been running is very hot. Allow the engine to cool before servicing, or severe burns may result.**
- **Keep fire and spark away when handling fuel.**

Engine Oil

⚠CAUTION!

- **Dispose of the drained oil properly. Check the national and local regulations for discarding engine oil.**
- **Make certain to fill the engine with correct grade of oil to the specified level. Insufficient amount or wrong grade of oil reduces performance and may cause permanent damage to the engine.**

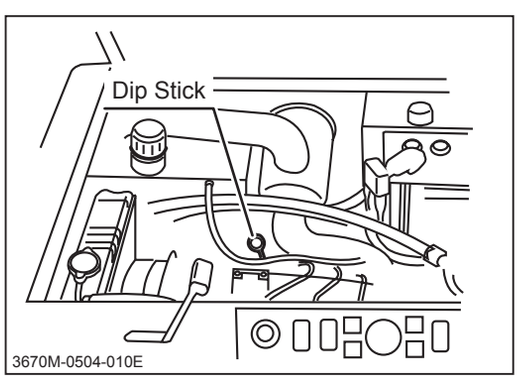

Inspecting

1. Park the machine on a level surface.
2. Open engine hood.
3. Follow the instructions in the **Operator's Manual for the Engine** to inspect oil.

NOTE

- **To obtain correct reading, check oil level before starting, or wait about 10 minutes after stopping the engine to allow oil to drain back to the oil pan.**
- **Always check oil level on a level surface.**

https://truckmanualshub.com/

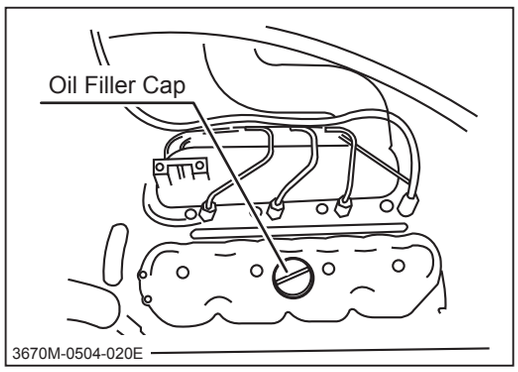

Filling

1. Remove oil filler cap.
2. Follow the instructions in the **Operator's Manual for the engine** to fill oil.
3. Put oil filler cap back in place and tighten it securely.

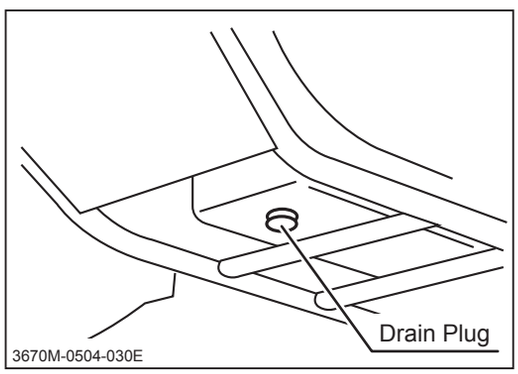

Changing

1. Have an appropriate oil drain pan.
2. Remove drain plug to drain oil.
3. Clean drain plug and put it back in place and tighten it securely.
4. Fill oil.
5. Close engine hood.

NOTE

- **Oil Capacity: 9.7L**
- **Oil to Use: Diesel Engine Oil, API rating CD or above, SAE index 10W-30.**
- **Removing oil filler cap helps drain oil faster.**

Oil Filter

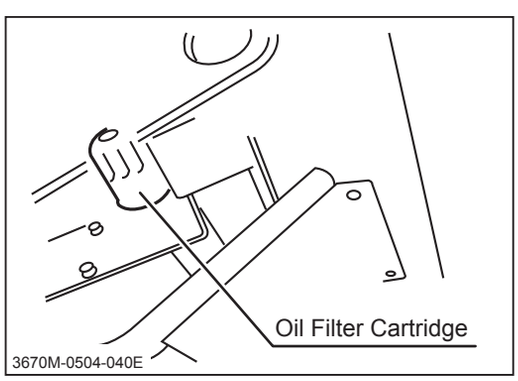

1. Open engine hood.
2. Follow the instructions in the **Operator's Manual for the engine** to change oil filter cartridge.
3. Fill oil.
4. Close engine hood.

https://truckmanualshub.com/

Air Cleaner

⚠CAUTION!

- **Clean air cleaner element regularly. Dirty cleaner element reduces engine performance and life.**
- **Replace cleaner element if damaged.**

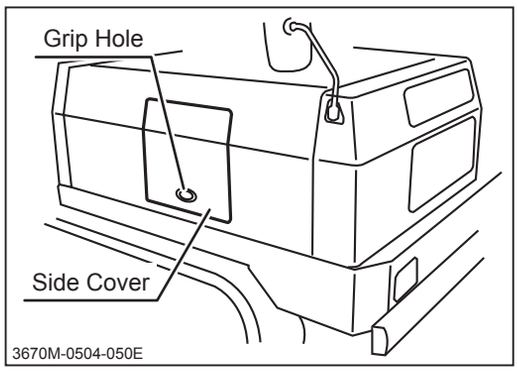

1. Open side cover.

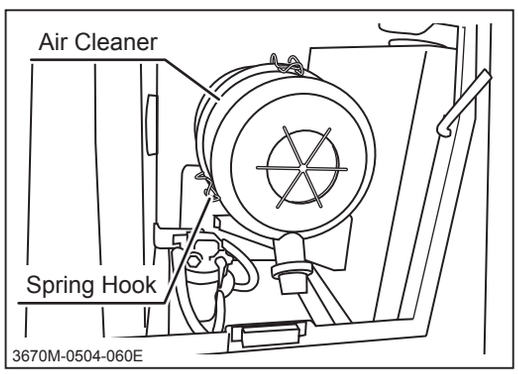

2. Undo spring hooks to remove air cleaner lid.
3. Follow the instructions in the **Operator's Manual for the engine** to inspect, clean or change air cleaner element.
4. Close side cover.

https://truckmanualshub.com/

Coolant

⚠CAUTION!

- **Do not open radiator cap when engine or radiator is hot. Opening cap when they are still hot may release boiling coolant and cause severe burns. Wait for engine to cool after operation (about 10 minutes) before opening.**
- **Take extreme care when handling the coolant; antifreeze solution is inflammable. Avoid exposure to open flame. It is also toxic. If coolant is caught in the eye, wash the eye clean with running water and consult a physician immediately.**
- **Dispose of the drained coolant properly. Check the national and local regulations.**

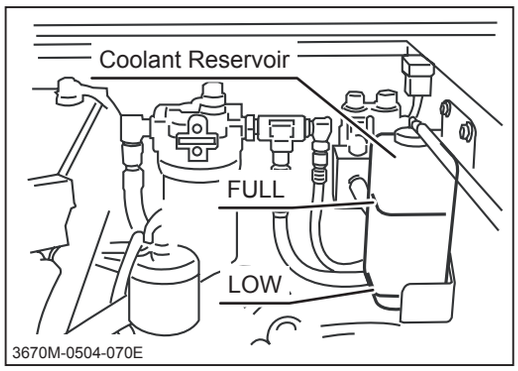

Inspecting/Filling

1. Open engine hood.
2. When the engine is cold, check engine coolant level in reservoir tank. If the level is below [FULL] mark, add water.

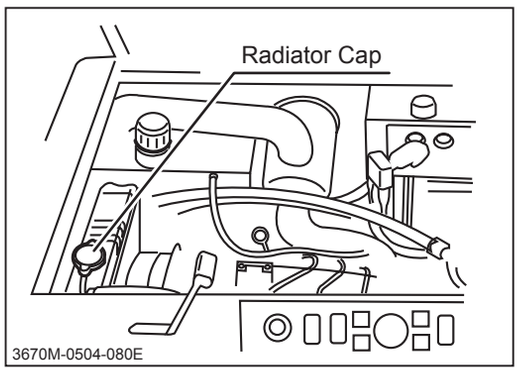

3. Open radiator cap.
4. Check engine coolant level. If the level is low, add water.
5. Put radiator cap back in place.
6. Close engine hood.

NOTE

- **When coolant temperature warning lamp is lit, it may mean the coolant level is low. Immediately inspect and add water as necessary.**

https://truckmanualshub.com/

Ambient Temperature	Antifreeze Mixture
-10 °C	30%
-15 °C	35%
-20 °C	40%
-25 °C	45%
-30 °C	50%
-35 °C	55%
-40 °C	60%

* The value for the ambient temperature is 5°C lower than the actual minimum temperature.

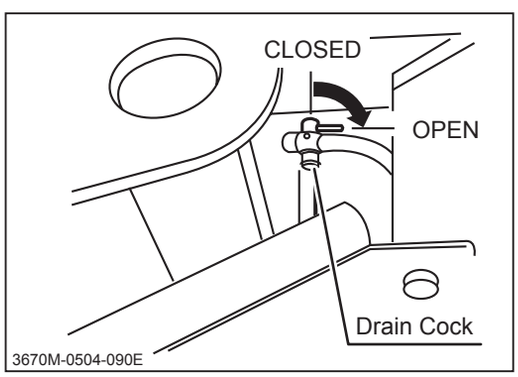

Antifreeze Mixture (Reference)

When this machine is shipped from the factory, it is filled with a mixture of 50% antifreeze and 50% water. To prevent coolant from freezing, use a mixture of water and antifreeze determined by the minimum temperature in the operation area using the table on the left.

NOTE

- **Antifreeze to use: Long Life Coolant (LLC).**
- **Use pure water to make antifreeze mixture.**

Changing

1. Prepare a suitable container for drained coolant.
2. Remove radiator cap and reservoir lid.
3. Open drain cock at the bottom of radiator.
4. Drain coolant. Then clean inside radiator.
5. Clsoe drain cock.
6. Fill radiator and reservoir with antifreeze mixture.
7. Put adiator cap and reservoir lid back in place.

NOTE

- **Coolant Capacity: 7.2L**
- **Removing radiator cap helps drain the coolant.**

https://truckmanualshub.com/

Fan Belt

⚠CAUTION!

- **Check belt tension regularly. Loose fan belt causes premature wear on belt or insufficient cooling.**

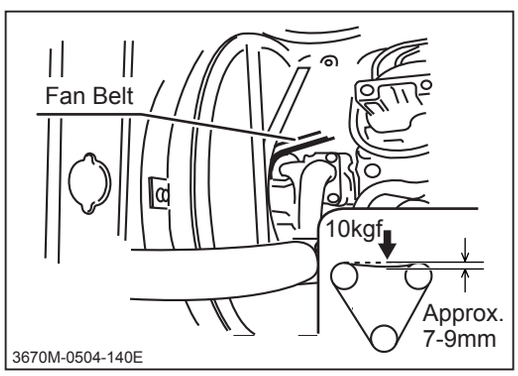

1. Open engine hood.
2. Press the middle of fan belt with a force of 10kgf to see belt deflects between 7 and 9 mm
3. If the deflection is not within this range, loosen alternator mounting bolts and move alternator to adjust belt tension.

https://truckmanualshub.com/

Fuel System

⚠WARNING!

- **Fuel is highly flammable. Keep fire and spark away when servicing fuel filter. If fuel is spilt, wipe immediately.**

⚠CAUTION!

- **Dispose risidual fuel in fuel filter or drained fuel or water properly. Check the national and local regulation for discarding such fluids.**

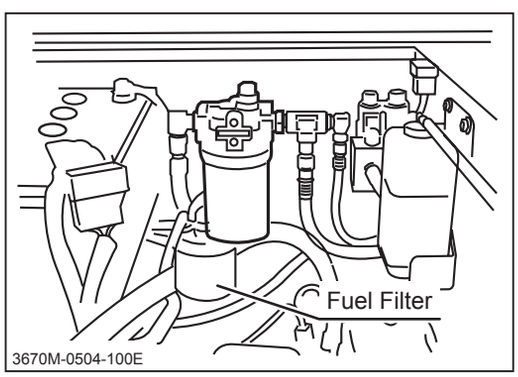

Changing Fuel Filter

1. Open engine hood.
2. Using oil filter wrench, remove fuel filter cartridge.

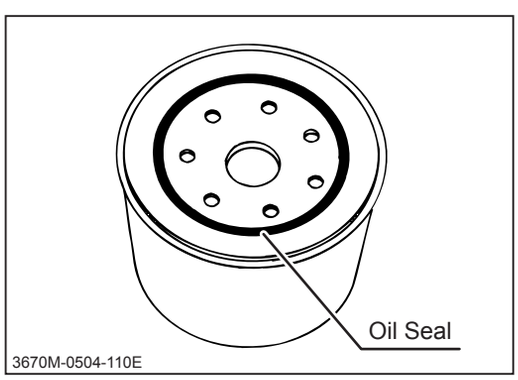

3. Apply thin coat of new fuel on oil seal.
4. Install fuel filter. Tighten fully by hand.

NOTE

- **Do not use oil filter wrench when installing fuel filter.**

5. After installation, bleed air in the fuel system.
6. Close engine hood.

https://truckmanualshub.com/

Bleeding Air in the Fuel System

NOTE

Bleed air when air enters the fuel system

- **After changing fuel filter or disconnecting fuel line.**
- **After running engine until fuel tank is completely dry.**

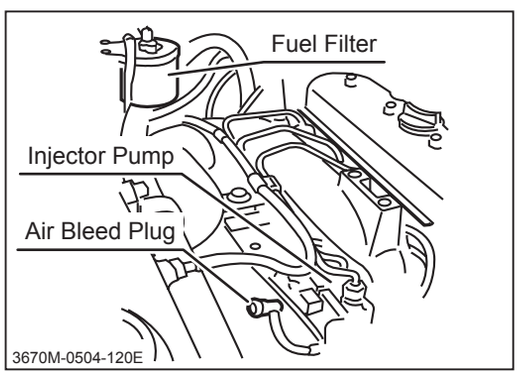

1. Open engine hood.
2. Make sure the components in the fuel system is securely installed.
3. Fill fuel in fuel tank.

NOTE

- **Fill enough amount of fuel so that air is not sucked into the fuel system.**

4. Open side cover (page 44).
5. Loosen air bleed plug.
6. Turn main switch to [| (ON)] position to actuate fuel pump.
7. When fuel comes out of air bleed plug, tighten plug.
8. Close side cover and engine hood.

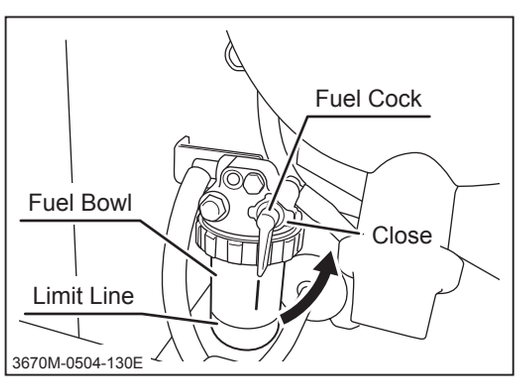

Inspecting Water in Fuel

1. Open side cover.
2. Visually inspect water in fuel bowl. If it reaches limit line or above, drain water.
3. Close side cover.

Removing Water in Fuel

1. Open side cover.
2. Close fuel cock.
3. Follow Operator's Manual for the Engine to remove fuel bowl and discard its content.
4. REinstall fuel bowl.
5. Open fuel cock.
6. Close side cover.

https://truckmanualshub.com/

Drive Train

⚠WARNING!

- Stop engine when servicing the drive train.
- Allow machine to cool off before servicing. Engine is very hot after operation and may pose a burn hazard.

Tracks

⚠WARNING!

- Jack up machine securely with a commercial grade jack capable of supporting machine's weight when inspecting or adjusting track. Follow jack manufacturer's instructions to raise one side of machine until track is a few centimeters off the ground.
- Once jacked up, support machine securely with rigid racks.
- Make certain to adjust track tension properly. Inproperly tensioned tracks may wear or come off, resulting in property damage, serious injury or death.

⚠CAUTION!

- Always unload machine before jacking up.
- When loosening track adjuster valve, loosen slowly and gradually so that it will not come off. Track adjuster cylinder is under pressure, and if adjuster valve comes off, it may be projected out, possibly causing injury or damage.

NOTE

- Track stretches during its use-life. Inspect and adjust regularly.
- During the first 100 hours of use, track tends to get broken in and stretch more than usual. Inspect often and adjust as necessary.

https://truckmanualshub.com/

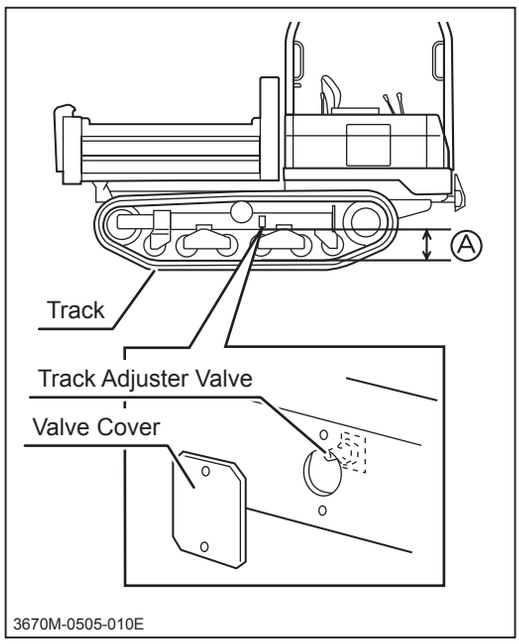

Adjusting

1. Park machine on a horizontal ground.
2. Jack up the front and the rear of chassis to raise track on one side. Make sure track is parallel to the ground surface.
3. Remove track adjuster valve cover.
4. Inspect the gap between track and track frame (Ⓐ)to be between 224 and 225mm.
5. Slowly loosen track adjuster valve to let grease come out around valve and track to loosen.
6. When track is loose enough, tighten valve. Make sure not to have valve O-ring get caught.
7. Attach grease pump to track adjuster valve and pump grease into track adjuster cylinder until the gap Ⓐ is between 224 and 225mm.
8. Remove grease pump and install valve cover.

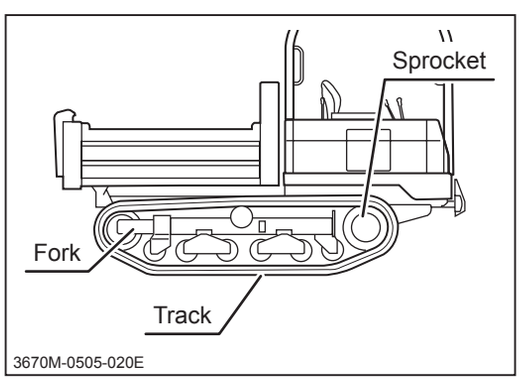

Replacing/Installing

1. Park machine on a horizontal ground.
2. Jack up the front and the rear of chassis to raise track on one side. Make sure track is parallel to the ground surface.
3. Remove track adjuster valve cover.
4. Slowly loosen track adjuster valve to let grease come out around valve to reduce pressure inside track adjuster cylinder.
5. Remove valve.
6. Push idler wheel fork in, toward the front of machine.
7. Remove track.
8. Fit new track, first on sprocket, then on idler.
9. Reinstall and tighten valve securely. Make sure not to have valve O-ring get caught.

https://truckmanualshub.com/

10. Attach grease pump to track adjuster valve and pump grease into track adjuster cylinder until the gap A is between 224 and 225mm.
11. Remove grease pump and install valve cover.

HST (Hydrostatic Transmission) Fluid

⚠CAUTION!

- **Inspect and maintain fluid level regularly. If fluid level is low, air may be trapped into the hydraulic system, causing loss of perwormance or premature wear..**
- **Dispose of the drained fluid properly, according to the national and local regulations.**
- **Burn hazard; pay special attention when handling the hydraulic fluid. Hot fluid may cause burns.**

NOTE

- **HST fluid is used for driving as well as for hydraulic apparatus .**

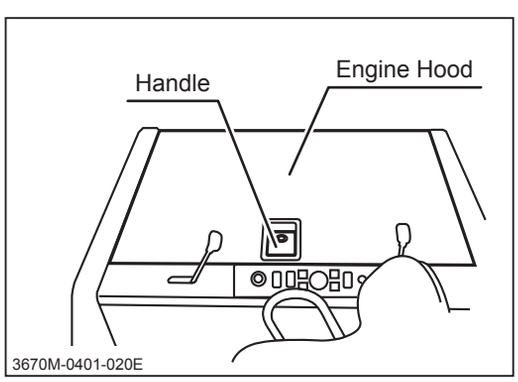

Inspecting/Filling

1. Park machine on the level ground.
2. Open engine hood.

https://truckmanualshub.com/

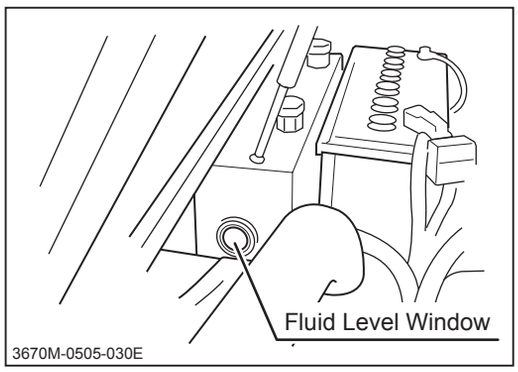

3. Visually inspect oil level window.

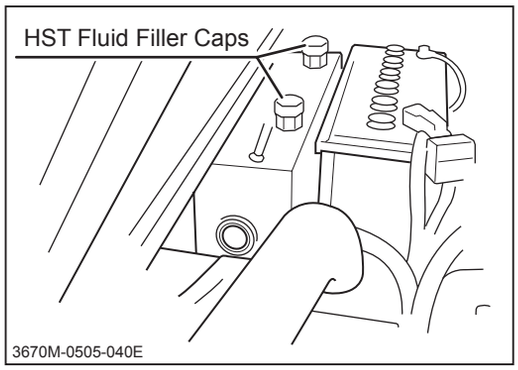

4. If the level is low, open filler cap and fill fluid. Put filler cap back in place.
5. Start and run engine for a while to circulate the fluid. Then, stop engine.
6. Visually inspect fluid level to be within the fluid level window.
7. Close engine hood.

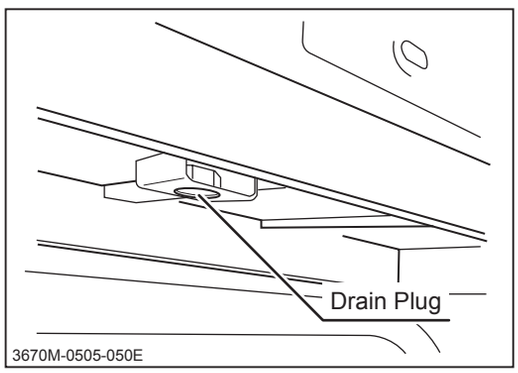

Changing

1. Park machine on the level ground.
2. Have an appropriate oil drain pan.
3. Remove drain plug to drain fluid.
4. Install drain plug.

NOTE

- **Replace both line filter cartridge and suction filter element when hydraulic fluid is changed.**

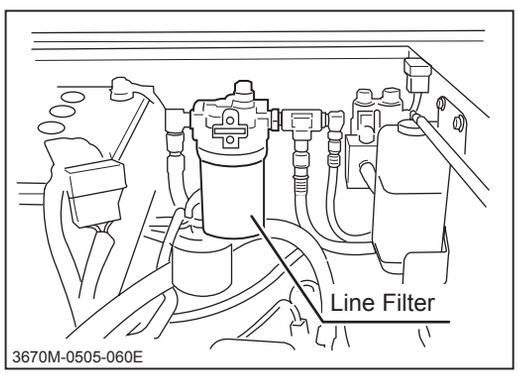

6. Open engine hood.
7. Remove line filter cartridge with the oil filter wrench.
8. Have a new line filter cartridge ready. Apply clean hydraulic fluid (oil) on the cartridge oil seal evenly.

https://truckmanualshub.com/

9. Screw in the new line filter cartridge. Tighten it by hand until the cartridge is firmly in place.

NOTE

- **Do not damage oil seal. If oil seal is damaged, use a new filter cartridge.**
- **Do NOT use the filter wrench when tightening the filter cartridge. Tighten it by hand.**

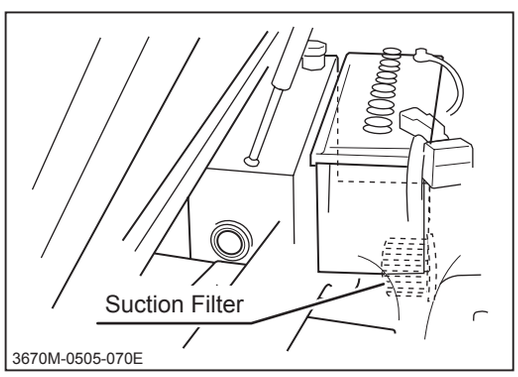

9. Remove flange cover, then remove suction filter.
10. Remove suction filter element and replace it with a new one.
11. Install suction filter, then flange cover.
12. Open filler cap and fill fluid until fluid level is within fluid level window. Put filler cap back in place.
13. Start engine to circulate the fluid. Watch for leaks.
14. Stop engine and inspect fluid level. If it is low, add fluid until it is within fluid level window.
15. Close engine hood.

https://truckmanualshub.com/

Steering Lever

NOTE

- **Steering levers are properly adjusted when machine leaves the factory, and normally they do not require adjustment. However, if any component in the steering linkage is replaced, steering levers need to be re-adjusted.**

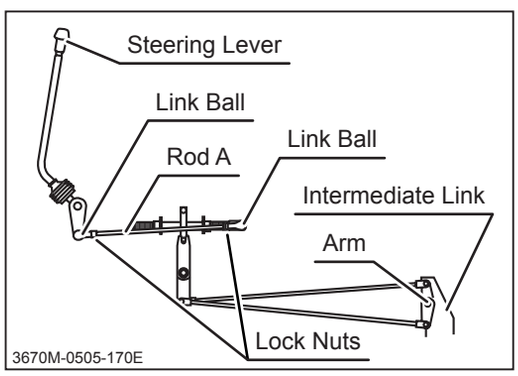

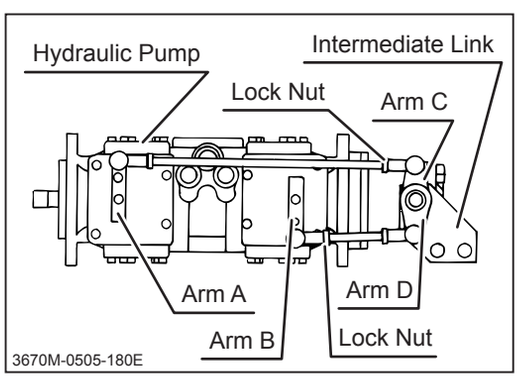

1. Turn rod A and adjust so that the link portion of steering lever is perpendicular.
   (1) Loosen locknut.
   (2) Turin rod A to adjust.
   (3) After adjusting, tighten locknut securely.
2. Adjust with the bearing so that hydraulic pump arm !, arm B, Intermediate Link, arm C, and Arm D are perpendicular.
   (1) Loosen locknut.
   (2) Turn rods B and C to adjust.
   (3) After adjusting, tighten locknut securely.
3. In the condition in Step 2, operate steering lever fully to the front and rear, and check that arms A and B both move the same angle to the front and rear. If their angls differ, turn rods B or C to adjust.
4. After carrying out of the adjustments in Steps 1 to 3, set steering lever to [N] position, push parking brake switch to [(P) (parking)], and start engine.
   Operate parking brake switch to [Travel] position, and if machine does not move, the setting of [N] position is correct. If machine moves, turn rods B and C again to carry out fine adjustment of arms A and B and set securely to the neutral position.
5. After completing the setting of neutral position in Step 4, operate steering levers fully to the front and rear and check that machine travels to the straight line.
6. Coar the sliding surfaces on arms A and B with grease.

https://truckmanualshub.com/

Travel Motor Oil

⚠WARNING!

- **Always park machine on a level surface and block tracks with chocks when working under machine.**

⚠CAUTION!

- **Dispose of the drained oil properly, according to the national and local regulations.**

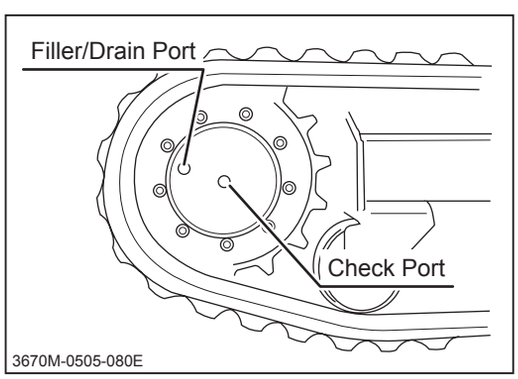

Changing

1. Park the machine on a level ground.
2. Drive machine so that filler/drain port of travel moror is at the bottom.
3. Remove drain plug to drain oil.
4. Reinstall drain plug.
5. Drive machine so that filler/drain port is at the top of the travel motor.
6. Remove drain check plugs.
7. Fill lubricant into filler port until oil comes out of check port.
8. Reinstall drain and check plugs.

NOTE

- **Oil to Use: Gear Oil, API rating GL-4, SAE index 90.**

https://truckmanualshub.com/

Greasing

⚠CAUTION!

- **Follow the maintenance schedule to grease the machine. Lack of greasing may result in rust, excessive wear or seizure.**

NOTE

- **Grease to use: Chassis Grease**
- **When using a manual grease gun, pump 5-6 times. When the handle of the gun becomes heavy, stop pumping immediately.**
- **When using a pneumatic grease gun, pump it for a few seconds.**

1. Grease greasing points as shown below.

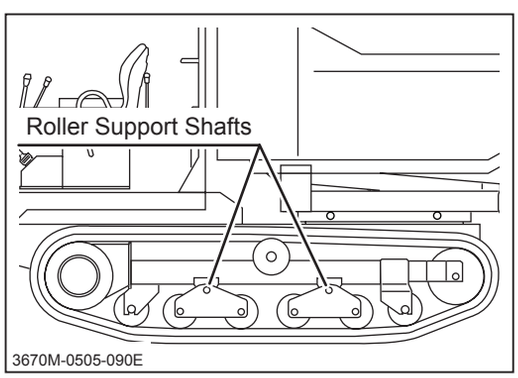

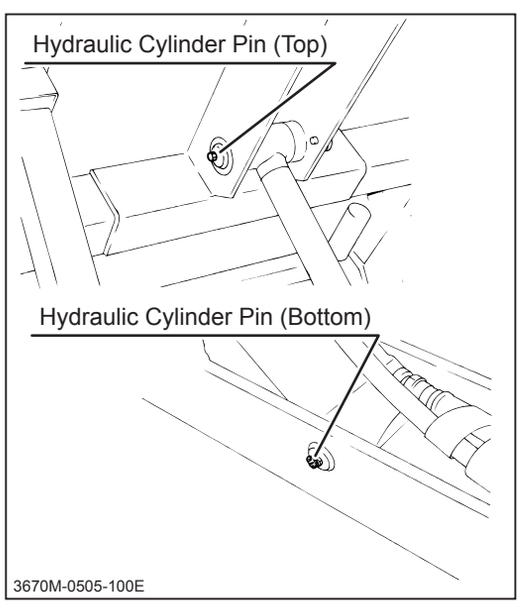

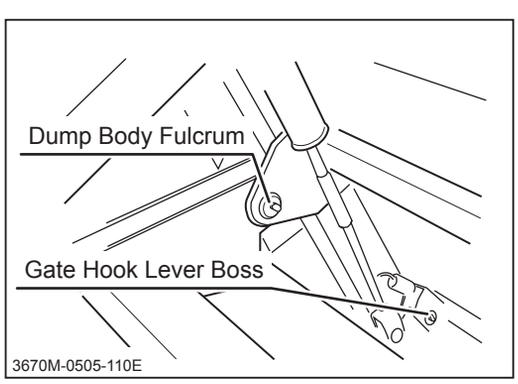

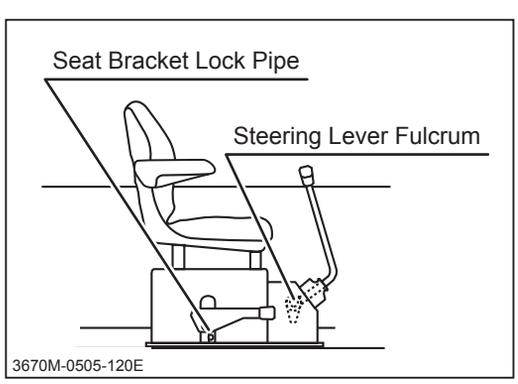

https://truckmanualshub.com/

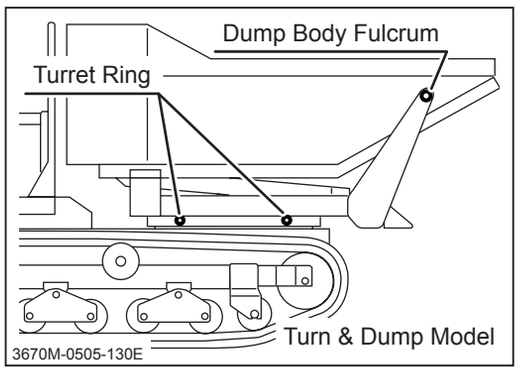

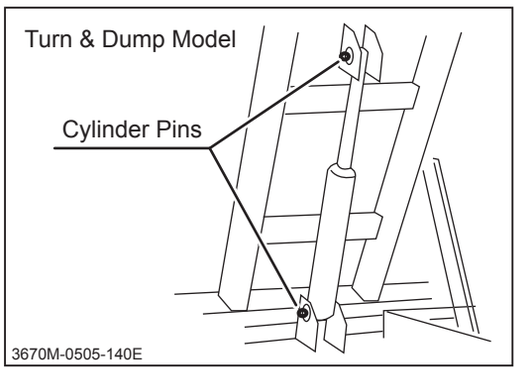

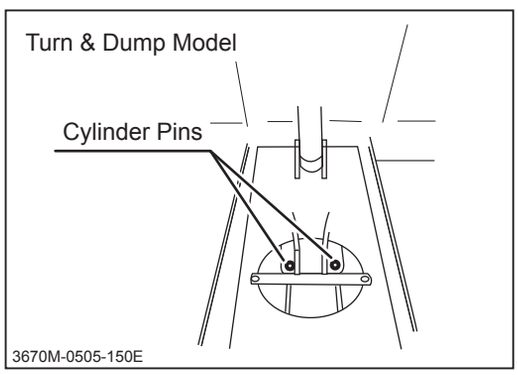

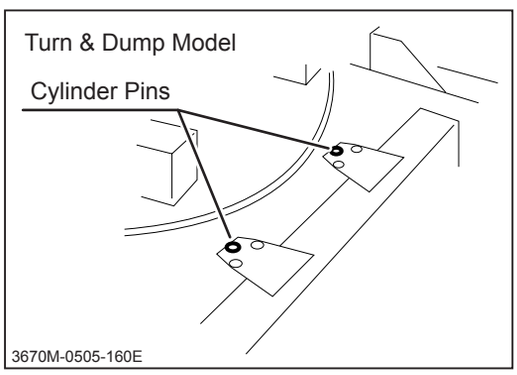

Electrical System

⚠WARNING!

- **Always stop the engine and turn the main switch to [◯ (OFF)] position, and disconnect the negative (-) terminal of battery when servicing the electrical system.**

Battery

⚠WARNING!

- **Explosion hazard. Keep open flame or spark away from battery. Hydrogen gas generated during charging is extremely explosive.**

https://truckmanualshub.com/

⚠WARNING!

- Battery fluid (diluted sulfic acid) is corrosive and causes severe burns. Be extremeley cautious when handling battery fluid. If battery fluid is spilt on clothes, immediately rinse with plenty of water. If spilt on skin or in an eye, immediately rinse with plenty of water and promptly consult a physician.
- Never use or charge battery when the fluid level is below the lower limit. Charging battery with insufficient fluid may shorten battery life or cause an explosion.
- Never fill battery fluid beyond the upper limit. Battery fluid may spill and cause damage to the machine or personal injury.
- Always disconnect the negative (-) terminal first, and connect the positive (+) terminal first. Disconnecting or connecting in the opposite order may cause a short circuit.
- When installing the battery, make certain to connect the positive (+) and negative (-) terminals to their respective original positions. Avoid contact between terminals and other surrounding parts.
- Use wet cloth to clean battery. Dry cloth may generate static electricity, which may cause explosion.
- Do not touch terminals. Electric shock may occur.

⚠CAUTION!

- Always remove battery from the machine before charging. Failure to do so may cause damage to the electrical components and wiring.
- Follow the battery charger user's manual when charging.

https://truckmanualshub.com/

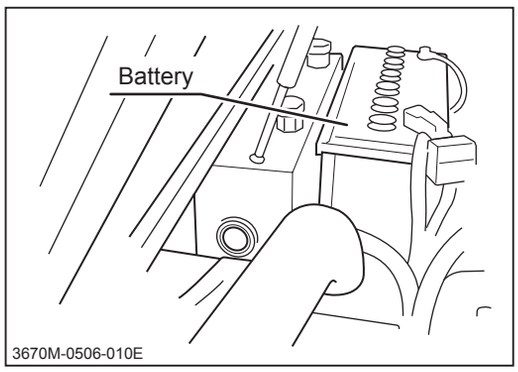

Inspecting/Filling

1. Park machine on a level ground. Open engine hood.

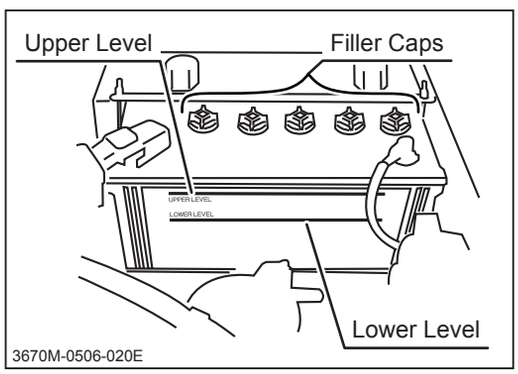

2. Visually inspect that battery fluid level is between the "Upper Level" and "Lower Level" lines. If the fluid level is below the "Lower Level," fill.
3. If battery fluid level is below "Lower Level line, open battery filler plugs and add distilled water up to "Upper Level" line.
4. Reinstall filler plugs.
5. Close engine hood.

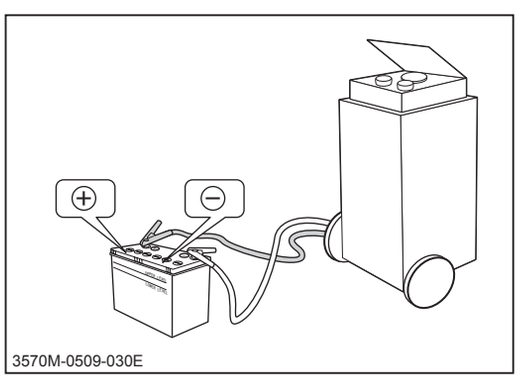

Charging

1. Park machine on a level ground. Open engine hood.
2. Remove battery from machine.
3. Remove all filler plugs.
4. Follow the instructions in **the battery charger user's manual** to charge the battery.
4. When battery is fully charged, put filler plugs back in place.
5. Reinstall battery. Close engine hood.

NOTE

- **Rapid charging is only an emergency measure. This method uses a large amount of current to compensate the lost charge in a short time. However, the battery needs to be fully charged in the ordinary method for a longer service life.**

https://truckmanualshub.com/

Fuses

⚠CAUTION!

- **If a fuse blows, investigate the cause and repair it before replacing the fuse. Always replace a fuse with the one of the correct rating.**

NOTE

- **Fuses are provided to protect electrical circuit from abnormal current caused by sort circuit or a damage in an electrical component. If an electricity-related problem occurs, inspect the related fuse.**

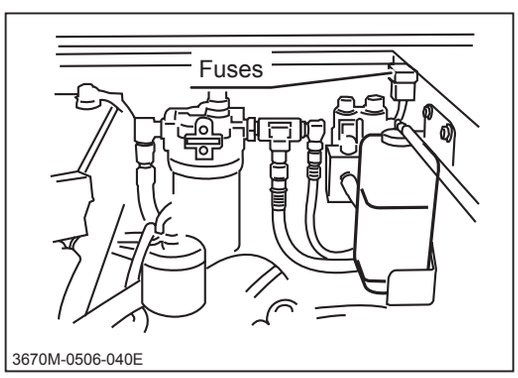

3670M-0506-040E

Fuses

1. Open engine hood.
2. Open fuse housing lid.

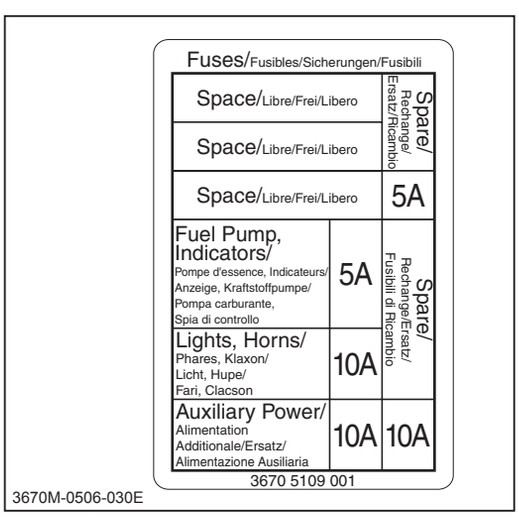

Fuses/Fusibles/Sicherungen/Fusibili

Space/Libre/Frei/Libero		Spare/ Rechange/ Ersatz/Ricambio
Space/Libre/Frei/Libero		
Space/Libre/Frei/Libero		5A
Fuel Pump, Indicators/ Pompe d'essence, Indicateurs/ Anzeige, Kraftstoffpumpe/ Pompa carburante, Spia di controllo	5A	Spare/ Rechange/Ersatz/ Fusbil di Ricambio
Lights, Horns/ Phares, Klaxon/ Licht, Hupe/ Fari, Clacson	10A	
Auxiliary Power/ Alimentation Additionale/Ersatz/ Alimentazione Ausiliaria	10A	10A

3670 5109 001

3670M-0506-030E

3. Locate the blown fuse and replace it with a new one of the correct rating.
4. Put the lid back in place.
5. Close engine hood.

NOTE

- **Fuel Pump, Indicators: 5A**
- **Lights, Horn: 10A**
- **Auxiliary Power: 10A**
- **Spare: 5A**
- **Spare: 5A**

https://truckmanualshub.com/

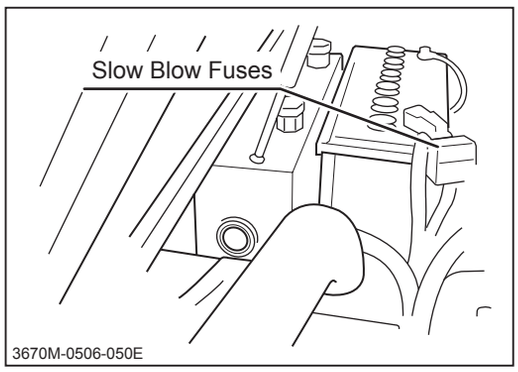

Slow Blow Fuses

1. Open engine hood.
2. Open the lid of fuse housing.
3. Locate the blown fuse and replace it with a new one of the correct rating.
4. Put the lid back in place.
5. Close engine hood.

NOTE

- **Main Glow: 50A**
- **Alternator: 30A**

After Use Care

⚠CAUTION!

- **Do not wash the engine, control panel, electrical parts, or tank caps with air breather with running water; water may enter inside and cause rust or damage.**
- **Clean the machine after use; leaving dirt or foreign objects may cause damage.**
- **Do not attempt to move the machine when it becomes inoperable due to freezing.**

After Normal Use

1. Clean the machine; wash off dirt, mud, and other foreign matter after use.
2. If the machine is to be left outside, cover the machine with protective, water-proof covering after the machine is cooled off.

After Cold Weather Use

1. Clean the machine; wash off dirt, mud, and other foreign matter after use.
2. Park the machine on a paved or firm, dry surface.
3. If the machine is to be left outside, cover the machine with protective, water-proof covering after it is cooled off.

https://truckmanualshub.com/

Storage

⚠WARNING!

- **Fire hazard; do not store the machine where there is a possiblity of ignition.**

⚠CAUTION!

- **Do not wash the engine or control panel with running water; water may enter inside and cause rust or damage.**
- **Clean the machine before storage; leaving dirt or foreign objects may cause rust or damage.**
- **Do not store the machine in a humid, dusty, or hot place.**

1. Follow the instructions in **Parking** (page 29) to park the machine.
2. Clean dirt off of the machine.
3. Change engine oil (page 42).

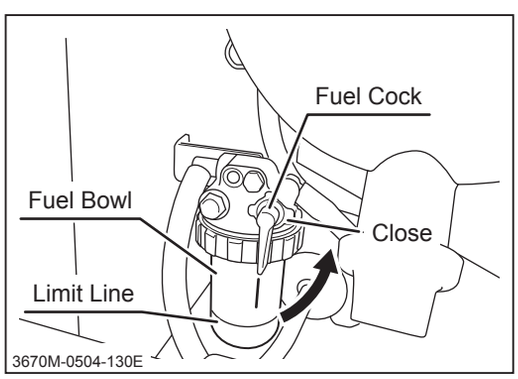

4. Clean the air cleaner (page 44).
5. Open engine hood and turn fuel cock to "OFF" position. Close engine hood.
6. Remove battery from the machine. Service battery (page 58).
7. Cover the machine with protective, water-proof covering after the machine is cooled off.

NOTE

- **Battery dischages even when it is not in use. A battery may hold charge for a few months, but it is a good practice to charge battery before it goes flat; it will extend the battery life.**
- **Refer to the Operation Manual for the engine, for detailed instructions on preparing the engine for storage.**
- **Do not forget to turn the fuel cock to "ON" position when starting the machine.**

https://truckmanualshub.com/

Troubleshooting

- If any malfunction or abnormal condition is found, immediately stop using the machine and take an appropriate measure according to the Troubleshooting chart below. If the malfunction or abnormal condition is not listed in the chart, or the suggested measure does not solve the problem, consult with your CANYCOM representative.

- Some corrective measures listed below require special knowledge and/or equipment. Please contact your CANYCOM representative in such a case.

Area	Malfunction	Possible Cause	Corrective Measure	Ref.
Engine	Engine does not start, or is difficult to start	Out of fuel.	→Fill fuel.	Page 19
		Air in fuel system.	→Bleed air.	Page 48
		Water in fuel.	→Drain water.	Page 48
		Battery is discharged.	→Add battery fluid. →Charge battery. →Replace battery.	Page 58
		Battery cable is disconnected.	→Connect battery cable.	
		Bad connection or breakage in the wiring.	→Please contact your CANYCOM representative.	
		Starter switch, relay or motor is defective.	→Please contact your CANYCOM representative.	
		Insufficient or wrong oil.	→Fill or change oil.	Page 42
		Other (other than the above).	→Please contact your CANYCOM representative.	
	Engine stalls	Out of fuel.	→Fill fuel.	Page 19
		Air in fuel system.	→Bleed air.	Page 48
		Cold engine.	→Warm up engine.	
		Other (other than the above).	→Please contact your CANYCOM representative.	

https://truckmanualshub.com/

Area	Malfunction	Possible Cause	Corrective Measure	Ref.
Engine	Engine stops abruptly.	Out of fuel	→Fill fuel.	Page 19
		Piston seizure due to insufficient or bad oil.	→Please contact your CANYCOM representative.	
		Other (other than the above).	→Please contact your CANYCOM representative.	
	Engine does not stop	Electrical malfunction	→Please contact your CANYCOM representative.	
		Other (other than the above).	→Please contact your CANYCOM representative.	
	Idling is not stable.	Insufficient intake air (clogged air cleaner).	→Clean or replace air cleaner.	Page 44
		Other (other than the above).	→Please contact your CANYCOM representative.	
	Poor power or acceleration	Bad fuel	→Change fuel.	
		Wrong oil (improper viscosity)	→Change to suitable oil.	Page 42
		Accelerator (throttle) is not properly adjusted.	→Please contact your CANYCOM representative.	
		Insufficient intake air (clogged air cleaner).	→Clean or replace air cleaner.	Page 44
		Excessive load	→Reduce load.	
		Other (other than the above).	→Please contact your CANYCOM representative.	
	Irregular noise or vibration from or around the engine	Loose engine mount.	→Tighten.	
			→Please contact your CANYCOM representative.	
	Excessive oil consumption		→Please contact your CANYCOM representative.	

https://truckmanualshub.com/

Area	Malfunction	Possible Cause	Corrective Measure	Ref.
Engine	Engine overheats	Insufficient amount of engine oil.	→Fill oil.	Page 42
		Insufficient amount of coolant.	→Fill coolant.	Page 45
		Cooling fan is clogged or blocked.	→Clean.	
		Other (other than the above).	→Please contact your CANYCOM representative.	
	Excessive fuel consumption	Clogged air cleaner.	→Clean or replace air cleaner.	Page 44
		Other (other than the above).	→Please contact your CANYCOM representative.	
	Black smoke comes out of exhaust	Bad fuel.	→Change fuel.	
		Clogged air cleaner.	→Clean or replace air cleaner.	Page 44
		Other (other than the above).	→Please contact your CANYCOM representative.	
	White or blue smoke comes out of exhaust	Engine oil level is too high.	→Adjust the oil level.	
		Other (other than the above).	→Please contact your CANYCOM representative.	
	Accelerator lever does not move smoothly	Deformed or rusty linkage or wire.	→Please contact your CANYCOM representative.	
		Other (other than the above).		
Drive Train	Machine does not move (forward, backward, turning) when the control stick is in the corresponding position.	Parking brake is applied	→Release parking brake.	Page 25
		Excessive load	→Reduce load.	
		Insufficient or deteriorated HST fluid.	→Add or change fluid.	Page 52
		Other (other than the above).	→Please contact your CANYCOM representative.	
	Irregular noise or heat is observed at or around the track.		→Please contact your CANYCOM representative.	

https://truckmanualshub.com/

Area	Malfunction	Possible Cause	Corrective Measure	Ref.
Brake	Brake does not work well.	Problem in hydraulic system.	→See below	
		Other (other than the above).	→Please contact your CANYCOM representative.	
Hydraulic System	Hydraulic components (hydraulic motor, cylinder) does not work properly.	Insufficient or deteriorated hydraulic oil.	→Fill or change oil.	Page 42
		Hydraulic oil is contaminated	→Change oil.	Page 42
		Oil filter is clogged.	→Change filter.	Page 47
		Oil leaks	→Repair leak.	
		Other (other than the above).	→Please contact your CANYCOM representative.	
Chassis	Track does not move smoothly.	Not properly adjusted.	→Adjust.	Page 50
		Other (other than the above).	→Please contact your CANYCOM representative.	
	Machine does not travel straight.	Roller, upper roller, idler or sprocket is broken.	→Repair or replace.	
		Other (other than the above).	→Please contact your CANYCOM representative.	
Dump Vessel Related	Tailgate does not open or close properly.	Not properly adjusted.	→Adjust.	
		Foreign object is stuck in the gate.	→Remove the foreign object.	
		Other (other than the above).	→Please contact your CANYCOM representative.	
Safety Devices	Lamp does not light.	Blown bulb.	→Replace.	
		Blown fuse.	→Replace.	
		Other (other than the above).	→Please contact your CANYCOM representative.	
	Lamp does not light.	Blown fuse.	→Replace.	Page 61
		Other (other than the above).	→Please contact your CANYCOM representative.	

https://truckmanualshub.com/

Hauling

Loading and Unloading

⚠WARNING!

- **Park the transporter (truck) on a level ground and apply parking brake. Always use chocks to secure wheels.**
- **Do not allow bystandars to come close to the machine or the transporter when loading or unloading the machine.**
- **Use only the loading ramps with sufficient strength (to withstand the combined weight of the machine and the operator), width (more than 1.2 times the width of the track), and length (more than 4 times the height of the loading deck of the transporter), and have anti-slip ramp surfaces.**
- **Secure the hooks of the loading ramps firmly and flush with the loading deck.**
- **Move slowly backward when loading onto, and move slowly forward when unloading off of the transporter. Pay special care when going over the joint between the loading deck and the ramps; the machine may tip.**
- **Do not turn on the loading ramps. The machine may fall.**
- **Tie down the machine securely. Make sure the machine does not move around on the loading deck.**

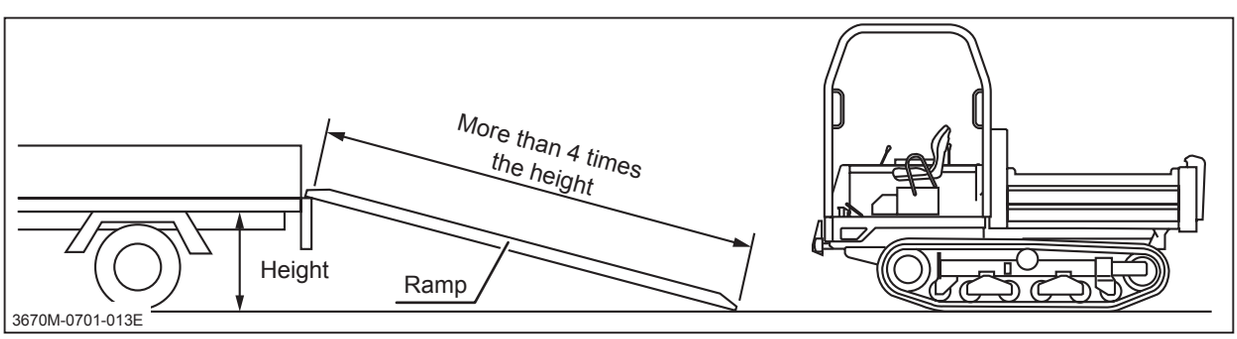

Loading to the Transporter

1. Park the transporter and apply parking brake. Secure the wheels with chocks.
2. Place the loading ramps. Secure the hooks of the ramps firmly and flush with the loading deck.

https://truckmanualshub.com/

3. Set the H/L Speed Selecter switch to [(LO)] mode and drive the machine slowly forward onto the loading deck.
4. Park the machine according to the instructions in **"Parking"** (Page 29).
5. Tie the machine at lift hooks with rope or tie-down belts and secure it onto the loading deck of the transporter securely.

Unloading from the Transporter

1. Park the transporter and apply parking brake. Secure the wheels with chocks.
2. Undo rope or tie-downs that secure the machine.
3. Place the loading ramps. Secure the hooks of the amps firmly and flush with the loading deck.
4. Set the H/L Speed Selector switch to [(LO)] mode and drive the machine slowly backward from the loading deck to the ground.

https://truckmanualshub.com/

Hoisting and Towing

⚠WARNING!

- **Always unload the machine before hoisting.**

Hoisting

⚠WARNING!

- **Hoisting requires qualifications. Check with your local authority for necessary qualifications and licenses for hoisting.**
- **Use hoisting sling of sufficient strength. Always use the slings of the same length when more than one is used.**

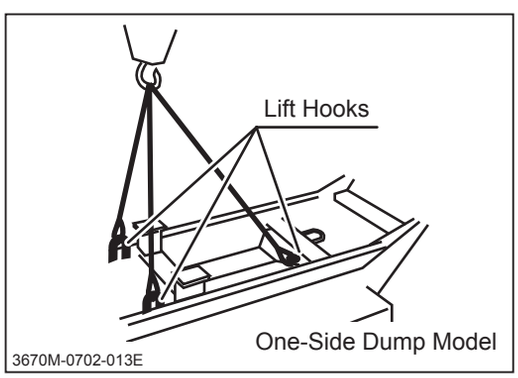

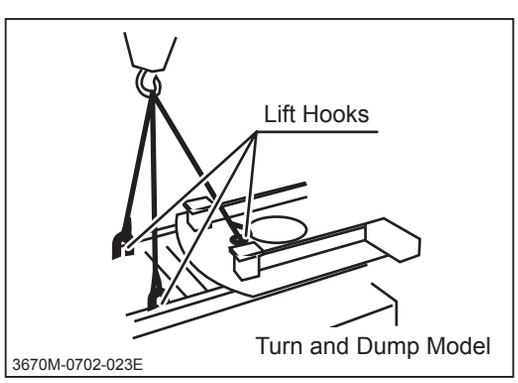

1. Raise the load deck body and lock it with the load deck body safety prop. (Page 32)
2. Hitch the wire rope to the lifting hooks (3 places) attached to the frame and lift the machine. At this time, adjust the wire rope length so that the machine will be horizontal.
3. Slinging work implements (wire rope, chain, etc.) to be used should have sufficient strength.

https://truckmanualshub.com/

Towing

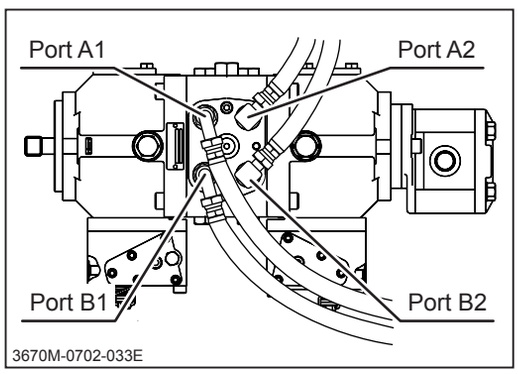

1. Disconnect the hoses from the ports A1 and B1 on the HST pump, and bypass them with a hose with appropriate fittings.
2. Disconnect the hoses from the ports A2 and B2 on the HST pump, and bypass them with a hose with appropriate fittings.
3. Cap the ports with plugs.

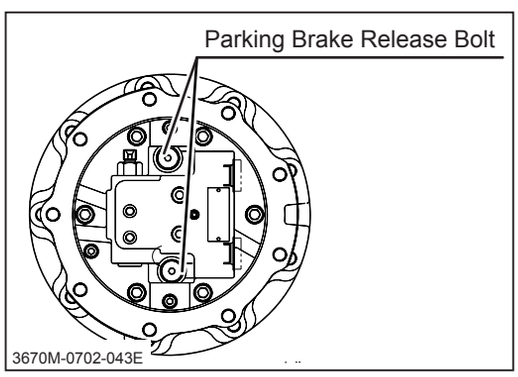

4. Remove the cover on the back of the HST motor on both sides.
5. Remove PF1/4 plugs from the parking brake release ports.

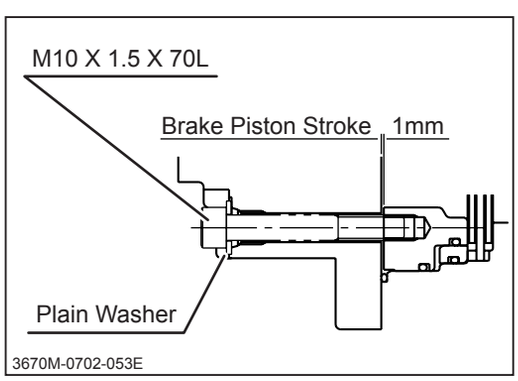

6. Screw in an M10X1.5X70L bolt with a nominal 10mm plain washer into each of those ports and tighten it until the brake becomes free.
7. Hitch the wire rope to the towing hook on the back end of the machine. Tow slowly.

NOTE

- **Towing Capacity: 2500kg**

https://truckmanualshub.com/

NOISE LEVEL

Model	Engine		LpA		LwA
Type	Type	Speed rpm	Left	Right	
S25A	Kubota V2203	2800 rpm	80.1 dB (A)	79.2 dB (A)	101 dB (A)

NOISE LEVEL evaluated based on factory standard.

VIBRATION

Model	Rated Engine Speed	Vibration	
		Steering lever	Seat
S25A	2800 rpm	3.0 m/s^2	3.0 m/s^2

VIBRATION evaluated based on factory standard.