CONTENTS

SECTION 1 GENERAL

Group 1 Safety Hints 1-1
Group 2 Specifications 1-9

SECTION 2 STRUCTURE AND FUNCTION

Group 1 Pump Device 2-1
Group 2 Main Control Valve 2-9
Group 3 Swing Device 2-38
Group 4 Travel Device 2-49
Group 5 RCV Lever 2-68

SECTION 3 HYDRAULIC SYSTEM

Group 1 Hydraulic Circuit 3-1
Group 2 Main Circuit 3-2
Group 3 Pilot Circuit 3-5
Group 4 Single Operation 3-10
Group 5 Combined Operation 3-22

SECTION 4 ELECTRICAL SYSTEM

Group 1 Component Location 4-1
Group 2 Monitoring system 4-3
Group 3 Electrical Circuit 4-9
Group 4 Electrical Component Specification 4-25
Group 5 Connectors 4-32

SECTION 5 TROUBLESHOOTING

Group 1 Before Troubleshooting 5-1
Group 2 Hydraulic and Mechanical System 5-4
Group 3 Electrical System 5-24

SECTION 6 MAINTENANCE STANDARD

Group 1 Operational Performance Test 6-1
Group 2 Major Components 6-21
Group 3 Track and Work Equipment 6-31

SECTION 7 DISASSEMBLY AND ASSEMBLY

Group 1 Precaution 7-1
Group 2 Tightening Torque 7-4
Group 3 Pump Device 7-7
Group 4 Main Control Valve 7-33
Group 5 Swing Device 7-47
Group 6 Travel Device 7-63
Group 7 RCV Lever 7-90
Group 8 Turning Joint 7-104
Group 9 Boom, Arm and Bucket Cylinder 7-109
Group 10 Undercarriage 7-128
Group 11 Work Equipment 7-141

SECTION 8 COMPONENT MOUNTING TORQUE

Group 1 Introduction Guide 8-1
Group 2 Engine System 8-2
Group 3 Electric System 8-4
Group 4 Hydraulic System 8-5
Group 5 Undercarriage 8-7
Group 6 Structure 8-8
Group 7 Work Equipment 8-10

1. STRUCTURE

This service manual has been prepared as an aid to improve the quality of repairs by giving the serviceman an accurate understanding of the product and by showing him the correct way to perform repairs and make judgements. Make sure you understand the contents of this manual and use it to full effect at every opportunity.
This service manual mainly contains the necessary technical information for operations performed in a service workshop.
For ease of understanding, the manual is divided into the following sections.

SECTION 1 GENERAL

This section explains the safety hints and gives the specification of the machine and major components.

SECTION 2 STRUCTURE AND FUNCTION

This section explains the structure and function of each component. It serves not only to give an understanding of the structure, but also serves as reference material for troubleshooting.

SECTION 3 HYDRAULIC SYSTEM

This section explains the hydraulic circuit, single and combined operation.

SECTION 4 ELECTRICAL SYSTEM

This section explains the electrical circuit, monitoring system and each component. It serves not only to give an understanding electrical system, but also serves as reference material for trouble shooting.

SECTION 5 TROUBLESHOOTING

This section explains the troubleshooting charts correlating **problems** to **causes**.

SECTION 6 MAINTENANCE STANDARD

This section gives the judgement standards when inspecting disassembled parts.

SECTION 7 DISASSEMBLY AND ASSEMBLY

This section explains the order to be followed when removing, installing, disassembling or assembling each component, as well as precautions to be taken for these operations.

SECTION 8 COMPONENT MOUNTING TORQUE

This section shows bolt specifications and standard torque values needed when mounting components to the machine.

The specifications contained in this shop manual are subject to change at any time and without any advance notice. Contact your HYUNDAI distributor for the latest information.

2. HOW TO READ THE SERVICE MANUAL

Distribution and updating

Any additions, amendments or other changes will be sent to HYUNDAI distributors.
Get the most up-to-date information before you start any work.

Filing method

1. See the page number on the bottom of the page.
   File the pages in correct order.
2. Following examples shows how to read the page number.
   Example 1
   2 - 3
   - Item number(2. Structure and Function)
   - Consecutive page number for each item.
3. Additional pages : Additional pages are indicated by a hyphen(-) and number after the page number. File as in the example.

   10 - 4
   10 - 4 - 1 ┐ Added pages
   10 - 4 - 2 ┘
   10 - 5

Revised edition mark(①②③…)

When a manual is revised, an edition mark is recorded on the bottom outside corner of the pages.

Revisions

Revised pages are shown at the **list of revised pages** on the between the contents page and section 1 page.

Symbols

So that the shop manual can be of ample practical use, important places for safety and quality are marked with the following symbols.

Symbol	Item	Remarks
⚠	Safety	Special safety precautions are necessary when performing the work.
		Extra special safety precautions are necessary when performing the work because it is under internal pressure.
※	Caution	Special technical precautions or other precautions for preserving standards are necessary when performing the work.

3. CONVERSION TABLE

Method of using the Conversion Table

The Conversion Table in this section is provided to enable simple conversion of figures. For details of the method of using the Conversion Table, see the example given below.

Example

1. Method of using the Conversion Table to convert from millimeters to inches
   Convert 55mm into inches.

   (1) Locate the number 50in the vertical column at the left side, take this as ⓐ, then draw a horizontal line from ⓐ.

   (2) Locate the number 5in the row across the top, take this as ⓑ, then draw a perpendicular line down from ⓑ.

   (3) Take the point where the two lines cross as ⓒ. This point ⓒ gives the value when converting from millimeters to inches. Therefore, 55mm = 2.165 inches.

2. Convert 550mm into inches.

   (1) The number 550 does not appear in the table, so divide by 10(Move the decimal point one place to the left) to convert it to 55mm.

   (2) Carry out the same procedure as above to convert 55mm to 2.165 inches.

   (3) The original value(550mm) was divided by 10, so multiply 2.165 inches by 10(Move the decimal point one place to the right) to return to the original value.
   This gives 550mm = 21.65 inches.

Millimeters to inches

1mm = 0.03937 in

	0	1	2	3	4	5 ⓑ	6	7	8	9
0		0.039	0.079	0.118	0.157	0.197	0.236	0.276	0.315	0.354
10	0.394	0.433	0.472	0.512	0.551	0.591	0.630	0.669	0.709	0.748
20	0.787	0.827	0.866	0.906	0.945	0.984	1.024	1.063	1.102	1.142
30	1.181	1.220	1.260	1.299	1.339	1.378	1.417	1.457	1.496	1.536
40	1.575	1.614	1.654	1.693	1.732	1.772	1.811	1.850	1.890	1.929
ⓐ 50	1.969	2.008	2.047	2.087	2.126	ⓒ 2.165	2.205	2.244	2.283	2.323
60	2.362	2.402	2.441	2.480	2.520	2.559	2.598	2.638	2.677	2.717
70	2.756	2.795	2.835	2.874	2.913	2.953	2.992	3.032	3.071	3.110
80	3.150	3.189	3.228	3.268	3.307	3.346	3.386	3.425	3.465	3.504
90	3.543	3.583	3.622	3.661	3.701	3.740	3.780	3.819	3.858	3.898

Millimeters to inches

1mm = 0.03937in

	0	1	2	3	4	5	6	7	8	9
0		0.039	0.079	0.118	0.157	0.197	0.236	0.276	0.315	0.354
10	0.394	0.433	0.472	0.512	0.551	0.591	0.630	0.669	0.709	0.748
20	0.787	0.827	0.866	0.906	0.945	0.984	1.024	1.063	1.102	1.142
30	1.181	1.220	1.260	1.299	1.339	1.378	1.417	1.457	1.496	1.536
40	1.575	1.614	1.654	1.693	1.732	1.772	1.811	1.850	1.890	1.929
50	1.969	2.008	2.047	2.087	2.126	2.165	2.205	2.244	2.283	2.323
60	2.362	2.402	2.441	2.480	2.520	2.559	2.598	2.638	2.677	2.717
70	2.756	2.795	2.835	2.874	2.913	2.953	2.992	3.032	3.071	3.110
80	3.150	3.189	3.228	3.268	3.307	3.346	3.386	3.425	3.465	3.504
90	3.543	3.583	3.622	3.661	3.701	3.740	3.780	3.819	3.858	3.898

Kilogram to Pound

1kg = 2.2046lb

	0	1	2	3	4	5	6	7	8	9
0		2.20	4.41	6.61	8.82	11.02	13.23	15.43	17.64	19.84
10	22.05	24.25	26.46	28.66	30.86	33.07	35.27	37.48	39.68	41.89
20	44.09	46.30	48.50	50.71	51.91	55.12	57.32	59.5.	61.73	63.93
30	66.14	68.34	70.55	72.75	74.96	77.16	79.37	81.57	83.78	85.98
40	88.18	90.39	92.59	94.80	97.00	99.21	101.41	103.62	105.82	108.03
50	110.23	112.44	114.64	116.85	119.05	121.25	123.46	125.66	127.87	130.07
60	132.28	134.48	136.69	138.89	141.10	143.30	145.51	147.71	149.91	152.12
70	154.32	156.53	158.73	160.94	163.14	165.35	167.55	169.76	171.96	174.17
80	176.37	178.57	180.78	182.98	185.19	187.39	189.60	191.80	194.01	196.21
90	198.42	200.62	202.83	205.03	207.24	209.44	211.64	213.85	216.05	218.26

Liter to U.S. Gallon

1 l = 0.2642 U.S.Gal

	0	1	2	3	4	5	6	7	8	9
0		0.264	0.528	0.793	1.057	1.321	1.585	1.849	2.113	2.378
10	2.642	2.906	3.170	3.434	3.698	3.963	4.227	4.491	4.755	5.019
20	5.283	5.548	5.812	6.6076	6.340	6.604	6.869	7.133	7.397	7.661
30	7.925	8.189	8.454	8.718	8.982	9.246	9.510	9.774	10.039	10.303
40	10.567	10.831	11.095	11.359	11.624	11.888	12.152	12.416	12.680	12.944
50	13.209	13.473	13.737	14.001	14.265	14.529	14.795	15.058	15.322	15.586
60	15.850	16.115	16.379	16.643	16.907	17.171	17.435	17.700	17.964	18.228
70	18.492	18.756	19.020	19.285	19.549	19.813	20.077	20.341	20.605	20.870
80	21.134	21.398	21.662	21.926	22.190	22.455	22.719	22.983	23.247	23.511
90	23.775	24.040	24.304	24.568	24.832	25.096	25.631	25.625	25.889	26.153

Liter to U.K. Gallon

1 l = 0.21997 U.K.Gal

	0	1	2	3	4	5	6	7	8	9
0		0.220	0.440	0.660	0.880	1.100	1.320	1.540	1.760	1.980
10	2.200	2.420	2.640	2.860	3.080	3.300	3.520	3.740	3.950	4.179
20	4.399	4.619	4.839	5.059	5.279	5.499	5.719	5.939	6.159	6.379
30	6.599	6.819	7.039	7.259	7.479	7.969	7.919	8.139	8.359	8.579
40	8.799	9.019	9.239	9.459	9.679	9.899	10.119	10.339	10.559	10.778
50	10.998	11.281	11.438	11.658	11.878	12.098	12.318	12.528	12.758	12.978
60	13.198	13.418	13.638	13.858	14.078	14.298	14.518	14.738	14.958	15.178
70	15.398	15.618	15.838	16.058	16.278	16.498	16.718	16.938	17.158	17.378
80	17.598	17.818	18.037	18.257	18.477	18.697	18.917	19.137	19.357	19.577
90	19.797	20.017	20.237	20.457	20.677	20.897	21.117	21.337	21.557	21.777

kgf · m to lbf · ft

1kgf · m = 7.233lbf · ft

	0	1	2	3	4	5	6	7	8	9
		7.2	14.5	21.7	28.9	36.2	43.4	50.6	57.9	65.1
10	72.3	79.6	86.8	94.0	101.3	108.5	115.7	123.0	130.2	137.4
20	144.7	151.9	159.1	166.4	173.6	180.8	188.1	195.3	202.5	209.8
30	217.0	224.2	231.5	238.7	245.9	253.2	260.4	267.6	274.9	282.1
40	289.3	396.6	303.8	311.0	318.3	325.5	332.7	340.0	347.2	354.4
50	361.7	368.9	376.1	383.4	390.6	397.8	405.1	412.3	419.5	426.8
60	434.0	441.2	448.5	455.7	462.9	470.2	477.4	484.6	491.8	499.1
70	506.3	513.5	520.8	528.0	535.2	542.5	549.7	556.9	564.2	571.4
80	578.6	585.9	593.1	600.3	607.6	614.8	622.0	629.3	636.5	643.7
90	651.0	658.2	665.4	672.7	679.9	687.1	694.4	701.6	708.8	716.1
100	723.3	730.5	737.8	745.0	752.2	759.5	766.7	773.9	781.2	788.4
110	795.6	802.9	810.1	817.3	824.6	831.8	839.0	846.3	853.5	860.7
120	868.0	875.2	882.4	889.7	896.9	904.1	911.4	918.6	925.8	933.1
130	940.3	947.5	954.8	962.0	969.2	976.5	983.7	990.9	998.2	10005.4
140	1012.6	1019.9	1027.1	1034.3	1041.5	1048.8	1056.0	1063.2	1070.5	1077.7
150	1084.9	1092.2	1099.4	1106.6	1113.9	1121.1	1128.3	1135.6	1142.8	1150.0
160	1157.3	1164.5	1171.7	1179.0	1186.2	1193.4	1200.7	1207.9	1215.1	1222.4
170	1129.6	1236.8	1244.1	1251.3	1258.5	1265.8	1273.0	1280.1	1287.5	1294.7
180	1301.9	1309.2	1316.4	1323.6	1330.9	1338.1	1345.3	1352.6	1359.8	1367.0
190	1374.3	1381.5	1388.7	1396.0	1403.2	1410.4	1417.7	1424.9	1432.1	1439.4

kgf/cm² to lbf/in²

1kgf / cm² = 14.2233lbf / in²

	0	1	2	3	4	5	6	7	8	9
		14.2	28.4	42.7	56.9	71.1	85.3	99.6	113.8	128.0
10	142.2	156.5	170.7	184.9	199.1	213.4	227.6	241.8	256.0	270.2
20	284.5	298.7	312.9	327.1	341.4	355.6	369.8	384.0	398.3	412.5
30	426.7	440.9	455.1	469.4	483.6	497.8	512.0	526.3	540.5	554.7
40	568.9	583.2	597.4	611.6	625.8	640.1	654.3	668.5	682.7	696.9
50	711.2	725.4	739.6	753.8	768.1	782.3	796.5	810.7	825.0	839.2
60	853.4	867.6	881.8	896.1	910.3	924.5	938.7	953.0	967.2	981.4
70	995.6	1010	1024	1038	1053	1067	1081	1095	1109	1124
80	1138	1152	1166	1181	1195	1209	1223	1237	1252	1266
90	1280	1294	1309	1323	1337	1351	1365	1380	1394	1408
100	1422	1437	1451	1465	1479	1493	1508	1522	1536	1550
110	1565	1579	1593	1607	1621	1636	1650	1664	1678	1693
120	1707	1721	1735	1749	1764	1778	1792	1806	1821	1835
130	1849	2863	1877	1892	1906	1920	1934	1949	1963	1977
140	1991	2005	2020	2034	2048	2062	2077	2091	2105	2119
150	2134	2148	2162	2176	2190	2205	2219	2233	2247	2262
160	2276	2290	2304	2318	2333	2347	2361	2375	2389	2404
170	2418	2432	2446	2460	2475	2489	2503	2518	2532	2546
180	2560	2574	2589	5603	2617	2631	2646	2660	2674	2688
200	2845	2859	2873	2887	2901	2916	2930	2944	2958	2973
210	2987	3001	3015	3030	3044	3058	3072	3086	3101	3115
220	3129	3143	3158	3172	3186	3200	3214	3229	3243	3257
230	3271	3286	3300	3314	3328	3343	3357	3371	3385	3399
240	3414	3428	3442	3456	3470	3485	3499	3513	3527	3542

TEMPERATURE

Fahrenheit-Centigrade Conversion.

A simple way to convert a fahrenheit temperature reading into a centigrade temperature reading or vice verse is to enter the accompanying table in the center or boldface column of figures.

These figures refer to the temperature in either Fahrenheit or Centigrade degrees.

If it is desired to convert from Fahrenheit to Centigrade degrees, consider the center column as a table of Fahrenheit temperatures and read the corresponding Centigrade temperature in the column at the left.

If it is desired to convert from Centigrade to Fahrenheit degrees, consider the center column as a table of Centigrade values, and read the corresponding Fahrenheit temperature on the right.

°C		°F	°C		°F	°C		°F	°C		°F
-40.4	-40	-40.0	-11.7	11	51.8	7.8	46	114.8	27.2	81	117.8
-37.2	-35	-31.0	-11.1	12	53.6	8.3	47	116.6	27.8	82	179.6
-34.4	-30	-22.0	-10.6	13	55.4	8.9	48	118.4	28.3	83	181.4
-31.7	-25	-13.0	-10.0	14	57.2	9.4	49	120.2	28.9	84	183.2
-28.9	-20	-4.0	-9.4	15	59.0	10.0	50	122.0	29.4	85	185.0
-28.3	-19	-2.2	-8.9	16	60.8	10.6	51	123.8	30.0	86	186.8
-27.8	-18	-0.4	-8.3	17	62.6	11.1	52	125.6	30.6	87	188.6
-27.2	-17	1.4	-7.8	18	64.4	11.7	53	127.4	31.1	88	190.4
-26.7	-16	3.2	-6.7	20	68.0	12.8	55	131.0	32.2	90	194.0
-26.1	-15	5.0	-6.7	20	68.0	12.8	55	131.0	32.2	90	194.0
-25.6	-14	6.8	-6.1	21	69.8	13.3	56	132.8	32.8	91	195.8
-25.0	-13	8.6	-5.6	22	71.6	13.9	57	134.6	33.3	92	197.6
-24.4	-12	10.4	-5.0	23	73.4	14.4	58	136.4	33.9	93	199.4
-23.9	-11	12.2	-4.4	24	75.2	15.0	59	138.2	34.4	94	201.2
-23.3	-10	14.0	-3.9	25	77.0	15.6	60	140.0	35.0	95	203.0
-22.8	-9	15.8	-3.3	26	78.8	16.1	61	141.8	35.6	96	204.8
-22.2	-8	17.6	-2.8	27	80.6	16.7	62	143.6	36.1	97	206.6
-21.7	-7	19.4	-2.2	28	82.4	17.2	63	145.4	36.7	98	208.4
-21.1	-6	21.2	-1.7	29	84.2	17.8	64	147.2	37.2	99	210.2
-20.6	-5	23.0	-1.1	35	95.0	21.1	70	158.0	51.7	125	257.0
-20.0	-4	24.8	-0.6	31	87.8	18.9	66	150.8	40.6	105	221.0
-19.4	-3	26.6	0	32	89.6	19.4	67	152.6	43.3	110	230.0
-18.9	-2	28.4	0.6	33	91.4	20.0	68	154.4	46.1	115	239.0
-18.3	-1	30.2	1.1	34	93.2	20.6	69	156.2	48.9	120	248.0
-17.8	0	32.0	1.7	35	95.0	21.1	70	158.0	51.7	125	257.0
-17.2	1	33.8	2.2	36	96.8	21.7	71	159.8	54.4	130	266.0
-16.7	2	35.6	2.8	37	98.6	22.2	72	161.6	57.2	135	275.0
-16.1	3	37.4	3.3	38	100.4	22.8	73	163.4	60.0	140	284.0
-15.6	4	39.2	3.9	39	102.2	23.3	74	165.2	62.7	145	293.0
-15.0	5	41.0	4.4	40	104.0	23.9	75	167.0	65.6	150	302.0
-14.4	6	42.8	5.0	41	105.8	24.4	76	168.8	68.3	155	311.0
-13.9	7	44.6	5.6	42	107.6	25.0	77	170.6	71.1	160	320.0
-13.3	8	46.4	6.1	43	109.4	25.6	78	172.4	73.9	165	329.0
-12.8	9	48.2	6.7	44	111.2	26.1	79	174.2	76.7	170	338.0
-12.2	10	50.0	7.2	45	113.0	26.7	80	176.0	79.4	172	347.0

SECTION 1 GENERAL

Group 1 Safety Hints 1-1
Group 2 Specifications 1-9

GROUP 1 SAFETY

FOLLOW SAFE PROCEDURE

Unsafe work practices are dangerous. Understand service procedure before doing work; Do not attempt shortcuts.

WEAR PROTECTIVE CLOTHING

Wear close fitting clothing and safety equipment appropriate to the job.

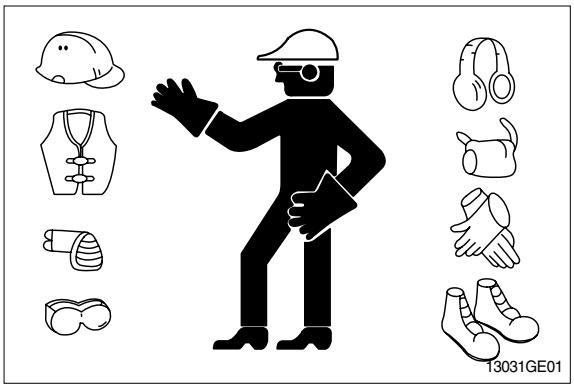

WARN OTHERS OF SERVICE WORK

Unexpected machine movement can cause serious injury.
Before performing any work on the excavator, attach a「**Do Not Operate**」tag on the right side control lever.

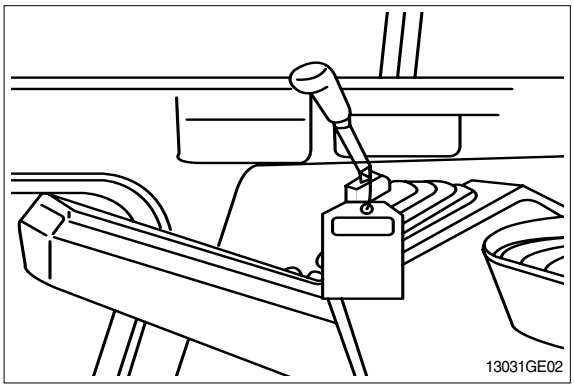

USE HANDHOLDS AND STEPS

Falling is one of the major causes of personal injury.
When you get on and off the machine, always maintain a three point contact with the steps and handrails and face the machine. Do not use any controls as handholds.
Never jump on or off the machine. Never mount or dismount a moving machine.
Be careful of slippery conditions on platforms, steps, and handrails when leaving the machine.

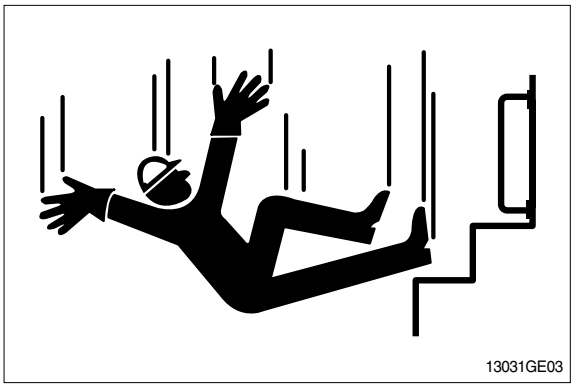

PREPARE FOR EMERGENCIES

Be prepared if a fire starts.

Keep a first aid kit and fire extinguisher handy.

Keep emergency numbers for doctors, ambulance service, hospital, and fire department near your telephone.

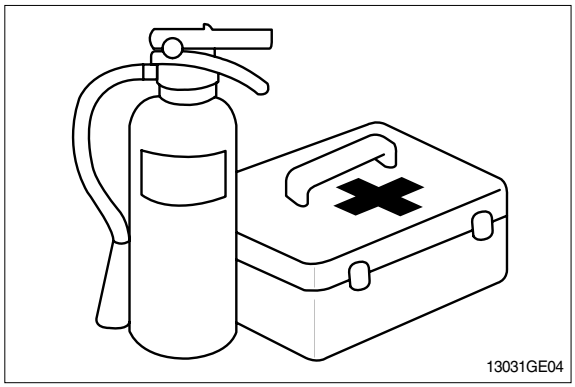

PROTECT AGAINST FLYING DEBRIS

Guard against injury from flying pieces of metal or debris; Wear goggles or safety glasses.

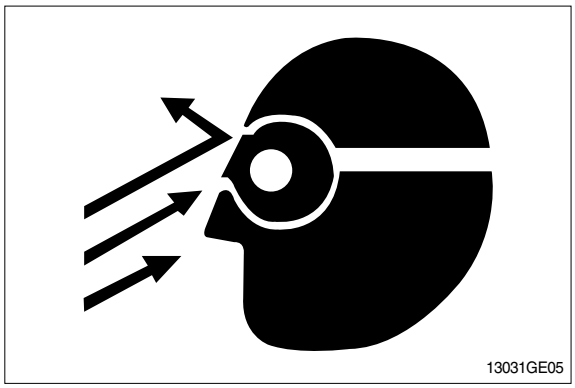

PROTECT AGAINST NOISE

Prolonged exposure to loud noise can cause impairment or loss of hearing.

Wear a suitable hearing protective device such as earmuffs or earplugs to protect against objectionable or uncomfortable loud noises.

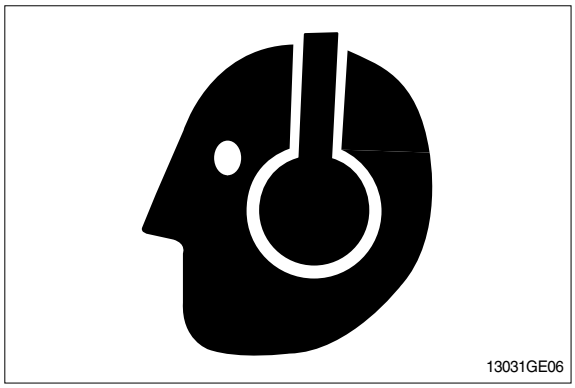

AVOID POWER LINES

Serious injury or death can result from contact with electric lines.

Never move any part of the machine or load closer to electric line than 3m(10ft) plus twice the line insulator length.

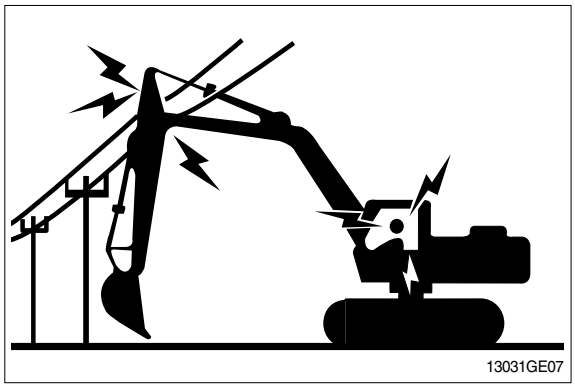

KEEP RIDERS OFF EXCAVATOR

Only allow the operator on the excavator. Keep riders off.

Riders on excavator are subject to injury such as being struck by foreign objects and being thrown off the excavator. Riders also obstruct the operator's view resulting in the excavator being operated in an unsafe manner.

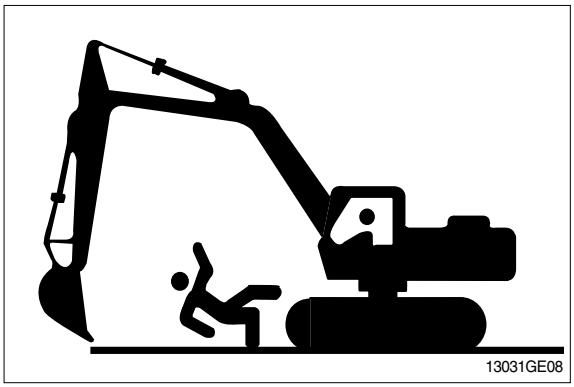

MOVE AND OPERATE MACHINE SAFELY

Bystanders can be run over. Know the location of bystanders before moving, swinging, or operating the machine.

Always keep the travel alarm in working condition. It warns people when the excavator starts to move.

Use a signal person when moving, swinging, or operating the machine in congested areas. Coordinate hand signals before starting the excavator.

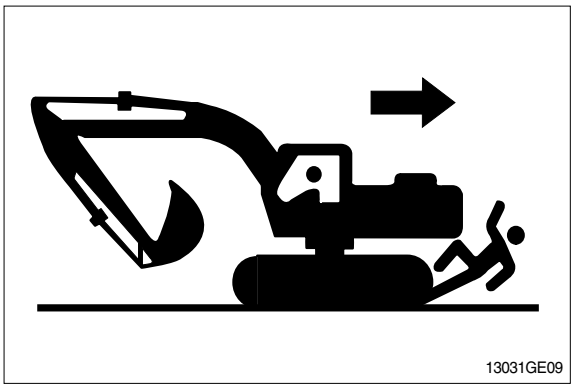

OPERATE ONLY FORM OPERATOR'S SEAT

Avoid possible injury machine damage. Do not start engine by shorting across starter terminals.

NEVER start engine while standing on ground. Start engine only from operator's seat.

PARK MACHINE SAFELY

Before working on the machine:

- Park machine on a level surface.
- Lower bucket to the ground.
- Turn auto idle switch off.
- Run engine at 1/2 speed without load for 2 minutes.
- Turn key switch to OFF to stop engine.
  Remove key from switch.
- Move pilot control shutoff lever to locked position.
- Allow engine to cool.

SUPPORT MACHINE PROPERLY

Always lower the attachment or implement to the ground before you work on the machine. If you must work on a lifted machine or attachment, securely support the machine or attachment.

Do not support the machine on cinder blocks, hollow tiles, or props that may crumble under continuous load.
Do not work under a machine that is supported solely by a jack. Follow recommended procedures in this manual.

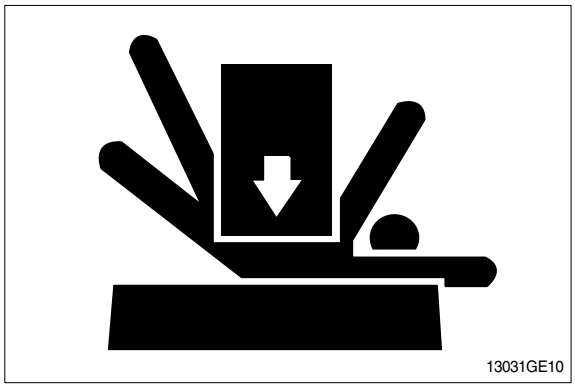

SERVICE COOLING SYSTEM SAFELY

Explosive release of fluids from pressurized cooling system can cause serious burns.

Shut off engine. Only remove filler cap when cool enough to touch with bare hands.

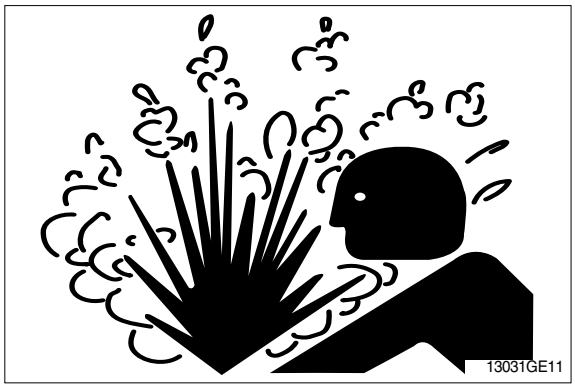

HANDLE FLUIDS SAFELY-AVOID FIRES

Handle fuel with care; It is highly flammable. Do not refuel the machine while smoking or when near open flame or sparks. Always stop engine before refueling machine.
Fill fuel tank outdoors.

Store flammable fluids away from fire hazards. Do not incinerate or puncture pressurized containers.

Make sure machine is clean of trash, grease, and debris.

Do not store oily rags; They can ignite and burn spontaneously.

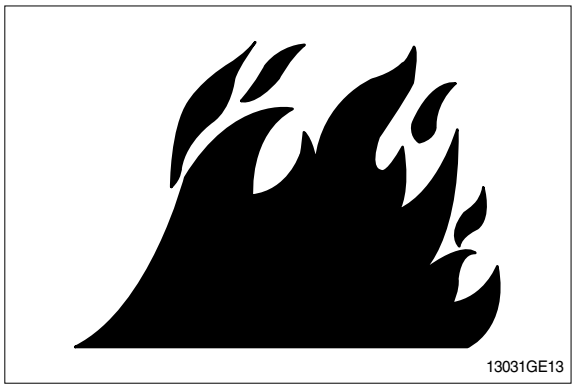

BEWARE OF EXHAUST FUMES

Prevent asphyxiation. Engine exhaust fumes can cause sickness or death.

If you must operate in a building, be positive there is adequate ventilation. Either use an exhaust pipe extension to remove the exhaust fumes or open doors and windows to bring enough outside air into the area.

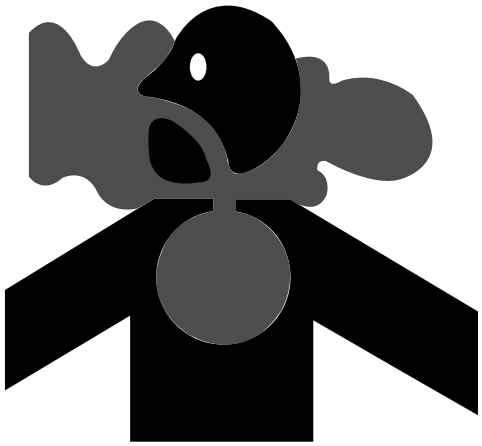

13031GE14

REMOVE PAINT BEFORE WELDING OR HEATING

Avoid potentially toxic fumes and dust.

Hazardous fumes can be generated when paint is heated by welding, soldering, or using a torch.

Do all work outside or in a well ventilated area. Dispose of paint and solvent properly.

Remove paint before welding or heating:

- If you sand or grind paint, avoid breathing the dust. Wear an approved respirator.
- If you use solvent or paint stripper, remove stripper with soap and water before welding. Remove solvent or paint stripper containers and other flammable material from area. Allow fumes to disperse at least 15 minutes before welding or heating.

ILLUMINATE WORK AREA SAFELY

Illuminate your work area adequately but safely. Use a portable safety light for working inside or under the machine. Make sure the bulb is enclosed by a wire cage. The hot filament of an accidentally broken bulb can ignite spilled fuel or oil.

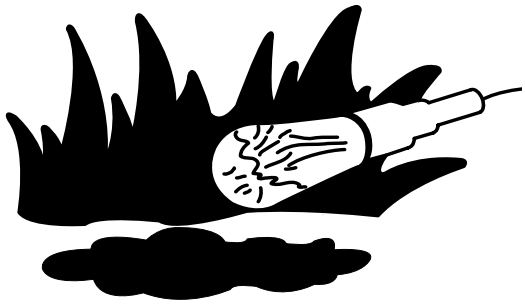

13031GE15

SERVICE MACHINE SAFELY

Tie long hair behind your head. Do not wear a necktie, scarf, loose clothing or necklace when you work near machine tools or moving parts. If these items were to get caught, severe injury could result.

Remove rings and other jewelry to prevent electrical shorts and entanglement in moving parts.

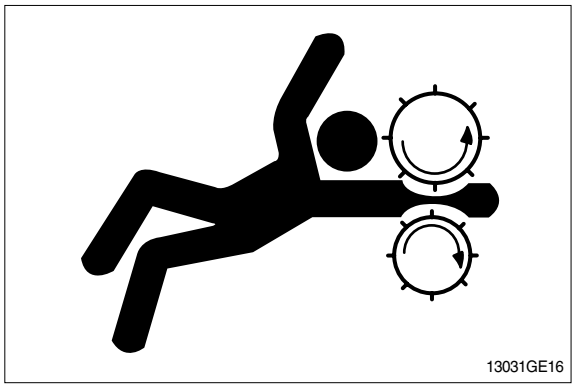

STAY CLEAR OF MOVING PARTS

Entanglements in moving parts can cause serious injury.

To prevent accidents, use care when working around rotating parts.

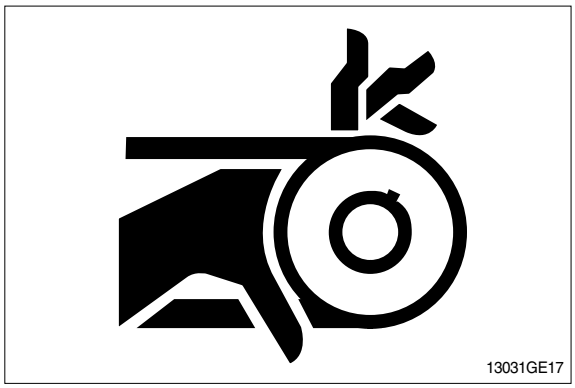

AVOID HIGH PRESSURE FLUIDS

Escaping fluid under pressure can penetrate the skin causing serious injury.

Avoid the hazard by relieving pressure before disconnecting hydraulic or other lines. Tighten all connections before applying pressure.

Search for leaks with a piece of cardboard. Protect hands and body from high pressure fluids.

If an accident occurs, see a doctor immediately. Any fluid injected into the skin must be surgically removed within a few hours or gangrene may result.

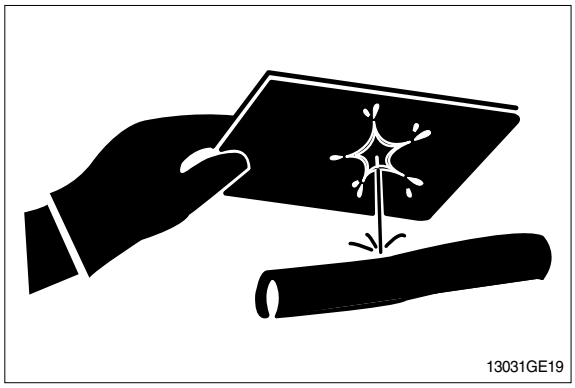

AVOID HEATING NEAR PRESSURIZED FLUID LINES

Flammable spray can be generated by heating near pressurized fluid lines, resulting in severe burns to yourself and bystanders. Do not heat by welding, soldering, or using a torch near pressurized fluid lines or other flammable materials.

Pressurized lines can be accidentally cut when heat goes beyond the immediate flame area. Install fire resisting guards to protect hoses or other materials.

13031GE20

PREVENT BATTERY EXPLOSIONS

Keep sparks, lighted matches, and flame away from the top of battery. Battery gas can explode.

Never check battery charge by placing a metal object across the posts. Use a volt-meter or hydrometer.

Do not charge a frozen battery; It may explode. Warm battery to 16°C(60°F).

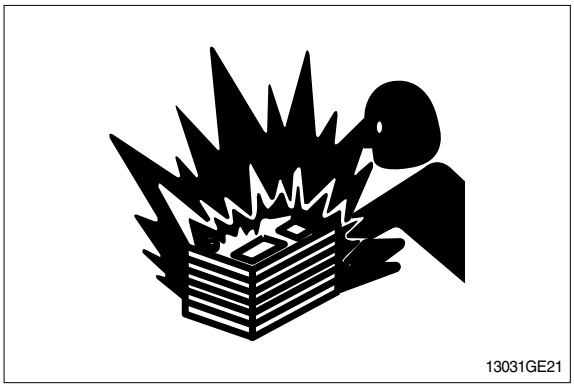
13031GE21

PREVENT ACID BURNS

Sulfuric acid in battery electrolyte is poisonous. It is strong enough to burn skin, eat holes in clothing, and cause blindness if splashed into eyes.

Avoid the hazard by:

1. Filling batteries in a well-ventilated area.
2. Wearing eye protection and rubber gloves.
3. Avoiding breathing fumes when electrolyte is added.
4. Avoiding spilling of dripping electrolyte.
5. Use proper jump start procedure.

If you spill acid on yourself:

1. Flush your skin with water.
2. Apply baking soda or lime to help neutralize the acid.
3. Flush your eyes with water for 10-15 minutes. Get medical attention immediately.

If acid is swallowed:

1. Drink large amounts of water or milk.
2. Then drink milk of magnesia, beaten eggs, or vegetable oil.
3. Get medical attention immediately.

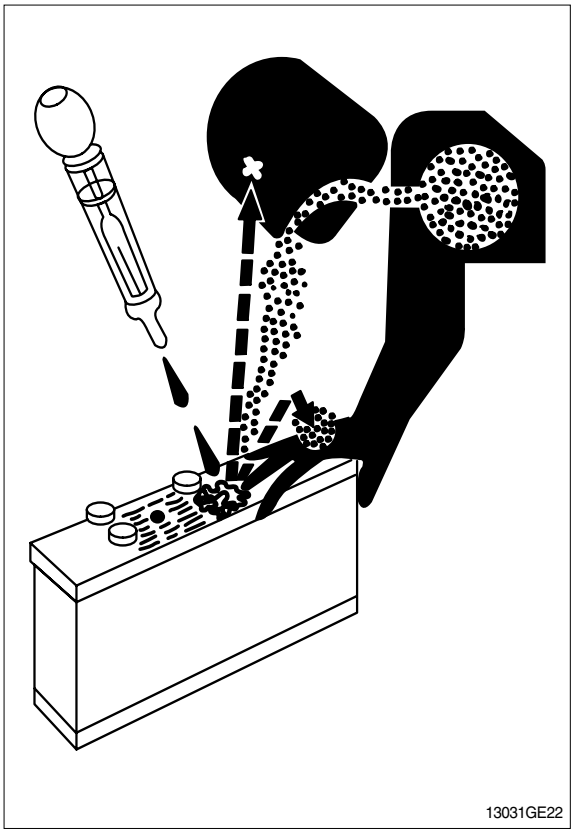
13031GE22

USE TOOLS PROPERLY

Use tools appropriate to the work. Makeshift tools, parts, and procedures can create safety hazards.

Use power tools only to loosen threaded tools and fasteners.

For loosening and tightening hardware, use the correct size tools. DO NOT use U.S. measurement tools on metric fasteners. Avoid bodily injury caused by slipping wrenches.

Use only recommended replacement parts.(See Parts catalogue.)

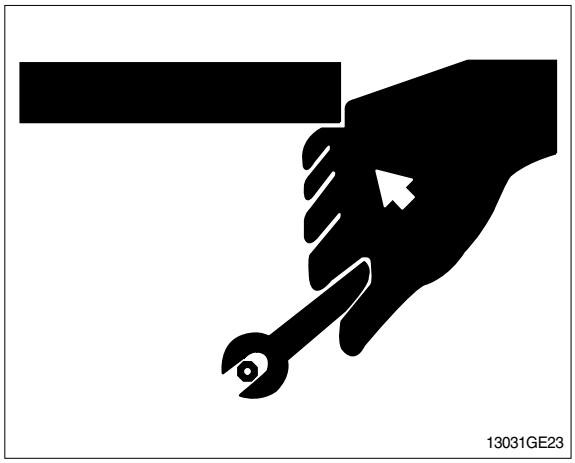

DISPOSE OF FLUIDS PROPERLY

Improperly disposing of fluids can harm the environment and ecology. Before draining any fluids, find out the proper way to dispose of waste from your local environmental agency.

Use proper containers when draining fluids. Do not use food or beverage containers that may mislead someone into drinking from them.

DO NOT pour oil into the ground, down a drain, or into a stream, pond, or lake. Observe relevant environmental protection regulations when disposing of oil, fuel, coolant, brake fluid, filters, batteries, and other harmful waste.

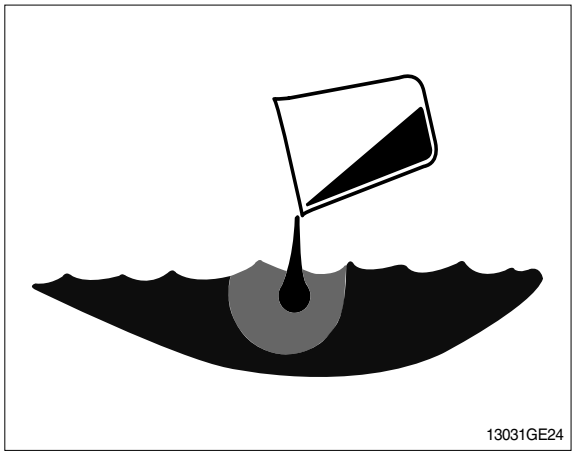

REPLACE SAFETY SIGNS

Replace missing or damaged safety signs. See the machine operator's manual for correct safety sign placement.

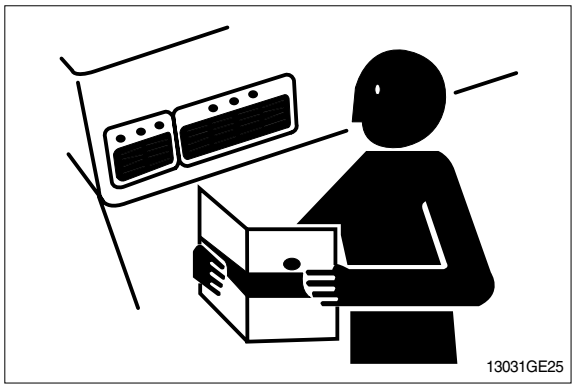

LIVE WITH SAFETY

Before returning machine to customer, make sure machine is functioning properly, especially the safety systems. Install all guards and shields.

GROUP 2 SPECIFICATIONS

1. MAJOR COMPONENT

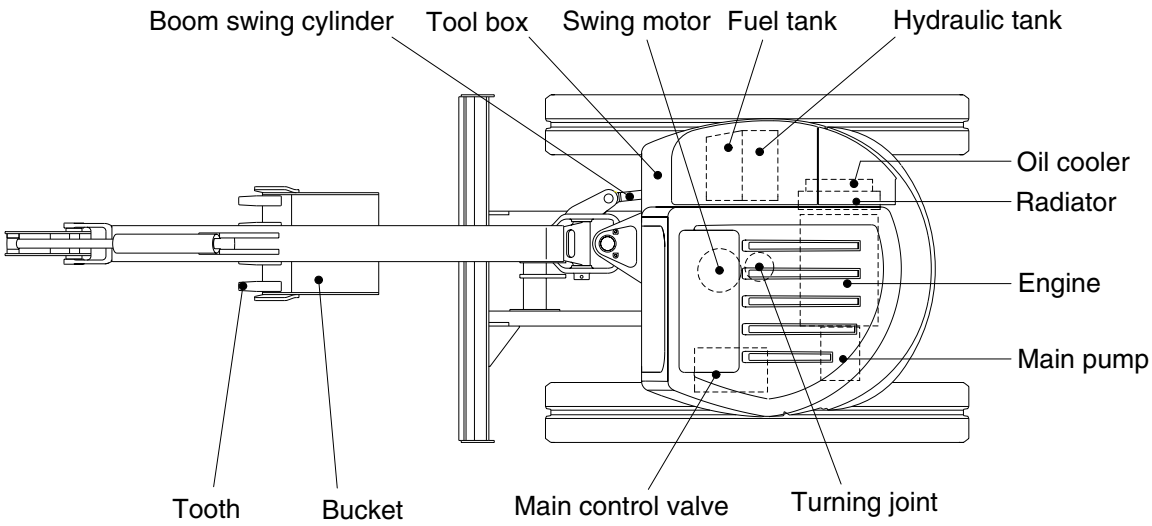

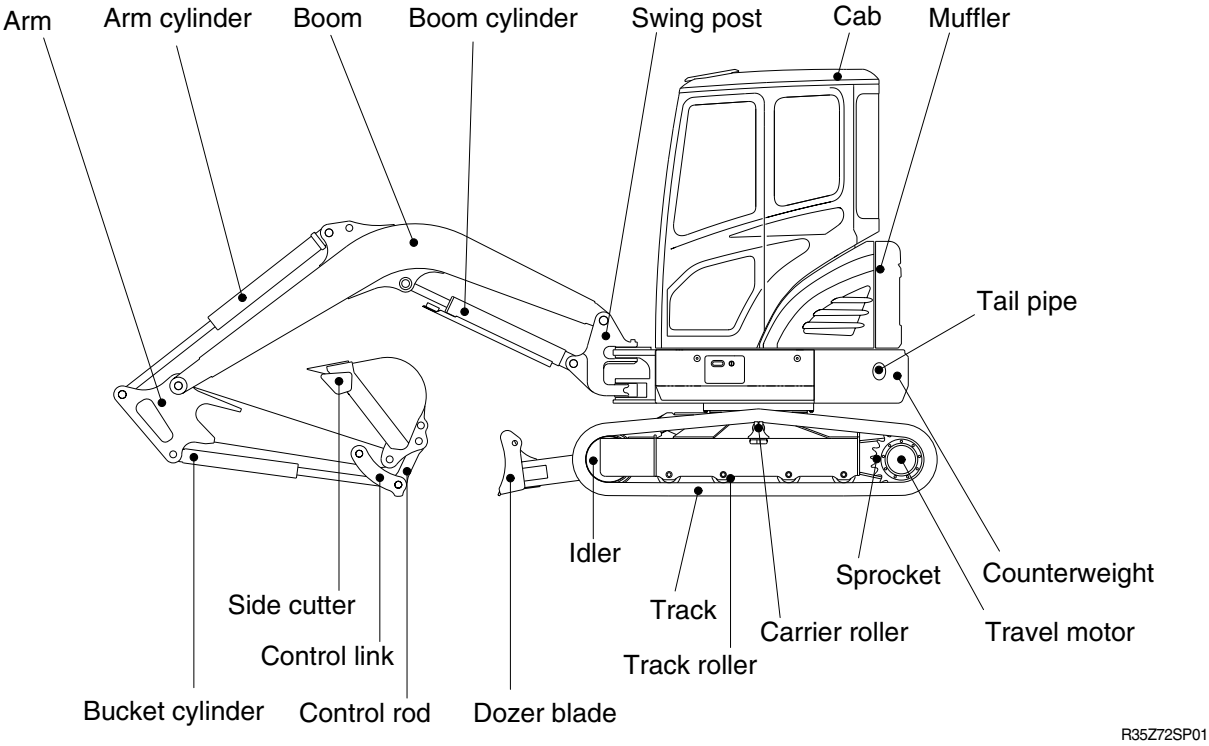

2. SPECIFICATIONS

1) 2.5m(8' 2") MONO BOOM, 1.3m(4' 3") ARM, WITH BOOM SWING POST

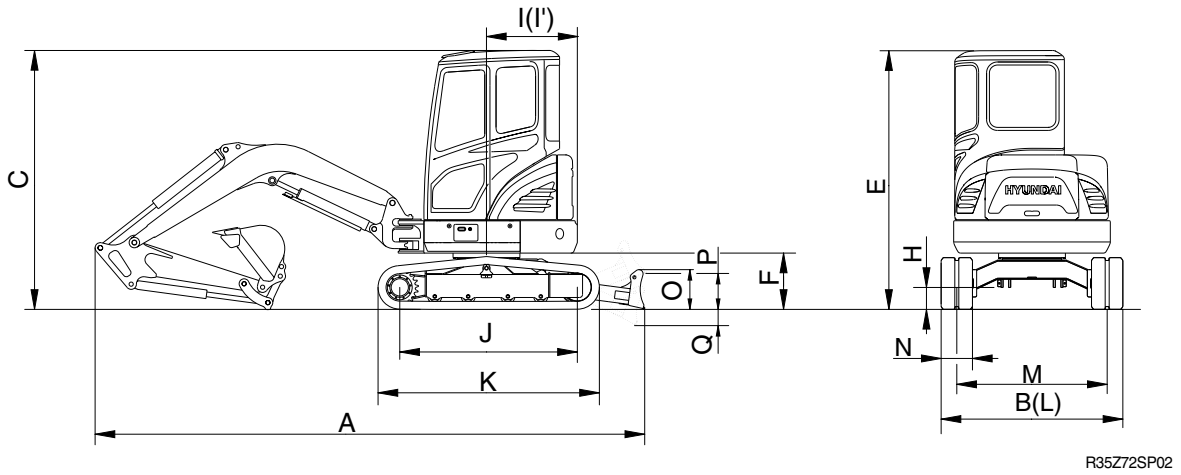

Description		Unit	Specification
Operating weight		kg(lb)	3650(8050)
Bucket capacity(SAE heaped), standard		$m^3(yd^3)$	0.11(0.14)
Overall length	A	mm(ft-in)	4790(15' 9")
Overall width, with 300mm shoe	B		1740(5' 9")
Overall height	C		2500(8' 2")
Overall height of cab	E		2500(8' 2")
Ground clearance of counterweight	F		540(1' 9")
Minimum ground clearance	H		290(0' 11")
Rear-end distance	I		870(2' 10")
Rear-end swing radius	I'		870(2' 10")
Distance between tumblers	J		1700(5' 7")
Undercarriage length	K		2130(7' 0")
Undercarriage width	L		1740(5' 9")
Track gauge	M		1440(4' 9")
Track shoe width, standard	N		300(1' 0")
Height of blade	O		370(1' 3")
Ground clearance of blade up	P		375(1' 3")
Depth of blade down	Q		390(1' 3")
Travel speed(Low/high)		km/hr(mph)	2.7/4.5(1.7/2.8)
Swing speed		rpm	9.5
Gradeability		Degree(%)	30(58)
Ground pressure(300mm shoe)		kgf/cm^2(psi)	0.34(4.83)

3. WORKING RANGE

1) 2.5m(8' 2") MONO BOOM WITH BOOM SWING POST

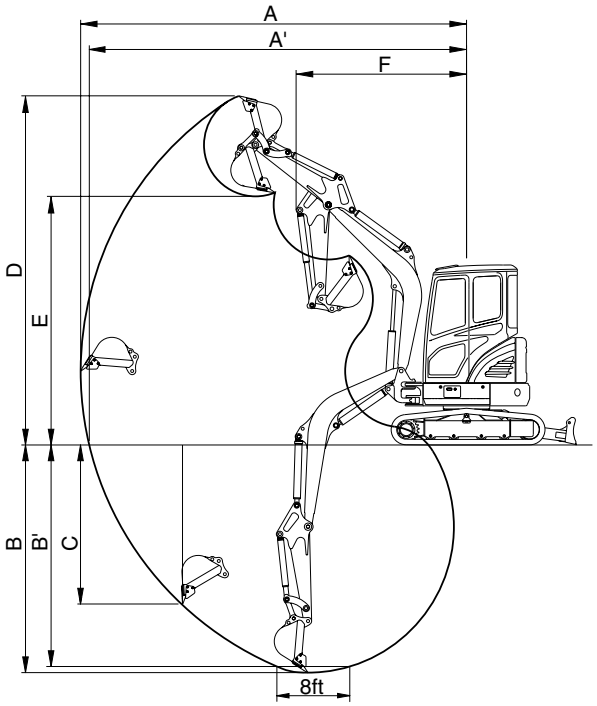

R35Z72SP03

Description		1.3m(4' 3") Arm
Max digging reach	A	5360mm (17' 7")
Max digging reach on ground	A'	5240mm (17' 2")
Max digging depth	B	3150mm (10' 4")
Max digging depth (8ft level)	B'	2660mm (8' 9")
Max vertical wall digging depth	C	2190mm (7' 2")
Max digging height	D	4830mm (15'10")
Max dumping height	E	3460mm (11' 4")
Min swing radius	F	2350mm (7' 9")
Boom swing radius(left/right)		75°/50°
Bucket digging force	SAE	27.9 kN
		2850 kgf
		6280 lbf
	ISO	31.4 kN
		3200 kgf
		7050 lbf
Arm crowd force	SAE	18.9 kN
		1930 kgf
		4250 lbf
	ISO	19.5 kN
		1990 kgf
		4390 lbf

4. WEIGHT

Item	kg	lb
Upperstructure assembly	2100	4630
Main frame weld assembly	480	1060
Engine assembly	155	340
Main pump assembly	25	55
Main control valve assembly	25	55
Swing motor assembly	40	90
Hydraulic oil tank assembly	50	110
Fuel tank assembly	30	70
Boom swing post	80	180
Counterweight	420	925
Cab assembly	210	460
Lower chassis assembly	1170	2580
Track frame weld assembly	400	880
Swing bearing	50	110
Travel motor assembly	35	77
Turning joint	15	35
Track recoil spring	12.5	27.5
Yoke	5	11
Idler	20	44
Carrier roller	2.7	6
Track roller	7.7	17
Sprocket	7.5	16.5
Rubber track(300mm)	127.5	281
Dozer blade assembly	140	310
Front attachment assembly (2.5m boom, 1.3m arm, 0.11m^3 SAE heaped bucket)	460	1015
2.5m boom assembly	140	310
1.3m arm assembly	80	180
0.11m^3 SAE heaped bucket	80	180
Boom cylinder assembly	40	90
Arm cylinder assembly	40	90
Bucket cylinder assembly	30	70
Bucket control link assembly	20	45
Dozer cylinder assembly	30	70
Boom swing cylinder assembly	30	70

5. LIFTING CAPACITIES

1) 2.5m(8' 2") boom, 1.3m(4' 3") arm equipped with 0.11m³(SAE heaped) bucket and 300mm(12") rubber track, the dozer blade up with 420kg(925lb) counterweight.

- : Rating over-front
- : Rating over-side or 360 degree

Load point height		Load radius								At max. reach		
		1.0m(3.3ft)		2.0m(6.6ft)		3.0m(9.9ft)		4.0m(13.2ft)		Capacity		Reach
												m(ft)
4.0m (13.2ft)	kg lb									600 1320	510 1120	3.94 (12.9)
3.0m (9.9ft)	kg lb							560 1230	470 1040	420 930	360 790	4.74 (15.6)
2.0m (6.6ft)	kg lb					890 1960	750 1650	540 1190	460 1010	360 790	300 660	5.11 (16.8)
1.0m (3.3ft)	kg lb					830 1830	690 1520	520 1150	440 970	340 750	290 640	5.18 (17.0)
Ground Line	kg lb			1570 3460	1260 2780	790 1740	650 1430	500 1100	420 930	360 790	300 660	4.98 (16.3)
-1.0m (-3.3ft)	kg lb	*2100 *4630	*2100 *4630	1590 3510	1270 2800	780 1720	650 1430	500 1100	420 930	440 970	370 820	4.45 (14.6)
-2.0m (-6.6ft)	kg lb			1630 3590	1310 2890	810 1790	670 1480					

Note
1. Lifting capacity are based on SAE J1097 and ISO 10567.
2. Lifting capacity of the ROBEX series does not exceed 75% of tipping load with the machine on firm, level ground or 87% of full hydraulic capacity.
3. The load point is a hook located on the back of the bucket.
4. *indicates load limited by hydraulic capacity.

2) 2.5m(8' 2") boom, 1.3m(4' 3") arm equipped with 0.11m³(SAE heaped) bucket and 300mm(12") rubber track, the dozer blade down with 420kg(925lb) counterweight.

- : Rating over-front
- : Rating over-side or 360 degree

Load point height		Load radius								At max. reach		
		1.0m(3.3ft)		2.0m(6.6ft)		3.0m(9.9ft)		4.0m(13.2ft)		Capacity		Reach
												m(ft)
4.0m (13.2ft)	kg lb									*700 *1540	510 1120	3.94 (12.9)
3.0m (9.9ft)	kg lb							*760 *1680	470 1040	*630 *1390	360 790	4.74 (15.6)
2.0m (6.6ft)	kg lb					*1780 *3920	750 1650	1410 3110	460 1010	*620 *1370	300 660	5.11 (16.8)
1.0m (3.3ft)	kg lb					2400 5290	690 1520	1380 3040	440 970	*650 *1430	290 640	5.18 (17.0)
Ground Line	kg lb			*1730 *3810	1260 2780	2340 5160	650 1430	1360 3000	420 930	*740 *1630	300 660	4.98 (16.3)
-1.0m (-3.3ft)	kg lb	*2100 *4630	*2100 *4630	*2850 *6280	1270 2800	2330 5140	650 1430	1350 2980	420 930	*920 *2030	370 820	4.45 (14.6)
-2.0m (-6.6ft)	kg lb			*3540 *7800	1310 2890	*2050 *4520	670 1480					

Note
1. Lifting capacity are based on SAE J1097 and ISO 10567.
2. Lifting capacity of the ROBEX series does not exceed 75% of tipping load with the machine on firm, level ground or 87% of full hydraulic capacity.
3. The load point is a hook located on the back of the bucket.
4. *indicates load limited by hydraulic capacity.

6. BUCKET SELECTION GUIDE

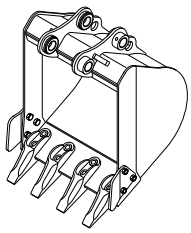

0.11m³
SAE heaped bucket

Capacity		Width		Weight	Recommendation
					2.5m (8' 2") boom
SAE heaped	CECE heaped	Without side cutter	With side cutter		1.3m (4' 3") arm
0.11m³ (0.14yd³)	0.09m³ (0.12yd³)	550mm (21.7")	610mm (24.0")	80kg (176lb)	Applicable for materials with density of 1600kgf/m³ (2700lb/yd³) or less

7. UNDERCARRIAGE

1) TRACKS

X-leg type center frame is integrally welded with reinforced box-section track frames. The design includes dry tracks, lubricated rollers, idlers, sprockets, hydraulic track adjusters with shock absorbing springs and assembled track-type tractor shoes with triple grousers.

2) TYPES OF SHOES

Model	Shapes		Steel double grouser	Rubber track
			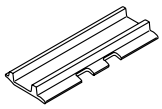	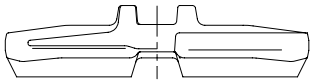
R35Z-7	Shoe width	mm(in)	300(12")	300(12")
	Operating weight	kg(lb)	3750(8267)	3650(8050)
	Ground pressure	kgf/cm^2(psi)	0.34(4.83)	0.34(4.83)
	Overall width	mm(ft-in)	1740(5' 9")	1740(5' 9")

3) NUMBER OF ROLLERS AND SHOES ON EACH SIDE

Item	Quantity
Carrier rollers	1EA
Track rollers	4EA
Track shoes	44EA

8. SPECIFICATIONS FOR MAJOR COMPONENTS

1) ENGINE

Item	Specification
Model	Yanmar 3TNV88
Type	4-cycle diesel engine, low emission
Cooling method	Water cooling
Number of cylinders and arrangement	3 cylinders, in-line
Firing order	1-3-2
Combustion chamber type	Direct injection type
Cylinder bore × stroke	88 × 90mm(3.46" × 3.54")
Piston displacement	1642cc(100.2cu in)
Compression ratio	19.1 : 1
Rated gross horse power(SAE J1995)	27Hp at 2200rpm(20.3kW at 2200rpm)
Maximum torque at 1400rpm	10.8kgf · m(78.1lbf · ft)
Engine oil quantity	6.7 ℓ (1.8U.S. gal)
Dry weight	155kg(340lb)
High idling speed	2400 + 30rpm
Low idling speed	1100 ± 30rpm
Rated fuel consumption	185g/Hp · hr at 2200rpm
Starting motor	12V-1.2kW
Alternator	12V-40A
Battery	1 × 12V × 55Ah(5h rating)

2) MAIN PUMP

Item	Specification
Type	Variable displacement tandem axis piston pumps
Capacity	2 × 17.5cc/rev
Maximum pressure	230kgf/cm^2 (3270psi)
Rated oil flow	2 × 38.5 ℓ /min (10.2U.S. gpm/ 8.5U.K. gpm)
Rated speed	2200rpm

3) GEAR PUMP

Item	Specification
Type	Fixed displacement gear pump single stage
Capacity	10.7/5.1cc/rev
Maximum pressure	230/30kgf/cm^2(3270/430psi)
Rated oil flow	23.5/11.2 ℓ /min(6.2/3.0U.S. gpm/ 5.2/2.5U.K. gpm)

4) MAIN CONTROL VALVE

Item	Specification
Type	Sectional, 10 spools(11 Blocks)
Operating method	Hydraulic pilot system
Main relief valve pressure	230kgf/cm^2(3270psi)
Overload relief valve pressure	250kgf/cm^2(3560psi)

5) SWING MOTOR

Item	Specification
Type	Fixed displacement axial piston motor
Capacity	22cc/rev
Relief pressure	200kgf/cm^2(2845psi)
Braking system	Automatic, spring applied hydraulic released
Braking torque	9.2kgf · m(66.5lbf · ft)
Brake release pressure	15~45kgf/cm^2(215~640psi)
Reduction gear type	2 - stage planetary

6) TRAVEL MOTOR

Item	Specification
Type	Variable displacement axial piston motor
Relief pressure	230kgf/cm^2(3270psi)
Reduction gear type	2-stage planetary
Braking system	Automatic, spring applied hydraulic released
Brake release pressure	8kgf/cm^2(114psi)
Braking torque	6.5kgf · m(47lbf · ft)

7) REMOTE CONTROL VALVE

Item		Specification
Type		Pressure reducing type
Operating pressure	Minimum	5kgf/cm^2(71psi)
	Maximum	20kgf/cm^2(284psi)
Single operation stroke	Lever	6.5/8.5mm(0.26/0.33in)

8) CYLINDER

Item		Specification
Boom cylinder	Bore dia × Rod dia × Stroke	ø 85× ø 45 × 540mm
	Cushion	Extend only
Arm cylinder	Bore dia × Rod dia × Stroke	ø 80× ø 45 × 585mm
	Cushion	Extend and retract
Bucket cylinder	Bore dia × Rod dia × Stroke	ø 70× ø 45 × 510mm
	Cushion	-
Boom swing cylinder	Bore dia × Rod dia × Stroke	ø 80× ø 45 × 400mm
	Cushion	-
Dozer cylinder	Bore dia × Rod dia × Stroke	ø 95× ø 50 × 152mm
	Cushion	-

※ Discoloration of cylinder rod can occur when the friction reduction additive of lubrication oil spreads on the rod surface.

※ Discoloration does not cause any harmful effect on the cylinder performance.

9) SHOE (Steel track)

Item	Width	Ground pressure	Link quantity	Overall width
R35Z-7	300mm(12")	0.34kgf/cm^2(4.83psi)	44	1740mm(5' 9")

10) BUCKET

Item		Capacity		Tooth quantity	Width	
		SAE heaped	CECE heaped		Without side cutter	With side cutter
R35Z-7	STD	0.11m^3(0.14yd^3)	0.09m^3(0.12yd^3)	4	550mm(21.7")	610mm(24.0")

9. RECOMMENDED OILS

Use only oils listed below or equivalent.
Do not mix different brand oil.

Service point	Kind of fluid	Capacity ℓ (U.S. gal)	Ambient temperature ℃(°F) -20 (-4)	-10 (14)	0 (32)	10 (50)	20 (68)	30 (86)	40 (104)
Engine oil pan	Engine oil	6.7(1.8)	SAE 10W						
			SAE 10W-30						
			SAE 15W-40						
					SAE 30				
Final drive	Gear oil	0.5×2 (0.1×2)	SAE 85W-140						
Hydraulic tank	Hydraulic oil	Tank: 37(9.8) System: 60(15.9)	ISO VG 32						
			ISO VG 46						
					ISO VG 68				
Fuel tank	Diesel fuel	40(10.5)	ASTM D975 NO.1						
					ASTM D975 NO.2				
Fitting (Grease nipple)	Grease	As required	NLGI NO.1						
					NLGI NO.2				
Radiator (Reservoir tank)	Mixture of antifreeze and water 50 : 50	5(1.3)	Ethylene glycol base permanent type						

SAE : Society of Automotive Engineers
API : American Petroleum Institute
ISO : International Organization for Standardization
NLGI : National Lubricating Grease Institute
ASTM : American Society of Testing and Material

SECTION 2 STRUCTURE AND FUNCTION

Group 1 Pump Device 2-1
Group 2 Main Control Valve 2-9
Group 3 Swing Device 2-38
Group 4 Travel Device 2-46
Group 5 RCV Lever 2-64

GROUP 1 HYDRAULIC PUMP

1. GENERAL

This is a variable displacement double-piston pump for discharge with equal displacements from one cylinder block. This pump is so compact as to appear a single pump though this is actually a double pump.

Because this pump has one swash plate, the tilting angle is the same for two pumps. Tilting of the pump changes in response to the total pressure of P1 + P2. Namely, the output is controlled to the constant value so that the relationship between the discharge pressure and flow rate Q becomes constant, (P1 + P2) * Q =Constant.

The third pump and pilot pump can be connected to the same shaft via a coupling.

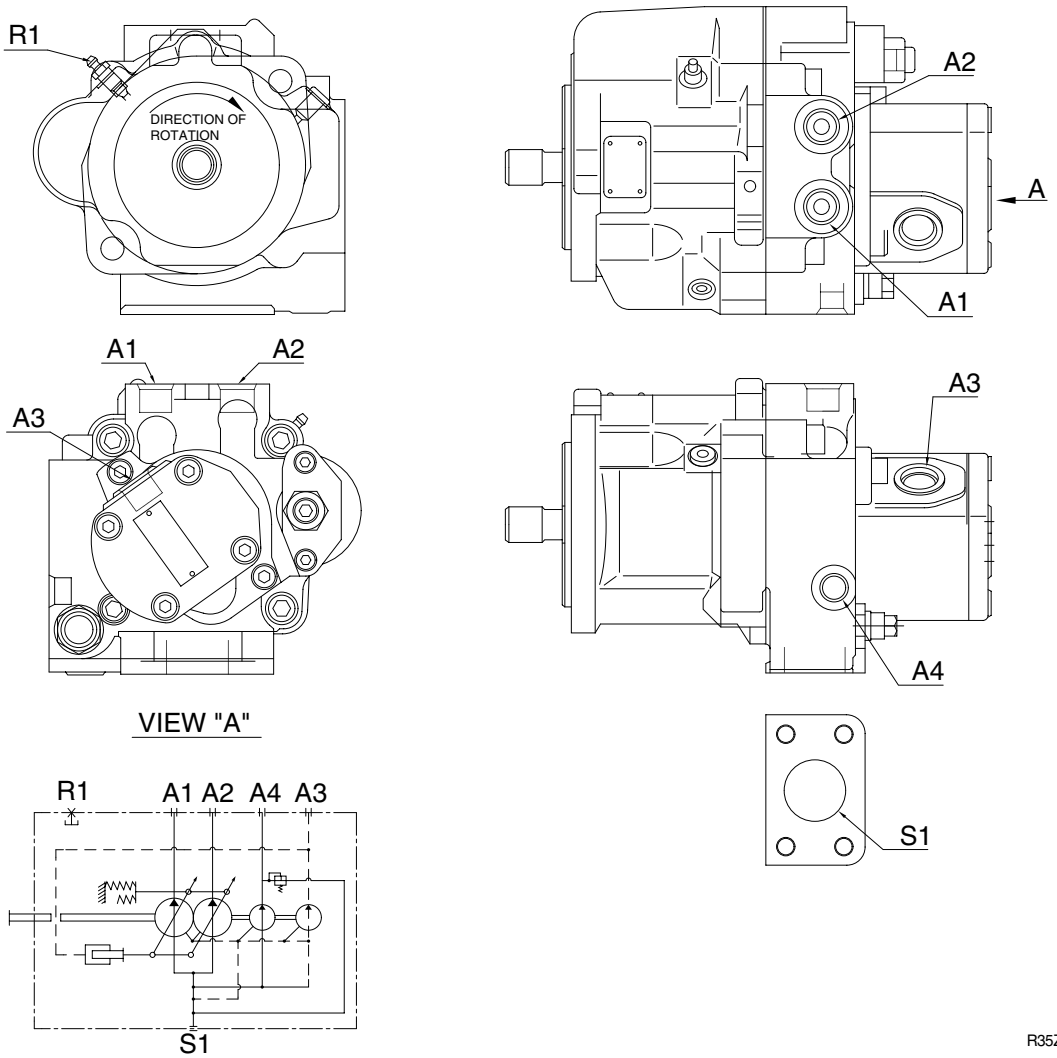

Description of the ports

Port	Name	Bore
S	Suction port	SAE 1 1/2 (Standard)
A1, A2, A3	Discharge port	PF 1/2
A4	Pilot port	G 3/8
R1	Air bleeder port	With bleeder valve(M10 × 1.0)

2. MAJOR COMPONENTS AND FUNCTIONS

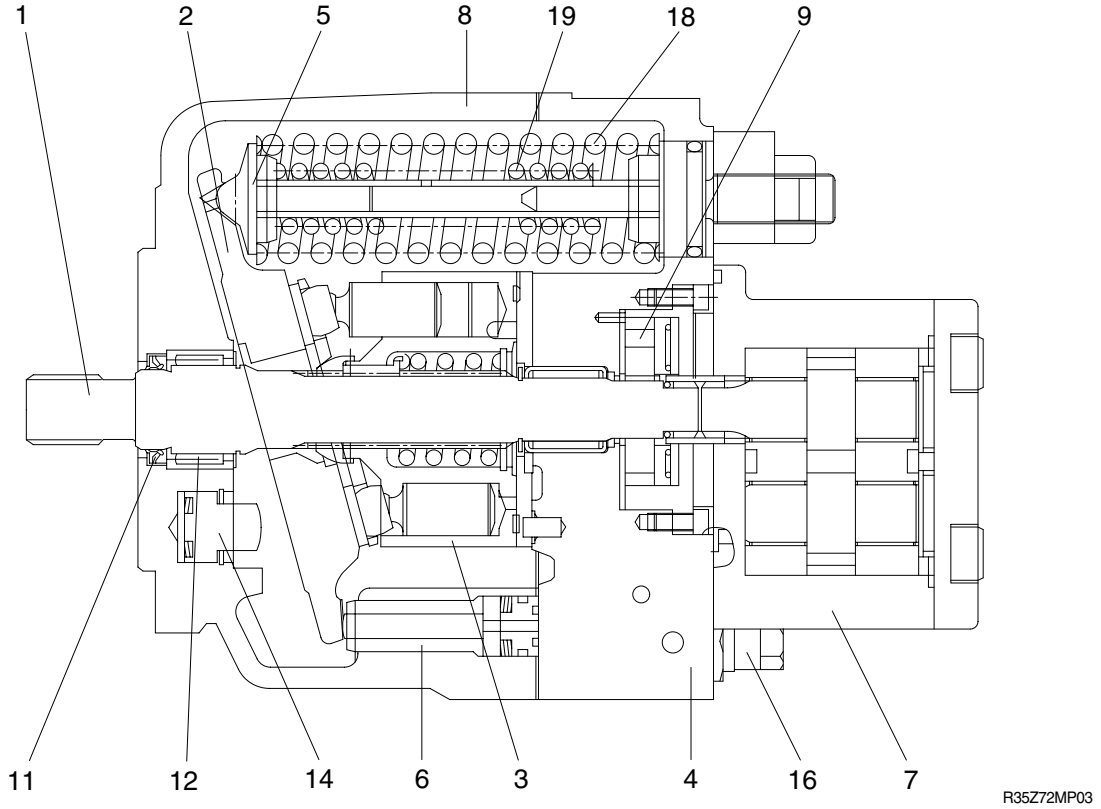

1	Drive shaft assembly	9	Trochoid pump
2	Swash plate assembly	11	Oil seal
3	Rotary group	12	Bearing
4	Port plate assembly	14	Stopper assembly
5	Spring seat assembly	16	Relief valve
6	Control piston assembly	18	Spring
7	Gear pump	19	Spring
8	Housing		

This is a variable displacement double-piston pump for discharge with two equal displacements from one cylinder block. Because this is one rotary group, there is only one suction port.

The oil is divided into two equal flows by the control plate in the cover and directed to two discharge ports provided in the cover.

The discharge pressure directed to the control piston tilts the hanger by overcoming the spring force.

Since the piston stroke changes according to the tilting angle of the hanger, the flow can be changed.

The simultaneous tilting angle constant-output control method is employed.

The pilot pump can be connected to the same shaft via a coupling.

1) PRINCIPLE OF OPERATION

(1) Function of pump

Displacement q(cm^2)

$q = \pi \times d^2/4 \times \tan\alpha \times D \times Z/2 \times 10^{-3}$

$\tan\alpha \times D$: Strokes

Z : Number of piston

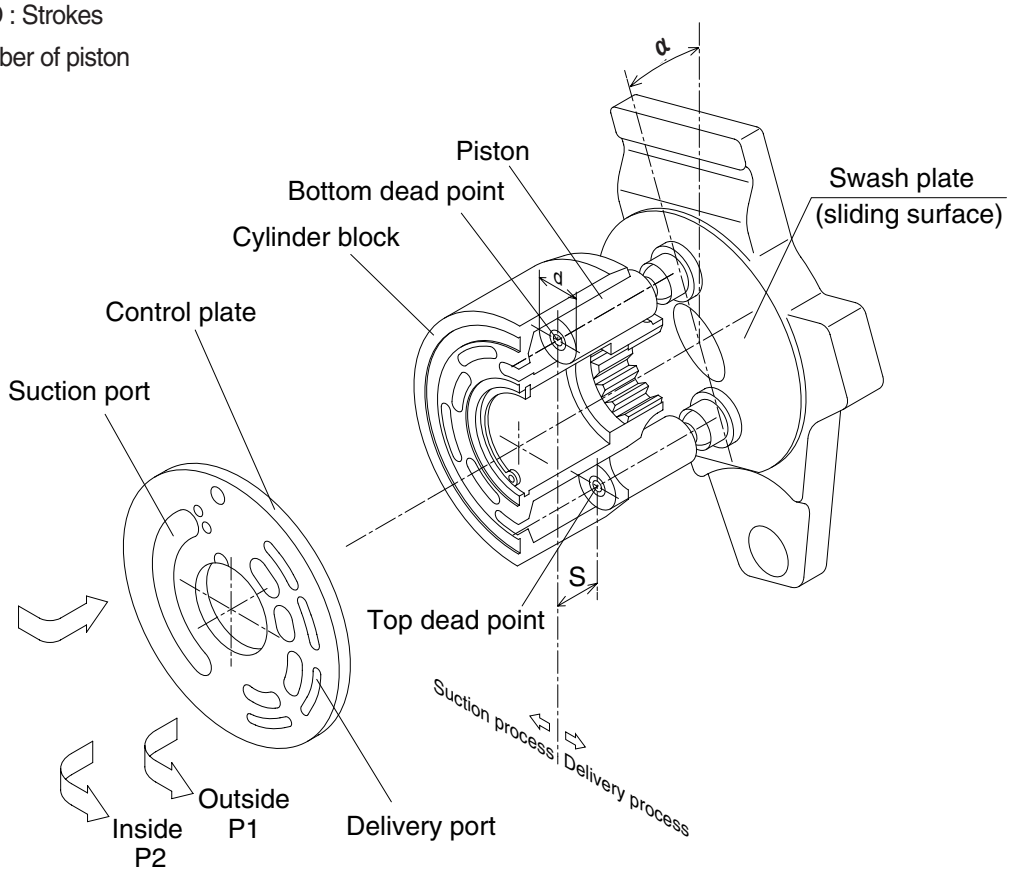

R35Z72MP05

The cylinder block is connected via spline and can rotate together with the drive shaft.

The piston assembled into the cylinder block performs reciprocal operation while following the swash plate on the hanger.

The piston moves in a direction to increase the displacement during a stroke from the lower to the upper dead points. The oil flows from the suction port via a port plate into the cylinder block(suction process).

During a stroke from the upper to the lower dead points, the piston moves in a direction to decrease the displacement. The oil is discharged to the discharge port(discharge process).

The displacement can be changed by changing the tilting of the hanger(swash plate).

The oil sucked through the port in the cylinder block is discharged from the discharge port in the control plate.

The oil sucked through the port on the outside of the cylinder block is discharged from the discharge port on the outside of the control plate.

2) CONTROL FUNCTIONS

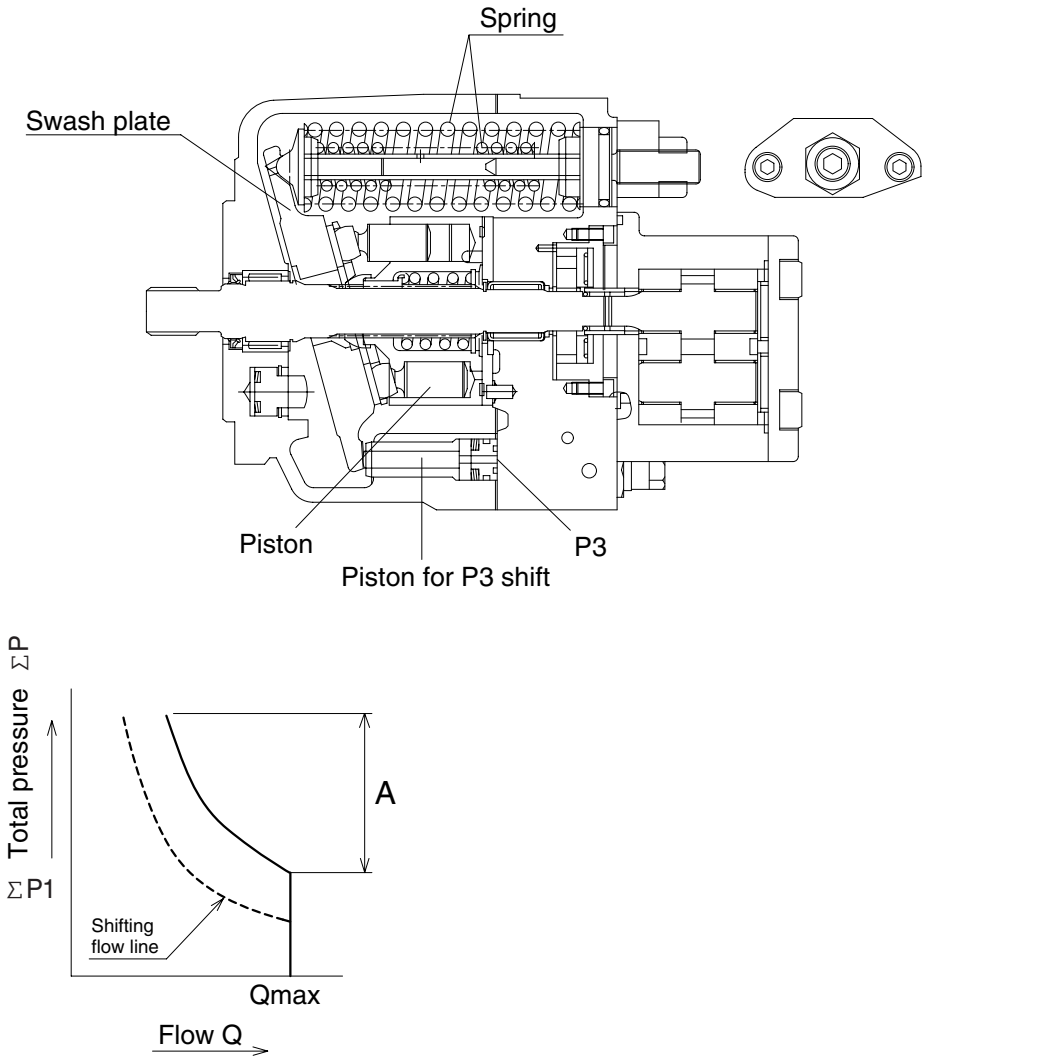

The delivery pressure P1 and P2 are directed to the piston which slides on the swash plate and acts on the swash plate.

The spring is provided to act against the delivery pressure.

When the oil pressure via piston acting on the swash plate is less than the installation load of the spring the swash plate is fixed to the maximum tilting position.

When the oil pressure via piston acting on the swash plate exceeds the installation load of the spring the swash plate is tilted and kept tilted at a position where the oil pressure is balanced with the spring force.(Region A in above figure)

When the P3 oil pressure act on the shaft piston, the control shifting line is shifted.

3) CONTROL / ADJUSTMENT PROCEDURE

(1) Loosen the hexagonal nut.

(2) Tighten or loosen the adjusting screw to set the power shifting line.

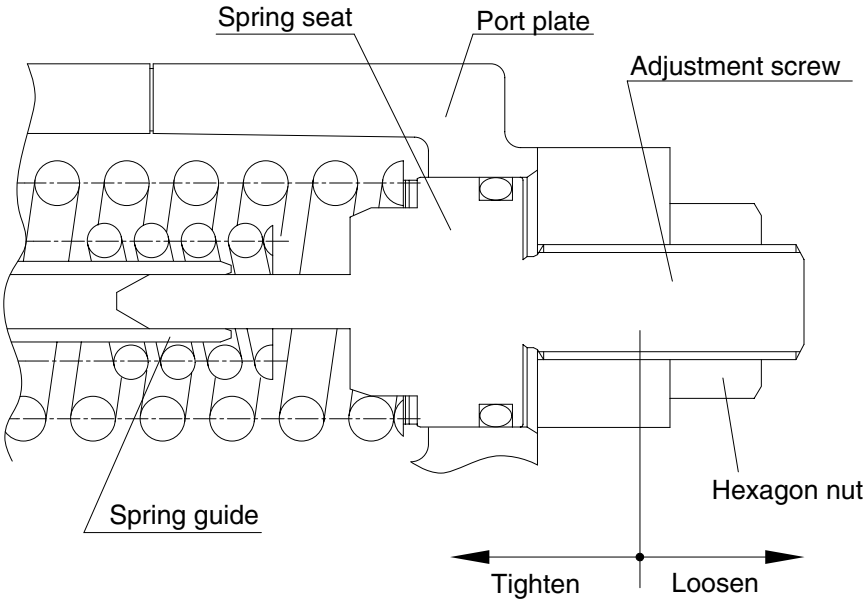

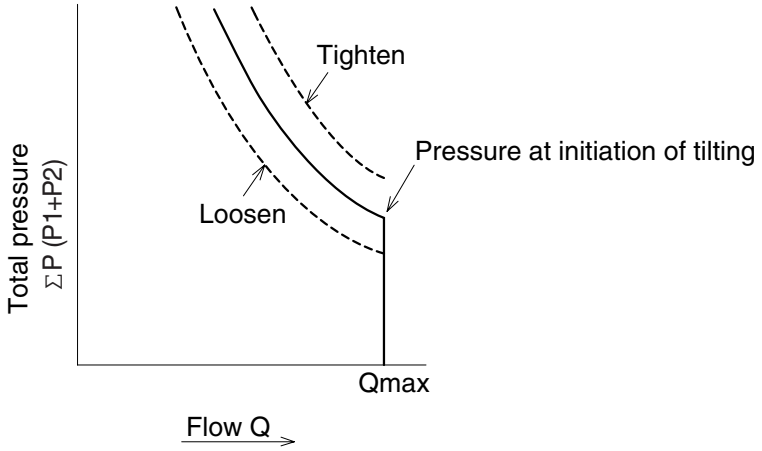

R35Z72MP06

3. ADJUSTMENT

This hydraulic pump has been set and inspected according to specified input power and control. Readjustment of all the adjusting portions may lead to the loss of functions specified for each control and the pump proper may be excluded from the scope of guarantee. Never attempt operating the adjusting screw, etc.

4. INSTALLATION

(1) Install the pump so that the input shaft becomes horizontal.
(2) Install the pump in a position lower than the lowest oil level in the tank to allow continuous flow of the oil into the pump.
(3) Since the pump is installed directly to the diesel engine, always use a flexible hose. Install the suction pipe firmly to prevent suction of an air.
(4) Use the high-pressure type flexible hoses for the discharge ports A1~A2.
(5) After installation, fill the pump housing with the hydraulic oil.
(6) Do not direct the external drain piping from within the oil.

5. DRIVE

(1) Use a flexible coupling for connection to the motor.
(2) Insert the coupling firmly onto the input shaft. Do not hammer the coupling during insertion.
(3) The input shaft must rotate clockwise when viewed from the shaft end.

6. HYDRAULIC OIL

The hydraulic oil to be used must be a general petroleum, hydraulic oil or wear-resistant hydraulic oil (ISO 3448, VG 32~56 or equivalent).
The applicable viscosity range is as follows :

Maximum allowable viscosity : 1000 mm^2/s
Minimum allowable viscosity : 10 mm^2/s
Recommended viscosity range : 15 ~ 36 mm^2/s

7. STARTING PROCEDURE

※ Before start up, check the following points and observe the cautions :

(1) Check if the tank has been washed clean.
(2) Check if the piping is clean and installed in such a manner as to prevent stress on the pump.
(3) Check if the piping is connected correctly according to the piping (circuit) diagram.
(4) Check if the joint and flange are correctly tightened.
(5) Check if the joint between the motor and pump is correctly installed.
(6) Check if the motor rotation direction agrees with the pump rotation direction.
(7) Check if the specific hydraulic oil is supplied though the filter and filled in the tank to the specified position of the oil level gauge.
(8) Check if the filter has the specified filtration accuracy (10 ㎛ or less).
(9) Check if the filter has been installed correctly relative to the flow direction.
(10) Check if the pump housing is filled with oil.
(11) Check if the control valve is set to the bypass position.
(12) Start the motor. If necessary, carry out warm-up operation at low speed.
(13) Check, without any load on the system, if the actuator operates correctly.

(14) When the motor has reached the operation speed, check the operation while applying the load to the actuator.
(15) Check the monitoring or measuring instrument if installed.
(16) Check the noise level.
(17) Check the oil level in the tank. Supply the oil. If required.
(18) Check the setting of the pressure control valve while applying the load to the actuator.
(19) Check the parts for any leakage.
(20) Stop the motor.
(21) Retighten all the bolts and plugs even when they have proved to by free from Leakage.
(Be sure to remove the pressure from the circuit before retightening.)
(22) Check the oil level in the tank.
(23) Check if the pump and actuator function correctly.
(24) Irregular operation of the actuator indicates that an air is left still in the circuit. When the air is bleeded completely from the circuit, all the parts operates smoothly without any irregular movement and there is no bubble in the oil of the tank.
(25) Check the oil temperature.
(26) Stop the motor.
(27) Check the filter if the element is fouled.
(28) If the element is heavily fouled, carry out flashing in the circuit.

※ To prevent damage to the pump, be sure to observe the following cautions during the operation which may allow entry of the actuator, hydraulic oil change, etc :
(1) After oil supply, fill the pump housing with the hydraulic oil.
(2) Start the pump with the speed of 1000 rpm or less and take care not to allow the oil level to lower below the specified level of the oil level gauge.
(3) When bleeding an air from the hydraulic circuit, keep the motor speed at 1000 rpm or less. Operate each actuator for three or more cycles and carry out idling for 5 minutes or more.

8. MAINTENANCE

The maintenance of this hydraulic pump is limited mainly to the tank, in particular, the hydraulic oil change.
Since the maintenance interval varies depending on respective operation and use conditions, the cautions described below for the users should be for reference only.

(1) Checking the filter

① Every day for the initial period after start up.
② Once a week when the operation becomes stable.
③ Once a month when the operation hours exceed about 100 hours.

※ When any part of the hydraulic system is changed (e.g., assembling of an additional part, change and repair of the piping), check the filter newly as in the case of startup.

(2) Changing the filter

① After startup
② After 500 hours of operation
③ Every 500 hours of operation after that, and each time the hydraulic oil is changed or the failure occurs. If any abnormal fouling of the filter is observed during daily check up to the first filter change after startup, find out the cause.
In this case, do not extend the check and filter change intervals to 500 hours.

※ The paper filter can not be cleaned. Change the filter as a whole.

(3) Changing the hydraulic oil

① After 2000 hours of operation.

② Every 2000 hours of operation or once a year after that.

The change interval may have to be shortened depending on the degree of fouling and the thermal load condition of the hydraulic oil.
If the hydraulic oil is not appropriate and need be changed, pay attention to the following points :

Be sure to control the oil temperature below the highest temperature and above the lowest temperature during operation in winter and summer.
Pay attention to the following points during change of the hydraulic oil :
- Change the hydraulic oil as a whole quantity.
- Do not allow dust to mix into the circuit.
- Clean the tank inside.
- Supply the oil through the filter.

(4) Checking for the oil leakage

① Daily during the initial period after startup.

② Once a week when the operation becomes stable.

(5) Checking the temperature

① Monitor the temperature continuously.

② When the viscosity is above the allowable value because of low hydraulic oil temperature, warm-up operation is necessary.
Start the motor with the speed set to about one half of the rated speed, then operate the actuator under the load for a short period.
When the oil temperature is below the allowable ambient temperature, it is necessary to preheat the oil tank before start of the motor.

③ Take care not to allow the hydraulic oil temperature to exceed +90° C

GROUP 2 MAIN CONTROL VALVE

1. OUTLINE

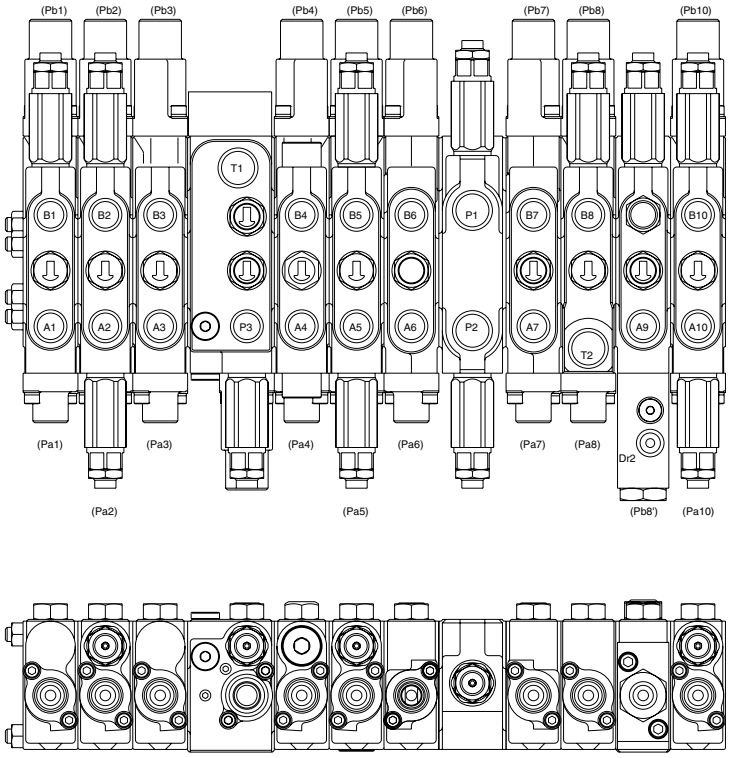

R35Z72MCV01

Mark	Port name	Port size	Tightening torque
P1	P1 pump port	PF 1/2	6~7 kgf · m
P2	P2 pump port		
T1	Tank return port		
T2	Tank return port		
P3	P3 pump port	PF 3/8	4.0~5.0 kgf · m
A1	Dozer		
B1	Dozer		
A2	Boom swing(RH) port		
B2	Boom swing(LH) port		
A3	Swing (LH) port		
B3	Swing (RH) port		
A4	Option port		
B4	Option port		
A5	Arm out port		
B5	Arm in port		
A6	Travel [LH/RR] port		
B6	Travel [LH/FW] port		
A7	Travel [RH/RR] port		
B7	Travel [RH/FW] port		
A9	Boom up port		
B8	Boom down port		

Mark	Port name	Port size	Tightening torque
A10	Bucket out port	PF 3/8	4.0~5.0 kgf · m
B10	Bucket in port		
Pa1	Dozer down pilot port	PF 1/4	2.5~3.0 kgf · m
Pb1	Dozer up pilot port		
Pa2	Boom swing (RH) pilot port		
Pb2	Boom swing (LH) pilot port		
Pa3	Swing (RH) pilot port		
Pb3	Swing (LH) pilot port		
Pa5	Arm out pilot port		
Pb5	Arm in pilot port		
Pa6	Travel [LH/RR] pilot port		
Pb6	Travel [LH/FW] pilot port		
Pa7	Travel [RH/RR] pilot port		
Pb7	Travel [RH/FW] pilot port		
Pa8	Boom up pilot port		
Pb8	Boom down pilot port		
Pa10	Bucket out pilot port		
Pb10	Bucket in pilot port		

2. STRUCTURE(1/3)

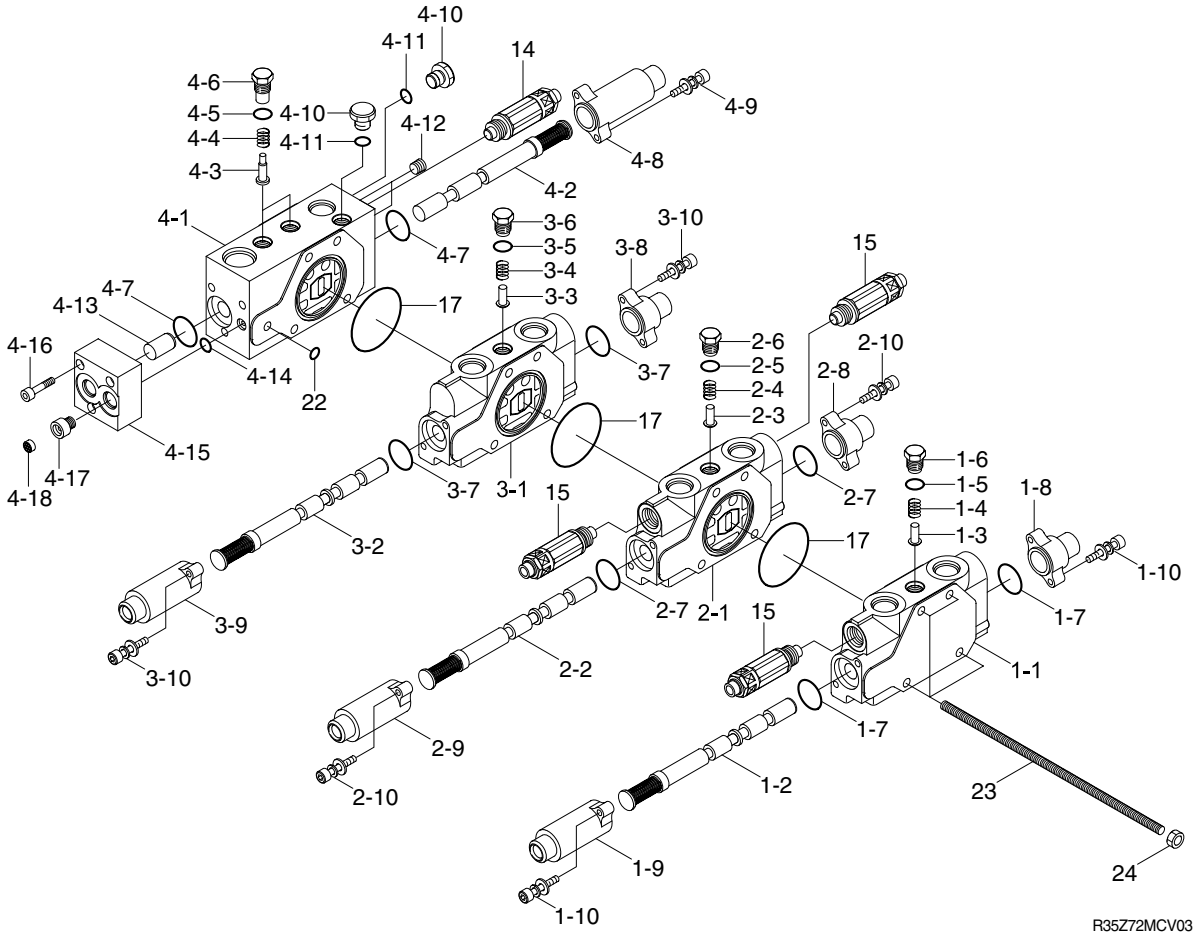

1	Dozer work block	2-9	Cover-pilot	4-6	Plug
1-1	Body-work	2-10	Bolt-soc head w/washer	4-7	O-ring
1-2	Spool assy	3	Swing work block	4-8	Cover-pilot
1-3	Poppet	3-1	Body-work	4-9	Bolt-soc head w/washer
1-4	Spring	3-2	Spool assy	4-10	Plug
1-5	O-ring	3-3	Poppet	4-11	O-ring
1-6	Plug	3-4	Spring	4-12	Plug
1-7	O-ring	3-5	O-ring	4-13	Piston
1-8	Cover-pilot	3-6	Plug	4-14	O-ring
1-9	Cover-pilot	3-7	O-ring	4-15	Body-pilot
1-10	Bolt-soc head w/washer	3-8	Cover-pilot	4-16	Bolt-soc head w/washer
2	Boom swing work block	3-9	Cover-pilot	4-17	Orifice
2-1	Body-work	3-10	Bolt-soc head w/washer	4-18	Filter-coin type
2-2	Spool assy	4	Connecting block	14	Relief valve
2-3	Poppet	4-1	Body-work	15	Overload relief valve
2-4	Spring	4-2	Spool assy	17	O-ring
2-5	O-ring	4-3	Poppet	22	O-ring
2-6	Plug	4-4	Spring	23	Bolt-tie
2-7	O-ring	4-5	O-ring	24	Nut-hex
2-8	Cover-pilot				

STRUCTURE(2/3)

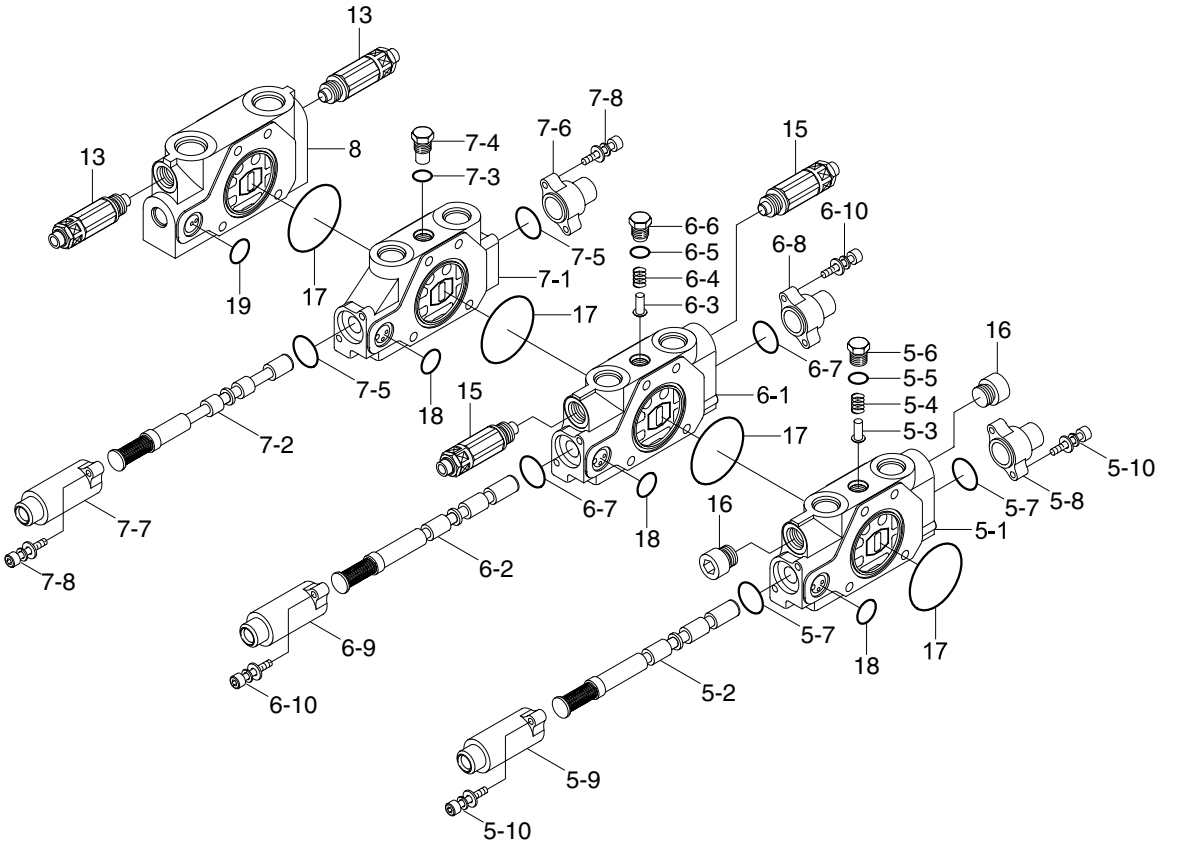

R35Z72MCV04

5	PTO work block	6-2	Spool assy	7-4	Plug
5-1	Body-work	6-3	Poppet	7-5	O-ring
5-2	Spool assy	6-4	Spring	7-6	Cover-pilot
5-3	Poppet	6-5	O-ring	7-7	Cover-pilot
5-4	Spring	6-6	Plug	7-8	Bolt-soc head w/washer
5-5	O-ring	6-7	O-ring	8	Inlet work block
5-6	Plug	6-8	Cover-pilot	13	Relief valve
5-7	O-ring	6-9	Cover-pilot	15	Overload relief valve
5-8	Cover-pilot	6-10	Bolt-soc head w/washer	16	Plug
5-9	Cover-pilot	7	Travel work block	17	O-ring
5-10	Bolt-soc head w/washer	7-1	Body work	18	O-ring
6	Arm work block	7-2	Spool assy	19	O-ring
6-1	Body-work	7-3	O-ring		

STRUCTURE(3/3)

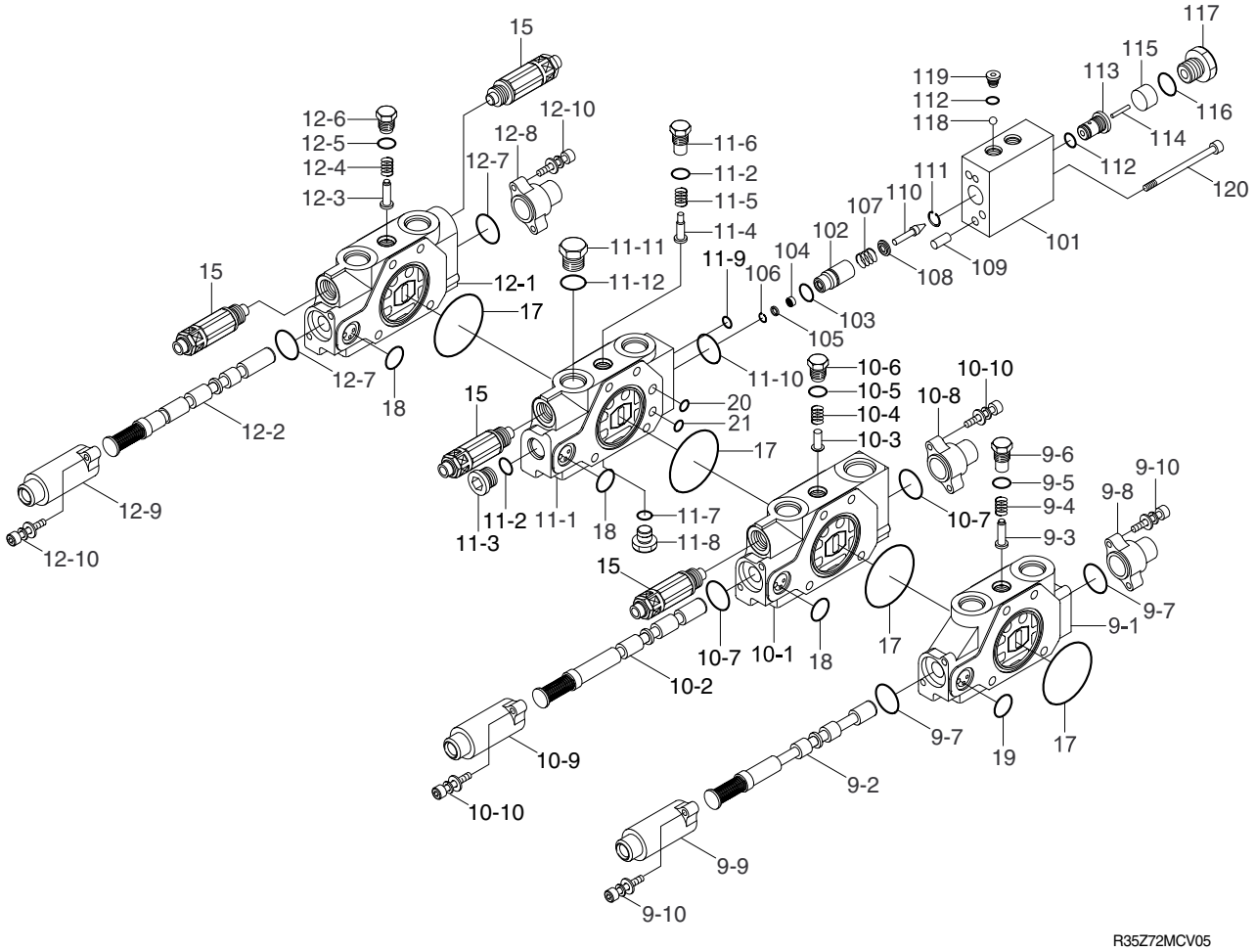

9	Travel work block	10-7	O-ring	12-1	Body-work	103	Seal
9-1	Body-work	10-8	Cover-pilot	12-2	Spool assy	104	Filter
9-2	Spool assy	10-9	Cover-pilot	12-3	Poppet	105	Spacer
9-3	Poppet	10-10	Bolt-soc head w/washer	12-4	Spring	106	Ring-retaining
9-4	Spring	11	Boom lock valve	12-5	O-ring	107	Spring A-lock valve
9-5	O-ring	11-1	Body-work	12-6	Plug	108	Spring seat
9-6	Plug	11-2	O-ring	12-7	O-ring	109	Pin
9-7	O-ring	11-3	Plug	12-8	Cover-pilot	110	Poppet
9-8	Cover-pilot	11-4	Poppet	12-9	Cover-pilot	111	Ring-retaining
9-9	Cover-pilot	11-5	Spring	12-10	Bolt-soc head w/washer	112	O-ring
9-10	Bolt-soc head w/washer	11-6	Plug	15	Overload relief valve	113	Guide-piston
10	Boom work block	11-7	O-ring	17	O-ring	114	Piston A1
10-1	Body-work	11-8	Plug	18	O-ring	115	Piston B
10-2	Spool assy	11-9	O-ring	19	O-ring	116	O-ring
10-3	Poppet	11-10	O-ring	20	O-ring	117	Connector
10-4	Spring	11-11	Plug	21	O-ring	118	Ball-steel
10-5	O-ring	11-12	O-ring	101	Cover-lock valve	119	Plug
10-6	Plug	12	Bucket work block	102	Lock valve	120	Bolt-hex. socket head

3. HYDRAULIC CIRCUIT

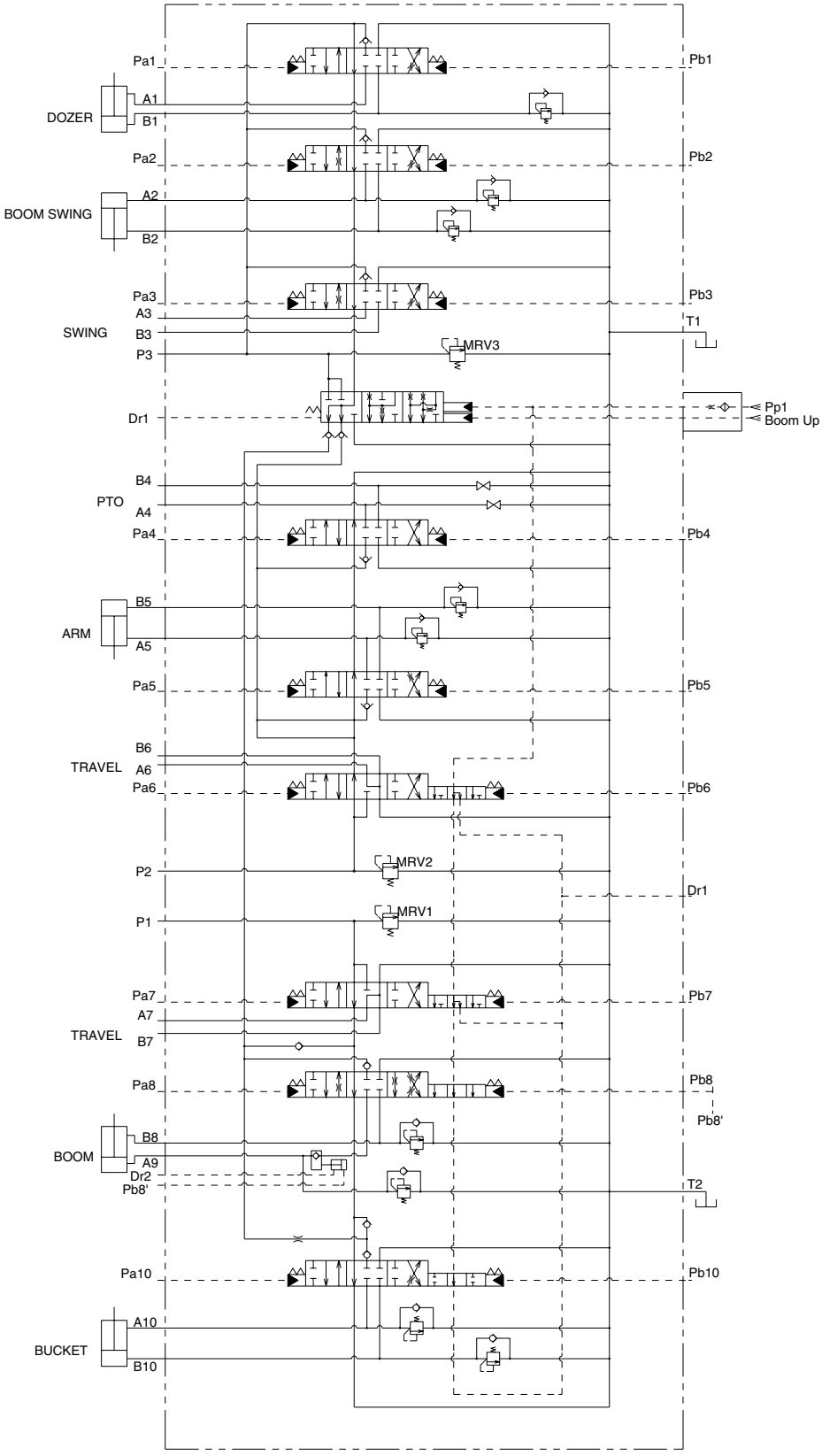

4. FUNCTION

1) IN NEUTRAL (When all spools are in neutral position)

P1 : The oil discharged from the hydraulic pump flows into control valve P1 port, and then flows through P1 and P2 supply body the P1 side travel spool. The oil flows through the bypass passage in the direction of travel → boom → bucket spool, and then flows from the bypass passage to the tank passage in the bucket section.

P2 : The oil discharged for the hydraulic pump flows into the control valve from P2 port, and then flows through P1 and P2 supply body to the P2 side travel spool. The oil flows through the bypass passage in the direction of travel → arm → PTO spool, and the flows from the bypass passage to the tank passage in the PTO section.

P3 : The oil discharged from the hydraulic pump flows into the control valve from P3 port, and then flows through the parallel passage of dozer, boom swing, and swing. The oil that has followed into the parallel passage flows through the bypass passage in the direction of dozer → Boom swing → swing spool, the connecting spool land, the P2 side parallel passage, the bypass passage from arm to PTO spool, the bypass passage in the PTO section, and then to the tank passage.

※ Since each line (P1, P2, P3) is supplied with oil from the pump, the section is operatable; therefore, do not operate the control valve except the working time.

- P1 line : Travel, boom, bucket
- P2 line : Travel, arm, PTO
- P3 line : Dozer, boom swing, arm, PTO, boom (up only)

P_P1 : When P_P1 port is applied with pilot pressure, the oil flows into the travel independent passage via an orifice.
With the spool in neutral, the oil flows into Dr1 port provided in the P1 and P2 supply body.

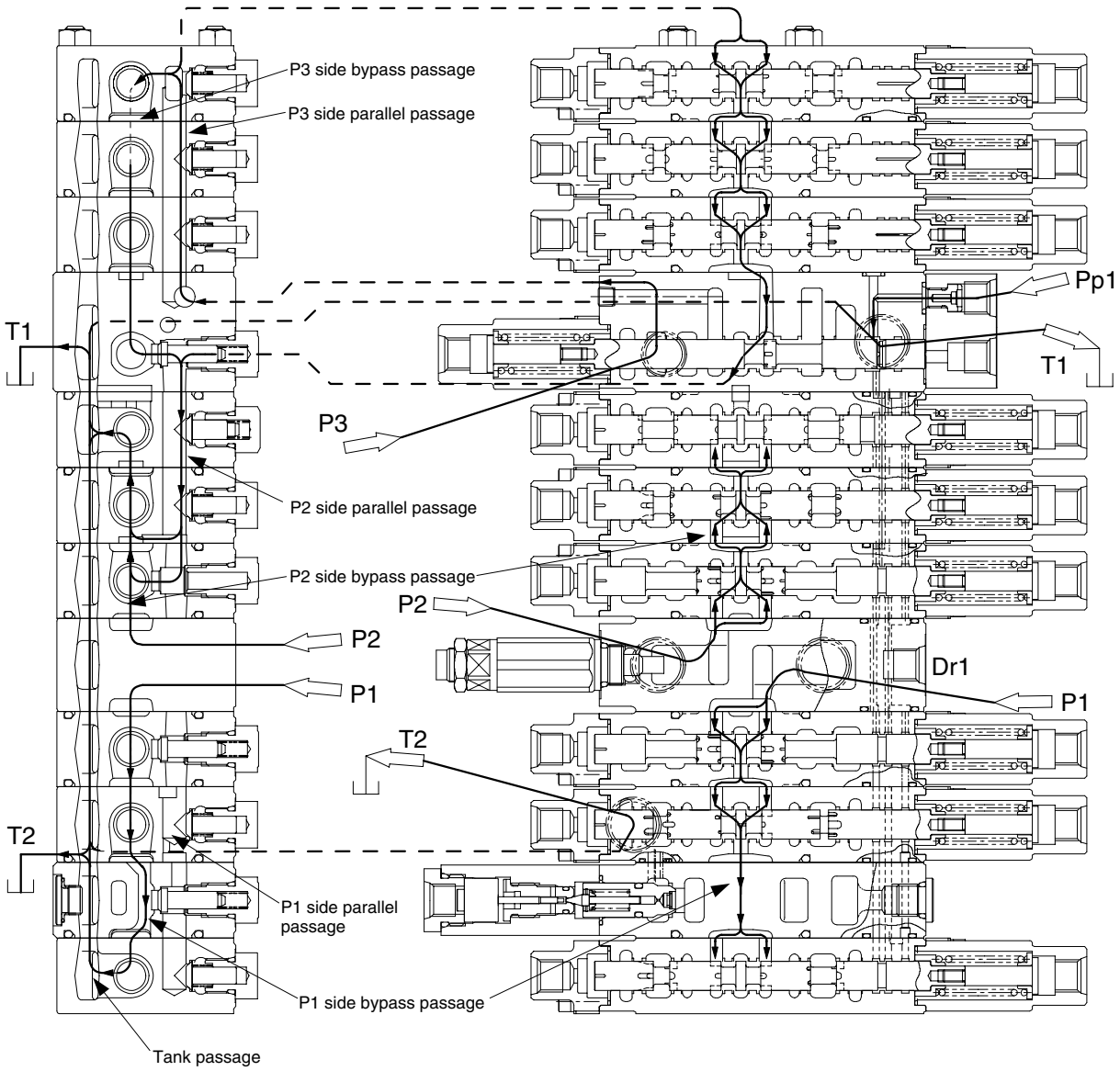

Hydraulic oil flow in neutral

R35Z72MCV11

2) TRAVEL OPERATION

For the travel operation, both Pa pressurization and Pb pressurization are the same on operation so that only Pa pressurization is explained as follows.
When left (right) travel reverse is operated, the secondary pressure from the remote control valve is applied to Pa6 [Pa7] port to change over the travel spool. The oil flowed from P2 [P1] port flows through the supply body into the P2 [P1] side bypass passage. The oil flowed into the P2 [P1] side bypass passage flows through A6 [A7] port that has been opened by the spool changeover to the travel motor. On the other hand, the oil returned from the travel motor flows into the control valve from B6 [B7] port and then to the tank passage has been opened after the spool changeover.

The oil flowed from P_P1 port flows through the orifice passage provided in the P3 supply section into the travel independent signal passage.
Although the travel independent passage (see page 2-15) in the travel section that has been opened during neutral is blocked after the both travel spools changeover, the travel independent signal passage is connected to the drain port via the bucket section Accordingly, when the bucket section has not changed over, the connecting spool in the P3 supply section does not change over because the pressure in the travel independent signal passage is equal to the drain pressure.

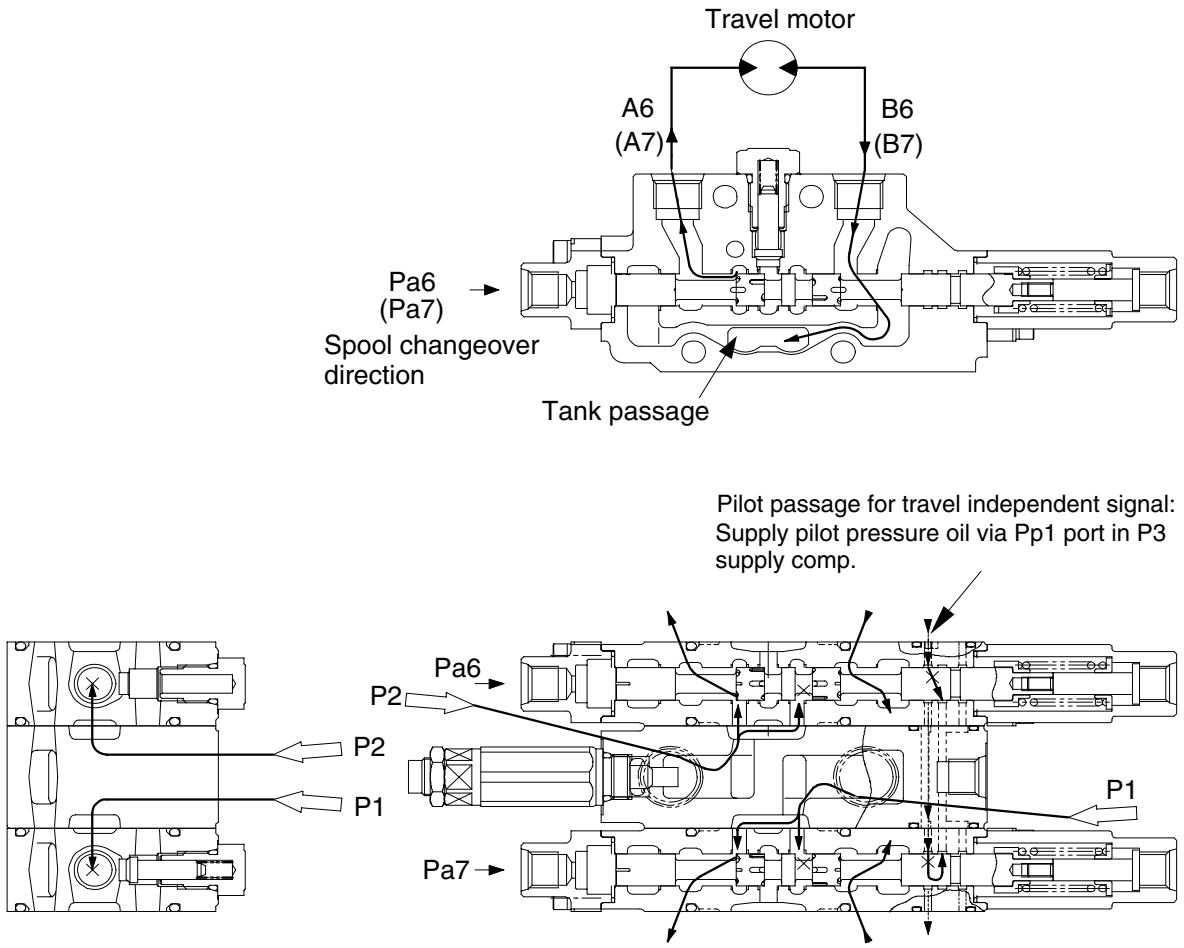

Operation during travel(Forward)

R35Z72MCV12

3) BOOM OPERATION

Boom up operation

When the boom up operation is carried out, the secondary pressure from the remote control valve is applied to Pa8 port to change over the boom spool. Since Pa8 port is connected to boom up port through the piping, the pressure oil supplied to boom up port changes over the connecting spool through the connecting piston in the P3 supply section

Also, since the P1 side bypass passage is shut off at the boom section after the boom spool changeover, the oil flowed from P1 port flows through the check valve provided above the bypass passage in the travel section into the P1 side parallel passage.

On the other side, after the connecting spool changeover the oil flowed into P3 port.

① Flows through the internal passage in connecting spool and the check valve in the P3 supply section into the P1 side parallel passage.

② The oil flows through the P3 side parallel passage and P3 side bypass passage and then:

a. Flows through the check valve in the P3 supply section into the P1 side parallel passage.

b. Some oil flows through the orifice passage provided in the connecting spool and the check valve in the P3 supply section into the P2 side parallel passage.

The oil flowed into the P1 side parallel passage is connected with the oil from P1 pump.

The oil flowed into the P2 side parallel passage flows through the bypass passages in the arm section and PTO section to the tank passage.

Since the passage connected to the boom lock valve and the bridge passage are opened after the boom spool changeover, the oil flowed into the P1 side parallel passage flows through the load check valve in the boom section and the bridge passage into the boom lock valve section

The oil flowed into the boom lock valve section opens the lock valve (free flow condition), flows into A9 port, and the to the head side of the boom cylinder.

On the other hand, the oil returned from the rod side of the boom cylinder flows into B8 port to the tank passage that has opened with the spool's notch after the spool changeover. Then, the boom cylinder extends to raise the boom.

P1 side circuit

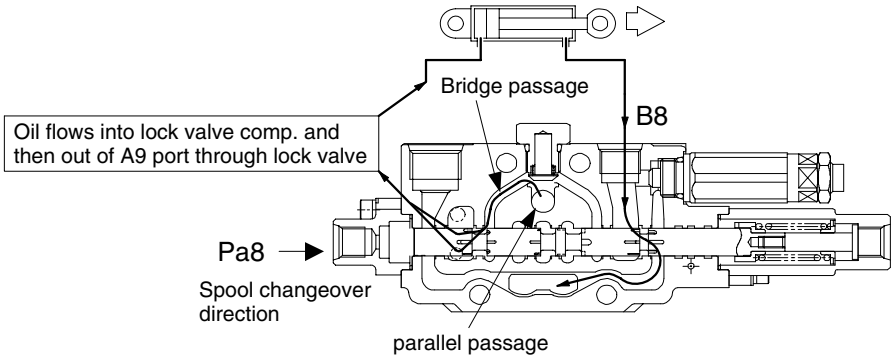

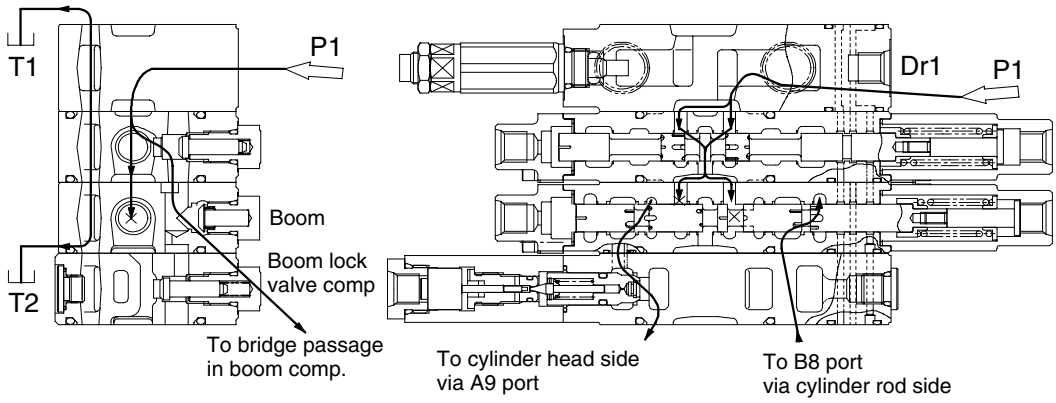

P3 side (Connecting side) circuit

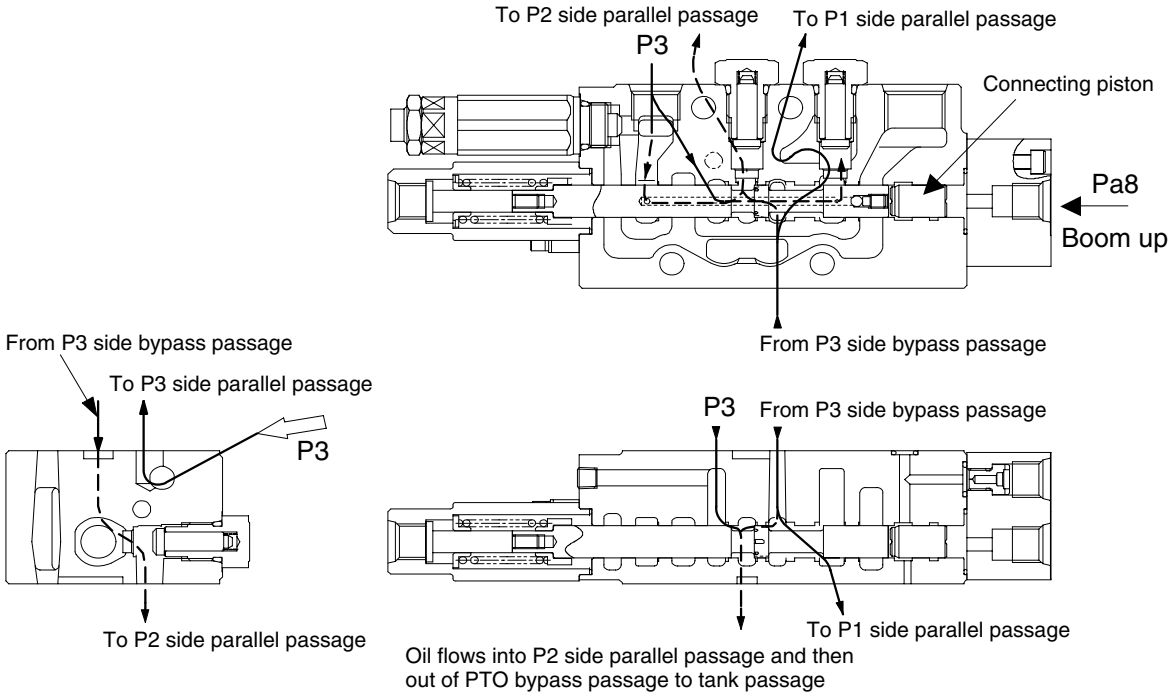

Boom up operation

R35Z72MCV13

Boom down operation

When the boom down operation is carried out, the secondary pressure from the remote control valve is applied to Pb8 port to change over the boom spool.
Since Pb8 port is connected to Pb8' port through the piping, the pressure is also applied to pb8' port (Boom lock valve release port) to release the boom lock valve.
(For the explanation of boom lock valve operation, see pages 2-20, 21)
Since the bypass passage is shut off at the boom section after the spool changeover (some oil flows through the orifice passage provided in the boom spool's bypass passage to the downstream side of the bypass passage), the oil flowed from P1 port flows through the check valve provided above the bypass passage in the travel section into the P1 side parallel passage.
Also, since a passage between B8 port and bridge passage is opened with the spool's notch after the spool changeover, the oil flowed into the P1 side parallel passage flows through the load check valve in the boom section into B8 port via the bridge passage and then into the rod side of the boom cylinder.
On the other side, the oil returned from the head side of the boom cylinder flows into A9 port to the tank passage that has been opened with the spool's notch after the spool changeover through the boom lock valve that has been released by Pb8' port pressure. Then, the boom cylinder retracts to lower the boom.

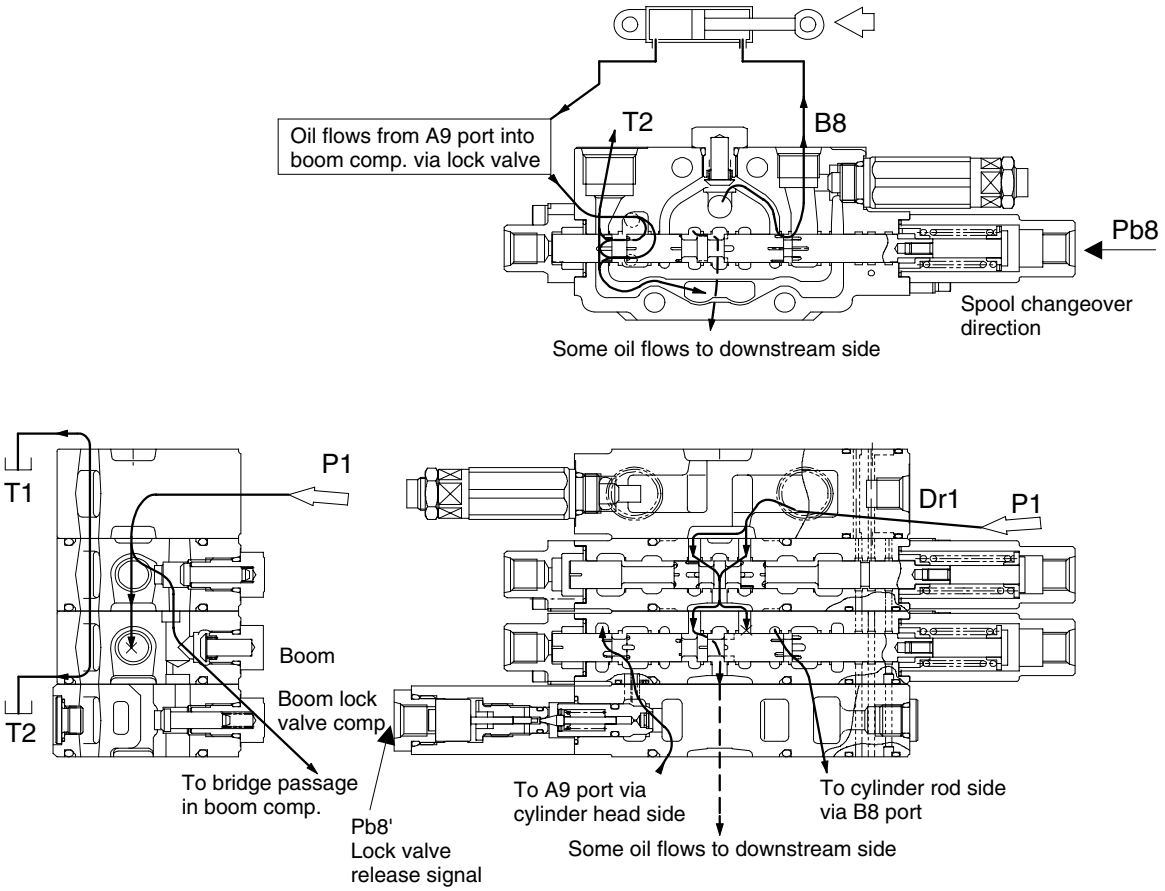

Boom down operation

R35Z72MCV14

4) Operation of boom lock valve

(1) Holding

In the boom spool neutral condition,

· The pilot piston chamber (a) is connected to the drain passage through the pilot port (Pb8') for releasing the boom lock valve.

· The piston chamber (b) is also connected to the drain passage through the drain port (Dr2).

Therefore, the piston (B) maintains the condition shown in the figure.

The boom cylinder holding pressure (shown in half-tone dot meshing) is applied to the lock valve chamber as shown in the figure to :

· Press the needle valve against the needle valve seat.

· Press the lock valve against the body seat.

Then, oil leakage from the boom cylinder head side is prevented to stop the movement of the boom cylinder due to leakage.

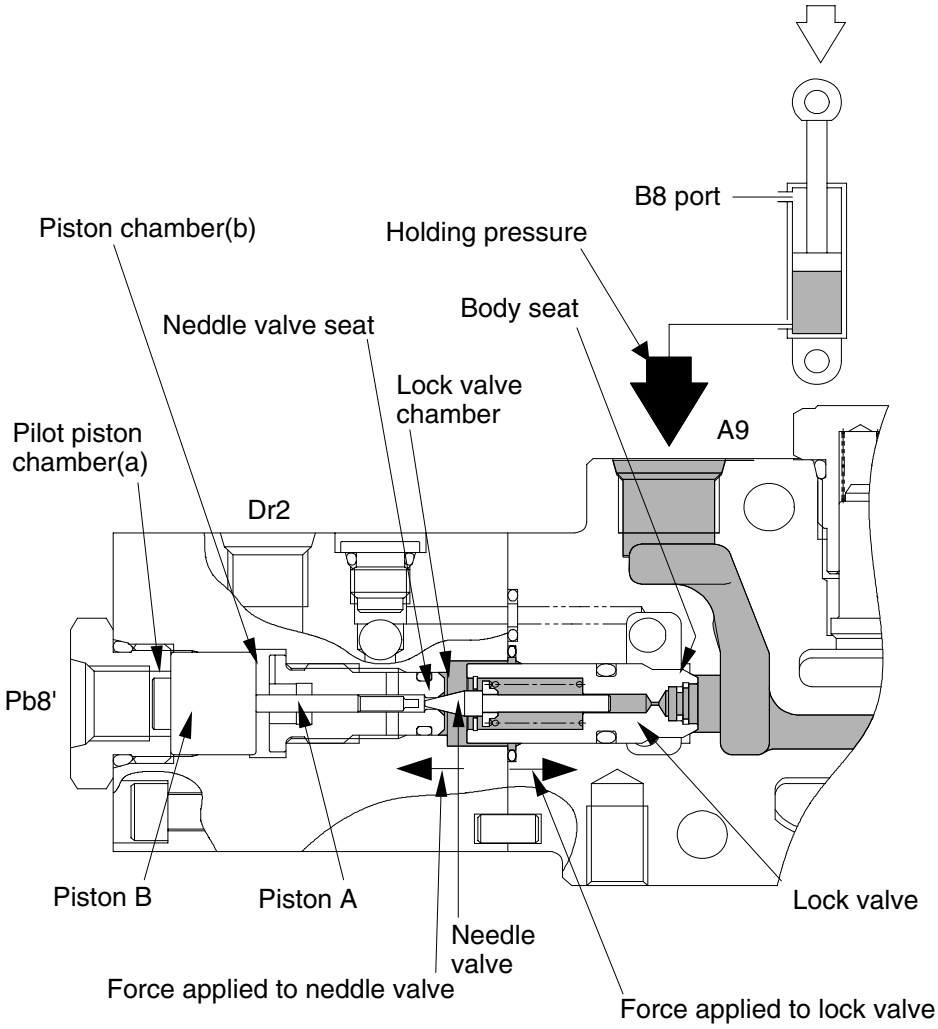

Operation of boom lock valve (holding)

R35Z72MCV15

(2) Release

When the pilot pressure is applied to the pilot port (Pb8') for boom lock valve release, the piston (B) moves rightward to open the needle valve through the piston (A1).

Then, the oil returned from the boom cylinder flows through the passage in the direction of lock valve's orifice → lock valve chamber → needle valve seat → check valve into the lock valve's downstream side chamber (boom section).

When the lock valve's downstream chamber is connected to the tank passage after the boom spool changeover and the needle valve is released, the pressure in the lock valve chamber decreases to open the lock valve by the oil returned from the boom cylinder. The returned oil flows into the tank passage with the boom spool's notch to operate the cylinder.

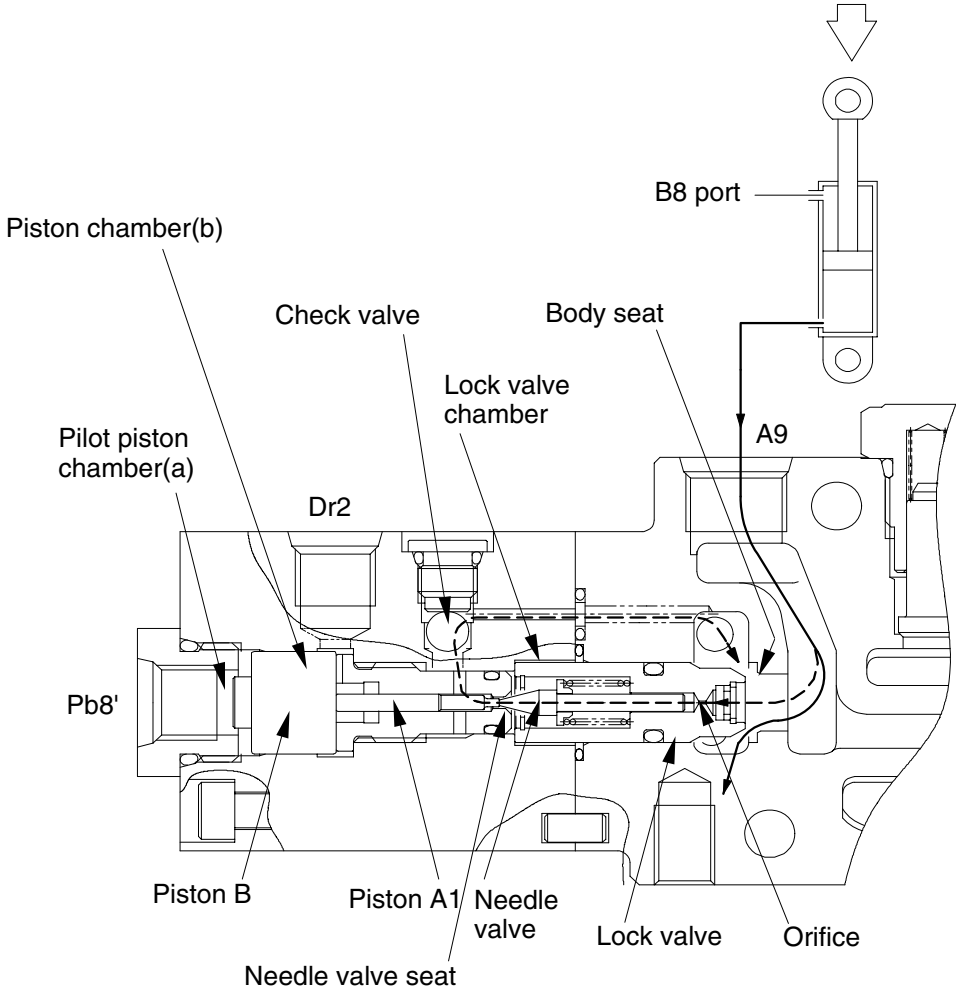

Operation of boom lock valve (release)

R35Z72MCV16

5) BUCKET OPERATION

Bucket in operation

When the bucket in operation is carried out, the secondary pressure from the remote control valve flows into Pb10 port to change over the bucket spool.

Since the P1 side bypass passage is shut off at the bucket section after the bucket spool changeover, the oil flowed from P1 port flows through the check valve provided above the bypass passage in the travel section into the P1 side parallel passage.

Also, since a passage between B10 port and the bridge passage is opened after the spool changeover, the oil flowed into the P1 side parallel passage flows through the load check valve in the bucket section into B10 port via the bridge passage and then the head side of the bucket cylinder.

On the other hand, the oil returned from the rod side of the bucket cylinder flows into A10 port to the tank passage that has opened with the spool's notch after the spool changeover. Then, the bucket cylinder extends to make the bucket in.

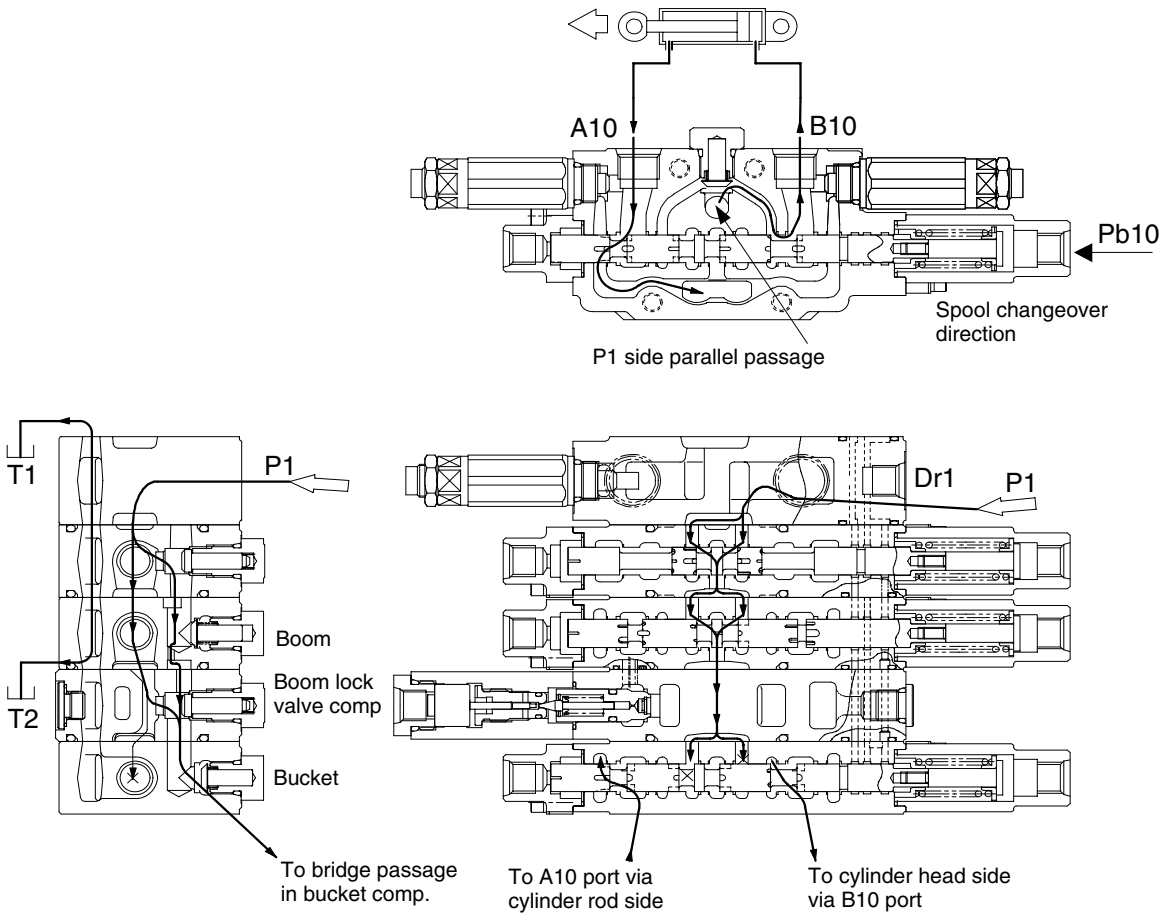

Bucket in operation

R35Z72MCV17

Bucket out operation

When the bucket out operation is carried out, the secondary pressure from the remote control valve flows into Pa10 port to change over the bucket spool.

Since the P1 side bypass passage is shut off at the bucket section after the bucket spool changeover, the oil flowed from P1 port flows through the check valve provided above the bypass passage in the travel section into the P1 side parallel passage.

Also, since a passage between A10 port and the bridge passage is opened after the spool changeover, the oil flowed into the P1 side parallel passage flows through the load check valve in the bucket section into A10 port via the bridge passage and then the head side of the bucket cylinder.

On the other hand, the oil returned from the head side of the bucket cylinder flows into B10 port to the tank passage that has opened after the spool changeover.

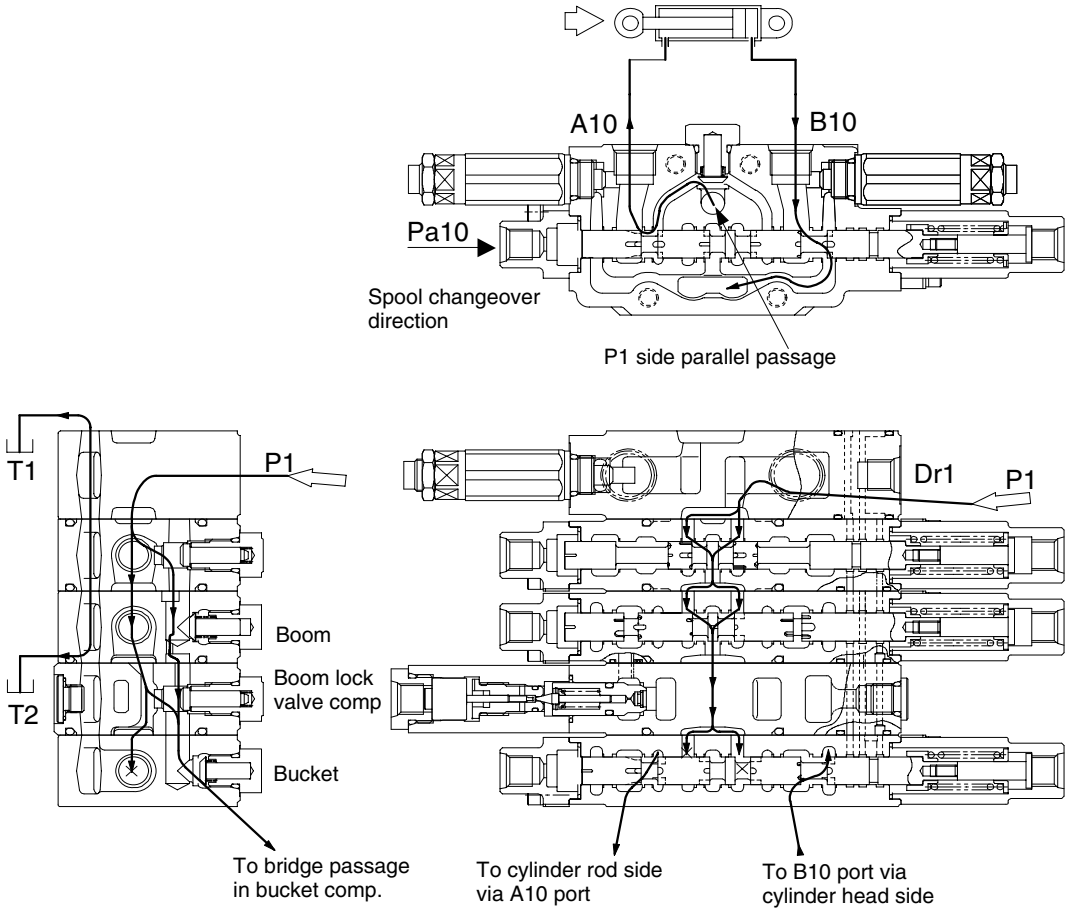

Bucket out operation

R35Z72MCV18

6) ARM OPERATION

Arm in operation

When the arm in operation is carried out, the secondary pressure from the remote control valve is applied to Pb5 port to change over the arm spool. The secondary pressure is also applied to the pilot chamber (arm in port) on the connecting section spring chamber side that has been connected through the piping. Therefore, when the operation is carried out together with the boom up operation at the same time, the connecting spool is hard to change over against the pilot pressure for arm in operation.

Since the P2 port bypass passage is shut off at the arm section after the arm spool change over, the oil flowed from P2 port flows through the travel section and a passage between travel section and arm section into the P2 side parallel passage.

Also, since the oil flowed from P3 port flows through the direction of dozer → boom swing → swing section and then into the P2 side parallel passage via the check valve in the P3 supply section, the connecting flow of P2 pump and P3 pump is supplied to the P2 side parallel passage. [Although the P3 side bypass passage is also connected to the P1 side parallel passage through the check valve in the P3 section, there is no oil flow into the P1 side as long as the P1 side sections (boom , bucket) are not operated.]

Since a passage between B5 port and the bridge passage is opened after the spool changeover, the oil flowed into the P2 side parallel passage flows through the load check valve in the arm section into B5 port via the bridge passage and then into the head side of the arm cylinder.

On the other hand, the oil returned from the rod side of the arm cylinder flows into A5 port to the tank passage that has opened with the spool's notch after the spool changeover. Then, the arm cylinder extends to make the arm in.

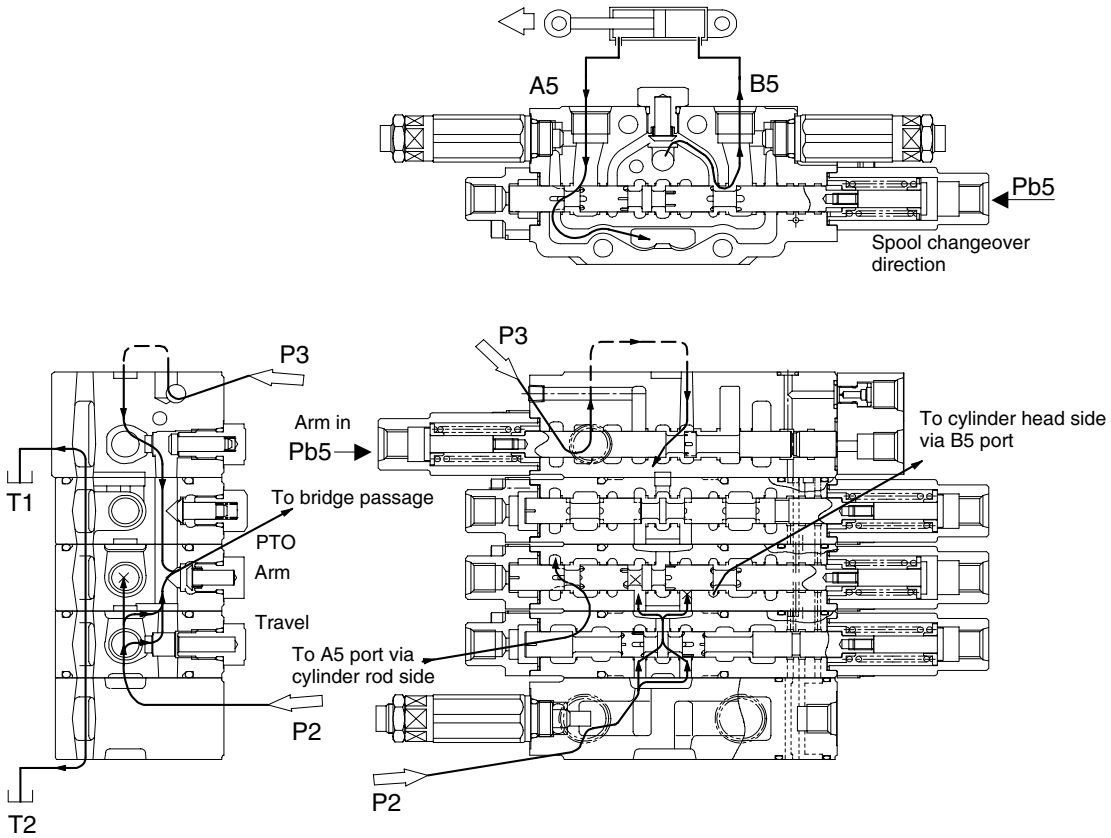

Arm in operation

R35Z72MCV19

Arm out operation

When the arm out operation is carried out, the secondary pressure from the remote control valve is applied to Pa5 port to change over the arm spool.

Since the P2 side bypass passage is shut off at the arm section after the arm spool changeover, the oil flowed from P2 port flows through the travel section and a passage between travel section and arm section into the P2 side parallel passage.

Also, since the oil flowed from P3 port flows through the direction of dozer → boom swing → swing section and then into the P2 side parallel passage via the check valve in the P3 supply section, the connecting flow of P2 pump and P3 pump is supplied to the P2 side parallel passage. [Although the P3 side bypass passage is also connected to the P1 side parallel passage through the check valve in the P3 section, there is no oil flow into the P1 side as long as the P1 side sections (boom , bucket) are not operated.]

Since a passage between A5 port and the bridge passage is opened after the spool changeover, the oil flowed into the P2 side parallel passage flows through the load check valve in the arm section into A5 port via the bridge passage and then into the rod side of the arm cylinder.

On the other hand, the oil returned from the head side of the arm cylinder flows into B5 port to the tank passage that has opened after the spool changeover. Then, the arm cylinder retracts to make the arm out.

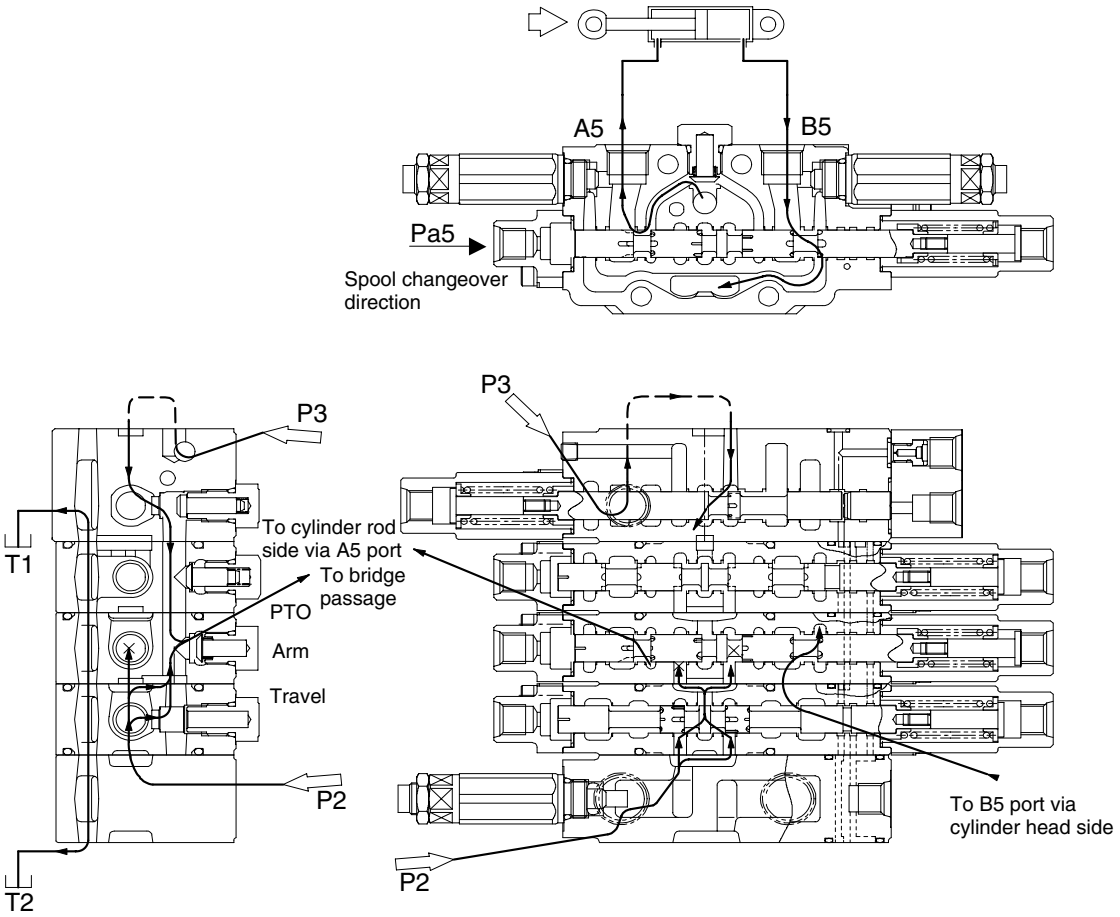

Arm out operation

R35Z72MCV20

7) PTO OPERATION

For the PTO operation, both Pa pressurization and Pb pressurization are the same on operation so that only Pa pressurization is explained as follows.

When the PTO operation (Pa4 pressurization) is carried out, the secondary pressure from the remote control valve is applied to Pa4 port to change over the PTO spool. Since the P2 side bypass passage is shut off at the PTO section after the PTO spool changeover, the oil flowed from P2 port flows through the travel section and a passage between travel section and arm section into the P2 side parallel passage.

Also, since the oil flowed from P3 port flows through the direction of dozer → boom swing → swing section and then into the P2 side parallel passage via the check valve in the P3 supply section, the connecting flow of P2 pump and P3 pump is supplied to the P2 parallel passage.

[Although the P3 side bypass passage is also connected to the P1 side parallel passage through the check valve in the P3 section, there is no oil flow into the P1 side as long as the P1 side sections (boom , bucket) are not operated.]

Since a passage between A4 port and the bridge passage is opened after the spool changeover, the oil flowed into the P2 side parallel passage flows through the load check valve in the PTO section into A4 port via the bridge passage and then into the actuator for PTO.

On the other hand, the oil returned from actuator for PTO flows into B4 port to the tank passage that has opened after the spool changeover.

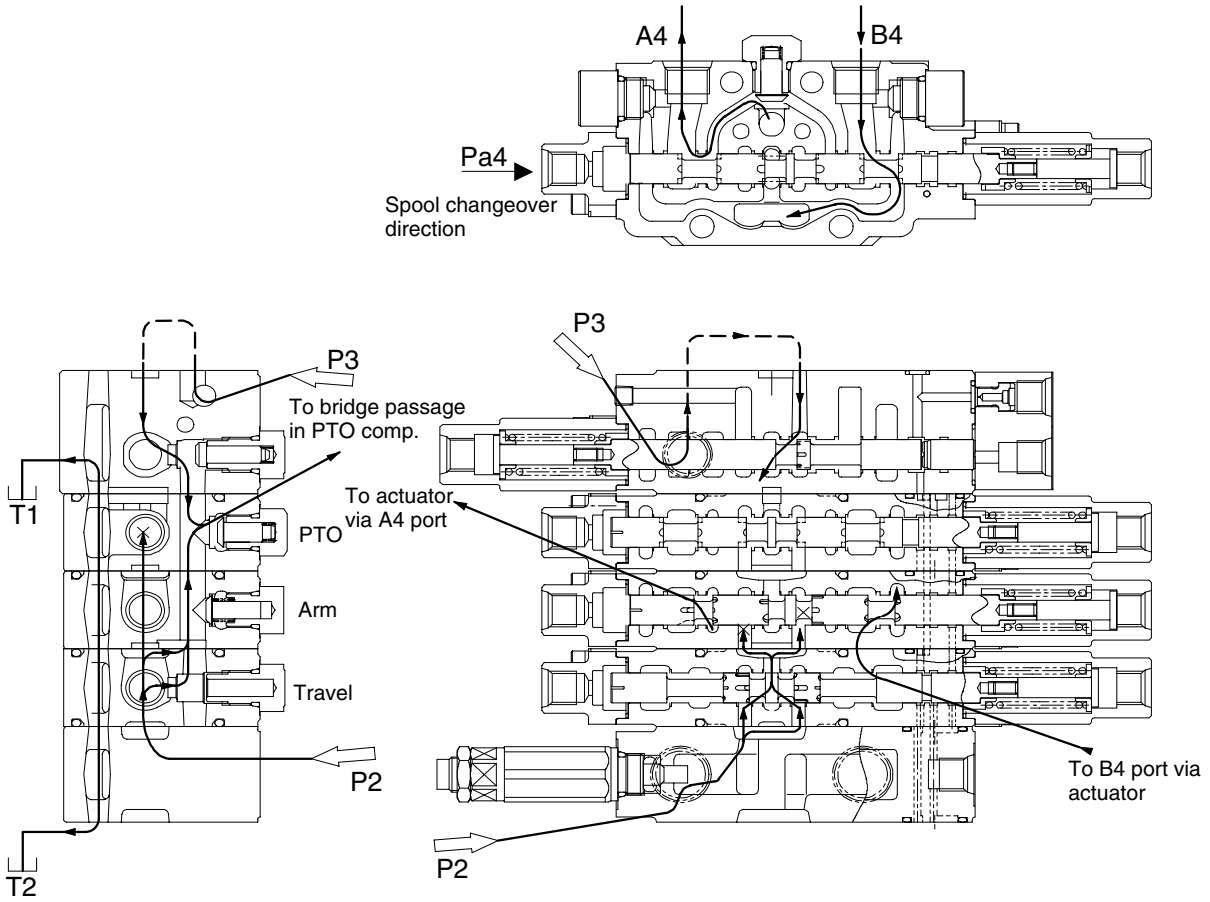

PTO operation

R35Z72MCV21

8) DOZER OPERATION

Dozer up operation

When the dozer up operation is carried out, the secondary pressure from the remote control valve is applied to Pa1 port to change over the dozer spool.

Since the P3 side bypass passage is shut off at the dozer section after the dozer spool changeover, the oil flowed from P3 port through the P3 side parallel passage flows into A1 port through the load check valve in the dozer section and the bridge passage since A1 port and the bridge passage have been opened after the spool changeover and then into the rod side of the dozer cylinder.

On the other hand, the oil returned from the head side of the dozer cylinder flows into B1 port to the tank passage that has opened after the spool changeover.

Then, the dozer cylinder retracts to raise the dozer.

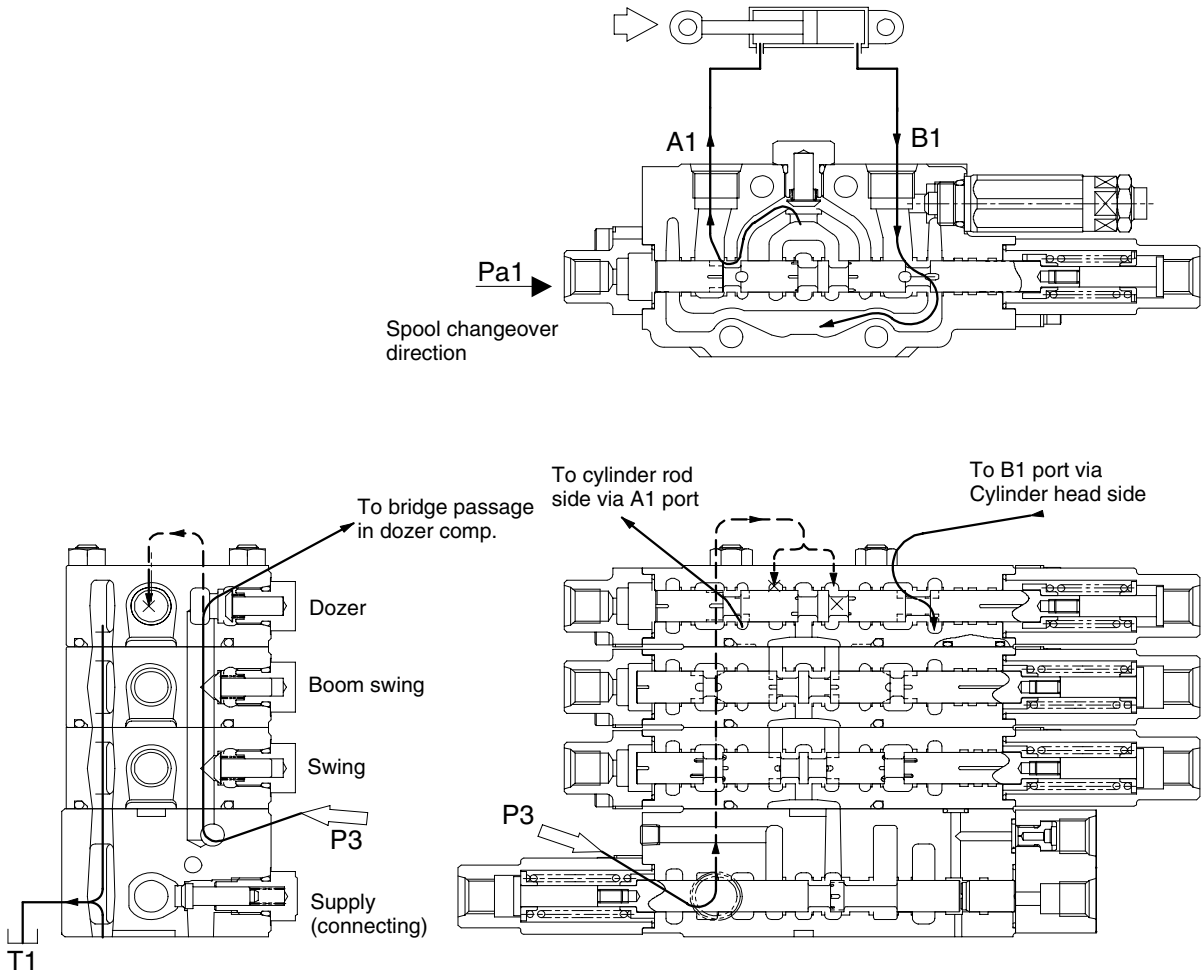

Dozer up operation

R35Z72MCV22

Dozer down operation

When the dozer down operation is carried out, the secondary pressure from the remote control valve is applied to Pb1 port to change over the dozer spool.

Since the P3 side bypass passage is shut off at the dozer section after the dozer spool changeover, the oil flowed from P3 port through the P3 side parallel passage flows into B1 port through the load check valve in the dozer section and the bridge passage since B1 port and the bridge passage have been opened after the spool changeover and then into the head side of the dozer cylinder.

On the other hand, the oil returned from the rod side of the dozer cylinder flows into A1 port to the tank passage that has opened with the spool's notch after the spool changeover.

Then, the dozer cylinder extends to lower the dozer.

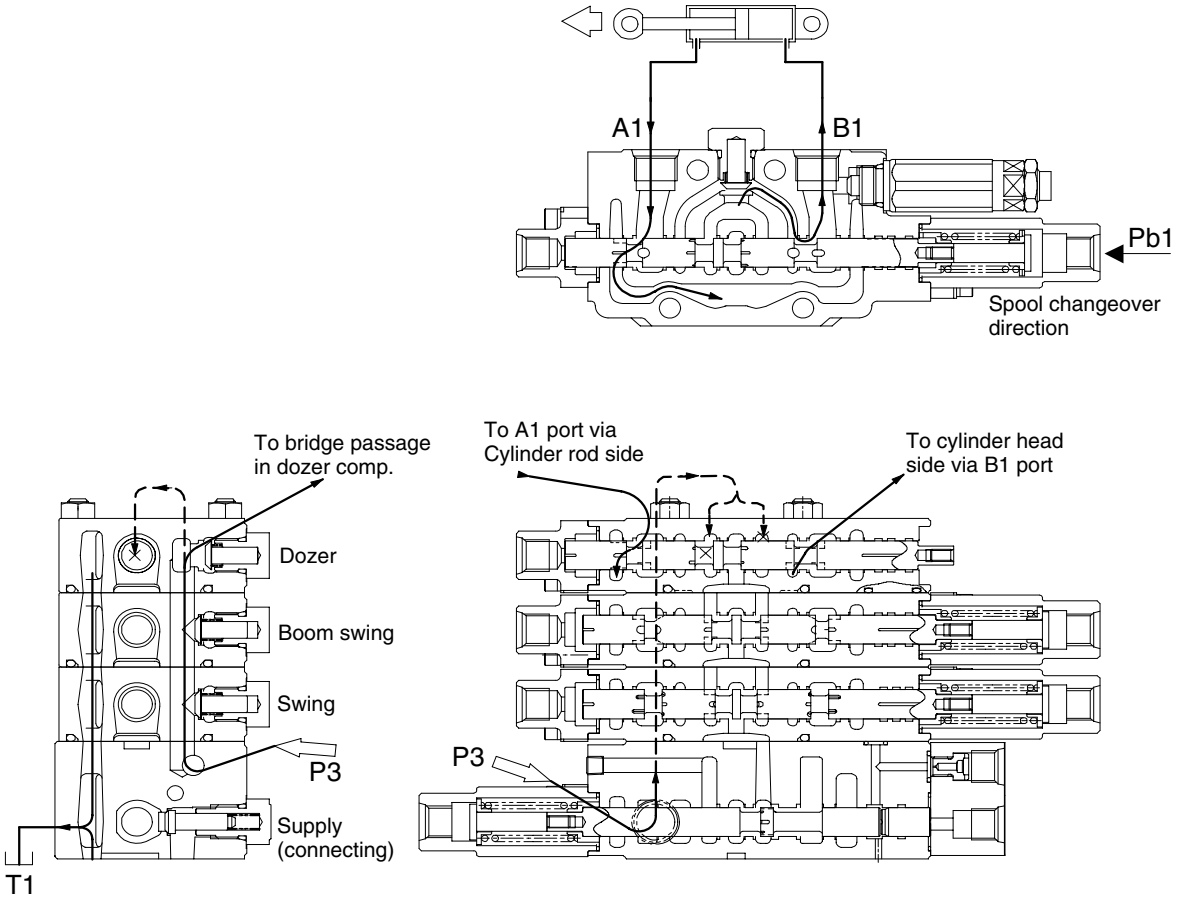

Dozer down operation

R35Z72MCV23

9) BOOM SWING OPERATION

Boom left swing operation

When the boom left swing operation is carried out, the secondary pressure from the remote control valve is applied to Pb2 port to change over the boom swing spool.

Since the P3 side bypass passage is shut off at the boom swing section after the boom swing spool changeover, the oil flowed from P3 port through the P3 side parallel passage flows into B2 port through the load check valve in the boom swing section and the bridge passage since B2 port and the bridge passage have been opened after the spool changeover and then into the rod side of the boom swing cylinder.

On the other hand, the oil returned from the head side of the boom swing cylinder flows into A2 port to the tank passage that has opened with the spool's notch after the spool changeover.

Then, the boom swing cylinder retracts to swing the attachment left.

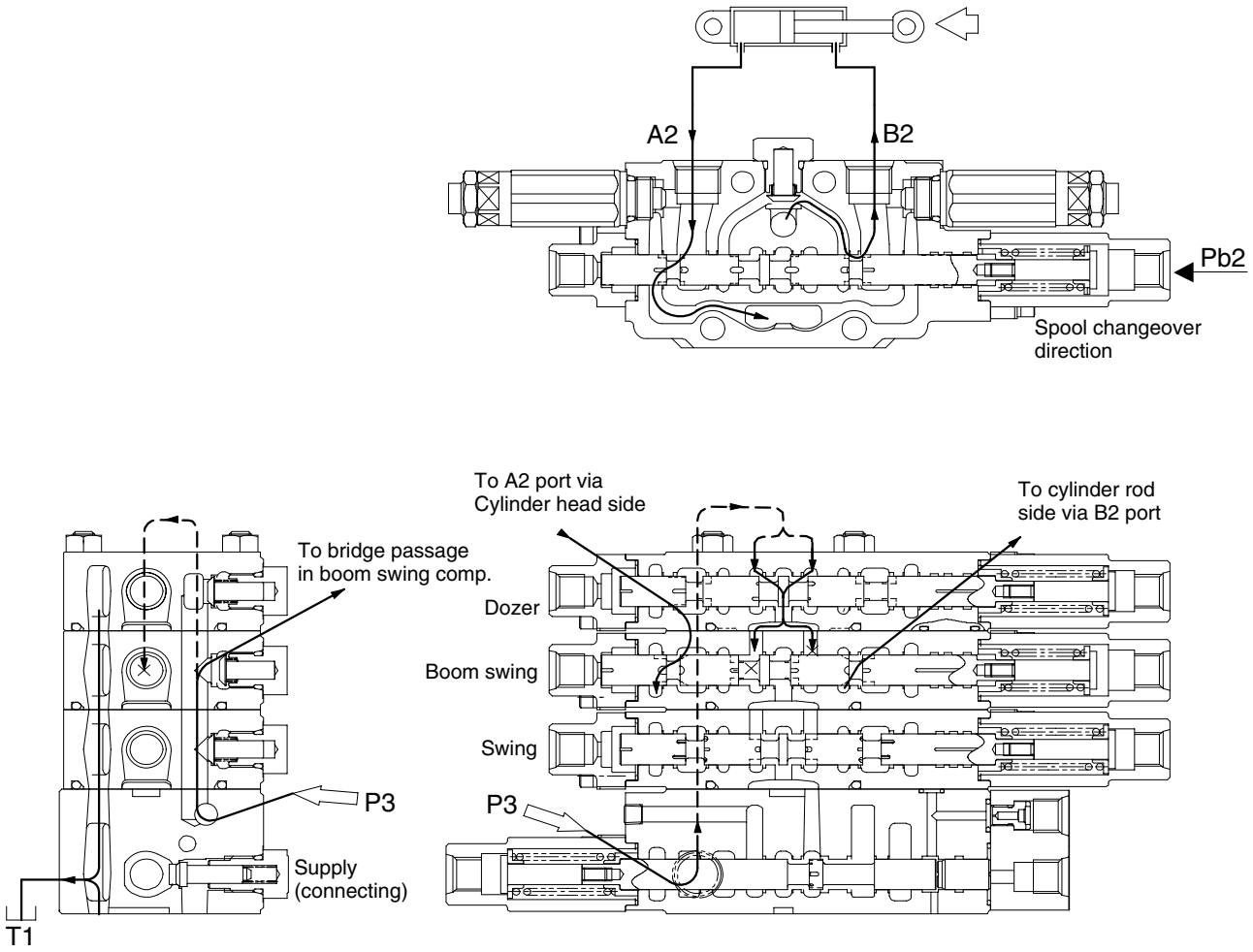

Boom left swing operation

R35Z72MCV24

Boom right swing operation

When the boom right swing operation is carried out, the secondary pressure from the remote control valve is applied to Pa2 port to change over the boom swing spool.

Since the P3 side bypass passage is shut off at the boom swing section after the boom swing spool changeover, the oil flowed from P3 port through the P3 side parallel passage flows into A2 port through the load check valve in the boom swing section and the bridge passage since A2 port and the bridge passage have been opened after the spool changeover and then into the head side of the boom swing cylinder.

On the other hand, the oil returned from the rod side of the boom swing cylinder flows into B2 port to the tank passage that has opened with the spool's notch after the spool changeover.

Then, the boom swing cylinder extends to swing the attachment right.

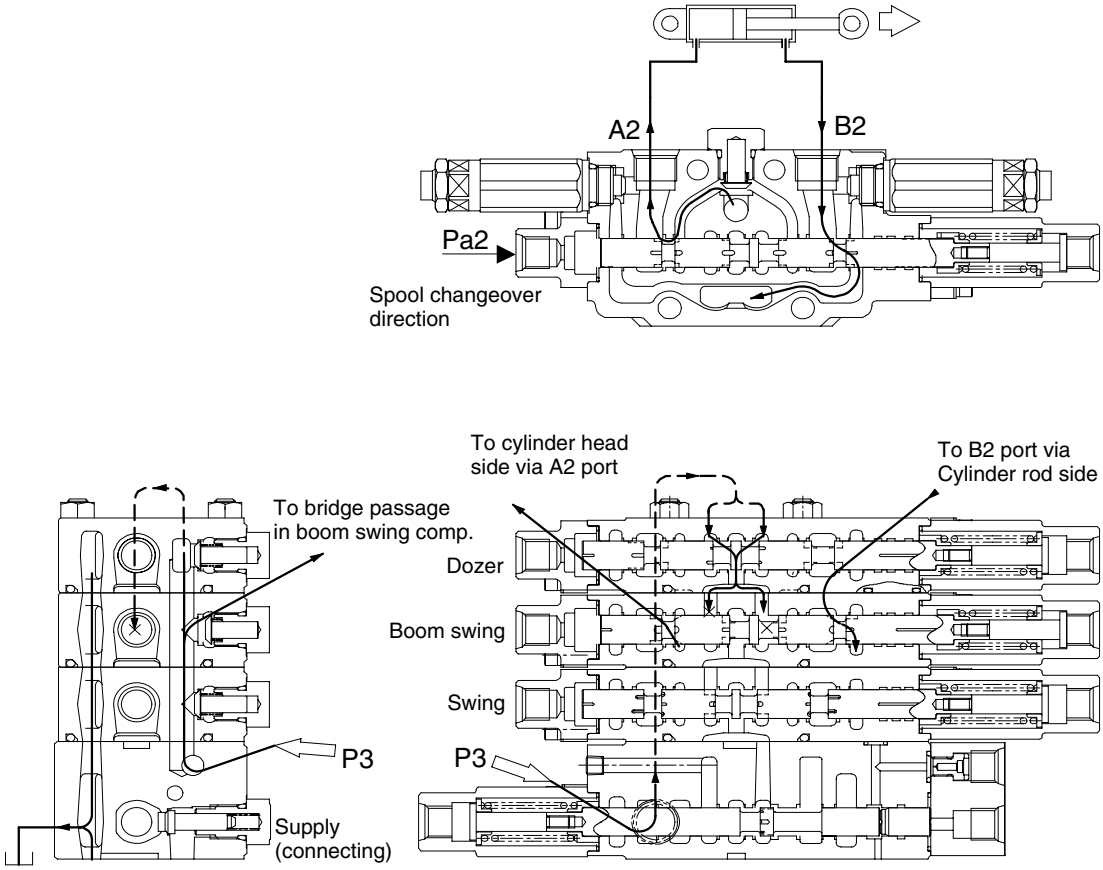

T1

Boom right swing operation

R35Z72MCV25

(10) SWING OPERATION

For the swing operation, both Pa pressurization and Pb pressurization are the same on operation so that only Pa pressurization is explained as follows.

When the right swing operation is carried out, the secondary pressure from the remote control valve is applied to Pa3 port to change over the swing spool.

Since the P3 side bypass passage is shut off at the swing section after the swing spool changeover, the oil flowed from P3 port through the P3 side parallel passage flows into A3 port through the load check valve in the swing section and the bridge passage since A3 port and the bridge passage have been opened after the spool changeover and then into the swing motor.

On the other hand, the oil returned from the swing motor flows into B3 port to the tank passage that has opened with the spool's notch after the spool changeover.

Then, the upper swing body swings right.

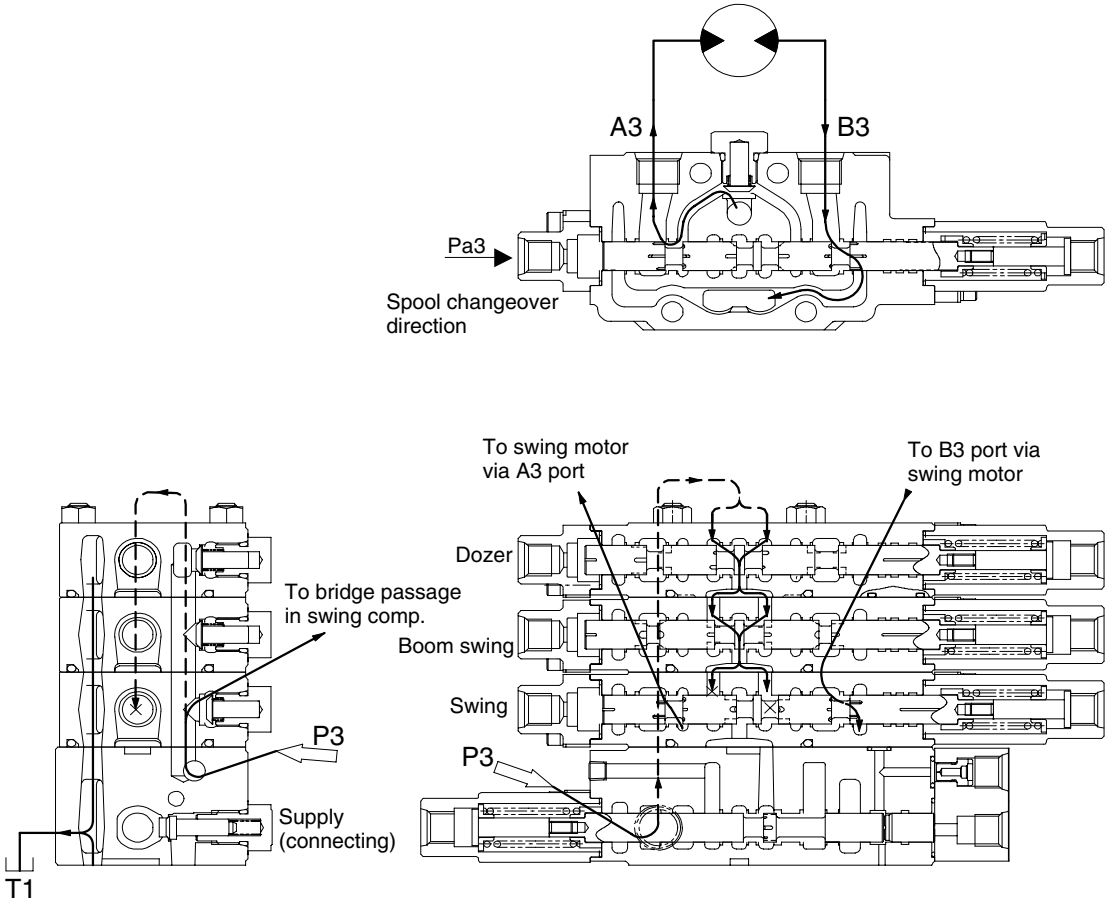

Right swing operation

R35Z72MCV26

(11) COMBINED CONTROL OPERATION ①

Boom up + Arm in + bucket

When the above combined control is carried out, the secondary pressure from the remote control valve is applied to each spool to change over them. Since the secondary pressure for arm in operation is also applied to the pilot chamber on the connecting section spring chamber side according to the piping, the connecting spool operates against the secondary pressure developed from boom up operation and arm in operation.
(Boom up operation secondary pressure - Arm in operation secondary pressure =
connecting spool changeover pressure)

When all the above combined operations are carried out in full lever operation (full changeover), the oil supplied from P1 pump is supplied to the boom and bucket and the oil from P2 pump to the arm. Since the connecting spool changeover pressure becomes "0" as mentioned above, the connecting spool cannot change over and the oil from P3 pump flows to the P1 and P2 side parallel passages through the connecting section. Accordingly, much oil flows to the arm side normally because of its low working load.

In this condition, since gradually restricting the arm in operation (returning the lever) causes the secondary pressure for arm in operation to decrease, the connecting spool changeover pressure to increase, the connecting spool to start changing over, and the passage to the arm side to be narrowed, the oil supplied from P3 pump flows abundantly into the P1 side (Boom, bucket).

As mentioned above, the oil supplied from P3 pump flows suitably into each attachment according to the control input during the above combined control, resulting in a well-balanced and efficient working speed.

Besides, since the oil flow to the bucket whose working load is less than the boom is restricted with an orifice (the orifice of boom priority) provided before the bucket section in the P1 side parallel passage, much oil flows into the boom section. As a result, the working speed balance between both attachments is maintained during the combined operation of boom and bucket.

P3 side (Connecting side) circuit

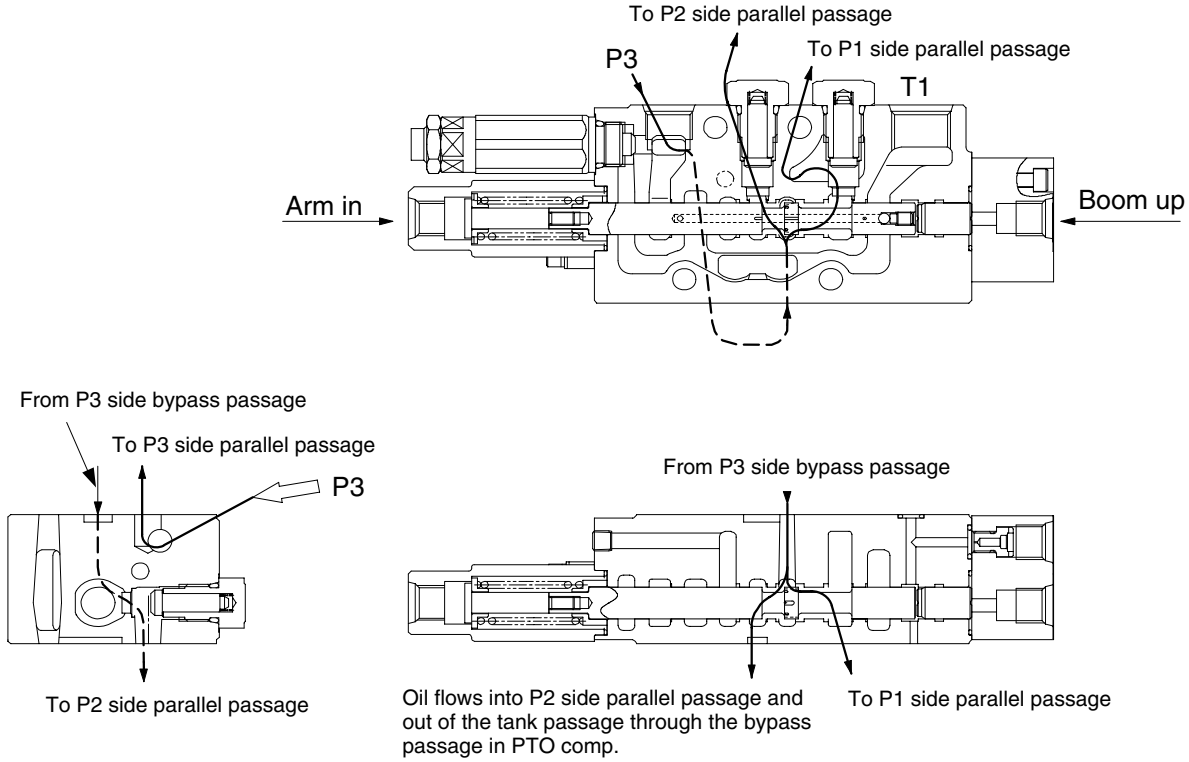

P1 side circuit(the orifice of boom priority)

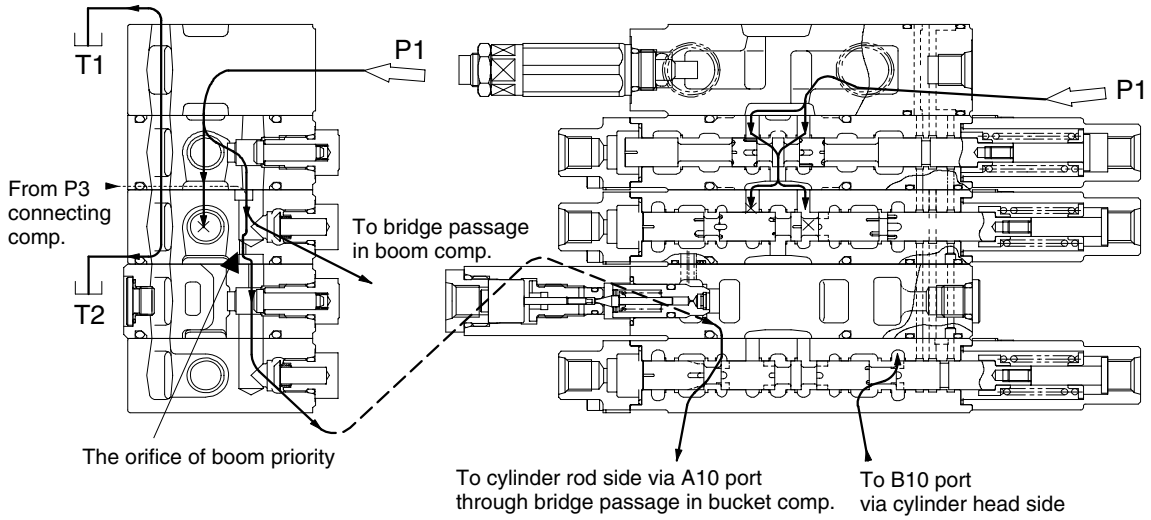

Oil flow during combined operation

R35Z72MCV27

(12) COMBINED CONTROL OPERATION ②

Both travels + bucket

When the both travels operation is carried out together with the bucket operation at the same time, the oil flowed from Pp1 port flows through the orifice passage and into the travel independent signal passage; both travels and the bucket spool changeover make a passage to the drain port shut off.

Then, the travel independent passage becomes the same pressure as Pp1 port pressure (pilot primary pressure).

When the travel independent passage becomes Pp1 pressure, the Pp1 pressure is applied to the connecting spool to change over the connecting spool.

Since the bypass passage from P3 to P2 side, which is a passage to the tank, in restricted, the oil from P3 side flows into the P1 side parallel passage that is connected through a check valve.

With his circuit arrangement, the bucket section is supplied with pressure oil from P3 during both travels operation, the simultaneous operation becomes possible.

Besides, since each of P1 and P2 is used independently during both travels and only P3 is used for bucket operation, stable travel is possible to continue even if there is change in the bucket load.

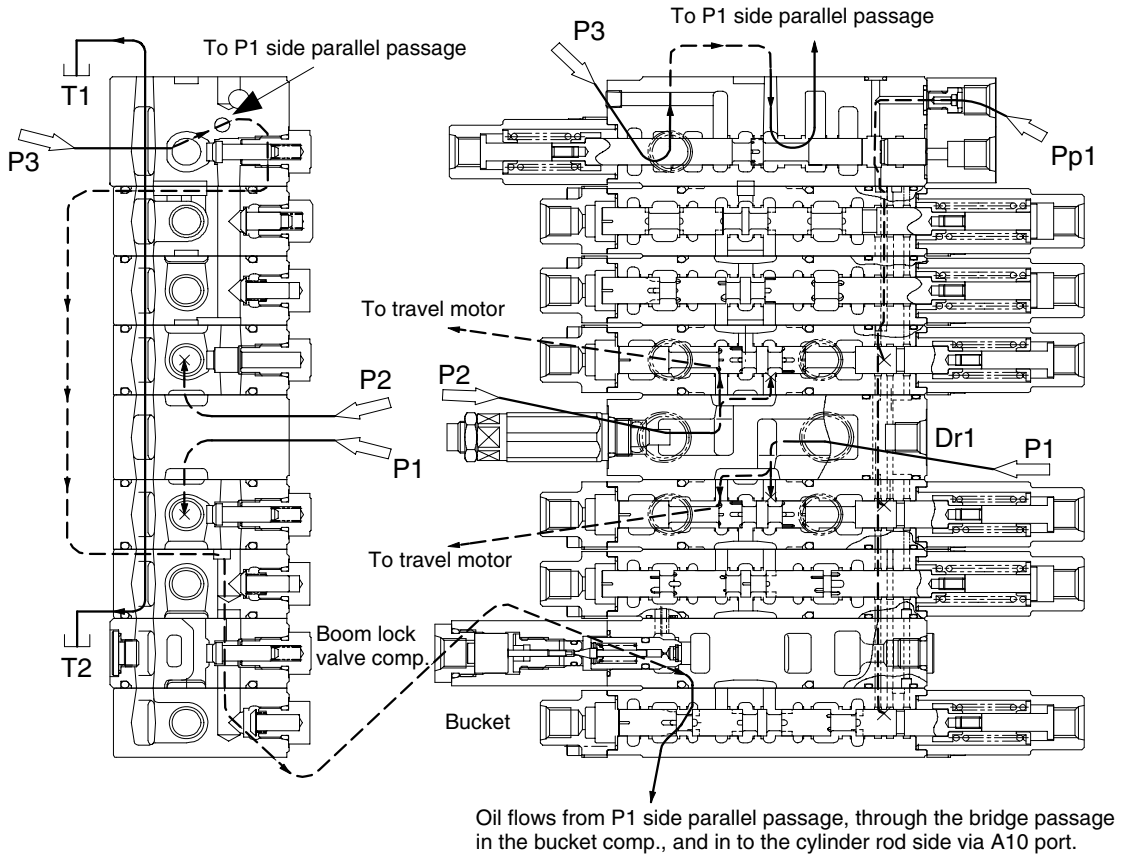

Travel independence operation

R35Z72MCV28

(13) MAIN AND PORT RELIEF VALVE OPERATION

Main relief valve operation

Main relief valves (MRV) are different in the uses for P1/P2 and P3; however, their structures and operation are the same.

① Pressure oil flows through the inside of the piston built in the pressure regulating valve (poppet-main V') and the orifice B and then into the internal chamber A until it is filled up. The filled up pressure causes both of the pressure regulating valve and the socket and body seat to be seated securely.

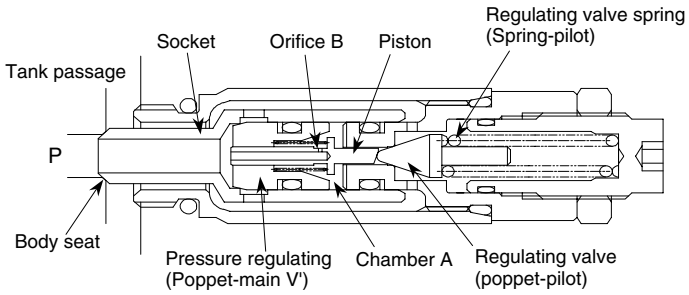

MRV operation (1) R35Z72MCV29

② When the oil pressure at port P increases up to the setting pressure of regulating valve spring, the pressure oil is applied to the regulating valve via the piston to open the regulating valve. Then, the pressure oil flows through a passage in the direction of piston inside → orifice B → chamber A → circular orifice C → Drill hole D and the external of socket and then into the tank passage.

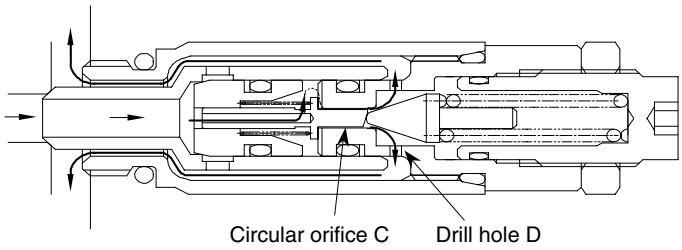

MRV operation (2) R35Z72MCV30

③ Since the pressure inside the chamber A decreases when the regulating valve is opened, which causes the pressure regulating valve to open to let the pressure oil port P flows into the tank passage through drill hole E.

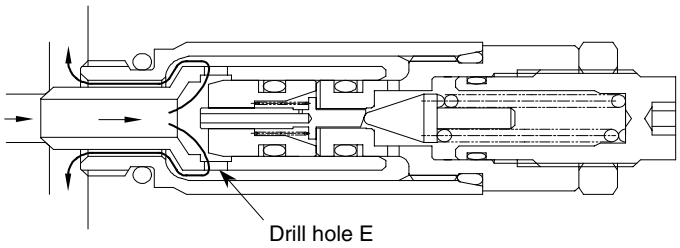

MRV operation (3) R35Z72MCV31

④ Also, since the regulating valve is pressed to the seat by regulating valve spring when the pressure at port P decreases below the setting pressure of regulating valve spring, the pressure inside chamber A becomes the same as the pressure at port P to cause the pressure regulating valve to be pressed to the seat, resulting in the original condition (①).

Overload relief valve (ORV) operation ①

① Pressure oil flows through the inside of the piston built in the pressure regulating valve (poppet-main V') and the orifice B and then into the internal chamber A until it is filled up. The filled up pressure causes both of the pressure regulating valve and socket and body seat to be seated securely.

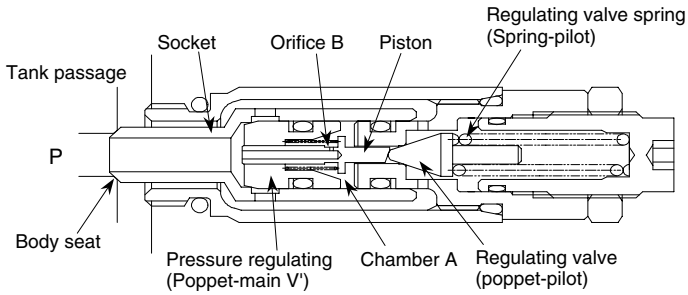

ORV operation (1) R35Z72MCV32

② When the oil pressure at port P increases up to the setting pressure of regulating valve spring, the pressure oil is applied to the regulating valve via the piston to open the regulating valve. Then, the pressure oil flows through a passage in the direction of piston inside → orifice B → chamber A → circular orifice C → Drill hole D and the external of socket and then into the tank passage.

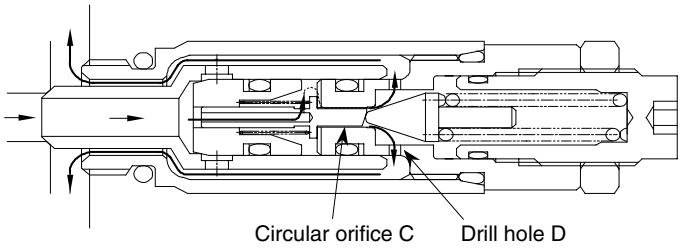

ORV operation (2) R35Z72MCV33

③ Since the pressure inside the chamber A decreases when the regulating valve is opened, which causes the pressure regulating valve to open to let the pressure oil port P flows into the tank passage through drill hole E.

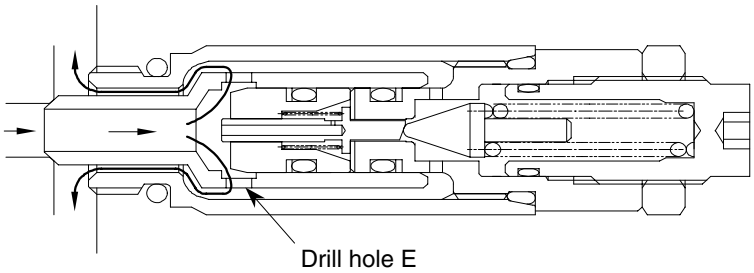

ORV operation (3) R35Z72MCV34

④ Also, since the regulating valve is pressed to the seat by regulating valve spring when the pressure at port P decreases below the setting pressure of regulating valve spring, the pressure inside chamber A becomes the same as the pressure at port P to cause the pressure regulating valve to be pressed to the seat, resulting in the original condition (①).

Overload relief valve (ORV) operation ② 【Operation during suction】

If there is negative pressure at port P (or the tank passage pressure is higher than P pressure), the socket is applied with press and open force. Then, the opening between body seat and socket increases to cause the oil to flow into port P from the tank passage, filling up the space.

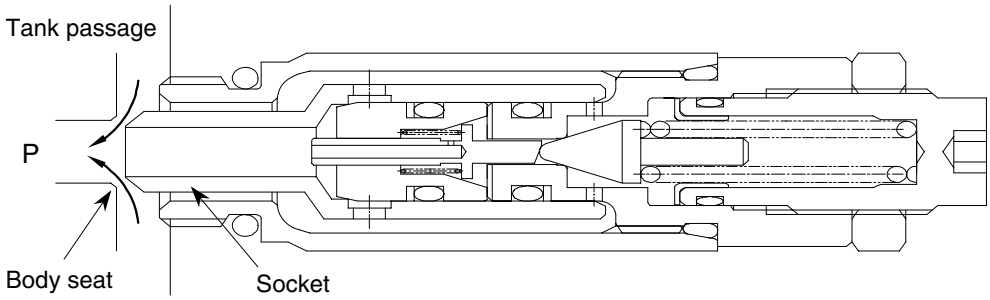

ORV operation (during suction)

R35Z72MCV35

GROUP 3 SWING DEVICE

1. STRUCTURE

Swing device consists swing motor and swing reduction gear.

1) SWING MOTOR

Swing motor include mechanical parking valve, relief valve, make up valve and time delay valve.

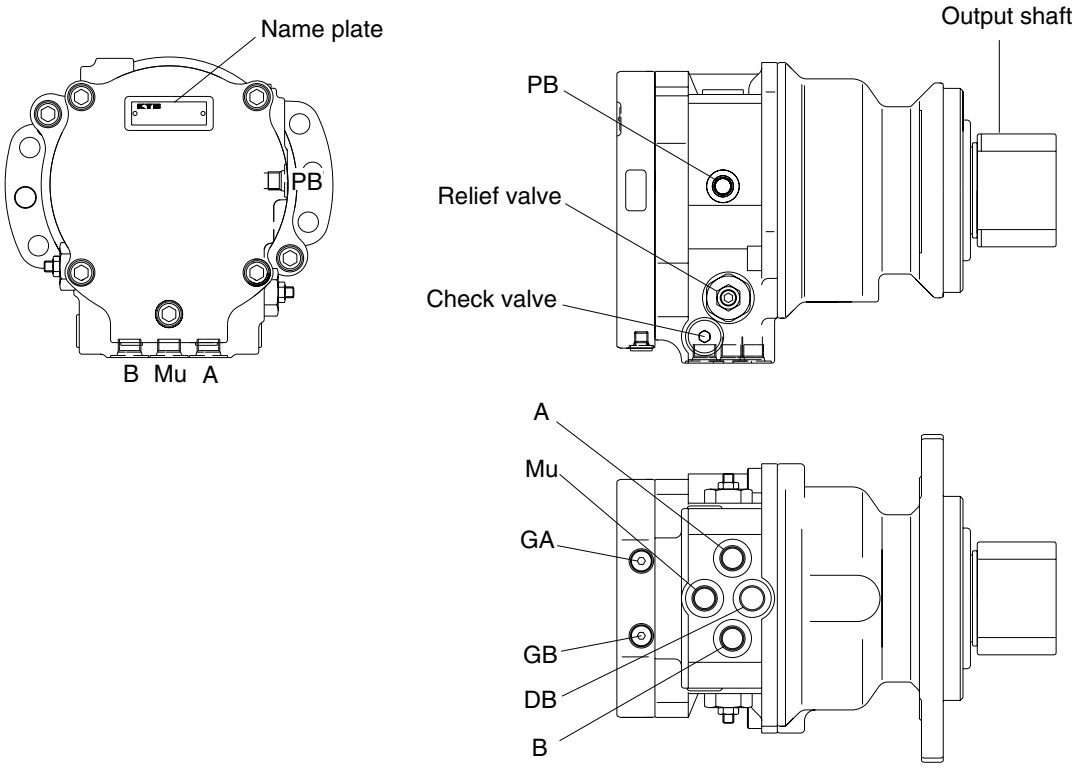

R35Z72SM01

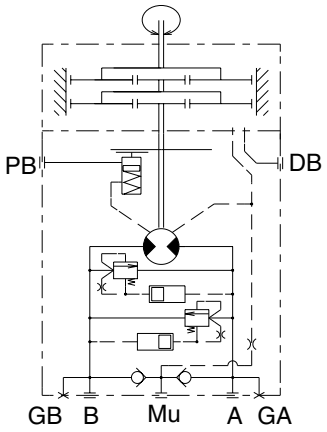

HYDRAULIC CIRCUIT

Port	Port name	Port size
A	Main port	PF 3/8
B	Main port	PF 3/8
DB	Drain port	PF 3/8
Mu	Make up port	PF 3/8
PB	Brake release port	PF 1/4
GA,GB	Gage port	PF 1/8

2) COMPONENTS

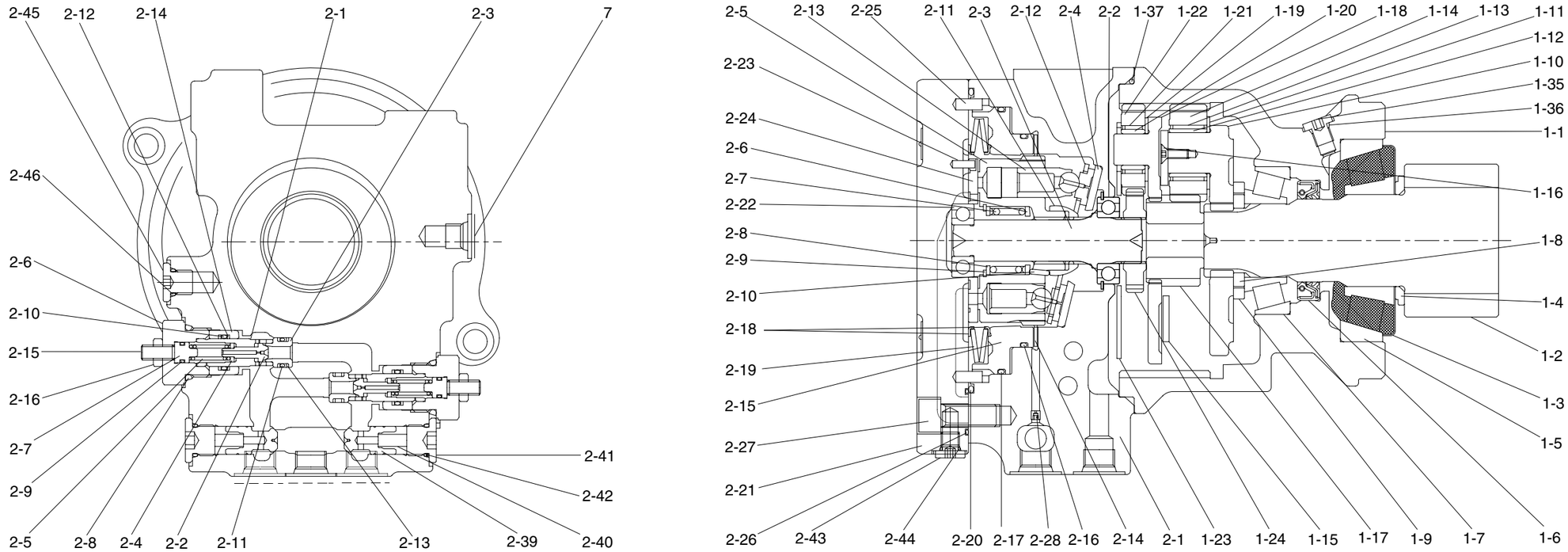

1	Gear box	1-11	Thrust washer	1-22	Planetary gear	2-5	Cylinder block	2-16	O-ring	2-27	Socket head bolt
1-1	Housing	1-12	Inner race	1-23	Thrust plate	2-6	Collar	2-17	O-ring	2-28	Orifice
1-2	Pinion shaft	1-13	Needle bearing	1-24	Drive gear	2-7	Spring	2-18	Spring seat	2-38	Relief valve assy
1-3	Plate	1-14	Planetary gear B	1-35	Plug	2-8	Washer	2-19	Spring	2-39	Check valve
1-4	Collar	1-15	Thrust plate	1-36	O-ring	2-9	Ring-snap	2-20	O-ring	2-40	Spring
1-5	Tapper roller bearing	1-16	Screw	1-37	O-ring	2-10	Pin	2-21	Cover	2-41	Plug
1-6	Oil seal	1-17	Sun gear B	2	Axial motor piston	2-11	Retainer holder	2-22	Ball bearing	2-42	O-ring
1-7	Tapper roller bearing	1-18	Holder	2-1	Case	2-12	Retainer plate	2-23	Pin	2-43	Plug
1-8	Plate	1-19	Thrust washer	2-2	Ball bearing	2-13	Piston assy	2-24	Valve plate	2-44	O-ring
1-9	Collar	1-20	Inner race	2-3	Shaft	2-14	Disc	2-25	Pin	2-45	Plug
1-10	Holder	1-21	Needle bearing	2-4	Thrust plate	2-15	Brake piston	2-26	O-ring	2-46	O-ring

2. DESCRIPTION OF FUNCTION AND OPERATION

1) SWASH PLATE MOTOR

The cylinder block incorporates nine pistons. The end face of the cylinder block is in contact with the valve plate having two woodruff ports B and C (distributing valve to change over between high and low pressure).

Principle of generation torque

When high pressure oil (Pressure P) is introduced to the B port, the inclined surface is pushed by a force of "F = P × A, A : Piston sectional area" per piston and the piston receives a reaction force from the inclined surface. The piston that is restricted in the moving direction by the cylinder block due to the reaction force generates a rotating force. The total of rotating force by the reaction force of the high pressure side pistons works on the cylinder block. The generated rotating force is transmitted as a torque to the shaft via the spline to turn the shaft.

On the other hand, if the high pressure oil is introduced to the C port, the opposite rotation is caused.

The output torque and the revolution are calculated as follows :

· Output torque (T)

$$T = \frac{P \times D \times i \times \eta m \times \eta G}{2 \times \pi \times 100}$$

· Revolution (N)

$$N = \frac{Q \times 1000 \times \eta v}{D \times i}$$

D : Displacement (cm^3/rev)
P : Effective drive pressure (MPa)
Q : Inflow (L/min)
ηm : Mechanical efficiency (motor) ($\% \times 10^{-2}$)
ηv : Volumetric efficiency (motor) ($\% \times 10^{-2}$)
i : Speed ratio of reduction gear
ηG : Efficiency of reduction gear ($\% \times 10^{-2}$)

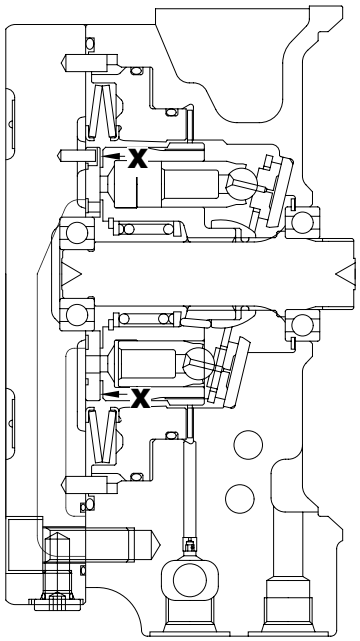

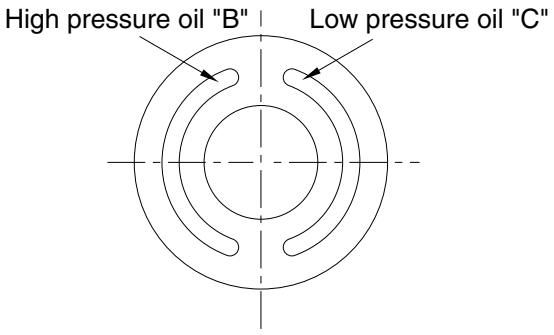

View X-X of valve plate(Outline)

R35Z72SM02

2) PARKING BRAKE

The parking brake is of wet type multi-plate construction of hydraulic release type and has a shaft lock mechanism that changes between ON and OFF of the brake by external signal pressures.

① Parking brake ON

When the hydraulic pressure for brake release is shut, the disc coupled to the periphery of the cylinder block via the spline is pushed by the spring force against the brake piston (pinned to the case so that it will not rotate) and the cylinder block and the case secured by the frictional force. Thus the shaft is locked.

② Parking brake OFF

When the brake release pressure is introduced to the brake cylinder chamber (C) via the "PB" port, the brake piston is operated by the release pressure in opposition to the spring force to eliminate the force of friction with the disc, thus allowing the shaft to rotate freely.

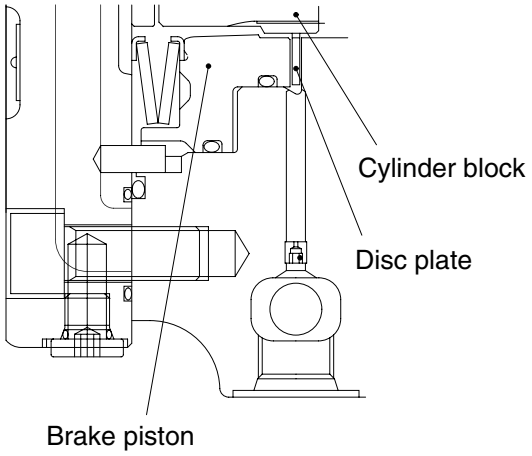

"PB" (Brake releasing pressure) OFF

R35Z72SM03

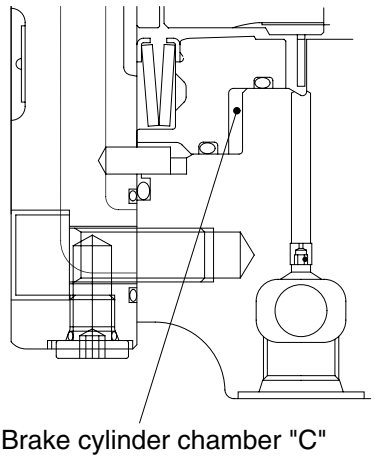

"PB" (Brake releasing pressure) ON

R35Z72SM04

3) RELIEF VALVE

The relief valves determine the drive force and the brake force for hydraulic shovel swing and are installed in the main port A and B lines. The circuit is configured to return the relief valve return oil to the counterpart main low pressure line.

A shockless function is also incorporated to reduce shock produced at the start of both acceleration and deceleration.

(1) Construction of the relief valve

① A direct-acting differential area type relief valve

② A shockless piston

The installation of a shockless type relief valve helps reduce shock and stress produced in the strength members.

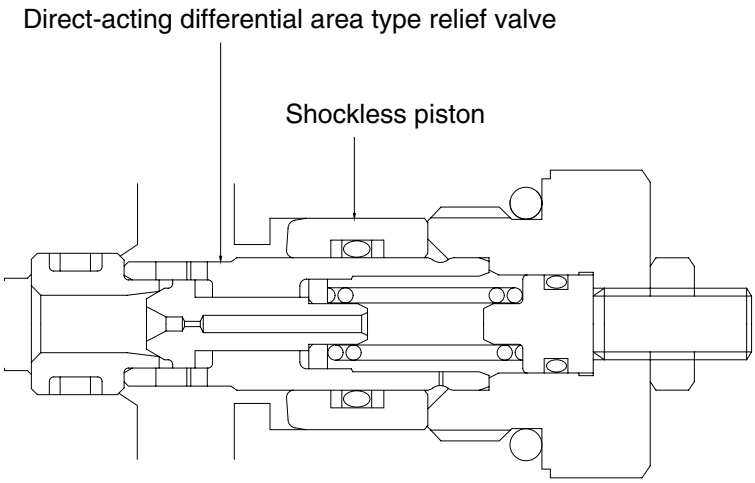

R35Z72SM05

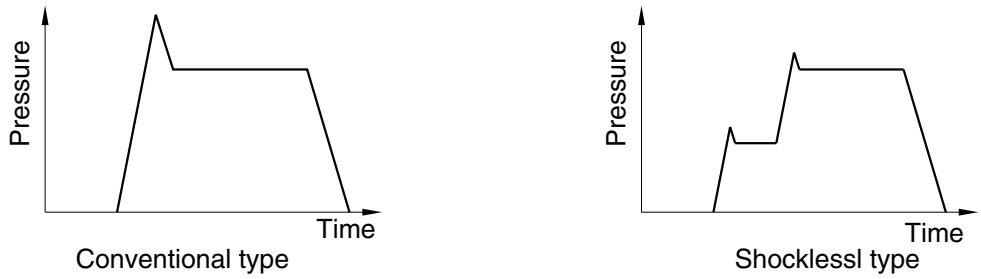

Comparison of pressure wave forms

R35Z72SM08

⑵ Relief valve operation

① First stage

At the start of operation, the shockless piston moves to maintain the spring chamber at a low pressure. Thus, the pressure receiving area of the poppet becomes the poppet seat area (S1), a considerably larger area than the pressure receiving area (S1-S2) at the specified relief setting. For this reason, the relief operating pressure is kept at a low pressure until the shockless piston completes its movement.

The low pressure holding time depends on the poppet orifice diameter, the free piston pressure receiving area and the free piston stroke.

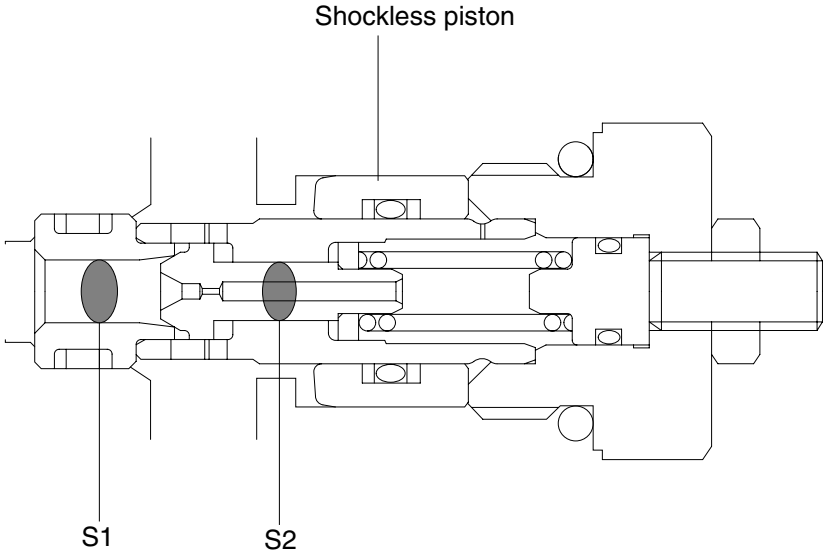

R35Z72SM06

② Second stage

When the shockless piston completes its movement, the pressure inside the spring chamber increases to make the pressures before and after the poppet equal. Then the relief valve operates at the specified set pressure.

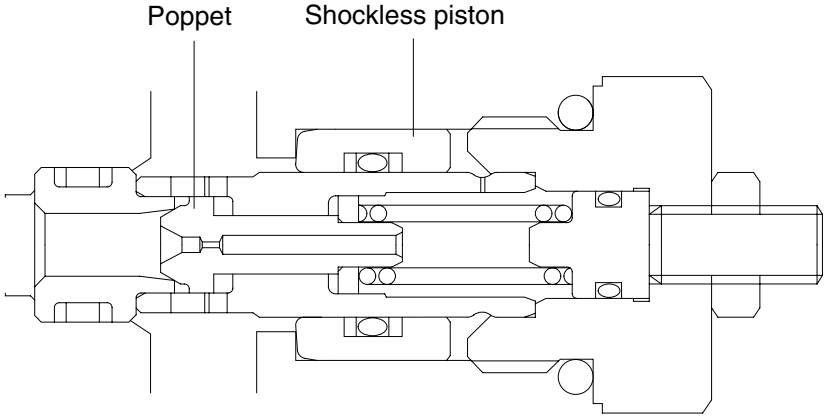

R35Z72SM07

4) MAKE-UP VALVE

The make-up valve has the following two functions.

One is to prevent cavitation produced by overrun of the piston motor in order to prevent the overrun of the upper body. When the motor is turned by the inertia of the upper body to cause the pumping action, which then causes the motor revolution to rise above the revolution equivalent to the amount of oil supplied to the motor, the amount of oil equipvalent to the shortage is supplied to the motor main circuit via the make-up valve from outside to prevent occurrence of vacuum inside the circuit.

The other is a function to add the amount of motor drain and valve leak via the make-up valve to prevent vacuum inside the circuit to provide the braking capability in the normal circuit status when a closed circuit is formed between the control valve and the motor as when braking.

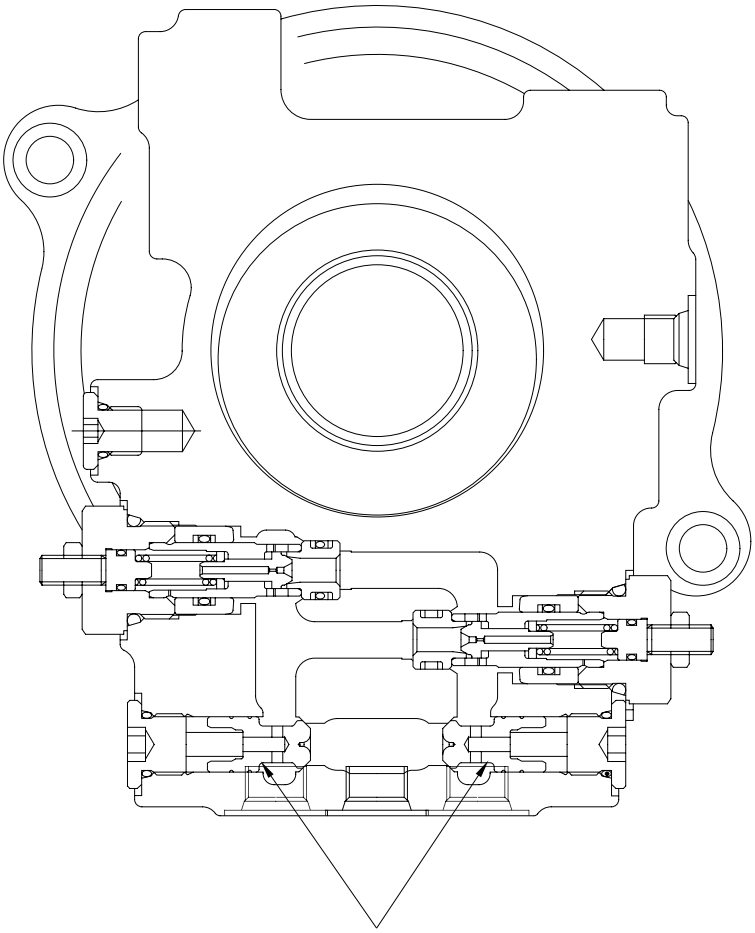

R35Z72SM09

5) REDUCTION GEAR (Planetary two-stage)

Refer to the cross section.

The motor shaft (1) is coupled to the drive gear (2) via a spline. The drive force of the hydraulic motor is transmitted from the drive gear (2) to the engaged planetary gear (3). The planetary gear (3) is meshed with the ring gear of the reduction gear housing (4). Thus, while rotating, it revolves around the ring gear. The planetary gear (3) is held by the holder (5) via the bearing and the holder transmits the revolving motion of the planetary gear (3) to the sun gear (6) coupled via the spline. The sun gear (6) meshes with the planetary gear (7) and as with the first stage, transmits the rotary motion to the planetary gear (7). Since the planetary gear (7) is meshed with the ring gear of the housing (4), it revolves while rotating. Since the planetary gear (7) is held by the holder (8) via the bearing, the holder (8) transmits the revolving motion of the planetary gear (7) to the pinion shaft (9) coupled via the spline.

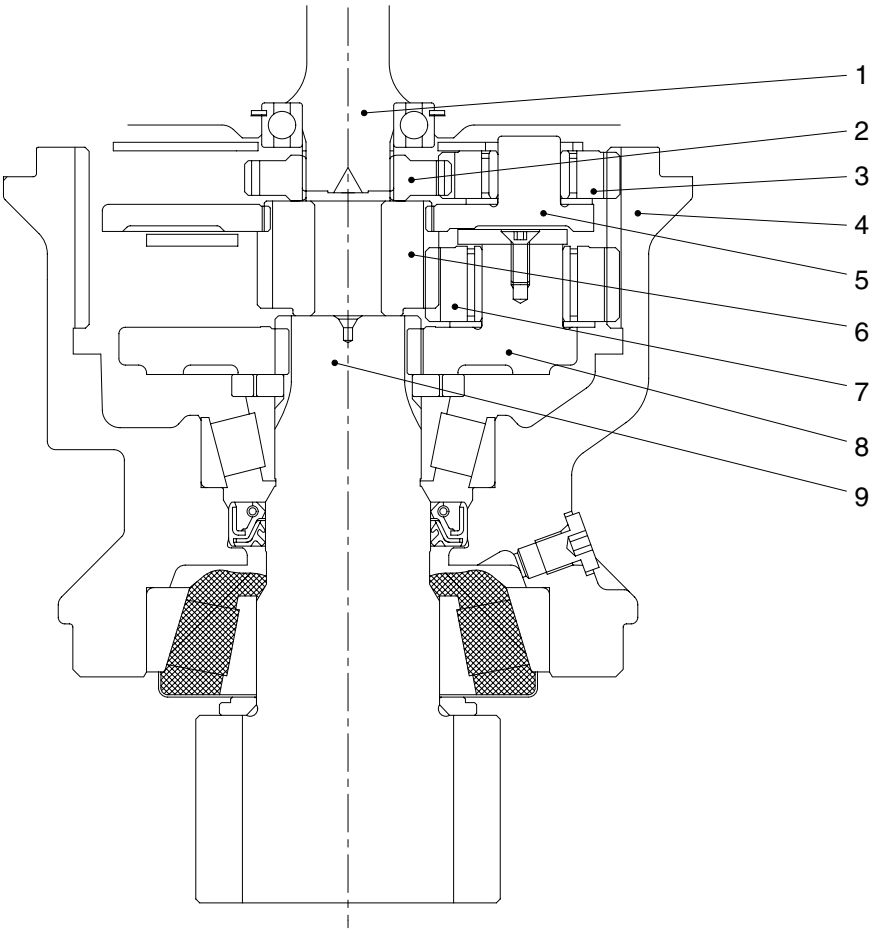

R35Z72SM10

GROUP 4 TRAVEL DEVICE

1. CONSTRUCTION

Travel device consists travel motor and gear box.

Travel motor includes counterbalance valve, parking brake and high/low speed changeover mechanism.

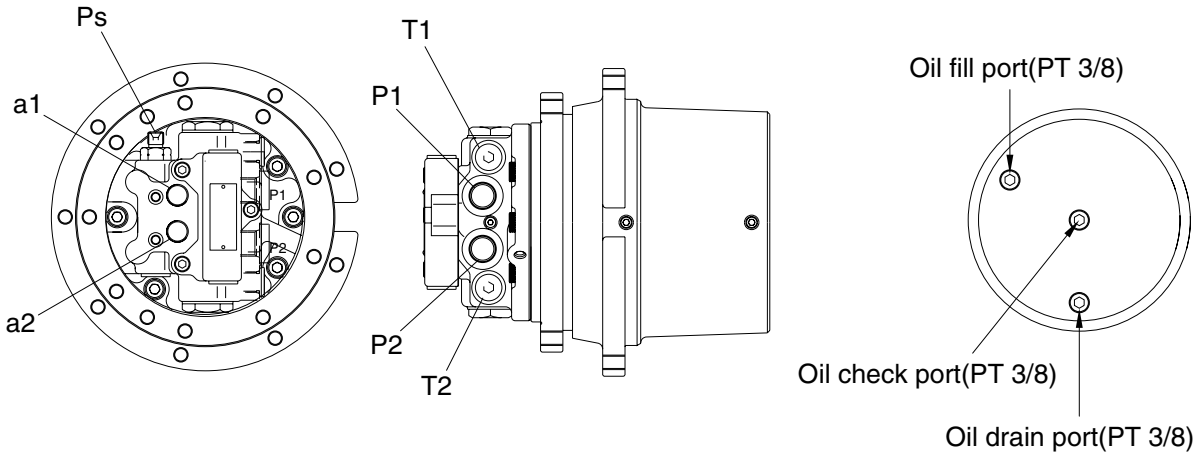

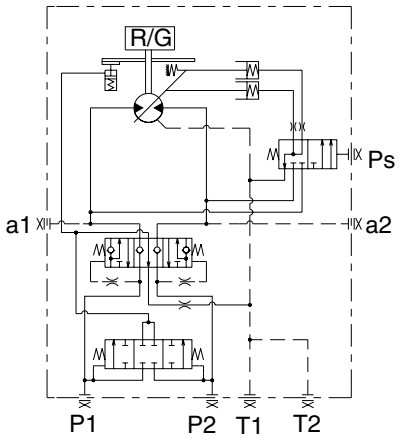

HYDRAULIC CIRCUIT

R35Z72TM20

Port	Port name	Port size
P1	Main port	PF 1/2
P2	Main port	PF 1/2
a1,a2	Gauge port	PF 1/8
T1,T2	Drain port	PF 3/8
Ps	2 speed control port	9/16-18 UNF

2) STRUCTURE

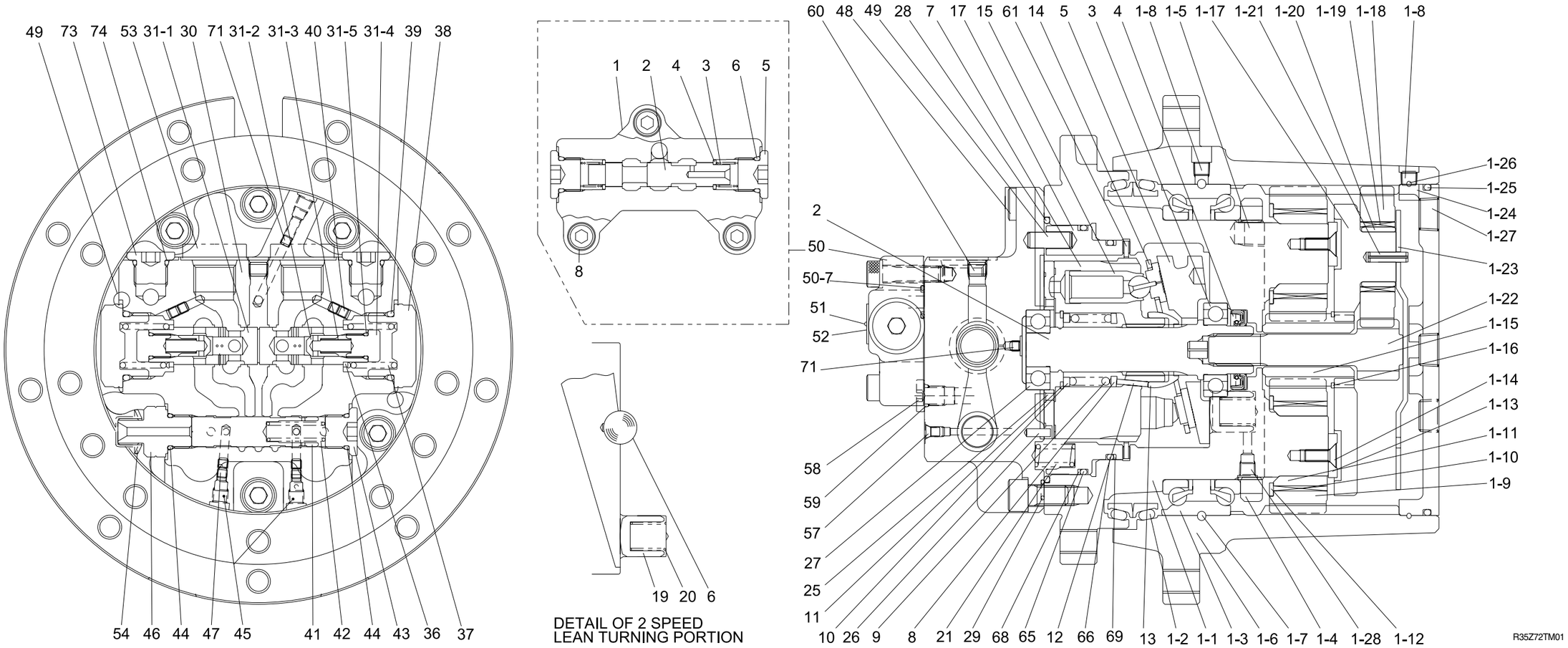

1	Gear box	1-17	Holder	5	Swash plate	27	Ball bearing	43	Plug	52	Drive screw
1-1	Flange holder	1-18	Planetary gear (A)	6	Steel ball	28	O-ring	44	O-ring	55	Plug
1-2	Floating seal	1-19	Needle bearing	7	Cylinder block	29	O-ring	45	Plug	57	O-ring
1-3	Angular bearing	1-20	Inner race	8	Color	30	Base plate	46	Plug	58	Plug
1-4	Ring nut	1-21	Spring pin	9	Spring	31	Plunger assy	47	Orifice	59	Plug
1-5	Plug	1-22	Drive gear	10	Washer	31-1	Plunger	48	Socket head bolt	60	Brake piston
1-6	Housing	1-23	Thrust plate (T = 1.8)	11	Snap ring	31-2	Check valve	49	Pin	61	Disc
1-7	Steel ball	1-23	Thrust plate (T = 2.3)	12	Pin	31-3	Spring	50	Valve assy	62	Spring
1-8	Plug	1-23	Thrust plate (T = 2.8)	13	Holder	31-4	Plug	50-1	Valve body	65	O-ring
1-9	Planetary gear B	1-24	Cover	14	Retainer plate	31-5	O-ring	50-2	Spool	66	O-ring
1-10	Needle bearing	1-25	O-ring	15	Piston assy	36	Spring seat	50-3	Spring	68	Backup ring
1-11	Collar	1-26	Wire	17	Brake piston	37	Spring	50-4	Spring seat	69	Backup ring
1-12	Thrust washer	1-27	Plug	19	Piston assy	38	Cap	50-5	Plug	71	Spring
1-13	Thrust plate	1-28	Plug	20	Spring	39	O-ring	50-6	O-ring	73	Plug
1-14	Screw	2	Shaft-sub assy	21	Spring	40	Orifice	50-7	O-ring	74	O-ring
1-15	Sun gear	3	Ball bearing	25	Valve plate	41	Spool	50-8	Socket head bolt		
1-16	Snap ring	4	Oil seal	26	Pin	42	Spring	51	Name plate		

1) BASIC STRUCTURE

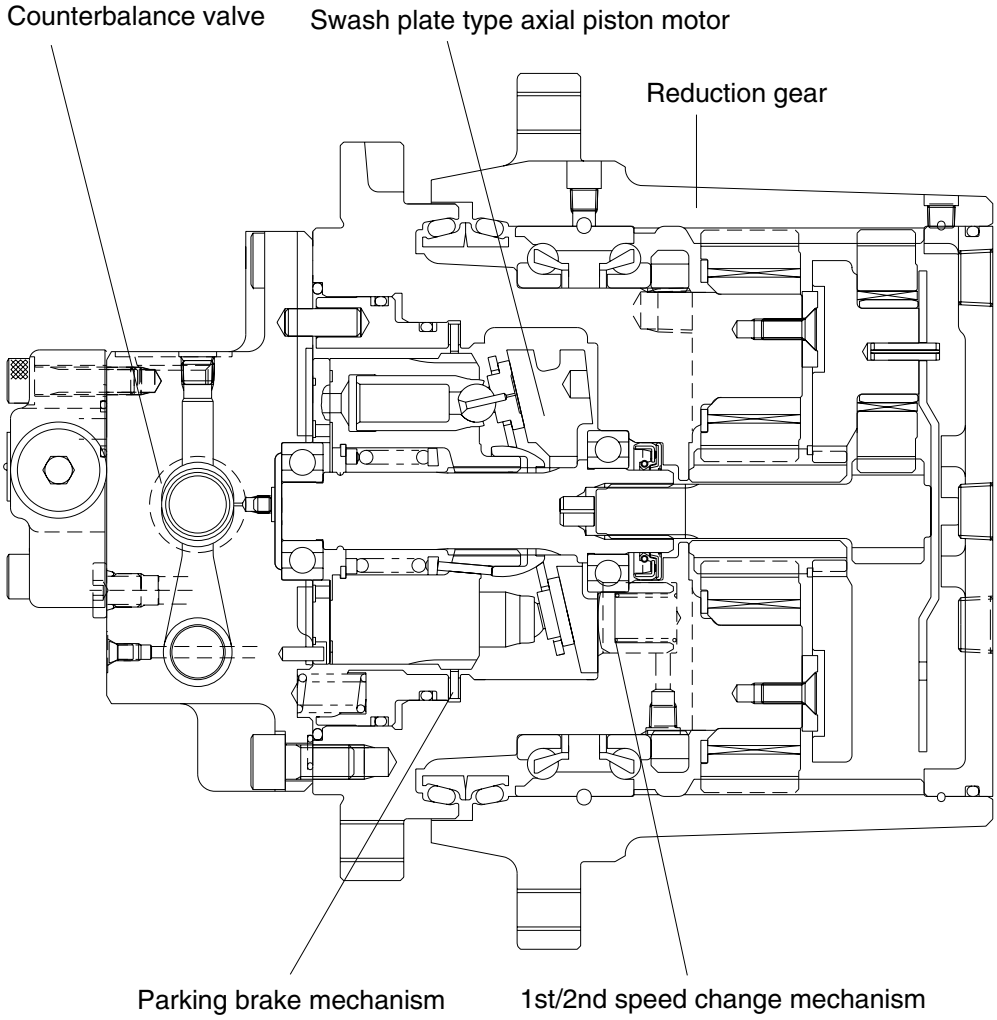

R35Z72TM02

The travel motor is integrated with swash plate type axial piston motor, counterbalance valve, 2 speed change mechanism, parking brake, anti-cavitation valve and reduction gear unit.

2. FUNCTION

1) HYDRAULIC MOTOR

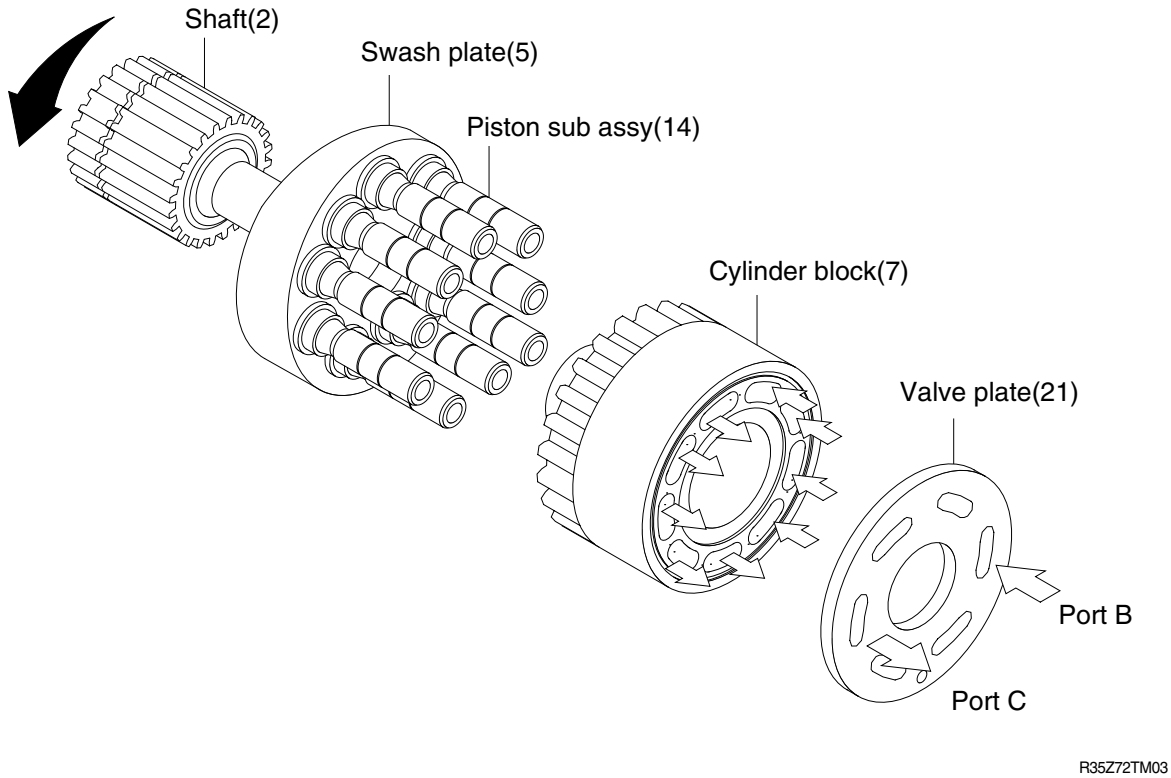

Nine piston assemblies (14) are assembled in cylinder block (7). The end face of cylinder block (7) is in contact with valve plate (21) having two crescent shaped ports, B and C (high and low pressure ports).

When supplying pressure fluid (pressure P) to B port, swash plate (5) is pushed by the force of piston sub assemblies having F = P¡ /A (A : piston pressure area). Piston assemblies receive the reaction force against it, and produce the reaction force (Ft) in rotating direction. The total force of high pressure side piston assemblies in rotating direction produces a rotating force in the cylinder block, and the torque is transmitted to shaft (2) through the spline resulting in the rotation of the shaft.

According to the above working principle, the output torque and rotating speed of the piston motor are determined by supply pressure (P) and flow rate (Q), and are calculated by the following equation.

$$T = \frac{P \times D \times \eta m}{2 * \pi}$$

$$N = \frac{Q \times 10^3 \times \eta v}{D}$$

T : Output torque [N · m]
N : Speed of rotation [rpm]
P : Working pressure [MPa]
Q : Flow rate [L/min]
D : Theoretical displacement [cm^3/rev]
ηm : Mechanical efficiency
ηv : Volumetric efficiency

2) COUNTERBALANCE VALVE

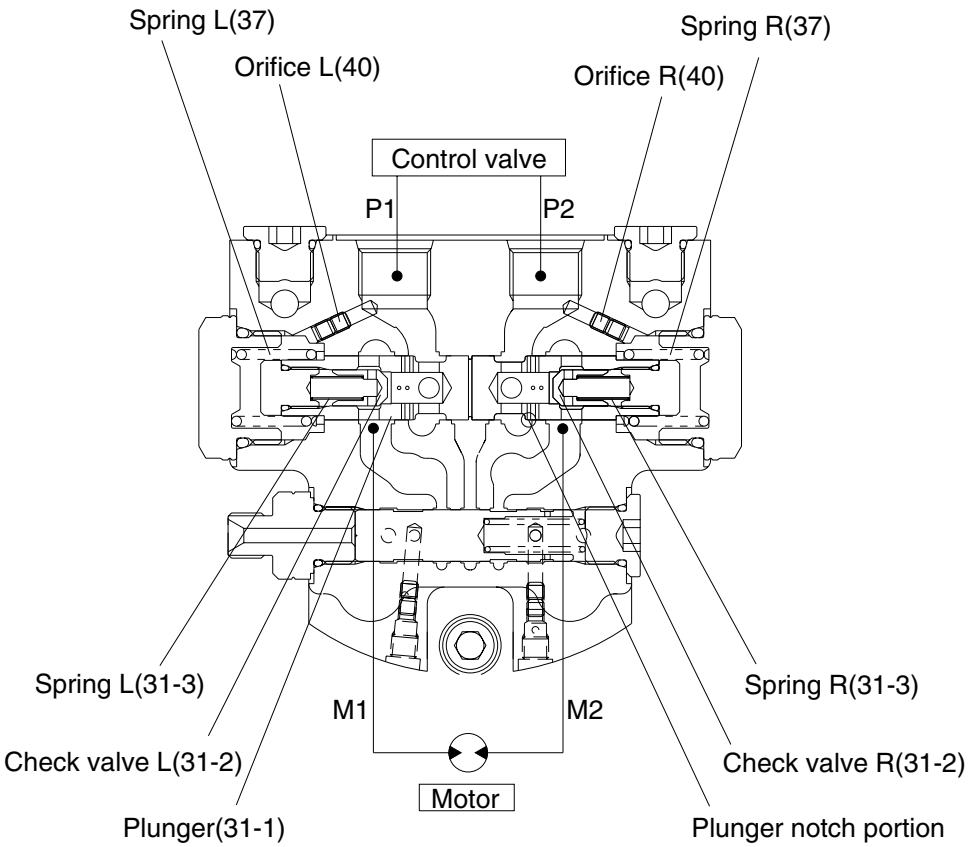

R35Z72TM04

The counterbalance valve is provided to stop the axial piston motor and to prevent overrun. When the control valve is set to the neutral position, there is no pressure in the ports P1 and P2, and ports M1 and M2 are blocked by plunger (31-1) and check valve (31-2), consequently the motor does not start rotating.

(1) Counterbalance valve work

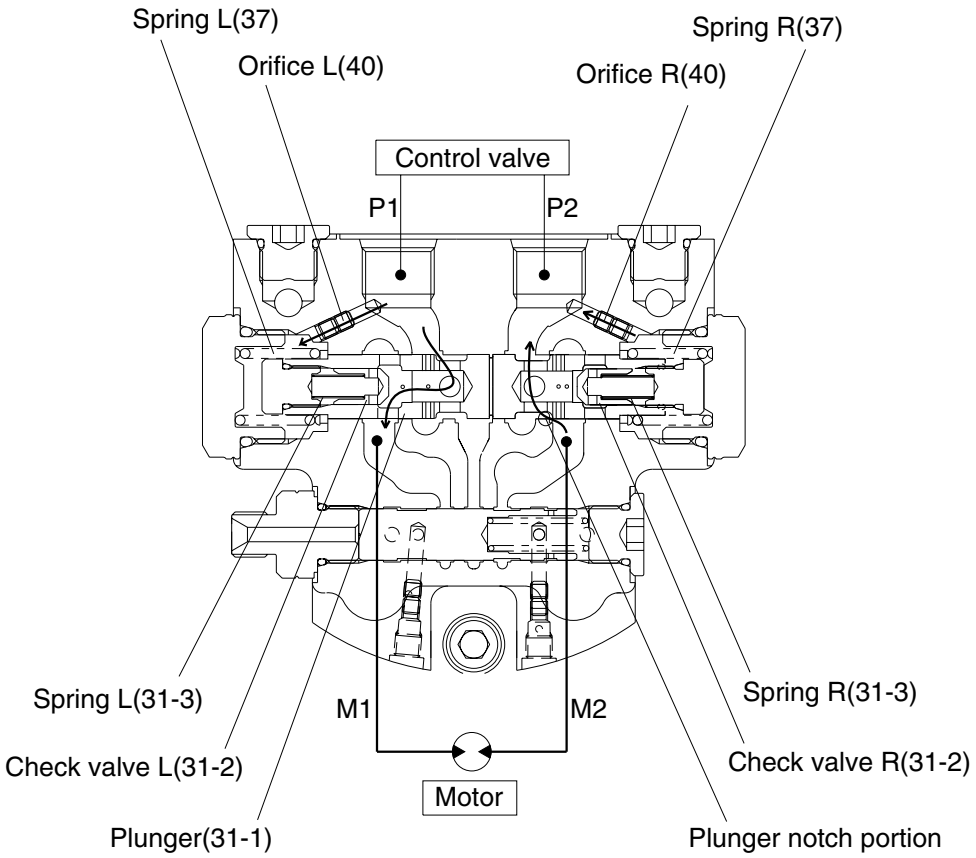

R35Z72TM05

When the fluid is supplied from pump to counterbalance valve port P1 through control valve, the fluid flows into piston motor through check valve L (31-2), and rotate the piston motor.
On the other hand, the return fluid from the piston motor flows into the counterbalance valve through port M2, but the fluid is interrupted by check valve R (31-2), and consequently the pump delivery pressure will increase.
The high pressure oil at port P1 passes through orifice L (40), pushes the end of face of plunger (31-1) and pushes the plunger rightward against spring R (37) on the opposite side with the force proportional to the pressure.
When the hydraulic pressure rises to a certain pressure, plunger (31-1) starts moving rightward, and the fluid in port M2 passes through the notch machined outer circular of plunger (31-1) and flows into the port P2, producing a back pressure on the port M2, finally returning into the tank through a control valve.
And when the pump delivery pressure rises, the throttling aperture of notch in plunger (31-1) becomes larger, and consequently the back pressure of the port M2 becomes lower.
This way, the throttling aperture of the notch in plunger (31-1) automatically adjusts the area of a return side passage in order to rotate the piston motor with the appropriate speed for port P1 side flow rate (inlet flow).

(2) Brake work

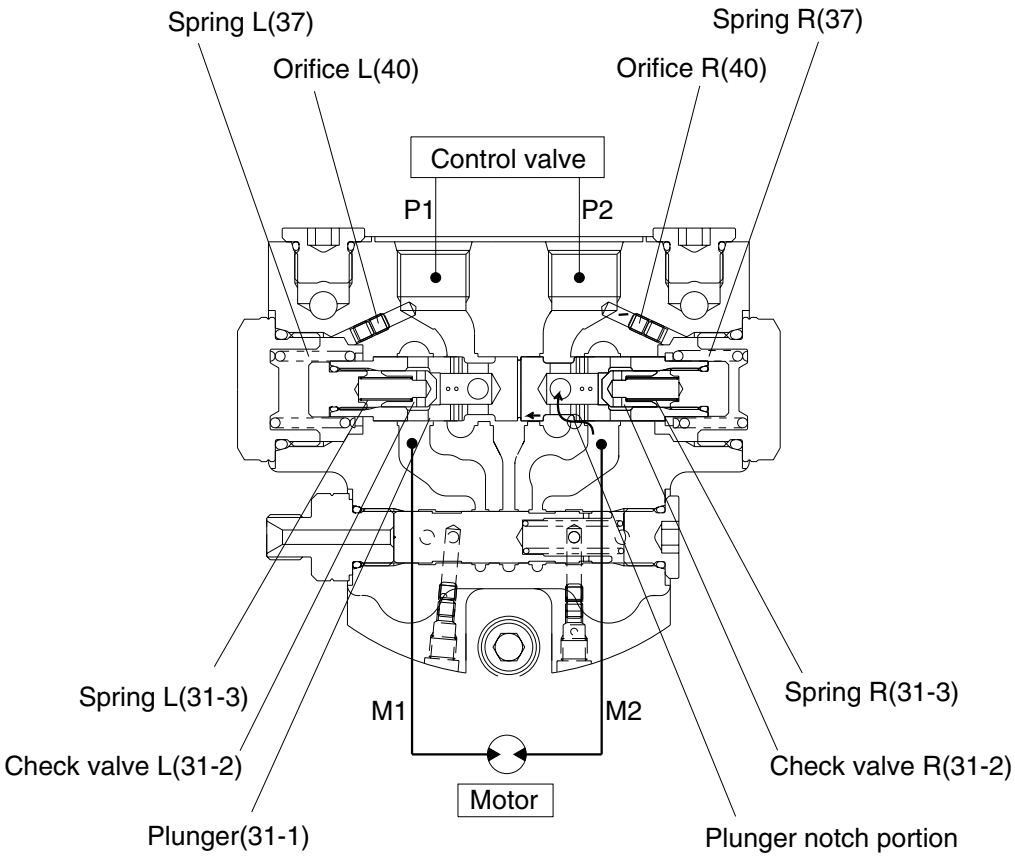

R35Z72TM06

Then, when the control valve returns to the neutral position, the pressurized oil from the pump is shut off and the pressures of the ports P1 and P2 become equal. Plunger (31-1) tries to be returned to neutral position by force of spring R (37). When plunger (31-1) moves, the throttle opening of plunger becomes small.

Piston motor tries to rotate with inertia energy (pumping action of motor) and the pressure rises on port M2.

With the movement of plunger (31-1), the oil of spring L room flows out through orifice L (40) and control the speed of plunger (31-1), By this movement, the shock pressure due to the inertia energy on the port M2 is absorbed, simultaneously preventing the cavitation on the port M1.

3) TWO SPEED CHANGE MECHANISM

(1) When running at 1st speed (low speed)

Swash plate (5) has three faces, from "a" to "c", as shown below in the figure and installed in the flange holder that is piston motor housing with two steel balls (6) in the condition where it can be tilted.

When the control valve is set to the 1st speed position, spool (41) is placed in the position shown below in the figure by the force of spring (42), and the passage of swash plate control piston (19) passes across the Pi1 and Pi2 port positions and led to the tank port. Therefore, the force pushing up the swash plate control piston (19).

$Fp = (Ap \times P) = 0$

Fp : Swash plate control piston thrust
Ap : Swash plate control piston pressure receiving area
P : Pressure

When steel ball (6) is placed on the tilting center, the balance of moment acting on swash plate (5) is in the condition of $(\Sigma F+Fs1) \times L1 > (Fp+Fs2) \times Lo$ depending on the total ΣF of driving force of piston sub assy (15) and the force of spring (9) Fs1 and Fs2, then swash plate (5) stables at the face a and the swash plate angel is α, and consequently the motor speed corresponding to the 1st speed, low speed, is obtained.

$(\Sigma F+Fs1) \times L1 > (Fp+Fs2) \times Lo$

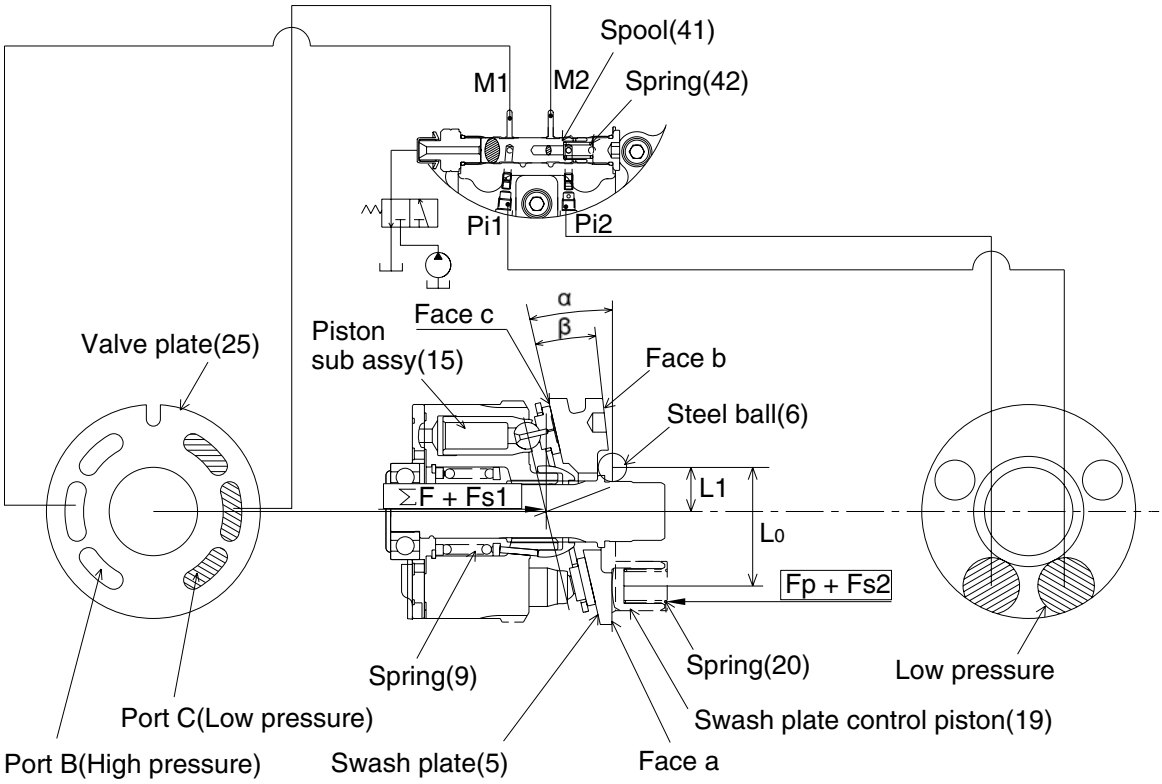

At 1st speed(low speed)

R35Z72TM08

(2) **When running at 2nd speed** (high speed)

When control valve is set to the 2nd speed position, the pressure oil delivered by the pump is led to spool (41) and spool (41) is switched to the position shown below in the figure. And the pressurized oil flows into each ports Pi1 and Pi2 through ports M1 and M2 and the motor driving pressure (P1 : high pressure and P2 : low pressure) is led to each swash plate control piston (19). Therefore the force pushing up the swash plate acts on swash plate control piston (19).

$Fp1 = Ap \times P1$ $\qquad$ $Fp2 = Ap \times P2$

When steel ball (6) is placed on the tilting center, the balance of moment acting on swash plate (5) is in the condition of $(\Sigma F+Fs1) \times L1 < (Fp+Fs2) \times Lo$ depending on the total ΣF of driving force of piston sub assy (15).

The face "b" of swash plate (5) stabilizes and the swash plate angle become β, consequently the motor speed is the 2nd speed (high speed).

While the engine is stopped, spool (41) is returned to the 1st speed position by the force of spring (9) since pressurized oil does not flow. When steel ball (6) is placed on the tilting center, the balance of moment acting on swash plate (5) is in the condition of $Fs \times L1 > Fp \times Lo$, the face "a" of swash plate (5) stabilizes and the swash plate angle become α, consequently the motor speed at starting is always the 1st speed.

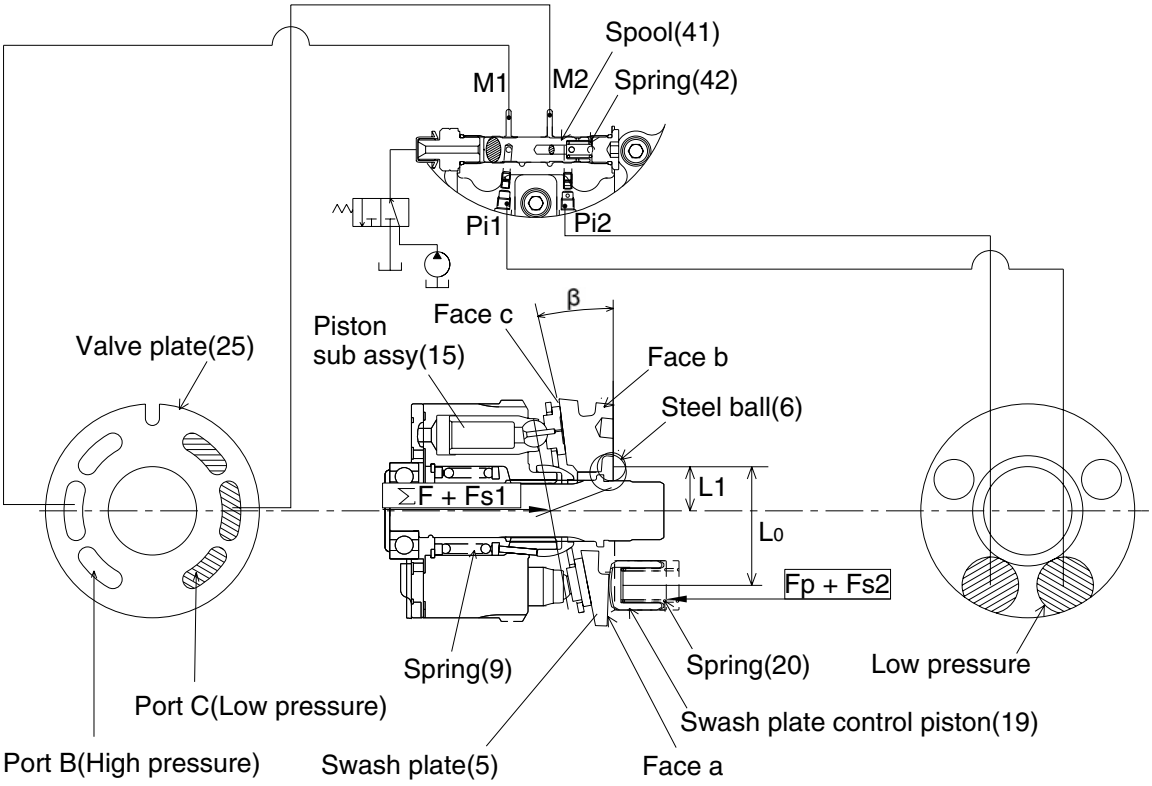

At 2nd speed(high speed)

R35Z72TM21

4) AUTO TWO SPEED CHANGE MECHANISM

Auto two speed control mechanism consists of two spools and spring. This valve automatically changes motor displacement in portion to motor pressure. This valve works while the pilot port Ps is pressurized.

(1) Motor pressure is low

The motor displacement is small (high speed displacement) as shown in the figure.

When the two speed spool is on the right position, motor pressure PM1 and PM2 are connected to each side of chamber of two speed piston. So swash plate is moved to high speed position by two speed piston and motor displacement is kept on high speed position.

Pilot pressure is applied on the area Ap when Ps port is pressurized. Then the pressure of Ps pushes the spool to the right direction on the figure. At the same time, motor inlet pressure is applied on the area Am. So, the spool is also applied to the left direction by Am pressure. According to above, if the motor pressure is lower and keep the following condition, the spool stay on the right position.

$$Ps \times Dp > Am \times Pin + Kx$$

Kx : the force of spring

Motor pressure is low : $(Ap \times Ps) > (Am \times Pin + Kx)$

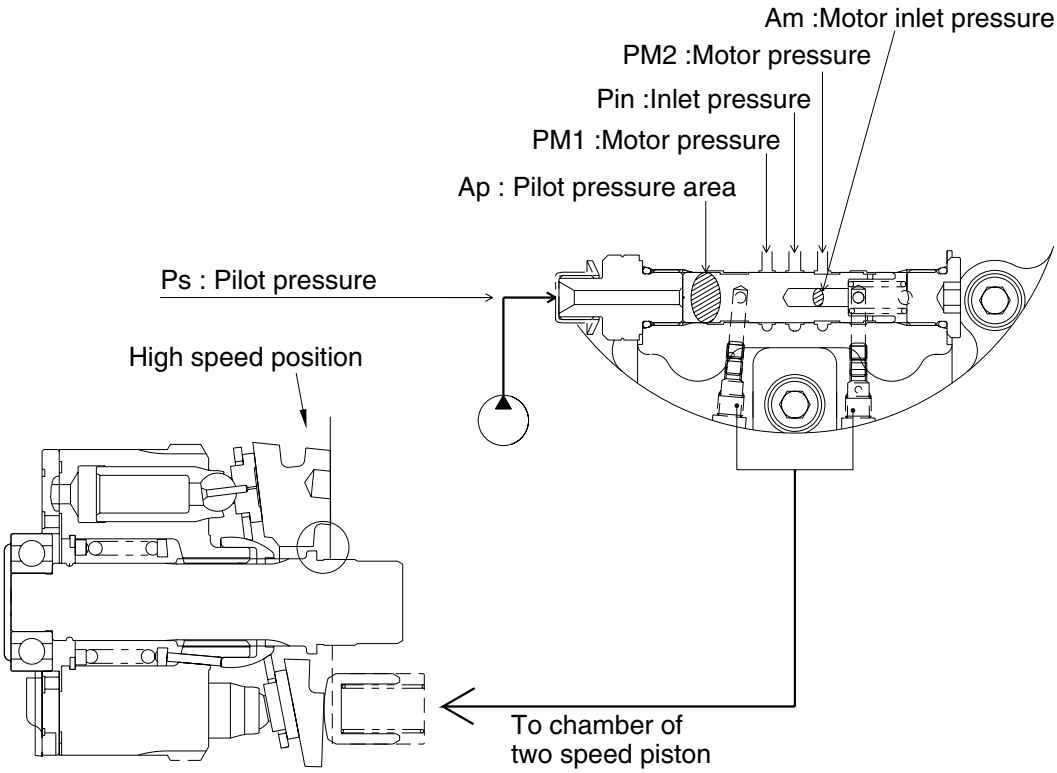

Automatic two speed (Motor pressure is low)

R35Z72TM11

(2) Motor pressure is high

The motor displacement is large (low speed displacement) as shown in the figure.

The two speed spool is on the left position if Pin pressure is high. Then, PM1 and PM2 are shutted by the spool. If the motor pressure is higher and keep the following condition, the spool stay on the left position.

$$Ps \times Dp > Am \times Pin + Kx$$

Motor pressure is high : $(Ap \times Ps) < (Am \times Pin + Kx)$

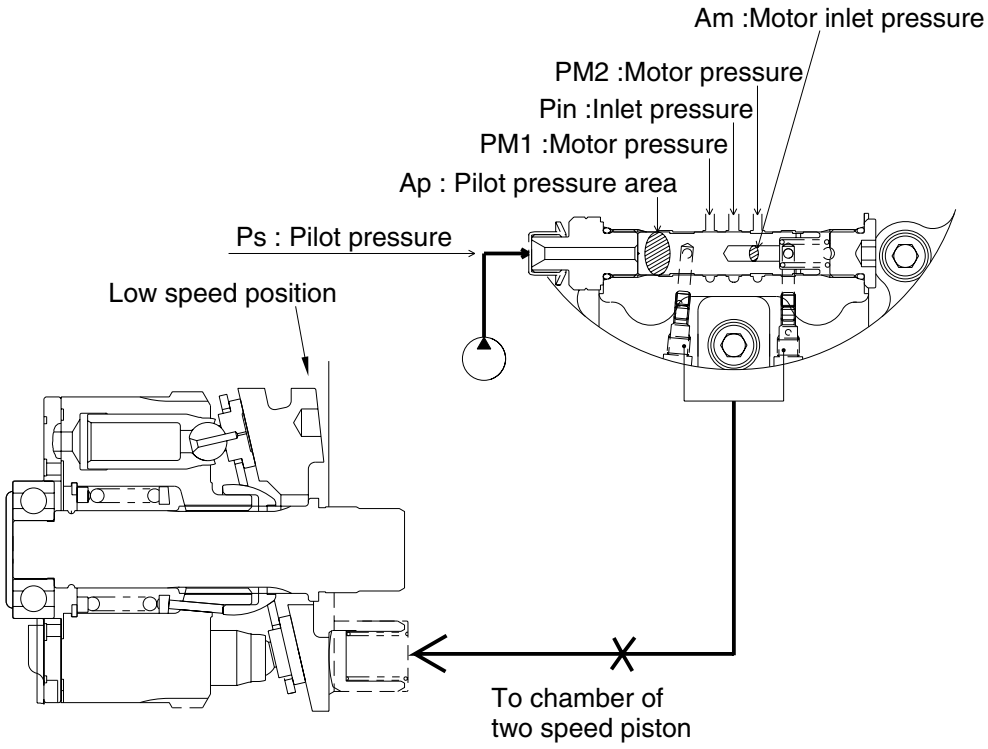

Automatic two speed (Motor pressure is high)

R35Z72TM09

5) ANTI CAVITATION VALVE (With parking brake)

Anti cavitation valve is always working with counterbalance valve.

This system consists of oil passage "A", "B", "C" and spool in addition to traditional counterbalance valve.

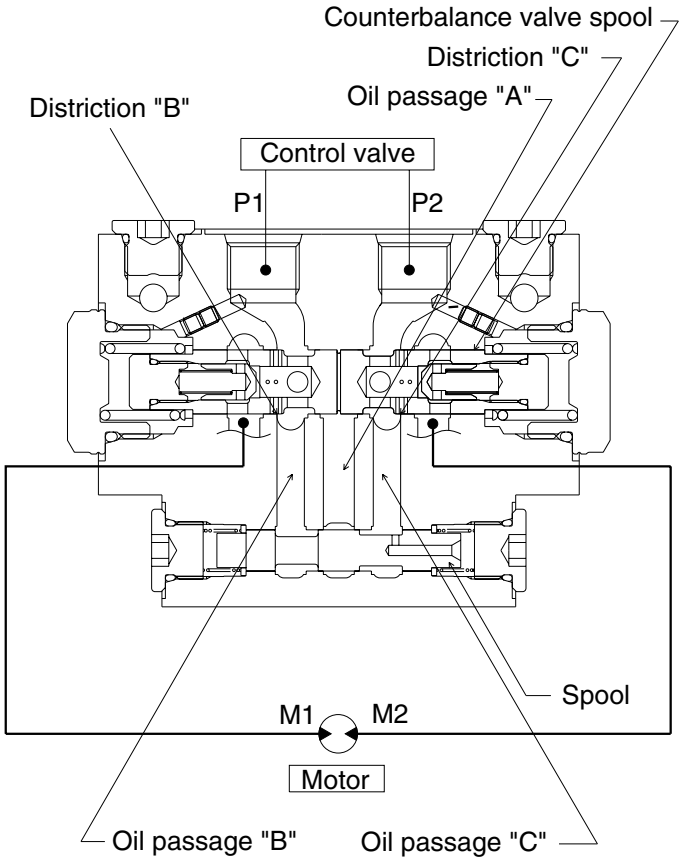

Anti cavitation valve system

R35Z72TM12

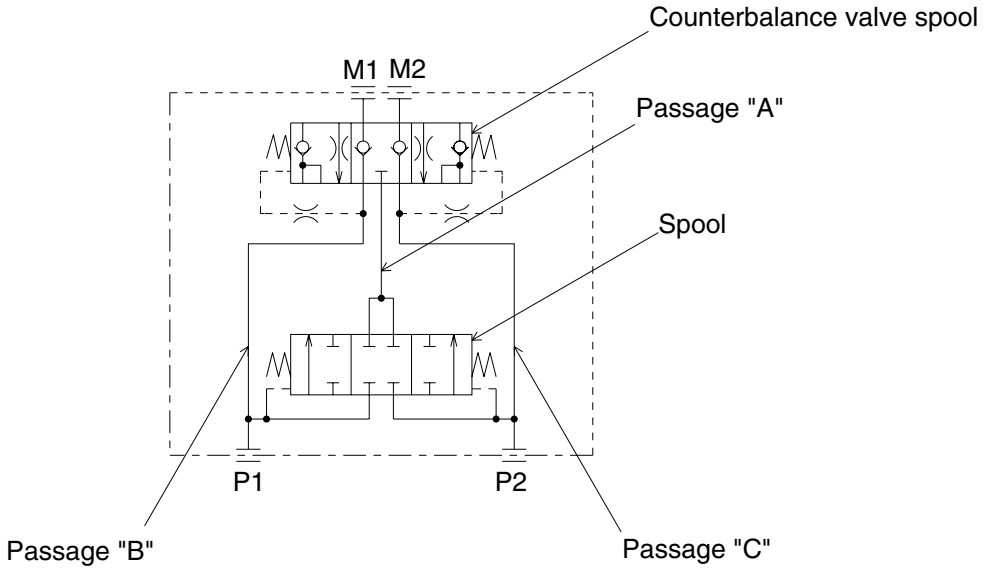

Hydraulic circuit

R35Z72TM17

(1) **From stopping to starting** (high speed)

Counterbalance valve spool is moved to right position by the force of spring when port P1 is pressurized. According as the movement of spool, P1 connects to M1 and M2 connects to P2. Consequently the motor work. At the same time, oil passage A is selected high pressure, however, there is no oil flow to oil passage C because of the movement of spool.

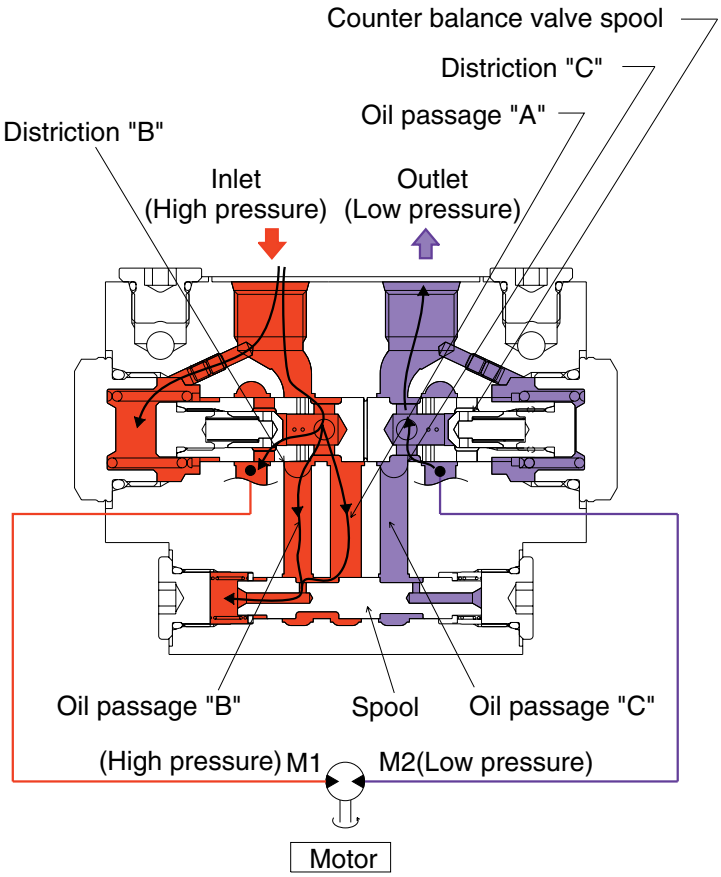

R35Z72TM13

(2) Continuous rotating

In case of continuous rotating, the oil passage A is also selected high pressure, however, there is no oil flow to oil passage C. So, anti cavitation valve has no influence during motor operation.

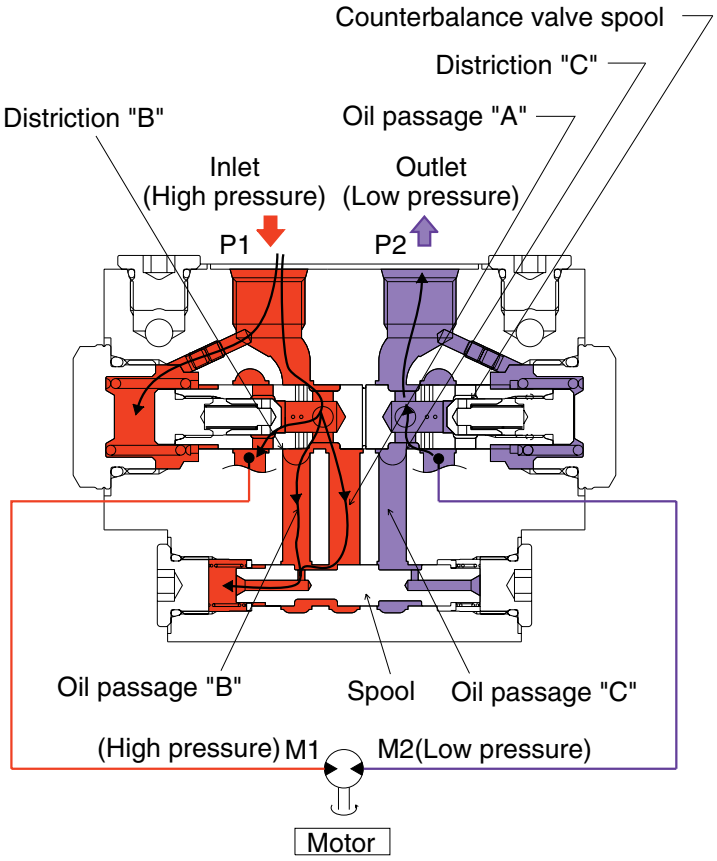

R35Z72TM14

(3) From continuous rotating to deceleration

At deceleration, the motor is still rotated by inertia. The oil flows M2 port to P2 port during counterbalance valve is opened. Then, if the flow to P1 is not enough, the cavitation could be appeared in P1-M1 line.

Anti cavitation valve can make a oil passage like M2 → C → spool → A → P1 → M1 and supply flow before counterbalance valve spool is returned. Consequently the cavitation is reduced by the above function.

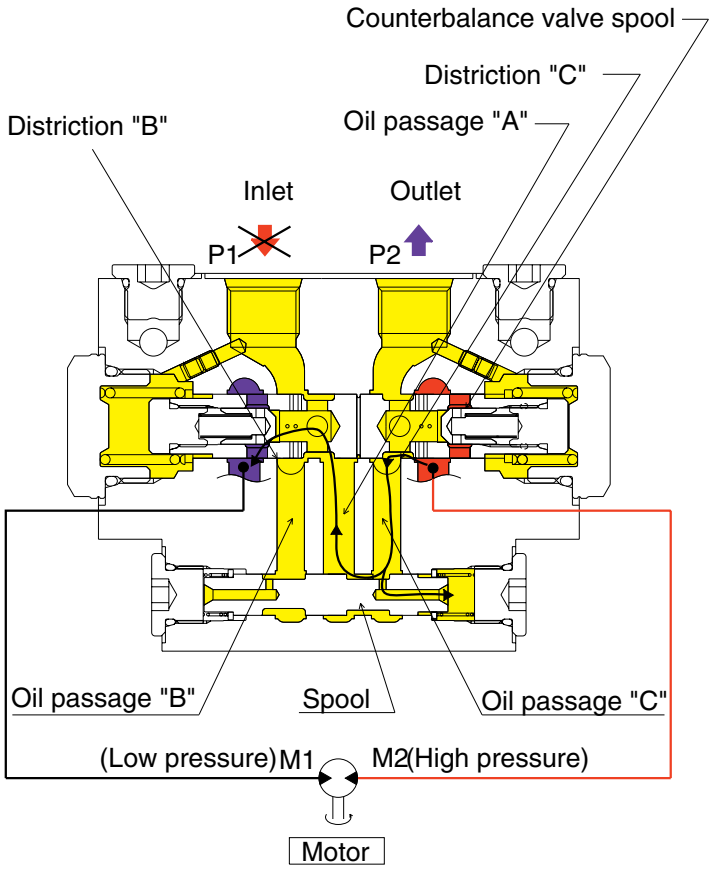

R35Z72TM15

(4) From deceleration to stopping

Anti cavitation valve works until oil passage from A to P1 is shut.

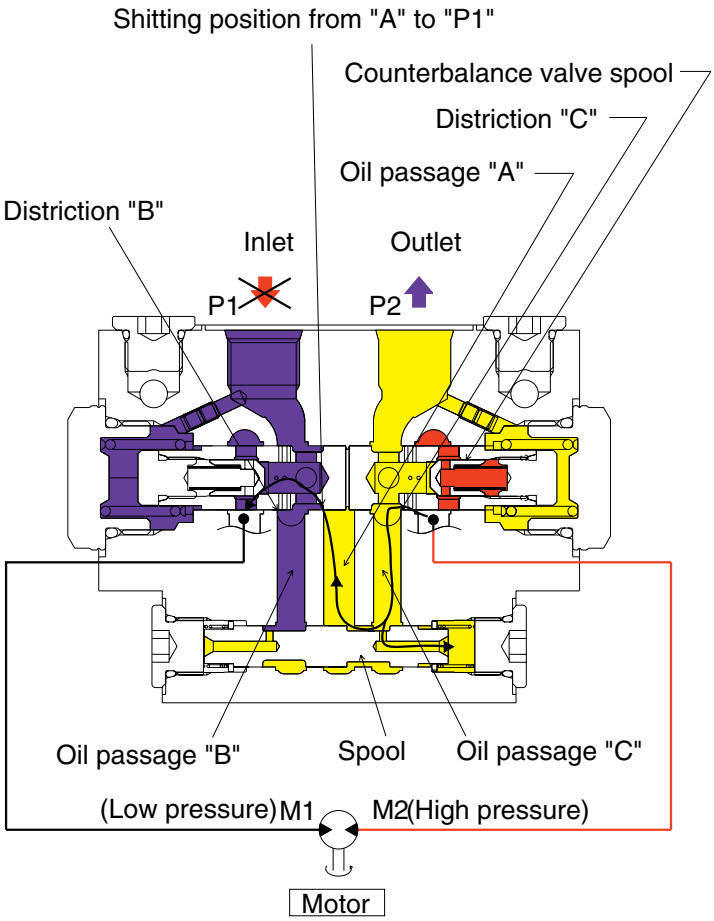

R35Z72TM16

6) PARKING BRAKE

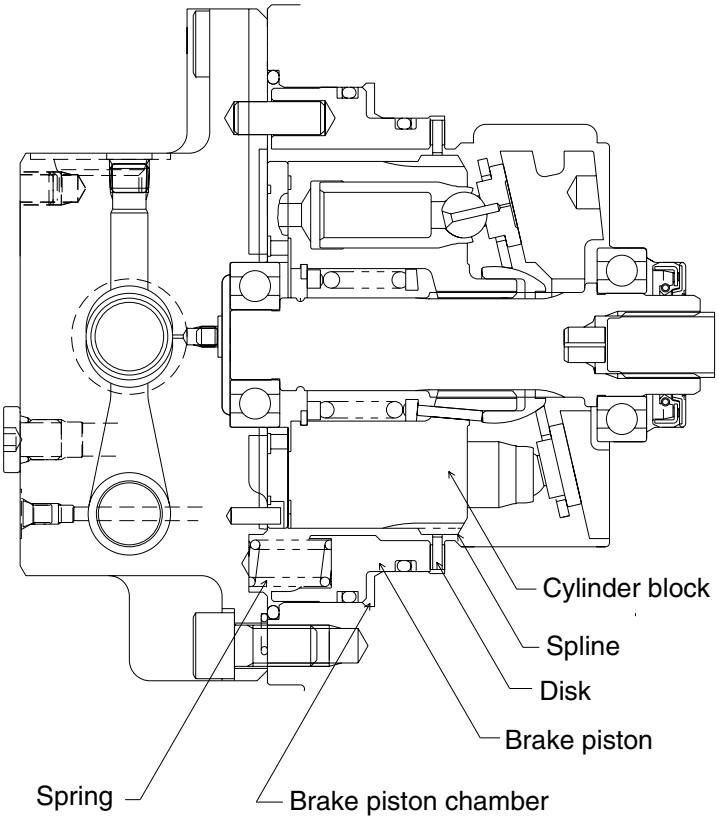

R35Z72TM18

The parking brake is a kind of negative brake which consist of disk, brake piston and spring.
The cylinder block and disk are combined with a spline, and friction material is bonded on both sides of disk. The disk generates frictional force between the flange holder and the brake piston by the force of spring and restricts the rotating force of the motor, achieving the best performance of the parking brake.
When the pressurized oil flows into the motor, the plunger moves and the parking brake release port is opened. After the oil flows into brake piston chamber, the thrust F is generated, corresponding to the pressure receiving surface of brake piston and the thrust F becomes larger than the force of spring F, consequently the brake piston moves toward right.
Then, the disk rotates freely between the flange holder and brake piston, and parking brake is released.
When the motor is stopped, the plunger returns to the neutral position and the parking brake release port is closed. Consequently the pressurized oil in brake piston chamber flows into motor case, the parking brake acts by the force of spring.

7) REDUCTION UNIT

The reduction unit consists of double stage planetary gear mechanism.

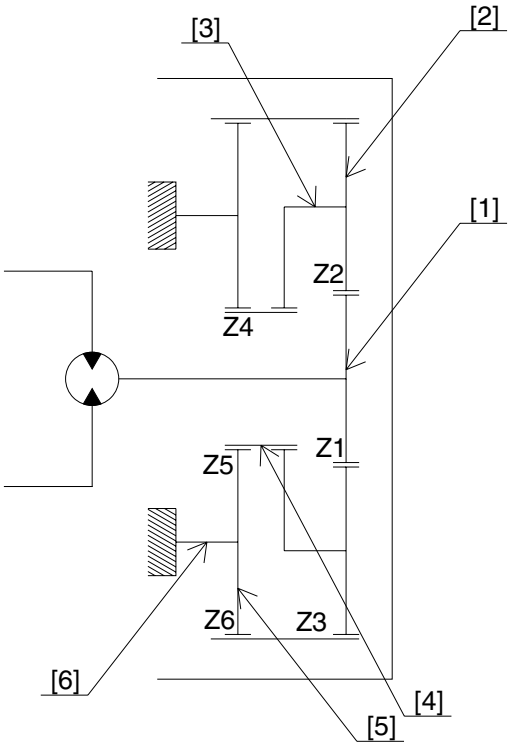

R35Z72TM19

Drive gear[1] is engaged with the 1st planetary gear [2], 2nd stage sun gear [4] is engaged with the 2nd planetary gear [5]. The 2nd stage planetary carrier [6] is fixed machine body. Planetary gears [2], [5] are engaged with ring gear (housing).

The driving force form the piston motor is transmitted to drive gear [1], and the speed is reduced by each gear.

The reduced driving force is transmitted to ring gear through planetary gear [5] of planetary carrier [6] fixed on the machine body. (The driving force is also transferred from 1st stage planetary gear [2]). The direction of output rotation are reversed against that of input rotation.

The reduction gear ratio " i " is shown as follows.

※ Reduction gear ratio (i)

$$I = (i1 \times i2 - 1) = \left(\frac{Z1+Z3}{Z1} \times \frac{Z4+Z6}{Z4} - 1 \right)$$

※ Output torque of reduction unit (T)

$$T = TM \times i \times \eta M$$

Z1 : Drive gear teeth number
Z2 : Ring gear teeth number
Z4 : Sun gear teeth number
Z6 : Ring gear teeth number

※ Reduction gear output rotating speed (N)

$$N = \frac{NM}{i}$$

TM : Input torque (motor output torque)
i : Reduction gear ratio
ηM : Mechanical efficiency
NM : Input speed of rotation (output motor speed)

GROUP 5 RCV LEVER

1. STRUCTURE

The casing has the oil inlet port P(Primary pressure) and the oil outlet port T(Tank). In addition the secondary pressure is taken out through ports 1,2,3 and 4 provided at the bottom face.

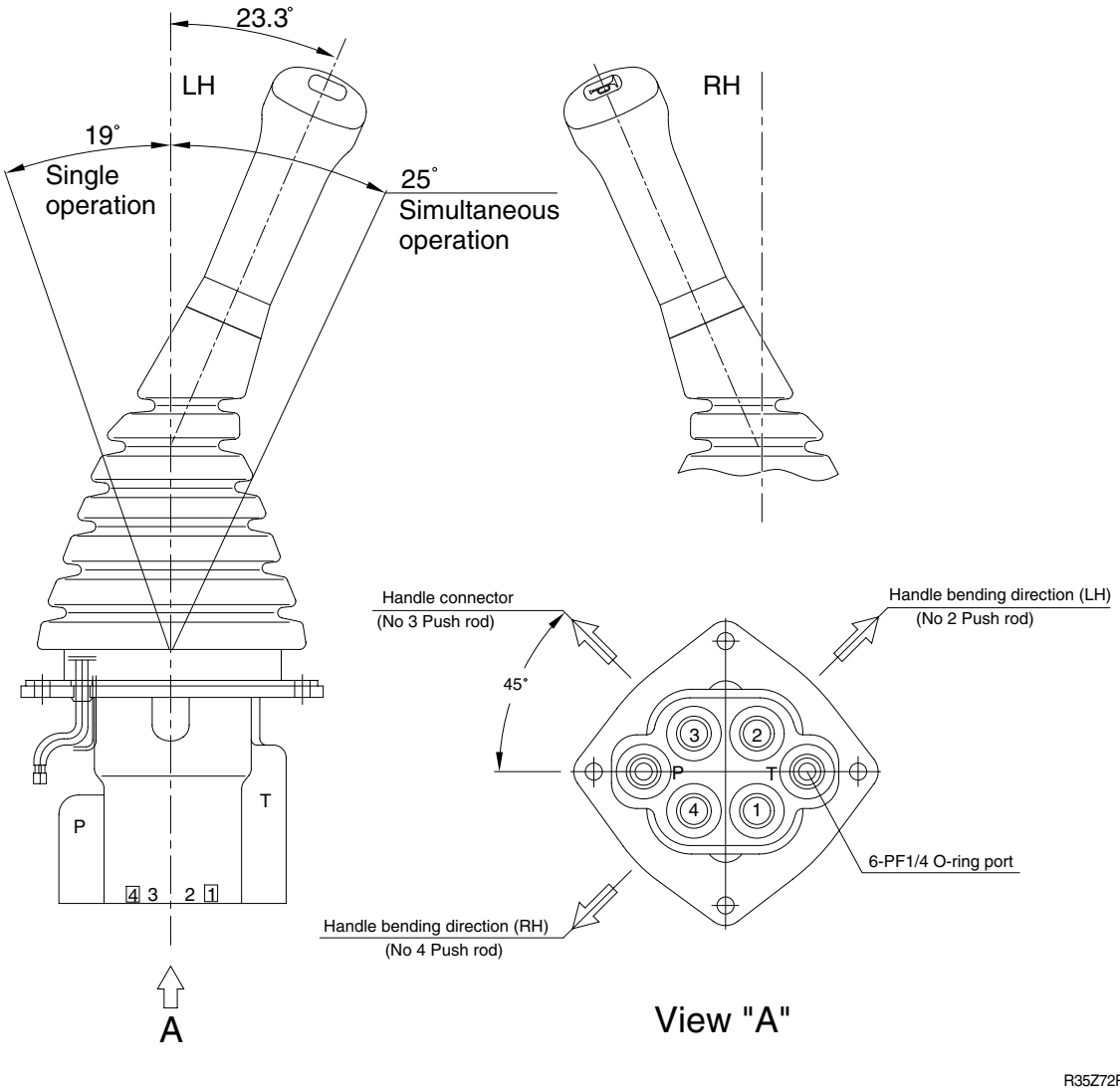

R35Z72RL01

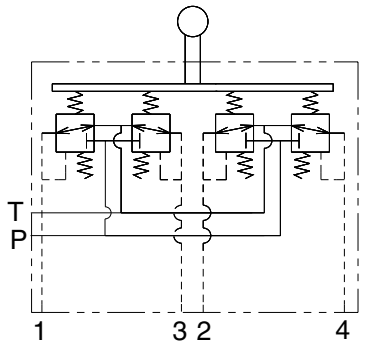

Hydraulic circuit

Port	LH	RH	Port size
P	Pilot oil inlet port	Pilot oil inlet port	PF 1/4
T	Pilot oil return port	Pilot oil return port	
1	Arm in port	Boom up port	
2	Right swing port	Bucket out port	
3	Arm out port	Boom down port	
4	Left swing port	Bucket in port	

CROSS SECTION

The construction of the pilot valve is shown in the attached cross section drawing. The casing has vertical holes in which reducing valves are assembled.

The pressure reducing section is composed of the spool(11), spring(8, 9) for setting secondary pressure, return spring(4), stopper(7), spring seat(5, 6) and spring seat(10). The spring for setting the secondary pressure has been generally so preset that the secondary pressure is 5 to 20.5kgf/cm^2(Depending on the type). The spool is pushed against the push rod(12, 13) by the return spring.

When the push rod is pushed down by tilting the handle, the spring seat comes down simultaneously and changes setting of the secondary pressure spring.

1	Case	12	Push rod (1, 3)	23	Connector
2	Plug	13	Push rod (2, 4)	24	Nut
3	O-ring	14	Plug	25	Nut
4	Spring	15	O-ring	26	Insert
5	Spring seat (1, 3)	16	Rod seal	27	Boot
6	Spring seat (2, 4)	17	Plate (A)	28	Handle
7	Stopper	18	Bushing	29	Switch assembly
8	Spring (1, 3)	19	Machine screw	30	Screw
9	Spring (2, 4)	20	Joint assembly	31	Plate
10	Spring seat	21	Swash plate	32	Boot
11	Spool	22	Hex nut		

CROSS SECTION

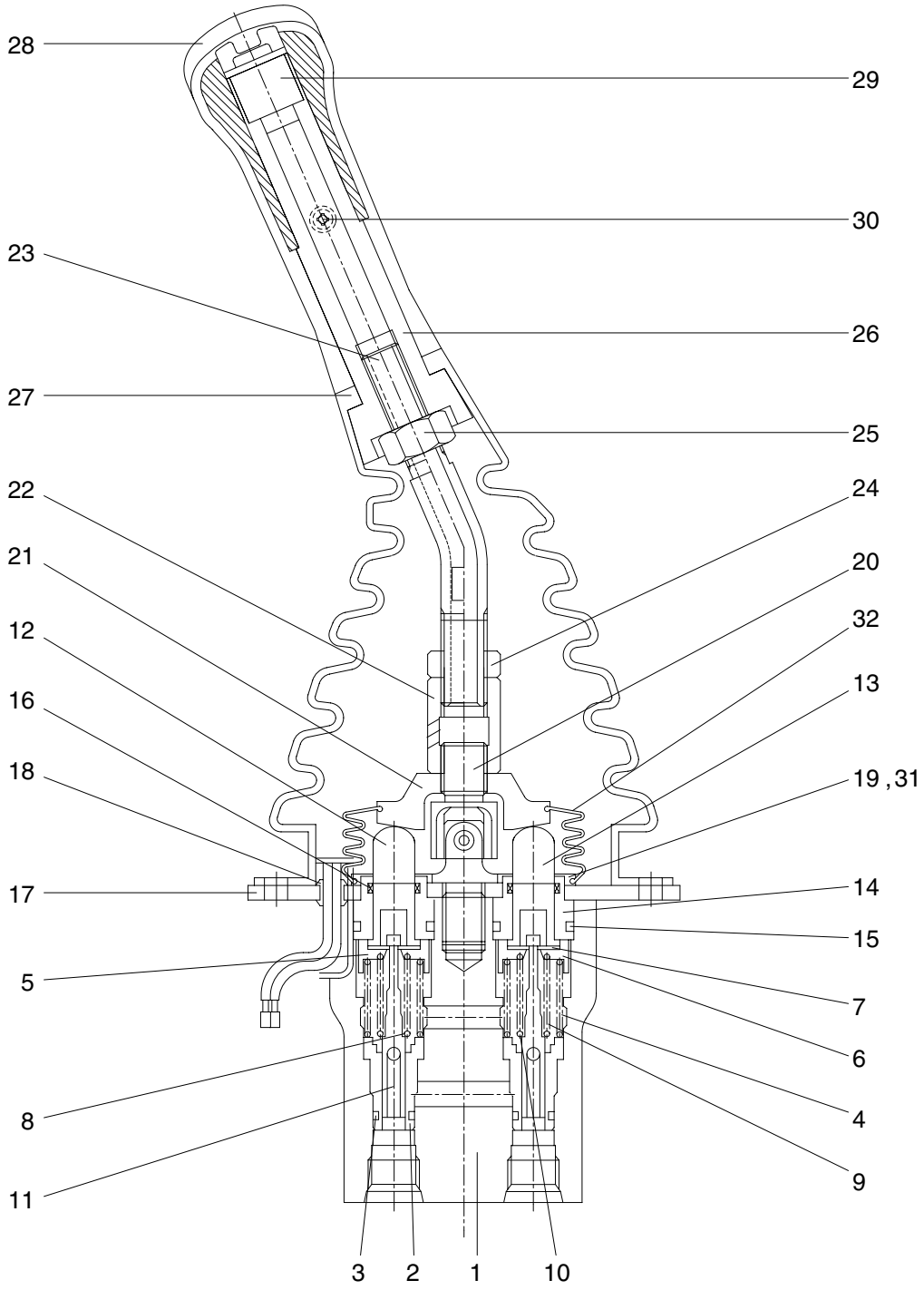

R35Z72RL02

2. FUNCTIONS

1) FUNDAMENTAL FUNCTIONS

The pilot valve is a valve that controls the spool stroke, direction, etc of a main control valve. This function is carried out by providing the spring at one end of the main control valve spool and applying the output pressure(Secondary pressure) of the pilot valve to the other end.

For this function to be carried out satisfactorily, the pilot valve is composed of the following elements.

(1) Inlet port(P) where oil is supplied from hydraulic pump.

(2) Output ports(1, 2, 3 & 4) to apply pressure supplied from inlet port to ends of control valve spools.

(3) Tank port(T) necessary to control the above output pressure.

(4) Spool to connect output port to inlet port or tank port.

(5) Mechanical means to control output pressure, including springs that work on the above spools.

2) FUNCTIONS OF MAJOR SECTIONS

The functions of the spool(11) are to receive the supply oil pressure from the hydraulic pump at its port P, and to change over oil paths to determine whether the pressure oil of port P is led to output ports 1, 2, 3 & 4 or the output port pressure oil to tank port T.

The spring(8, 9) works on this spool to determine the output pressure.

The change the deflection of this spring, the push rod(12, 13) is inserted and can slide in the plug(14).

For the purpose of changing the displacement of the push rod through the switch plate(21) and adjusting nut(22) are provided the handle(28) that can be tilted in any direction around the fulcrum of the universal joint(20) center.

The spring(4) works on the case(1) and spring seat(5, 6) and tries to return the push rod(12, 13) to the zero-displacement position irrespective of the output pressure, securing its resetting to the center position.

This also has the effect of a reaction spring to give appropriate control feeling to the operator.

3) OPERATION

The operation of the pilot valve will be described on the basis of the hydraulic circuit diagram shown below and the attached operation explanation drawing.

The diagram shown below is the typical application example of the pilot valve.

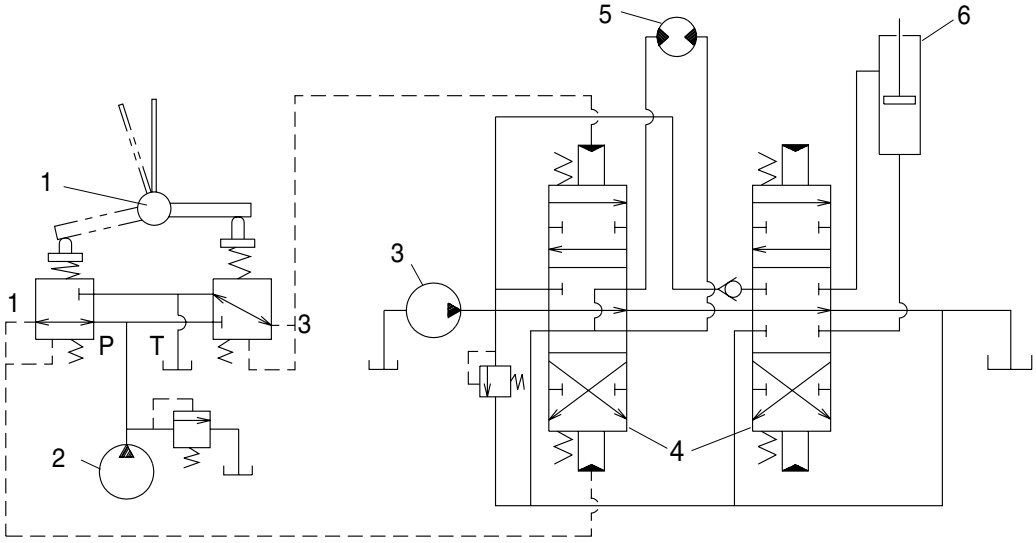

2-70 (140-7TIER)

1	Pilot valve	3	Main pump	5	Hydraulic motor
2	Pilot pump	4	Main control valve	6	Hydraulic cylinder

(1) Case where handle is in neutral position

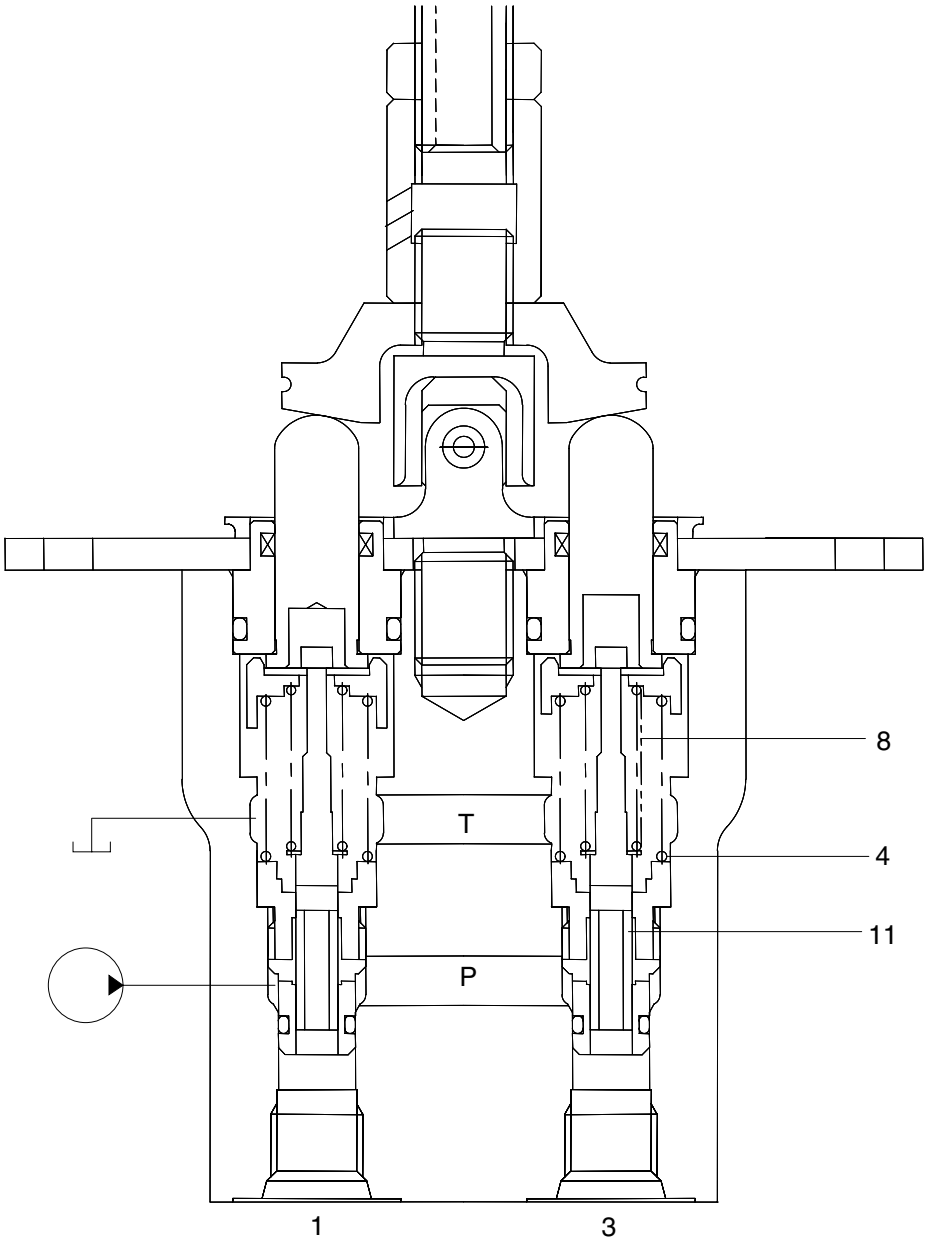

R35Z72RL03

The force of the spring(8) that determines the output pressure of the pilot valve is not applied to the spool(11). Therefore, the spool is pushed up by the spring(4) to the position of port(1, 3) in the operation explanation drawing. Then, since the output port is connected to tank port T only, the output port pressure becomes equal to tank pressure.

(2) Case where handle is tilted

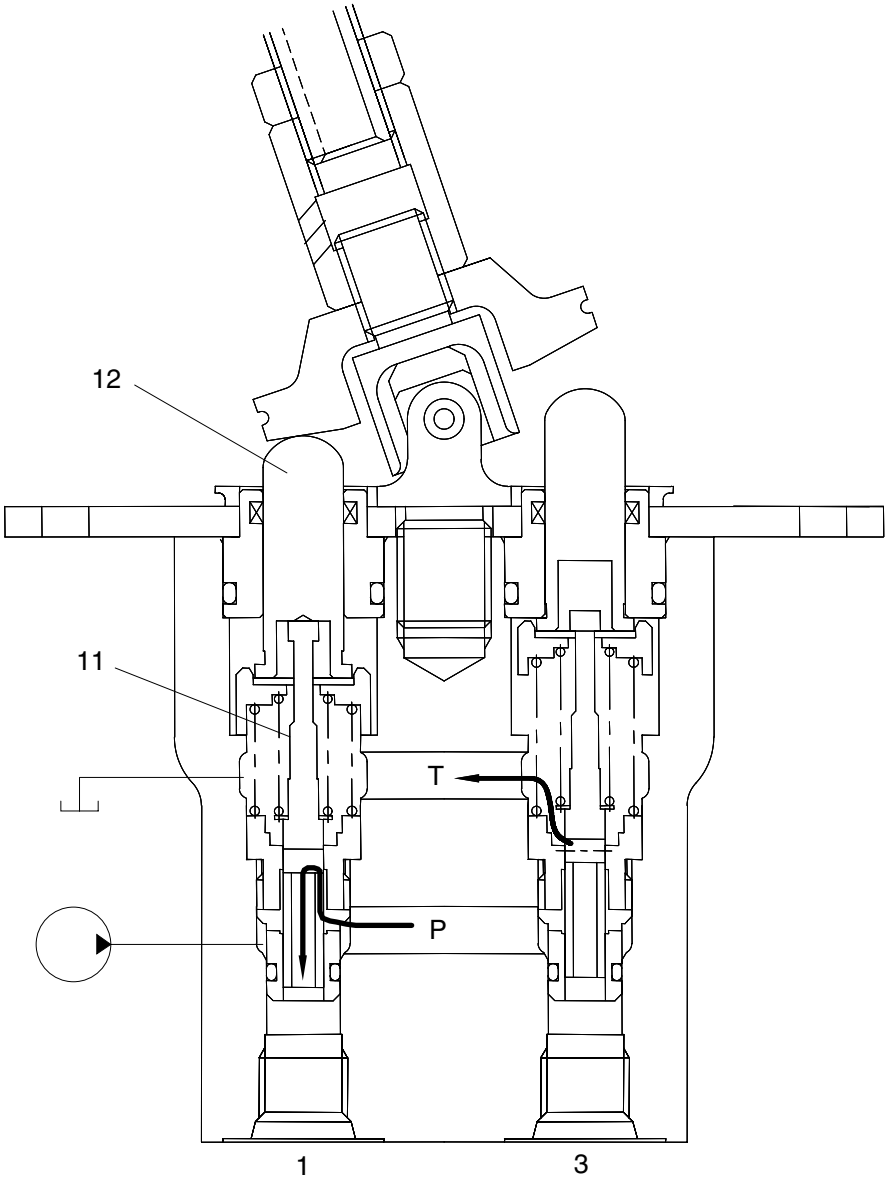

When the push rod(12) is stroked, the spool(11) moves downwards.
Then port P is connected with port(1) and the oil supplied from the pilot pump flows through port(1) to generate the pressure.
When the pressure at port(1) increases to the value corresponding to the spring force set by tilting the handle, the hydraulic pressure force balances with the spring force. If the pressure at port(1) increases higher than the set pressure, port P is disconnected from port(1) and port T is connected with port(1). If it decreases lower than the set pressure, port P is connected with port(1) and port T is disconnected from port 1.
In this manner the secondary pressure is kept at the constant value.

SECTION 3 HYDRAULIC SYSTEM

Group 1 Hydraulic Circuit 3-1
Group 2 Main Circuit 3-2
Group 3 Pilot Circuit 3-5
Group 4 Single Operation 3-10
Group 5 Combined Operation 3-22

GROUP 1 HYDRAULIC CIRCUIT

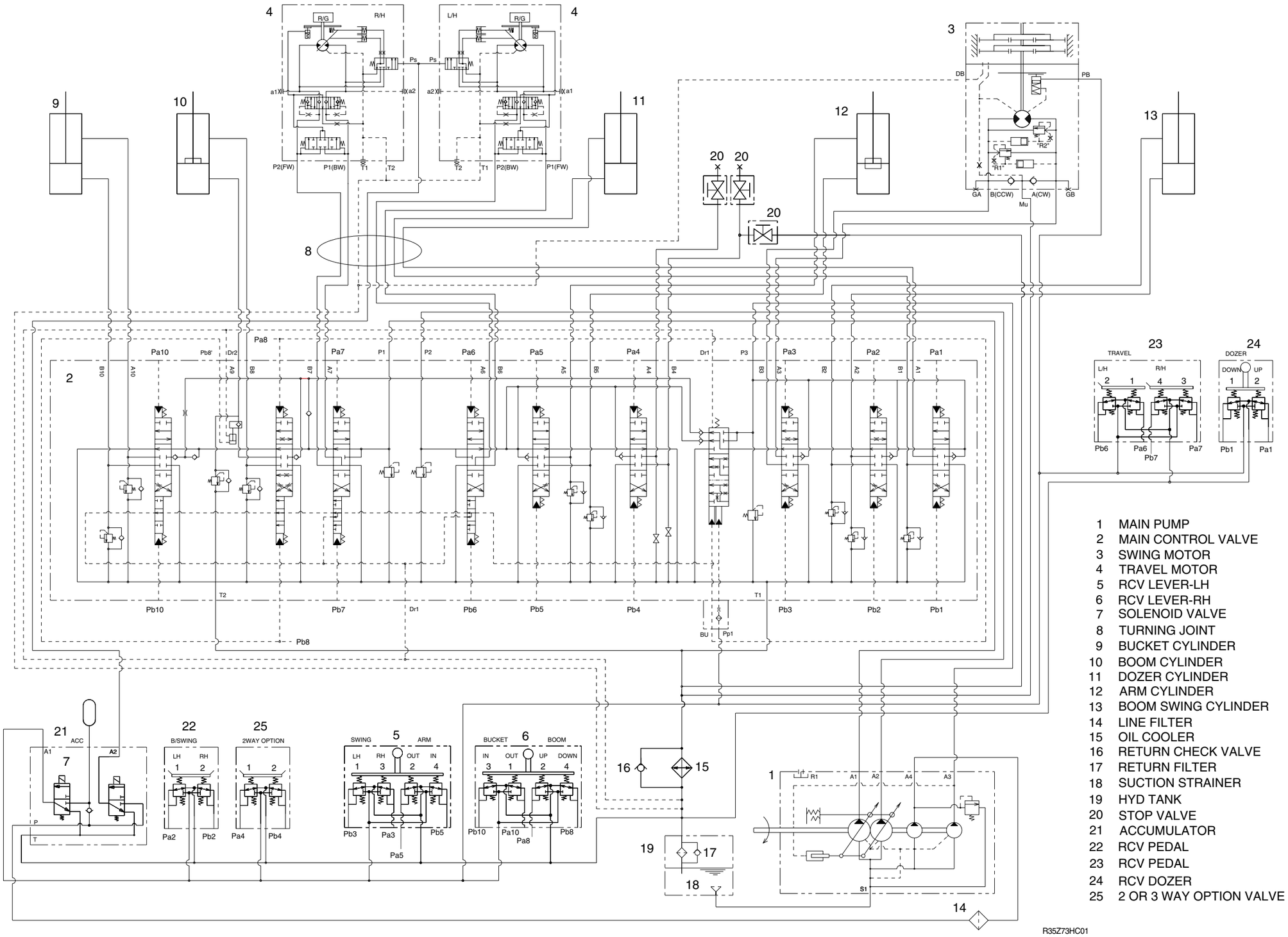

1 MAIN PUMP
2 MAIN CONTROL VALVE
3 SWING MOTOR
4 TRAVEL MOTOR
5 RCV LEVER-LH
6 RCV LEVER-RH
7 SOLENOID VALVE
8 TURNING JOINT
9 BUCKET CYLINDER
10 BOOM CYLINDER
11 DOZER CYLINDER
12 ARM CYLINDER
13 BOOM SWING CYLINDER
14 LINE FILTER
15 OIL COOLER
16 RETURN CHECK VALVE
17 RETURN FILTER
18 SUCTION STRAINER
19 HYD TANK
20 STOP VALVE
21 ACCUMULATOR
22 RCV PEDAL
23 RCV PEDAL
24 RCV DOZER
25 2 OR 3 WAY OPTION VALVE

GROUP 2 MAIN CIRCUIT

The main hydraulic circuit consists of suction circuit, delivery circuit, return circuit and drain circuit.
The hydraulic system consists of one main pump, one control valve, one swing motor, four cylinders and two travel motors.
The swash plate type variable displacement axial piston pump is used as the main pump and is driven by the engine at ratio 1.0 of engine speed.

1. SUCTION AND DELIVERY CIRCUIT

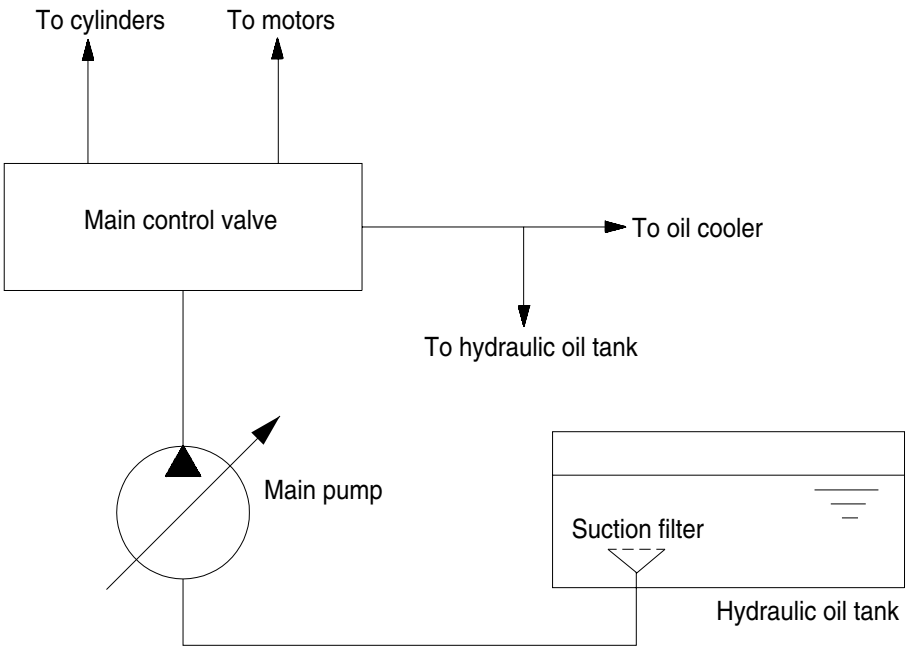

3-02 (140-7 TIER)

The pumps receive oil from the hydraulic tank through a suction filter. The discharged oil from the pump flows into the control valve and goes out the tank ports.
The oil discharged from the main pump flows to the actuators through the control valve.
The control valve controls the hydraulic functions.
The return oil from the actuators flows to the hydraulic tank through the control valve and the oil cooler.

2. RETURN CIRCUIT

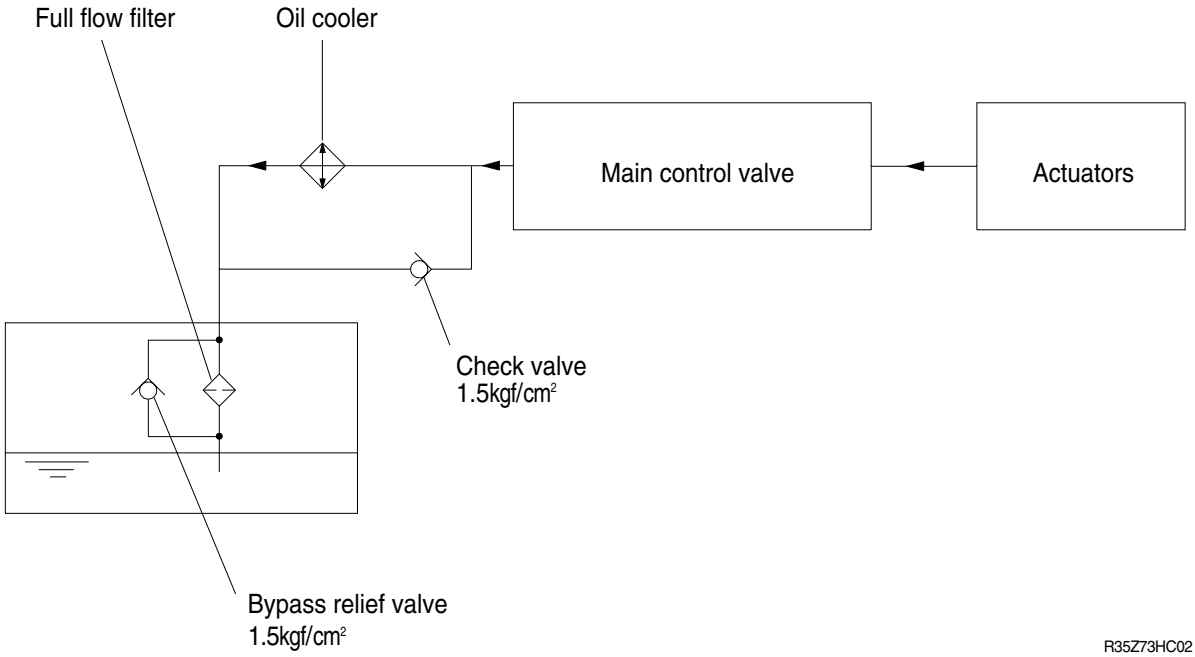

All oil returned from each actuator returns to the hydraulic tank through the control valve.
The bypass check valves are provided in the return circuit.
The setting pressure of bypass check valves are 1.5kgf/cm^2(21psi). Usually, oil returns to the hydraulic tank from the left side of control valve through oil cooler.
When oil temperature is low, viscosity becomes higher and flow resistance increases when passing through the oil cooler. When the oil pressure exceeds 1.5kgf/cm^2(21psi), the oil returns directly to the hydraulic tank, resulting in the oil temperature being raised quickly at an appropriate level.
When the oil cooler is clogged, the oil returns directly to the hydraulic tank through bypass check valve.
The full-flow filter and bypass relief valve are provided in the hydraulic tank.
The oil returned from right and left side of control valve is combined and filtered by the full-flow filter. A bypass relief valve is provided in the full-flow filter.
When the filter element is clogged, the bypass relief valve opens at 1.5kgf/cm^2(21psi) differential pressure.

3. DRAIN CIRCUIT

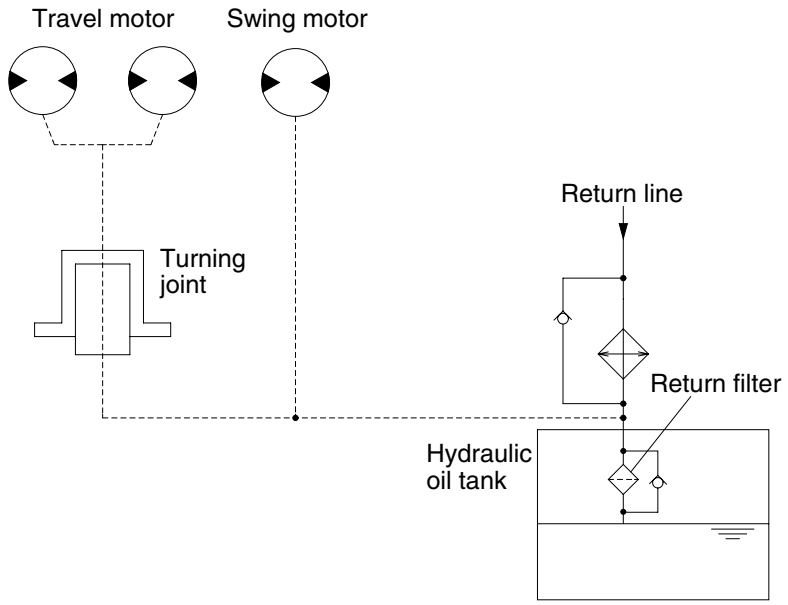

R35Z73HC43

Besides internal leaks from the motors and main pump, the oil for lubrication circulates.

1) TRAVEL MOTOR DRAIN CIRCUIT

Oil leaked from the right and left travel motors comes out of the drain ports provided in the respective motor casing and join with each other. These oils pass through the turning joint and return to the hydraulic tank after being filtered by return filter.

2) SWING MOTOR DRAIN CIRCUIT

Oil leaked from the swing motor returns to the hydraulic tank passing through a return filter with oil drained from the travel circuit .

GROUP 3 PILOT CIRCUIT

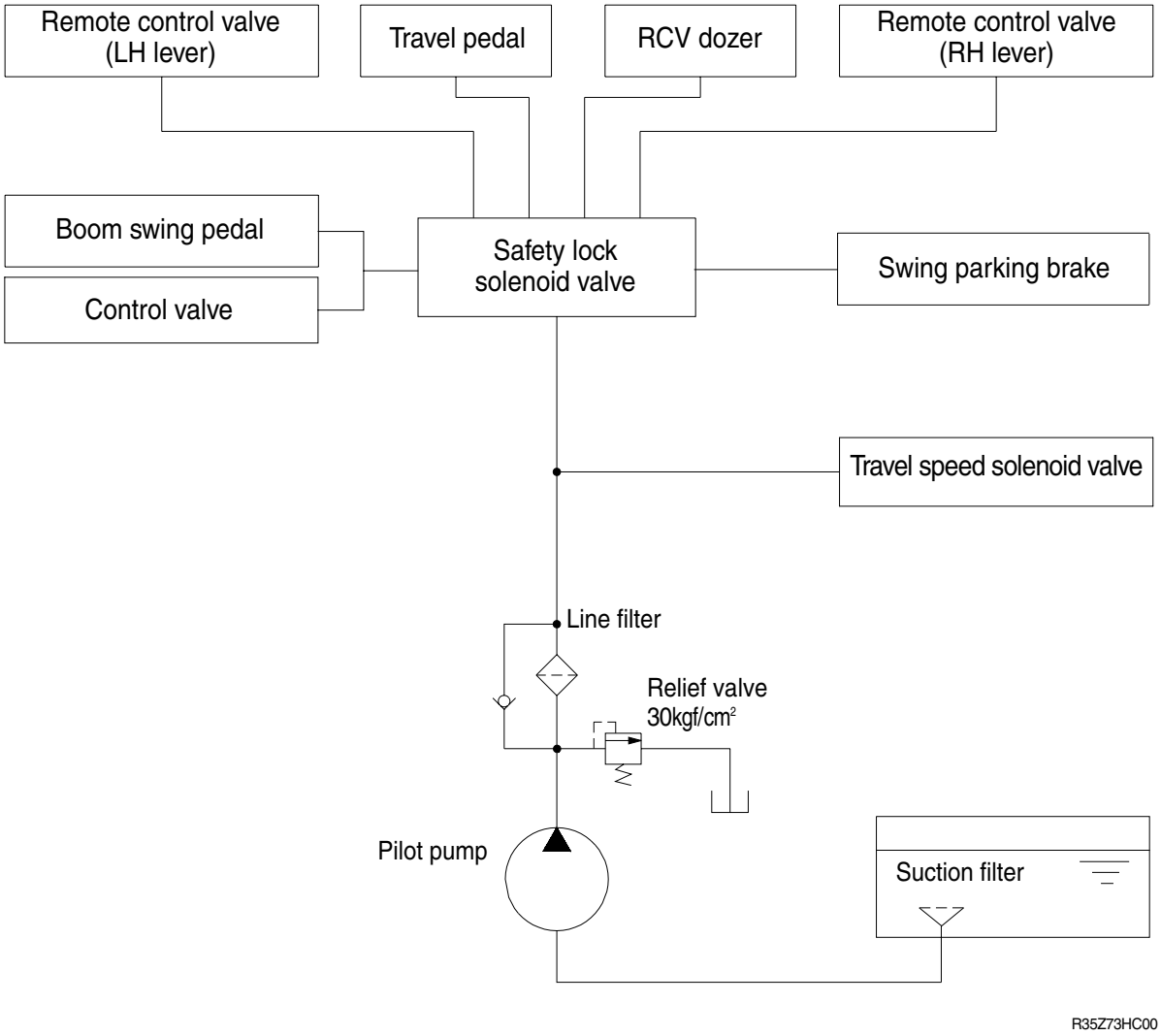

The pilot circuit consists of suction circuit, delivery circuit and return circuit.
The pilot pump is provided with relief valve, receives the oil from the hydraulic tank through the suction filter.
The discharged oil from the pilot pump flows to the remote control valve through line filter, solenoid valve assemblies, swing parking brake, main control valve and safety lock solenoid valve.

1. SUCTION, DELIVERY AND RETURN CIRCUIT

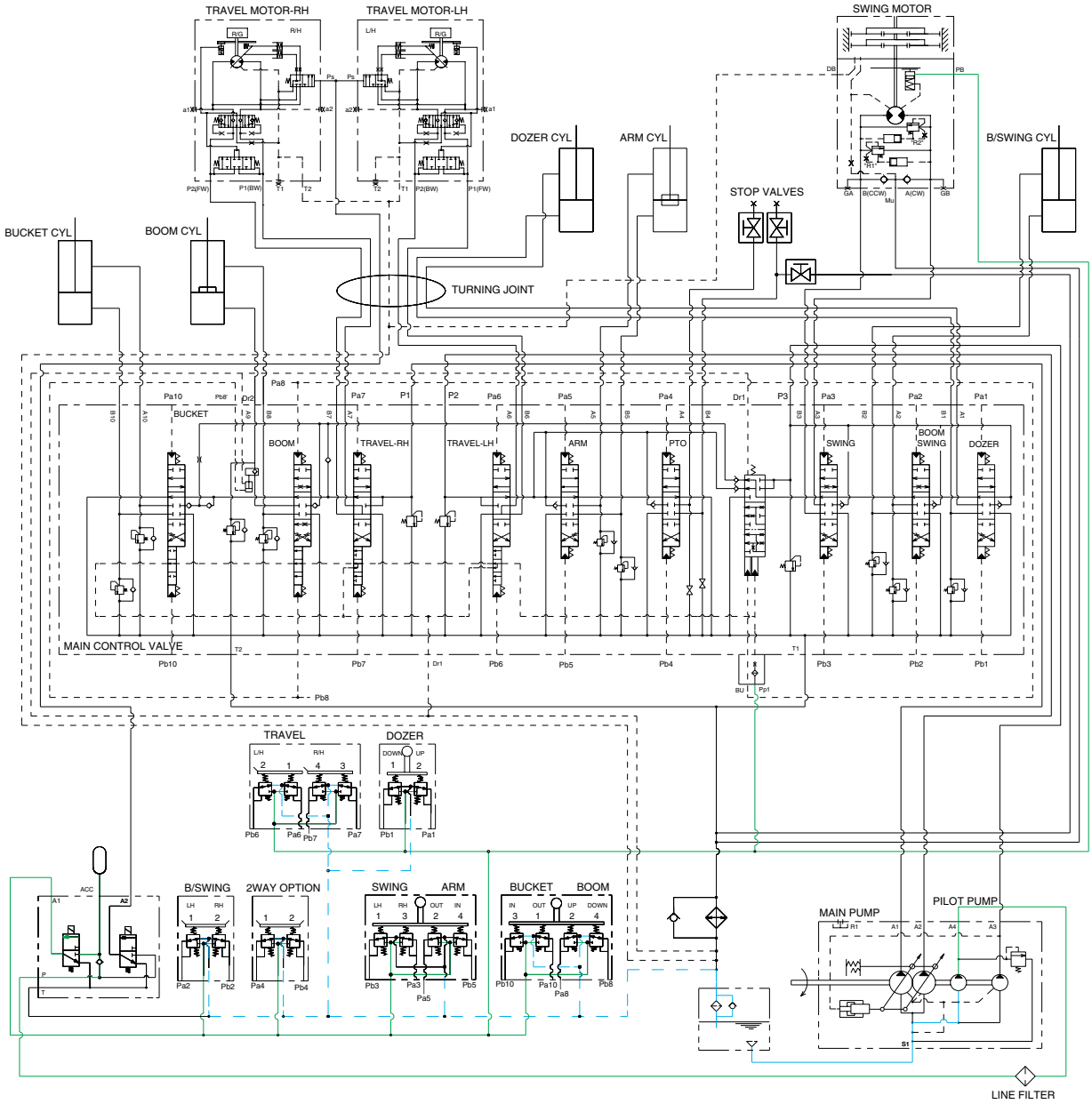

R35Z73HC03

The pilot pump receive oil from the hydraulic tank. The discharged oil from the pilot pump flows to the safety solenoid valve through the line filter. The oil is filtered by the line filter. The pilot relief valve is provided in the pilot pump for limiting the pilot circuit pressure.

The oil filtered by line filter flows remote control valve, MCV and swing port through safety solenoid valve.

The return oil flow into the hydraulic tank.

2. SAFETY VALVE(SAFETY LEVER)

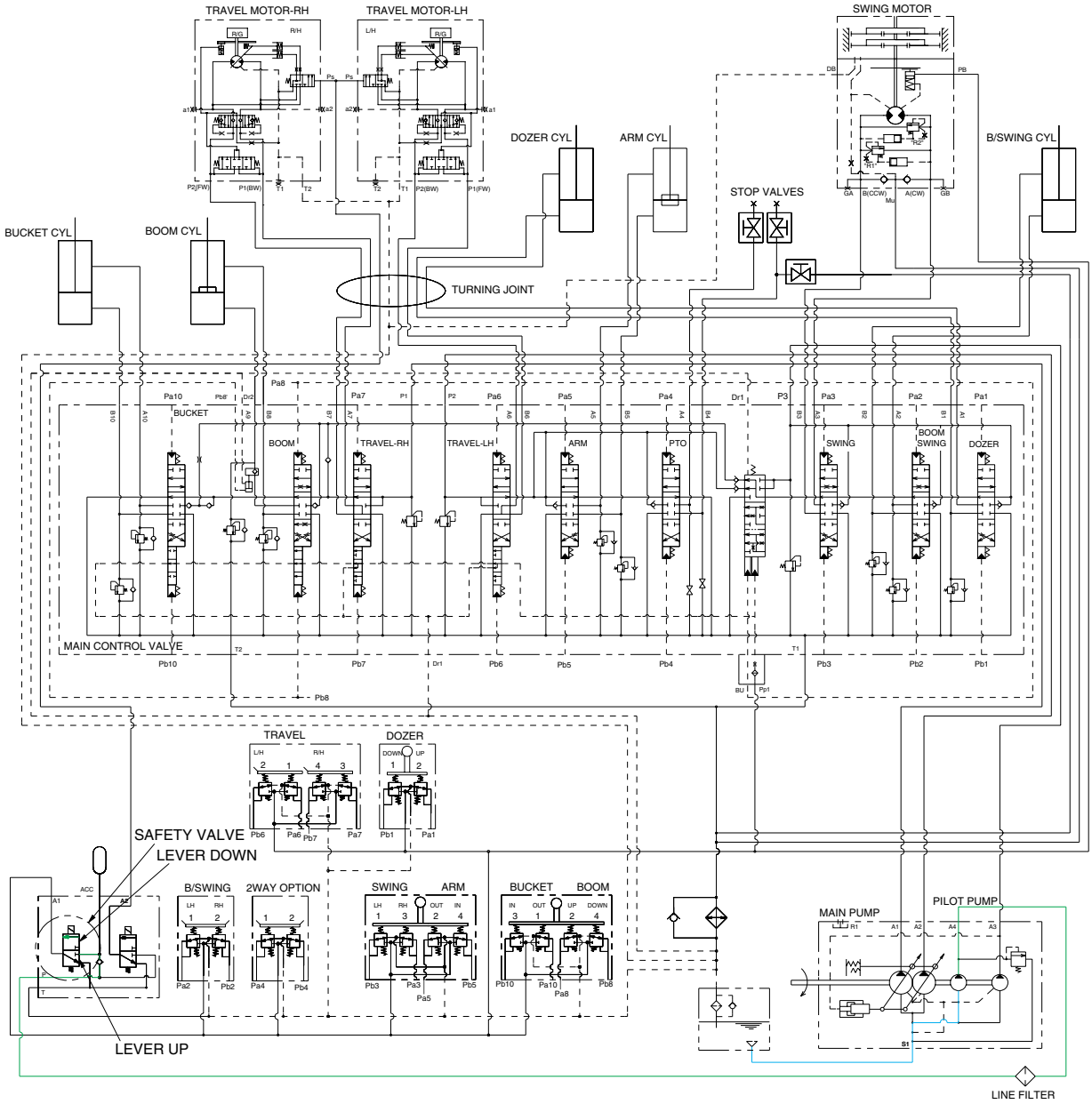

When the lever of the safety solenoid valve is moved downward, oil flows into the remote control valve through solenoid valve and line filter.

When the lever of the safety solenoid valve is moved upward, oil does not flow into the remote control valve, because of the blocked port.

3. TRAVEL SPEED CONTROL SYSTEM

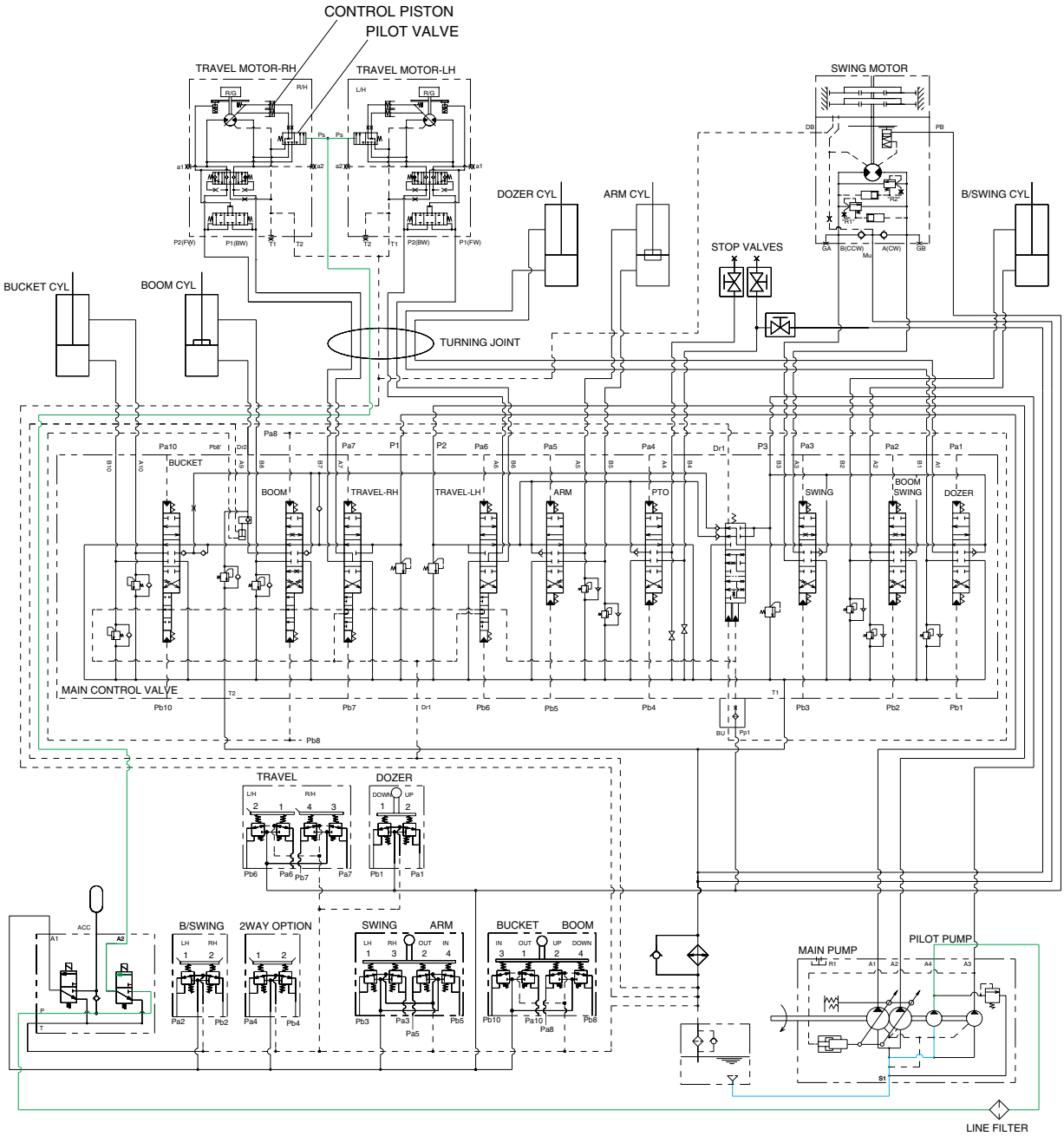

R35Z73HC05

When the travel speed switch is pushed, the travel speed solenoid valve is actuated and the discharged oil from the pilot pump flows to the Ps port of pilot valve in the travel motors.
As a result, the control piston is pushed by the main oil flow, thus the displacement is minimized.
When the travel speed switch is pushed once more, the travel speed solenoid valve is return to original position by the force of spring, the hydraulic oil of Ps port returns to the hydraulic tank.
As a result, the control piston is returned by the main oil flow, thus the displacement is maximized.

4. SWING PARKING BRAKE RELEASE

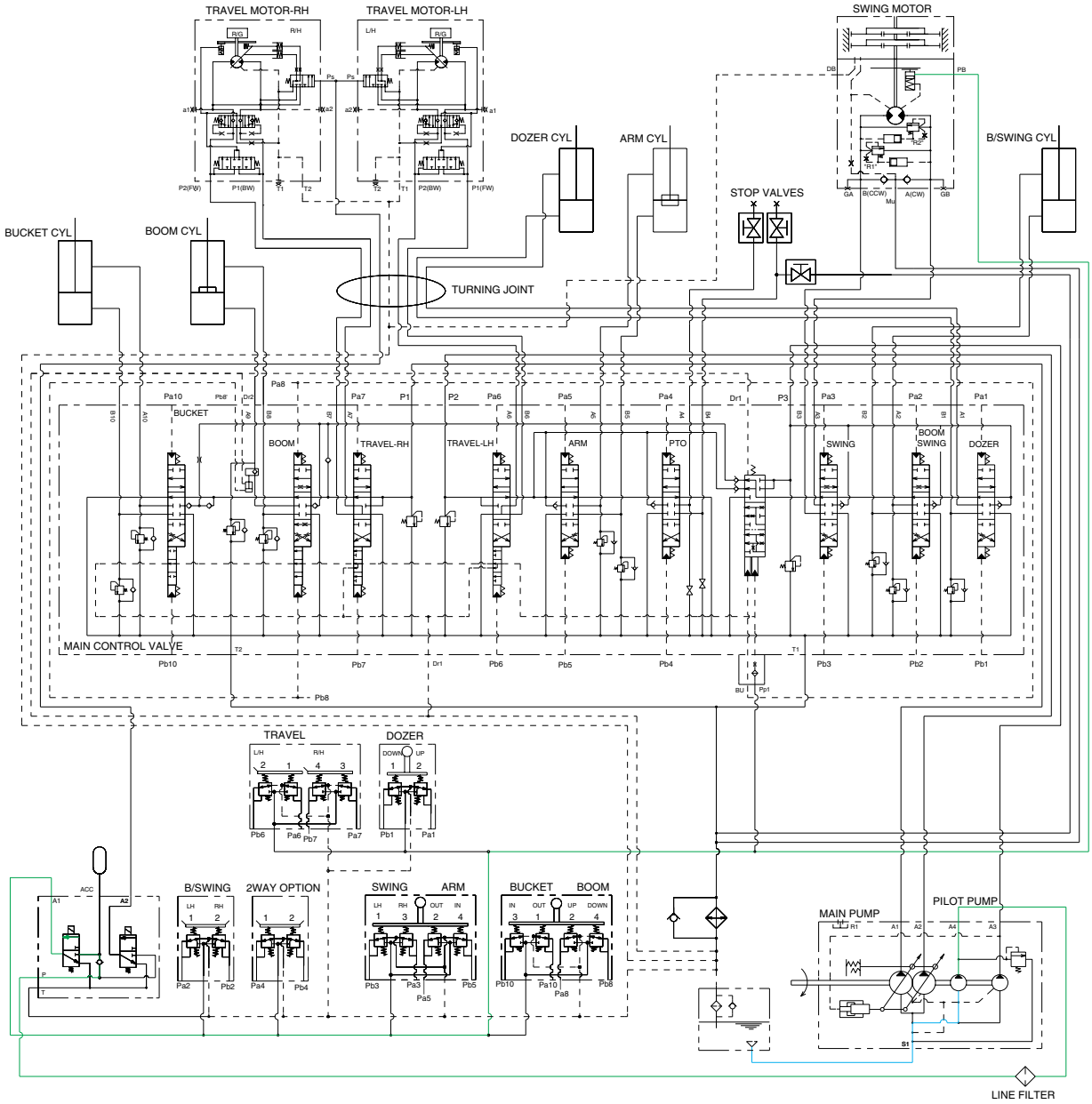

R35Z73HC06

When the Safety solenoid lever is moved downward, the pilot oil flow into PB port of the swing motor through solenoid valve. This pressure is applied to swing motor disc, thus the brake is released.
When the safety solenoid lever is moved to upward, oil in the swing motor disc cylinder is drained, thus the brake is applied.

GROUP 4 SINGLE OPERATION

1. BOOM UP OPERATION

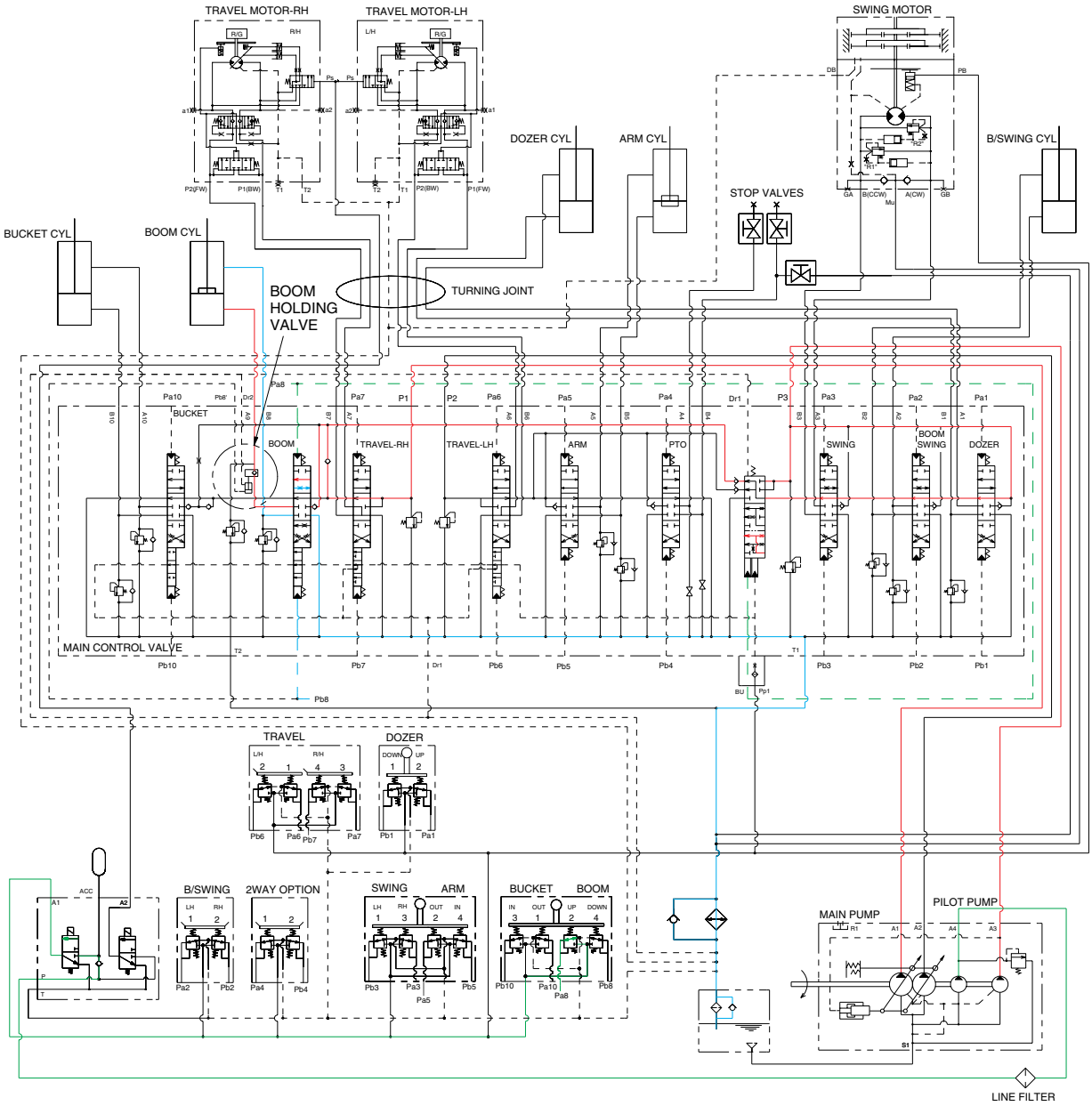

When the right control lever is pulled back, the boom spools in the main control valve are moved to the up position by the pilot oil pressure from the remote control valve.

The oil from the P1 and P3 pump flows into the main control valve and then goes to the large chamber of boom cylinders. At the same time, the oil from the small chamber of boom cylinders returns to the hydraulic oil tank through the boom spool in the main control valve. When this happens, the boom goes up. The excessive pressure in the boom cylinder bottom end circuit is prevented by relief valve. When the boom is up and the control lever is returned to neutral position, the circuit for the holding pressure at the bottom end of the boom cylinder is closed by the boom holding valve. This prevents the hydraulic drift of boom cylinder.

2. BOOM DOWN OPERATION

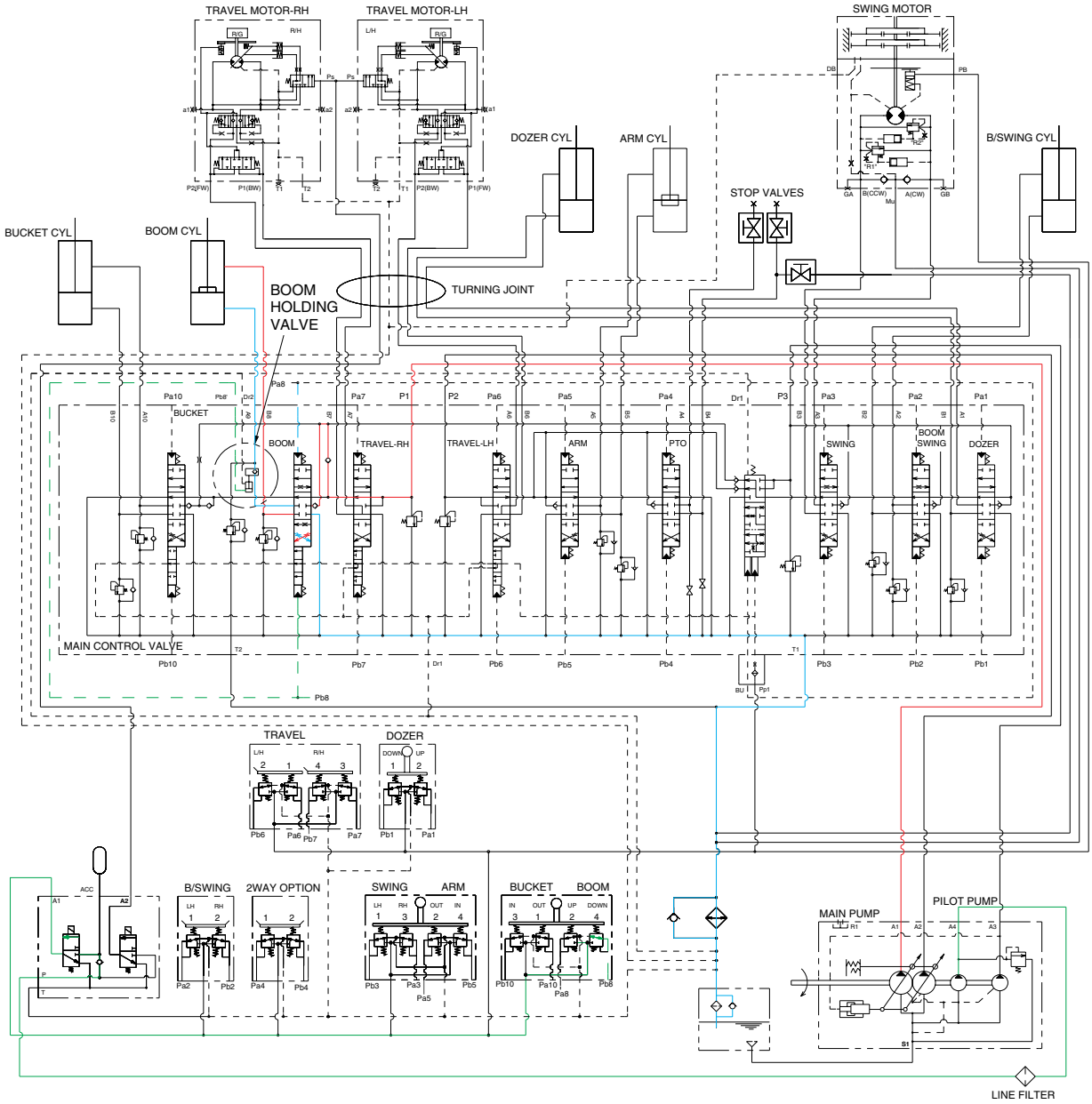

R35Z73HC11

When the right control lever is pushed forward, the boom spools in the main control valve are moved to the down position by the pilot oil pressure from the remote control valve. Since Pb8 port is connected Pb8' port through the piping, boom holding valve is also released.

The oil from the P1 pump flows into the main control valve and then goes to the small chamber of boom cylinders. At the same time, the oil from the large chamber of boom cylinders returns to the hydraulic tank through the boom spool in the main control valve.

The excessive pressure in the boom cylinder rod end circuit is prevented by the relief valve.

3. ARM ROLL IN OPERATION

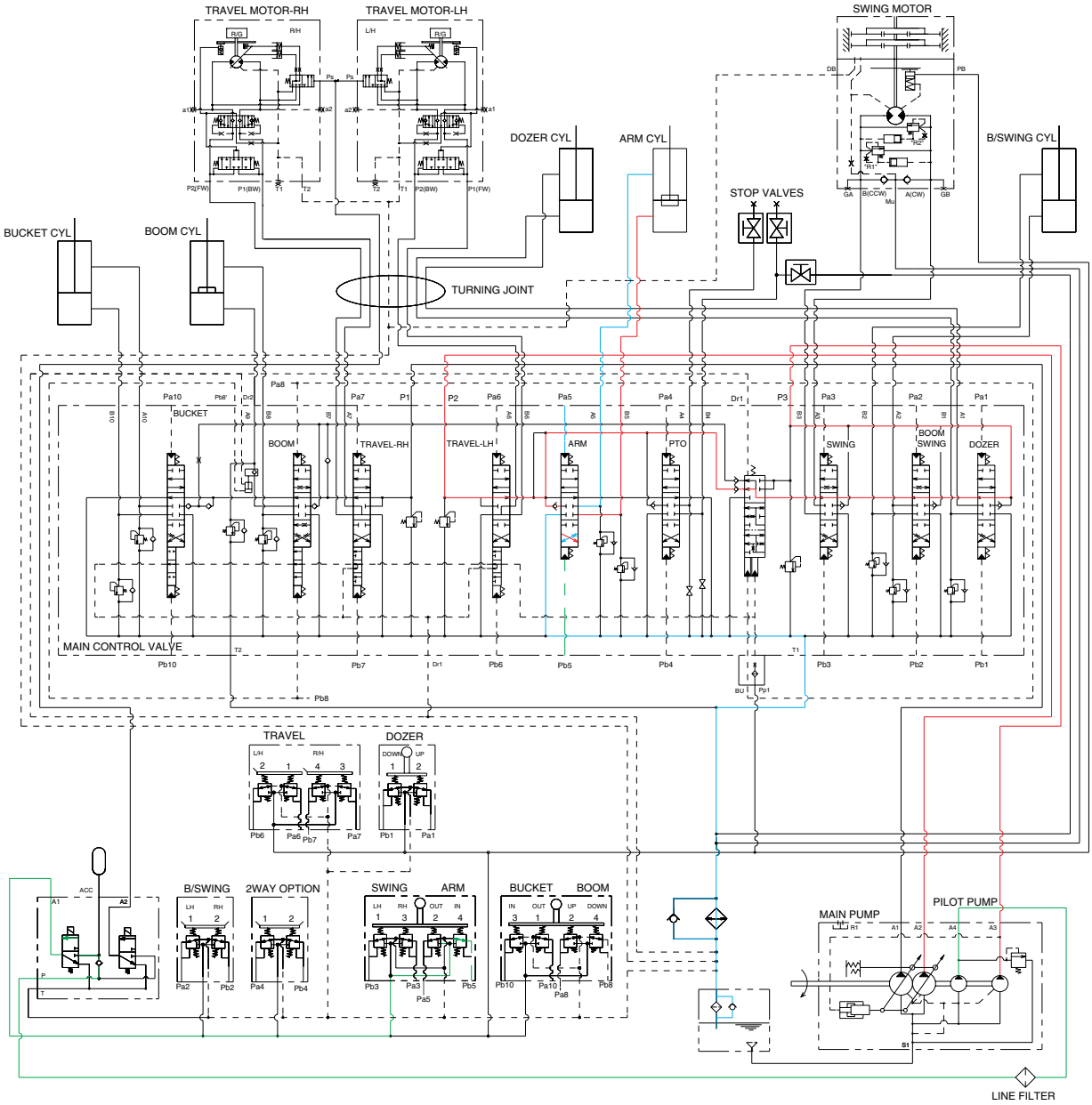

When the left control lever is pulled back, the arm spools in the main control valve are moved the to roll in position by the pilot oil pressure from the remote control valve.

The oil from the P2 and P3 pump flows into the main control valve and then goes to the large chamber of arm cylinder.

At the same time, the oil from small chamber of arm cylinder returns to the hydraulic oil tank through the arm spool in the main control valve. When this happens, the arm rolls in.

The cavitation which will happen to the bottom of the arm cylinder is also prevented by the make-up valve in the main control valve.

4. ARM ROLL OUT OPERATION

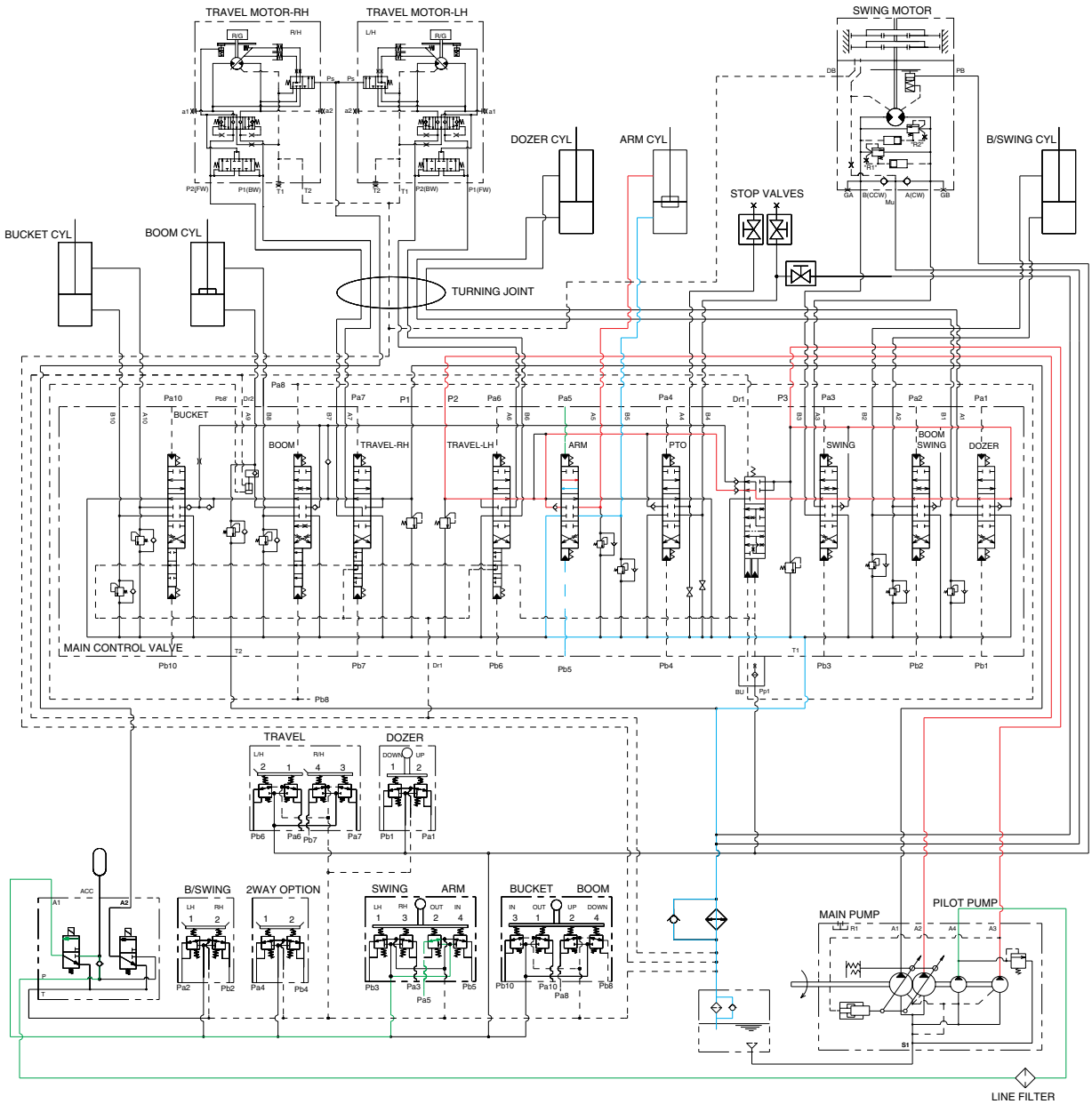

When the left control lever is pushed forward, the arm spool in the main control valve are moved to the roll out position by the pilot oil pressure from the remote control valve.

The oil from the P2 and P3 pump flows into the main control valve and then goes to the small chamber of arm cylinder.

At the same time, the oil from the large chamber of arm cylinder returns to the hydraulic oil tank through the arm spool in the main control valve. When this happens, the arm rolls out.

The cavitation which will happen to the rod of the arm cylinder is also prevented by the make-up valve in the main control valve.

5. BUCKET ROLL IN OPERATION

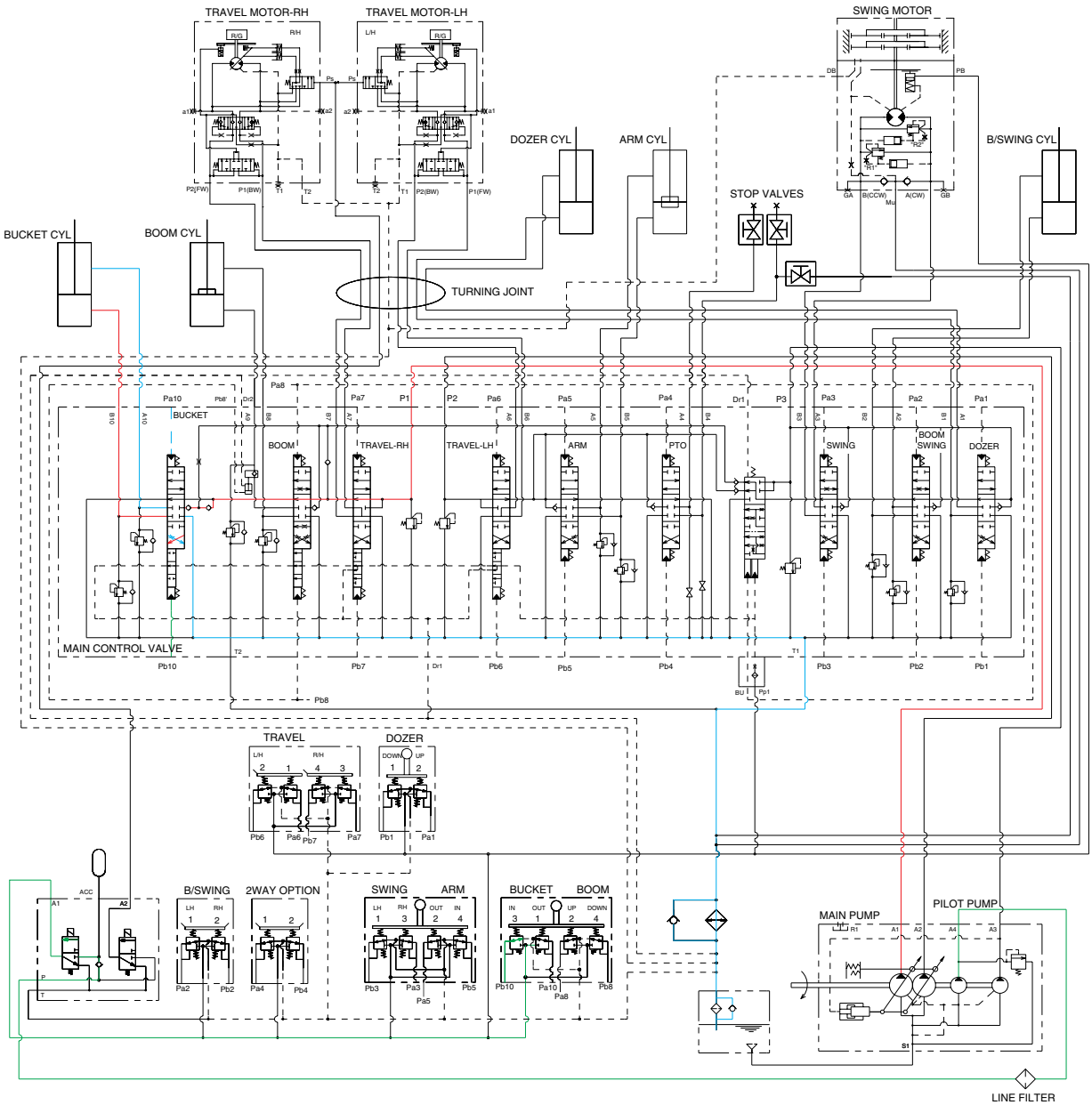

R35Z73HC14

When the right control lever is pulled left, the bucket spool in the main control valve is moved to the roll in position by the pilot oil pressure from the remote control valve.

The oil from the P1 pump flows into the main control valve and then goes to the large chamber of bucket cylinder.

At the same time, the oil from the small chamber of bucket cylinder returns to the hydraulic oil tank through the boom spool in the main control valve. When this happens, the bucket rolls in.

The cavitation which will happen to the bottom of the bucket cylinder is also prevented by the make-up valve in the main control valve.

6. BUCKET ROLL OUT OPERATION

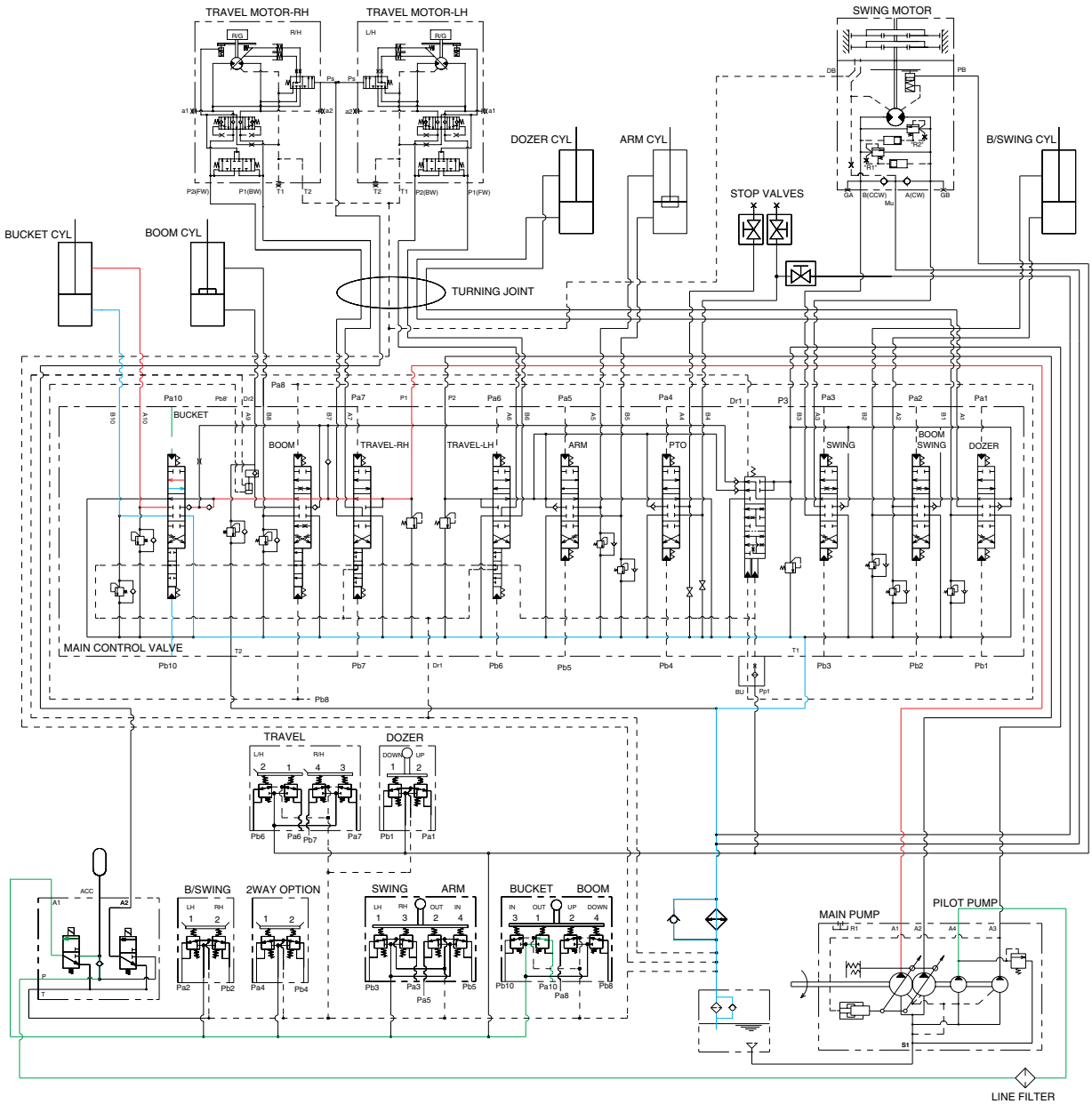

When the right control lever is pushed right, the bucket spool in the main control valve is moved to the roll out position by the pilot oil pressure from the remote control valve.

The oil from the P1 pump flows into the main control valve and then goes to the small chamber of bucket cylinder.

At the same time, the oil from the large chamber of bucket cylinder returns to the hydraulic oil tank through the bucket spool in the main control valve. When this happens, the bucket rolls out.

The cavitation which will happen to the rod of the bucket cylinder is also prevented by the make-up valve in the main control valve.

7. SWING OPERATION

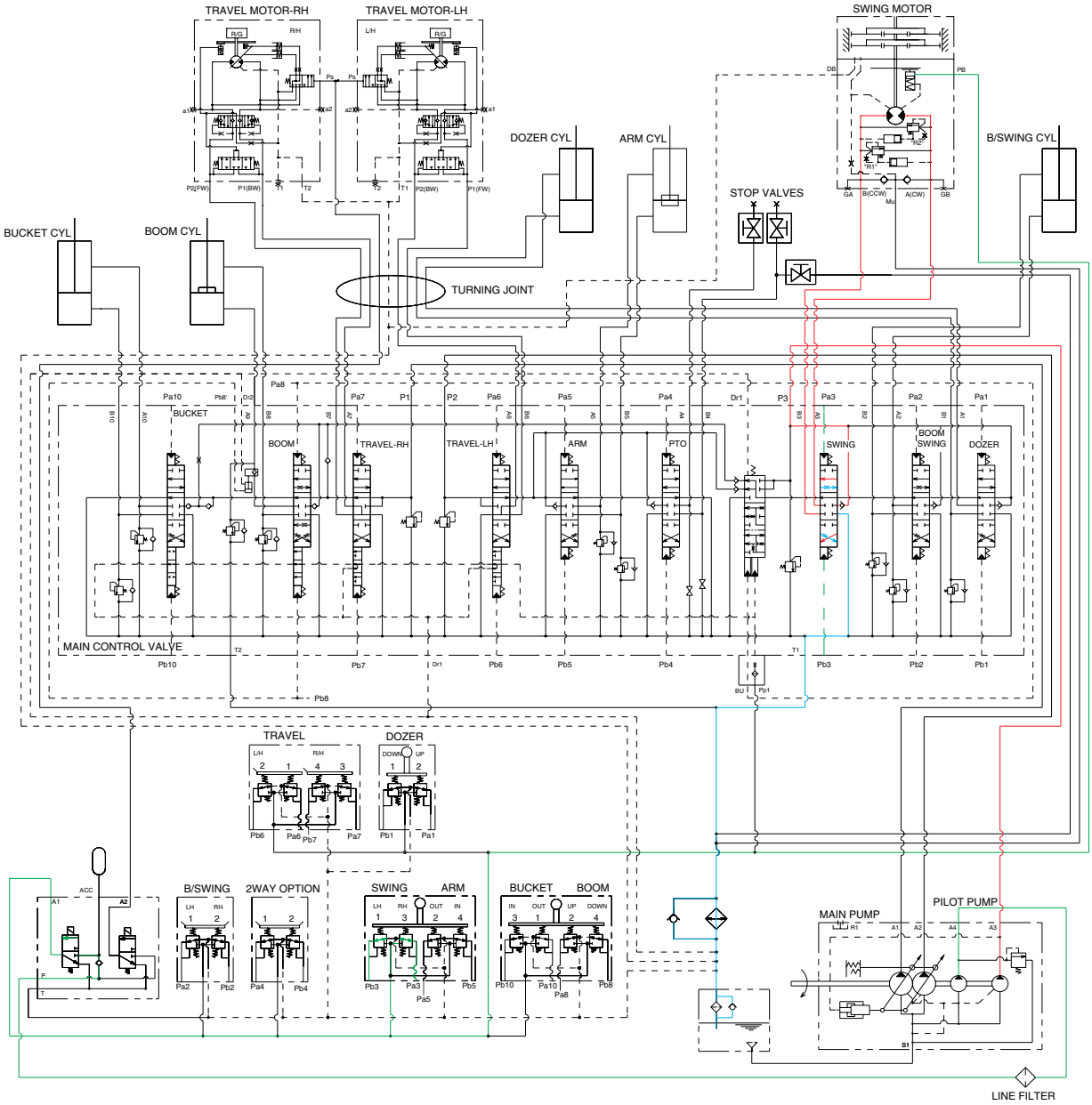

R35Z73HC16

When the left control lever is pushed left or right, the swing spool in the main control valve is moved to the left or right swing position by the pilot oil pressure from the remote control valve.
The oil from the P3 pump flows into the main control valve and then goes to the swing motor.
At the same time, the return oil from the swing motor returns to the hydraulic oil tank through the swing spool in the main control valve. When this happens, the superstructure swings to the left or right. The swing parking brake, make up valve and the overload relief valve are provided in the swing motors. The cavitation which will happen to the swing motor is also prevented by the make up valve in the swing motor itself.

SWING CIRCUIT OPERATION

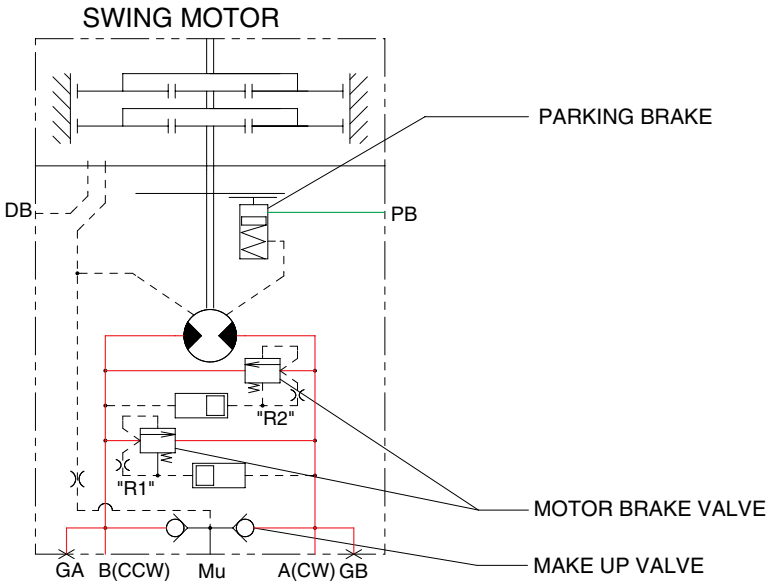

TO/FROM MAIN CONTROL VALVE

R35Z73HC40

1) MOTOR BRAKE VALVE

Motor brake valve for the swing motor limits to cushion the starting and stopping pressure of swing operation.

2) MAKE UP VALVE

The make up valves prevent cavitation by supplying return oil to the vacuum side of the motor.

3) PARKING BRAKE

PARKING BRAKE "ON" OPERATION

When the safety solenoid lever is moved to upward, the oil in the parking brake is drained to the tank. So, parking brake is applied.

PARKING BRAKE "OFF" OPERATION

The parking brake is released by the pilot pressure oil from pilot pump.
When the safety solenoid lever is moved to downward, the pilot pressure from the P4 pilot pump is flow into parking brake through safety solenoid valve.
Then the pilot pressure lift the brake piston and release the parking brake.

8. TRAVEL FORWARD AND REVERSE OPERATION

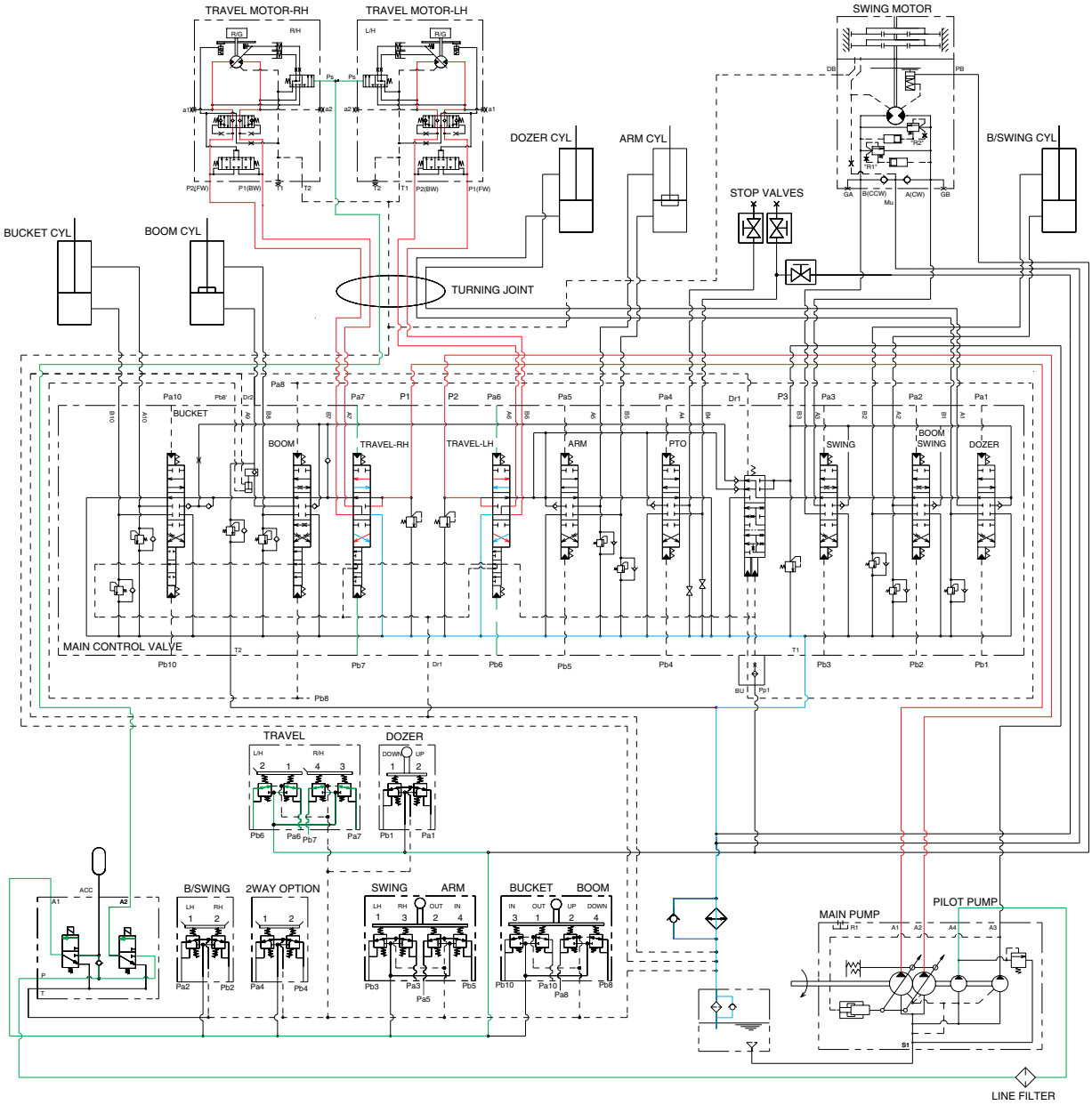

R35Z73HC17

When the travel levers are pushed forward or reverse position, the travel spools in the main control valve are moved to the forward or reverse travel position by pilot pressure oil. The oil from the both pumps flows into the main control valve and then goes to the both travel motors through the turning joint. The return oil from both travel motors returns to the hydraulic oil tank through the turning joint and the travel spools in the main control valve. When this happens, the machine moves to the forward or reverse.

TRAVEL CIRCUIT OPERATION

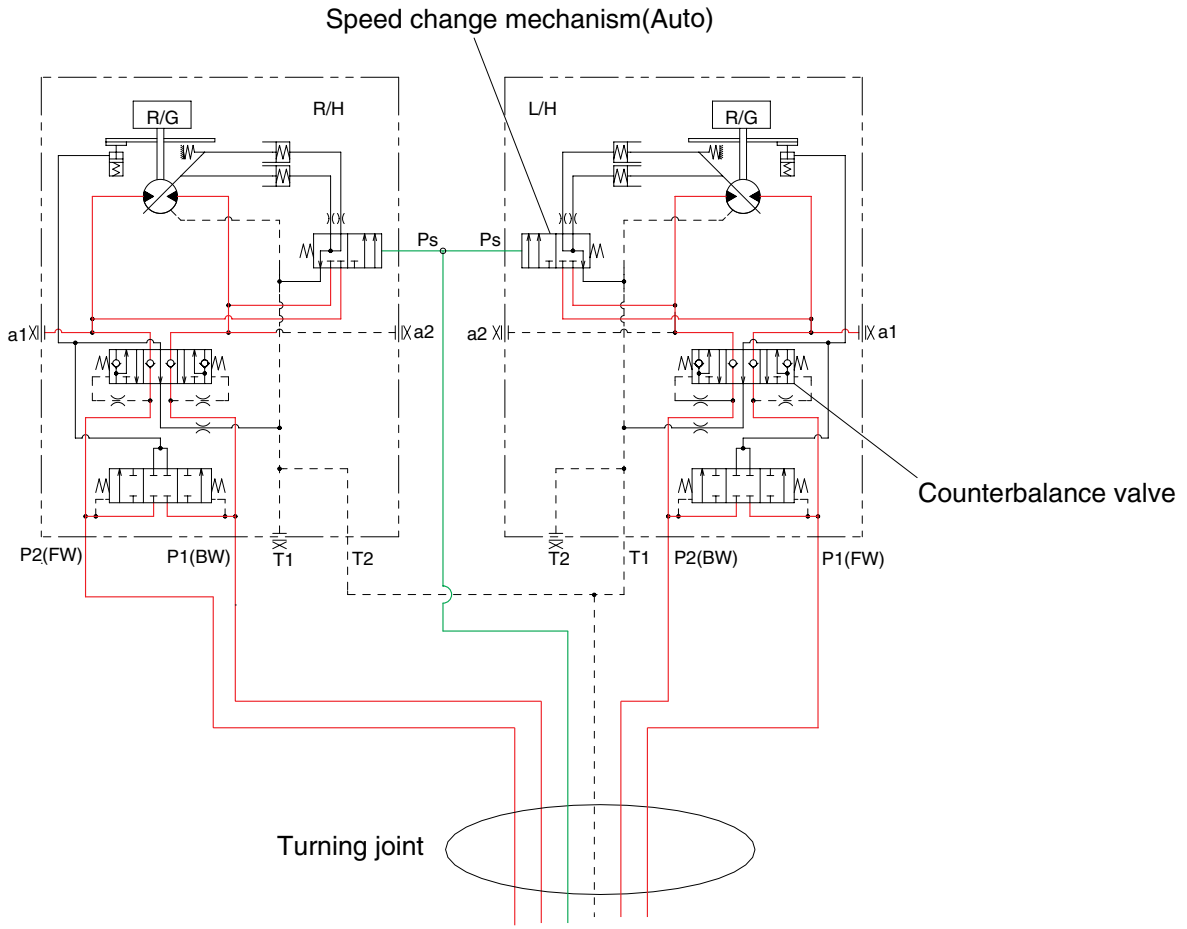

R35Z73HC42

Valves are provided on travel motors to offer the following functions.

1) COUNTERBALANCE VALVE

When stopping the motor of slope descending, this valve to prevent the motor over run.

2) SPEED CHANGE MECHANISM (Auto)

Auto two speed control mechnism consists of two spools and spring. This valve automatically changes motor displacement in portion to motor pressure.

9. DOZER UP OPERATION

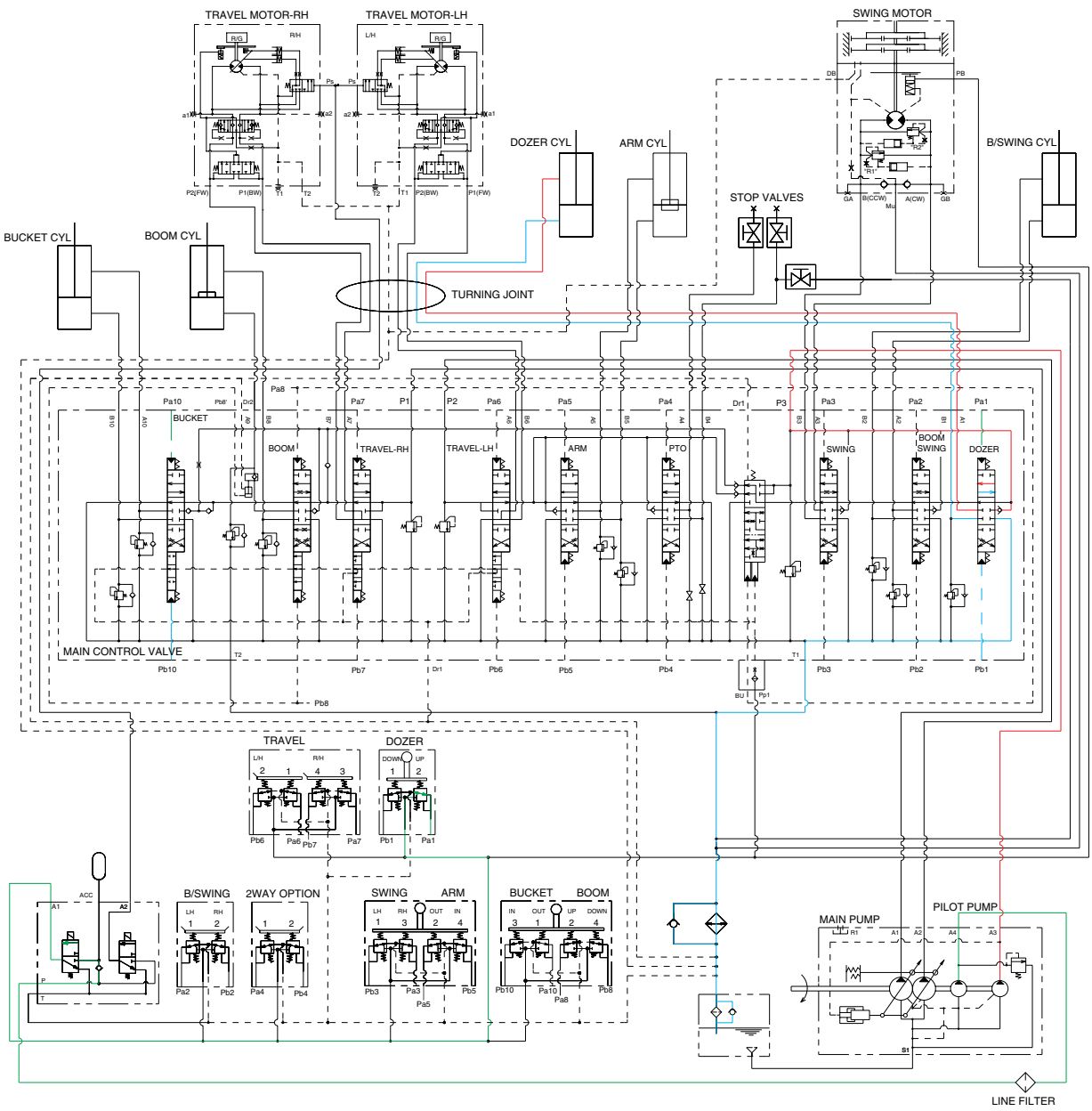

When the dozer control lever is pulled back, the dozer spool in the main control valve is moved to the dozer up position by the pilot oil pressure from the remote control valve.

The oil from the P3 pump flows into the main control valve and then goes to the small chamber of dozer cylinders.

At the same time, the oil from the large chamber of dozer cylinders returns to the hydraulic oil tank through the dozer spool in the main control valve. When this happens, the dozer goes up.

10. DOZER DOWN OPERATION

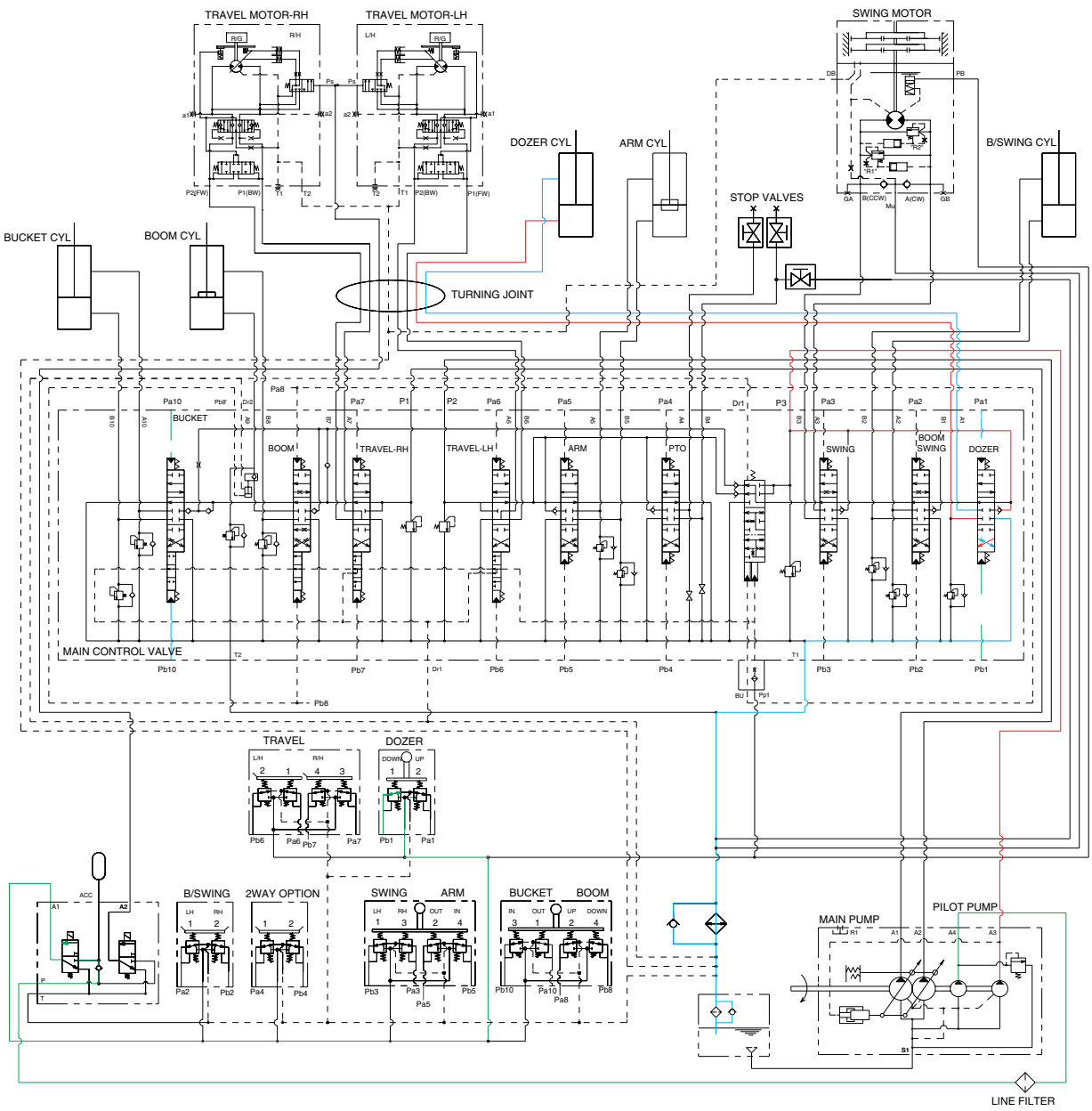

When the dozer control lever is pushed forward, the dozer spool in the main control valve is moved to the dozer down position by the pilot oil pressure from the remote control valve.

The oil from the P3 pump flows into the main control valve and then goes to the large chamber of dozer cylinders.

At the same time, the oil from the small chamber of dozer cylinders returns to the hydraulic oil tank through the dozer spool in the main control valve. When this happens, the dozer blade is down.

GROUP 5 COMBINED OPERATION

1. OUTLINE

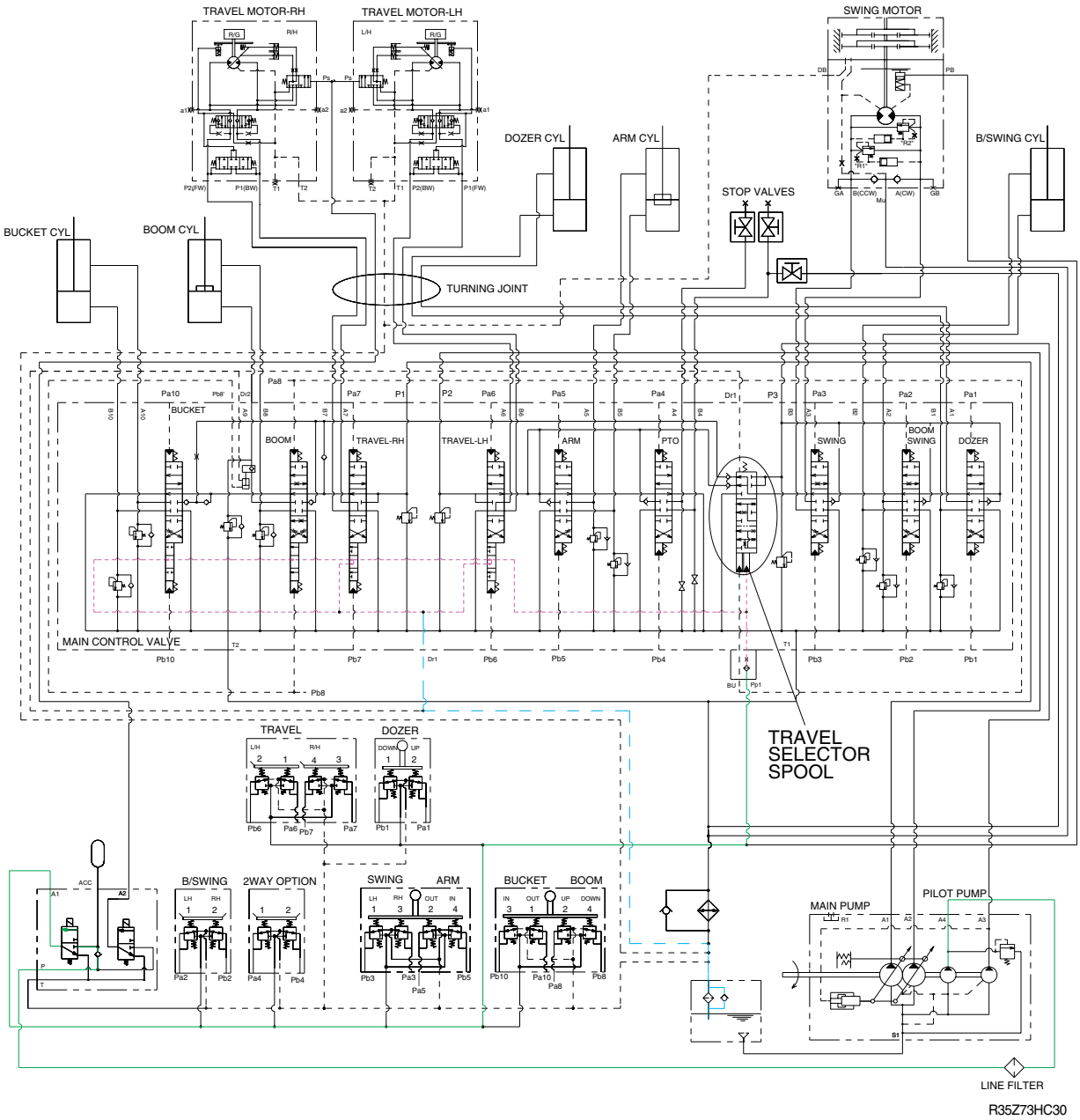

The oil from the P1, P2, P3 pump flows through the neutral oil passage, bypass oil passage and confluence oil passage in the main control valve. Then the oil goes to each actuator and operates them. Check valves and orifices are located on these oil passage in the main control valve. These control the oil from the main pumps so as to correspond to the operation of each actuator and smooth the combined operation.

INDEPENDENT TRAVEL SYSTEM

This independent travel system for straight travel is provided in the main control valve.

If any actuator(s) on P1 and P2 pump side is operated when traveling, the travel selector spool is moved to the selected side by the pilot oil pressure.

Consequently, the pressure oil from P1 and P2 pump are supplied to the right and left travel motor and oil from P3 pump flows into the other operated actuator.

This keeps the straight travel.

2. COMBINED SWING AND BOOM OPERATION

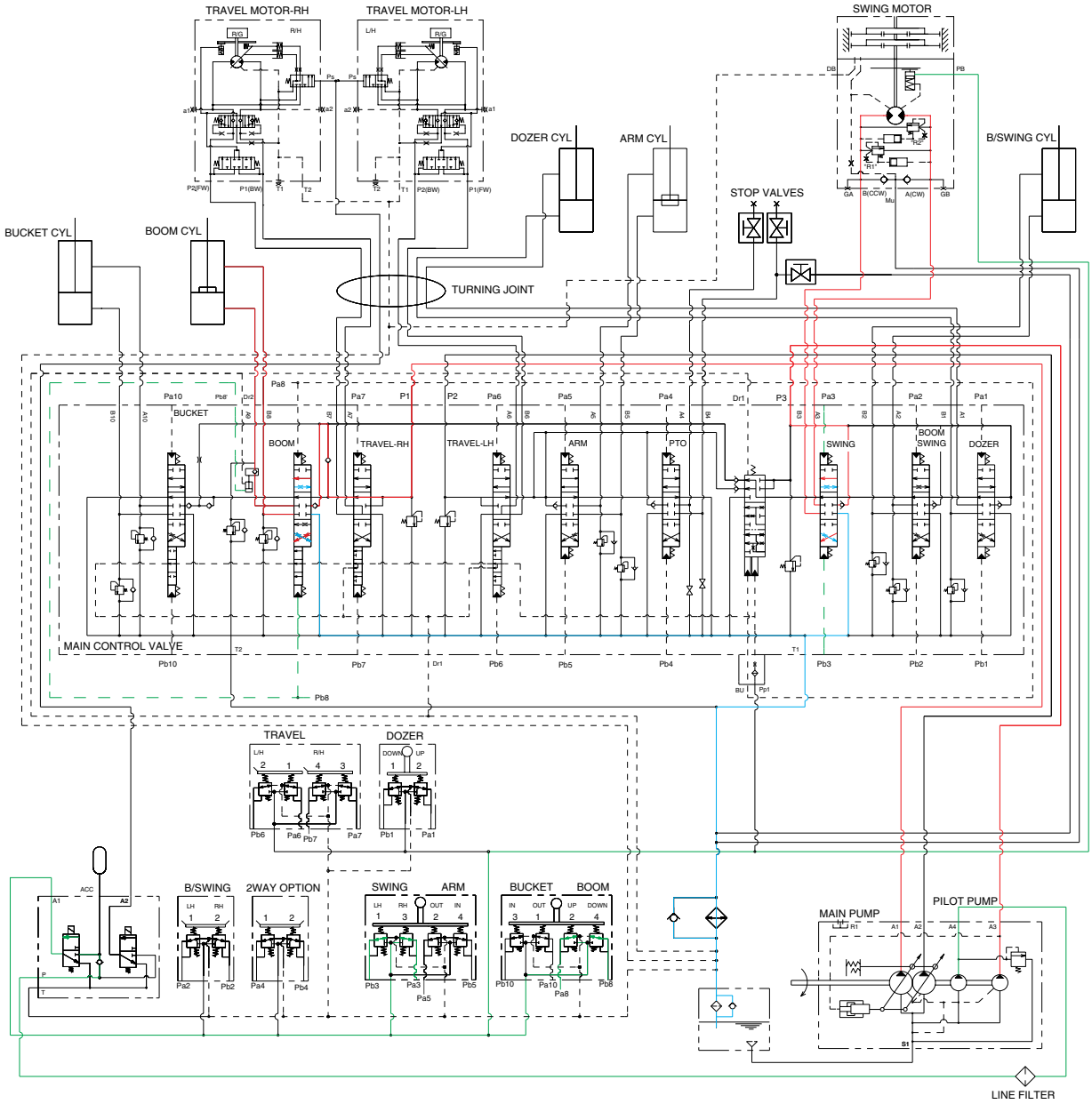

When the swing and boom functions are operated, simultaneously the swing spool and boom spools in the main control valve are moved to the functional position by the pilot oil pressure from the remote control valve.

The oil from the P1 pump flows into the boom cylinder through boom.

The oil from the P3 pump flows into the swing motor through the swing spool.

The superstructure swings and the boom is operated.

3. COMBINED SWING AND ARM OPERATION

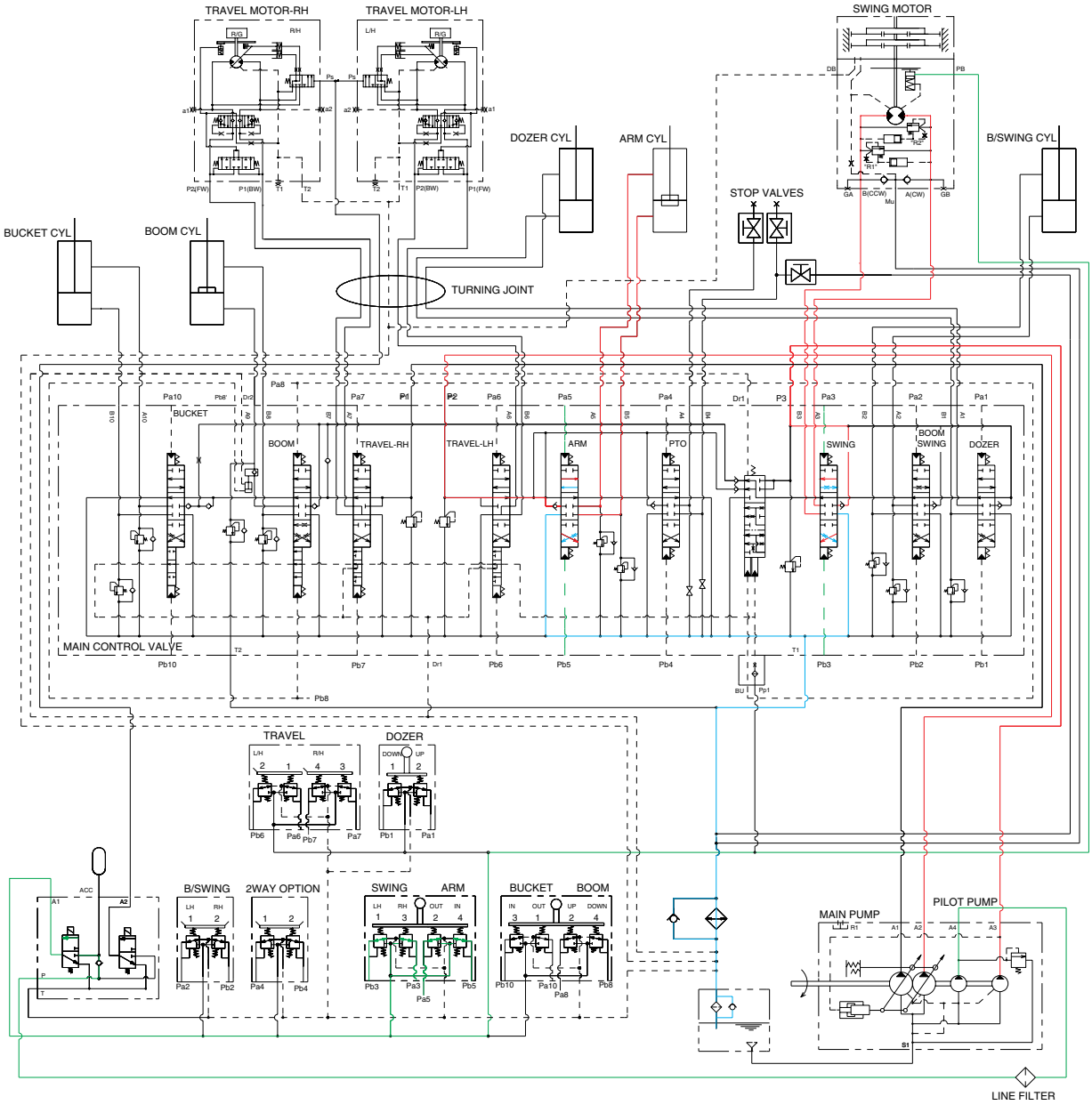

When the swing and arm functions are operated, simultaneously the swing spool and arm spools in the main control valve are moved to the functional position by the pilot oil pressure from the remote control valve.

The oil from the P3 pump flows into the swing motor through swing spool.

The oil from the P2 pump flows into the arm cylinder through the arm.

The superstructure swings and the arm is operated.

4. COMBINED SWING AND BUCKET OPERATION

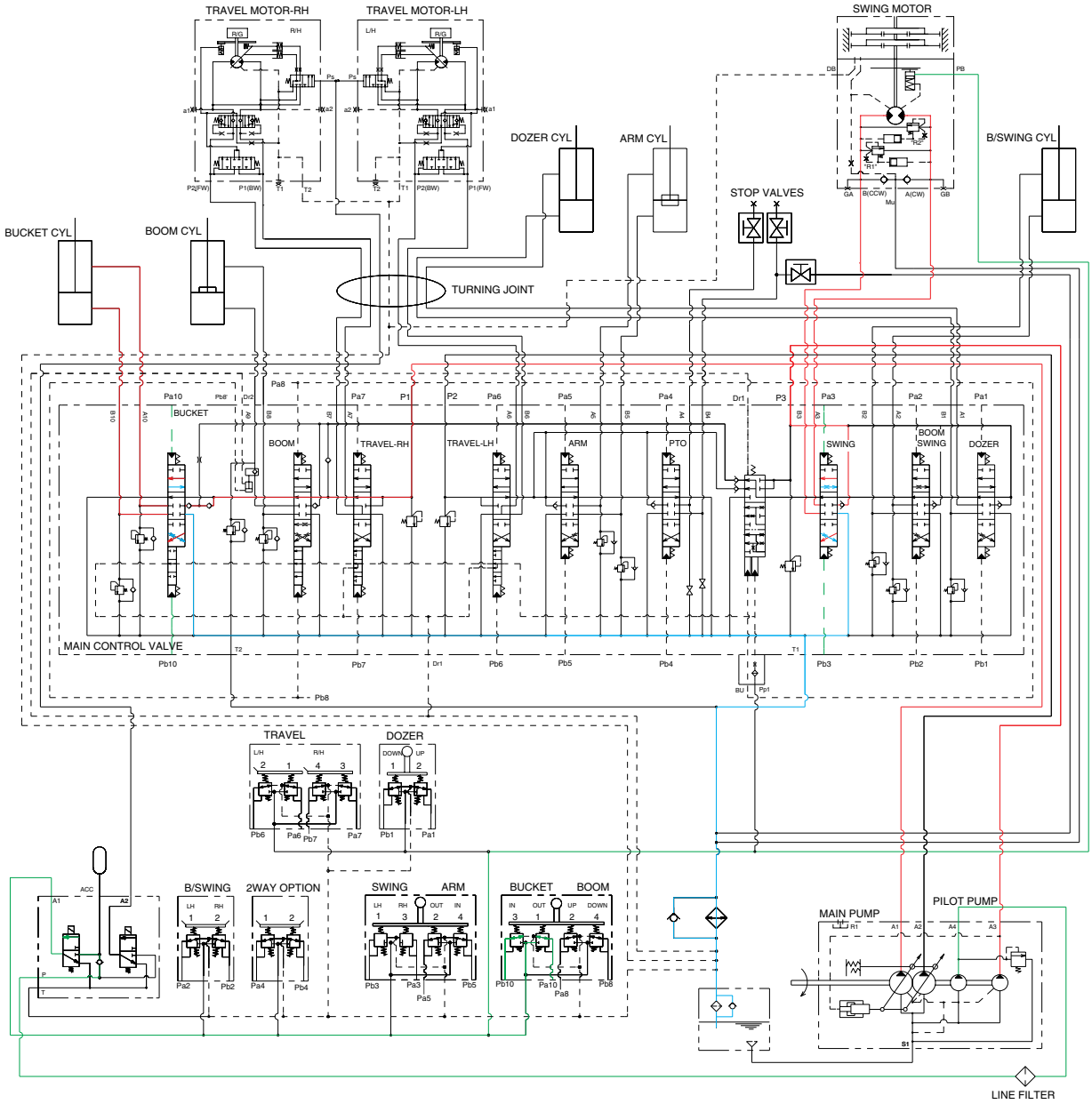

When the swing and bucket functions are operated, simultaneously the swing spool and bucket spool in the main control valve are moved to the functional position by the pilot oil pressure from the remote control valve.

The oil from the P3 pump flows into the swing motor through the swing spool.

The oil from the P1 pump flows into the bucket cylinder through the bucket spool.

5. COMBINED SWING, BOOM, ARM AND BUCKET OPERATION

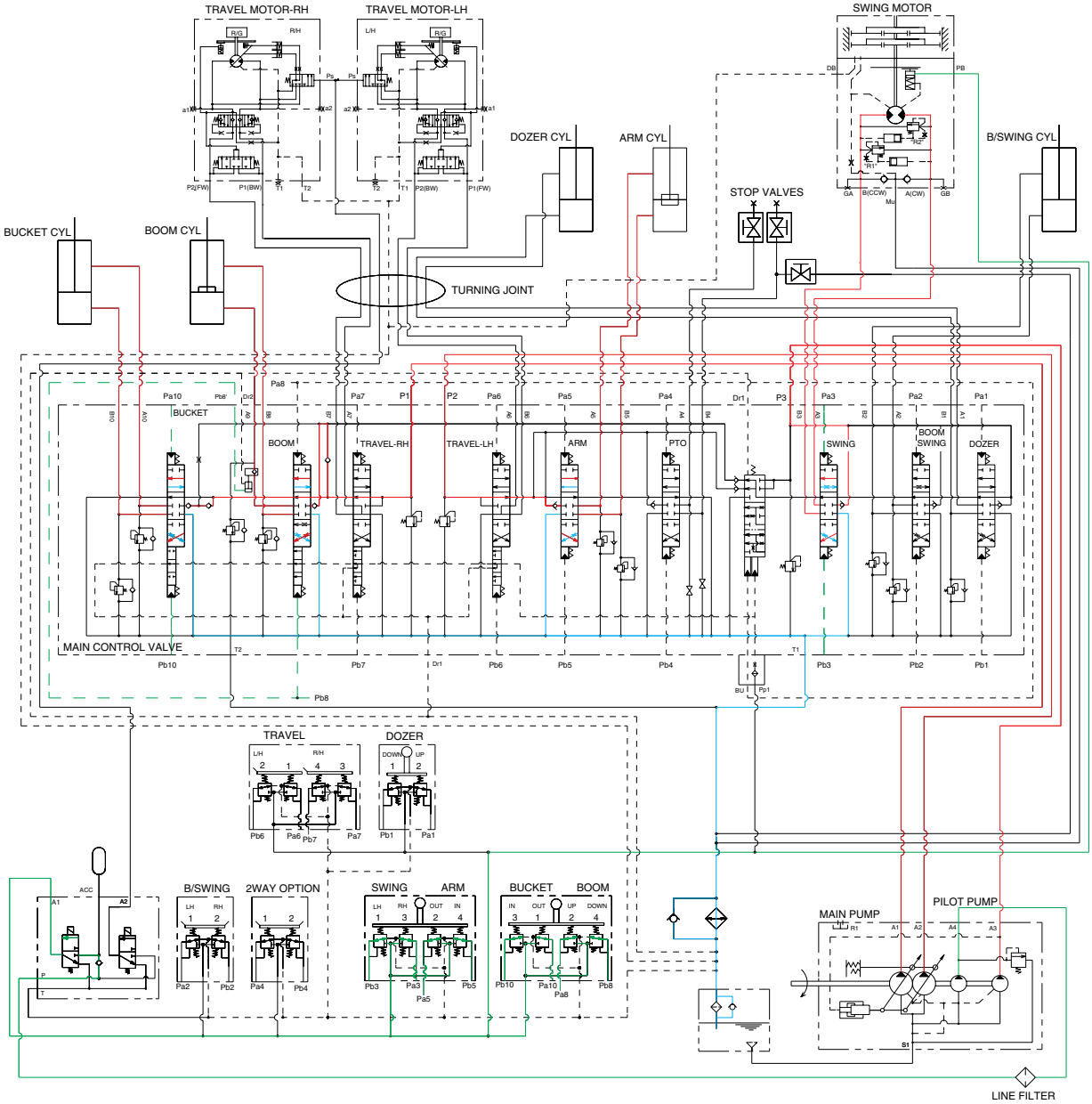

R35Z73HC34

When the swing, boom, arm and bucket functions are operated, simultaneously each spool in the main control valve is moved to the functional position by the pilot oil pressure from the remote control valve.

The oil from the P2 pump flows into the arm cylinder through, arm spool.

The oil from the P1 pump flows into the boom cylinders and bucket cylinder through the boom spool, bucket spool.

The oil from the P3 pump flows into the swing motor through the swing spool.

The superstructure swings and the boom, arm and bucket are operated.

6. COMBINED SWING AND TRAVEL OPERATION

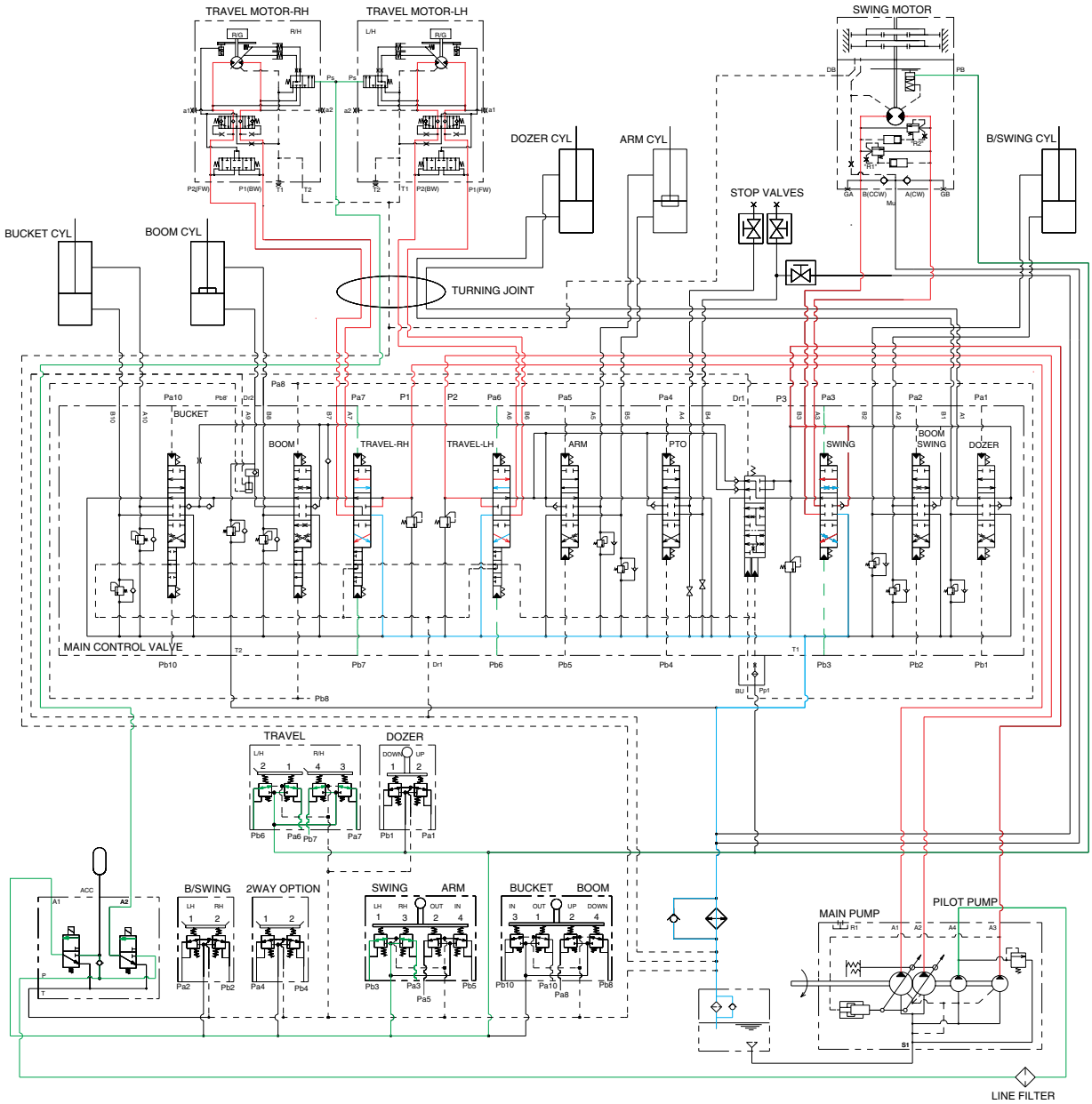

R35Z73HC35

When the swing and travel functions are operated, simultaneously the swing spool and travel spools in the main control valve are moved to the functional position by the pilot oil pressure from the remote control valve and the travel levers.

The oil from the P3 pump flows into the swing motor through the swing spool.

The oil from the P1 pump flows into the travel motor through the RH travel spool.

The oil from the P2 pump flows into the travel motor through the LH travel spool.

The superstructure swings and the machine travels straight.

7. COMBINED BOOM AND TRAVEL OPERATION

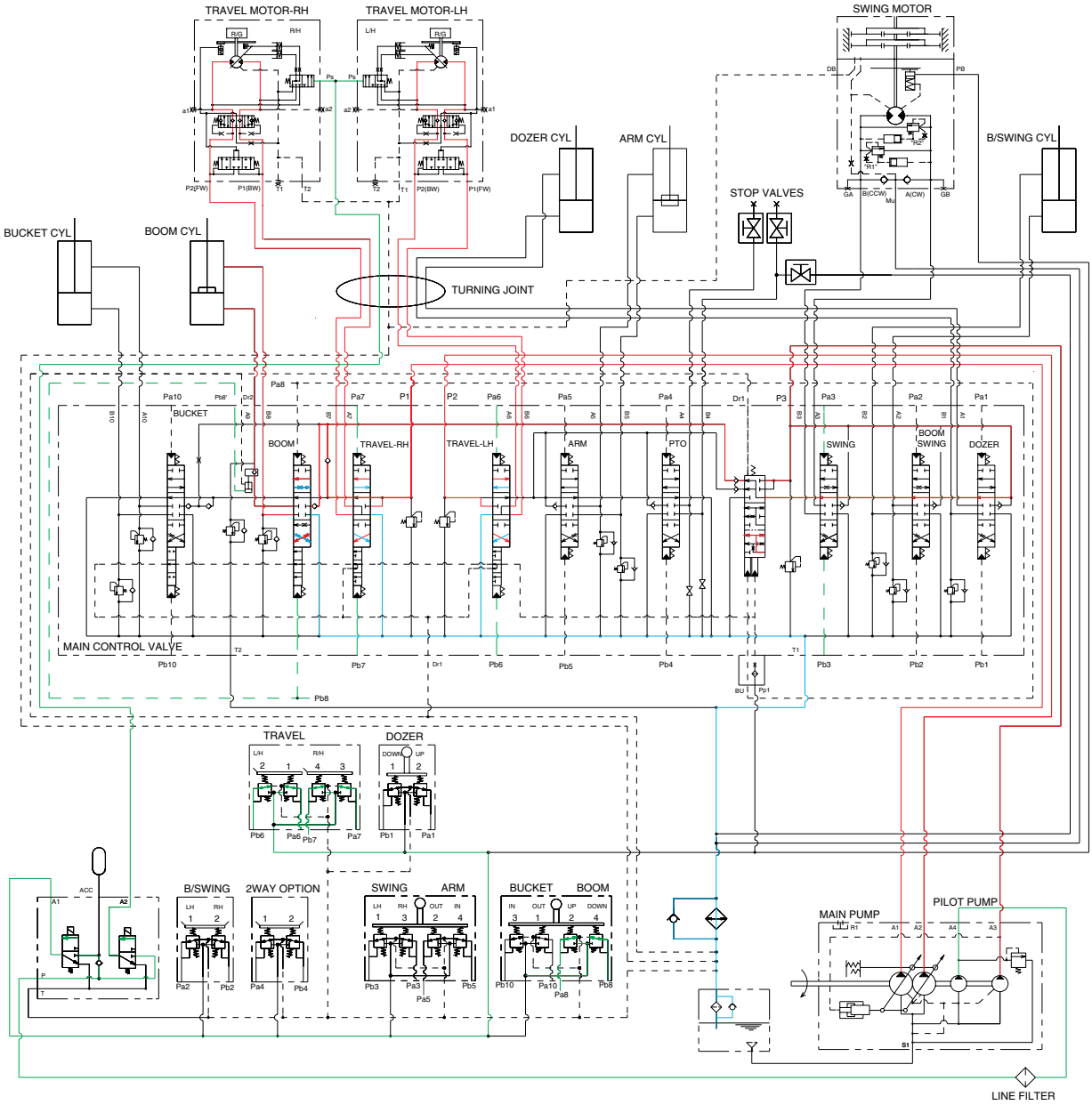

When the boom and travel functions are operated, simultaneously the boom spools and travel spools in the main control valve are moved to the functional position by the pilot oil pressure from the remote control valve.

The oil from the P1 and P2 pumps flows into the travel motors through travel RH and travel LH spools.

The oil from the P3 pump flows into the boom cylinders through boom spool via the travel selector spool. The boom is operated and the machine travels straight.

8. COMBINED ARM AND TRAVEL OPERATION

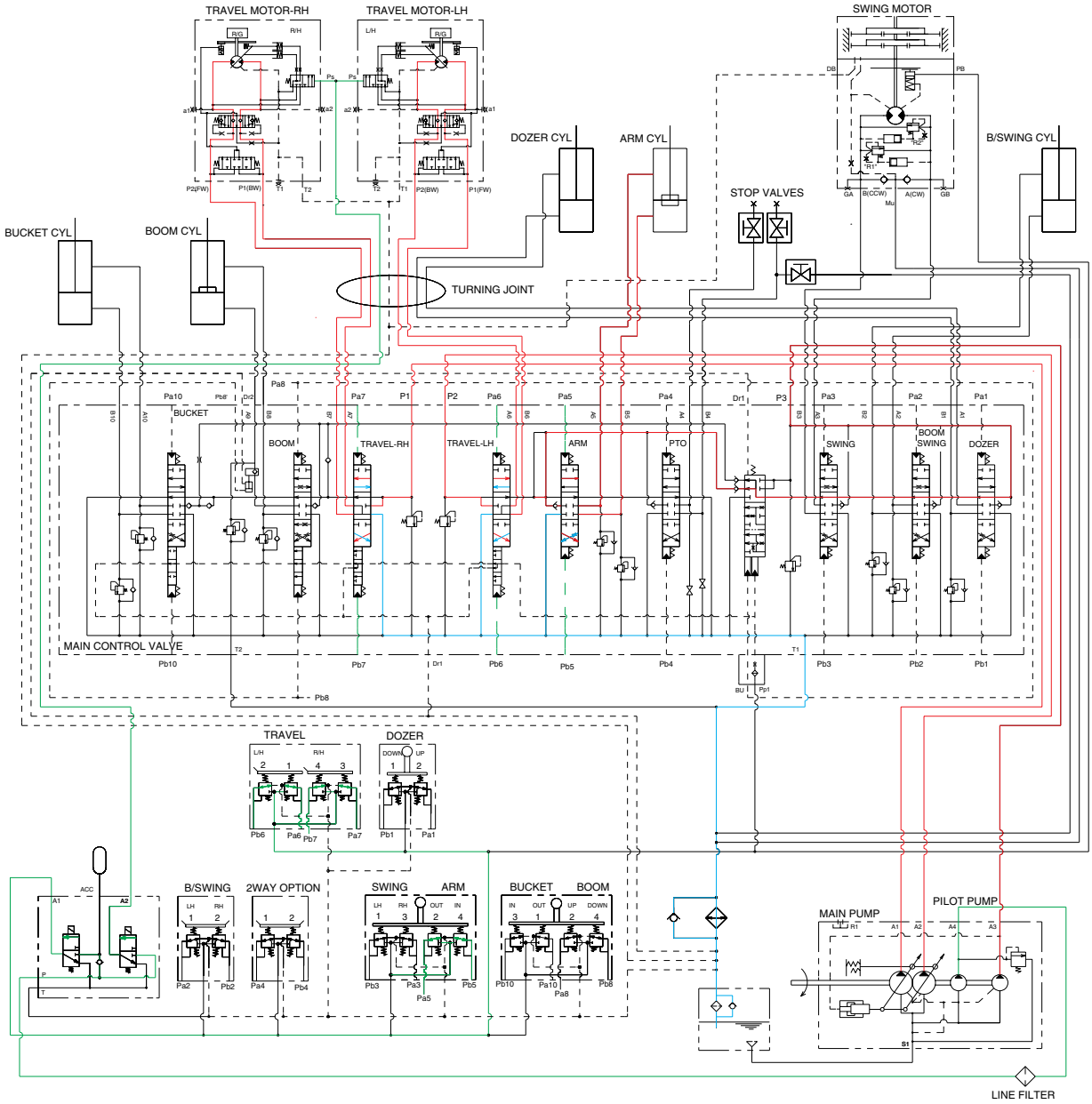

R35Z73HC37

When the arm and travel functions are operated, simultaneously the arm spools and travel spools in the main control valve are moved to the functional position by the pilot oil pressure from the remote control valve.

The oil from the P1 and P2 pumps flows into the travel motors through travel spools.

The oil from the P3 pump flows into the arm cylinder through arm spool via the travel selector spool.

The arm is operated and the machine travels straight.

9. COMBINED BUCKET AND TRAVEL OPERATION

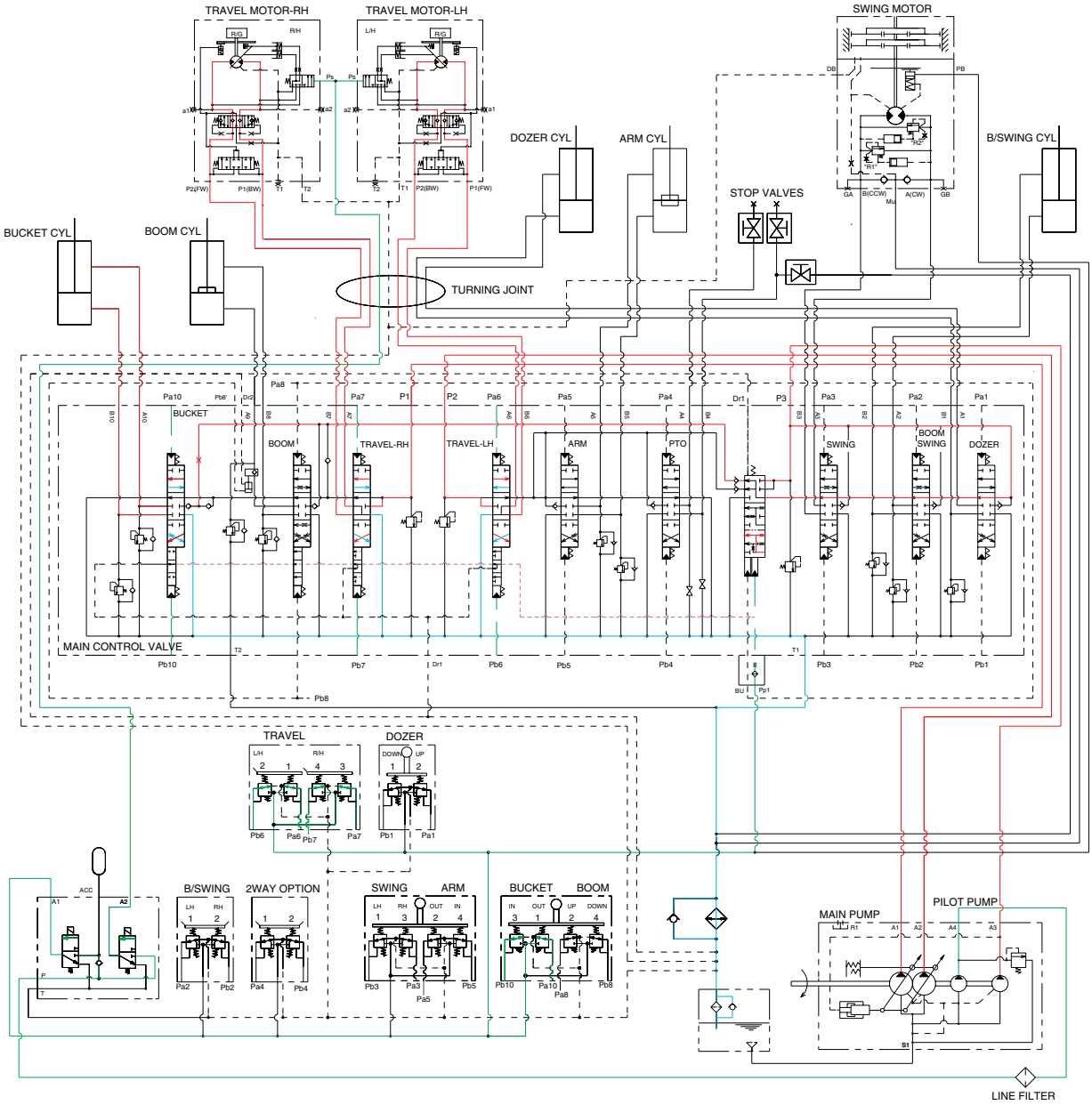

R35Z73HC38

When the bucket and travel functions are operated, simultaneously the bucket spool and travel spools in the main control valve are moved to the functional position by the pilot oil pressure from the remote control valve, and the travel selector spool is pushed to the up by the oil pressure from pilot pump. The oil from the P1 and P2 pumps flows into the travel motors.

The oil from the P3 pump flows into the bucket cylinder through bucket spool via the travel selector spool.

The bucket is operated and the machine travels straight.

SECTION 4 ELECTRICAL SYSTEM

Group 1 Component Location 4-1
Group 2 Monitoring system 4-3
Group 3 Electrical Circuit 4-9
Group 4 Electrical Component Specification 4-25
Group 5 Connectors 4-32

GROUP 1 COMPONENT LOCATION

1. LOCATION 1

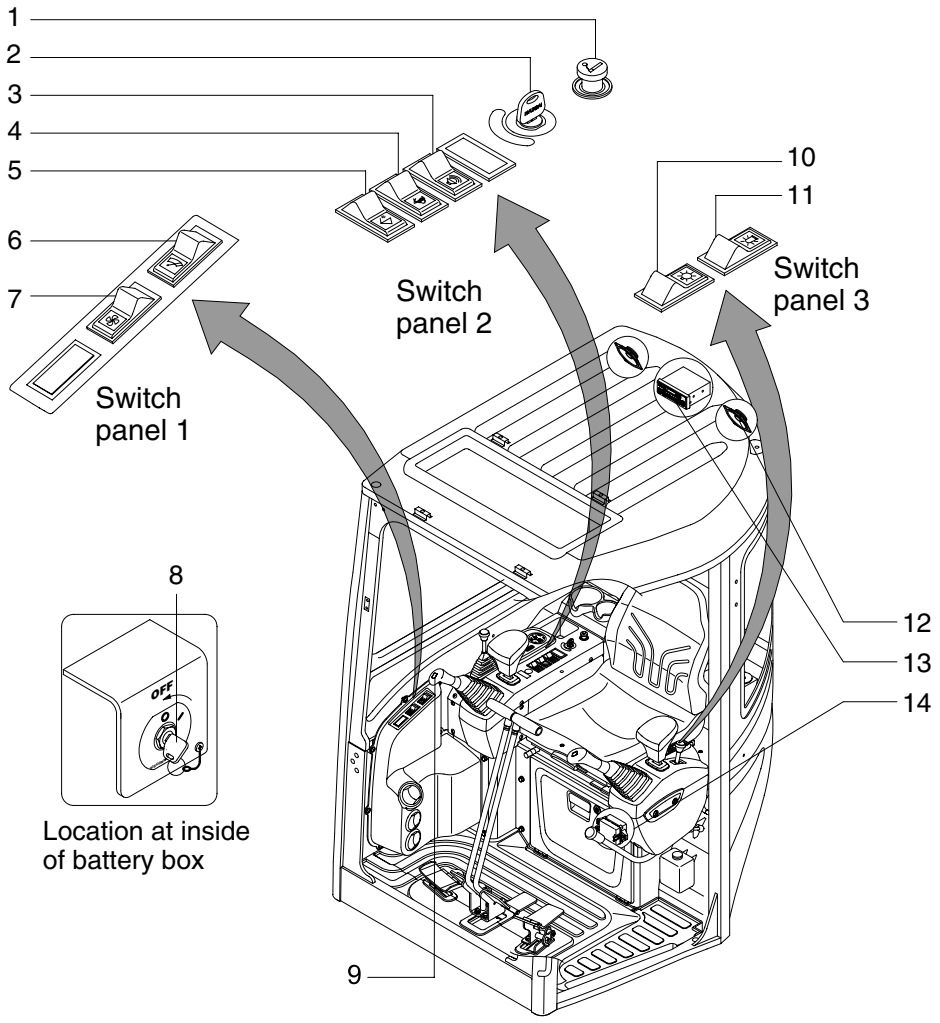

R35Z74EL02

1	Cigar light	6	Washer/wiper switch	11	Beacon switch
2	Start switch	7	Heater switch	12	Speaker
3	Travel alarm switch	8	Master switch	13	Cassette & radio
4	Travel speed control	9	Horn switch	14	Fuse box
5	Quick clamp switch	10	Main light switch		

2. LOCATION 2

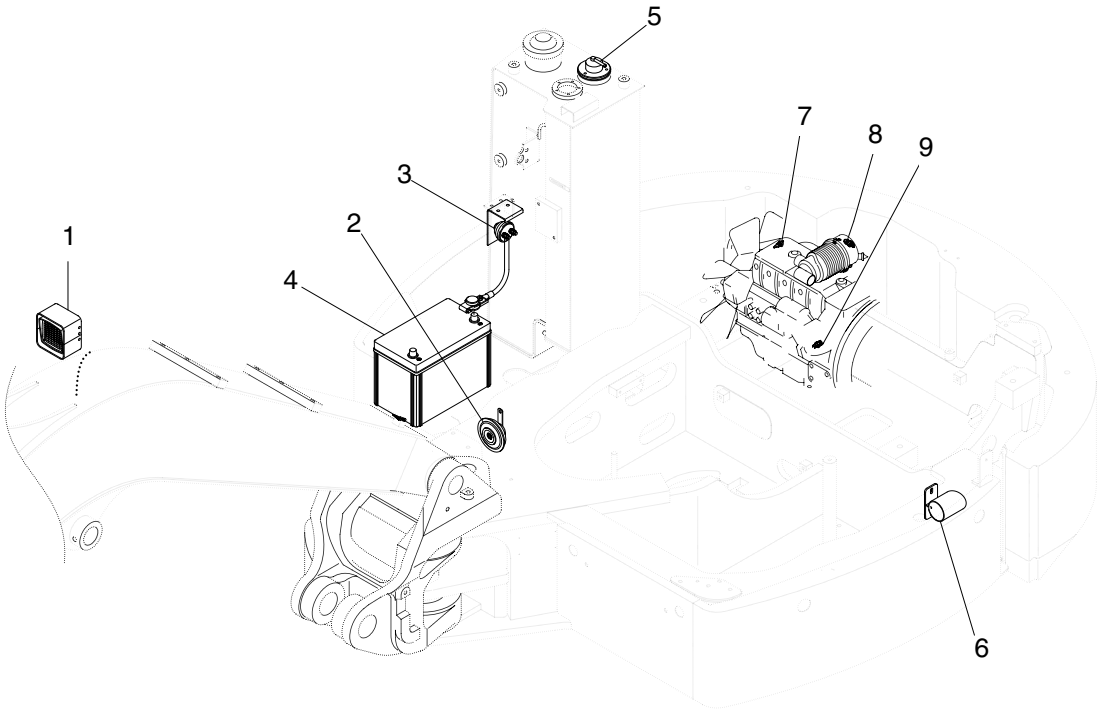

R35Z74EL22

1	Lamp	4	Battery	7	Temperature sender
2	Horn	5	Fuel sender	8	Air cleaner pressure switch
3	Master switch	6	Travel alarm buzzer	9	Engine oil pressure switch

GROUP 2 MONITORING SYSTEM

1. OUTLINE

Monitoring system consists of the monitor part and switch part.

The monitor part gives warnings when any abnormality occurs in the machine and informs the condition of the machine.

Various select switches are built into the monitor panel, which act as the control portion of the machine control system.

2. CLUSTER

1) MONITOR PANEL

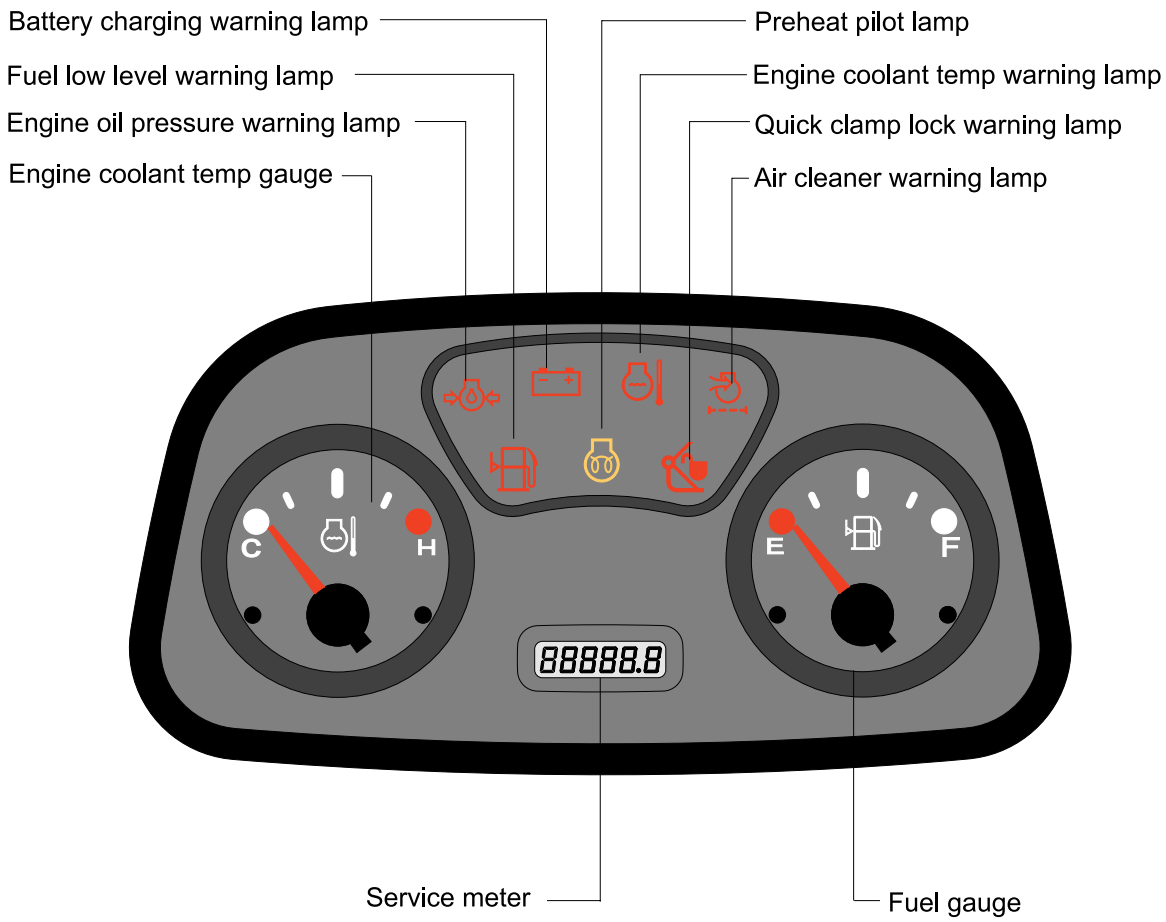

R35Z73CD01

2) CLUSTER CHECK PROCEDURE

(1) Start key : ON

① Check monitor initial 6 seconds

a. All lamps light up.

② Check monitor after 3 seconds : Indicate machine condition

a. Tachometer : 0 rpm

b. Fuel gauge : Pointed at appropriate level

c. Engine coolant temperature gauge : Pointed at appropriate level

d. Warning lamp

※ During start key **ON** the engine oil pressure lamp and battery charging lamp go on, but it is not abnormal.

(2) Start of engine

① Check machine condition

a. Tachometer pointed at present rpm

b. Gauge and warning lamp : Indicate at present condition.

※ When normal condition : All warning lamp OFF

② When abnormal condition

a. The lamp lights up.

b. The lamp light up until normal condition.

3. CLUSTER CONNECTOR

1) CONNECTOR

CN-56

POWER IG 12V	1
LAMP, ENG OIL PRESSURE	2
LAMP, CHARGE	3
LAMP, WATER TEMP	4
LAMP, AIR-CLEANER	5
LAMP, FUEL EMPTY	6
LAMP, AIR-HEATER	7
LAMP, QUICK CLAMP	8
LAMP, ILLUMINATION	9
GAUGE, WATER TEMP	10
GAUGE, FUEL LEVEL	11
RETURN, AIR-HEATER	12
BUZZER(+)	13
NC	14
EARTH	15
NC	16
NC	17
HOURMETER(B +)	1
HOURMETER(SIG +)	2
HOURMETER(-)	3

CN-48

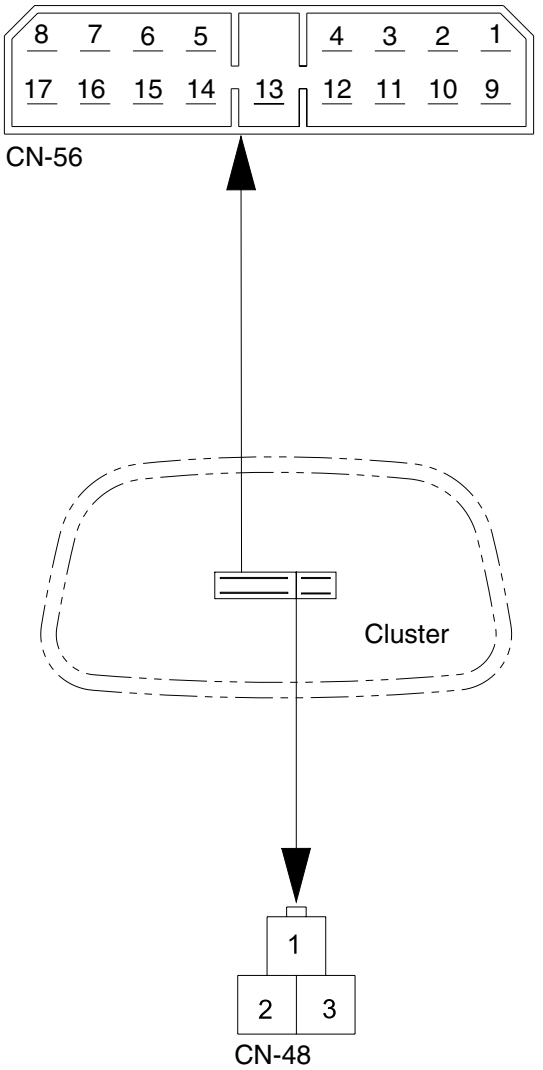

R35Z74EL23

2) CLUSTER DETAIL

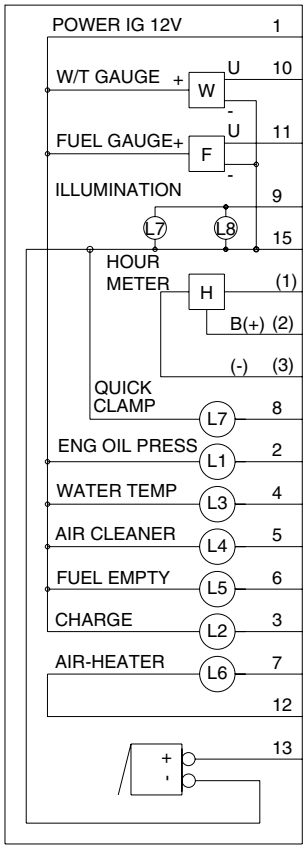

4. CLUSTER FUNCTION

1) GAUGES AND DISPLAYS

(1) Service meter

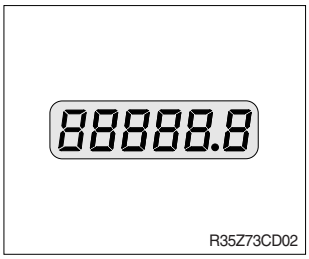

① This meter shows the total operation hours of the machine.

② Always ensure the operating condition of the meter during the machine operation.
Inspect and service the machine based on hours as indicated in chapter 6, **maintenance**.

(2) Fuel gauge

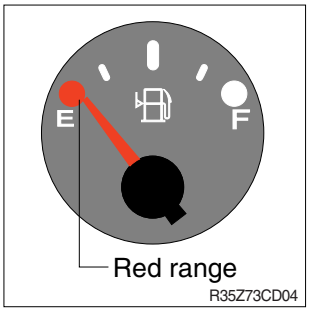

① This gauge indicates the amount of fuel in the fuel tank.

② Fill the fuel when the red range or warning lamp ON.

※ **If the gauge illuminates the red range or warning lamp ON even though the machine is on the normal condition, check the electric device as that can be caused by the poor connection of electricity or sensor.**

(3) Engine coolant temperature gauge

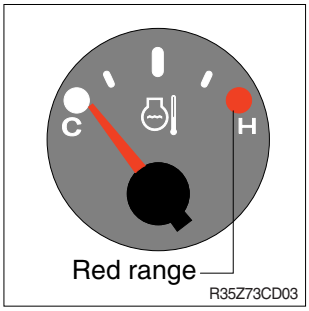

① This indicates the temperature of coolant.
- Red range : Above 105°C (221°F)

② When the red range pointed or warning lamp ON, engine do not abruptly stop but run it at medium speed to allow it to cool gradually, then stop it.
Check the radiator and engine.

※ **If the engine is stopped without cooled down running, the temperature of engine parts will rise suddenly, this could cause severe engine trouble.**

2) WARNING AND PILOT LAMPS

(1) Fuel low level warning lamp

① This lamp blinks when the level of fuel is below 8.5 ℓ (2.2U.S. gal).
② Fill the fuel immediately when the lamp blinks.

(2) Engine coolant temperature warning lamp

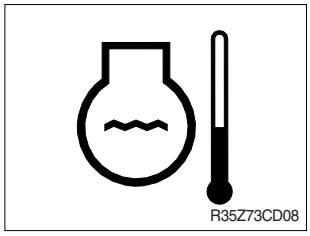

① This lamp blinks when the temperature of coolant is over the normal temperature 110℃ (230℉) .
② Check the cooling system when the lamp blinks.

(3) Engine oil pressure warning lamp

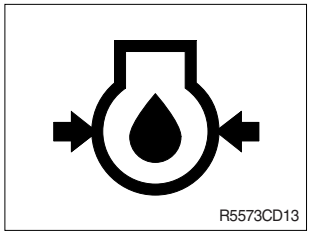

① This lamp blinks after starting the engine because of the low oil pressure.
② If the lamp blinks during engine operation, shut OFF engine immediately. Check oil level.

(4) Air cleaner warning lamp

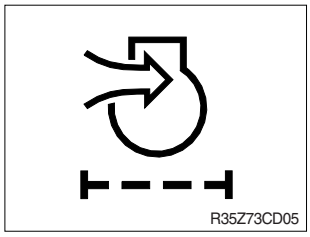

① This lamp blinks when the filter of air cleaner is clogged.
② Check the filter and clean or replace it.

(5) Battery charging warning lamp

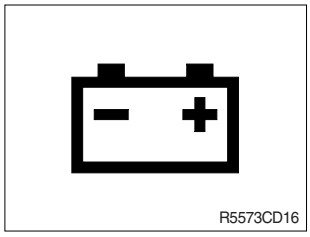

① This lamp blinks when the starting switch is ON, it is turned OFF after starting the engine.
② Check the battery charging circuit when this lamp blinks during engine operation.

(6) Preheat pilot lamp

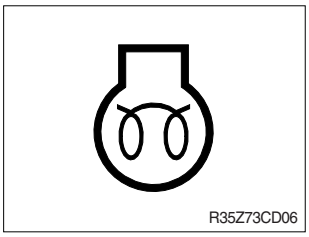

① When the start switch turn to HEAT position, pilot lamp comes ON.

② Refer to "4-2) STARTING ENGINE" of operator's manual for details.

(7) Quick clamp warning lamp

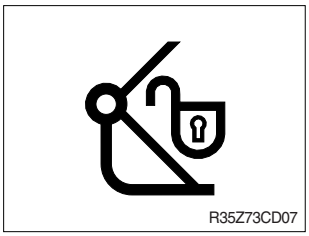

① When the quick clamp switch turned ON, this lamp turn ON and the buzzer sounds.

② This lamp turned OFF and the buzzer stop when the quick clamp switch turned OFF.

MEMORANDUM

Robex
HYUNDAI HEAVY INDUSTRIES CO., LTD.
CONSTRUCTION EQUIPMENT DIV.

1. POWER CIRCUIT

The negative terminal of battery is grounded to the machine chassis.

When the start switch is in the OFF position, the current flows from the positive battery terminal as shown below.

1) OPERATING FLOW

Battery → Master switch[CS-74] → Fusible link(CN-60) → Start switch[CS-2(1)]
→ I/conn[CN-5(2)] →

Fuse box[No.1] → I/conn[CN-8(5)] → I/conn[CN-1(1)] → Cluster[CN-48(1)]
→ I/conn[CN-11(1)] →
→ Room lamp[CL-1(1)]
→ Cassette radio[CN-27(11)]

※ I/conn : Intermediate connector

2) CHECK POINT

Engine	Start switch	Check point	Voltage
OFF	OFF	① - GND (Battery) ② - GND (Master switch) ③ - GND (Fusible link)	10~12.5V

※ GND : Ground

POWER CIRCUIT

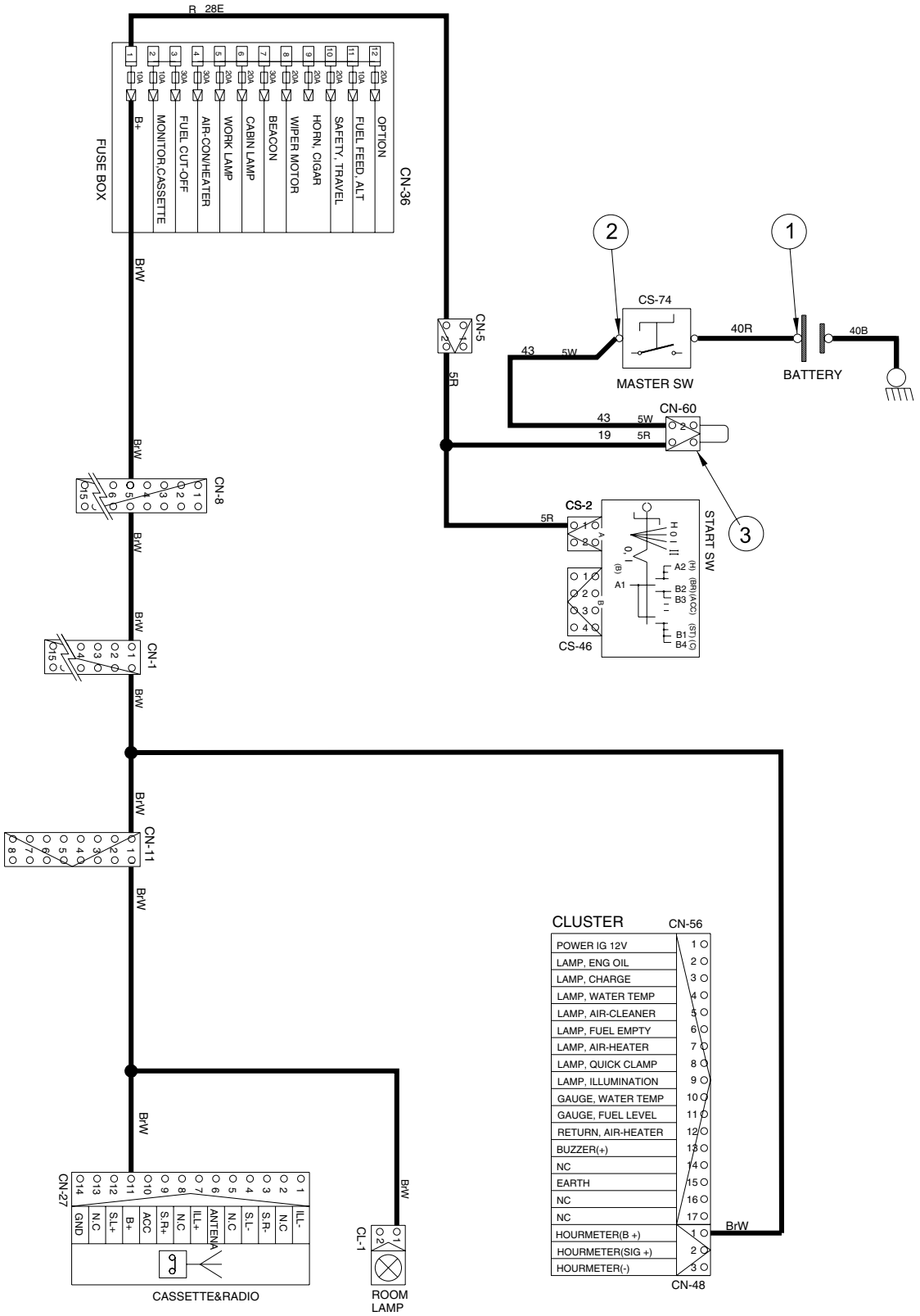

R35Z74EL04

2. STARTING CIRCUIT

1) OPERATING FLOW

Battery(+) terminal → Master switch[CS-74] → Fusible link[CN-60]
- → Start key[CS-2(1)]
- → I/conn[CN-5(2)]
  - → Fuse box No.1
  - → Safety relay[CN-165(1)]
  - → Power relay[CR-35(30)]

※ **Start switch : ON**

Start switch ON [CS-46(2,3)] → I/conn [CN-7(1)]
- → Fuse box No. 2, 3 (Power is supplied)
- → Safety relay[CN-165(3)]
- → Power relay[CR-35(85) → (87)] →
  Fuse box(All power is supplied with electric component)

※ **Start switch : START**

Start switch START [CS-46(4)] → I/conn [CN-6(7)]
- → Safety relay[CN-165(1)] → [CN-166(2)] → I/conn[CN-5(1)]
  → Starter[M] → Start motor operating
- → Timer for air heater[CN-62(4)]

2) CHECK POINT

Engine	Start switch	Check point	Voltage
Operating	Start	① - GND (Battery) ② - GND (Start key) ③ - GND (Starter B^+) ④ - GND (Starter M)	10 ~ 12.5V

※ GND : Ground

STARTING CIRCUIT

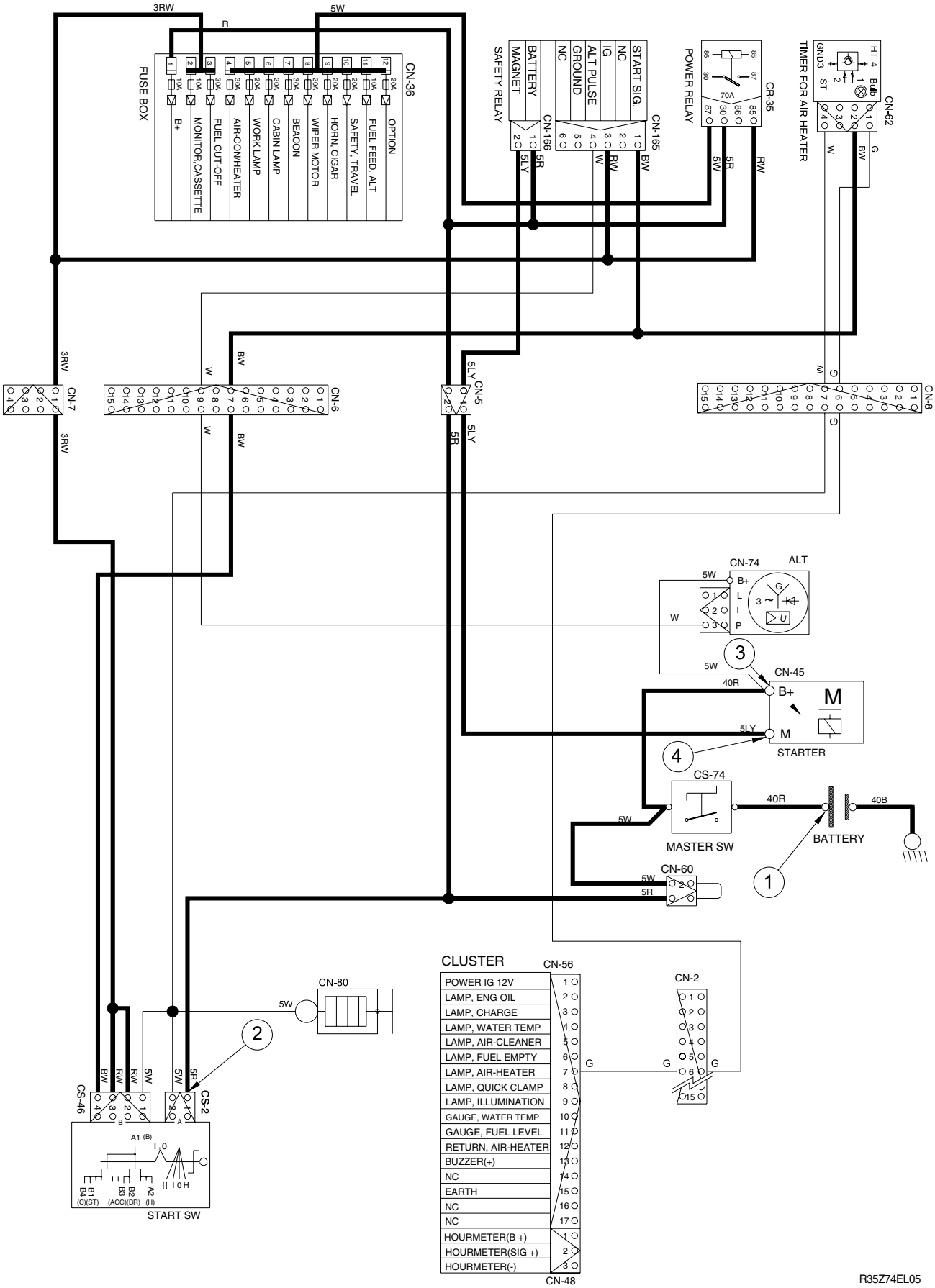

3. CHARGING CIRCUIT

When the starter is activated and the engine is started, the operator releases the key switch to the ON position.

Charging current generated by operating alternator flows into the battery through the battery relay(CR-1).

The current also flows from alternator to each electrical component and controller through the fuse box.

1) OPERATING FLOW

(1) Warning flow

Alternator "L" terminal → I/conn [CN-2(13)] → Cluster [CN-56(3)] → Cluster warning lamp

(2) Charging flow

Alternator "B^+" terminal → Battery(+) terminal

2) CHECK POINT

Engine	Start switch	Check point	Voltage
ON	ON	① - GND (Battery voltage) ② - GND (Alternator B^+ terminal) ③ - GND (Cluster)	10~12.5V

※ GND : Ground

CHARGING CIRCUIT

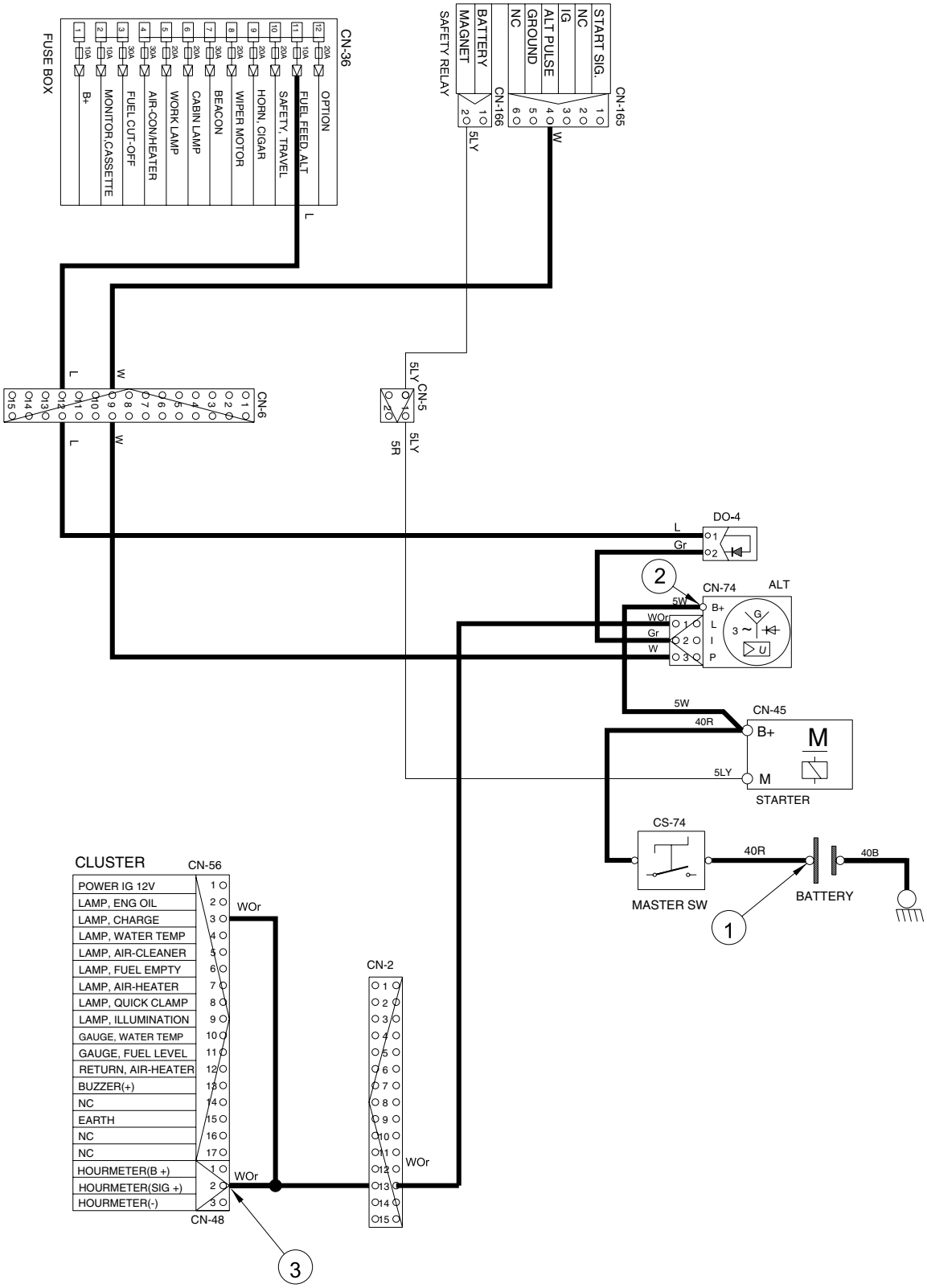

R35Z74EL06

4. HEAD AND WORK LIGHT CIRCUIT

1) OPERATING FLOW

Fuse box (No.6) → Light switch[CS-21(1)]
Fuse box (No.5) → Light switch[CS-21(4)]

(1) Main light switch ON : 1st step

Cabin light switch ON [CS-21(5,7)] → I/conn[CN-3(2)] → I/conn[CN-2(8)]
- → Cluster illumination ON [CN-56(9)]
- → Cigar light illumination ON [CL-2]
- → I/conn[CN-11(3)]
  - → Cabin Lamp ON[CL-9,10(2)]
  - → Cassette radio illumination ON [CN-27(7)]

(2) Main light switch ON : 2nd step

Work light switch ON [CS-21(2)] → I/conn[CN-3(14)] → I/conn[CN-12(2)]
→ Work light ON [CL-5(2)]

2) CHECK POINT

Engine	Start switch	Check point	Voltage
STOP	ON	① - GND(Fuse box) ② - GND(Switch power input) ③ - GND(Switch power output) ④ - GND(Head light)	10~12.5V
STOP	ON	⑤ - GND(Fuse box) ⑥ - GND(Switch power input) ⑦- GND(Switch power output) ⑧ - GND(Work light)	10~12.5V

※ GND : Ground

HEAD AND WORK LAMP CIRCUIT

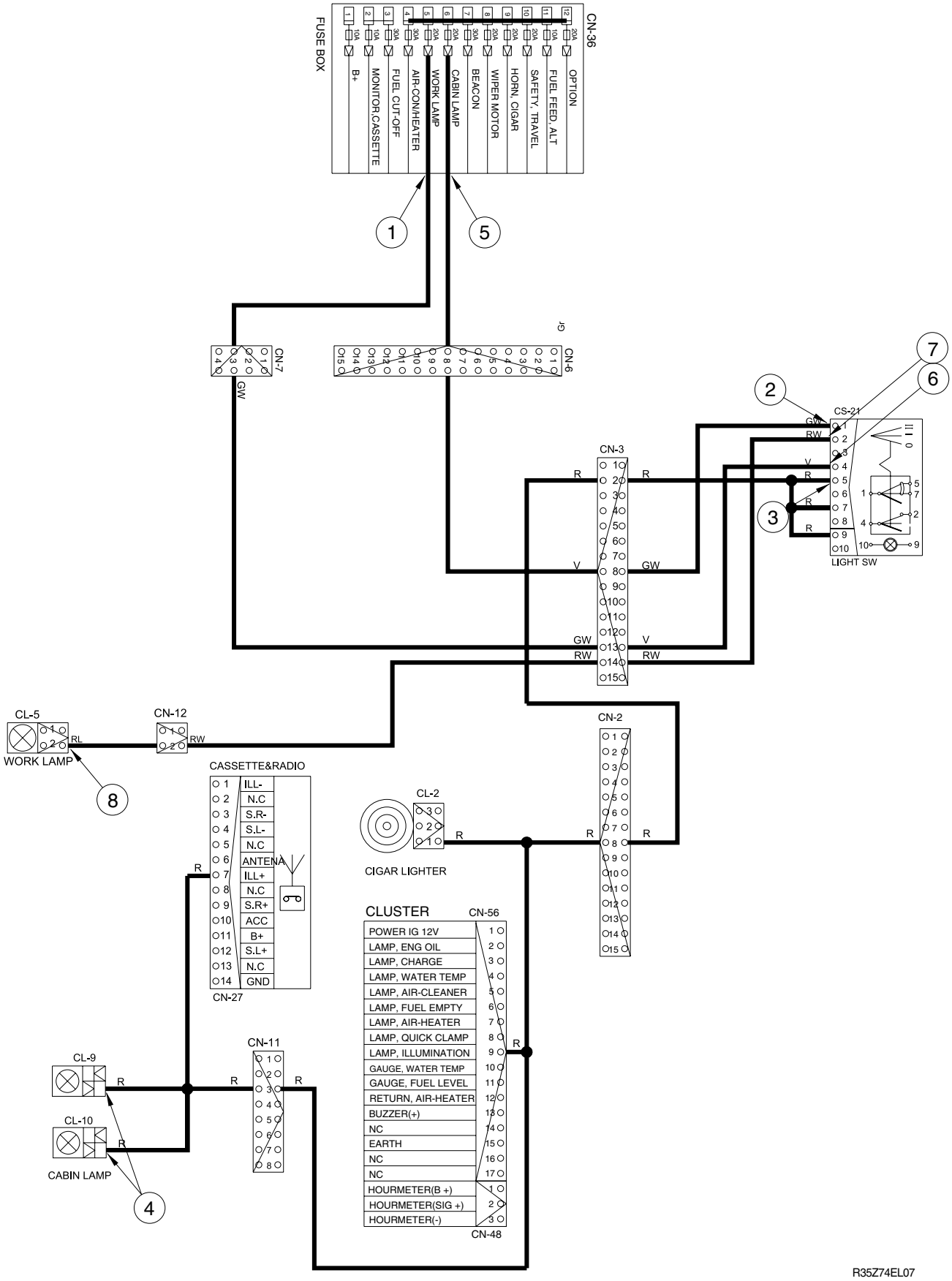

5. BEACON LAMP CIRCUIT

1) OPERATING FLOW

Fuse box (No.19) → I/conn[CN-6(15)] → Beacon lamp switch[CN-23(5)]

(1) Beacon lamp switch ON

Beacon lamp switch ON [CS-23(1)]

→ Switch Indicator lamp ON [CS-23(9)]

→ I/conn[CN-3(1)] → I/conn[CN-1(5)] → I/conn[CN-11(8)] → Beacon lamp ON [CL-7]

2) CHECK POINT

Engine	Start switch	Check point	Voltage
STOP	ON	① - GND(Fuse box) ② - GND(Switch power input) ③ - GND(Switch power output) ④ - GND(Beacon lamp)	10~12.5V

※ GND : Ground

BEACON LAMP CIRCUIT

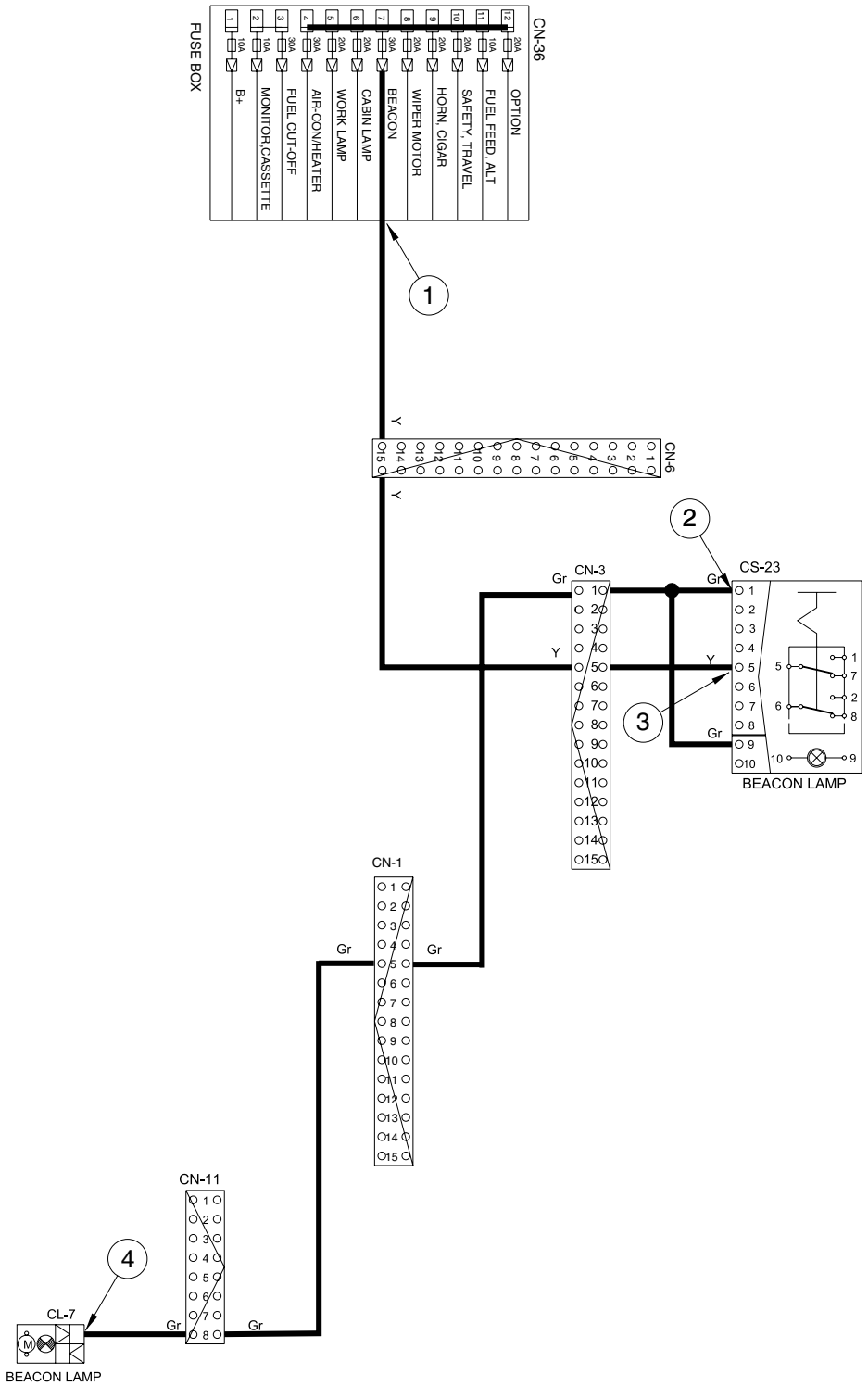

R35Z74EL08

6. WIPER AND WASHER CIRCUIT

1) OPERATING FLOW

(1) Key switch ON

Fuse box (No.7) → I/conn[CN-8(1)] → I/conn[CN-8(1)] → Wiper and washer switch[CS-3(1)]
→ Wiper motor[CN-21(3)]

(2) Wipe switch ON : 1st step(Low speed)

Wiper switch ON [CS-3(6)] → Wiper motor operating[CN-21(4)]

(3) Wiper switch ON : 2nd step(Washer)

Wiper switch ON [CS-3(6)] → Wiper motor operating[CN-21(4)]
Wiper switch ON [CS-3(3)] → I/conn[CN-4(3)] → I/conn[CN-3(3)] → Washer pump operating[CN-22(2)]

(4) Auto parking(When switch OFF)

Switch OFF → Wiper motor[CN-21(1)] → Wiper switch[CS-3(8)→(6)] → Wiper motor[CN-21(4)]
→ Wiper motor parking position by wiper motor controller

2) CHECK POINT

Engine	Start switch	Check point	Voltage
STOP	ON	① - GND(Fuse box) ② - GND(Switch power input) ③ - GND(Switch power output) ④ - GND(Wiper motor)	10~12.5V

※ GND : Ground

WASHER CONTROL CIRCUIT

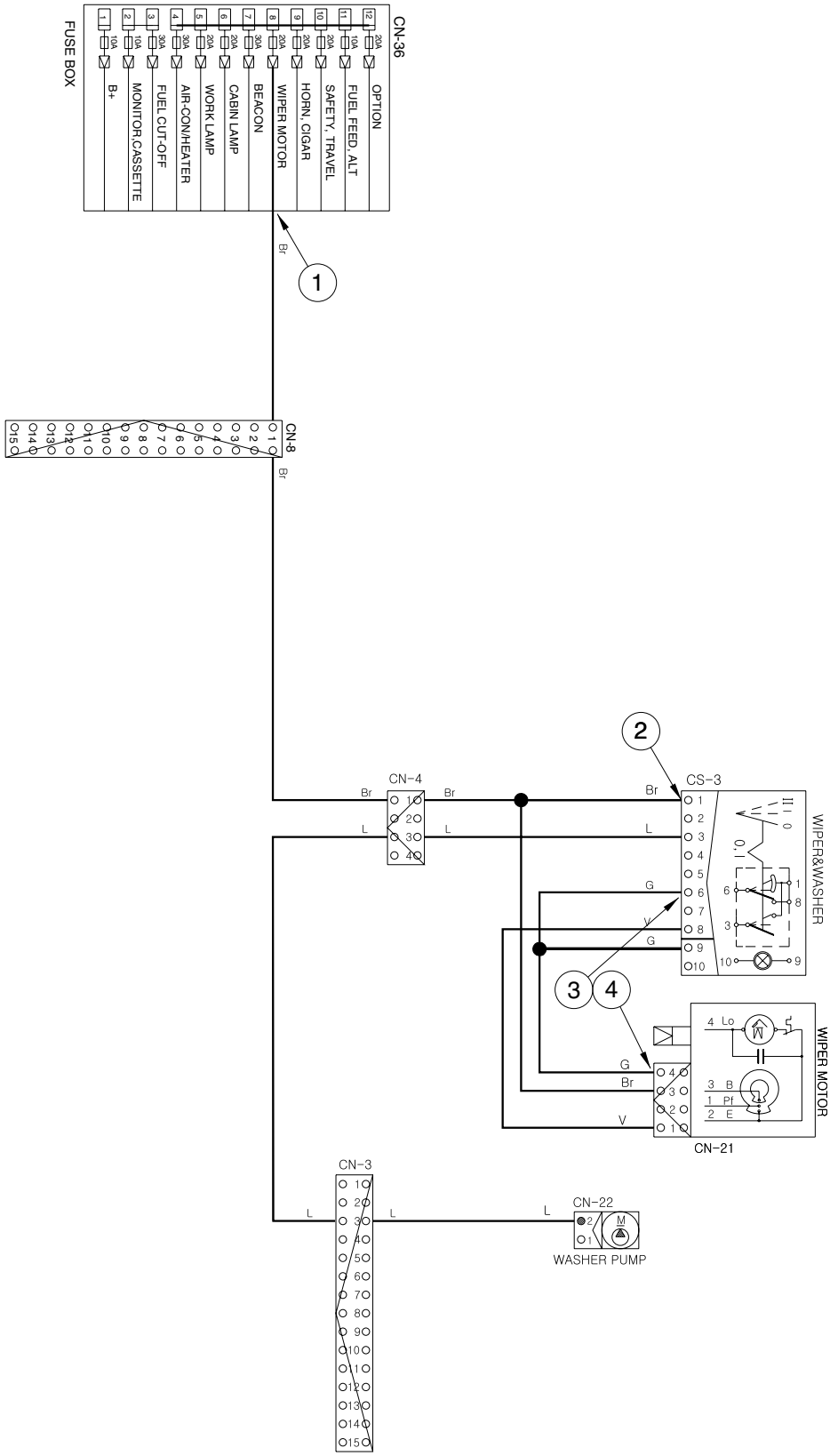

R35Z74EL09

MONITORING CIRCUIT

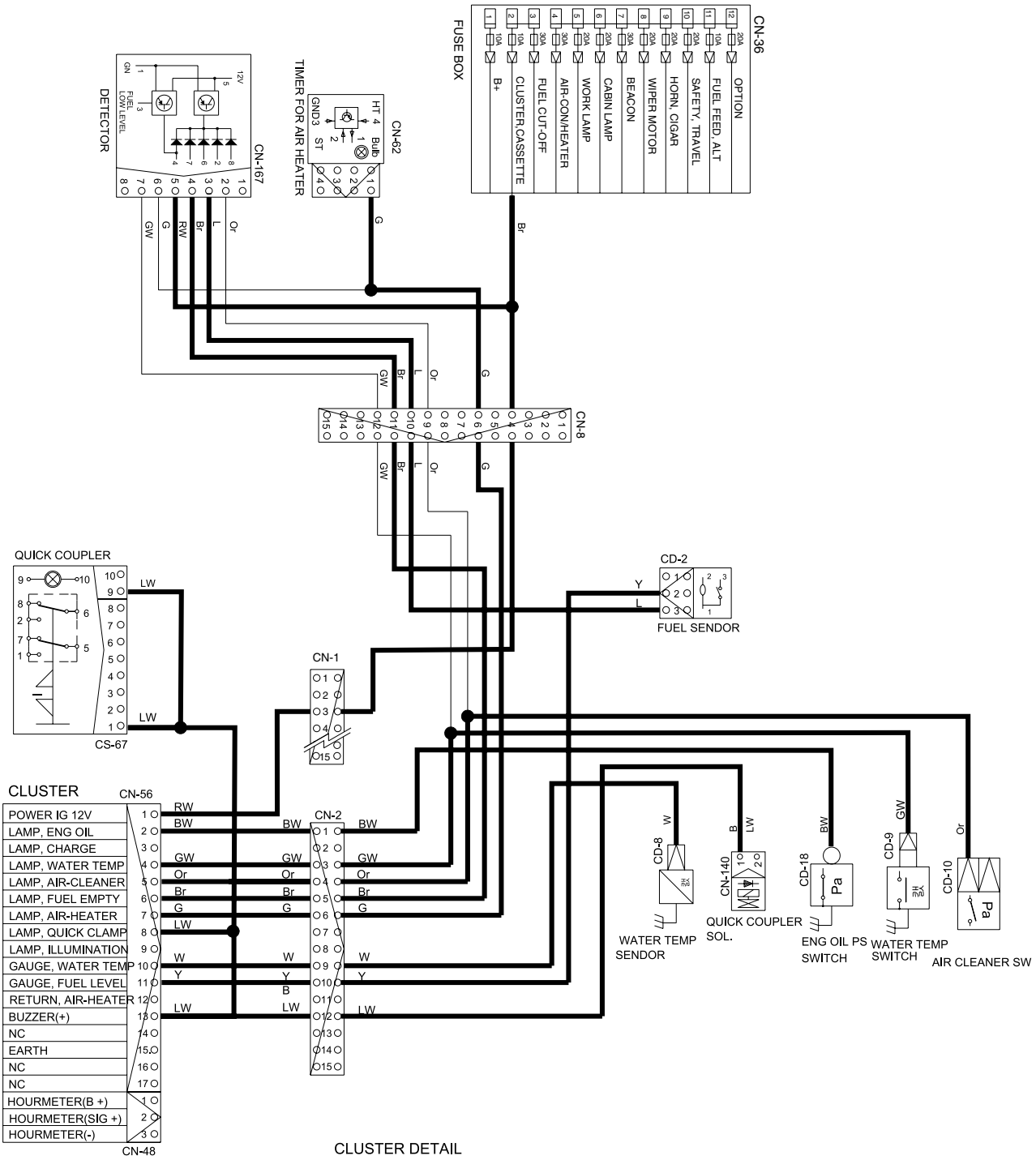

R35Z74EL10

ELECTRIC CIRCUIT FOR HYDRAULIC

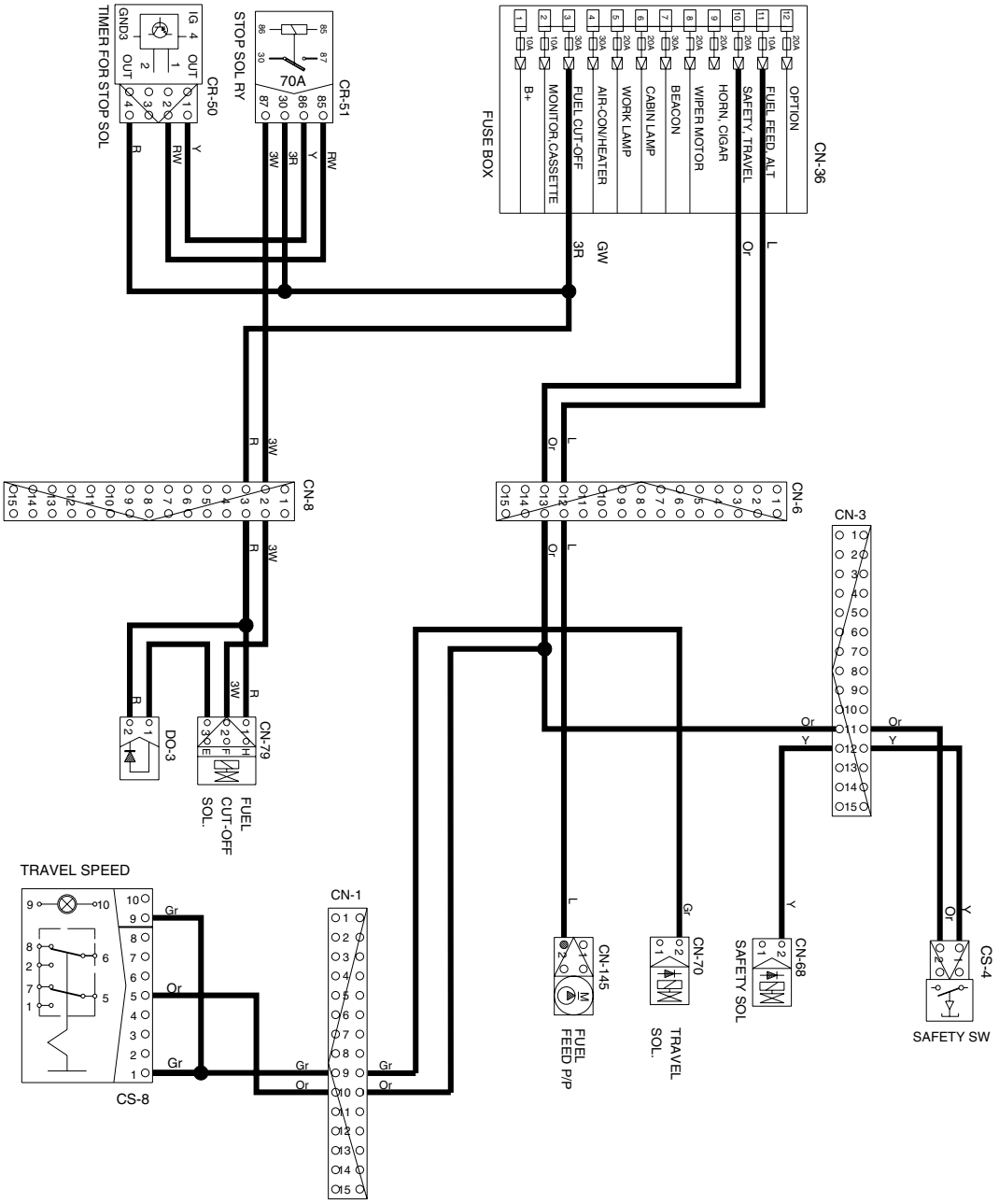

R35Z74EL11

WIRING R35z-7

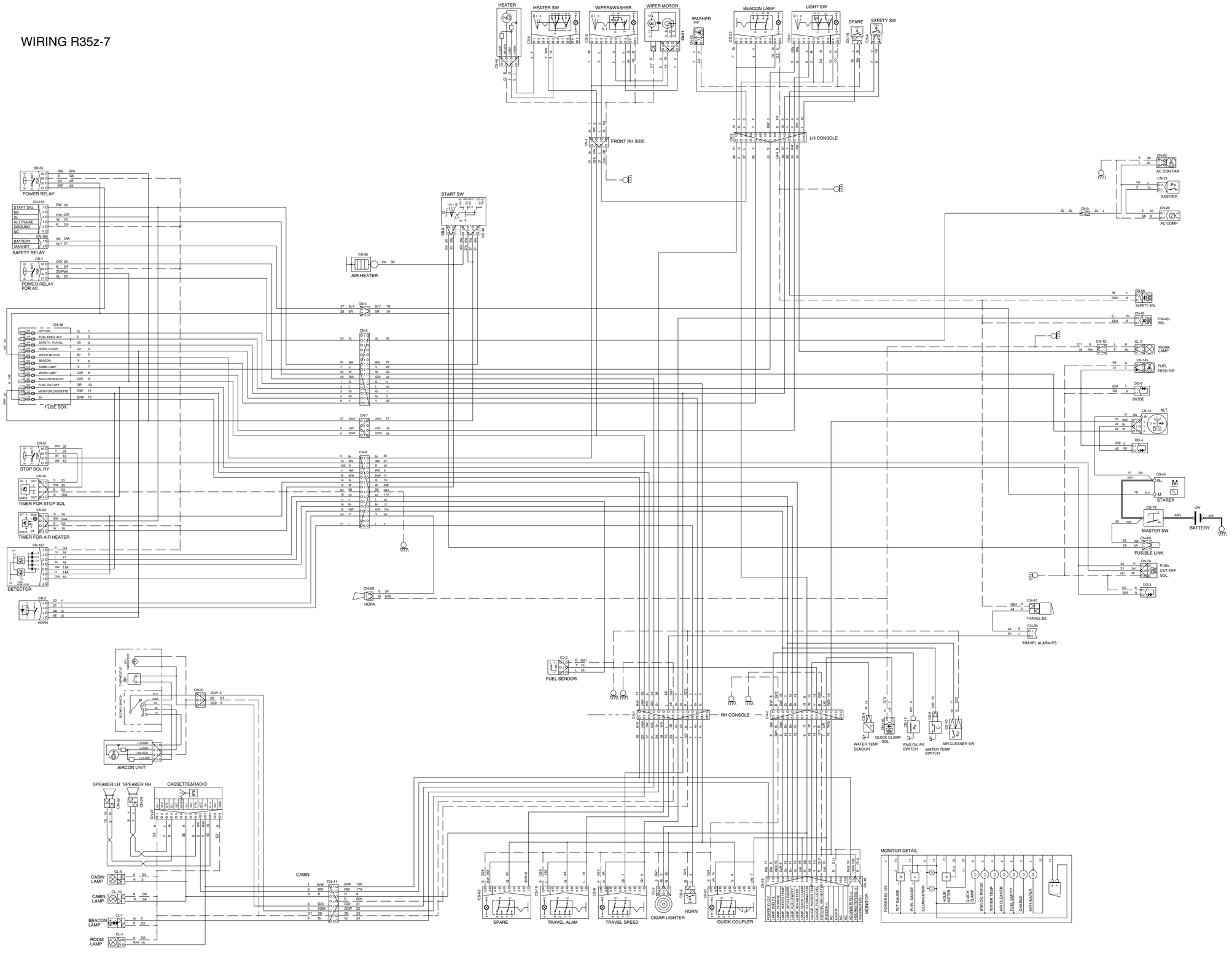

GROUP 4 ELECTRICAL COMPONENT SPECIFICATION

Part name	Symbol	Specification	Check
Battery	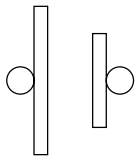	12V × 100Ah	※ Check specific gravity 1.280 over : Over charged 1.280 ~ 1.250 : Normal 1.250 below : Recharging
Start key	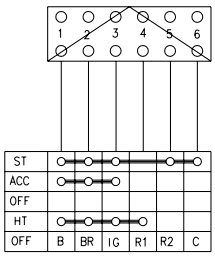 CS-2	12V	※ Check contact OFF : ∞ Ω (For each terminal) ON : 0 Ω (For terminal 1-3 and 1-2) START : 0 Ω (For terminal 1-5)
Pressure switch (For engine oil)	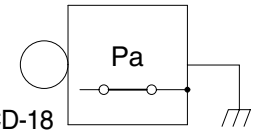 CD-18	0.5 kgf/cm² (N.C TYPE)	※ Check resistance Normal : 0 Ω (CLOSE)
Temperature sensor	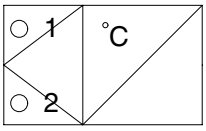 CD-1	-	※ Check resistance 50°C : 804 Ω 80°C : 310 Ω 100°C : 180 Ω
Air cleaner pressure switch	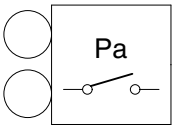 CD-10	Pressure: 635mmH₂O (N.O TYPE)	※ Check contact Normal : ∞ Ω

Part name	Symbol	Specification	Check
Fuel sender	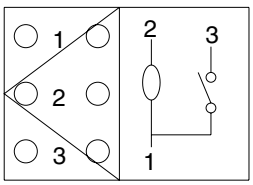 CD-2	-	※ Check resistance Full : 30 Ω Low : 100 Ω Empty warning : 200 Ω
Relay	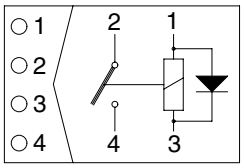 CR-2 CR-7 CR-35	12V 20A	※ Check resistance Normal : About 200 Ω (For terminal 1-3) : 0 Ω (For terminal 2-4)
Relay	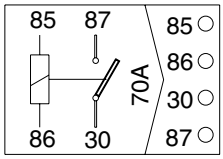 CR-51	12V 70A	※ Rated coil current 1.2±0.3A
Solenoid valve	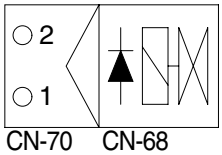 CN-70 CN-68 CN-140	12V 1A	※ Check resistance Normal : 15~25 Ω (For terminal 1-2)
Speaker	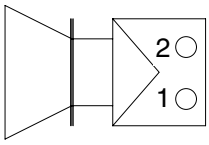 CN-23(LH) CN-24(RH)	4 Ω 20W	※Check resistance Normal : 4 Ω
Switch (Looking type)	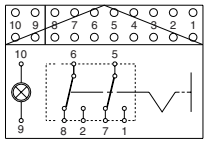 CS-8 CS-16 CS-23 CS-21 CS-67	12V 16A	※ Check contact Normal OFF - ∞ Ω (For terminal 1-5,2-6) - 0 Ω (For terminal 5-7,6-8)

Part name	Symbol	Specification	Check
Lamp	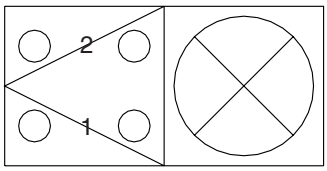 CL-5 CL-9 CL-10	12V 55W (H3 TYPE)	※ Check disconnection Normal : 1.2 Ω
Room lamp	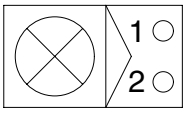 CL-1	12V 10W	※ Check disconnection Normal : A few Ω
Horn	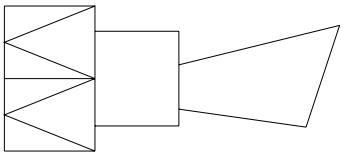 CN-20	12V	100±5dB
Safety switch	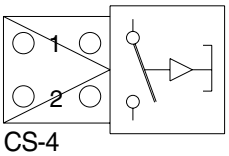 CS-4	Micro	※ Check contact Normal : 0 Ω Operating : ∞ Ω
Fuel cut-off	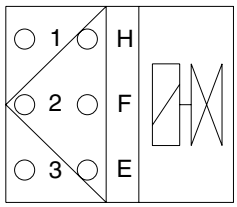 CN-79	12V	※ Check operation Rated full current : 12V 33A Rated hold current : 12V 0.8A
Water temp	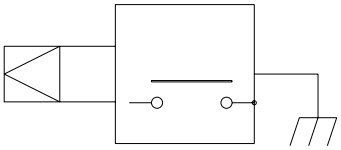 CD-9	ON 110 °C (N.O type)	-

Part name	Symbol	Specification	Check
Beacon lamp	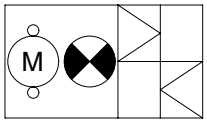 CL-7	12V (Strobe type)	※ Check disconnection Normal : A few Ω
Wiper switch	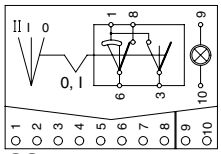 CS-3	12V 16A	※Check contact Normal : ∞ Ω
Washer pump	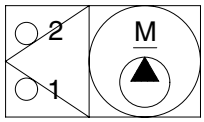 CN-22	12V 3.8A	※Check contact Normal : 3 Ω (For terminal 1-2)
Cigar lighter	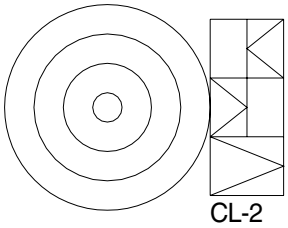 CL-2	12V 10A 1.4W	※Check coil resistance Normal : About 1MΩ ※ Check contact Normal : ∞ Ω Operating time : 5~15sec
Switch	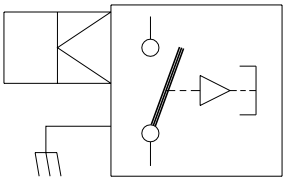 CS-1, CS-20, CS-53	12V4W	※Check resistance Normal : About 5MΩ
Wiper motor	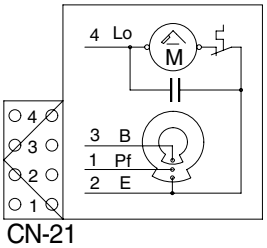 CN-21	12V 3A	※Check contact Normal : 6 Ω (For terminal 2-6)

Part name	Symbol	Specification	Check
Cassette radio	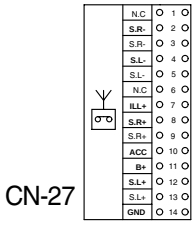 CN-27	12V 3A	※ Check voltage 10 ~ 12.5V (For terminal 10-14,11-14)
Receiver dryer	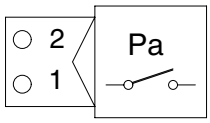 CN-29	12V	※ Check contact Normal : 0 Ω
Starter	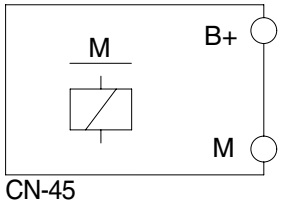 CN-45	12V	※ Check contact Normal : 0.1 Ω
Alternator	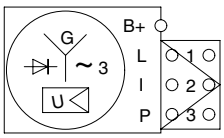 CN-74	12V 55A	※ Check contact Normal : 0 Ω (For terminal B+-1) Normal : 10 ~ 12.5V
Travel alarm	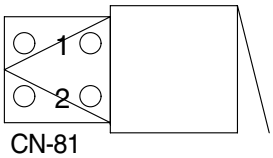 CN-81	12V	-
Compressor	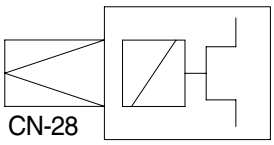 CN-28	12V 38W	-

Part name	Symbol	Specification	Check
Air con fan motor	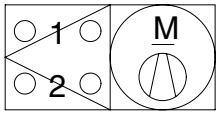 CN-83	12V 8.5A	-
Fuel feed pump	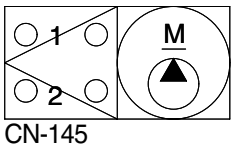 CN-145	12V	-
Master switch	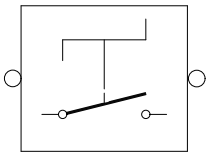 CN-74	12V 1000A	-
Timer	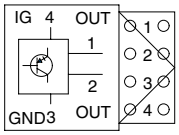 CR-50, CN-62	12V	-
Duct sensor (Switch)	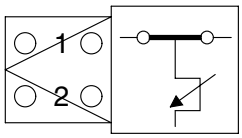	1°C OFF 4°C ON	※ Check resistance : 0 Ω (For terminal 1-2, the atmosphere temp : over 4°C)
Preheater	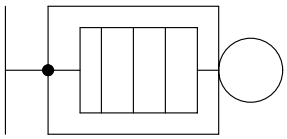	12V 42A 500W	-

Part name	Symbol	Specification	Check
Safety relay	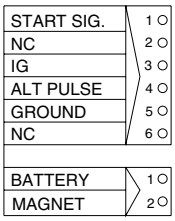 CN-165 CN-166	12V 1400rpm/ Alternator	¡ Contact capacity : Rush : 100A Steady-State : 50A(30sec)
Detector	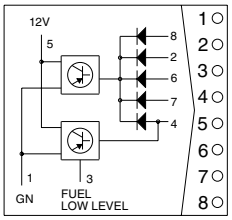 CN-167	12V	-

GROUP 5 CONNECTORS

1. CONNECTOR DESTINATION

Connector number	Type	No. of pin	Destination	Connector part No.	
				Female	Male
CN-1	-	15	Cabin room harness-RH	2-85262-1	368301-1
CN-2	-	15	Cabin room harness-RH	2-85262-1	368301-1
CN-3	-	15	Cabin room harness-LH	2-85262-1	368301-1
CN-4	AMP	4	Front-RH side harness	S810-004202	S810-104202
CN-5	AMP	2	Relay harness	S813-030201	S813-130201
CN-6	-	15	Relay harness	2-85262-1	368301-1
CN-7	AMP	4	Relay harness	S810-004202	S810-104202
CN-8	-	15	Relay harness	2-85262-1	368301-1
	AMP	1	Air-con harness	-	S810-101202
CN-9	AMP	1	Air-con harness	S810-001202	S810-101202
CN-10	AMP	2	Cabin lamp	-	S816-102002
CN-11	AMP	8	Cabin harness	S810-008202	S810-108202
CN-11-1	AMP	2	Canopy harness	S816-002002	S816-102002
CN-12	AMP	2	Boom harness	S816-002002	S816-102002
CN-20	-	2	Horn	35825-0211	-
CN-21	AMP	4	Wiper harness	180900-0	-
CN-22	KET	2	Washer tank	MG640605	-
CN-23	KET	1	Speaker LH	S822-014002	S822-114002
CN-24	KET	1	Speaker RH	S822-014002	S822-114002
CN-27	-	14	Cassette radio	173852-1	-
CN-28	KET	2	Air-con comp	MG640165	-
CN-29	KET	2	Receiver dryer	MG640795	-
CN-31	-	3	Air-con harness	DT06-3S	DT04-3P
CN-45	TERM	1	Starter	S820-305002	-
	TERM	1		S820-308002	-
CN-46	AMP	4	Heater	180900-0	
CN-48	AMP	3	Hour meter	S810-003202	
CN-55	AMP	2	Travel alarm PS	S816-002002	S816-102002
CN-56	AMP	17	Cluster	172500-1	-
CN-60	AMP	2	Fusible link	-	S831-130200
CN-62	AMP	4	Air-con heater timer	MG610047-5	-
CN-68	DEUTSCH	2	Safety solenoid	DT06-2S-P012	-
CN-70	DEUTSCH	2	Travel HI-LO solenoid	DT06-2S-P012	-
CN-74	SUMITOMO	3	Alternator	6189-0443	-
CN-79	SWP	3	Fuel cut-off solenoid	S813-060300	-
CN-80	TERM	1	Pre heater	S820-306002	-
CN-81	SWP	1	Travel buzzer	S822-014000	S822-114000

Connector number	Type	No. of pin	Destination	Connector part No.	
				Female	Male
CN-83	KET	2	Air-con fan	-	MG610164
CN-139	AMP	2	12V socket	S810-002202	-
CN-140	DEUTSCH	2	Quick clamp	DT06-2S-P012	DT04-2P-E004
CN-145	-	2	Fuel feed pump	7123-6423-30	-
CN-165	-	6	Safety relay	6195-0021	-
CN-166	-	2	Safety relay	6195-0060	-
CN-167	AMP	8	Detector	S810-008202	-
LAMP					
CL-1	KET	2	Room lamp	MG610392	-
CL-2	AMP	3	Cigar light	S810-003202	-
CL-5	DEUTSCH	2	Work lamp	-	DT04-2P-E004
CL-7	KET	1	Beacon lamp	S822-014002	S822-114000
CL-9	-	2	Cabin lamp (Canopy lamp)	-	DT04-2P-E004
CL-10	-	2	Cabin lamp (Canopy lamp)	DT06-2S-PO12	DT04-2P-E004
RELAY					
CR-2	AMP	4	Horn relay	S810-004002	-
CR-7	KET	4	Air-con relay	MG612017-5	-
CR-35	KET	4	Power relay	MG612017-5	-
CR-50	AMP	4	Timer relay	S810-004202	-
CR-51	KET	4	Engine stop sol relay	MG612017-5	-
SENSOR					
CD-2	AMP	3	Fuel sender	S816-003002	S816-102002
CD-8	-	1	Water temp sender	1-150656-1	-
CD-9	-	1	Water temp switch	1-150656-1	-
CD-10	-	1	Air cleaner	GP890469	-
CD-18	-	1	Engine oil pressure	S814-001001	-
DO-3	-	2	Diode	S816-002002	21EA-50570
DO-4	-	2	Diode	S816-002002	21EA-50550
DO-6	-	2	Diode	S816-002002	21EA-50570
SWITCH					
CS-2	-	2	Start key switch	S813-030201	-
CS-3	SWF	10	Wiper switch	593757	-
CS-4	AMP	3	Safety switch	-	S814-102001
CS-5	-	1	Horn-LH switch	S822-014002	-
	-	1		-	S822-114002
CS-6	SWF	10	Heater switch	593757	-
CS-8	SWF	10	Travel speed switch	593757	-
CS-16	SWF	10	Travel alarm switch	593757	-
CS-21	SWF	10	Light switch	593757	-
CS-23	SWF	10	Beacon lamp switch	593757	-

Connector number	Type	No. of pin	Destination	Connector part No.	
				Female	Male
CS-26	-	1	Breaker switch	S822-014000	-
	-	1		-	S822-114000
CS-27	SWF	10	Breaker switch	593757	-
CS-46	KET	4	Start switch	MG651926	-
CS-67	SWF	10	Quick clamp switch	593757	-
CS-74	-	1	Master switch	ST710287-2	-
CS-83	SWF	10	Spare	593757	-

2. CONNECTION TABLE FOR CONNECTORS

1) PA TYPE CONNECTOR

No. of pin	Receptacle connector(Female)	Plug connector(Male)
5	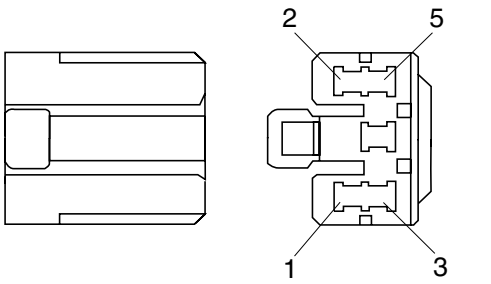 S811-005002	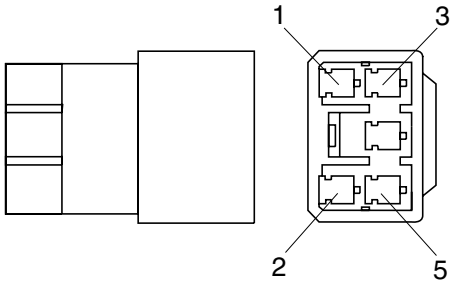 S811-105002
7	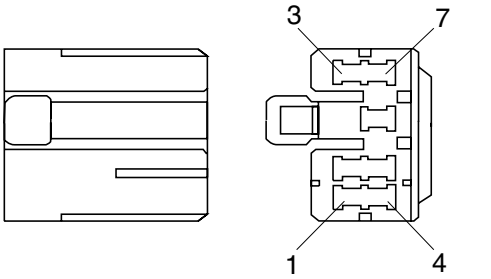 S811-007002	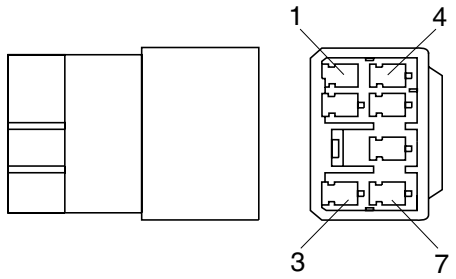 S811-107002
9	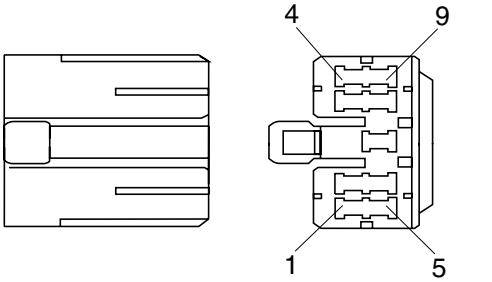 S811-009002	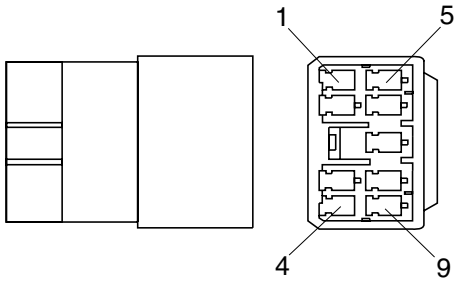 3S811-109002
11	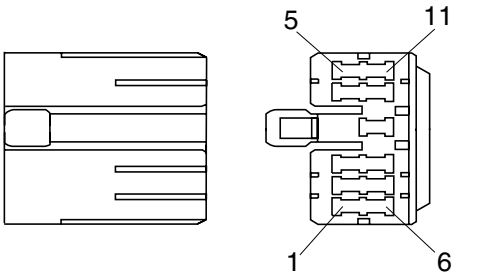 S811-011002	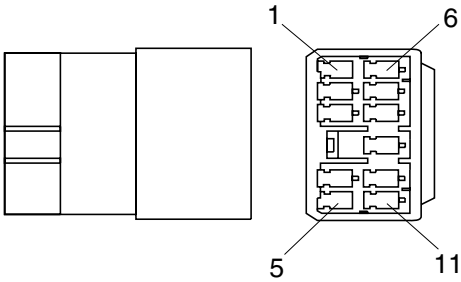 S811-111002

No. of pin	Receptacle connector(Female)	Plug connector(Male)
13	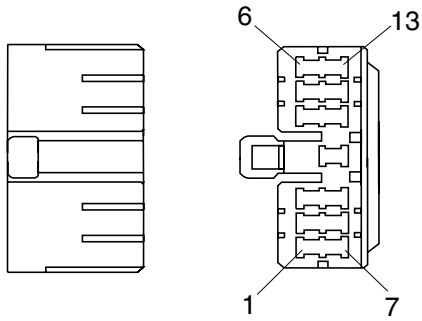 S811-013002	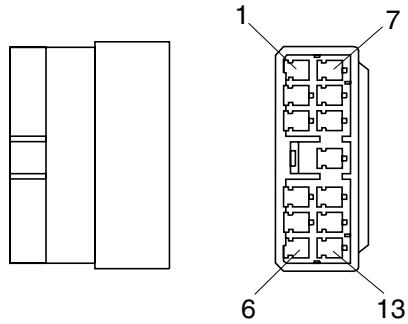 S811-113002
17	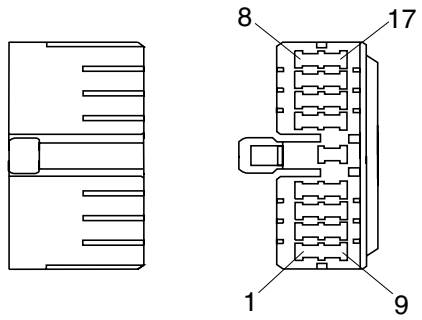 S811-017002	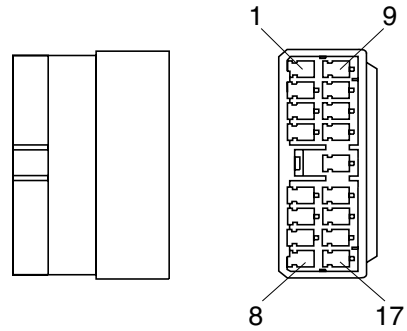 S811-117002
21	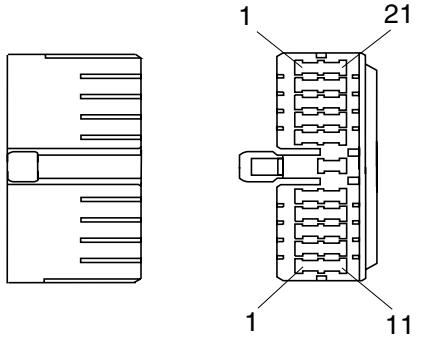 S811-021002	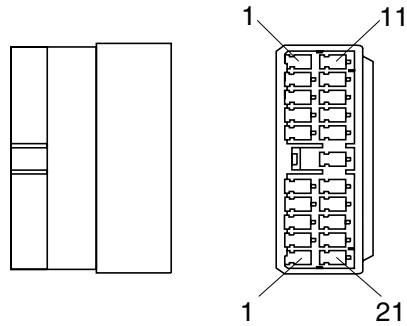 S811-121002

2) J TYPE CONNECTOR

No. of pin	Receptacle connector(Female)	Plug connector(Male)
2	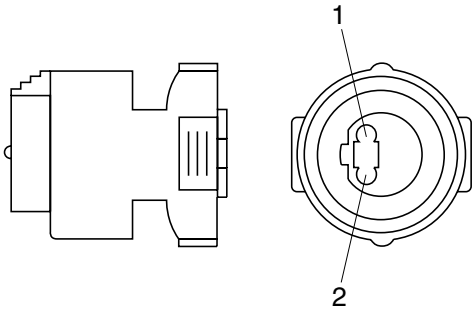 S816-002001	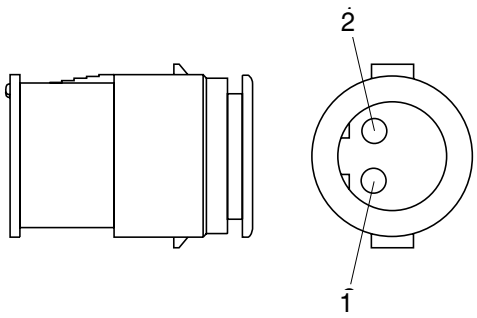 S816-102001
3	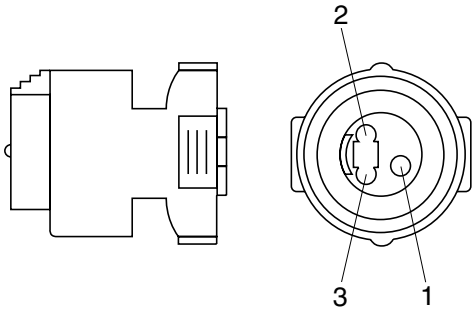 S816-003001	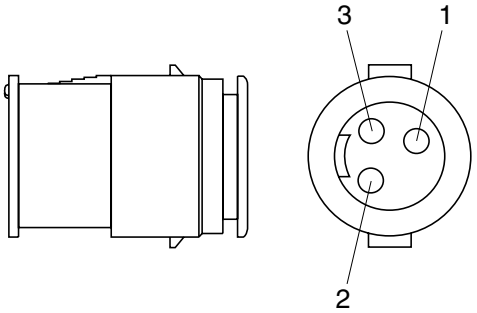 S816-103001
4	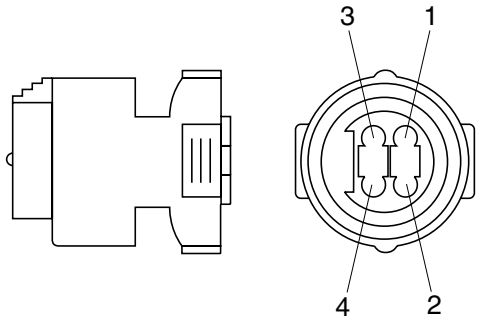 S816-004001	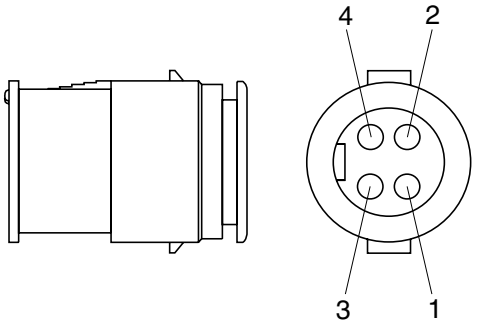 S816-104001
8	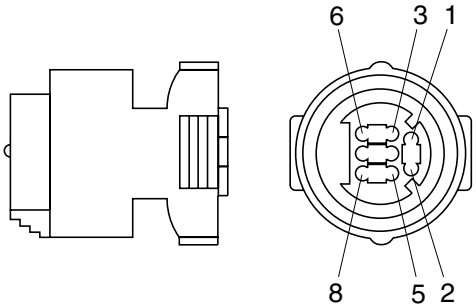 S816-008001	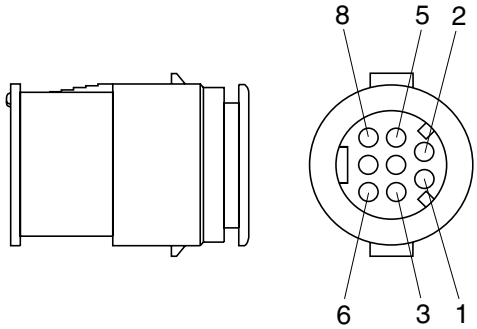 S816-108001

3) SWP TYPE CONNECTOR

No. of pin	Receptacle connector(Female)	Plug connector(Male)
1	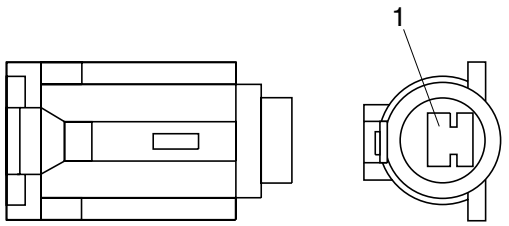 S814-001000	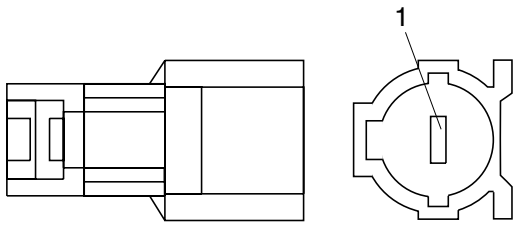 S814-101000
2	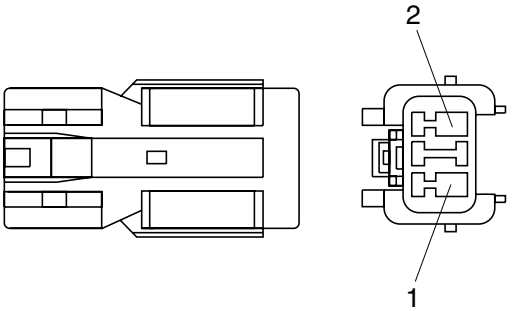 S814-002000	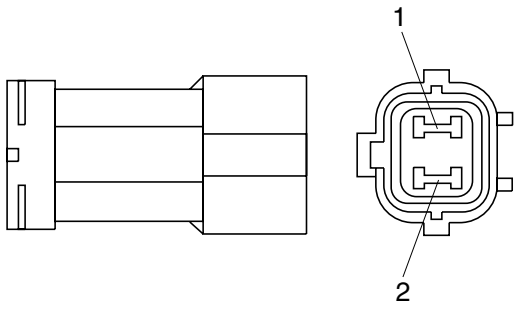 S814-102000
3	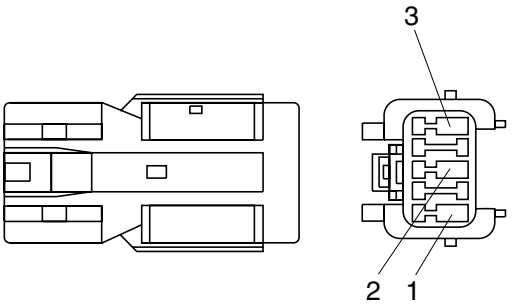 S814-003000	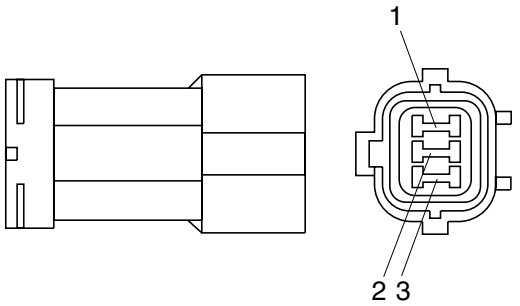 S814-103000
4	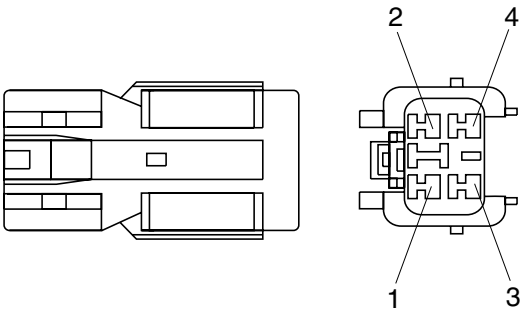 S814-004000	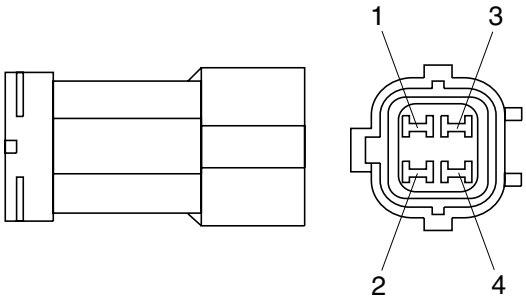 S814-104000

No. of pin	Receptacle connector(Female)	Plug connector(Male)
6	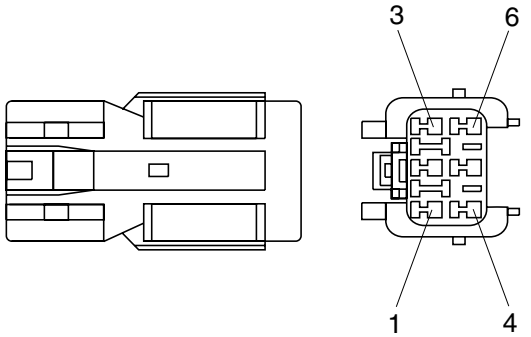 S814-006000	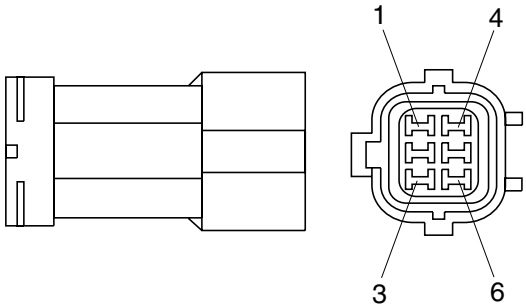 S814-106000
8	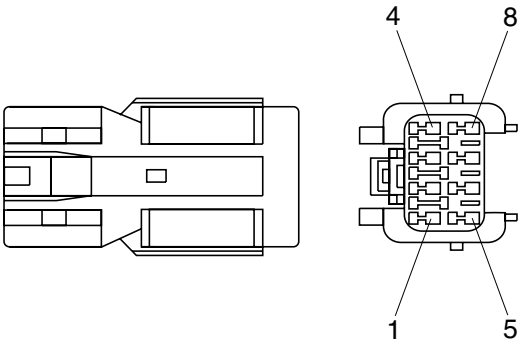 S814-008000	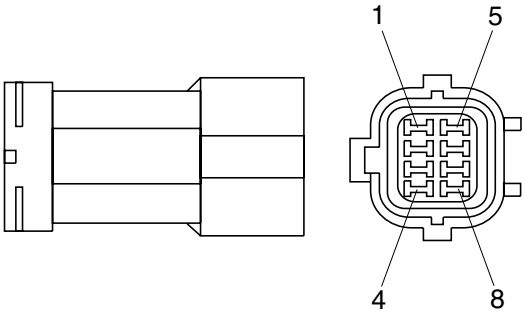 S814-108000
12	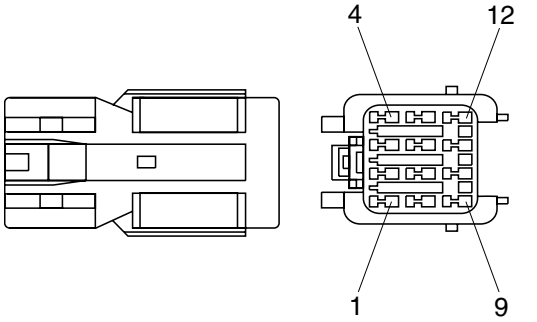 S814-012000	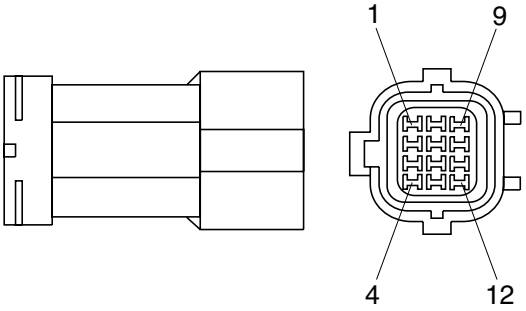 S814-112000
14	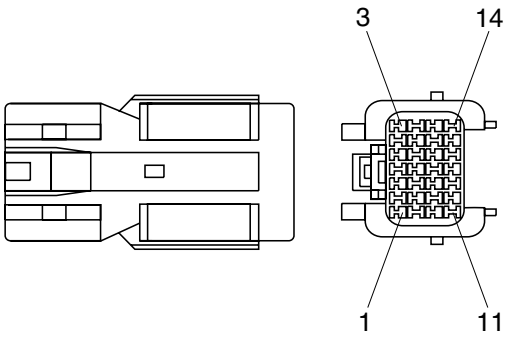 S814-014000	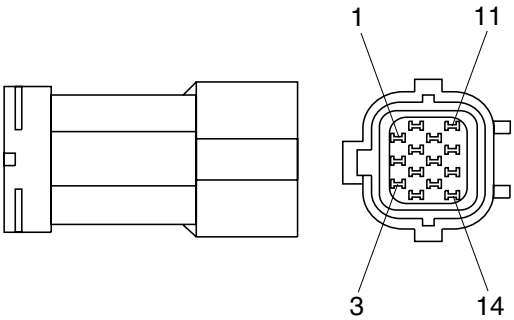 S814-114000

4) CN TYPE CONNECTOR

No. of pin	Receptacle connector(Female)	Plug connector(Male)
1	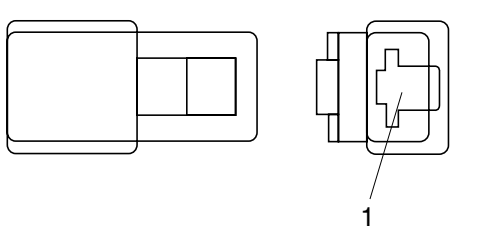 S810-001202	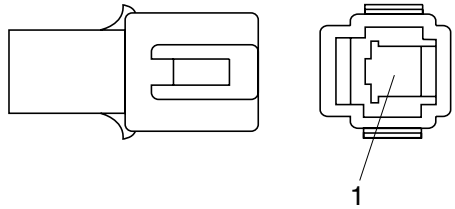 S810-101202
2	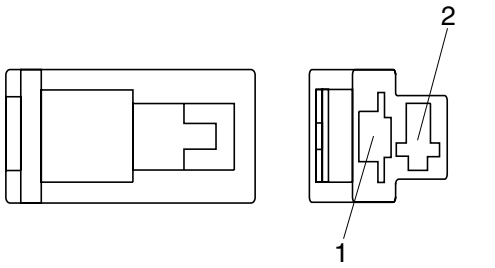 S810-002202	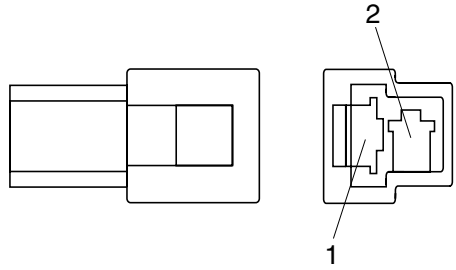 S810-102202
3	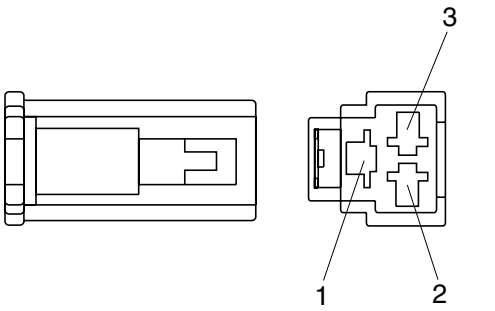 S810-003202	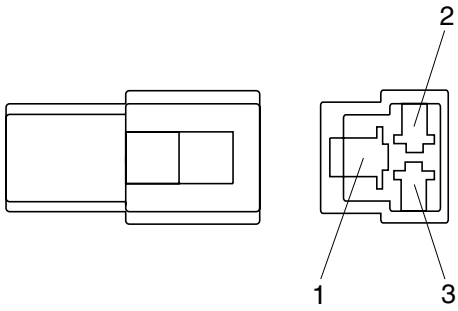 S810-103202
4	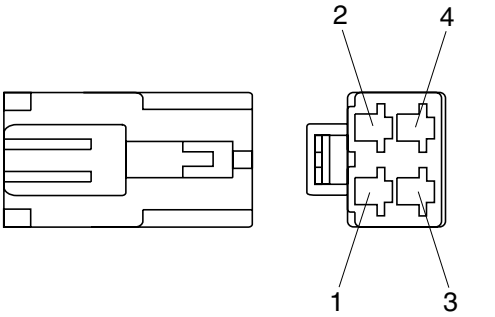 S810-004202	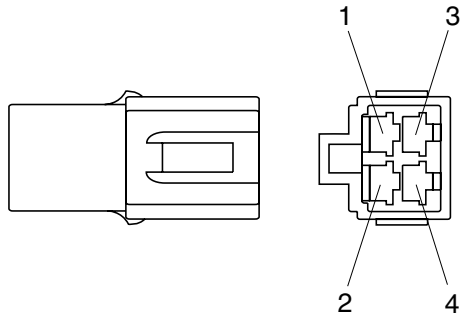 S810-104202

No. of pin	Receptacle connector(Female)	Plug connector(Male)
6	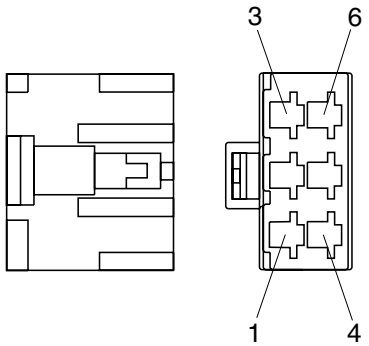 S810-006202	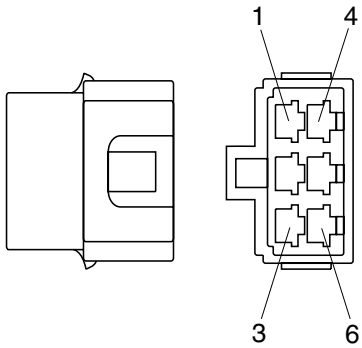 S810-106202
8	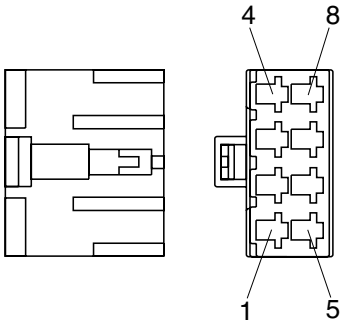 S810-008202	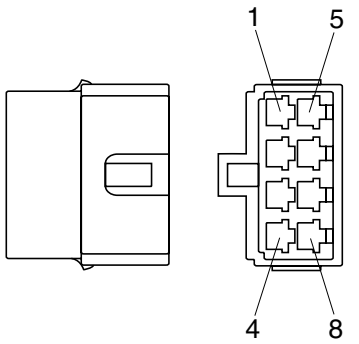 S810-108202

5) 375 FASTEN TYPE CONNECTOR

No. of pin	Receptacle connector(Female)	Plug connector(Male)
2	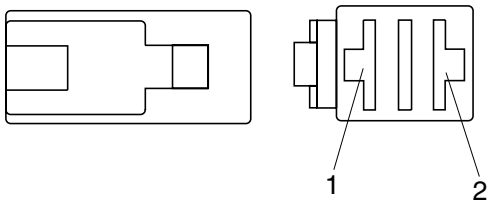 S810-002402	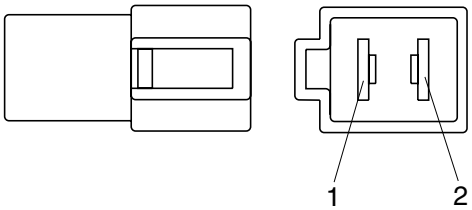 S810-102402

6) AMP ECONOSEAL CONNECTOR

No. of pin	Receptacle connector(Female)	Plug connector(Male)
36	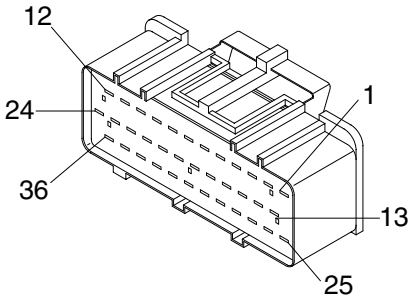 344111-1	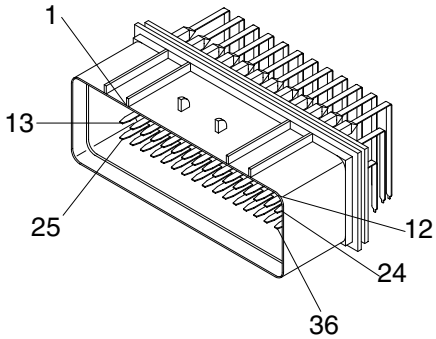 344108-1

7) AMP TIMER CONNECTOR

No. of pin	Receptacle connector(Female)	Plug connector(Male)
2	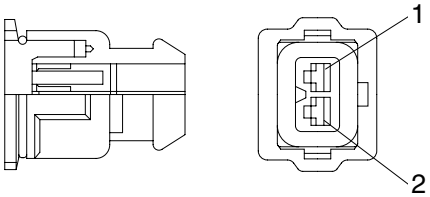 85202-1	

8) AMP 040 MULTILOCK CONNECTOR

No. of pin	Receptacle connector(Female)	Plug connector(Male)
12	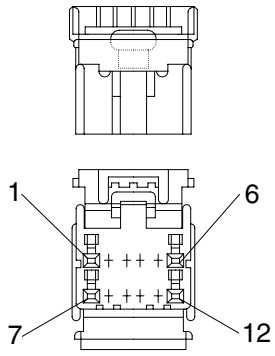 174045-2	

9) AMP 070 MULTILOCK CONNECTOR

No. of pin	Receptacle connector(Female)	Plug connector(Male)
14	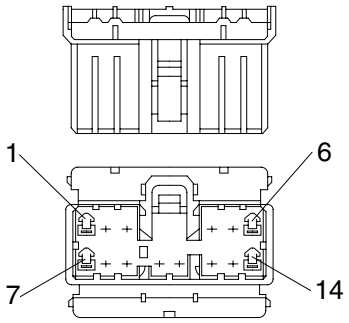 173852	

10) AMP FASTIN - FASTON CONNECTOR

No. of pin	Receptacle connector(Female)	Plug connector(Male)
6	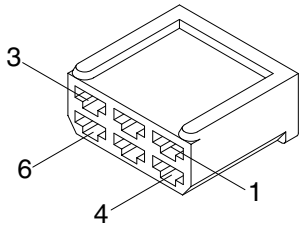 925276-0	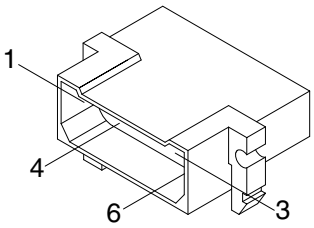 480003-9

11) KET 090 CONNECTOR

No. of pin	Receptacle connector(Female)	Plug connector(Male)
2	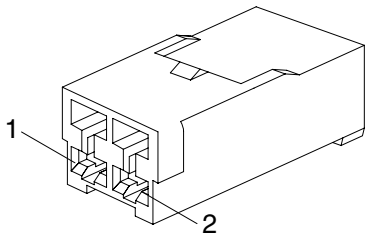 MG610070	

12) KET 090 WP CONNECTORS

No. of pin	Receptacle connector(Female)	Plug connector(Male)
2	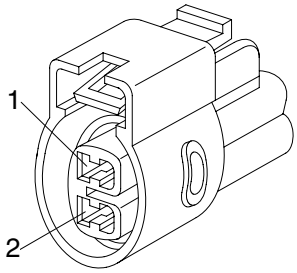 MG640605	
2	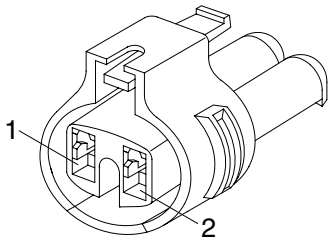 MG640795	

13) KET SDL CONNECTOR

No. of pin	Receptacle connector(Female)	Plug connector(Male)
14	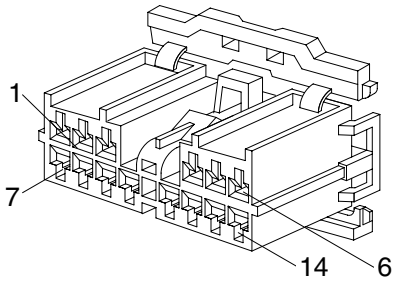 MG610406	

14) DEUTSCH DT CONNECTORS

DT 06 - 3S - ★★★★

- ★★★★ — Modifications(See below)
- 3S — Number of contacts(P : Pin, S : Socket)
- 06 — 04 : Receptacle, 06 : Plug
- DT — Deutsch connectors

※ Modification

E003 : Standard end cap - gray
E004 : Color of connector to be black
E005 : Combination - E004 & E003
EP04 : End cap
EP06 : Combination P012 & EP04
P012 : Front seal enhancement - connectors color to black for 2, 3, 4 & 6pin

No. of pin	Receptacle connector(Female)	Plug connector(Male)
2	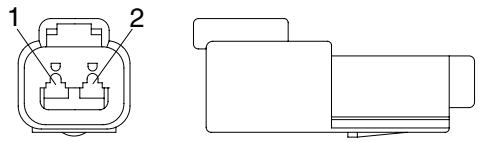 DT06-2S	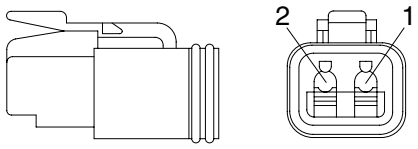 DT04-2P
3	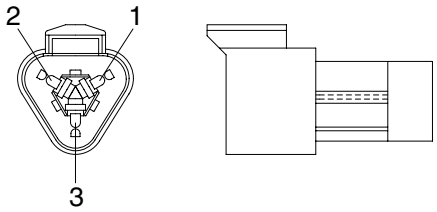 DT06-3S	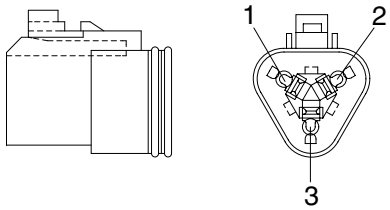 DT04-3P
4	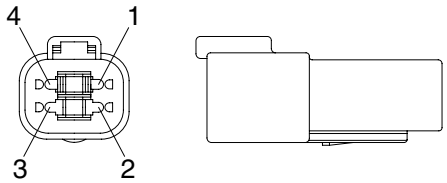 DT06-4S	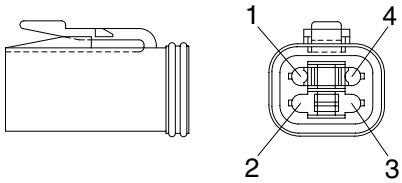 DT04-4P

No. of pin	Receptacle connector(Female)	Plug connector(Male)
6	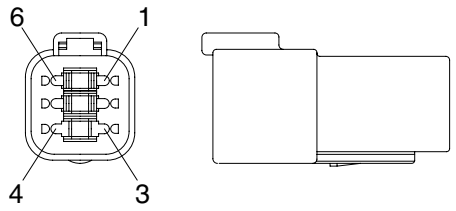 DT06-6S	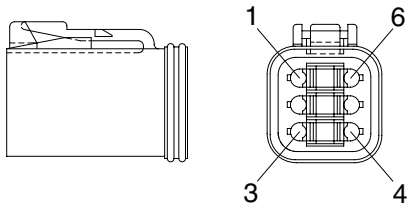 DT04-6P
8	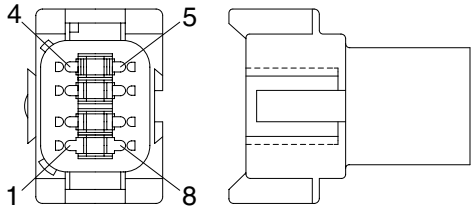 DT06-8S	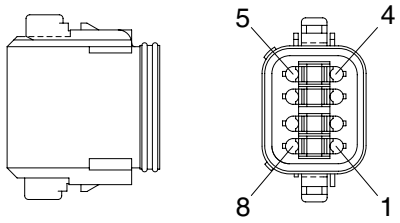 DT04-8P
12	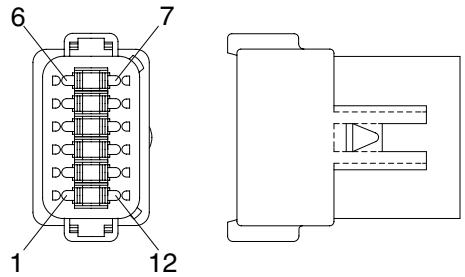 DT06-12S	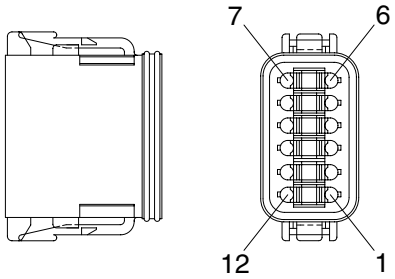 DT04-12P

15) MOLEX 2CKTS CONNECTOR

No. of pin	Receptacle connector(Female)	Plug connector(Male)
2	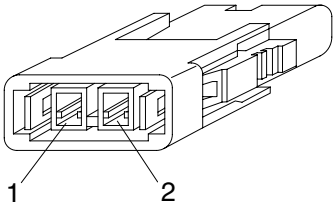 35215-0200	

16) ITT SWF CONNECTOR

No. of pin	Receptacle connector(Female)	Plug connector(Male)
10	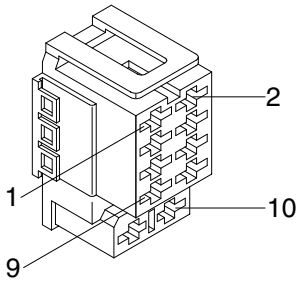 SWF593757	

17) MWP NMWP CONNECTOR

No. of pin	Receptacle connector(Female)	Plug connector(Male)
1	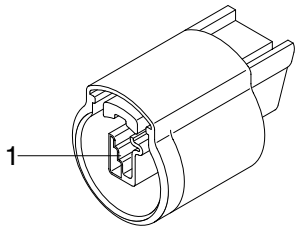 NMWP01F-B	

SECTION 5 TROUBLESHOOTING

Group 1 Before Troubleshooting 5-1
Group 2 Hydraulic and Mechanical System 5-4
Group 3 Electrical System 5-24

GROUP 1 BEFORE TROUBLESHOOTING

1. INTRODUCTION

When a trouble is occurred in the machine, this section will help an operator to maintain the machine with easy.
The trouble of machine is parted Hydraulic & Mechanical system and Electrical system system.
At each system part, an operator can check the machine according to the troubleshooting process diagram.

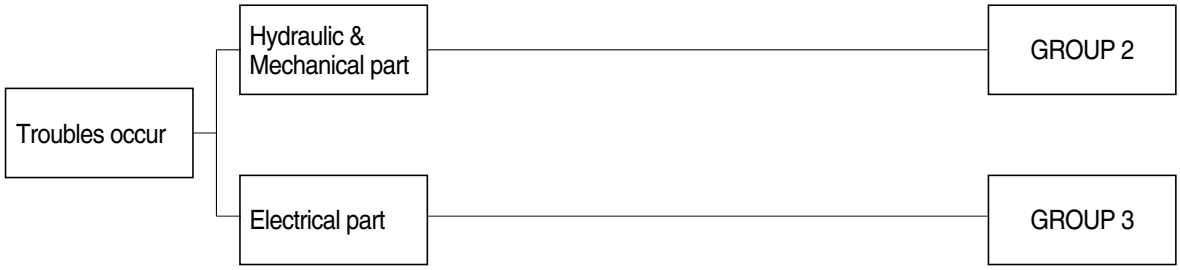

2. DIAGNOSING PROCEDURE

To carry out troubleshooting efficiently, the following steps must be observed.

STEP 1. Study the machine system

Study and know how the machine is operating, how the system is composing, what kinds of function are installed in the machine and what are specifications of the system components by the machine service manual.
Especially, deepen the knowledge for the related parts of the trouble.

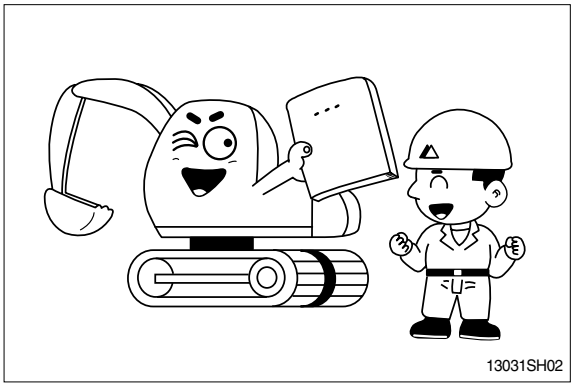

STEP 2. Ask the operator

Before inspecting, get the full story of malfunctions from a witness --- the operator.

1) How the machine is used and when it is serviced?
2) When the trouble was noticed and what work the machine was doing at that time?
3) What is the phenomenon of the trouble? Was the trouble getting worse, or did it come out suddenly for the first time?
4) Did the machine have any troubles previously? If so, which parts were repaired before.

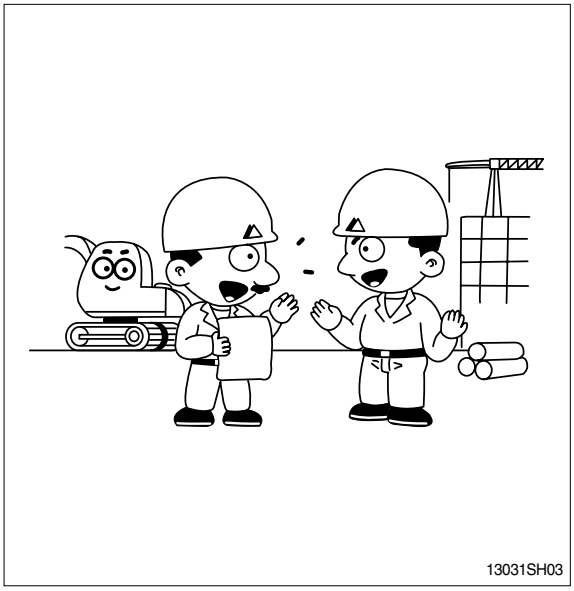

STEP 3. Inspect the machine

Before starting troubleshooting, check the machine for the daily maintenance points as shown in the operator's manual.

And also check the electrical system including batteries, as the troubles in the electrical system such as low battery voltage, loose connections and blown out fuses will result in malfunction of the controllers causing total operational failures of the machine.

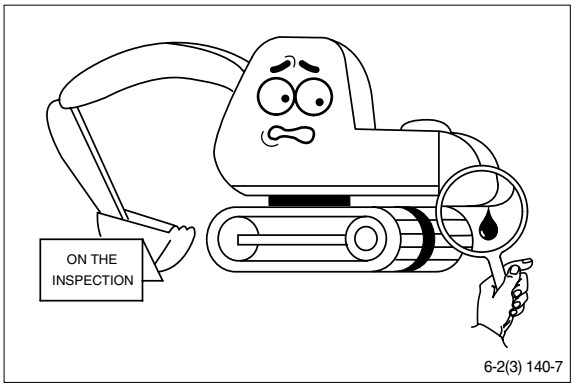

STEP 4. Inspect the trouble actually on the machine

In case that some trouble cannot be confirmed, obtain the details of the malfunction from the operator.
Also, check if there are any in complete connections of the wire harnesses are or not.

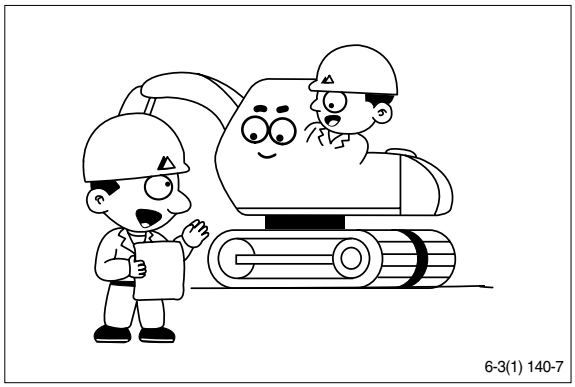

STEP 5. Perform troubleshooting

According to where the trouble parts are located, hydraulic & mechanical system part or electrical system part or mechatronics system part, perform troubleshooting the machine refer to the each system part's troubleshooting process diagram.

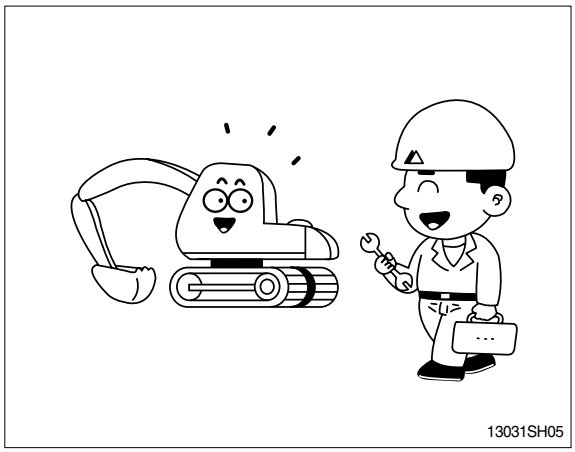

STEP 6. Trace a cause

Before reaching a conclusion, check the most suspectible causes again. Try to trace what the real cause of the trouble is.

Make a plan of the appropriate repairing procedure to avoid consequential malfunctions.

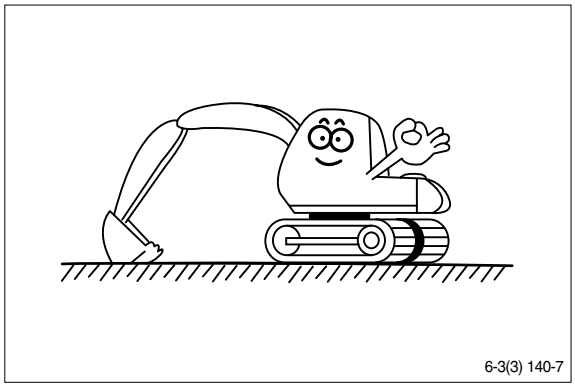

GROUP 2 HYDRAULIC AND MECHANICAL SYSTEM

1. INTRODUCTION

1) MACHINE IN GENERAL

(1) If even a minor fault is left intact and operation is continued, a fatal failure may be caused, entailing a large sum of expenses and long hours of restoration.
Therefore when even a small trouble occurs, do not rely on your intuition and experience, but look for the cause based on the troubleshooting principle and perform maintenance and adjustment to prevent major failure from occurring. Keep in mind that a fault results from a combination of different causes.

(2) The following lists up commonly occurring faults and possible causes with this machine. For the troubleshooting of the engine, refer to the coming troubleshooting and repair.

(3) When carrying out troubleshooting, do not hurry to disassemble the components.
It will become impossible to find the cause of the problem.

(4) Ask user or operator the following.
① Was there any strange thing about machine before failure occurred?
② Under what conditions did the failure occur?
③ Have any repairs been carried out before the failure?

(5) Check before troubleshooting.
① Check oil and fuel level.
② Check for any external leakage of oil from components.
③ Check for loose or damage of wiring and connections.

2. DRIVE SYSTEM

1) UNUSUAL NOISE COMES OUT OF PUMP CONNECTION

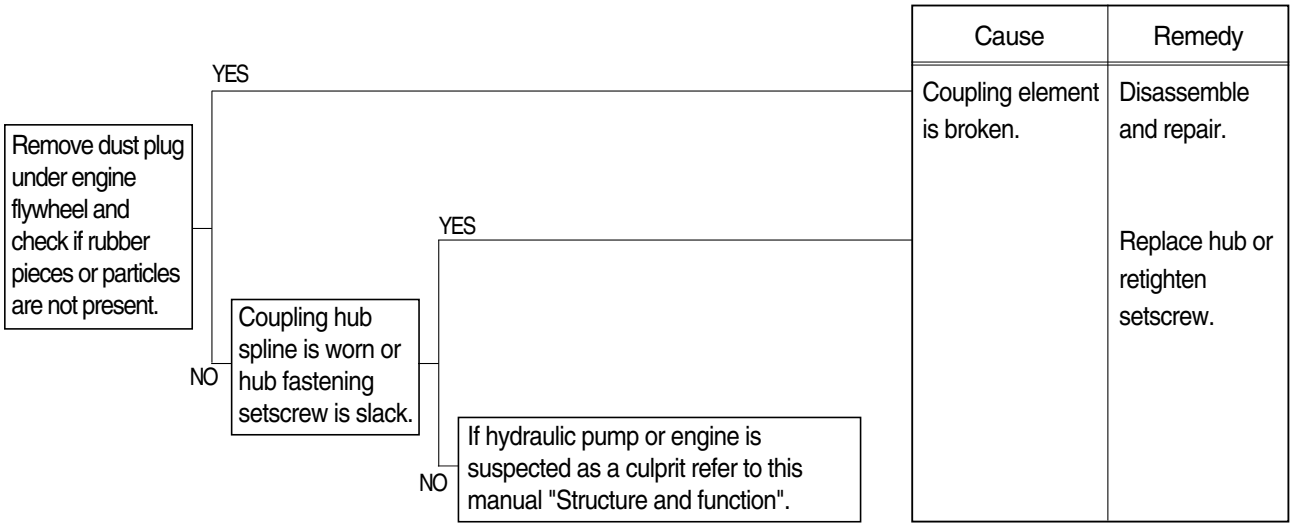

Cause	Remedy
Coupling element is broken.	Disassemble and repair.
	Replace hub or retighten setscrew.

2) ENGINE STARTS BUT MACHINE DOES NOT OPERATE AT ALL

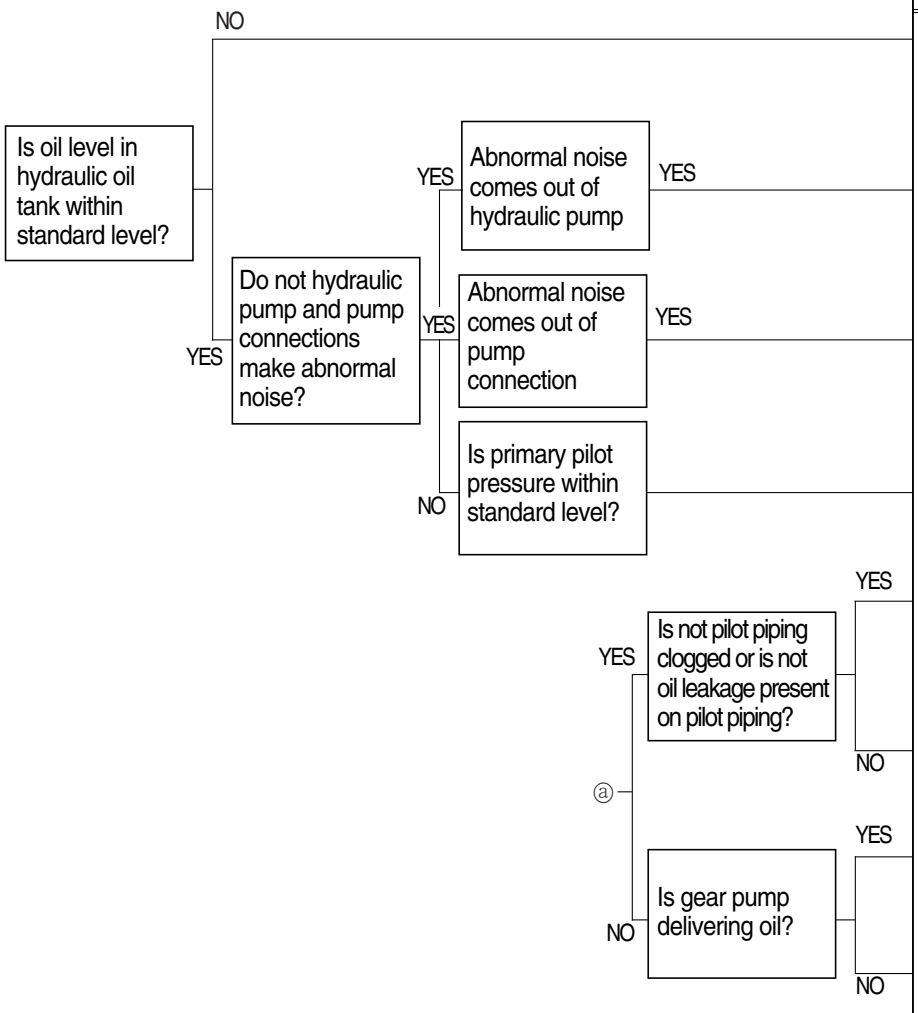

Cause	Remedy
	Replenish specified oil to the standard level.
Hydraulic pump is broken.	Disassemble and repair.
	See item 1). at page 5-5
ⓐ	
	Clean pilot piping interior or repair piping.
Pilot valve is faulty.	Disassemble and repair.
Pilot relief valve is faulty.	Repair or replace.
Gear pump is broken.	Disassemble and repair.

3. HYDRAULIC SYSTEM

1) HYDRAULIC OIL IS CLOUDY

Cause	Remedy
Water is mixed.	Put hydraulic oil still, separate water and dispose it or replace hydraulic oil.
Air is intruded.	Check suction line and return line and eliminate the air intruding source.

2) HYDRAULIC OIL TEMPERATURE HAS RISEN ABNORMALLY

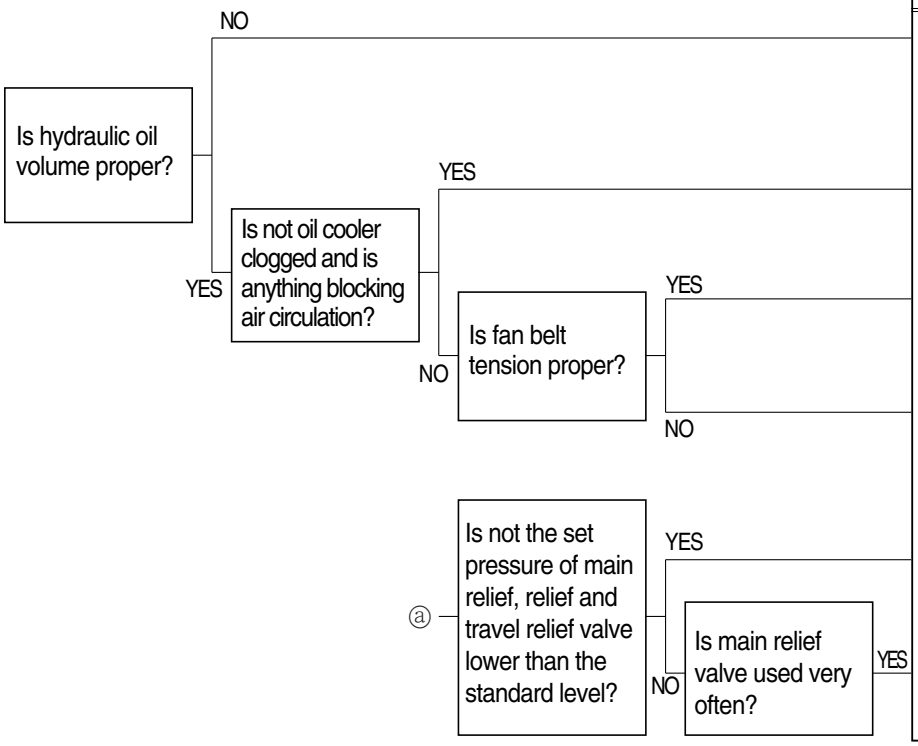

Cause	Remedy
ⓐ	Replenish specified oil to the standard level. Clean oil cooler. Secure air circulation route.
	Adjust belt tension or replace belt.
	Readjust set pressure.
	Reduce load.

3) CAVITATION OCCURS WITH PUMP

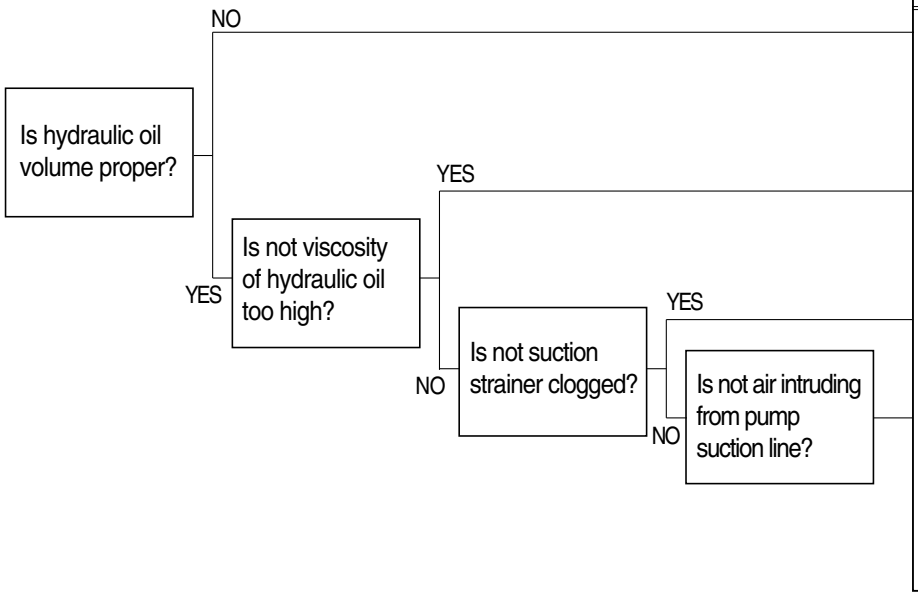

Cause	Remedy
	Replenish specified oil to the standard level. Replace oil with one of proper viscosity. Clean suction strainer. Check for air intrusion in suction line and retighten or replace parts.

4) HYDRAULIC OIL IS CONTAMINATED

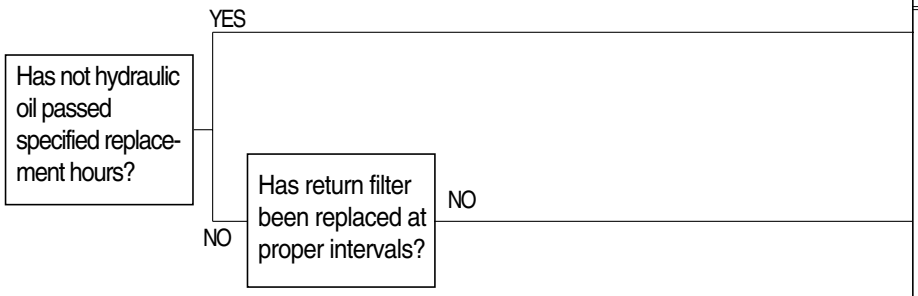

Cause	Remedy
	Replace hydraulic oil to be specified. Flush with hydraulic oil and replace return filter.

4. SWING SYSTEM

1) BOTH LH AND RH SWING ACTIONS ARE IMPOSSIBLE

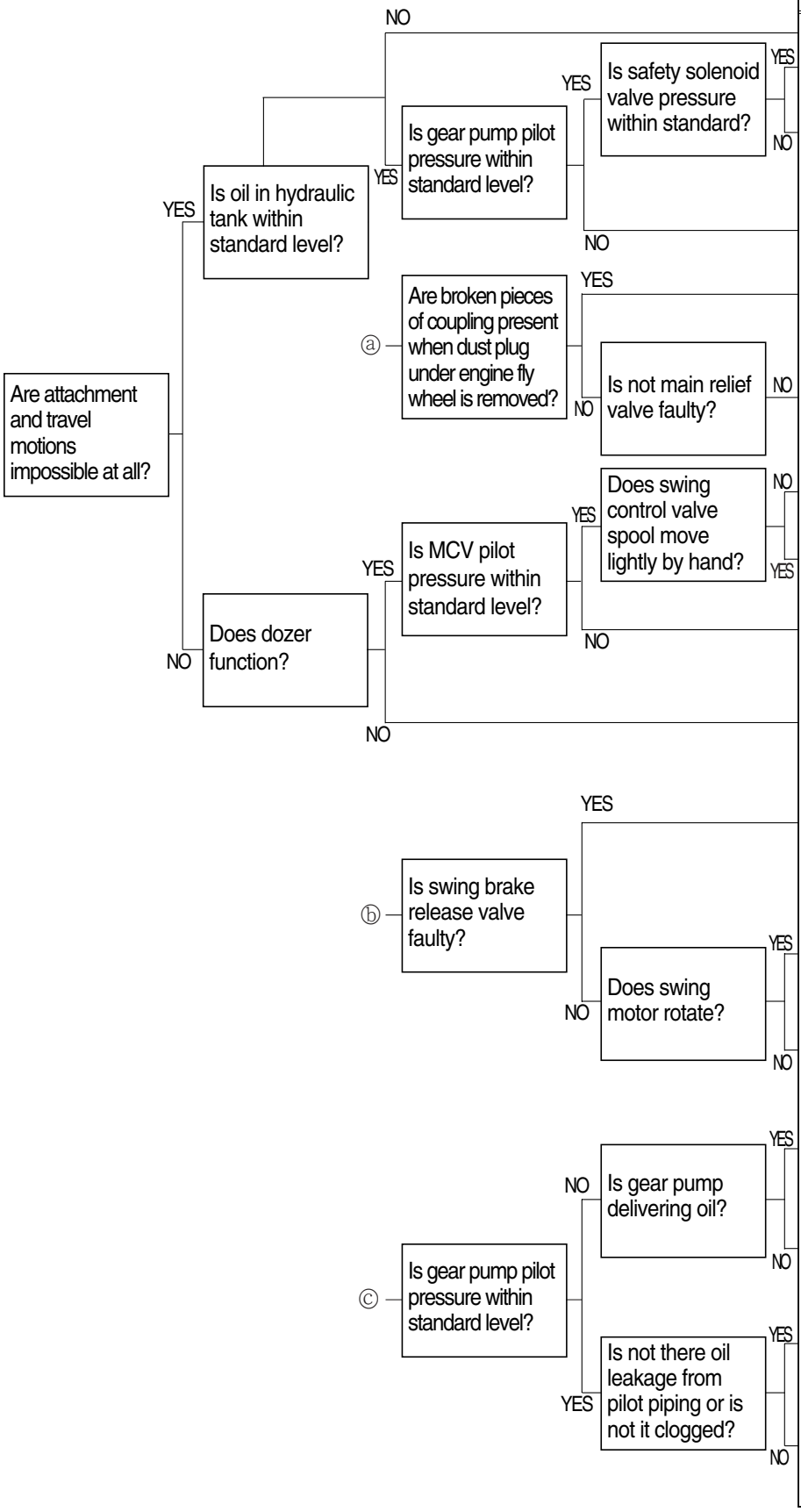

Cause	Remedy
ⓐ Safety valve faulty or not operated.	Replenish specified oil to the standard level. Repair or replace.
Gear pump faulty.	Repair or replace.
Pump connection coupling is broken.	Disassemble and repair.
Hydraulic pump is out of order.	Disassemble and repair.
Swing control valve spool is stuck.	Disassemble and repair.
ⓑ	
ⓒ	
Hydraulic pump is broken.	Disassemble and repair.
Swing brake release valve is broken.	Disassemble and repair.
Swing reduction unit is broken.	Disassemble and repair.
Swing motor is broken.	Disassemble and repair.
Pilot relief valve is faulty.	Disassemble and repair or replace.
Gear pump is out of order.	Disassemble and repair.
	Clean pilot piping interior or repair piping.
Pilot valve is broken.	Disassemble and repair.

2) SWING SPEED IS LOW

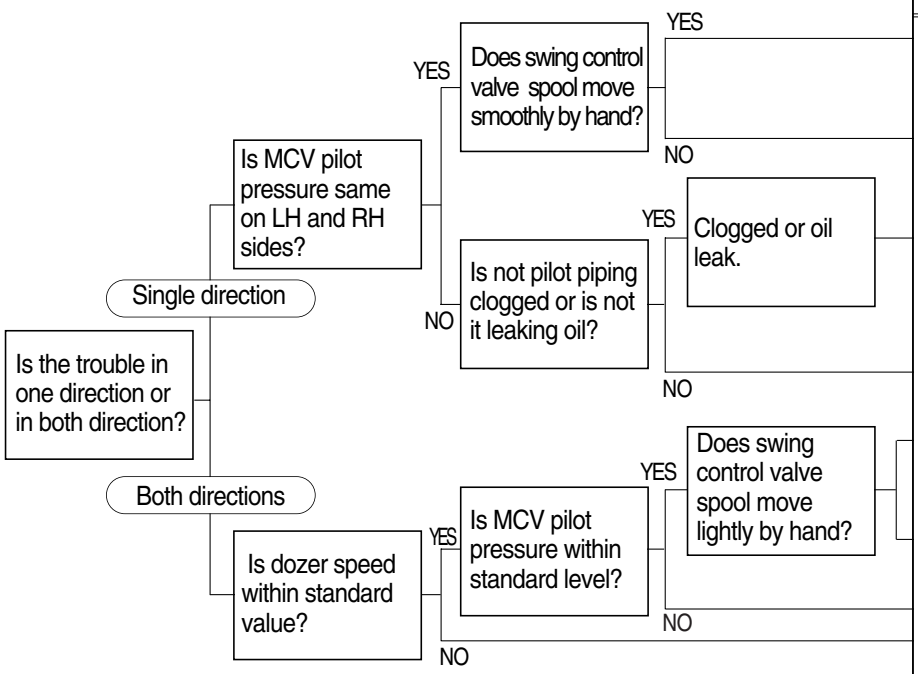

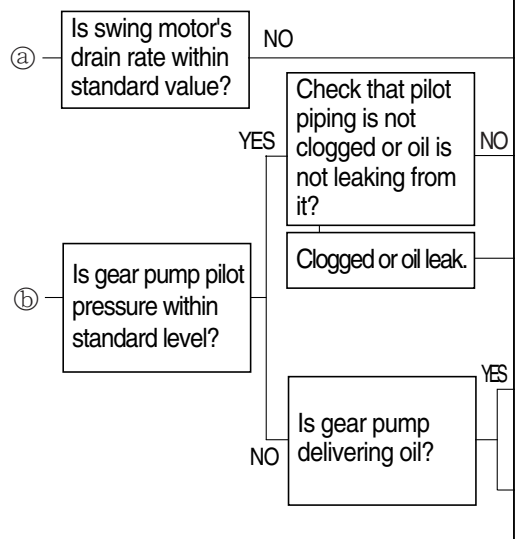

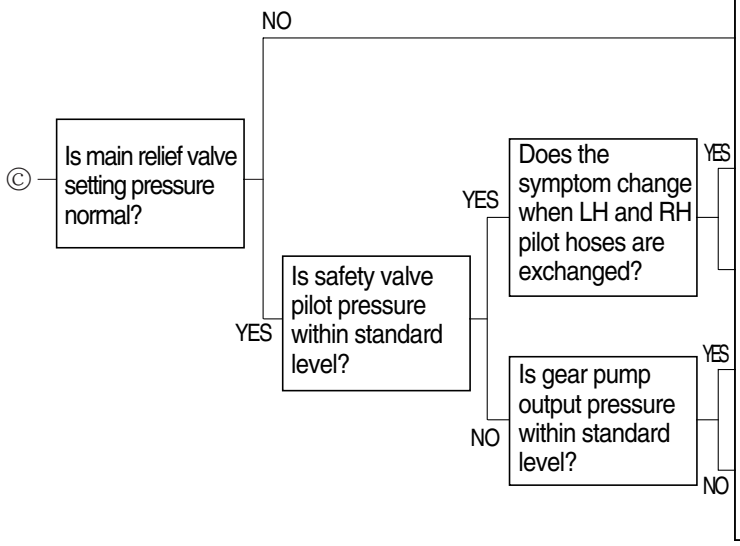

Cause	Remedy
Swing port relief valve is faulty.	Disassemble and repair or replace.
Swing control valve spool is stuck.	Disassemble and repair.
	Clean pilot piping interior or repair piping.
Pilot valve or shuttle valve is faulty.	Disassemble and repair.
ⓐ	
Swing control valve spool is stuck.	Disassemble and repair.
ⓑ	
ⓒ	
Swing motor is broken.	Disassemble and repair.
Pilot valve or shuttle valve is faulty.	Disassemble and repair.
	Clean pilot piping interior or repair piping.
Pilot relief valve is defective.	Disassemble and repair or replace.
Gear pump is broken.	Disassemble and repair.
Main relief valve faulty.	Main relief valve pressure resetting or repair.
Hydraulic pump is broken.	Disassemble and repair.
Shuttle valve is faulty.	Repair or replace.
Pilot relief valve is faulty.	Repair or replace.
Gear pump is faulty.	Repair or replace.

3) SWING MOTION IS IMPOSSIBLE IN ONE DIRECTION

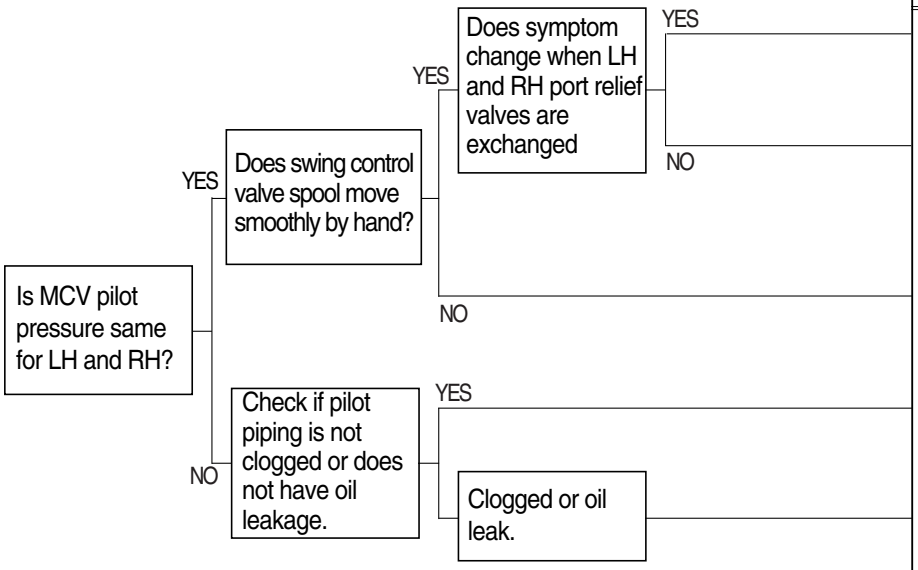

Cause	Remedy
Swing port relief valve is faulty.	Disassemble and repair.
Shuttle valve is faulty.	Disassemble and repair.
Swing control valve spool is stuck.	Disassemble and repair.
Pilot valve is faulty.	Disassemble and repair.
	Clean pilot piping interior or repair piping.

4) MACHINE SWINGS BUT DOES NOT STOP

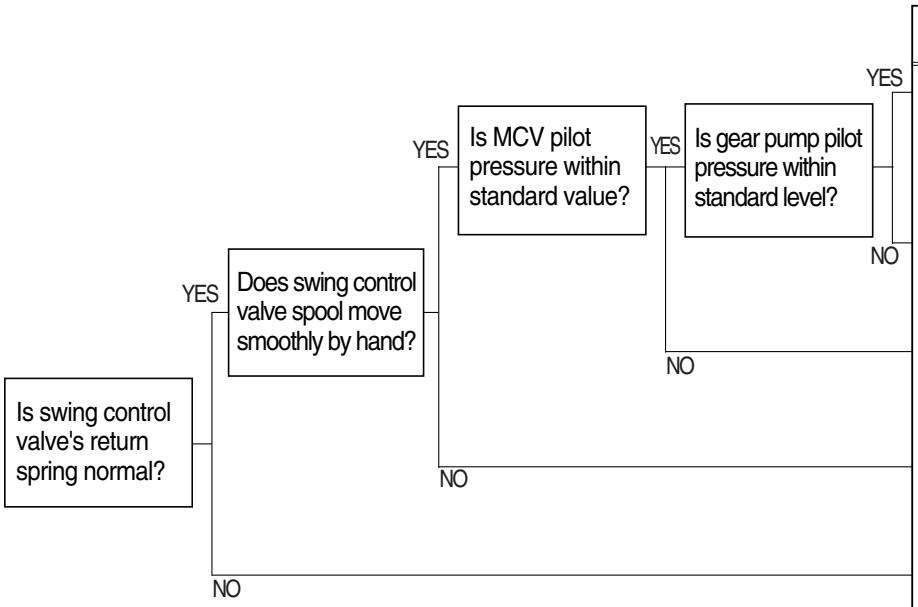

Cause	Remedy
Pilot relief valve is faulty.	Disassemble and repair or replace.
Gear pump is broken.	Disassemble and repair.
Pilot valve is faulty.	Disassemble and repair.
Swing control valve spool is stuck.	Disassemble and repair.
Return spring is faulty.	Disassemble and replace.

5) THE SWING UNIT DRIFTS WHEN THE MACHINE IS AT REST ON A SLOPE

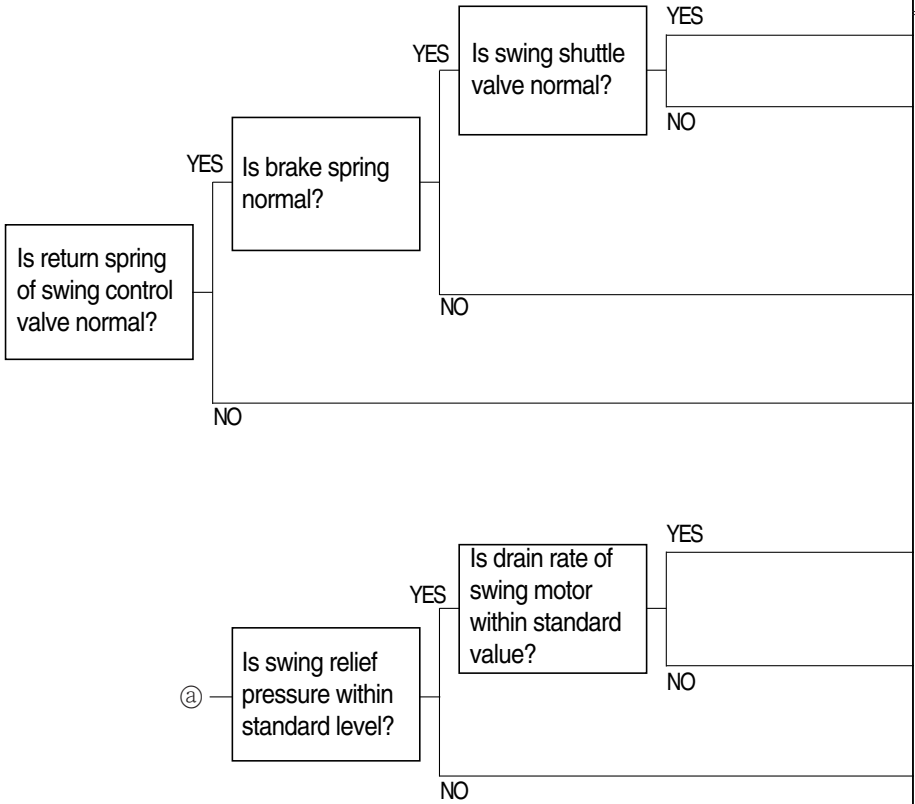

Cause	Remedy
ⓐ	
Shuttle valve is faulty.	Disassemble and replace.
Brake spring is faulty.	Disassemble and replace.
Return spring of swing control valve is faulty.	Disassemble and replace.
Swing relief valve is faulty.	Disassemble and repair or replace.
Swing motor is broken.	Disassemble and repair.
	Adjust swing relief valve pressure or replace swing relief valve.

5. TRAVEL SYSTEM

1) TRAVEL DOES NOT FUNCTION AT ALL ON ONE SIDE

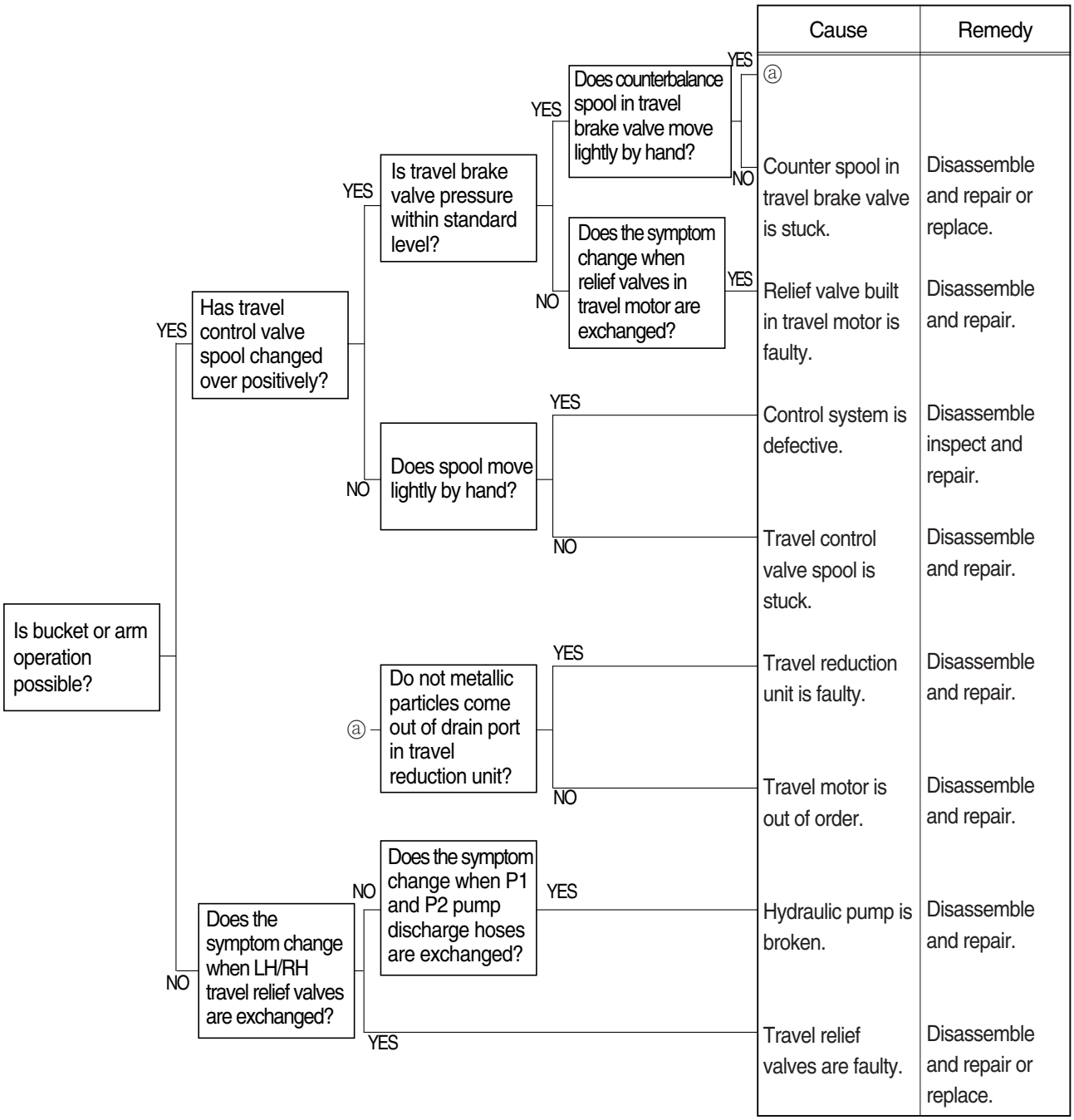

2) SPEED ON ONE SIDE FALLS AND THE MACHINE CURVES

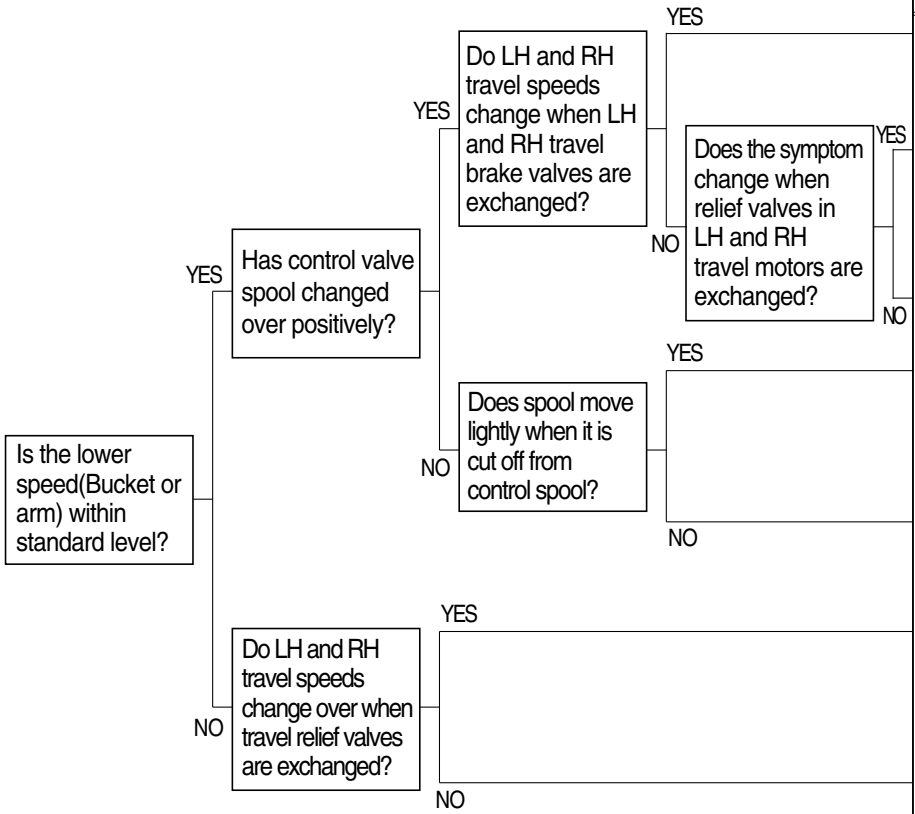

Cause	Remedy
Brake valve is defective.	Disassemble and repair or replace.
Relief valve built in travel motor is faulty.	Disassemble and repair.
Control system is faulty .	Disassemble, inspect and repair.
Control valve spool is stuck.	Disassemble and repair.
Travel relief valve is faulty.	Disassemble and repair or replace.
Hydraulic pump is broken.	Disassemble and repair.
Travel motor's parking brake is not released properly.	Disassemble and clean pilot piping.
Travel motor is faulty.	Disassemble and repair.

3) MACHINE DOES NOT STOP ON A SLOPE

Machine is pulled forward as sprocket rotates during digging operation.

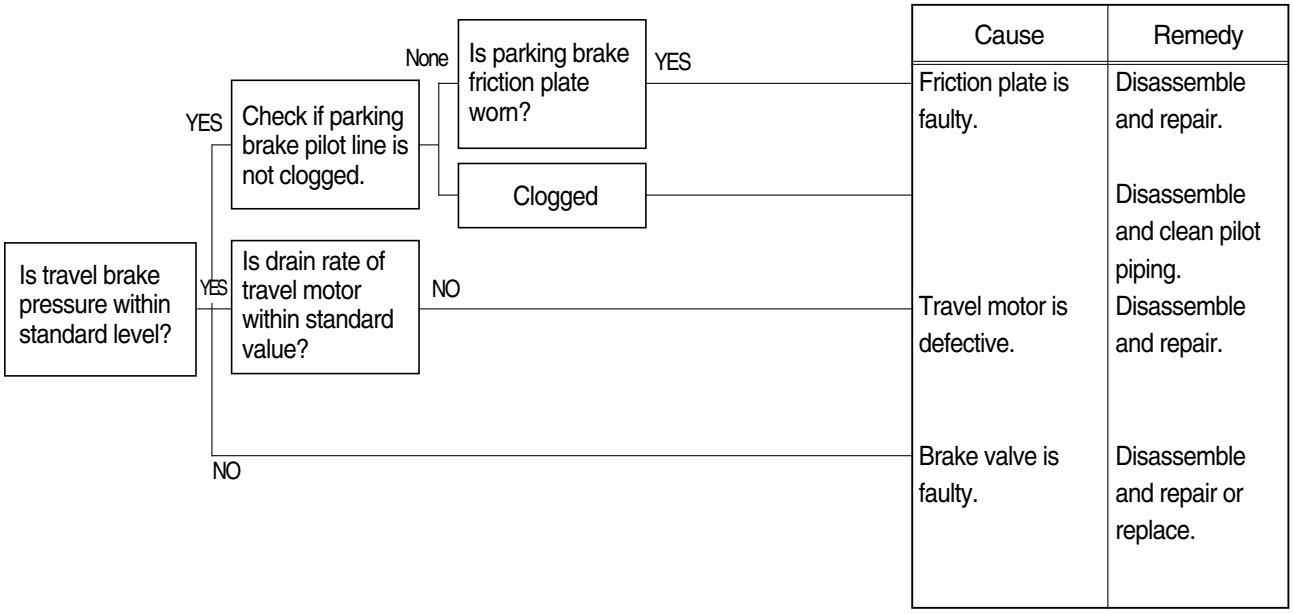

4) LH AND RH TRAVEL MOTIONS ARE IMPOSSIBLE

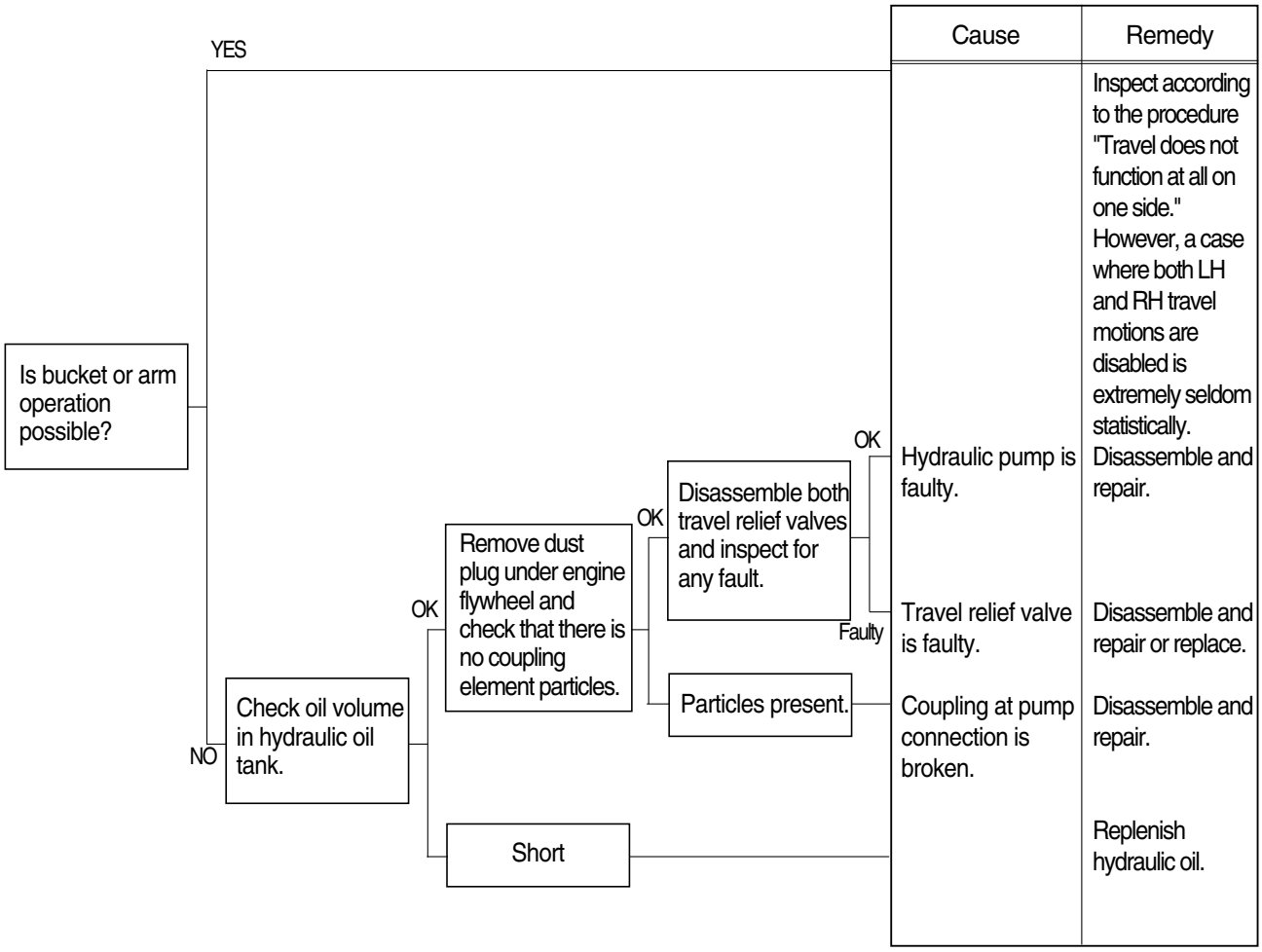

5) TRAVEL ACTION IS POWERLESS(Travel only)

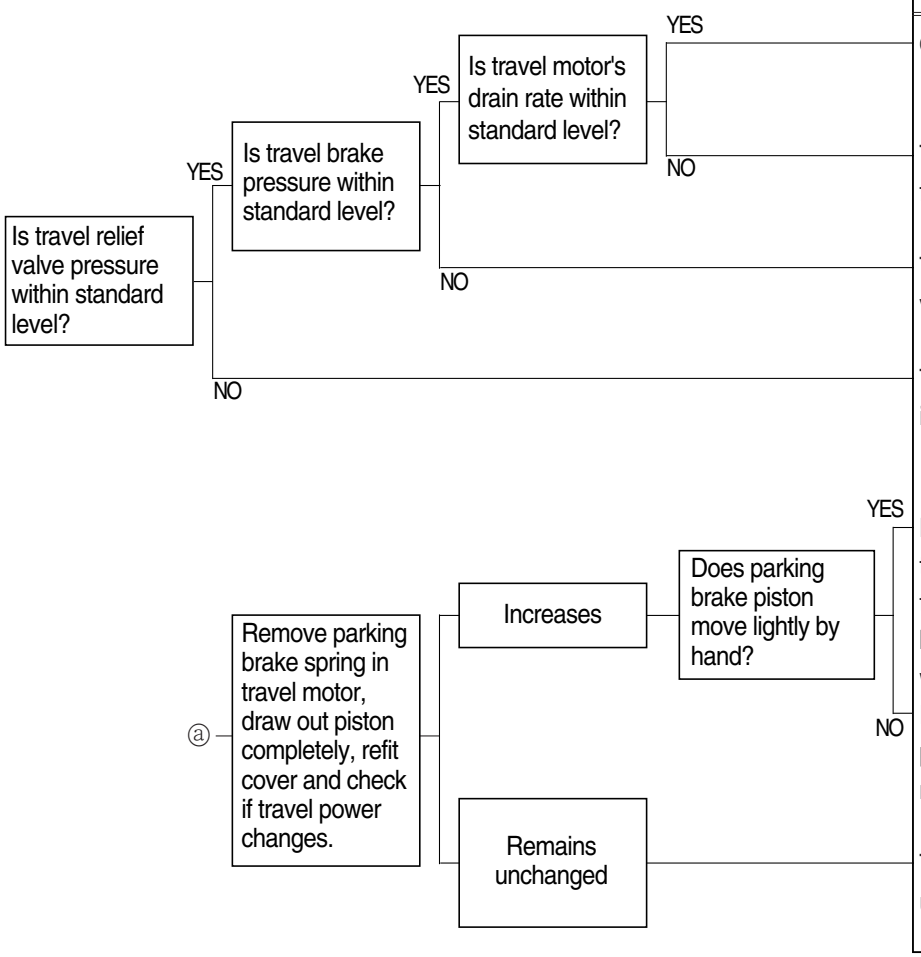

Cause	Remedy
ⓐ	
Travel motor is faulty.	Disassemble and repair.
Travel brake valve is defective.	Disassemble and repair or replace.
Travel relief valve is faulty.	Disassemble and repair or replace.
Hydraulic circuit that releases travel parking brake is clogged with dirt.	Disassemble and clean.
Parking brake piston in travel motor is stuck.	Disassemble and repair.
Travel reduction unit is defective.	Disassemble and repair.

6) MACHINE RUNS RECKLESSLY ON A SLOPE

Cause	Remedy
	Disassemble and repair or replace.

7) MACHINE MAKES A CURVED TRAVEL OR DOES NOT TRAVEL AT ALL WHEN TRAVEL AND ATTACHMENT OPERATIONS ARE EXECUTED AT THE SAME TIME

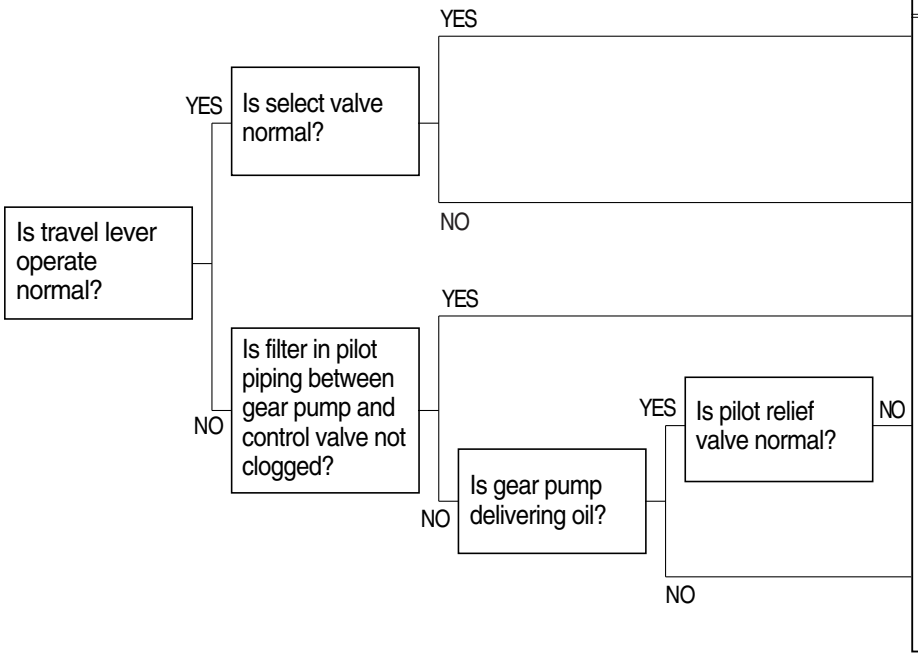

Cause	Remedy
	Normal.
Select valve is faulty.	Repair or replace.
	Remove dirt on pilot line filter.
Pilot relief valve is defective.	Disassemble and repair or replace.
Gear pump is broken.	Disassemble and repair.

6. ATTACHMENT SYSTEM

1) BOOM OR ARM ACTION IS IMPOSSIBLE AT ALL

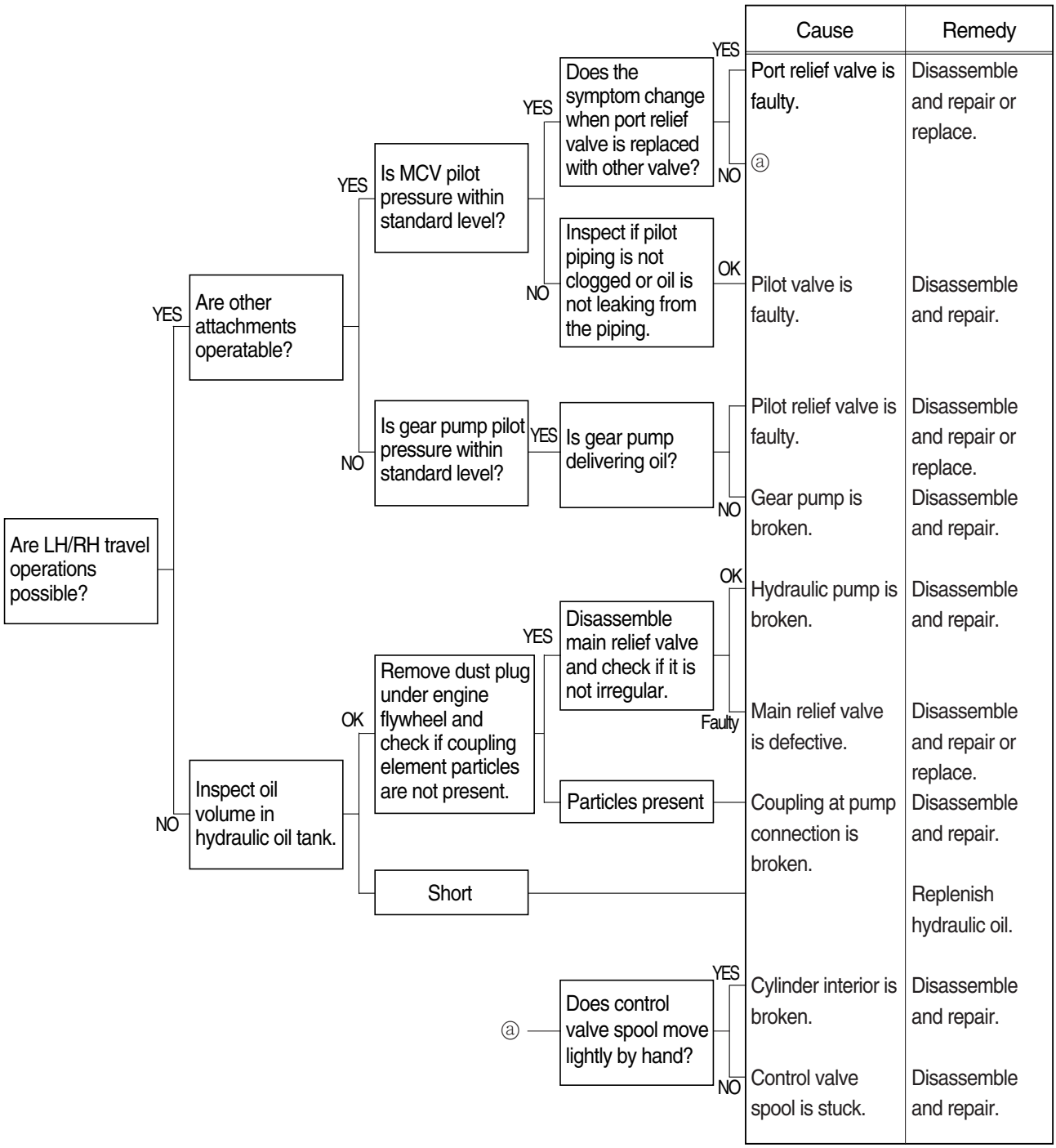

2) BOOM, ARM OR BUCKET SPEED IS LOW

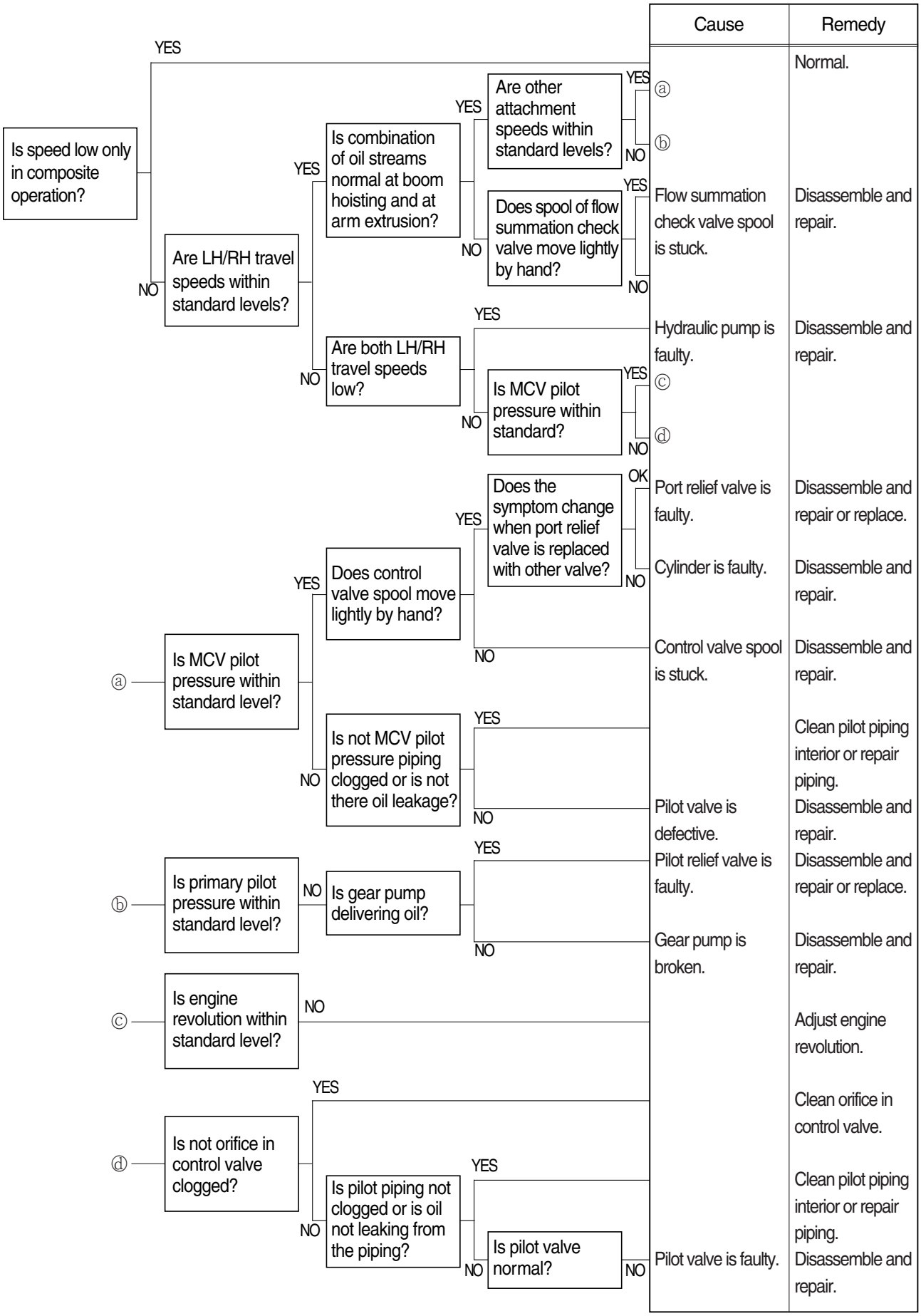

3) BOOM, ARM OR BUCKET CYLINDER EXTENDS OR CONTRACTS ITSELF AND ATTACHMENT FALLS

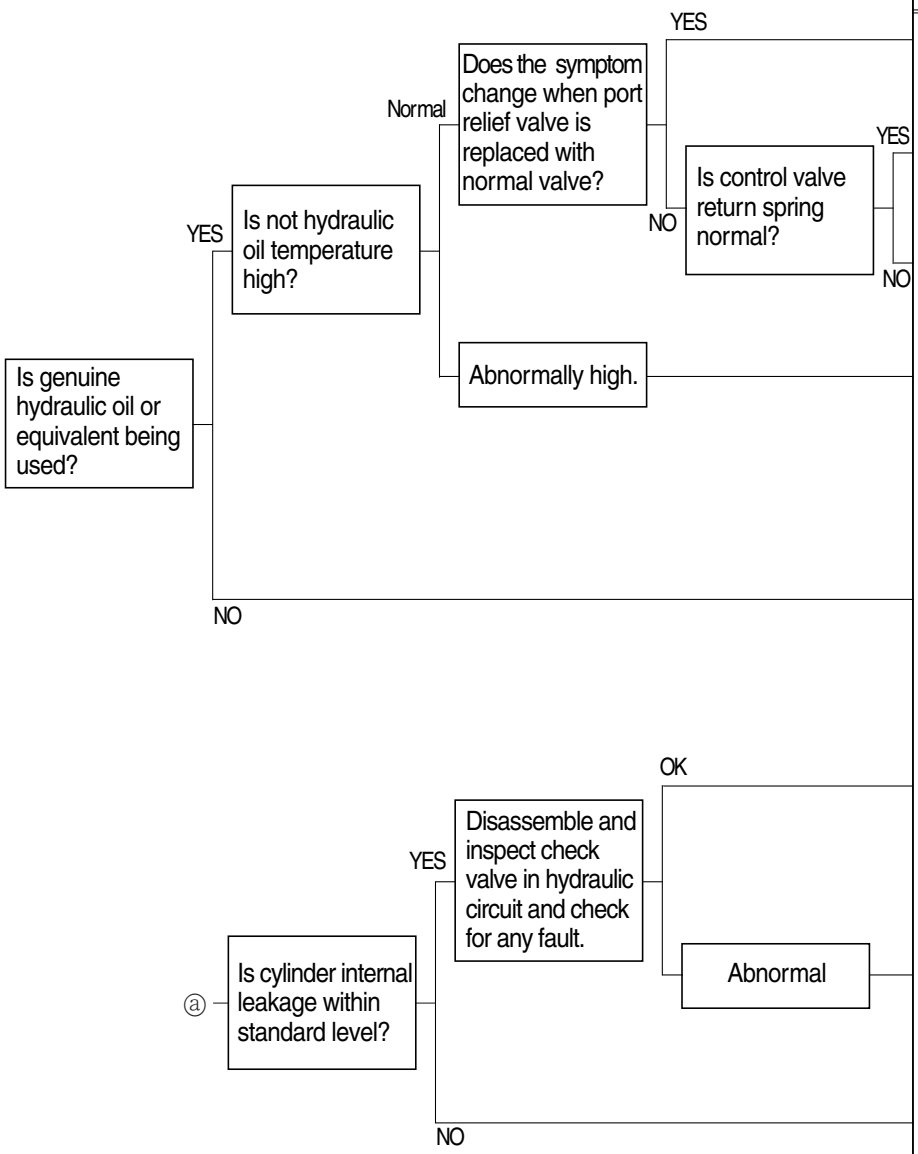

Cause	Remedy
Port relief valve is faulty.	Disassemble and repair or replace.
Control valve's return spring is faulty.	Disassemble and replace.
	Locate the cause of hydraulic oil temperature rise and lower it to proper level.
	Replace with genuine hydraulic oil or equivalent.
Pressure tightness between control valve casing and spool is poor.	Disassemble and repair.
Contact surface between poppet and seat is poor.	Disassemble and repair.
Cylinder is faulty.	Disassemble and repair.

4) BOOM, ARM OR BUCKET POWER IS WEAK

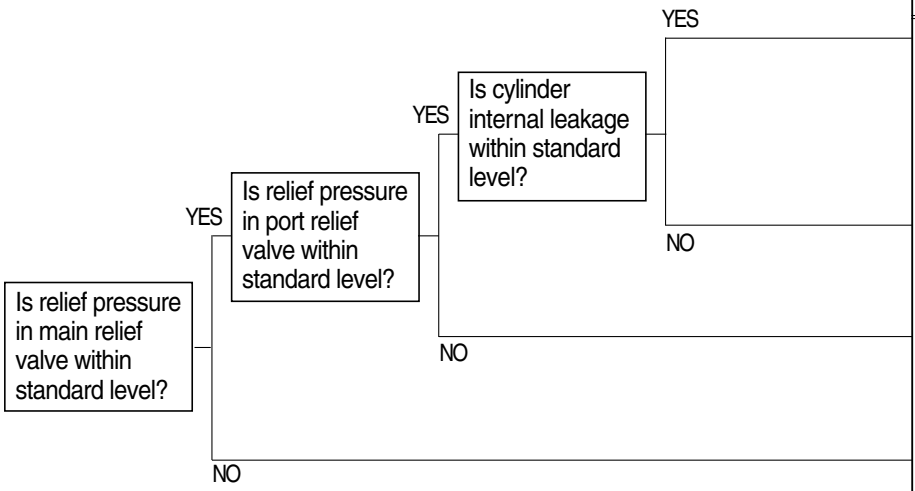

Cause	Remedy
	Check according to the procedure in Item "Speed is low".
Cylinder is faulty.	Disassemble and repair.
Port relief valve is faulty.	Adjust pressure, repair or replace.
Main relief valve is defective.	Adjust pressure, repair or replace.

5) ONLY BUCKET OPERATION IS TOTALLY IMPOSSIBLE

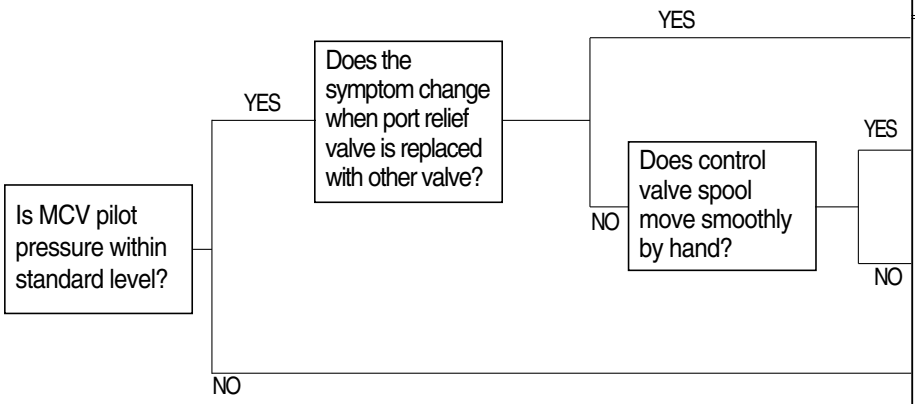

Cause	Remedy
Port relief valve is defective.	Disassemble and repair or replace.
Cylinder interior is broken.	Disassemble and repair.
Control valve spool is stuck.	Disassemble and repair.
Pilot valve is faulty.	Disassemble and repair.

6) BOOM MAKES A SQUEAKING NOISE WHEN BOOM IS OPERATED

Is boom foot pin greased sufficiently?

	Cause	Remedy
YES		Frictional noise occurs between the sliding faces of boom cylinder's oil seal and boom proper. ※ Frictional noise will disappear if they are kept used.
NO	Boom foot pin has run out of grease.	Supply grease to it. ※ If seizure is in an initial stage, supply sufficient grease. If seizure is in a grown state, correct it by paper lapping or with an oil stone.

※ HOW TO CHECK INTERNAL BOOM CYLINDER LEAKAGE

1. Lower the bucket teeth to the ground with bucket cylinder fully retracted and arm cylinder rod retracted almost in full.

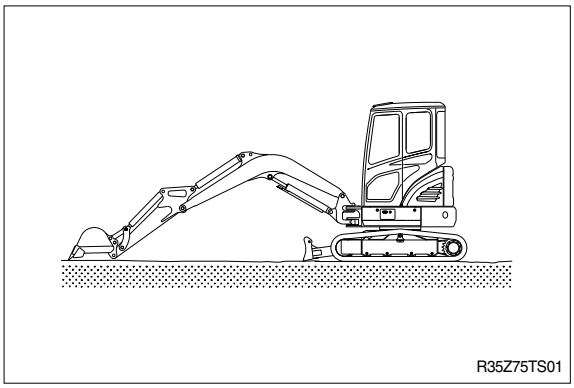

2. Disconnect hose(A) from rod side of boom cylinder and drain oil from cylinders and hose.(Put cups on piping and hose ends)

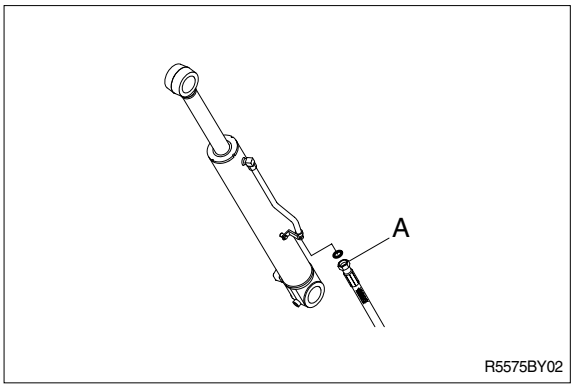

3. Raise bucket OFF the ground by retracting the arm cylinder rod.

   If oil leaks from piping side and boom cylinder rod is retracted there is an internal leak in the cylinder.
   If no oil leaks from piping side and boom cylinder rod is retracted, there is an internal leak in the control valve.

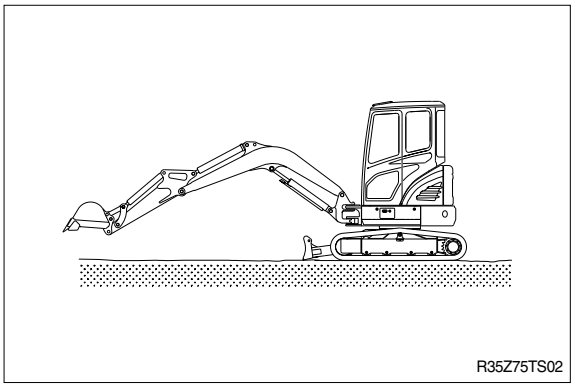

1. WHEN STARTING SWITCH IS TURNED ON, MONITOR PANEL DISPLAY DOES NOT APPEAR

- Before disconnecting the connector, always turn the starting switch OFF.
- Before carrying out below procedure, check all the related connectors are properly inserted and short of fuse No. 2.
- After checking, insert the disconnected connectors again immediately unless otherwise specified.

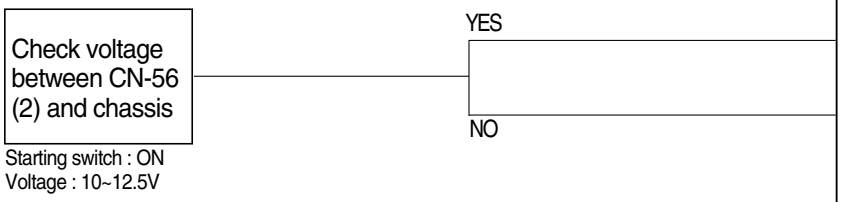

Cause	Remedy
Defective cluster	Replace
Disconnection in wiring harness or poor contact between CN-56 (1) and fuse No.2.	Repair or replace (After clean)

Check voltage

YES	10 ~ 12.5V
NO	0V

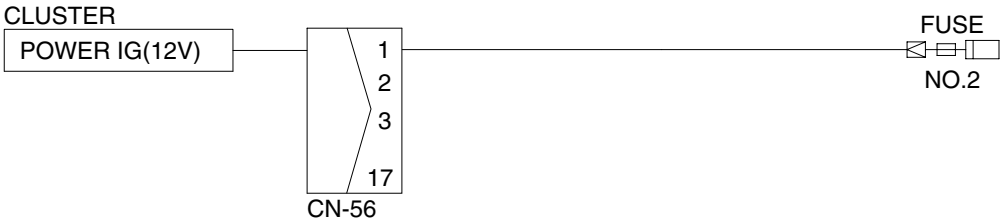

R35Z75TS10

2. BATTERY CHARGING WARNING LAMP LIGHTS UP(Starting switch : ON)

- Before disconnecting the connector, always turn the starting switch OFF.
- Before carrying out below procedure, check all the related connectors are properly inserted.
- After checking, insert the disconnected connectors again immediately unless otherwise specified.

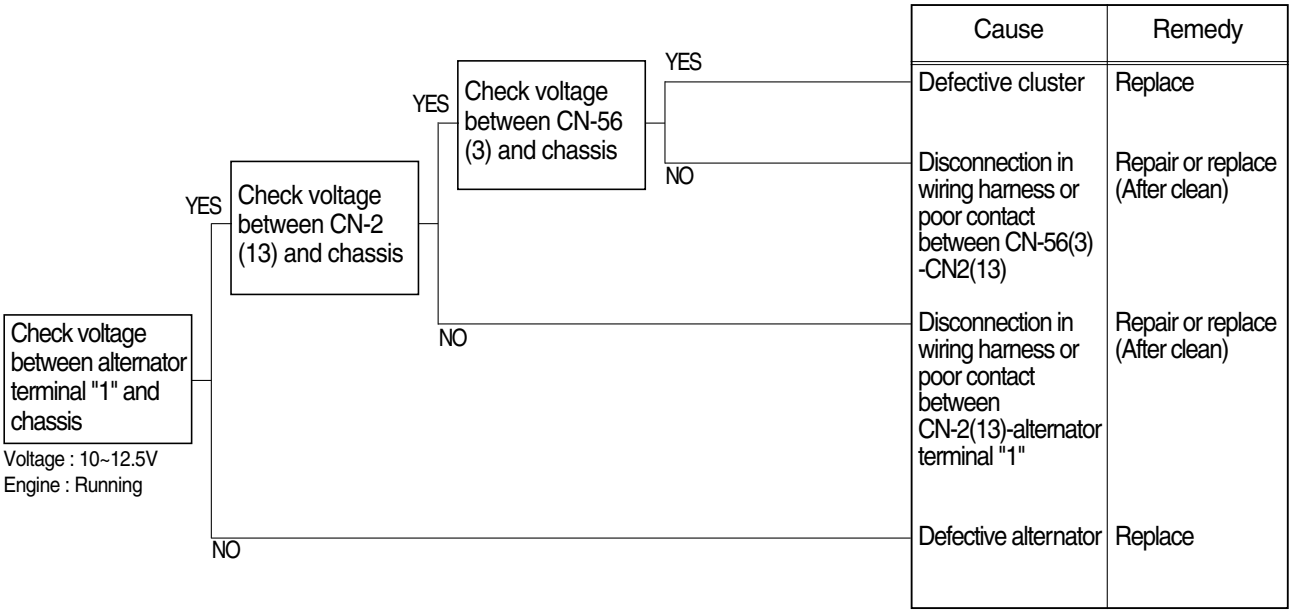

Check voltage

YES	10 ~ 12.5V
NO	0V

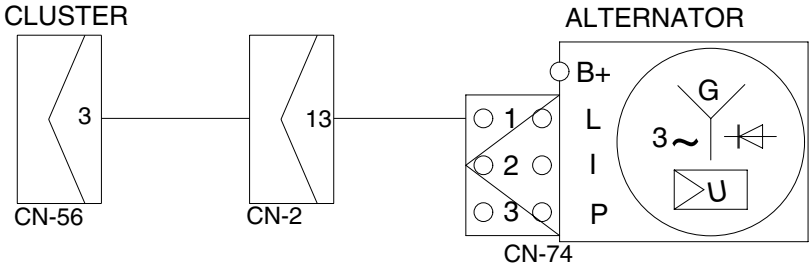

R35Z75TS11

3. WHEN COOLANT OVERHEAT WARNING LAMP LIGHTS UP(Engine is started)

- Before disconnecting the connector, always turn the starting switch OFF.
- Before carrying out below procedure, check all the related connectors are properly inserted.
- After checking, insert the disconnected connectors again immediately unless otherwise specified.

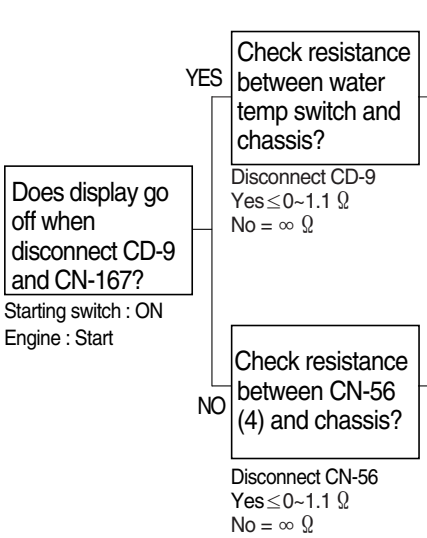

Cause	Remedy
Coolant overheat (110°C ±2°C) or defective temp switch	Check engine cooling system or replace temp switch
Defective temp detector	Repair or replace the detector
Short circuit in wiring harness	Repair or replace (After clean)
Defective cluster	Replace

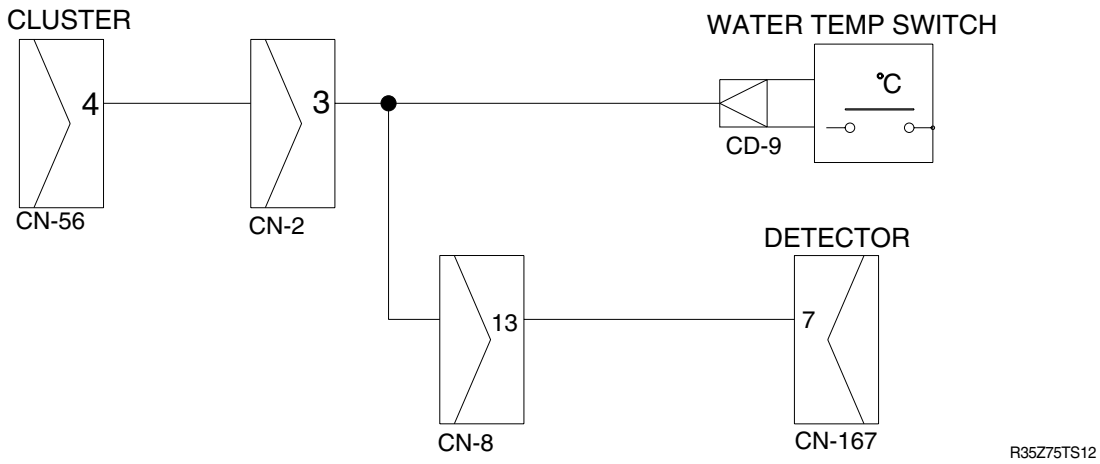

4. WHEN AIR CLEANER WARNING LAMP LIGHTS UP(Engine is started)

- Before disconnecting the connector, always turn the starting switch OFF.
- Before carrying out below procedure, check all the related connectors are properly inserted.
- After checking, insert the disconnected connectors again immediately unless otherwise specified.

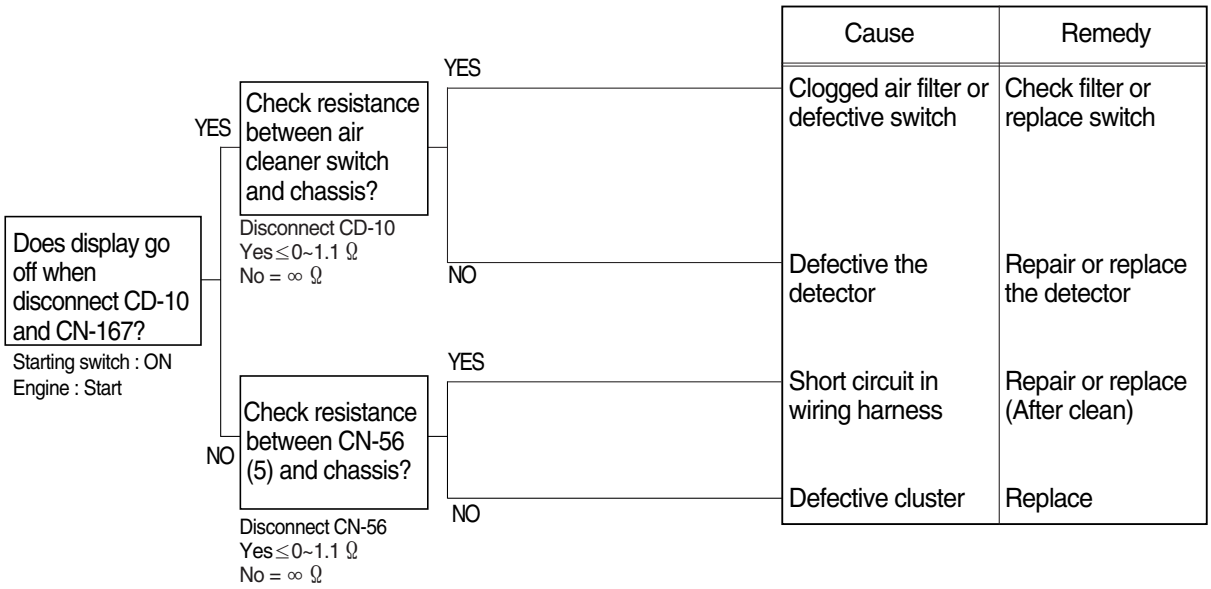

Check resistance

YES	MAX 1Ω
NO	MIN 1M Ω

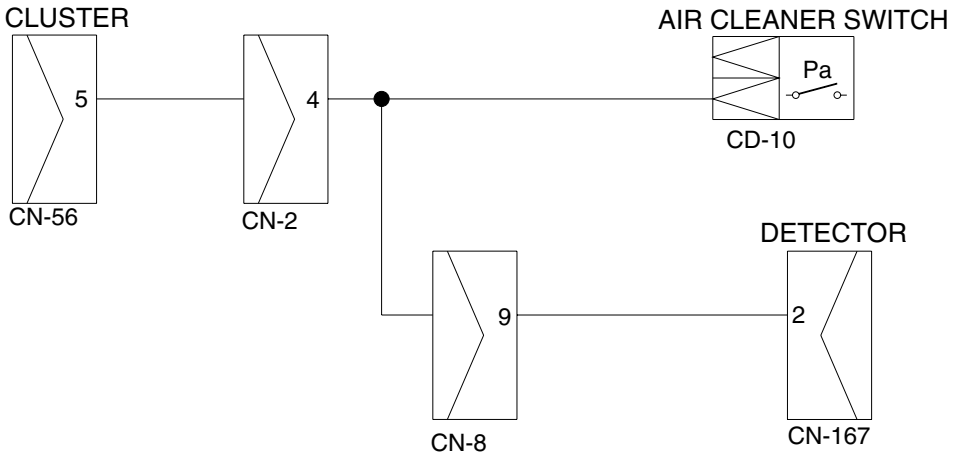

R35Z75TS13

5. WHEN ENGINE OIL PRESSURE WARNING LAMP LIGHTS UP(Engine is started)

- Before disconnecting the connector, always turn the starting switch OFF.
- Before carrying out below procedure, check all the related connectors are properly inserted.
- After checking, insert the disconnected connectors again immediately unless otherwise specified.

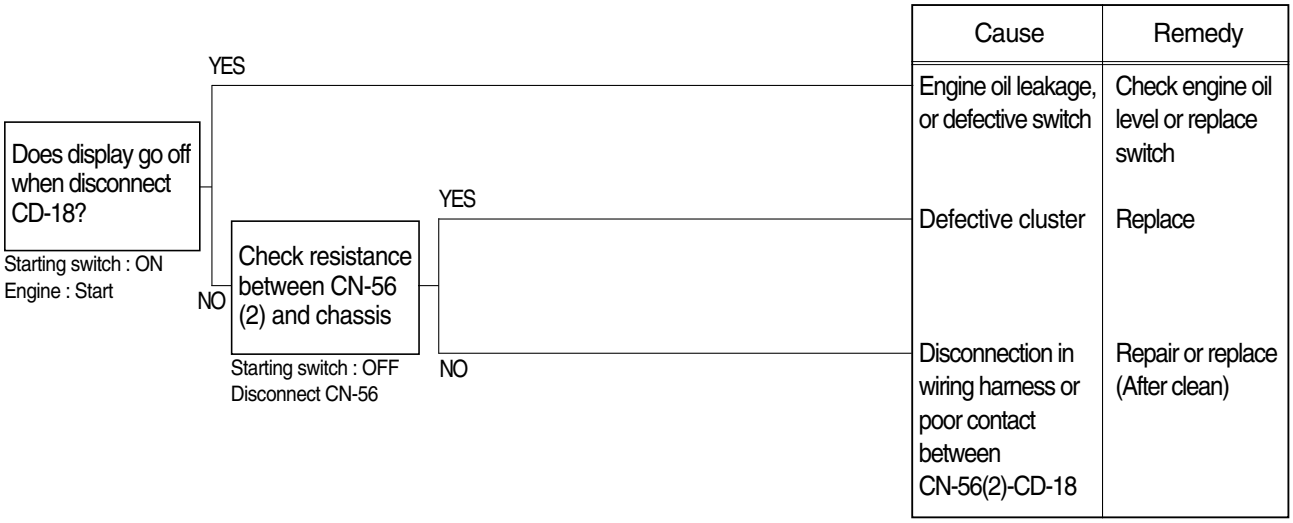

Check resistance

YES	MAX 1Ω
NO	MIN 1MΩ

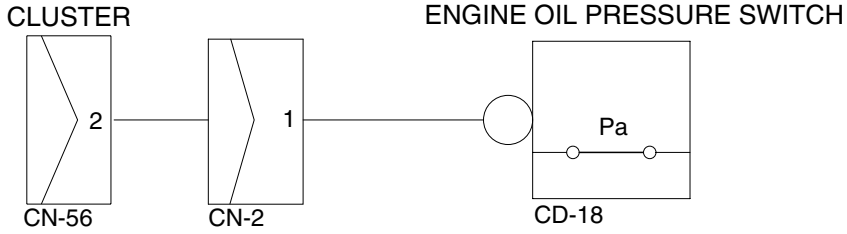

R35Z75TS14

6. WHEN COOLANT TEMPERATURE GAUGE DOES NOT OPERATE

- Before disconnecting the connector, always turn the starting switch OFF.
- Before carrying out below procedure, check all the related connectors are properly inserted.
- After checking, insert the disconnected connectors again immediately unless otherwise specified.

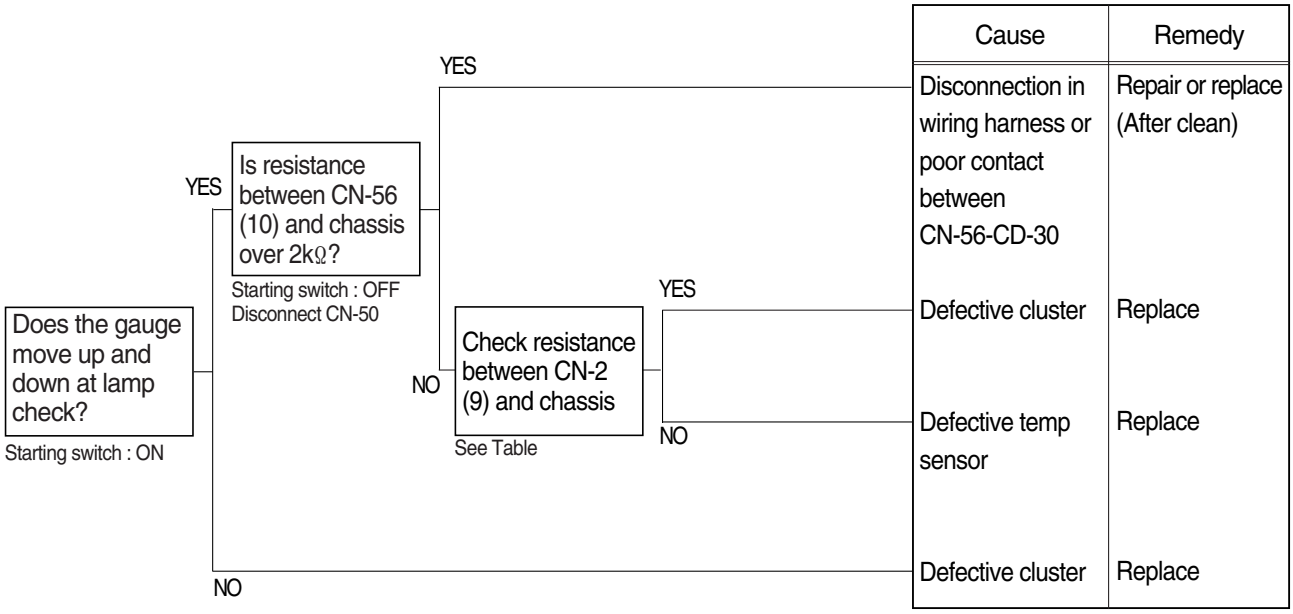

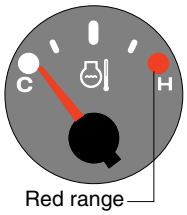

Check Table

Item \ Temperature	50°C	80°C	100°C	120°C (Red range)
Unit Resistance(Ω)	350	118	63.5	36.2

R35Z75TS15

7. WHEN FUEL GAUGE DOES NOT OPERATE(Check warning lamp ON/OFF)

- Before disconnecting the connector, always turn the starting switch OFF.
- Before carrying out below procedure, check all the related connectors are properly inserted.
- After checking, insert the disconnected connectors again immediately unless otherwise specified.

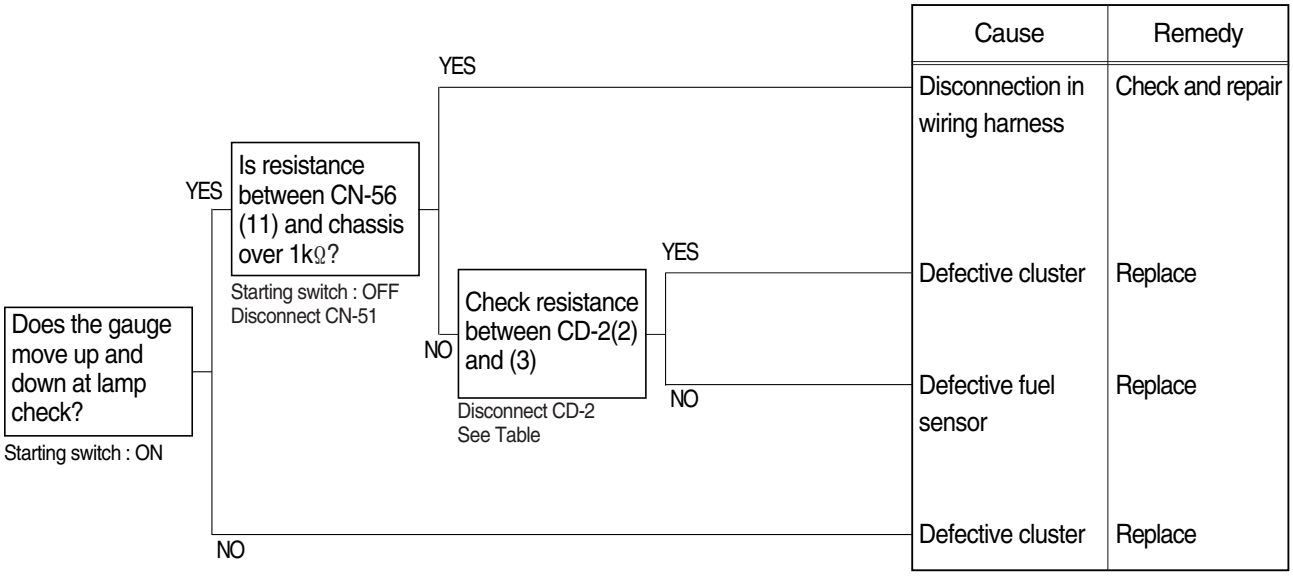

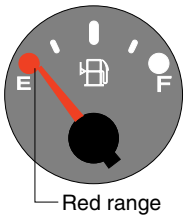

Check Table

Item \ Temperature	Empty	1/2	Full
Unit Resistance(Ω)	90	38	10

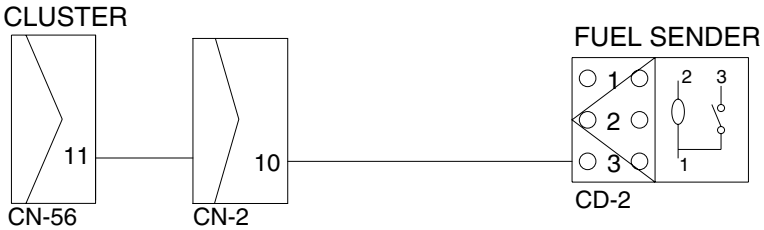

R35Z75TS16

8. WHEN SAFETY SOLENOID DOES NOT OPERATE

- Before disconnecting the connector, always turn the starting switch OFF.
- Before carrying out below procedure, check all the related connectors are properly inserted and short of fuse No.10.
- After checking, insert the disconnected connectors again immediately unless otherwise specified.

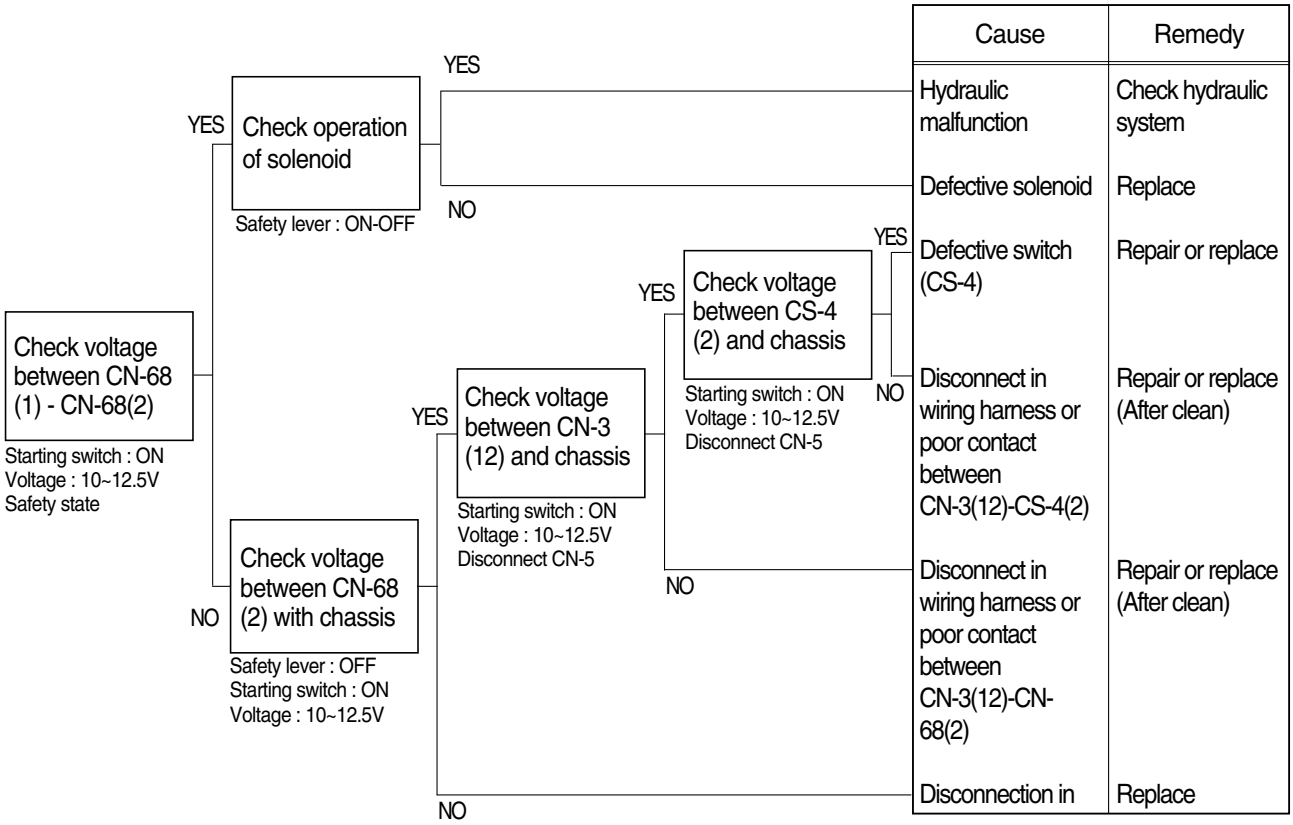

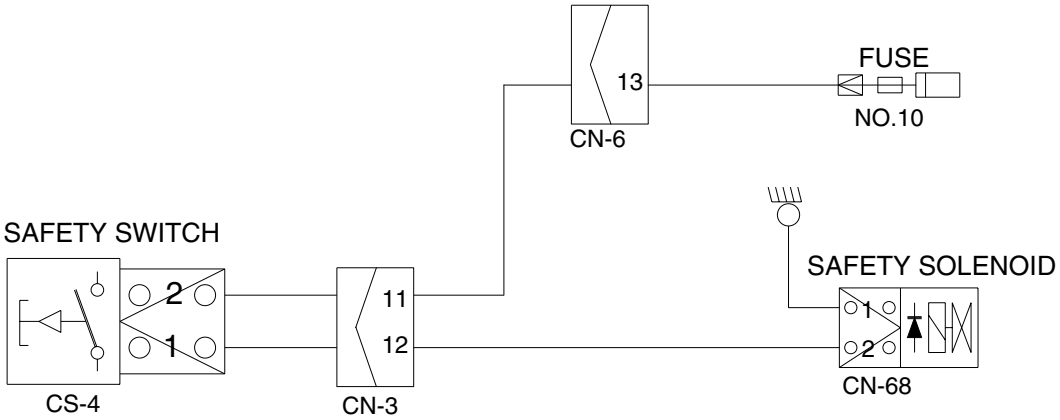

R35Z75TS17

9. WHEN TRAVEL SPEED 1, 2 DOES NOT OPERATE

- Before disconnecting the connector, always turn the starting switch OFF.
- Before carrying out below procedure, check all the related connectors are properly inserted and short of fuse No.10 .
- After checking, insert the disconnected connectors again immediately unless otherwise specified.

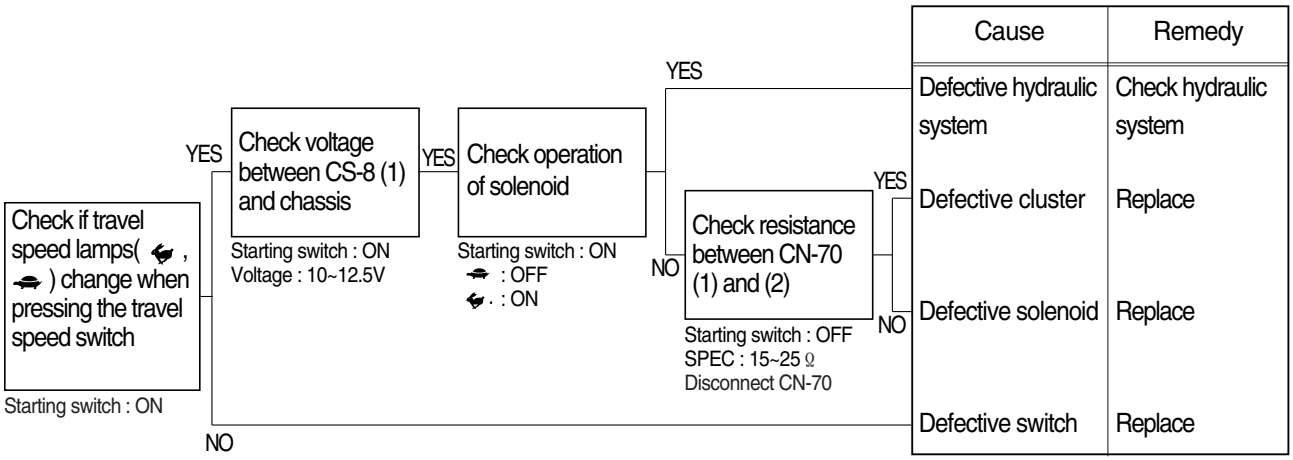

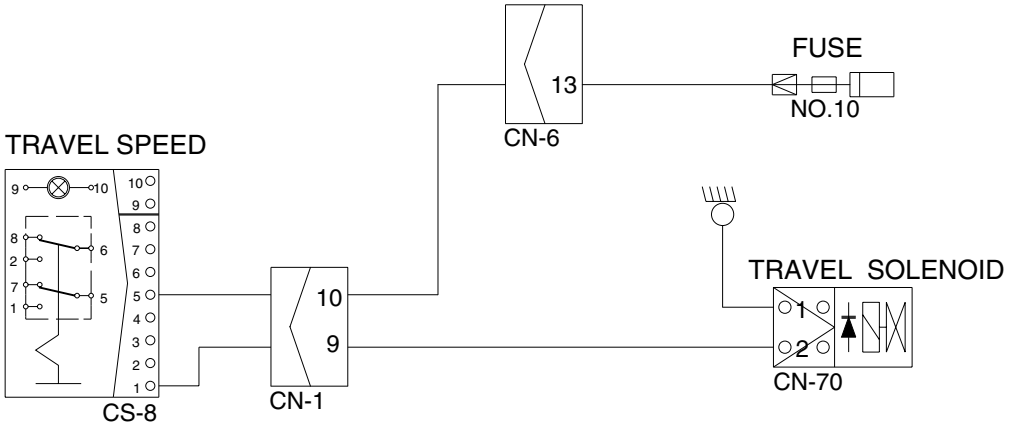

R35Z75TS18

10. WHEN STARTING SWITCH IS TURNED ON, WIPER MOTOR DOES NOT OPERATE

- Before disconnecting the connector, always turn the starting switch OFF.
- Before carrying out below procedure, check all the related connectors are properly inserted and the fuse No.8 is not blown out.
- After checking, insert the disconnected connectors again immediately unless otherwise specified.

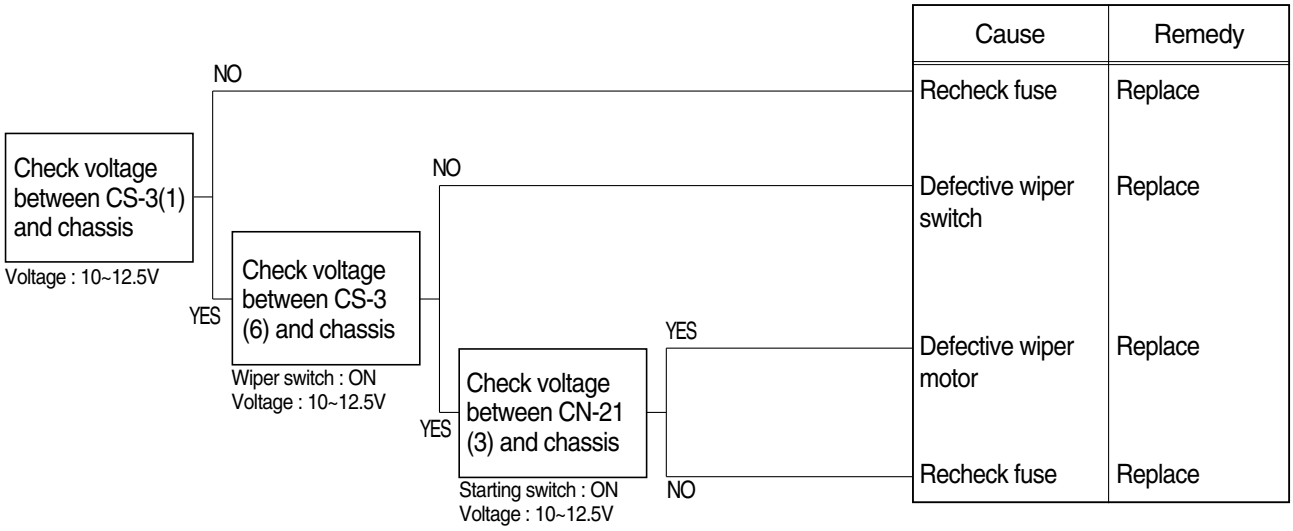

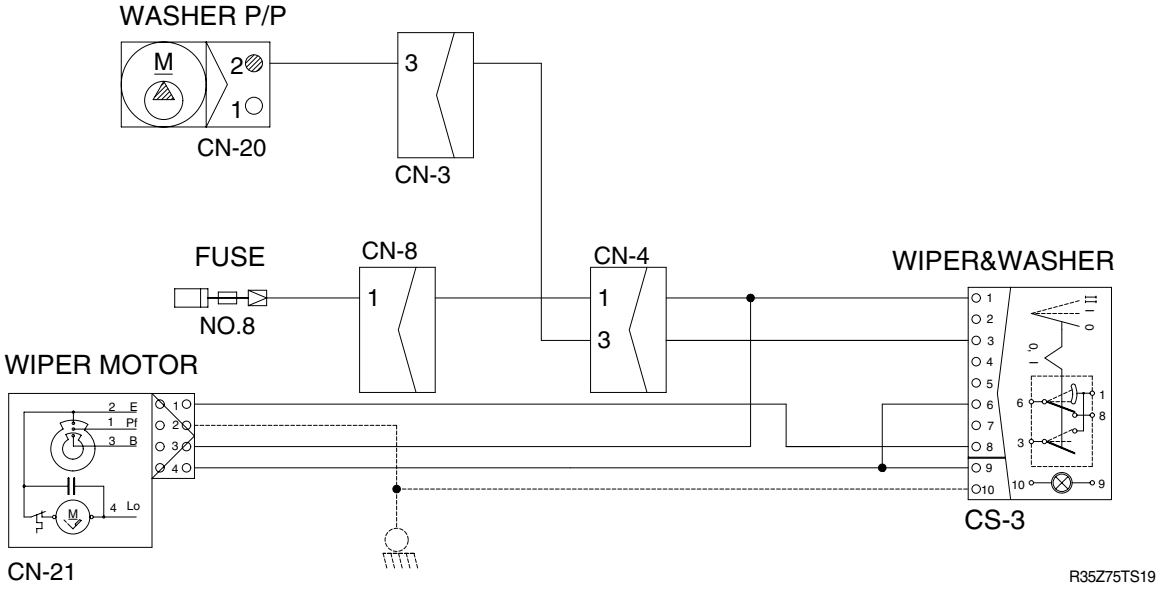

11. WHEN STARTING SWITCH IS TURNED ON, HEAD LAMP DOES NOT LIGHTS UP

- Before disconnecting the connector, always turn the starting switch OFF.
- Before carrying out below procedure, check all the related connectors are properly inserted and short of fuse No.6.
- After checking, insert the disconnected connectors again immediately unless otherwise specified.

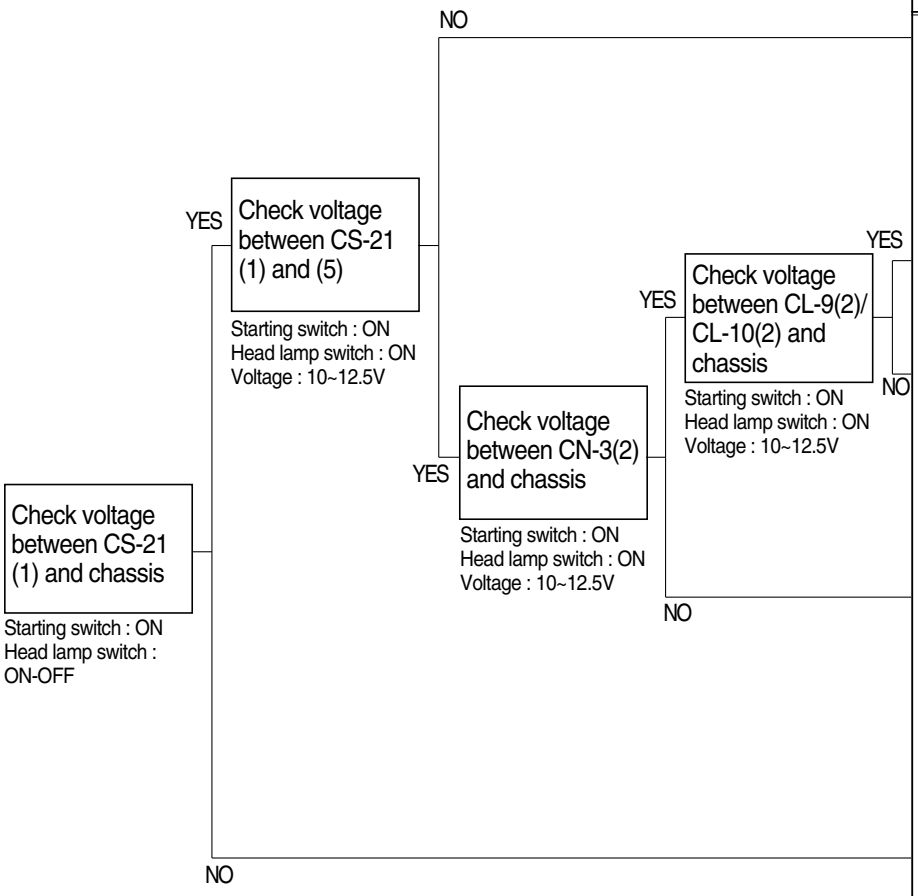

Cause	Remedy
Defective lamp switch	Replace switch
Defective bulb	Replace
Disconnection in wiring harness or poor contact between CN-3(2)-CL-9(2)/CL-10(2)	Repair or replace (After clean)
Disconnection in wiring harness or poor contact between CS-21(5)-CN-3(2)	Repair or replace (After clean)
Disconnection in wiring harness or poor contact between CS-21(5) and fuse	Repair or replace (After clean)

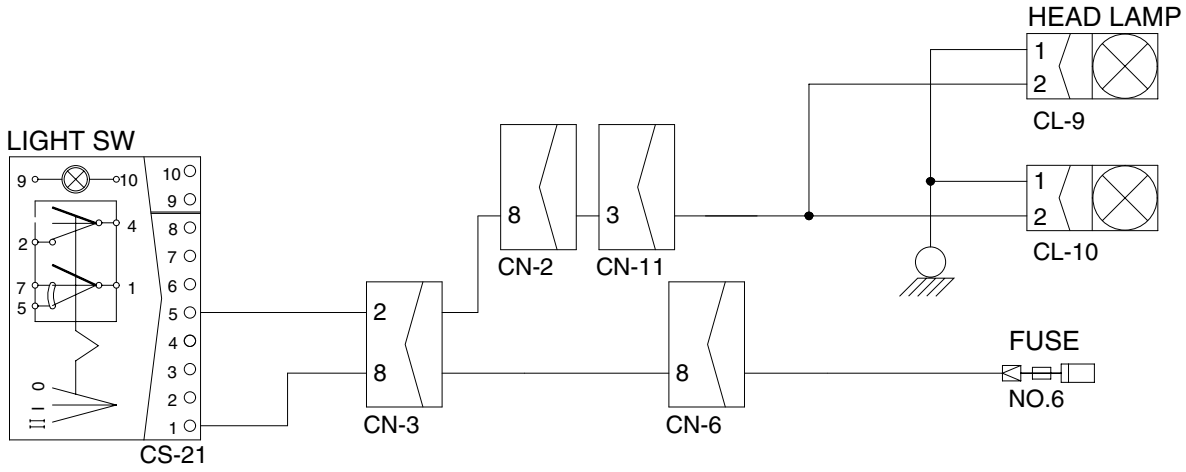

R35Z75TS20

12. WHEN STARTING SWITCH IS TURNED ON, WORK LAMP DOES NOT LIGHTS UP

- Before disconnecting the connector, always turn the starting switch OFF.
- Before carrying out below procedure, check all the related connectors are properly inserted and short of fuse No.5.
- After checking, insert the disconnected connectors again immediately unless otherwise specified.

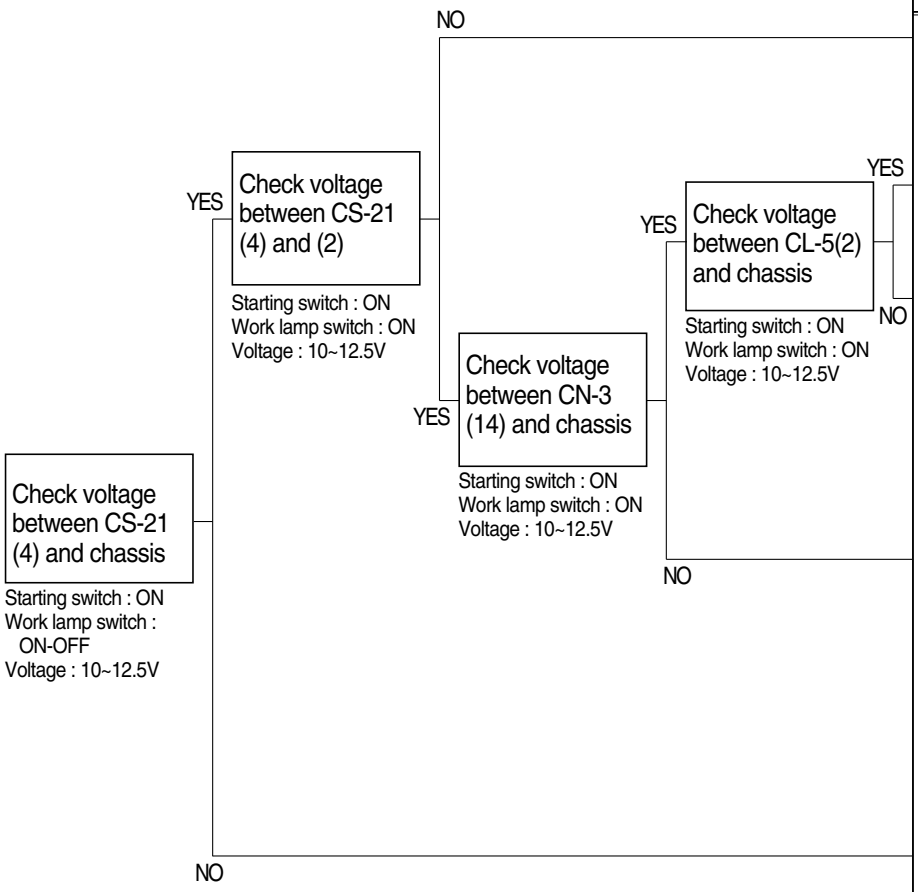

Cause	Remedy
Defective lamp switch	Replace switch
Defective bulb	Replace
Disconnection in wiring harness or poor contact between CN3(14) and CL-5(2)	Repair or replace (After clean)
Disconnection in wiring harness or poor contact between CS-21(2)-CN-3(14)	Repair or replace (After clean)
Disconnection in wiring harness or poor contact between CS-21 (4) and fuse	Repair or replace (After clean)

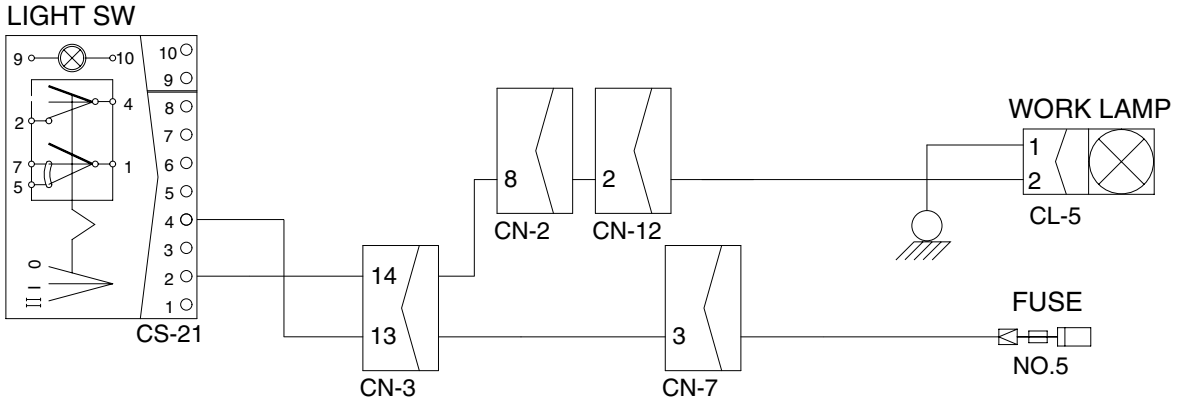

R35Z75TS21

13. WHEN ENGINE DOES NOT START

- Check supply of the power at engine stop solenoid while starting switch is ON.
- Before disconnecting the connector, always turn the starting switch OFF.
- Before carrying out below procedure, check all the related connectors are properly inserted.
- After checking, insert the disconnected connectors again immediately unless otherwise specified.

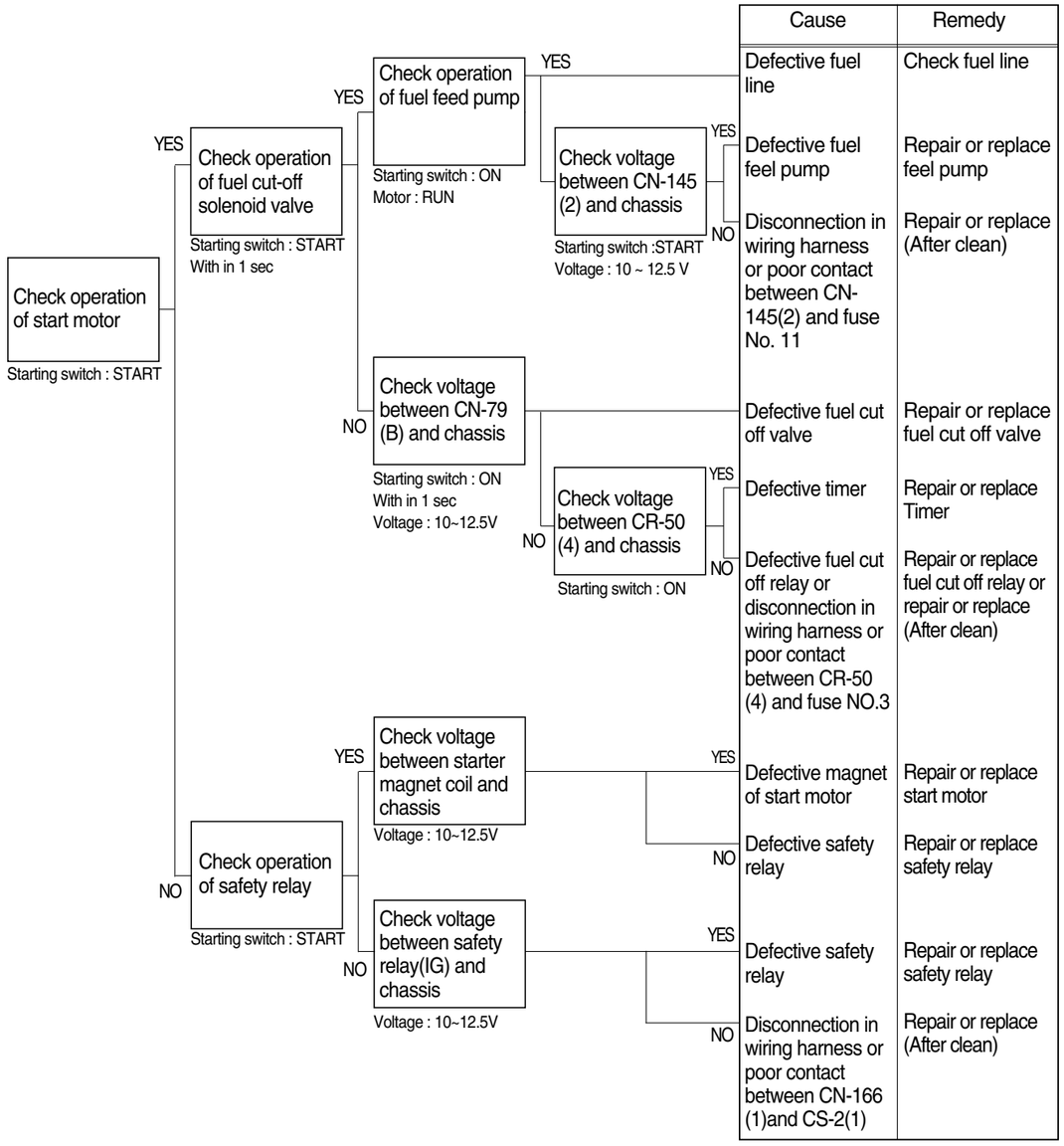

Cause	Remedy
Defective fuel line	Check fuel line
Defective fuel feel pump	Repair or replace feel pump
Disconnection in wiring harness or poor contact between CN-145(2) and fuse No. 11	Repair or replace (After clean)
Defective fuel cut off valve	Repair or replace fuel cut off valve
Defective timer	Repair or replace Timer
Defective fuel cut off relay or disconnection in wiring harness or poor contact between CR-50 (4) and fuse NO.3	Repair or replace fuel cut off relay or repair or replace (After clean)
Defective magnet of start motor	Repair or replace start motor
Defective safety relay	Repair or replace safety relay
Defective safety relay	Repair or replace safety relay
Disconnection in wiring harness or poor contact between CN-166 (1)and CS-2(1)	Repair or replace (After clean)

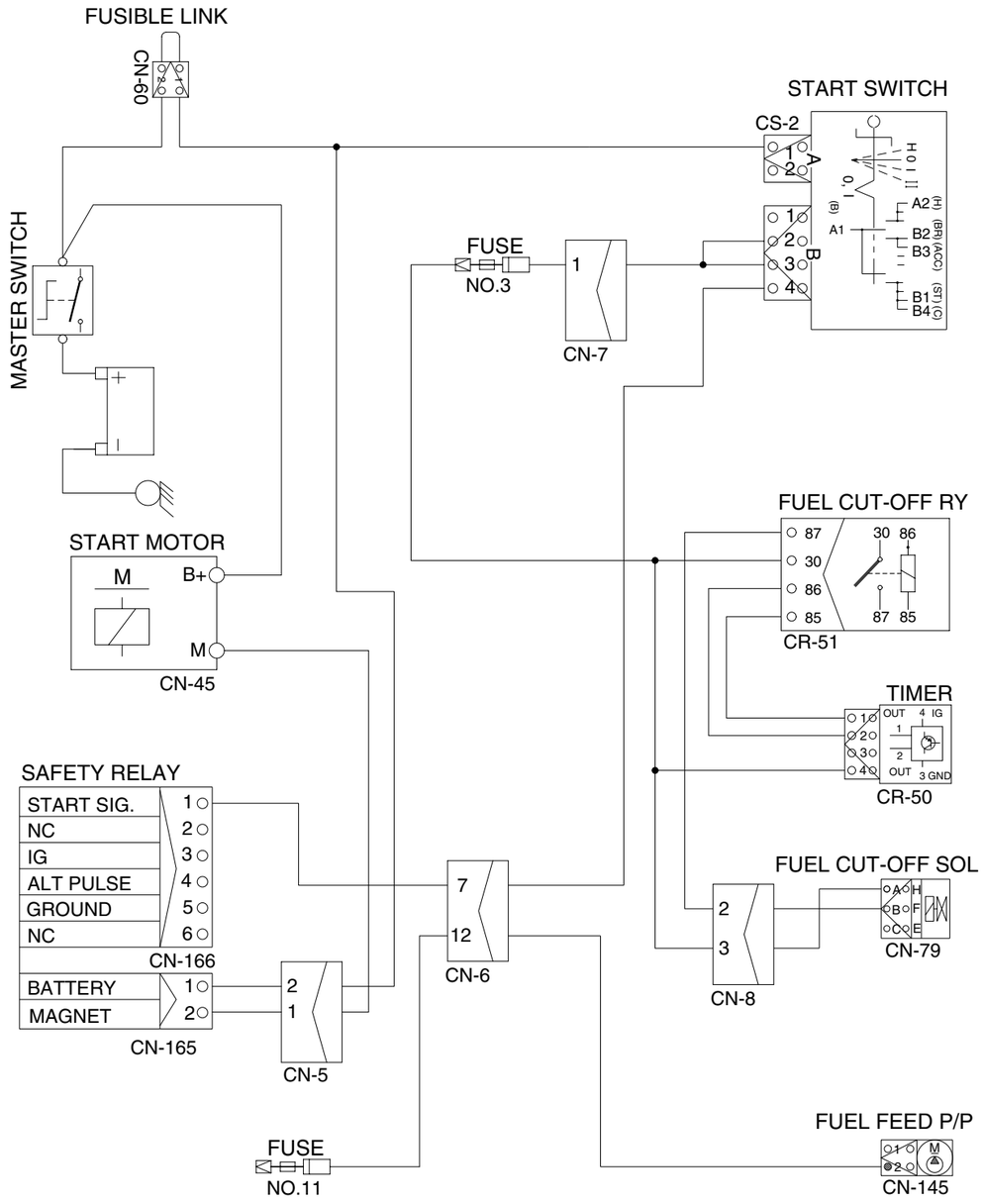

R35Z75TS22

14. WHEN STARTING SWITCH ON DOES NOT OPERATE

- Before disconnecting the connector, always turn the starting switch OFF.
- Before carrying out below procedure, check all the related connectors are properly inserted and master switch ON.
- After checking, insert the disconnected connectors again immediately unless otherwise specified.

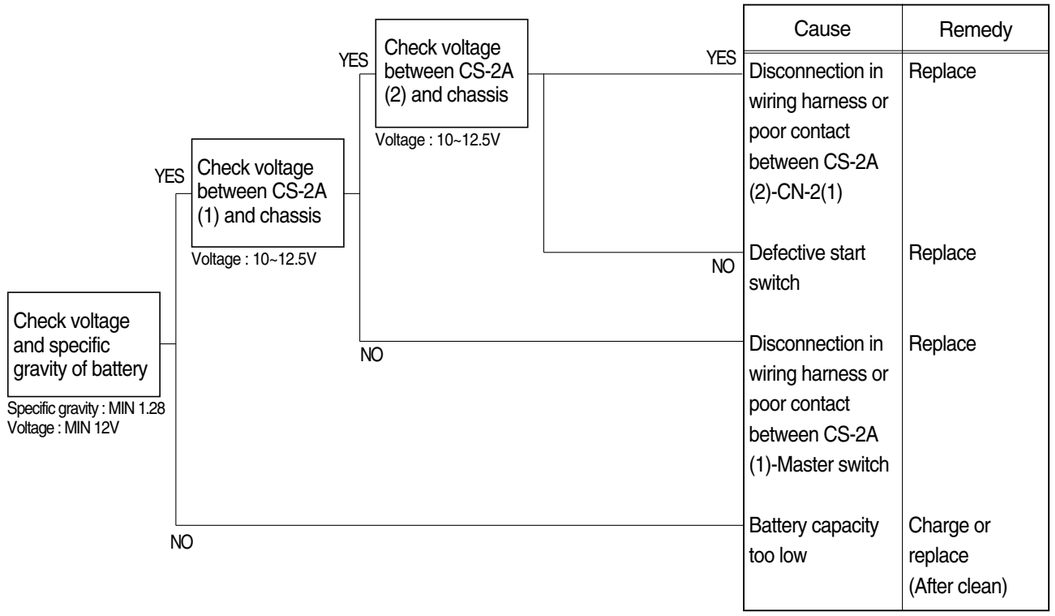

Cause	Remedy
Disconnection in wiring harness or poor contact between CS-2A (2)-CN-2(1)	Replace
Defective start switch	Replace
Disconnection in wiring harness or poor contact between CS-2A (1)-Master switch	Replace
Battery capacity too low	Charge or replace (After clean)

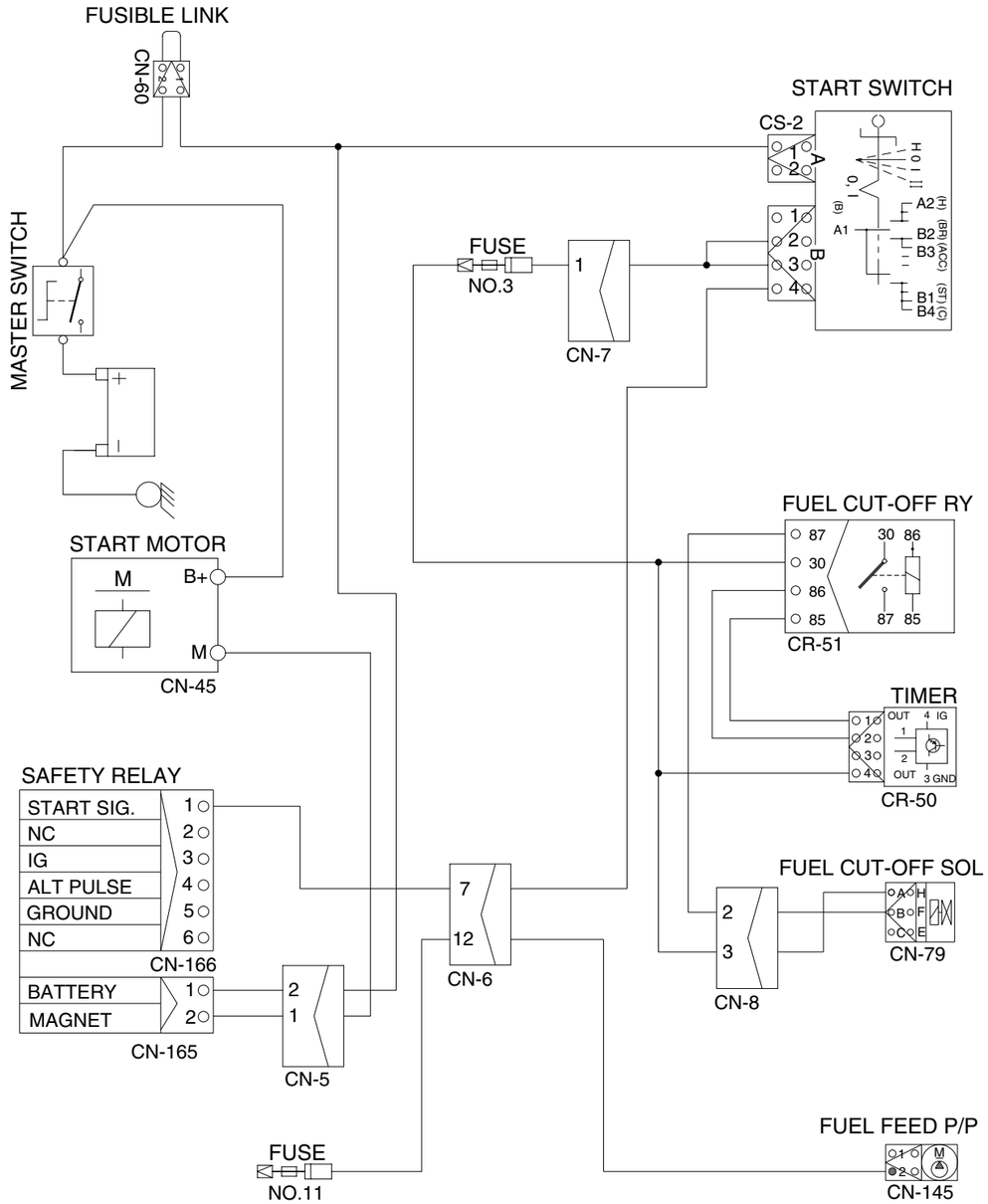

R35Z75TS22

SECTION 6 MAINTENANCE STANDARD

Group 1 Operational Performance Test 6-1
Group 2 Major Components 6-21
Group 3 Track and Work Equipment 6-31

GROUP 1 OPERATIONAL PERFORMANCE TEST

1. PURPOSE

Performance tests are used to check:

1) OPERATIONAL PERFORMANCE OF A NEW MACHINE

Whenever a new machine is delivered in parts and reassembled at a customer's site, it must be tested to confirm that the operational performance of the machine meets Hyundai spec.

2) OPERATIONAL PERFORMANCE OF A WORKING MACHINE

With the passage of time, the machine's operational performance deteriorates, so that the machine needs to be serviced periodically to restore it to its original performance level.

Before servicing the machine, conduct performance tests to check the extent of deterioration, and to decide what kind of service needs to be done(by referring to the "Service Limits" in this manual).

3) OPERATIONAL PERFORMANCE OF A REPAIRED MACHINE

After the machine is repaired or serviced, it must be tested to confirm that its operational performance was restored by the repair and/or service work done.

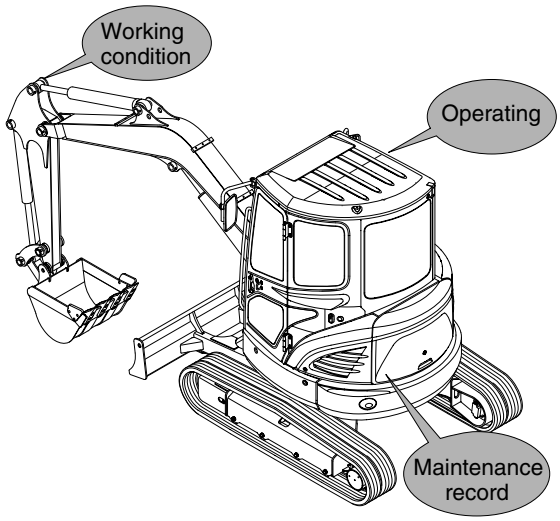

R35Z76MC01

2. TERMINOLOGY

1) STANDARD

Specifications applied to the brand-new machine, components and parts.

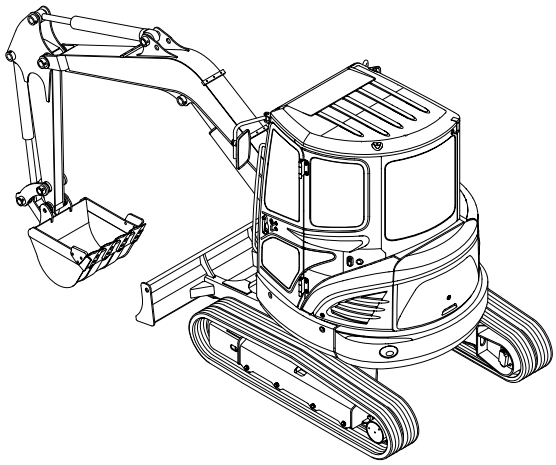

R35Z76MC02

2) SERVICE LIMIT

The lowest acceptable performance level. When the performance level of the machine falls below this level, the machine must be removed from work and repaired.
Necessary parts and components must be replaced.

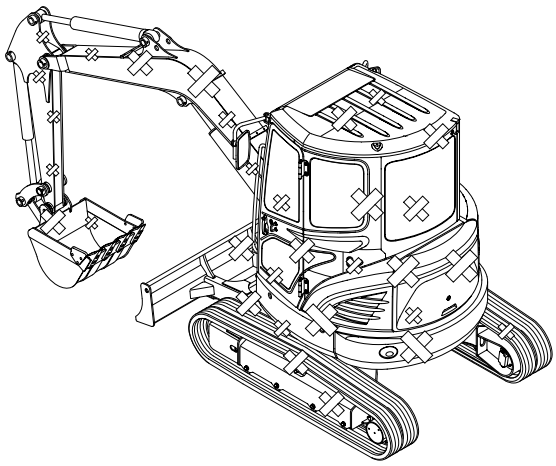

R35Z76MC03

3. OPERATION FOR PERFORMANCE TESTS

1) Observe the following rules in order to carry out performance tests accurately and safely.

(1) The machine

Repair any defects and damage found, such as oil or water leaks, loose bolts, cracks and so on, before starting to test.

(2) Test area

① Select a hard, flat surface.

② Secure enough space to allow the machine to run straight more than 20m, and to make a full swing with the front attachment extended.

③ If required, rope off the test area and provide signboards to keep unauthorized personnel away.

(3) Precautions

① Before starting to test, agree upon the signals to be employed for communication among coworkers. Once the test is started, be sure to communicate with each other using these signals, and to follow them without fail.

② Operate the machine carefully and always give first priority to safety.

③ While testing, always take care to avoid accidents due to landslides or contact with high voltage power lines. Always confirm that there is sufficient space for full swings.

④ Avoid polluting the machine and the ground with leaking oil. Use oil pans to catch escaping oil. Pay special attention to this when removing hydraulic pipings.

(4) Make precise measurements

① Accurately calibrate test instruments in advance to obtain correct data.

② Carry out tests under the exact test conditions prescribed for each test item.

③ Repeat the same test and confirm that the test data obtained can be procured repeatedly. Use mean values of measurements if necessary.

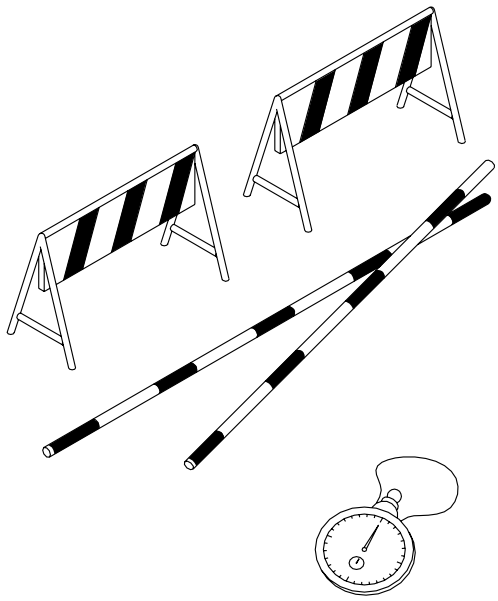

7-3 (140-7)

2) ENGINE SPEED

(1) Measure the engine speed at the maximum RPM.

※ The engine speed must meet standard RPM; if not, all other operational performance data will be unreliable. It is essential to perform this test first.

(2) Preparation and measurement

① Warm up the machine, until the engine coolant temperature reaches 50°C or more, and the hydraulic oil is 50±5°C.

② Set the accel lever at the maximum stroke.

③ Measure the engine RPM.

(3) Evaluation

The measured speeds should meet the following specifications.

Unit : t / rpm

Model	Engine speed	Standard	Remark
R35Z-7	Low idle	1100±100	
	High idle	2350±50	

3) TRAVEL SPEED

(1) Measure the time required for the excavator to travel a 20m test track.

(2) Preparation

① Adjust the tension of both tracks to be equal.

② Prepare a flat and solid test track 20m in length, with extra length of 3 to 5m on both ends for machine acceleration and deceleration.

③ Hold the bucket 0.3 to 0.5m above the ground with the arm and bucket rolled in.

④ Keep the hydraulic oil temperature at 50 ±5°C.

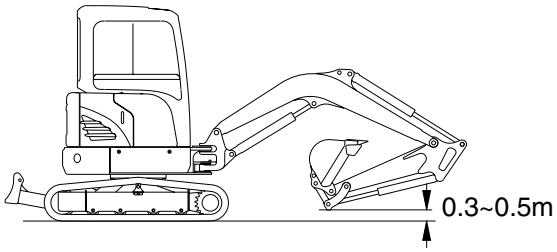

R35Z76MC04

(3) Measurement

① Measure both the low and high speeds of the machine.

② Before starting either the low or high speed tests, adjust the travel mode switch to the speed to be tested.

③ Start traveling the machine in the acceleration zone with the travel levers at full stroke.

④ Measure the time required to travel 20m.

⑤ After measuring the forward travel speed, turn the upperstructure 180° and measure the reverse travel speed.

⑥ Repeat steps ④ and ⑤ three times in each direction and calculate the average values.

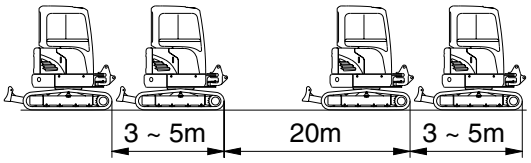

R35Z76MC05

(4) Evaluation

The average measured time should meet the following specifications.

Unit : Seconds / 20m

Model	Travel speed	Standard	Maximum allowable	Remarks
R35Z-7	1 Speed	28.8±2.0	36	
	2 Speed	16.0±1.0	20	

4) TRACK REVOLUTION SPEED

(1) Measure the track revolution cycle time with the track raised off ground.

(2) Preparation

① Adjust the tension of both side tracks to be equal.

② On the track to be measured, mark one shoe with chalk.

③ Swing the upperstructure 90° and lower the bucket to raise the track off ground. Keep the boom-arm angle between 90 to 110° as shown. Place blocks under machine frame.

④ Keep the hydraulic oil temperature at 50 ±5°C.

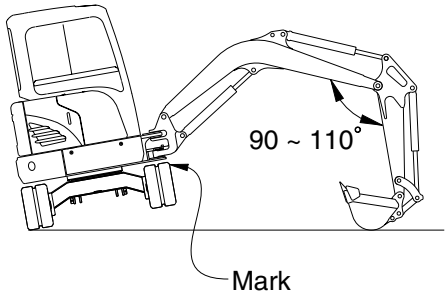

R35Z76MC06

(3) Measurement

① Select the following switch positions.

· Travel mode switch : 1 or 2 speed

② Operate the travel control lever of the raised track in full forward and reverse.

③ Rotate 1 turn, then measure time taken for next 3 revolutions.

④ Raise the other side of machine and repeat the procedure.

⑤ Repeat steps ③ and ④ three times and calculate the average values.

(4) Evaluation

The revolution cycle time of each track should meet the following specifications.

Unit : Seconds / 3 revolutions

Model	Travel speed	Standard	Maximum allowable
R35Z-7	1 Speed	19.3±2.0	24.0
	2 Speed	10.6±2.0	13.2

5) TRAVEL DEVIATION

(1) Measure the deviation by the tracks from a 20m straight line.

(2) Preparation

① Adjust the tension of both tracks to be equal.

② Provide a flat, solid test yard 20m in length, with extra length of 3 to 5m on both ends for machine acceleration and deceleration.

③ Hold the bucket 0.3 to 0.5m above the ground with the arm and bucket rolled in.

④ Keep the hydraulic oil temperature at 50 ±5°C.

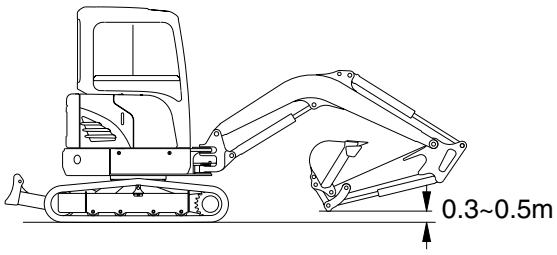

R35Z76MC04

(3) Measurement

① Measure the amount of mistracking at high and low travel speeds.

② Start traveling the machine in the acceleration zone with the travel levers at full stroke.

③ Measure the distance between a straight 20m line and the track made by the machine.(Dimension a)

④ After measuring the tracking in forward travel, turn the upperstructure 180° and measure that in reverse travel.

⑤ Repeat steps ③ and ④ three times and calculate the average values.

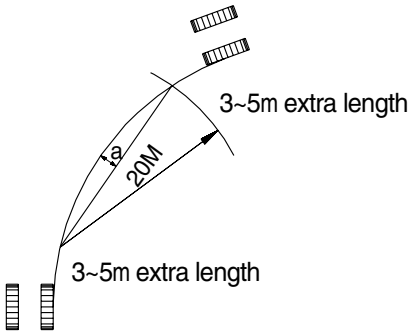

7-7(2) 140-7

(4) Evaluation

Mistrack should be within the following specifications.

Unit : mm / 20m

Model	Standard	Maximum allowable	Remarks
R35Z-7	200 below	240	

6) SWING SPEED

(1) Measure the time required to swing three complete turns.

(2) Preparation

① Check the lubrication of the swing gear and swing bearing.

② Place the machine on flat, solid ground with ample space for swinging. Do not conduct this test on slopes.

③ With the arm rolled out and bucket rolled in, hold the bucket so that the height of the bucket pin is the same as the boom foot pin. The bucket must be empty.

④ Keep the hydraulic oil temperature at 50 ±5°C.

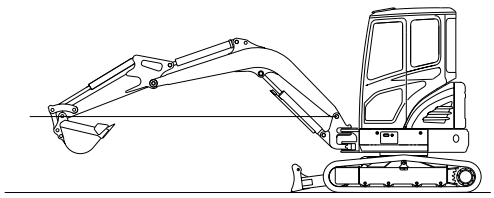

R35Z76MC07

(3) Measurement

① Operate swing control lever fully.

② Swing 1 turn and measure time taken to swing next 2 revolutions.

③ Repeat steps ① and ② three time and calculate the average values.

(4) Evaluation

The time required for 2 swings should meet the following specifications.

Unit : Seconds / 2 revolutions

Model	Standard	Maximum allowable	Remark
R35Z-7	12.6±1.0	15.8	

7) SWING FUNCTION DRIFT CHECK

(1) Measure the swing drift on the bearing outer circumference when stopping after a 360° full speed swing.

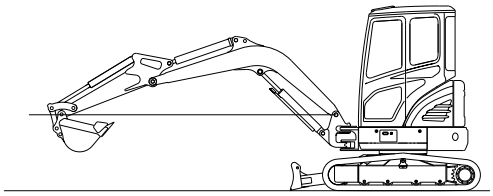

R35Z76MC07

(2) Preparation

① Check the lubrication of the swing gear and swing bearing.

② Place the machine on flat, solid ground with ample space for swinging. Do not conduct this test on slopes.

③ With the arm rolled out and bucket rolled in, hold the bucket so that the height of the bucket pin is the same as the boom foot pin. The bucket must be empty.

④ Make two chalk marks: one on the swing bearing and one directly below it on the track frame.

⑤ Swing the upperstructure 360°.

⑥ Keep the hydraulic oil temperature at 50 ±5°C.

(3) Measurement

① Operate the swing control lever fully and return it to the neutral position when the mark on the upperstructure aligns with that on track frame after swinging 360°

② Measure the distance between the two marks.

③ Align the marks again, swing 360°, then test the opposite direction.

④ Repeat steps ② and ③ three times each and calculate the average values.

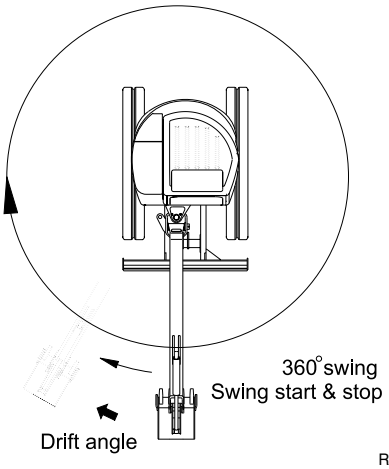

R35Z76MC08

(4) Evaluation

The measured drift angle should be within the following specifications.

Unit : Degree

Model	Standard	Maximum allowable	Remarks
R35Z-7	40 below	50	

8) SWING BEARING PLAY

(1) Measure the swing bearing play using a dial gauge to check the wear of bearing races and balls.

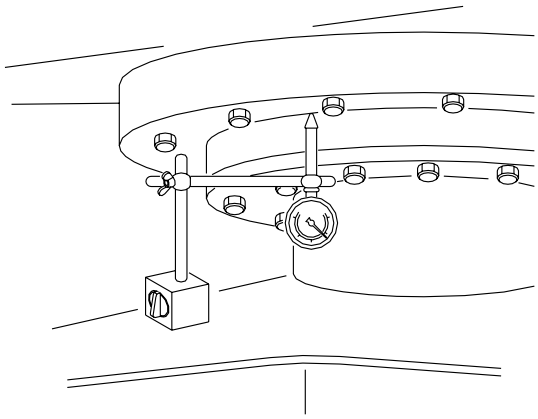

7-10(1) 140-7

(2) Preparation

① Check swing bearing mounting cap screws for loosening.

② Check the lubrication of the swing bearing. Confirm that bearing rotation is smooth and without noise.

③ Install a dial gauge on the track frame as shown, using a magnetic base.

④ Position the upperstructure so that the boom aligns with the tracks facing towards the front idlers.

⑤ Position the dial gauge so that its needle point comes into contact with the bottom face of the bearing outer race.

⑥ Bucket should be empty.

(3) Measurement

① With the arm rolled out and bucket rolled in, hold the bottom face of the bucket to the same height of the boom foot pin.
Record the dial gauge reading(h1).

② Lower the bucket to the ground and use it to raise the front idler 50cm.
Record the dial gauge reading(h2).

③ Calculate bearing play(H) from this data(h1 and h2) as follows.
H=h2-h1

Measurement : h1

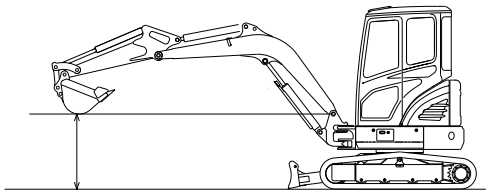

R35Z76MC09

Measurement : h2

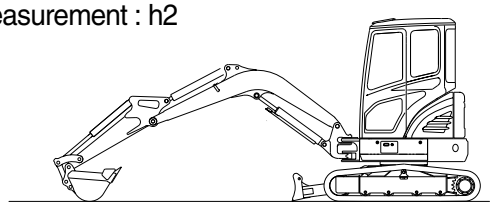

R35Z76MC10

(4) Evaluation

The measured drift should be within the following specifications.

Unit : mm

Model	Standard	Maximum allowable	Remarks
R35Z-7	0.5 ~ 1.2	2.4	

9) HYDRAULIC CYLINDER CYCLE TIME

(1) Measure the cycle time of the boom, standard arm, and standard bucket cylinders.

(2) Preparation

① To measure the cycle time of the boom cylinders:
With the arm rolled out and the empty bucket rolled out, lower the bucket to the ground, as shown.

② To measure the cycle time of the arm cylinder.
With the empty bucket rolled in, position the arm so that it is vertical to the ground. Lower the boom until the bucket is 0.5m above the ground.

③ To measure the cycle time of the bucket cylinder.
The empty bucket should be positioned at midstroke between roll-in and roll-out, so that the sideplate edges are vertical to the ground.

④ Keep the hydraulic oil temperature at 50±5°C.

(3) Measurement

① To measure cylinder cycle times.

- Boom cylinders.
  Measure the time it takes to raise the boom, and the time it takes to lower the boom. To do so, position the boom at one stroke end then move the control lever to the other stroke end as quickly as possible.
- Arm cylinder.
  Measure the time it takes to roll in the arm, and the time it takes to roll out the arm. To do so, position the bucket at one stroke end, then move the control lever to the other stroke end as quickly as possible.

Boom cylinder

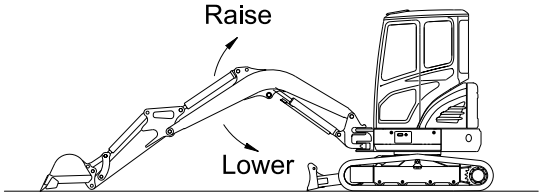

Arm cylinder

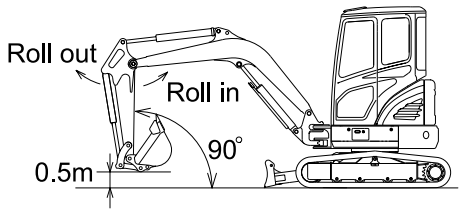

Bucket cylinder

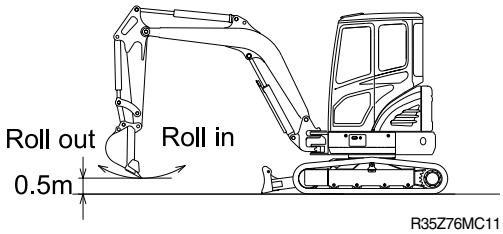

R35Z76MC11

- Bucket cylinders
  Measure the time it takes to roll in the bucket, and the time it takes to roll out the bucket. To do so, position the bucket at one stroke end, then move the control lever to the other stroke end as quickly as possible.
- Repeat each measurement 3 times and calculate the average values.

(4) Evaluation

The average measured time should meet the following specifications.

Unit : Seconds

Model	Function	Standard	Maximum allowable	Remarks
R35Z-7	Boom raise	2.4±0.4	3.0	
	Boom lower	2.1±0.4	2.7	
	Arm in	2.9±0.4	3.5	
	Arm out	2.3±0.4	2.9	
	Bucket load	3.2±0.4	3.9	
	Bucket dump	2.1±0.4	2.7	
	Boom swing(LH)	5.3±0.4	6.4	
	Boom swing(RH)	4.0±0.4	4.8	
	Dozer up(Raise)	1.3±0.3	1.6	
	Dozer down(Lower)	1.3±0.3	1.6	

10) DIG FUNCTION DRIFT CHECK

(1) Measure dig function drift, which can be caused by oil leakage in the control valve and boom, standard arm, and standard bucket cylinders, with the loaded bucket.
When testing the dig function drift just after cylinder replacement, slowly operate each cylinder to its stroke end to purge air.

(2) Preparation

① Load bucket fully. Instead of loading the bucket, weight(W) of the following specification can be used.

· $W=M^3 \times 1.5$

Where :

M^3 = Bucket heaped capacity(m^3)

1.5 = Soil specific gravity

② Position the arm cylinder with the rod 20 to 30㎜ extended from the fully retracted position.

③ Position the bucket cylinder with the rod 20 to 30mm retracted from the fully extended position.

④ With the arm rolled out and bucket rolled in, hold the bucket so that the height of the bucket pin is the same as the boom foot pin.

⑤ Keep the hydraulic oil temperature at 50 ±5°C.

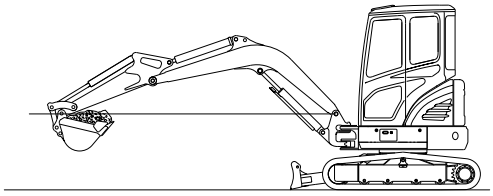

R35Z76MC12

(3) Measurement

① Stop the engine.

② Five minutes after the engine has been stopped, measure the changes in the positions of the boom, arm and bucket cylinders.

③ Repeat step ② three times and calculate the average values.

(4) The measured drift should be within the following specifications.

Unit : mm / 5min

Model	Drift to be measured	Standard	Maximum allowable	Remarks
R35Z-7	Boom cylinder	10 below	20	
	Arm cylinder	20 below	30	
	Bucket cylinder	20 below	30	

11) CONTROL LEVER OPERATING FORCE

(1) Use a spring scale to measure the maximum resistance of each control lever at the middle of the grip.

(2) Preparation

① Keep the hydraulic oil temperature at 50 ±5°C.

(3) Measurement

① Start the engine.

② Operate each boom, arm, bucket and swing lever at full stroke and measure the maximum operating force for each.

③ Lower the bucket to the ground to raise one track off the ground. Operate the travel lever at full stroke and measure the maximum operating force required. When finished, lower the track and then jack-up the other track.

④ Repeat steps ② and ③ three times and calculate the average values.

(4) Evaluation

The measured operating force should be within the following specifications.

Unit : kgf

Model	Kind of lever	Standard	Maximum allowable	Remarks
R35Z-7	Boom lever	1.4 or below	1.9	
	Arm lever	1.4 or below	1.9	
	Bucket lever	1.4 or below	1.9	
	Swing lever	1.4 or below	1.9	
	Travel lever	2.0 or below	2.5	

12) CONTROL LEVER STROKE

(1) Measure each lever stroke at the lever top using a ruler.

※ When the lever has play, take a half of this value and add it to the measured stroke.

(2) Preparation

Keep the hydraulic oil temperature at 50±5°C.

(3) Measurement

① Stop the engine.

② Measure each lever stroke at the lever top from neutral to the stroke end using a ruler.

③ Repeat step ② three times and calculate the average values.

(4) Evaluation

The measured drift should be within the following specifications.

Unit : mm

Model	Kind of lever	Standard	Maximum allowable	Remarks
R35Z-7	Boom lever	87±10	109	
	Arm lever	87±10	109	
	Bucket lever	87±10	109	
	Swing lever	87±10	109	
	Travel lever	86±10	105	

13) PILOT PRIMARY PRESSURE

(1) Preparation

① Stop the engine.

② Push the pressure release button to bleed air.

③ Loosen the cap of screw coupling at the fitting near pilot filter and connect pressure gauge.

④ Start the engine and check for oil leakage from the port.

⑤ Keep the hydraulic oil temperature at 50 ±5°C.

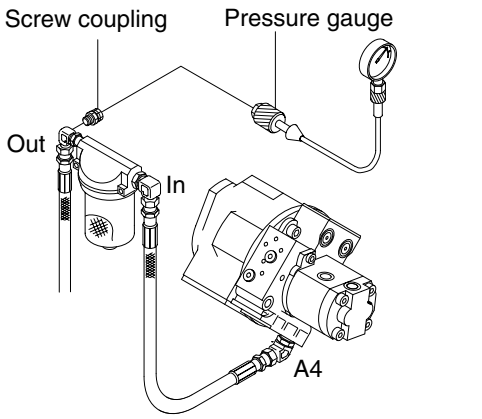

(2) Measurement

① Measure the primary pilot pressure in the H mode.

(3) Evaluation

The average measured pressure should meet the following specifications:

Unit : kgf / cm^2

Model	Standard	Remarks
R35Z-7	30±5	

14) FOR TRAVEL SPEED SELECTING PRESSURE

(1) Preparation

① Stop the engine.

② Push the pressure release button to bleed air.

③ To measure the speed selecting pressure: Install a connector and pressure gauge assembly to turning joint P2 port as shown.

④ Start the engine and check for on leakage from the adapter.

⑤ Keep the hydraulic oil temperature at 50 ±5°C.

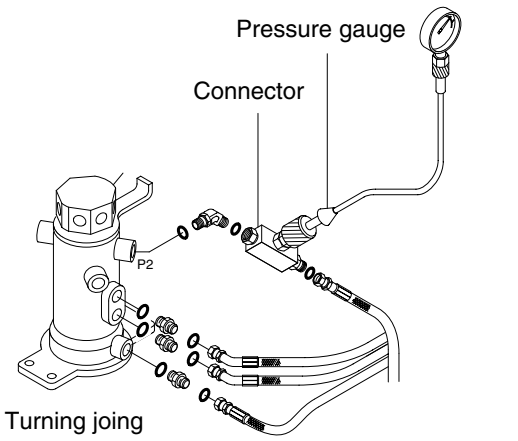

R35Z76MC15

(2) Measurement

① Select the following switch positions.
Travel mode switch : 1 speed
2 speed

② Measure the travel speed selecting pressure in the Hi or Lo mode.

③ Lower the bucket to the ground to raise the track off the ground. Operate the travel lever at full stroke and measure the fast speed pressure.

④ Repeat steps ② and ③ three times and calculate the average values.

(3) Evaluation

The average measured pressure should be within the following specifications.

Unit : kgf / cm²

Model	Travel speed mode	Standard	Maximum allowable	Remarks
R35Z-7	1 Speed	0	-	
	2 Speed	30±5	-	

15) SWING PARKING BRAKE RELEASING PRESSURE

(1) Preparation

① Stop the engine.

② Push the pressure release button to bleed air.

③ Install a connector and pressure gauge assembly to swing motor PB port, as shown.

④ Start the engine and check for oil leakage from the adapter.

⑤ Keep the hydraulic oil temperature at 50 ±5°C.

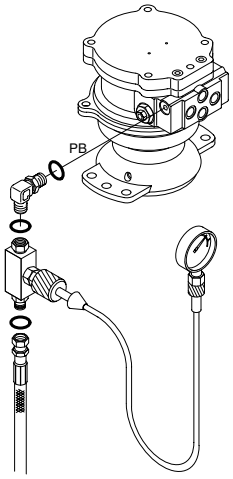

R35Z76MC16

(2) Measurement

① Operate the swing function or arm roll in function and measure the swing brake control pressure with the brake disengaged. Release the control lever to return to neutral and measure the control pressure when the brake is applied.

② Repeat three times and calculate the average values.

(3) Evaluation

The average measured pressure should be within the following specifications.

Unit : kgf / cm^2

Model	Description	Standard	Remarks
R35Z-7	Brake disengaged	30±5	
	Brake applied	0	

16) MAIN PUMP DELIVERY PRESSURE

(1) Preparation

① Stop the engine.

② Push the pressure release button to bleed air.

③ To measure the main pump pressure. Loosen the cap of screw coupling and connect pressure gauge to the main pump gauge port(G1, G2, G3) as shown.

④ Start the engine and check for oil leakage from the port.

⑤ Keep the hydraulic oil temperature at 50 ±5°C.

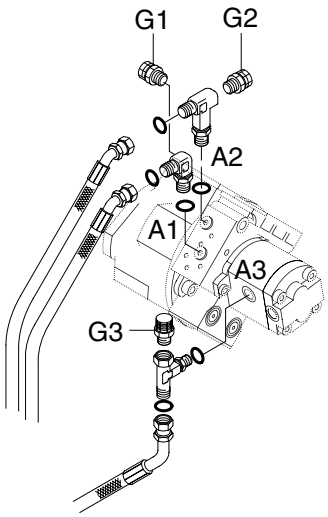

R35Z76MC17

(2) Measurement

① Measure the main pump delivery pressure at high idle.

(3) Evaluation

The average measured pressure should meet the following specifications.

Unit : kgf / cm²

Model	Engine speed	Standard	Allowable limits	Remarks
R35Z-7	High ilde	20±5	-	

17) SYSTEM PRESSURE REGULATOR RELIEF SETTING

(1) Preparation

① Stop the engine.

② Push the pressure release button to bleed air.

③ To measure the system relief pressure. Loosen the cap of screw coupling and connect pressure gauge to the main pump gauge port(G1, G2, G3) as shown.

④ Start the engine and check for oil leakage from the port.

⑤ Keep the hydraulic oil temperature at 50 ±5°C.

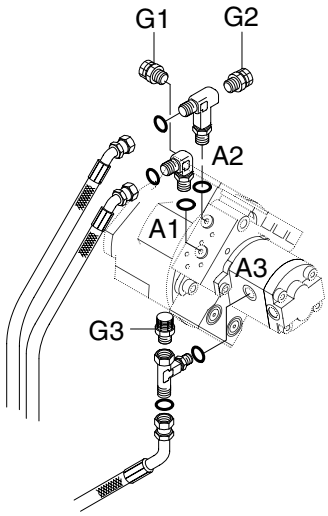

R35Z76MC17

(2) Measurement

① Slowly operate each control lever of boom, arm and bucket functions at full stroke over relief and measure the pressure.

② In the swing function, place bucket against an immovable object and measure the relief pressure.

③ In the travel function, lock undercarriage with an immovable object and measure the relief pressure.

(3) Evaluation

The average measured pressure should be within the following specifications.

Unit : kgf / cm²

Model	Function to be tested	Standard
R35Z-7	Boom, Arm, Bucket	230±10
	Travel	230±10
	Swing	230±10

GROUP 2 MAJOR COMPONENT

1. MAIN PUMP

Before inspection, wash the parts well and dry them completely.

Inspect the principal parts with care and replace them with new parts when any abnormal wear exceeding the allowable limit or damage considered harmful is found.

Replace the seal also when any remarkable deformation and damage are found.

1) PISTON ASSEMBLY AND CYLINDER BLOCK

(1) Check the appearance visually.
No damage, scouring, abnormal wear (Particularly, in the slide portion) should be found.

(2) Check the clearance between the piston outside dia and cylinder block inside dia.
D-d $\leq$ 0.050mm

2) PISTON SHOE AND PISTON

(1) Check the axial play of the piston and piston shoe.
$\varepsilon \leq$ 0.2mm

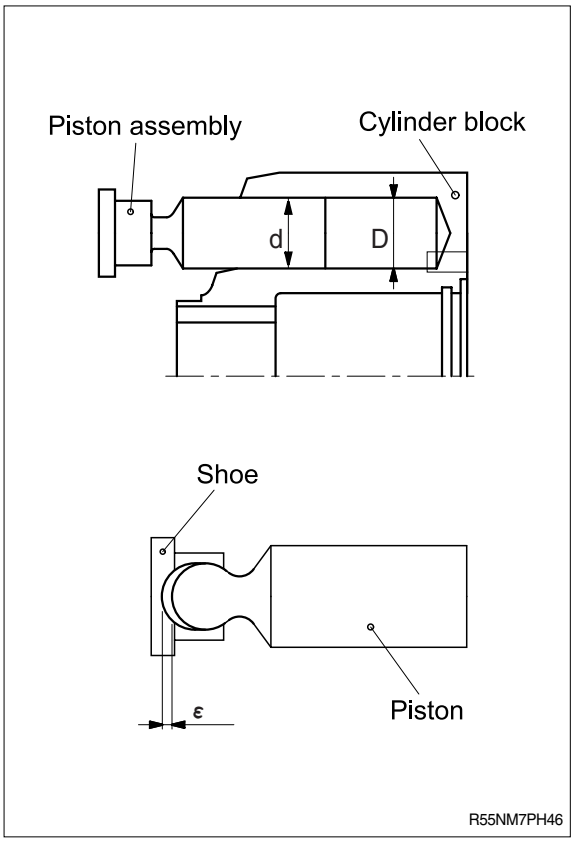

3) SHAFT

(1) Check the wear amount of the oil seal mounting section.
Wear mount $\leq$ 0.025mm

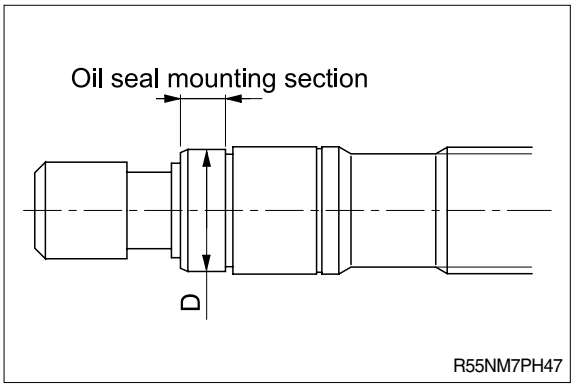

4) CONTROL PLATE

(1) Check the slide surface for any damage.
When the damage is large, replace the plate with new one.

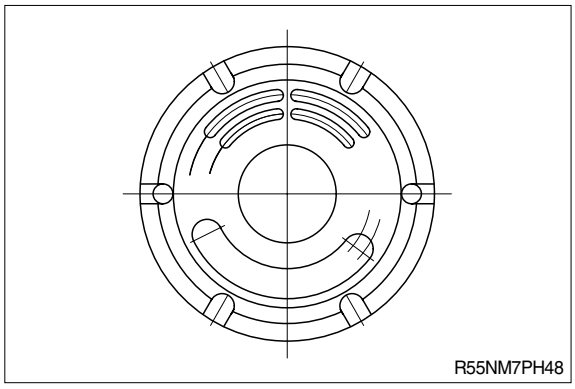

5) GUIDE AND RETAINER

(1) Check for scouring or stepped wear.
If this can not be corrected, replace the guide and retainer with new full-set.

(2) Fine scouring or damage can be corrected with lapping.
Carry out thorough washing after lapping.

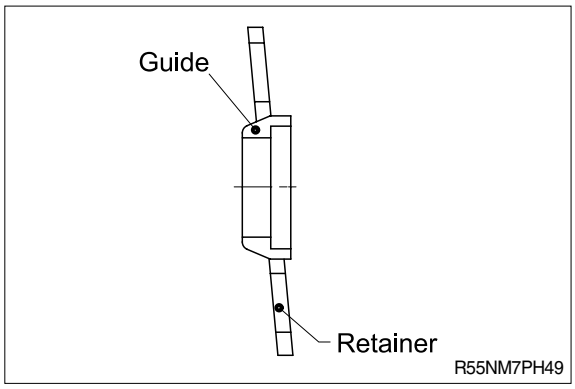

2. MAIN CONTROL VALVE

Part name	Inspection item	Criteria & measure
Block	· Existence of scratch, rusting or corrosion.	· In case of damage in following section, replace part. - Sliding sections of casing fore and spool, especially land sections applied with holded pressure. - Seal pocket section where spool is inserted. - Seal section of port where O-ring contacts. - Seal section of each relief valve for main, travel, and port. - Other damages that may damage normal functions.
Spool	· Existence of scratch, gnawing, rusting or corrosion. · O-ring seal sections at both ends. · Insert spool in casing hole, rotate and reciprocate it.	· Replacement when its outside sliding section has scratch(Especially on seals-contacting section). · Replacement when its sliding section has scratch. · Correction or replacement when O-ring is damaged or when spool does not move smoothly.
Poppet	· Damage of poppet or spring · Insert poppet into casing and function it.	· Correction or replacement when sealing is incomplete. · Normal when it can function lightly without being caught.
Around spring	· Rusting, corrosion, deformation or breaking of spring, spring seat, plug or cover.	· Replacement for significant damage.
Around seal for spool	· External oil leakage. · Rusting, corrosion or deformation of seal plate.	· Correction or replacement. · Correction or replacement.
Main relief valve & port relief valve	· External rusting or damage. · Contacting face of valve seat. · Contacting face of poppet. · Abnormal spring. · O-rings, back up rings and seals.	· Replacement. · Replacement when damaged. · Replacement when damaged. · Replacement. · 100% replacement in general.

3. SWING MOTOR

Replace the parts referring to the following table.

1) MOTOR

Part name	Service criteria
Piston assembly (2-13)	1. The sliding parts are scratched deeply or the sliding surface has become rough. 2. The clearance between the piston and the cylinder block bore is too large. Upper limit of diameter clearance : 0.04mm. 3. The piston shoe ball is loose excessively. Max. clearance (movement) : 0.4 mm
Thrust plate (2-4) Retainer holder (2-11) Retainer plate (2-12) Brake piston (2-15) Valve plate (2-24)	1. The sliding parts are scratched deeply or the sliding surface has become rough.
Cylinder block (2-5)	1. The sliding parts are scratched deeply or the sliding surface has become rough. 2. The meshing surface is worn excessively or cut.
Disc (2-14)	1. The disc (friction material) is scratched deeply or peeled. 2. The meshing surface is worn excessively or cut.
Ball bearings (2-2) (2-22)	1. The rolling contact surface has been flaked or peeled. 2. The rolling contact surface is dented. 3. Bearing rotation produces abnormality (abnormal noise, irregular rotation).
Spring (2-7)	1. The spring is broken or deformed excessively.
O-rings (2-16), (2-17), (2-20), (2-26), (2-42), (2-44), (2-46)	1. Damage that is likely to cause oil leak, damage that is likely to deteriorate the sealing or premanent deformation is noticed.

2) REDUCTION GEAR

Part name	Service criteria
Pinion shaft (1-2)	1. The gear tooth surface is damaged excessively, worn of flaked.
Plates (1-3), (1-8)	1. The plate is damaged or worn excessively.
Taper roller bearings (1-5), (1-7)	1. The roller or the race is damaged excessively, dented or flaked. 2. The rotation produces abnormal noise or is not smooth. ※ To replace the bearing, replace the body assembly.
Oil seal (1-6)	1. The lip is damaged, deformed or worn excessively. 2. The lip is hardened.
Housing (1-1) Holders (1-10), (1-18) Drive gear (1-24) Sun gear (1-17)	1. The gear tooth surface is damaged excessively, worn or flaked. ※ To replace the housing, replace the body assembly.
Inner races (1-12), (1-20)	1. The rolling contact surface of the needle bearings is damaged excessively or worn or flaked.
Needle bearings (1-13), (1-21)	1. The surface of the needle bearings is damaged excessively or worn or flaked.
Planetary gears (1-14), (1-22)	1. The gear tooth surface is excessively damaged, worn of flaked. 2. The rolling contact surface in contact with the needle bearing is excessively damaged, worn or flaked.
Thrust plates (1-15), (1-23)	1. The sliding surface is excessively damaged, worn or seized.

3) VALVE

Part name	Service criteria
Piston (2-38-14) Case (2-1)	1. The sliding surface is damaged deeply or rough. 2. The clearance between the piston and the case hole is large. Upper limit of diameter clearance : 0.04mm
Spring (2-40)	1. The spring is broken or deformed excessively.
Plugs (2-38-6), (2-41) Check valve (2-39) O-rings (2-38-8, 9, 10, 11), (2-42) Backup rings (2-38-12, 13)	1. Damage that is likely to cause oi leak, damage that is likely to deteriorate the sealing or permanent deformation is noticed.

4) OTHERS

Part name	Service criteria
Other plugs and O-rings	Damage that is likely to cause oil leak, damage that is likely to deteriorate the sealing or permanent deformation is noticed.

4. TRAVEL MOTOR

Wash all parts disassembly in treated oil and dry in the compressed air.

Perform maintenance including replacement or corrections in accordance with the following criterion.

No.	Parts Name	Check Points	Criterion (Recommended standards for replacement)	Measures
1	Floating seal (1-2)	Sliding surface	No remarkable flaws, wear, or seizure are noted.	Replacement
2	Angular bearing (1-3)	Rolling surface	No remarkable flaws, wear, or flaking are noted on balls and race.	Replacement
3	Housing (1-6)	Gear tooth surface	No remarkable flaws, wear, or flaking are noted on gear tooth surface. (Note 1)	Replacement
4	Planetary gear A (1-18), B (1-9)	Gear tooth surface and rolling surface of inner side	No remarkable flaws, wear, or flaking are noted as same as No.3	Replacement
5	Needle bearing (1-10), (1-19)	Rolling surface of needle bearing	No remarkable flaws, wear, or flaking are noted.	Replacement
6	Inner race (1-11), (1-20)	Rolling surface of inner race	No remarkable flaws, wear, or flaking are noted.	Replacement
7	Thrust washer (1-12)	Sliding surface	No remarkable flaws, wear, or seizure are noted.	Replacement
8	Thrust plate (1-13), (1-23)	Sliding surface	No remarkable flaws, wear, or seizure are noted.	Replacement
9	Sun gear (1-15)	Gear tooth surface	Same as No. 3	Replacement
10	Holder (1-17)	Sliding surface of planetary gear A	No remarkable flaws, wear, or seizure are noted.	Replace planetary A and holder.
11	Drive gear (1-22)	Gear tooth surface	Same as No. 3	Replacement
13	O-ring (1-25), (28), (29), (39), (31-5), (44), (50-6), (50-7)	Surface and hardness	No flaws and deflection are noted. Not hardened.	Recommend that seals be replaced with new ones at time of reassembly, since rubber materials normally deteriorate with age.
14	Shaft (2)	Sliding surface of oil seal	No remarkable flaws, wear.	Replacement
15	Ball bearing (3), (27)	Same as No. 2.	Same as No. 2.	Replacement
16	Oil seal (4)	Surface and hardness of seal lip	No flaw, wear or deflection are noted. Not hardened.	Replacement

Note 1 : Pitching in this instance refers to a case where pitching occurs in more than 10% of engagement area per tooth surface.

No.	Parts Name	Check Points	Criterion (Recommended standards for replacement)	Measures
17	Swash plate (5)	Sliding surface and roughness between piston sub assembly and swash plate	No remarkable flaws (over 0.02 [mm] in thickness), wear, or seizure are noted. 0.4a (0.8a)	Correct lapping (#1000) if sliding surface is rough. Replace if proper correction cannot be made.
18	Cylinder block (7)	Clearance between piston sub assembly and cylinder block.	0.02[mm] (0.04[mm])	Replace both cylinder block and piston sub assembly concurrently. Correct lapping (#1000) if sliding surface is rough. Replace both cylinder block and piston sub assembly with new, if sliding surfaces cannot be properly corrected.
		Sliding surface and roughness between valve plate and cylinder block.	No remarkable flaws (over 0.02[mm] in thickness), wear, or seizure are noted. 0.4a (0.8a)	
19	Spring (9), (20), (37) (42), (31-3), (50-3)	Breakage or deflection is big.	-	Replacement
20	Piston sub assembly (15)	Clearance between piston sub assembly and cylinder block.	Same as No. 18.	Same as No. 18.
		Sliding surface and roughness between piston sub assembly and swash plate.	Same as No. 17. 0.2a (0.8a)	Same as No. 17.
		Loosen between piston and shoe is big.	0.15[mm] (0.4[mm])	Replacement
21	Piston (19)	Clearance between piston sub assembly and flange holder.	Same as No. 18.	Same as No. 18.
		Sliding surface and roughness between piston sub assembly and swash plate.	Same as No. 17.	Same as No. 17.
22	Valve plate (25)	Sliding surface and roughness between valve plate cylinder block.	Same as No. 18.	Same as. No. 18.
		Thickness; 5 [mm]	4.8 [mm]	Replacement
23	Base plate (30)	Sliding surface between plunger and base plate.	No remarkable flaws, wear, or seizure are noted.	Replace both base plate and plunger.
		Sliding surface between spool and base plate.	No remarkable flaws, wear, or seizure are noted.	Replace both base plate and spool.

No.	Parts Name	Check Points	Criterion (Recommended standards for replacement)	Measures
24	Plunger (31-1)	Sliding surface between plunger and base plate.	No remarkable flaws, wear, or seizure are noted.	Replace both base plate and plunger.
		Sliding surface between plunger and check valve.	No remarkable flaws, wear, or seizure are noted.	Replace both check valve and plunger.
25	Check valve (31-2)	Sliding surface between plunger and check valve.	No remarkable flaws, wear, or seizure are noted.	Replace plunger assy.
		Seat surface between plunger and check valve.	No remarkable flaws, wear, or seizure are noted. Entire surface of seats are rubbing.	Replace both check valve and plunger.
26	Spool (41)	Sliding surface between plunger and check valve.	Same as No. 23	Same as No. 23
27	Valve body (50-1)	Sliding surface between spool and valve body.	No remarkable flaws, wear, or seizure are noted.	Replace valve assy.
28	Without parking brake check valve (50-2)	Sliding surface between plunger and check valve.	No remarkable flaws, wear, or seizure are noted.	Replace valve assy.
	With parking brake spool (50-2)	Sliding surface between spool and valve body.	No remarkable flaws, wear, or seizure are noted.	Replace valve assy.

5. TURNING JOINT

Part name		Maintenance standards	Remedy
Body, Stem	Sliding surface with sealing sections.	Plating worn or peeled due to seizure or contamination.	Replace
	Sliding surface between body and stem other than sealing section.	· Worn abnormality or damaged more than 0.1mm (0.0039in) in depth due to seizure contamination.	Replace
		· Damaged more than 0.1mm(0.0039in) in depth.	Smooth with oilstone.
	Sliding surface with thrust plate.	· Worn more than 0.5mm(0.02in) or abnormality.	Replace
		· Worn less than 0.5mm(0.02in).	Smooth
		· Damage due to seizure or contamination remediable within wear limit (0.5mm)(0.02in).	Smooth
Cover	Sliding surface with thrust plate.	· Worn more than 0.5mm(0.02in) or abnormality.	Replace
		· Worn less than 0.5mm(0.02in).	Smooth
		· Damage due to seizure or contamination remediable within wear limit (0.5mm)(0.02in).	Replace
Seal set	-	· Extruded excessively from seal groove square ring. 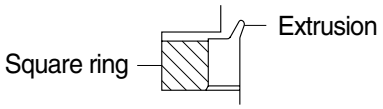	Replace
	-	· Slipper ring 1.5mm(0.059in) narrower than seal groove, or narrower than back ring. 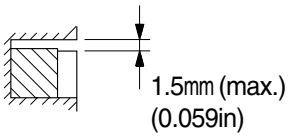	Replace
	-	· Worn more than 0.5mm(0.02in) ~ 1.5mm(MAX.) (0.059in) 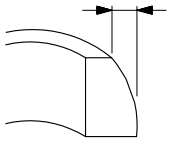	Replace

6. CYLINDER

Part name	Inspecting section	Inspection item	Remedy
Piston rod	· Neck of rod pin	· Presence of crack	· Replace
	· Weld on rod hub	· Presence of crack	· Replace
	· Stepped part to which piston is attached.	· Presence of crack	· Replace
	· Threads	· Presence of crack	· Recondition or replace
	· Plated surface	· Plating is not worn off to base metal. · Rust is not present on plating. · Scratches are not present.	· Replace or replate · Replace or replate · Recondition, replate or replace
	· Rod	· Wear of O.D.	· Recondition, replate or replace
	· Bushing at mounting part	· Wear of I.D.	· Replace
Cylinder tube	· Weld on bottom	· Presence of crack	· Replace
	· Weld on head	· Presence of crack	· Replace
	· Weld on hub	· Presence of crack	· Replace
	· Tube interior	· Presence of faults	· Replace if oil leak is seen
	· Bushing at mounting part	· Wear on inner surface	· Replace
Gland	· Bushing	· Flaw on inner surface	· Replace if flaw is deeper than coating

1. TRACK SHOE

1) STEEL SHOE SPEC

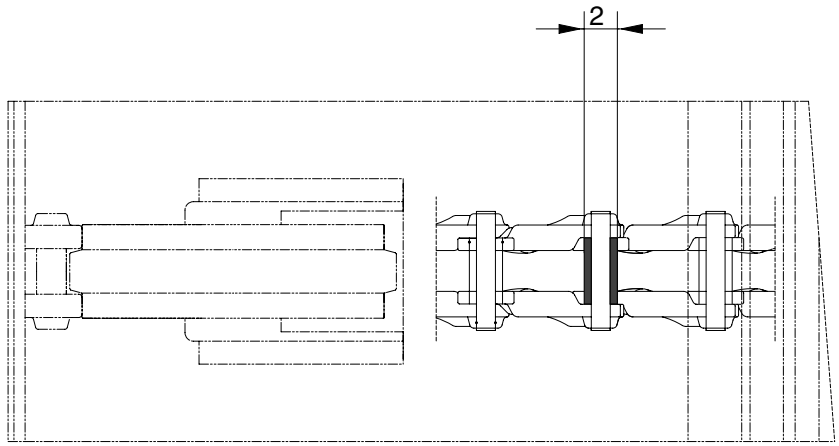

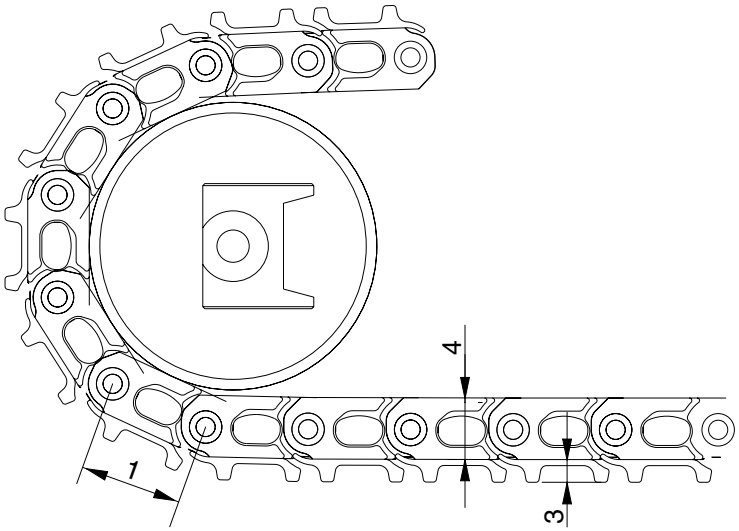

R35Z76MC18

Unit : mm

No	Check item	Criteria		Remedy
		Standard size	Repair limit	
1	Link pitch	101.6	105.0	Replace bushing and pin and link assembly
2	Outside diameter of bushing	32.17	28.77	
3	Height of grouser	16.5	12.5	Lug welding, rebuild or replace
4	Height of link	61	56	

2) RUBBER SHOE SPEC

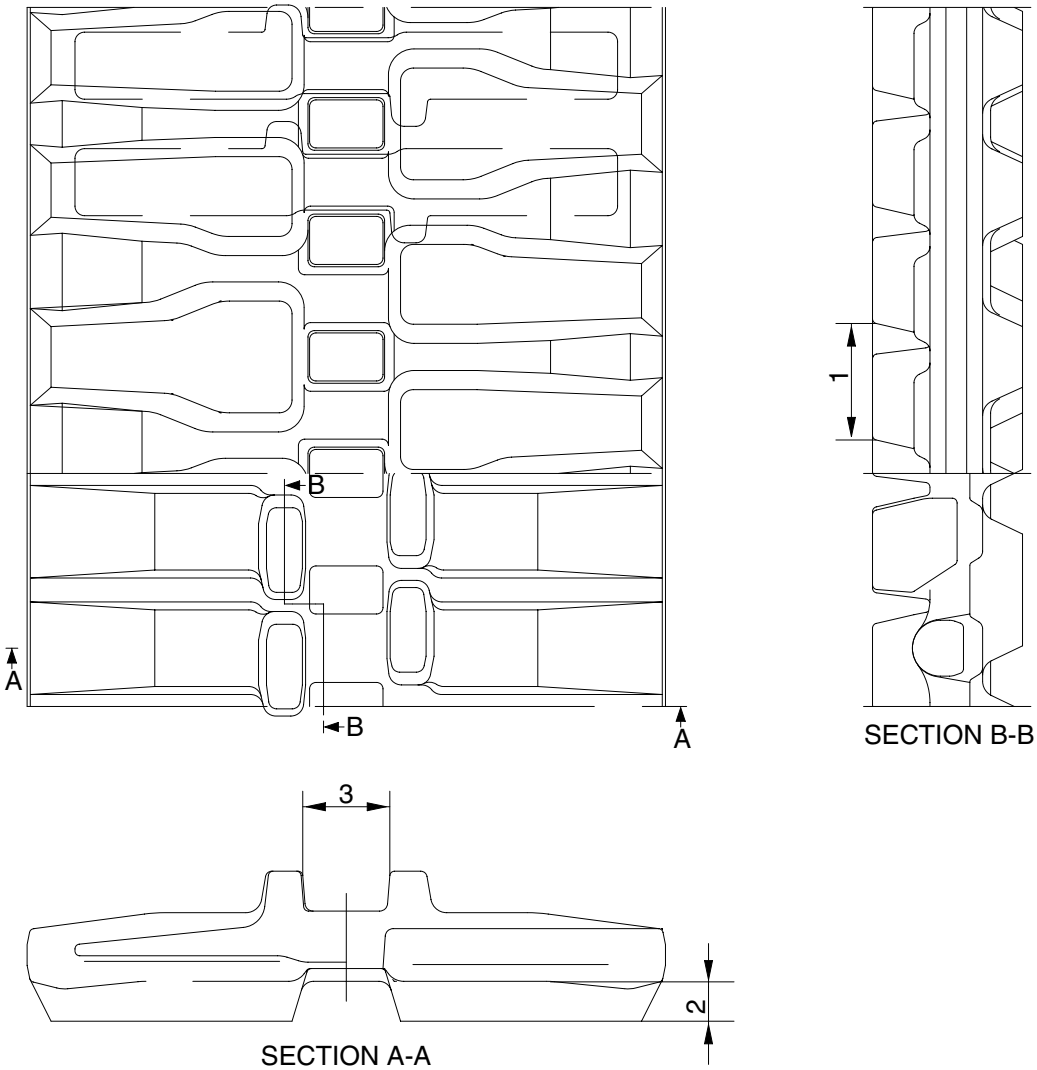

R5576MC17

Unit : mm

No	Check item	Criteria		Remedy
		Standard size	Repair limit	
1	Link pitch	52.5	54.5	Replace
2	Height of grouser	23.5	5	
3	Width of link	34	46	

2. IDLER

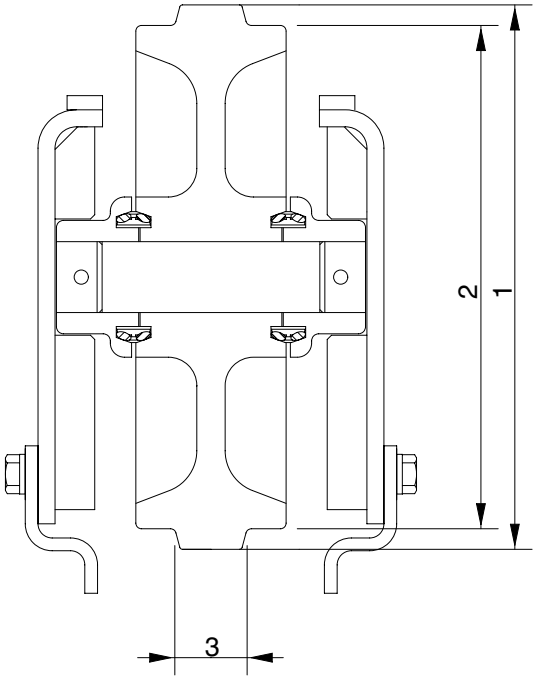

R5576MC18

Unit : mm

No	Check item		Criteria		Remedy
			Standard size	Repair limit	
1	Outside diameter of flange	Steel	293	-	Rebuild or replace
		Rubber	327	-	
2	Outside diameter of thread	Steel	269	263	
		Rubber	285	279	
3	Width of flange		26.2	20.2	

3. TRACK/CARRIER ROLLER

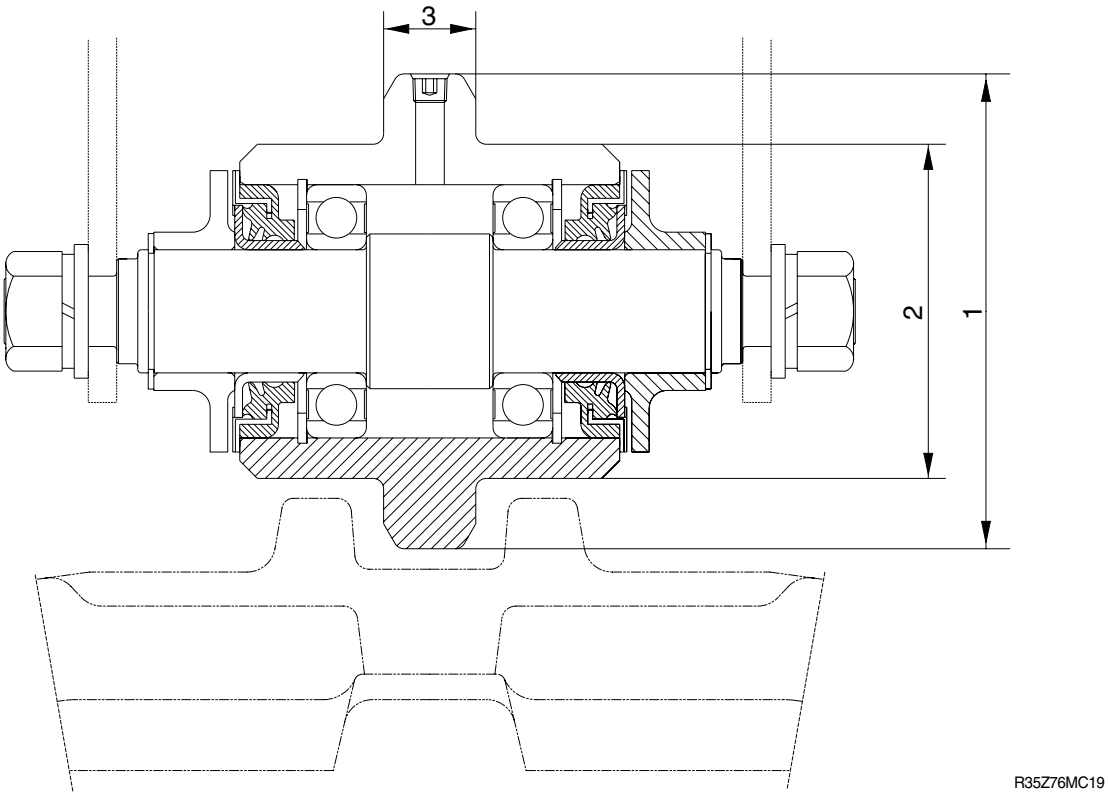

Unit : mm

No	Check item		Criteria		Remedy
			Standard size	Repair limit	
1	Outside diameter of flange	Steel	131	-	Rebuild or replace
		Rubber	135	-	
2	Outside diameter of thread	Steel	107	101	
		Rubber	95	89	
3	Width of flange		26.2	20.2	

4. CARRIER ROLLER

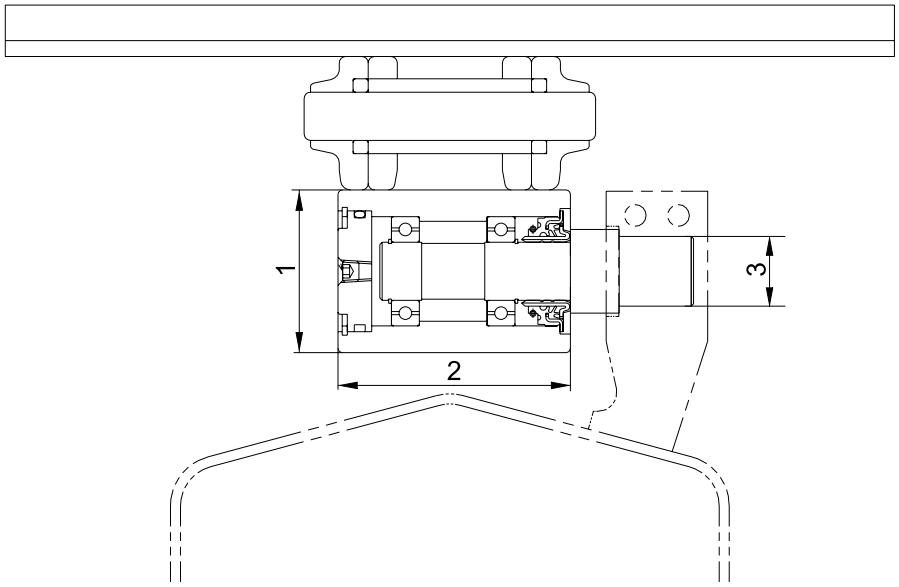

R35Z76MC20

Unit : mm

No.	Check item	Criteria		Remedy
		Standard size	Repair limit	
1	Outside diameter of flange	ø 70	ø 66	Replace
2	Width of tread	ø 100	-	
3	Diameter of shaft	ø 30	-	

5. TENSION CYLINDER

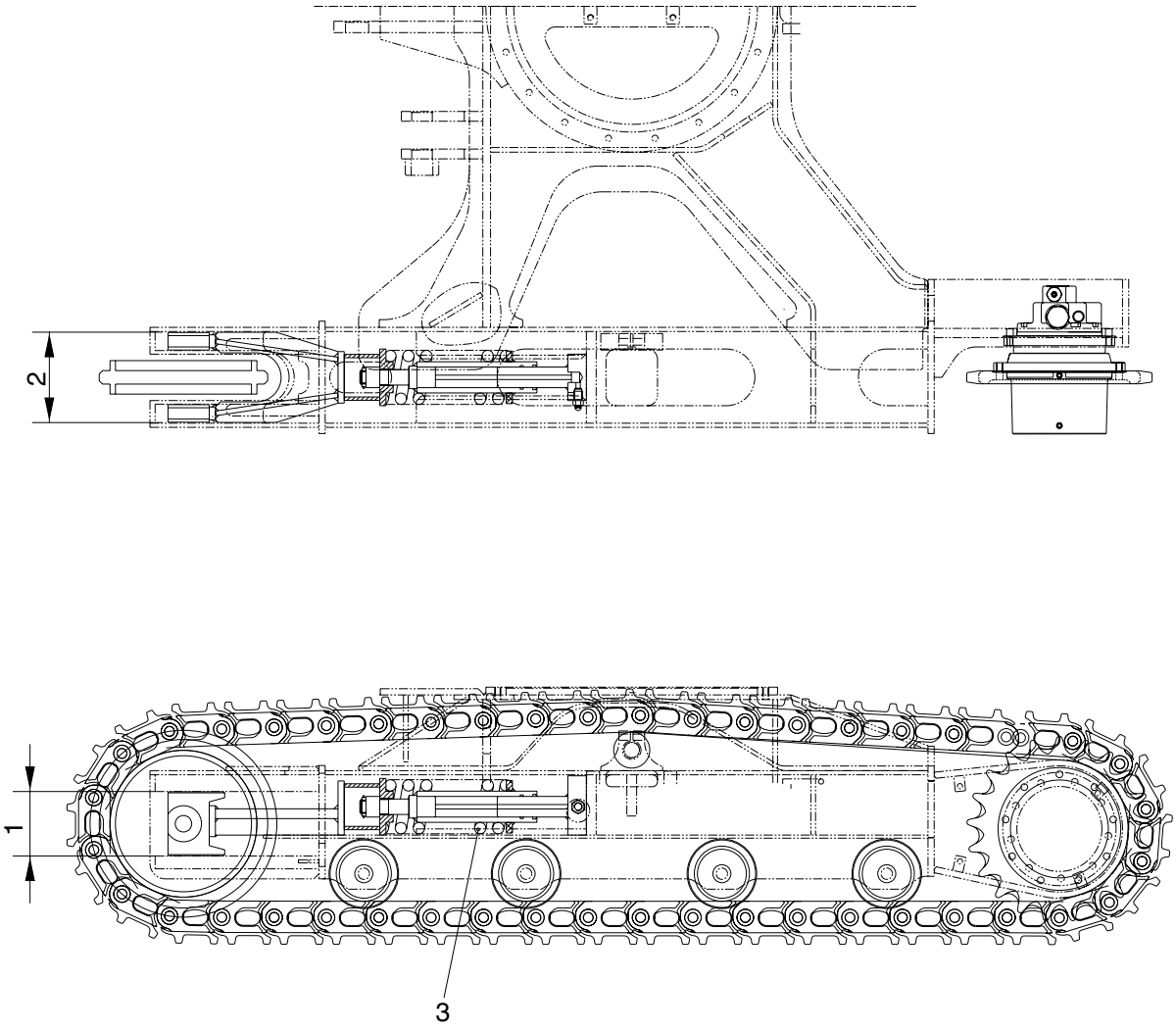

R35Z76MC21

Unit : mm

No	Check item	Criteria					Remedy
			Standard size		Repair limit		
1	Vertical width of idler guide	Track frame	125		129		Rebuild
		Idler support	124		128		Rebuild or replace
2	Horizontal width of idler guide	Track frame	178		182		Rebuild
		Idler guide	174		178		Rebuild or replace
3	Recoil spring	Standard size			Repair limit		Replace
		Free length	Installed length	Installed load	Free length	Installed load	
		286.5	233.5	2,698 kg	-	2,158 kg	

6. SPROCKET

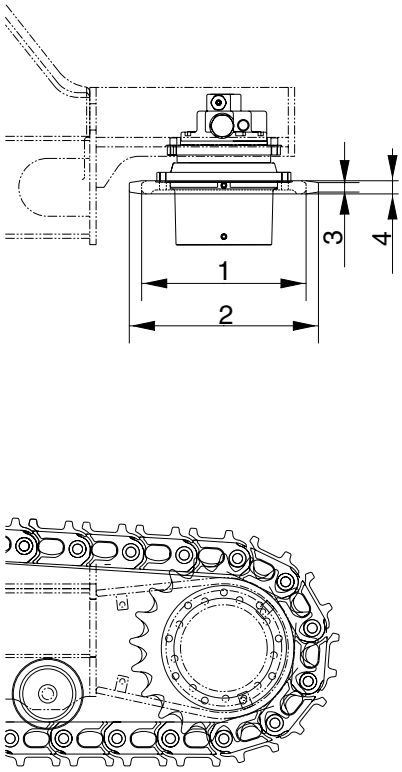

R35Z76MC22

Unit : mm

No	Check item	Criteria		Remedy
		Standard size	Repair limit	
1	Wear out of sprocket tooth lower side diameter	313.72	304.72	Repair or Replace
2	Wear out of sprocket tooth upper side diameter	359.75	-	
3	Wear out of sprocket tooth upper side width	18	-	
4	Wear out of sprocket tooth lower side width	25	17	

7. WORK EQUIPMENT

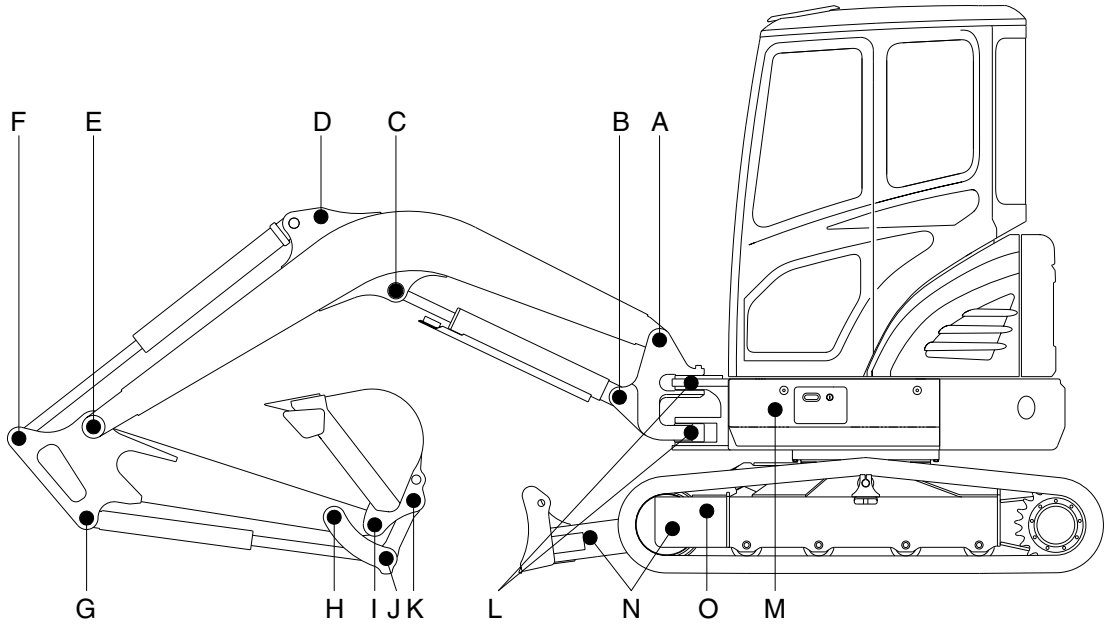

R35Z76MC30

Unit : mm

Mark	Measuring point (Pin and Bushing)	Normal value	Pin		Bushing		Remedy & Remark
			Recomm. service limit	Limit of use	Recomm. service limit	Limit of use	
A	Boom Rear	50	49	48.5	50.5	51	Replace
B	Boom Cylinder Head	45	44	43.5	45.5	46	〃
C	Boom Cylinder Rod	45	44	43.5	45.5	46	〃
D	Arm Cylinder Head	45	44	43.5	45.5	46	〃
E	Boom Front	45	44	43.5	45.5	46	〃
F	Arm Cylinder Rod	45	44	43.5	45.5	46	〃
G	Bucket Cylinder Head	40	39	38.5	40.5	41	〃
H	Arm Link	40	39	38.5	40.5	41	〃
I	Bucket and Arm Link	40	39	38.5	40.5	41	〃
J	Bucket Cylinder Rod	40	39	38.5	40.5	41	〃
K	Bucket Link	40	39	38.5	40.5	41	〃
L	Boom swing post	70	69	68.5	70.5	71	〃
M	Boom swing cylinder	45	44	43.5	45.5	46	〃
N	Blade cylinder	45	44	43.5	45.5	46	〃
O	Blade and frame link	40	39	38.5	40.5	41	〃

SECTION 7 DISASSEMBLY AND ASSEMBLY

Group 1 Precaution 7-1
Group 2 Tightening Torque 7-4
Group 3 Pump Device 7-7
Group 4 Main Control Valve 7-33
Group 5 Swing Device 7-47
Group 6 Travel Device 7-63
Group 7 RCV Lever 7-90
Group 8 Turning Joint 7-104
Group 9 Boom, Arm and Bucket Cylinder 7-109
Group 10 Undercarriage 7-128
Group 11 Work Equipment 7-141

SECTION 7 DISASSEMBLY AND ASSEMBLY

GROUP 1 PRECAUTIONS

1. REMOVAL WORK

1) Lower the work equipment completely to the ground.
   If the coolant contains antifreeze, dispose of it correctly.
2) After disconnecting hoses or tubes, cover them or fit blind plugs to prevent dirt or dust from entering.
3) When draining oil, prepare a container of adequate size to catch the oil.
4) Confirm the match marks showing the installation position, and make match marks in the necessary places before removal to prevent any mistake when assembling.
5) To prevent any excessive force from being applied to the wiring, always hold the connectors when disconnecting the connectors.
6) Fit wires and hoses with tags to show their installation position to prevent any mistake when installing.
7) Check the number and thickness of the shims, and keep in a safe place.
8) When raising components, be sure to use lifting equipment of ample strength.
9) When using forcing screws to remove any components, tighten the forcing screws alternately.
10) Before removing any unit, clean the surrounding area and fit a cover to prevent any dust or dirt from entering after removal.
11) When removing hydraulic equipment, first release the remaining pressure inside the hydraulic tank and the hydraulic piping.
12) If the part is not under hydraulic pressure, the following corks can be used.

Nominal number	Dimensions		
	D	d	L
06	6	5	8
08	8	6.5	11
10	10	8.5	12
12	12	10	15
14	14	11.5	18
16	16	13.5	20
18	18	15	22
20	20	17	25
22	22	18.5	28
24	24	20	30
27	27	22.5	34

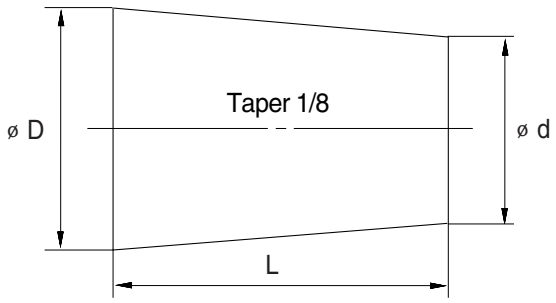

2. INSTALL WORK

1) Tighten all bolts and nuts(Sleeve nuts) to the specified torque.
2) Install the hoses without twisting or interference.
3) Replace all gaskets, O-rings, cotter pins, and lock plates with new parts.
4) Bend the cotter pin or lock plate securely.
5) When coating with adhesive, clean the part and remove all oil and grease, then coat the threaded portion with 2-3 drops of adhesive.
6) When coating with gasket sealant, clean the surface and remove all oil and grease, check that there is no dirt or damage, then coat uniformly with gasket sealant.
7) Clean all parts, and correct any damage, dents, burrs, or rust.
8) Coat rotating parts and sliding parts with engine oil.
9) When press fitting parts, coat the surface with antifriction compound(LM-P).
10) After installing snap rings, check that the snap ring is fitted securely in the ring groove(Check that the snap ring moves in the direction of rotation).
11) When connecting wiring connectors, clean the connector to remove all oil, dirt, or water, then connect securely.
12) When using eyebolts, check that there is no deformation or deterioration, and screw them in fully.
13) When tightening split flanges, tighten uniformly in turn to prevent excessive tightening on one side.
14) When operating the hydraulic cylinders for the first time after repairing and reassembling the hydraulic cylinders, pumps, or other hydraulic equipment or piping, always bleed the air from the hydraulic cylinders as follows:

(1) Start the engine and run at low idling.

(2) Operate the control lever and actuate the hydraulic cylinder 4-5 times, stopping 100㎜ before the end of the stroke.

(3) Next, operate the piston rod to the end of its stroke to relieve the circuit. (The air bleed valve is actuated to bleed the air.)

(4) After completing this operation, raise the engine speed to the normal operating condition.

※ If the hydraulic cylinder has been replaced, carry out this procedure before assembling the rod to the work equipment.

※ Carry out the same operation on machines that have been in storage for a long time after completion of repairs.

3. COMPLETING WORK

1) If the coolant has been drained, tighten the drain valve, and add water to the specified level. Run the engine to circulate the water through the system. Then check the water level again.
2) If the hydraulic equipment has been removed and installed again, add engine oil to the specified level. Run the engine to circulate the oil through the system. Then check the oil level again.
3) If the piping or hydraulic equipment, such as hydraulic cylinders, pumps, or motors, have been removed for repair, always bleed the air from the system after reassembling the parts.
4) Add the specified amount of grease(Molybdenum disulphide grease) to the work equipment related parts.

GROUP 2 TIGHTENING TORQUE

1. MAJOR COMPONENTS

No.	Descriptions		Bolt size	Torque	
				kgf · m	lbf · ft
1	Engine	Engine mounting bolt(Engine-Bracket)	M10 × 1.5	6.9±1.4	50±10.0
2		Engine mounting bolt(Bracket-Frame)	M12 × 1.75	25±2.5	181±18.1
3		Radiator mounting bolt, nut	M10 × 1.5	6.9±1.4	50±10.0
4		Coupling mounting bolt	M12 × 1.75	9.25±0.25	67±1.8
5	Hydraulic system	Main pump mounting bolt	M12 × 1.75	9.5±1.9	69±14.0
6		Main control valve mounting bolt	M10 × 1.5	6.9±1.4	50±10.0
7		Fuel tank mounting bolt	M12 × 1.75	12.8±3.0	93±22.0
8		Hydraulic oil tank mounting bolt	M12 × 1.75	12.8±3.0	93±22.0
9		Turning joint mounting bolt, nut	M10 × 1.5	6.9±1.4	50±10.0
10		Swing motor mounting bolt	M14 × 2.0	19.6±2.9	142±21.0
11	Power train system	Swing bearing upper mounting bolt	M12 × 1.75	12.8±3.0	93±22.0
12		Swing bearing lower mounting bolt	M12 × 1.75	12.8±3.0	93±22.0
13		Travel motor mounting bolt	M12 × 1.75	13.8±2.0	100±14.0
14		Sprocket mounting bolt	M12 × 1.75	12.8±3.0	93±22.0
15	Under carriage	Carrier roller mounting bolt, nut	M12 × 1.75	12.8±3.0	93±22.0
16		Track roller mounting bolt	M18 × 2.0	41.3±6.2	299±45.0
17	Others	Counter weight mounting bolt	M20 × 2.5	57.8±6.4	418±46.3
18		Cab mounting bolt, nut	M12 × 1.75	12.8±3.0	92±22.0
19		Operator's seat mounting bolt	M 8 × 1.25	1.17±0.1	8.5±0.7

※ For tightening torque of engine and hydraulic components, see each component disassembly and assembly.

2. TORQUE CHART

Use following table for unspecified torque.

1) BOLT AND NUT - Coarse thread

Bolt size	8T		10T	
	kgf · m	lbf · ft	kgf · m	lbf · ft
M 6 × 1.0	0.9 ~ 1.3	6.5 ~ 9.4	1.1 ~ 1.7	8.0 ~ 12.3
M 8 × 1.25	2.0 ~ 3.0	14.5 ~ 21.7	2.7 ~ 4.1	19.5 ~ 29.7
M10 × 1.5	4.0 ~ 6.0	28.9 ~ 43.4	5.5 ~ 8.3	39.8 ~ 60.0
M12 × 1.75	7.4 ~ 11.2	53.5 ~ 81.0	9.8 ~ 15.8	70.9 ~ 114
M14 × 2.0	12.2 ~ 16.6	88.2 ~ 120	16.7 ~ 22.5	121 ~ 163
M16 × 2.0	18.6 ~ 25.2	135 ~ 182	25.2 ~ 34.2	182 ~ 247
M18 × 2.0	25.8 ~ 35.0	187 ~ 253	35.1 ~ 47.5	254 ~ 344
M20 × 2.5	36.2 ~ 49.0	262 ~ 354	49.2 ~ 66.6	356 ~ 482
M22 × 2.5	48.3 ~ 63.3	349 ~ 458	65.8 ~ 98.0	476 ~ 709
M24 × 3.0	62.5 ~ 84.5	452 ~ 611	85.0 ~ 115	615 ~ 832
M30 × 3.0	124 ~ 168	898 ~ 1214	169 ~ 229	1223 ~ 1656
M36 × 4.0	174 ~ 236	1261 ~ 1704	250 ~ 310	1808 ~ 2242

2) BOLT AND NUT - Fine thread

Bolt size	8T		10T	
	kgf · m	lbf · ft	kgf · m	lbf · ft
M 8 × 1.0	2.2 ~ 3.4	15.9 ~ 24.6	3.0 ~ 4.4	21.7 ~ 31.8
M10 × 1.2	4.5 ~ 6.7	32.5 ~ 48.5	5.9 ~ 8.9	42.7 ~ 64.4
M12 × 1.25	7.8 ~ 11.6	56.4 ~ 83.9	10.6 ~ 16.0	76.7 ~ 116
M14 × 1.5	13.3 ~ 18.1	96.2 ~ 131	17.9 ~ 24.1	130 ~ 174
M16 × 1.5	19.9 ~ 26.9	144 ~ 195	26.6 ~ 36.0	192 ~ 260
M18 × 1.5	28.6 ~ 43.6	207 ~ 315	38.4 ~ 52.0	278 ~ 376
M20 × 1.5	40.0 ~ 54.0	289 ~ 391	53.4 ~ 72.2	386 ~ 522
M22 × 1.5	52.7 ~ 71.3	381 ~ 516	70.7 ~ 95.7	511 ~ 692
M24 × 2.0	67.9 ~ 91.9	491 ~ 665	90.9 ~ 123	658 ~ 890
M30 × 2.0	137 ~ 185	990 ~ 1339	182 ~ 248	1314 ~ 1796
M36 × 3.0	192 ~ 260	1390 ~ 1880	262 ~ 354	1894 ~ 2562

3) PIPE AND HOSE(FLARE TYPE)

Thread size(PF)	Width across flat(mm)	kgf · m	lbf · ft
1/4"	19	4	28.9
3/8"	22	5	36.2
1/2"	27	9.5	68.7
3/4"	36	18	130.2
1"	41	21	151.9
1-1/4"	50	35	253.2

4) PIPE AND HOSE(ORFS TYPE)

Thread size(UNF)	Width across flat(mm)	kgf · m	lbf · ft
9/16-18	19	4	28.9
11/16-16	22	5	36.2
13/16-16	27	9.5	68.7
1-3/16-12	36	18	130.2
1-7/16-12	41	21	151.9
1-11/16-12	50	35	253.2

5) FITTING

Thread size	Width across flat(mm)	kgf · m	lbf · ft
1/4"	19	4	28.9
3/8"	22	5	36.2
1/2"	27	9.5	68.7
3/4"	36	18	130.2
1"	41	21	151.9
1-1/4"	50	35	253.2

GROUP 3 PUMP DEVICE

1. REMOVAL AND INSTALL

1) REMOVAL

(1) Lower the work equipment to the ground and stop the engine.

(2) Operate the control levers and pedals several times to release the remaining pressure in the hydraulic piping

(3) Loosen the breather slowly to release the pressure inside the hydraulic tank.

⚠ Escaping fluid under pressure can penetrate the skin causing serious injury.

(4) Loosen the drain plug under the hydraulic tank and drain the oil from the hydraulic tank.

- Hydraulic tank quantity : 37 ℓ (9.8U.S.gal)

(5) Disconnect hoses(79, 80) and remove connectors(47, 48).

(6) Disconnect pilot line hoses(21, 90) and remove connectors(49, 54).

(7) Remove socket bolts(28) and disconnect pump suction tube(9).

※ When pump suction tube is disconnected, the oil inside the piping will flow out, so catch it in oil pan.

(8) Sling the pump assembly and remove the pump mounting bolts.

- Weight : 25㎏(55lb)

※ Pull out the pump assembly from housing. When removing the pump assembly, check that all the hoses have been disconnected.

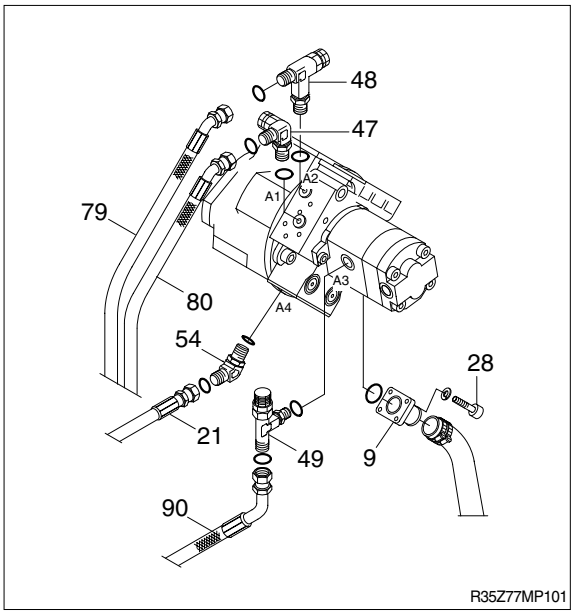

2) INSTALL

(1) Carry out installation in the reverse order to removal.

(2) Remove the suction strainer and clean it.

(3) Replace return filter with new one.

(4) Remove breather and clean it.

(5) After adding oil to the hydraulic tank to the specified level.

(6) Bleed the air from the hydraulic pump.
① Remove the air vent plug(1EA).
② Tighten plug lightly.
③ Start the engine, run at low idling, and check oil come out from plug.
④ Tighten plug.

(7) Start the engine, run at low idling(3~5 minutes) to circulate the oil through the system.

(8) Confirm the hydraulic oil level and check the hydraulic oil leak or not.

2. MAIN PUMP

1) STRUCTURE

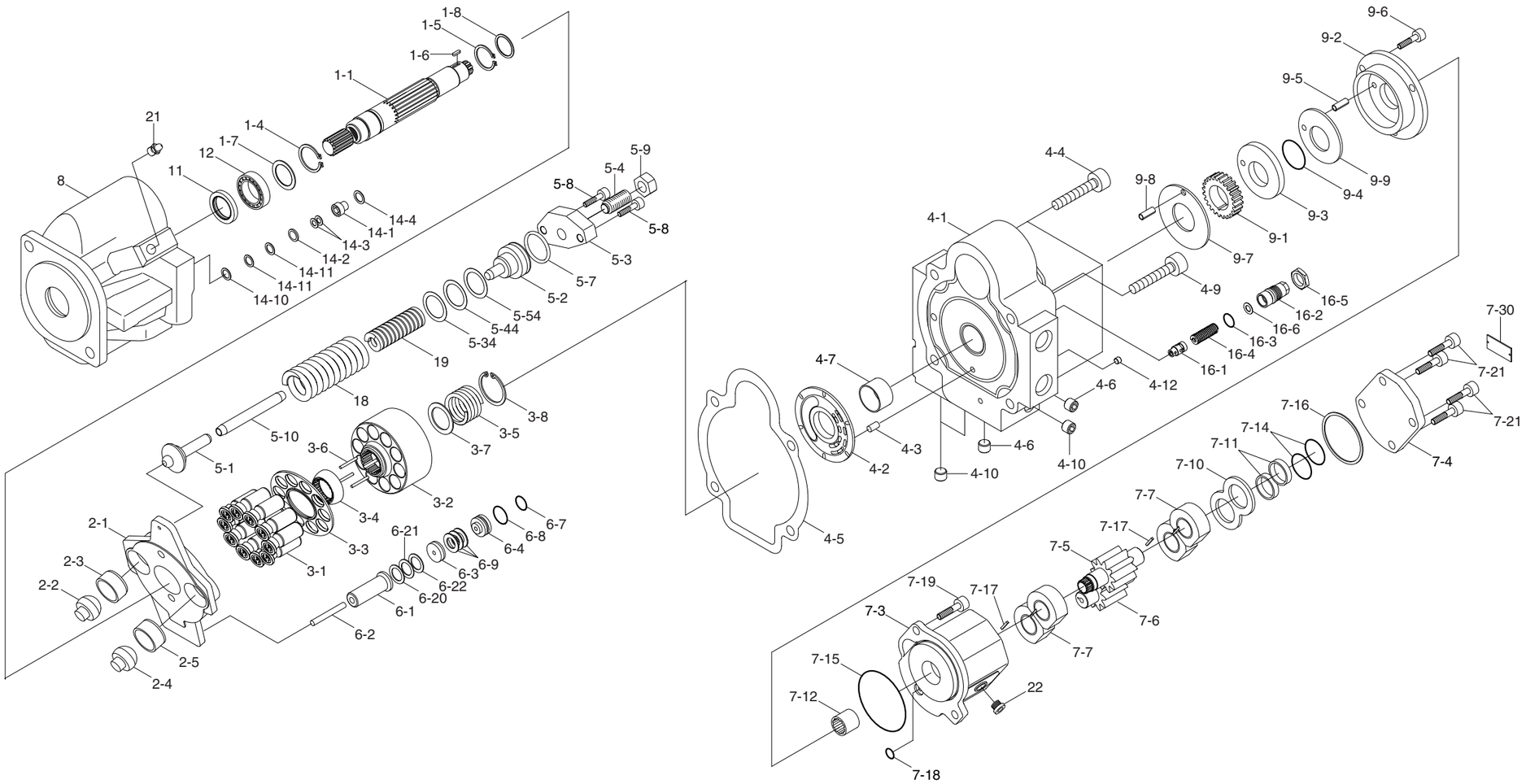

1	Shaft assy	3	Rotary group	4-4	Socket head screw	5-8	Socket head screw	6-9	Coned disc spring	7-14	O-ring	14-2	Distance piece	9-7	Thrust plate
1-1	Shaft	3-1	Piston assy	4-5	Packing	5-9	Hex nut	6-20	Shim	7-15	O-ring	14-3	Coned disc spring	9-8	Spring pin
1-4	Ring	3-2	Cylinder block	4-6	Plug	5-10	Guide	6-21	Shim	7-16	Square ring	14-4	Retaining ring	9-9	Plate
1-5	Ring retaining	3-3	Retainer	4-7	Bearing	5-34	Shim	6-22	Shim	7-17	Square ring	14-5	Shim	16	Relief valve assy
1-6	Key	3-4	Guide	4-9	Socket head screw	5-44	Shim	7	Gear pump	7-18	O-ring	14-6	Shim	16-1	Spool
1-7	Shim	3-5	Spring	4-10	plug	5-54	Shim	7-3	Housing	7-19	Bolt	14-7	Shim	16-2	Adjust screw
1-8	Shim	3-6	Pressure pin	4-12	Orifice	6	Control piston assy	7-4	Cover	7-21	Socket head screw	9	Trochoid pump assy	16-3	O-ring
2	Swash plate assy	3-7	Spring seat	5	Spring seat assy	6-1	Sleeve	7-5	Gear	7-30	Name plate	9-1	Gear	16-4	Spring
2-1	Swash plate	3-8	Retaining ring	5-1	Spring seat	6-2	Parallel pin	7-6	Gear	8	Housing assy	9-2	Case	16-5	Nut
2-2	Suction side guide	4	Port plate assy	5-2	Spring seat	6-3	Distance piece	7-7	Thrust plate assy	11	Oil seal	9-3	Thrust plate	16-6	Spring seat
2-3	Suction side bushing	4-1	Port plate	5-3	Cover	6-4	Piston	7-10	Plate	12	Bearing	9-4	O-ring	18	Spring
2-4	Delivery side guide	4-2	Control plate	5-4	Adjusting screw	6-7	O-ring	7-11	Guide	14	Stopper assy	9-5	Spring pin	19	Spring
2-5	Delivery side bushing	4-3	Parallel pin	5-7	O-ring	6-8	O-ring	7-12	Coupling	14-1	Guide	9-6	Socket head screw	21	Air vent valve
														22	Plug

2) NECESSARY TOOLS AND JIGS

The following tools and jigs are necessary to disassemble and reassemble the pump.

(1) Tools

Name	Quantity	Size (nominal)
Hexagon socket screw key	One each	4, 6, 8, 10
Spanner	One each	14, 24
Plastic hammer	1	Medium size
Pliers for retaining ring	1	For hole (retaining ring for 22)
Pliers for retaining ring	1	For shaft (retaining ring for 20)
Torque wrench	-	Wrench which can tighten at the specified torque
Grease	Small amount	-
Adhesives	Small amount	Loctite (high tack sealant #98)

(2) Jigs

① **Disassemble table**

This is a plate to stand the pump facing downward.

A square block may be used instead of the shaft and does not contact.

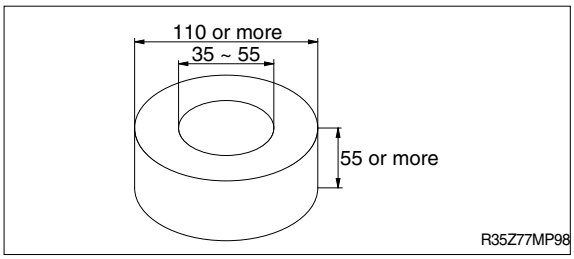

② **Jigs for disassemble the port plate**

Jigs are necessary to protect the shaft, when disassembly and assembly the port plate.

Disassembly

When hexagon socket head cap screws (4 pieces of size M12) are removed, the jig is necessary to prevent the port plate from lifting up diagonally due to the control spring.

Assembly

The jig is necessary to install the port plate parallel to the housing mounting surface.

The structure of the jig is shown as right. It can hold the port plate by means of applying the machined edge* of the hexagon socket set screw (M16×150) to the adjusting screw.

※ When the hex socket set screw is used, apply the machining work on the edge to shape it in size the dia of 8mm from the top edge to 15mm position.

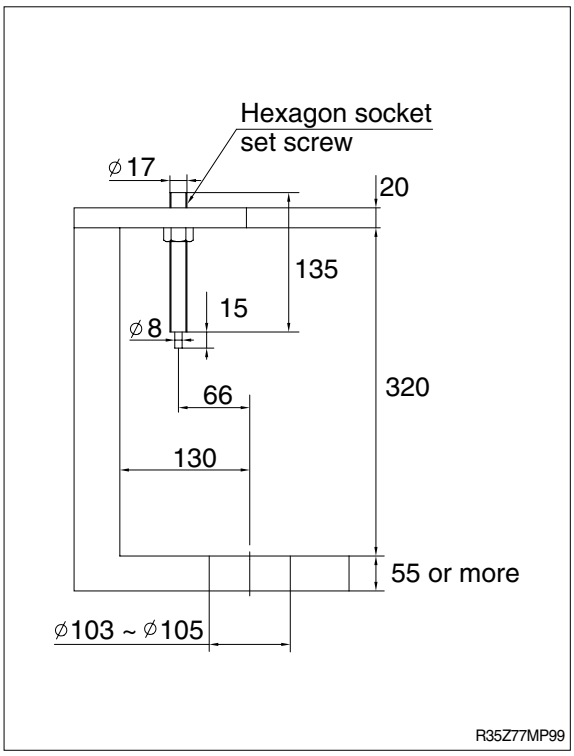

3) CAUTIONS DURING DISASSEMBLING AND ASSEMBLING

(1) Cautions for disassembling

① Never attempt operating the adjusting screw unless absolutely necessary.
② Take utmost care during disassembly not to knock or drop each part.

(2) Cautions for disassembling

① Wash each part thoroughly.
② During assembling, take utmost care not to damage the part or allow foreign materials to enter.
③ As a rule, the O-ring and oil seal should not be reused.
④ In our assembly work, the torque wrench is used to control the torque.
Be sure to use torque wrench.

3. DISASSEMBLING PROCEDURE

1) DISASSEMBLING THE GEAR PUMP

(1) Remove the hexagon socket head cap screw. (M10 × 25, 2 pieces)
Hexagon socket screw key (8 mm)

※ Be careful because the O-ring (at 2 pieces) are provided to the housing.

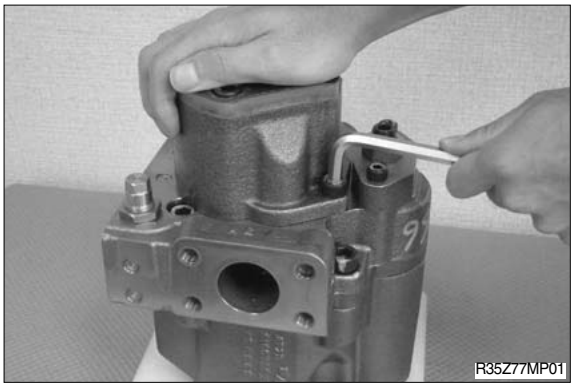

(2) Remove the coupling.

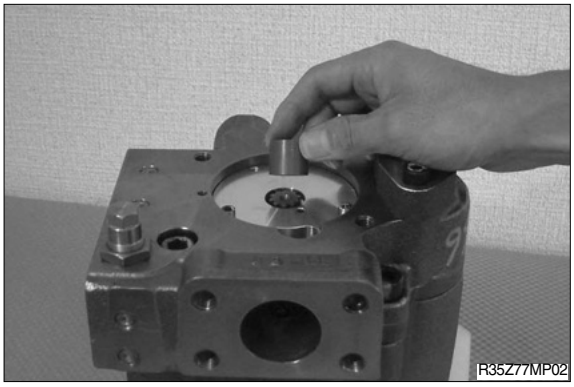

2) DISASSEMBLING THE TROCHOID PUMP

(1) Remove the hexagon socket head cap screw. (M5 × 12, 3 pieces)
Hexagon socket screw key (4 mm)

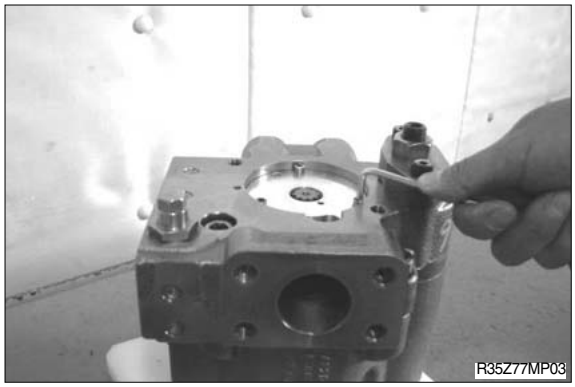

(2) Remove the case, the side plate (A), and the gear.
Use the hexagon socket head cap screws.
For example : M5 × 90, 2 pieces

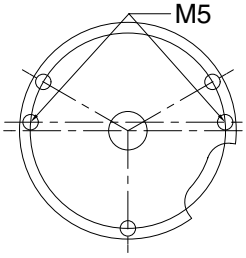

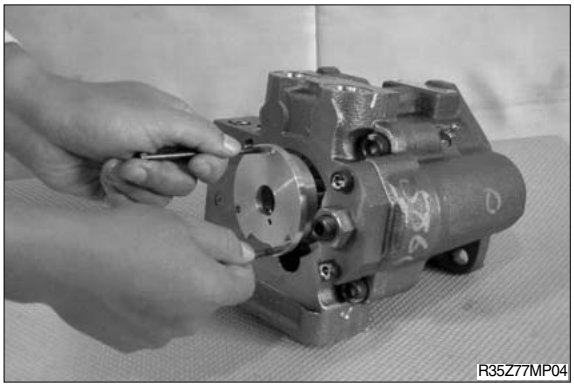

(3) Remove the gear from the case.

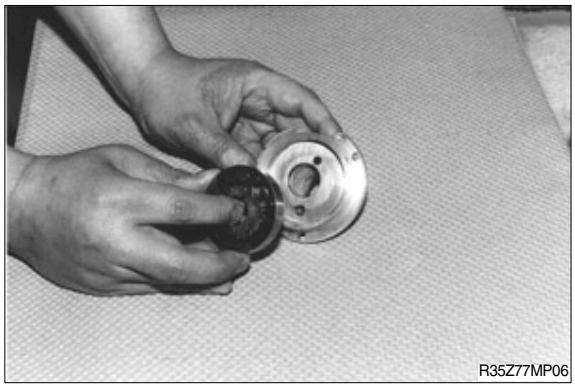

(4) Remove the side plate (A) from the case.

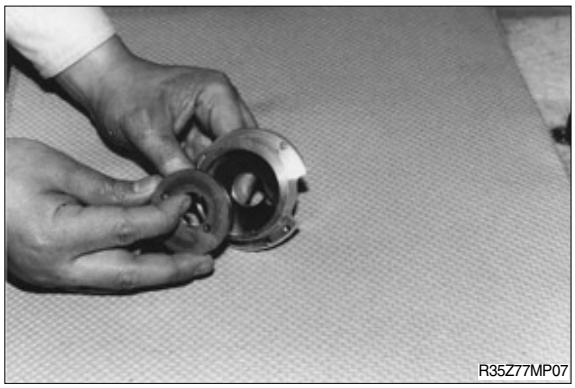

(5) Remove the side plate (B) from the port plate.

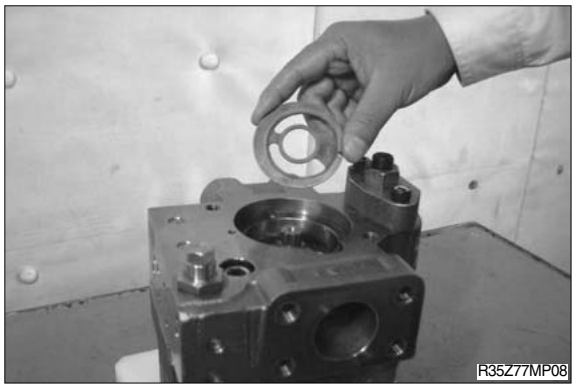

(6) Remove the key of the shaft.

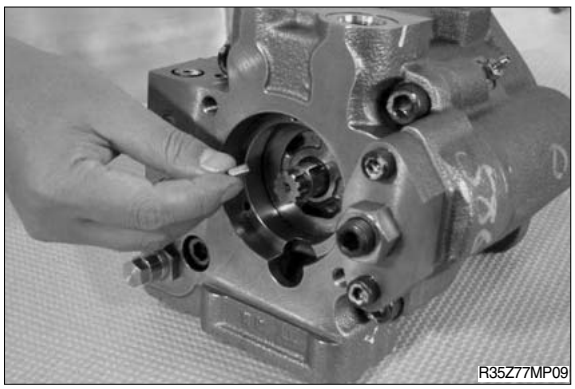

3) DISASSEMBLING THE MAIN PUMP

(1) Remove the port plate since the force of the control spring is strong, remove the hexagon socket head cap screws holding the port plate by means of the jigs.
(M12×40, 3 pieces), (M12×55, 1 piece)
Hexagon socket screw key (10 mm)

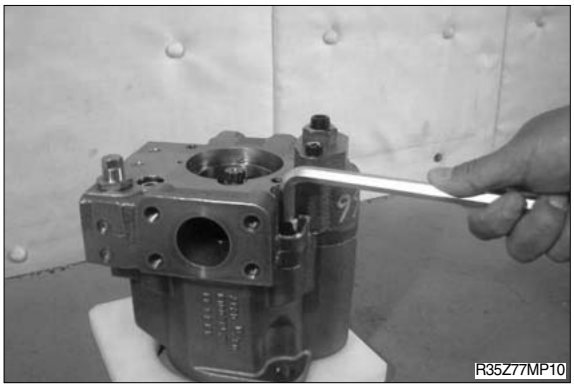

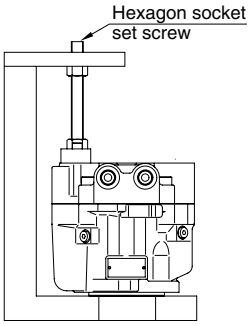

(2) Remove the cover.
Use the jig to hold the port in a horizontal condition, and unloosen the hexagon socket set screw of the jig slowly, to remove the port plate.
※ Be careful because the control plate is provided to the backside.

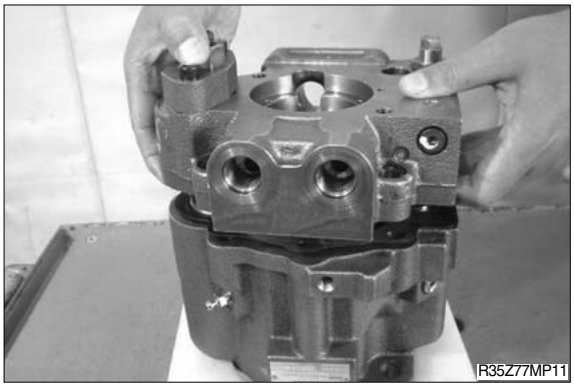

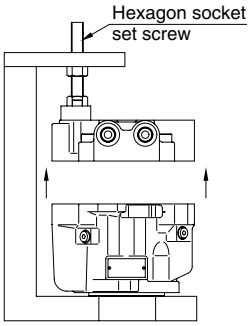

(3) This photo shows the state with the port plate removed.

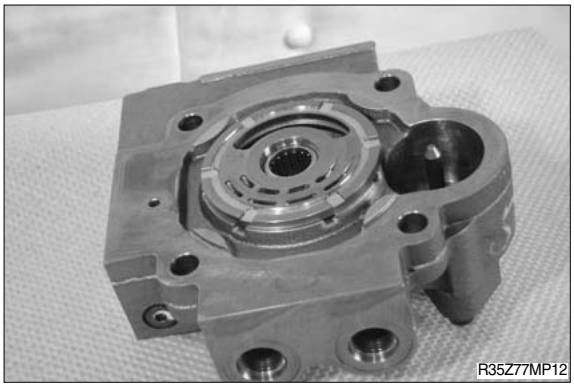

(4) Remove the packing.

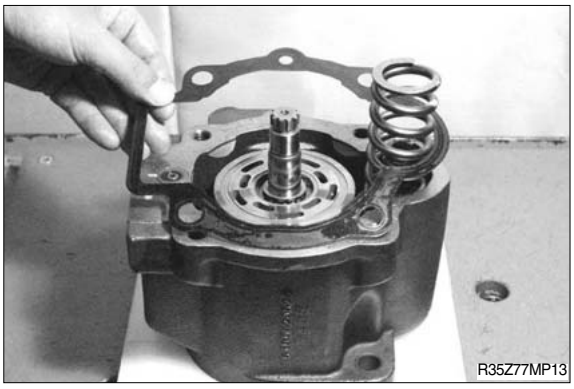

(5) Remove the control spring and the spring seat.
Remove the two springs (inner and outer), and the guide.

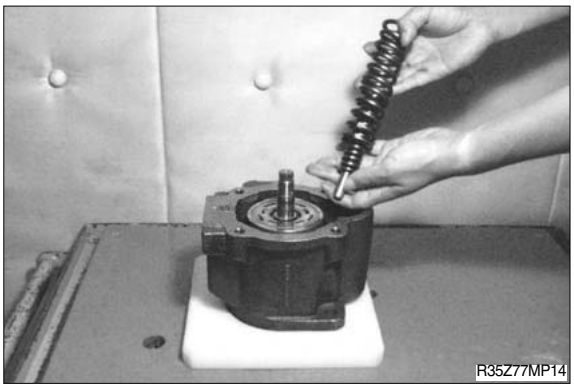

(6) Remove the spring seat.

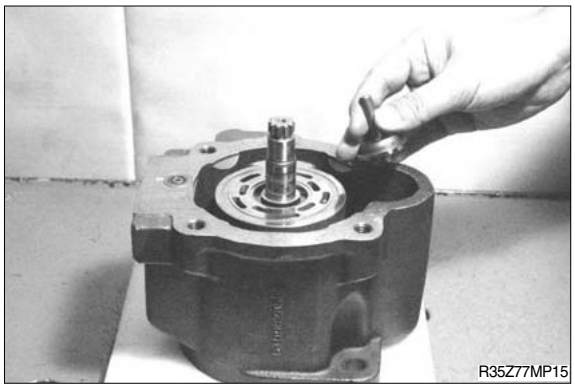

(7) Remove the rotary group.
Remove the shim and the retaining ring.
(For shafts ; 20)
Pliers for retaining rings.
(For shafts ; Retaining ring for 20)

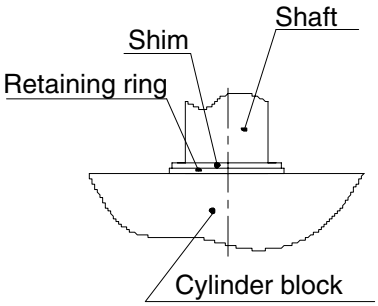

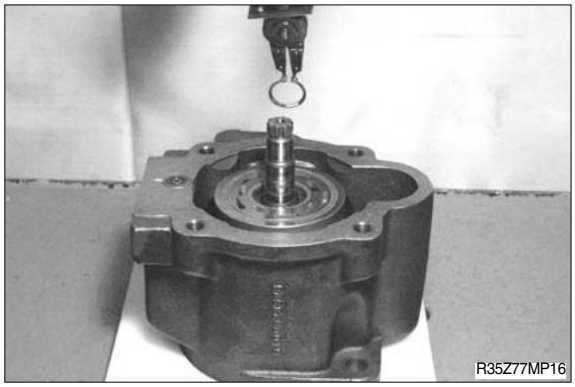

(8) Push down sideways the pump. And takes out the rotary group from the shaft.

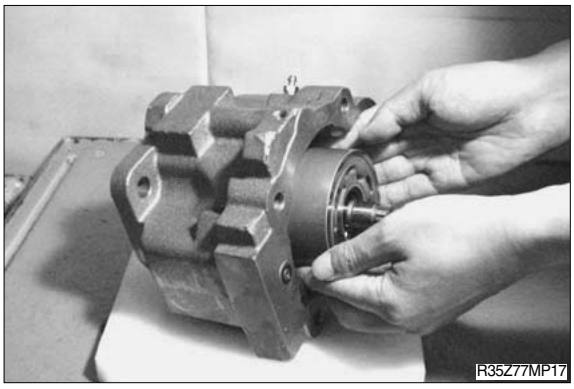

(9) Remove the shaft.
The protective taping around the spline part, and pull out straight the shaft, taking care not to damage the oil seal.

(10) Remove the swash plate assembly.
Remove the swash plate.

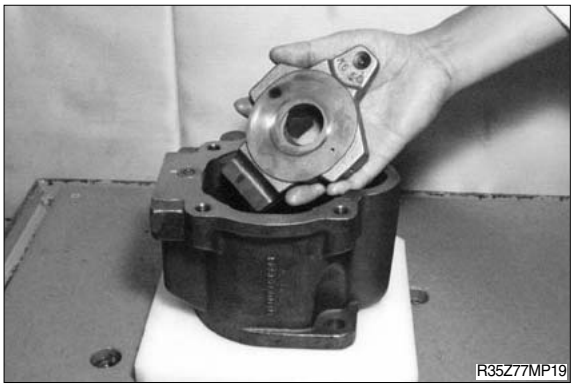

(11) Remove the guide.
※ Put the mark on the guides, to know the correct direction, and between right and left side.

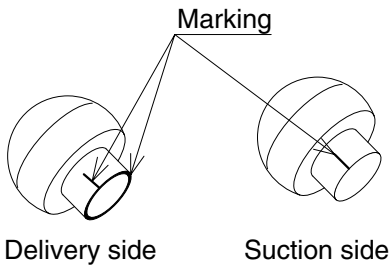

(12) Disassemble the port plate assembly.
Remove the control plate.

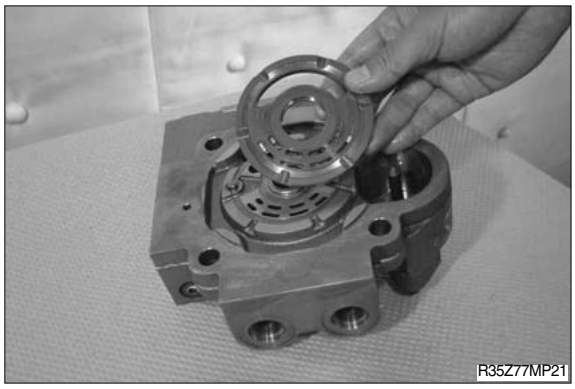

(13) Remove the hexagon socket head cap screws (M8 × 30, 2 pieces), in order to remove the cover of the spring seat assembly.
Hexagon socket screw key (6mm)

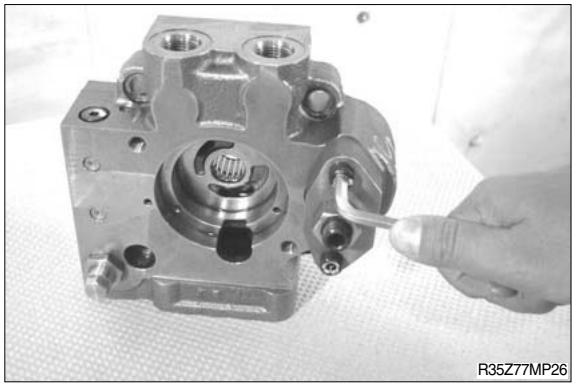

(14) Remove the spring seat.

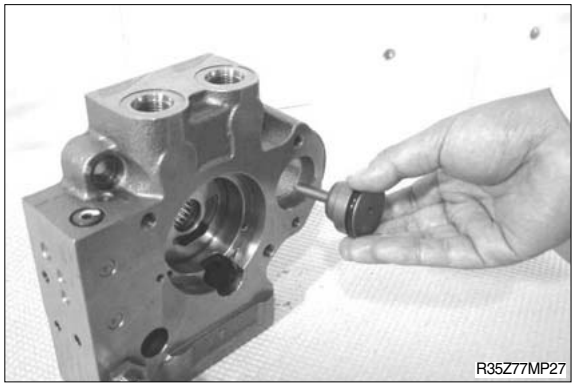

(15) Disassemble the control piston assembly.
Remove the piston, the coned disk springs, the distance piece and the shim.

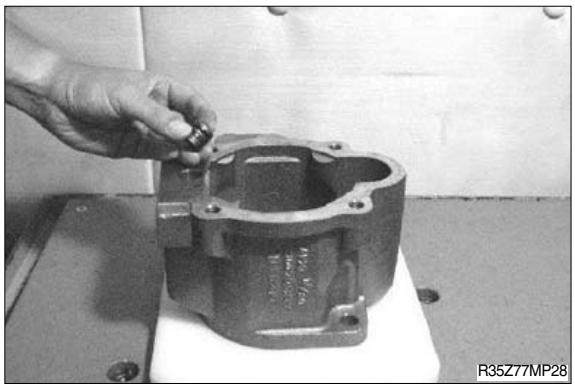

(16) Remove the parallel pin and the sleeve.

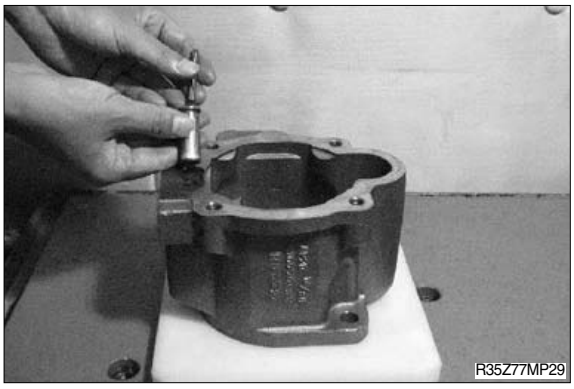

(17) Remove the minimum flow stopper.
Remove the retaining ring. (For holes; 22)
Pliers for retaining rings.
(For holes ; retaining ring for 22)

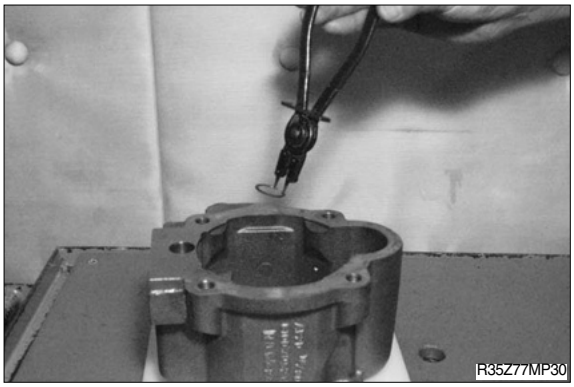

(18) Remove the guide, the coned disk springs, the distance piece, and shim.

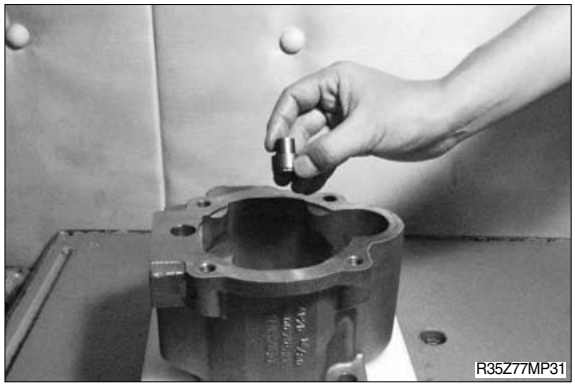

(19) Remove the relief valve.
Remove the hexagon nut.
Spanner (24 ㎜)
※ Since the pressure has set, you may remove this assembly, only when necessary.

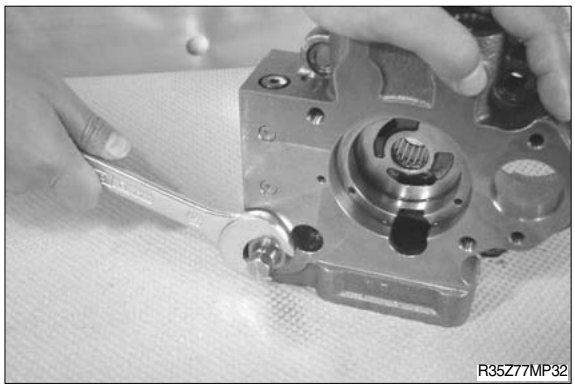

(20) Remove the adjustment screw.
Spanner (14 mm)
※ Be careful because the shim is inserted.

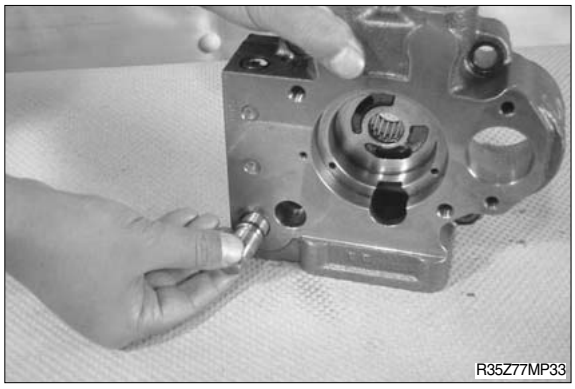
R35Z77MP33

(21) Remove the spring.

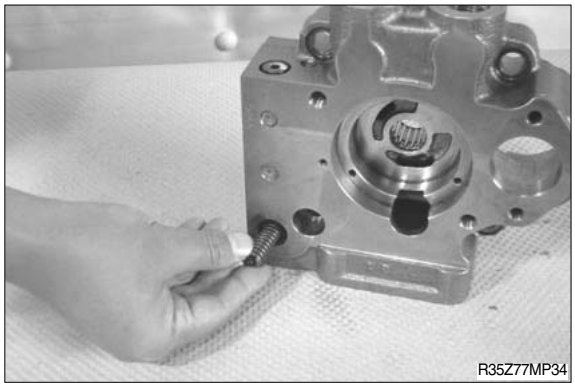
R35Z77MP34

(22) Remove the spool.

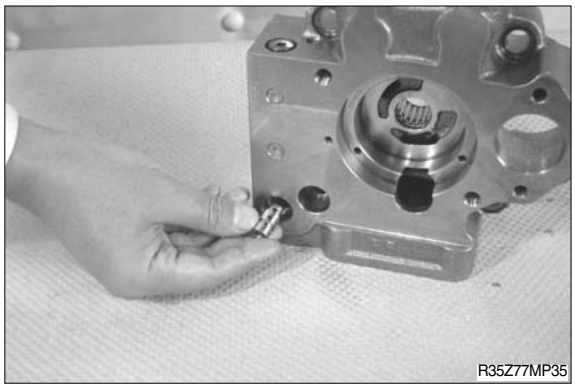
R35Z77MP35

4) DISASSEMBLING THE GEAR PUMP (GSP2)

(1) Remove the hexagon socket head cap screws.
(M10×20, 4 pieces)
Hexagon socket screw key (8mm)

R35Z77MP36

(2) Remove the cover.

(3) Remove the square ring.

(4) Remove the plate, the guides, and the O-rings.

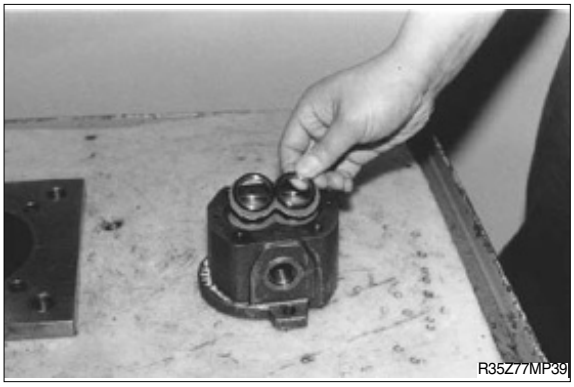

(5) Remove the drive gear, the idle gear, and the side plates.

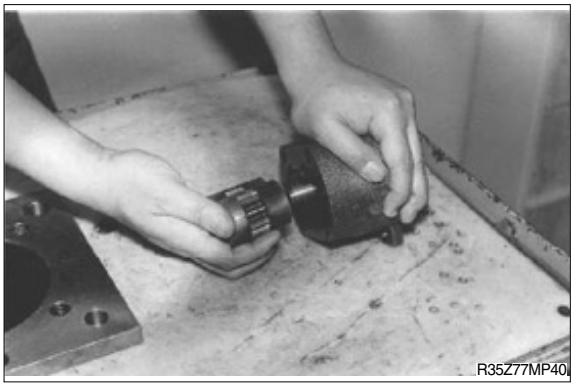

5. ASSEMBLING PROCEDURE

1) ASSEMBLE THE MAIN PUMP

(1) Assemble the minimum flow stopper.
Install the guide, the coned disk springs, the distance piece, and the shim into the housing.
* Pay attention to the direction of the coned disk spring.

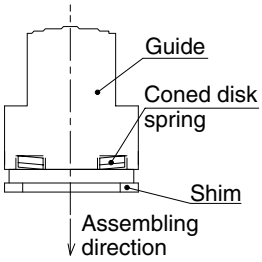

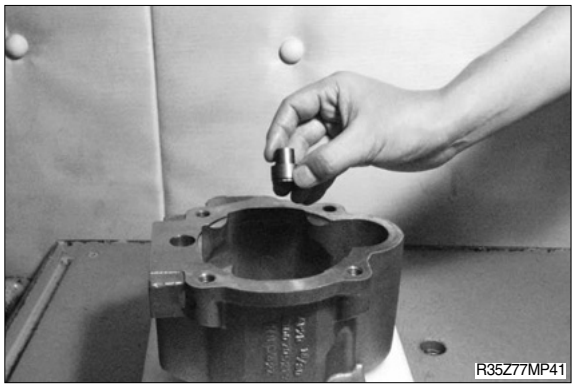

(2) Install the retaining ring. (For holes; 22)
Pliers for retaining rings.
(For holes; retaining ring for 22)

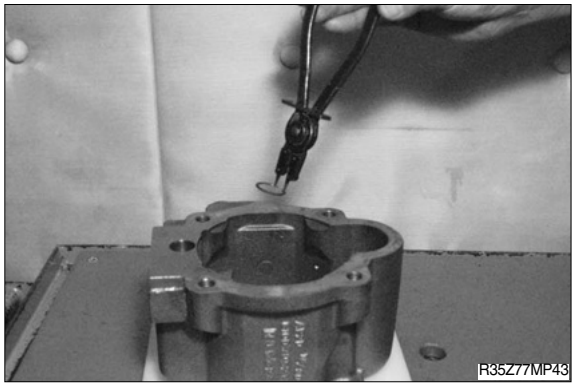

(3) Install the parallel pin and the sleeve into the housing.

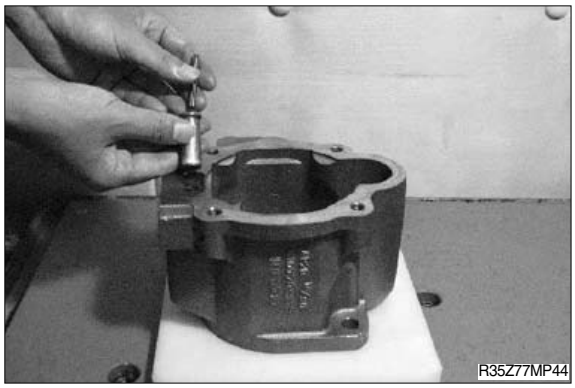

(4) Install the piston, the coned disk springs, the distance piece, and the shim into the housing.

※ Pay attention to the direction of the coned disk springs.

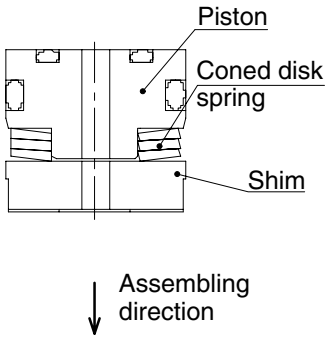

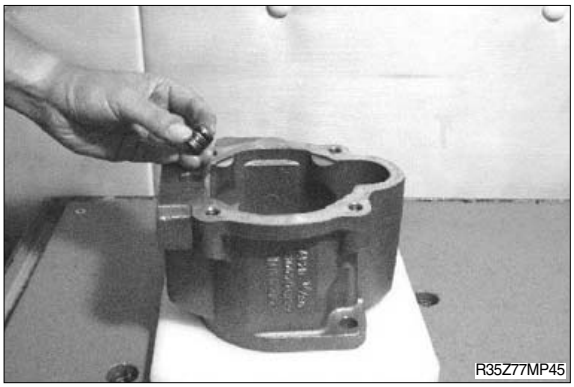

(5) Assemble the swash plate.
Install the guides into the housing.

※ Assemble the guides into the housing, taking care on the marking, which was put on during disassembling work.

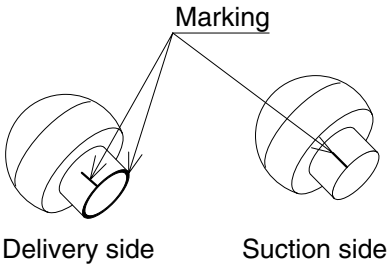

(6) Install the swash plate.

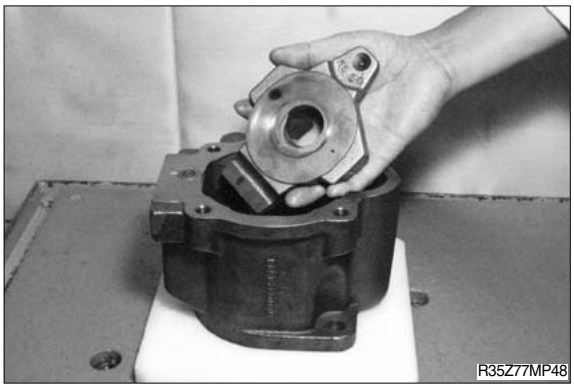

(7) Assemble the shaft.
The protective taping around the spline part, and install the shaft vertically, taking care not to damage the oil seal.
※ Confirm that the shim is installed above the bearing.

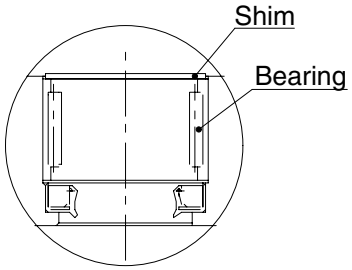

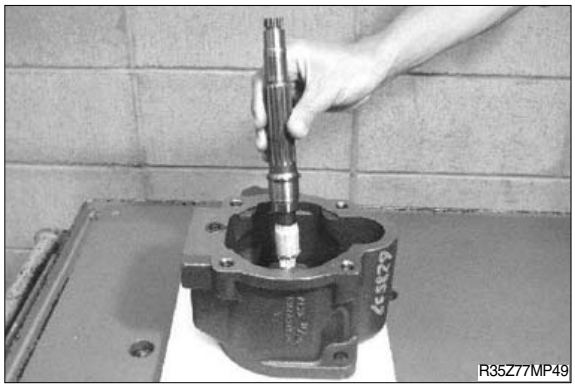
R35Z77MP49

(8) Assemble the rotary group.
Install the pistons (10 pistons) into the retainer.

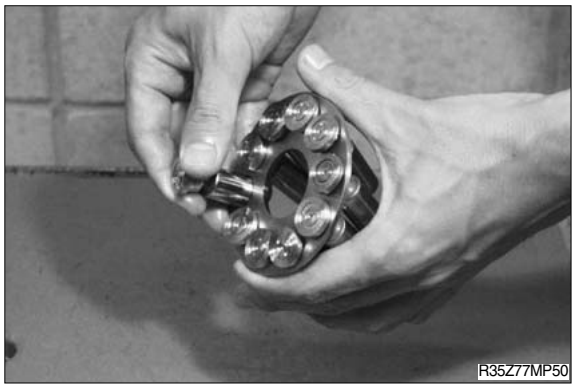
R35Z77MP50

(9) Apply the grease to the spherical portion of the guide.

R35Z77MP51

(10) Insert the guide between the retainer and the cylinder block and assemble the piston into the hole of the cylinder block.
※ Apply grease to the end of the shoes.

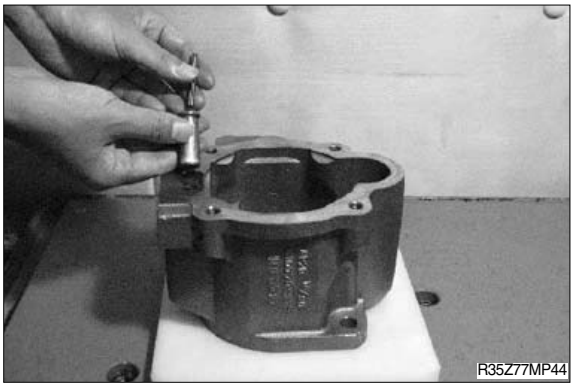
R35Z77MP44

(11) Install the rotary group.
Assemble the rotary group along the shaft spline.

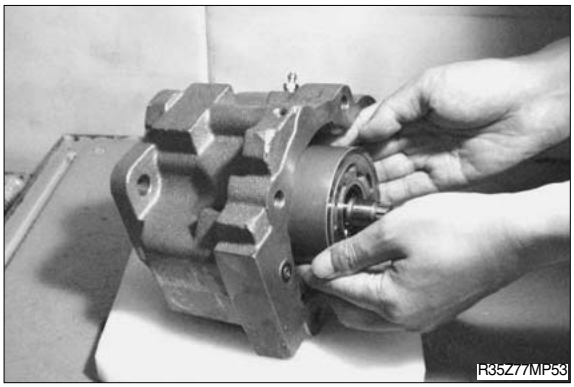

(12) Install the retaining ring (For shafts; 20), and install the shim.
Pliers for retaining rings.
(For shafts; retaining ring for 20)

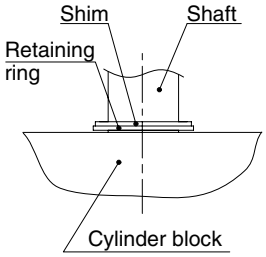

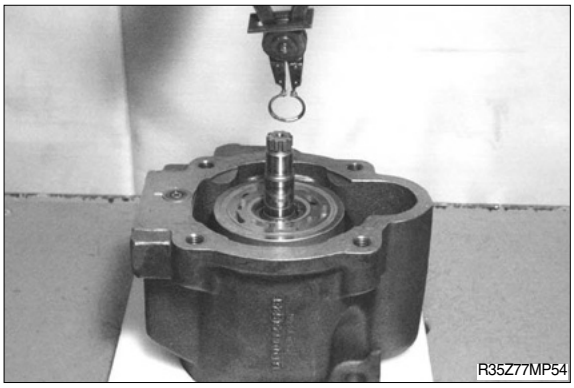

(13) Assemble the control spring.
Apply grease to the spherical portion of the spring seat before assembling.

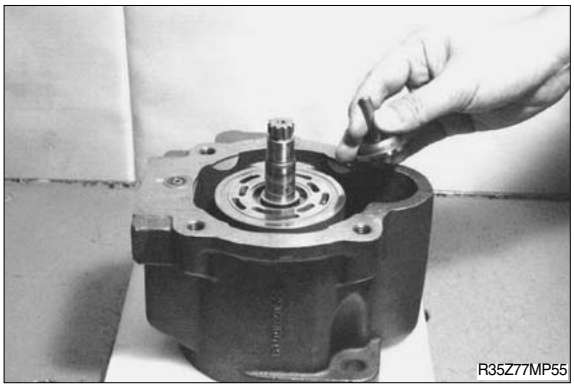

(14) Assemble the two springs (inner and outer) and the guide.

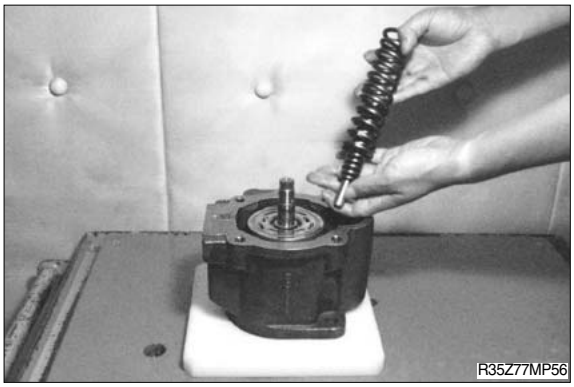

(15) Assemble the port plate.
Assemble the spring seat into the port plate.

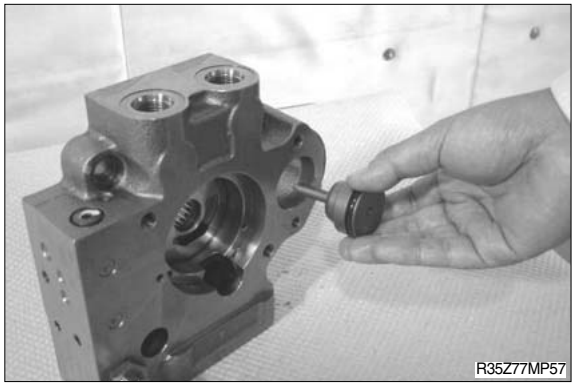

(16) Assemble the cover of the spring seat assembly, and fix it with hexagon socket head cap screws. (M8 × 30, 2 pieces)
Hexagon socket screw key (6 mm)

· Tightening torque : 3.6 kgf · m
(21~26 lbf · ft)

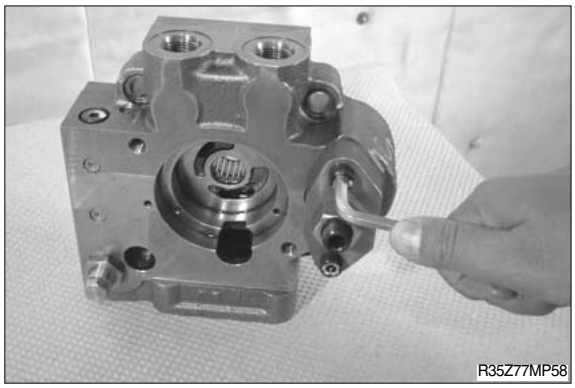

(17) Apply grease to the backside of the control plate (to prevent dislodgement), and assembly it to the port plate while matching the knock hole.

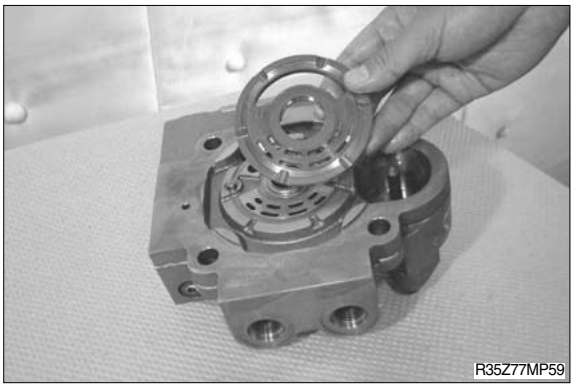

(18) Assemble the relief valve.
Install the spool into the port plate.

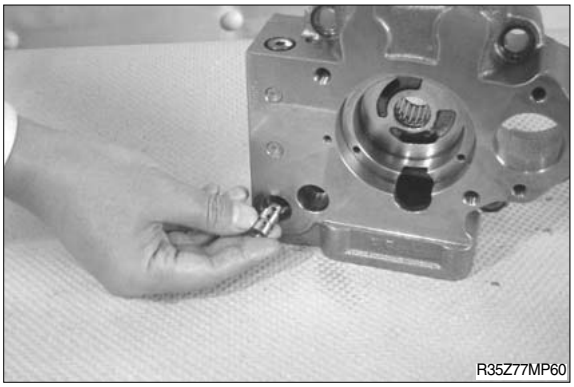

(19) Assemble the spring.

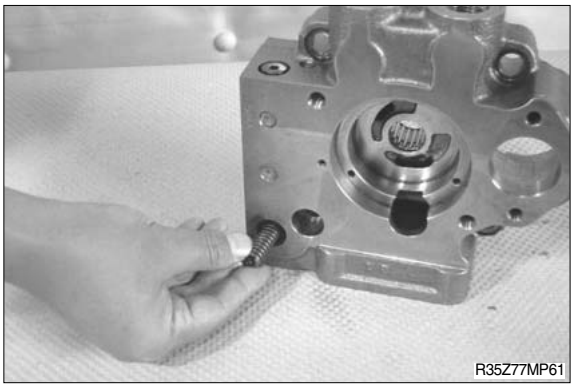

(20) Install the shim into the adjustment screw.

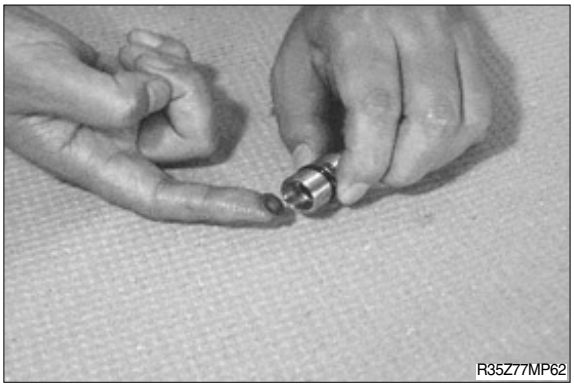

(21) Assemble the adjustment screw.
Spanner (14 mm)

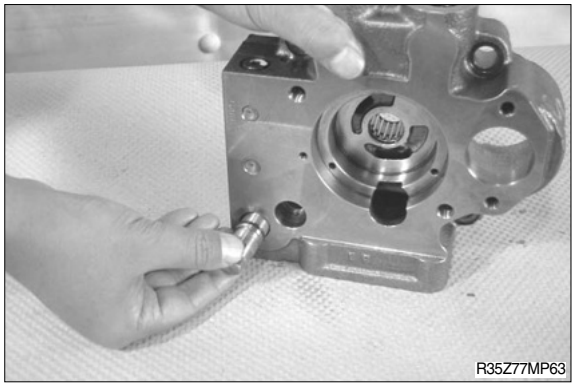

(22) Tighten the hexagon nut.

※ After assembling, set the pressure and tighten the nut.

Spanner (24 mm)

· Tightening torque : 1.0 kgf · m
(7.2 lbf · ft)

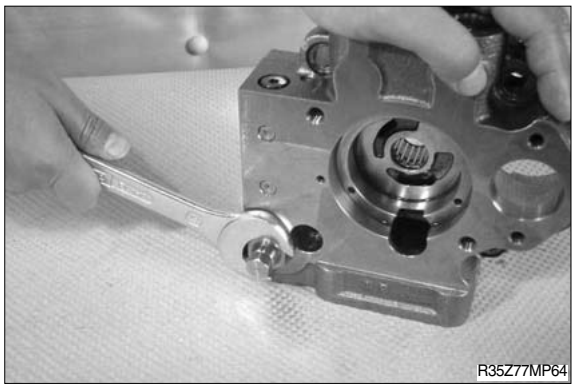

(23) Assemble the port plate.
Install the packing.

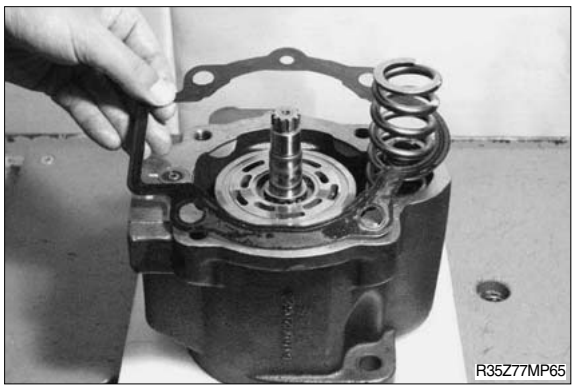

(24) Holding the cover in parallel condition, by using the jig, tightens slowly the hexagon socket set screw of the jigs, in order to install the port plate.

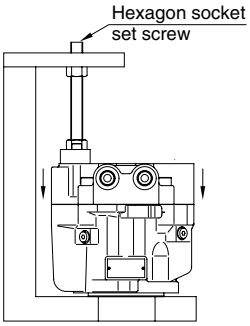

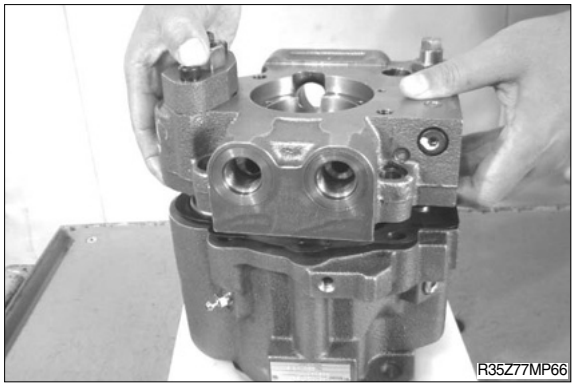

(25) Fix the port plate with the hexagon socket head cap screws.
(M12 × 40, 3 pieces)
(M12 × 55, 1 pieces)
Hexagon socket screw key (10 mm)

· Tightening torque : 10~12.5 kgf · m
(72.3~91 lbf · ft)

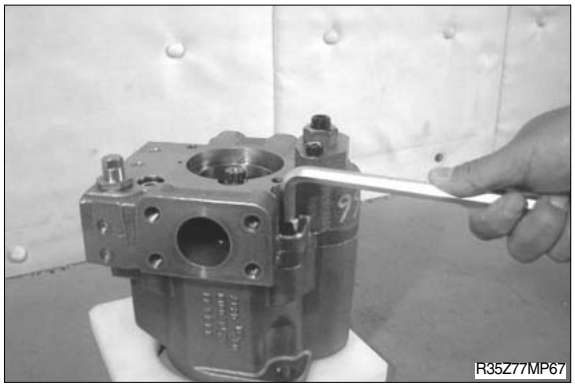

2) ASSEMBLE THE TROCHOID PUMP

(1) Install the key into the shaft.

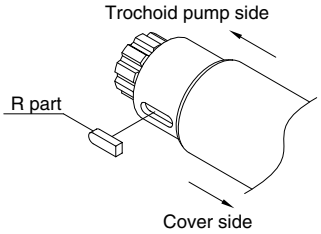

Install the key so that R side position in the trochoid pump side.

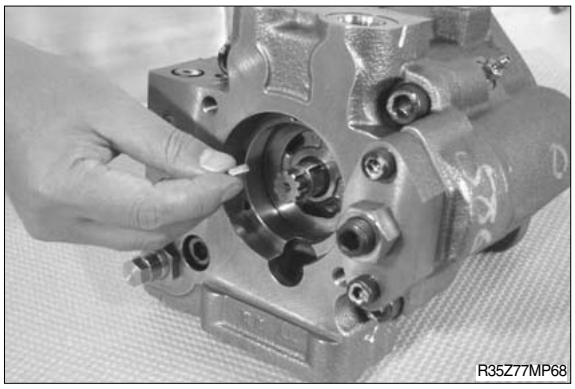

(2) Install the side plate (B) into the port plate.

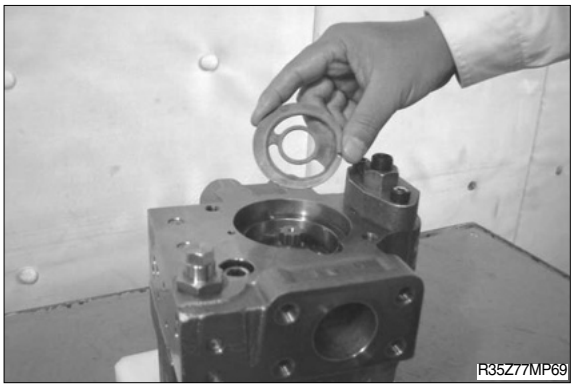

(3) Install the gear (inner rotor) into the shaft.

※ The surface of matching mark should be positioned in the side plate (B) side.

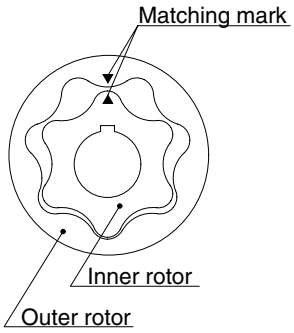

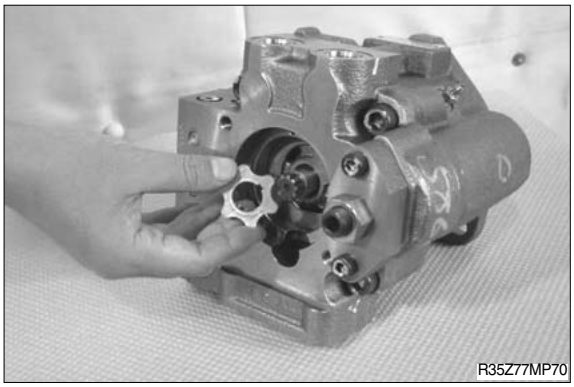

(4) Install the side plate (A) into the case.

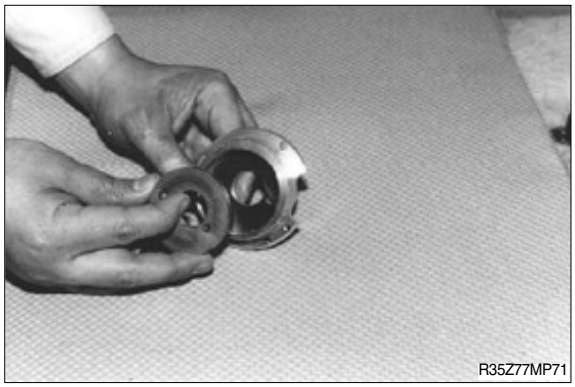

(5) Install the gear (outer rotor) into the case.

※ The surface of matching mark should be positioned in the side plate (B) side.

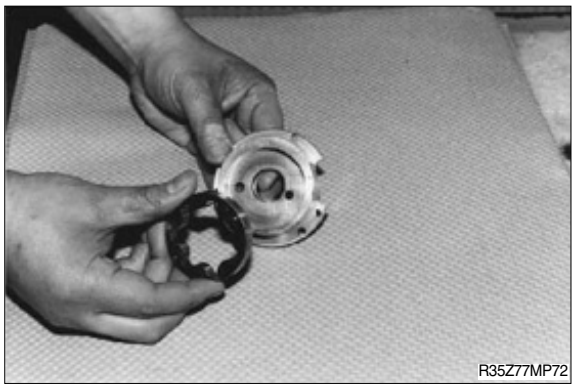

(6) Install the case into the port plate.

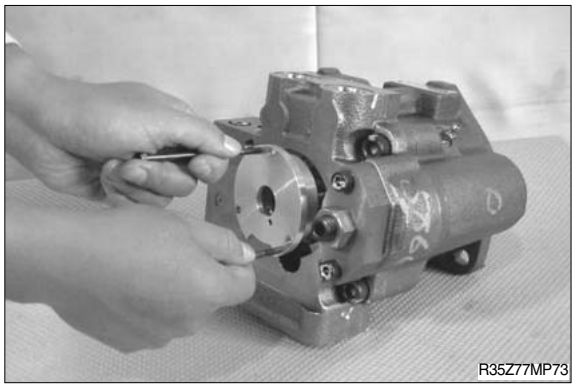

(7) Tighten the hexagon socket head cap screw. (M5×12, 3 pieces)
Hexagon socket screw key (4 mm)

· Tightening torque : 0.7~0.8 kgf · m
(5.1~6.1 lbf · ft)

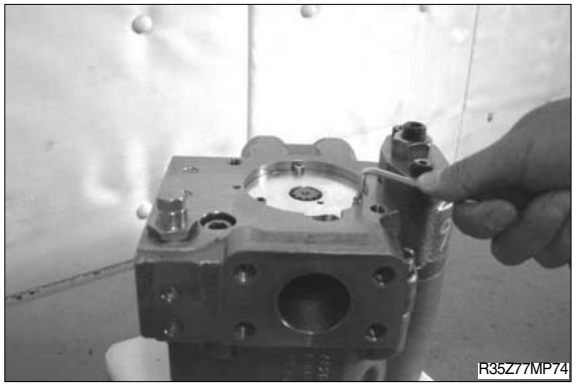

3) ATTACH THE GEAR PUMP

(1) Install the coupling to the shaft end on the main pump.

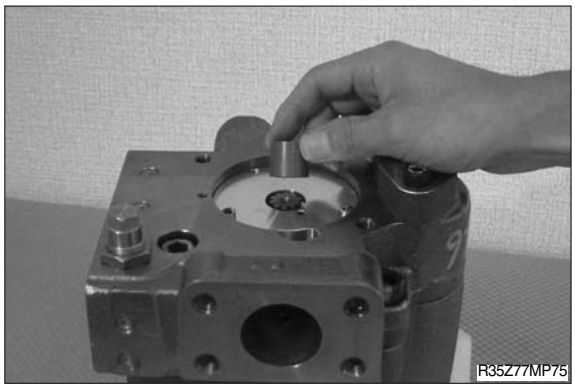

(2) Connect the main pump and the gear pump.
And fix the gear pump with the hexagon socket head cap screws.
(M10×25, 2 pieces)
Hexagon socket screw key (8 mm)

· Tightening torque : 5.6~7.0 kgf · m
(41~51 lbf · ft)

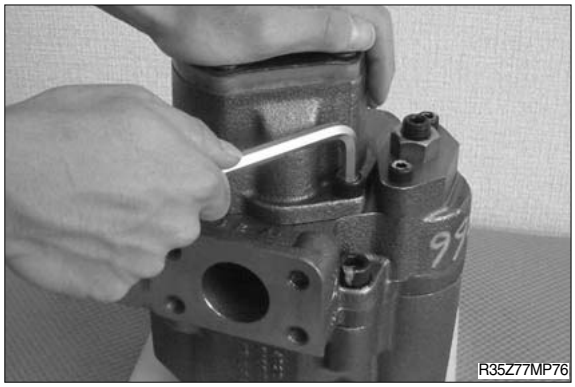

4) ASSEMBLE THE GEAR PUMP

(1) Assemble the gear pump(GSP2)

Assemble the square ring into the side plate.

Pay attention to the suction and delivery directions.

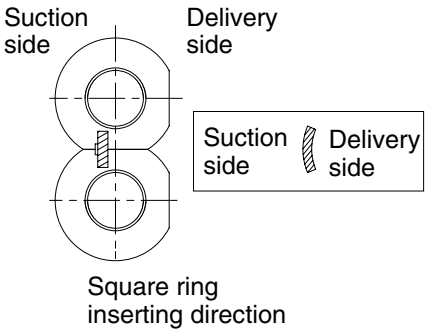

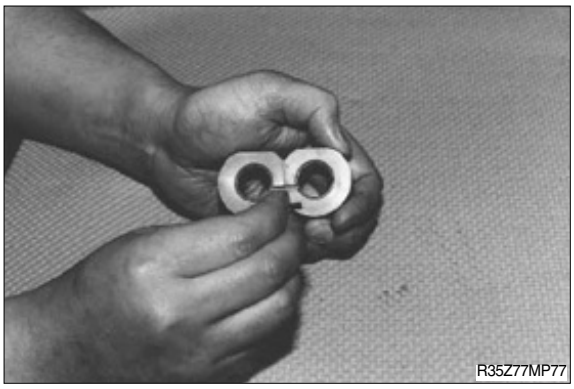

(2) Assemble the drive gear and the idle gear to the side plates.

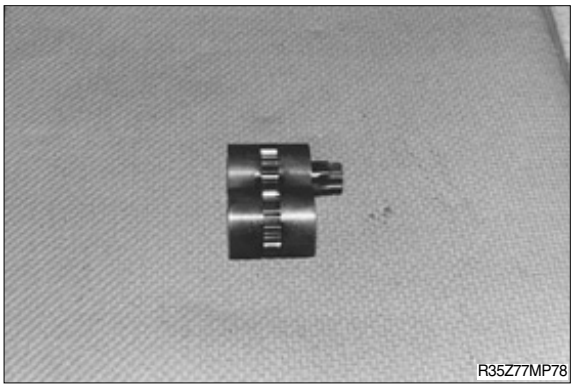

(3) Assemble the drive gear, the idle gear and the side plates in the housing.

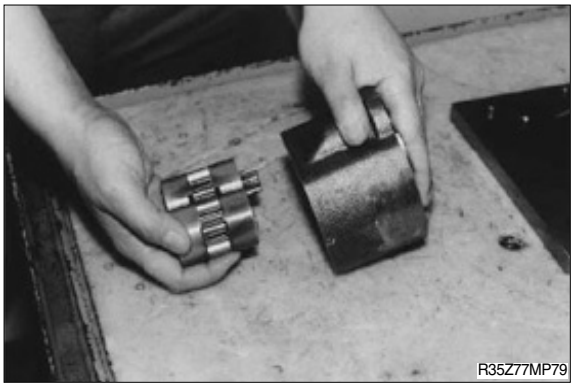

(4) Insert the O-rings into the guides, then insert them into the plate.

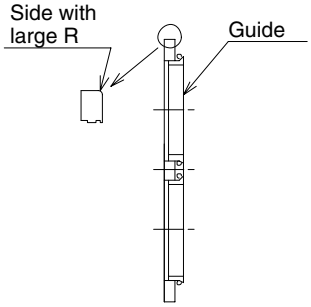

(5) Assemble the plate, guides and O-rings. Pay attention to the suction and delivery directions.

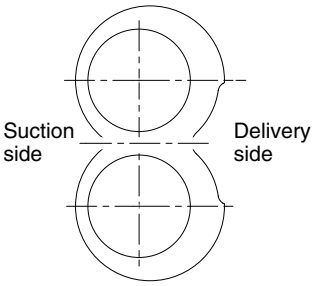

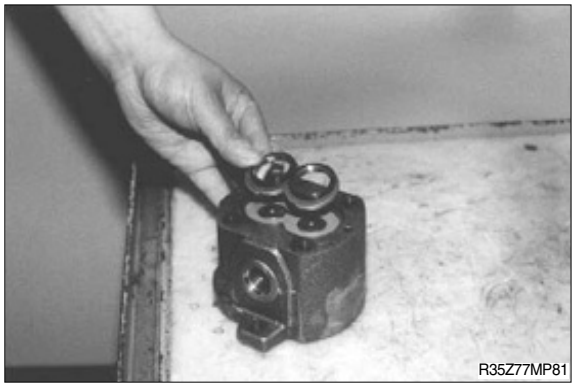

(6) Install the square ring.

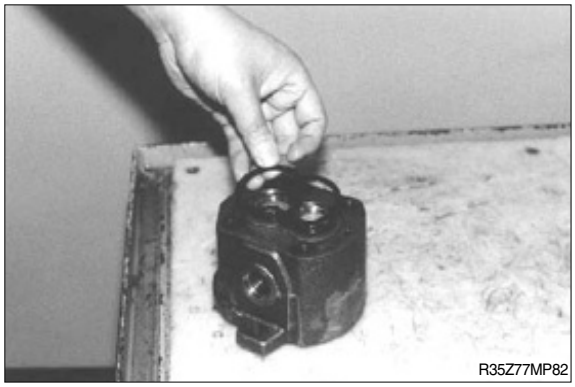

(7) Assemble the housing and the cover.

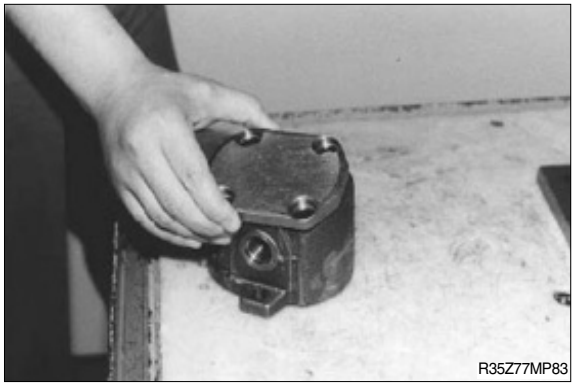

(8) Fix the housing and the cover with the hexagon socket head cap screws.
(M10 × 20, 4 pieces)
Hexagon socket screw key (8 mm)

· Tightening torque : 5.6~7.0 kgf · m
(41~51 lbf · ft)

1. REMOVAL AND INSTALL OF MOTOR

1) REMOVAL

(1) Lower the work equipment to the ground and stop the engine.

(2) Operate the control levers and pedals several times to release the remaining pressure in the hydraulic piping.

(3) Loosen the breather slowly to release the pressure inside the hydraulic tank.

⚠ Escaping fluid under pressure can penetrate the skin causing serious injury.

※ When pipes and hoses are disconnected, the oil inside the piping will flow out, so catch it in oil pan.

(4) Disconnect hydraulic hose.

(5) Disconnect pilot line hoses.

(6) Sling the control valve assembly and remove the control valve mounting bolt.
- Weight : 25kg(55lb)

(7) Remove the control valve assembly.
When removing the control valve assembly, check that all the piping have been disconnected.

2) INSTALL

(1) Carry out installation in the reverse order to removal.

(2) Bleed the air from below items.
① Cylinder(Boom, arm, bucket)
② Swing motor
③ Travel motor
※ See each item removal and install.

(3) Confirm the hydraulic oil level and recheck the hydraulic oil leak or not.

13031GE18

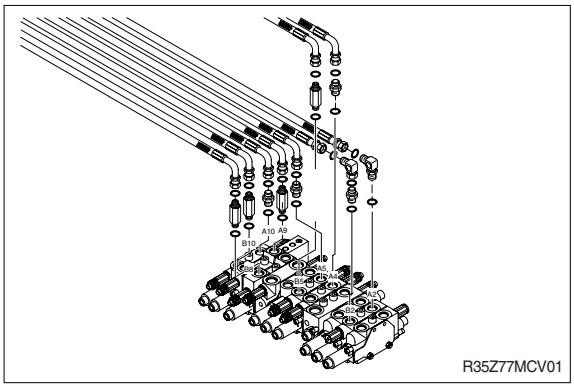
R35Z77MCV01

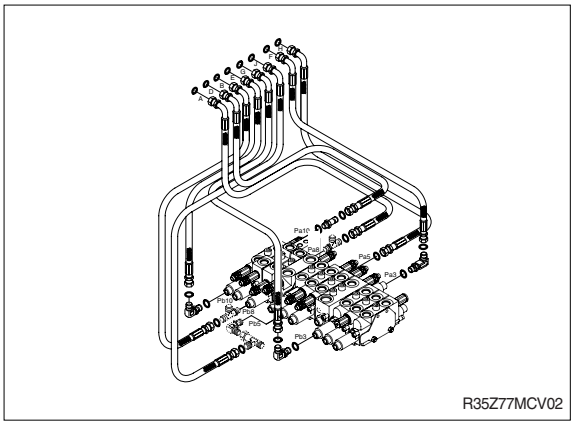
R35Z77MCV02

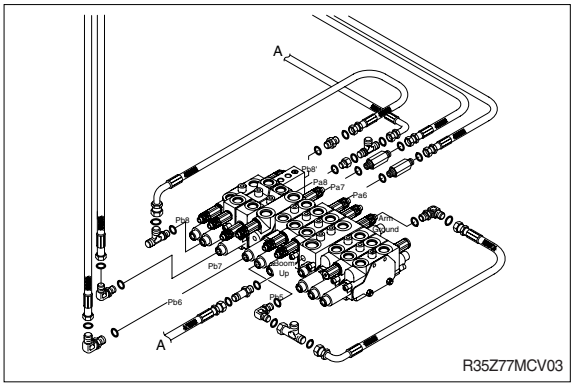

R35Z77MCV03

2. STRUCTURE(1/3)

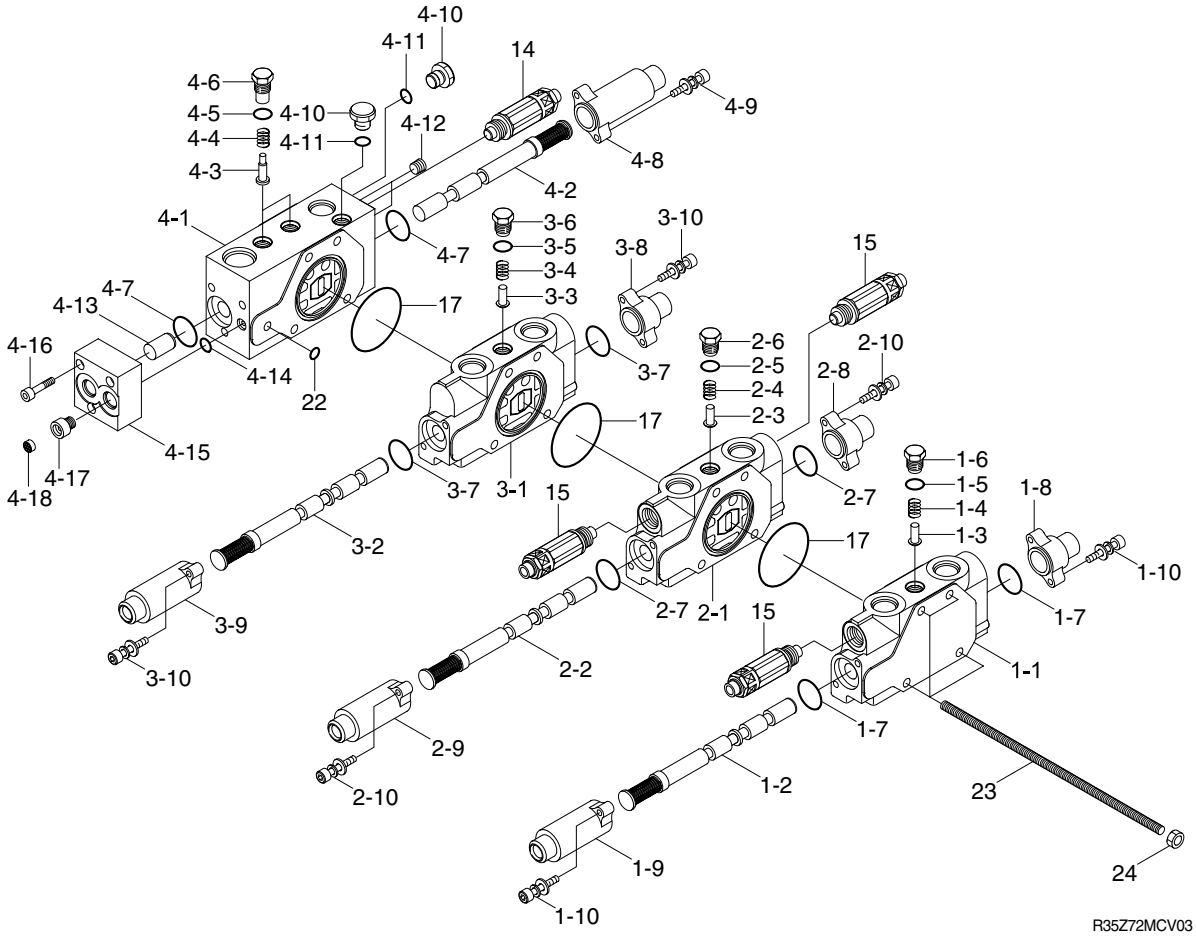

1	Dozer work block	2-9	Cover-pilot	4-6	Plug
1-1	Body-work	2-10	Bolt-soc head w/washer	4-7	O-ring
1-2	Spool assy	3	Swing work block	4-8	Cover-pilot
1-3	Poppet	3-1	Body-work	4-9	Bolt-soc head w/washer
1-4	Spring	3-2	Spool assy	4-10	Plug
1-5	O-ring	3-3	Poppet	4-11	O-ring
1-6	Plug	3-4	Spring	4-12	Plug
1-7	O-ring	3-5	O-ring	4-13	Piston
1-8	Cover-pilot	3-6	Plug	4-14	O-ring
1-9	Cover-pilot	3-7	O-ring	4-15	Body-pilot
1-10	Bolt-soc head w/washer	3-8	Cover-pilot	4-16	Bolt-soc head w/washer
2	Boom swing work block	3-9	Cover-pilot	4-17	Orifice
2-1	Body-work	3-10	Bolt-soc head w/washer	4-18	Filter-coin type
2-2	Spool assy	4	Connecting block	14	Relief valve
2-3	Poppet	4-1	Body-work	15	Overload relief valve
2-4	Spring	4-2	Spool assy	17	O-ring
2-5	O-ring	4-3	Poppet	22	O-ring
2-6	Plug	4-4	Spring	23	Bolt-tie
2-7	O-ring	4-5	O-ring	24	Nut-hex
2-8	Cover-pilot				

STRUCTURE(2/3)

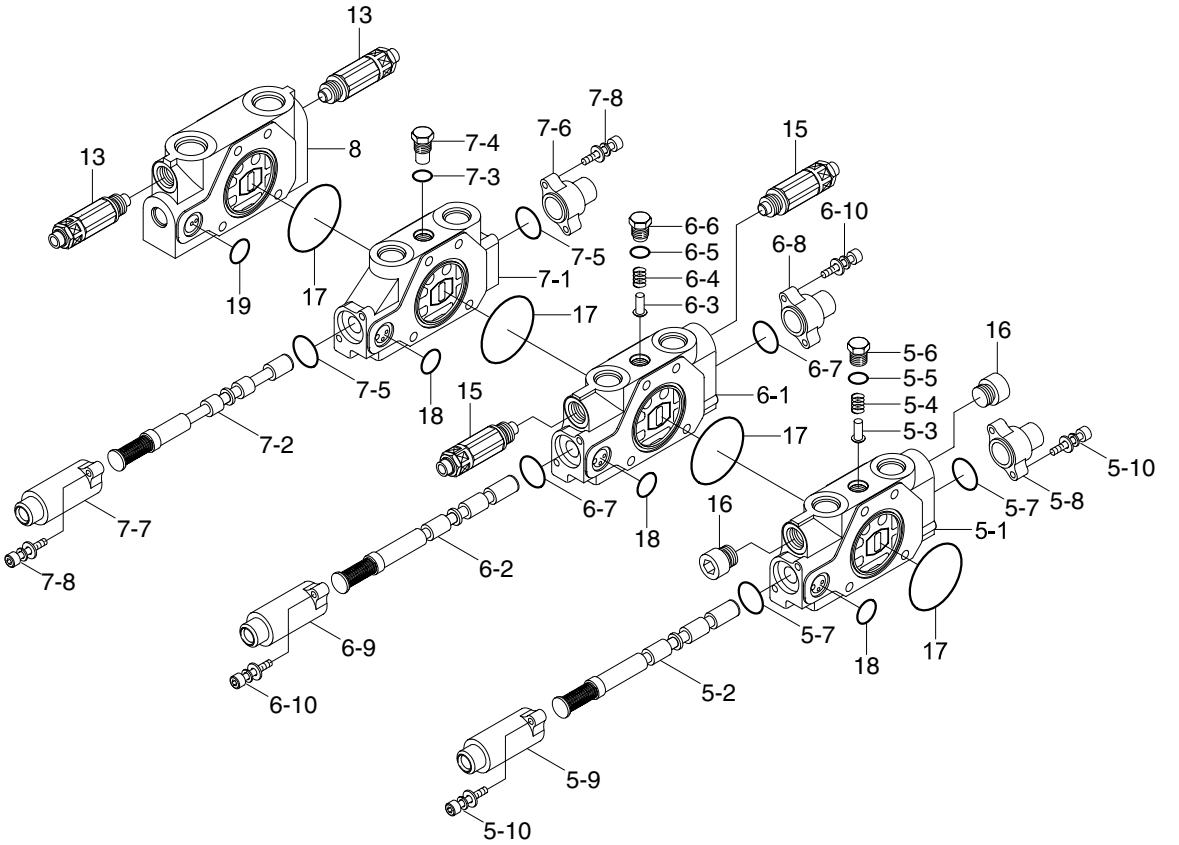

R35Z72MCV04

5	PTO work block	6-2	Spool assy	7-4	Plug
5-1	Body-work	6-3	Poppet	7-5	O-ring
5-2	Spool assy	6-4	Spring	7-6	Cover-pilot
5-3	Poppet	6-5	O-ring	7-7	Cover-pilot
5-4	Spring	6-6	Plug	7-8	Bolt-soc head w/washer
5-5	O-ring	6-7	O-ring	8	Inlet work block
5-6	Plug	6-8	Cover-pilot	13	Relief valve
5-7	O-ring	6-9	Cover-pilot	15	Overload relief valve
5-8	Cover-pilot	6-10	Bolt-soc head w/washer	16	Plug
5-9	Cover-pilot	7	Travel work block	17	O-ring
5-10	Bolt-soc head w/washer	7-1	Body work	18	O-ring
6	Arm work block	7-2	Spool assy	19	O-ring
6-1	Body-work	7-3	O-ring		

STRUCTURE(3/3)

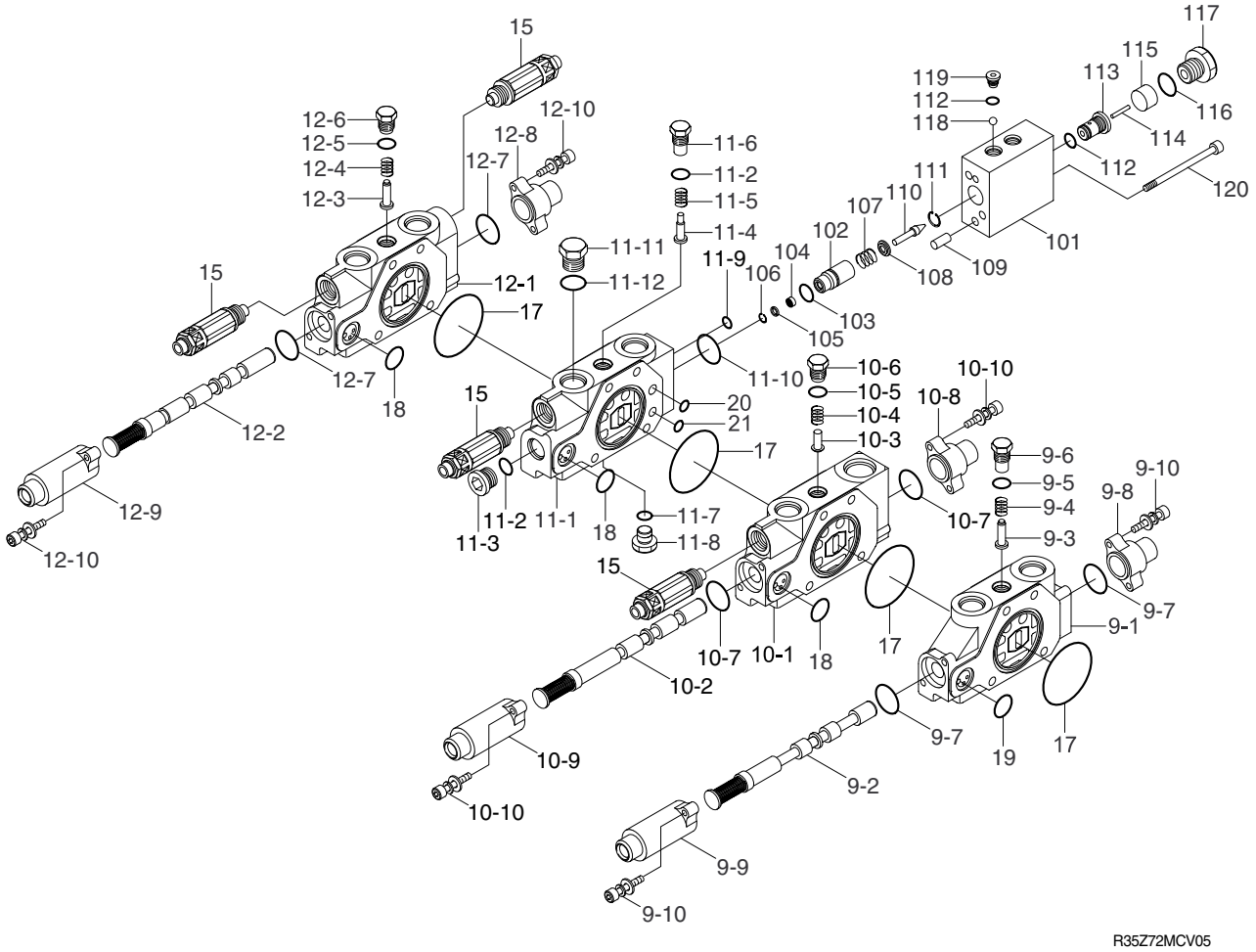

9	Travel work block	10-7	O-ring	12-1	Body-work	103	Seal
9-1	Body-work	10-8	Cover-pilot	12-2	Spool assy	104	Filter
9-2	Spool assy	10-9	Cover-pilot	12-3	Poppet	105	Spacer
9-3	Poppet	10-10	Bolt-soc head w/washer	12-4	Spring	106	Ring-retaining
9-4	Spring	11	Boom lock valve	12-5	O-ring	107	Spring A-lock valve
9-5	O-ring	11-1	Body-work	12-6	Plug	108	Spring seat
9-6	Plug	11-2	O-ring	12-7	O-ring	109	Pin
9-7	O-ring	11-3	Plug	12-8	Cover-pilot	110	Poppet
9-8	Cover-pilot	11-4	Poppet	12-9	Cover-pilot	111	Ring-retaining
9-9	Cover-pilot	11-5	Spring	12-10	Bolt-soc head w/washer	112	O-ring
9-10	Bolt-soc head w/washer	11-6	Plug	15	Overload relief valve	113	Guide-piston
10	Boom work block	11-7	O-ring	17	O-ring	114	Piston A1
10-1	Body-work	11-8	Plug	18	O-ring	115	Piston B
10-2	Spool assy	11-9	O-ring	19	O-ring	116	O-ring
10-3	Poppet	11-10	O-ring	20	O-ring	117	Connector
10-4	Spring	11-11	Plug	21	O-ring	118	Ball-steel
10-5	O-ring	11-12	O-ring	101	Cover-lock valve	119	Plug
10-6	Plug	12	Bucket work block	102	Lock valve	120	Bolt-hex. socket head

3. DISASSEMBLY AND ASSEMBLY

1) GENERAL PRECAUTIONS

(1) All hydraulic components are manufactured to a high precision. Consequently, before disassembling and assembling them, it is essential to select an especially clean place.

(2) In handling a control valve, pay full attention to prevent dust, sand, etc. from entering into it.

(3) When a control valve is to be remove from the machine, apply caps and masking seals to all ports. Before disassembling the valve, recheck that these caps and masking seals are fitted completely, and then clean the outside of the assembly. Use a proper bench for working. Spread paper or a rubber mat on the bench, and disassemble the valve on it.

(4) Support the body section carefully when carrying or transferring the control valve. Do not lift by the exposed spool, end cover section etc.

(5) After disassembling and assembling of the component it is desired to carry out various tests(For the relief characteristics, leakage, flow resistance, etc.), but hydraulic test equipment is necessary for these tests. Therefore, even when its disassembling can be carried out technically, do not disassemble such components that cannot be tested, adjusted, and so on. Additionally one should always prepare clean cleaning oil, hydraulic oil, grease, etc. beforehand.

2) TOOLS

Before disassembling the control valve, prepare the following tools beforehand.

Name of tool	Quantity	Size(mm)
Vice mounted on bench(Soft jaws)	1 unit	
Hexagon wrench	Each 1 piece	5, 6, 10, 12 and 14
Socket wrench	Each 1 piece	5 and 6
Spanner	Each 1 piece	13, 21 and 30
Rod	1 piece	Less than 10×250

3) DISASSEMBLY

(1) Disassembly of spools(Pilot type)

① Loosen hexagon socket head bolts(10) with washer.
(Hexagon wrench : 5㎜)

② Remove the pilot cover(8).

※ Pay attention not to lose the O-ring(7) under the pilot cover.

③ Remove the spool assembly(2) from the body by hand slightly.

※ When extracting each spool from its body, pay attention not to damage the body.

※ When extracting each spool assembly, it must be extracted from spring side only.

※ When any abnormal parts are found, replace it with completely new spool assembly.

※ When disassembled, tag the components for identification so that they can be reassembled correctly.

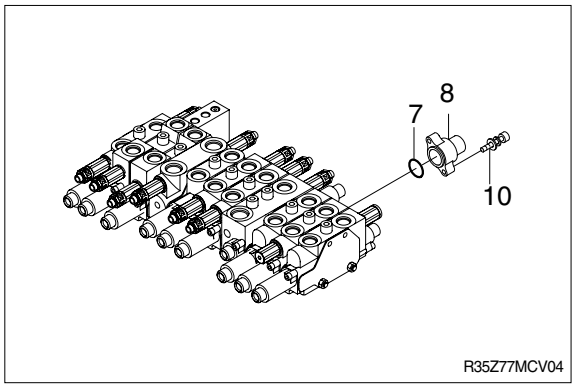

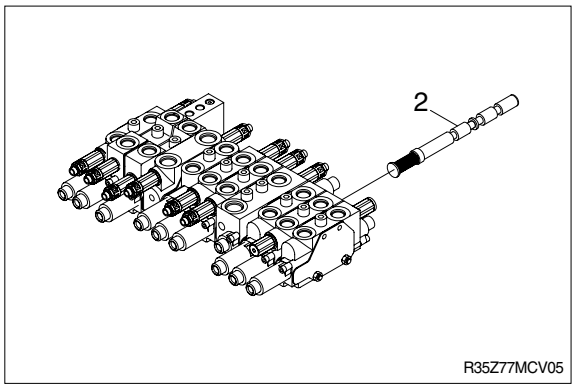

(2) Disassembly of holding valve(Boom 1)

① Loosen hexagon socket head bolts(120). (Hexagon wrench : 5㎜)

② Remove the holding valve.

※ Pay attention not to lose the O-ring and the poppet under the pilot cover.

※ Pay attention not to damage the "piston A" under pilot cover.

※ When any abnormal parts are found, replace it with completely new holding valve assembly.

※ When disassembled, tag the components for identification so that they can be reassembled correctly.

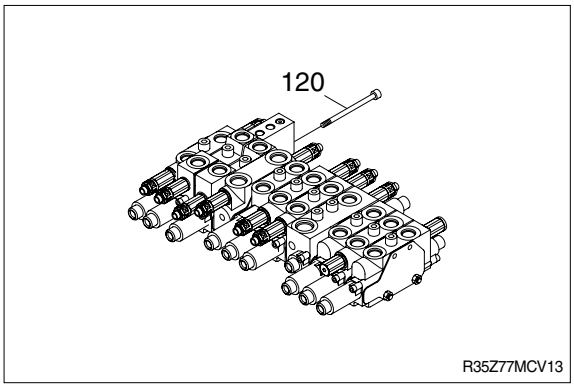

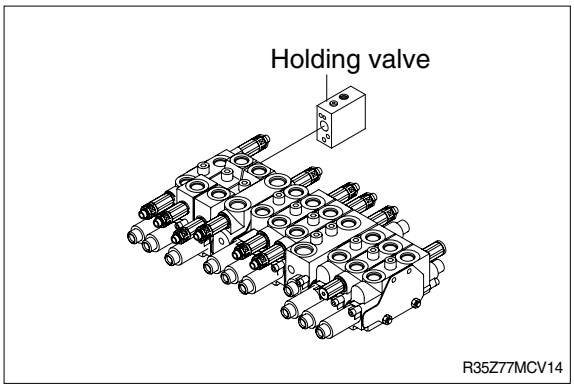

(3) Disassembly of the load check valve and the negative relief valve

① The load check valve

a. Fix the body to suitable work bench.

※ Pay attention not to damage the body.

b. Loosen the plug(6)
(Hexagon wrench : 10㎜).

c. Remove the O-ring(5), spring(4) and the load check valve(3) with pincers or magnet.

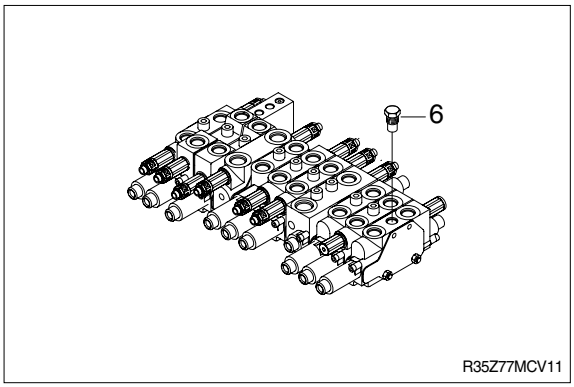

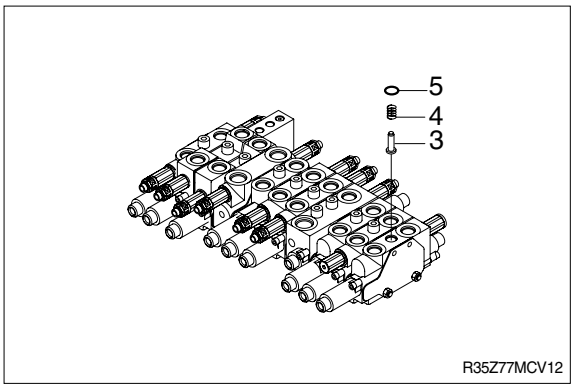

(4) Disassembly of the main and overload relief valve

① Fix the body to suitable work bench.

② Remove the main relief valve(14).
(Spanner : 30㎜)

③ Remove the overload relief valve(15).
(Spanner : 22㎜)

※ When disassembled, tag the relief valve for identification so that they can be reassembled correctly.

※ Pay attention not to damage seat face.

※ When any abnormal parts are found, replace it with completely new relief valve assembly.

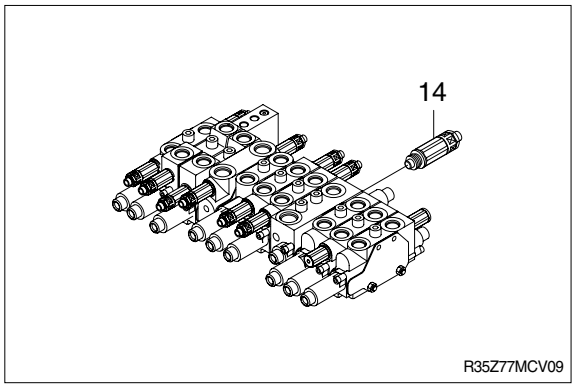

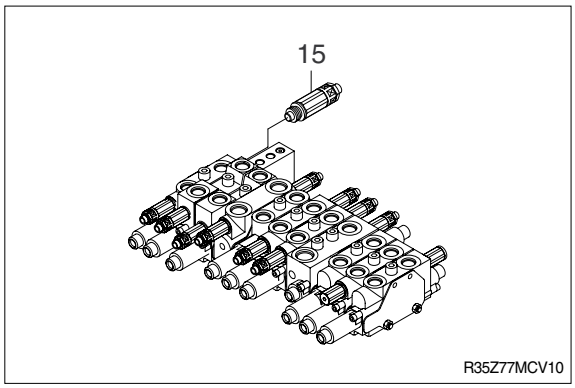

(5) Disassembly of the block assembly

① Fix the body to suitable work bench.

② Remove the nut(24).
(Spanner : 13mm)

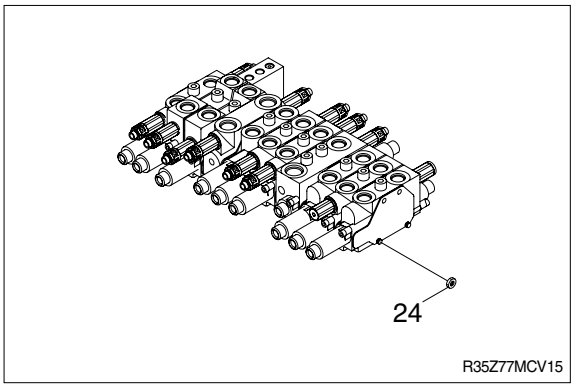

※ Do not removed the tie bolt(23).

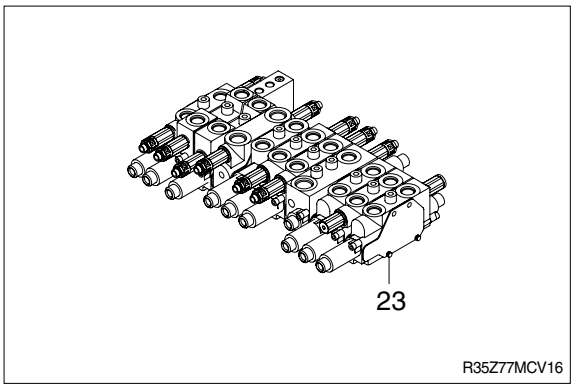

(6) Inspection after disassembly

Clean all disassembled parts with clean mineral oil fully, and dry them with compressed air. Then, place them on clean papers or cloths for inspection.

① Control valve

a. Check whole surfaces of all parts for burrs, scratches, notches and other defects.
b. Confirm that seal groove faces of body and block are smooth and free of dust, dent, rust etc.
c. Correct dents and damages and check seat faces within the body, if any, by lapping.
※ Pay careful attention not to leave any lapping agent within the body.
d. Confirm that all sliding and fitting parts can be moved manually and that all grooves and path's are free foreign matter.
e. If any spring is broken or deformed, replace it with new one.
f. When a relief valve does not function properly, repair it, following it's the prescribed disassembly and assembly procedures.
g. Replace all seals and O-rings with new ones.

② Relief valve

a. Confirm that all seat faces at ends of all poppets and seats are free of defects and show uniform and consistent contact faces.
b. Confirm manually that main poppet and seat can slide lightly and smoothly.
c. Confirm that outside face of main poppet and inside face of seat are free from scratches and so on.
d. Confirm that springs are free from breakage, deformation, and wear.
e. Confirm that orifices of main poppet and seat section are not clogged with foreign matter.
f. Replace all O-rings with new ones.
g. When any light damage is found in above inspections, correct it by lapping.
h. When any abnormal part is found, replace it with a completely new relief valve assembly.

4) ASSEMBLY

(1) General precaution

① In this assembly section, explanation only is shown.
For further understanding, please refer to the figures shown in the previous structure & disassembly section.

② Pay close attention to keeping all seals free from handling damage and inspect carefully for damage before using them.

③ Apply clean grease or hydraulic oil to the seal so as to ensure it is fully lubricated before assembly.

④ Do not stretch seals so much as to deform them permanently.

⑤ In fitting O-rings, pay close attention not to roll them into their final position in addition, a twisted O-ring cannot easily untwist itself naturally and could thereby cause inadequate sealing and thereby both internal and external oil leakage.

⑥ Tighten fitting bolts for all sections with a torque wrench adjusted to the respective tightening torque.

⑦ Do not reuse removed O-rings and seals.

(2) Load check valve

① Assemble the load check valve(3) and O-ring(5), spring(4).

② Put O-rings on to plug(6).

③ Tighten plug to the specified torque.

- Hexagon wrench : 8mm
- Tightening torque : 3.7kgf · m (26.7lbf · ft)

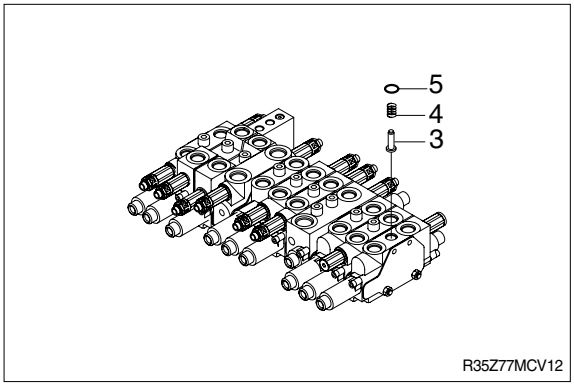

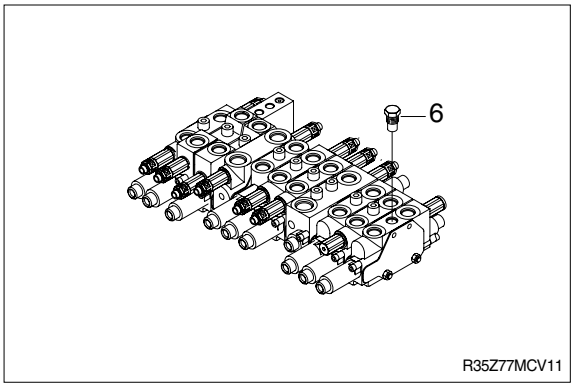

(3) Main relief, port relief valves

① Install the main relief valve(14).
- Spanner : 30mm
- Tightening torque : 6kgf · m(43.4lbf · ft)

② Install the over load relief valve(15).
- Spanner : 22mm
- Tightening torque : 4kgf · m(28.9lbf · ft)

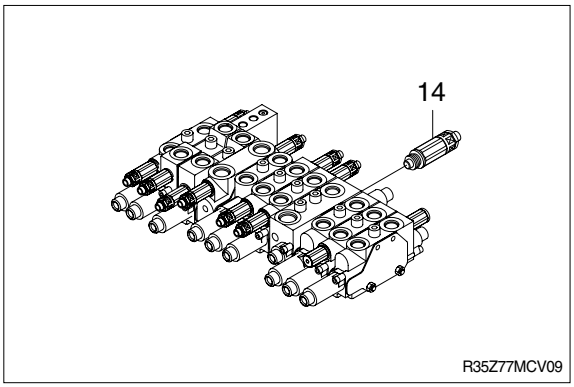

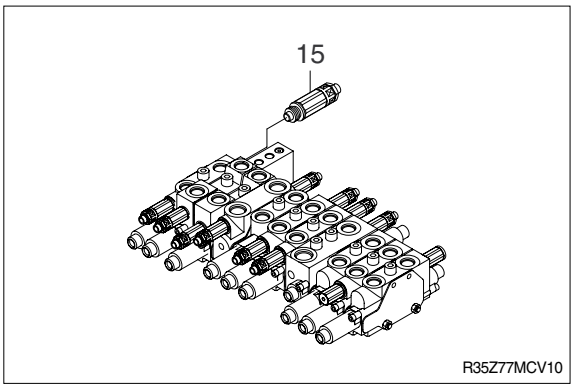

(4) Main spools

① Carefully insert the previously assembled spool assemblies into their respective bores within of body.

※ **Fit spool assemblies into body carefully and slowly. Do not under any circumstances push them forcibly in.**

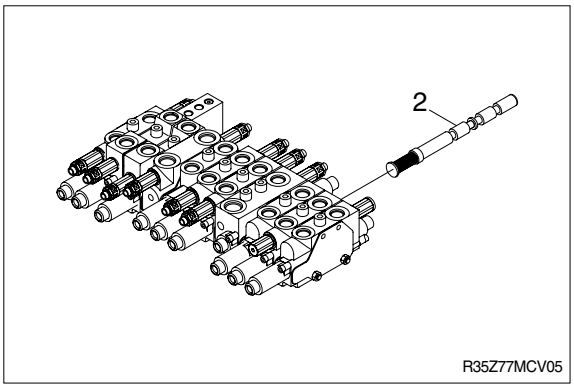

(5) Covers of pilot type

① Fit spool covers(8) tighten the hexagonal socket head bolts(10) with washer to the specified torque.
- Hexagon wrench : 5mm
- Tightening torque : 1~1.1kgf · m (7.2~7.9lbf · ft)

※ Confirm that O-rings(7) have been fitted.

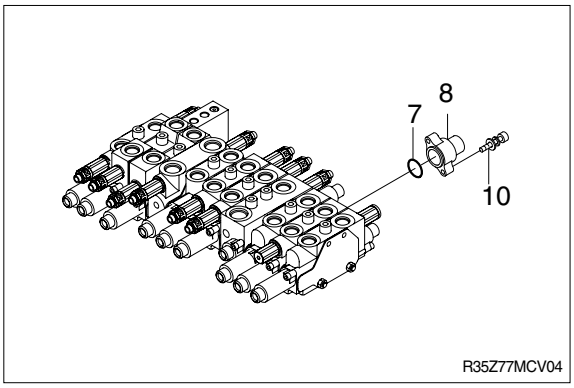

(6) Holding valve

① Fit the holding valve to the body and tighten hexagon socket head bolt(120) to specified torque.

- Hexagon wrench : 5mm
- Tightening torque : 1.1kgf · m (7.9lbf · ft)

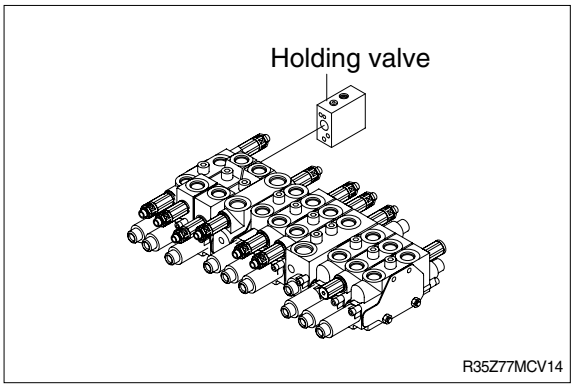

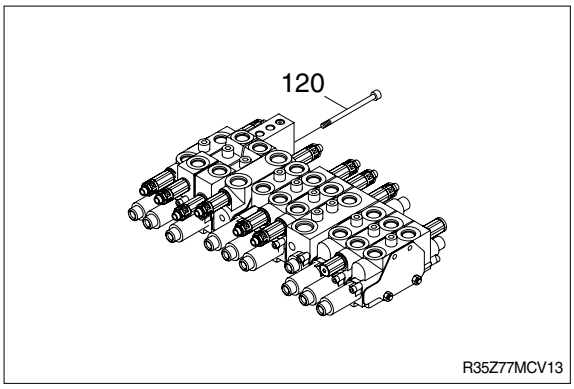

1. REMOVAL AND INSTALL OF MOTOR

1) REMOVAL

(1) Lower the work equipment to the ground and stop the engine.

(2) Operate the control levers and pedals several times to release the remaining pressure in the hydraulic piping.

(3) Loosen the breather slowly to release the pressure inside the hydraulic tank.

⚠ Escaping fluid under pressure can penetrate the skin causing serious injury.

※ When pipes and hoses are disconnected, the oil inside the piping will flow out, so catch it in oil pan.

(4) Disconnect hose assembly(78, 102, 103).

(5) Disconnect pilot line hoses(27, 29, 32).

(6) Sling the swing motor assembly(1) and remove the swing motor mounting bolts (24).

※ Motor device weight : 39kg(86lb)

(7) Remove the swing motor assembly.

※ When removing the swing motor assembly, check that all the piping have been disconnected.

2) INSTALL

(1) Carry out installation in the reverse order to removal.

(2) Bleed the air from the swing motor.

① Remove the air vent plug.

② Pour in hydraulic oil until it overflows from the port.

③ Tighten plug lightly.

④ Start the engine, run at low idling and check oil come out from plug.

⑤ Tighten plug fully.

(3) Confirm the hydraulic oil level and check the hydraulic oil leak or not.

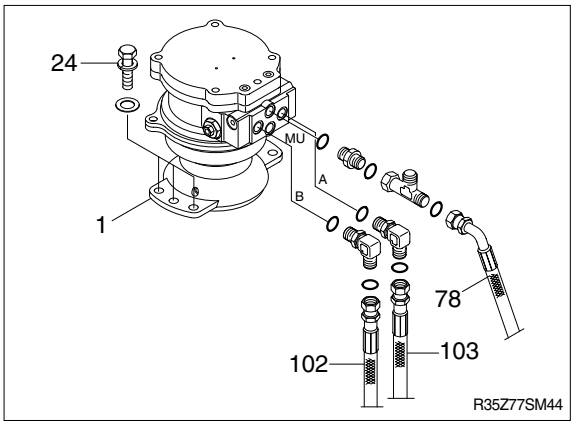

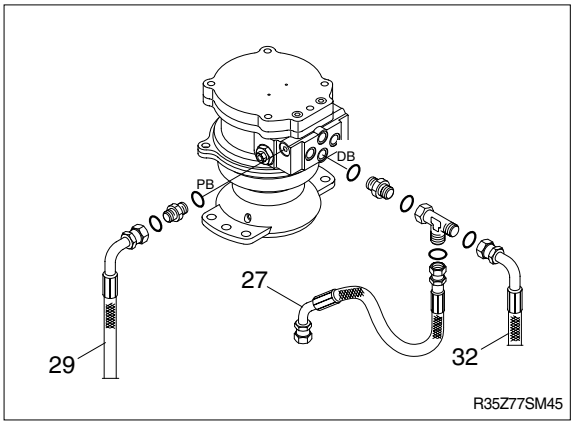

2. DISASSEMBLY AND ASSEMBLY OF SWING MOTOR

1) STRUCTURE

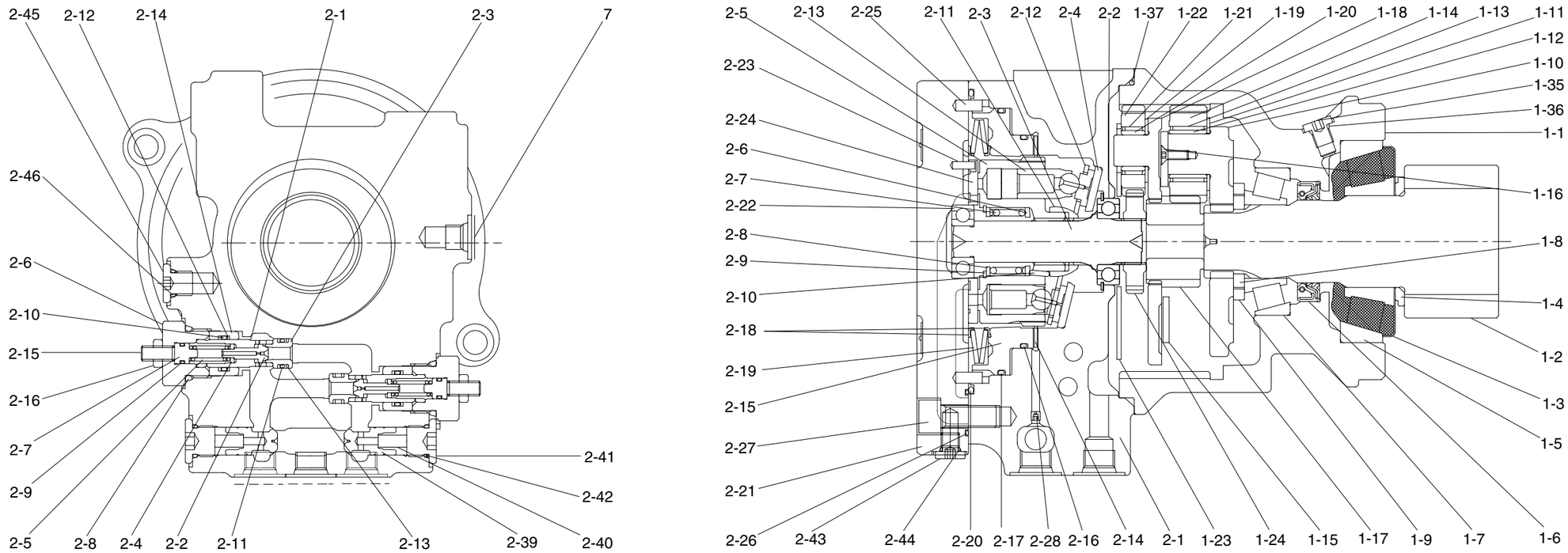

R35Z72SM12

1	Gear box	1-11	Thrust washer	1-22	Planetary gear	2-5	Cylinder block	2-16	O-ring	2-27	Socket head bolt
1-1	Housing	1-12	Inner race	1-23	Thrust plate	2-6	Collar	2-17	O-ring	2-28	Orifice
1-2	Pinion shaft	1-13	Needle bearing	1-24	Drive gear	2-7	Spring	2-18	Spring seat	2-38	Relief valve assy
1-3	Plate	1-14	Planetary gear B	1-35	Plug	2-8	Washer	2-19	Spring	2-39	Check valve
1-4	Collar	1-15	Thrust plate	1-36	O-ring	2-9	Snap ring	2-20	O-ring	2-40	Spring
1-5	Tapper roller bearing	1-16	Screw	1-37	O-ring	2-10	Pin	2-21	Cover	2-41	Plug
1-6	Oil seal	1-17	Sun gear B	2	Axial motor piston	2-11	Retainer holder	2-22	Ball bearing	2-42	O-ring
1-7	Tapper roller bearing	1-18	Holder	2-1	Case	2-12	Retainer plate	2-23	Pin	2-43	Plug
1-8	Plate	1-19	Thrust washer	2-2	Ball bearing	2-13	Piston assy	2-24	Valve plate	2-44	O-ring
1-9	Collar	1-20	Inner race	2-3	Shaft	2-14	Disc	2-25	Pin	2-45	Plug
1-10	Holder	1-21	Needle bearing	2-4	Thrust plate	2-15	Brake piston	2-26	O-ring	2-46	O-ring

2) DISASSEMBLY

Disassemble the parts by the following procedure.

(1) Separating the motor and the reduction gear

Secure the motor assembly in a vice and remove the socket head bolt (3).

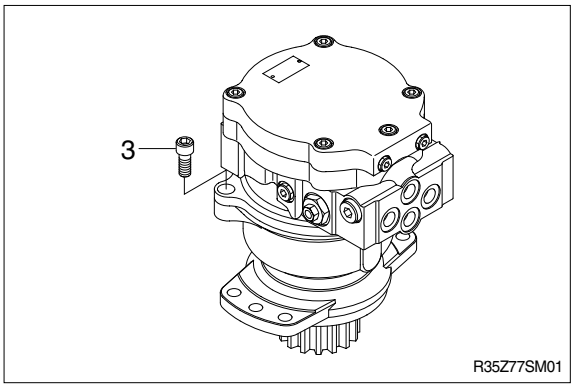

(2) Disassembling the motor

① Secure the motor assembly in a vice. Remove the socket head bolts (2-27) and separate the cover (2-21).

※ When separating the cover (2-21), be careful not to drop the valve plate (2-24).

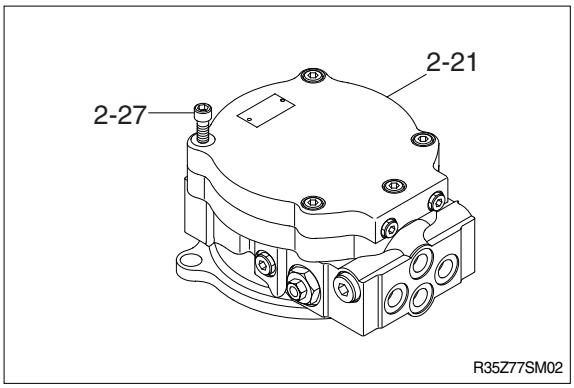

② Remove the valve plate (2-24) and the pin (2-23).

※ The valve plate (2-24) may remain on the motor side.

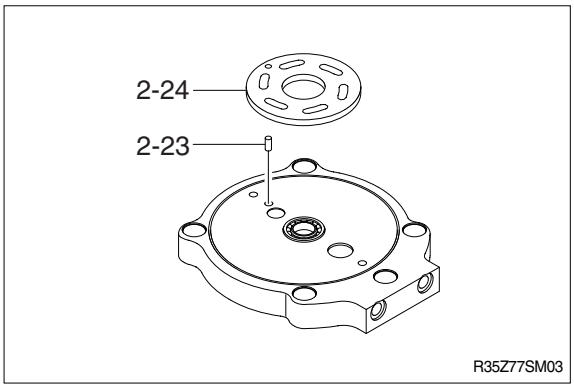

③ Remove the bearing (2-22). Remove the O-ring (2-26).

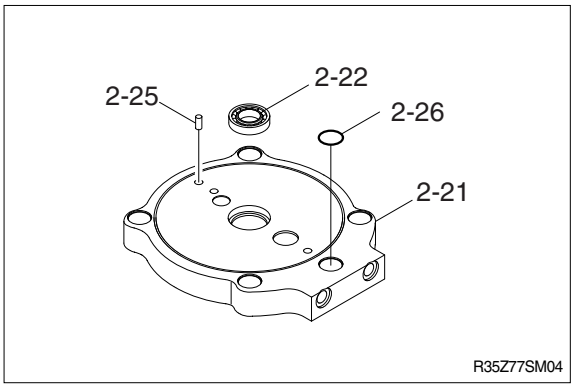

④ Disassemble the check valve.

a. Loosen to remove the plug (2-41).

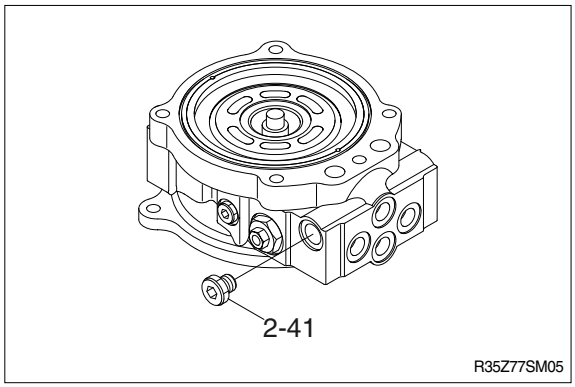

b. Remove the spring (2-40) and the check valve (2-39).

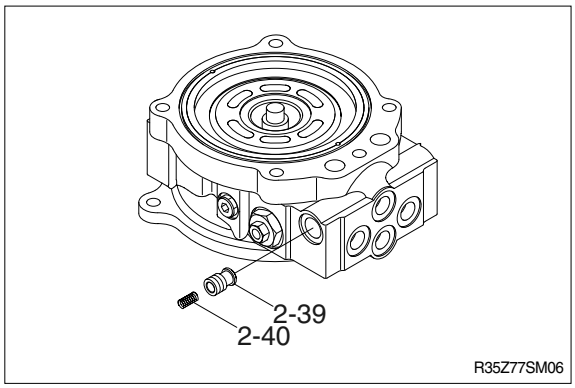

⑤ Remove the relief valve.

a. Loosen the plug (2-38-6) to remove the relief valve assembly (2-38).

※ Do not move the adjuster kit (2-38-7). Otherwise, the set pressure will change.

※ Do not disassemble the relief valve assembly (2-38) because it is a functional component.

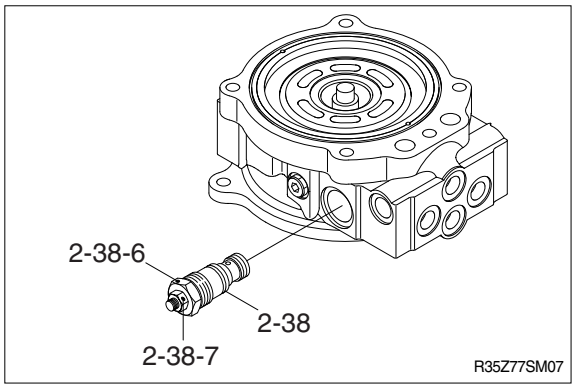

⑥ Remove the disc spring assembly (2-19) and the spring seat (2-18), and utilizing the gage port of the case (2-1), remove the parking brake piston (2-15).

※ The piston may be ejected by the air pressure. Exercise sufficient care during removal. At the beginning of the work, set a lower air pressure and adjust it while checking the piston for ejection.

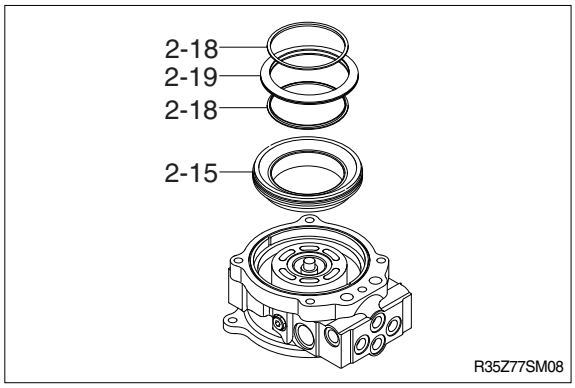

⑦ Remove the cylinder block and other associated parts.

(2-5) Cylinder block
(2-6) Collar
(2-7) Spring
(2-8) Washer
(2-9) Snap ring
(2-10) Pin
(2-11) Retainer holder
(2-12) Retainer plate
(2-13) Piston assembly
(2-14) Disc(Parking brake spec. only)

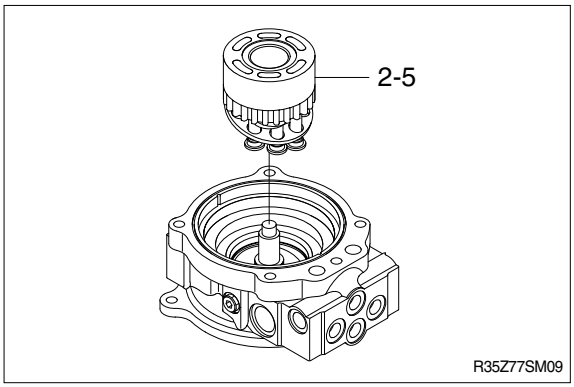

⑧ Remove the retainer plate (2-12) and the piston assembly (2-13).

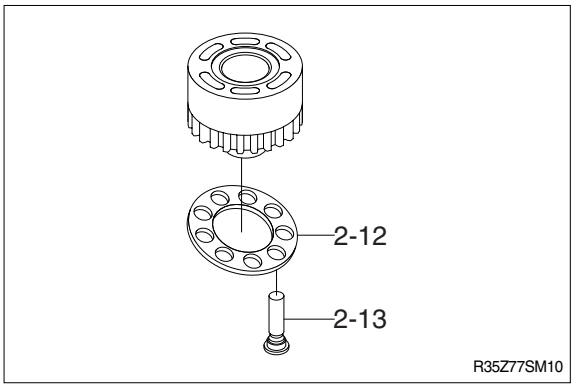

⑨ Remove the pin (2-10) and the retainer holder (2-11).

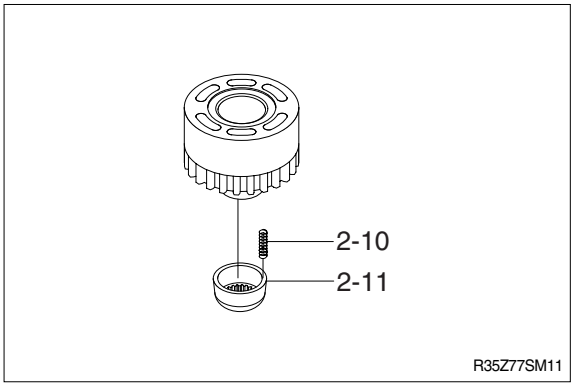

⑩ While pushing the washer (2-8), remove the snap ring (2-9).

⑪ Remove the collar (2-6), the spring (2-7) and the washer (2-8).

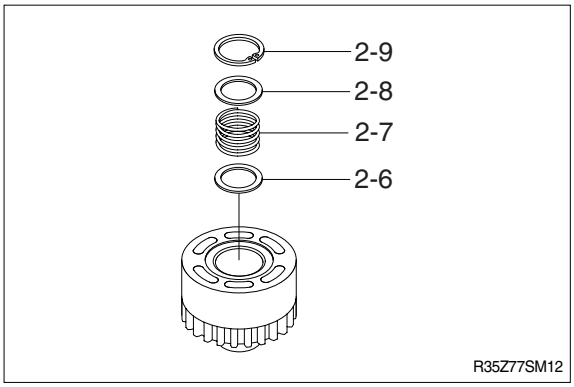

⑫ Remove the thrust plate (2-4).

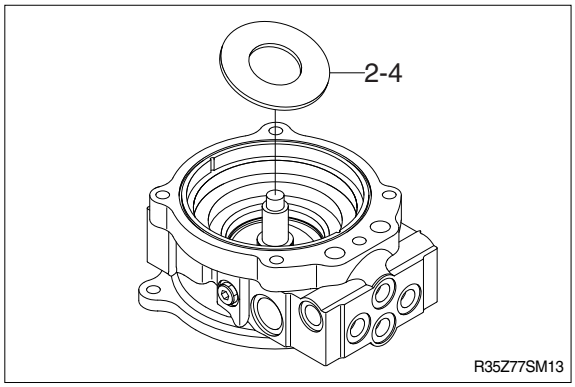

⑬ Lightly strike the end of the shaft (2-3) with a plastic hammer to remove the shaft.

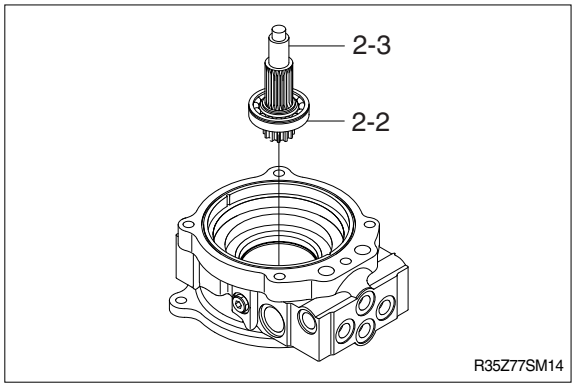

⑭ Disassemble the bearing (2-2) and the ball bearing (2-3).

※ The disassembled bearing must not be used.

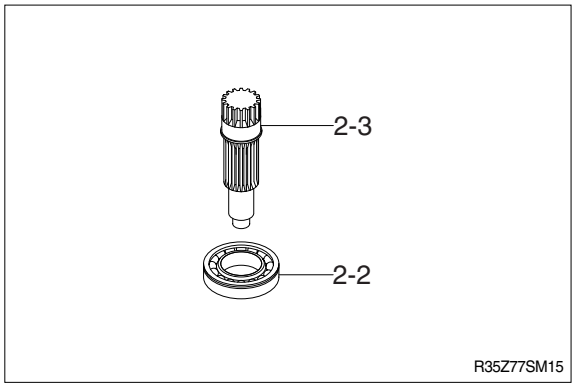

(3) Disassembling the reduction gear

① Remove the following parts.

(1-37) O-ring
(1-23) Thrust plate
(1-24) Drive gear
(1-22) Planetary gear
(1-21) Needle bearing
(1-20) Inner race
(1-19) Thrust washer
(1-18) Holder

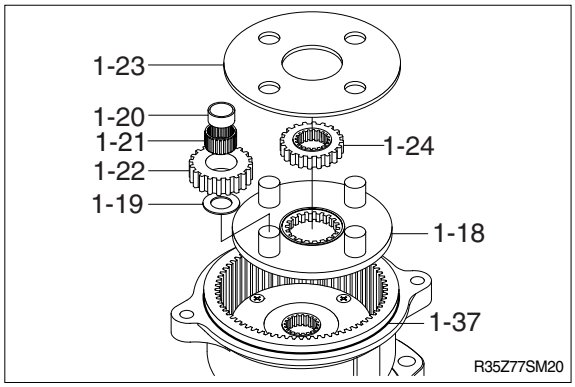

② Remove the sun gear (1-17).

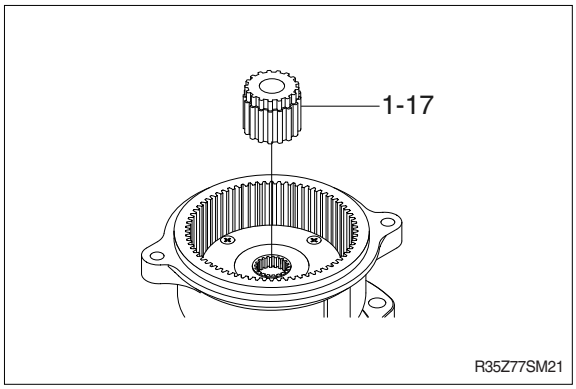

③ Remove the holder (1-11) and other associated parts.

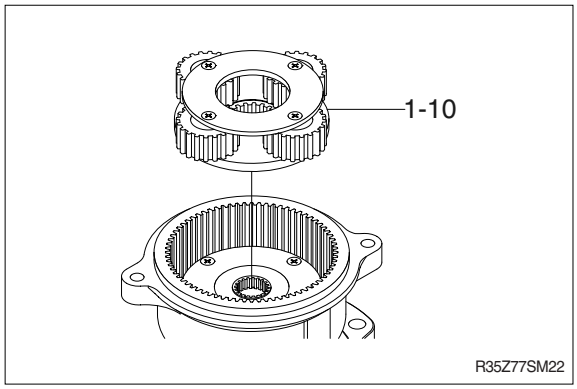

¤Œ Secure the holder (1-11) in a vice and loosen the screw (1-16) to remove the thrust plate (1-15).

※ The screw is hard to remove because loctite was used during assembly. To facilitate the removal of the screw, warm the screw with a drier.

⑤ Remove the following parts.

(1-14) Planetary gear
(1-13) Needle bearing
(1-12) Inner race

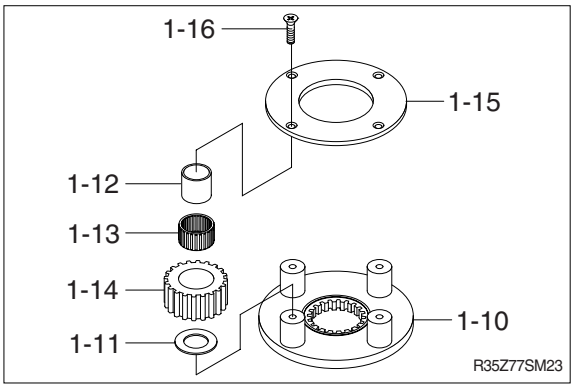

※ When replacing the taper roller bearings (1-6) and (1-8), the collar (1-3) and the plate (1-4), they are to be replaced by the body assembly.

⑥ Remove the following parts.

(1-9) Plate
(1-10) Collar

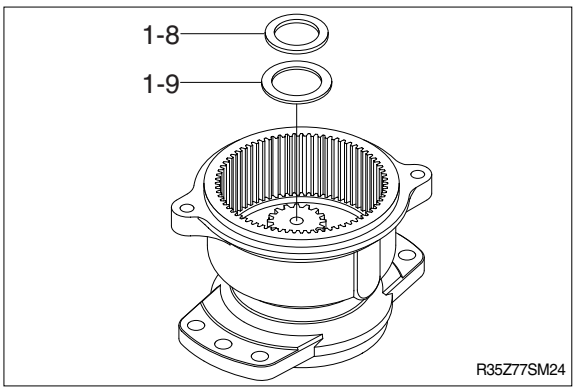

⑦ Remove the pinion shaft (1-2)

※ When removing the shaft, be careful not to drop it. If it is hard to remove, lightly strike it with a plastic hammer.

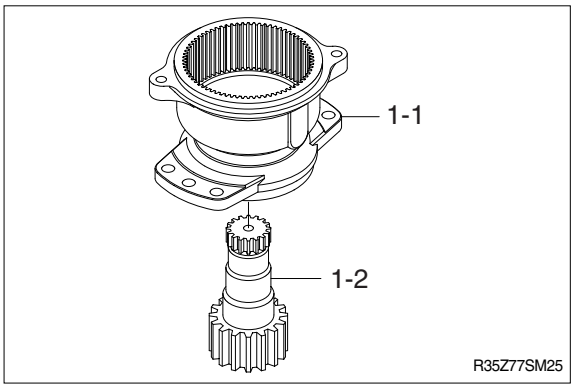

⑧ Remove the inner race of the taper roller bearing (1-7).

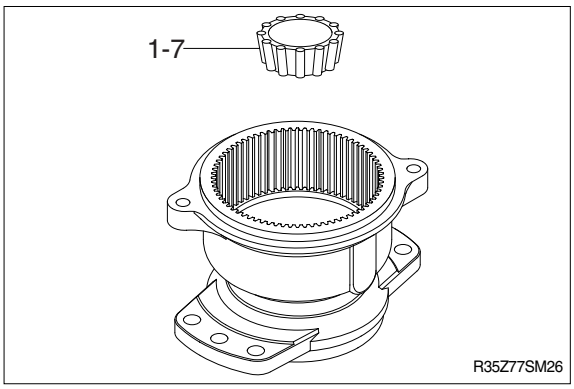

⑨ Break the oil seal (1-6) to remove it.

※ The removed oil seal must not be used again.
When removing it, exercise care to prevent damage to the outer races of the taper roller bearing (1-8) and (1-6).

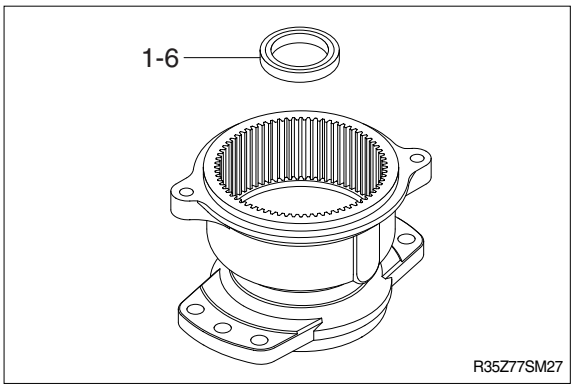

⑩ Remove the outer race of the taper roller bearing (1-8) and the plug (1-35).

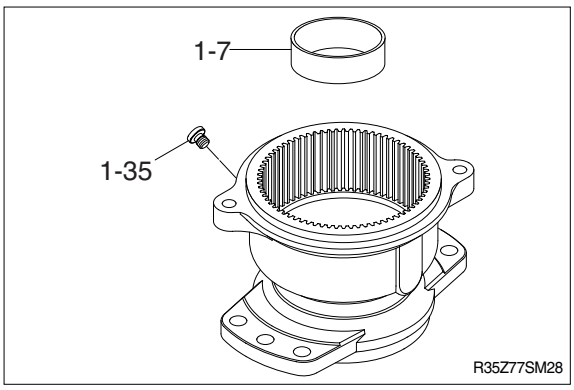

3) ASSEMBLY

Assemble the parts by the following procedure.

(1) Assembling the motor

① Install the relief valve assembly (2-38).

· Tightening torque : 157±10 N¡/m
161±1 kgf · m

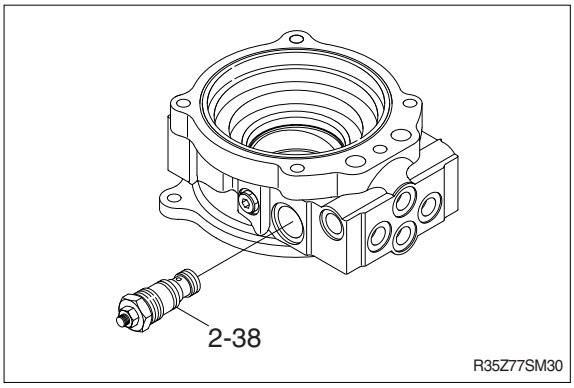

② Assemble the check valve (2-39) and the spring (2-40).

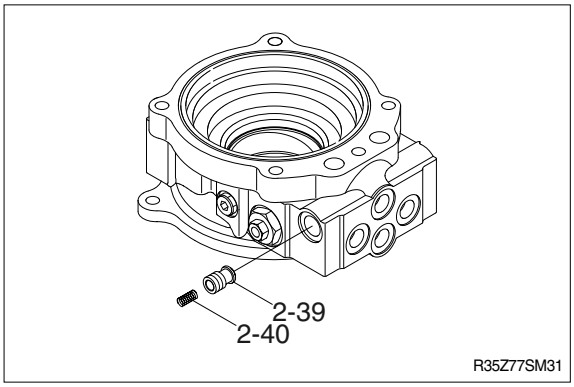

③ Install the plug (2-41).

· Tightening torque : 39.2±2.0 N¡/m
4.0±0.2 kgf · m

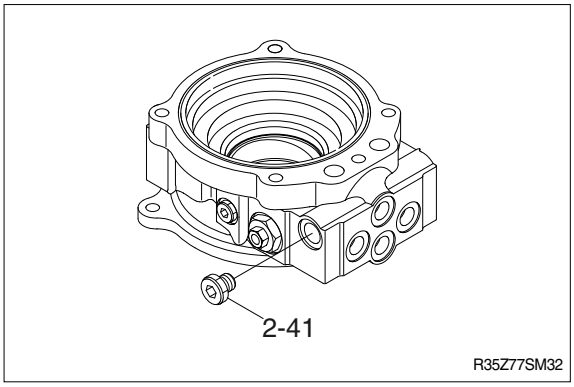

④ Assemble the collar (2-6), the spring (2-7) and the washer (2-8) in the cylinder block (2-5).

※ Be sure to assemble the collar (2-6) in the correct direction.

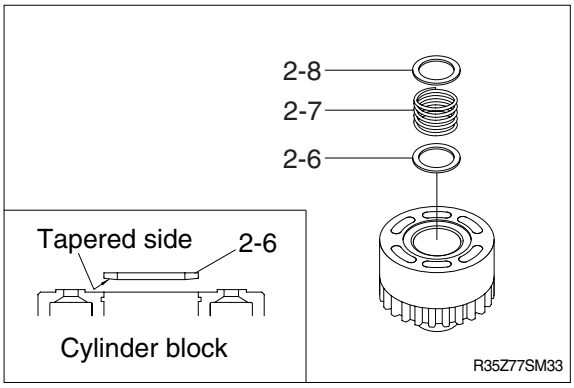

⑤ While pushing the washer (2-8), assemble the snap ring (2-9).

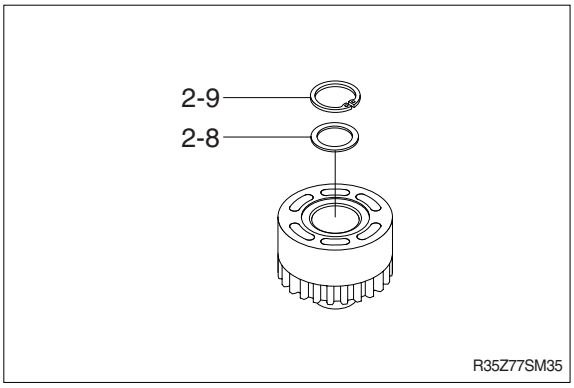

⑥ Apply grease to the pin (2-10) and assemble it in the cylinder block (2-5).

⑦ Assemble the retainer holder (2-11).

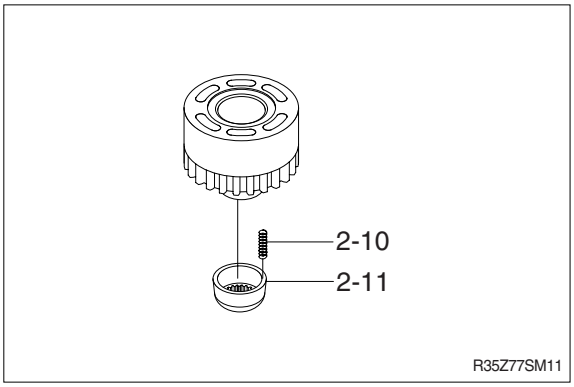

⑧ Set the piston assembly (2-13) on the retainer plate (2-12) and assemble it in the cylinder block (2-5).

※ Apply an ample amount of hydraulic fluid to the sliding part before assembly.

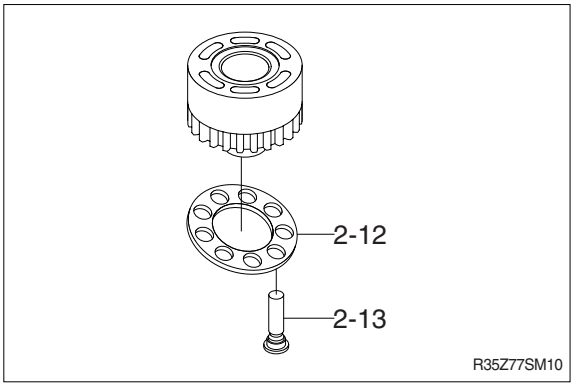

⑨ Press-fit the ball bearing (2-2) on the shaft (2-3).

※ Press-fit the ball bearing (2-2) with the attached snap ring facing as shown in the figure.

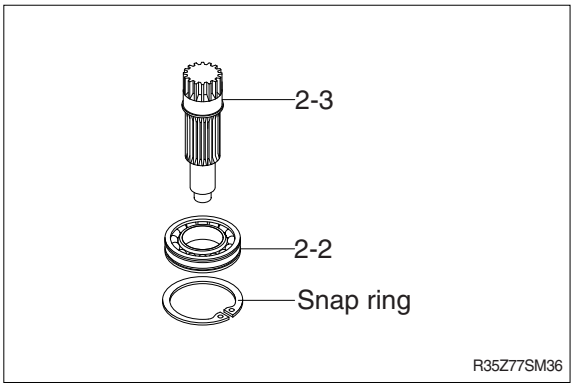

⑩ Press-fit the shaft (2-3) and the ball bearing (2-2) in the case (2-1).

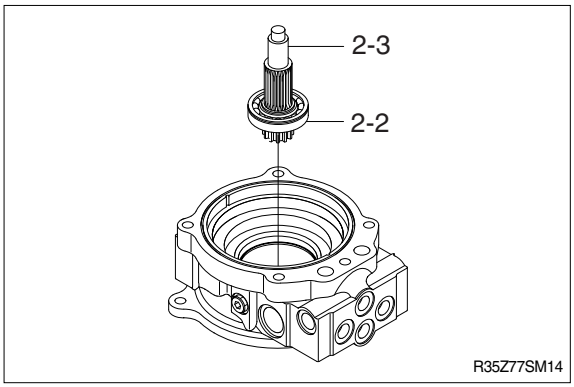

⑪ Apply grease to the back side of the thrust plate (2-4) and assemble it.

※ The thrust plate must be assembled in the correct direction.

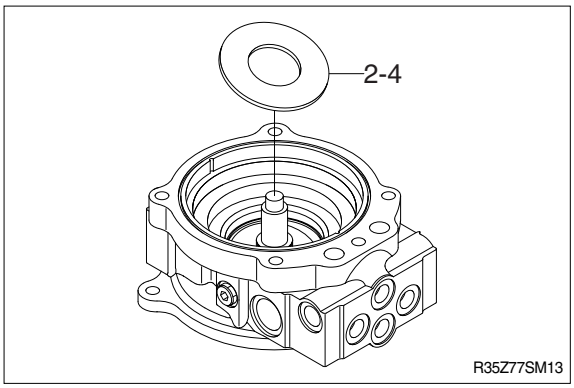

⑫ Assemble the cylinder block (2-5) and other associated parts.

※ During assembly, be sure that the pin (2-10) will not come out.

※ The disk(2-14) is assembled only for the parking brake spec only.

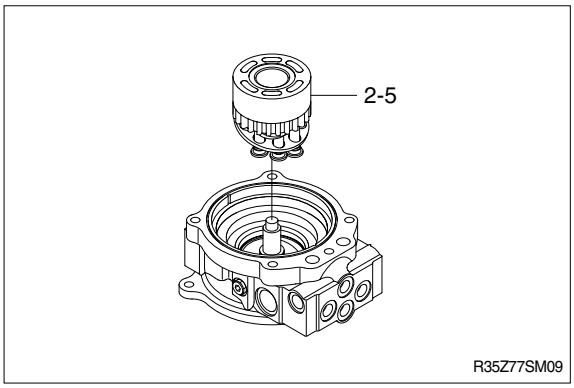

⑬ Apply grease to the O-ring (2-16) and the O-ring (2-17) and assemble them on the brake piston (2-15).

⑭ While paying attention to the location of the hole of the pin (2-25), assemble the brake piston (2-15) in the case (2-1).

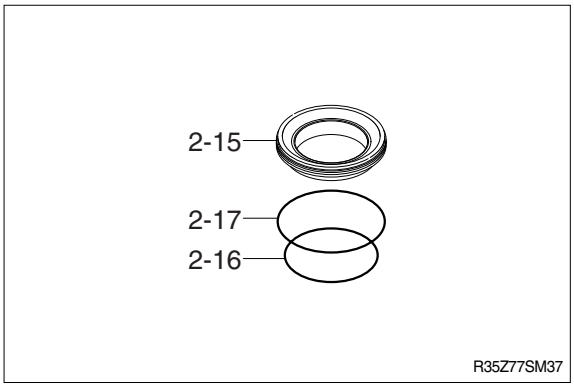

⑮ Assemble the spring seat (2-19) and the disc spring assembly (2-18) in the correct direction.

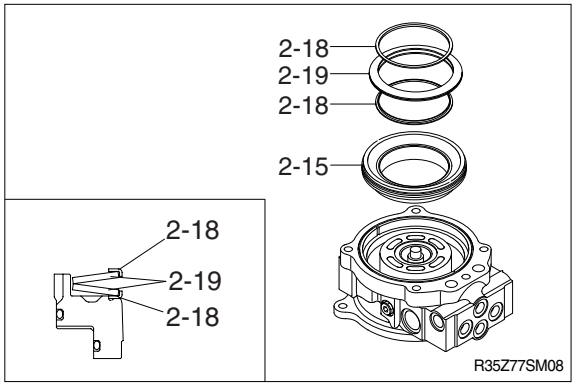

§ Apply grease to the O-ring (2-20) and assemble it in the case (2-1).
Check to see if the pin (2-25) can be assembled in the brake piston and case hole. If not, remove the brake piston (2-15) and re-orient it, then reassemble.

※ Assemble the pin (2-25) while being attached on the cover.

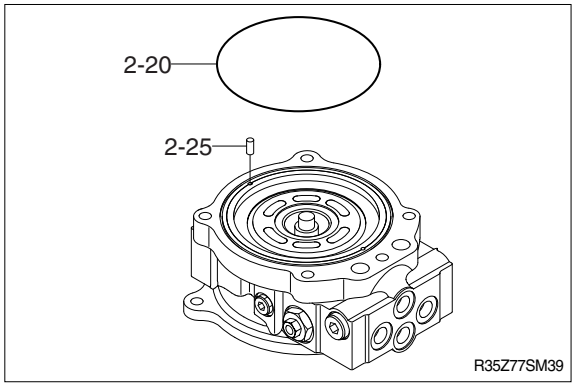

§æApply grease to the O-ring (2-26) and the pin (2-25), then assemble them in the cover (2-21).
Press-fit the ball bearing (2-22).

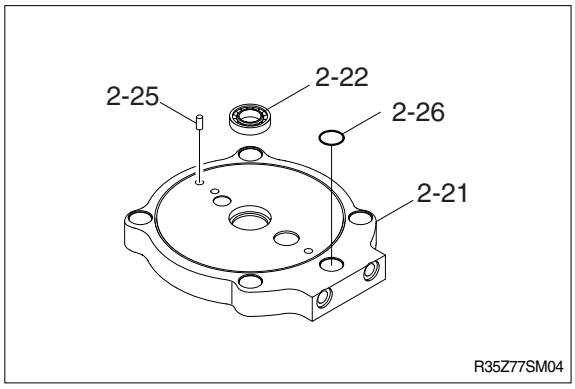

§ Install the pin (2-23), then install the valve plate (2-24).
To prevent it from falling, apply grease to the back side.

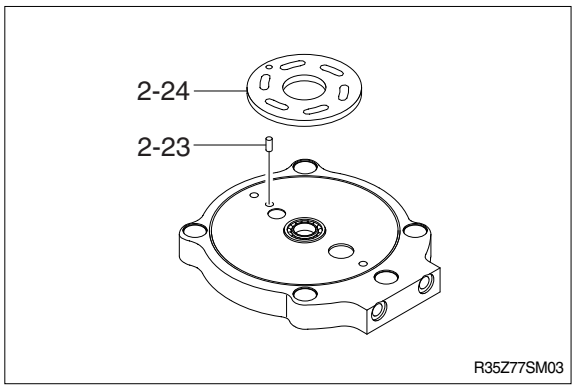

§ While paying attention to the location of the pin (2-25), install the cover (2-21) and other associated parts to the case (2-1).

※ Exercise care so that the pin (2-25) and the valve plate (2-24) will not fall.

§ Loosely tighten the socket head bolts (2-27), then using a torque wrench, tighten them to the specified torque.

· Tightening torque : 13±0.7 kgf · m
(94.4±5 lbf · ft)

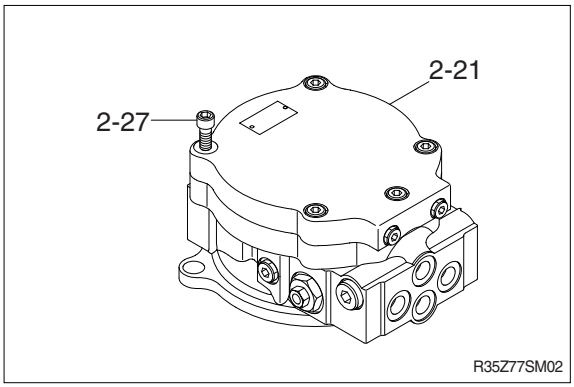

(2) Assembling the reduction gear

① Press-fit the oil seal (1-7).

※ Prior to press-fit, apply grease to the oil seal mounting area of the housing and the periphery of the oil seal.

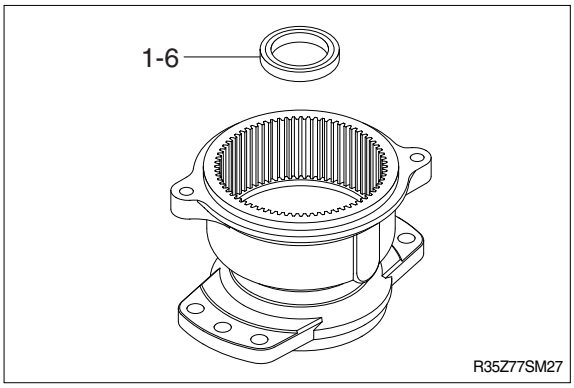

② Press-fit the taper roller bearing (1-8) and install the plug (1-35).

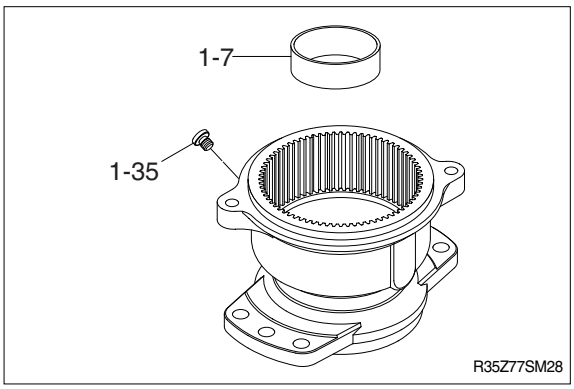

③ Apply grease to the inner race of the taper roller bearing (1-6) assembled on the pinion shaft (1-2).

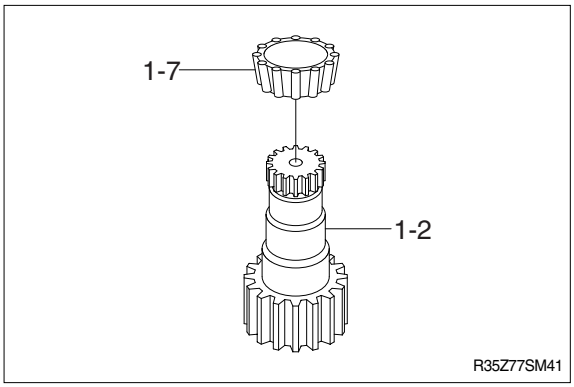

④ Install the pinion shaft (1-2) and other associated parts. Install the taper roller bearing inner race (1-7).

※ Prior to assembling the pinion shaft (1-2), etc. apply grease to the lip of the oil seal (1-6).

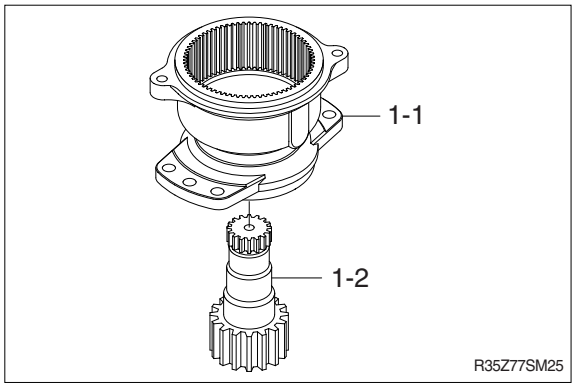

⑤ Install the collar (1-9) and the plate (1-8).

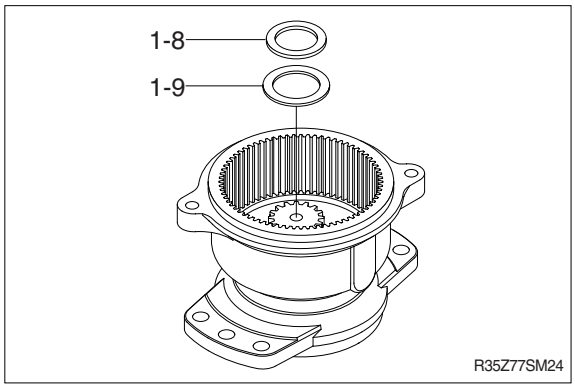

⑥ Install the following parts on the holder (1-10).

(1-11) Thrust washer
(1-12) Inner race
(1-13) Needle bearing
(1-14) Planetary gear B
(1-15) Thrust plate
(1-16) Screw

※ Apply loctite 242 to the screw prior to tightening it.

· Tightening torque : 0.4±0.05 kgf¡/m
2.9±0.3 lbf¡/ft

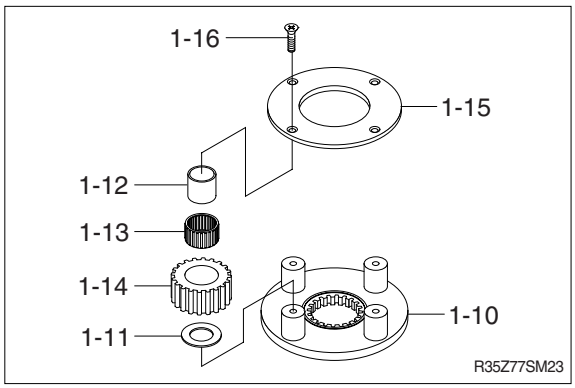

⑧ Install the holder (1-10) and other associated parts.

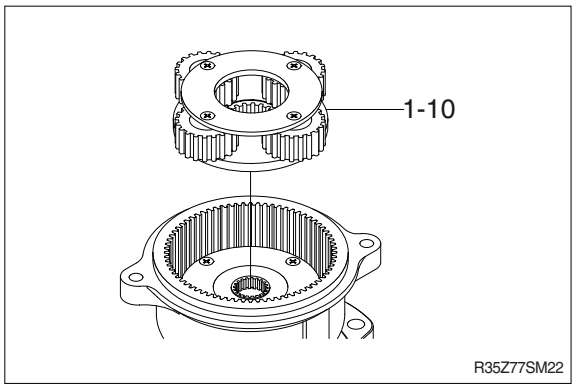

⑨ Install the sun gear (1-17).

※ Install the sun gear (1-17) with the snap ring facing as shown in the figure.

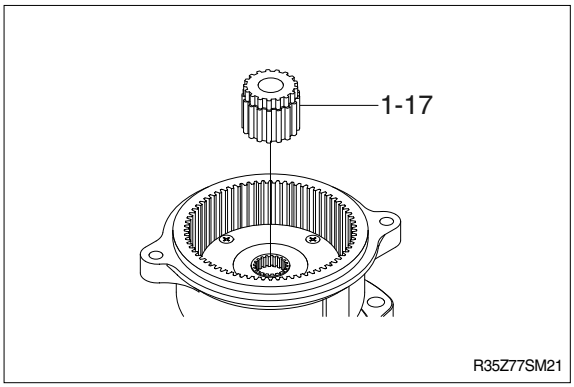

⑩ Install the holder (1-18).

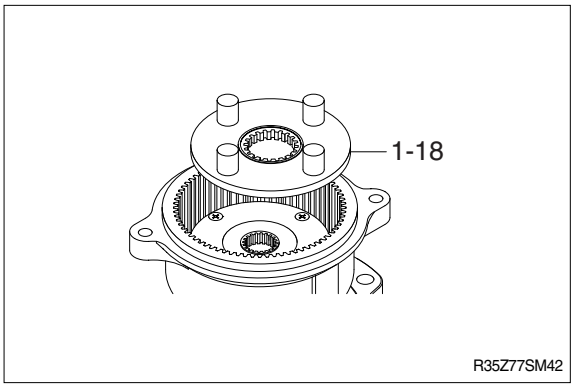

⑪ Install the following parts.

(1-19) Thrust washer
(1-20) Inner race
(1-21) Needle bearing
(1-22) Planetary gear A
(1-23) Thrust plate
(1-24) Drive gear
(1-37) O-ring

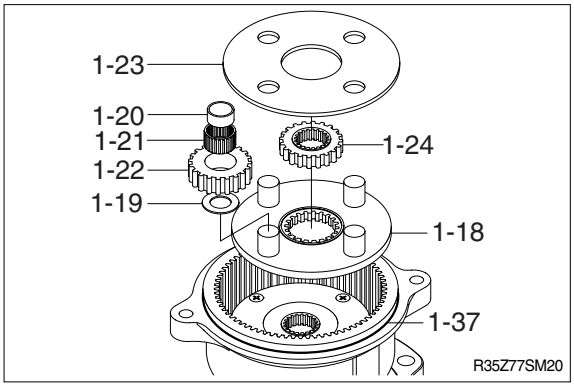

※ Selection for thrust plate (15).
When any consisting parts of reduction unit were changed, select and install thrust plate corresponding to the measured value "E" referring to the below table.

E dimension (measured value)	Less than 6.6	6.6~7.2	More than 7.2
Part no. of thrust plate 1-23	XJBV-00129	XJBV-00130	XJBV-00131
(plate thickness)	(3.2 mm)	(2.8 mm)	(2.3 mm)

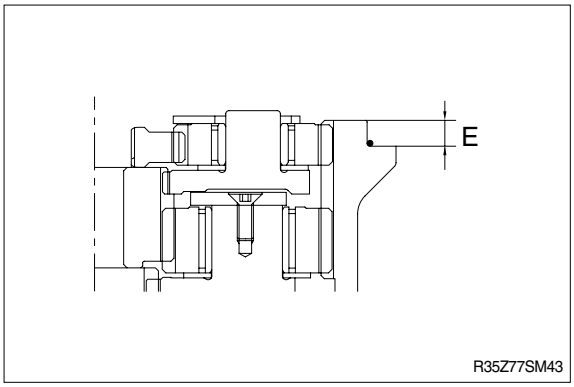

(3) Assembling the whole motor assembly

Place the reduction gear assembly on the motor assembly and loosely tighten the socket head bolt (3), then tighten it to the specified torque.

· Tightening torque : 13±0.7 kgf · m
(94.4±5 lbf · ft)

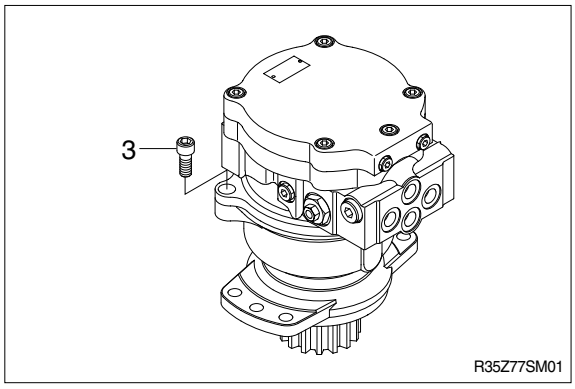

1. REMOVAL AND INSTALL

1) REMOVAL

(1) Swing the work equipment 90° and lower it completely to the ground.

(2) Operate the control levers and pedals several times to release the remaining pressure in the hydraulic piping.

(3) Loosen the breather slowly to release the pressure inside the hydraulic tank.

⚠ Escaping fluid under pressure can penetrate the skin causing serious injury.

※ When pipes and hoses are disconnected, the oil inside the piping will flow out, so catch it in oil pan.

(4) Remove the track shoe assembly.
For details, see **removal of track shoe assembly**.

(5) Remove the cover.

(6) Remove the hose.

※ Fit blind plugs to the disconnected hoses.

(7) Remove the bolts and the sprocket.

(8) Sling travel device assembly(1).

(9) Remove the mounting bolts(2), then remove the travel device assembly.
· Weight : 80kg(180lb)

2) INSTALL

(1) Carry out installation in the reverse order to removal.

(2) Bleed the air from the travel motor.
① Remove the air vent plug.
② Pour in hydraulic oil until it overflows from the port.
③ Tighten plug lightly.
④ Start the engine, run at low idling, and check oil come out from plug.
⑤ Tighten plug fully.

(3) Confirm the hydraulic oil level and check the hydraulic oil leak or not.

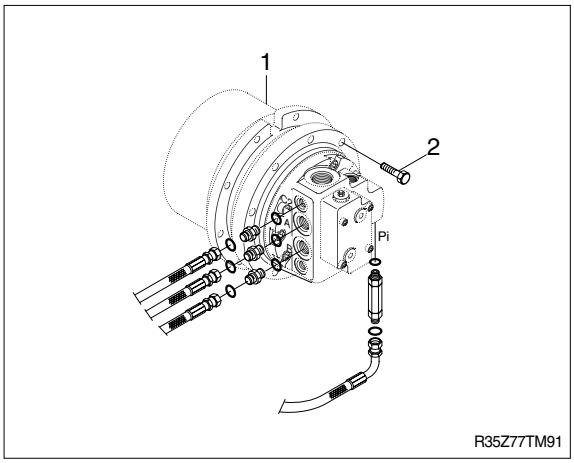

2) STRUCTURE

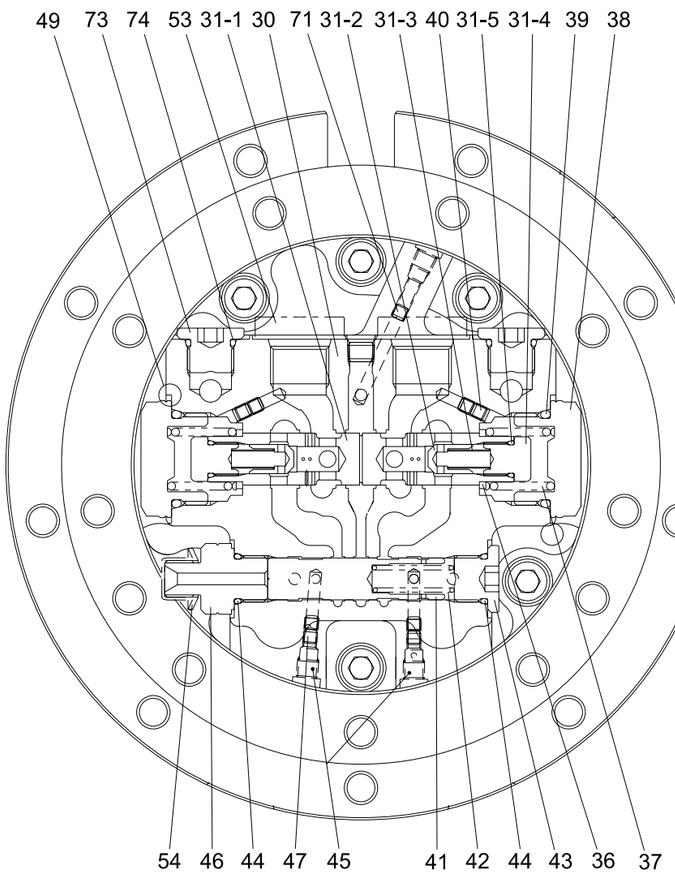

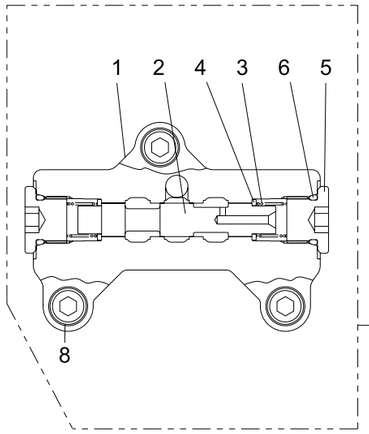

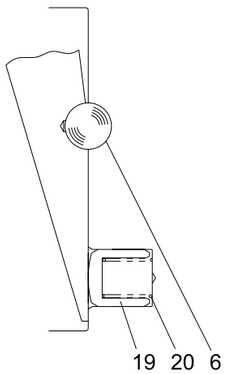

DETAIL OF 2 SPEED
LEAN TURNING PORTION

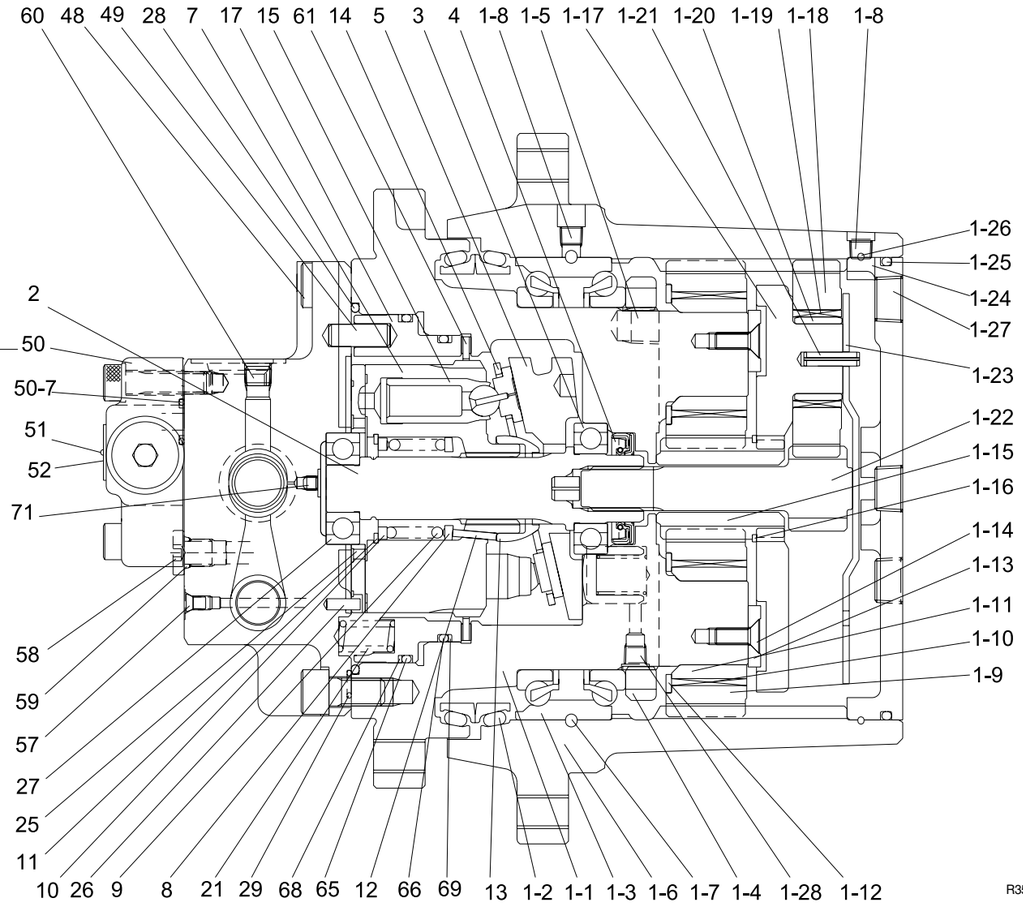

R35Z72TM01

1	Gear box	1-17	Holder	5	Swash plate	27	Ball bearing	43	Plug	52	Drive screw
1-1	Flange holder	1-18	Planetary gear (A)	6	Steel ball	28	O-ring	44	O-ring	55	Plug
1-2	Floating seal	1-19	Needle bearing	7	Cylinder block	29	O-ring	45	Plug	57	O-ring
1-3	Angular bearing	1-20	Inner race	8	Color	30	Base plate	46	Plug	58	Plug
1-4	Ring nut	1-21	Spring pin	9	Spring	31	Plunger assy	47	Orifice	59	Plug
1-5	Plug	1-22	Drive gear	10	Washer	31-1	Plunger	48	Socket head bolt	60	Brake piston
1-6	Housing	1-23	Thrust plate (1.8 t)	11	Snap ring	31-2	Check valve	49	Pin	61	Disc
1-7	Steel ball	1-23	Thrust plate (2.3 t)	12	Pin	31-3	Spring	50	Valve assy	62	Spring
1-8	Plug	1-23	Thrust plate (2.8 t)	13	Holder	31-4	Plug	50-1	Valve body	65	O-ring
1-9	Planetary gear B	1-24	Cover	14	Retainer plate	31-5	O-ring	50-2	Spool	66	O-ring
1-10	Needle bearing	1-25	O-ring	15	Piston assy	36	Spring seat	50-3	Spring	68	Backup ring
1-11	Collar	1-26	Wire	17	Brake piston	37	Spring	50-4	Spring seat	69	Backup ring
1-12	Thrust washer	1-27	Plug	19	Piston assy	38	Cap	50-5	Plug	71	Spring
1-13	Thrust plate	1-28	Plug	20	Spring	39	O-ring	50-6	O-ring	73	Plug
1-14	Screw	2	Shaft sub assy	21	Spring	40	Orifice	50-7	O-ring	74	O-ring
1-15	Sun gear	3	Ball bearing	25	Valve plate	41	Spool	50-8	Socket head bolt		
1-16	Snap ring	4	Oil seal	26	Pin	42	Spring	51	Name plate		

3) MAINTENANCE INSTRUCTION

(1) Tools for disassembly and reassembly

No.	Parts name		Applicable components or parts
1	Torque wrench (Preset type)	(230)	Plug (1-5), (1-8), (45), (58), (60), Screw (1-14) Orifice (40), (47), (62) Socket head bolt (50-7), (50-8)
2		(450)	Socket head bolt (48) Plug (1-27), (31.4), (43), (46), (50-4), (50-5)
3		(1800)	Housing (1-6), Ring nut (1-4) Cap (38)
4	Hexagon bit for torque wrench	Width across flats 2.0	Orifice (40)
5		Width across flats 2.5	Orifice (47), (62)
6		Width across flats 4.0	Plug (45), Screw (1-14)
7		Width across flats 5.0	Plug (1-8), (31-4)
8		Width across flats 6.0	Socket head bolt (50-7), (50-8) Plug (1-5), (1-27), (31-4), (43), (58), (60) Socket head bolt (48)
9		Width across flats 8.0	Plug (1-5), (50-4), (50-5), Housing (1-6)
10	Socket for socket wrench	Width across flats 10.0	Socket head bolt (48)
11		Width across flats 22.0	Plug (46)
12		Width across flats 36.0	Cap (38)
13	Screw driver		Floating seal (1-2) Wire (1-26), Base plate (30) Oil seal (4)
14	Hammer		Angular bearing (1-3) Plug (1-5), Steel ball (1-7) Shaft (2), Oil seal (4) Pin (26)
15	Plastic hammer		Base plate (30), Cover (1-24)
16	Cutting pliers		Wire (1-26)
17	Snap ring pliers		Snap ring (11)
18	Punch		Plug (1-5)

(2) Special Tools

· Table

No.	Parts name	Applicable components or parts
S-1	Pin Dia. 5.5×30mm	Plug (31-4)
S-2	Eyebolt PF 1/4	Cover (1-24), Wire (1-26)
S-3	Round bar dia. 20×1000mm	Cover (1-24), Wire (1-26)
S-4	Piano wire dia. 0.2×700mm	Steel ball (1-7)
S-5	Housing disassembly jig	Housing (1-6)
S-6	Ring nut tightener	Ring nut (1-4)
S-7	Round bar dia. 10×150mm	Angular bearing (1-3), Shaft (2)
S-8	Ball bearing disassembly jig	Ball bearing (3)
S-9	Floating seal assembly jig	Floating seal (1-2)
S-10	Angular bearing press fitting jig	Angular bearing (1-3)
S-11	Flange holder press fitting jig	Flange holder (1-1)
S-12	Oil seal press fitting jig	Oil seal (4)
S-13	Ball bearing press fitting jig	Shaft (2), Ball bearing (3)
S-14	Shaft sub assembly press fitting jig	Shaft (2), Ball bearing (3)
S-15	Snap ring assembly jig	Snap ring (11)
S-16	Ball bearings press fitting jig	Ball bearing (27)

※ Refer to page 7-67 for detail figure. (S1~S16)

· Tools

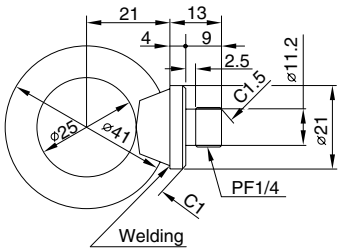

S-2 Eye bolt

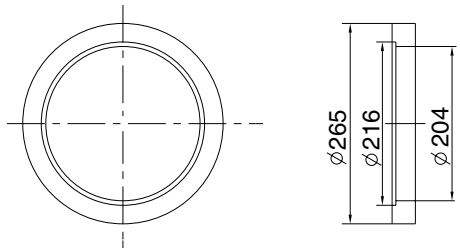

S-5 Housing disassembly

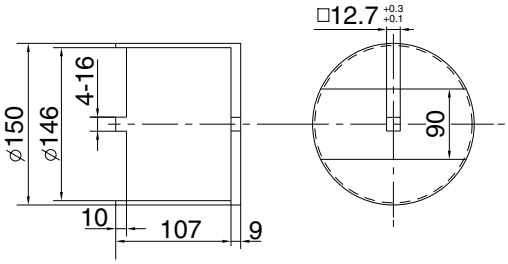

S-6 Ring nut tightener

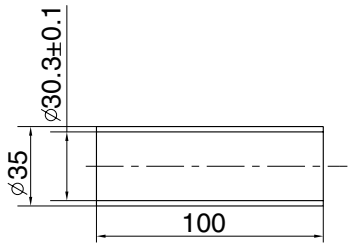

S-8 Ball bearing disassembly

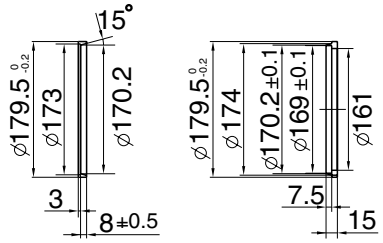

S-9 Floating seal assembly

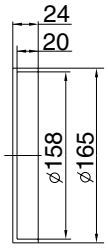

S-10 Angular bearing press fitting

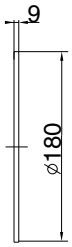

S-11 Flange holder press fitting

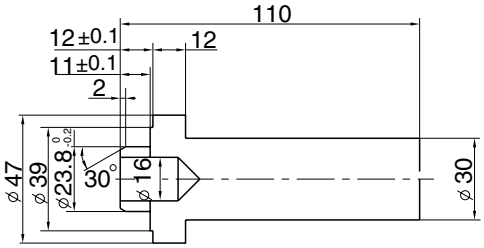

S-12 Oil seal press fitting

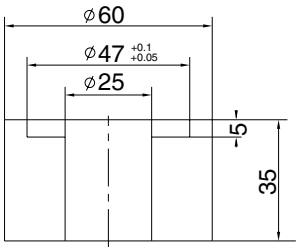

S-13 Ball bearing press fitting

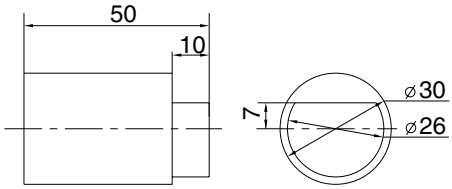

S-15 Snap ring assembly

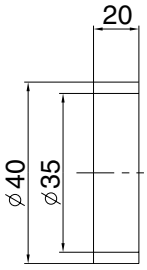

S-16 Ball bearing press fitting

2. DISASSEMBLY

1) GENERAL PRECAUTIONS

(1) Before disassembling the TM motors, check the items to be inspected and, for remedy against trouble, closely examine the nature of the trouble, so that the motor can be disassembled effectively.

(2) To disassemble the motor, use the disassembling procedures described in section 2-2, and select a clean place.

(3) Place a rubber or vinyl sheet or other such protective materials on your working bench to protect the surface of the motor to be serviced.

(4) During disassembly, give a match mark to the mating surfaces of each part.

(5) Arrange removed parts in order so that they will not become damaged or missing during disassembly.

(6) Once seals have been disassembled, they should be replaced even if damage is not observed. Have replacement seals ready on hand before starting your disassembling job.

2) DISASSEMBLE TRAVEL MOTOR BY THE FOLLOWING PROCEDURE

(1) Fix the motor with vise.
Loosen socket head bolt (50-7), (50-8) and remove valve assy (50).

· Tools required :
Torque wrench (No. 1)
Hexagonal bit for torque wrench (No. 7)

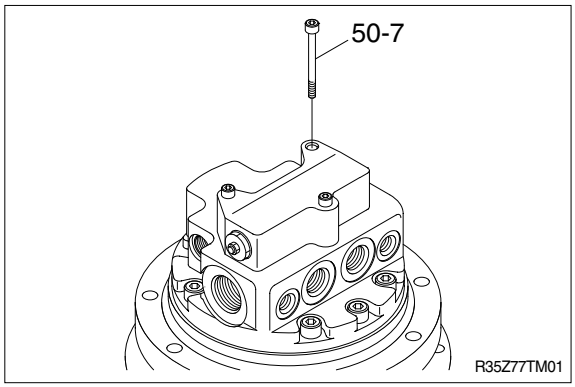

(2) Remove cap (38).

· Tools required :
Torque wrench (No. 3)
Socket for torque wrench (No. 12)

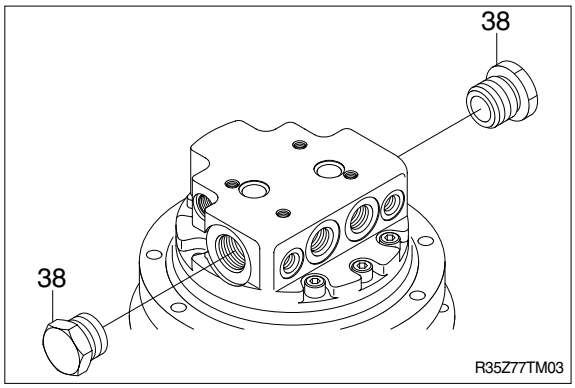

(3) Take out spring (37), spring seat (36).

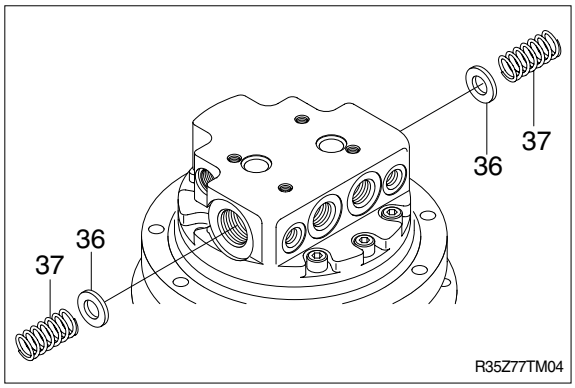

(4) Remove plunger sub assy (31) turning slowly.
Be careful not to damage around the plunger.

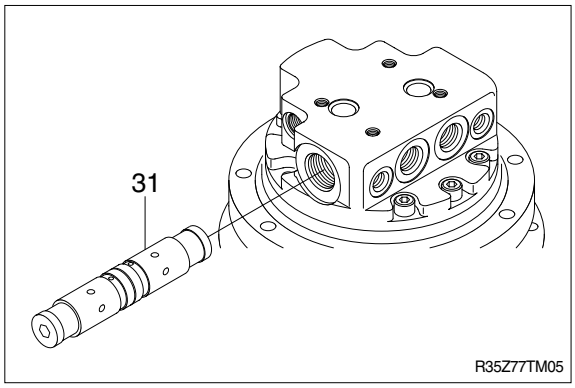

(5) Disassembly of plunger sub assy is not required when it operates normally.
Insert pin S-1, dia. 5.5×30, in the through hole dia.6 of the plunger sub assy, and fix it with vase.

· Tools required :
Torque wrench (No. 2)
Hexagonal bit for torque wrench (No. 8)
Pin (S-1)

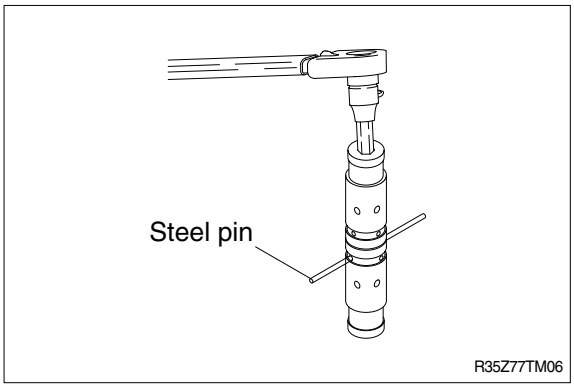

(6) Remove spring (31-3), check valve (31-2). And store the parts so that the respective parts make a set as it was when assembling again, taking care of the combination of the right and left check valves to the plunger.

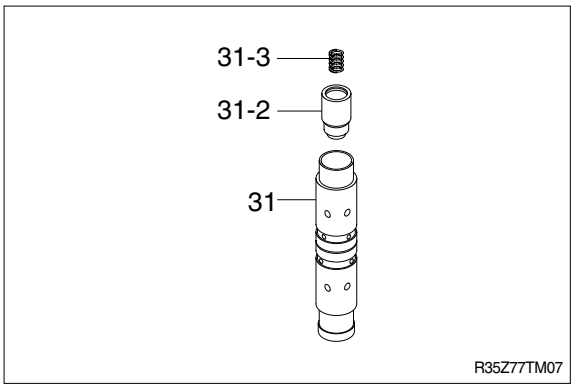

(7) Remove plugs (43), (46).

· Tools required :
Torque wrench (No. 2)
Hexagonal bit for torque wrench (No. 9)
Socket for torque wrench (No. 11)

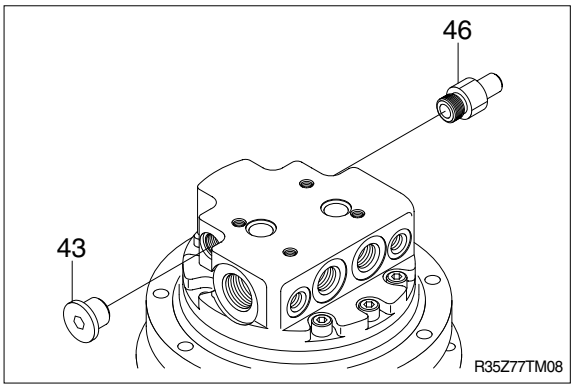

(8) Removing spring (42), spool assy (41).
Be careful not to damage around the spool.

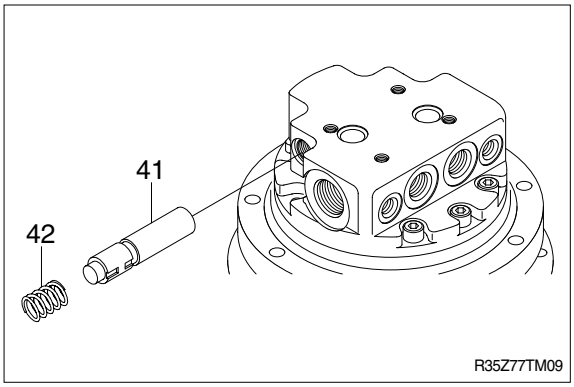

(9) Remove socket head bolt (48).

· Tools required :
Torque wrench (No. 3)
Hexagonal bit for torque wrench (No. 10)

※ **Points (with parking brake type)**
To disassemble the motor easily, socket head bolt (48) should be loosened evenly because base plate (30) lift up by the reactive force of springs (21), (32).

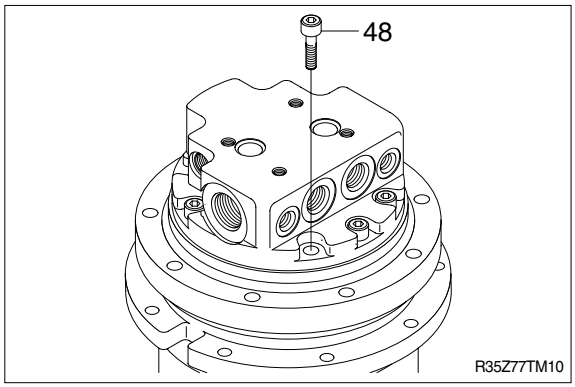

(10) Remove base plate (30).
Then, pay attention so that cylinder block (7) does not come out. When it is difficult to remove, strike it by use of plastic hammer. If it is more difficult to remove, remove it by lightly prying with screwdriver.

· Tools required :
Plastic hammer (No. 15)
Screwdriver (No. 13)

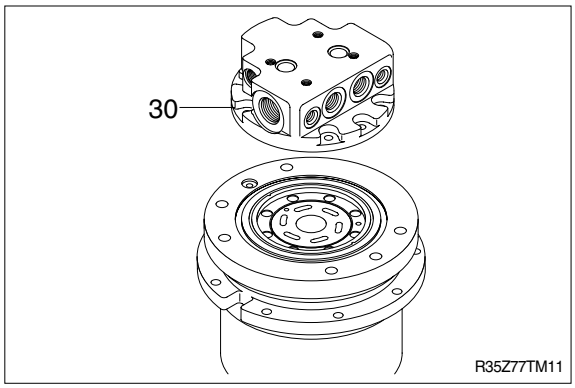

(11) With parking brake type.
Remove pin (26), (49), valve plate (25), O-rings (28, 29).

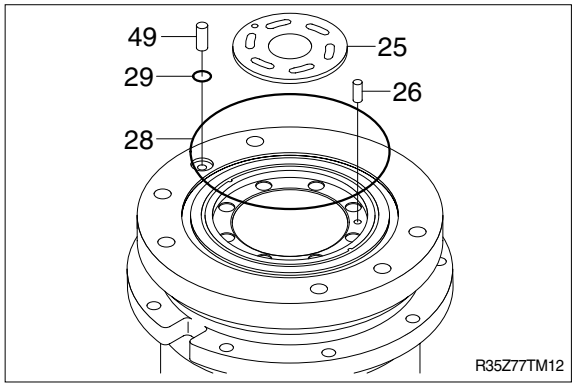

(12) This process is the only parking brake type.
Remove spring (21) and brake piston (17). Blow compressed air into parking brake releasing port (show the photograph with red circle) on flange holder(1-1).

※ Before working, put rag on all surface of brake piston because brake piston fly out and oil flies off when working.

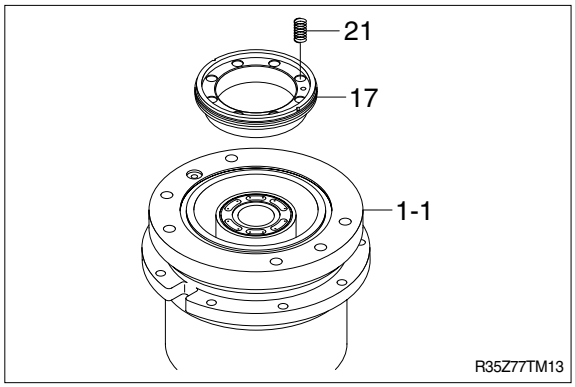

(13) Remove cylinder block sub assy (7), pin (12), retainer holder (13), retainer plate (14), piston sub assy (15). Be careful not to damage the sliding surface of the cylinder block.
Only parking brake type, remove disk plate (18)

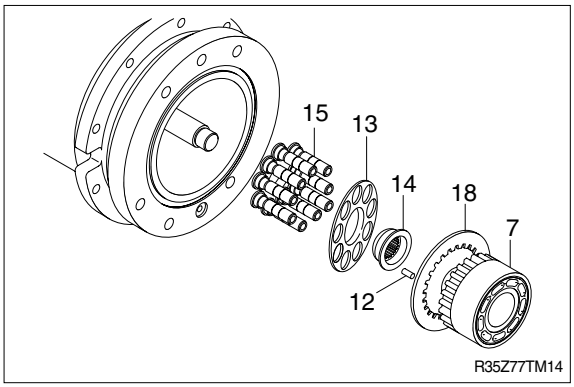

(14) Remove snap ring (11) by use of plier.
Remove washer (8), spring seat (10) and spring (9). Be careful not to damage the sliding surface of the cylinder block.

- Tools required :
  Snap ring pliers (No. 17)

※ Pay attention not to pinch fingers by the inside spring when removing the snap ring.

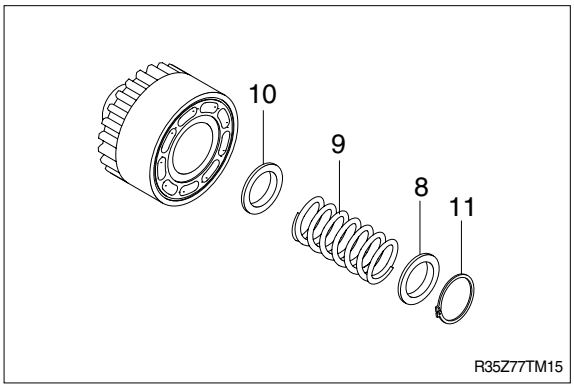

(15) Remove swash plate (5), steel ball (6), piston sub assy (19) and spring (20).

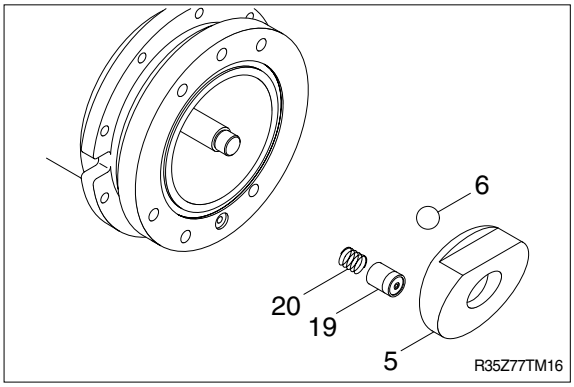

(16) Remove plugs (1-27), (1-8). Attach eyebolt (PF 1/4) to the threaded hole of plug (1-27) and insert pry-bar (length 1 [m]) in the eye hole, and turn the bar until wire (1-26) can be seen through the threaded hole of plug (1-8). Draw the wire outside when the wire end can be seen.

- Tools required :
  Torque wrench (No. 1, No. 2)
  Eyebolt PF 1/4 (S-2)
  Hexagonal bit for torque wrench (No. 7, No. 8)
  Round bar dia. 20 × 1000mm (S-3)
  Screw driver (No. 13), cutting pliers (No. 16)

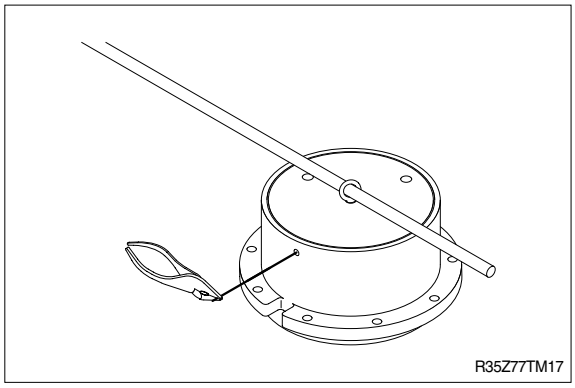

(17) Hook eyebolt and remove cover (1-24)

- Tools required :
  Eyebolt PF 1/4 (S-2)
  Round bar dia. 20 × 1000mm (S-3)

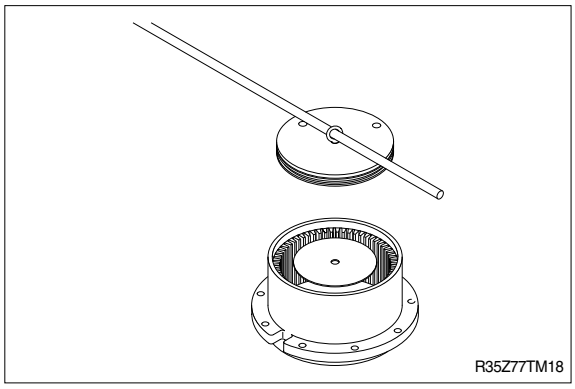

(18) Remove sun gear assy (1-15), holder (1-17), planetary gear A (1-18), needle bearing (1-19), inner race (1-20), drive gear (1-22) and thrust plate (1-23).

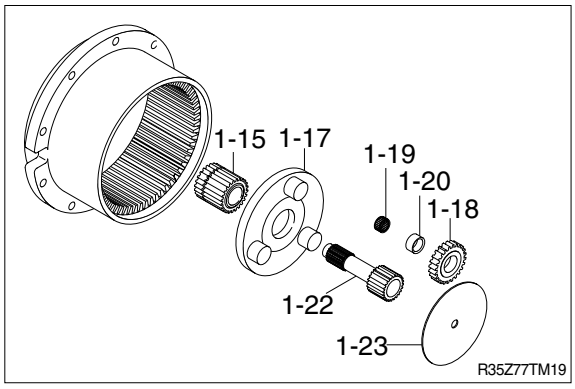

(19) Remove thrust plate (1-13) and screw (1-14).

· Tools required :
Torque wrench (No. 1)
Hexagonal bit for torque wrench (No. 6)

※ It is easy to remove the screw after heated fully by heater because screw (1-14) is applied loctite.

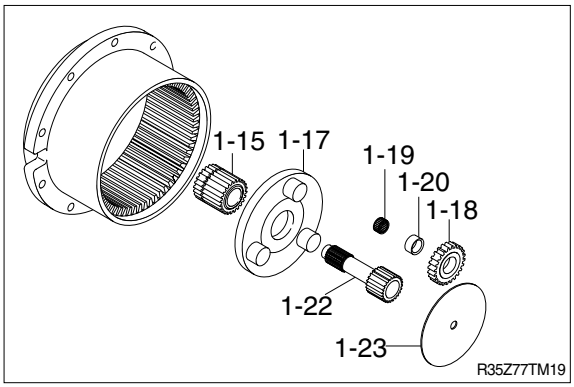

(20) Remove planetary gear B (1-9), needle bearing (1-10), inner race (1-11) and thrust washer (1-12).
Be careful not to damage the tooth surface of gear and the rolling section of the collar.

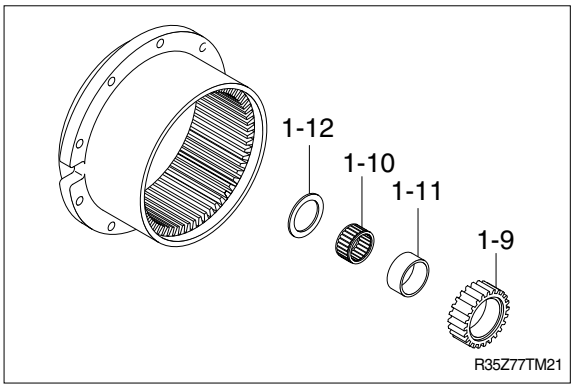

(21) Remove plug (1-8).

· Tools required :
Torque wrench (No. 1)
Hexagonal bit for torque wrench (No. 7)

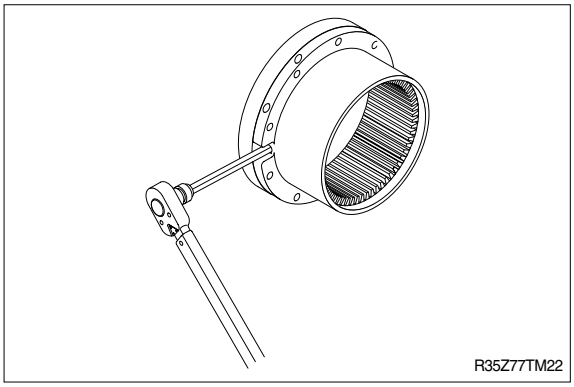

(22) Take out steel balls (1-7) from the threaded hole of plug (1-8). After degreasing (thinner, white gasoline. etc), take out them by blowing air. Put piano wire through the threaded hole to be sure that all steel balls (1-7) are taken out.

· Tools required :
Hammer (No. 14), piano wire (S-4)

※ When it is difficult to remove, take out steel balls (1-7) striking around housing (1-6) by hammer.

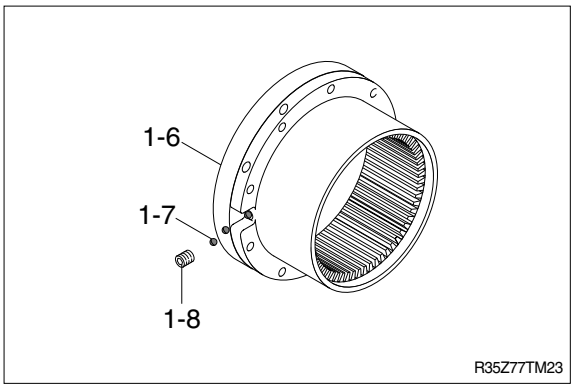

(23) Attach jig between flange holder (1-1) and housing (1-6), and tighten 3 bolts M14¡¿2.0 uniform from the housing side.

· Tools required :
Torque wrench (No. 3)
Hexagonal bit for torque wrench (No. 10)
Housing disassembly (S-5)

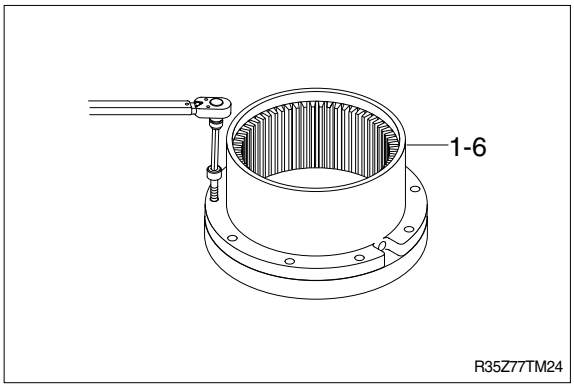

(24) Remove plug (1-5).

· Tools required :
Torque wrench (No. 1)
Hexagonal bit for torque wrench (No. 9)

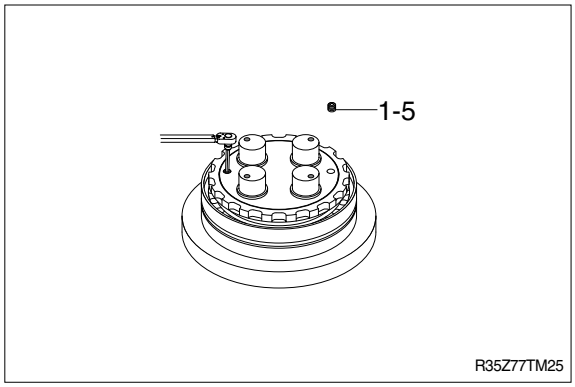

(25) Removing ring nut (1-4).

· Tools required :
Torque wrench (No. 3)
Ring nut tightener (S-6)

※ If fix them by vise, fix around of outside of flange holder absolutely.

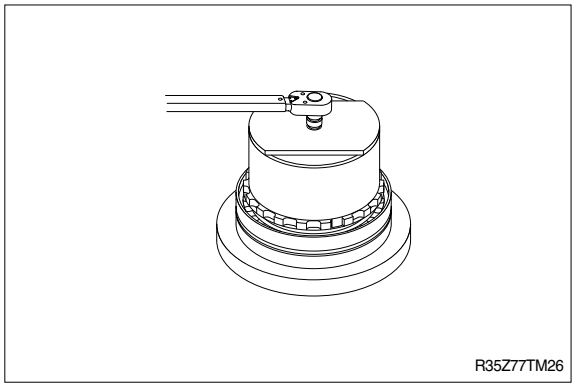

(26) Apply pry-bar to the groove for steel balls (1-7), and remove angular bearing (1-3) striking it by hammer.

· Tools required :
Hammer (No. 14)
Round bar dia. 10×150mm (S-7)

※ When removing, strike the groove turning. If strike the groove on one portion, angular bearing wouldn't be removed.

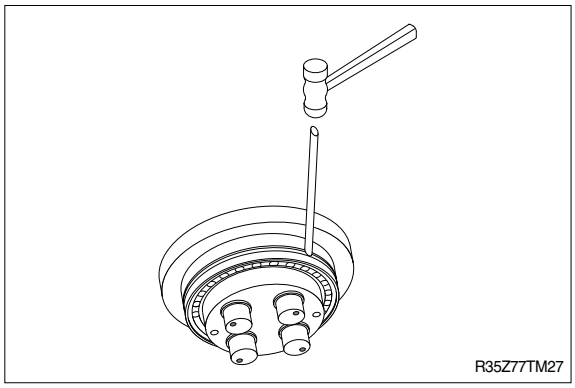

(27) Remove floating seal (1-2) and angular bearing (1-3).

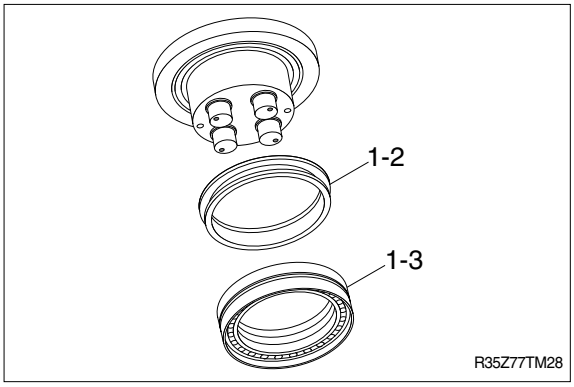

(28) Remove other floating seal (1-2) by use of two drivers.

- Tools required :
  Screw driver (No. 13)

※ Be careful not to damage the sliding surface of floating seal (1-2).

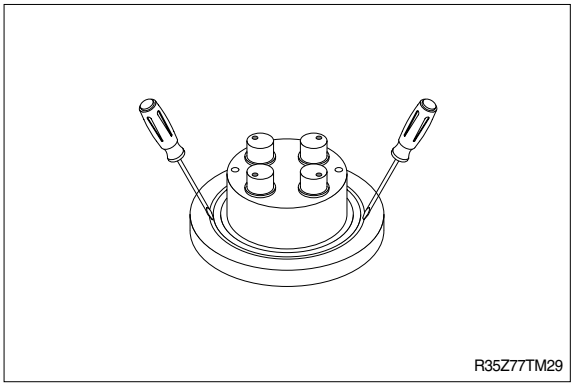

(29) Apply pre-bar to the hold of spline, and remove shaft (2) striking it by hammer.

- Tools required :
  Screw driver (No. 12)
  Round bar dia. 10×150mm(S-7)

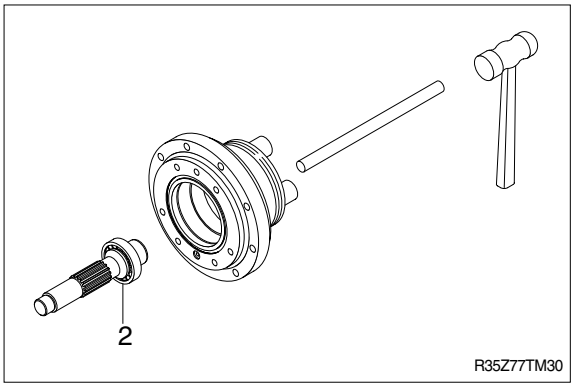

(30) Remove oil seal (4).

- Tools required :
  Screw driver (No. 13)
  Hammer (No. 14)

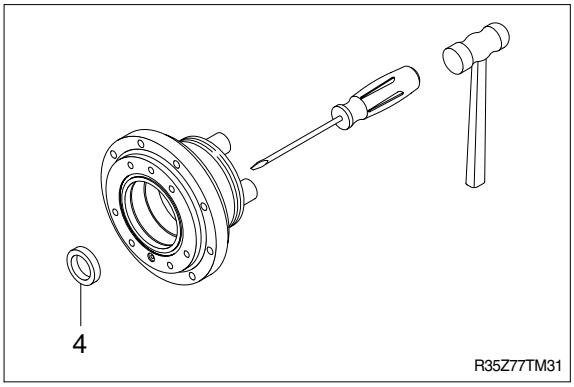

(31) Take out ball bearing (3) from shaft (2).

- Tools required :
  Ball bearing disassembly jig (S-8)

(32) Completed.

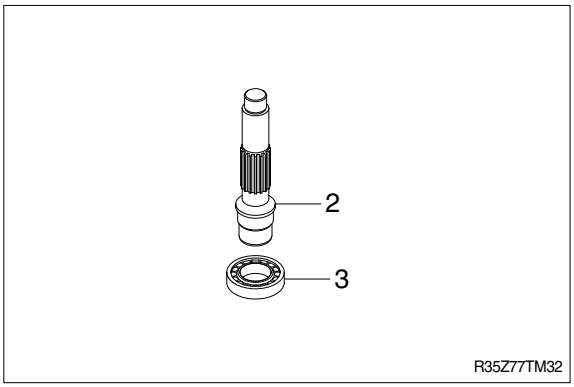

3. REASSEMBLY

1) GENERAL PRECAUTIONS

(1) Reassemble in a work area that is clean and free from dust and grit.

(2) Handle parts with bare hands to keep them free or linty contaminants.

(3) Repair or replace the damage parts.
Each parts must be free of burrs its corners.

(4) Do not reuse O-rings, oil seal and floating seal that were removed in disassembly.
Provide the new parts.

(5) Wash all parts thoroughly in a suitable solvent.
Dry thoroughly with compressed air
Do not use the cloths.

(6) When reassembling oil motor components of TM motor, be sure to coat the sliding parts of the motor and valve with fresh hydraulic oil.(NAS class 9 or above).

(7) Use a torque wrench to tighten bolts and plugs, to the torque specified as follows.

2) ASSEMBLE THE TRAVEL MOTOR BY THE FOLLOWING PROCEDURE

(1) Apply grease to floating seal (1-2) and install it on flange holder (1-1).

· Tools required :
Floating seal assembly jig (S-9)

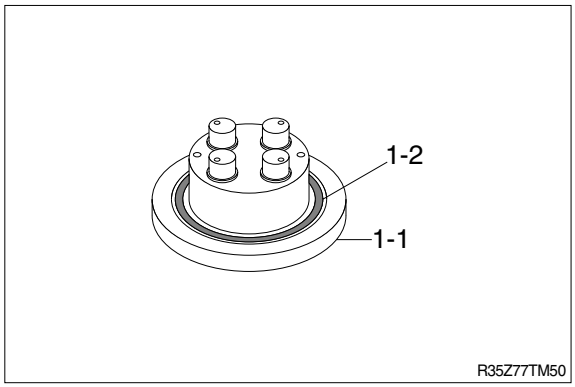

(2) Press fit angular bearings (1-3) to housing (1-6).

· Tools required :
Angular bearings press fitting jig (S-10)

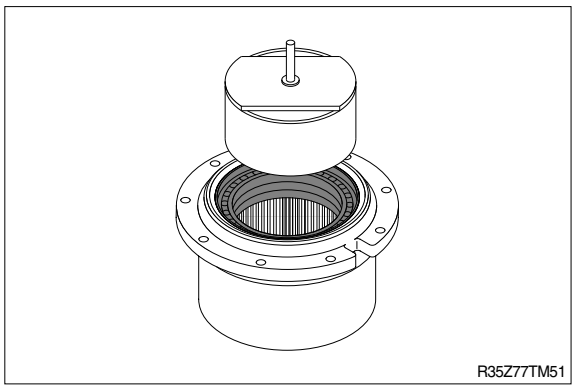

(3) Apply grease to the second floating seal and place it on the concentric circle. Install it on housing (1-6).

· Tools required :
Floating seal assembly jig (S-9)

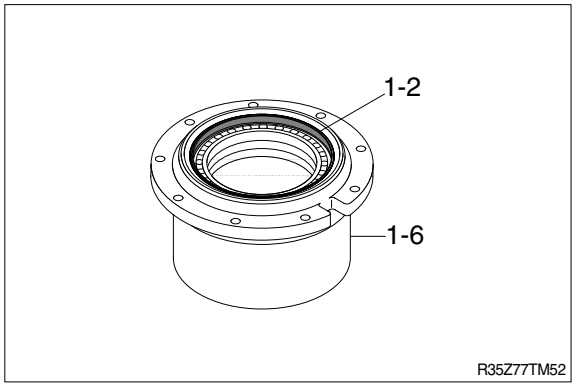

(4) Apply lubricating oil on the sliding surface of floating seal after make the surface clean by rags.
Install flange holder (1-1) in housing (1-6).

· Tools required :
Flange holder press fitting jig (S-11)

※ If there are foreign articles on the sliding surface of floating seal (1-2), it causes oil leak.

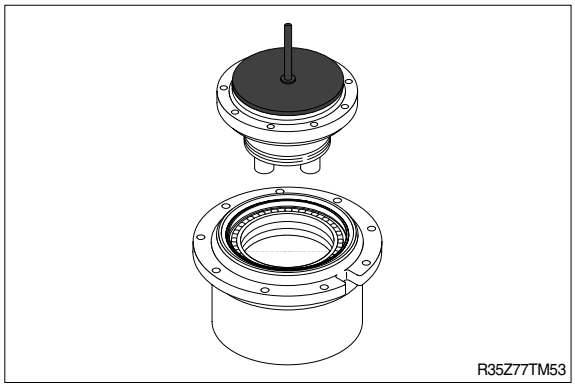

(5) Tighten angular bearing (1-3) with ring nut (1-4)

· Tools required :
Torque wrench (No. 3)
Ring nut tightener (S-6)
Tightening torque 23.9±1.0 kgf · m
(173±7.2 lbf · ft)

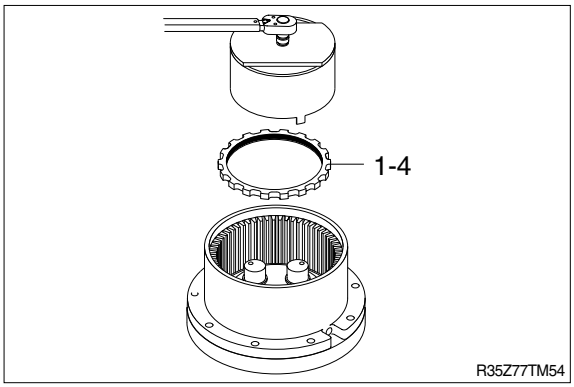

(6) Tighten plug (1-5).
The seal tape is not allowed to wrap for assembling of this plug.

· Tools required :
Torque wrench (No. 1)
Hexagonal bit for torque wrench (S-9)
Tightening torque 3.5±0.5 kgf · m
(25.2±3.6 lbf · ft)

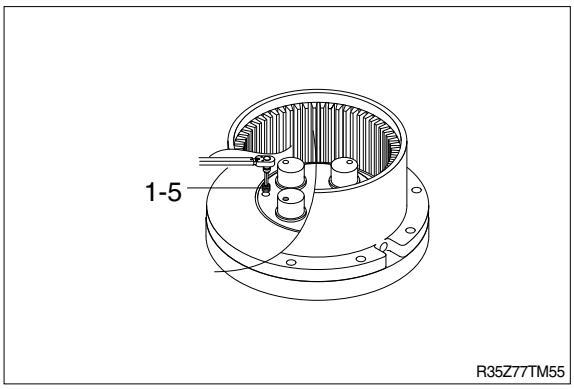

(7) Caulk plug (1-5) two positions with punch to lock.

· Tools required :
Hammer (No. 14)
Punch (No. 18)

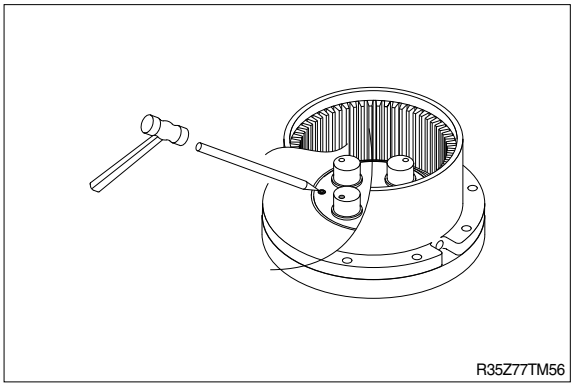

(8) Place steel balls (1-7) (99 pcs) in.

※ If it is difficult to place steel balls in, beat on the side of housing (1-6) by using of plastic hammer.

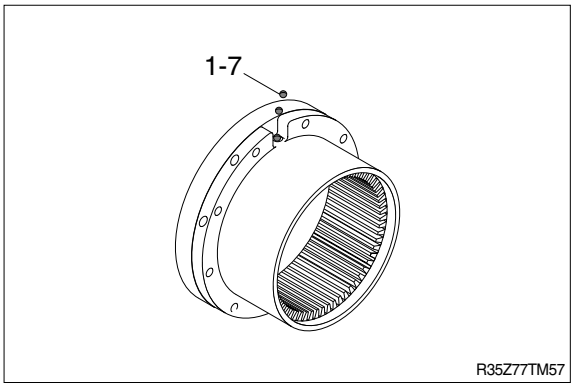

(9) Wrap plug (1-8) with seal tape, and tighten it.

· Tools required :
Torque wrench (No. 1)
Hexagonal bit for torque wrench (No. 7)
Tightening torque 0.8±0.1 kgf · m
(5.8±0.7 lbf · ft)

※ Tighten plug (1-8) until the head of plug is obscured against the surface of sprocket guide.

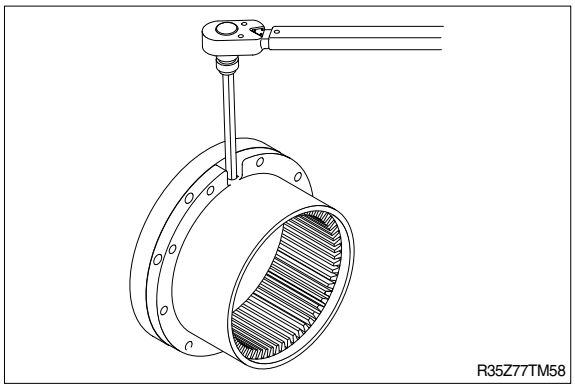

(10) Install planetary gear B (1-9), needle bearing (1-10), inner race (1-11) and thrust washer (1-12).

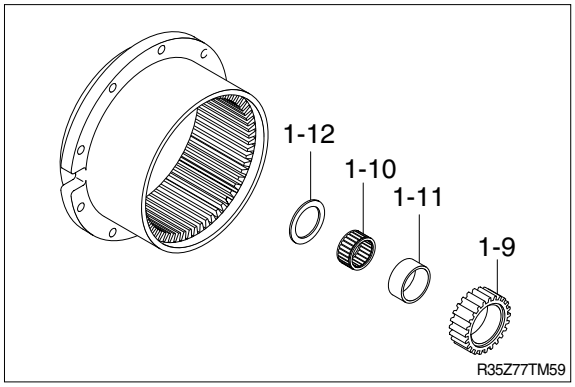

(11) Put thrust plate (1-13) on the trunnion section of flange holder, apply loctite #262 to screw (1-14) and tighten it.
Before applying the loctite, degrease the parts completely and us hardening accelerator.

· Tools required :
Torque wrench (No. 1)
Hexagonal bit for torque wrench (No. 6)
Tightening torque 1.3±0.06 kgf · m
(9.4±0.4 lbf · ft)

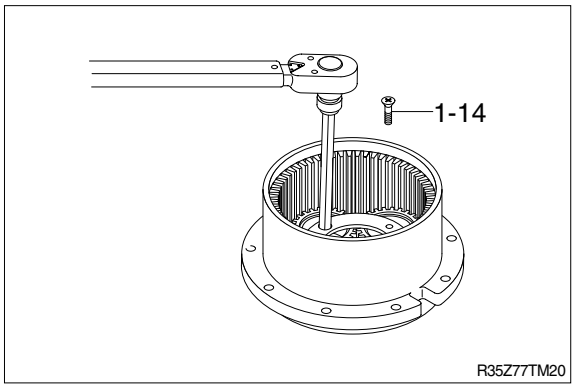

(12) Install sun gear assy (1-15) with snap ring (1-16), holder (1-17) with inner race (1-20), planetary gear A (1-18), needle bearing (1-19) and drive gear (1-22).

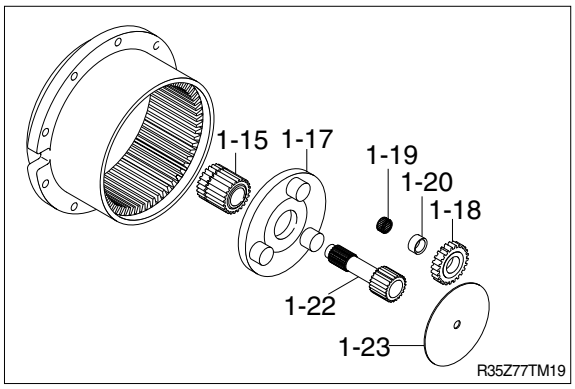

(13) Install thrust plate (1-23).

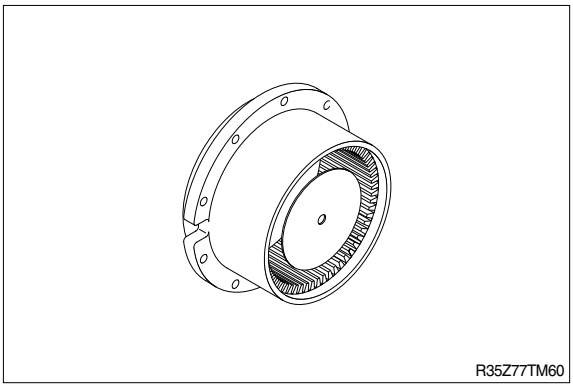

(14) Apply grease to O-ring (1-25), fit the O-ring on cover (1-24), and install cover (1-24) to housing (1-6) matching the threaded hole of socket plug (1-8) of housing (1-6) with the U-groove (for piano wire).

- Tools required :
  Plastic hammer (No. 14)
  Eye bolt (S-2)

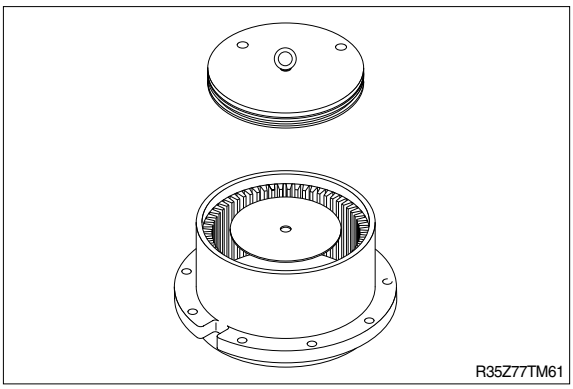

(15) Bend 6 [mm] of the top end of wire (1-26) at right angle, insert it into the threaded hole of the housing, and wind the piano wire turning the cover. Wrap socket plug (1-8) with seal tape before tightening.

- Tools required :
  Eye bolt (S-2)
  Round bar dia. 20 × 1000 [mm] (S-3)
  Torque wrench (No. 1)
  Hexagonal bit for torque wrench (No. 7)
  Tightening torque 0.8 ± 0.1 kgf · m
  (5.8 ± 0.7 lbf · ft)

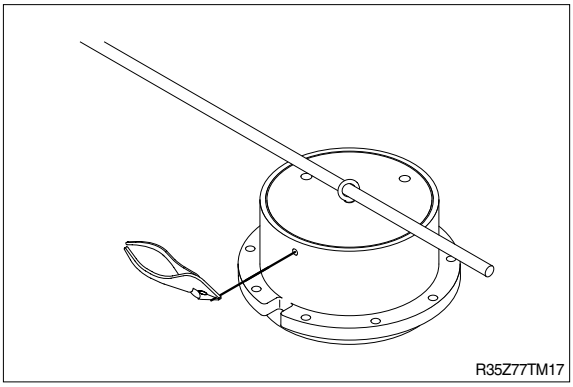

(16) Apply grease to oil seal (4) and press fit it in flange holder.

- Tools required :
  Oil seal press fitting jig (S-12)

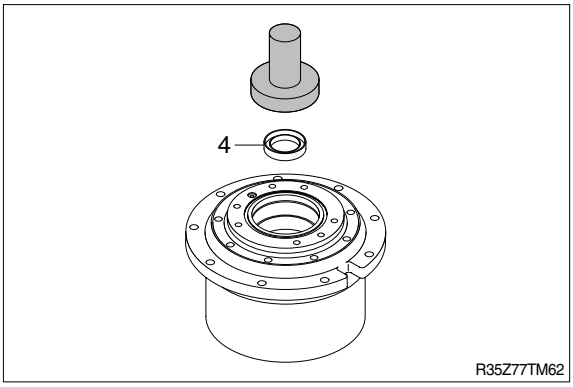

(17) Press fit ball bearing (3) on shaft (2).

- Tools required :
  Ball bearing press fitting jig (S-13)
  Shaft sub assembly press fitting jig (S-14)

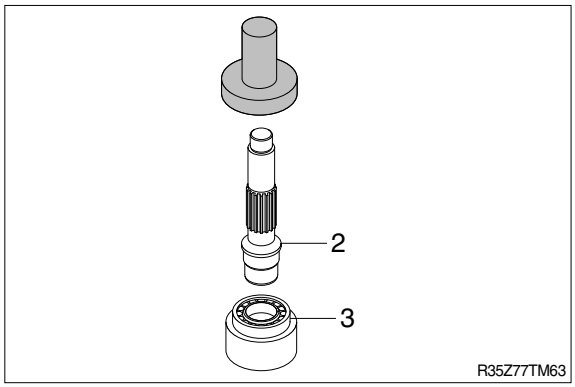

(18) Press fit shaft sub assy (2) in flange holder (1-1).

- Tools required :
  Shaft sub assembly press fitting jig (S-14)

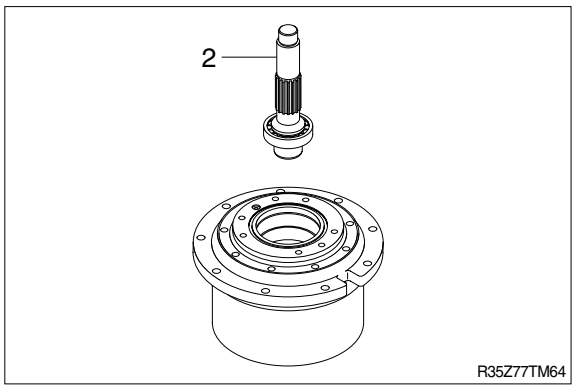

(19) Install steel ball (6), spring (20), piston assy (19) and swash plate (5) on flange holder (1-1).
Apply hydraulic oil to the sliding surface of the swash plate.

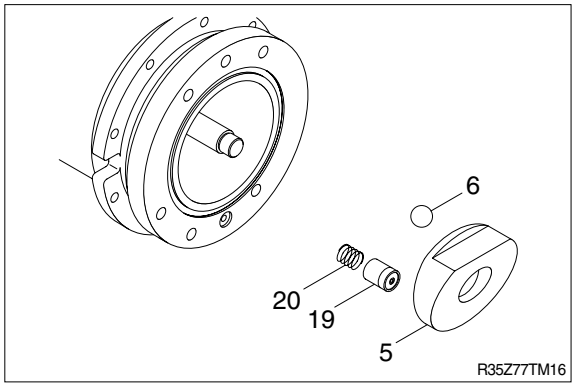

(20) Install washer (8), spring (11), spring seat (10) and snap ring (9) on cylinder block (7).

- Tools required :
  Snap ring pliers (No. 17)
  Snap ring assembly jig (S-16)

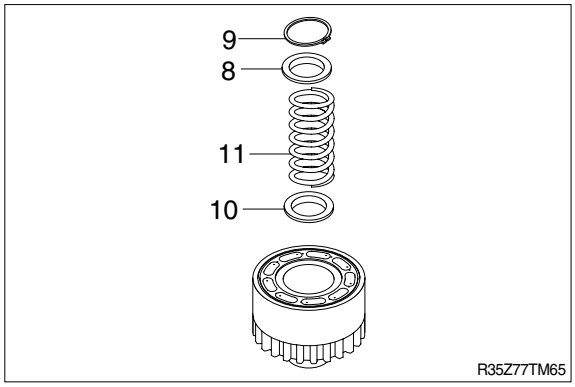

(21) Apply grease to pin (12) install pins in three holes of cylinder block (7).

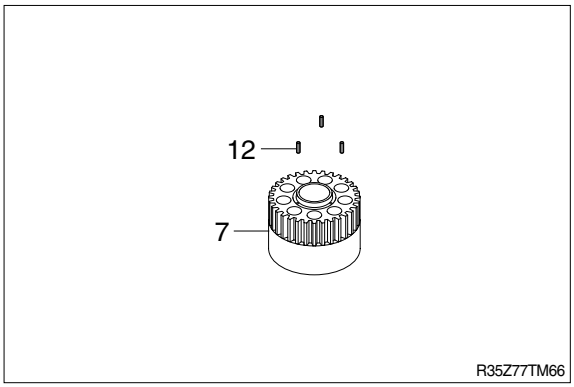

(22) Install retainer holder (13), retainer plate (14) and piston sub assy (15). Apply hydraulic oil in 99 holes of cylinder block (7).
Only parking brake type
Install disk plate (18).

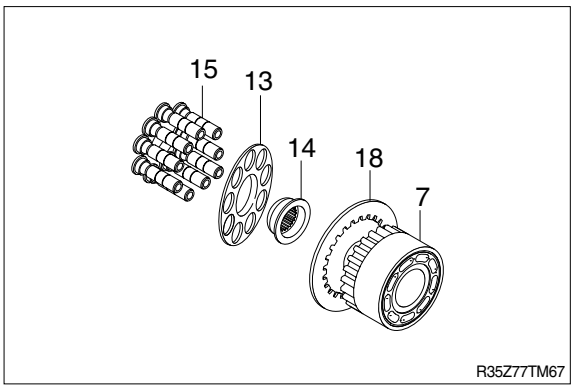

(23) Place the motor laterally, and install the cylinder block sub assy regarding the spline of the shaft as a guide.

※ Location of spline tooth of cylinder block(7) should be aligned that of retainer holder (13) to install them easily.

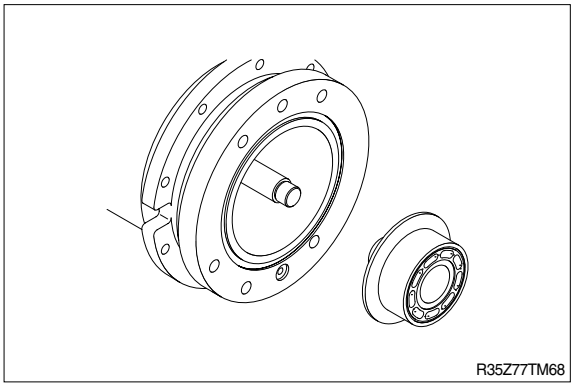

(24) Push the cylinder block by hand, and check that the spring contracts and restores. Apply hydraulic oil to the sliding surface of the cylinder block.

※ Confirm no foreign articles on surface of cylinder block, marked a circle. If there are foreign articles on it, wipe off them.

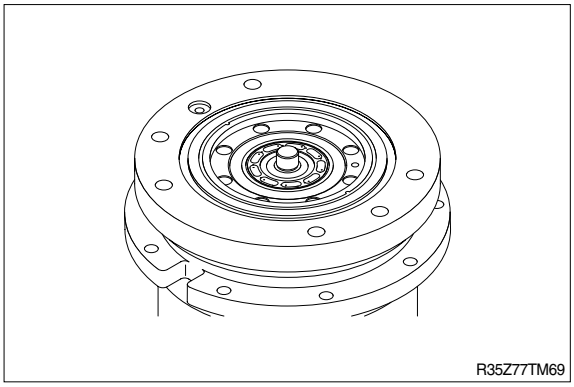

(25) Apply grease to O-ring (28), (29) and install pin (49) and them on flange holder (1-1)

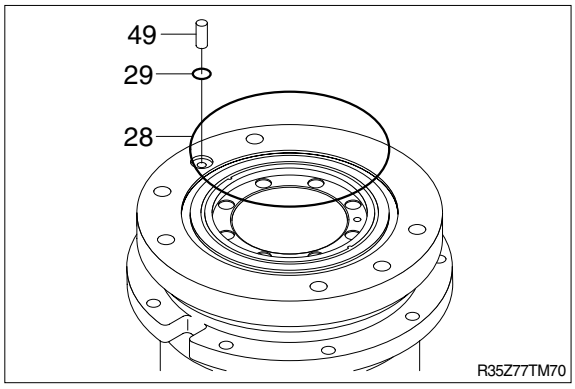

(26) Press fit ball bearing (27) on base plate (30).

· Tools required :
Ball bearing press fitting jig (S-16)

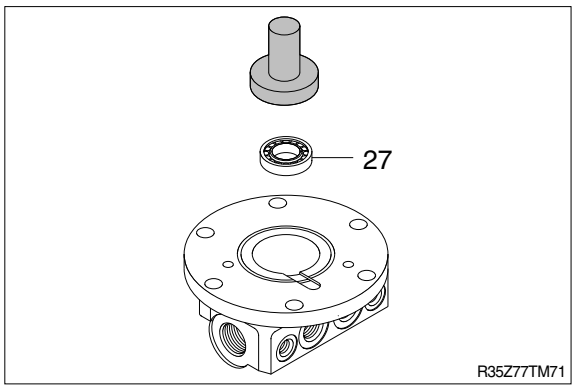

(27) Apply grease on the back side of valve plate (25), and install it and pin (26), O-ring (29) on base plate.

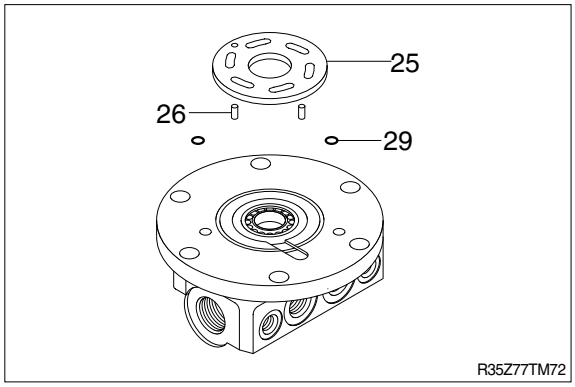

(28) This process is only parking brake type.
Apply grease to O-rings (22), (24) and install them to brake piston (17).
Install brake piston (17) to flange holder (1-1) to align pin (61) installed on base plate in No. 29 with holes on brake piston (17).
When install it, beat on evenly outside of brake piston by using of plastic hammer.

· Tools required :
Plastic hammer (No. 15)

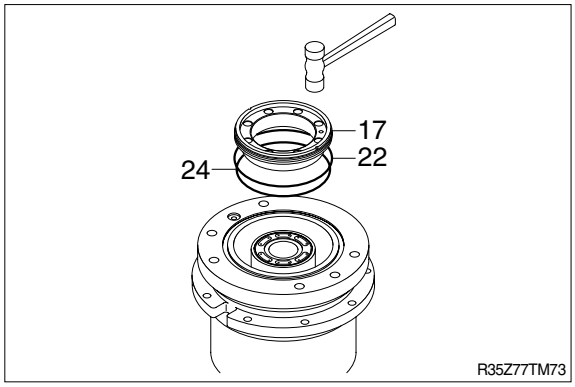

(29) With parking brake type.
Install springs (21), base plate (30), Pin (49).

※ Be careful of installing as springs (21), (32) don't fall down.
It's difficult to fall down by greased them.

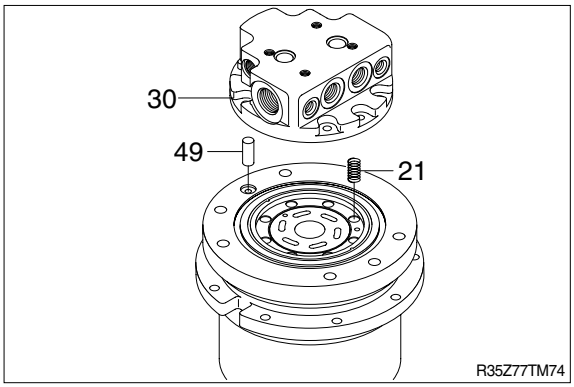

(30) Tighten socket head bolt (48).

· Tools required :
Torque wrench (No. 2)
Hexagonal bit for torque wrench (No. 10)
Tightening torque : 13.1±0.7 kgf · m
(94.8±5.1 lbf · ft)

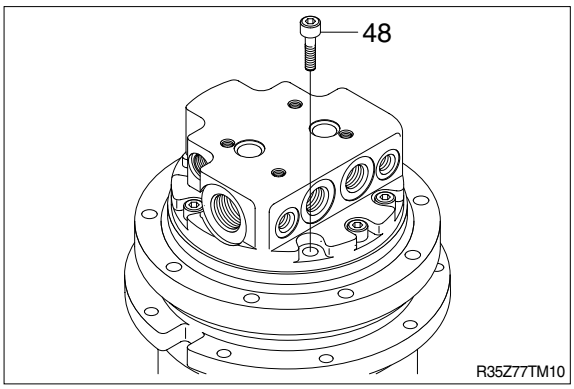

(31) Place spool (41) and spring (42) in.
Place the spool in while turning to prevent them from sticking.
Apply hydraulic oil to the spool before installation.

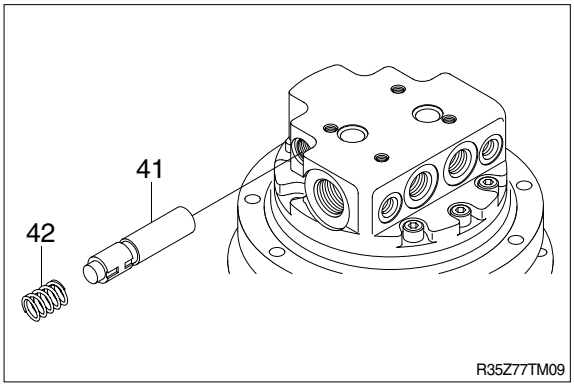

(32) Tighten plugs (43), (46) with O-ring (44).

· Tools required :
Torque wrench (No. 2)
Hexagonal bit for torque wrench (No. 9)
Socket for torque wrench (No. 11)
Tightening torque : 5.5±0.5 kgf · m
(39.8±3.6 lbf · ft)

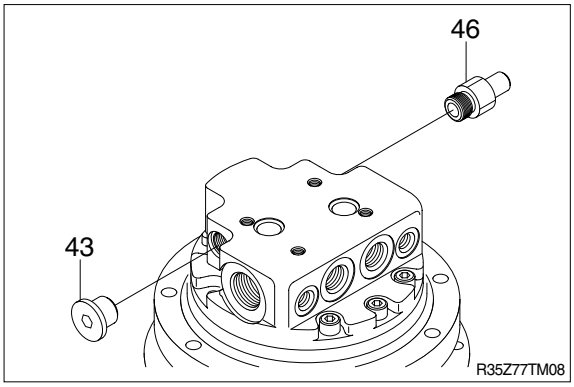

(33) Install check valve (31-2), spring (31-3) and plug (31-4) with O-ring (31-5) to plunger (31-1).
Apply a slight grease to the O-ring.

· Tools required :
Torque wrench (No. 2)
Hexagonal bit for torque wrench (No. 8)
Tightening torque : 3.3±0.2 kgf · m
(23.5±1.8 lbf · ft)

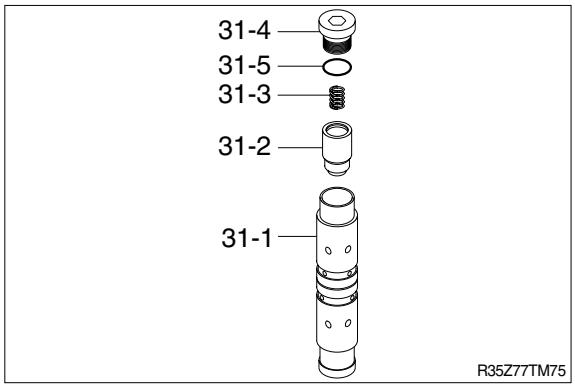

(34) Install plunger assy (31) on base plate (30).
Install it while turning to prevent it from sticking.
Apply hydraulic oil to plunger assy (31) before installation.

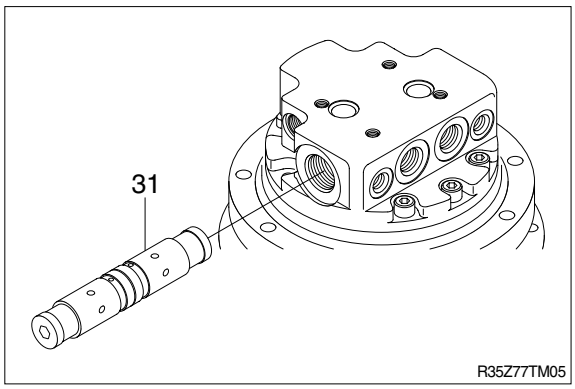

(35) Place spring (37) and spring seat (36) in.

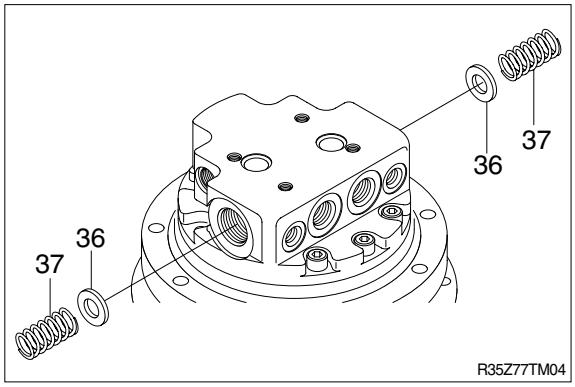

(36) Tighten cap (38) with O-ring (39).
Apply a slight grease to the O-ring.

· Tools required :
Torque wrench (No. 3)
Hexagonal bit for torque wrench (No. 10)
Tightening torque : 24.5±0.5 kgf · m
(177±3.7 lbf · ft)

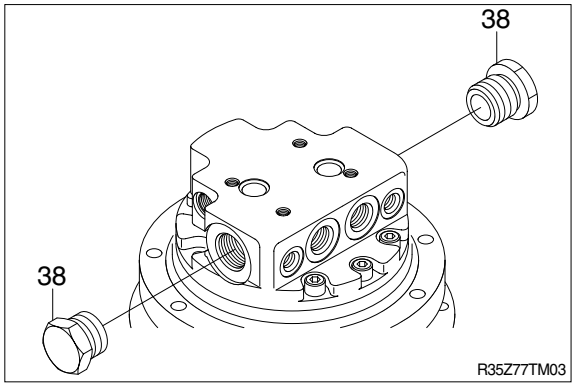

(37) With parking brake type

Install spool (50-2), spring (50-3) and spring seat (50-4) in valve body (50-1), and tighten plug (50-5)

· Tools required :
Torque wrench (No. 2)
Hexagonal bit for torque wrench (No. 9)
Tightening torque : 5.5±0.5 kgf · m
(39.8±3.6 lbf · ft)

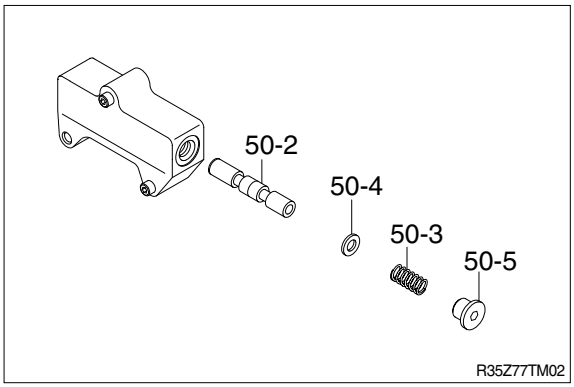

(38) Fit O-rings (50-6) or (50-7) to valve body, and put valve assy (50) on base plate (30).

Tighten socket head bolt (50-7), (50-8).

· Tools required :
Torque wrench (No. 1)
Hexagonal bit for torque wrench (No. 7)
Tightening torque : 3.8±0.2 kgf · m
(27.2±1.4 lbf · ft)

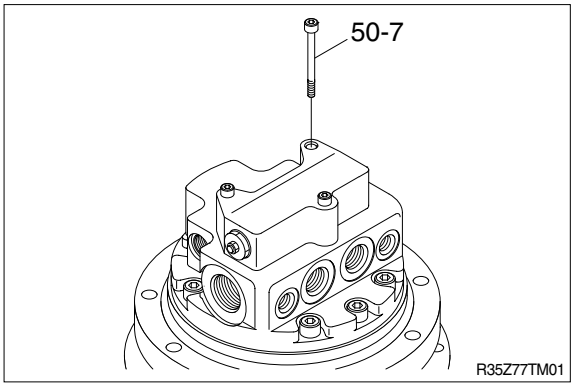

(39) Pour the gear oil through the threaded hole of plug (1-27).

Wind the plug with seal tape before tightening.

· Tools required :
Torque wrench (No. 2)
Hexagonal bit for torque wrench (No. 8) (No. 9)
PF 1/4 ··· Tightening torque wrench
3.5±0.5 kgf · m
(25.3±3.6 lbf · ft)
PF 1/4 ··· Tightening torque wrench
4.0±0.2 kgf · m
(28.9±1.5 lbf · ft)

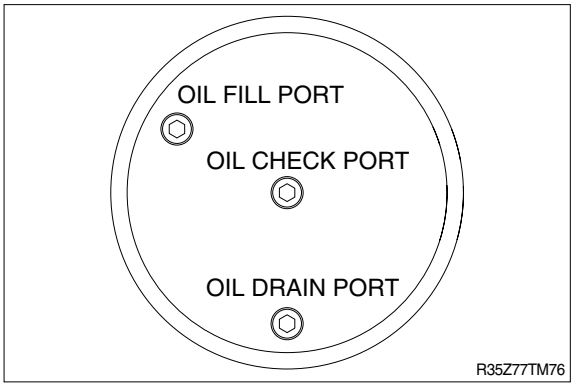

(40) Completed.

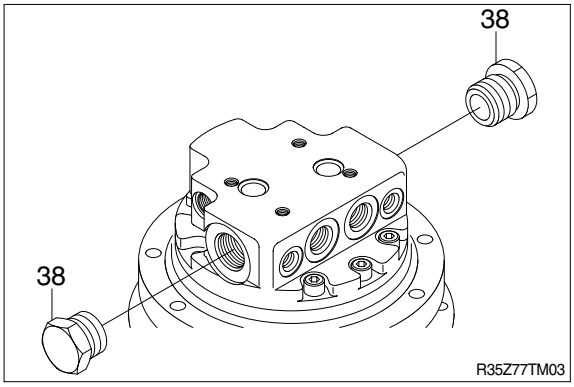

3) QUALITY CHECK AFTER REASSEMBLY

(1) Air leak test of reduction unit

Remove one plug (① or ② or ③) of the reduction unit apply compressed air (0.03 [MPa]) through tapped hole of plug in water for two minutes, and observe that are no bubbles.

(2) Air leak test of motor

Seal all piping ports on the motor except one port with plugs, and apply compressed air (0.03 [MPa]) through open port in water for two minutes. Observe that there are no bubbles.

(3) Upon completion of leak test in subparagraphs (1) and (2) above, fill the motor case with new hydraulic fluid. Run the motor crosswise for two minutes filling hydraulic fluid at flow rate of 20 liters per minute.

Confirm that there is no excessive heat, vibration or noise during running.

GROUP 7 RCV LEVER

1. REMOVAL AND INSTALL

1) REMOVAL

(1) Lower the work equipment to the ground and stop the engine.

(2) Operate the control levers and pedals several times to release the remaining pressure in the hydraulic piping.

(3) Loosen the breather slowly to release the pressure inside the hydraulic tank.

⚠ Escaping fluid under pressure can penetrate the skin causing serious injury.

(4) Loosen the socket bolt(1).

(5) Remove the cover of the console box.

(6) Disconnect pilot line hoses(3).

(7) Remove the pilot valve assembly(2).

※ When removing the pilot valve assembly, check that all the hoses have been disconnected.

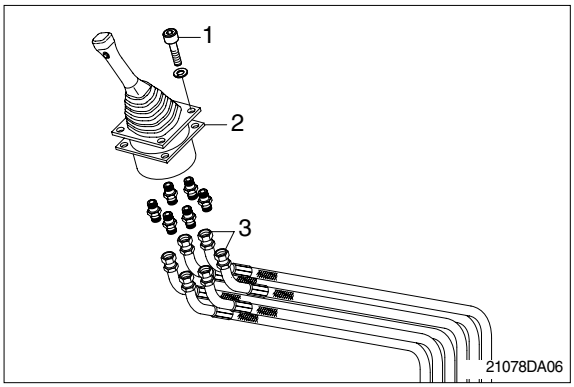

2) INSTALL

(1) Carry out installation in the reverse order to removal.

(2) Confirm the hydraulic oil level and check the hydraulic oil leak or not.

2. DISASSEMBLY AND ASSEMBLY

1) STRUCTURE

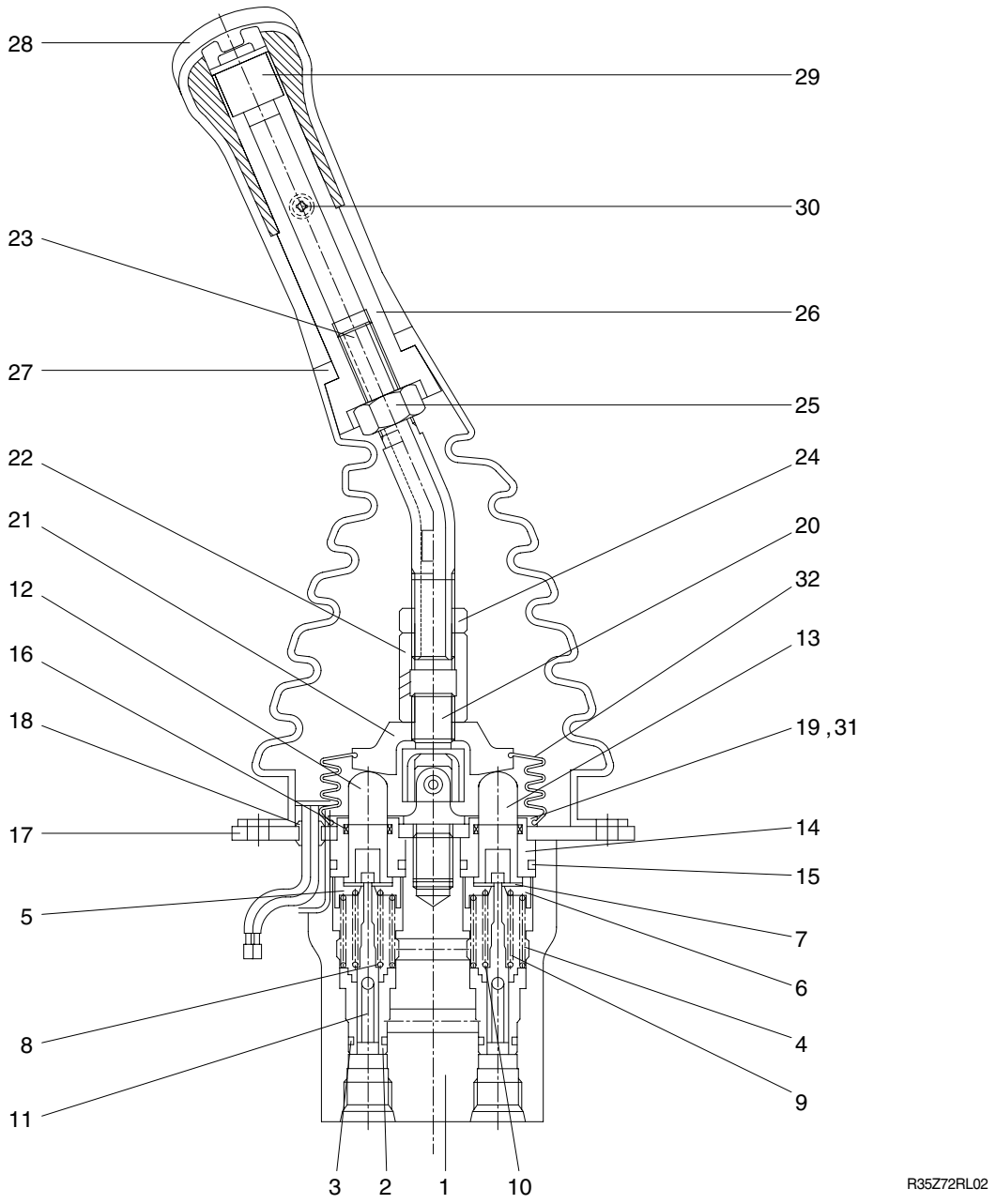

1	Case	12	Push rod (1, 3)	23	Connector
2	Plug	13	Push rod (2, 4)	24	Nut
3	O-ring	14	Plug	25	Nut
4	Spring	15	O-ring	26	Insert
5	Spring seat (1, 3)	16	Rod seal	27	Boot
6	Spring seat (2, 4)	17	Plate (A)	28	Handle
7	Stopper	18	Bushing	29	Switch assembly
8	Spring (1, 3)	19	Machine screw	30	Screw
9	Spring (2, 4)	20	Joint assembly	31	Plate
10	Spring seat	21	Swash plate	32	Boot
11	Spool	22	Hex nut		

2) TOOLS AND TIGHTENING TORQUE

(1) Tools

Tool name	Remark	
(L) Hexagonal wrench	10	B
Spanner	22	
	27	
(+) Driver	Length 150	
(-) Driver	Width 4~5	
Torque wrench	Capable of tightening with the specified torques	

3) DISASSEMBLY

(1) Clean pilot valve with kerosene.

※ Put blind plugs into all ports

(2) Fix pilot valve in a vise with copper(or lead) sheets.

(3) Remove end of boot(32) from case(1) and take it out upwards.

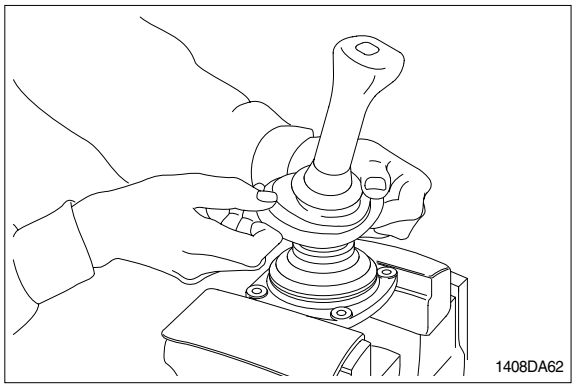

※ For valve with switch, remove cord also through hole of casing.

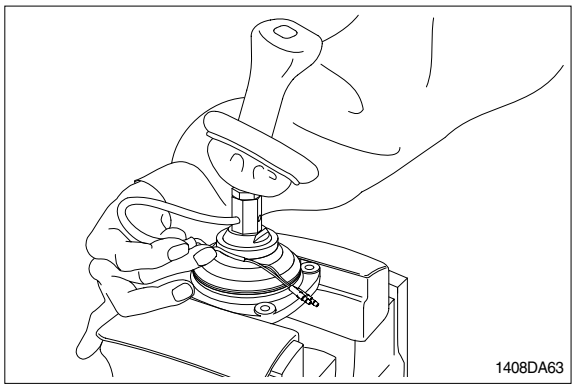

(4) Loosen lock nut(24) and adjusting nut(22) with spanners on them respectively, and take out handle section as one body.

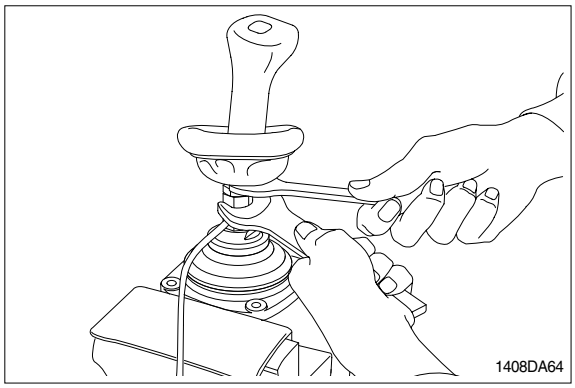

(5) Remove the boot(32).

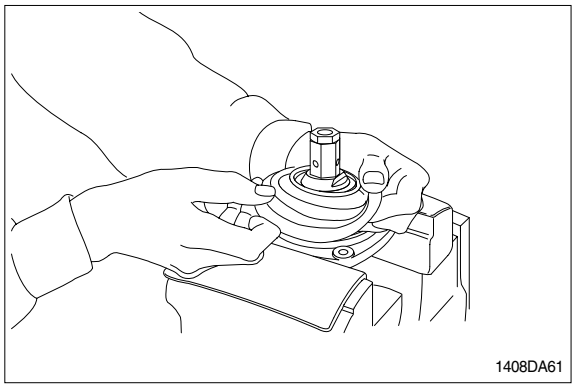

(6) Loosen adjusting nut(22) and plate(31) with spanners on them respectively, and remove them.

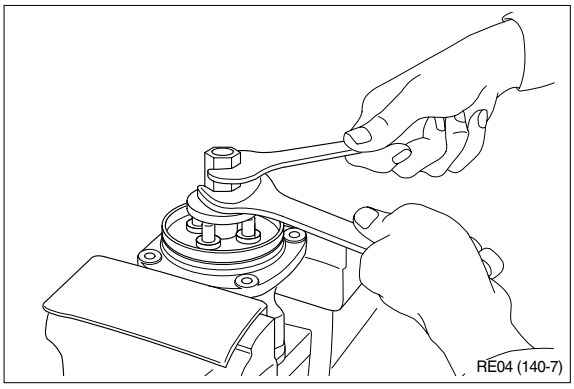
RE04 (140-7)

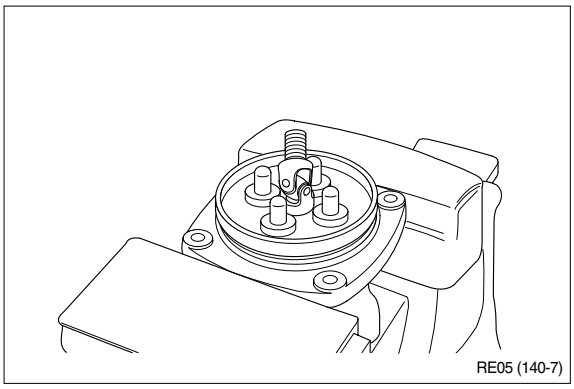
RE05 (140-7)

(7) Turn joint anticlockwise to loosen it, utilizing jig(Special tool).

※ When return spring(8, 9) is strong in force, plate(31), plug(14) and push rod(12, 13) will come up on loosening joint.
Pay attention to this.

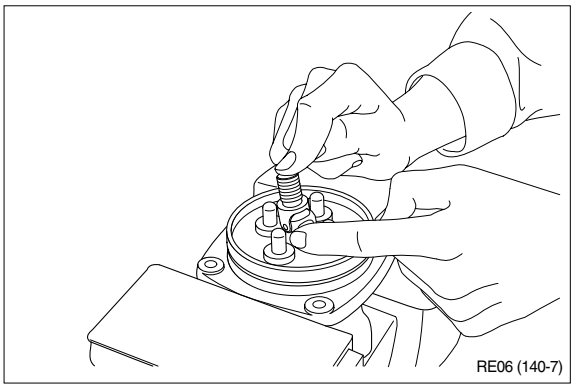
RE06 (140-7)

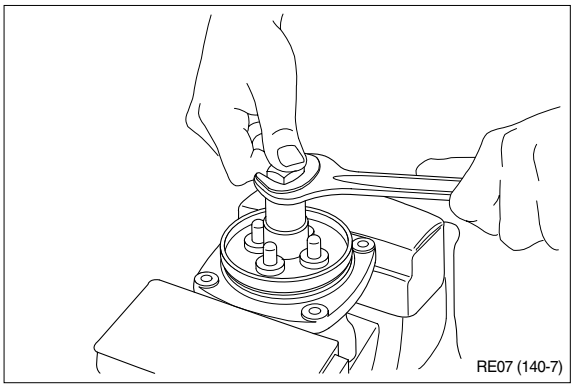
RE07 (140-7)

(8) Remove plate(31).

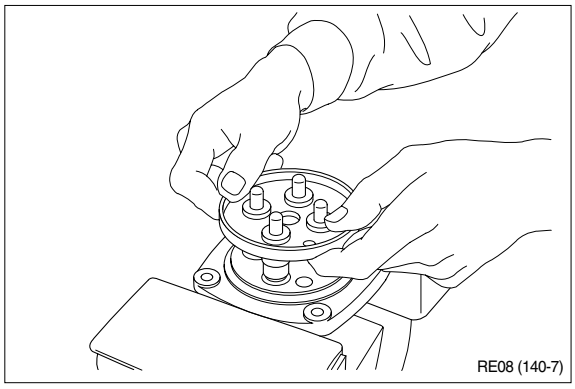
RE08 (140-7)

(9) When return spring(8, 9) is weak in force, plug(14) stays in casing because of sliding resistance of O-ring.

※ Take it out with minus screwdriver.
Take it out, utilizing external periphery groove of plug and paying attention not to damage it by partial loading.

※ During taking out, plug may jump up due to return spring(8, 9) force.
Pay attention to this.

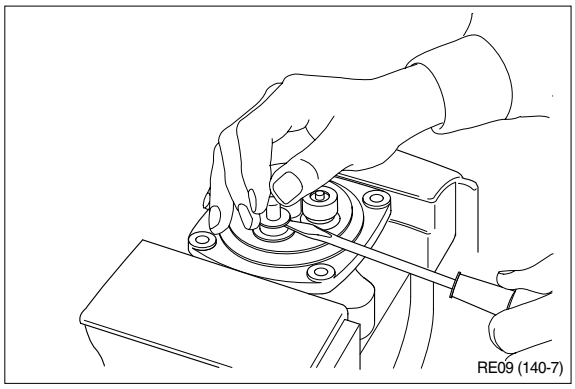
RE09 (140-7)

(10) Remove reducing valve subassembly and return spring(8, 9) out of casing.

※ Record relative position of reducing valve subassembly and return springs.

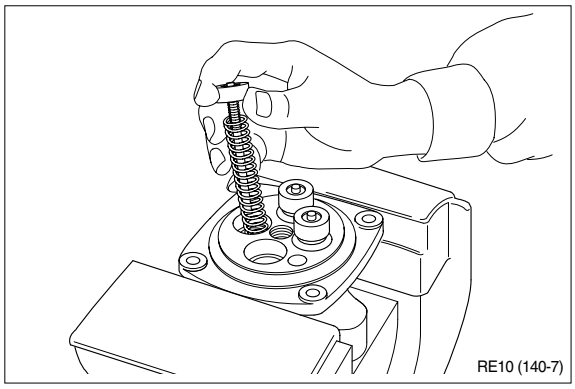
RE10 (140-7)

(11) Loosen hexagon socket head plug(2) with hexagon socket screw key.

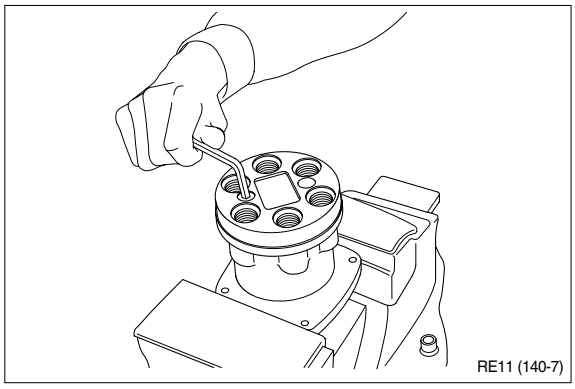
RE11 (140-7)

(12) For disassembling reducing valve section, stand it vertically with spool(11) bottom placed on flat workbench. Push down spring seat(5, 6) and remove two pieces of semicircular stopper(7) with tip of small minus screwdriver.

※ Pay attention not to damage spool surface.

※ Record original position of spring seat(5, 6).

※ Do not push down spring seat more than 6mm.

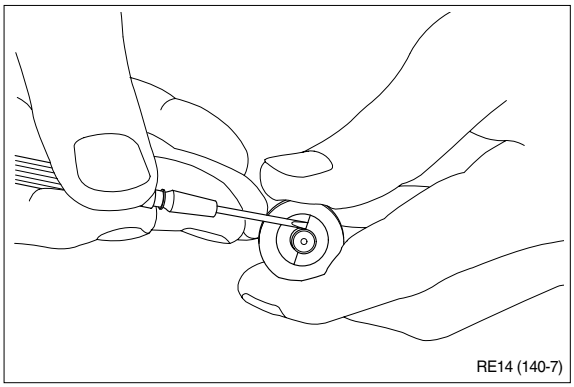

RE14 (140-7)

(13) Separate spool(11), spring seat(5, 6), spring(8, 9) and spring seat (10)

※ individually.

Until being assembled, they should be handled as one subassembly group.

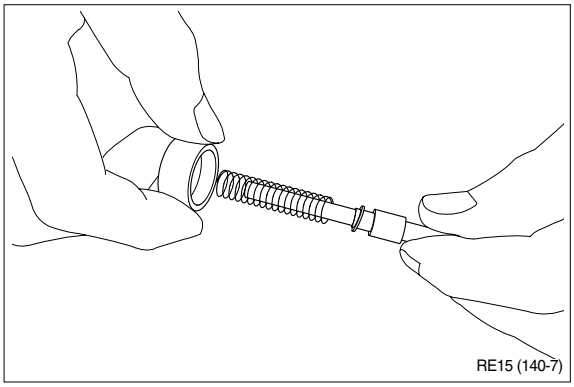

RE15 (140-7)

(14) Take push rod(12, 13) out of plug(14).

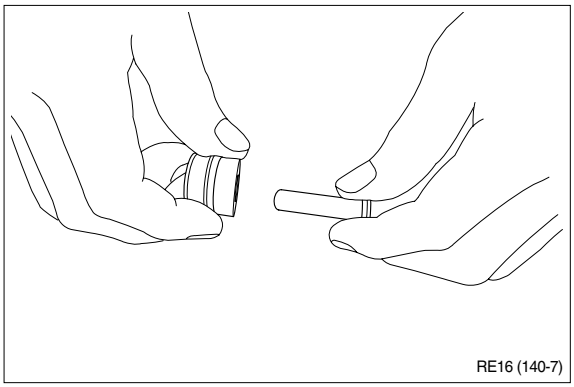

RE16 (140-7)

(15) Remove O-ring(15) and seal(16) from plug(14).

Use small minus screwdriver or so on to remove this seal.

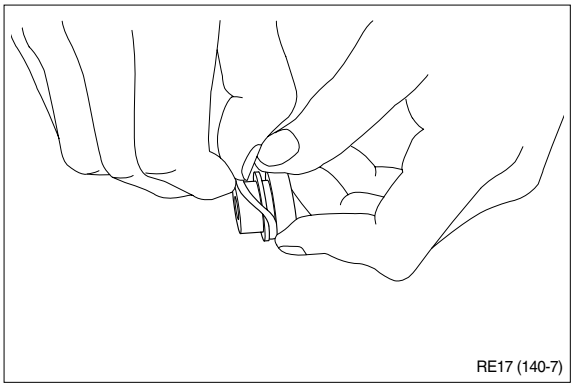

RE17 (140-7)

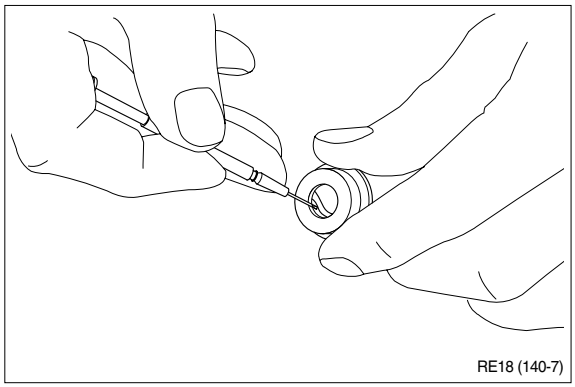

(16) Remove lock nut(24) and then boot(27).

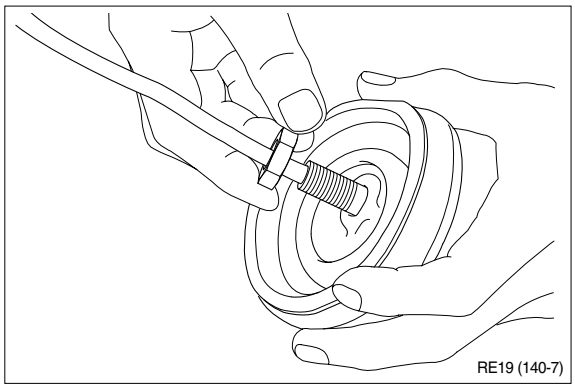

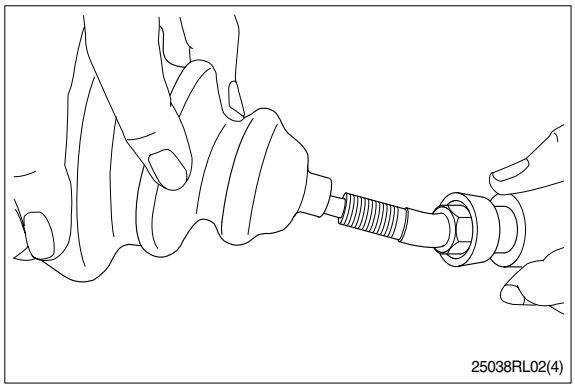

(17) Cleaning of parts

① Put all parts in rough cleaning vessel filled with kerosene and clean them (Rough cleaning).

※ If dirty part is cleaned with kerosene just after putting it in vessel, it may be damaged. Leave it in kerosene for a while to loosen dust and dirty oil.

※ If this kerosene is polluted, parts will be damaged and functions of reassembled valve will be degraded.
Therefore, control cleanliness of kerosene fully.

② Put parts in final cleaning vessel filled with kerosene, turning it slowly to clean them even to their insides (Finish cleaning).

※ Do not dry parts with compressed air, since they will be damaged and/or rusted by dust and moisture in air.

(18) Rust prevention of parts.

Apply rust-preventives to all parts.

※ If left as they after being cleaned, they will be rusted and will not display their functions fully after being reassembled.

4) ASSEMBLY

(1) Tighten hexagon socket head plug(2) to the specified torque.

※ Tighten two bolts alternately and slowly.

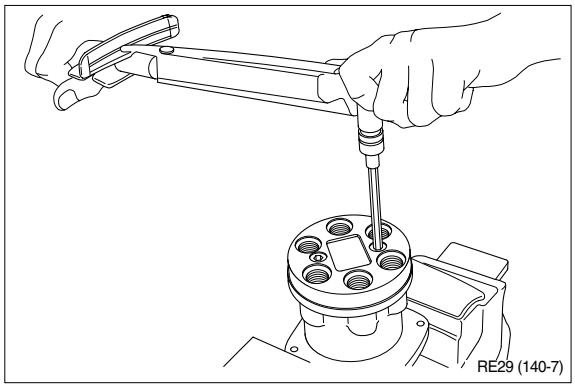

(2) Put spring seat(10), springs(8, 9) and spring seat(5, 6) onto spool(11) in this order.

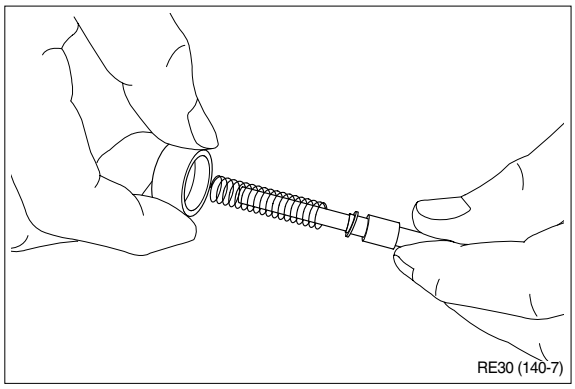

(3) Stand spool vertically with its bottom placed on flat workbench, and with spring seat pushed down, put two pieces of semicircular stopper(7) on spring seat without piling them on.

※ Assemble stopper(7) so that its sharp edge side will be caught by head of spool. Do not push down spring seat more than 6mm.

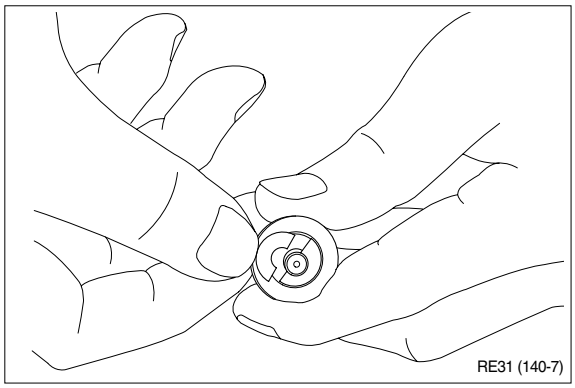

(4) Assemble spring(8, 9) into casing. Assemble reducing valve subassembly into casing.

※ Assemble them to their original positions.

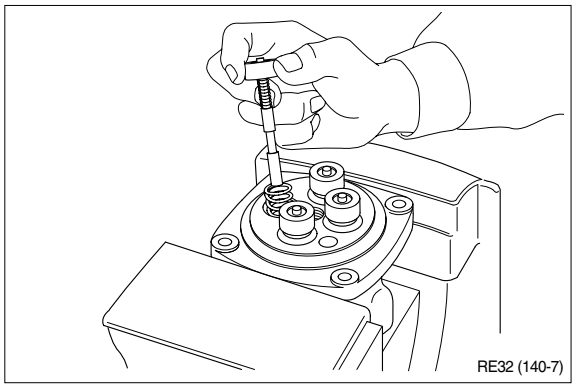

(5) Assemble O-ring(15) onto plug(14).

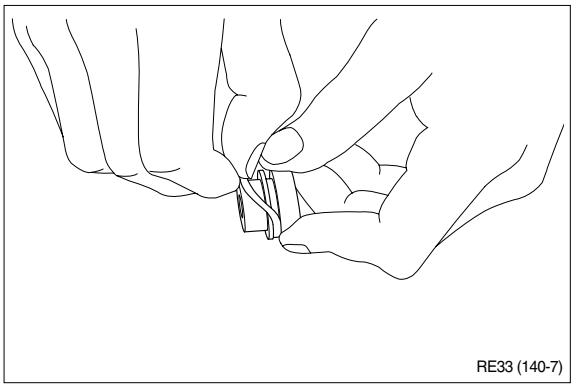
RE33 (140-7)

(6) Assemble seal(16) to plug(14).
※ Assemble seal in such lip direction as shown below.

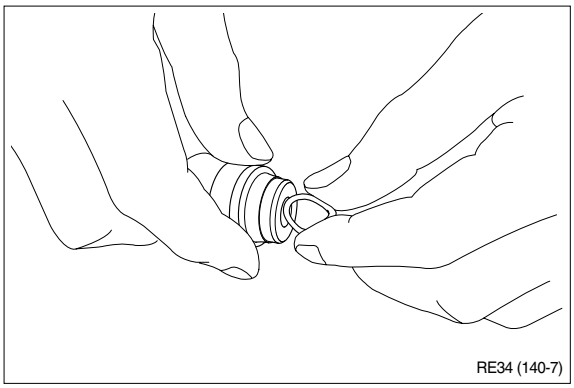
RE34 (140-7)

(7) Assemble push rod(12, 13) to plug(14).
※ Apply working oil on push-rod surface.

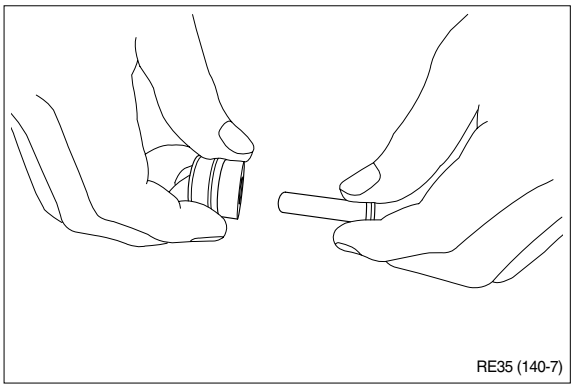
RE35 (140-7)

(8) Assemble plug subassembly to casing.
※ When return spring is weak in force, subassembly stops due to resistance of O-ring.

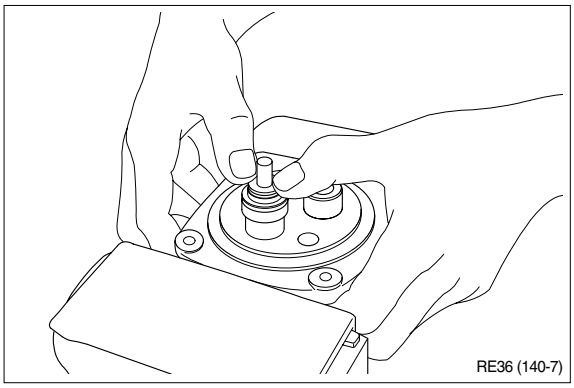
RE36 (140-7)

(9) When return spring is strong in force, assemble 4 sets at the same time, utilizing plate(31), and tighten joint(20) temporarily.

(10) Fit plate(31).

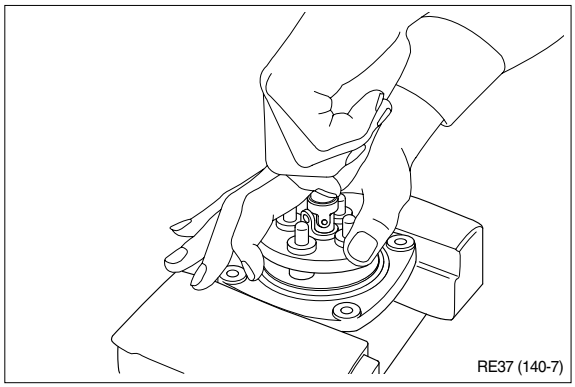

(11) Tighten joint(20) with the specified torque to casing, utilizing jig.

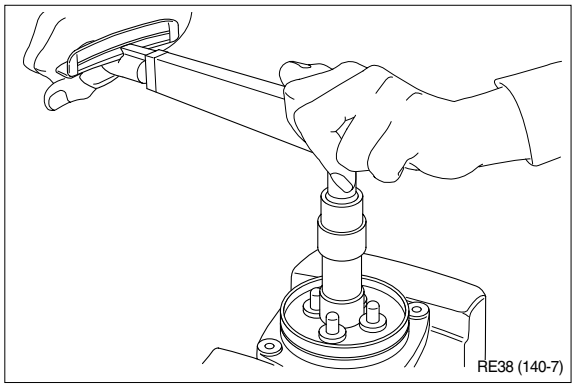

(12) Assemble plate(21) to joint(20).

※ Screw it to position that it contacts with 4 push rods evenly.

※ Do not screw it over.

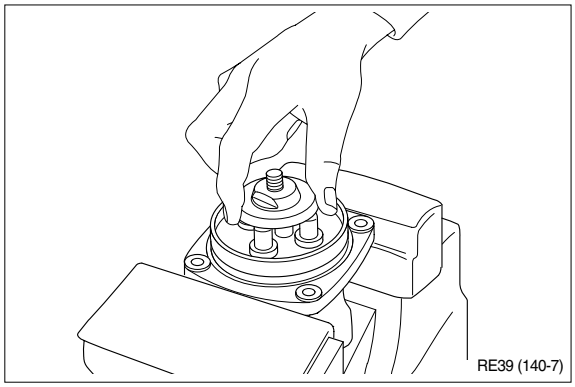

(13) Assemble adjusting nut(22), apply spanner to width across flat of plate(21) to fix it, and tighten adjusting nut to the specified torque.

※ During tightening, do not change position of disk.

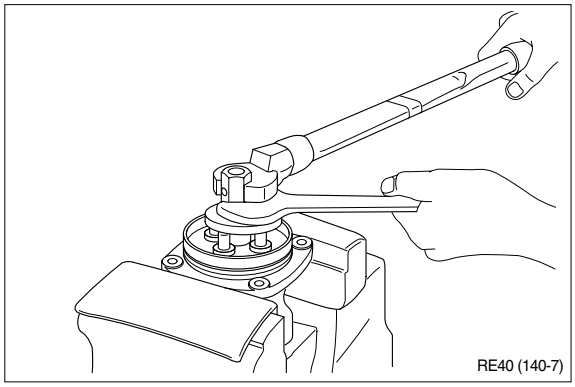

(14) Fit boot(32) to plate.

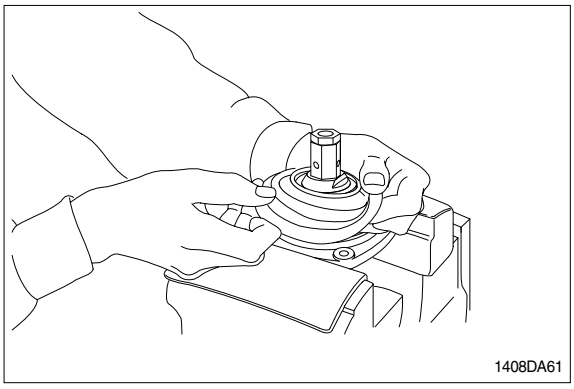

(15) Fit boot(27) and lock nut(24), and handle subassembly is assembled completely.

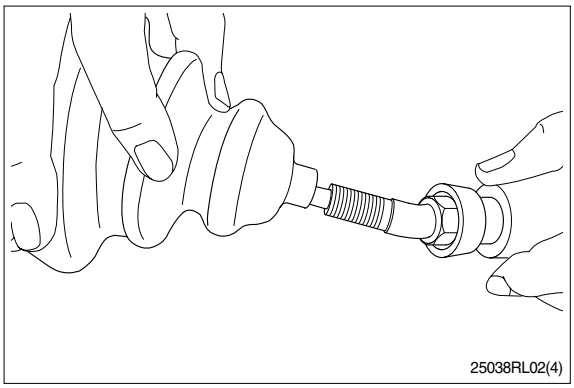

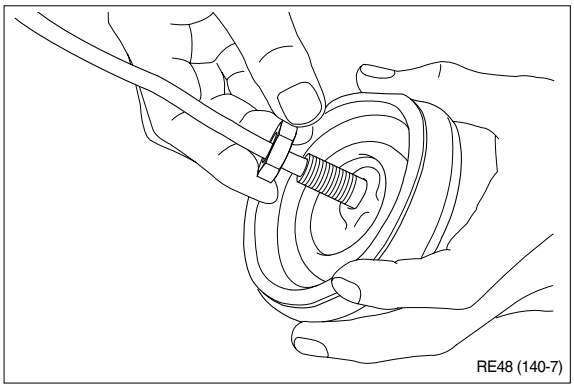

(16) Pull out cord and tube through adjusting nut hole provided in direction 60° to 120° from casing hole.

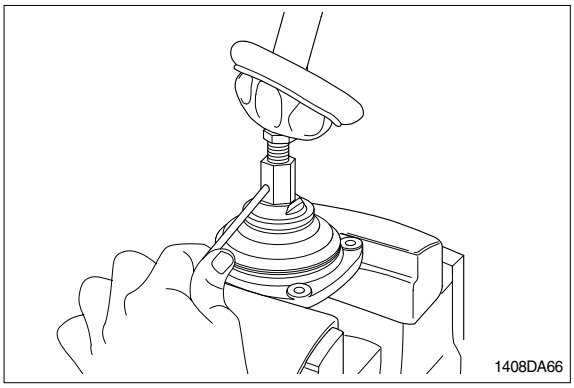

(17) Assemble bushing(18) to plate and pass cord and tube through it.

※ Provide margin necessary to operation.

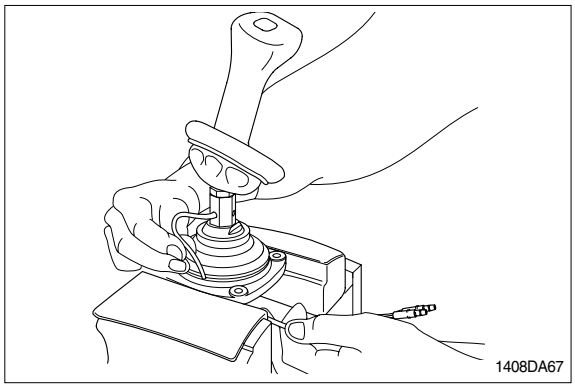

(18) Determine handle direction, tighten lock nut(21) to specified torque to fix handle.

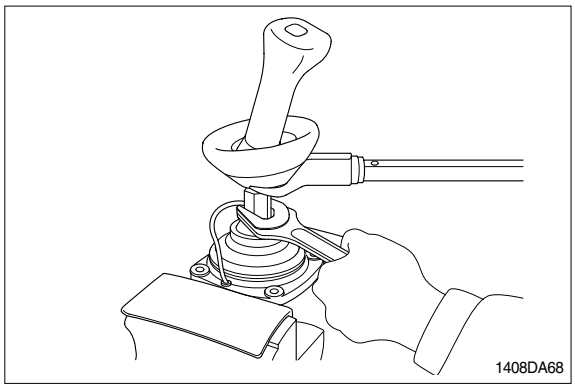

(19) Apply grease to rotating section of joint and contacting faces of disk and push rod.

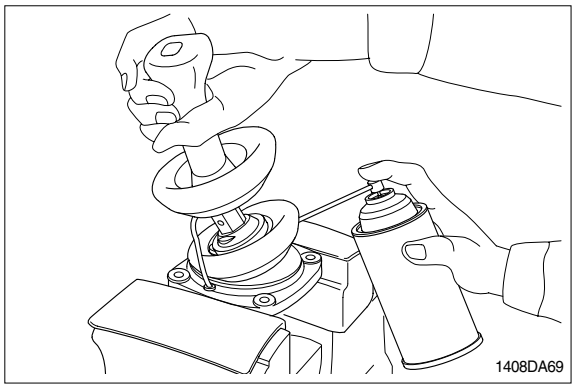

(20) Assemble lower end of bellows to casing.

(21) Inject volatile rust-preventives through all ports and then put blind plugs in ports.

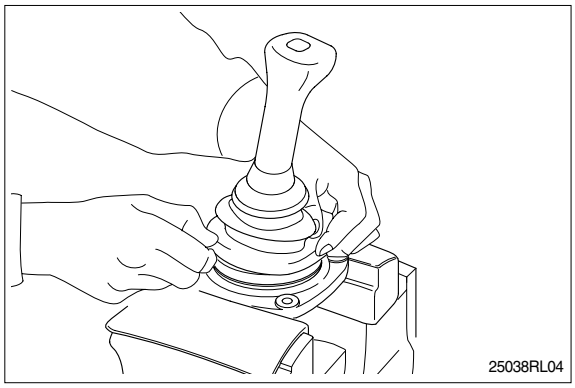

GROUP 8 TURNING JOINT

1. REMOVAL AND INSTALL

1) REMOVAL

(1) Lower the work equipment to the ground and stop the engine.

(2) Operate the control levers and pedals several times to release the remaining pressure in the hydraulic piping.

(3) Loosen the breather slowly to release the pressure inside the hydraulic tank.

⚠ Escaping fluid under pressure can penetrate the skin causing serious injury.

※ When pipes and hoses are disconnected, the oil inside the piping will flow out, so catch it in oil pan.

(4) Disconnect all hoses.

(5) Sling the turning joint assembly (1) and remove the mounting bolt(2).

- Weight : 15kg(35lb)
- Tightening torque : 6.9± 1.4kgf · m (49.9± 10.1lbf · ft)

(6) Remove the turning joint assembly.

※ When removing the turning joint, check that all the hoses have been disconnected.

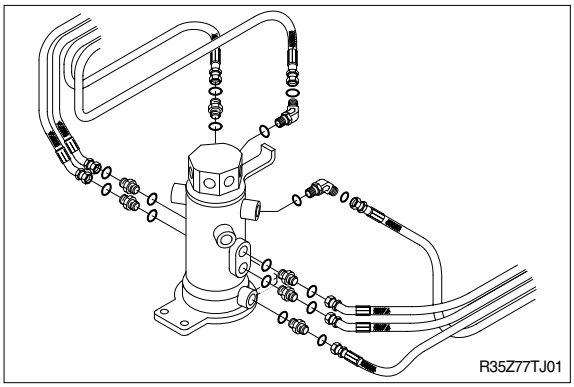

2) INSTALL

(1) Carry out installation in the reverse order to removal.

※ Take care of turning joint direction.

※ Assemble hoses to their original positions.

※ Confirm the hydraulic oil level and check the hydraulic oil leak or not.

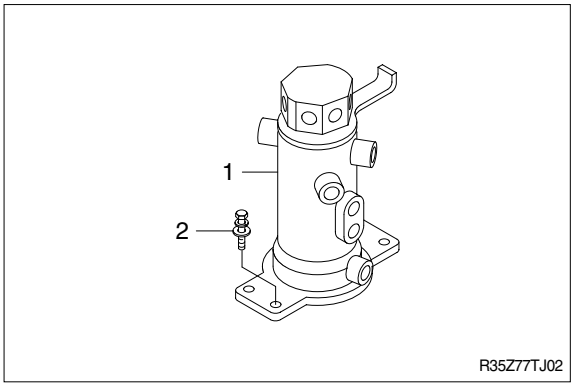

2. DISASSEMBLY AND ASSEMBLY

1) STRUCTURE

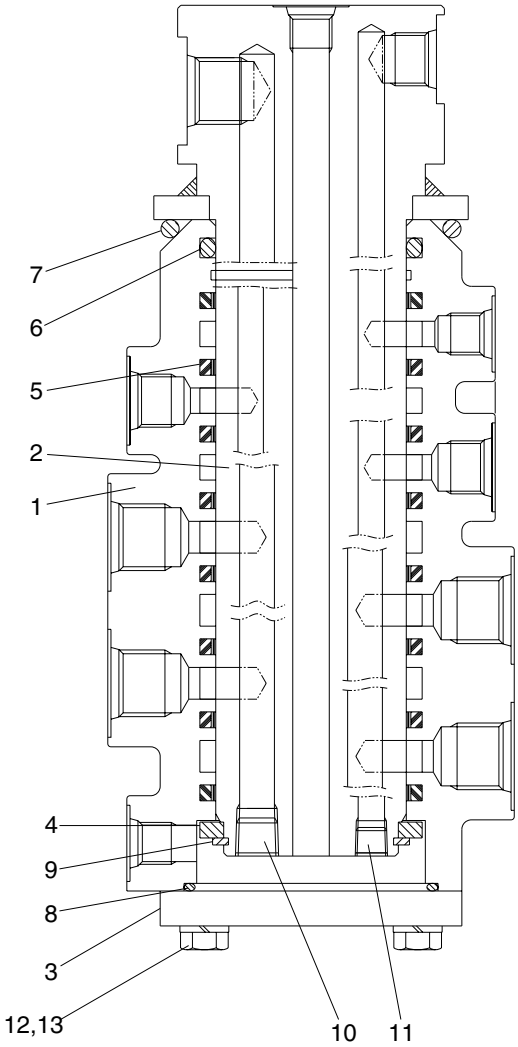

R35Z77TJ03

1	Hub	6	O-ring	10	Plug
2	Shaft	7	O-ring	11	Plug
3	Cover	8	O-ring	12	Hexagon bolt
4	Spacer	9	Retainer ring	13	Spring washer
5	Slipper seal				

2) DISASSEMBLY

※ Before the disassembly, clean the turning joint.

(1) Remove bolts(12), washer(13) and cover(3).

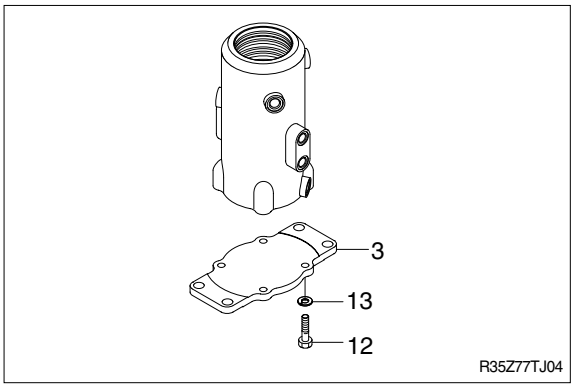

(2) Remove O-ring(8).

(3) Remove retainer ring(9) and spacer(4).

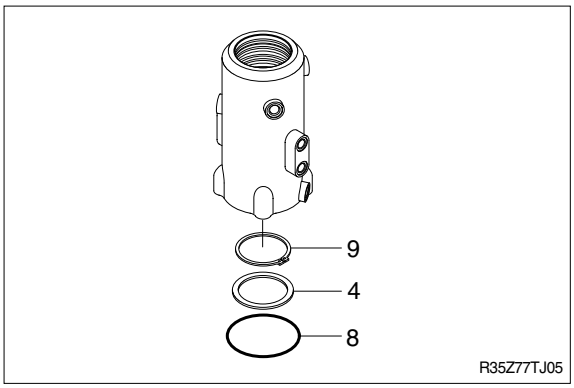

(4) Place hub(1) on a V-block and by using a wood buffer at the shaft end, hit out shaft(2) to about 1/2 from the body with a hammer.

※ Take care not to damage the shaft(2) when remove hub(1) or rest it sideway.

※ Put a fitting mark on hub(1) and shaft(2).

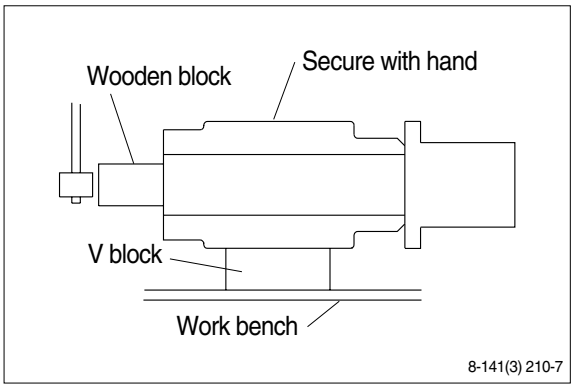

(5) Remove eight slipper seals(5) and O-ring(6, 7) from hub(1).

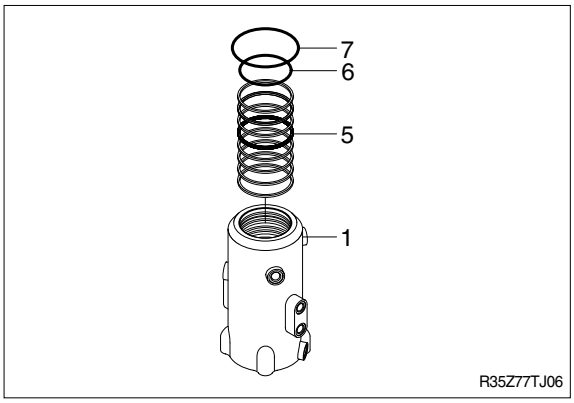

3) ASSEMBLY

※ Clean all parts.
※ As a general rule, replace oil seals and O-ring.
※ Coat the sliding surfaces of all parts with engine oil or grease before installing.

(1) Fix eight slipper seal(5) and O-ring(6, 7)to hub(1).

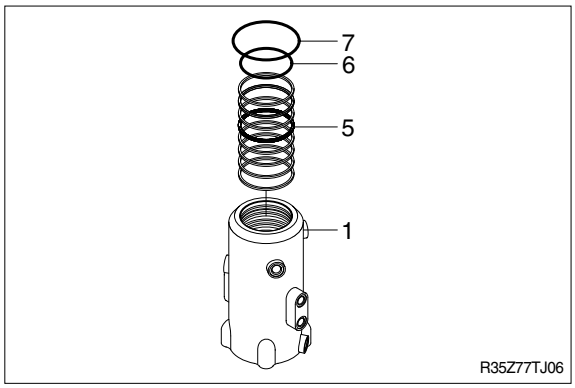

(2) Set hub(1) on block, install shaft(2) into hub(1) by hand.

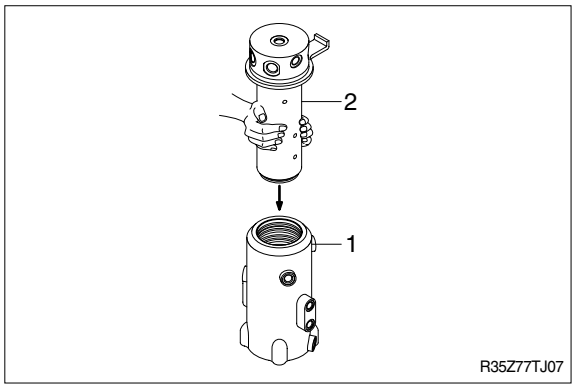

(3) Fit spacer(4) and retainer ring(9) to shaft(2).

(4) Fit O-ring(8) to hub(1).

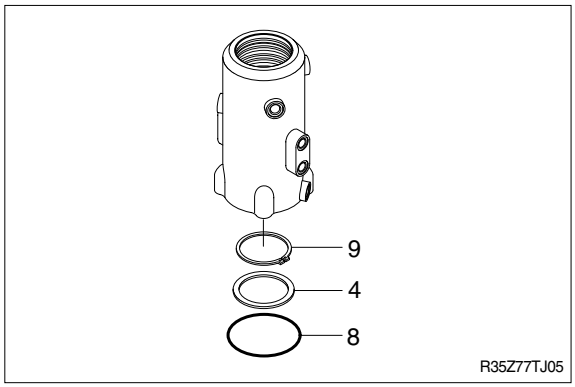

(5) Install cover(3) to hub and tighten bolts(12).

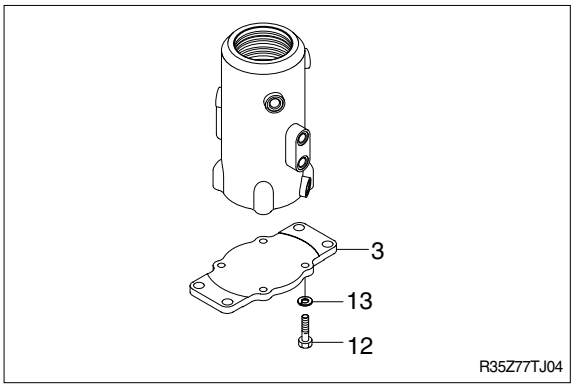

1. REMOVAL AND INSTALL

1) BUCKET CYLINDER

(1) Removal

※ Expand the arm and bucket fully, lower the work equipment to the ground and stop the engine.

※ Operate the control levers and pedals several times to release the remaining pressure in the hydraulic piping.

13031GE18

⚠ Loosen the breather slowly to release the pressure inside the hydraulic tank. Escaping fluid under pressure can penetrate the skin causing serious injury.

※ Fit blind plugs in the hoses after disconnecting them, to prevent dirt or dust from entering.

① Set block between bucket cylinder and arm.

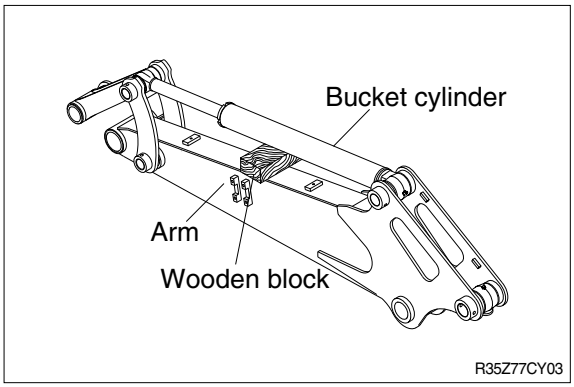

R35Z77CY03

② Remove bolt(2), nut(3) and pull out pin (1).

※ Tie the rod with wire to prevent it from coming out.

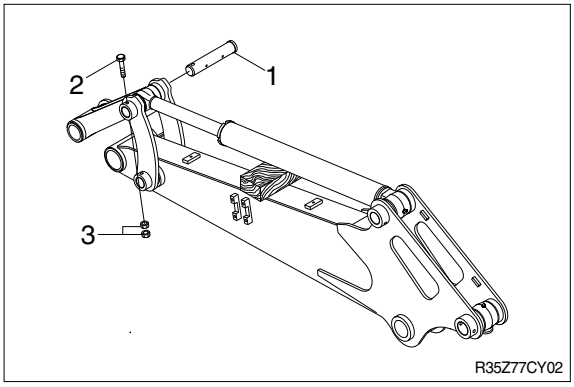

R35Z77CY02

③ Disconnect bucket cylinder hoses(4) and put plugs(5) on cylinder pipe.

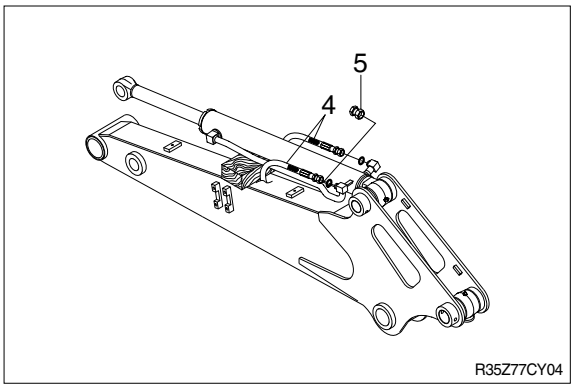

R35Z77CY04

④ Sling bucket cylinder assembly(9) and remove bolt(6) and nut(7) then pull out pin (8).

⑤ Remove bucket cylinder assembly(9).

· Weight : 30kg(70lb)

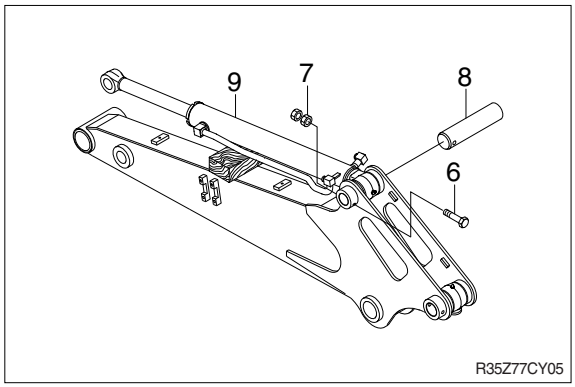

(2) Install

① Carry out installation in the reverse order to removal.

⚠ **When aligning the mounting position of the pin, do not insert your fingers in the pin hole.**

※ Bleed the air from the bucket cylinder.

※ Confirm the hydraulic oil level and check the hydraulic oil leak or not.

2) ARM CYLINDER

(1) Removal

※ Expand the arm and bucket fully, lower the work equipment to the ground and stop the engine.

※ Operate the control levers and pedals several times to release the remaining pressure in the hydraulic piping.

⚠ Loosen the breather slowly to release the pressure inside the hydraulic tank.

⚠ Escaping fluid under pressure can penetrate the skin causing serious injury.

※ Fit blind plugs in the hoses after disconnecting them, to prevent dirt or dust from entering.

① Set block between arm cylinder and boom.

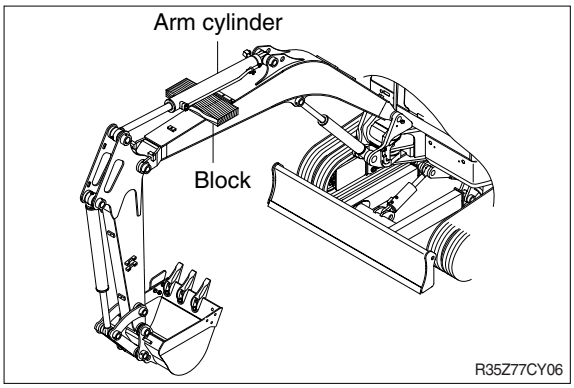

② Remove bolt and nut(2) and pull out pin(1).

※ Tie the rod with wire to prevent it from coming out.

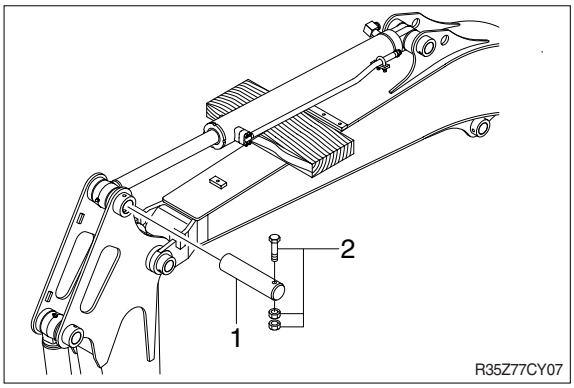

③ Disconnect arm cylinder hoses(4) and put plugs on cylinder pipe.

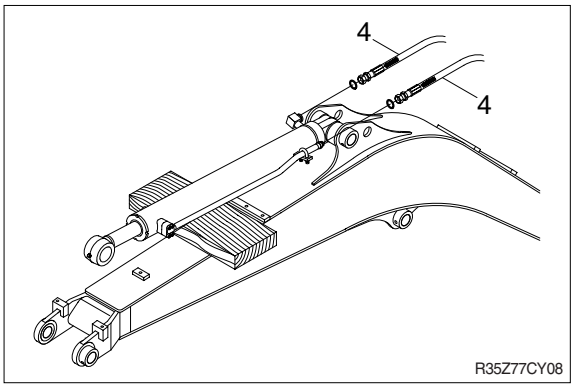

⑤ Sling arm assembly(8) and remove bolt and nut(7) then pull out pin(6).

⑥ Remove arm cylinder assembly(8).

· Weight : 40kg(90lb)

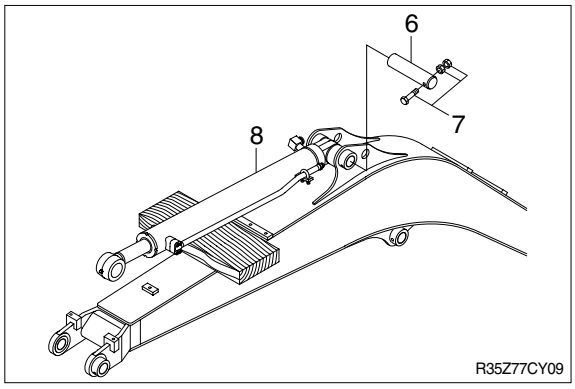

(2) Install

① Carry out installation in the reverse order to removal.

⚠ When aligning the mounting position of the pin, do not insert your fingers in the pin hole.

※ Bleed the air from the arm cylinder.

※ Confirm the hydraulic oil level and check the hydraulic oil leak or not.

3) BOOM CYLINDER

(1) Removal

※ Expand the arm and bucket fully, lower the work equipment to the ground and stop the engine.

※ Operate the control levers and pedals several times to release the remaining pressure in the hydraulic piping.

⚠ Loosen the breather slowly to release the pressure inside the hydraulic tank.

⚠ Escaping fluid under pressure can penetrate the skin causing serious injury.

※ Fit blind plugs in the hoses after disconnecting them, to prevent dirt or dust from entering.

① Sling boom cylinder assembly.

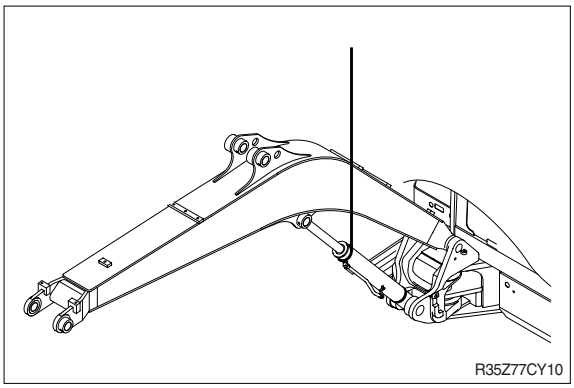

③ Remove bolt and nut(2) and pull out pin(1).

※ Tie the rod with wire to prevent it from coming out.

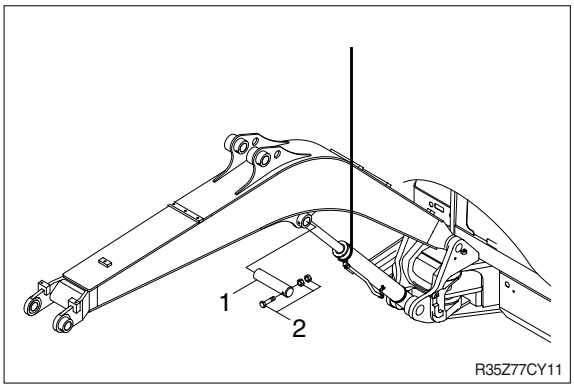

④ Lower the boom cylinder assembly(3) on a stand.

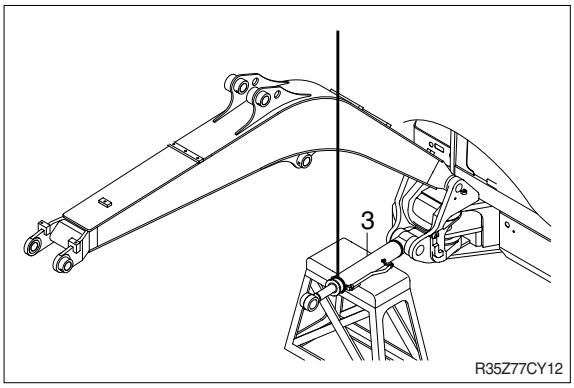

⑤ Disconnect boom cylinder hoses(4) and put plugs on cylinder pipe.

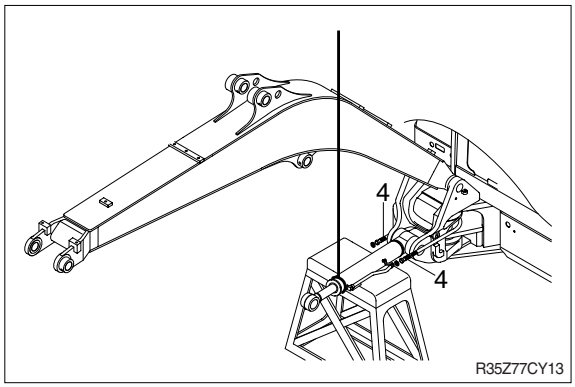

⑥ Remove bolt(6) and pull out pin(5).

⑦ Remove boom cylinder assembly(3).

· Weight : 60kg(130lb)

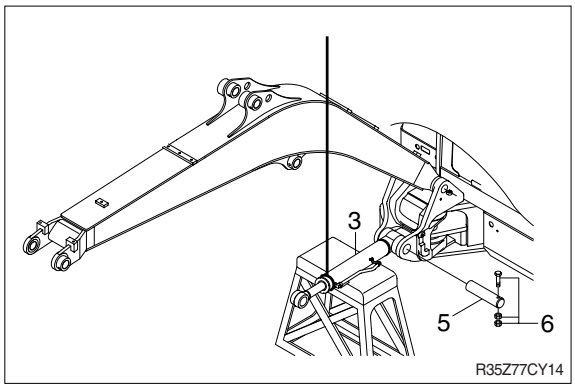

(2) Install

① Carry out installation in the reverse order to removal.

⚠ When aligning the mounting position of the pin, do not insert your fingers in the pin hole.

※ Bleed the air from the boom cylinder.

※ Conformed the hydraulic oil level and check the hydraulic oil leak or not.

2. DISASSEMBLY AND ASSEMBLY

1) STRUCTURE

(1) Bucket cylinder

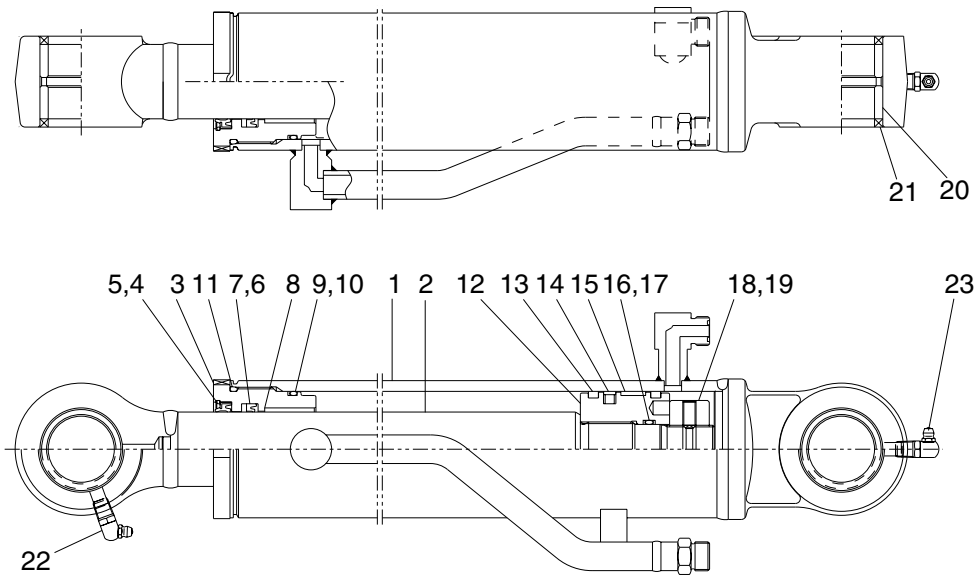

R35Z77CY15

1	Tube assembly	9	O-ring	17	Back-up ring
2	Rod assembly	10	Back-up ring	18	Piston nut
3	Gland	11	O-ring	19	Set screw
4	Dust wiper	12	Piston	20	Pin bush
5	Retaining ring	13	Dust ring	21	Dust seal
6	Rod seal	14	Piston seal	22	Grease nipple
7	Back-up ring	15	Wear ring	23	Grease nipple
8	DU bush	16	O-ring		

(2) Arm cylinder

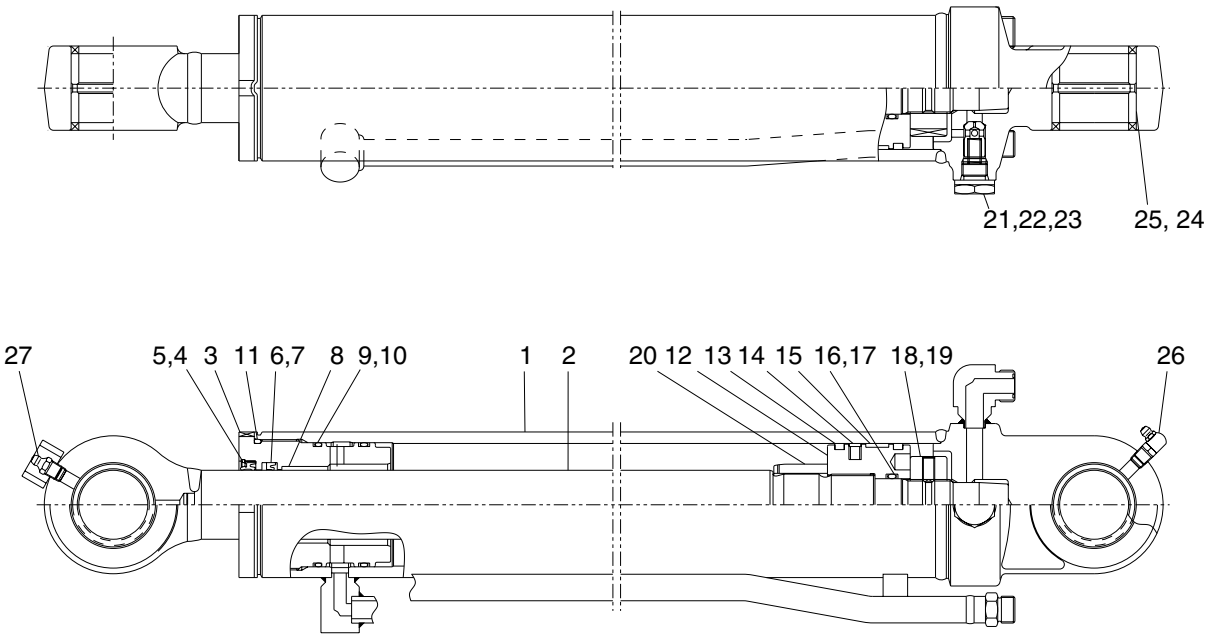

1	Tube assembly	10	Back-up ring	19	Set screw
2	Rod assembly	11	O-ring	20	Cushion ring
3	Gland	12	Piston	21	Check valve
4	Dust wiper	13	Dust ring	22	Spring
5	Retaining ring	14	Piston seal	23	Plug
6	Rod seal	15	Wearing	24	Pin bush
7	Back-up ring	16	O-ring	25	Dust seal
8	DU bush	17	Back-up ring	26	Grease nipple
9	O-ring	18	Piston nut	27	Grease nipple

(3) Boom cylinder

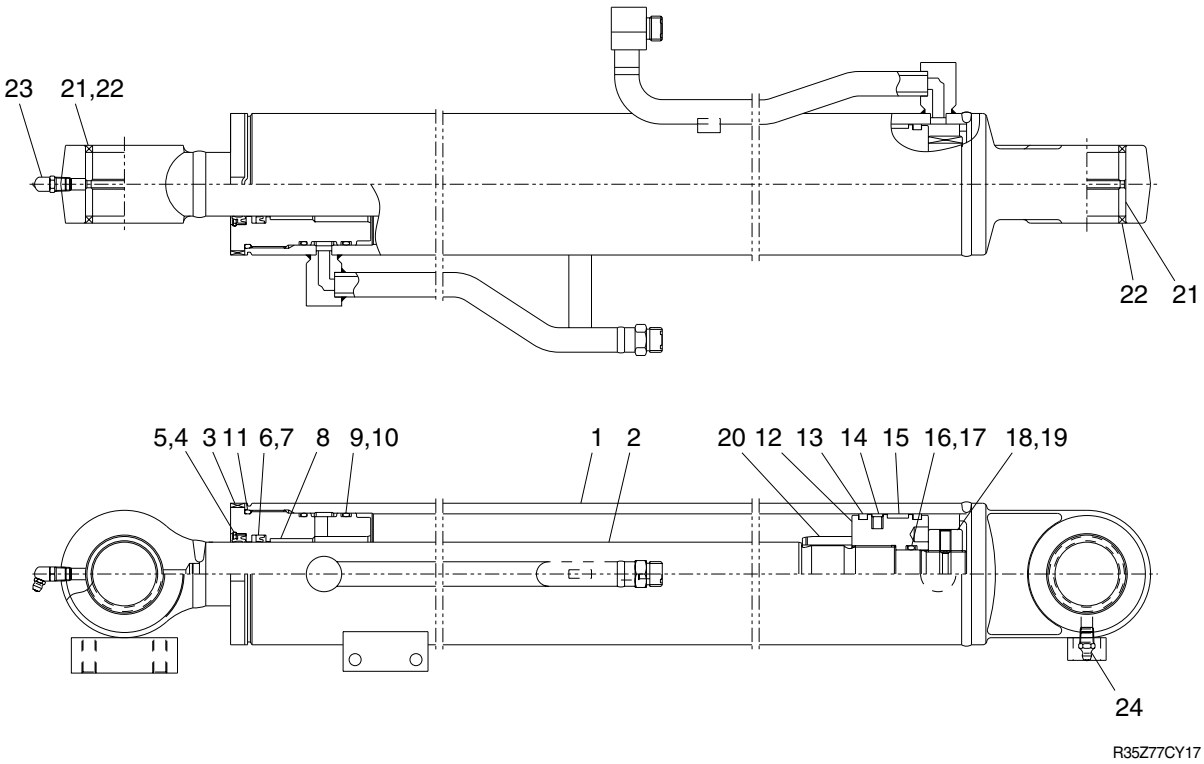

1	Tube assembly	9	O-ring	17	Back-up ring
2	Rod assembly	10	Back-up ring	18	Piston nut
3	Gland	11	O-ring	19	Set screw
4	Dust wiper	12	Piston	20	Cushion ring
5	Retaining ring	13	Dust ring	21	Pin bush
6	Rod seal	14	Piston seal	22	Dust seal
7	Back-up ring	15	Wearing	23	Grease nipple
8	DU bush	16	O-ring	24	Grease nipple

(4) Dozer cylinder

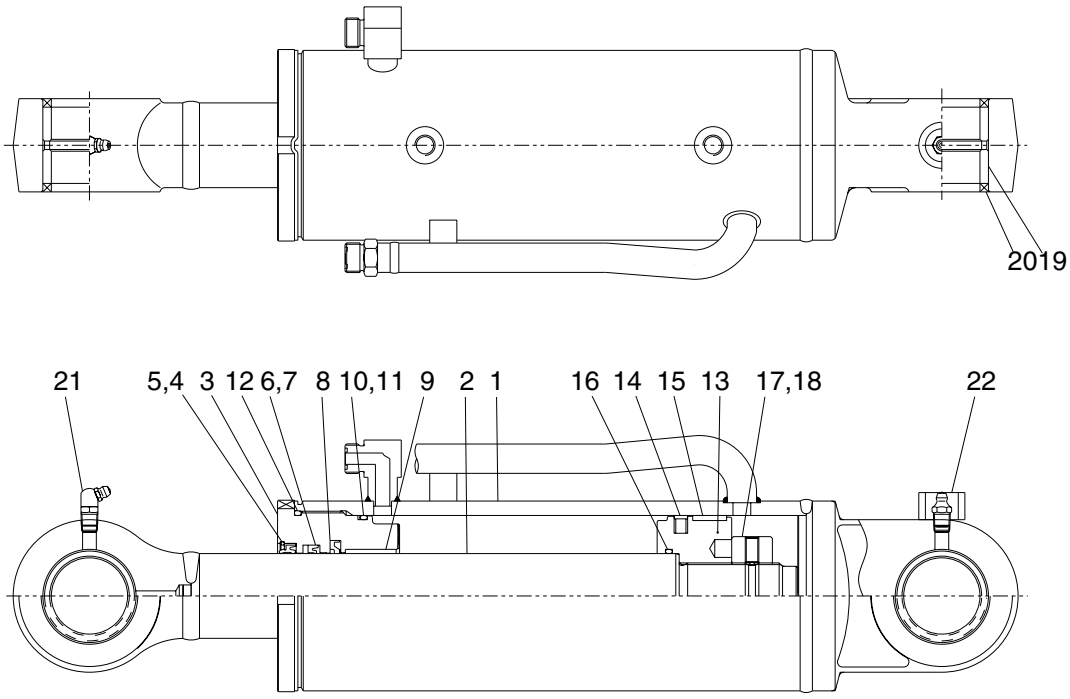

R35Z77CY18

1	Tube assembly	8	Buffer ring	15	Wear ring
2	Rod assembly	9	DU bush	17	Piston nut
3	Gland	10	O-ring	18	Set screw
4	Dust wiper	11	Back-up ring	19	Pin bush
5	Retaining ring	12	O-ring	20	Dust seal
6	Rod seal	13	Piston	21	Grease nipple
7	Back-up ring	14	Piston seal	22	Grease nipple

(5) Boom swing cylinder

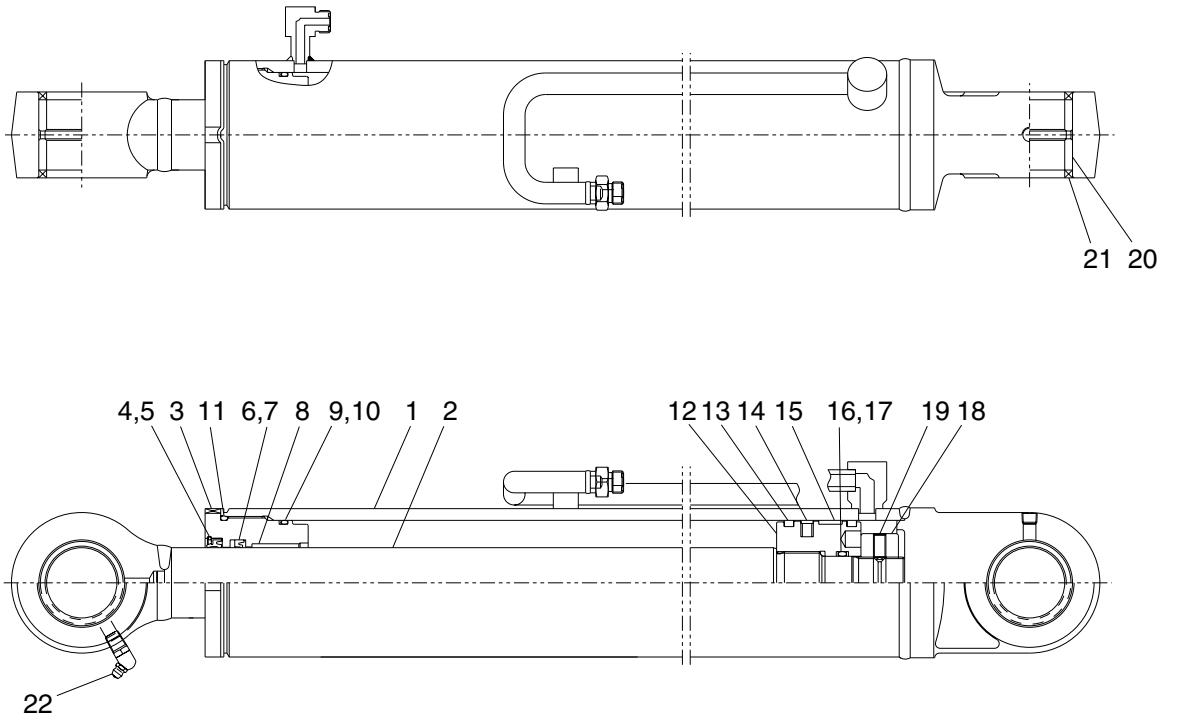

1	Tube assembly	8	O-ring	16	O-ring
2	Rod assembly	9	Back-up ring	17	Back-up ring
3	Gland	10	O-ring	18	Piston nut
4	Dust wiper	11	O-ring	19	Set screw
5	Retaining ring	12	Piston	20	Pin bush
6	Rod seal	13	Dust ring	21	Dust seal
7	Back-up ring	14	Piston seal	22	Grease nipple
8	DU bush	15	Wear ring		

2) TOOLS AND TIGHTENING TORQUE

(1) Tools

Name	Specification	
Allen wrench	8	B
	3	
Spanner	M22	
Hook spanner	Suitable size(80~120 mm)	
(-) Driver	Small and large sizes	
Torque wrench	Capable of tightening with the specified torques	

(2) Tightening torque

Part name		Item	Size	Torque	
				kgf · m	lbf · ft
Gland	Boom cylinder	3	M90	68±6.8	492±49
	Arm cylinder	3	M85	64±6.4	463±46
	Bucket cylinder	3	M75	56±5.6	405±41
	Dozer cylinder	3	M100	75±7.5	542±54
	Boom swing cylinder	3	M85	64±6.4	463±46
Piston nut	Boom cylinder	18	M33	82±8	593±59
	Arm cylinder	18	M33	82±8	593±59
	Bucket cylinder	18	M29	73±7	528±53
	Dozer cylinder	17	M39	150±15	1085±109
	Boom swing cylinder	18	M33	93±9	673±67

3) DISASSEMBLY

※ Procedures are based on the boom cylinder.

(1) Remove cylinder head and piston rod

① Hold the clevis section of the tube in a vise.

※ Use mouth pieces so as not to damage the machined surface of the cylinder tube. Do not make use of the outside piping as a locking means.

② Pull out rod assembly(2) about 200mm (7.1in). Because the rod assembly is rather heavy, finish extending it with air pressure after the oil draining operation.

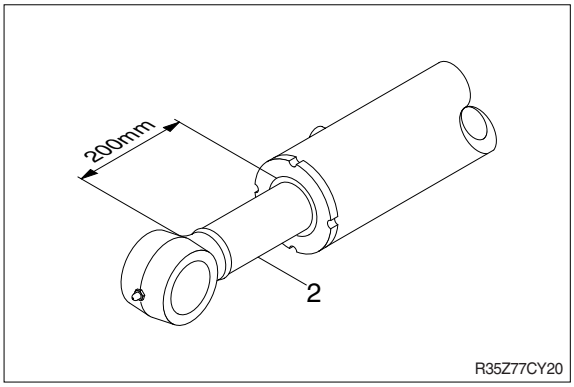

③ Loosen and remove the gland(3) by hook spanner.

※ Cover the extracted rod assembly(2) with rag to prevent it from being accidentally damaged during operation.

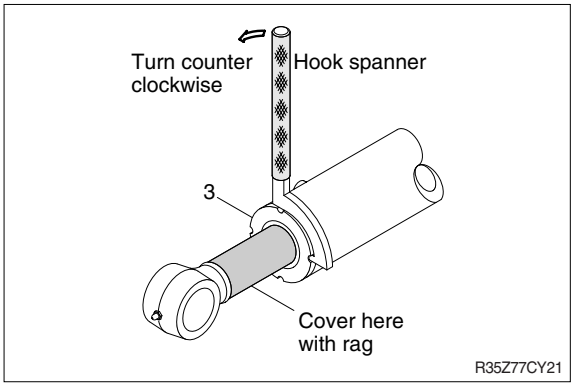

④ Draw out cylinder head and rod assembly together from tube assembly(1).

※ Since the rod assembly is heavy in this case, lift the tip of the rod assembly(2) with a crane or some means and draw it out. However, when rod assembly(2) has been drawn out to approximately two thirds of its length, lift it in its center to draw it completely.

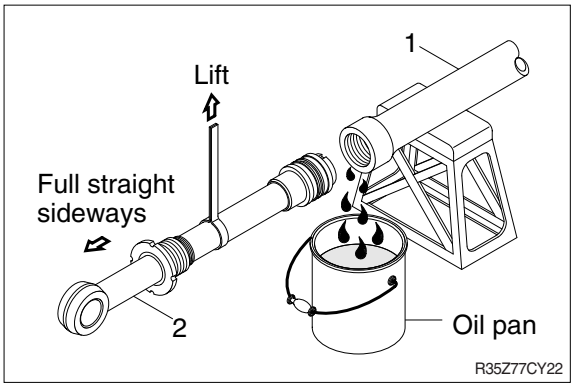

Note that the plated surface of rod assembly(2) is to be lifted. For this reason, do not use a wire sling and others that may damage it, but use a strong cloth belt or a rope.

⑤ Place the removed rod assembly on a wooden V-block that is set level.

※ Cover a V-block with soft rag.

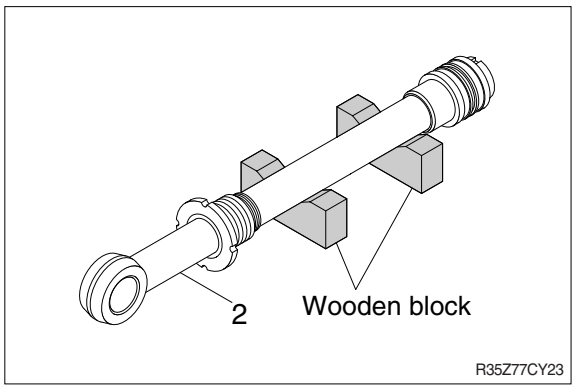

(2) Remove piston and gland

① Remove set screw(19)

② Remove piston nut(18).

※ Since piston nut(18) is tightened to a high torque, use a hydraulic and power wrench that utilizers a hydraulic cylinder, to remove the piston nut(18).

③ Remove piston assembly(12), back up ring(17), O-ring(10) and cushion ring (20).

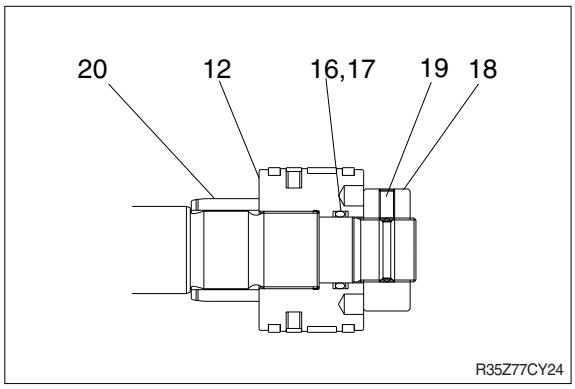

④ Remove the gland assembly from rod assembly(2).

※ If it is too heavy to move, move it by striking the flanged part of gland with a plastic hammer.

※ Pull it straight with gland assembly lifted with a crane.

Exercise care so as not to damage the lip of DU bushing(8) and packing (4,5,6,7, 9,10) by the threads of rod assembly(2).

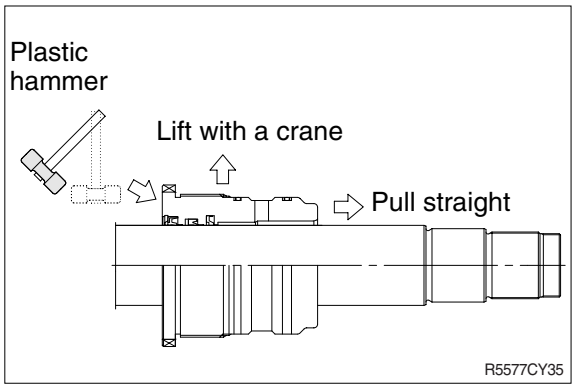

(3) Disassemble the piston assembly

① Remove wear ring(15).

② Remove dust ring(13) and piston seal (14).

※ Exercise care in this operation not to damage the grooves.

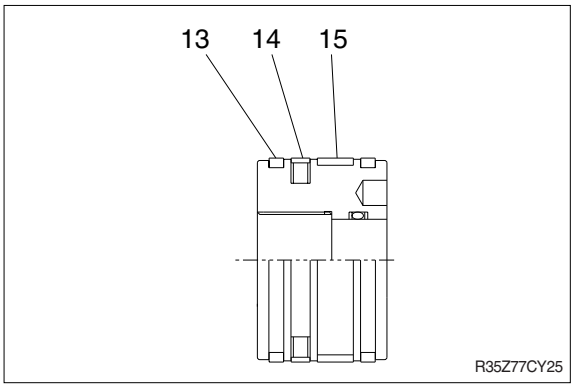

(4) Disassemble gland assembly

① Remove back up ring(10) and O-ring (9).

② Remove snap ring(5), dust wiper(4).

③ Remove back up ring(7), rod seal(6).

④ Remove the cushion ring (8).

※ Exercise care in this operation not to damage the grooves.

※ Do not remove seal and ring, if does not damaged.

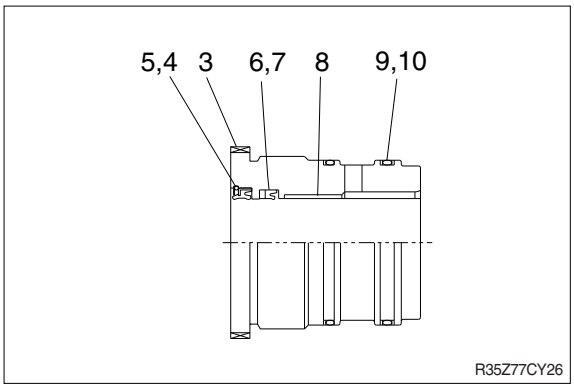

4) ASSEMBLY

(1) Assemble cylinder head assembly

※ Check for scratches or rough surfaces if found smooth with an oil stone.

① Coat the inner face of gland(3) with hydraulic oil.

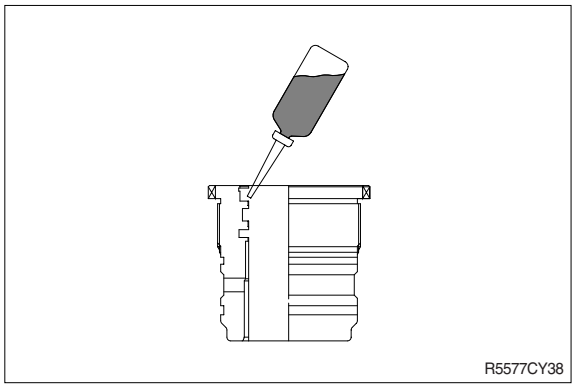

② Coat dust wiper(4) with grease and fit dust wiper(4) to the bottom of the hole of dust seal.
At this time, press a pad metal to the metal ring of dust seal.

③ Fit retain ring(5) to the stop face.

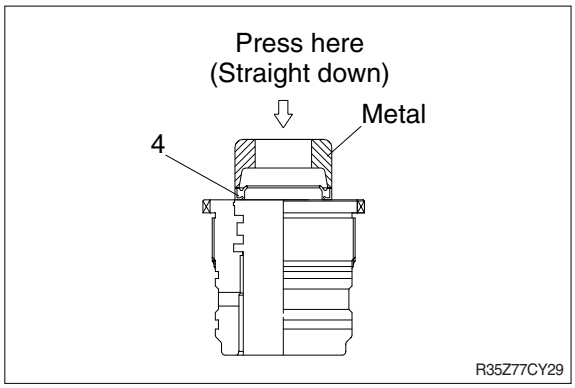

④ Fit back up ring(7), rod seal(6) to corresponding grooves, in that order.
Coat each packing with hydraulic oil

※ before fitting it.
Insert the backup ring until one side of it

※ is inserted into groove.

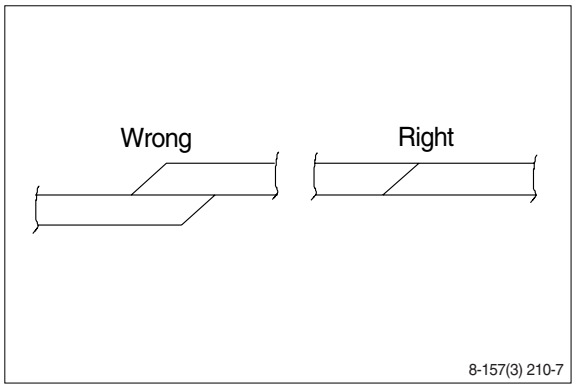

※ Rod seal(6) has its own fitting direction. Therefore, confirm it before fitting them.

※ Fitting rod seal(6) upside down may damage its lip. Therefore check the correct direction that is shown in fig.

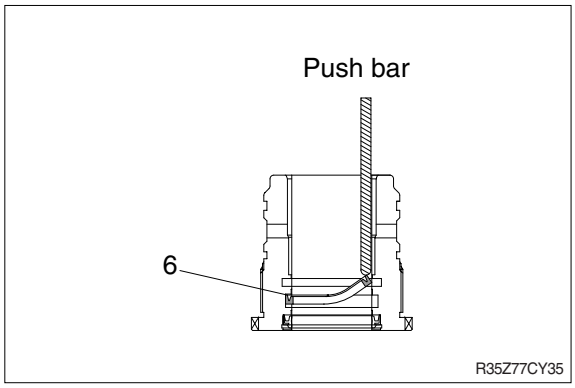

⑤ Fit back up ring(10) to gland(3).

※ Put the backup ring in the warm water of 30~50°C .

⑥ Fit O-ring(9) to gland(3).

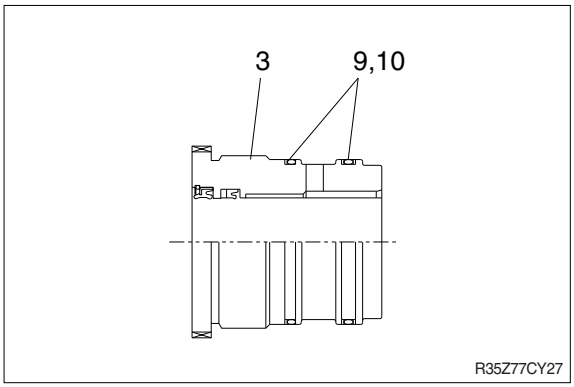

(2) Assemble piston assembly

※ Check for scratches or rough surfaces. If found smooth with an oil stone.

① Coat the outer face of piston(16) with hydraulic oil.

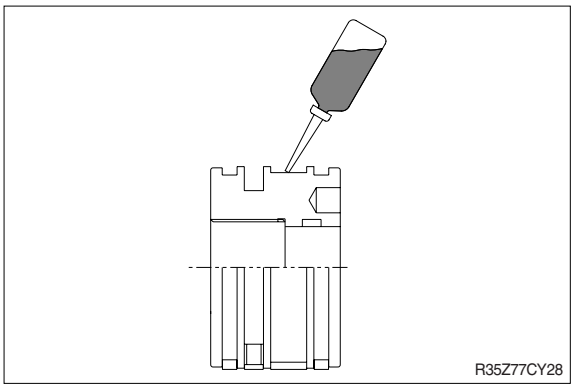

② Fit piston seal(14) to piston.

※ Put the piston seal in the warm water of 60~100°C for more than 5 minutes.

※ After assembling the piston seal, press its outer diameter to fit in.

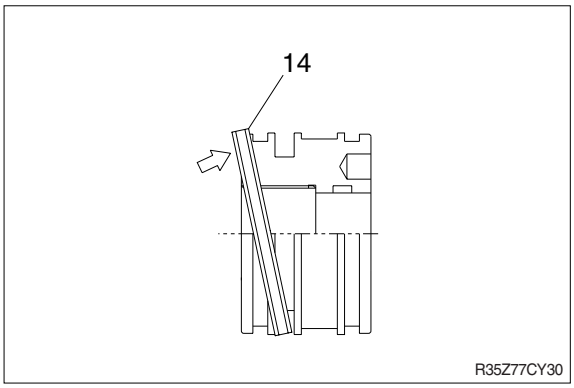

③ Fit wear ring(15) and dust ring(13) to piston(12).

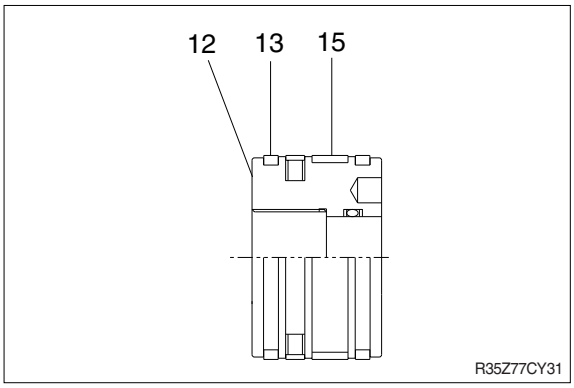

(3) Install piston and cylinder head

① Fix the rod assembly to the work bench.
② Apply hydraulic oil to the outer surface of rod assembly(2), the inner surface of piston and gland.
③ Insert gland assembly to rod assembly.

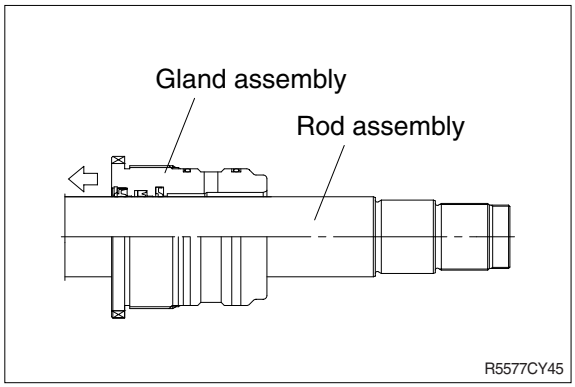

④ Insert cushion ring(20) to rod assembly.
※ Note that cushion ring(20) has a direction in which it should be fitted.

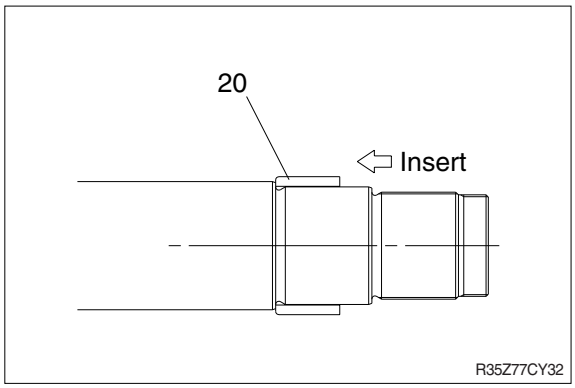

⑤ Fit piston assembly to rod assembly.

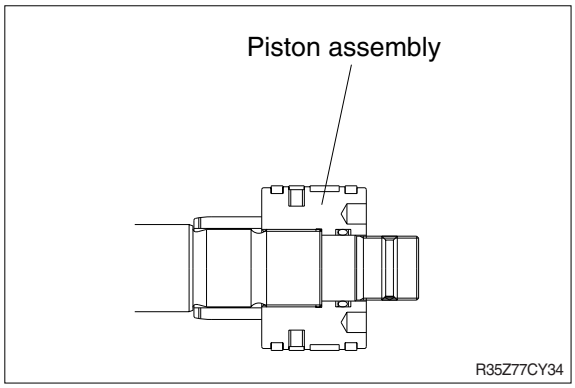

⑥ Fit piston nut(18) and set screw(19).
· Tightening torque :

Item		kgf · m	lbf · ft
Boom	18	82±8	593±59
Arm	18	82±8	593±59
Bucket	18	73±7	528±53
Dozer	17	150±15	1085±109
Boom swing	18	93±9	673±67

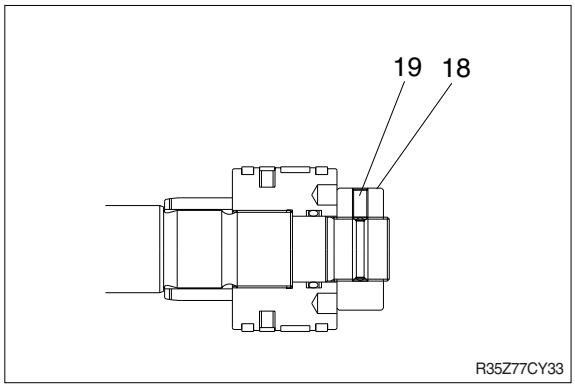

(3) Overall assemble

① Place a V-block on a rigid work bench. Mount the tube assembly(1) on it and fix the assembly by passing a bar through the clevis pin hole to lock the assembly.

② Insert the rod assembly in to the tube assembly, while lifting and moving the rod assembly with a crane.

※ Be careful not to damage piston seal by thread of tube assembly.

③ Match the bolt holes in the cylinder head flange to the tapped holes in the tube assembly and tighten socket bolts to a specified torque.

※ Refer to the table of tightening torque.

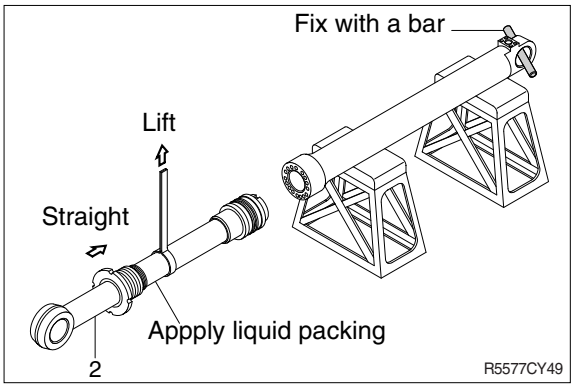

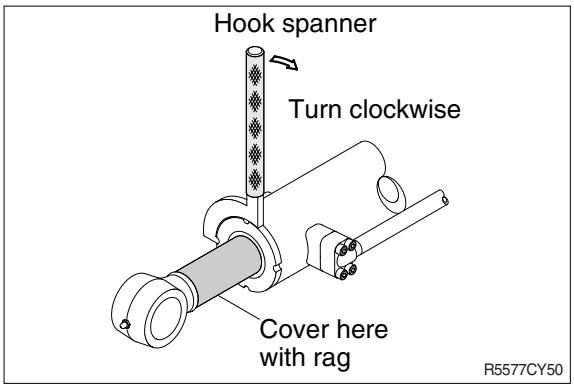

1. RUBBER TRACK

1) REMOVAL

(1) Loosen tension of the track link.

※ If track tension is not relieved when the grease valve is loosened, move the machine backwards and forwards.

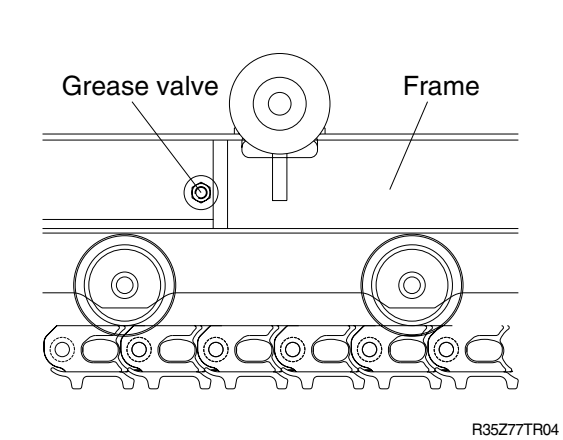

(2) Remove the rubber track from lower frame using pry.

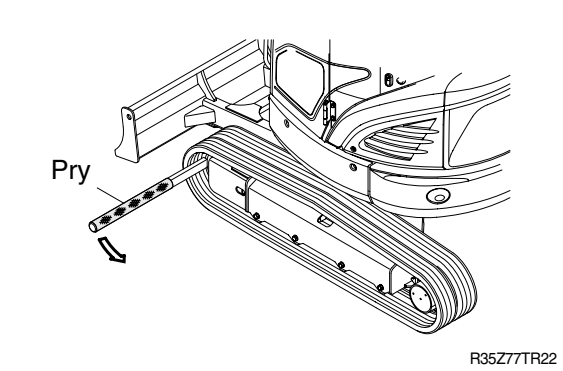

2) INSTALL

(1) Carry out installation in the reverse order to removal.

※ Adjust the tension of the track link.

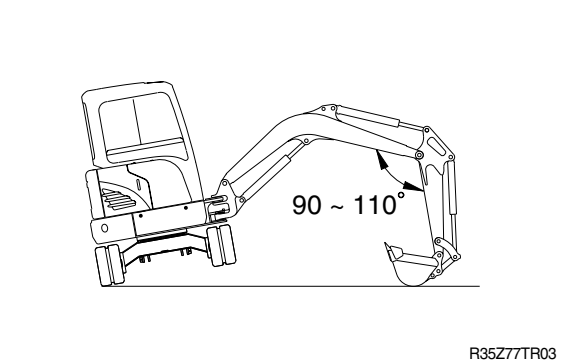

2. TRACK LINK

1) REMOVAL

(1) Move track link until master pin is over front idler in the position put wooden block as shown.

(2) Loosen tension of the track link.

※ If track tension is not relieved when the grease valve is loosened, move the machine backwards and forwards.

(3) Push out master pin by using a suitable tool.

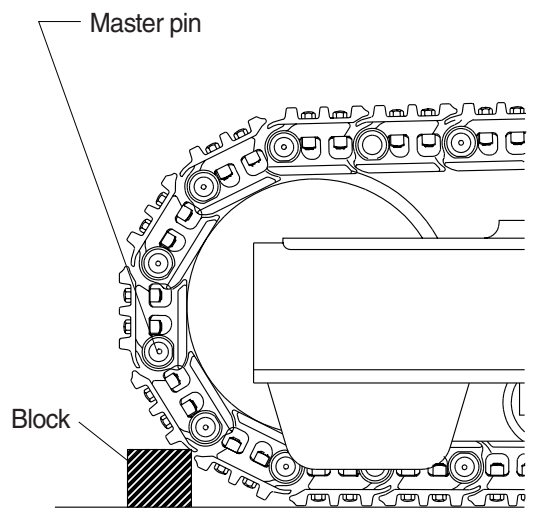

8-161(1) 140-7

(4) Move the machine slowly in reverse, and lay out track link assembly (1).

※ Jack up the machine and put wooden block under the machine.

※ Don't get close to the sprocket side as the track shoe plate may fall down on your feet.

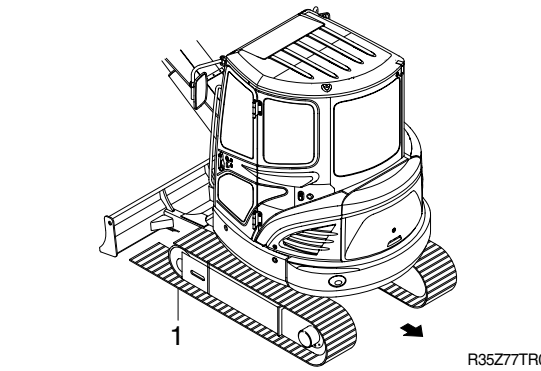

R35Z77TR01

2) INSTALL

(1) Carry out installation in the reverse order to removal.

※ Adjust the tension of the track link.

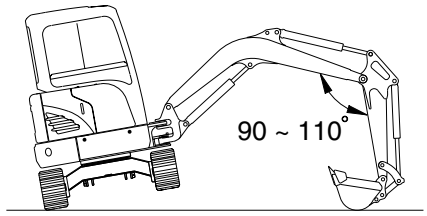

R35Z77TR02

3. CARRIER ROLLER

1) REMOVAL

(1) Loosen tension of the track link.

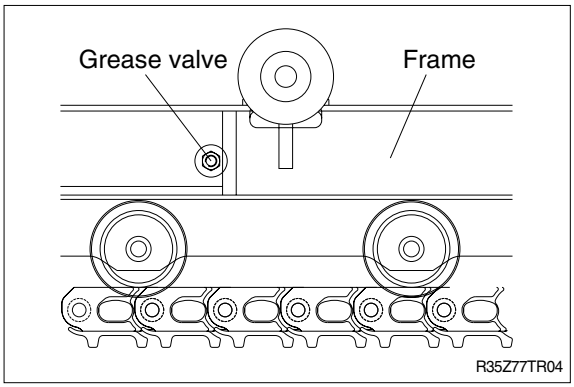

(2) Jack up the track link height enough to permit carrier roller removal.

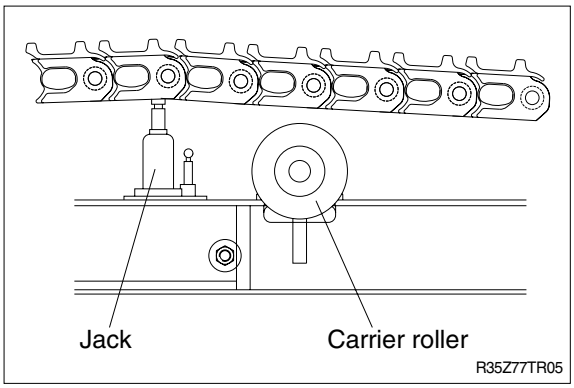

(3) Loosen the bolt and nut(1)

(4) Open bracket(2) with a screwdriver, push out from inside, and remove carrier roller assembly.
- Weight : 5kg(11lb)

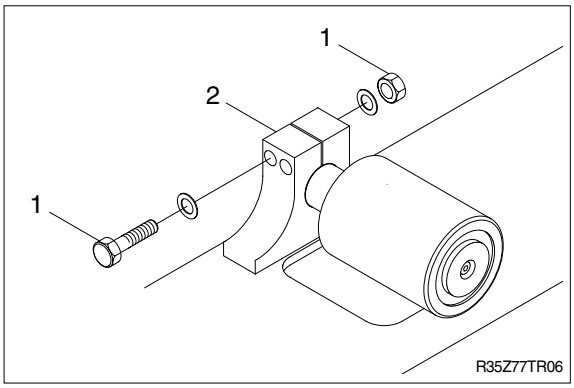

2) INSTALL

(1) Carry out installation in the reverse order to removal.

4. TRACK ROLLER

1) REMOVAL

(1) Loosen tension of the track link.

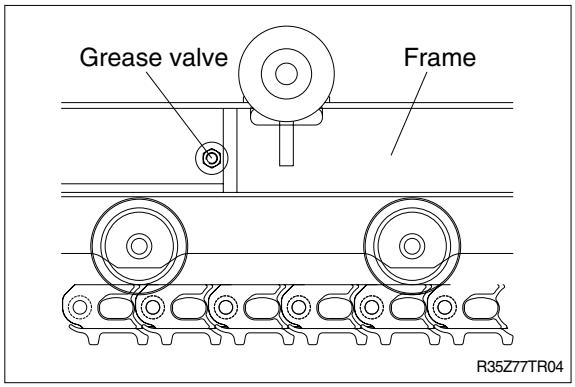

(2) Using the work equipment, push up track frame on side which is to be removed.

※ After jack up the machine, set a block under the unit.

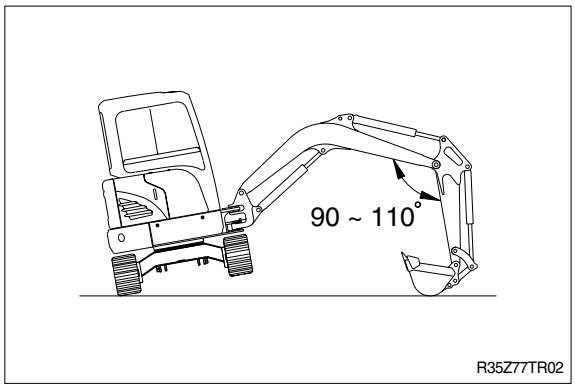

(3) Remove the mounting bolt(1) and draw out the track roller(2).

· Weight : 8kg(17.5lb)

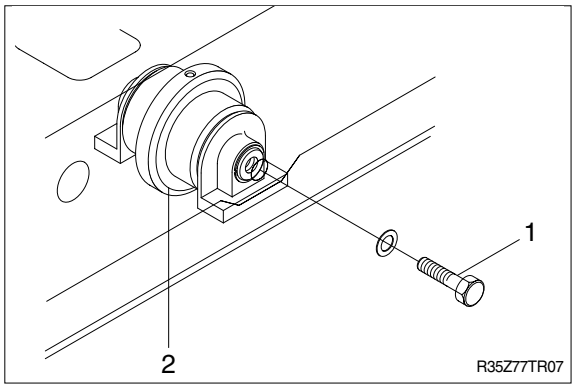

2) INSTALL

(1) Carry out installation in the reverse order to removal.

5. IDLER AND RECOIL SPRING

1) REMOVAL

(1) Remove the track link.
For detail, see **removal of track link**.

(2) Sling the idler(1) and pull out idler and recoil spring assembly from track frame, using a pry.
· Weight : 40kg(90lb)

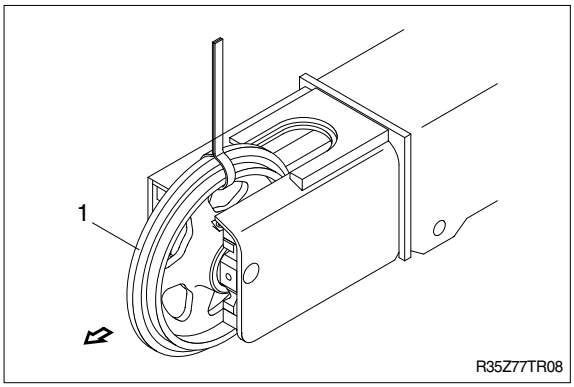

(3) Pull out yoke(2) from track frame, using a pry.
· Weight : 10kg(25lb)

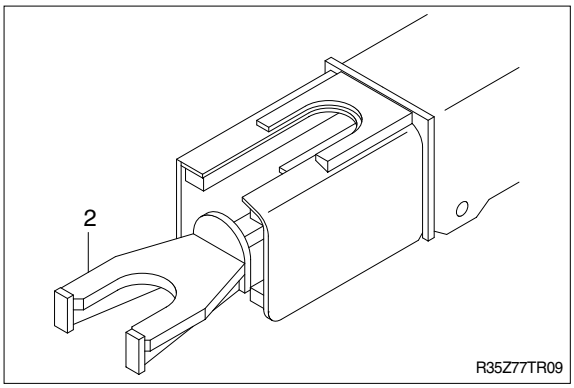

(4) Sling the recoil spring(3) and pull out recoil spring(3) from track frame.
· Weight : 25kg(55lb)

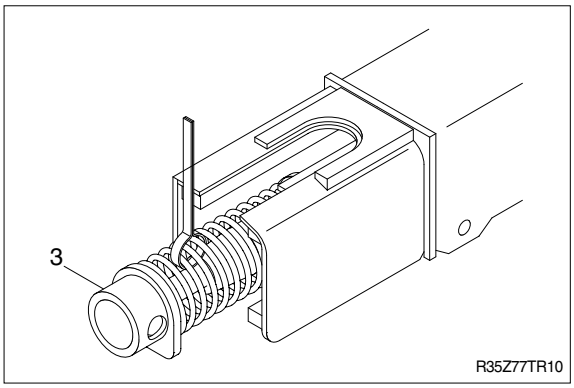

2) INSTALL

(1) Carry out installation in the reverse order to removal.

※ Make sure that the boss on the end face of the recoil cylinder rod is in the hole of the track frame.

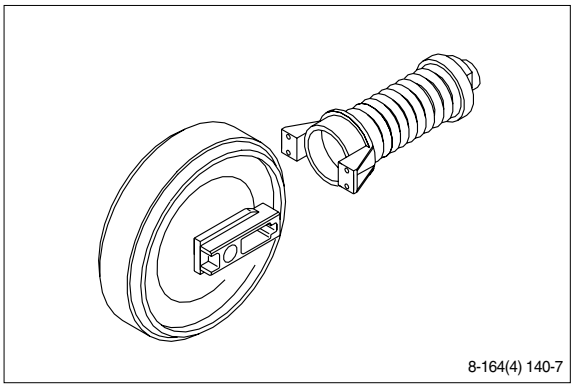

3) DISASSEMBLY AND ASSEMBLY OF IDLER

(1) Structure

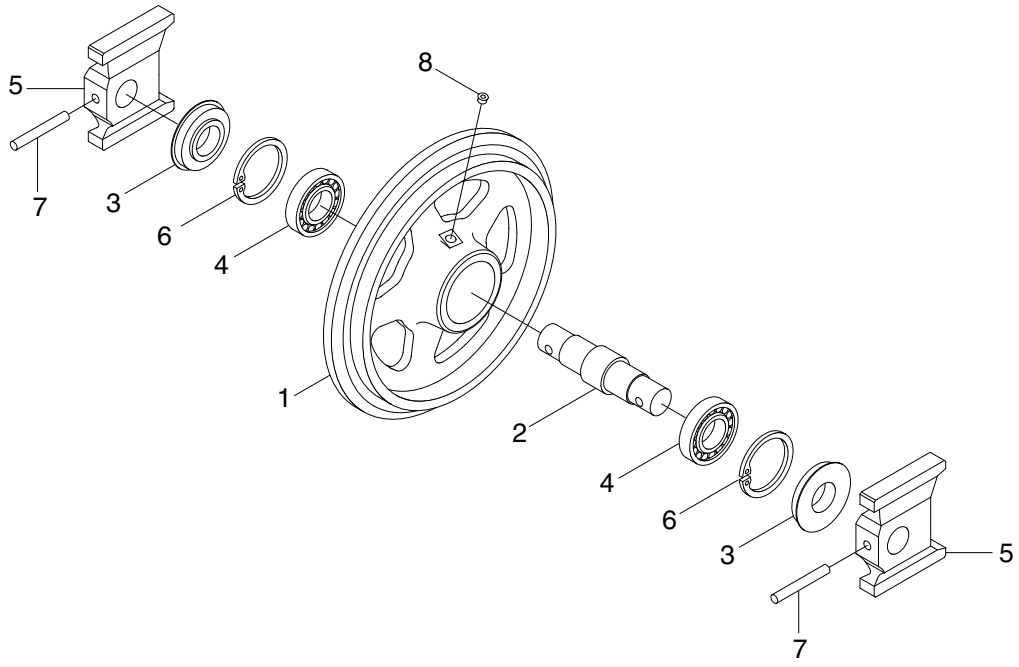

R35Z77TR11

1	Shell	4	Ball bearing	7	Spring pin
2	Shaft	5	Bracket	8	Plug
3	Seal assembly	6	Snap ring		

(2) Disassembly

① Remove plug and drain oil.

② Draw out the spring pin(7), using a press.

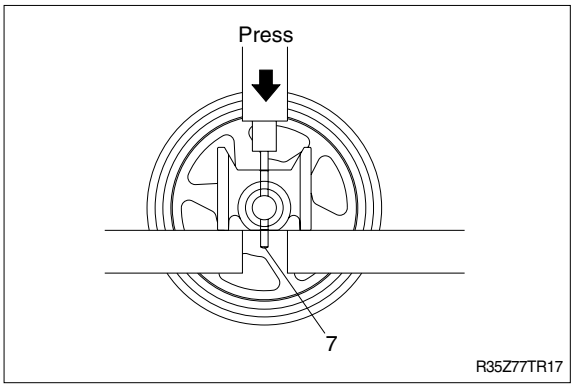

③ Remove brackets(2) from shaft.

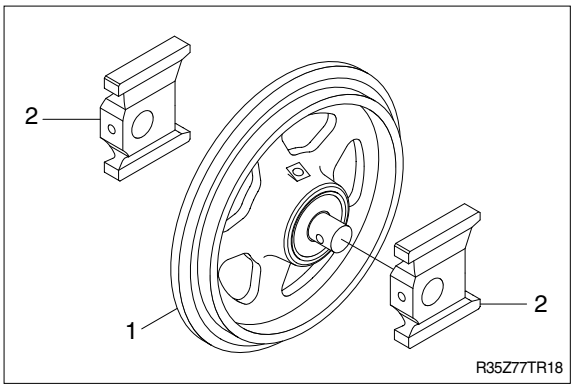

④ Remove seal assembly(3) from shell(1) by pry.

※ Do not reuse seal assembly after removal.

⑤ Remove snap ring(6) from shell(1)

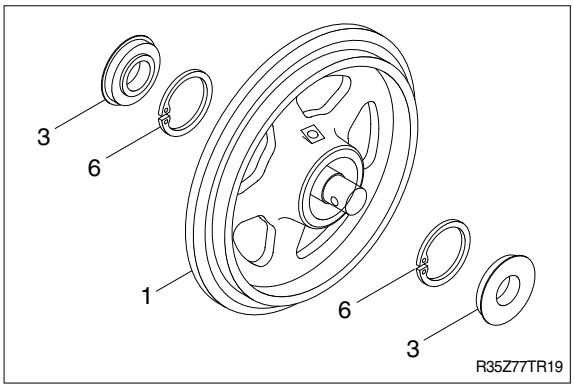

⑥ Draw out the ball bearing(4) with shaft(2) using press.

⑦ Remove the ball bearing(4) from shaft, using a special tool.

※ Only remove ball bearing if replacement is necessity.

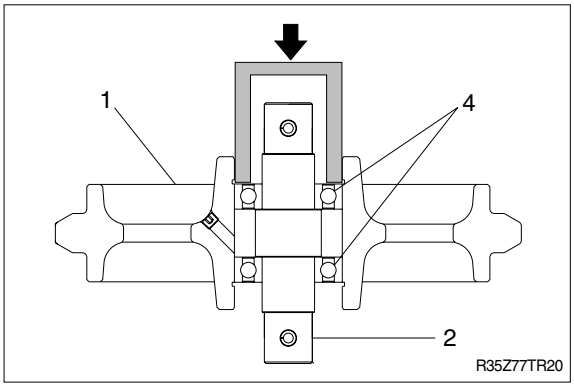

(3) Assembly

※ Before assembly, clean the parts.

※ Coat the sliding surfaces of all parts with oil.

① Do not press it at the normal temperature, assemble ball bearing(4) to shaft by press.

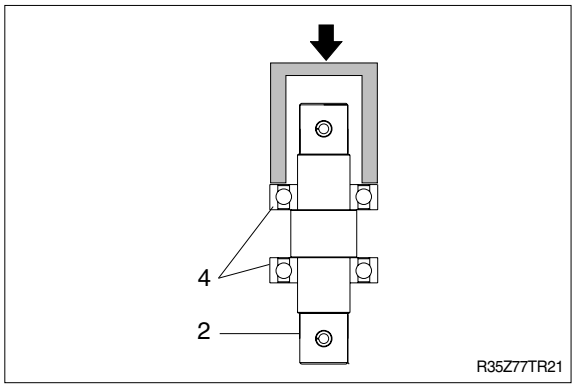

② Insert shaft(2) with ball bearing(4) assembly to shell(1).

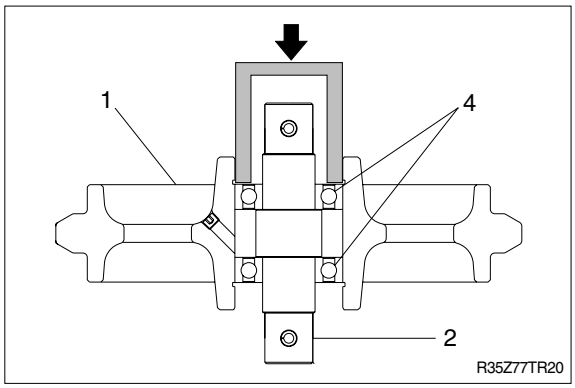

③ Assembly snap ring(6) and seal assembly(3).

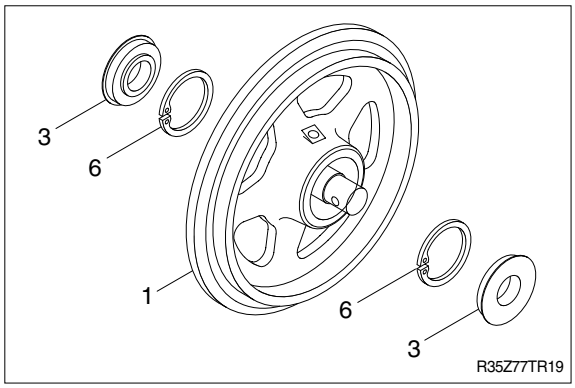

④ Assemble bracket(2) to shell(1).

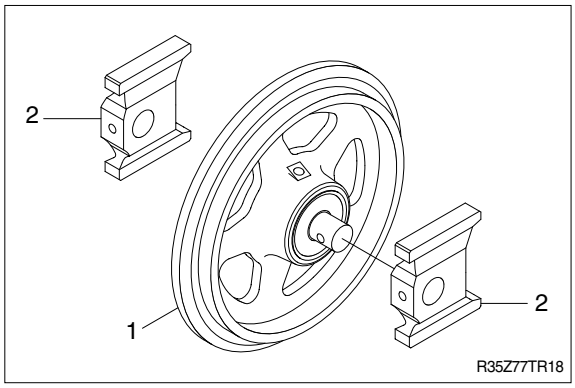

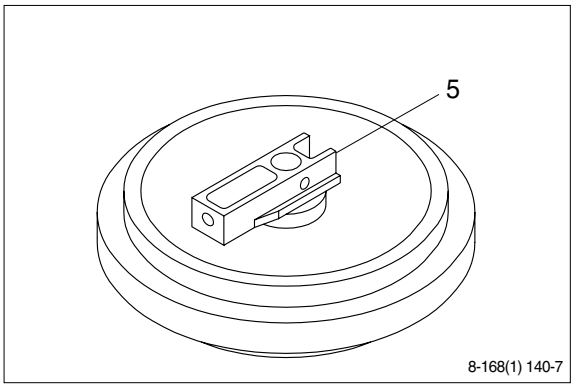

⑥ Knock in the spring pin(7) with a hammer.

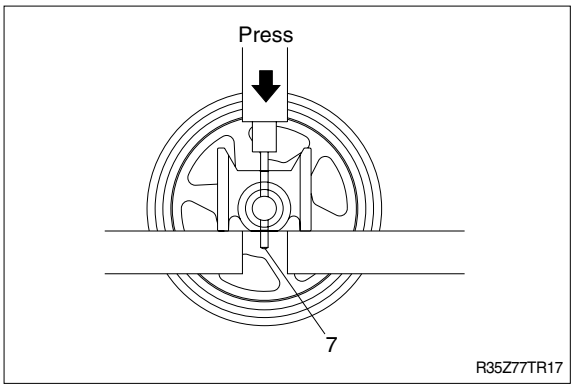

⑦ Lay bracket(5) on its side.
Supply engine oil to the specified level, and tighten plug.

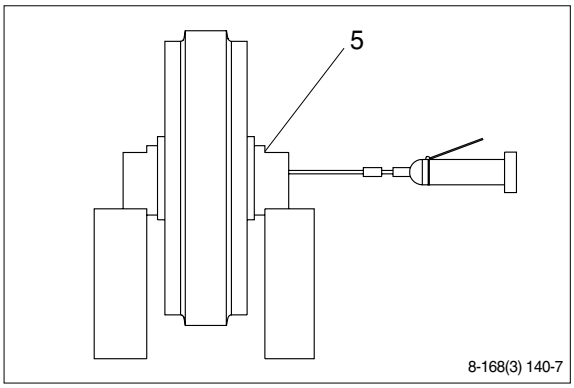

4) DISASSEMBLY AND ASSEMBLY OF RECOIL SPRING

(1) Structure

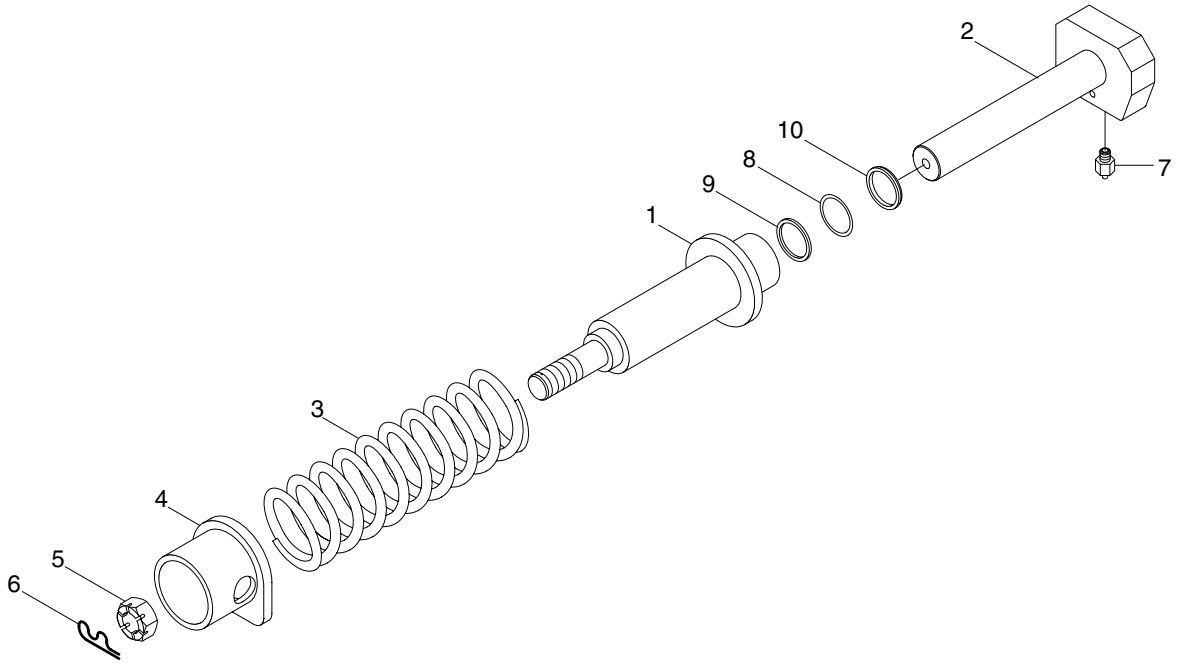

R35Z77TR12

1	Body	5	Nut	8	O-ring
2	Rod	6	Cotter pin	9	Back-up ring
3	Spring	7	Valve assy	10	Packing
4	Cap				

(2) Disassembly

① Apply pressure on cap(4) with a press.

※ The spring is under a large installed load. This is dangerous, so be sure to set properly.

・Spring set load : 2700kg(6000lb)

② Remove split pin(6) and nut(5).

③ Take enough notice so that the press which pushes down the spring, should not be slipped out in its operation.

④ Lighten the press load slowly and remove cap(4) and spring(3).

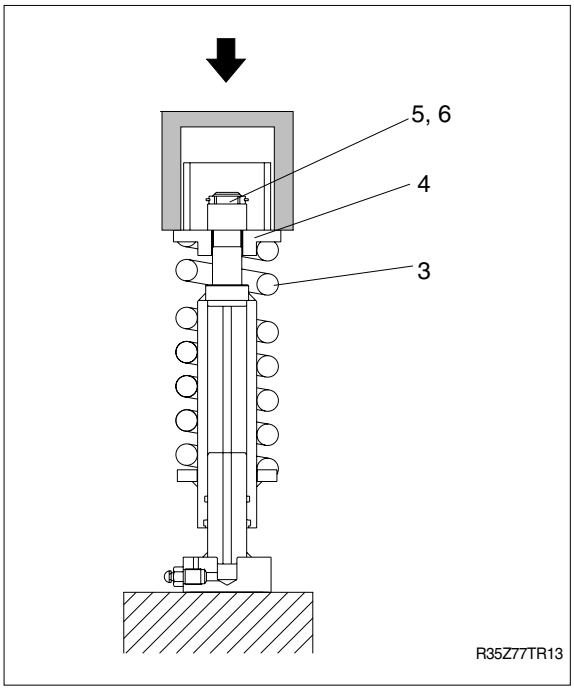

⑤ Remove rod(2) from body(1).

⑥ Remove grease valve(7) from rod(2).

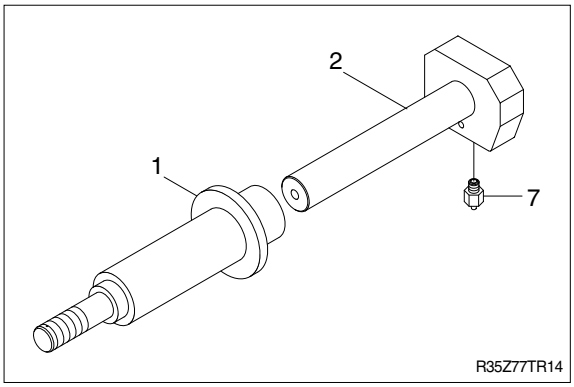

⑦ Remove packing(10), back-up ring(9) and O-ring(8) from body(1).

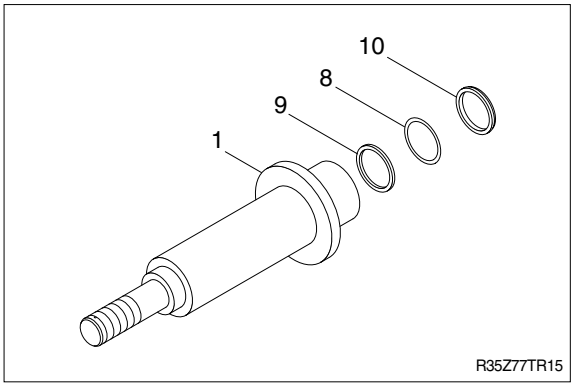

(3) Assembly

① Install O-ring(8), back-up ring(9), and packing(10) body(1).

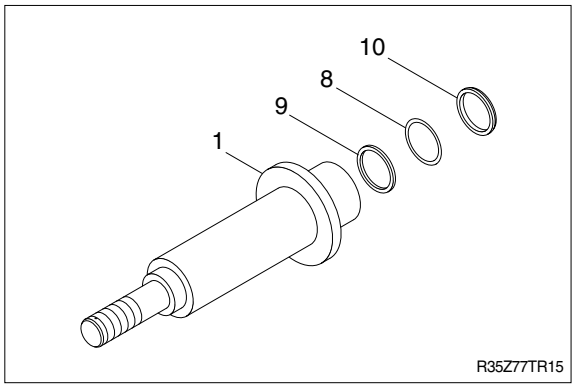

② Pour grease into body(1), then push in rod(2) by hand.
After take grease out of grease valve mounting hole, let air out.

※ If air letting is not sufficient, it may be difficult to adjust the tension of crawler.

③ Fit grease valve(7) to rod(2).
· Tightening torque : 10±0.5kg · m
(72.4±3.6lb · ft)

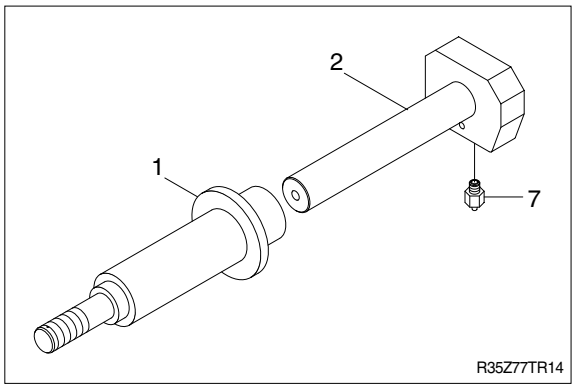

④ Install rod(2) to body(1).

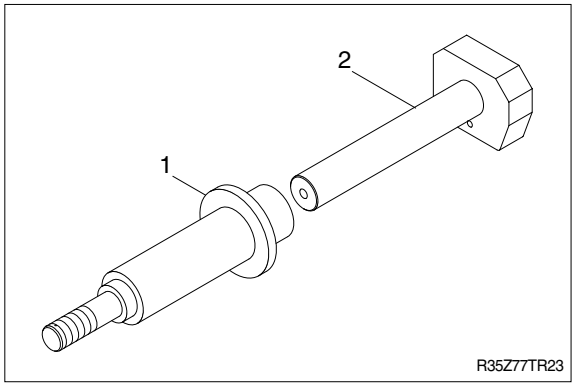

⑤ Install spring(3) and cap(4) to body (1).
⑥ Apply pressure to spring(3) with a press and tighten nut(5).
※ During the operation, pay attention specially to prevent the press from slipping out.
⑦ Tighten nut(5) and insert split pin(6).

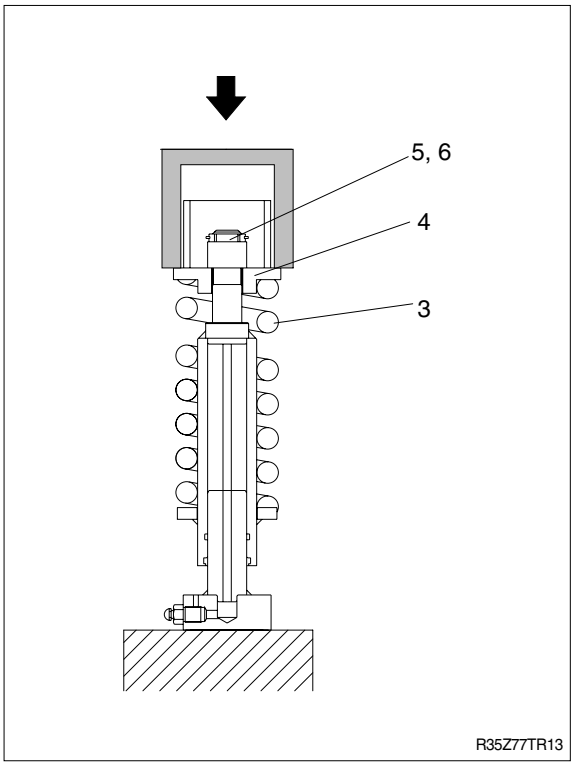

⑧ Lighten the press load and confirm the set length of spring(2).
· Spring length : 233.5㎜

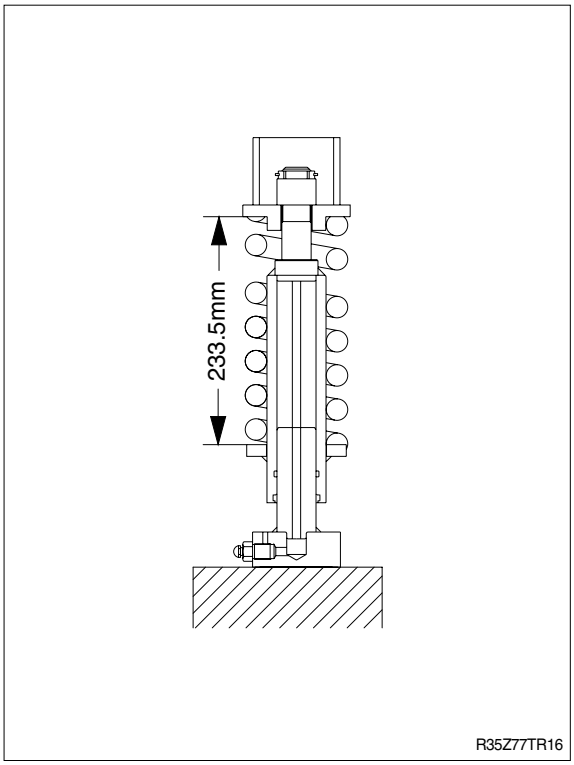

GROUP 11 WORK EQUIPMENT

1. STRUCTURE

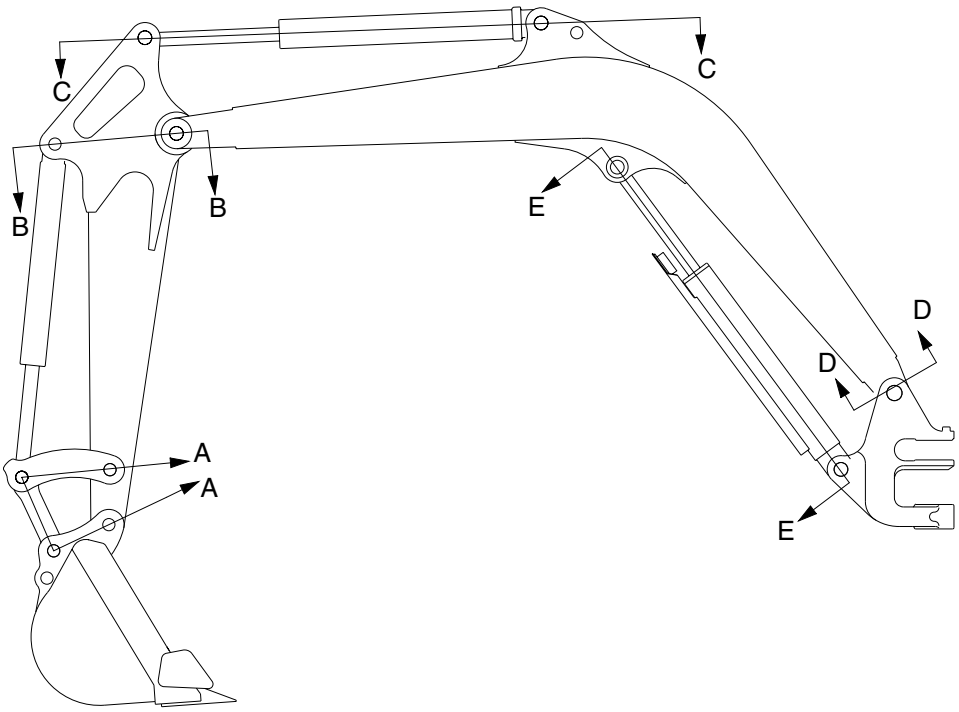

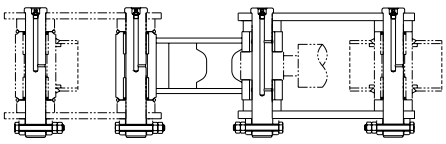

SECTION A-A

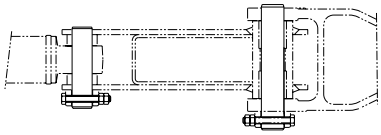

SECTION B-B

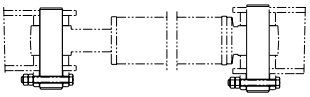

SECTION C-C

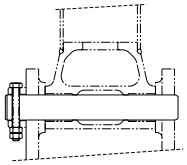

SECTION D-D

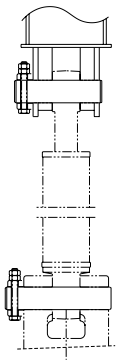

SECTION E-E

R35Z77AT01

2. REMOVAL AND INSTALL

1) BUCKET ASSEMBLY

(1) Removal

① Lower the work equipment completely to ground with back of bucket facing down.

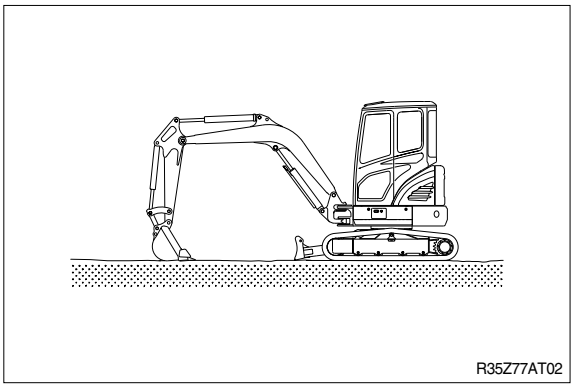

② Remove nut(1), bolt(2) and draw out the pin(4).

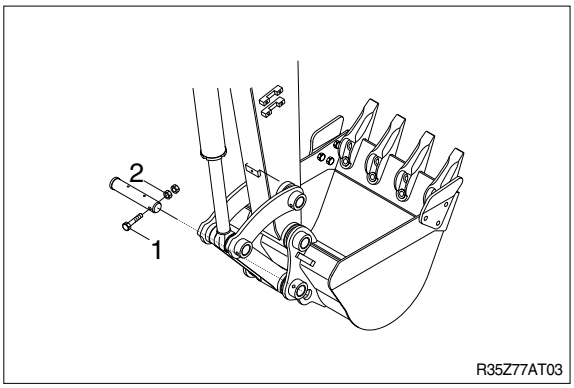

③ Remove nut(1), bolt(2) and draw out the pin(3) then remove the bucket assembly.
· Weight : 80kg(180lb)

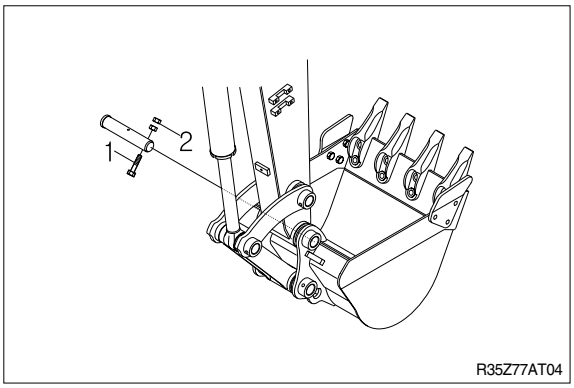

(2) Install

① Carry out installation in the reverse order to removal.

⚠ When aligning the mounting position of the pin, do not insert your fingers in the pin hole.

※ Adjust the bucket clearance.
For detail, see **operator's manual.**

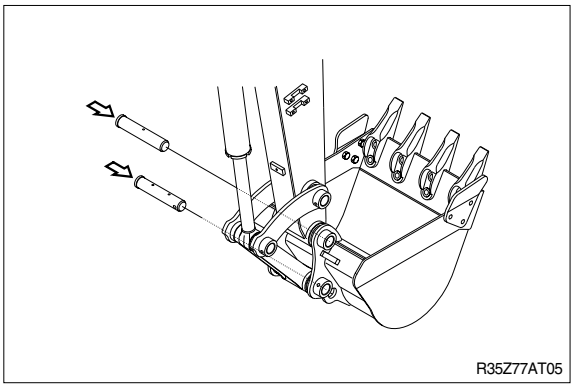

2) ARM ASSEMBLY

(1) Removal

※ Loosen the breather slowly to release the pressure inside the hydraulic tank.

⚠ Escaping fluid under pressure can penetrated the skin causing serious injury.

① Remove bucket assembly.
For details, see **removal of bucket assembly.**

② Disconnect bucket cylinder hose(4).

⚠ Fit blind plugs(5) in the piping at the chassis end securely to prevent oil from spurting out when the engine is started.

③ Sling arm cylinder assembly, remove spring, pin stopper and pull out pin.

※ Tie the rod with wire to prevent it from coming out.

④ For details, see **removal of arm cylinder assembly.**
Place a wooden block under the cylinder and bring the cylinder down to it.

⑤ Remove bolt(1) and pull out the pin(2) then remove the arm assembly.
・Weight : 80kg(180lb)

※ When lifting the arm assembly, always lift the center of gravity.

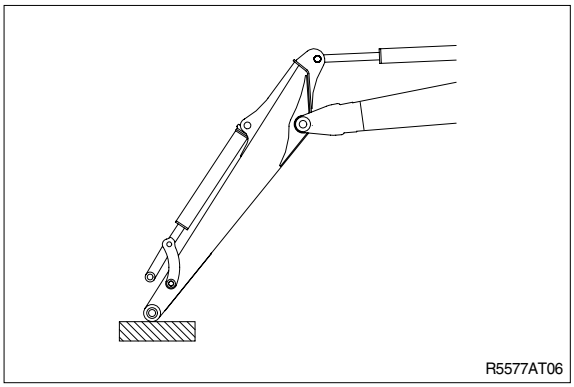
R5577AT06

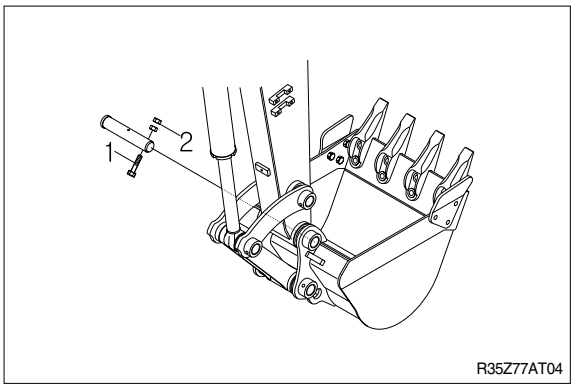

R35Z77AT04

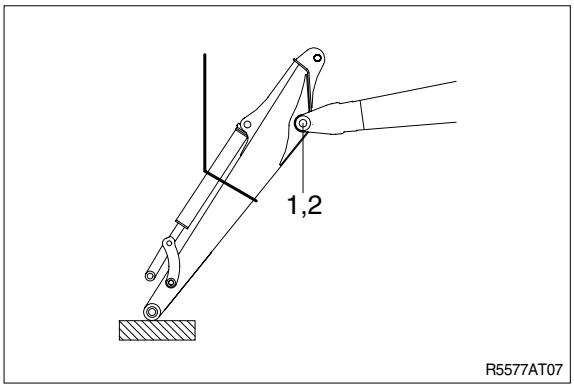

R5577AT07

(2) Install

① Carry out installation in the reverse order to removal.

⚠ When lifting the arm assembly, always lift the center of gravity.

※ Bleed the air from the cylinder.

3) BOOM CYLINDER

(1) Removal

① Remove arm and bucket assembly.
For details, see **removal of arm and bucket assembly.**

② Remove boom cylinder assembly from boom.
For details, see **removal of arm cylinder assembly.**

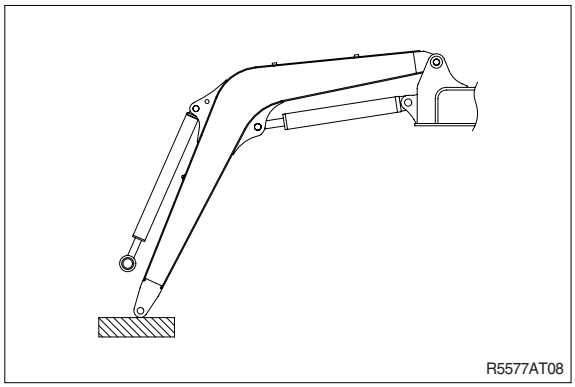

③ Disconnect head lamp wiring.

④ Disconnect bucket cylinder hose(2) and arm cylinder hose(1).

※ When the hose are disconnected, oil may spurt out.

⑤ Sling boom assembly(3).

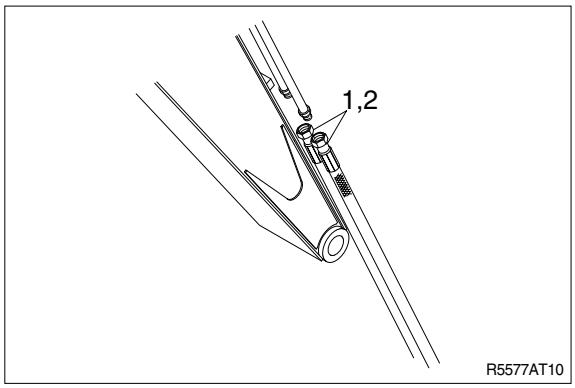

⑥ Remove bolt(3), nut(4) and pull out the pin(5) then remove boom assembly.
· Weight : 140kg(310lb)

※ When lifting the boom assembly always lift the center of gravity.

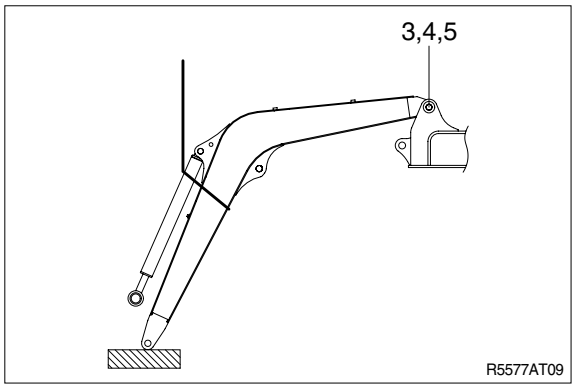

(2) Install

① Carry out installation in the reverse order to removal.

⚠ When lifting the arm assembly, always lift the center of gravity.

※ Bleed the air from the cylinder.

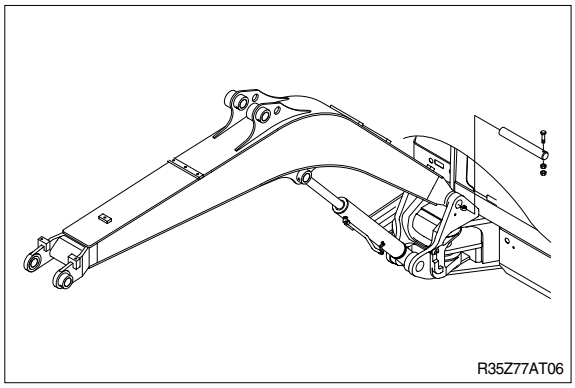

SECTION 8 COMPONENT MOUNTING TORQUE

Group 1 Introduction guide 8-1
Group 2 Engine system 8-2
Group 3 Electric system 8-4
Group 4 Hydraulic system 8-5
Group 5 Undercarriage 8-7
Group 6 Structure 8-8
Group 7 Work equipment 8-10

SECTION 8 COMPONENT MOUNTING TORQUE

GROUP 1 INTRODUCTION GUIDE

1. This section shows bolt specifications and standard torque values needed when mounting components to the machine.
2. Use genuine Hyundai spare parts.
   We expressly point out that Hyundai will not accept any responsibility for defects resulted from non-genuine parts.
   In such cases Hyundai cannot assume liability for any damage.

※ **Only metric fasteners can be used and incorrect fasteners may result in machine damage or malfunction.**

※ **Before installation, clean all the components with a non-corrosive cleaner. Bolts and threads must not be worn or damaged.**

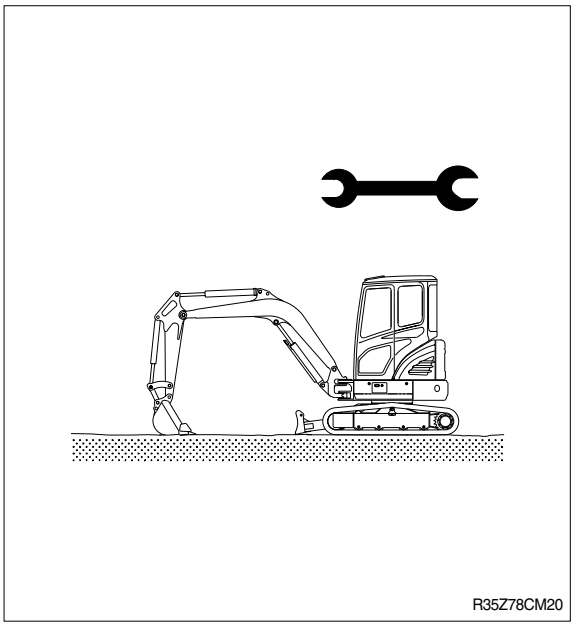

GROUP 2 ENGINE SYSTEM

1. ENGINE AND ACCESSORIES MOUNTING

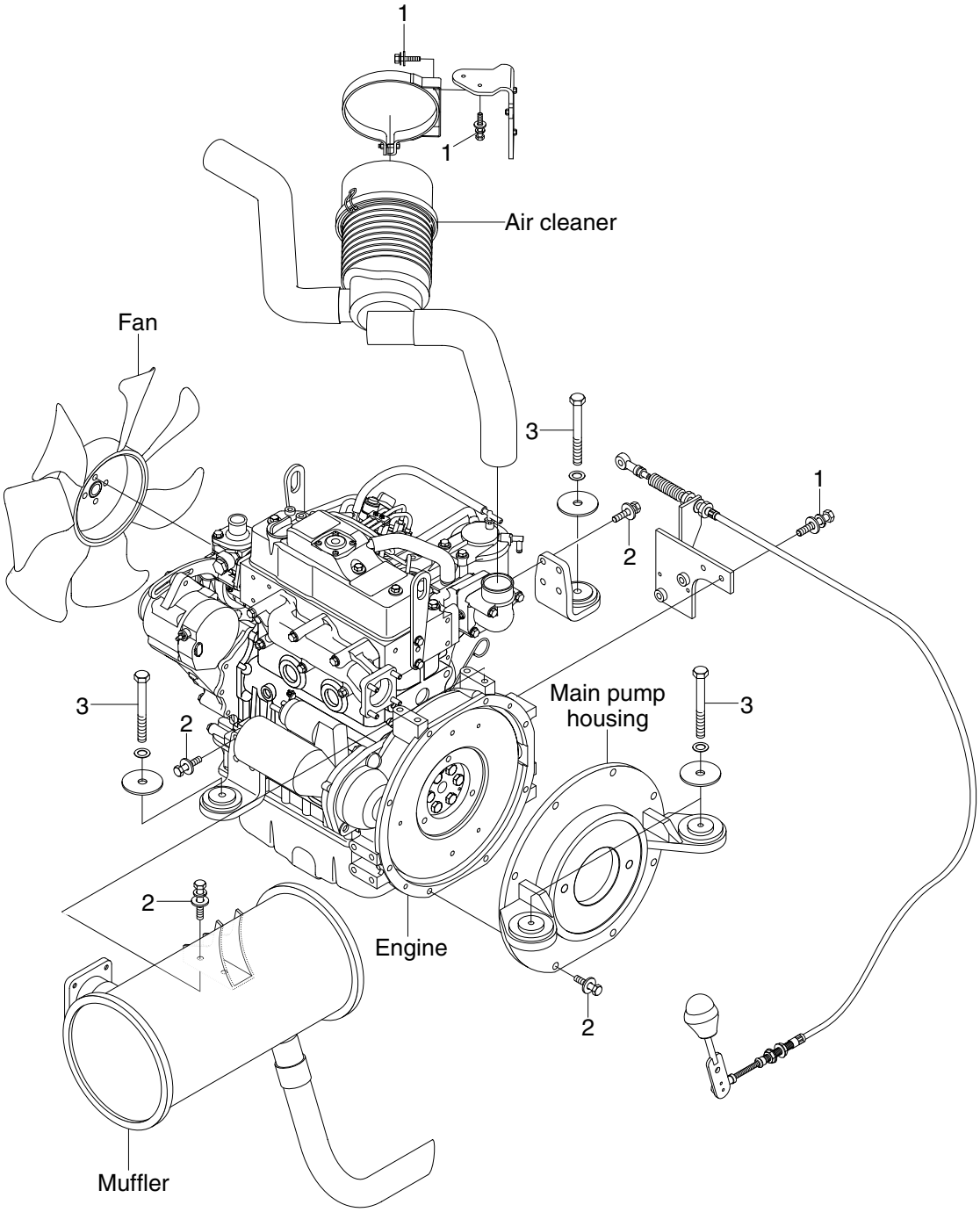

R35Z78CM01

· Tightening torque

Item	Size	kgf · m	lbf · ft
1	M 8×1.25	2.5±0.5	18.1±3.6
2	M10×1.5	6.9±1.4	49.9±10.1

Item	Size	kgf · m	lbf · ft
3	M16×2.0	25±2.5	181±18.1

2. COOLING SYSTEM AND FUEL TANK MOUNTING

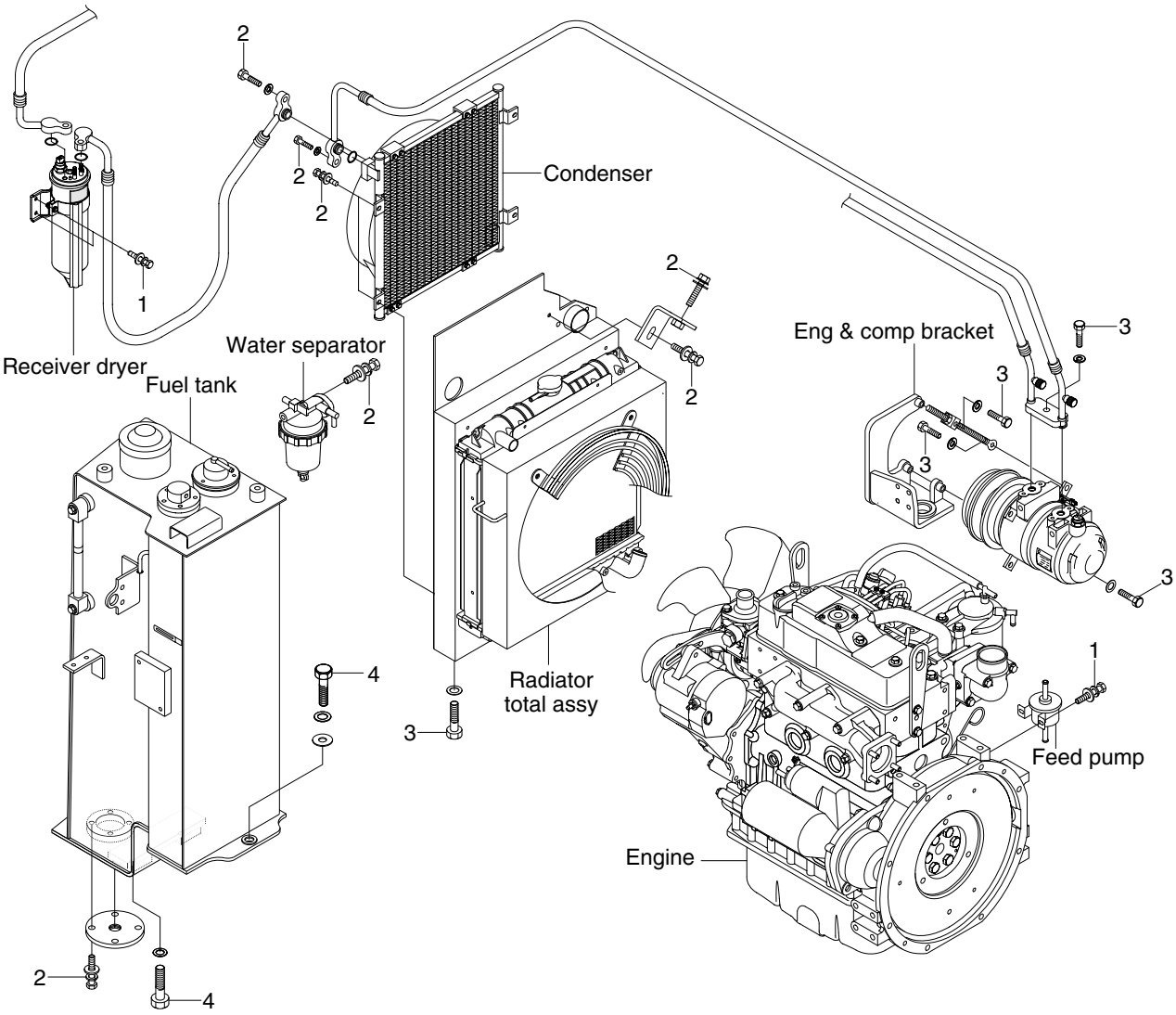

R35Z78CM02

· Tightening torque

Item	Size	kgf · m	lbf · ft
1	M 6×1.0	1.05±0.2	7.6±1.45
2	M 8×1.25	2.5±0.5	18.1±3.6

Item	Size	kgf · m	lbf · ft
3	M 10×1.25	6.9±1.4	49.9±10.1
4	M 12×1.75	12.8±3.0	92.6±21.7

GROUP 3 ELECTRIC SYSTEM

1. ELECTRIC COMPONENTS MOUNTING 1

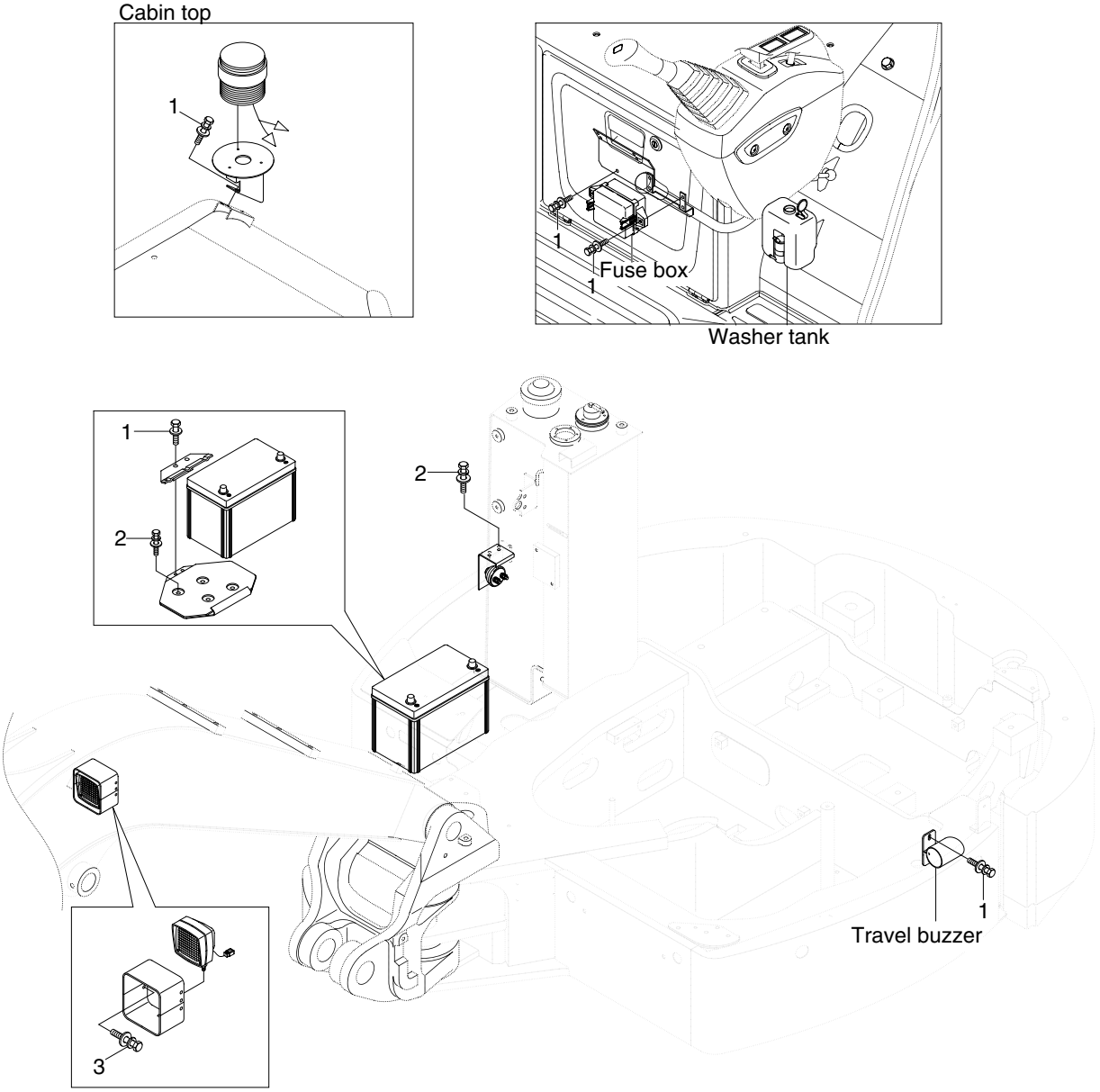

R35Z78CM03

· Tightening torque

Item	Size	kgf · m	lbf · ft
1	M 6×1.0	1.05±0.2	7.6±1.45
2	M 8×1.25	2.5±0.5	18.1±3.6

Item	Size	kgf · m	lbf · ft
3	M10×1.5	6.9±1.4	49.9±10.1

GROUP 4 HYDRAULIC SYSTEM

1. HYDRAULIC COMPONENTS MOUNTING 1

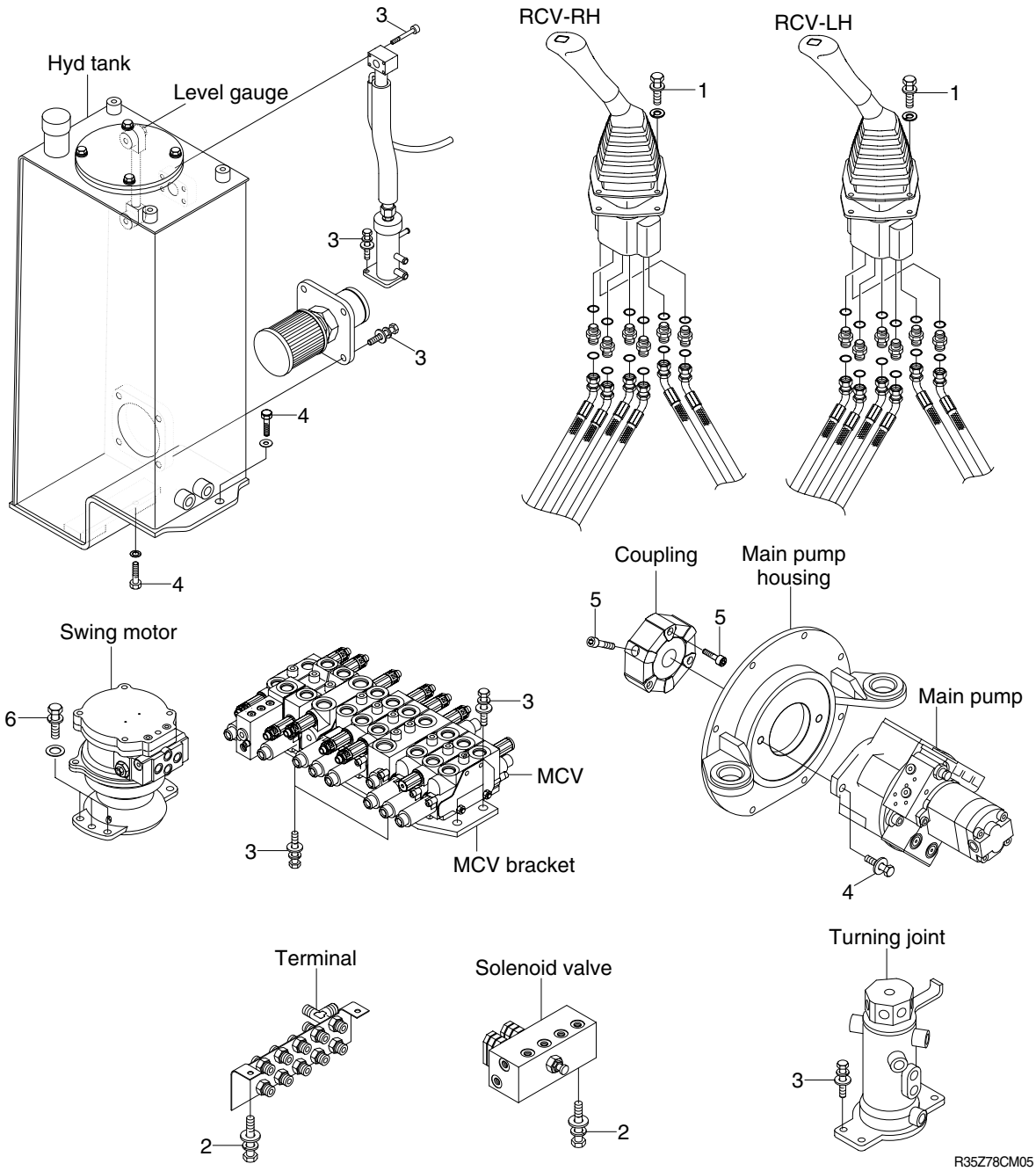

· Tightening torque

Item	Size	kgf · m	lbf · ft
1	M 6×1.0	1.05±0.2	7.6±1.45
2	M 8×1.25	2.5±0.5	18.1±3.6
3	M10×1.5	6.9±1.4	49.9±10.1

Item	Size	kgf · m	lbf · ft
4	M12×1.75	12.8±3.0	93±22.0
5	M12×1.75	9.25±0.25	69±14.0
6	M14×2.0	12.0±1.0	88.0±7.2

2. HYDRAULIC COMPONENTS MOUNTING 2

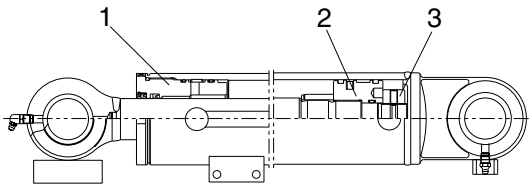

Boom cylinder

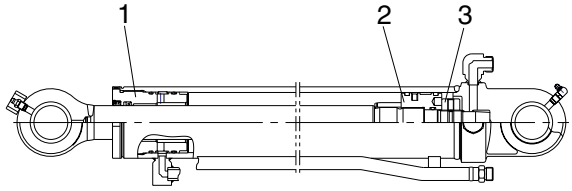

Arm cylinder

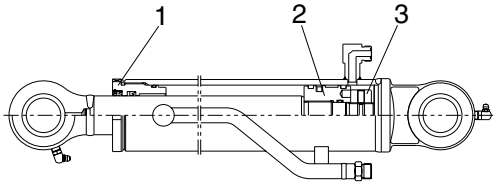

Bucket cylinder

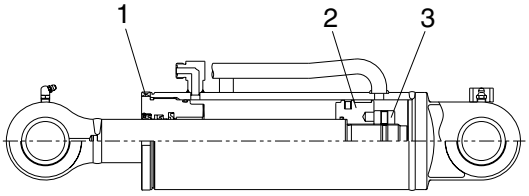

Dozer cylinder

R35Z78CM07

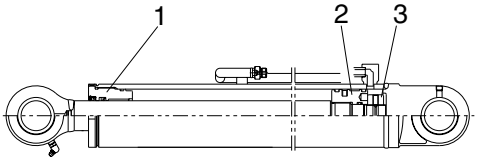

Boom swing cylinder

· Tightening torque

1. Gland

Item	Size	kgf · m	lbf · ft
Boom cylinder	M90×2	68±6.8	492±49
Arm cylinder	M85×2	64±6.4	463±46
Bucket cylinder	M75×2	56±5.6	405±41
Dozer cylinder	M100×2	75±7.5	542±54
Boom swing cylinder	M85×2	64±6.4	463±46

2. Piston

Item	Size	kgf · m	lbf · ft
Boom cylinder	M40×2	100±10	723±72
Arm cylinder	M40×2	100±10	723±72
Bucket cylinder	M33×2	83±8	600±60
Dozer cylinder	M39×2	98±9.8	709±71
Boom swing cylinder	M40×2	100±10	723±72

3. Piston nut

Item	Size	kgf · m	lbf · ft
Boom cylinder	M33×2	82±8	593±59
Arm cylinder	M33×2	82±8	593±59
Bucket cylinder	M29×2	73±7	528±53
Dozer cylinder	M39×2	150±15	1085±109
Boom swing cylinder	M33×2	93±9	673±67

GROUP 5 UNDERCARRIAGE

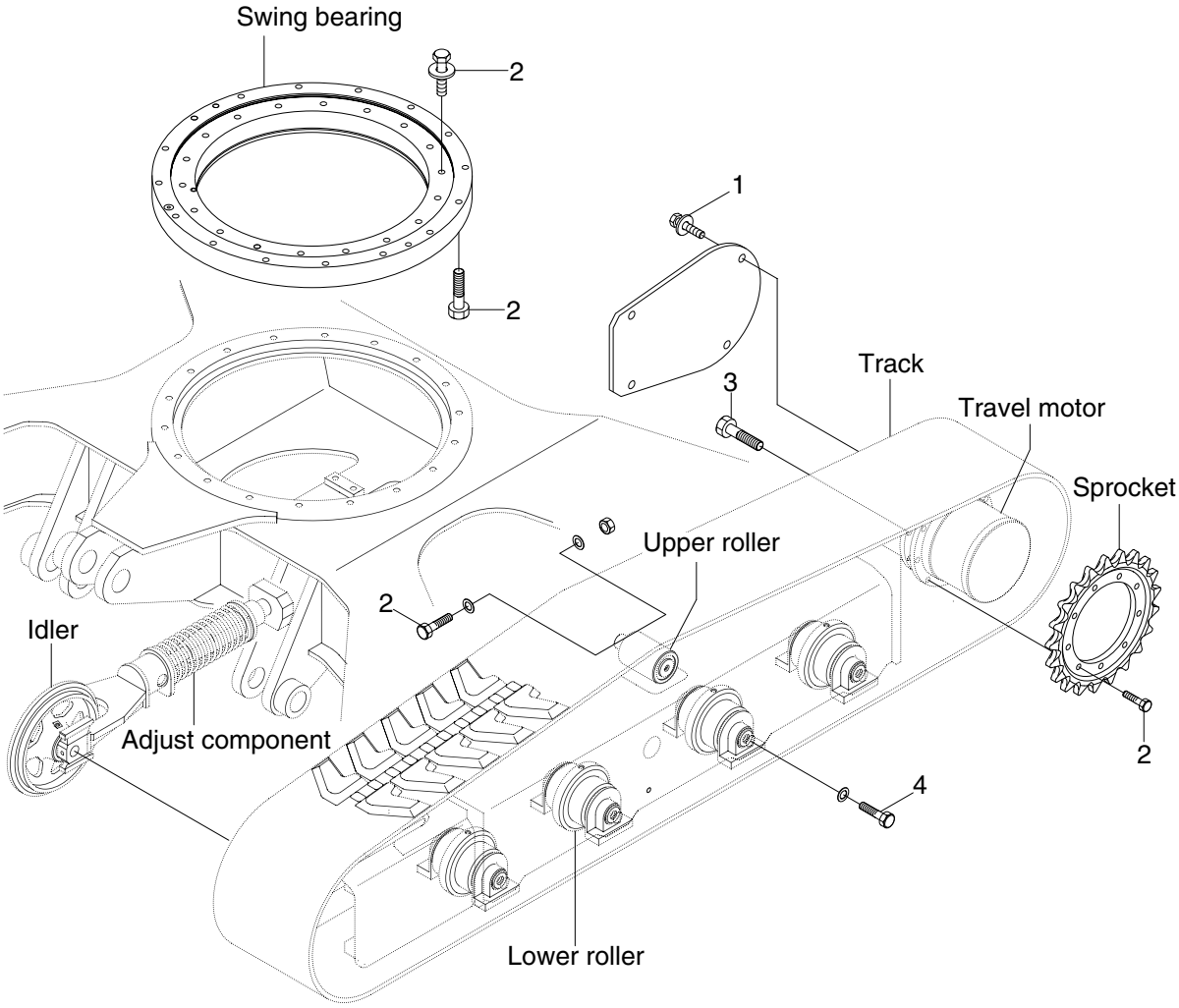

R35Z78CM08

· Tightening torque

Item	Size	kgf · m	lbf · ft
1	M10×1.5	6.9±1.4	49.9±10.1
2	M12×1.75	12.8±3.0	92.6±21.7

Item	Size	kgf · m	lbf · ft
3	M12×1.75	138±2	100±14
4	M18×2.0	41.3±6.2	299±45

GROUP 6 STRUCTURE

1. CANOPY AND ACCESSORIES MOUNTING

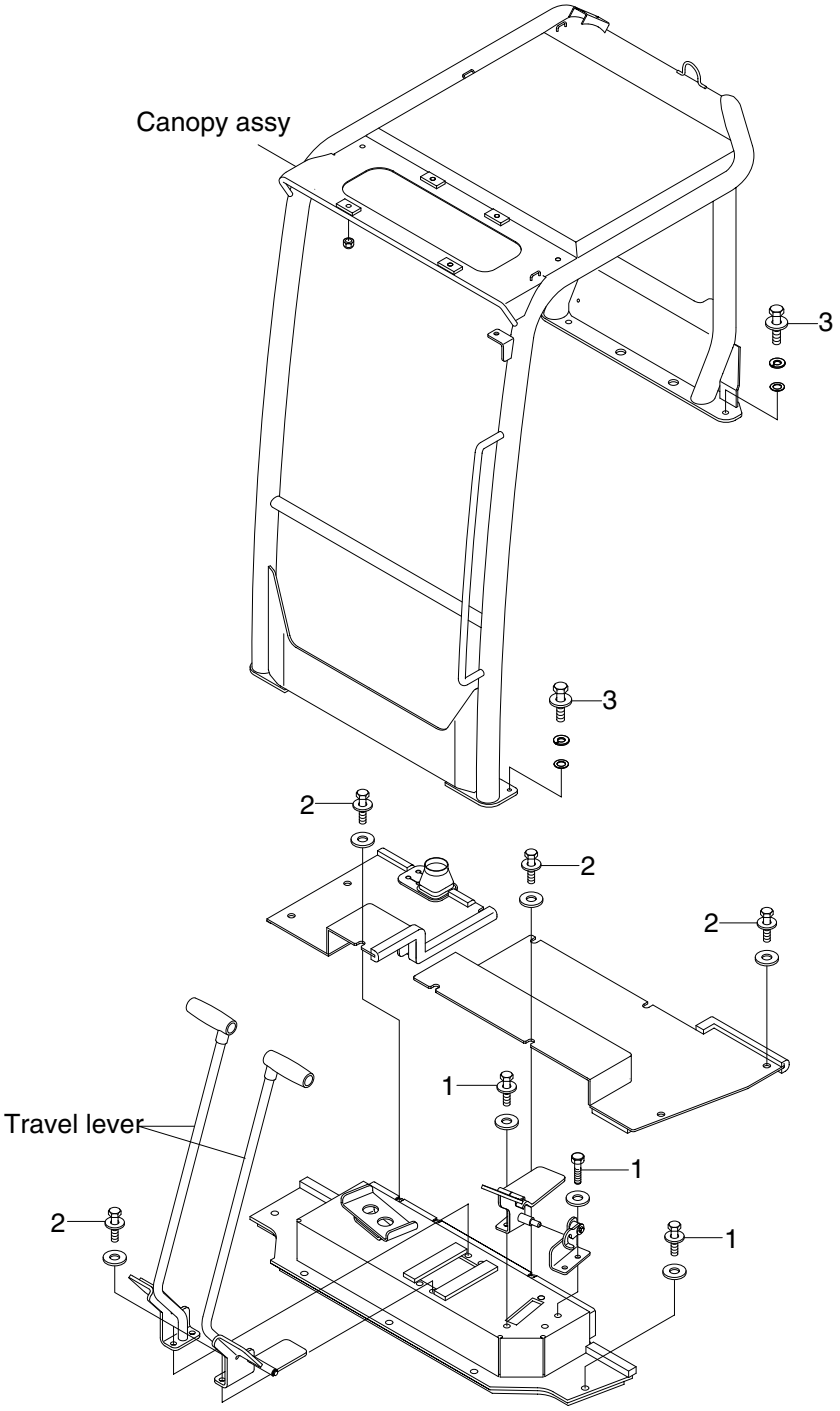

R35Z78CM09

· Tightening torque

Item	Size	kgf · m	lbf · ft
1	M 8×1.25	2.5±0.5	18.1±3.6
2	M10×1.5	6.9±1.4	50±10

Item	Size	kgf · m	lbf · ft
3	M12×1.75	12.8±3.0	92.6±21.7

2. COWLING MOUNTING

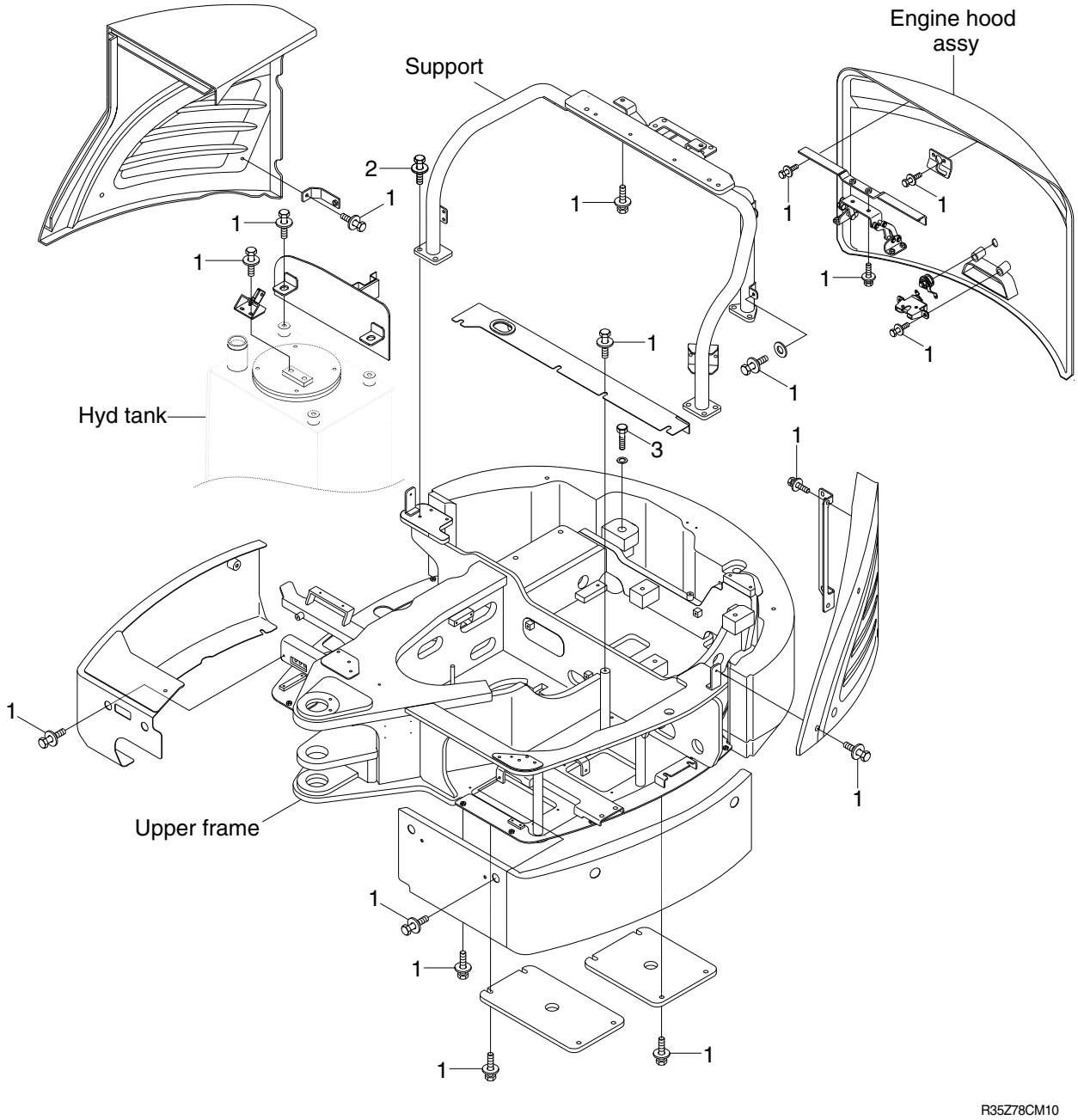

· Tightening torque

Item	Size	kgf · m	lbf · ft
1	M 8×1.25	2.5±0.5	18.1±3.6
2	M12×1.75	12.8±3.0	92.6±21.7

Item	Size	kgf · m	lbf · ft
3	M20×2.5	57.8±6.4	418±46.3

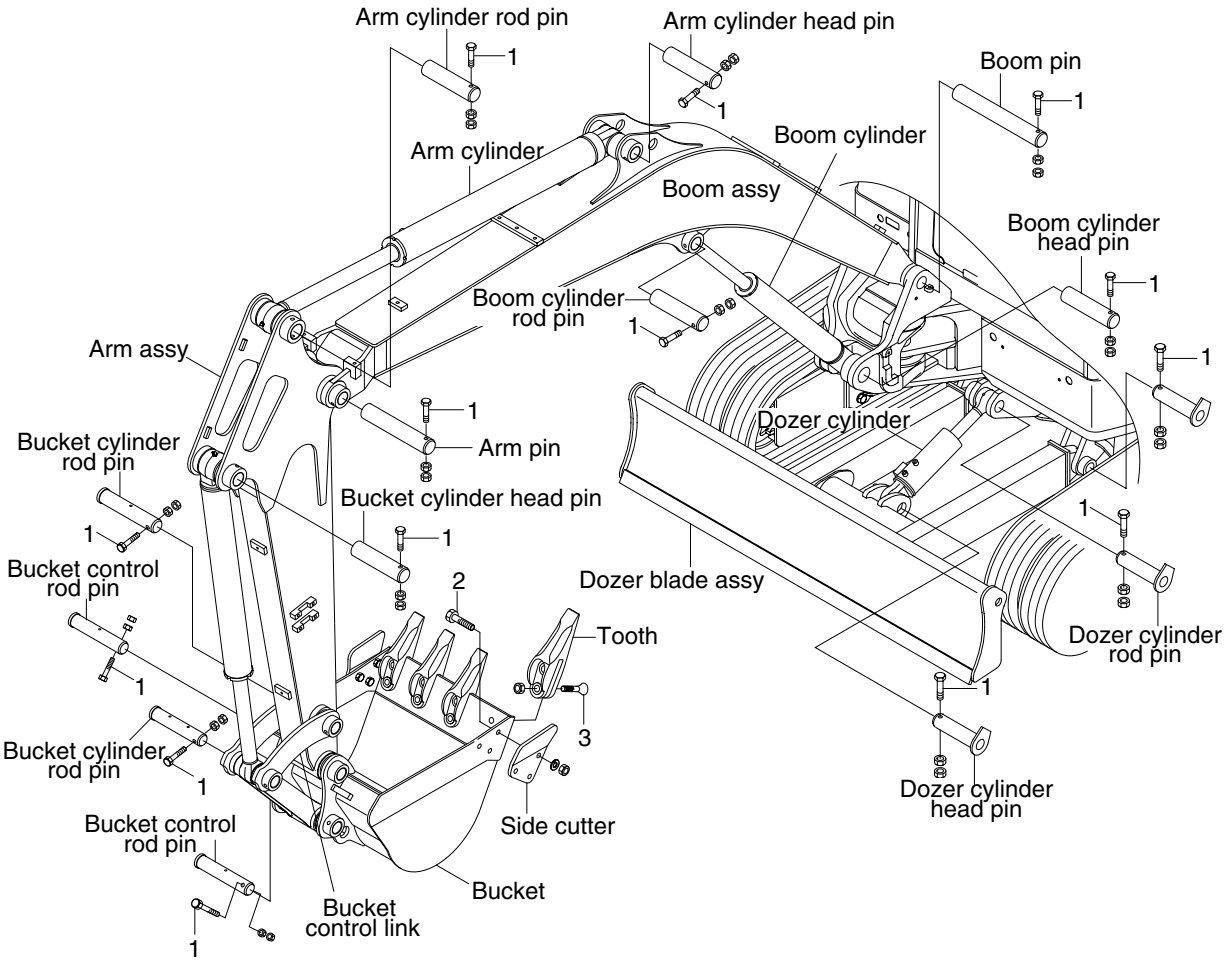

R35Z78CM11

· Tightening torque

Item	Size	kgf · m	lbf · ft
1	M12×1.75	12.8±3.0	92.6±21.7
2	M16×2.0	29.7±4.5	215±32.5

Item	Size	kgf · m	lbf · ft
3	M16×1.5	31.3±4.7	226±34