L2000 M2000 F2000
construction period 1992-2005
(according to model)

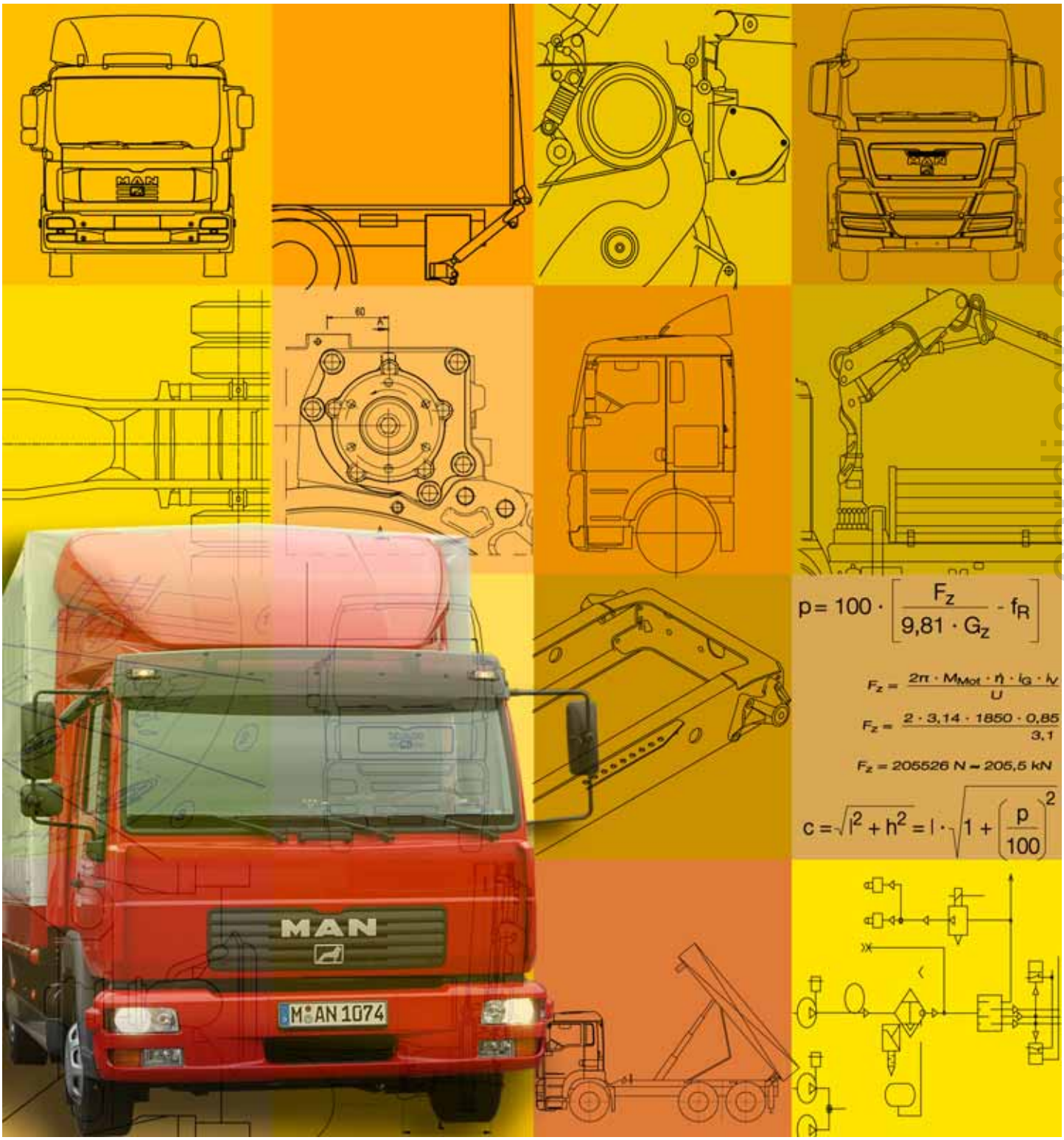

cardiagn.com

P U B L I S H E R

MAN Nutzfahrzeuge AG
ESC Department
Engineering Services
Consultation (formerly TDB)

Dachauer Str. 667
D - 80995 Munich

E-Mail:
esc@man.eu

Fax:
+ 49 (0) 89 1580 4264

cardiagn.com

We reserve the right to make changes in the course of technical development.

© 2007 MAN Nutzfahrzeuge Aktiengesellschaft

Reprinting, reproduction or translation, even of excerpts, is not permitted without the written permission of MAN.
All rights, in particular under copyright, are strictly reserved by MAN.

Trucknology® and MANTED® are registered trademarks of MAN Nutzfahrzeuge AG

Where designations are trademarks they are, even without the ® or ™ sign, acknowledged as the proprietor‘s protected marks.

L2000 M2000 F2000 construction period 1992-2005 (according to model)

1. Applicability of the Guide 1
2. Vehicle designations 1
2.1 Model ranges 1
2.2. Model number, model code, vehicle identification number, basic vehicle number, 2
vehicle number 2
2.3 Wheel formula 2
2.4 Vehicle designation 2
2.4.1 Vehicle designation for the L2000, M2000, F2000, and E2000 model ranges 2
2.4.2 Model numbers, model codes 5
2.5 Engine designations 9
3. General 10
3.1 Legal agreements and approval procedure 10
3.1.1 Preconditions 10
3.2 Responsibility 11
3.3 Quality assurance (QA) 11
3.4 Approval 12
3.5 Submission of documents 12
3.6 Warranty 13
3.7 Liability 14
3.8 Type approval 14
3.9 Safety 15
3.9.1 Functional and operational safety 15
3.9.2 Manuals for MAN trucks 16
3.9.3 Manuals from body and conversion companies 17
3.10 Limitation of liability for accessories/spare parts 17
3.11 Special-case approvals 17
3.12 Change of tyre type 18
3.13 Increasing the permissible trailer load 20
3.14 Increasing the permissible axle load 20
3.15 Increasing the permissible gross weight 21
3.16 Reducing the permissible gross weight 21
3.17 Definitions, dimensions and weights 21
3.17.1 Axle overload, one-sided loading 22

caragar.com

3.18 Minimum front axle load 23
3.19 Permissible overhang 24
3.20 Theoretical wheelbase, overhang, theoretical axle centreline 24
3.21 Calculating the axle load and weighing procedure 27
3.22 Weighing vehicles with trailing axles 27
4. Modifying the chassis 28
4.1 Safety at work 28
4.2 Corrosion protection 28
4.3 Storage of vehicles 29
4.4 Materials and frame data 29
4.4.1 Materials for frames and subframes 29
4.4.2 Frame data 29
4.5 Modifying the frame 34
4.5.1 Drill holes, riveted joints and screw connections on the frame 34
4.5.2 Cut-outs in the frame 37
4.5.3 Welding the frame 38
4.5.4 Modifying the frame overhang 40
4.6 Modifications to the wheelbase 43
4.7 Retrofitting equipment 46
4.8 Retrofitting of leading and trailing axles 46
4.9 Propshafts 46
4.9.1 Single joint 46
4.9.2 Jointed shaft with two joints 47
4.9.3 Three-dimensional propshaft layout 48
4.9.3.1 Propshaft train 49
4.9.3.2 Forces in the propshaft system 50
4.9.4 Modifying the propshaft layout in the driveline of MAN chassis 50
4.10 Central lubrication system 51
4.11 Modifying the cab 51
4.11.1 General 51
4.11.2 Extending the cab 51
4.11.3 Spoilers, aerodynamics kit 52
4.11.4 Roof sleeper cabs and raised roofs 52
4.11.4.1 Fundamentals for the installation of roof cabs 52
4.11.4.2 Roof openings 54
4.12 Axle location, suspension, steering 55
4.12.1 General 55
4.12.2 Stability, body roll 55

cardiagn.com

4.13 Add-on frame components 56
4.13.1 Underride guard 56
4.13.2 Sideguards 57
4.13.3 Spare wheel 61
4.13.4 Wheel chocks 61
4.13.5 Fuel tanks 61
4.13.6 Liquefied gas systems and auxiliary heaters 62
4.14 Gas engines: Handling of high-pressure gas installations 62
4.15 Modifications to the engine 63
4.15.1 Air intake, exhaust gas path 63
4.15.2 Engine cooling 63
4.15.3 Engine encapsulation, noise insulation 63
4.16 Coupling devices 64
4.16.1 General 64
4.16.2 Trailer coupling, D value 66
4.16.3 Rigid drawbar trailers, central axle trailers, D_c value, V value 67
4.16.4 End cross members and trailer couplings 69
4.16.5 Ball-type coupling 83
4.16.6 Fifth-wheel coupling 83
4.16.7 Converting the vehicle type - truck / tractor 86
5. Bodies 86
5.1 General 86
5.1.1 Accessibility, Clearances 87
5.1.2 Lowering the body 89
5.1.3 Platforms and steps 89
5.1.4 Corrosion protection 90
5.2 Subframes 90
5.2.1 Designing the subframe 92
5.2.2 Attaching subframes and bodies 95
5.2.2.1 Screw connections and riveted joints 95
5.2.2.2 Flexible connections 96
5.2.2.3 Rigid connections 102
5.2.2.4 Self-supporting bodies without subframe 104
5.3 Special bodies 105
5.3.1 Testing of bodies 105
5.3.2 Single-pivot body 105
5.3.3 Tank and container bodies 106
5.3.3.1 General 106
5.3.3.2 Body fixtures, mountings 106
5.3.3.3 Tankers and container bodies without subframes 107

carDiagn.com

5.3.4 Tippers 109
5.3.5 Set-down, sliding set-down and sliding roll-off skip loaders 111
5.3.6 Platform and box bodies 112
5.3.7 Interchangeable containers 113
5.3.7.1 Factory-fitted interchangeable platform chassis 113
5.3.7.2 Other interchangeable equipment 113
5.3.8 Loading cranes 114
5.3.8.1 Loading crane behind the cab 116
5.3.8.2 Rear loading crane 117
5.3.8.3 Subframe for loading crane 118
5.3.9 Tail-lifts 127
5.3.10 Cable winches 147
5.3.11 Transport mixers 148
6. Electrics 149
6.1 Introduction 149
6.2 References to repair manuals and standards 149
6.3 Starting, tow-starting and operating 149
6.4 Handling batteries 149
6.5 Additional wiring diagrams and wiring harness drawings 150
6.6 Fuse, power for additional consumers 151
6.7 Type of electrical conductors and relays to be used 151
6.8 Lighting installations 151
6.9 Interference suppression 152
6.10 Electromagnetic compatibility 152
6.11 Interfaces on the vehicle 152
6.12 Body fittings 153
6.13 Setting customer-specific parameters with MAN-cats® 153
6.14 Earth cable 153
6.15 Installation and routing of electric cabling/pipework 154
7. Power take-offs (see separate booklet) 154
8. Brakes, lines 155
8.1 Brake and compressed air lines 155
8.1.1 Basic principles 155
8.1.2 Plug connectors, changeover to Voss 232 system 155
8.1.3 Installing and attaching lines 157
8.1.4 Compressed air loss 159
8.2 Connecting ancillary consumers 159
8.3 Adjusting the automatic load-dependent brake system 162
8.4 Continuous brakes (retarders) 162
8.4.1 Hydrodynamic retarders 162

cardiagn.com

8.4.2 Eddy-current brakes 163
9. Calculations 165
9.1 Speed 165
9.2 Efficiency 166
9.3 Tractive force 167
9.4 Gradeability 168
9.4.1 Distance travelled on uphill or downhill gradients 168
9.4.2 Angle of uphill or downhill gradient 168
9.4.3 Calculating the gradeability 169
9.5 Torque 173
9.6 Power output 174
9.7 Rotational speeds for power take-offs at the transfer case 176
9.8 Driving resistances 177
9.9 Turning circle 180
9.10 Axle load calculation 182
9.10.1 Performing an axle load calculation 182
9.10.2 Calculation of weight with trailing axle lifted 185
9.11 Support length for bodies without subframes 187
9.12 Coupling devices 188
9.12.1 Trailer coupling 188
9.12.2 Rigid drawbar trailers / central axle trailers 188
9.12.3 Fifth-wheel coupling 190

cardiagn.com

1. Gültigkeit der Aufbaurichtlinien

This „Guide to Fitting Bodies for Trucks“ (hereinafter also called the „Guide“) is published by MAN Nutzfahrzeuge.
The Guide is also available via our „MANTED® Technical Data“ software and on the Internet.

The user is responsible for ensuring that he is working with the latest issue. Our TDB Department (see „Publisher“ above) can provide information about the current status of the document.

This Guide serves as instructions and as a technical aid for companies that carry out the design and installation of bodies for truck chassis as well as companies that carry out modifications to truck chassis.

This Guide applies to:

- New vehicles
- Old vehicles

if retrospective work is being carried out on these vehicles.

A Guide to Fitting Bodies for bus chassis can be obtained from NEOMAN.

Responsibilities concerning trucks are as follows:
for

- Sales enquiries
  - → the nearest MAN branch
  - → Sales Support
- Technical enquiries
  - → for sales negotiations
    - - the nearest MAN branch
    - - the ESC Department (for address see “Publisher” above)
- Customer service matters
  - → After Sales

2. Vehicle designations

To identify and differentiate MAN vehicles, components and assemblies, Sections 2.1 to 2.5 of this chapter will describe some of the designations in greater detail. The figures contained in model designations serve only as an indication and are not definite figures for actual maximum load carrying capacity for specific components or assemblies; in addition, they do not always agree with the legally specified limits.

2.1 Model ranges

Within the MAN vehicle programme there are different vehicle classes or model ranges.
When reference is made in this Guide to vehicle families or model ranges, it is referring to the following vehicles:

L2000	7,5t - 10,5t	see Table 12
M2000L	12t - 26t	see Table 13
M2000M	12t - 25t	see Table 14
F2000	19t - 41t	see Table 15
E2000	19t - 50t	see Table 16

cardiagn.com

2.2 Model number, model code, vehicle identification number, basic vehicle number, vehicle number

The three-digit model number, also called model code, provides a technical description of the MAN chassis and also identifies which vehicle range it belongs to. The number is part of the 17-digit vehicle identification number (VIN) and is located at digits 4 to 6 in the VIN. The basic vehicle number, formulated for sales purposes, also contains the model number at digits 2 to 4.
The seven-figure vehicle number describes the technical equipment on a vehicle; it contains the model number at digits 1 to 3, followed by a four-digit sequential number. The vehicle number is to be found in the vehicle papers and on the vehicle's manufacturing plate. The vehicle number can be given instead of the 17-digit vehicle identification number in the event of any technical queries regarding conversions and bodies.

2.3 Wheel formula

For more accurate identification, the wheel formula can be used alongside the vehicle designation. This is a familiar, but not standardised term. Twin tyres are regarded as one wheel, i.e. it is the „wheel locations" that are counted. The wheel formula does not indicate which axles are driven. On all-wheel drive vehicles, not all axles are necessarily driven; instead, it may be that all-wheel drive components are merely present in the drivetrain.

Table 1: Example of a wheel formula

6x4/2		
6	=	Number of wheel locations, in total
x	=	Has no function
4	=	Number of driven wheels
/	=	Only the front wheels are steered
-	=	Combined front and rear wheel steering
2	=	Number of steered wheels

In normal parlance, the number of steered wheels is not stated if only two wheels are steered.
However, for consistency, MAN's technical documents do indicate the number of steered wheels.

2.4 Vehicle designation

2.4.1 Vehicle designation for the L2000, M2000, F2000, and E2000 model ranges

The following section explains how the vehicle designations are formulated.
Vehicle designations comprise a prefix and a suffix.

Table 2: Example of a vehicle designation

26.464	FNLL	
26.464		Prefix
	FNLL	Suffix

A prefix comprises:

- Technical design gross weight*
- Engine power rating in DIN-hp/10
- Version code

cardiagn.com

Table 3: Example of a prefix

26.464 FNLL		
26.	=	Technical design gross weight*
46	=	Engine power rating in DIN-hp/10. 46x10 = 460 hp power output; ratings that end in 5 hp are rounded up
4	=	Version code

* The technically possible permissible gross weight is only achieved if the vehicle is also fitted with the appropriate components. The vehicle designation does not provide any information on the equipment fitted to a vehicle

The suffix comprises:

- Chassis section
- Factory-fitted body section
- Dimensions section
- Body/conversion section

Table 4: Example of a suffix

19.364 FLK/N-LV		
FL	=	Chassis section
K	=	Factory-fitted body section
/N	=	Dimensions section
-LV	=	Body/conversion section

Chassis section:

The first character (on two-axle vehicles) or the first and second characters in the case of vehicles with more than two axles, mean the following:

Table 5: Suffix codes indicating vehicle model ranges and configuration

L	=	Light-duty L2000 or medium-duty M2000L range, cab from light-duty L2000 range
LN	=	Medium-duty M2000L range, cab from light-duty L2000 range, trailing axle
M	=	Medium duty, cab from heavy-duty F2000 range
MN	=	Trailing axle, medium-duty range, cab from heavy-duty F2000 range
MV	=	Leading axle, medium-duty range, cab from heavy-duty F2000 range
F	=	Two-axle truck, cab from heavy-duty F2000 range
FN	=	Trailing axle, cab from heavy-duty F2000 range
FV	=	Leading axle, cab from heavy-duty F2000 range
DF	=	Three-axle truck, tandem axle, cab from heavy-duty F2000 range
VF	=	Four-axle truck, cab from heavy-duty F2000 range

There are also optional details specifying whether a vehicle has all-wheel drive and/or whether it has single tyres on the driven rear axles:

Table 6: Suffix codes for all-wheel drive/single tyres

A	=	All-wheel drive
E	=	Single tyres

cardiagn.com

Suspension:

Vehicles with leaf suspension on all axles are not specially marked. Air suspension is indicated by the letter „L“, hydropneumatic suspension by the letter „P“. The suspension code starts at the second character of the chassis section of the suffix at the earliest. A distinction is made between the following suspension systems:

Table 7: Suffix codes for suspension systems

Suspension system	Code	Description
Leaf-leaf	none	Front and rear axle(s) have leaf suspension
Leaf-air	L	Front axle(s) have leaf suspension, rear axles have air suspension
Air-air	LL	Full air suspension, front and rear axle(s) have air suspension
Leaf-hydro	P	Front axle(s) have leaf suspension, rear axle(s) have hydropneumatic suspension

Steering layout:

Left-hand drive vehicles are not specially marked. Right-hand drive vehicles contain the letter “R” in the last position of the chassis section of the suffix, but before the factory-fitted body section.

Table 8: Marking for right-hand drive

FLRS

F	=	Forward-control truck with 2 axles and driveline like a two-axle vehicle
L	=	Leaf-air suspension
R	=	Right-hand drive vehicle
S	=	Semitrailer tractor unit

Factory-fitted body section:

This letter indicates that an appropriate body type can be factory-fitted; however, the vehicle can also be delivered without a body.

Table 9: Factory-fitted body section

C	=	Chassis with and without factory-fitted platform
K	=	Tipper
S	=	Semitrailer tractor
W	=	Interchangeable platform chassis

Dimensions section:

If the overall height differs from the normal height, this is indicated by a forward slash. The chassis as a whole dictates whether a special overall height is required. Changes to vehicle equipment such as the fitting of different tyres, a low mounting plate or a low fifth-wheel coupling do not require the vehicle designation to be changed to indicate that the vehicle is a low-level design.

Table 10: Overall heights

19.414 FLS/N

/	=	Special overall height
N	=	Low
M	=	Medium-height
H	=	High

cardiagn.com

Body/conversion section:

If a chassis is intended for a specific body or conversion, the body/conversion section of the number is indicated by a hyphen. This is always followed by a combination of two letters.

Table 11: Body/conversion section

Example:

19.314 FLL - PT

- KI = Fittings for tipper body
- HK = Fittings for tipper body (rear)
- KO = Fittings for municipal service body
- LF = Fittings for fire-fighting vehicle
- LV = Fittings for loading crane structure in front of the platform
- PT = Fittings for car transporter
- TM = Fittings for concrete mixer
- NL = Fittings for the installation of a trailing axle

2.4.2 Model numbers, model codes

Table 12: L2000

Model no.	Tonnage	Designation	Suspension	Engine	Wheel formula
L20	8/9t	8.xxx L 9.xxx L	BB	R4	4x2/2
L21	8/9t	8.xxx L 9.xxx L	BB	R6	4x2/2
L22	8t	8.xxx LAE	BB	R4	4x4/2
L23	8t	8.xxx LAE	BB	R6	4x4/2
L24	10t	10.xxx L	BB	R4	4x2/2
L25	10t	10.xxx L	BB	R6	4x2/2
L26	10t	10.xxx LAE	BB	R4	4x4/2
L27	10t	10.xxx LAE	BB	R6	4x4/2
L33	8/9t	8.xxx LL 9.xxx LL	BL	R4	4x2/2
L34	8/9t	8.xxx LL 9.xxx LL	BL	R6	4x2/2
L35	10t	10.xxx LL	BL	R4	4x2/2
L36	10t	10.xxx LL	BL	R6	4x2/2

*) = The type of suspension is indicated by the following code letters:

B = leaf suspension,

L = air suspension,

H = hydropneumatic suspension. A code letter is assigned to each axle (starting with the first axle).

*) = The type of engine is indicated by up to three characters, the letter (R/V) represents the design, i.e. in-line or V, and the number represents the number of cylinders.

cardiagn.com

Table 13: M2000L with compact, medium or twin cab

Model no.	Tonnage	Designation	Suspension	Engine	Wheel formula
L70	12t	12.xxx L	BB	R4	4x2/2
L71	12t	12.xxx L	BB	R6	4x2/2
L72	12t	12.xxx LL	BL	R4	4x2/2
L73	12t	12.xxx LL	BL	R6	4x2/2
L74	14t	14.xxx L	BB	R4	4x2/2
L75	14t	14.xxx L	BB	R6	4x2/2
L76	14t	14.xxx LL	BL	R4	4x2/2
L77	14t	14.xxx LL	BL	R6	4x2/2
L79	14t	14.xxx LLL	LL	R6	4x2/2
L80	14t	14.xxx LA	BB	R6	4x4/2
L81	15t	15.xxx L	BB	R4	4x2/2
L82	15t	15.xxx L	BB	R6	4x2/2
L83	15t	15.xxx LL	BL	R4	4x2/2
L84	15t 20t	15.xxx LL 20.xxx LNL	BL BLL	R6 R6	4x2/2 6x2-4
L86	15t 20t	15.xxx LLL 20.xxx LNLL	LL LLL	R6 R6	4x2/2 6x2-4
L87	18t	18.xxx L	BB	R6	4x2/2
L88	18t	18.xxx LL	BL	R6	4x2/2
L89	18t	18.xxx LLL	LL	R6	4x2/2
L90	18t	18.xxx LA	BB	R6	4x4/2
L95	26t	26.xxx DL	BBB	R6	6x4/2

Table 14: M2000M with short or long-haul cab

Model no.	Tonnage	Designation	Suspension	Engine	Wheel formula
M31	14t	14.xxx M	BB	R6	4x2/2
M32	14t	14.xxx ML	BL	R6	4x2/2
M33	14t	14.xxx MLL	LL	R6	4x2/2
M34	14t	14.xxx MA	BB	R6	4x4/2
M38	18t	18.xxx M	BB	R6	4x2/2
M39	18t	18.xxx ML	BL	R6	4x2/2
M40	18t	18.xxx MLL	LL	R6	4x2/2
M41	18t	18.xxx MA	BB	R6	4x4/2
M42	25t	25.xxx MNL	BLL	R6	6x2/2
M43	25t	25.xxx MNLL	LLL	R6	6x2/2
M44	25t	25.xxx MVL	BLL	R6	6x2/4

cardiagn.com

Table 15: F2000

Model no.	Tonnage	Designation	Suspension	Engine	Wheel formula
T01	19t	19.xxx F	BB	R5	4x2/2
T02	19t	19.xxx FL	BL	R5	4x2/2
T03	19t	19.xxx FLL	LL	R5	4x2/2
T04	19t	19.xxx FA	BB	R5	4x4/2
T05	23t	23.xxx FNLL	LLL	R5	6x2/2 6x2-4
T06	26t	26.xxx FNL	BLL	R5	6x2/2 6x2-4
T07	26t	26.xxx FNLL	LLL	R5	6x2/2 6x2-4
T08	26t	26.xxx FVL	BLL	R5	6x2/4
T09	26t	26.xxx DF	BBB	R5	6x4/2
T10	26t	26.xxx DFL	BLL	R5	6x4/2
T12	27/33t	27.xxx DFA	BBB	R5	6x6/2
T15	32t	32.xxx VF	BBBB	R5	8x4/4
T16	35/41t	35.xxx VF	BBBB	R5	8x4/4
T17	32t	32.xxx VFLR	BBLL	R5/R6	8x4/4
T18	27/33t	27.xxx DF	BBB	R5	6x4/2
T20	19t	19.xxx FLL	LL	R5	4x2/2
T31	19t	19.xxx F	BB	R6	4x2/2
T32	19t	19.xxx FL	BL	R6	4x2/2
T33	19t	19.xxx FLL	LL	R6	4x2/2
T34	19t	19.xxx FA	BB	R6	4x4/2
T35	23t	23.xxx FNLL	LLL	R6	6x2/2 6x2-4
T36	26t	26.xxx FNL	BLL	R6	6x2/2 6x2-4
T37	26t	26.xxx FNLL	LLL	R6	6x2/2 6x2-4
T38	26t	26.xxx FVL	BLL	R6	6x2/4
T39	26t	26.xxx DF	BBB	R6	6x4/2
T40	26t	26.xxx DFL	BLL	R6	6x4/2
T42	27/33t	27.xxx DFA	BBB	R6	6x6/2
T43	40t	40.xxx DF	BBB	R6	6x4/2
T44	40t	40.xxx DFA	BBB	R6	6x6/2
T45	32t	32.xxx VF	BBBB	R6	8x4/4
T46	35/41t	35.xxx VF	BBBB	R6	6x2/4
T48	27/33t	27.xxx DF	BBB	R6	6x2/2
T50	19t	19.xxx FLL	LL	R6	4x2/2
T62	19t	19.xxx FL	BB	V10	4x2/2
T70	26t	26.xxx DFL	BLL	V10	6x4/2
T72	27/33t	27.xxx DFA	BBB	V10	6x6/2
T78	27/33t	27.xxx DF	BBB	V10	6x4/2

cardiagn.com

Table 16: ÖAF special-purpose vehicles

Model no.	Tonnage	Designation	Suspension	Engine	Wheel formula
E40	26t	26.xxx DFLR	BBB	R6	6x4/2
E41	41t	41.xxx VFA	BBBB BBLL	R6	8x8/4 8x4/4
E42	26t	26.xxx FVL	BLL	R6	6x2/4
E47	28t	28.xxx FAN 28.xxx DFA	BBB	R5	6x4-4 6x6-4
E50	30/33t	33.xxx DFAL	BLL	R5	6x6/2
E51	19t	19.xxx FL	BL	R5	4x2/2
E52	19t	19.xxx FAL	BL	R5	4x4/2
E53	26t	26.xxx FNL	BLL	R5	6x2-4 6x4-4
E54	26t	26.xxx FN	BBB	R5	6x2/2
E55	32t	32.xxx VFL	BBLL	R5	8x2/4 6x2-6 8x4/4
E56	26t	26.xxx FAVL	BLL	R5	6x4/4
E58	41/50t	41.xxx VFA	BBBB	R5	8x8/4 8x6/4 8x4/4
E59	33t	33.xxx DFL	BLL	R5	6x2/2 6x4/2
E60	30/33t	33.xxx DFAL	BLL	R6	6x6/2
E61	19t	19.xxx FL	BL	R6	4x2/2
E62	19t	19.xxx FAL	BL	R6	4x4/2
E63	26t	26.xxx FNL	BLL	R6	6x2-4 6x4-4
E64	26t	26.xxx FN	BBB	R6	6x2/2
E65	32t	32.xxx VFL	BBLL	R6	8x2/4 8x2-6 8x4/4
E66	26t	26.xxx FAVL	BLL	R6	6x4/4
E67	28t	28.xxx FANL 28.xxx FNAL	BLL	R6	6x4-4 6x6-4
E68	41/50t	41.xxx VFA	BBBB	R6	8x8/4 8x6/4 8x4/4
E69	33t	33.xxx DFL	BLL	R6	6x2/2 6x4/2
E72	33t	33.xxx DFAP	BHH	R6	6x6-4
E73	32/35t	32.xxx FVNL	BLLL	R6	8x2/4 8x2-6
E74	42t	42.xxx VFP	BBHH	R6	8x4-6
E75	41t	41.xxx DFVL	BLBB BLLL	R6	8x4/4

cardiagn.com

Table 16: ÖAF special-purpose vehicles

Model no.	Tonnage	Designation	Suspension	Engine	Wheel formula
E77	50t	50.xxx VFVP	BBHHH	R6	10x4-8
E78	42t	42.xxx VFAP	BBHH	R6	8x8-6
E79	50t	50.xxx VFAVP	BBHHH	R6	10x8-8
E88	35t	36.xxx VFL	BBLL	V10	8x4/4
E94	40t	40.xxx DFA 40.xxx DFAL	BBB BLL	V10	6x6/2
E95	41t	41.xxx DFVL	BLBB BLLL	V10	8x4/4
E98	50t	50.xxx VFA	BBBB	V10	8x8/4
E99	33t	33.xxx DF 33.xxx DFL	BBB BLL	V10	6x4/2

2.5 Engine designations

Table 17: Engine designation

	X	XX	X	X	X(X)	(X)	(X)	(X)
	D	08	2	6	L		F	
Diesel engine	D							
+ 100mm = cylinder bore diameter in mm		08						
Times 10 + 100 = stroke in mm			2					
Number of cylinders				6				
Intake system					L			
Power variant								
Engine installation							F	

Key to abbreviations:

D	=	Diesel
E	=	Natural gas
L	=	Intercooling
F	=	Front installation, engine vertical
H	=	Rear installation, engine vertical (bus)

Table 18: Example of engine designation

	D	28	4	0	L	F
Diesel engine	D					
+ 100mm = 128mm bore		28				
Times 10 + 100 = 140mm stroke			4			
0 = 10 cylinders				0		
Intercooling					L	
Front installation, vertical						F

cardiagn.com

3. General

3.1 Legal agreements and approval procedure

National regulations must be adhered to. The company carrying out the work remains responsible even after the vehicle has been approved if the authorities responsible issue an approval unaware of the operational safety of the product.

3.1.1 Preconditions

In addition to this Guide, the company carrying out the work must observe all

- laws and decrees
- accident prevention regulations
- operating instructions

relating to the operation and construction of the vehicle. Standards are technical standards; they are therefore minimum requirements. Anyone who does not endeavour to observe these minimum requirements is regarded as operating negligently.
Standards are binding when they form part of regulations.
Information given by MAN in reply to telephone enquiries is not binding unless confirmed in writing. Enquiries are to be directed to the relevant MAN department. Information refers to conditions of use that are usual within Europe. Particular consideration is given to the regulations in force in Germany, such as the Strassenverkehrs-Zulassungs-Ordnung (Road Traffic Licensing Regulations).
Dimensions, weights and other basic data that differ from these must be taken into consideration when designing the body, mounting the body and designing the subframe. The company carrying out the work must ensure that the entire vehicle can withstand the conditions of use that it is expected to experience.
For certain types of equipment, such as loading cranes, tail-lifts, cable winches etc, the respective manufacturers have developed their own body regulations. If, when compared with this MAN Guide, they impose further conditions, then these too must be observed.

References to

- legal stipulations
- accident prevention regulations
- decrees from professional associations
- work regulations
- other guidelines and sources of information

are not in any way complete and are only intended as ideas for further information. They do not replace the company's obligation to carry out its own checks.

The following can be obtained from the respective professional association or from the Carl-Heymanns-Verlag (publishers):

- Accident prevention regulations
- Guidelines
- Safety regulations
- Leaflets
- Other health and safety at work documents from professional associations.

These documents are available as individual documents and as directories.

Fuel consumption is considerably affected by modifications to the vehicle, by the body and its design and by the operation of equipment driven by the vehicle's engine. It is therefore expected that the company carrying out the work implements a design that facilitates the lowest possible fuel consumption.

cardiagn.com

3.2 Responsibility

The responsibility for proper

- design
- production
- installation of bodies
- modification to the chassis

always lies fully with the company that is manufacturing the body, installing it or carrying out modifications (manufacturer's liability). This also applies if MAN has expressly approved the body or the modification. Bodies/conversions that have been approved in writing by MAN do not release the body manufacturer from his responsibility for the product.
Should the company carrying out the work detect a mistake either in the planning stage or in the intentions of

- the customer
- the user
- its own personnel
- the vehicle manufacturer

then that mistake must be brought to the attention of the respective party.
The company is responsible for seeing that the vehicle's

- operational safety
- traffic safety
- maintenance possibilities and
- handling characteristics

do not exhibit any disadvantageous properties.
With regard to traffic safety, the company must operate in accordance with the state of the art and in line with the recognised rules in the field in matters relating to

- the design
- the production of bodies
- the installation of bodies
- the modification of chassis
- instructions and
- operating instructions.

Difficult conditions of use must also be taken into account.

3.3 Quality assurance (QA)

In order to meet our customers' high quality expectations and in view of international product liability legislation an on-going quality monitoring programme is also required for conversions and body manufacture/installation. This requires a functioning quality assurance system. It is recommended that the body manufacturer sets up and provides evidence of a quality system that complies with the general requirements and recognised rules (e.g. DIN EN ISO 9000 et seq. or VDA 8). Evidence of a qualified system can be provided for example by:

- Self-certification in accordance with the VDA checklist or that of another vehicle manufacturer
- A positive system audit carried out by other vehicle manufacturers (second party audit)
- Auditing of the QA system by an accredited institute (third party audit)
- Possession of a corresponding certificate.

cardiagn.com

If MAN is the party awarding the contract for the body or conversion, one of the above is required as evidence of qualification. MAN Nutzfahrzeuge AG reserves the right to carry out its own system audit in accordance with VDA 8 or a corresponding process check at the supplier's premises. At MAN, the QS department is responsible for the approval of body manufacturers as suppliers. VDA volume 8 has been agreed with the following body manufacturers' associations: **ZKF** (Zentralverband Karosserie- und Fahrzeugtechnik – Central Association of Body and Vehicle Engineering) and **BVM** (Bundesverband Metall Vereinigung Deutscher Metallhandwerke – Federation of German Metal Trades Associations). It has also been agreed with the **ZDH** (Zentralverband des Deutschen Handwerks – Central Association of German Craft Trades).

Documents:
VDA Volume 8
„Quality assurance at trailer, body and container manufacturers", obtainable from the Verband der Automobilindustrie e.V (VDA) (German Motor Industry Association). http://www.vda-qmc.de/de/index.php.

3.4 Approval

Approval from MAN for a body or a chassis modification is not required if the bodies or modifications are being carried out in accordance with this Guide.

If MAN approves a body or a chassis modification, this approval refers

- In the case of bodies only to the body's fundamental compatibility with the respective chassis and the interfaces to the body (e.g. dimensions and mounting of the subframe)
- In the case of chassis modifications only to the fact that, from a design point of view, the modifications to the chassis in question are fundamentally permissible.

The approval note that MAN enters on the submitted technical documents does not indicate a check on the

- Function
- Design
- Equipment of the body or the modification.

Observance of this Guide does not free the user from responsibility to perform modifications and manufacture bodies properly from a technical point of view. The approval observations only refer to such measures or components as are to be found in the submitted technical documents.

MAN reserves the right to refuse to issue approvals for bodies or modifications, even if a comparable approval has already been issued. Later submissions for approval are not automatically treated the same as earlier ones, because technical advances achieved in the interim period have to be taken into account.

MAN also reserves the right to change this Guide at any time or to issue instructions that differ from this Guide for individual chassis.

If several identical chassis have the same bodies or modifications MAN can, to simplify matters, issue a collective approval.

3.5 Submission of documents

Documents should only be sent to MAN if bodies/conversions diverge from this Guide. Before work begins on the vehicle, technical documents that require approval or inspection must be sent to MAN, department ESC (see „Addresses" booklet for address). Chassis drawings, data sheets etc. can also be requested from this office.

cardiagn.com

For an approval process to proceed swiftly, the following are required:

- Documents should be submitted in duplicate, at the very least
- The number of individual documents should be kept to a minimum
- All the technical data and documents must be submitted.

The following information should be included:

- Vehicle model with
  - cab design
  - wheelbase
  - frame overhang
  - length of rear overhang (vehicle overhang)
- Vehicle identification number
- Vehicle number (see 2.2)
- Dimension from the centre of the body to the centre of the last axle
- Centre of gravity position of the payload and body
- Body dimensions
- Material and dimensions of the subframe that is to be used
- Body mountings on the chassis frame
- Description of any deviations from this „MAN Guide to Fitting Bodies for Trucks“
- Any references to identical or similar vehicles

The following are not sufficient for inspection or approval:

- Parts lists
- Brochures
- Information that is not binding
- Photographs.

Some types of bodies, such as loading cranes, cable winches etc., necessitate information specific to their type.

In the documents submitted, all main length dimensions must be stated with respect to the wheel centre of the first axle, as appropriate.

Drawings are only valid if they bear the number that has been assigned to them. It is therefore not permitted to draw in the bodies or modifications on chassis drawings that have been provided by MAN and to submit these for approval.

3.6 Warranty

Warranty claims only exist within the framework of the purchasing contract between buyer and seller.
In accordance with this, the warranty obligation lies with the respective seller of the goods.

Warranty claims against MAN are not valid if the fault that is the subject of the complaint was due to the fact that

- This Guide was not observed
- In view of the purpose for which the vehicle is used, an unsuitable chassis has been selected
- The damage to the chassis has been caused by
  - the body
  - the type of body mounting or how the body has been mounted
  - the modification to the chassis
  - improper use.

cardiagn.com

3.7 Liability

Any faults in the work that are identified by MAN are to be corrected. Insofar as is legally permissible, MAN disclaims all liability, in particular for consequential damage.

Product liability regulates:

- The liability of the manufacturer for its product or component
- The compensation claim made by the manufacturer against whom a claim has been made against the manufacturer of an integral component, if the damage that has occurred is due to a fault in that component.

The company that has made the body or carried out the modification is to relieve MAN of any liability to its customer or other third party if the damage that has occurred is due to the fact that

- The company did not observe this Guide
- The body or chassis modification has caused damage on account of its faulty
  - design
  - manufacture
  - installation
  - instructions
- The fundamental rules that are laid down have not been complied with in any other way.

3.8 Type approval

Each vehicle that is to be used on the road in Germany must be officially approved. Approval is carried out by the local Vehicle Licensing Agency after submission of the vehicle documentation.

EBE approval (EBE = Einzel-Betriebserlaubnis = single certification)

The vehicle documentation is drawn up by a technical agency (DEKRA, TÜA, TÜV) after the vehicle has been examined.

ABE approval for complete vehicles (ABE = Allgemeine Betriebserlaubnis = National Type Approval = NTA)

The vehicle documentation is drawn up by the vehicle manufacturer.

ABE approval for chassis (ABE = Allgemeine Betriebserlaubnis = National Type Approval = NTA)

The vehicle documentation is drawn up by the chassis manufacturer and completed after the body has been approved by a technical agency (DEKRA, TÜA, TÜV).

Vehicles that are to be used for transporting hazardous goods require additional approval in accordance with GGVS or ADR.

Modifications that affect the certification may only be added by the official agency responsible.
Expiry of the certification will also cancel insurance cover.

The responsible authorities, the officially recognised expert, the customer or a MAN department may request submission of a drawing bearing the MAN approval mark; in some circumstances, evidence in the form of calculations or the submission of this Guide may suffice.

cardiagn.com

3.9 Safety

Companies carrying out work on the chassis/vehicle are liable for any damage that may be caused by poor functional and operational safety or inadequate operating instructions. Therefore, MAN requires the body manufacturer or vehicle conversion company to:

- Ensure the highest possible safety, in line with the state of the art
- Provide comprehensible, sufficient operating instructions
- Provide permanent, easily visible instruction plates on hazardous points for operators and/or third parties
- Observe the necessary protection measures (e.g. fire and explosion prevention)
- Provide full toxicological information
- Provide full environmental information.

3.9.1 Functional and operational safety

Safety is top priority! All available technical means of avoiding incidents that will undermine operational safety are to be implemented. This applies equally to

- Active safety = prevention of accidents. This includes:
  - Driving safety
    achieved by the overall vehicle design, including the body
  - Safety as a consequence of the driver's well-being
    achieved by keeping occupant stress caused by vibrations, noise, climatic conditions etc. to a minimum
  - Safety as a consequence of observation and perception, in particular through the correct design of lighting systems, warning equipment, providing sufficient direct and indirect visibility
  - Safety as a consequence of operating equipment and controls
    this includes optimising the ease of operation of all equipment, including that of the body.
- Passive safety = avoidance and reduction of the consequences of accidents. This includes:
  - Exterior safety
    such as the design of the outside of the vehicle and body with respect to deformation behaviour and the installation of protective devices
  - Interior safety
    including the protection of occupants of vehicles and cabs that are installed by the body builders.

Climatic and environmental conditions have effects on:

- Operational safety
- Readiness for use
- Operational performance
- Service life
- Cost-effectiveness.

Climatic and environmental conditions are, for example:

- The effects of temperature
- Humidity
- Aggressive substances
- Sand and dust
- Radiation.

Sufficient space for all parts required to carry out a movement, including all pipes and cables, must be guaranteed.

cardiagn.com

The operating instructions for MAN trucks provide information about the maintenance points on the vehicle. Regardless of what type of body is fitted, good access to the maintenance points must be ensured in all cases. It must be possible to carry out maintenance unhindered and without having to remove any components. Sufficient ventilation and/or cooling of the components is to be guaranteed.

3.9.2 Manuals for MAN trucks

Each MAN truck has:

- Operating instructions
- Inserts that form part of the operating instructions
- Maintenance recommendations
- Maintenance booklet
- Maintenance instructions (available for a fee from the spare parts department).

Operating instructions

provide the driver and vehicle owner with all they need to know about how vehicles are operated and maintained in a ready-to-use condition. Important safety instructions for the driver/vehicle owner are also included.

Inserts

provide technical data on a specific type of vehicle or several similar types of vehicle, thus supplementing the operating instructions. Inserts are also published for new technical features and modifications to specific vehicles if the operating instructions themselves are not being revised.

Maintenance recommendations

are published in the same format as the operating instructions, i.e. DIN A5. They describe the maintenance systems and list specifications for the various operating fluids, fill quantities for various components and list approved operating fluids.
They are a supplement to every operating and maintenance manual. The „Maintenance recommendations“ brochure is published every 6 – 12 months.

Maintenance instructions

indicate the scope of the maintenance to be carried out, provide the technical data that is required for maintenance and describe the individual jobs in detail.
Both operating instructions and maintenance instructions are compiled for „vehicle families“. This means for example, that the „F2000 forward-control heavy-duty range“ operating instructions will include all the heavy-duty forward-control vehicles, regardless of which and how many axles it has or which engine is fitted. In exceptional cases for major customers, model-specific operating and maintenance instructions may be compiled.

Maintenance booklet

provides information about the necessary maintenance services and contains boxes that are filled in as evidence that maintenance work has been carried out properly and on time.

cardiagn.com

3.9.3 Manuals from body and conversion companies

In the event of a body being added or modifications to the vehicle being carried out, the operator of the vehicle is also entitled to operating instructions from the conversion company. All specific advantages offered by the product are of no use if the customer is not able to:

- Handle the product safely and properly
- Use it rationally and effortlessly
- Maintain it properly
- Master all of its functions.

As a result, every vehicle body builder and converter must check his technical instructions for:

- Clarity
- Completeness
- Accuracy
- Product-specific safety instructions and
- To check that they can be correctly understood.

Inadequate or incomplete operating instructions carry considerable risks for the user. Possible effects are:

- Reduced benefit, because the advantages of the product remain unknown
- Complaints and annoyance
- Faults and damage, which are normally blamed on the chassis
- Unexpected and unnecessary additional cost through repairs and time lost
- A negative image and thereby less inclination to buy the same product or brand again.

Depending on the vehicle body or modification, the operating personnel must be instructed about operation and maintenance. Such instruction must also include the possible effects on the static and dynamic performance of the vehicle.

3.10 Limitation of liability for accessories/spare parts

Accessories and spare parts that MAN has not manufactured or approved for use in its products may affect the traffic safety and operational safety of the vehicle and create hazardous situations. MAN Nutzfahrzeuge Aktiengesellschaft (or the seller) accepts no liability for claims of any kind resulting from a combination of the vehicle together with an accessory that was made by another manufacturer, regardless of whether MAN Nutzfahrzeuge Aktiengesellschaft (or the seller) has sold the accessory itself or fitted it to the vehicle (or the subject of the contract).

3.11 Special-case approvals

Upon written application, MAN may approve exceptions to existing technical regulations, provided that such exceptions are in agreement with functional safety, traffic safety and operational safety. These actions refer to, for example:

- Permissible axle loads
- Permissible gross weight
- Modifications to
  - installed parts
  - retrofit installation of equipment
  - changes to dimensions.

cardiagn.com

A special case approval granted by MAN is not binding on the responsible authorities. MAN has no influence on the issuing of special case approvals by the respective authorities. If the measure in question is intended for use outside the area covered by the StVZO, then a special case approval must be obtained in advance from the respective provincial government department.

Each special case approval must be examined and approved by an officially recognised expert and must be entered into the vehicle documentation by the responsible approval agency. If a parts inspection has been issued in accordance with § 19/3 StVZO (Road Traffic Licensing Regulations), then confirmation of the part's correct installation by an officially recognised examiner will suffice.

The most common reasons for requesting special case approval are:

- A change of tyre type (see 3.12)
- An increase in the permissible trailer load (see 3.13)
- An increase in the permissible front axle load (see 3.14)
- An increase in the permissible gross weight (see 3.15).

3.12 Change of tyre type

The tyre load rating influences the permissible axle load. If the load rating is less than the truck's technically or legally permissible axle load, then the permissible axle load reduces accordingly. However, the permissible axle load does not increase if tyres with a higher load rating than the standard permissible axle load are fitted. The marks located on the tyres and the manufacturer's tyre manuals will provide technical tyre data. The following points must therefore be observed:

- Load index (rating)
  - for single tyres
  - for twin tyres
- Speed code
- Tyre pressure
- Vehicle's maximum design speed.

The size of the tyre and rim must match. Assignment of a tyre to:

- A specific rim must be approved by the tyre and rim manufacturers, whilst assignment of a tyre to
- A specific vehicle must be approved by MAN.

A written approval from MAN is required only if the tyres intended for use are not listed in the vehicle documents.

Changing the tyres will affect:

- Driving properties
  - road speed
  - pulling power
  - gradeability
  - braking
  - fuel consumption
- Vehicle dimensions
  - height above ground
  - tyre compression
  - steer angle
  - turning circle
  - clearance circle
  - tyre clearance
- Handling properties.

cardiagn.com

The reference speed of a tyre must not be exceeded or may only be exceeded if the load rating is reduced. In the case of reference speed, it is not the permissible maximum speed of the vehicle that is critical but the maximum design speed.
The maximum design speed is the maximum speed achievable at a particular engine speed and overall gear ratio or the maximum speed achievable because of the speed limiter.

There are tyres that should not exceed the specified maximum design speed, regardless of their load rating or the respective loading.

Some vehicles, such as fire service vehicles and airport tanker vehicles, can have a higher load rating on account of their special conditions of use (see tyre and rim manufacturers' documents).

On all-wheel drive vehicles, different tyre sizes on the front and rear axle(s) are only possible if the circumferences of the tyres used do not differ by more than 2%. The instructions in the „Bodies" chapter in respect of snow chains, load ratings and clearances must be observed.

If different tyre sizes are fitted to the front and rear axle(s), the basic headlamp settings must be checked and adjusted if necessary. This must be done directly at the headlamps even if the vehicles are fitted with a headlamp range adjustment facility (see also the „Lighting installation" section in the „Electrics, wiring" chapter).

Vehicles fitted with maximum speed limiters or ABS and ASR must have these devices reprogrammed after the tyres have been changed. This can only be carried out with the MAN-CATS diagnostics system. The following information must be provided for MAN to confirm a tyre change:

- MAN vehicle model
- Vehicle identification number (see 2.2)
- Vehicle number (see 2.2)
- Whether the vehicle's tyres will be changed:
  - on the front axle(s) only
  - on the rear axle(s) only
  - on all wheels
- Required tyre size:
  - front
  - rear
- Required rim size:
  - front
  - rear
- Required permissible axle load:
  - front
  - rear
- Required permissible gross weight
- Current permissible loads
- Permissible front axle load
- Permissible rear axle load
- Permissible gross weight
- Current maximum design speed.

cardiagn.com

3.13 Increasing the permissible trailer load

If a higher trailer load than the standard one is required, MAN can issue a technical clearance certificate.
The maximum trailer load is limited by:

- Official regulations
- The trailer coupling fitted
- The end cross-member
- The minimum engine power
- The braking system
- The driveline design (e.g. transmission, final drive ratio, engine cooling).

Standard end cross-members for trailer couplings are normally not suitable for operation with rigid drawbar trailers/centre axle trailers. It is not possible to use the final cross-member with such trailers even if the permissible nose weight for the trailer coupling currently fitted would permit this. Nose weight and D value alone are not adequate criteria for selecting the end cross-member. To help in the selection of a suitable end cross-member the „Coupling devices“ section of the „Modifying the chassis“ chapter contains two tables that list the suitable end cross-members for particular vehicles.

If a truck is being used as a tractor unit, then in some circumstances it will have to be converted into a tractor unit.
The converted vehicle must comply with the term „tractor unit“. The relevant regulations define this term.

If MAN is required to issue a confirmation the following information must be available:

- MAN vehicle model
- Vehicle identification number or vehicle number (see 2.2)
- Permissible gross weight
- Trailer coupling to be used
- Required trailer load.

3.14 Increasing the permissible axle load

If the standard permissible axle load is not sufficient, then a higher permissible axle load may be approved for some vehicles. However, there is a precondition that the vehicle concerned should also have those components fitted that a higher front axle load necessitates, such as suitable springs, tyres and braking system.

The following information must be provided for confirmation:

- MAN vehicle model
- Vehicle identification number or vehicle number (see 2.2)
- Permissible gross weight
- Permissible front axle load
- Permissible rear axle load
- Maximum design speed
- Tyre and rim sizes for all axles
- Required permissible loads.

cardiagn.com

3.15 Increasing the permissible gross weight

A precondition for a higher permissible gross weight than standard is that the components that a higher gross weight necessitates are fitted. If the higher permissible gross weight exceeds the legally permissible one, then the law in Germany will normally only allow higher permissible weights if the loads that are to be transported cannot be separated. There is no legal entitlement to an official exemption.

Consult the ESC department at MAN to discuss the technical options for increasing the gross weight. (For address see „Publisher“ above).

A request for confirmation must include the following data:

- MAN vehicle model
- Vehicle identification number or vehicle number (see 2.2)
- Permissible gross weight
- Permissible front axle load
- Permissible rear axle road
- Maximum speed
- Current tyre size front and rear
- Current rim size front and rear

3.16 Reducing the permissible gross weight

If the permissible gross weight is reduced, then MAN does not specify any technical modifications. The respective person carrying out the work himself determines the new permissible axle loads. The respective authorities will specify whether any technical modifications are required.

3.17 Definitions, dimensions and weights

National and international regulations take precedence over technically permissible dimensions and weights if they limit the technically permissible dimensions and weights. The following data for series standard vehicles can be obtained from the tender documents and the daily updated MANTED® documents:

- Dimensions
- Weights
- Centre of gravity position for payload and body (minimum and maximum position for body).

The data contained in these documents may vary depending on what technical features the vehicle is actually fitted with upon delivery. The critical factor is the vehicle’s actual configuration and condition at the time delivery. To achieve optimum payload carrying capability the chassis must be weighed before work starts on the body. Calculations can then be made to determine the best centre of gravity position for payload and body as well as the optimum body length. As a result of manufacturing tolerances the weight of the standard chassis is allowed to vary by ± 5%, in accordance with DIN 70020. Any deviations from the standard equipment level will have a greater or lesser effect on dimensions and weights. MAN itself takes advantages of permissible tolerances. Changes in equipment may result in deviations in the dimensions and weights, particularly if different tyres are fitted that then also lead to a change in the permissible loads. Dimensional changes from the series-production status, e.g. alteration of the centre of gravity of the body, may affect the axle loads and the payload.

In each individual case when a body is fitted care needs to be taken to ensure the following:

- That the permissible axle weights are not exceeded under any circumstances (see 3.17.1)
- That a sufficient minimum front axle load is achieved (see 3.18)
- That loading and the centre of gravity position cannot be displaced to one side (see 3.17.1)
- That the permissible overhang (vehicle overhang) is not exceeded (see 3.19).

cardiagn.com

3.17.1 Axle overload, one-sided loading

Fig. 1: Overloading the front axle ESC-052

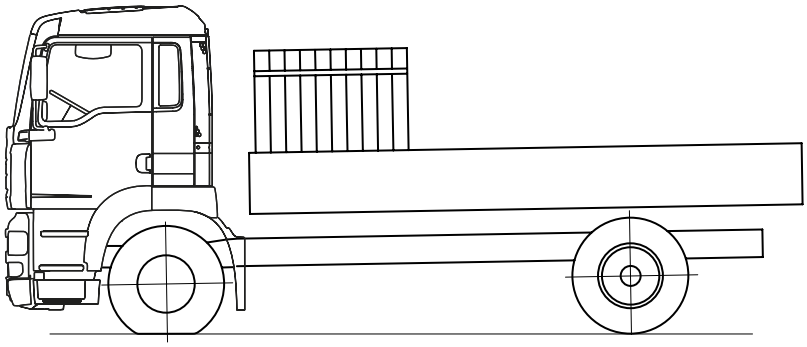

Fig. 2: One-sided loading ESC-054

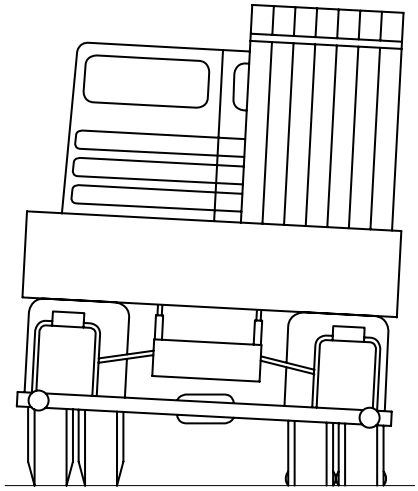

Fig. 3: Difference in wheel load ESC-126

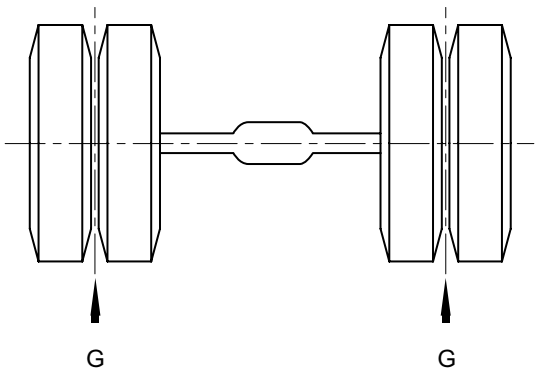

cardiagn.com

Formula 1: Difference in wheel load

$$\Delta G \leq 0{,}04 \cdot G_{tat}$$

In design of the body, one-sided wheel loads are not permitted. When verifying checks are made, a maximum wheel load difference of 4% is permitted. In this case, 100% is the actual axle load and not the permissible axle load.

Example:

Actual axle load G_{tat} = 11.000kg

Therefore, the permissible wheel load difference is:

$$\Delta G = 0{,}04 \cdot G_{tat} = 0{,}04 \cdot 11.000\text{kg}$$
$$\Delta G = 440\text{kg}$$

Therefore, wheel load on the left is 5,720kg and wheel load on the right is 5,280kg.
The calculated maximum wheel load does not give any information about the permissible individual wheel load for the tyres fitted. Information on this can be found in the technical manuals from the tyre manufacturers.

3.18 Minimum front axle load

In order to maintain steerability, the vehicle must have the stipulated minimum front axle load in all load conditions, see Table 19.

Table 19: Minimum front axle loading for any load condition, as a % of vehicle gross weight

SDAH = Rigid drawbar trailer ZAA = centre axle trailer GG = Vehicle weight							
Model range No. of axles	Wheel formula	GG [t]	With SDAH ZAA	With SDAH ZAA GG ≤ 11t	With SDAH ZAA GG ≤ 18t	Triple SDAH ZAA GG > 18t	Other rear load e.g. crane
All 2-axle vehicles	4x2, 4x4 4x2, 4x4 4x2, 4x4	≤ 10 ≤ 15 > 15	**25%** **25%** **25%**	**30%** **30%** **25%**	**35%** **30%** **25%**	**not perm.** **not perm.** **not perm.** **TGA and F2000**	**30%** **30%** **30%**
More than 2 axles	6x2, 6x4, 6x6 8x4, 8x2 8x6, 8x8	> 19	**20%**	**25%***	**25%***	**30%**	**25%**
If there are more than one front axles the % value is the sum of the front axle loads. When operating with SDAH / ZAA + additional rear loads (e.g. tail-lift, crane) the higher value applies *) = -2% for steered leading/trailing axles							

Since the values are related to the gross vehicle weight, they are inclusive of any additional rear loads such as

- Nose weights applied by a centre axle trailer
- Loading crane at rear of vehicle
- Tail-lifts
- Transportable fork-lifts.

cardiagn.com

Fig. 4: Minimum loading on the front axle ESC-051

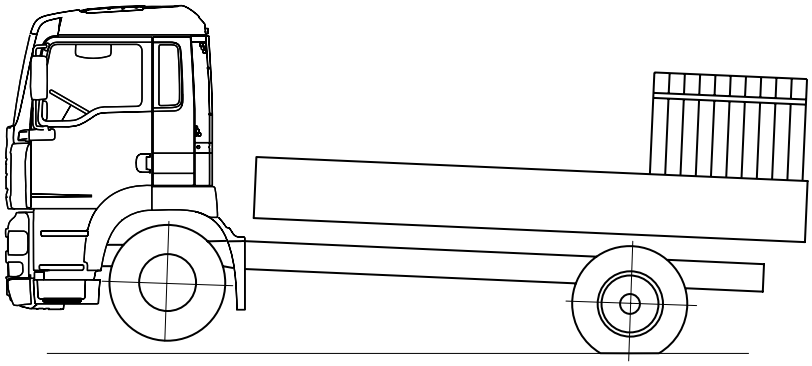

3.19 Permissible overhang

The theoretical overhang (vehicle overhang including body) is the measurement from the resulting rear axle centre (determined by the theoretical wheelbase) to the end of the vehicle. For definition, see diagrams in the following section 3.20.
The following maximum values are permitted, expressed as a percentage of the theoretical wheelbase:

- Two-axle vehicles 65%
- All other vehicles 70%.

If no equipment for pulling a trailer is fitted, the above-mentioned values can be exceeded by 5%. The basic requirement is that the minimum front axle loads stated in Table 19 in Section 3.18 must be observed for every load condition.

3.20 Theoretical wheelbase, overhang, theoretical axle centreline

The theoretical wheelbase is an aid for calculating the position of the centre of gravity and the axle loads. It is defined in the following diagrams. Warning: the effective wheelbase on turns that is used to calculate the turning circles is not in every case identical to the theoretical wheelbase that is required for calculating the weight.

Fig. 5: Theoretical wheelbase and overhang – two-axle vehicle ESC-046

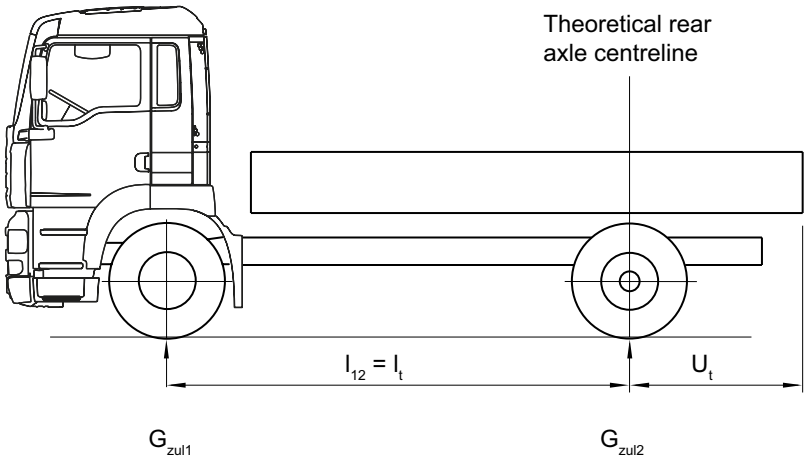

cardiagn.com

Formula 2: Theoretical wheelbase for a two-axle vehicle

$l_t = l_{12}$

Formula 3: Permissible overhang for a two-axle vehicle

$U_t \leq 0{,}65 \cdot l_t$

Fig. 6: Theoretical wheelbase and overhang for a three-axle vehicle with two rear axles and identical rear axle loads ESC-047

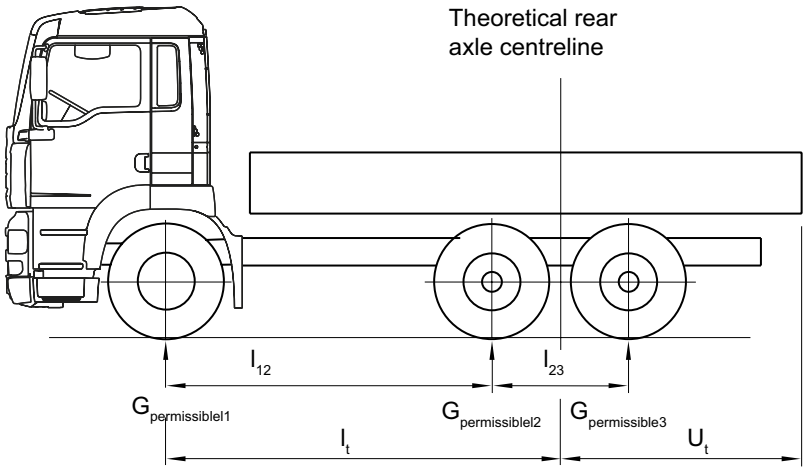

Formula 4: Theoretical wheelbase for a three-axle vehicle with two rear axles and identical rear axle loads

$l_t = l_{12} + 0{,}5 \cdot l_{23}$

Formula 5: Permissible overhang for a three-axle vehicle with two rear axles and identical rear axle loads

$U_t \leq 0{,}70 \cdot l_t$

cardiagn.com

Fig. 7: Theoretical wheelbase and overhang for a three-axle vehicle with two rear axles and different rear axle loads (in the MAN vehicle range, e.g. all 6x2/2, 6x2/4 and 6/2-4) ESC-048

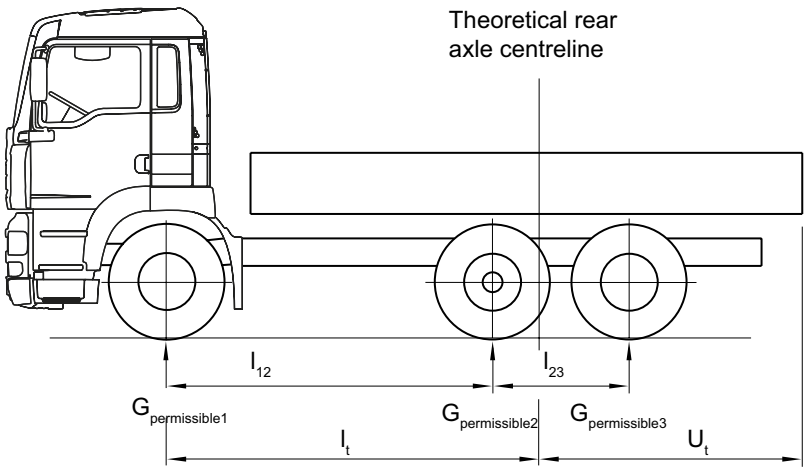

Formula 6: Theoretical wheelbase for a three-axle vehicle with two rear axles and different rear axle loads

$$l_t = l_{12} + \frac{G_{permissible3} \cdot l_{23}}{G_{permissible2} + G_{permissible3}}$$

Formula 7: Permissible overhang for a three-axle vehicle with two rear axles and different rear axle loads

$$U_t \leq = 0{,}70 \cdot l_t$$

Fig. 8: Theoretical wheelbase and overhang for a four-axle vehicle with two front and two rear axles (any load axle distribution) ESC-050

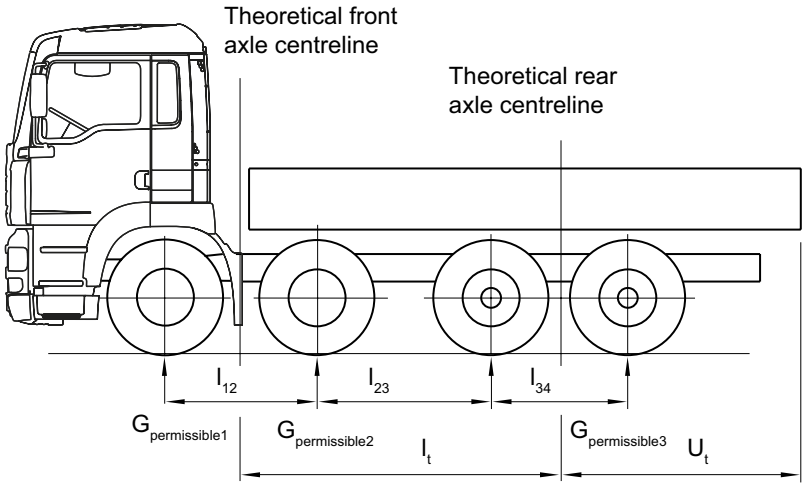

cardiagn.com

Formula 8: Theoretical wheelbase and overhang for a four-axle vehicle with two front and two rear axles (any load axle distribution)

$$l_t = l_{23} + \frac{G_{permissible1} \cdot l_{12}}{G_{permissible1} + G_{permissible2}} + \frac{G_{permissible4} \cdot l_{34}}{G_{permissible3} + G_{permissible4}}$$

Formula 9: Zulässige Überhanglänge Vierachser mit zwei Vorder- und zwei Hinterachsen

$$U_t \leq 0{,}70 \cdot l_t$$

3.21 Permissible overhang for a four-axle vehicle with two front and two rear axles

Calculation of the axle load is essential to achieve the correct body design. Optimum matching of the body to the truck is only possible if the vehicle is weighed before any work on the body is commenced. The weights obtained from this can then be used in an axle load calculation. The weights given in the sales documents are only for vehicles with standard equipment. Build tolerances can occur, see point 3.17 in the section “Definitions, dimensions and weights”.

The vehicle must be weighed:

- Without the driver
- With a full fuel tank
- With the handbrake released and the vehicle secured with chocks
- If fitted with air suspension, raise the vehicle to normal driving position
- Lower any liftable axles
- Do not actuate any moving-off aid.

When weighing, observe the following sequences:

- Two-axle vehicles
  - 1st axle
  - 2nd axle
  - the whole vehicle as a check
- Three-axle vehicles with two rear axles
  - 1st axle
  - 2nd and 3rd axles
  - the whole vehicle as a check
- Four-axle vehicles with two front and two rear axles
  - 1st and 2nd axles
  - 3rd and 4th axles
  - the whole vehicle as a check.

3.22 Weighing vehicles with trailing axles

The weights stated in the sales documents and the MANTED® documents for vehicles with trailing axles have been calculated with the trailing axle lowered. The distribution of axle loads to the front and driven axle after the trailing axle is lifted is to be determined either by weighing or by calculation. An example of a calculation is given in the „Calculations“ section.

cardiagn.com

4. Modifying the chassis

To provide customers with the products they want, additional components sometimes need to be installed, attached or modified. For uniformity of design and ease of maintenance, we recommend that original MAN components be used whenever this is in accordance with the vehicle's design and ratings. Department VE is responsible for advising on the installation of additional components; see the „General“ chapter for further details.
To keep maintenance work as low as possible, we recommend using components that have the same maintenance intervals as the MAN chassis. If necessary, consult component manufacturers regarding the co-ordination of maintenance intervals and obtain their consent.

4.1 Safety at work

Accident prevention regulations must be observed, in particular:

- Do not breathe in any harmful gases/fumes, such as exhaust gas, harmful substances released during welding or fumes from cleaning agents and solvents; extract them from the work area using suitable equipment.
- Secure the vehicle to prevent it from rolling.
- Make safe any equipment when removing it.
- Observe the special handling regulations for vehicles with natural gas engines, see section 4.14 „Gas engines“ in this chapter.

4.2 Corrosion protection

Surface and corrosion protection affects the service life and appearance of the product. In general, the quality of the coatings on body components should be equal to that of the chassis. In order to fulfil this requirement, the MAN Works Standard M 3297 “Corrosion protection and coating systems for non-MAN bodies” is binding for bodies that are ordered by MAN. If the customer commissions the body, this standard becomes a recommendation only. Should the standard not be observed, MAN provides no guarantee for any consequences. MAN works standards can be obtained from the ESC Department (see „Publisher“ above).
Series production MAN chassis are coated with environmentally friendly, water-based 2-component chassis top-coat paints. Drying temperatures range up to approx. 80°C. To guarantee uniform coating the following coating structure is required for all metal component assemblies on the body and subframe and whenever modifications to the chassis frame have been carried out:

- Bright (SA 2.5) metallic component surface
- Primer coat: 2-component epoxy primer, approved in accordance with MAN works standard M 3162-C, or, if possible cathodic dip painting to MAN works standard M 3078-2, with zinc phosphate pre-treatment
- Top coat: 2-component top-coat paint to MAN works standard M 3094, preferably water-based; if there are no facilities for this, then solvent-based paint is also permitted. In place of primer and top coat galvanising the bodywork substructure (e.g. frame side members, cross members and corner plates) is also possible. The coating thickness must be >= 80 µm.

See the relevant data sheets from the paint manufacturer for information on tolerances for drying and curing times and temperatures. When selecting and combining different metals (e.g. aluminium and steel) the effect of the electrochemical series on the occurrence of corrosion at the boundary surfaces must be taken into consideration (insulation). The compatibility of materials must also be taken into consideration; e.g. the electrochemical series (cause of galvanic corrosion).

After all work on the chassis has been completed:

- Remove any drilling swarf
- Remove burrs from the edges
- Apply wax preservative to any cavities

Mechanical connections (e.g. bolts, nuts, washers, pins) that have not been painted over must be given optimum corrosion Protection.

To prevent salt corrosion whilst the vehicle is stationary during the body-building phase all chassis must be washed with clean water to remove any salt residues as soon as they arrive at the body manufacturer.

cardiagn.com

4.3 Storage of vehicles

If chassis are to be stored for 3 months or more they must be treated in accordance with MAN standard M3069 Part 3 'Temporary corrosion protection; commercial vehicles in interim storage'. Please contact the nearest MAN centre/authorised workshop for instructions on how to carry out this procedure correctly.

For vehicles that are to be stored follow the instructions contained in the „Handling batteries" section of chapter 6 „Electrics, wiring", depending on how long the vehicle is to be stored.

4.4 Materials and frame data

4.4.1 Materials for frames and subframes

For the purposes of achieving standardised designations in Europe, the European Committee on Standardisation (CEN) has developed new standards for steel. These include the principal general (DIN EN 10025) and fine-grain structural steels (DIN EN 10149) used in commercial vehicle construction. These replace the DIN/SEW designations used to date. The material numbers have been adopted by the European Standards Organisation and are unchanged; the short name of a material can therefore be found if the material number is known. The following steels are used for the frame/subframe:

Table 20: Steels and their short designations, according to the old and new standard

Material No.	Old material designation	Old standard	$\sigma_{0,2}$ [N/mm²]	$\sigma_{0,2}$ [N/mm²]	New material designation	New standard	Suitability for chassis frame /subframe
1.0037	St37-2*	DIN 17100	≥ 235	340-470	S235JR	DIN EN 10025	not suitable
1.0570	St52-3	DIN 17100	≥ 355	490-630	S355J2G3	DIN EN 10025	well suited
1.0971	QStE260N*	SEW 092	≥ 260	370-490	S260NC	DIN EN 10149-3	only for L2000 4x2, not for point loads
1.0974	QStE340TM	SEW 092	≥ 340	420-540	(S340MC)		not for point loads
1.0978	QStE380TM	SEW 092	≥ 380	450-590	(S380MC)		well suited
1.0980	QStE420TM	SEW 092	≥ 420	480-620	S420MC	DIN EN 10149-2	well suited
1.0984	QStE500TM	SEW 092	≥ 500	550-700	S500MC	DIN EN 10149-2	well suited

* For strength reasons, materials S235JR (St37-2) and S260NC (QStE260N) respectively are not suitable or only suitable to a limited degree. They are therefore only permitted for subframe longitudinal and cross members that are subject only to line loads from the body. Mounted equipment with locally applied forces such as tail-lifts, cranes and cable winches always requires the use of steels with a yield point of $\sigma_{0,2}$ > 350 N/mm².

4.4.2 Frame data

Table 21 is organised such that a frame profile code can be found under the respective model number and wheelbase.
The frame profile data are then listed in Table 22 under this code.

cardiagn.com

Table 21: Allocation of frame profile codes

Tonnage	Model	Design	Wheelbase	Profile code
L2000				
8t	L20	LC	all	12
	L21	LC	except*	
	L33	LLC		
	L34	LLC		
8t	L22	LAC, LAEC	all	
	L23	LAC, LAEC		21
9t	L20	LC, LK		
	L21	LC, LK		
	L33	LLC, LLS	all	13
	L34	LLC, LLS		
10t	L24	LC, LK		
	L25	LC, LK	all	
	L35	LLC, LLS		13
	L36	LLC, LLS		
10t	L26	LAC, LAEC		
	L27	LAC, LAEC	all	21
* Models L20, L21, L33, L34 have profile code 13 if: suffix = LLS (semitrailer) or suffix = LK-LV (preparation for loading crane in front of load platform) or wheelbase = 3000 or wheelbase ≥ 4.600				
M2000L				
12t	L70	LC, LK	all	5
	L71	LC, LK		
	L72	LLC, LLK		
	L73	LLC, LLK		
14t	L74	LC, LK		
	L75	LC, LK	< 4.500	5
	L76	LLC, LLK	≥ 4.500	19
	L77	LLC, LLK		
	L79	LLLC		
14t	L80	LAC, LAK	all	19
15t	L81	LC, LK		
	L82	LC, LK	< 4.500	5
	L83	LLC, LLK	≥ 4.500	19
	L84	LLC, LLK		
	L86	LLLC		
	L87	LC, LK		
18t	L88	LLC, LLK	< 5.500	27
	L89	LLLC	≥ 5.500	28
18t	L90	LAC, LAK	all	26
20t	L84	LNLC	3.675+1.350	5
	L86	LNLLC	> 3.675+1.350	19
26t	L95	DLC		27

cardiagn.com

Table 21: Allocation of frame profile codes

Tonnage	Model	Design	Wheelbase	Profile code
M2000M				
14t	M31 M32 M32 M33 M34	MC, MK MLC MLS MLLC MAC, MAK		19 19 27 19 19
18t 18t	M38 M39 M40 M41	MC, MK MLC, MLS MLLC MAC, MAK	< 5.750 ≥ 5.750 all	27 28 26
25t	M42 M43 M44	MNLC MNLLC MVLC	all	28
F2000				
19t 19t	T01 T02 T03 T04 T31 T32 T33 T34 T62 T20 T50	F FL FLL FA F FL FLL FA FL FLL FLL	≤ 4.800 > 4.800 all	23 22 23
23t 6x2	T05 T35	FNLL FNLL	all	23
26t 6x2 26t 6x4	T06 T07 T08 T36 T37 T38 T09 T10 T39 T40 T70	FNL FNLL FVL FNL FNLL FVL DF DFL DF DFL DFL	all (if required,depending on chassis) all	22 23 23
27/33t 6x4 6x6	T12 T18 T42 T48 T72 T78	DFA DF DFA DF DFA DF	all except DFC: ≥ 3.825+1.400 DFAC: ≥ 4.025+1.400	23 24 24
40t 6x4 / 6x6	T43 T44	DF DFA	all	24 24
32/35/41t 8x4	T15 T16 T45 T46	VF VF VF VF	all except VF-TM VF/N-HK	22 23 23

cardiagn.com

Table 21: Allocation of frame profile codes

Tonnage	Model	Design	Wheelbase	Profile code
E2000				
19t 4x2 19t 4x4	E51 E61 E52 E62	FLK/M, FLS/M FALS, FALK	all all	23 22
26t 6x2/4 6x2-4 6x4-4 6x4/4 6x4/2 6x6/2	E42 E53 E63 E56 E66 E40	FVLC FNLC FAVLC, FAVLK DFARC, DFRS DFRLS	all all all all	24 22 22 23
28t 6x4-4 6x6-4	E47 E67	FANLC FNALC	all	29
30/33t 6x4, 6x6	E50 E60	FNALC DFALC		
32 t 8x2/4 8x2/6 8x4/4	E55 E65	VFNLC VFLC	≤ 2.600 > 2.600	23 22
33t 6x2/2 6x4/2 33t 6x6-4	E59 E69 E99 E72	DF DFL DFAP	 all all	 24 29
32t / 35t	E73	FVNL	all	22
35t	E88	VFL	all	22
35t / 41t 50t	E58 E68	VF VFA	35t / 41t 50t	22 29
41t	E75 E95	DFVS DFVLS	all	29
42t	E74 E78	VFP VFAP	all	29
50t	E77 E79	VFVP VFAVP	all	29

cardiagn.com

Fig. 9: Explanation of profile data ESC-128

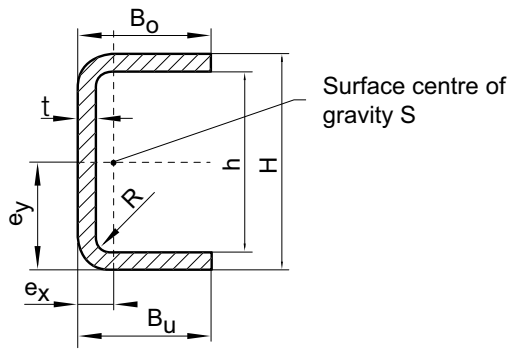

Note:

1) Upper and lower flanges 13 mm thick
2) Outer radius 10mm

Table 22: Profile data for longitudinal frame members

No	H [mm]	h [mm]	B_o [mm]	B_u [mm]	t [mm]	R [mm]	G [kg/m]	$\sigma_{0,2}$ [N/mm²]	σ_B [N/mm²]	A [mm²]	e_x [mm]	e_y [mm]	I_x [cm⁴]	W_{x1} [cm³]	W_{x2} [cm³]	I_y [cm⁴]	W_{y1} [cm³]	W_{y2} [cm³]
1	220	208	80	85	6	10	17	420	480…620	2.171	21	110	1.503	138	135	135	64	21
2	222	208	80	80	7	10	20	420	480…620	2.495	20	111	1.722	155	155	142	71	24
3	222	208	75	75	7	10	19	420	480…620	2.425	18	111	1.641	148	148	118	66	21
4	224	208	75	75	8	10	22	420	480…620	2.768	19	112	1.883	168	168	133	70	24
5	220	208	70	70	6	10	16	420	480…620	2.021	16	110	1.332	121	121	85	53	16
6	322	306	80	80	8	10	29	420	480…620	3.632	17	161	4.821	299	299	176	104	28
7	262	246	78	78	8	10	24	420	480…620	3.120	18	131	2.845	217	217	155	86	26
8	260	246	78	78	7[1)]	10	21	420	480…620	2.733	18	130	2.481	191	191	138	77	23
9	224	208	80	80	8	10	22	420	480…620	2.848	20	112	1.976	176	176	160	80	27
10	262	246	80	80	8	10	25	420	480…620	3.152	19	131	2.896	221	221	167	88	27
11	273	247	85	85	7[1)]	6[2)]	31	355	510	3.836	26	136	4.463	327	327	278	108	47
12	209	200	65	65	4,5	8	11	260	420	1.445	15	105	868	83	83	52	35	10
13	210	200	65	65	5	8	13	260	420	1.605	15	105	967	92	92	58	39	12
14	220	208	70	80	6	10	16	420	480…620	2.081	18	107	1.399	124	124	105	58	17
15	222	208	70	80	7	10	19	420	480…620	2.425	18	108	1.638	144	144	120	67	19
16	234	220	65	65	7	8	19	420	480…620	2.381	15	117	1.701	145	145	80	53	16
17	220	208	75	75	6	10	16	420	480…620	2.081	18	110	1.400	127	127	103	57	18
18	218	208	70	70	5	10	13	420	480…620	1.686	16	109	1.105	101	101	72	45	13
19	222	208	70	70	7	10	18	420	480…620	2.355	17	111	1.560	141	141	97	57	18
20	260	246	70	70	7	10	21	420	480…620	2.621	15	130	2.302	177	177	101	67	18
21	210	200	65	65	5	8	13	420	480…620	1.605	15	105	967	92	92	58	39	12
22	330	314	80	80	8	10	29	420	480…620	3.696	17	165	5.125	311	311	177	104	28
23	270	254	80	80	8	10	25	420	480…620	3.216	18	135	3.118	231	231	168	93	27
24	274	254	80	80	10	10	31	420	480…620	4.011	19	137	3.919	286	286	204	107	33
25	266	254	80	80	6	10	19	420	480…620	2.417	18	133	2.325	175	175	130	72	21
26	224	208	70	70	8	10	21	420	480…620	2.688	17	112	1.789	160	160	109	64	21
27	268	254	70	70	7	10	21	420	480…620	2.677	15	134	2.482	185	185	102	68	19

cardiagn.com

Table 22: Profile data for longitudinal frame members

No	H [mm]	h [mm]	B_o [mm]	B_u [mm]	t [mm]	R [mm]	G [kg/m]	$\sigma_{0,2}$ [N/mm²]	σ_B [N/mm²]	A [mm²]	e_x [mm]	e_y [mm]	I_x [cm⁴]	W_{x1} [cm³]	W_{x2} [cm³]	I_y [cm⁴]	W_{y1} [cm³]	W_{y2} [cm³]
28	270	254	70	70	8	10	24	420	480…620	3.056	17	135	2843	211	211	114	76	21
29	334	314	80	80	10	10	36	420	480…620	4.611	16	167	6.429	385	385	215	126	34
30	328	314	80	80	7	10	25	420	480…620	3.237	16	164	4.476	273	273	158	99	25
31	270	254	85	85	8	10	26	500	550…700	3.296	20	135	3.255	241	241	201	101	31
32	270	251	85	85	9,5	10	30	500	550…700	3.879	21	135	3.779	280	280	232	110	36
33	334	314	85	85	10	10	37	420	480…620	4.711	19	167	6.691	401	401	257	135	39
34	270	256	85	85	6,8	10	22	500	550…700	2.821	19	135	2.816	209	209	174	92	26
35	220	212	70	70	4	10	11	420	480…620	1.367	16	110	921	84	84	59	37	11
36	220	211	70	70	4,5	10	12	420	480…620	1.532	16	110	1.026	93	93	65	41	12
37	220	206	70	70	7	10	18	420	480…620	2.341	17	110	1.526	139	139	97	57	18
38	220	204	70	70	8	10	21	420	480…620	2.656	17	110	1.712	156	156	108	64	20
39	270	256	70	70	7	10	21	420	480…620	2.691	15	135	2.528	187	187	102	68	19
40	270	256	70	70	7	10	21	500	550…700	2.691	15	135	2.528	187	187	102	68	19
41	270	254	70	70	8	10	24	420	480...620	3.056	15	135	2.843	211	211	114	76	21

4.5 Modifying the frame

4.5.1 Drill holes, riveted joints and screw connections on the frame

If possible, use the holes already drilled in the frame. No drilling should be carried out in the flanges of the frame longitudinal member profiles, i.e. in the upper and lower flanges (see Fig. 11). The only exception to this is at the rear end of the frame, outside the area of all the parts fitted to the frame that have a load-bearing function for the rearmost axle (see Fig. 12).
This also applies to the subframe.

It is possible to drill holes along the entire usable length of the frame (see Fig. 13). However, the permissible distances between holes must be adhered to as illustrated in Fig. 14.

After drilling, rub down all holes and remove any burrs.

Several frame components and add-on components (e.g. corner plates with cross member, shear plates, platform corner pieces) are riveted to the frame during production. If modification to these components is required at a later time then bolted connections with a minimum strength class of 10.9 and mechanical keeper are permitted. MAN recommends double nip countersunk bolts/nuts.
The manufacturer's stipulated tightening torque must be adhered to.

Several frame components and add-on components (e.g. corner plates with cross member, shear plates, platform corner pieces) are riveted to the frame during production. If modifications to these components need to be carried out afterwards, screw connections with a minimum strength class of 10.9 and mechanical locking device are permitted. MAN recommends double nip countersunk bolts/nuts. The manufacturer's stipulated tightening torque must be observed. If double nip countersunk bolts are reinstalled then new bolts/nuts must be used on the tightening side. The tightening side can be recognised by slight marks on the bolt's nips or nut flange (see Fig. 10).

cardiagn.com

Fig. 10: Marks on the bolt's nips on the tightening side ESC-216

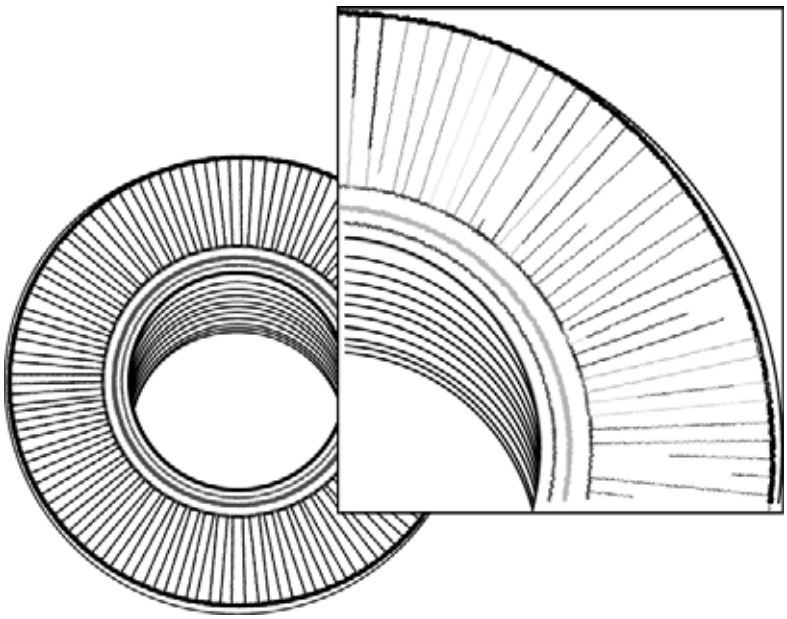

Alternatively, it is possible to use high-strength rivets (e.g. Huck®-BOM, blind fasteners) – manufacturers' installation instructions must be followed. The riveted joint must be at least equivalent to the screw connection in terms of design and strength.

In principle it is also possible to use flange bolts. MAN draws your attention to the fact that such flange bolts place high requirements on installation accuracy. This applies particularly when the grip length is short.

Fig. 11: Frame drill holes in the upper and lower flange ESC-155

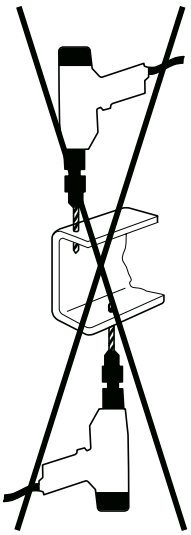

cardiagn.com

Fig. 12: Drill holes at frame end ESC-032

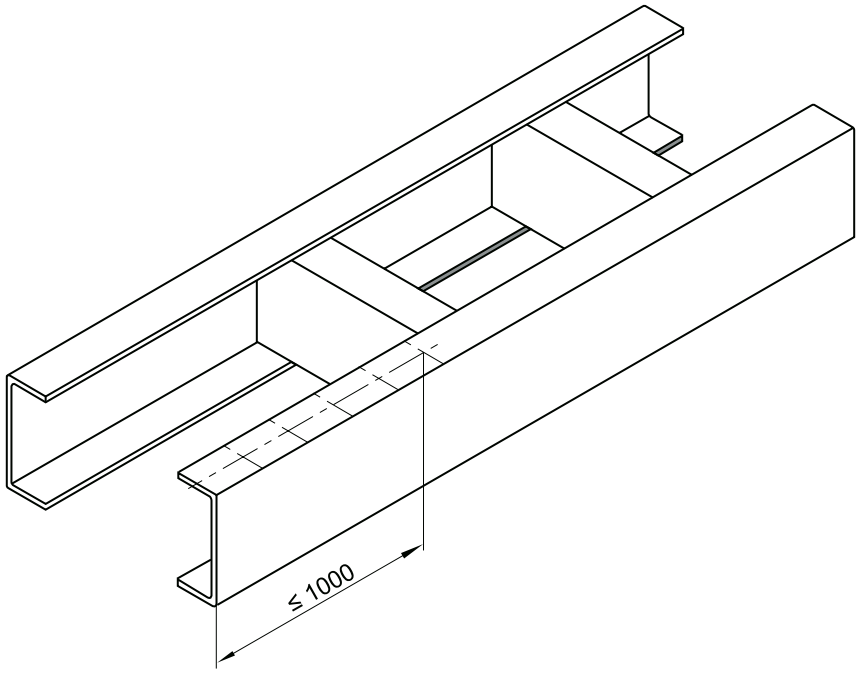

Fig. 13: Drill holes along the entire length of the frame ESC-069

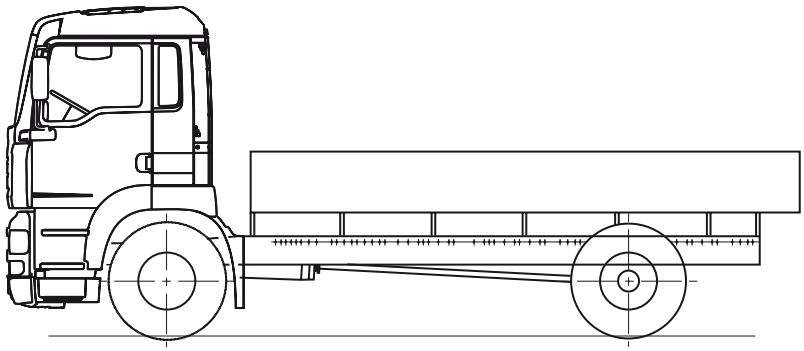

cardiagn.com

Fig. 14: Distances between drill holes ESC-021

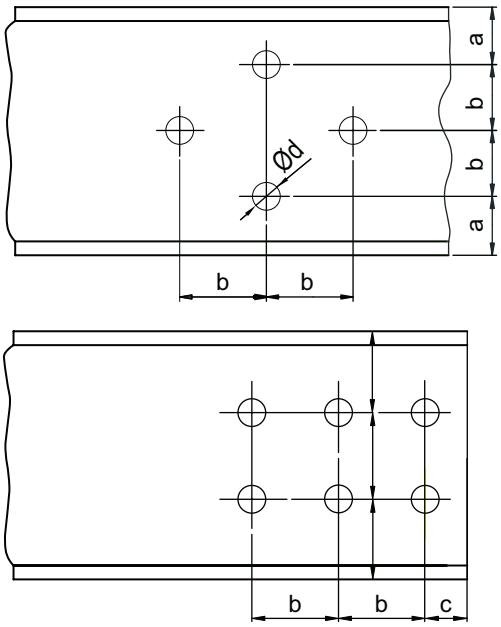

a ≥ 40
b ≥ 50
c ≥ 25

4.5.2 Cut-outs in the frame

No cut-outs may be made on the frame longitudinal and cross members (see Fig. 15).

The function of the frame cross members must not be adversely affected. Therefore cut-outs are not permitted and drill holes and openings are only permitted to a limited extent. For examples, see Figs. 16 and 17.

Under no circumstances make openings or drill holes in cross members made of tubular profile sections.

Fig. 15: Cut-outs on the frame ESC-091

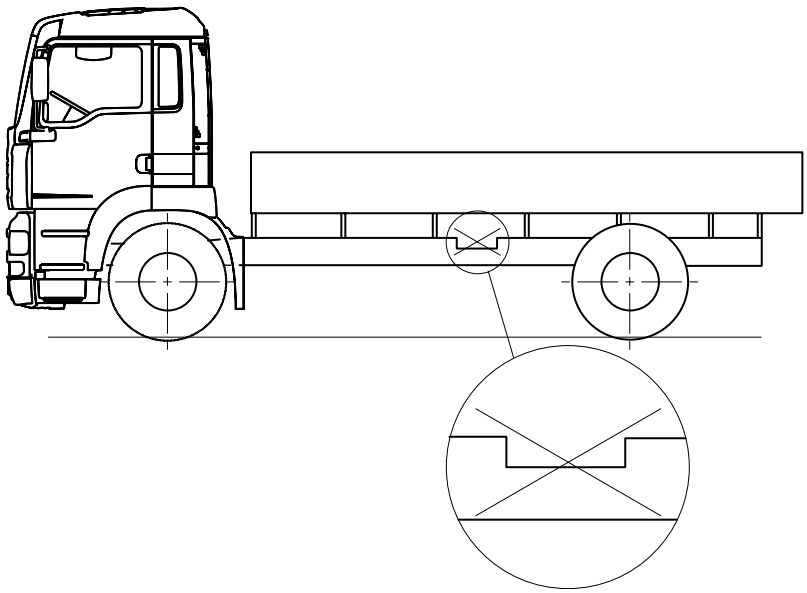

cardiagn.com

Fig. 16: Making an opening at the top of the frame cross member ESC-125
Fig. 17: Making an opening at the bottom of the frame cross member ESC-124

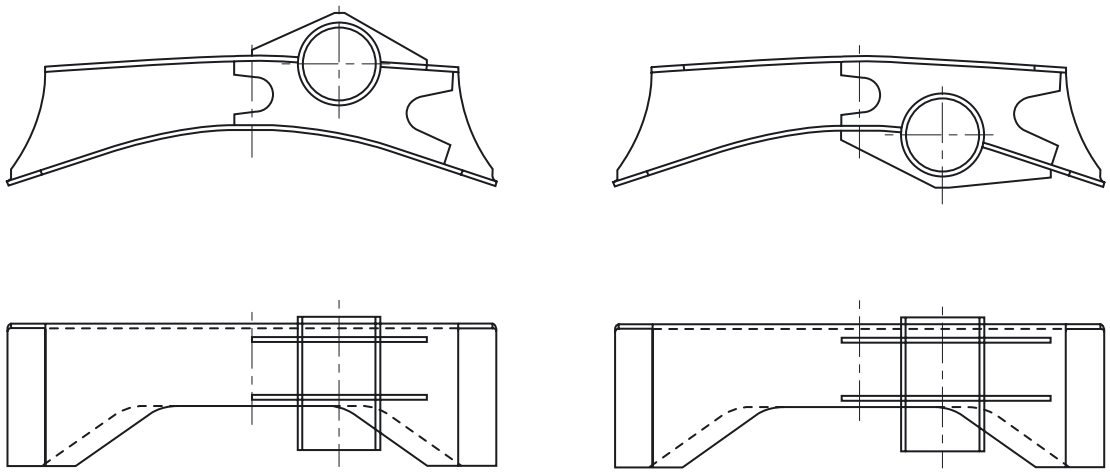

4.5.3 Schweißen am Rahmen

Welders must have specialist knowledge in chassis welding. The workshop must therefore employ suitably trained and qualified personnel to carry out the required welding work (e.g. in Germany, according to the DVS leaflets 2510 – 2512 “Carrying out repair welding work on commercial vehicles”, available from the DVS publishing house).

No welding work is permitted on the frame and axle mounting components other than that described in these guidelines or in the MAN repair instructions.
Welding work on components that are subject to design approval (e.g. coupling devices) may only be carried out by the design approval holder – normally the manufacturer or importer. The special handling instructions for vehicles with natural gas engines must be observed, see section 5.14 „Gas engines“.

The frames of MAN commercial vehicles are made from high-strength fine-grain steels. The fine-grain steels used during manufacture are well suited to welding. Performed by a qualified welder, the MAG (metal-active gas) and MMA (manual metal arc) welding methods ensure high quality, long lasting welded joints.

Recommended welding materials:

MAG	SG 3 welding wire
MMA	B 10 electrode

It is important to prepare the area of the weld thoroughly before welding so that a high-quality joint can be achieved.
Heat-sensitive parts must be protected or removed. The areas where the part to be welded joins the vehicle and the earth terminal on the welding equipment must be bare; therefore any paint, corrosion, oil, grease, dirt, etc., must be removed. Only direct current welding may be employed; note the polarity of the electrodes.

cardiagn.com

Fig. 18: Protecting heat-sensitive parts ESC-156

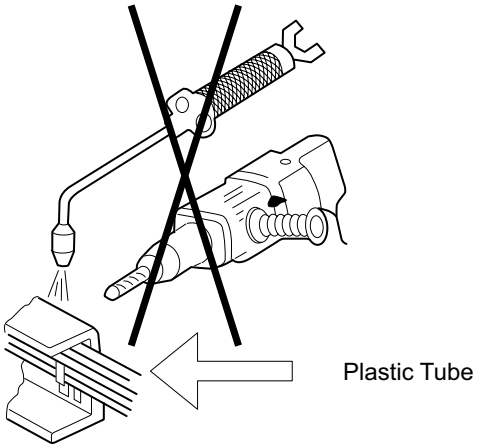

Pipes/wires (air, electric) around the area of the weld must be protected against heat. It is better to remove them completely.

Do not carry out any welding if the ambient temperature falls below +5°C.

No undercuts are to be made whilst carrying out welding work (see fillet welds, Fig. 19). Cracks in the weld seam are not permitted.
Joint seams on the longitudinal members are to be made as V or X seams in several passes (see Fig. 20).
Vertical welds should be carried out from bottom to top (see Fig. 21).

Fig. 19: Undercuts ESC-150

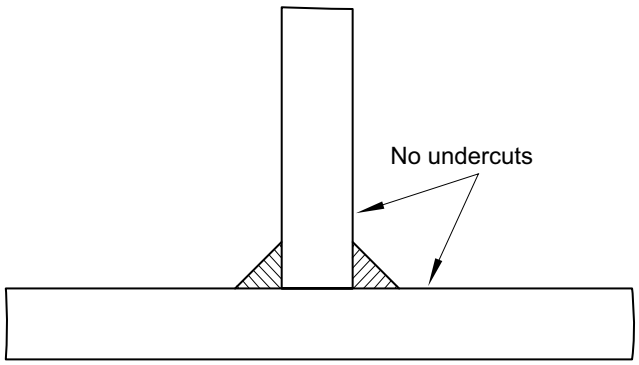

Fig. 20: Welding an X and Y seam ESC-003

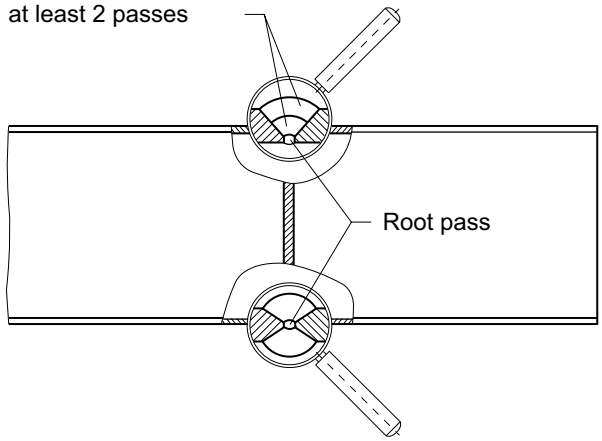

cardiagn.com

Fig. 21: Vertical welds on the frame ESC-090

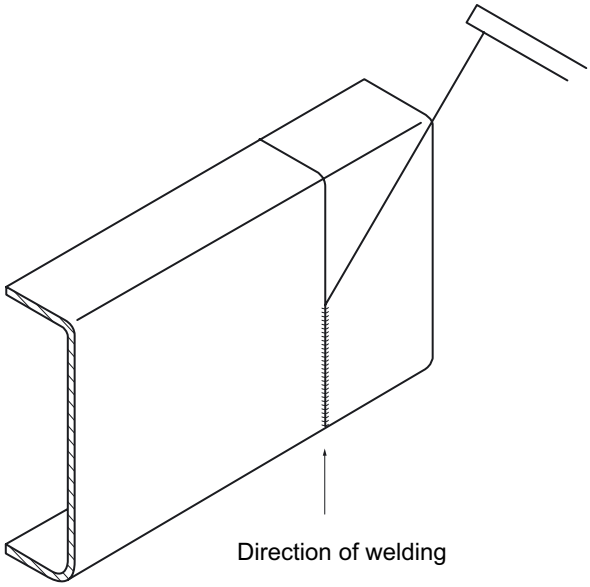

To prevent damage to electronic assemblies (e.g. alternator, radio, ABS, EDC, ECAS), adhere to the following procedure:

- Disconnect the battery positive and negative leads; join the loose ends of the cables together (- with +)
- Turn on the battery master switch (mechanical switch) or bypass the electric battery master switch on the solenoid (disconnect cables and join together)
- Attach the earth clip of the welding equipment directly to the area to be welded, ensuring there is good conductivity
- If two parts are to be welded together connect them together first, ensuring good conductivity (e.g. connect both parts to the earth clip)
- Electronic components and assemblies do not have to be disconnected if the above-mentioned requirements are followed.

4.5.4 Modifying the frame overhang

When the rear overhang is modified, the centre of gravity of the payload and the body shifts and as a result the axle loads change. Only an axle load calculation can show whether this is within the permissible range. Such a calculation is therefore essential and must be carried out before beginning the work. A specimen axle load calculation can be found in chapter 8 „Calculations“.

If the frame overhang is to be extended, the profile section to be welded on must be of a similar material quality to the original frame longitudinal members (see Tables 21 and 22). A minimum of S355J2G3 = St 52-3 (Table 20) is required.

Extending the overhang with several profile sections is not permitted. If the overhang has already been extended, the frame longitudinal member is to be removed right back to its original length. The overhang is then to be extended by the required amount by attaching a new profile section of the appropriate length (see Fig. 22).

Wiring harnesses with appropriate fittings are available from MAN for frame extensions. They can be obtained from the spare parts service. Only wiring harnesses with so-called seal connectors are permitted. Observe the instructions in the „Electrics, wiring“ chapter regarding cable routing.

cardiagn.com

Fig. 22: Extending the frame overhang ESC-093

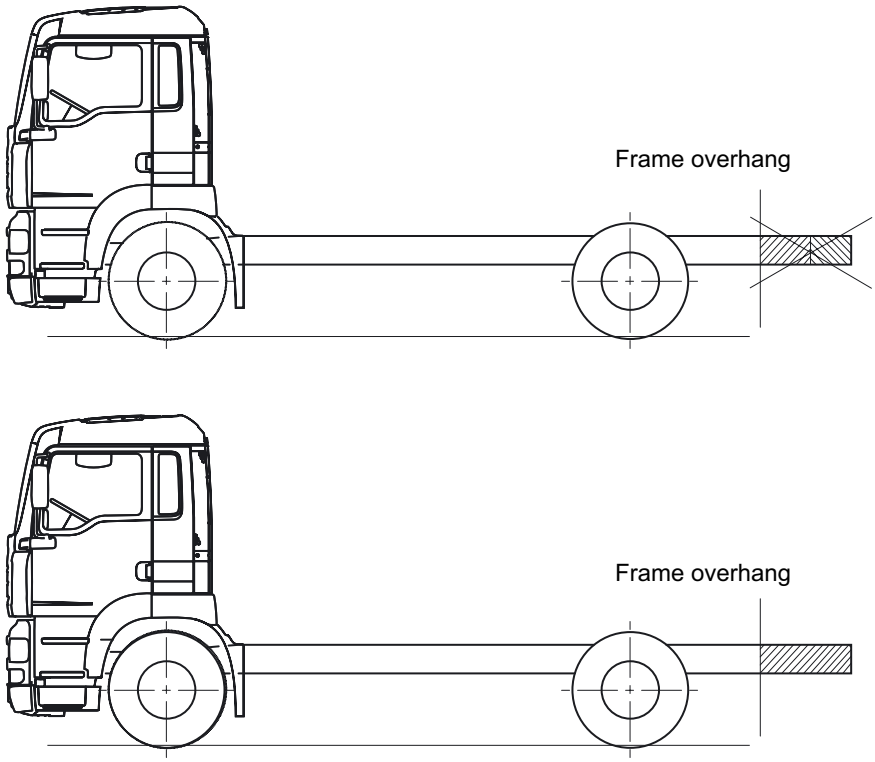

If it is intended to extend vehicles with short overhangs, the existing cross member between the rear spring hangers must be left in place.

An additional frame cross member must be fitted if the distance between the cross members is more than 1.500 mm (see Fig. 23). A tolerance of +100mm is permitted. There must always be an end cross member fitted.

Fig. 23: Max. distance between frame cross members ESC-092

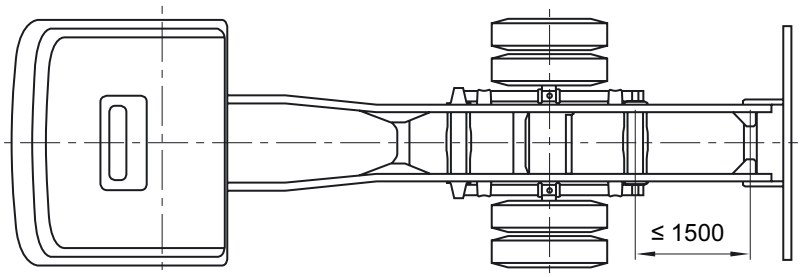

If both the frame overhang and the subframe are being extended at the same time, the weld seams or connection points must be at least 100mm apart with the subframe weld seam being located forward of the frame weld seam (see Fig. 24).

cardiagn.com

Fig. 24: Extending the frame and the subframe ESC-017

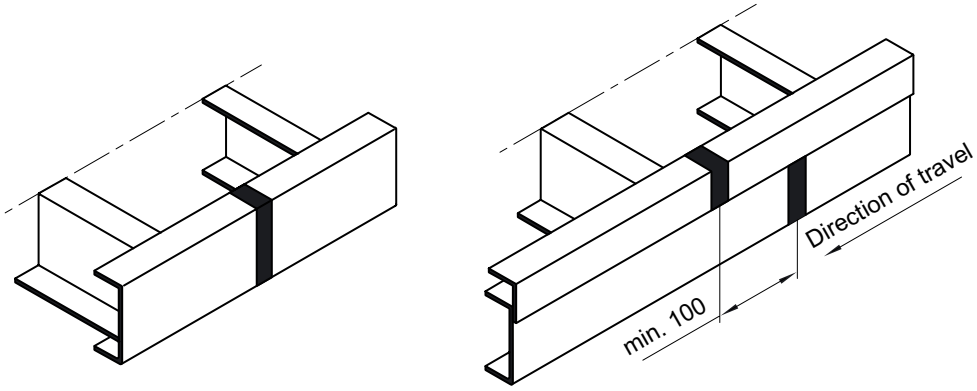

Even if a frame overhang has been extended the standard trailer load remains the same.
When the frame overhang is shortened, the largest possible technical trailer load is possible.

The rear end of the frame may be tapered as in Fig. 25 The resulting reduced cross-section of the longitudinal frame member profile must still be of sufficient strength. No tapers are allowed in the vicinity of the axle locating parts.

Fig. 25: Tapered frame end ESC-108

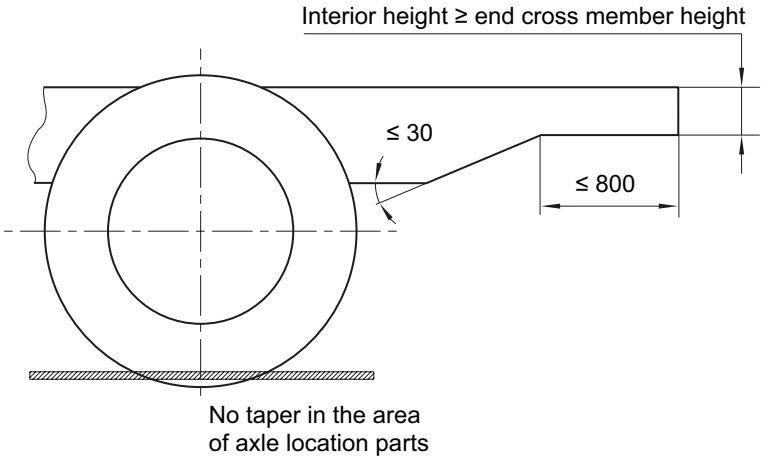

The rear ends of the chassis and body longitudinal members must be closed up with suitable coverings. Suitable coverings are, for example, metal plates or caps of rubber or suitable plastics (see e.g. §32 StVZO „Guidelines on the quality and fitting of external vehicle components“, note no. 21). This does not apply to body longitudinal members if they are set back or protected by the respective cross member or other suitable constructions.

cardiagn.com

4.6 Modifications to the wheelbase

The wheelbase influences the load on the front and rear axles and thereby the static design and the driving and braking dynamics of the vehicle. Before carrying out any modifications to the wheelbase, therefore, it is essential that an axle load calculation is carried out. A specimen axle load calculation is contained in chapter 9 „Calculations“.

Modifications to the wheelbase can be made by:

- Moving the entire rear axle assembly
- Disconnecting the longitudinal frame members and adding or removing a section of frame.

On models that have rod-type steering linkage to the trailing/leading axle (e.g. 6x2/4 M44, T08, T38, L84, L86), the steering linkages must be re-designed. MAN cannot provide assistance if the intended wheelbase is not available ex works.

On models with „ZF-Servocom® RAS“ hydraulic positive trailing-axle steering (e.g. 6x2-4 T35 T36, T37) depending upon the extent of the wheelbase modification, steering arms with different steering angles must be fitted to the 1st and 2nd axles, according to Table 23.

Table 23: Steering arms on 6x2-4 with ZF-Servocom® RAS trailing-axle steering

Wheelbase [mm] 1st - 2nd axle	Steering arm Product number	Steer angle - trailing axle
≤ 4.100	81.46705.0366	16,5
4.100 ≤ 5.000	81.46705.0367	15
> 5.000 - max. 6.000	81.46705.0368	12

If changing the wheelbase involves disconnecting the frame longitudinal members, the weld seams must be secured with angle inserts, in accordance with Fig. 26 or Fig. 27. On frames with factory-fitted inserts, the retrofitted insert is to be butt-welded to the factory-fitted insert as shown in the drawing. In this case, the weld seam for the inserts must not be in the same place as the weld seam for the frame.

The new wheelbase must remain between the minimum and maximum standard wheelbase for a comparable production vehicle (as defined by model number, see Chapter 3 „General“).

If the new wheelbase is the same as a standard wheelbase, the layout of the propshafts and the cross members must be the same as for the standard wheelbase.

If the vehicle with the comparable standard wheelbase has a stronger frame, then the frame of the vehicle with the modified wheelbase must be reinforced so that at the very least the same section modulus and planar moment of inertia can be achieved. This is done by selecting a corresponding subframe and a suitable joint between the truck frame and the subframe, e.g. a flexible or rigid connection (see „Bodies“ booklet).

The frame should not be disconnected in the area around:

- Points where loads are introduced
- Modifications to the profile section (bends in the frame – minimum distance 200mm)
- Axle locating system and suspension (e.g. spring hangers, trailing arm mountings), minimum distance 200mm
- Frame inserts (for exception, see above)
- Transmission mountings (including transfer cases on all-wheel drive vehicles).

Wiring harnesses with appropriate fittings are available from MAN for frame extensions. These make the necessary changes to the wiring layout considerably easier. See also Chapter 6 „Electrics, wiring“ for cable routing.

cardiagn.com

Fig. 26: Shortening the wheelbase ESC-012

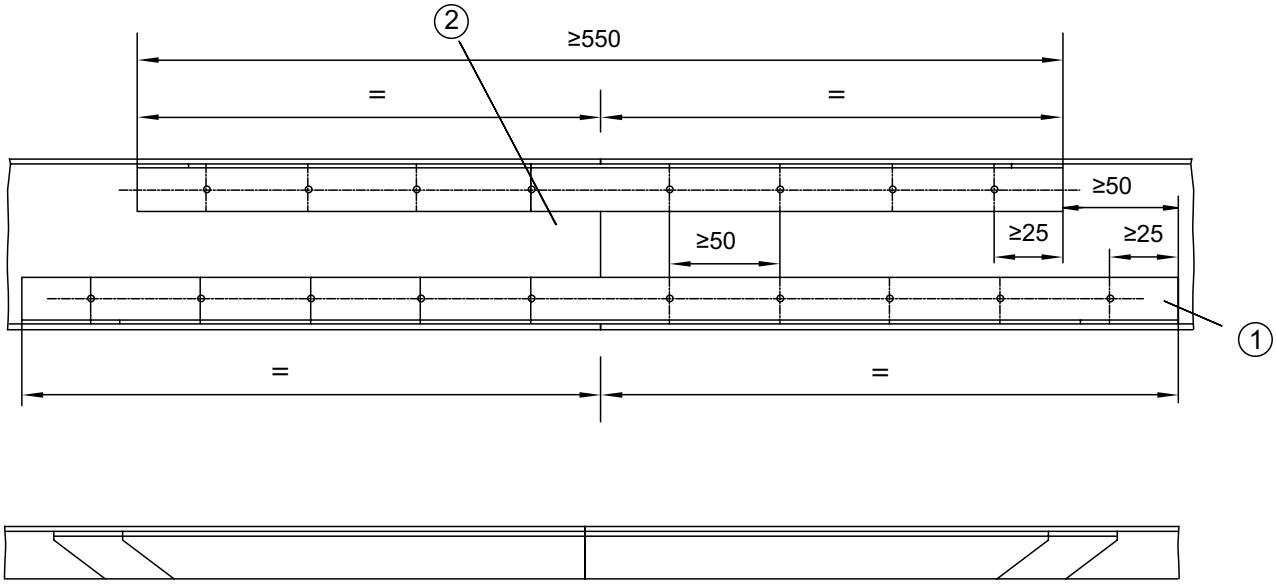

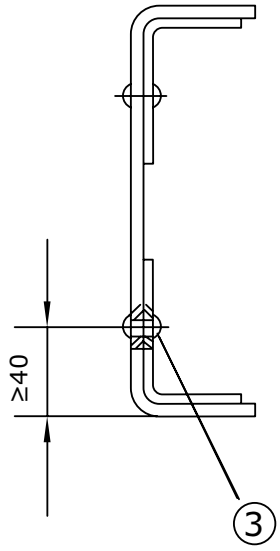

1. Use the existing drill holes in the frame in the vicinity of the angle inserts. Distance between drill holes ≥ 50, Distance between edges ≥ 25

2. Level the weld seam where parts should be in contact. Weld seam by assessment group BS, DIN 8563, part 3.

3. Use profile sections with equal flange lenghts. Width is the same as the inner width of the frame. Tolerance - 5 mm. Thickness same as frame thickness. Tolerance -1. Material min. S355J2G3 (St52-3)

cardiagn.com

Fig. 27: Extending the wheelbase ESC-013

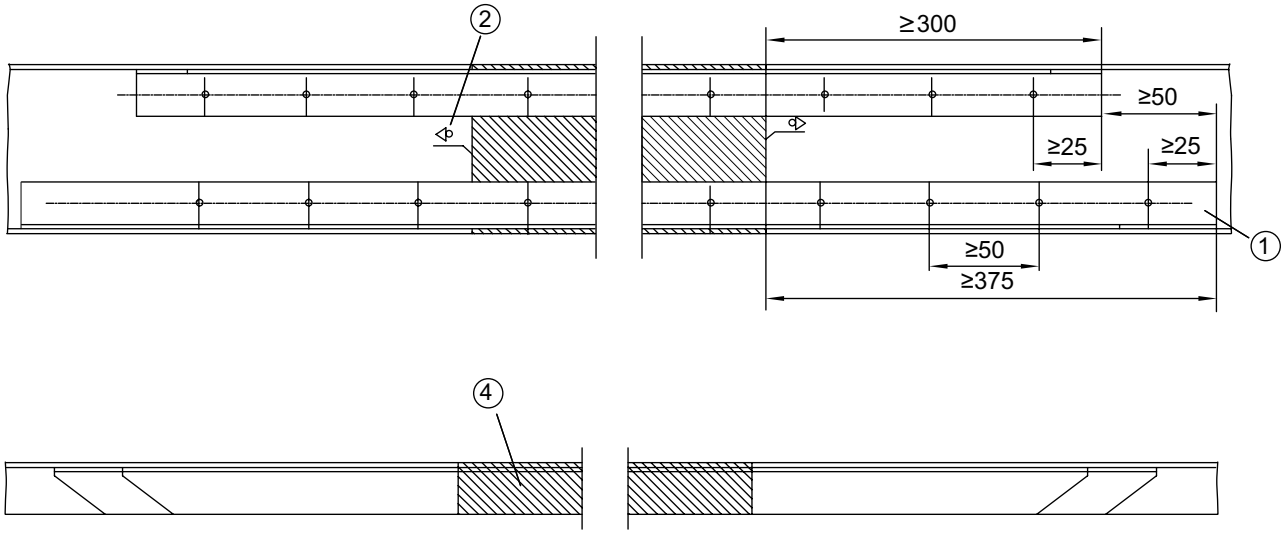

1 Use the existing frame drill holes in the area of the angle inserts.
Angle inserts must be of one piece.
Distance between drill holes ≥ 50, edge distance ≥ 25

2 Level the weld seam where parts should be in contact.
Weld seam by assesment group BS, DIN 8563, part 3.

3 Use profile sections with equal flange lengths.
Width is the same as the inner width of the frame. Tolerance -5.
Rolled sections are not permitted.
Thickness same as frame thickness. Tolerance -1. Material S355J3G3 (St52-3)

4 Extend the wheelbase using a section of the original frame longitudinal member.
Material as stated in the Guide to Fitting Bodies, frame profile list.
Observe max. distance between frame cross members as stated in the Guide to Fitting Bodies.

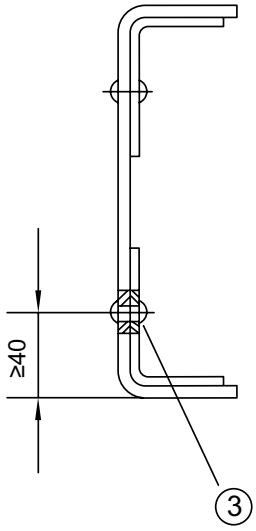

cardiagn.com

4.7 Retrofitting equipment

The manufacturer of the equipment must obtain MAN's agreement regarding its installation. MAN's approval must be made available to the workshop carrying out the work. The workshop is obliged to request MAN's approval from the equipment manufacturer. If there is no approval, then it is the responsibility of the equipment manufacturer and not the workshop carrying out the work, to obtain it.

Under no circumstances does MAN accept responsibility for the design or for the consequences of non-approved retrofitted equipment. The conditions stated in this Guide and in the approvals must be followed. Only under these conditions will MAN accept warranty for its share of the delivery. The body manufacturer is responsible for the parts that he supplies, for carrying out the work and for any possible consequences. As part of his supervision obligations, the body manufacturer is also responsible for other companies working on his behalf.

An approval procedure must include documents which contain a sufficient amount of technical data and which it is possible to inspect. Such documents include approvals, test reports and other similar documents that have been drawn up by the authorities or other institutions.

Approvals, reports and clearance certificates that have been compiled by third parties (e.g. TÜV, DEKRA, authorities, test institutes) do not automatically mean that MAN will also issue approval. MAN can refuse approval even though third parties have issued clearance certificates.

Unless otherwise agreed, approval only refers to the actual installation of the equipment. Approval does not mean that MAN has checked the entire system with regard to strength, driving performance etc., or has accepted warranty. The responsibility for this lies with the company carrying out the work, since the end product is not comparable with any MAN production vehicle.

Retrofitting of equipment may change the vehicle's technical data. The equipment manufacturer and/or the company carrying out the work is responsible for calculating and issuing this new data, e.g. for obtaining data for subframe dimensioning or the fitting of tail-lifts and loading cranes.

Adequate service and operating instructions must be provided. We recommend co-ordinating the maintenance intervals for the equipment with those for the vehicle.

4.8 Retrofitting of leading and trailing axles

The installation of additional axles and the repositioning of steerable front axles together with the removal of axles is not permitted. Such conversions will be carried out by MAN Nutzfahrzeuge AG with suppliers.

4.9 Propshafts

Jointed shafts located in areas where people walk or work must be encased or covered.

4.9.1 Single joint

When a single cardan joint, universal joint or ball joint is rotated uniformly whilst bent it results in a non-uniform movement on the output side (see Fig. 28). This non-uniformity is often referred to as cardan error. The cardan error causes sinusoidal-like fluctuations in rotational speed on the output side. The output shaft leads and trails the input shaft. The output torque of the propshaft fluctuates in line with this, despite constant input torque and input power.

cardiagn.com

Fig. 28: Single joint ESC-074

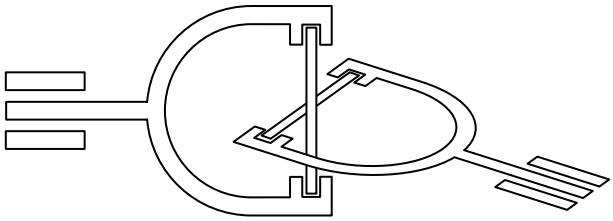

Because acceleration and deceleration occur twice during each revolution, this type of propshaft and layout cannot be permitted for attachment to a power take-off. A single joint is feasible only if it can be proven without doubt that because of the

- mass moment of inertia
- rotational speed and
- the angle of deflection

the vibrations and loads are not significant.

4.9.2 Jointed shaft with two joints

The non-uniformity of the single joint can be compensated for by combining two single joints in one propshaft.
However, full compensation of the movement can be achieved only if the following conditions are met:

- Both joints have the same working angle, i.e. $ß_1 = ß_2$
- The two inner yokes of the joint must be in the same plane
- The input and output shafts must also be in the same plane, see Figs. 29 and 30.

All three conditions must always be met simultaneously so that the cardan error can be compensated for. These conditions exist in the so-called Z and W arrangements (see Figs. 29 and 30). The common working plane that exists for Z or W arrangements may be freely rotated about the longitudinal axis.

The exception is the three-dimensional propshaft layout, see Fig. 31.

Fig. 29: W propshaft layout ESC-075

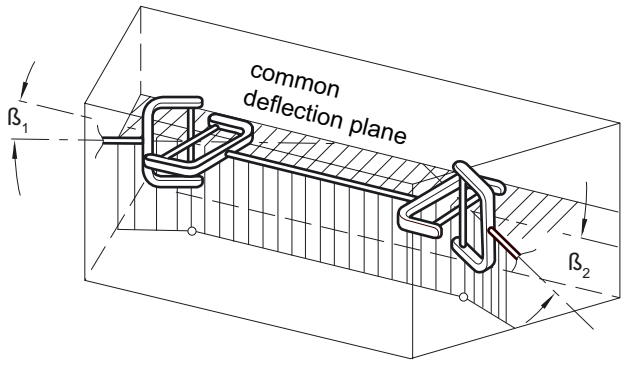

cardiagn.com

Fig. 30: Z propshaft layout ESC-076

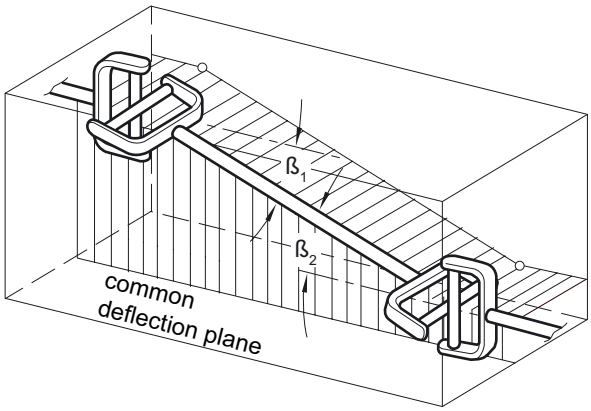

4.9.3 Three-dimensional propshaft layout

If the input and output shafts are not in the same plane the layout is three-dimensional. The centre lines of the input and output shafts are not parallel. There is no common plane and therefore, to compensate for the fluctuations in angular velocity, the inner yokes (forks) of the joint must be offset by angle „γ“ - see Fig. 31.

Fig. 31: Three-dimensional propshaft layout ESC-077

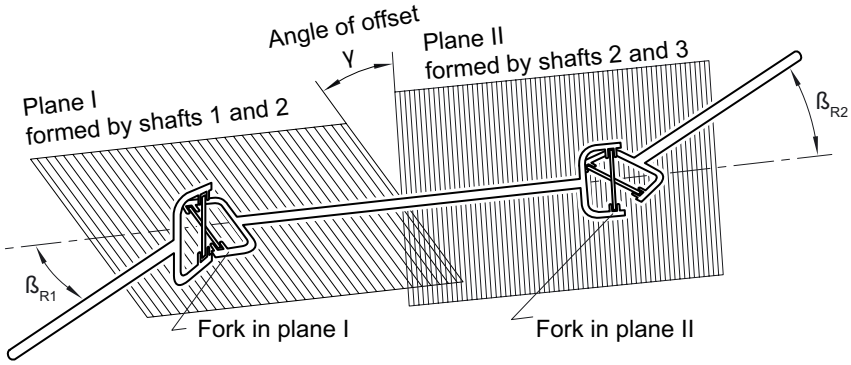

The condition that the resulting working angle $ß_{R1}$ on the input shaft must be exactly the same as the working angle $ß_{R2}$ on the output shaft still applies.

Therefore:

$$ß_{R1} = ß_{R2}.$$

Where:

$ß_{R1}$ = three-dimensional angle of shaft 1
$ß_{R2}$ = three-dimensional angle of shaft 2

Three-dimensional working angle $ß_R$ is a function of the vertical and horizontal angle of the propshafts and is calculated as:

cardiagn.com

Formula 10: Three-dimensional working angle

$$\tan^2 ß_R = \tan^2 ß_v + \tan^2 ß_h$$

The required angle of offset γ can be calculated using the joint angles in the horizontal and vertical planes as follows:

Formula 11: Angle of offset γ

$$\tan \gamma_1 = \frac{\tan ß_{h1}}{\tan ß_{\gamma 1}}; \quad \tan \gamma_2 \frac{\tan ß_{h2}}{\tan ß_{\gamma 2}}; \quad \gamma = \gamma_1 + \gamma_2$$

Where:

$ß_R$	=	Three-dimensional working angle
$ß_\gamma$	=	Vertical working angle
$ß_h$	=	Horizontal working angle
γ	=	Angle of offset.

Note:

In the case of three-dimensional offset of a propshaft with two joints only the three-dimensional working angles need to be equal.
In theory therefore, an infinite number of layout options can be achieved from the combination of the vertical and horizontal working angles.
We recommend that the manufacturers' advice be sought for determining the angle of offset of a three-dimensional propshaft layout.

4.9.3.1 Propshaft train

If the design dictates that greater lengths have to be spanned, propshaft systems comprising two or more shafts may be used.
Fig. 32 shows three basic forms of propshaft system in which the position of the joints and the drivers with respect to each other were assumed to be arbitrary. Drive dogs and joints are to be matched to each other for kinematic reasons. Propshaft manufacturers should be consulted when designing the system.

Fig. 32: Propshaft train ESC-078

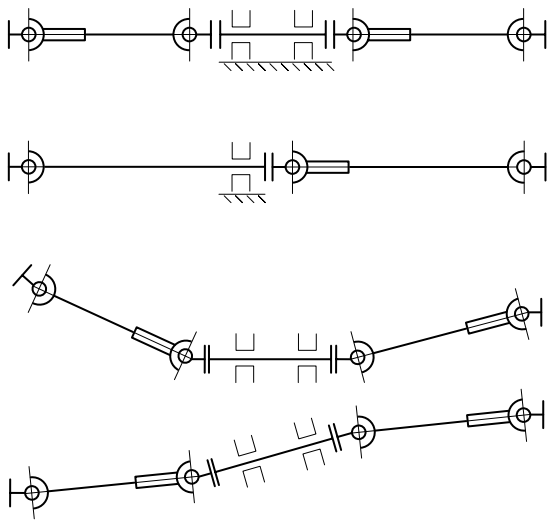

cardiagn.com

4.9.3.2 Forces in the propshaft system

The joint angles in propshaft systems inevitably introduce additional forces and moments. If a telescoping propshaft is extended or compressed whilst under load whilst under load further additional forces will be introduced.

Dismantling the propshaft, twisting the two halves of the shaft and then putting them back together again will not compensate for the imbalances, it is more likely to exacerbate the problem. Such „trial and error“ may cause damage to the propshafts, the bearings, the joint, the splined shaft profile and assemblies. It is therefore essential that the markings on the propshaft are observed.
The marks must therefore be aligned when the joints are fitted (see Fig. 33).

Fig. 33: Marking on propshaft ESC-079

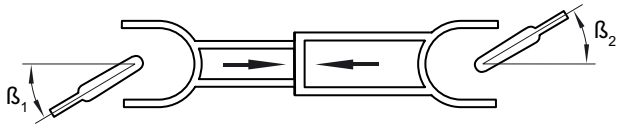

Do not remove existing balancing plates and do not confuse propshaft parts otherwise imbalances will occur again.
If one of the balancing plates is lost or propshaft parts are replaced, the propshaft should be re-balanced.

Despite careful design of a propshaft system, vibrations may occur that may cause damage if the cause is not eliminated.
Suitable measures must be used to cure the problem such as installing dampers, the use of constant velocity joints or changing the entire propshaft system and the mass ratios.

4.9.4 Modifying the propshaft layout in the driveline of MAN chassis

Body manufacturers normally modify the propshaft system when:

- Modifying the wheelbase as a retrofit operation
- Installing retarders

In such cases the following must be observed:

- The working angle of each cardan shaft in the driveline must be 7° maximum in each plane when loaded.
- If propshafts are to be extended the entire propshaft system must be re-designed by a propshaft manufacturer.
- Every propshaft must be balanced before installation.
- Any modification to the lightweight propshaft system on the L2000 4x2 range (for definition, see „General“ chapter) may be carried out only by Eugen Klein KG (www.klein-gelenkwellen.de) or its authorised representatives.
- When installing retarders, the retarder manufacturer must submit an approval from MAN. The details stated in the approval must also be adhered to by the workshops carrying out the work.

cardiagn.com

4.10 Central lubrication system

Chassis can be factory-fitted with BEKA-MAX central lubrication systems. It is possible to connect body-mounted equipment (e.g. fifth-wheel coupling, loading crane, tail-lift). However, only pump units, progressive distributors and metering valves having MAN item numbers or those supplied by BEKA-MAX may be used.

The body manufacturer is to ensure that the required quantities of lubricant are provided, depending on:

- Number of pump strokes
- Delivery quantity per stroke and
- Pause time between strokes.

However, under no circumstance should the quantity be below that required for the chassis (= basic factory setting).
Observe the BEKA-MAX instructions. These can be obtained from the MAN spare parts service (product number of German language version 81.99598.8360) or from BEKA-MAX.

4.11 Modifying the cab

4.11.1 General

Modifications to the cab must be approved by MAN, ESC Department (see „Publisher“ above).
Safety requirements have the highest priority and the safety of occupants must not be detrimentally affected under any circumstances by the modifications. Ride comfort is to be maintained.

The tilting function of tiltable cabs should not be impaired. The radius that the outline of the cab describes during the tilting process should be maintained. The tilting radii are shown in the chassis drawings. Chassis drawings can be obtained from our MANTED® on-line system (www.manted.de) or by fax order from the ESC Department (see „Publisher“ above).

4.11.2 Extending the cab

For compact and short-haul cabs, half-cabs can be supplied, with or without windscreen.

The cab components, as delivered, would then comprise:

- Floor assembly
- Front panel with windscreen
- Sidewalls with doors
- Rear corner pillars
- Lower section of the rear wall with cab locking mechanism
- Fittings, compartments in the lower area, seats and seatbelts
- Cab suspension and tilting mechanism as for the standard cab.

The following are also available ex-works:

- Fuel tank for crew cab
- Provisional battery mounting for delivery including battery cable extension
- Package of additional parts for crew cab (with same locks as half cab and door handles and window lifters using MAN parts).

cardiagn.com

The body builder must:

- Re-design the cab suspension.
- Strengthen the standard cab longitudinal members.
- Move the coolant expansion tank. The coolant level must be higher than the uppermost part of the engine and passengers should not be exposed to any risk of injury from hot coolant.
- Move the oil dipstick (note fill height) and oil filler neck in accordance with the cab modification.
- Ensure that the cab can tilt sufficiently. The cab must be tilted by means of a hydraulic tilting mechanism. A minimum tilt angle of 30° is recommended. Tilted cabs must have an adequate safety mechanism.
- Compile an operating manual.
- Take account of the changed centre of gravity conditions and the body lengths.
- Calculate the new technical data for the entire vehicle.
- Assume liability for the components he has supplied and any effects they are likely to have.

MAN has developed its own chassis with driver platform for rigid connections between cabs and bodies. These have the model designation FOC, e.g. 8.163 FOC. NEOMAN has drawn up its own Guide to Fitting Bodies (www.neoman.de) for FOC chassis; this is available from the BVT Department at MAN (for address, see „Addresses“ booklet).

4.11.3 Spoilers, aerodynamics kit

It is possible to retrofit a roof spoiler or an aerodynamics kit. Original MAN spoilers and aerodynamics kits can be factory-fitted but are also available for retrofitting from our spare parts service. Only the proper mounting points and rain channel on the cab roof should be used. Ensure there is sufficient clamping length (rain channel). No additional holes in the cab roof are permitted.

4.11.4 Roof sleeper cabs and raised roofs

4.11.4.1 Fundamentals for the installation of roof cabs

It is possible to install roof sleeper cabs (top-sleepers) and raised roofs provided that the following conditions are met:

- Approval must be obtained from MAN. This is the responsibility of the roof cab manufacturer and not the workshop carrying out the work. Section 4.7 „Retrofitting equipment“ in this chapter applies.
- The manufacturer of the roof cab is responsible for compliance with specifications (in particular safety regulations, e.g. trade association guidelines), decrees and regulations (e.g. GGVS).
- A securing device (to prevent the cab from closing by itself when it is tilted) must be installed.
- If the tilting process differs from that for the standard MAN cab, a simple but comprehensive operating manual must be drawn up.
- The dimensions for the resulting cab centre of gravity must be complied with by the cab with its attachment, and evidence of this is to be brought - see Fig.34.
- Cab suspension that is suitable for the installation of a roof cab must already be fitted or must be retrofitted for the installation of the roof cab (see Table 24). The conditions and maximum weights listed in Table 24 are to be observed.

cardiagn.com

Fig. 34: Cab centre of gravity with roof sleeper cab ESC-110

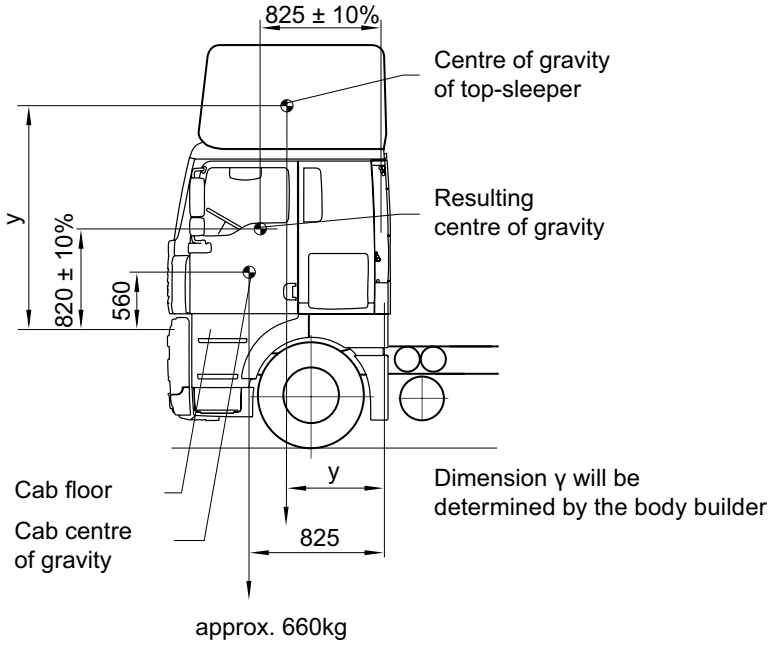

Table 24: Cab suspensions for roof cab installation, maximum weights of fitted/installed components

Model	Model number	Cab	Equipment required	Maximumweight, incl. equipment
L2000	L20 - L36	Compact (**K**) short	Cab suspension for top-sleeper	120kg
		Medium (**M**); twin cab (**D**)	**Not possible**	
M2000L	L70 - L95	Compact (**K**) short	Cab suspension for top-sleeper	120kg
		Medium (**M**); twin cab (**D**)	**Not possible**	
M2000M	M31 - M44	Short-haul (**N**) short	Cab suspension for top-sleeper	130kg
		Long-haul (**F**) long	Air-sprung cab suspension for top-sleeper	200kg
F2000	T01 - T78	Short-haul (**N**) short	Cab suspension for top-sleeper	130kg
		Large-capacity (**G**) long	Air-sprung cab suspension for top-sleeper	200kg

A retrofit conversion for the installation of roof cabs is possible. The cab suspension and tilt mechanism components required for this can be obtained from the MAN spare parts service.

cardiagn.com

4.11.4.2 Roof openings

The following instructions for access openings in the roof also apply, as appropriate, for the design of other roof openings such as for the installation of glass roofs or sliding roofs.

For the installation of a roof cab, the existing opening in the cab roof can be used as an access opening, see Fig. 35.
The standard roof framework and the standard cut-out in the roof panel are to be left unchanged.

Fig. 35: Normal access opening ESC-146

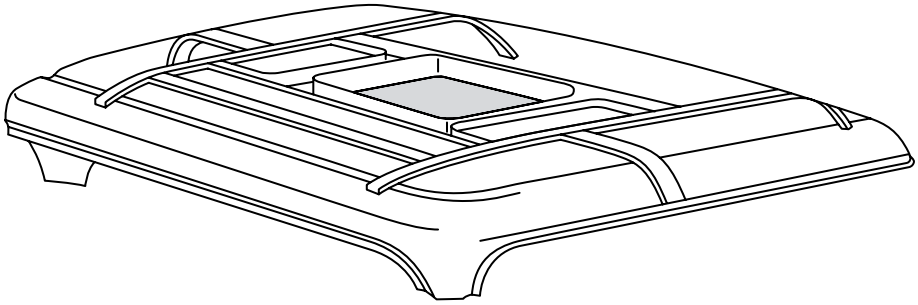

Enlarging the access opening is permitted, provided that the stipulations in Fig. 36 are taken into account. If longitudinal or lateral bows have to be removed and are not replaced the remaining roof frame must be stiffened with suitable reinforcements (e.g. original MAN high-roof design), so that a stable assembly is formed between the roof, front wall, side walls and rear wall.

Fig. 36: Enlarged access opening ESC-145

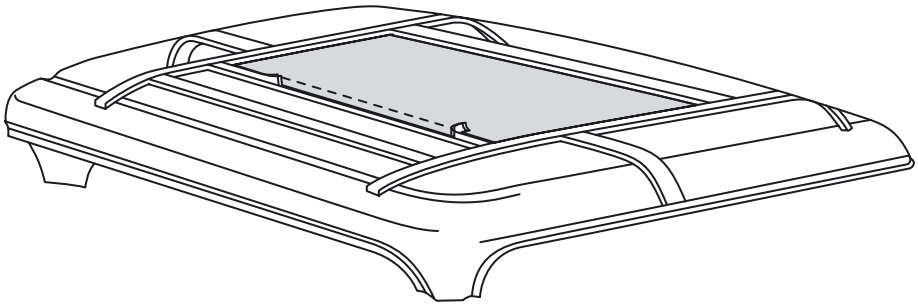

cardiagn.com

4.12 Axle location, suspension, steering

4.12.1 General

Work is not permitted on axle locating hardware and steering components such as links, steering arms, springs and their brackets and mountings on the frame.

Suspension components or spring leaves must not be modified or removed.

Leaf springs may be replaced only as a complete part and only in pairs (left and right-hand side). The spare part number of the leaf springs must be listed on the ALB plate; otherwise a new ALB plate, with corresponding amendments, is required.

4.12.2 Stability, body roll

Standard anti-roll bars must not be removed or modified.

Under certain circumstances high centre of gravity positions can also make additional stabilisation measures necessary.

A centre of gravity of payload and body which is > 1000 mm above the upper edge of the frame on the L2000 is regarded as a high centre of gravity position. On all other vehicles it is one which is > 1200 mm above the upper edge of the frame.

Depending on range and design it may be possible to supply additional stabilisation measures ex-works.

These include:

- Reinforced dampers
- Springs with higher ratings
- Additional and reinforced anti-roll bars.

Computer calculations cannot determine exactly from which centre of gravity position onwards additional stabilisation measures become necessary.

Reason:

Conventional computing methods are based on steady-state cornering. Driving situations that lead to rollovers are however quite different from steady-state cornering.

The differences are as follows:

- Steady-state cornering is seldom achieved with the typical changes in direction that occur in road traffic.
- The changes in direction are too small and too brief to enable steady-state vehicle roll.
- The rolling motions occurring at the start of a cornering manoeuvre do not decay as it progresses.
- Road surface unevenness and changes to the road inclination generate additional rolling motions.
- Steering corrections during cornering result in lateral acceleration peaks that also generation rolling motions.

cardiagn.com

The steering parameters that are responsible for vehicle reactions to external influences similarly have various effects on the roll stability of a vehicle.

The main influencing factors are:

- The compound spring characteristic curves (including their limits) which differ from linear spring characteristics.
- The type and intensity of damping if relation to roll motion damping.
- Tyre spring rate characteristics in the vertical and horizontal plane.
- The torsional stiffness of the frame and body.
- How vehicle stabilisation is distributed across the individual axles.

In theory it is possible to calculate the rollover stability of a vehicle if the following points are known:

- All the aforesaid vehicle parameters
- The load conditions
- The curve/corner to be driven round
- All driver reactions
- All road surface unevennesses
- All changes in road inclination
- The speed curve.

Any test using a simplified calculation is not reliable and will lead to unusable results. MAN cannot provide any guarantee of a likely specific cornering rollover speed.

4.13 Add-on frame components

4.13.1 Underride guard

Chassis can be factory-fitted with a rear underride guard. Alternatively, rear underride guard are not installed at the factory, in which case chassis units are fitted with a so-called „non-returnable lighting bracket“ for transporting them to the body manufacturer.
The body manufacturer must himself then fit rear underride guard that complies with regulations.

MAN rear underride guards have component approval in accordance with Directive 70/221/EEC or ECE R 58. This can be seen:

- From the model number and
- From the model mark of the underride guard.

The model number and model mark are noted on a sticker on the underride guard.
The following dimensional requirements are imposed for MAN underride guards to EC/ECE directives (see also Fig. 37):

- The horizontal distance between the rear edge of the underride guard and the rear edge of the vehicle (rearmost edge) must not exceed 350mm. This value takes account of the deformation occurring under the test load (in 70/221/EEC, a value of 400mm is permitted in the deformed state).
- The distance between the lower edge of the underride guard and the road surface must not exceed 550mm when the vehicle is unladen.
- Vehicles that are being transported to body manufacturers or overseas do not have to have an underride guard fitted because a special case approval has been issued.

The body manufacturer must ensure that these requirements are adhered to because the dimensions are dependent on the body.

cardiagn.com

Fig. 37: Layout of underride guard ESC-056

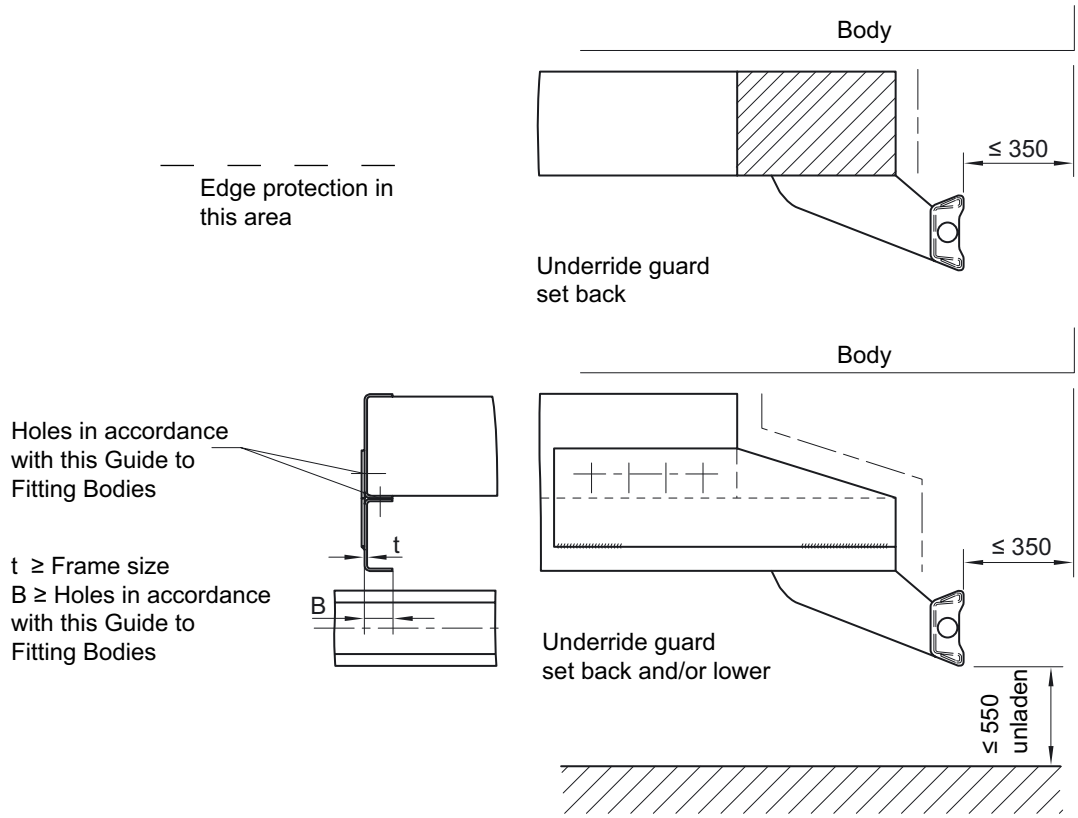

4.13.2 Sideguards

All trucks, tractor units and their trailers with a permissible gross weight of > 3.5t and a maximum design speed of more than 25 km/h must have sideguards (including vehicles that, because of the design of the chassis, are regarded as the equivalent of trucks and tractor units).

The exceptions for the truck sector are as follows:

- Vehicles that are not yet completely manufactured (chassis being transported)
- Semitrailer tractors (not semitrailers)
- Vehicles built for special purposes where the fitting of sideguards would not be compatible with the purpose for which the vehicle is to be used.

Special vehicles in this respect include in particular vehicles with side tipper bodies. This only applies if they tip to the sides and the inner length of the body is ≤ 7.500mm Table 25 shows which tippers need sideguards and which do not.

cardiagn.com

Table 25: Types of tippers and whether they require sideguards

Length of tipper body	≤ 7.500	> 7.500
Rear tipper	yes	yes
Roll-off/set-down skip loader	yes	yes
Two-way tipper	no	yes
Three-way tipper	no	yes

Vehicles intended for combined transport and vehicles suitable for off-road use are not exempt from the fitting of sideguards.

If the body manufacturer is to fit sideguards to the chassis, then profile sections, profile supports and installation parts are available from MAN in a variety of designs. They can be obtained from the spare parts service. To aid the design process, the maximum spans and projections for which the regulations with regards to strength have been met are stipulated in a design report (see Figs. 38 and 39). Dimension combinations for span „l“ and projection „a“ can be obtained from the diagram in Fig. 40. If the permissible dimensions as stated in the report are exceeded, then the body builder must carry out a strength test.

The figures clarify only the dimensions with which the MAN sideguards fulfil strength requirements. Other legal regulations have intentionally not been mentioned because the company that is installing the sideguards is responsible for meeting these.
Further information can be obtained from Directive 89/297/EEC and, in Germany from §32c StVZO.

Fig. 38: Sideguards on L2000 and M2000 vehicles ESC 201

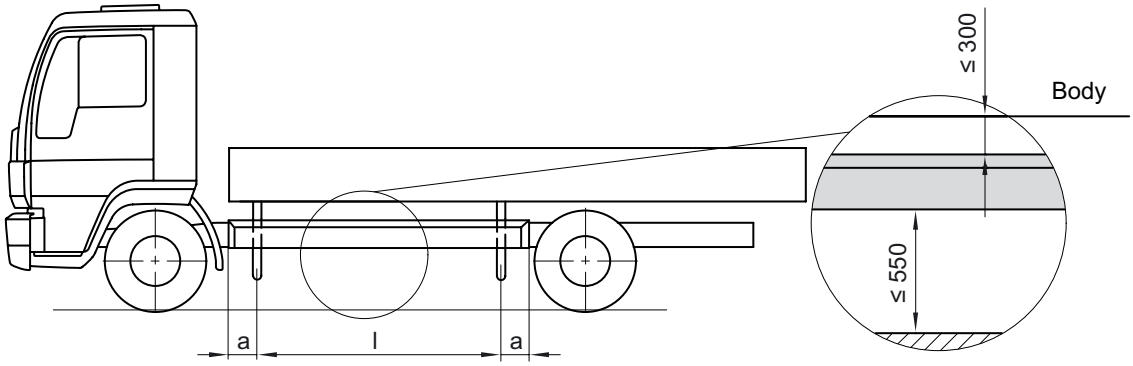

Fig. 39: Sideguards on M2000 and F2000 vehicles ESC 200

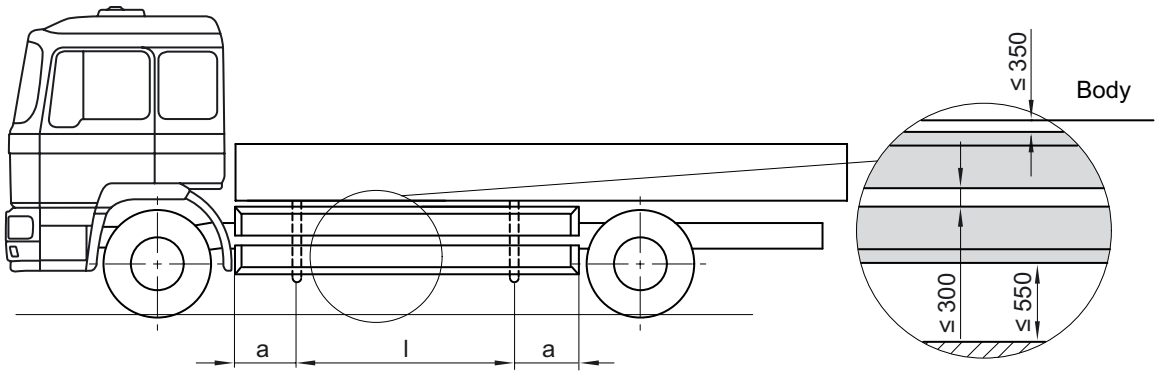

cardiagn.com

Fig. 40: Diagram for calculating spans and projections ESC-140

Maximum projections ‚a‘ as a function of span ‚T‘

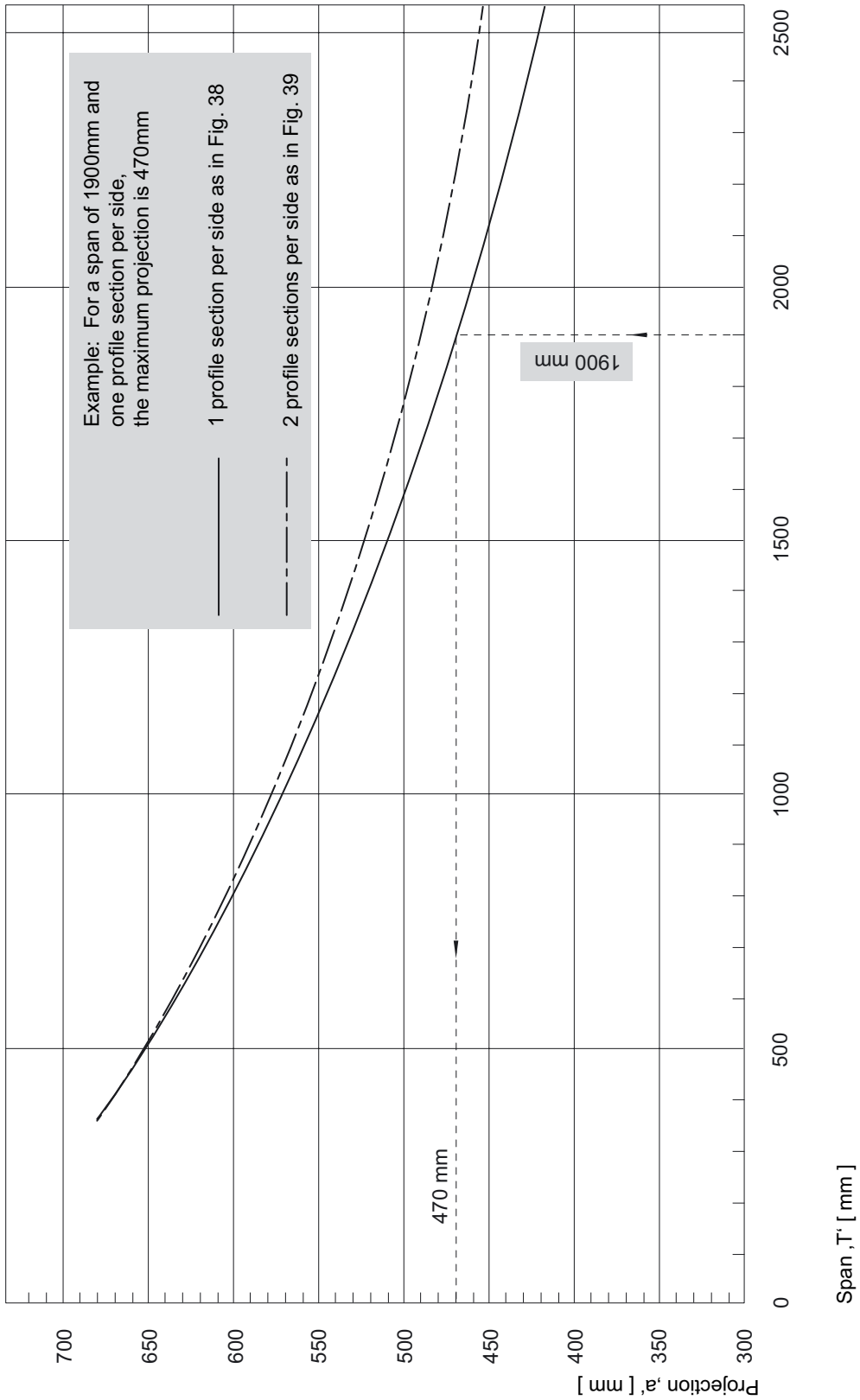

cardiagn.com

As can be seen from the figures, there are basically 2 layouts for the profile sections. L2000 models have one profile per side, whilst M2000L and M2000M range of vehicles must have either one or two profiles, depending on the size of the wheels. All F2000 models must be fitted with two profile sections per side (for definition of the vehicle range, see Chapter 3 „General“). Table 26 defines which vehicles are to be fitted with which profile layout.

Table 26: Number and layout of profile sections

Model series	Wheel size	Number of profile sections per side
L2000	all	1
M2000L, M2000M	17,5“ 19,5“ 22,5“	1 1 2
F2000	all	2

No brake, air or hydraulic pipes must be attached to the sideguards (see also the Chapter „Electrics, wiring“). Rounded bolts and rivets are allowed to have a maximum projection of 10mm; the rounding-off radius for all parts cut to size by the body builder must be at least 2.5mm.

If the vehicle is fitted with different tyres or different springs, the height of the guards must be checked and, if necessary, corrected. The brackets that can be supplied by MAN allow the profile section to be adjusted. They are easy to disassemble in that by loosening one central bolt for each „omega“ bracket, the entire guard, complete with mountings can be removed (see Fig. 41).

Fig. 41: Removing the sideguards with central bolt on the omega bracket ESC-154

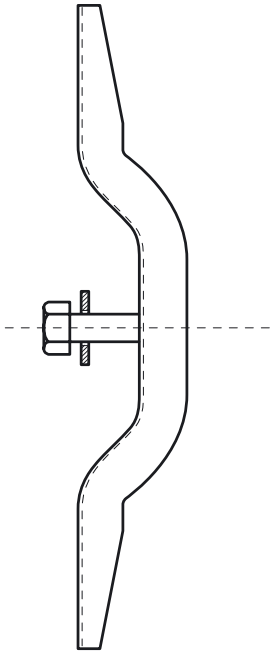

cardiagn.com

4.13.3 Spare wheel

The spare wheel can be mounted at the side on the frame, at the end of the frame or on the body, provided there is sufficient space for it and the relevant national regulations permit it.

In every case,

- The legal regulations and directives must be observed.
- The spare wheel (or spare wheel lift) must be easily accessible and simple to operate.
- A double lock to prevent loss must be provided.
- The spare wheel lift is to be secured to prevent it from being lost; observe instructions in Section 4.5.1 „Rivet joints and screw connections“ (e.g. mechanical keeper, double nip countersunk bolts/nuts.)
- A minimum clearance of ≥ 200mm from the exhaust system must be observed; if a heatshield is installed, this clearance may be ≥ 100mm.

If a spare wheel is fitted at the end of the frame, the reduced rear overhang angle must be noted. The location of the spare wheel must not result in interruptions in the subframes or in their being bent at right angles or bent out to the side.

4.13.4 Wheel chocks

In Germany, §41 StVZO stipulates that wheel chocks must be included as part of the vehicle’s equipment.
The corresponding regulations in other countries must be observed.

According to §41 StVZO, Section 14 the following is stipulated:

1 wheel chock on:

- Vehicles with a permissible gross weight of more than 4 t
- Two-axle trailers – apart from semitrailers and rigid drawbar trailers (including central-axle trailers) with a permissible gross weight of more than 750kg.

2 wheel chocks on:

- Three and multi-axle vehicles
- Semitrailers
- Rigid drawbar trailers (including central-axle trailers) with a permissible gross weight of more than 750kg.

Chocks must be safe to handle and sufficiently effective. They must be fitted in or on the vehicle by means of holders and must be easily accessible. The holders must prevent them from being lost and from rattling.

Hooks or chains must not be used as holders.

4.13.5 Fuel tanks

If space permits, fuel tanks can be either repositioned and/or additional fuel tanks can be fitted. However, the wheel loads should be as even as possible (see Chapter 3 „General“), where possible the fuel tanks are to be mounted opposite each other, i.e. on the left and right-hand sides on the frame. The maximum tank volume per vehicle is 1,500 litres. It is also possible to lower the tanks. If the ground clearance is affected by shifting a fuel tank, then a guard must be fitted to prevent damage to the fuel tank.

Fuel pipes are to be routed properly, see also „Electrics, wiring“ booklet. The prevailing temperatures in the areas that the vehicle will be used must be taken into account. Operation at low temperatures requires the fuel return line to be located immediately next to the intake area. This warms the intake area and is an effective means of preventing fuel from clouding (flocculation of paraffin).

cardiagn.com

4.13.6 Liquefied gas systems and auxiliary heaters

MAN has no objection to the proper retrofitting of liquefied gas systems for operating

- Heating systems
- Cooking systems
- Cooling systems, etc.

However, the installation must comply with the relevant national and international regulations/standards

Some examples (including, but not limited to):

- Liquid gas installations for combustion purposes in vehicles - § 29 of Accident Prevention Regulation VBG 21, Use of Liquid Gas
- § 41a StVZO Compressed Gas Installations and Pressurised Containers
- German Pressure Vessel Regulations (DruckbehV)
- German Equipment Safety Act (GSG)
- Work sheet G607 of the German Technical and Scientific Association for Gas and Water (DVGW)
- European Standard EN 1949.

Gas cylinders must be installed in a safe place. Gas cylinders or the cylinder cabinet must not protrude above the upper edge of the frame.

Manufacturers of auxiliary heaters have their own regulations for installation and operation. MAN permits only auxiliary heaters that have also been issued with a design approval.

The installation of liquid gas systems can affect the usage options of the vehicle because, for example, some countries do not allow vehicles fitted with such systems to be driven into enclosed spaces, e.g. halls and workshops.

Other regulations, which may be specific to certain countries, must also be taken into consideration. This applies particularly to vehicles that are used for the transportation of hazardous goods.

4.14 Gas engines: Handling of high-pressure gas installations

MAN's vehicle range also includes truck chassis that can be operated with natural gas (in this case **CNG** = **c**ompressed **n**atural **g**as). The engine is a four-stroke spark-ignition gas engine with a contactless transistor ignition system, ignition distributor and sparkplugs. Mixture preparation is achieved by mixture formation (outside the combustion chamber) in the central gas mixer. Exhaust aftertreatment by means of a controlled three-way catalytic converter and electrically heated lambda sensor is obligatory. The CNG engine also has an interface for intermediate speeds, the description of which can be obtained from the ESC Department (see „Publisher“ above).

The body manufacturer **must comply absolutely with the following safety instructions** in addition to those for vehicles with conventional diesel engines:

- Parking and workshop halls must have the necessary equipment to permit gas vehicles to enter the buildings. Information can be obtained from building authorities, hazardous goods experts from technical testing agencies (in Germany DEKRA, GTÜ, TÜV for example).
- When working on the electrical system, the battery must be disconnected for safety reasons; before disconnecting the battery, ventilate the battery box well (explosive gas); if necessary blow it out with compressed air.
- The compressed gas tank is fitted with an overpressure safety device to prevent it exploding. This ventilates the high-pressure gas installation when the temperature or pressure is too high; as a result, under no circumstances should temperatures > 80°C occur (e.g. when painting). For paints and drying temperatures, see also Chapter 4. 2, „Corrosion protection“). When drying paint at temperatures up to max 80°C, the compressed gas tanks may only be filled up to max. 100 bar.
- Do not attach any components or pipes to the components of the compressed-gas system.

cardiagn.com

- Modifications to the compressed-gas system may only be carried out by the manufacturer. Expert advice should be sought before making any modifications; after the modifications have been carried out, a further experts approval must be obtained (e.g. in Germany in accordance with §14 GSG).
- Repair, maintenance, assembly and other work on the compressed-gas system may only be carried out by authorised, trained specialist personnel.
- Pressurised pipes must not be tightened or slackened. **RISK OF EXPLOSION!**
- It is forbidden to carry out any welding work on vehicles with filled natural gas tanks. **RISK OF EXPLOSION!**

Before carrying out welding work the entire gas system, including the compressed-gas tanks should be ventilated and the compressed-gas tanks should be filled with an inert gas, e.g. nitrogen (N2). Do not discharge the gas into the atmosphere. The natural gas must be diverted through disposal pipes.

4.15 Modifications to the engine

4.15.1 Air intake, exhaust gas path

There must be a free and unhindered flow of intake air and exhaust gases. The vacuum condition in the intake pipe and the backpressure in the exhaust system must not be allowed to change.

Therefore observe the following points when carrying out modifications to the air intake system and/or exhaust gas path:

- Never change the shape or area of cross-sections.
- Do not modify silencers or air filters.
- The radius of any bends must be at least double the diameter of the pipe.
- Continuous bends only, i.e. no mitre cuts.
- MAN cannot provide information about changes in fuel consumption or noise performance; in some circumstances a new noise approval will be required.
- Heat-sensitive parts (e.g. pipes, spare wheels) must be at least ≥ 200mm away from the exhaust; if heatshields are fitted, this clearance may be ≥ 100mm.

4.15.2 Engine cooling

- The cooling system (radiator, grille, air ducts, coolant circuit) must not be modified.
- Exceptions only with the approval of the ESC Department at MAN (for address see „Publisher“ above).
- Modifications to the radiator that reduce the cooling surface area cannot be approved.

When operating in primarily stationary conditions or in areas with severe climates, a more powerful radiator is sometimes required.
The nearest MAN sales centre can provide information on options that can be supplied for the respective vehicle.
For retrofit installations, contact the nearest MAN service centre or MAN authorised workshop

4.15.3 Engine encapsulation, noise insulation

Work on and modifications to factory-fitted engine encapsulation is not permitted. If vehicles are defined as „low-noise“, they will lose this status if retrofit work has been carried out on them. The company that has carried out the modification will then be responsible for re-obtaining the previous status.

When using power take-offs in conjunction with engine encapsulation see also the „Power take-offs“ booklet.

cardiagn.com

4.16 Coupling devices

4.16.1 General

If the truck is intended to pull loads, the equipment required to do this must be fitted and approved. Compliance with the minimum engine power required by legislation and/or the installation of the correct trailer coupling does not give any guarantee that the truck is suitable for pulling loads.

The ESC Department at MAN (for address see „Publisher“ above) must be consulted if the standard or ex-works permissible gross vehicle weight is to be changed.

Only trailer couplings approved by MAN must be used. An approval by monitoring organisations or test agencies does not mean that the vehicle manufacturer has also issued or will be issuing an approval. An overview of the approved trailer couplings and their associated installation drawings is given in Table 29.

Contact between the truck and the trailer must not occur during manoeuvring. Adequate drawbar lengths should therefore be selected. National regulations should also be met. In Germany, these are, for example, „Vehicle components: technical requirements for design testing“ in accordance with §22a StVZO, and specifically No. 31 „Equipment for joining vehicles“ (TA31).

The required clearance dimensions must be taken into consideration: In Germany, these are stipulated in the accident prevention regulation „Vehicles“ (=VBG-12) and DIN 74058 or EC Directive 94/20/EC.

The body manufacturer is obliged to design and construct the body in such a way that the coupling process can be carried out and monitored unhindered and without incurring any risks. The freedom of movement of the trailer drawbar must be guaranteed.

If the coupling heads and the sockets are fitted to the side (e.g. on the rear light holder on the driver’s side), the trailer manufacturer and the operator must ensure that the cables/pipes are long enough for cornering.

Fig. 42: Clearances for trailer couplings in accordance with VBG-12 ESC-006

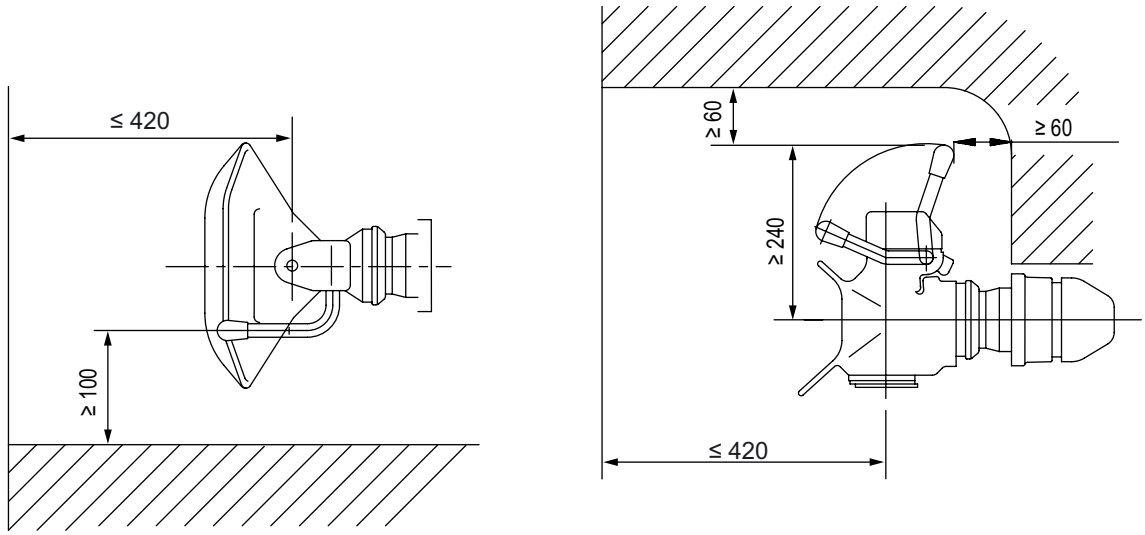

cardiagn.com

Fig. 43: Clearances for trailer couplings in accordance with DIN 74058 ESC-152

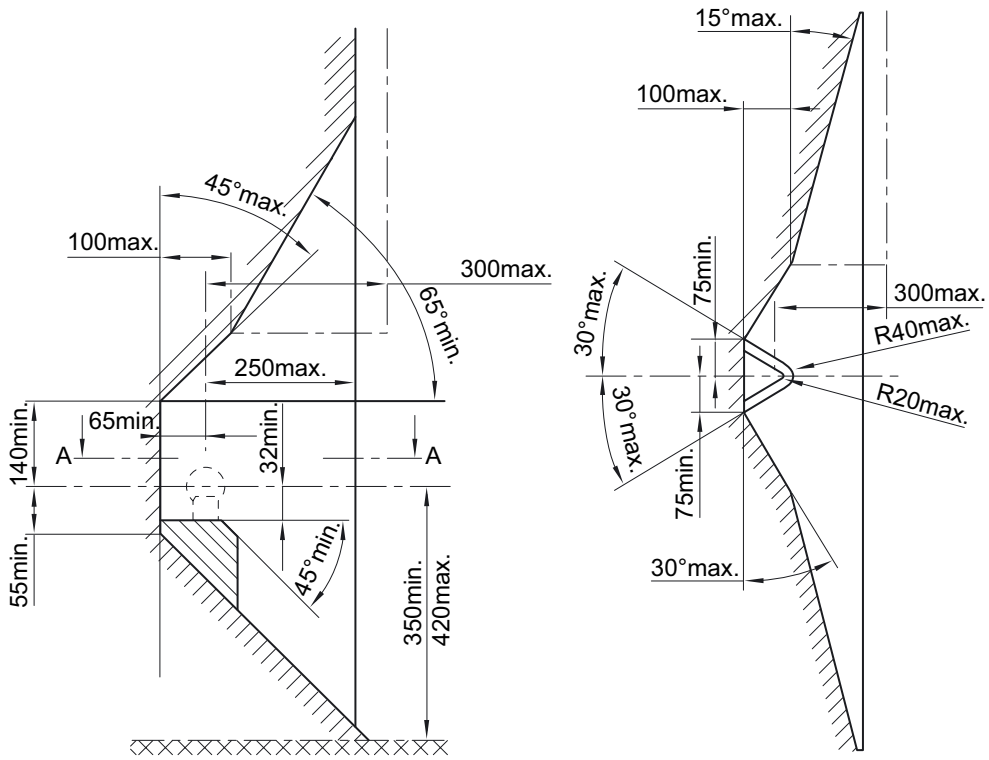

Original MAN end cross members and the associated reinforcement plates must be used when fitting trailer couplings.
End cross members have suitable hole patterns for the associated trailer coupling. This hole pattern must under no circumstances be modified to install a different trailer coupling. Follow the coupling manufacturers' instructions in their installation guidelines (e.g. tightening torques and testing).

Lowering the trailer coupling without lowering the end cross member as well is not permitted. Some examples of how the coupling may be lowered are shown in Figs. 44 and 45.

Fig. 44: Lowered trailer coupling ESC-015

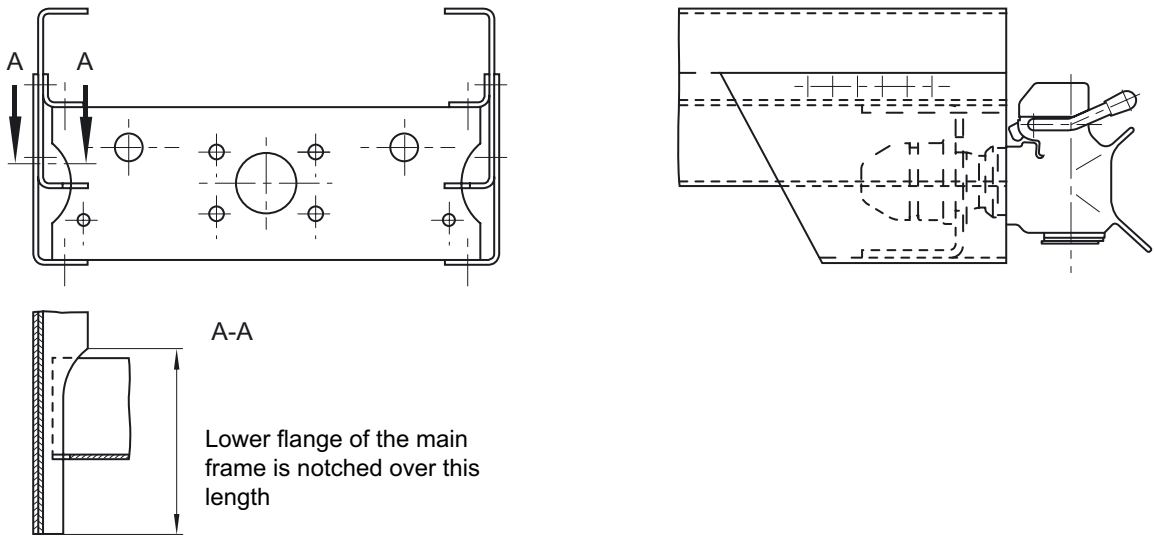

cardiagn.com

Fig. 45: Trailer coupling fitted below the frame ESC-042

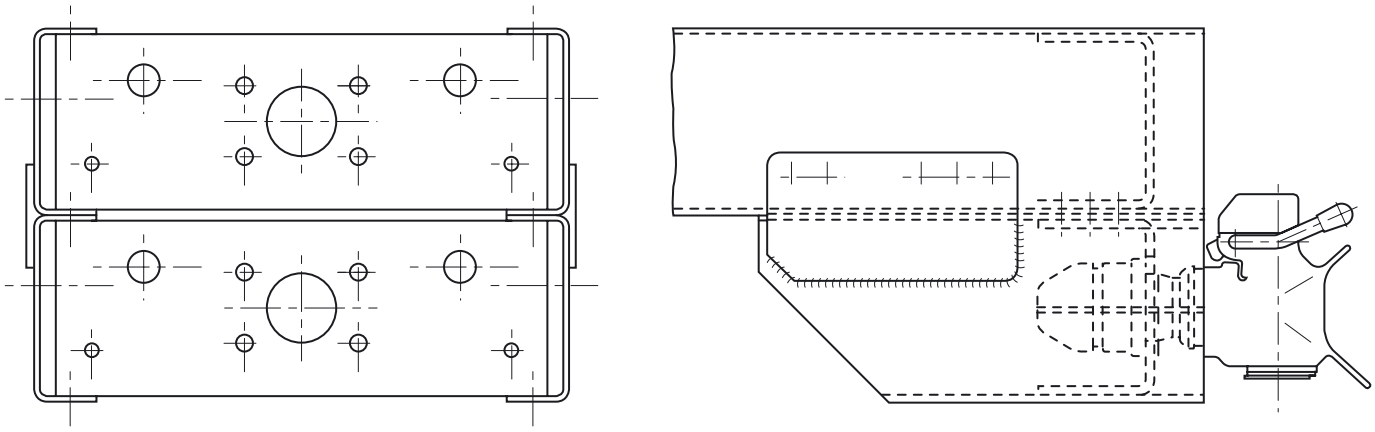

4.16.2 Trailer coupling, D value

The required size of trailer coupling is determined by the D value. The trailer coupling manufacturer fits a model plate to the trailer coupling; the model plate contains the maximum permissible D value. The D value is expressed in kilonewtons [kN].
The formula for the D value is as follows:

Formula 12: D value

$$D = \frac{9{,}81 \cdot T \cdot R}{T + R}$$

If the trailer coupling D value and the permissible gross weight of the trailer are known, then the maximum permissible gross weight of the towing vehicle can be calculated using the following formula:

Formula 13: D value formula for permissible gross weight

$$T = \frac{R \cdot D}{(9{,}81 \cdot R) - D}$$

If the D value and the permissible gross weight of the towing vehicle are known, then the maximum permissible gross weight of the trailer is calculated as follows:

Formula 14: D value formula for permissible trailer weight

$$R = \frac{T \cdot D}{(9{,}81 \cdot T) - D}$$

Where:

D	=	D value, in [kN]
T	=	Gross vehicle weight rating of the towing vehicle, in [t]
R	=	Gross vehicle weight rating of the trailer, in [t]

Examples of these calculations can be found in Chapter 9 „Calculations“.

cardiagn.com

4.16.3 Rigid drawbar trailers, central axle trailers, D_c value, V value

The following definitions are applied:

- **Rigid drawbar trailer:** Trailer vehicle with one axle or axle group where:
  - the connection to the towing vehicle, with respect to angular movements, is achieved by means of a towing device (drawbar)
  - the drawbar is not connected to the chassis in a freely moveable state and therefore can transfer vertical moments, and
  - depending on its design, part of its gross weight is borne by the towing vehicle.
- **Central axle trailer:** Towed vehicle with a towing device that is not movable in the perpendicular plane in relation to the trailer and whose axle(s) is/are located near to the mass centre of gravity of the vehicle (with even loads) such that only a small static vertical load not exceeding 10% of the trailer mass or 1,000 kg (whichever is the smaller) is transferred to the towing vehicle. Central axle trailers are therefore a sub-group of rigid drawbar trailers.
- **Trailer nose weight:** Vertical load that the drawbar places on the coupling point. With coupled trailers the trailer nose weight is borne by the towing vehicle and is therefore to be taken into consideration when designing the vehicle (axle load calculation).

In addition to the D value, further conditions apply to rigid drawbar trailers/central axle trailers: Trailer couplings and end cross members have reduced trailer loads since in this case the nose weight acting on the trailer coupling and end cross member must be taken into account. To harmonise the regulations within the European Union therefore, the terms D_c value and V value were introduced with Directive 94/20/EC.

The following formulae apply:

Formula 15: D_C value formula for rigid drawbar and central axle trailers

$$D_C = \frac{9{,}81 \cdot T \cdot C}{T + C}$$

Formula 16: V value formula for central axle and rigid drawbar trailers with a permissible trailer nose weight of ≤ 10% of the trailer mass and not more than 1,000kg

$$V = a \cdot \frac{X^2}{l^2} \cdot C \; ; \; \frac{X^2}{l^2} \geq 1 \quad \text{Where calculated values for} \quad \frac{X^2}{l^2} < 1 \text{ the value 1.0 should be used}$$

Where:

D_C	=	Reduced D value when operating with central axle trailer, in [kN]
V	=	V value, in [kN]
T	=	Gross vehicle weight rating of the towing vehicle, in [t]
C	=	Sum of the axle loads of the central axle trailer loaded with the permissible mass, in [t], not including trailer nose weight
a	=	Comparable acceleration at the coupling point, in [m/s²]. Use: 1,8 m/s² if the towing vehicle is fitted with air suspension or a similar suspension system and 2,4 m/s² if other types of suspension are fitted
S	=	Permissible trailer nose weight on the coupling point, in [kg]
X	=	Body length of trailer, in [m] see Fig. 46
l	=	Theoretical drawbar length, in [m] see Fig. 46

cardiagn.com

Fig. 46: Body length of trailer and theoretical drawbar length ESC-510

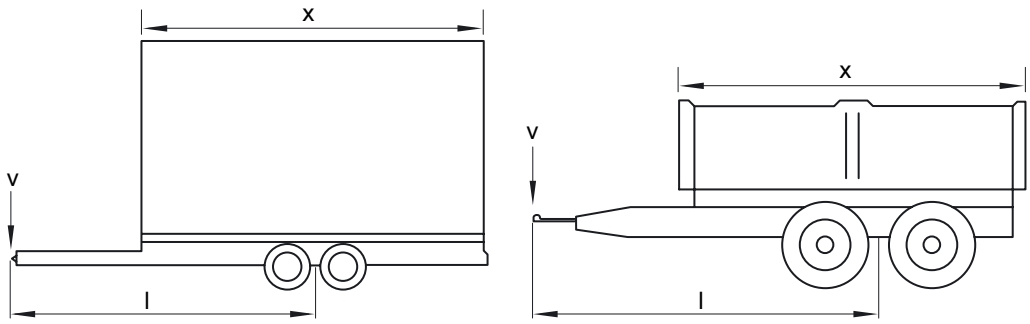

MAN specifies the following for operation with central axle trailers/rigid drawbar trailers:

- For factory fitted equipment a trailer nose weight of more than 10% of the permissible trailer mass and more than 1,000kg is not permitted. Other loads are the responsibility of the manufacturer of the respective towing device. MAN cannot make any statements as to the permissible loads and calculations (e.g. to 94/20/EC) for these towing devices.
- Like all rear loads trailer nose weights have an effect on axle load distribution. Therefore use an axle load calculation to check whether trailer nose weights are possible. This is particularly important when there are additional rear loads (e.g. tail-lift, rear loading crane).
- Vehicles with a lifting trailing axle must not lift the trailing axle if a central axle trailer/rigid drawbar trailer is connected.
- Operating a laden central axle trailer/rigid drawbar trailer with an unladen towing vehicle is not permitted.
- To ensure sufficient steerability the minimum front axle loads, as set out in Table 19 (in the „General“ chapter) must be observed.

Table 28 lists possible combinations of trailer loads and nose weights as well as D, D_c and V values. Table 27 assigns them to the different vehicles (listed by model number and type of vehicle).

In some circumstances it is possible to change the loads listed. Further information can be obtained from the ESC Department (for address see „Publisher“ above) quoting the vehicle data given in Section 2.4.2 of the „General“ chapter.

cardiagn.com

4.16.4 End cross members and trailer couplings

Table 27: Assignment to vehicle by vehicle range, model number and end cross member

L2000

Model no.	MAN item no.	Hole pattern [mm]	Notes
L20	81.41250.2251	None	Not for trailer couplings
	81.41250.5137	120 x 55	Basic part for 81.41250.5140
	81.41250.5140	120 x 55	4x2/2 for trailer coupling type G 135
	81.41250.5151	140 x 80	End cross member reinforced
	81.41250.5152	120 x 55	Basic part for 81.41250.5153
	81.41250.5153	120 x 55	All-wheel drive 4x4/2 or 4x2/2 50mm lower, for trailer coupling type G 135
	81.41250.5155	83 x 56	Fire service, additional hole pattern 120x55
	81.41250.5155	120 x 55	Fire service, additional hole pattern 83x56
L21	81.41250.2251	None	Not for trailer couplings
	81.41250.5137	120 x 55	Basic part for 81.41250.5140
	81.41250.5140	120 x 55	4x2/2 for trailer coupling type G 135
	81.41250.5151	140 x 80	End cross member reinforced
	81.41250.5152	120 x 55	Basic part for 81.41250.5153
	81.41250.5153	120 x 55	All-wheel drive 4x4/2 or 4x2/2 50mm lower, for trailer coupling type G 135
	81.41250.5155	120 x 55	Fire service, additional hole pattern 83x56
	81.41250.5155	83 x 56	Fire service, additional hole pattern 120x55
L22	81.41250.5151	140 x 80	End cross member reinforced
	81.41250.5152	120 x 55	Basic part for 81.41250.5153
	81.41250.5153	120 x 55	All-wheel drive 4x4/2 or 4x2/2 50mm lower, for trailer coupling type G 135
	81.41250.5155	83 x 56	Fire service, additional hole pattern 120x55
	81.41250.5155	83 x 56	Fire service, additional hole pattern 120x55
	81.41250.5170	140 x 80	Allrad 4x4/2, um 100mm tiefer, End cross member reinforced
L23	81.41250.5151	140 x 80	End cross member reinforced
	81.41250.5152	120 x 55	Basic part for 81.41250.5153
	81.41250.5153	120 x 55	All-wheel drive 4x4/2 or 4x2/2 50mm lower, for trailer coupling type G 135
	81.41250.5155	120 x 55	Fire service, additional hole pattern 83x56
	81.41250.5155	83 x 56	Fire service, additional hole pattern 120x55
	81.41250.5170	140 x 80	All-wheel drive 4x4/2 100mm lower, end cross member reinforced
L24	81.41250.2251	None	Not for trailer couplings
	81.41250.5137	120 x 55	Basic part for 81.41250.5140
	81.41250.5140	120 x 55	4x2/2 for trailer coupling type G 135
	81.41250.5151	140 x 80	End cross member reinforced
	81.41250.5152	120 x 55	Basic part for 81.41250.5153

cardiagn.com

Table 27: Assignment to vehicle by vehicle range, model number and end cross member

L2000

Model no.	MAN item no.	Hole pattern [mm]	Notes
	81.41250.5153	120 x 55	All-wheel drive 4x4/2 or 4x2/2 50mm lower, for trailer coupling type G 135
	81.41250.5155	83 x 56	Fire service, additional hole pattern 120x55
	81.41250.5155	120 x 55	Fire service, additional hole pattern 83x56
L25	81.41250.2251	None	Not for trailer couplings
	81.41250.5137	120 x 55	Basic part for 81.41250.5140
	81.41250.5140	120 x 55	4x2/2, for trailer coupling type G 135
	81.41250.5151	140 x 80	End cross member reinforced
	81.41250.5152	120 x 55	Basic part for 81.41250.5153
	81.41250.5153	120 x 55	All-wheel drive 4x4/2 or 4x2/2 50mm lower, for trailer coupling type G 135
	81.41250.5155	120 x 55	Fire service, additional hole pattern 83x56
	81.41250.5155	83 x 56	Fire service, additional hole pattern 120x55
L26	81.41250.5151	140 x 80	End cross member reinforced
	81.41250.5152	120 x 55	Basic part for 81.41250.5153
	81.41250.5153	120 x 55	All-wheel drive 4x4/2 or 4x2/2 50mm lower, for trailer coupling type G 135
	81.41250.5155	120 x 55	Fire service, additional hole pattern 83x56
	81.41250.5155	83 x 56	Fire service, additional hole pattern 120x55
	81.41250.5158	160 x 100	10t all-wheel drive 4x4/2, L26, L27, HD design
	81.41250.5168	160 x 100	Tool and gear truck, model L26
	81.41250.5170	140 x 80	All-wheel drive 4x4/2 100mm lower, end cross member reinforced
L27	81.41250.5151	140 x 80	End cross member reinforced
	81.41250.5152	120 x 55	Basic part for 81.41250.5153
	81.41250.5153	120 x 55	All-wheel drive 4x4/2 or 4x2/2 50mm lower, for trailer coupling type G 135
	81.41250.5155	120 x 55	Fire service, additional hole pattern 83x56
	81.41250.5155	83 x 56	Fire service, additional hole pattern 120x55
	81.41250.5158	160 x 100	10t all-wheel drive 4x4/2, L26, L27, HD design
	81.41250.5170	140 x 80	All-wheel drive 4x4/2 100mm lower, end cross member reinforced
L30	81.41250.5152	120 x 55	Basic part for 81.41250.5153
	81.41250.5153	120 x 55	All-wheel drive 4x4/2 or 4x2/2 50mm lower, for trailer coupling type G 135
L33	81.41250.2251	None	Not for trailer couplings
	81.41250.5137	120 x 55	Basic part for 81.41250.5140
	81.41250.5140	120 x 55	4x2/2, for trailer coupling type G 135
	81.41250.5151	140 x 80	End cross member reinforced
	81.41250.5152	120 x 55	Basic part for 81.41250.5153
	81.41250.5153	120 x 55	All-wheel drive 4x4/2 or 4x2/2 50mm lower, for trailer coupling type G 135
	81.41250.5155	83 x 56	Fire service, additional hole pattern 120x55
	81.41250.5155	120 x 55	Fire service, additional hole pattern 83x56

cardiagn.com

Table 27: Assignment to vehicle by vehicle range, model number and end cross member

L2000

Model no.	MAN item no.	Hole pattern [mm]	Notes
L34	81.41250.2251	None	Not for trailer couplings
	81.41250.5137	120 x 55	Basic part for 81.41250.5140
	81.41250.5140	120 x 55	4x2/2, for trailer coupling type G 135
	81.41250.5151	140 x 80	End cross member reinforced
	81.41250.5152	120 x 55	Basic part for 81.41250.5153
	81.41250.5153	120 x 55	All-wheel drive 4x4/2 or 4x2/2 50mm lower, for trailer coupling type G 135
	81.41250.5155	83 x 56	Fire service, additional hole pattern 120x55
	81.41250.5155	120 x 55	Fire service, additional hole pattern 83x56
L35	81.41250.2251	None	Not for trailer couplings
	81.41250.5137	120 x 55	Basic part for 81.41250.5140
	81.41250.5140	120 x 55	4x2/2, for trailer coupling type G 135
	81.41250.5151	140 x 80	End cross member reinforced
	81.41250.5152	120 x 55	Basic part for 81.41250.5153
	81.41250.5153	120 x 55	All-wheel drive 4x4/2 or 4x2/2 50mm lower, for trailer coupling type G 135
	81.41250.5155	120 x 55	Fire service, additional hole pattern 83x56
	81.41250.5155	83 x 56	Fire service, additional hole pattern 120x55
L36	81.41250.2251	None	Not for trailer couplings
	81.41250.5137	120 x 55	Basic part for 81.41250.5140
	81.41250.5140	120 x 55	4x2/2, for trailer coupling type G 135
	81.41250.5151	140 x 80	End cross member reinforced
	81.41250.5152	120 x 55	Basic part for 81.41250.5153
	81.41250.5153	120 x 55	All-wheel drive 4x4/2 or 4x2/2 50mm lower, for trailer coupling type G 135
	81.41250.5155	120 x 55	Fire service, additional hole pattern 83x56
	81.41250.5155	83 x 56	Fire service, additional hole pattern 120x55

cardiagn.com

M2000L

Model no.	MAN item no.	Hole pattern [mm]	Notes
L70	81.41250.0127	None	Not for trailer couplings
	81.41250.5158	160 x 100	12t, frame thickness 5mm, truck gross weight max. 11,990kg
L71	81.41250.0127	None	Not for trailer couplings
	81.41250.5158	160 x 100	12t, frame thickness 5mm, truck gross weight max. 11,990kg
L72	81.41250.0127	None	Not for trailer couplings
	81.41250.5158	160 x 100	12t, frame thickness 5mm, truck gross weight max. 11,990kg
L73	81.41250.0127	None	Not for trailer couplings
	81.41250.5158	160 x 100	12t, frame thickness 5mm, truck gross weight max. 11,990kg

Table 27: Assignment to vehicle by vehicle range, model number and end cross member

M2000L

Model no.	MAN item no.	Hole pattern [mm]	Notes
L74	81.41250.0127	None	Not for trailer couplings
	81.41250.5158	160 x 100	13/14/15t, frame thickness 6-7mm
L75	81.41250.0127	None	Not for trailer couplings
	81.41250.5158	160 x 100	13/14/15t, frame thickness 6-7mm
	81.41250.5163	160 x 100	13/14/15t, frame thickness 6-7mm, Fire service, additional hole pattern 83x56
	81.41250.5163	83 x 56	13/14/15t, frame thickness 6-7mm, fire service, additional hole pattern 83x56
L76	81.41250.0127	None	Not for trailer couplings
	81.41250.5158	160 x 100	13/14/15t, frame thickness 6-7mm
L77	81.41250.0127	None	Not for trailer couplings
	81.41250.5158	160 x 100	13/14/15t, frame thickness 6-7mm
	81.41250.5163	160 x 100	13/14/15t, frame thickness 6-7mm, Fire service, additional hole pattern 83x56
	81.41250.5163	83 x 56	13/14/15t, frame thickness 6-7mm, fire service, additional hole pattern 83x56
L79	81.41250.0127	None	Not for trailer couplings
	81.41250.5158	160 x 100	13/14/15t, frame thickness 6-7mm
L80	81.41250.5158	160 x 100	13/14/15t, frame thickness 6-7mm
	81.41250.5163	160 x 100	13/14/15t, frame thickness 6-7mm, Fire service, additional hole pattern 83x56
	81.41250.5163	83 x 56	13/14/15t, frame thickness 6-7mm, fire service, additional hole pattern 160x100
L81	81.41250.0127	None	Not for trailer couplings
	81.41250.5158	160 x 100	13/14/15t, frame thickness 6-7mm
L82	81.41250.0127	None	Not for trailer couplings
	81.41250.5158	160 x 100	13/14/15t, frame thickness 6-7mm
	81.41250.5163	160 x 100	13/14/15t, frame thickness 6-7mm, Fire service, additional hole pattern 83x56
	81.41250.5163	83 x 56	113/14/15t, frame thickness 6-7mm, fire service, additional hole pattern 160x100
L83	81.41250.0127	None	Not for trailer couplings
	81.41250.5158	160 x 100	13/14/15t, frame thickness 6-7mm
L84	81.41250.0127	None	Not for trailer couplings
	81.41250.5158	160 x 100	13/14/15t, frame thickness 6-7mm
	81.41250.5163	160 x 100	13/14/15t, frame thickness 6-7mm, Fire service, additional hole pattern 83x56
	81.41250.5163	83 x 56	13/14/15t, frame thickness 6-7mm, fire service, additional hole pattern 160x100
L86	81.41250.0127	None	Not for trailer couplings
	81.41250.5158	160 x 100	13/14/15t, frame thickness 6-7mm
L87	81.41250.0127	None	Not for trailer couplings
	81.41250.5158	160 x 100	18/25t, frame thickness 7-8mm
L88	81.41250.0127	None	Not for trailer couplings
	81.41250.5158	160 x 100	18/25t, frame thickness 7-8mm

cardiagn.com

Table 27: Assignment to vehicle by vehicle range, model number and end cross member

M2000L

Model no.	MAN item no.	Hole pattern [mm]	Notes
L89	81.41250.0127	None	Not for trailer couplings
	81.41250.5158	160 x 100	18/25t, frame thickness 7-8mm
L90	81.41250.5158	160 x 100	18/25t, frame thickness 7-8mm
L95	81.41250.5122	None	26t, L95, for frame thickness 7mm and frame height 268mm, not for trailer couplings
	81.41250.5145	160 x 100	26t, L95, end cross member reinforced, for frame thickness 7mm and frame height268mm

M2000M

Model no.	MAN item no.	Hole pattern [mm]	Notes
M31	81.41250.0127	None	Not for trailer couplings
	81.41250.5158	160 x 100	13/14/15t, frame thickness 6-7mm
M32	81.41250.0127	None	Not for trailer couplings
	81.41250.5158	160 x 100	13/14/15t, frame thickness 6-7mm
M33	81.41250.0127	None	Not for trailer couplings
	81.41250.5158	160 x 100	13/14/15t, frame thickness 6-7mm
M34	81.41250.5158	160 x 100	13/14/15t, frame thickness 6-7mm
	81.41250.5163	160 x 100	13/14/15t, frame thickness 6-7mm, Fire service, additional hole pattern 83x56
	81.41250.5163	83 x 56	13/14/15t, frame thickness 6-7mm, fire service, additional hole pattern 83x56
M38	81.41250.0127	None	Not for trailer couplings
	81.41250.5158	160 x 100	18/25t, frame thickness 7-8mm
M39	81.41250.0127	None	Not for trailer couplings
	81.41250.5158	160 x 100	18/25t, frame thickness 7-8mm
M40	81.41250.0127	None	Not for trailer couplings
	81.41250.5158	160 x 100	18/25t, frame thickness 7-8mm
M41	81.41250.5158	160 x 100	18/25t, frame thickness 7-8mm
M42	81.41250.0127	None	Not for trailer couplings
	81.41250.5158	160 x 100	18/25t, frame thickness 7-8mm
M43	81.41250.5158	160 x 100	18/25t, frame thickness 7-8mm
M44	81.41250.0127	None	Not for trailer couplings
	81.41250.5158	160 x 100	18/25t, frame thickness 7-8mm

cardiagn.com

Table 27: Assignment to vehicle by vehicle range, model number and end cross member

F2000

Model no.	MAN item no.	Bohrbild [mm]	Notes
T01	81.41250.5122	None	Not for trailer couplings
	81.41250.5145	160 x 100	End cross member reinforced, Frame heigh 270mm
	81.41250.5146	160 x 100	End cross member reinforced, Frame heigh 330mm
	81.41250.5159	330 x 110	10 bolt connection for 100t coupling installation, semitrailer tractors
	81.41250.5160	330 x 110	10 bolt connection for 100t coupling installation, tippers andtruck chassis
T02	81.41250.5122	None	Not for trailer couplings
	81.41250.5133	140 x 80	Fifth-wheel overhang = 750mm, tow coupling only, not for trailer couplings, cannot be changed
	81.41250.5145	160 x 100	End cross member reinforced, Frame heigh 270mm
	81.41250.5146	160 x 100	End cross member reinforced, Frame heigh 330mm
	81.41250.5160	330 x 110	10 bolt connection for 100t coupling installation, tippers andtruck chassis
T03	81.41250.5133	140 x 80	Fifth-wheel overhang = 750mm, tow coupling only, not for trailer couplings, cannot be changed
	81.41250.5145	160 x 100	End cross member reinforced, Frame heigh 270mm
	81.41250.5146	160 x 100	End cross member reinforced, Frame heigh 330mm
	81.41250.5160	330 x 110	10 bolt connection for 100t coupling installation, tippers andtruck chassis
T04	81.41250.5122	None	Not for trailer couplings
	81.41250.5145	160 x 100	End cross member reinforced, Frame heigh 270mm
	81.41250.5159	330 x 110	10 bolt connection for 100t coupling installation, semitrailer tractors
	81.41250.5160	330 x 110	10 bolt connection for 100t coupling installation, tippers andtruck chassis
T05	81.41250.5145	160 x 100	End cross member reinforced, Frame heigh 27mm
T06	81.41240.5045	160 x 100	T06, T36, rigid drawbar / central axle trailer only with reinforcement plates 81.42022.0020/.0013
	81.41250.5146	160 x 100	End cross member reinforced, Frame heigh 330mm
T07	81.41250.5146	160 x 100	End cross member reinforced, Frame heigh 330mm
T08	81.41250.5122	None	Not for trailer couplings
	81.41250.5145	160 x 100	End cross member reinforced, Frame heigh 270mm
	81.41250.5146	160 x 100	End cross member reinforced, Frame heigh 330mm
T09	81.41250.5122	None	Not for trailer couplings
	81.41250.5145	160 x 100	End cross member reinforced, Frame heigh 270mm
	81.41250.5159	330 x 110	10 bolt connection for 100t coupling installation, semitrailer tractors
	81.41250.5160	330 x 110	10 bolt connection for 100t coupling installation, tippers andtruck chassis

A

cardiagn.com

Table 27: Assignment to vehicle by vehicle range, model number and end cross member

F2000

Model no.	MAN item no.	Hole pattern [mm]	Notes
T10	81.41250.5122	None	Not for trailer couplings
	81.41250.5145	160 x 100	End cross member reinforced, Frame heigh 270mm
T12	81.41250.5122	None	Not for trailer couplings
	81.41250.5145	160 x 100	End cross member reinforced, Frame heigh 270mm
	81.41250.5159	330 x 110	10 bolt connection for 100t coupling installation, semitrailer tractors
	81.41250.5160	330 x 110	10 bolt connection for 100t coupling installation, tippers andtruck chassis
T15	81.41250.5145	160 x 100	End cross member reinforced, Frame heigh 270mm
	81.41250.5146	160 x 100	End cross member reinforced, Frame heigh 330mm
T16	81.41250.5145	160 x 100	End cross member reinforced, Frame heigh 270mm
	81.41250.5146	160 x 100	End cross member reinforced, Frame heigh 330mm
	81.41250.5162	160 x 100	Not for trailer couplings
T17	81.41250.5146	160 x 100	End cross member reinforced, Frame heigh 330mm
	81.41250.5162	160 x 100	Not for trailer couplings
T18	81.41250.5122	None	Not for trailer couplings
	81.41250.5145	160 x 100	End cross member reinforced, Frame heigh 270mm
	81.41250.5159	330 x 110	10 bolt connection for 100t coupling installation, semitrailer tractors
	81.41250.5160	330 x 110	10 bolt connection for 100t coupling installation, tippers andtruck chassis
T20	81.41250.5145	160 x 100	End cross member reinforced, Frame heigh 270mm
	81.41250.5148	160 x 100	Models T20 and T50 only
T31	81.41250.5122	None	Not for trailer couplings
	81.41250.5145	160 x 100	End cross member reinforced, Frame heigh 270mm
	81.41250.5146	160 x 100	End cross member reinforced, Frame heigh 330mm
	81.41250.5159	330 x 110	10 bolt connection for 100t coupling installation, semitrailer tractors
	81.41250.5160	330 x 110	10 bolt connection for 100t coupling installation, tippers andtruck chassis
T32	81.41250.5122	None	Not for trailer couplings
	81.41250.5133	140 x 80	Fifth-wheel overhang = 750mm, tow coupling only, not for trailer couplings, cannot be changed
	81.41250.5145	160 x 100	End cross member reinforced, Frame heigh 270mm
	81.41250.5146	160 x 100	End cross member reinforced, Frame heigh 330mm
	81.41250.5160	330 x 110	10 bolt connection for 100t coupling installation, tippers andtruck chassis

cardiagn.com

Table 27: Assignment to vehicle by vehicle range, model number and end cross member

F2000

Model no.	MAN item no.	Hole pattern [mm]	Notes
T33	81.41250.5133	140 x 80	Fifth-wheel overhang = 750mm, tow coupling only, not for trailer couplings, cannot be changed
	81.41250.5145	160 x 100	End cross member reinforced, Frame heigh 270mm
	81.41250.5146	160 x 100	End cross member reinforced, Frame heigh 330mm
	81.41250.5160	330 x 110	10 bolt connection for 100t coupling installation, tippers andtruck chassis
T34	81.41250.5122	None	Not for trailer couplings
	81.41250.5145	160 x 100	End cross member reinforced, Frame heigh 270mm
	81.41250.5159	330 x 110	10 bolt connection for 100t coupling installation, semitrailer tractors
	81.41250.5160	330 x 110	10 bolt connection for 100t coupling installation, tippers andtruck chassis
T35	81.41250.5145	160 x 100	End cross member reinforced, Frame heigh 270mm
T36	81.41240.5045	160 x 100	T06, T36, rigid drawbar / central axle trailer only with reinforcement plates 81.42022.0020/.0013
	81.41250.5146	160 x 100	End cross member reinforced, Frame heigh 330mm
T37	81.41250.5145	160 x 100	End cross member reinforced, Frame heigh 270mm
	81.41250.5146	160 x 100	End cross member reinforced, Frame heigh 330mm
T38	81.41250.5122	None	Not for trailer couplings
	81.41250.5145	160 x 100	End cross member reinforced, Frame heigh 270mm
	81.41250.5146	160 x 100	End cross member reinforced, Frame heigh 330mm
T39	81.41250.5122	None	Not for trailer couplings
	81.41250.5145	160 x 100	End cross member reinforced, Frame heigh 270mm
	81.41250.5159	330 x 110	10 bolt connection for 100t coupling installation, semitrailer tractors
	81.41250.5160	330 x 110	10 bolt connection for 100t coupling installation, tippers andtruck chassis
T40	81.41250.5122	None	Not for trailer couplings
	81.41250.5145	160 x 100	End cross member reinforced, Frame heigh 270mm
T42	81.41250.5122	None	Not for trailer couplings
	81.41250.5145	160 x 100	End cross member reinforced, Frame heigh 270mm
	81.41250.5159	330 x 110	10 bolt connection for 100t coupling installation, semitrailer tractors
	81.41250.5160	330 x 110	10 bolt connection for 100t coupling installation, tippers and truck chassis
T43	81.41250.5145	160 x 100	End cross member reinforced, Frame heigh 270mm
	81.41250.5160	330 x 110	10 bolt connection for 100t coupling installation, tippers and truck chassis

cardiagn.com

Table 27: Assignment to vehicle by vehicle range, model number and end cross member

F2000

Model no.	MAN item no.	Hole pattern [mm]	Notes
T44	81.41250.5145	160 x 100	End cross member reinforced, Frame heigh 270mm
	81.41250.5159	330 x 110	10 bolt connection for 100t coupling installation, semitrailer tractors
	81.41250.5160	330 x 110	10 bolt connection for 100t coupling installation, tippers andtruck chassis
T45	81.41250.5145	160 x 100	End cross member reinforced, Frame heigh 270mm
	81.41250.5146	160 x 100	End cross member reinforced, Frame heigh 330mm
T46	81.41250.5145	160 x 100	End cross member reinforced, Frame heigh 270mm
	81.41250.5146	160 x 100	End cross member reinforced, Frame heigh 330mm
	81.41250.5162	160 x 100	Not for trailer couplings
	81.41250.5167	160 x 100	Overhang = 700mm (900mm)
T48	81.41250.1324	160 x 100	100mm lower, Frame heigh 270mm
	81.41250.5122	None	Not for trailer couplings
	81.41250.5145	160 x 100	End cross member reinforced, Frame heigh 270mm
	81.41250.5159	330 x 110	10 bolt connection for 100t coupling installation, semitrailer tractors
	81.41250.5160	330 x 110	10 bolt connection for 100t coupling installation, tippers and truck chassis
	81.41250.5167	160 x 100	Overhang = 700mm (900mm)
T50	81.41250.5145	160 x 100	End cross member reinforced, Frame heigh 270mm
	81.41250.5148	160 x 100	Models T20 and T50 only
T62	81.41250.5122	None	Not for trailer couplings
	81.41250.5145	160 x 100	End cross member reinforced, Frame heigh 270mm
	81.41250.5160	330 x 110	10 bolt connection for 100t coupling installation, tippers andtruck chassis
T70	81.41250.5122	None	Not for trailer couplings
	81.41250.5145	160 x 100	End cross member reinforced, Frame heigh 270mm
T72	81.41250.5122	None	Not for trailer couplings
	81.41250.5145	160 x 100	End cross member reinforced, Frame heigh 270mm
	81.41250.5159	330 x 110	10 bolt connection for 100t coupling installation, semitrailer tractors
T78	81.41250.5122	None	Not for trailer couplings
	81.41250.5145	160 x 100	End cross member reinforced, Frame heigh 270mm
	81.41250.5159	330 x 110	10 bolt connection for 100t coupling installation, semitrailer tractors

cardiagn.com

Table 28: End cross members and technical data

MAN item no.	Hole pattern [mm]	D [kN]	S [kg]	C [kg]	R_C = C+S [kg]	D_C [kN]	V [kN]	Max. trailer load [kg]	t [mm]	Vehicle range	Notes
81.41240.5045	160 x 100	130	1000	13000	14000	90	35	D value	10	F2000	T06, T36, rigid drawbar / central axle trailer only with reinforcement plates 81.42022.0020/.0013in accordance with installation drawing 81.42001.8105
81.41250.0127	None	0	0	0	0	0	0	0	5	M2000	Not for trailer couplings
81.41250.1320	160 x 100	130	1000	13000	14000	90	35	D value	12	F2000	150mm lower than standard, for frame height 270mm
81.41250.1324	160 x 100	130	1000	13000	14000	90	35	D value	12	F2000	100mm lower than standard, for frame height 270mm
81.41250.1337	160 x 100	130	1000	13000	14000	90	35	D value	12	F2000	150mm lower than standard, for frame height 330mm
81.41250.2251	None	0	0	0	0	0	0	0	4	L2000	Not for trailer couplings
81.41250.5122	None	0	0	0	0	0	0	0	6	M2000	26t, L95, for frame thickness 7mm andframe height 268mm, not for trailer couplings
81.41250.5122	None	0	0	0	0	0	0	0	6	F2000	Not for trailer couplings
81.41250.5133	140 x 80	0	0	0	0	0	0	0	8	F2000	T02, T03, T32, T33, fifth-wheel overhang = 750mm, hole pattern for tow coupling only, not fortrailer couplings, cannot be changed
81.41250.5137	120 x 55	*	*	*	*	*	*	*	8	L2000	Basic part for 81.41250.5140* only with reinforcement plate 81.41291.2201
81.41250.5138	140 x 80	*	*	*	*	*	*	*	10	L2000	Replaced by 81.41250.5150* only with reinforcement plate 81.41291.2492
81.41250.5139	140 x 80	52	1000	10500	11500	52	25	10500	10	L2000	Replaced by 81.41250.5151
81.41250.5140	120 x 55	52	700	6500	7200	40	18	10500	8	L2000	4x2/2, for trailer coupling type G 135
81.41250.5141	160 x 100	0	0	0	0	0	0	0	8	F2000	Replaced by 81.41250.5162, not for trailer couplings, hole pattern only for assembly line installation
81.41250.5145	160 x 100	90	1000	16000	17000	90	50	20000	11	M2000	26t, L95, end cross member reinforced,for frame thickness 7mm and frame height 268mm
81.41250.5145	160 x 100	200	1000	18000	19000	130	70	D value	11	F2000	End cross member reinforced, for frame height 270mm
81.41250.5146	160 x 100	200	1000	18000	19000	130	70	D value	11	F2000	End cross member reinforced, for frame height 330mm
81.41250.5146	160 x 100	130	1000	9500	10500	67	35	D value	11	F2000	Models T20 and T50 only

Abbreviations: t: thickness of end cross member material R_c: Gross vehicle weight rating of rigid drawbar / central axle trailer

cardiagn.com

Table 28: End cross members and technical data

MAN item no.	Hole pattern [mm]	D [kN]	S [kg]	C [kg]	R_C =C+S [kg]	D_C [kN]	V [kN]	Max. trailer load [kg]	t [mm]	Vehicle range	Notes
81.41250.5150	140 x 80	*	*	*	*	*	*	*	10	L2000	Basic part for 81.41250.5151* only with reinforcement plate 81.41291.2492
81.41250.5151	140 x 80	60	1000	13000	14000	58	35	14000	10	L2000	End cross member reinforced
81.41250.5152	120 x 55	*	*	*	*	*	*	*	8	L2000	Basic part for 81.41250.5153* only with reinforcement plate 81.41291.2201
81.41250.5153	120 x 55	52	700	6500	7200	40	18	10500	8	L2000	All-wheel drive 4x4/2 or 4x2/2,50mm lower, for trailer coupling type G 135
81.41250.5154	160 x 100	60	1000	9500	10500	55	35	14000	10	M2000-L	12t, L70, L71, L72, L73, frame thickness 5mm,replaced by 81.41250.5158
81.41250.5154	160 x 100	84	1000	9500	10500	61	35	18000	10	M2000	13/14/15t, frame thickness 6-7mm,replaced by 81.41250.5158
81.41250.5154	160 x 100	90	1000	9500	10500	67	35	20000	10	M2000	18/25t, frame thickness 7-8mm,replaced by 81.41250.5158
81.41250.5155	120 x 55	52	700	6500	7200	40	18	10500	8	L2000	Fire service, additional hole pattern 83x56
81.41250.5155	83 x 56	17	80	2000	2080	17	10	2080	8	L2000	Fire service, additional hole pattern 120x55
81.41250.5156	160 x 100	60	1000	13000	14000	64	35	14000	12	M2000-L	12t, L70, L71, L72, L73, frame thickness 5mm,replaced by 81.41250.5158
81.41250.5156	160 x 100	84	1000	13000	14000	71	35	20000	12	M2000	13/14/15t, frame thickness 6-7mm,replaced by 81.41250.5158
81.41250.5156	160 x 100	90	1000	16000	17000	90	50	24000	12	M2000	18/25t, frame thickness 7-8mm,replaced by 81.41250.5158
81.41250.5158	160 x 100	60	1000	13000	14000	64	35	14000	11	L2000	10t all-wheel drive 4x4/2, L26, L27, HD design
81.41250.5158	160 x 100	60	1000	13000	14000	64	35	14000	11	M2000-L	12t, L70, L71, L72, L73, frame thickness 5mm,truck max. gross weight 11,990kg
81.41250.5158	160 x 100	84	1000	13000	14000	71	35	20000	11	M2000	13/14/15t, frame thickness 6-7mm
81.41250.5158	160 x 100	90	1000	16000	17000	90	50	24000	11	M2000	18/25t, frame thickness 7-8mm
81.41250.5159	330 x 110	314	0	0	0	0	0	D value	15	F2000	10 bolt connection for 100t coupling installation,semitrailer tractors
81.41250.5160	330 x 110	314	0	0	0	0	0	D value	15	F2000	10 bolt connection for 100t coupling installation,tippers and truck chassis

Abbreviations: t: thickness of end cross member material R_c: Gross vehicle weight rating of rigid drawbar / central axle trailer

cardiagn.com

Table 28: End cross members and technical data

MAN item no.	Hole pattern [mm]	D [kN]	S [kg]	C [kg]	R_C = C+S [kg]	D_C [kN]	V [kN]	Max. trailer load [kg]	t [mm]	Vehicle range	Notes
81.41250.5161	160 x 100	55	700	6500	7200	40	18	10500	8	M2000	Fire service, additional hole pattern 83x56,replaced by 81.41250.5163
81.41250.5161	83 x 56	18	80	2000	2080	18	10	2080	8	M2000	Fire service, additional hole pattern 160x100,replaced by 81.41250.5163
81.41250.5162	160 x 100	0	0	0	0	0	0	0	8	F2000	Hole pattern for assembly line installation only,not for trailer couplings
81.41250.5163	160 x 100	55	700	6500	7200	40	18	10500	8	M2000	13/14/15t, frame thickness 6-7mm,fire service, additio-nal hole pattern 83x56
81.41250.5163	83 x 56	18	80	2000	2080	18	10	2080	8	M2000	13/14/15t, frame thickness 6-7mm,fire service, additio-nal hole pattern 160x100
81.41250.5167	160 x 100	200	1000	18000	19000	130	70	D value	11	F2000	T46, T48, overhang = 700mm (900mm) (centre part like 81.41250.5145)
81.41250.5168	160 x 100	53	1000	9500	10500	53	25	10500	8	L2000	Tool and gear truck model L26, fittings for hydraulic PTO shaft, with reinforcement plates 81.42022.0013and 81.42022.0014
81.41250.5170	140 x 80	60	1000	13000	14000	58	35	14000	10	L2000	Allrad 4x4/2, 100mmlower, End cross member rein-forced

Abbreviations: t: thickness of end cross member material R_c: Gross vehicle weight rating of rigid drawbar / central axle trailer

cardiagn.com

Table 29: Installation drawings for trailer couplings

Vehicle range	Trailer coupling model	Trailer coupling manufacturer	Hole pattern in [mm]	Ø Pin in [mm]	Installation drawing MAN no.	Notes
L2000	260 G 135	Rockinger	120 x 55	40	81.42000.8031	Replaces 81.42000.8094
	86 G 135	Ringfeder	120 x 55	40	81.42000.8031	Replaces 81.42000.8094
	86 G 145	Ringfeder	140 x 80	40	81.42000.8095	
	260 G 145	Rockinger	140 x 80	40	81.42000.8095	
	864	Ringfeder	140 x 80	40	81.42000.8095	
	260 G 150	Rockinger	160 x 100	40	81.42000.8107	
	400 G 150	Rockinger	160 x 100	40	81.42000.8107	
	86 G 150	Ringfeder	160 x 100	40	81.42000.8107	
	TK 226 A	Rockinger	83 x 56	40	81.42000.8116	Fire service
	D 125	Oris	83 x 56	ball	81.42000.8101	Up to 3.5t, see 81.42001.6142
	D 125/1	Oris	83 x 56	ball	81.42030.6014	Up to 2.2t, replaced by D 125
	D 85 A	Oris	83 x 56	ball	81.42030.6014	Up to 2.2t, replaced by D 125
M2000	260 G 150	Rockinger	160 x 100	40	81.42000.8107	
	400 G 150	Rockinger	160 x 100	40	81.42000.8107	
	86 G 150	Ringfeder	160 x 100	40	81.42000.8107	
	340 G 150	Rockinger	160 x 100	40	81.42000.8106	Overhang > 750mm
	430 G 150	Rockinger	160 x 100	40	81.42000.8106	Overhang > 750mm
	95 G 150	Ringfeder	160 x 100	40	81.42000.8111	Overhang > 750mm
	98 G 150	Ringfeder	160 x 100	40	81.42000.8112	Overhang > 750mm, Switzerland
	263 G 150	Rockinger	160 x 100	40	81.42000.8108	Switzerland
	88 G 150	Ringfeder	160 x 100	40	81.42000.8108	Switzerland
	865	Ringfeder	160 x 100	40	81.42000.8105	
	500 G 6	Rockinger	160 x 100	50	81.42000.8105	
	700 G 61	Rockinger	160 x 100	50	81.42000.8105	
	81/CX	Ringfeder	160 x 100	50	81.42000.8105	
	92/CX	Ringfeder	160 x 100	50	81.42000.8105	
	TK 226 A	Rockinger	83 x 56	40	81.42000.8116	Fire service

cardiagn.com

Table 29: Installation drawings for trailer couplings

Vehicle range	Trailer coupling model	Trailer coupling manufacturer	Hole pattern in [mm]	Ø Pin in [mm]	Installation drawing MAN no.	Notes
F2000	260 G 150	Rockinger	160 x 100	40	81.42000.8107	
	400 G 150	Rockinger	160 x 100	40	81.42000.8107	
	86 G/150	Ringfeder	160 x 100	40	81.42000.8107	
	42 G 250	Rockinger	160 x 100	40	81.42000.8084	
	340 G 150	Rockinger	160 x 100	40	81.42000.8106	Overhang > 750mm
	430 G 150	Rockinger	160 x 100	40	81.42000.8106	Overhang > 750mm
	95 G 150	Ringfeder	160 x 100	40	81.42000.8111	Overhang > 750mm
	98 G 150	Ringfeder	160 x 100	40	81.42000.8112	Overhang > 750mm, Switzerland
	263 G 150	Rockinger	160 x 100	40	81.42000.8108	Switzerland
	88 G 150	Ringfeder	160 x 100	40	81.42000.8108	Switzerland
	865	Ringfeder	160 x 100	40	81.42000.8105	
	500 G 6	Rockinger	160 x 100	50	81.42000.8105	
	700 G 61	Rockinger	160 x 100	50	81.42000.8105	
	81/CX	Ringfeder	160 x 100	50	81.42000.8105	
	92/CX	Ringfeder	160 x 100	50	81.42000.8105	

cardiagn.com

4.16.5 Ball-type coupling

Like all rear loads, even low nose weights have an effect on the axle load distribution. Therefore, use an axle load calculation to check whether trailer nose weights are possible. This is particularly important when there are additional rear loads (e.g. tail-lift, rear loading crane).

Other requirements for fitting ball-type couplings are as follows:

- Ball-type coupling must be adequately sized (trailer nose weight, trailer load)
- Design-approved trailer bracket
- Installation without a trailer bracket, i.e. attachment to the rear underride guard only, is not permitted by MAN
- The trailer bracket must be attached to the vertical webs of the main frame (attachment just to the lower flange of the main frame is not permitted by MAN)
- Follow the instructions in the installation manual/guidelines of the trailer bracket and ball-type coupling manufacturers
- Observe the clearance dimensions, e.g. to VBG-12 and DIN 74058 (see Figs. 42 and 43)
- The testing authority (e.g. DEKRA, TÜV) must check for adequate size and suitable connection to the vehicle frame when the trailer coupling is registered
- An approved and registered gross vehicle weight must be observed.

If the requirements are met, a trailer load of 3,500kg can be registered for vehicles from the M2000L, M2000M and F2000 ranges (for definition of ranges, see the „General“ chapter). For the L2000 model range a maximum gross vehicle weight of 10,400 kg must be observed if a 5-speed gearbox is fitted and the vehicle also has the longest final drive ratio of i = 3.9. All other L2000 models up to 10,000 kg permissible gross weight can also accommodate a trailer load of 3,500kg.

4.16.6 Fifth-wheel coupling

Semitrailers and semitrailer tractors must be checked to see if their weight and size are suitable for forming an articulated vehicle.

The following must therefore be checked:

- Slew radii
- Fifth-wheel height
- Fifth-wheel load
- Freedom of movement of all parts
- Legal conditions
- Adjusting instructions for the braking system.

To achieve maximum fifth-wheel load the following actions are required before the vehicle goes into operation:

- Weigh the vehicle
- Calculate the axle loads
- Determine the optimum distance between the rear axle and the fifth-wheel kingpin (fifth-wheel lead)
- Check the front slew radius
- Check the rear slew radius
- Check the front angle of inclination
- Check the rear angle of inclination
- Check the overall length of the articulated vehicle
- Install the fifth-wheel coupling accordingly.

The required angles of inclination are 6° to the front, 7° to the rear and 3° to the side in accordance with DIN-ISO 1726.
Different tyre sizes, spring rates or fifth-wheel heights between tractor unit and semitrailer reduce these angles so that they no longer comply with the standard.

In addition to the inclination of the semitrailer to the rear, the side inclination when cornering, suspension compression travel (axle guides, brake cylinder), the anti-skid chains, the pendulum movement of the axle unit on vehicles with tandem axles and the slew radii must also be taken into account.

cardiagn.com

Fig. 47: Dimensions for semitrailer tractor units ESC-002

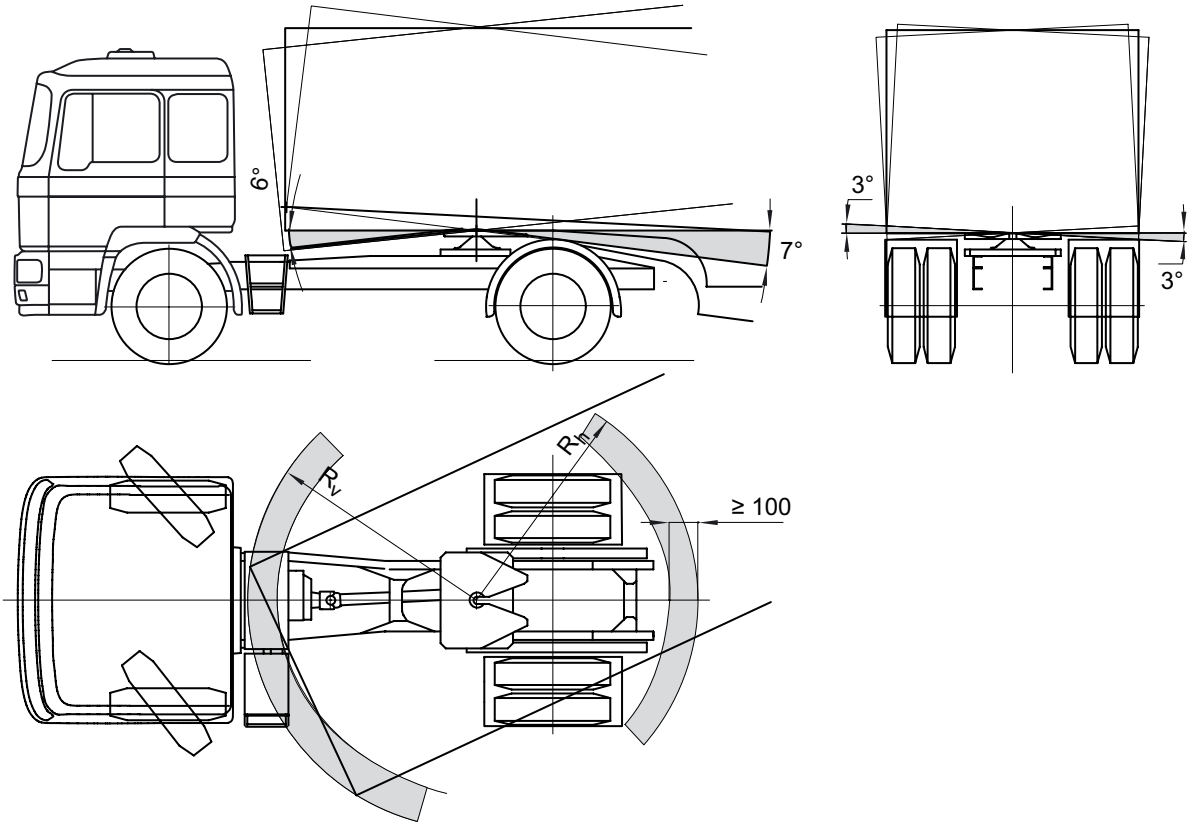

A specific minimum fifth-wheel height must be observed. The distance between the rear axle and the fifth-wheel kingpin (fifth-wheel lead), as stated in the sales documentation or the chassis drawings, is applicable to the standard vehicle only.
In some circumstances, equipment that affects the vehicle's unladen weight or the vehicle dimensions requires the distance between the fifth-wheel lead to be modified. This could also change the payload capacity and the combined vehicle length.

Only type-approved fifth-wheel coupling base plates may be used. Type-approved components have an approval mark, in this case in accordance with Directive 94/20/EC. EU approval marks can be identified by their eXX – number (XX: 1- or 2-figure number), usually in a rectangular frame, followed by a further group of figures in the format XX-XXXX (2 and 4-figure number, e.g.: e1 00-0142.
Base plates that require drilling of the flanges of the frame or subframe are not permitted.

Installing a fifth-wheel coupling without a subframe is also not permitted. The size of the subframe and the quality of the material ($\sigma_{0,2} \geq 360 N/mm^2$) must be the same as for a comparable production vehicle. The fifth-wheel coupling base plate must rest only on the fifth-wheel subframe and not on the frame longitudinal members. The mounting plate must be attached only using bolts approved by MAN or by the fifth-wheel coupling base plate manufacturer (see also the Chapter „Modifying the chassis", section „Drill holes, riveted joints and screw connections on the frame"). Observe the tightening torques and check them at the next maintenance service!

Follow the instructions/guidelines of the fifth-wheel coupling manufacturers.

The plane of the fifth-wheel pick-up plate on the semitrailer should run parallel with the road at permissible fifth-wheel load.
The height of the fifth-wheel coupling must be designed accordingly, taking into account the free tolerances specified in DIN-ISO 1726.

Connecting pipes/cables for air supply, brakes, electrics and ABS must not chafe on the body or snag during cornering.
Therefore the body builder must check the freedom of movement of all cables/pipes when cornering with a semitrailer.
When operating without a semitrailer, all pipes/cables must be attached securely in dummy couplings or connectors.

cardiagn.com

The following fifth-wheel kingpins are available:

- Fifth-wheel kingpin 50, 2“ diameter
- Fifth-wheel kingpin 90, 3.5“ diameter.

Which one to be used depends upon various factors. As for trailer couplings the deciding factor is the D value.
The smaller of the two D values for the kingpin and the fifth-wheel coupling applies for the articulated vehicle as a whole.
The D value itself is marked on the model plates.

The following formulae are used to calculate the D value:

Formula 17: D value for fifth-wheel coupling

$$D = \frac{0{,}6 \cdot 9{,}81 \cdot T \cdot R}{T + R - U}$$

If the D value is known and the permissible gross weight of the semitrailer is required then the following formula applies:

Formula 18: Permissible gross weight of the semitrailer

$$R = \frac{D \cdot (T - U)}{(0{,}6 \cdot 9{,}81 \cdot T) - D}$$

If the permissible gross weight of the semitrailer and the D value of the fifth-wheel coupling are known, the permissible gross weight of the semitrailer tractor unit can be calculated with the following formula:

Formula 19: Permissible gross weight of the tractor unit

$$T = \frac{D \cdot (R \cdot U)}{(0{,}6 \cdot 9{,}81 \cdot R) - D}$$

If the fifth-wheel load is required and all other loads are known, the following formula can be used to calculate the fifth-wheel load:

Formula 20: Fifth-wheel load

$$U = T + R - \frac{0{,}6 \cdot 9{,}81 \cdot T \cdot R}{D}$$

Where:

D	=	D value, in [kN]
R	=	Permissible gross weight of the semitrailer, in [t], including the fifth-wheel load
T	=	Permissible gross weight of the tractor unit, in [t], including the fifth-wheel load
U	=	Fifth-wheel load, in [t]

Examples of calculations can be found in Chapter 9 „Calculations“.

cardiagn.com

4.16.7 Converting the vehicle type - truck / tractor

Depending on the chassis conversion to a tractor unit or to a truck requires modifications to the braking system. MAN approval is thus required to convert a truck into a tractor unit or vice versa. The ESC Department can provide information and confirmation of the changes to the braking system (for address see „Publisher“ above).
The following data must be supplied: Vehicle identification number and vehicle number (for definition, see the „General“ chapter).

If a fifth-wheel coupling is to be installed, only design-approved and MAN-approved base plates may be used. Approval by a testing agency (e.g. TÜV, DEKRA) does not constitute a design approval and does not replace a MAN approval.

Base plates may only be attached to a subframe. The subframe cross-section and strength must at least correspond with that of a comparable subframe on a production vehicle. See above for the installation of subframe, base plate and fifth-wheel coupling.

Air and electrical connections must be relocated so that they can be safely connected and disconnected and so that the pipes/cables are not damaged by the movement of the semitrailer. If electrical cables have to be modified, wiring harnesses for comparable MAN semitrailer tractor units must be fitted. These can be obtained from the spare parts service. When modifying the standard electrical system always follow the instructions in the „Electrics, wiring“ Chapter.

If it not possible to connect up the air and electrical connections from the road, a suitable work area measuring at least 400mm x 500mm must be provided, as must access steps to this area.

If the frame, wheelbase or frame overhang has to be modified, follow the instructions described in the Chapter „Modifying the chassis“.

To prevent pitching, the rear suspension of the comparable MAN tractor unit must be fitted. A rear axle anti-roll bar must be fitted.

In conversion of a tipper chassis to a tractor unit the rear suspension does not need to be converted (but there will be loss of comfort due to the harder tipper suspension). When converting a tractor unit into a tipper chassis the rear suspension of a comparable tipper vehicle must be installed.

5. Bodies

5.1 General

For identification purposes, each body must be fitted with a model plate that must contain the following minimum data:

- Full name of body manufacturer
- Serial number.

The data must be marked permanently on the model plate.

Bodies have a significant influence on handling properties and the vehicle’s resistance to movement and consequently also on fuel consumption. As a result, bodies must not unnecessarily:

- Increase running-resistance
- Impair handling characteristics.

The unavoidable bending and twisting of the frame should not give rise to any undesirable properties in either the body or the vehicle. The body must be able to absorb such forces safely. To ensure this on platform bodies for example, three-part dropsides are available. The approximate value for unavoidable bending is as follows:

Formula 21: Approximate value for permissible bending

$$f = \frac{\Sigma_1^i \; l_i + l_ü}{200}$$

cardiagn.com

Where:

f	=	Maximum bending, in [mm]
l_i	=	Wheelbases, Σl_i = sum of the wheelbases, in [mm]
$l_ü$	=	Frame overhang, in [mm]

The moment of resistance affects the bending stress, and the geometrical moment of inertia affects bending and the vibration behaviour. Therefore it is important that both the moment of resistance and the geometrical moment of inertia are sufficient.
The body should transfer as few vibrations as possible to the chassis.
The conditions under which the vehicle will be used at its work location are the decisive factors for its design.
We stipulate that body manufacturers should at the very least be able to determine approximate ratings for the subframe and assembly.
The body builder is expected to take suitable measures to ensure that the vehicle is not overloaded.
The MAN frame data required for designing the subframes can be obtained from:

- The table „Frame longitudinal members“ in the „Modifying the chassis“ Chapter
- Our MANTED® on-line service (www.manted.de)
- The chassis drawing (also available via MANTED®).

The body builder must take account of all other unavoidable tolerances in vehicle design.

These include, for example, tolerances for:

- The tyres
- The springs
- The frame.

When the vehicle is in use, other dimensional changes can be expected and these also have to be taken into consideration in the designing of the body.

These include:

- Settling of the springs
- Tyre deformation
- Body deformation.

The frame must not be deformed before or during installation. Before positioning the vehicle for installation, it should be driven backwards and forwards a few times to release any trapped stresses arising from torsional moments. This is particularly applicable to vehicles with tandem axle units because of the secondary bending of the axles during cornering. The vehicle should be placed on level ground to install the body. If possible, the maintenance intervals of the bodies should be matched to those of the chassis so that maintenance costs are kept low.

cardiagn.com

5.1.1 Accessibility, Clearances

Access to the filler necks for fuel and if fitted, urea tanks must be ensured as must access to all other frame components (e.g. spare wheel lift, battery box). The freedom of movement of moving parts in relation to the body must not be adversely affected. To ensure minimum clearances the following should be taken into account:

- Maximum compression of the springs
- Dynamic compression during the journey
- Compression when starting off or braking
- Side tilt when cornering
- Operation with anti-skid chains
- Limp-home mode properties, for example damage to an air spring bellows during a journey and the resulting side tilt (e.g. side tilt for semitrailer tractor units is 3°, in accordance with ISO 1726. See also the „Coupling equipment“ Chapter).

The above-mentioned criteria may sometimes occur simultaneously. Neither tyres nor tyre chains must come into contact with the body. We recommend a residual clearance of at least 30mm (with the above-mentioned criteria taken into account). The values given in Table 30 for the installed heights of chains are for information only and will differ according to chain manufacturer and design.

Fig. 48: Installed dimensions for snow or similar chains ESC-033

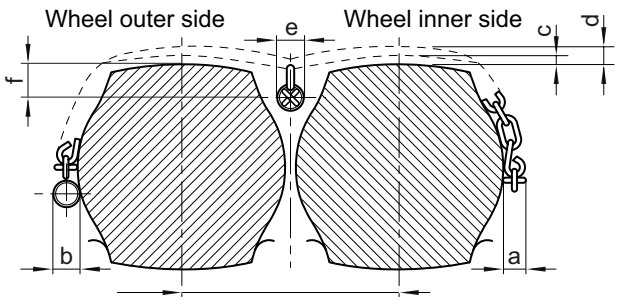

Tyres – distance between centres

Table 30: Dynamic dimensions, chains

Source: Rud Kettenfabrik Rieger u. Dietz, D-73428 Aalen

Size	Tyre designation	a [mm]		b [mm]		c [mm]		d [mm]		e [mm]	f [mm]
		single	twin	single	twin	single	twin	single	twin	twin	twin
17,5°	215/75 R 17.5	20	23	36	42	24	28	60	70	42	60
	225/75 R 17.5	20	23	36	42	24	28	60	70	42	60
	235/75 R 17.5	20	23	36	42	24	28	60	70	42	60
	245/75 R 17.5	20	23	36	42	24	28	60	70	42	60
	245/75 R 17.5	20	23	36	42	24	28	60	70	42	60
19,5°	245/70 R 19.5	23	26	38	45	28	32	70	80	48	70
	265/70 R 19.5	23	26	38	45	28	32	70	80	48	70
	285/70 R 19.5	23	26	38	45	28	32	70	80	48	70
	305/70 R 19.5	23	26	38	45	28	32	70	80	48	70
20,0°	335/80 R 20	26	26	38	45	32	32	70	80	48	70
	365/80 R 20	26	26	38	45	32	32	70	80	48	70
	365/85 R 20	26	26	38	45	32	32	70	80	48	70
	375/70 R 20	26	26	38	45	32	32	70	80	48	70
22,5°	10 R 22,5	23	26	38	45	28	32	70	80	48	70
	11 R 22,5	26	26	45	45	32	32	80	80	48	70
	12 R 22,5	26	26	45	45	32	32	80	80	48	70
	13 R 22,5	26	26	45	45	32	32	80	80	48	70
	255/70 R 22.5	23	26	38	45	28	32	70	80	48	70
	275/70 R 22.5	23	26	38	45	28	32	70	80	48	70
	285/60 R 22.5	26	26	45	45	32	32	80	80	48	70
	295/60 R 22.5	26	26	45	45	32	32	80	80	48	70
	295/80 R 22.5	26	26	38	45	32	32	70	80	48	70
	305/60 R 22.5	23	26	38	45	28	32	70	80	48	70
	305/70 R 22.5	23	26	38	45	28	32	70	80	48	70
	315/60 R 22.5	23	26	38	45	28	32	70	80	48	70
	315/70 R 22.5	26	26	38	45	32	32	70	80	48	70
	315/80 R 22.5	26	26	38	45	32	32	70	80	48	70
	385/65 R 22.5	26	26	38	45	32	32	80	80	48	70
	425/65 R 22.5	26	26	38	45	32	32	80	80	48	70

cardiagn.com

On lifting axles the clearance also needs to be checked with the axle lifted. The lift travel must be greater than the spring travel on the drive axle to prevent the lifted axle from coming into contact with the ground during dynamic compression of the drive axle.

The lifting function may be restricted on account of:

- The position of the lower edge of the body (e.g. low bodies)
- Load distribution (e.g. loading crane on the end of the frame).

In such cases, MAN recommends abandoning the axle-lifting option. It must be disabled if, when travelling unladen with the axle lifted, ≥ 80% of the permissible drive axle load is reached or ≥ 25% of the front axle load is not reached.

5.1.2 Lowering the body

If vehicles are fitted with smaller tyres, then the body can, in some circumstances, be lowered by the dimension „h_δ“ using the following formula:

Formula 22: The difference in the dimensions – for lowering the body

$$h_\delta = \frac{d_1 - d_2}{2}$$

Where:

h_δ	=	Difference in dimensions for lowering in [mm]
d_1	=	Outer diameter of the larger tyre in [mm]
d_2	=	Outer diameter of the smaller tyre in [mm]

Because the distance between the upper edge of the frame and the upper edge of the tyre is reduced by dimension „h_δ“ , the body can also be lowered by this amount if there are no other reasons to prevent it. Other reasons may be for example, parts that protrude beyond the upper edge of the frame.

If a body is to be lowered even more, the following effects must be checked:

- Maximum static compression with the vehicle fully laden (= the condition drawn in the chassis drawing)
- Additional dynamic spring travel
- Side tilt on cornering (approx. 7° without anti-skid chains)
- Installed heights of the anti-skid chains
- Freedom of movement of components that may protrude above the upper edge of the frame when there is maximum compression, e.g. brake cylinders
- Free movement of transmission and shift linkage.

These criteria may also occur simultaneously.

5.1.3 Platforms and steps

Steps and walk-on platforms must comply with the relevant accident prevention regulations. Gratings or panels stamped out on alternate sides are recommended. Closed panels or panels stamped on just one side are not permitted. Cover panels must be designed so that any water that runs off them cannot enter the gearbox breather.

cardiagn.com

5.1.4 Corrosion protection

In general, the quality of the coatings on body components should be equal to that of the chassis.
To ensure this requirement is met, the MAN Works Standard M 3297 „Corrosion protection and coating systems for non-MAN bodies“ is binding for bodies that are ordered by MAN. If the customer commissions the body, this standard becomes a recommendation only. Should the standard not be observed, MAN provides no guarantee for any consequences.
MAN works standards may be sourced via the ESC department (for address see “Publisher” above). Series production MAN chassis are coated with environmentally friendly, water-based 2-component chassis top-coat paints at approx. 80°C. To guarantee uniform coating, the following coating structure is required for all metal component assemblies on the body and subframe and, following frame modifications, on the chassis::

- Bare metal or blasted component surface (SA 2.5)
- Primer coat: 2-component epoxy primer or, if possible;
- Cathodic dip painting to MAN works standard M 3078-2, with zinc phosphate pre-treatment
- Top coat: 2-component top-coat paint to MAN works standard M 3094, preferably water-based.

In place of primer and top coat galvanising the bodywork substructure (e.g. frame side members, cross members and corner plates) is also possible. The coating thickness must be ≥ 80 µm.
See the relevant paint manufacturer’s data sheets for information on tolerances for drying and curing times and temperatures.
When selecting and combining materials their compatibility must be also taken into consideration; e.g. the electrochemical series (cause of galvanic corrosion).

After all work on the chassis has been completed:

- Remove any drilling swarf
- Remove burrs from the edges
- Apply wax preservative to any cavities.

Mechanical connections (e.g. bolts, nuts, washers, pins) that have not been painted over, must be given optimum corrosion protection.
To prevent the occurrence of salt corrosion whilst the vehicle is stationary during the body-building phase, all chassis must be washed with clean water to remove any salt residues as soon as they arrive at the body manufacturer’s premises.

5.2 Subframes

The subframe must have the same outer width as the chassis frame and must follow the outer contour of the main frame.
Exceptions to this require prior approval from the ESC Department at MAN, (for address see “Publisher” above).

Should a subframe be required it must be of a continuous design, it may not be interrupted or bent out to the side (exceptions in the case of some tippers etc. require approval).

The longitudinal members of the subframe must lie flat on the upper flange of the frame longitudinal member.

Point loads must be avoided. As far as possible the subframe should be designed to be flexible. Torsionally stiff box sections should be used only if no other design option is possible (exceptions apply for loading cranes, see „Loading cranes“ in this Chapter → 5.3.8).
The usual chamfered u-profiles used in vehicle construction are the best in terms of complying with the requirement for torsional flexibility. Rolled sections are not suitable.

If a subframe is closed at various points to form a box, the transition from the box to the U-section must be gradual. The length of the transition from the closed to the open section must be at least three times the height of the subframe (see Fig. 49).

cardiagn.com

Fig. 49: Transition from box- to U-section ESC-043

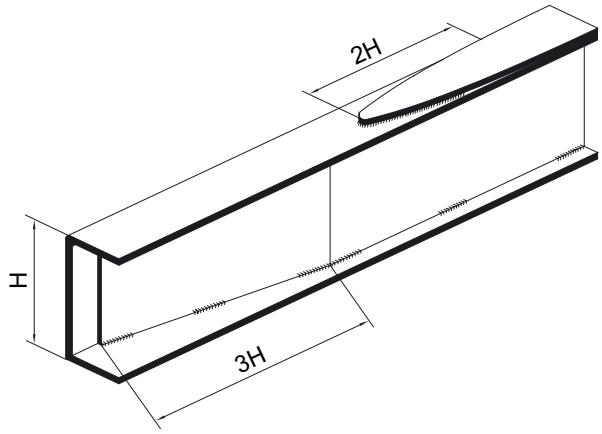

The subframe sizes recommended by us do not free the body builder from his obligations to check again that the subframes are suitable.

The yield point, also called elongation limit or $\sigma_{0,2}$ limit, must not be exceeded under any driving or load conditions.
The safety coefficients must be taken into account.

Recommended safety coefficients:

- 2.5 when the vehicle is being driven
- 1.5 for loading while stationary.

See Table 31 for the yield points for different subframe materials.

Table 31: Yield points of subframe materials

Material No.	Old material designation	Old standard	$\sigma_{0,2}$ [N/mm²]	$\sigma_{0,2}$ [N/mm²]	New material designation	New standard	Suitability for chassisframe / subframe
1.0037	St37-2	DIN 17100	≥ 235	340-470	S235JR	DIN EN 10025	not suitable
1.0570	St52-3	DIN 17100	≥ 355	490-630	S355J2G3	DIN EN 10025	well suited
1.0971	QStE260N	SEW 092	≥ 260	370-490	S260NC	DIN EN 10149-3	only for L2000 4x2, not for point loads
1.0974	QStE340TM	SEW 092	≥ 340	420-540	(S340MC)		not for point loads
1.0978	QStE380TM	SEW 092	≥ 380	450-590	(S380MC)		well suited
1.0980	QStE420TM	SEW 092	≥ 420	480-620	S420MC	DIN EN 10149-2	well suited
1.0984	QStE500TM	SEW 092	≥ 500	550-700	S500MC	DIN EN 10149-2	well suited

Materials S235JR (St37-2) and S260NC (QstE260N) are unsuitable for subframes or are only suitable to a limited degree.
They are permitted if only line loads occur. To reinforce a frame or when equipment with locally applied forces (such as tail-lifts, cranes and cable winches) are fitted, steels with a yield point $\sigma_{0,2}$ ≥ 350 N/mm² are required.

Sharp edges must not act on the frame longitudinal members. Therefore deburr edges well, round them off or chamfer them.

cardiagn.com

The height of the frame longitudinal members on vehicles from the F2000 range may be 270mm instead of 330mm, depending on the model, wheelbase and design. If the height of the frame longitudinal member is 270mm, a continuous subframe must be used (the exception being self-supporting bodies without subframes, see Section 5.2.2.4 and interchangeable bodies, see Section 5.3.7 in this Chapter). The frame longitudinal member tables at the beginning of Chapter 4 „Modifying the chassis“ allocate a corresponding frame longitudinal member height to each vehicle. Subframes and frame longitudinal members must together, have at least the same geometrical moment of inertia and moment of resistance as a frame longitudinal member that is 330mm high. Whether a rigid or flexible connection is selected depends on the respective body situation. A body without a subframe is feasible if the conditions in Section 5.2.2.4 „Self-supporting bodies without subframe“ are observed and if there is a guarantee that the body structure will bear the additional loading.

No moving parts may be restricted in their freedom of movement by the subframe structure.

5.2.1 Designing the subframe

The following vehicles require a continuous subframe:

- L2000: all model numbers
- M2000L, M2000M model numbers in Table 32.

Table 32: Models for which a continuous subframe is required

Tonnage	Model		Tonnage	Model		Tonnage	Model
L2000			**M2000L**			**M2000M**	
8/9t	L20		12t	L70		14t	M31
	L21			L71			M32
	L22			L72			M33
	L23			L73			M34
	L33		14t	L74			
	L34			L75			
10t	L24			L76			
	L25			L77			
	L26			L79			
	L27			L80			
	L35		15/20t	L81			
	L36			L82			
				L83			
				L84			
				L86			

cardiagn.com

Subframe longitudinal members must exhibit a planar moment of inertia of ≥ 100cm^4 . Sections that comply with this geometrical moment of inertia are, for example:

- U 90/50/6
- U 95/50/5
- U 100/50/5
- U 100/55/4
- U 100/60/4
- U 110/50/4.

Minimum quality: S355J2G3 (= St 52-3) or other steel material with a yield point of $\sigma_{0,2}$ ≥ 350 N/mm². Materials with a lower yield point are permitted only if just line loads occur.

If possible arrange the subframe cross member above the position of the frame cross member.

During installation of the subframe the main frame connections must not be detached.

Fig. 50: Designing the subframe ESC-096

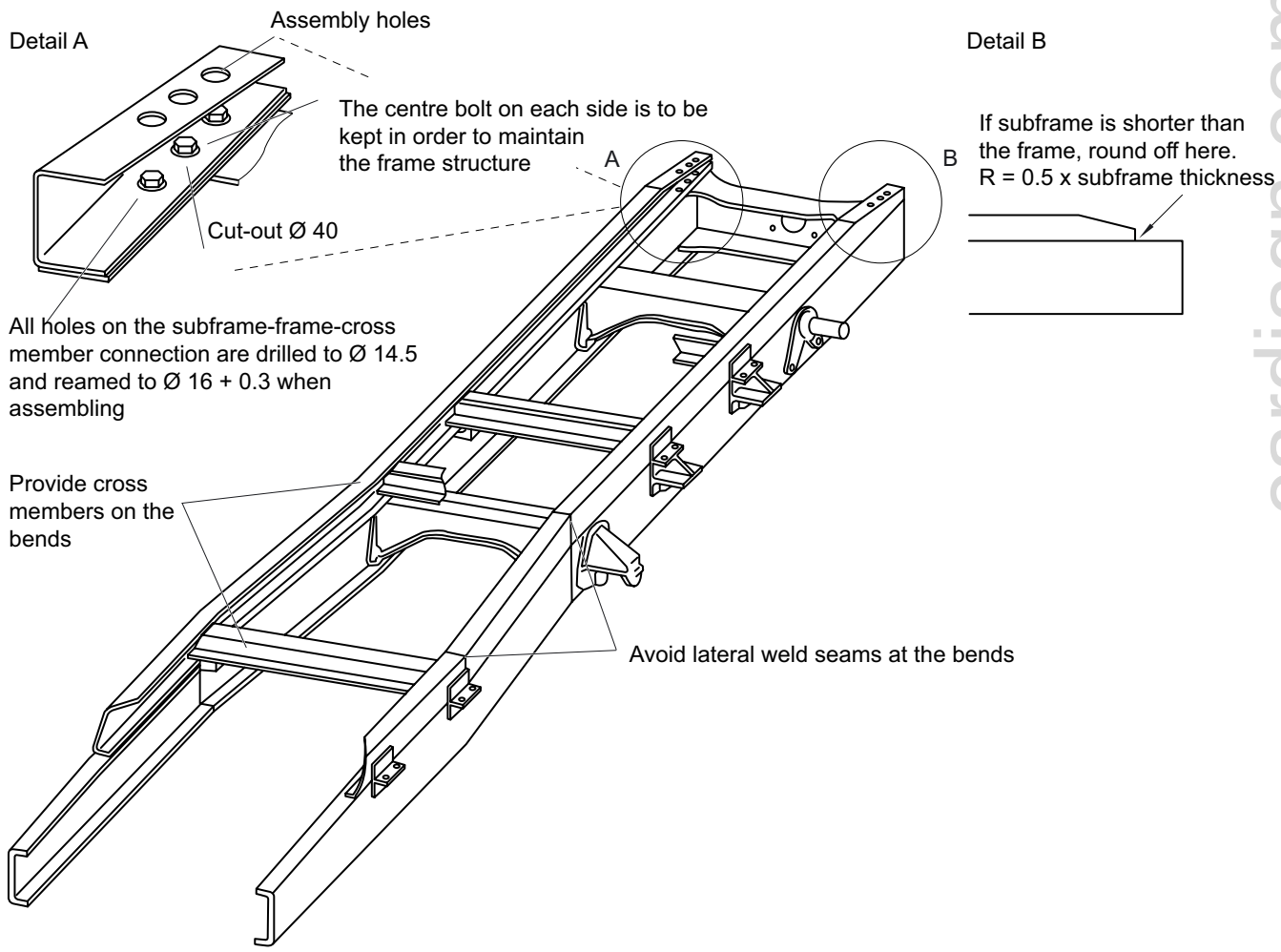

The subframe longitudinal member must reach as far forward as possible and at least beyond the rear front spring bracket (see Fig. 51). If the first axle is air-sprung we recommend a distance „a“ of ≤ 600mm between the centre of the wheel on the 1st axle and the start of the subframe.

cardiagn.com

Fig. 51: Distance of subframe from centre of first axle ESC-097

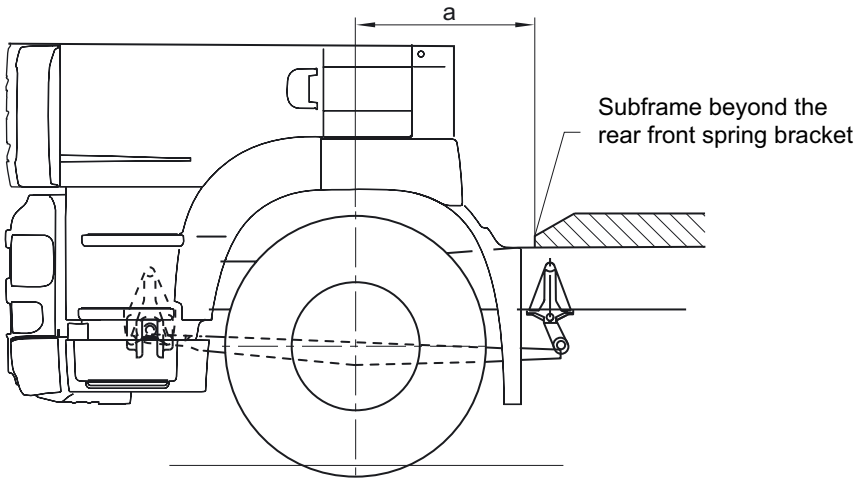

So that the required dimensions can be adhered to, the subframe must follow the contour of the frame; it can be chamfered or cut out at the front (for examples, see Figs 52 to 55).

Fig. 52: Chamfering the subframe at the front ESC-030

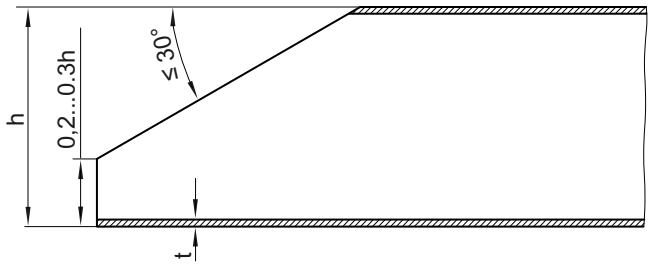

Fig. 53: Cutting out the subframe at the front ESC-031

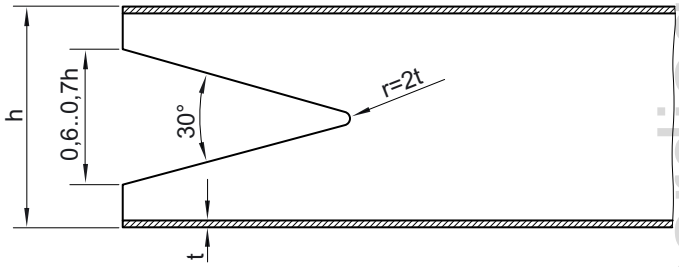

Fig. 54: Subframe – adapting it by expanding it ESC-098

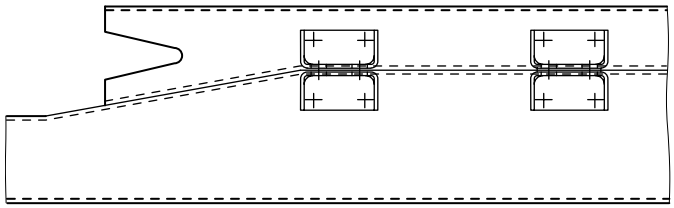

Fig. 55: Subframe – adapting it by chamfering it ESC-099

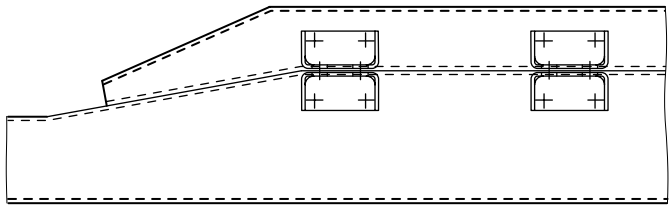

cardiagn.com

5.2.2 Attaching subframes and bodies

Subframe and vehicle frame are to be joined using either a flexible or rigid connection. Depending on the body situation, it is possible, or even necessary, to use both types of connection at the same time (this is then referred to as semi-rigid where the length and area of the rigid connection are stated). How these joints are used is determined by strength. Rigid connections are to be used if a flexible connection is no longer sufficient.

Only with rigid connections can the „Steiner principle“ be applied to both frame and subframe together. This can be used to determine the geometrical moment of inertia of the entire frame and subframe assembly.

The mounting brackets fitted by MAN or supplied loose by MAN are intended only for the installation of loading platforms and box bodies. This does not mean that they are unsuitable for other body components and bodies. However, a check must be made to see whether they are strong enough when driven equipment and machines, lifts, tanker bodies etc. are installed.

The forces introduced from the body into the subframe – in particular the body fixture with respect to the frame structure – and the associated connections to the main frame are the responsibility of the body manufacturer.

Wooden inserts or flexible shims between the frame and the subframe or the frame and the body are not permitted (see Fig. 56). Exceptions are permitted only after consultation (ESC Department – for address see „Publisher“ above).

Fig. 56: Flexible shims ESC-026

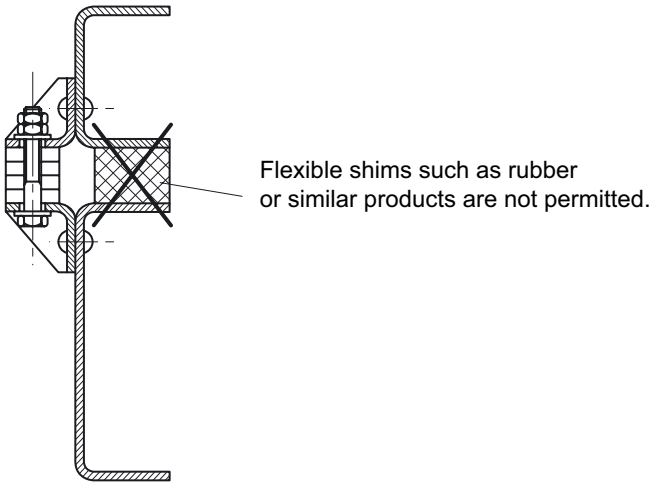

5.2.2.1 Screw connections and riveted joints

Screw connections with a minimum strength class of 10.9 and mechanical locking device are permitted. MAN recommends double nip bolts/nuts. The nut material must be the same as the bolt material. Observe the tightening torques stipulated by the bolt manufacturer.

It is also possible to use high-strength rivets (e.g. Huck®-BOM or blind fasteners – manufacturers’ installation instructions must be followed. The riveted joint must be at least the same as the bolt connection in terms of design and strength.

In principle – although never tested by MAN – it is also possible to use flange bolts. MAN draws your attention to the fact that such flange bolts place considerable requirements on installation accuracy because they have no locking device as such.
This applies particularly when the grip length is short.

cardiagn.com

Fig. 57: Riveted joint on open and closed sections ESC-157

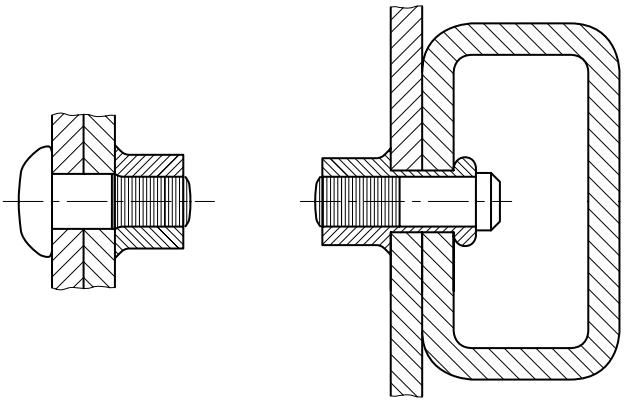

5.2.2.2 Flexible connections

Flexible connections are non-positive/frictional connections. Relative movement between frame and subframe is possible to a limited degree. All bodies or subframes that are bolted to the vehicle frame by means of mounting brackets are flexible connections.
Even when shear plates are used, these connecting pieces should initially be regarded as flexible. Only when it can be proven by calculation that they are suitable can this type of connection be recognised as rigid.

For flexible connections the mounting points located on the chassis must be used first. If these are not sufficient or cannot be used for design reasons, then additional mountings are to be located at suitable points. If additional holes in the frame are required the section entitled „Drill holes, riveted joints and bolt connections on the frame“ in Chapter 4 „Modifying the chassis“ shall also be observed.

The number of mountings should be selected to ensure that the distance between the mounting point centres does not exceed 1200mm (see fig. 58).

Fig. 58: Distance between subframe and body mountings ESC-100

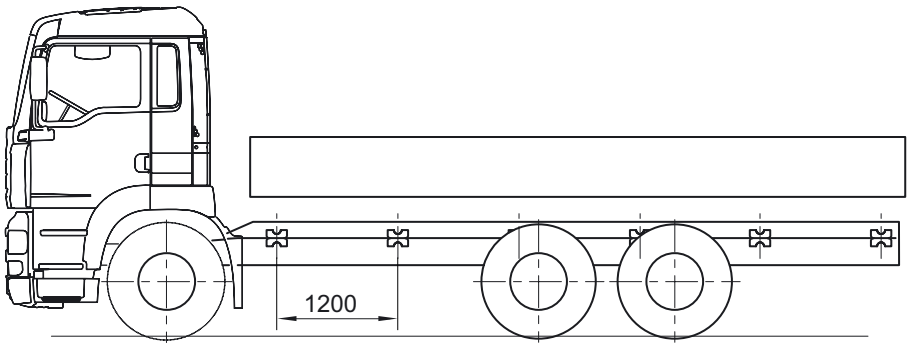

If MAN mounting brackets are supplied, either fitted to the vehicle or as loose components, the bodybuilder is still under obligation to check whether their number and location (existing holes in frame) is correct and adequate for the particular body installation.

The mounting brackets on MAN vehicles have oblong holes that run in the longitudinal direction of the vehicle (see Fig. 59).

cardiagn.com

They compensate for any tolerances and – for flexible connections – permit the unavoidable longitudinal movement between the frame and the subframe or between the frame and the body.

To balance out the width clearances, the subframe mounting brackets may also have oblong holes and these must be arranged at right angles to the longitudinal direction of the vehicle (see Fig. 59).

Fig. 59: Mounting brackets with oblong holes ESC-038

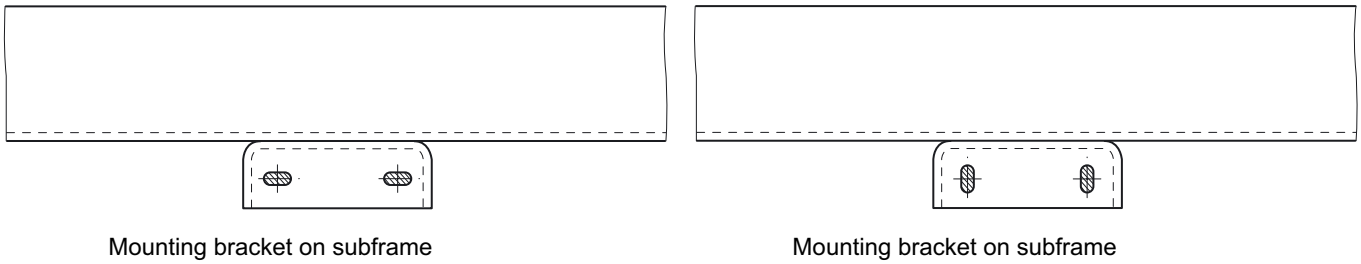

The different clearances (gaps) between the mounting brackets and the frame and subframe are compensated for by inserting shims of appropriate thickness (see Fig. 60). The shims must be made of steel. Grade S235JR (=St37-2) is sufficient. Avoid using more than four shims at any one mounting point.

Fig. 60: Shims between mounting brackets ESC-028

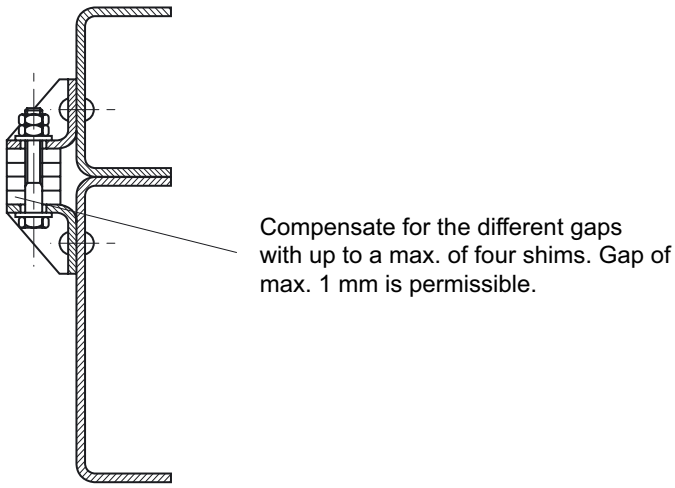

If there is a risk that the mounting bolts will work loose bolts of between 100 and 120mm in length must be used. This reduces the risk of them working loose because long bolts have a higher elastic elongation capacity (absolute value). If long bolts are used on normal mounting brackets spacer sleeves must be inserted (see Fig. 62).

The mounting shown in Fig. 63 is recommended for rigid bodies. In cases of extreme frame distortion this type of mounting permits a limited, controlled lifting of the body.

cardiagn.com

The following bolt sizes are recommended:

- For L2000: M12 x 1,5
- For all other vehicles: M14 x 1,5 or M16 x 1,5.

For bolt connections see also Chapter 4 „Modifying the chassis“, Section „Drill holes, riveted joints and bolt connections on the frame“.

The material of the nuts must be the same as that for the bolts. Nuts must be locked. Self-locking nuts may only be used once.

Fig. 61: Mounting bracket for long bolts ESC-018

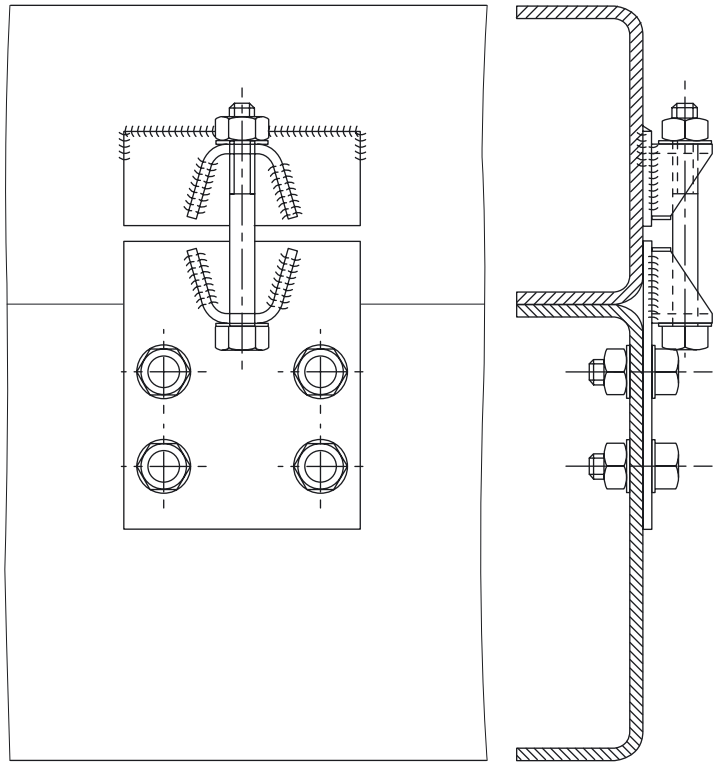

cardiagn.com

Fig. 62: Spacer sleeves for long bolts ESC-035

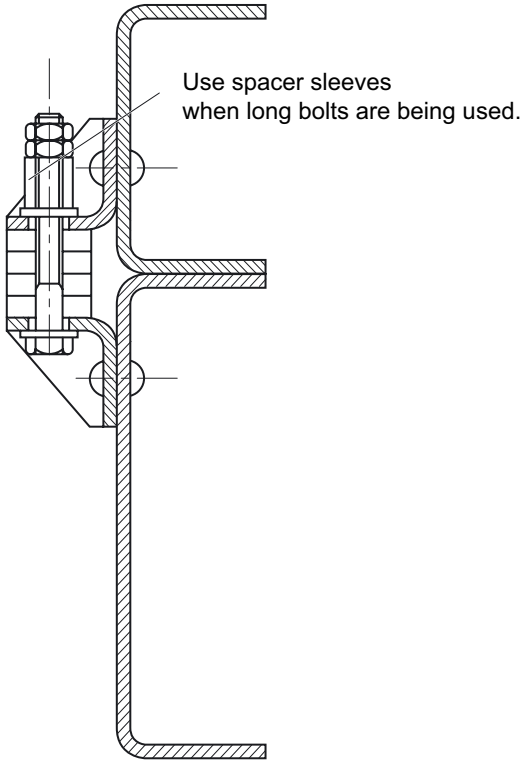

Fig. 63: Long bolts and cup springs ESC-101

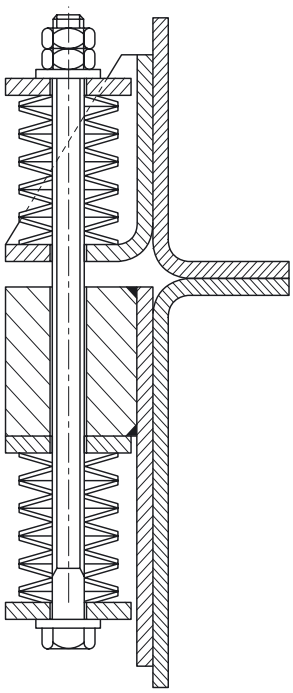

cardiagn.com

Fig. 64: Subframe mounting with brackets ESC-010

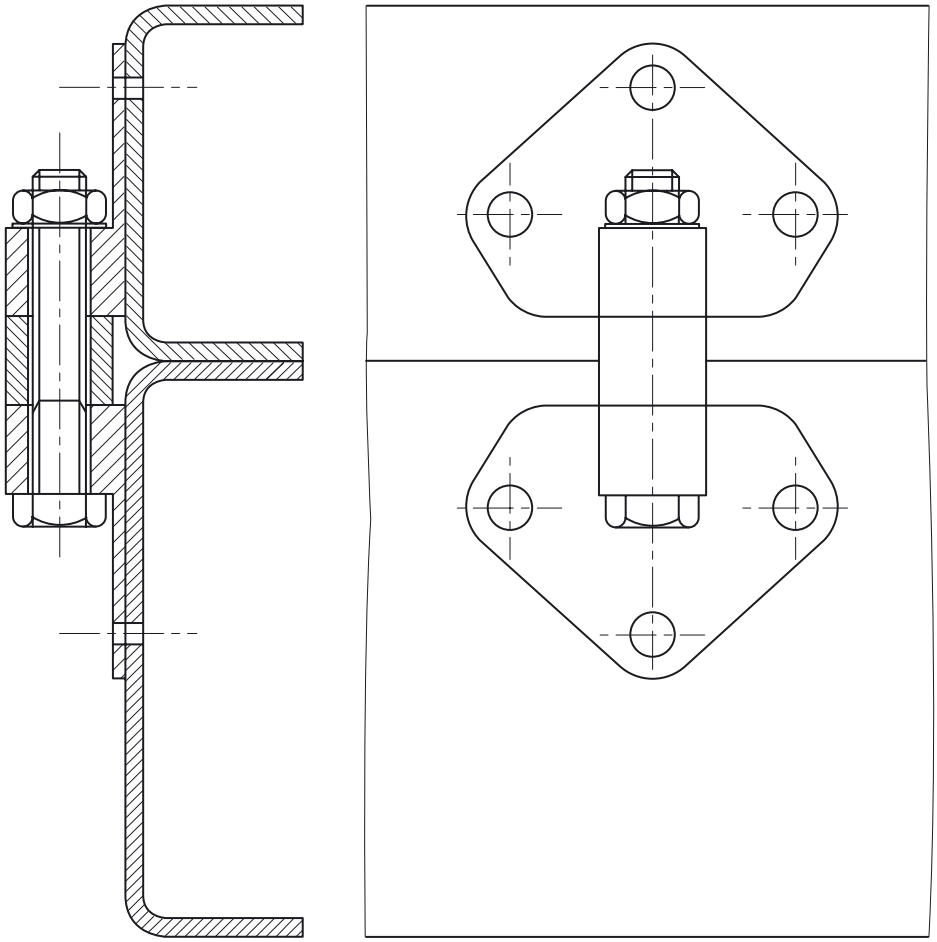

Fig. 65: Shackle mounting ESC-123

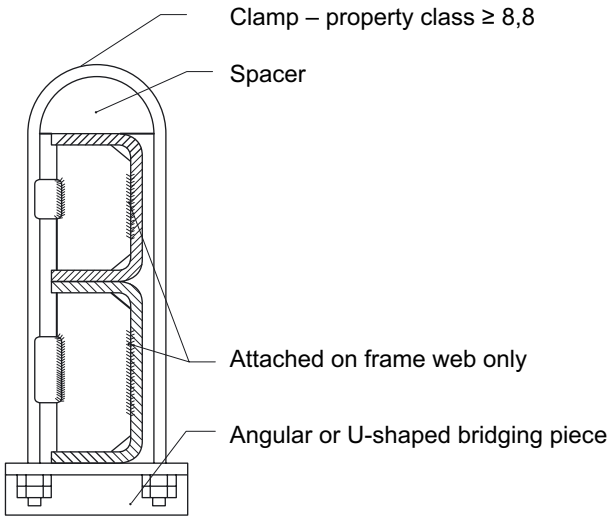

cardiagn.com

Fig. 66: Twin mounting ESC-027

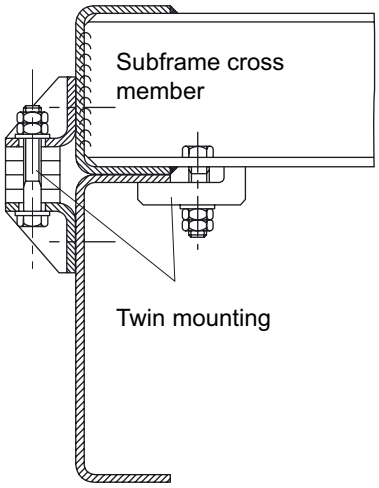

Fig. 67: Twin mounting with plug weld ESC-025

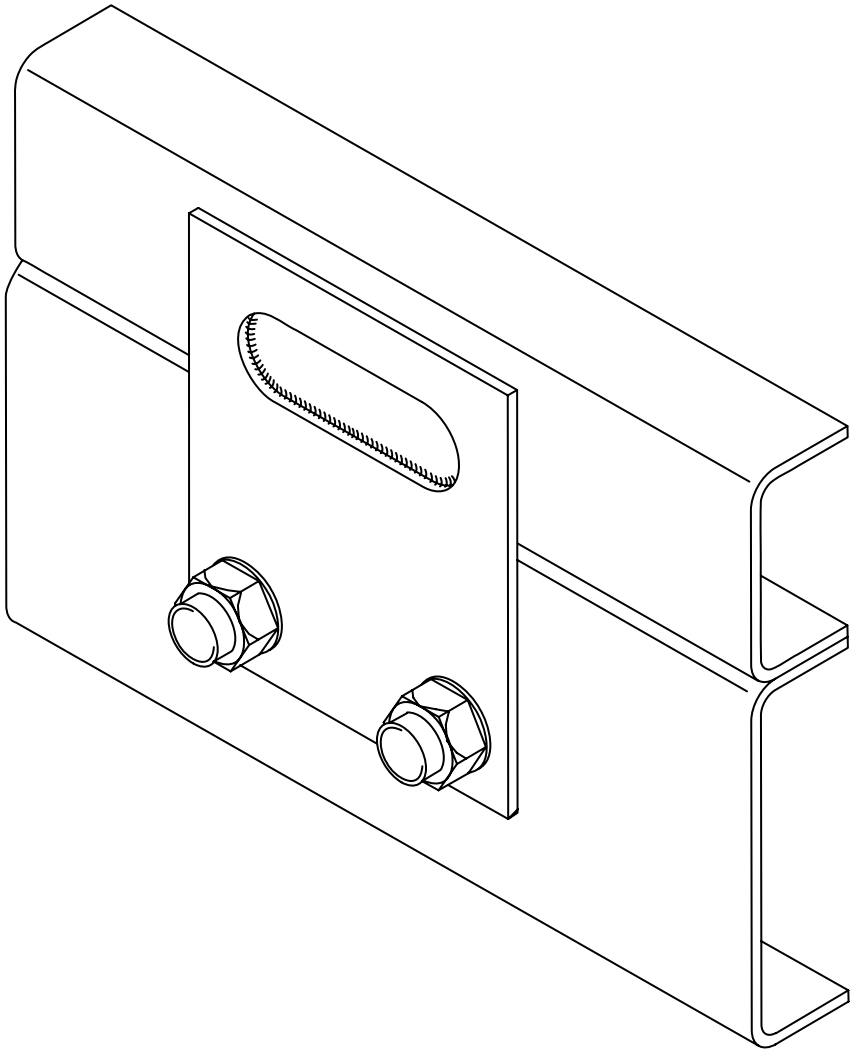

cardiagn.com

5.2.2.3 Rigid connections

With rigid connections relative movement between the frame and subframe is no longer possible, the subframe follows all the movements of the frame. Rigid connections should be used if flexible connections are not sufficient or if the subframe would have to have an unreasonably large cross-section if a flexible connection were to be used. If the rigid connection is correctly executed the frame and the subframe profile in the vicinity of the rigid connection are regarded as one single profile for calculation purposes.

Mounting brackets supplied ex-works are not considered to be rigid connections. The same also applies to other connections that are non-positive/frictional. Only positive-locking connecting elements are rigid. Positive-locking connecting elements are rivets or bolts. However bolts are only classed as rigid connectors if a hole tolerance ≤ 0.2 mm is maintained. In all cases, solid-shank bolts of a minimum quality class of 10.9 must be used. For permissible bolt connections see also Chapter 4 „Modifying the chassis“, Section „Drill holes, riveted joints and bolt connections on the frame“.

The hole walls must not come into contact with the bolt threads, see Fig. 68. Due to the short grip lengths that are normally required, use may be made of spacer sleeves, see Figs 68 to 70.

Fig. 68: Contact of the bolt thread with the hole wall ESC-029

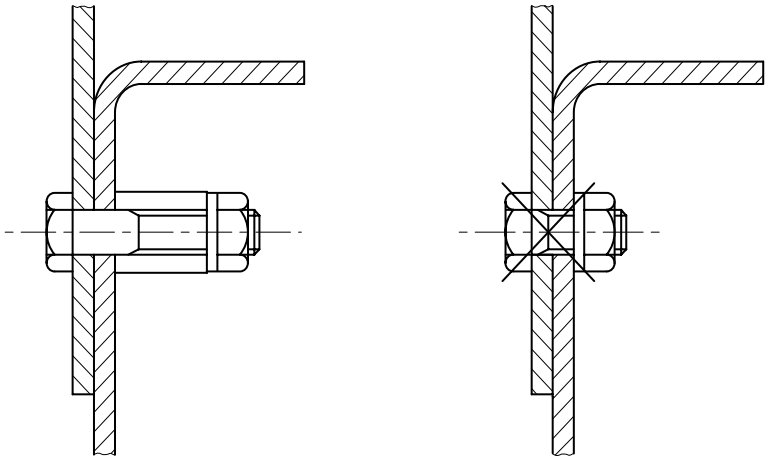

cardiagn.com

Fig. 69: Fitting shear plates

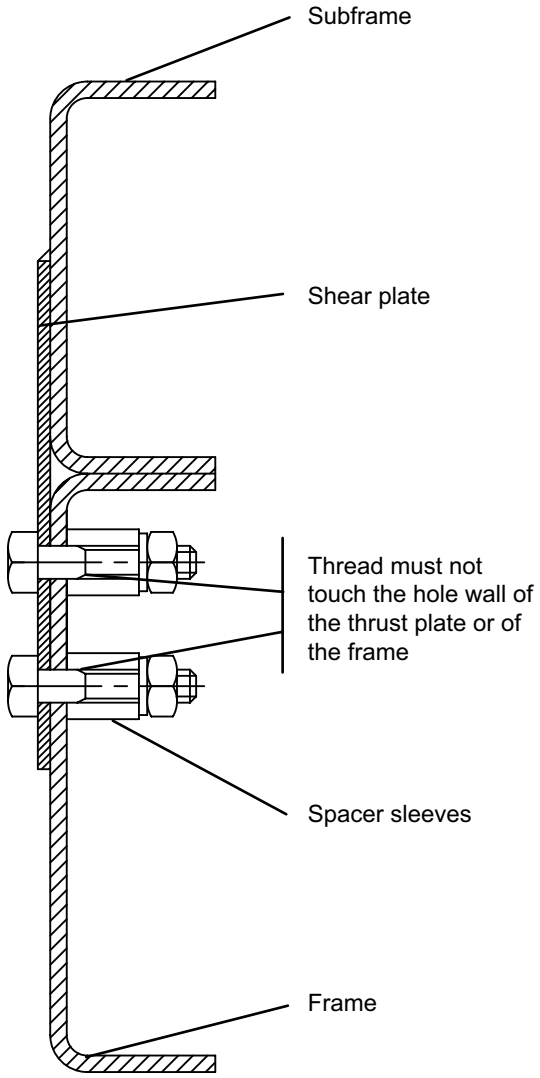

Fig. 70: Fitting shear plates, long shear plate ESC-019 with bolts ESC-037

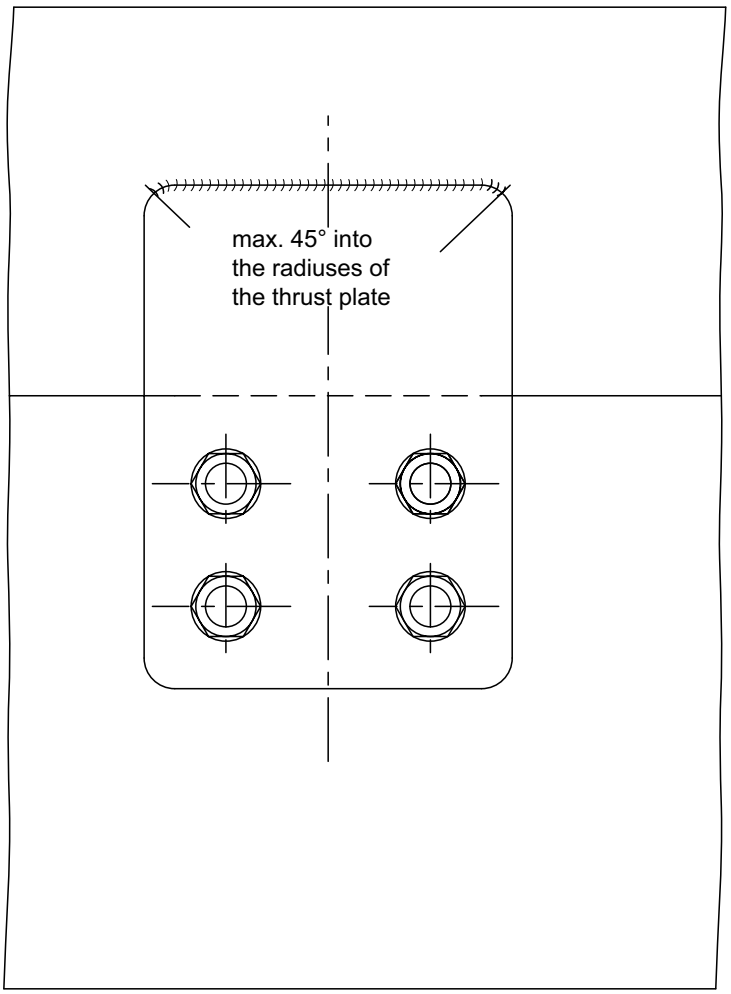

cardiagn.com

If existing frame holes are used for the rigid connection and if the existing hole diameter does not match the bolt diameter (required tolerance ≤ 0,2mm) the next largest standard thread diameter is to be provided.

Example:

If a hole of Ø15 is available, then this hole is drilled out to Ø 16 + 0.2 and a bolt thread size of M16 x 1.5 is selected.

Single piece shear plates may be fitted to each side of the frame. Individual shear plates are preferred however. The thickness of the thrust plate must be the same as the thickness of the frame web; a tolerance of + 1mm is permitted.
So as to affect the frame's ability to twist as little as possible, the thrust plates are to be located only where they are absolutely necessary.

The beginning, end and the required length of a rigid connection can be determined by calculation. The connection should be designed based on the calculation. Flexible mountings may be selected for the other mounting points outside the defined rigid area. (see the section 5.2.2.2 „Flexible connections").

5.2.2.4 Self-supporting bodies without subframe

A subframe is not required if:

- There is a sufficient moment of resistance (affects the bending stress)
- There is a sufficient geometrical moment of inertia (affects flexing).

If the body is self-supporting and no point loads and rear loads (e.g. tail-lift, trailer nose weights) occur, then in some circumstances a subframe does not need to be fitted if the distance between the body cross members is not more than 600mm (see Fig. 71).
This value of 600mm may be exceeded only in the area of the rear axles.

Fig. 71: Distances between cross members when there is no subframe ESC-001

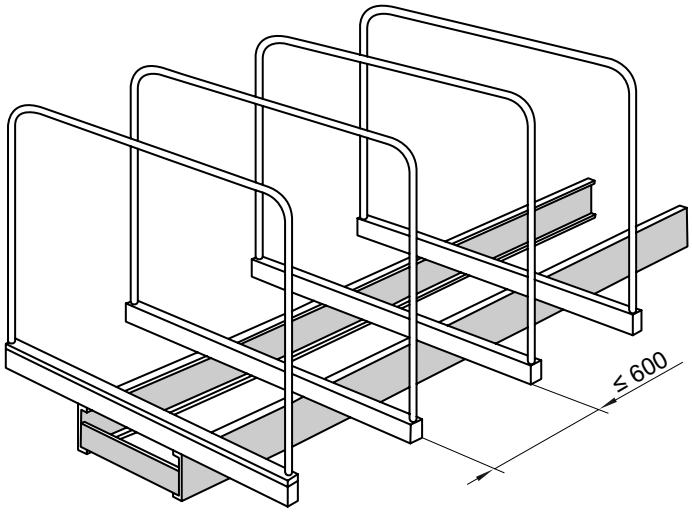

Access to the filler necks for fuel and if fitted, urea-water tanks (AdBlue®) must also be ensured for designs without subframes, as must access to all other frame components (e.g. spare wheel lift, battery box).
The supports on the frame must be of the minimum lengths as determined using the „Hertzian surface pressure“ principle.
Here, „linear contact between two cylinders“ is assumed rather than „linear contact of a cylinder and a plane“.
Fig. 72 shows an exaggerated deformation of two U-sections lying on top of each other. An example of the calculation can be found in Chapter 9 „Calculations“.

Fig. 72: Deformation of two U-sections ESC-120

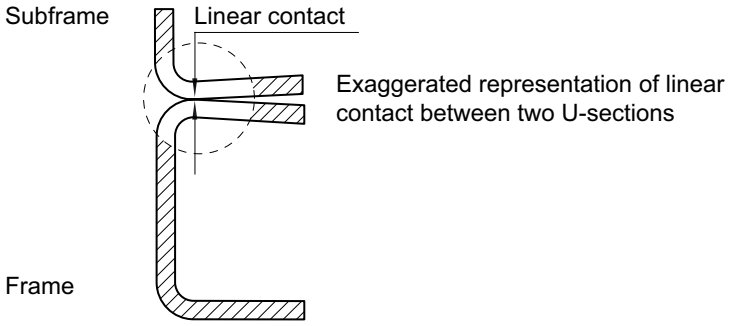

cardiagn.com

Sufficient strength values do not give any guarantee of correct operation (e.g. different elongation behaviour of bodies made from aluminium alloys).

Vibration problems on bodies without subframes cannot be ruled out. MAN cannot make any statements about the vibration behaviour of vehicles whose bodies have no subframes since the vibration behaviour depends on the body and its connection to the vehicle.
If inadmissible vibration occurs, its cause must be eliminated, which may mean that a subframe has to be retrofitted after all.

5.3 Special bodies

5.3.1 Testing of bodies

MAN, department ESC (for address see „Publisher“ above) can carry out computational testing of the strength and bending stiffness as part of a body check for special bodies. This is on condition that all the required data are provided.

For the calculations, two copies of body documentation that must be suitable for inspection are required.

This documentation must contain the following information in addition to a drawing of the body:

- Loads and their load application points:
  - Forces
  - Dimensions
  - Axle load calculation
- Conditions of use:
  - On-road
  - Off-road, etc.
  - Goods to be carried
- Subframe:
  - Material and cross-sectional data
  - Dimensions
  - Type of section
  - Quality
  - Arrangement of cross members in the subframe
  - Special features of the subframe design
  - Cross-section modifications
  - Additional reinforcements
  - Upsweeps, etc.
- Means of connection:
  - Positioning
  - Type
  - Size
  - Number.

5.3.2 Single-pivot body

The single-pivot body, which is comparable with a fifth-wheel coupling, always requires a subframe. Here, particular attention should be paid to ensuring that the subframe is properly connected to the chassis frame.

Positioning the pivot point for the single-pivot body behind the theoretical rear axle centreline means that the axle load distribution and handling must be checked. Information can be obtained from the ESC Department (for address see „Publisher“ above).

Documents:

- Guidelines for the testing of timber trucks for § 43 StVZO
- Trade association guidelines for timber trucks (ZH 1/588).

cardiagn.com

5.3.3 Tank and container bodies

5.3.3.1 General

Depending on the type of goods transported, vehicles must be equipped by the companies responsible in accordance with national requirements, guidelines and regulations. In Germany, the hazardous goods officers of the technical monitoring organisations (DEKRA, TÜV) can provide information regarding the transportation of hazardous goods.

5.3.3.2 Body fixtures, mountings

Tank and container bodies require a continuous subframe, yield point $\sigma_{0,2} \geq 350$ N/mm² (e.g. S355J2G3 = St52-3, see also Table 31: Yield points of subframe materials). The conditions for approving exceptions to this are described in the following section on „Tank and container bodies without subframes“.

The connection between the body and chassis in the front area must be designed so that it does not excessively hinder the frame's ability to twist.

This can be achieved by having front mountings that are as torsionally compliant as possible, e.g. by having

- Pendulum-type mounting (Fig. 73)
- Flexible mounting (Fig. 74)

Fig. 73: Front mounting as a pendulum mounting ESC-103

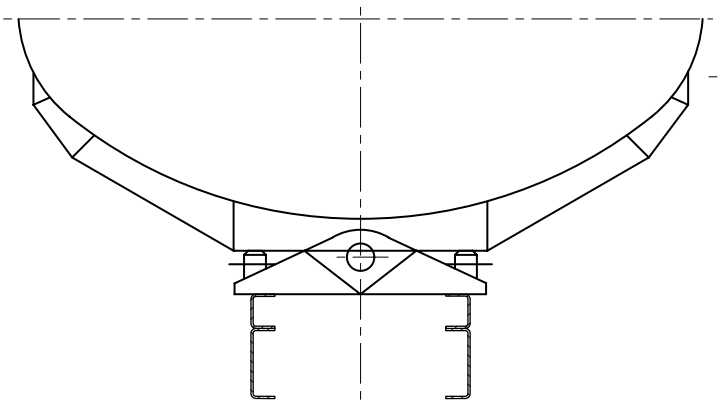

Fig. 74: Front mounting as an elastic mounting ESC-104

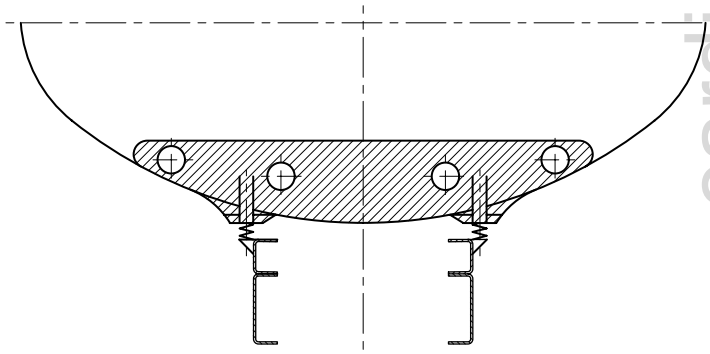

The front mounting point should be as close as possible to the front axle centreline. (see fig. 75).
The rear, laterally stiff body support must be fitted in the vicinity of the theoretical rear axle centreline.
At this point the connection to the frame should also be of sufficient size.
The distance between the theoretical rear axle centreline and the centre of the support must be < 1,000 mm (see fig. 75).
See the “General” Chapter for ‘Theoretical axle centreline’.

cardiagn.com

Fig. 75: Layout of tanker and bulk container mountings ESC-004

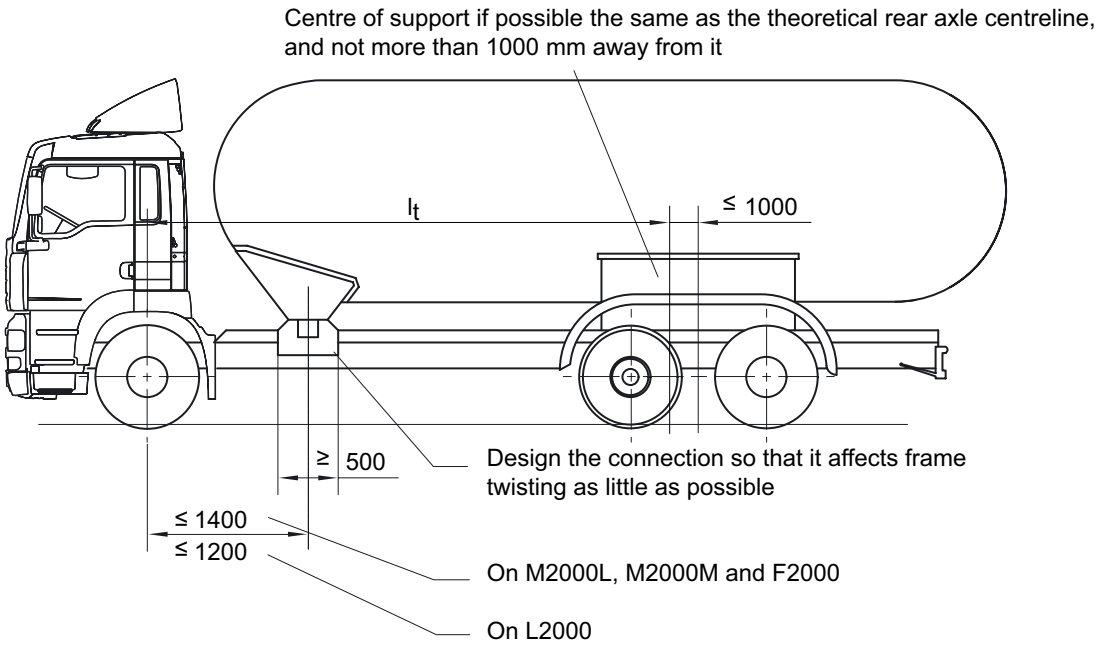

Once the body has been installed it is important that a test is carried out to confirm whether vibrations or other disadvantageous handling characteristics are evident. Vibration can be influenced by correct subframe design and the correct layout of the tank mountings.

5.3.3.3 Tankers and container bodies without subframes

Tanker and container bodies without subframes can be approved if the conditions described here are observed and there are double or triple mountings on each side of the frame.

All supports must be arranged at the specified distances. If the permissible range is exceeded, this may cause the frame to bend excessively, which is not permitted; a continuous subframe would then be required (see above).

cardiagn.com

Table 33: Chassis without subframes for tanker bodies with double and triple mountings

Vehicle range	Model	Wheel formula	Suspension	Wheelbases [mm]
M2000L	L74	4x2/2	leaf-leaf	3.575 … 4.250
	L76		leaf-air	„
	L79		full air	„
	L81		leaf-leaf	„
	L84		leaf-air	„
	L86		full air	„
	L87		leaf-leaf	„
	L88		leaf-air	„
	L89		full air	„
M2000M	M38	4x2/2	leaf-leaf	„
	M39		leaf-air	„
	M40		full air	„
F2000	T31	4x2/2	leaf-leaf	3.800 … 4.500
	T32		leaf-air	„
	T33		full air	„
	T36	6x2/2	leaf-air	4.100 … 4.600 … 1.350
	T37	6x2-4	full air	„

Fig. 76: Requirements for tank mountings for designs without subframes ESC-311

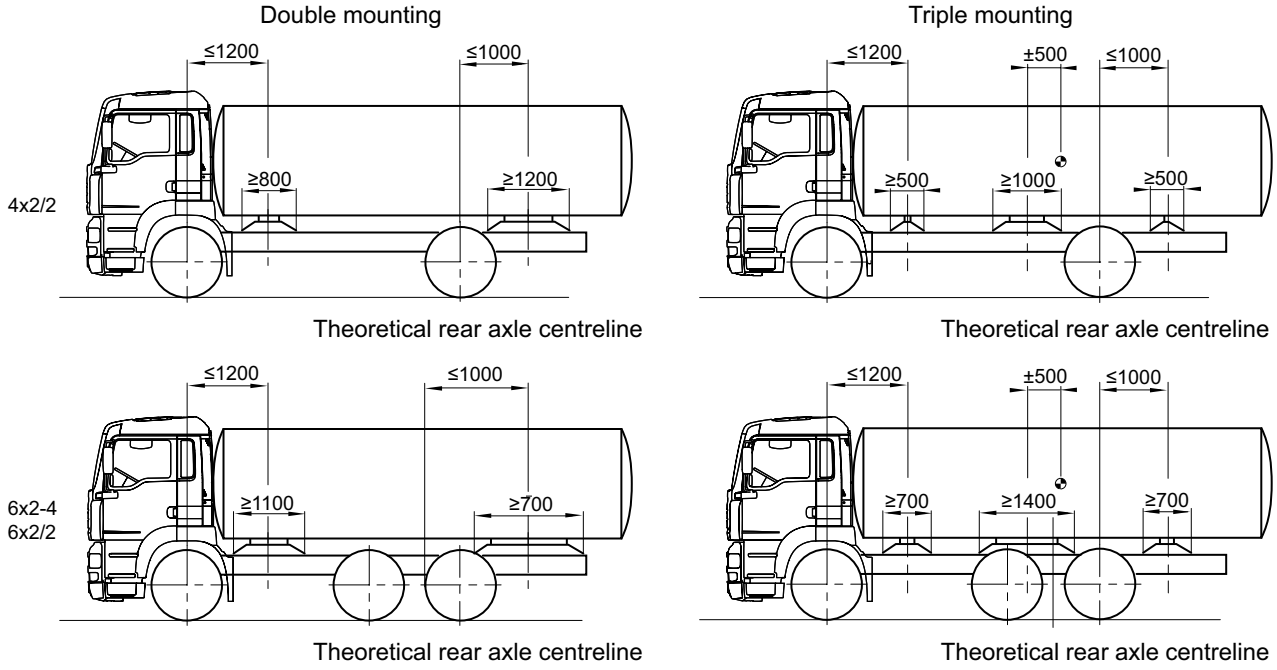

cardiagn.com

5.3.4 Tippers

Tipper bodies require a chassis that is designed for the purpose for which the vehicle will be used. MAN has appropriate chassis in its product range. These are marked with a "**K**" in the model designation, e.g. 19.364 FL**K**. Factory-built tipper chassis require no additional work if it is guaranteed that the following points are observed:

- The permissible gross weight
- The permissible axle loads
- The standard tipper body length
- The standard frame overhang
- The standard vehicle overhang
- The maximum tipping angle of 50° to the rear or side.

If tipper bodies are mounted on normal chassis, these chassis must be fitted with the components of a comparable MAN tipper. For example, the leaf springs of semitrailer tractors are not suitable for tippers. An anti-roll bar must be fitted to the rear axle if the standard tipper body lengths of comparable MAN tipper chassis are exceeded.

All tipper bodies require a continuous subframe made of steel with a minimum yield point of $\sigma_{0,2} \geq 350$ N/mm^2 (e.g. S355J2G3 = St52-3, for technical data of steel materials for vehicle construction, see Table 31: „Yield points of subframe materials" in this Chapter).

To improve stability when using vehicles with air suspension, it is important that the air suspension should be lowered for the tipping operation (5-10 mm above the buffer stop). An automatic lowering facility that is activated as soon as the power take-off is switched on can be ordered ex-works. Control via the ECAS remote control will then, as before, enable the vehicle height to be adjusted.

WARNING: Air-sprung chassis from the L2000 range are not approved for tipper bodies (for model allocation, see „General" Chapter).

The body manufacturer is responsible for the connection between the main frame and the subframe. Tipper rams and tipper mountings must be incorporated into the subframe because the vehicle frame is not suitable for supporting point loads.

Point loads that arise around the tipper ram during the tipping process are to be taken into account when designing the subframe. The following reference data must be observed:

- Tipping angle to the rear or side ≤ 50°
- During tipping to the rear, the centre of gravity of the tipper body with payload should not move behind the centreline of the last axle unless stability of the vehicle is guaranteed
- Locate the rear tipper mountings as close to the theoretical rear axle centreline as possible. During the tipping operation the height of the centre of gravity of the tipper body with payload (horizontal line) must not exceed dimension „a" (see Table 34 and Fig. 77).
- For the rear tipper mountings the distance between the centre of the tipper mountings and the theoretical rear axle centreline must not exceed dimension „b" (see Table 34 and Fig. 77) (for theoretical rear axle centreline, see „General" Chapter).

Table 34: Tippers: Maximum dimensions for centre of gravity height and tipping dimensions

Vehicle (for definition of model, see „General" booklet)	Dimension „a" [mm]	Dimension „b" [mm]
L2000	≤ 1.600	≤ 1.000
Two-axle vehicle M2000L, M2000M, F2000, E2000	≤ 1.800	≤ 1.100
Three-axle vehicle F2000, E2000, 6x2, 6x4, 6x6	≤ 2.000	≤ 1.250
Four-axle vehicle F2000, E2000, 8x4, 8x6, 8x8	≤ 2.000	≤ 1.250

cardiagn.com

Fig. 77: Tippers: Maximum dimensions for centre of gravity height and centre of tipper mountings ESC-105

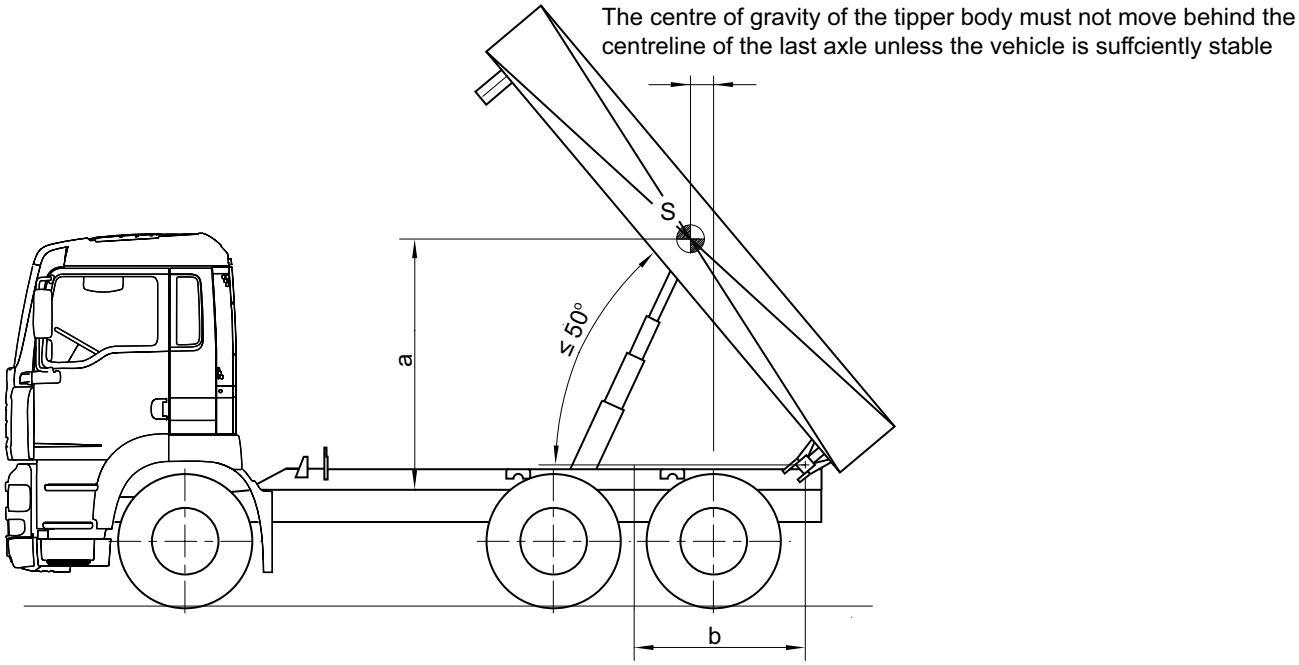

Because of the said conditions, the length of the platform for three-way and rear tippers is restricted.
The length of two-way tippers can be designed similar to that for loading platforms if there is sufficient stability.

If required for reasons of operational safety, MAN reserves the right to request more far-reaching measures such as the use of hydraulic supports to increase stability or the relocation of specific equipment. However, the body manufacturer is required to recognise the need for such measures himself, since the measures depend mainly on the design of his product.

To improve stationary and operational safety, rear tippers are sometimes required to be fitted with a so-called scissors-action support and/or a support at the end of the frame. See Fig. 78.

Documents:

For tipper bodies §22 and §23 of accident prevention regulations (VBG12).

cardiagn.com

Fig. 78: Rear tipper with scissors-action support and rear support ESC-106

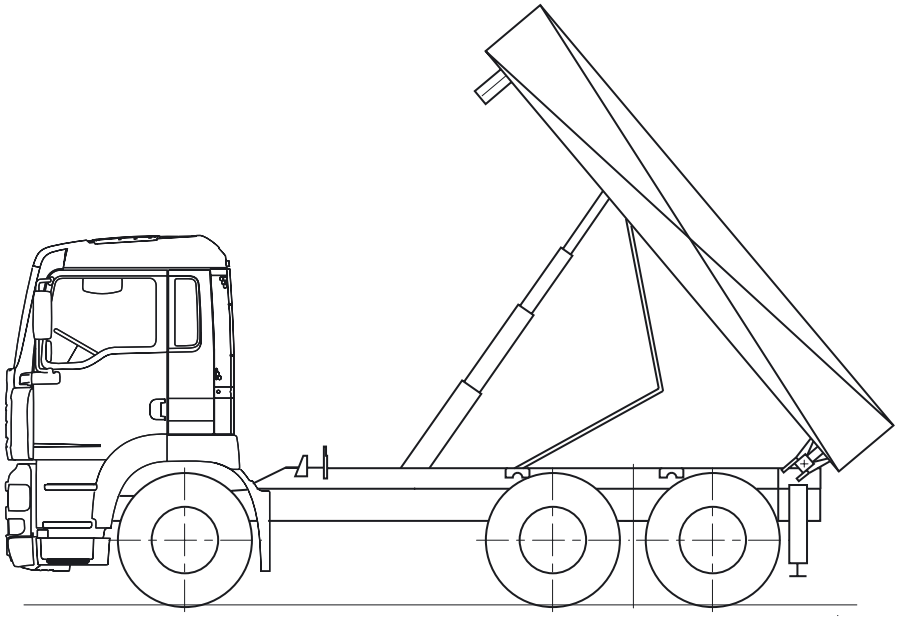

5.3.5 Set-down, sliding set-down and sliding roll-off skip loaders

For these types of body, the design often means that the subframes cannot follow the contour of the main frame and that special connections to the main frame must be provided. The body manufacturer must ensure that these fixtures are adequately sized and are properly located. Tried and tested fixtures, their design and attachment can be seen in the body installation instructions for manufacturers. The standard MAN platform brackets are not suitable for installing these bodies.

Because of the low substructure heights, the freedom of movement of all moving parts attached to the chassis (e.g. brake cylinders, transmission shift components, axle location components, etc) and the body (e.g. hydraulic cylinders, pipes, tipper frame, etc.) must be particularly carefully checked. If necessary an intermediate frame must be fitted, the suspension travel must be limited, the pendulum movement of the tandem axle must be limited or other similar measures taken.

For rolling, setting down and tipping operations, the same procedure applies (as appropriate) to air sprung vehicles in this category as is applied to air sprung tippers (that is, the vehicle is lowered to 5-10 mm above the buffer stop, see Section 5.3.4).
An automatic lowering facility that is activated when the power take-off is switched on can be ordered ex-works. Control via the ECAS remote control will then, as before, enable the vehicle height to be adjusted (e.g. for pushing containers on to the trailer).

When loading and unloading, supports are required for the end of the vehicle if:

- The rear axle load is more than twice the technically permissible rear axle load. Here, the tyre and rim load capacity must also be taken into account.
- The front axle loses contact with the ground. For safety reasons, lifting of this kind is strictly forbidden.
- The stability of the vehicle is not guaranteed. This can be because of a high centre of gravity height, an inadmissible side tilt when compression occurs on one side, if the vehicle has sunk into soft ground on one side etc.

Rear support by locking the vehicle springs is permitted only if the ESC department at MAN (for address see “Publisher” above) has approved the installation together with the respective load transmissions (for details of documents to be submitted for body testing, see „General“ booklet, Sections „Approval“ and „Submission of documents“).

The required evidence of stability is to be provided by the body manufacturer.

cardiagn.com

5.3.6 Platform and box bodies

To ensure even load distribution a subframe is normally required. Vehicles in Table 32 (see the Section „Designing the subframe“ earlier in this Chapter) require a continuous subframe.

Exceptions to this are dependent on:

- The length of the support (e.g. tanker body, see Section „Tankers and container bodies without subframes“)
- The distance between cross members (see section „Self-supporting bodies without subframes“).

Point and rear loads (e.g. tail-lift) must not occur on bodies without subframes.

Closed bodies in particular, such as box bodies, are torsionally stiff with respect to the chassis frame. So that the desired twisting of the frame (for example when cornering) is not hindered by the body, the body fixtures should be flexible at the front and rigid at the rear. This is particularly important if the vehicle is designed for off-road purposes. For this application we recommend a front body mount with cup springs (for an example, see Fig. 63 in this Chapter), a three-point mounting or a diamond-shaped mounting layout (see Fig. 79 for mounting principle).

Fig. 79: Mounting options for torsionally rigid bodies compared with flexible chassis with three-point and diamond-shaped mountings ESC-158

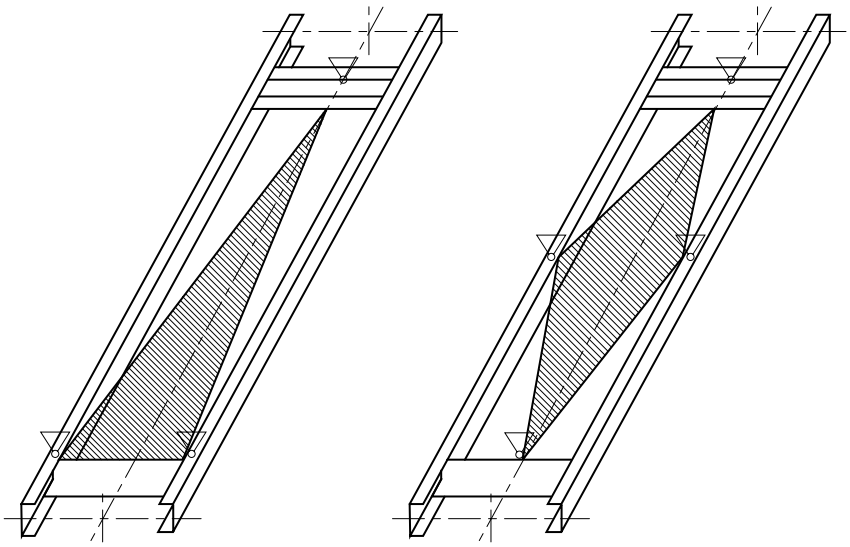

cardiagn.com

5.3.7 Interchangeable containers

5.3.7.1 Factory-fitted interchangeable platform chassis

MAN's vehicle range includes fully air-sprung vehicles that can be supplied ex-factory with swap body fittings. Connection dimensions and centring equipment correspond to the requirements of EN 284. Installation dimensions and centring devices correspond to the requirements of EN 284. Container and interchangeable platforms that meet the requirements of EN 248 may be fitted to the vehicles defined above. The standard swap body fittings cannot however be freely utilised if different bodies are to be mounted.

The relocation of support points or different dimensions are only permitted if they have been approved by the ESC department at MAN (for address see "Publisher" above).

Do not remove the centre supports – their use is imperative! The body must lie along their whole length. If this is not possible for design reasons, then an adequately dimensioned subframe must be fitted.

Supports for interchangeable containers are not suitable for absorbing forces that are exerted by mounted machinery and point loads. This means that when fitting concrete mixers, tippers, fifth-wheel subframes with fifth-wheel couplings, etc, different fixtures and supports must be used. The body manufacturer must provide evidence that they are suitable for this purpose.

5.3.7.2 Other interchangeable equipment

Interchangeable containers should lie on the upper side of the frame, along the whole length of the frame. A subframe can be omitted if the requirements in the section on „Self-supporting bodies without subframes" are met. Frame longitudinal members are to be protected from the wear that, for example, can occur when equipment is being swapped over. This can be achieved by installing an anti-wear section. One such option using an L-section is shown in Fig. 80.

The anti-wear section can assume the functions of a subframe only if it can be proved by calculation that it is suitable for this purpose. It is possible to use materials with a yield point $\sigma_{0,2} \geq 350$ N/mm², e.g. S235JR (=St37-2) for the anti-wear section, but not for the subframe.

Fig. 80: Anti-wear section for interchangeable container ESC-121

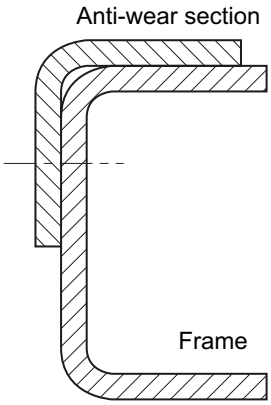

cardiagn.com

5.3.8 Loading cranes

Empty weight and the total moment of a loading crane must be matched to the chassis on which it will be fitted.
The basis for the calculation is the maximum total moment and not the lifting moment. The total moment is the result of the empty weight and the lifting force of the loading crane with the crane arm extended. The total moment of a loading crane M_{Kr} is calculated using the following formula:

Fig. 81: Moments on the loading crane ESC-040

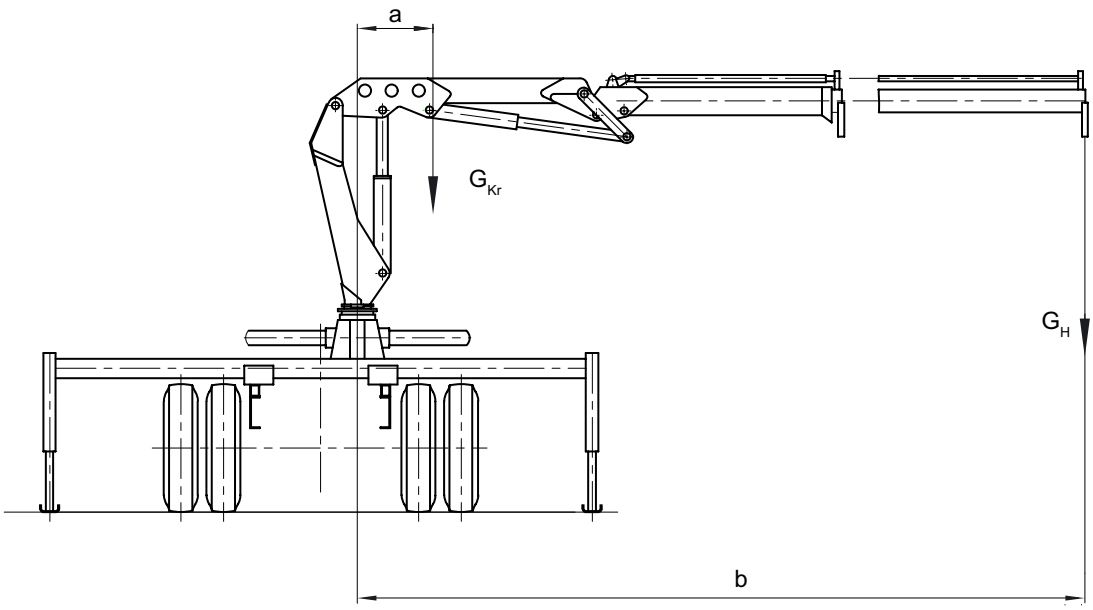

Formula 23: Total moment of loading crane

$$M_{Kr} = \frac{g \cdot s \cdot (G_{Kr} \cdot a + G_H \cdot b)}{1000}$$

Where:

a	=	Distance of the crane centre of gravity from the centre of the crane pillar in [m], with the crane arm extended to maximum length
b	=	Distance of the maximum lifting load from the centre of the crane pillar in [m], with the crane arm extended to maximum length
G_H	=	Lifting load of the loading crane in [kg]
G_{Kr}	=	Weight of the loading crane in [kg]
M_{Kr}	=	Total moment in [kNm]
s	=	Impact coefficient from details provided by the crane manufacturer (dependent on the crane control system), always ≥ 1
g	=	Acceleration due to gravity 9,81 [m/s²]

The number of outriggers (two or four) and their positions and distance apart is to be determined by the crane manufacturer on the basis of the stability calculation and vehicle load. For technical reasons, MAN may insist that four outriggers are fitted.
When the crane is operating, the outriggers must always be extended and level with the ground. They must be repositioned accordingly for both loading and unloading. Hydraulic compensation between the outriggers must be blocked. The crane manufacturer must also detail any ballast that is required for ensuring stability.

cardiagn.com

On air-sprung vehicles, care must be taken to ensure that the vehicle is not lifted above its driving height by the outriggers. Before being braced with the outriggers the vehicle must be in its lowered position (5-10 mm above the buffer stop). An automatic lowering facility that is activated when the power take-off is switched on can be ordered ex-works.

Amongst other characteristics, the torsional stiffness of the entire frame connection is responsible for the stability. It must be noted that a high torsional stiffness of the frame connection will necessarily reduce the ride comfort and the off-road capability of the vehicles. The body builder or crane manufacturer is responsible for ensuring that the crane and subframe are properly attached. Operating forces including their safety coefficients must be safely absorbed. Mounting brackets available ex-works are not suitable for this purpose.

Inadmissible overloading of the axle(s) must be avoided. The maximum permissible axle loading during crane operation must not be more than twice the technically permissible axle load. The impact coefficients provided by the crane manufacturer are to be taken into account (see Formula 23 „Total moment for loading crane“)! The permissible axle loads must not be exceeded during vehicle operation. An axle load calculation specifically for the job in hand is essential. See Chapter 9 „Calculations“ for an example of an axle load calculation.
Depending on the chassis and optional equipment, higher technically permissible loads are possible. Consult the ESC Department (for address see “Publisher” above). For increasing the axle load, see the „General“ Chapter, Section „Increasing the permissible axle load“).

Asymmetric crane installation is not permissible if uneven wheel loads arise as a result (permissible wheel load difference ≤ 4%, see „General“ booklet, section „One-sided loading“). The body manufacturer must ensure adequate compensation.

The pivoting range of the crane must be limited if this is required to maintain the permissible axle loads or stability. Methods for ensuring this compliance are the responsibility of the loading crane manufacturer (e.g. by limiting the lifting load dependent on the pivoting range).

During installation and operation of the loading crane, the required freedom of movement of all moving parts must be observed. Controls must demonstrate the required minimum clearances in every operating mode. Sometimes the required clearances must be achieved by proper relocation of the fuel tank, battery box, air reservoirs, etc.

When hydraulic reservoirs are installed there must be a sufficient head between the reservoir and the equipment being supplied, or suitable measures must be taken to ensure that the hydraulic equipment does not run dry.
In contrast to other bodies, for crane bodies the minimum load on the front axle(s) in any load state must be 35% (L2000), 30% (other two-axle vehicles) or 25% (three and four-axle vehicles) in order to retain steerability of the vehicle. For a precise definition, see the „General“ Chapter, Section „Minimum front axle load“. Exceptions are permitted only after prior consultation with the ESC Department at MAN (for address, see „Publisher“ above).
Any nose weights on the trailer coupling must be included in the necessary axle load calculation.

On vehicles with trailing axles, the weight ratios must also be checked with the trailing axle lifted (see also „General“, and „Calculations“ booklets). If necessary, the lifting option must be disabled (see also „Rear loading crane“ section).

Depending on the size of the crane (weight and centre of gravity position) and location (behind the cab or at the rear), vehicles must be fitted with reinforced springs, reinforced anti-roll bars or reinforced shock absorbers, if these items are available. These measures will prevent the chassis from adopting a lopsided position (e.g. due to reduced compression of the reinforced springs) and will prevent or reduce any tendency to roll. However, with crane superstructures, it is not always possible to prevent the chassis from standing lopsided because of the shift in the vehicle’s centre of gravity.

After installation of the body, adjustments or checks may have to be made on the vehicle again. This particularly applies to the automatic load-dependent braking system (ALB), the headlights and the rear underride guard and the sideguards.

An approval must be requested from the ESC Department at MAN, (for address, see „Publisher“ above). If the permissible total crane moment given by MAN in Figs. 86 to 88 is exceeded or if it is not possible to keep to the right subframe for the right loading crane and vehicle size. The straight lines in Figs. 86 to 88 must not be extended.

cardiagn.com

Different forces come into play when four outriggers are fitted. This means that the ESC department at MAN (for address, see „Publisher“ above) must always be consulted if these crane bodies are to be fitted. To guarantee stability whilst the crane is operating, the subframe in the area between the two outrigger members must have sufficient torsional stiffness.
For strength reasons, lifting the vehicle on the outriggers is permissible only if the subframe structure absorbs all the forces resulting from the operation of the crane and provided its connection to the chassis frame is not rigid (e.g. car cranes).

Depending on national regulations, the crane body and its operation will need to be checked by a crane expert from the technical monitoring organisations or by a person authorised to do so by a trade association before it goes into operation. The results of the test must be entered in the test document.

Documents:

- Accident prevention regulations for cranes (VBG 9).

5.3.8.1 Loading crane behind the cab

If the shift linkage or the transmission protrudes above the upper edge of the subframe an additional intermediate frame needs to be provided on the subframe to create the required clearance (see Fig. 82).
The intermediate frame can be designed so that it serves as a reinforcement for the subframe.

Fig. 82: Clearance for loading crane behind the cab ESC-107

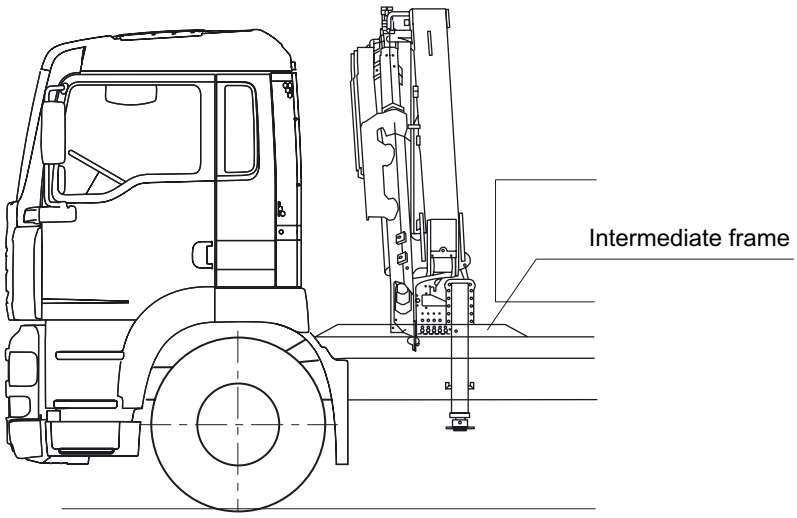

It must still be possible for the cab to tilt and it must be possible to operate the locking mechanism unhindered at any time.
There must be no obstructions that encroach on the arc described by the cab when tilting. The tilt radii of the cabs are given in the chassis drawings. Chassis drawings can be obtained from our MANTED® on-line system (www.manted.de) or by fax order from the ESC Department (for address/ fax number see „Publisher“ above).

Even when the permissible front axle load is observed, care still needs to be taken to prevent excessive top-heaviness of the vehicle for handling reasons. A reduction of the front axle load, for example, can be achieved by relocating equipment.
On some vehicles, the permissible front axle load can be increased if certain conditions exist (for example if the axles, springs, steering, wheels and tyres have adequate load capacity). See the ‘General’ Chapter for information on and procedures for increasing the permissible front axle load.

cardiagn.com

5.3.8.2 Rear loading crane

In order to create the required space for the loading crane and achieve a more favourable front axle loading the spare wheel, normally located at the rear, can be moved to a position on the side of the frame.

Stronger springs, a stronger anti-roll bar and other available stabilisation aids must be installed depending on the size of the crane and the axle load distribution. This will prevent the vehicle from standing lopsided and reduce its tendency to roll.

When a lifting trailing axle is lifted, considerable load is put on the front axle of the vehicle. Because of the point load acting dynamically on the end of the frame as a result of the crane, it is likely that the driving condition will not be sufficiently stable.
The lifting facility must be disabled if more than 80% of the permissible drive axle load is reached when travelling unladen with the crane and with the axle lifted. It must also be disabled if the minimum front axle load (30% of the actual vehicle weight) is not reached.
For manoeuvring purposes the trailing axle can be lifted if the subframe and body are of adequate size and provided that the permissible axle loads are observed. The higher bending and torsional forces acting on the body and the frame structure must be taken into account. The moving-off aid may be retained since this only involves relieving the trailing axle of its load and not lifting it.

A second trailer coupling is to be installed on the installation consoles for detachable rear loading cranes if the vehicle is to be operated with a trailer. This trailer coupling must be connected to the one installed on the vehicle by means of a trailer coupling ring (see Fig. 83).
The coupling device and the body must be able to safely absorb and transmit forces arising during trailer operation. The instructions in the „Coupling devices“ and „Modifying the frame“ Chapters must be observed. The maximum trailer load with the loading crane hitched up must not exceed the standard trailer load on the vehicle’s trailer coupling.

In operation with a trailer the overall vehicle length is extended by the distance „L“ between the two trailer couplings (see Fig. 83).
If a centre-axle trailer is to be pulled as well as the detachable rear loading crane carried, then the crane manufacturer must confirm its suitability for this. Trailer nose weights are to be taken into consideration (see „Coupling devices“ Section in Chapter 4 “Modifying the Chassis”). The front axle loads must not be below the values stated in the „Minimum front axle load“ Section of the „General“ Chapter.

If the crane is connected but the vehicle is being operated without a trailer, the coupling device must have an underride guard fitted.
It is the responsibility of the body manufacturer to ensure that the coupling console is of adequate strength and that the console support is properly fitted to the vehicle.

Forklifts carried on the vehicle are to be treated as attachable loading cranes when being transported.
The body manufacturer can obtain information on the required subframe and bending actions for on-board forklifts from our MANTED® on-line service (www.manted.de) (see also Chapter 5.3.9 „Tail-lifts“).

Fig. 83: Coupling device for rear loading cranes ESC-023

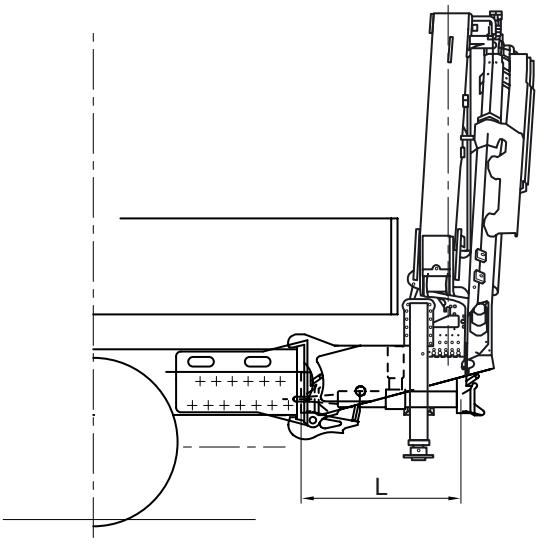

cardiagn.com

The centre of gravity of the payload will change depending on whether the crane is detached or not. To achieve the largest possible payload without exceeding the permissible axle loads, we recommend that the centre of gravity of the payload with and without the crane be marked clearly on the body.

The larger overhang resulting from the installation of the coupling device must be taken into consideration. Exceeding the overhang specified in the section on „Permissible overhangs“ in the „General“ Chapter is permitted if no other technical or legal specifications specify anything to the contrary.

5.3.8.3 Subframe for loading crane

All loading crane bodies require a subframe whose minimum geometrical moment of inertia is obtained from Figs. 86 to 88.
Even with crane total moments that theoretically produce a required geometrical moment of inertia of below 175cm^4 a subframe with a minimum geometrical moment of inertia of at least 175cm^4 must be fitted.

To protect the subframe we recommend fitting an additional upper flange (anti-wear plate) in the area of the crane to prevent the base of the crane from wearing into the subframe. The thickness of the additional upper flange should be between 8 and 10mm, depending on the size of the crane.

Loading cranes are frequently installed along with other bodies, for which a subframe is also required (e.g. tippers, semitrailer tractors, single pivot body). In this case, depending on the body and its requirements, a larger subframe suitable for the entire body structure must be used.

The subframe for a detachable loading crane must be designed to ensure that the coupling device and the loading crane can be supported safely. The body manufacturer is responsible for the design of the console support (bolt fixings, etc.).

During installation of the loading crane behind the cab, the subframe must be enclosed to form a box, at least in the area around the crane (see also Fig. 49, Transition from box section to U-section ESC-043). If the loading crane is installed at the rear, a closed section must be used from the end of the frame to a point forward of the front-most rear axle location element at least. In addition, to increase the torsional stiffness in the subframe, a cross-shaped connecting piece (X-shaped connecting piece), or an equivalent construction must be provided (see Fig. 84). To be recognised by MAN as an equivalent structure, the ESC department must issue an approval (for address see „Publisher“ above).

Fig. 84: Cross-strut in the subframe ESC-024

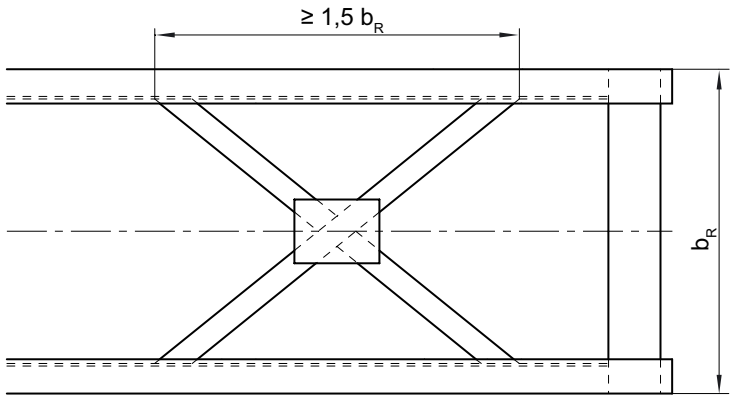

As a rule a flexible subframe connection is not sufficient for crane use. A rigid connection with a sufficient number of adequately sized shear plates is required. Individual side plates on the frame, as shown in Fig. 85, are regarded as a rigid connection only if verification in the form of mathematical calculations can be provided.
For flexible or rigid connections, see the relevant sections in this Chapter.

cardiagn.com

Fig. 85: Rigid connection for crane bodies ESC-045

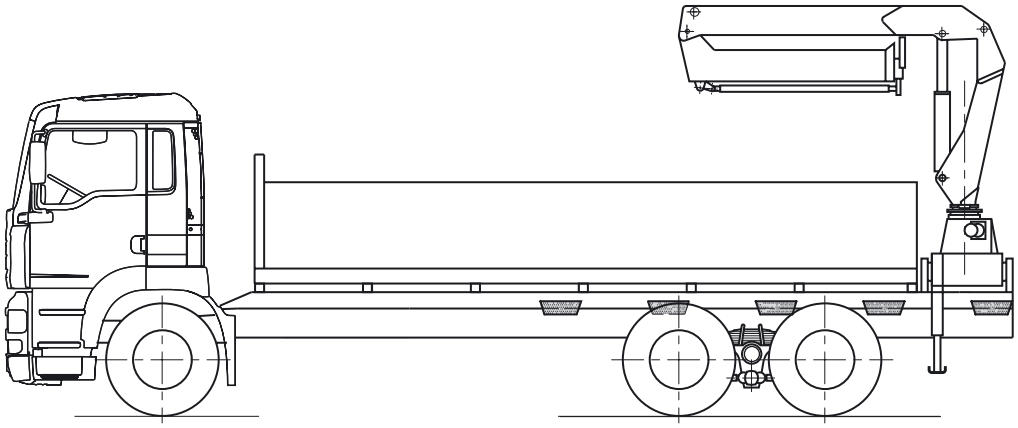

The diagrams in Figs. 86 to 88 apply only to crane structures with two outriggers. They are equally applicable to crane installation behind the cab or at the end of the frame. Safety coefficients are already included, the crane total moment M_{Kr} is to be taken into account along with the impact coefficient supplied by the crane manufacturer (see also the Formula „Total moment of a loading crane“ earlier in this Chapter).

If body conditions (e.g. low container vehicles, breakdown trucks, etc.) mean that the design methods described here cannot be adhered to, the entire body must be approved by the ESC Department at MAN (for address see „Publisher“ above).

Example of how to use diagrams in Figs 86 to 88:

A subframe is to be specified for an F2000 19.xxx FC vehicle, model T31, frame section number 23 (in accordance with Table 31 of the „Modifying the chassis“ Chapter). The vehicle is to be fitted with a crane with a total moment of 160kNm.

Solution:

A minimum geometrical moment of inertia of approx. 1440cm^4 is derived from Fig. 88.

If one U-section with a width of 80mm and a thickness of 8mm is formed into a box with an 8mm thick section, a section height of 180mm is required, see diagram in Fig. 90. If two U-sections of a width/thickness of 80/8mm are formed into a box, the minimum height is reduced to approx. 150mm, see Fig. 91.

If, when the values are read off, the section size in question is not available, round up to the next available size; rounding down is not permitted.

The freedom of movement of all moving parts is not taken into consideration here; it must therefore be re-checked when the dimensions have been selected.

An open U-section, as in Fig. 89, must not be used in the area around the crane. It is only shown here because the diagram can also be used for other bodies.

cardiagn.com

Fig. 86: Crane total moment and geometrical moment of inertia for L2000 ESC-210

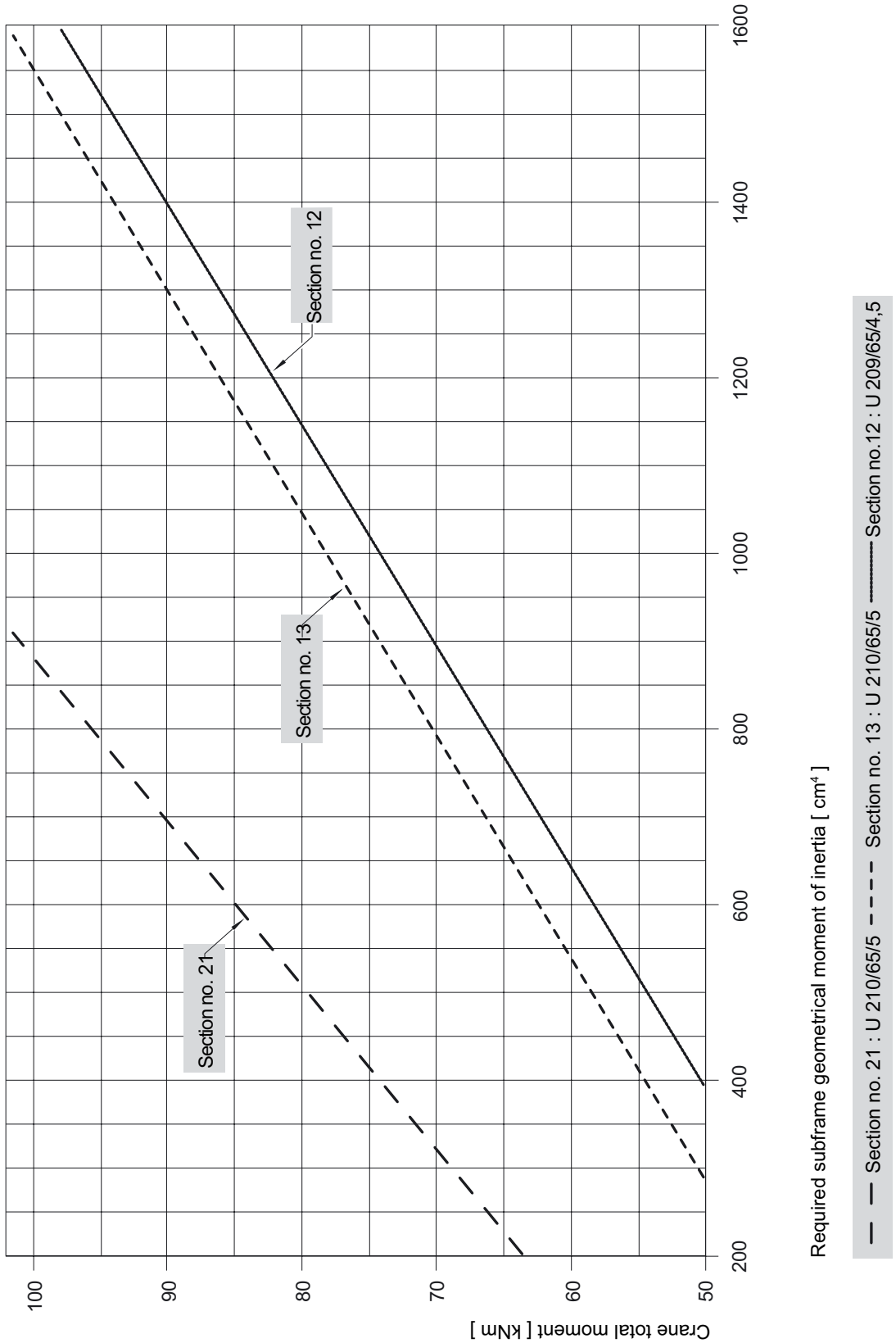

cardiagn.com

Fig. 87: Crane total moment and geometrical moment of inertia for M2000L and M2000M ESC-211

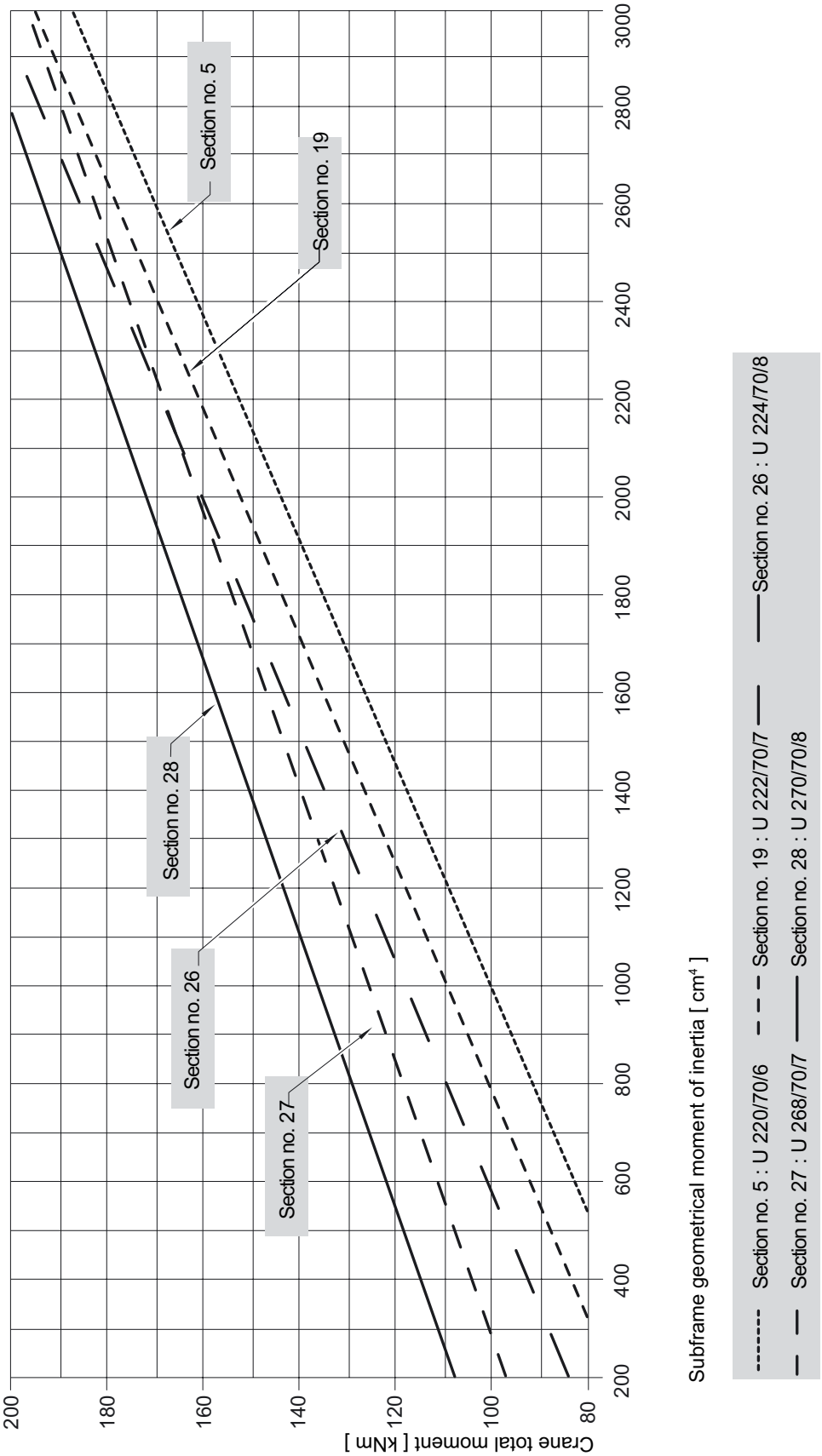

cardiagn.com

Fig. 88: Crane total moment and geometrical moment of inertia for F2000 ESC-212

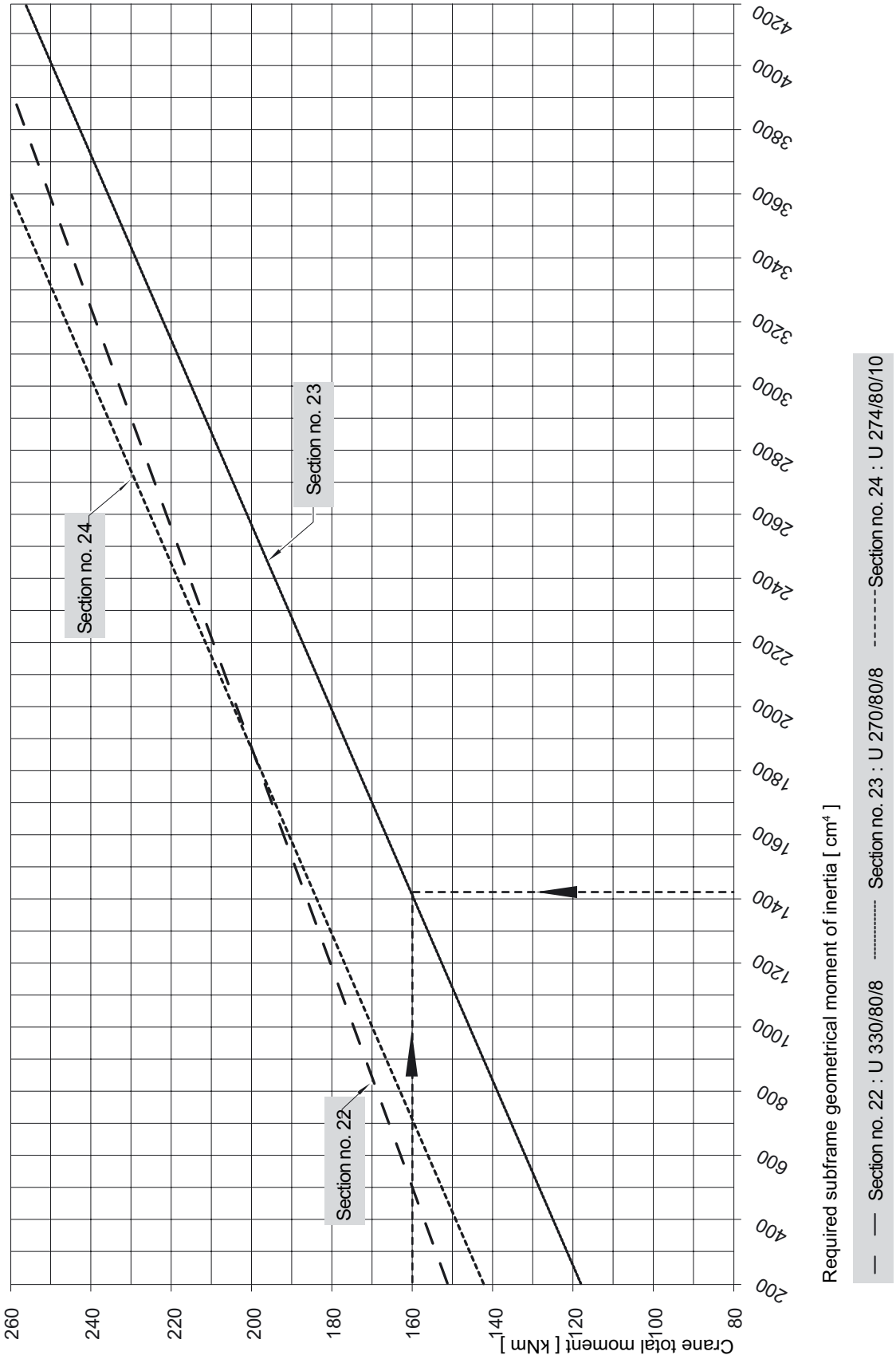

cardiagn.com

Fig. 89: Crane total moment and geometrical moment of inertia for TGA ESC-216_1

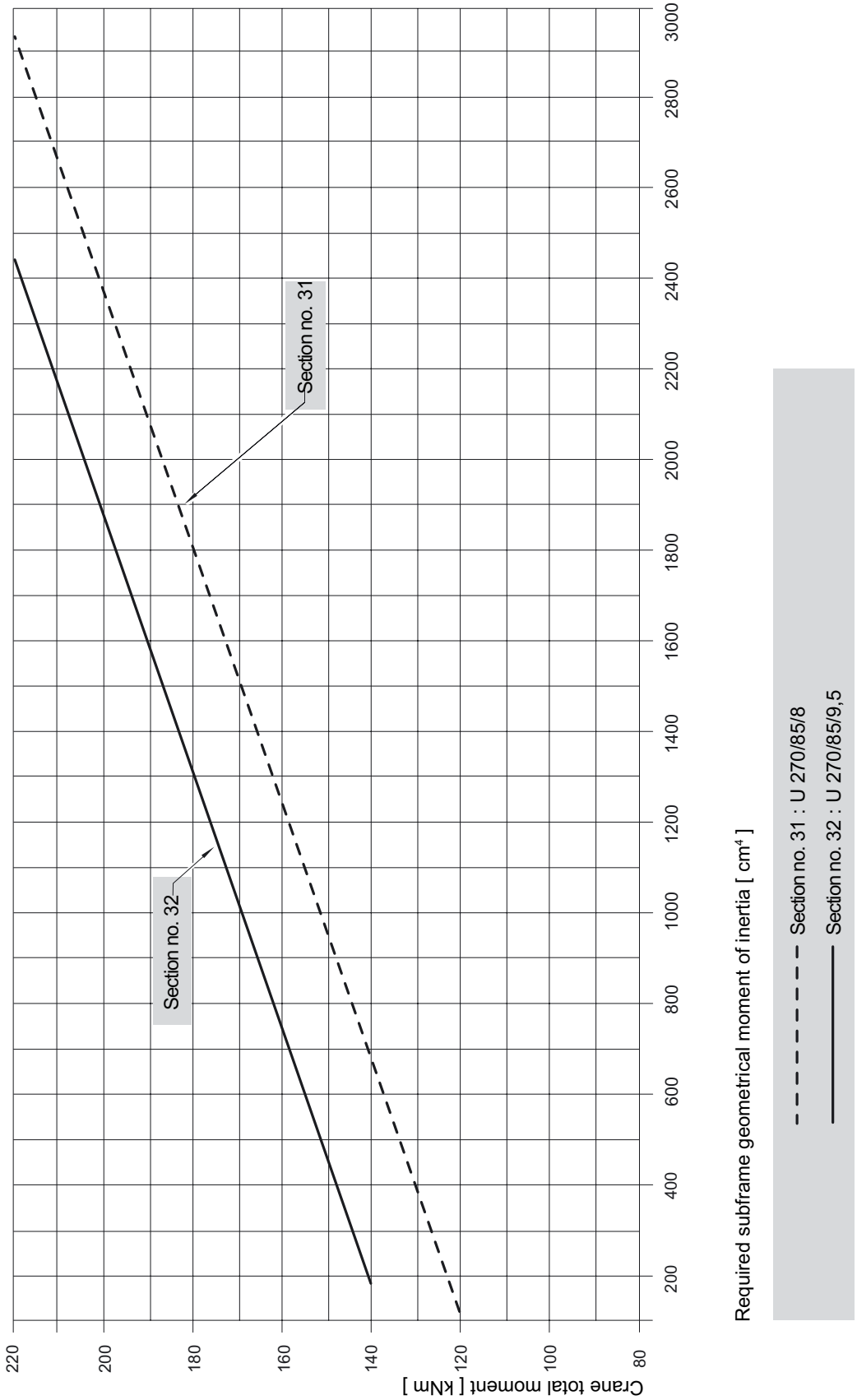

cardiagn.com

Fig. 90: Geometrical moments of inertia for U-sections ESC-213

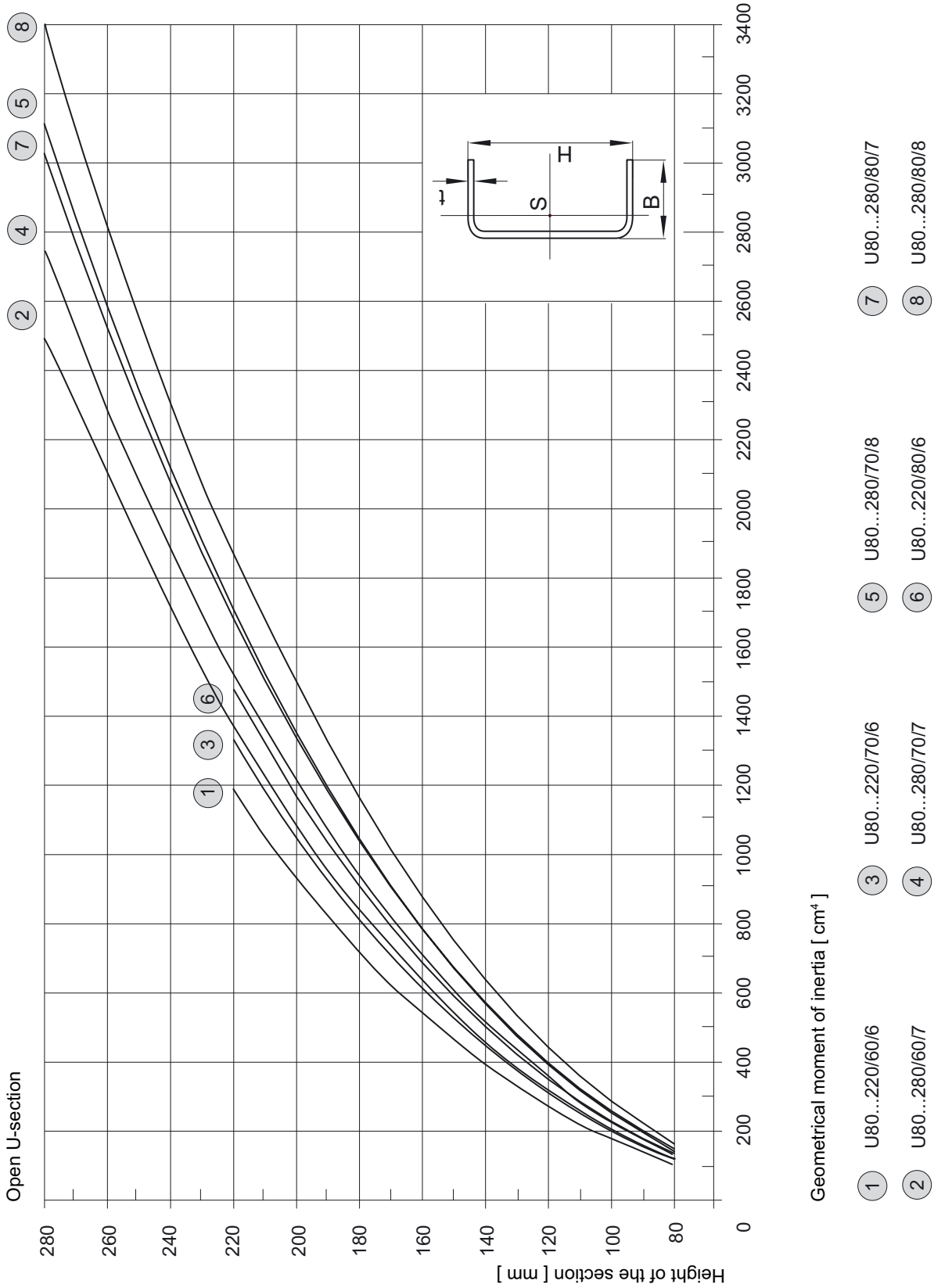

cardiagn.com

Fig. 91: Geometrical moments of inertia of closed U-sections ESC-214

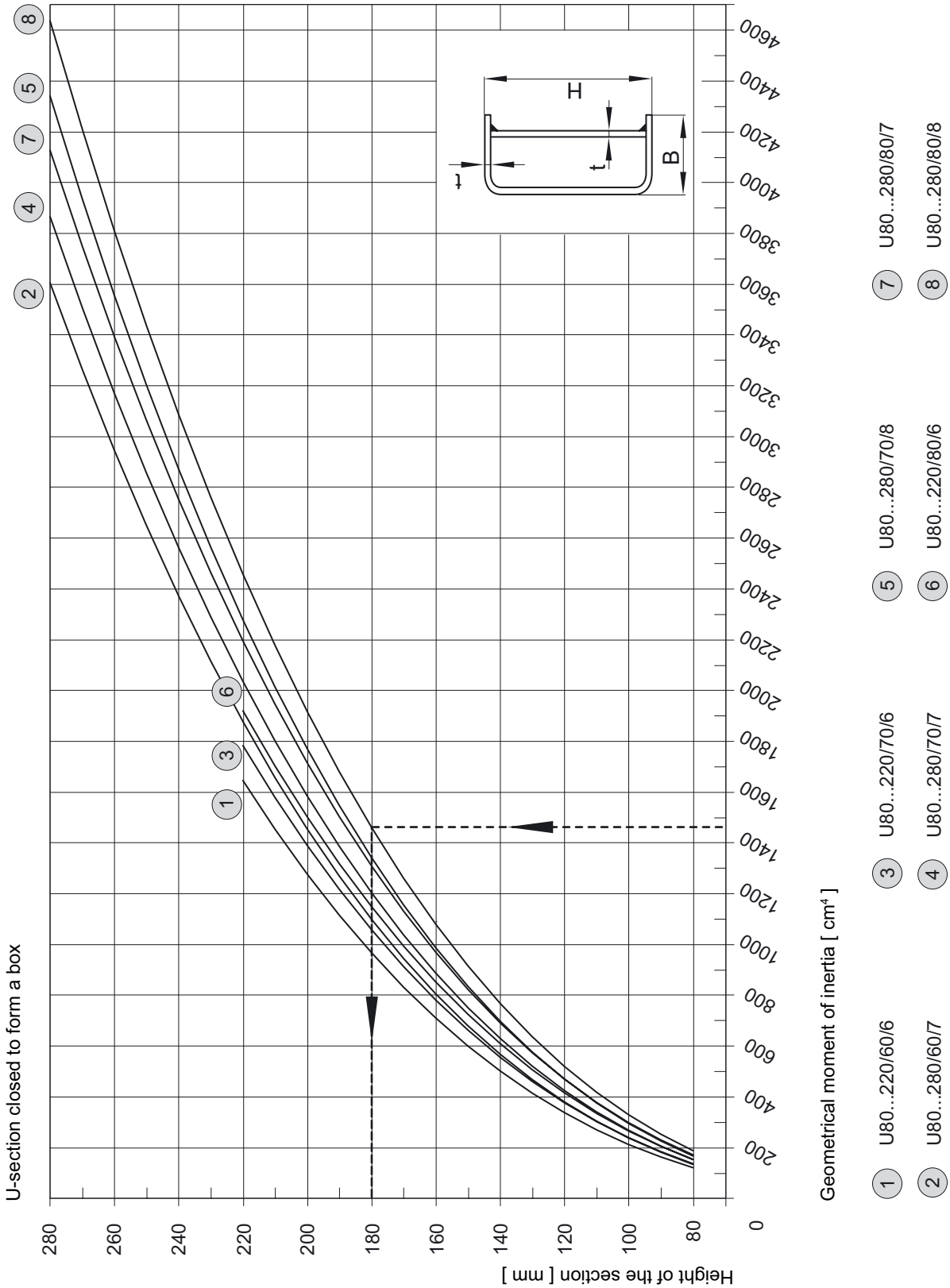

cardiagn.com

Fig. 92: Geometrical moments of inertia for boxed U-sections ESC-215

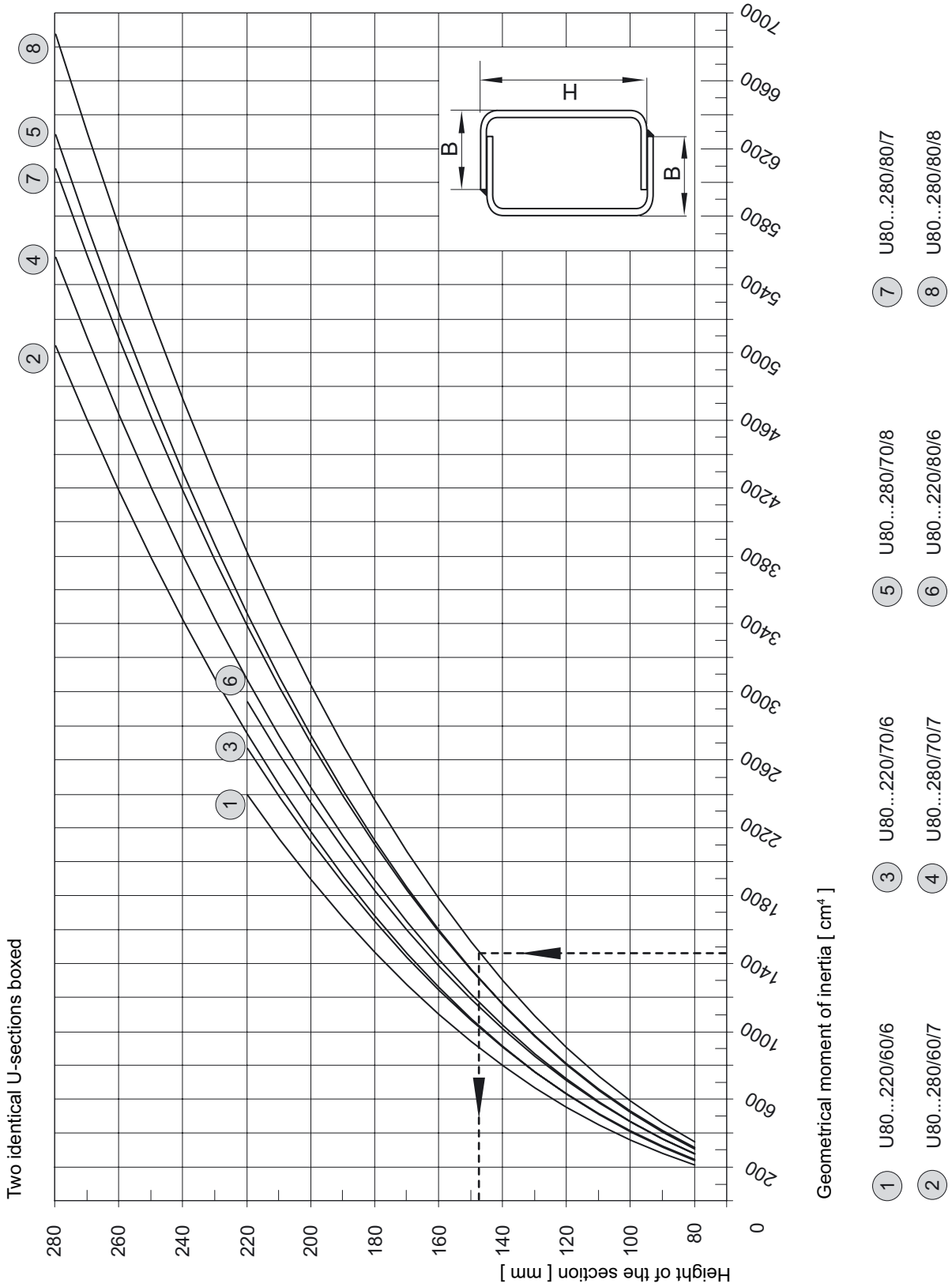

cardiagn.com

5.3.9 Tail-lifts

Before installing a tail-lift (also called lifting platforms, loading platforms, tail-lifts), its compatibility with the vehicle design, the chassis and the body must be checked.

The installation of a tail-lift affects:

- Weight distribution
- Body and overall length
- Frame bending
- Subframe bending
- Type of connection between frame and subframe
- The on-board electrical system (battery, alternator, wiring).

The body manufacturer must:

- Carry out a calculation of the axle loads
- Observe the stipulated minimum front axle load (see „General“ Chapter, Section „Minimum front axle loads“)
- Avoid overloading the rear axles
- If necessary shorten the body length and rear overhang or extend the wheelbase
- Check stability
- Design the subframe and the connections to the frame – see the Section “Subframe specification”
- Provide batteries of greater capacity (140Ah for L2000, 180Ah for M2000 and F2000) and a higher capacity alternator (at least 28V 55A, but preferably 28V 80A). These can be provided ex-works as optional equipment.
- Install an electrical interface for the tail-lift (for wiring diagrams and pin assignment see the Section on electrical connections). The electrical interface for the tail-lift can also be supplied ex-works.
- Observe the regulations, e.g.
  - EC Machinery Directive (consolidated version of Directive 89/392/EEC: 98/37/EC)
  - Accident prevention regulations (UVV)
  - Fit underride guards in accordance with §32b StVZO or EC Directive 70/221/EEC or ECE R 58
  - Fit approved lighting installations in accordance with 76/756/EEC (in Germany, additional yellow indicator lights and retroreflective red-white warning markers are also required when operating the tail-lift, in accordance with §53b, Paragraph 5, StVZO for lifting platforms).

Defining the sub-frame

The sub-frame tables are applicable subject to the following:

- Minimum front axle load respected in accordance with Section 3.18 of the ‚General’ Chapter
- No design overload of the rear axle(s)
- In addition to the support loads occurring on the tail-lift, both minimum front axle load and maximum rear axle load are to be added to the trailer vehicle on testing.
- Vehicles with lifting axles must lower the lifting axle during operation of the tail-lift.
- overhang limits in respect of max. vehicle overhang respected.

The values in the tables are the benchmark values for which, due to strength/deformation reasons, no supports are required.
They are required if:

- The tail-lift loading capacity limits given in the tables is exceeded
- Outriggers are required for stability reasons

If supports – although not required – are mounted, this does not affect the size of the extended sub-frame.
It is not permitted to raise the vehicles with the supports, as this could damage the frame.

cardiagn.com

Vehicles fitted with loading ramps ex-works (manufactured by Walther) are fitted with a U 120/60/6 sub-frame made of QStE 380 ($\sigma_{0,2} \geq 380$ N/mm^2) , where the connection to the chassis is flexible using MAN angle brackets. If required according to the tables, a partially rigid connection is to be made retrospectively when fitting a tail-lift.
The tables are sorted in ascending order according to model range, suspension type and wheelbase, where the vehicle designation (e.g. LE 8.xxx LC 4x2 BB) is to be regarded as an aid to orientation. The 3-digit type numbers, also known as type code numbers, which appear at the 2nd and 4th positions of the basic vehicle number and at the 4th and 6th positions of the vehicle identification number are binding (for explanation, see the 'General' Chapter). All other technical documents, e.g. chassis drawings, assembly directives relate to the type number.
The overhang – always related to the wheel centre of the last axle – includes both the frame overhang of the standard production chassis and the overall maximum vehicle overhang (including body and tail-lift, see Fig. 93 below), which must not be exceeded when the tail-lift has been fitted. If the specified maximum vehicle overhang is insufficient, the sub-frame data in the following lines for which the ≤-condition is satisfied applies (apart from the start of the rigid connection, which relates only to the wheelbase).
The sub-frames in the tables are examples. For instance U120/60/6 is a U section open to the inside with an outer height of 120mm, top and bottom 60mm wide and 6mm thick over the entire cross section. Other steel sections are acceptable if they have at least equivalent values in respect of moments of inertia I_x, moments of resistance W_{x1} W_{x2} and yield points $\sigma_{0,2}$.

Table 35: Technical data for sub-frame profile

Profile	Height	Width o/u	Thickness	I_x	W_{x1}, W_{x2}	$\sigma_{0,2}$	σ_B	Mass
U100/50/5	100mm	50mm	5mm	136cm^4	27cm^3	355 N/mm^2	520 N/mm^2	7,2kg/m
U100/60/6	100mm	60mm	6mm	182cm^4	36cm^3	355 N/mm^2	520 N/mm^2	9,4kg/m
U120/60/6	120mm	60mm	6mm	281cm^4	47cm^3	355 N/mm^2	520 N/mm^2	10,4kg/m
U140/60/6	140mm	60mm	6mm	406cm^4	58cm^3	355 N/mm^2	520 N/mm^2	11,3kg/m
U160/60/6	160mm	60mm	6mm	561cm^4	70cm^3	355 N/mm^2	520 N/mm^2	12,3kg/m
U160/70/7	160mm	70mm	7mm	716cm^4	90cm^3	355 N/mm^2	520 N/mm^2	15,3kg/m
U180/70/7	180mm	70mm	7mm	951cm^4	106cm^3	355 N/mm^2	520 N/mm^2	16,3kg/m

If adequate, the flexible structure of the sub-frame is designated by a **w**. For the partially rigid structure (designated **s**), the number of screw connections, the weld seam length – in each case per frame side – and the start of the rigid connection from the centre of axle 1 are indicated (see Fig. 93). For the rigid and/or partially rigid connection, the conditions set out in Chapter 5 'Body' apply.

Fig. 93: Tail-lift overhang dimension, dimensions with partially rigid connection ESC-633

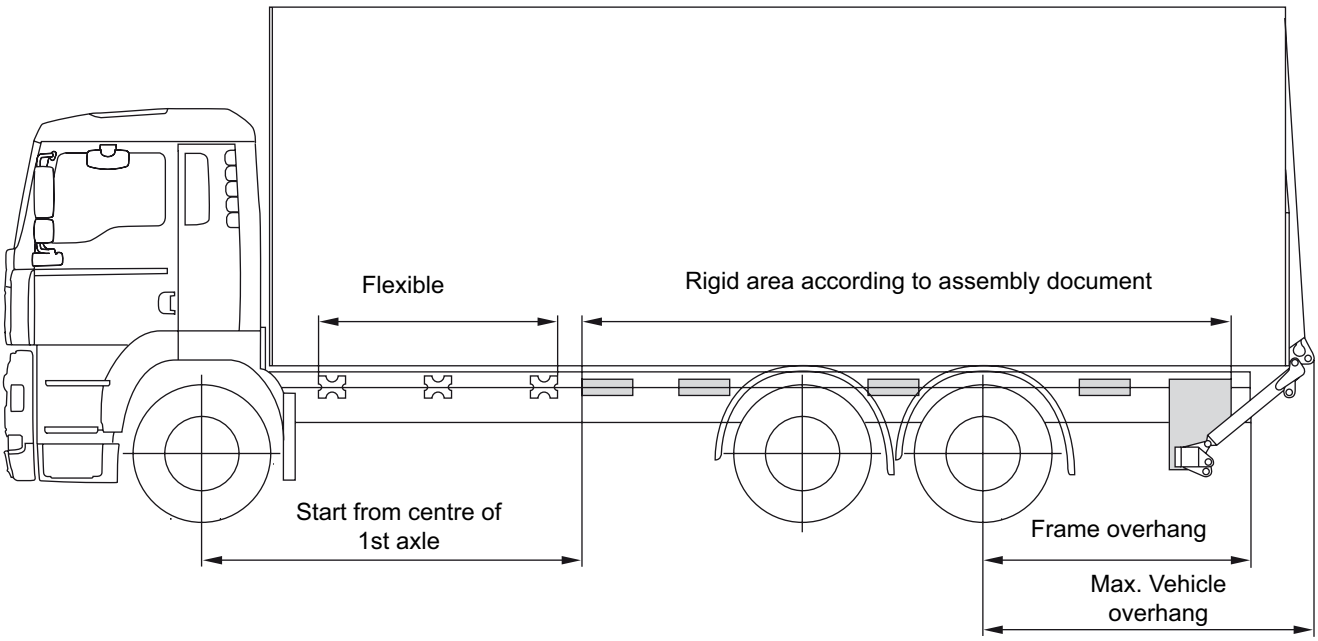

cardiagn.com

Table 36: Subframe and mounting method

L2000 LE 8.xxx LE 9.xxx Connection method: **w** = flexible **s** = rigid

L20 L21 LE 8.xxx 4x2 BB LE 9.xxx 4x2 BB (leaf/leaf)								
Wheel base	Standard frame overhang	max. vehicle overhang	LBW useful load	Min. subframe	Type of connection	Each frame side ≥		Start from centre of 1st axle ≤
						Bolt diameter Ø12+0,2	Weld length	
3.000	1.090	≤ 1.800	≤ 20,0	U 100/50/5	w			
3.350	1.420	≤ 2.000	≤ 15,0	U 100/50/5	w			
			20,0	U 120/60/6	w			
				U 100/50/5	s	34	950	1.950
3.650	1.820	≤ 2.150	≤ 15,0	U 100/50/5	w			
			20,0	U 120/60/6	w			
				U 100/50/5	s	26	750	2.100
3.950	1.820	≤ 2.350	≤ 10,0	U 100/50/5	w			
			15,0	U 120/60/6	w			
				U 100/50/5	s	24	650	2.300
			20,0	U 160/60/6	w			
				U 100/50/5	s	30	850	2.300
4.250	2.075	≤ 2.550	≤ 10,0	U 100/50/5	w			
			15,0	U 160/60/6	w			
				U 100/50/5	s	24	650	2.450
			20,0	U 100/50/5	s	28	800	2.450
4.600	2.550	≤ 2.750	≤ 7,5	U 100/50/5	w			
			10,0	U 120/60/6	w			
				U 100/50/5	s	18	450	2.650
			15,0	U 160/70/7	w			
				U 100/50/5	s	22	600	2.650
			20,0	U 100/50/5	s	28	750	2.650
4.900	2.550	≤ 2.900	≤ 7,5	U 120/60/6	w			
				U 100/50/5	s	16	450	2.850
			10,0	U 160/60/6	w			
				U 100/50/5	s	18	500	2.850
			15,0	U 100/50/5	s	24	650	2.850
			20,0	U 120/60/6	s	30	800	2.850
5.300	2.925	≤ 3.150	≤ 7,5	U 160/60/6	w			
				U 100/50/5	s	16	450	3.000
			10,0	U 100/50/5	s	18	500	3.000
			15,0	U 100/50/5	s	24	650	3.000
			20,0	U 120/60/6	s	30	700	3.000

Dimensions in mm, loads in kN

cardiagn.com

L2000 LE 8.xxx LE 9.xxx Connection method: w = flexible s = rigid

L33 L34 LE 8.xxx 4x2 BL / LE 9.xxx 4x2 BL (leaf-air)								
Wheel base	Standard frame overhang	max. vehicle overhang	LBW useful load	Min. subframe	Type of connection	Each frame side ≥		Start from centre of 1st axle ≤
						Bolt diameter Ø12+0,2	Weld length	
3.000	1.090	≤ 1.800	≤ 15,0	U 100/50/5	w			
			20,0	U 140/60/6	w			
				U 100/50/5	s	28	800	1.750
3.350	1.420	≤ 2.000	≤ 10,0	U 100/50/5	w			
			15,0	U 120/60/6	w			
				U 100/50/5	s	22	600	1.950
			20,0	U 160/60/6	w			
				U 100/50/5	s	26	700	1.950
3.650	1.820	≤ 2.150	≤ 10,0	U 100/50/5	w			
			15,0	U 140/60/6	w			
				U 100/50/5	s	20	550	2.100
			20,0	U 160/70/7	w			
				U 100/50/5	s	24	650	2.100
3.950	1.820	≤ 2.350	≤ 7,5	U 100/50/5	w			
			10,0	U 120/60/6	w			
				U 100/50/5	s	16	450	2.300
			15,0	U 160/70/7	w			
				U 100/50/5	s	22	600	2.300
			20,0	U 120/60/6	s	26	600	2.300
4.250	2.075	≤ 2.550	≤ 7,5	U 120/60/6	w			
				U 100/50/5	s	14	400	2.450
			10,0	U 160/60/6	w			
				U 100/50/5	s	18	450	2.450
			15,0	U 100/50/5	s	22	600	2.450
			20,0	U 120/60/6	s	28	600	2.450
4.600	2.550	≤ 2.750	≤ 7,5	U 160/60/6	w			
				U 100/50/5	s	14	400	2.650
			10,0	U 100/50/5	s	18	450	2.650
			15,0	U 100/50/5	s	22	600	2.650
			20,0	U 140/60/6	s	26	600	2.650
4.900	2.450	≤ 2.900	≤ 7,5	U 160/70/7	w			
				U 100/50/5	s	16	450	2.850
			10,0	U 100/50/5	s	18	500	2.850
			15,0	U 100/50/5	s	24	650	2.850
			20,0	U 140/60/6	s	28	650	2.850
5.300	2.925	≤ 3.150	≤ 7,5	U 100/50/5	s	16	450	3.000
			10,0	U 100/50/5	s	18	500	3.000
			15,0	U 120/60/6	s	24	550	3.000
			20,0	U 160/60/6	s	28	600	3.000

Dimensions in mm, loads in kN

cardiagn.com

L2000 LE 10.xxx Connection method: **w** = flexible **s** = rigid

L24 L25 LE 10.xxx 4x2 BB (leaf/leaf)								
Wheel base	Standard frame overhang	max. vehicle overhang	LBW useful load	Min. subframe	Type of connection	Each frame side ≥		Start from centre of 1st axle ≤
						Bolt diameter Ø 12+0,2	Weld length	
3.000	1.090	≤ 1.650	≤ 20,0	U 100/50/5	w			
3.350	1.420	≤ 1.900	≤ 20,0	U 100/50/5	w			
3.650	1.820	≤ 2.150	≤ 15,0	U 100/50/5	w			
			20,0	U 120/60/6	w			
				U 100/50/5	s	26	750	2.100
3.950	1.820	≤ 2.350	≤ 10,0	U 100/50/5	w			
			15,0	U 120/60/6	w			
				U 100/50/5	s	24	700	2.300
			20,0	U 160/60/6	w			
				U 100/50/5	s	30	850	2.300
4.250	2.075	≤ 2.550	≤ 10,0	U 100/50/5	w			
			15,0	U 160/60/6	w			
				U 100/50/5	s	24	650	2.450
			20,0	U 100/50/5	s	30	850	2.450
4.600	2.550	≤ 2.750	≤ 7,5	U 100/50/5	w			
			10,0	U 140/60/6	w			
				U 100/50/5	s	18	500	2.650
			15,0	U 160/70/7	w			
				U 100/50/5	s	22	600	2.650
			20,0	U 120/60/6	s	28	650	2.650
4.900	2.550	≤ 2.900	≤ 7,5	U 120/60/6	w			
				U 100/50/5	s	16	450	2.850
			10,0	U 160/60/6	w			
				U 100/50/5	s	20	550	2.850
			15,0	U 100/50/5	s	26	750	2.850
			20,0	U 120/60/6	s	32	700	2.850
5.300	2.925	≤ 3.150	≤ 7,5	U 160/70/7	w			
				U 100/50/5	s	16	450	3.000
			10,0	U 100/50/5	s	20	550	3.000
			15,0	U 100/50/5	s	26	700	3.000
			20,0	U 140/60/6	s	30	700	3.000

Dimensions in mm, loads in kN

cardiagn.com

L2000 LE 10.xxx Connection method: **w** = flexible **s** = rigid

L35 L36 LE 10.xxx 4x2 BL (leaf-air)								
Wheel base	Standard frame overhang	max. vehicle overhang	LBW useful load	Min. subframe	Type of connection	Each frame side ≥		Start from centre of 1st axle ≤
						Bolt diameter Ø 12+0,2	Weld length	
3.000	1.090	≤ 1.650	≤ 15,0	U 100/50/5	w			
			20,0	U 120/60/6	w			
				U 100/50/5	s	28	750	1.750
3.350	1.420	≤ 1.900	≤ 10,0	U 100/50/5	w			
			15,0	U 120/60/6	w			
				U 100/50/5	s	22	550	1.950
			20,0	U 160/60/6	w			
				U 100/50/5	s	26	700	1.950
3.650	1.820	≤ 2.150	≤ 10,0	U 100/50/5	w			
			15,0	U 140/60/6	w			
				U 100/50/5	s	20	550	2.100
			20,0	U 160/70/7	w			
				U 100/50/5	s	24	650	2.100
3.950	1.820	≤ 2.350	≤ 7,5	U 100/50/5	w			
			10,0	U 140/60/6	w			
				U 100/50/5	s	18	500	2.300
			15,0	U 160/70/7	w			
				U 100/50/5	s	22	600	2.300
			20,0	U 120/60/6	s	28	600	2.300
4.250	2.075	≤ 2.550	≤ 7,5	U 140/60/6	w			
				U 100/50/5	s	16	450	2.450
			10,0	U 160/70/	w			
				U 100/50/5	s	18	500	2.450
			15,0	U 100/50/5	s	22	650	2.450
			20,0	U 120/60/6	s	28	650	2.450
4.600	2.550	≤ 2.750	≤ 7,5	U 160/60/6	w			
				U 100/50/5	s	16	400	2.650
			10,0	U 100/50/5	s	18	500	2.650
			15,0	U 100/50/5	s	22	600	2.650
			20,0	U 140/60/6	s	28	600	2.650
4.900	2.450	≤ 2.900	≤ 7,5	U 100/50/5	s	16	450	2.850
			10,0	U 100/50/5	s	20	550	2.850
			15,0	U 120/60/6	s	26	550	2.850
			20,0	U 140/60/6	s	30	650	2.850
5.300	2.925	≤ 3.150	≤ 7,5	U 100/50/5	s	18	450	3.000
			10,0	U 100/50/5	s	20	550	3.000
			15,0	U 120/60/6	s	26	550	3.000
			20,0	U 160/60/6	s	28	650	3.000

Dimensions in mm, loads in kN

cardiagn.com

M2000L LE 12.xxx Connection method: **w** = flexible **s** = rigid

L70 L71 LE 12.xxx 4x2 BB (leaf - leaf)								
Wheel base	Standard frame overhang	max. vehicle overhang	LBW useful load	Min. subframe	Type of connection	Each frame side ≥		Start from centre of 1st axle ≤
						Bolt diameter Ø 14+0,2	Weld length	
3.275	1.850	≤ 1.900	≤ 30,0	U 100/50/5	w			
3.675	2.150	≤ 2.200	≤ 20,0	U 100/50/5	w			
			30,0	U 120/60/6	w			
				U 100/50/5	s	22	850	2.100
4.025	2.1100	≤ 2.400	≤ 20,0	U 100/50/5	w			
			30,0	U 160/70/7	w			
				U 100/50/5	s	26	950	2.300
4.575	2.100	≤ 2.700	≤ 10,0	U 100/50/5	w			
			15,0	U 140/60/6	w			
				U 100/50/5	s	20	700	2.650
			20,0	U 100/50/5	s	24	850	2.650
			30,0	U 100/50/5	s	32	1200	2.650
5.075	2.550	≤ 3.000	≤ 7,5	U 100/50/5	w			
			10,0	U 140/60/6	w			
				U 100/50/5	s	14	550	2.950
			15,0	U 100/50/5	s	18	700	2.950
			20,0	U 100/50/5	s	22	850	2.950
			30,0	U 120/60/6	s	32	950	2.950
5.475	3.000	≤ 3.250	≤ 7,5	U 140/60/6	w			
				U 100/50/5	s	12	450	3.150
			10,0	U 160/70/7	w			
				U 100/50/5	s	14	500	3.150
			15,0	U 100/50/5	s	18	650	3.150
			20,0	U 100/50/5	s	22	800	3.150
			30,0	U 140/60/6	s	30	900	3.150

Dimensions in mm, loads in kN

cardiagn.com

M2000L LE 12.xxx Connection method: **w** = flexible **s** = rigid

L72 L73 LE 12.xxx 4x2 BL (leaf-air)								
Wheel base	Standard frame overhang	max. vehicle overhang	LBW useful load	Min. subframe	Type of connection	Each frame side ≥		Start from centre of 1st axle ≤
						Bolt diameter Ø 14+0,2	Weld length	
3.275	1.850	≤ 1.900	≤ 20,0	U 100/50/5	w			
			30,0	U 160/60/6	w			
				U 100/50/5	s	20	700	1.900
3.675	2.150	≤ 2.200	≤ 15,0	U 100/50/5	w			
			20,0	U 160/60/6	w			
				U 100/50/5	s	16	600	2.100
			30,0	U 100/50/5	s	22	800	2.100
4.025	2.100	≤ 2.400	≤ 10,0	U 100/50/5	w			
			15,0	U 160/60/6	w			
				U 100/50/5	s	14	550	2.300
			20,0	U 100/50/5	s	18	650	2.300
			30,0	U 100/50/5	s	24	900	2.300
4.575	2.100	≤ 2.700	≤ 7,5	U 140/60/6	w			
				U 100/50/5	s	12	450	2.650
			10,0	U 160/70/7	w			
				U 100/50/5	s	14	500	2.650
			15,0	U 100/50/5	s	18	650	2.650
			20,0	U 100/50/5	s	22	800	2.650
			30,0	U 140/60/6	s	30	900	2.650
5.075	2.550	≤ 3.000	≤ 7,5	U 100/50/5	s	14	450	2.950
			10,0	U 100/50/5	s	14	550	2.950
			15,0	U 100/50/5	s	18	650	2.950
			20,0	U 120/60/6	s	22	700	2.950
			30,0	U 160/60/6	s	30	900	2.950
5.475	3.000	≤ 3.250	≤ 10,0	U 100/50/5	s	14	550	3.150
			15,0	U 120/60/6	s	20	550	3.150
			20,0	U 140/60/6	s	22	650	3.150
			30,0	U 180/70/7	s	28	700	3.150

Dimensions in mm, loads in kN

cardiagn.com

M2000L LE 14.xxx Connection method: **w** = flexible **s** = rigid

L74 L75 LE 14.xxx 4x2 BB (leaf - leaf)								
Wheel base	Standard frame overhang	max. vehicle overhang	LBW useful load	Min. subframe	Type of connection	Each frame side ≥		Start from centre of 1st axle ≤
						Bolt diameter Ø 14+0,2	Weld length	
≤ 3.675		≤ 1.950	≤ 30,0	U 100/50/5	w			
4.025	2.100	≤ 2.200	≤ 20,0	U 100/50/5	w			
			30,0	U 120/60/6	w			
				U 100/50/5	s	24	900	2.300
4.575	2.100	≤ 2.550	≤ 15,0	U 100/50/5	w			
			20,0	U 120/60/6	w			
				U 100/50/5	s	20	750	2.650
			30,0	U 100/50/5	s	28	1050	2.650
5.075	2.550	≤ 2.950	≤ 10,0	U 100/50/5	w			
			15,0	U 160/60/6	w			
				U 100/50/5	s	18	650	2.950
			20,0	U 100/50/5	s	22	800	2.950
			30,0	U 120/60/6	s	30	900	2.950
5.475	3.000	≤ 3.200	≤ 7,5	U 120/60/6	w			
				U 100/50/5	s	12	450	3.150
			10,0	U 160/60/6	w			
				U 100/50/5	s	14	500	3.150
			15,0	U 100/50/5	s	18	650	3.150
			20,0	U 100/50/5	s	22	800	3.150
			30,0	U 120/60/6	s	30	900	3.150

Dimensions in mm, loads in kN

cardiagn.com

M2000L LE 14.xxx Connection method: **w** = flexible **s** = rigid

L76 L77 L79 LE 14.xxx 4x2 BL / LL (leaf-air / air-air)								
Wheel base	Standard frame overhang	max. vehicle overhang	LBW useful load	Min. subframe	Type of connection	Each frame side ≥		Start from centre of 1st axle ≤
						Bolt diameter Ø 14+0,2	Weld length	
≤ 3.275	1.850	≤ 1.650	≤ 30,0	U 100/50/5	w			
3.675	2.150	≤ 1.950	≤ 20,0	U 100/50/5	w			
			30,0	U 160/60/6	w			
				U 100/50/5	s	20	700	2.100
4.025	2.100	≤ 2.150	≤ 15,0	U 100/50/5	w			
			20,0	U 160/60/6	w			
				U 100/50/5	s	16	600	2.300
			30,0	U 100/50/5	s	22	850	2.300
4.575	2.100	≤ 2.550	≤ 7,5	U 100/50/5	w			
			10,0	U 120/60/6	w			
				U 100/50/5	s	14	450	2.650
			15,0	U 160/70/7	w			
				U 100/50/5	s	16	600	2.650
			20,0	U 100/50/5	s	20	700	2.650
			30,0	U 120/60/6	s	28	800	2.650
5.075	2.550	≤ 2.900	≤ 7,5	U 160/60/6	w			
				U 100/50/5	s	12	450	2.950
			10,0	U 100/50/5	s	14	500	2.950
			20,0	U 120/60/6	s	22	650	2.950
			30,0	U 140/60/6	s	28	850	2.950
5.475	3.000	≤ 3.200	≤ 7,5	U 100/50/5	s	14	450	3.150
			10,0	U 100/50/5	s	14	550	3.150
			15,0	U 120/60/6	s	20	550	3.150
			20,0	U 120/60/6	s	22	700	3.150
			30,0	U 160/70/7	s	30	750	3.150
6.900	3.425	≤ 3.850	≤ 7,5	U 140/60/6	s	18	500	4.000
			10,0	U 160/60/6	s	20	600	4.000
			15,0	U 180/70/7	s	24	600	4.000

Dimensions in mm, loads in kN

cardiagn.com

M2000L LE 15.xxx 20.xxx Connection method: **w** = flexible **s** = rigid

L81 L82 LE 15.xxx 4x2 BB (leaf - leaf)								
Wheel base	Standard frame overhang	max. vehicle overhang	LBW useful load	Min. subframe	Type of connection	Each frame side ≥		Start from centre of 1st axle ≤
						Bolt diameter Ø 14+0,2	Weld length	
≤ 4.325		≤ 2.000	≤ 30,0	U 100/50/5	w			
4.575	2.100	≤ 2.200	≤ 20,0	U 100/50/5	w			
			30,0	U 120/60/6	w			
				U 100/50/5	s	24	900	2.650
5.075	2.550	≤ 2.500	≤ 15,0	U 100/50/5	w			
			20,0	U 120/60/6	w			
				U 100/50/5	s	18	650	2.950
			30,0	U 100/50/5	s	24	900	2.950
5.475	3.000	≤ 2.750	≤ 10,0	U 100/50/5	w			
			15,0	U 120/60/6	w			
				U 100/50/5	s	14	550	3.150
			20,0	U 160/60/6	w			
				U 100/50/5	s	18	650	3.150
			30,0	U 100/50/5	s	24	900	3.150
L83 L84 L86 LE 15.xxx 4x2 BL / LL (leaf-air / air-air)								
≤ 3.675		≤ 1.600	≤ 30,0	U 100/50/5	w			
4.325	2.550	≤ 2.000	≤ 20,0	U 100/50/5	w			
			30,0	U 160/70/7	w			
				U 100/50/5	s	18	700	2.500
4.575	2.100	≤ 2.150	≤ 15,0	U 100/50/5	w			
			20,0	U 120/60/6	w			
				U 100/50/5	s	16	600	2.650
			30,0	U 100/50/5	s	22	800	2.650
5.075	2.550	≤ 2.450	≤10,0	U 100/50/5	w			
			15,0	U 160/60/6	w			
				U 100/50/5	s	14	550	2.950
			20,0	U 100/50/5	s	18	650	2.950
			30,0	U 100/50/5	s	24	850	2.950
5.475	3.000	≤ 2.700	≤ 7,5	U 120/60/6	w			
				U 100/50/5	s	12	400	3.150
			10,0	U 160/60/6	w			
				U 100/50/5	s	12	450	3.150
			15,0	U 100/50/5	s	16	550	3.150
			20,0	U 100/50/5	s	18	700	3.150
			30,0	U 120/60/6	s	26	800	3.150

Dimensions in mm, loads in kN

cardiagn.com

M2000L LE 15.xxx 20.xxx Connection method: **w** = flexible **s** = rigid

L84 L86	**LE 20.xxx 6x2-4 BL / LL (leaf-air / air-air)**							
Wheel base	Standard frame overhang	max. vehicle overhang	LBW useful load	Min. subframe	Type of connection	Each frame side ≥		Start from centre of 1st axle ≤
						Bolt diameter Ø 14+0,2	Weld length	
3.675	1.500	≤ 2.000	≤ 7,5	U 140/60/6	w			
+1.375				U 100/50/5	s	10	600	2.900
			10,0	U 160/70/7	w			
				U 100/50/5	s	12	700	2.900
			15,0	U 100/50/5	s	14	800	2.900
			20,0	U 100/50/5	s	16	950	2.900
			30,0	U 120/60/6	s	22	1.050	2.900
4.025	1.700	≤ 2.250	≤ 7,5	U 160/70/7	w			
+1.375				U 100/50/5	s	10	600	3.100
			10,0	U 180/70/7	w			
				U 100/50/5	s	12	700	3.100
			15,0	U 100/50/5	s	14	800	3.100
			20,0	U 120/60/6	s	18	850	3.100
			30,0	U 140/60/6	s	22	1.050	3.100
4.325	1.900	≤ 2.450	≤ 10,0	U 100/50/5	s	12	700	3.300
+1.375			15,0	U 120/60/6	s	16	750	3.300
			20,0	U 120/60/6	s	18	850	3.300
			30,0	U 160/60/6	s	22	1.050	3.300
4.575	2.000	≤ 2.600	≤ 10,0	U 100/50/5	s	14	750	3.450
+1.375			15,0	U 120/60/6	s	16	750	3.450
			20,0	U 140/60/6	s	20	900	3.450
			30,0	U 160/70/7	s	24	950	3.450

Dimensions in mm, loads in kN

cardiagn.com

M2000L LE 18.xxx Connection method: **w** = flexible **s** = rigid

L87 LE 18.xxx 4x2 BB (leaf - leaf)

Wheel base	Standard frame overhang	max. vehicle overhang	LBW useful load	Min. subframe	Type of connection	Each frame side ≥		Start from centre of 1st axle ≤
						Bolt diameter Ø 16+0,2	Weld length	
≤ 5.900		≤ 2.500	≤ 30,0	No subframe required				
6.300	2.800	≤ 2.700	≤ 20,0	No subframe required				
			30,0	U 120/60/6	w			
				U 100/50/5	s	16	800	3.650
L88 L89 LE 18.xxx 4x2 BL / LL (leaf-air / air-air)								
≤ 5.100		≤ 2.100	≤ 30,0	No subframe required				
5.500	3.050	≤ 2.300	≤ 20,0	No subframe required				
			30,0	U 120/60/6	w			
				U 100/50/5	s	14	600	3.200
5.900	3.200	≤ 2.500	≤ 20,0	No subframe required				
			30,0	U 160/70/7	w			
				U 100/50/5	s	14	650	3.400
6.300	2.800	≤ 2.700	≤ 15,0	No subframe required				
			20,0	U 160/60/6	w			
				U 100/50/5	s	12	600	3.650
			30,0	U 100/50/5	s	16	800	3.650

Dimensions in mm, loads in kN

cardiagn.com

M2000M ME 12.xxx ME 14.xxx Connection method: **w** = flexible **s** = rigid

M31	**ME 12.xxx 4x2 BB / ME 14.xxx 4x2 BB (leaf - leaf)**							
Wheel base	Standard frame overhang	max. vehicle overhang	LBW useful load	Min. subframe	Type of connection	Each frame side ≥		Start from centre of 1st axle ≤
						Bolt diameter Ø 14+0,2	Weld length	
4.425	2.250	≤ 2.300	≤ 20,0	U 100/50/5	w			
			30,0	U 120/60/6	w			
				U 100/50/5	s	24	850	2.550
4.925	2.700	≤ 2.650	≤ 15,0	U 100/50/5	w			
			20,0	U 140/60/6	w			
				U 100/50/5	s	18	650	2.850
			30,0	U 100/50/5	s	24	900	2.850
5.325	3.150	≤ 2.900	≤ 10,0	U 100/50/5	w			
			15,0	U 140/60/6	w			
				U 100/50/5	s	16	550	2.900
			20,0	U 100/50/5	s	18	650	2.900
			30,0	U 100/50/5	s	24	900	2.950
M32 M33	**ME 12.xxx 4x2 BL / ME 14.xxx 4x2 BL / LL MLC (leaf-air / air-air)**							
4.425	2.250	≤ 2.300	≤ 15,0	U 100/50/5	w			
			20,0	U 160/60/6	w			
				U 100/50/5	s	16	600	2.550
			30,0	U 100/50/5	s	22	800	2.550
4.925	2.700	≤ 2.600	≤ 7,5	U 100/50/5	w			
			10,0	U 120/60/6	w			
				U 100/50/5	s	12	450	2.850
			15,0	U 160/70/7	w			
				U 100/50/5	s	14	550	2.850
			20,0	U 100/50/5	s	18	650	2.850
			30,0	U 120/60/6	s	26	750	2.850
5.325	3.150	≤ 2.900	≤ 7,5	U 140/60/6	w			
				U 100/50/5	s	12	400	3.050
			15,0	U 160/70/7	w			
				U 100/50/5	s	12	450	3.050
			20,0	U 100/50/5	s	18	700	3.050
			30,0	U 140/60/6	s	26	800	3.050
5.800	2.675	≤ 3.150	≤ 7,5	U 100/50/5	s	14	500	3.350
			10,0	U 100/50/5	s	16	550	3.350
			15,0	U 120/60/6	s	20	600	3.350
			20,0	U 120/60/6	s	24	700	3.350
			30,0	U 160/70/7	s	32	800	3.350

Dimensions in mm, loads in kN

cardiagn.com

M2000M ME 18.xxx ME 25.xxx Connection method: **w** = flexible **s** = rigid

Wheel base	Standard frame overhang	max. vehicle overhang	LBW useful load	Min. subframe	Type of connection	Each frame side ≥		Start from centre of 1st axle ≤
						Bolt diameter Ø 16+0,2	Weld length	
M38 ME 18.xxx 4x2 BB (leaf - leaf)								
≤5.900		≤ 2.650	≤ 30,0	No subframe required				
6.300	2.800	≤ 2.900	≤ 20,0	No subframe required				
			30,0	U 180/70/7	w			
				U 100/50/5	s	18	900	3.650
M39 M40 ME 18.xxx 4x2 BL / LL (leaf-air / air-air)								
≤4.950		≤ 2.150	≤ 30,0	No subframe required				
5.350	3.200	≤ 2.350	≤15,0	No subframe required				
			20,0	U 100/50/5	w			
			30,0	U 100/50/5	s	24	850	2.950
5.750	3.350	≤ 2.550	≤15,0	No subframe required				
			20,0	U 100/50/5	w			
			30,0	U 100/50/5	s	24	850	3.300
5.900	3.200	≤ 2.650	≤ 15,0	No subframe required				
			20,0	U 100/50/5	w			
			30,0	U 100/50/5	s	24	900	3.400
6.300	2.800	≤ 2.900	≤ 10,0	No subframe required				
			15,0	U 120/60/6	w			
				U 100/50/5	s	12	550	3.650
			20,0	U 180/70/7	w			
				U 100/50/5	s	24	900	3.650
			30,0	U 100/50/5	s	26	1.000	3.650
M42 M43 ME 25.xxx 6x2-2 BL / LL (leaf-air / air-air)								
4.150	2.000	≤ 1.800	≤ 30,0	No subframe required				
+1.350								
4.500	1.650	≤ 2.050	≤ 20,0	No subframe required				
+1.350			30,0	U 160/60/6	w			
				U 100/50/5	s	18	1.000	3.400
5.150	2.000	≤ 2.450	≤ 10,0	No subframe required				
+1.350			15,0	U 120/60/6	w			
				U 100/50/5	s	12	700	3.750
			20,0	U 180/70/7	w			
				U 100/50/5	s	18	800	3.750
			30,0	U 160/60/6	s	22	1.050	3.750
5.600	2.350	≤ 2.750	≤ 7,5	U 100/50/5	w			
+1.350			10,0	U 160/60/6	w			
				U 100/50/5	s	12	650	4.000
			20,0	U 100/50/5	s	20	900	4.000
			30,0	U 120/60/6	s	22	1.000	3.450

Dimensions in mm, loads in kN

cardiagn.com

F2000 FE 19.xxx FE 23.xxx FE 26.xxx Connection method: **w** = flexible **s** = rigid

T01 T31	**FE 19.xxx 4x2 BB (leaf - leaf)**							
Wheel base	Standard frame overhang	max. vehicle overhang	LBW useful load	Min. subframe	Type of connection	Each frame side ≥		Start from centre of 1st axle ≤
						Bolt diameter Ø 16+0,2	Weld length	
≤ 5.700		≤ 3.200	≤ 30,0	No subframe required				
T02 T03 T32 T33 T62	**FE 19.xxx 4x2 BL / LL (leaf-air / air-air)**							
≤ 3.800		≤ 2.000	≤ 30,0	No subframe required				
4.500	1.900	≤ 2.400	≤ 20,0	No subframe required				
			30,0	U 140/60/6	w			
				U 100/50/5	s	16	750	2.600
4.800	1.800	≤ 2.450	≤ 20,0	No subframe required				
			30,0	U 160/60/6	w			
				U 100/50/5	s	18	800	2.750
5.000	2.250	≤ 2.750	≤ 30,0	No subframe required				
5.200	3.000	≤ 2.850	≤ 30,0	No subframe required				
5.500	2.100	≤ 2.950	≤ 20,0	No subframe required				
			30,0	U 120/60/6	w			
				U 100/50/5	s	16	750	3.200
5.700	2.750	≤ 3.200	≤ 20,0	No subframe required				
			30,0	U 180/70/7	w			
				U 100/50/5	s	16	750	3.200
6.600	3.650	≤ 3.800	≤ 10,0	No subframe required				
			15,0	U 140/60/6	w			
				U 100/50/5	s	10	500	3.800
			20,0	U 100/50/5	s	12	550	3.800
			30,0	U 100/50/5	s	16	750	3.800

Dimensions in mm, loads in kN

cardiagn.com

F2000 FE 19.xxx FE 23.xxx FE 26.xxx Connection method: **w** = flexible **s** = rigid

T05 T35	**FE 23.xxx 6x2-2, 6x2-4 LL (air-air)**							
Wheel base	Standard frame overhang	max. vehicle overhang	LBW useful load	Min. subframe	Type of connection	Each frame side ≥		Start from centre of 1st axle ≤
						Bolt diameter Ø 16+0,2	Weld length	
4.600	1.850	≤ 2.700	≤ 7,5	No subframe required				
+1.350			10,0	U 120/60/6	w			
				U 100/50/5	s	12	600	3.450
			15,0	U 180/70/7	w			
				U 100/50/5	s	12	750	3.450
			20,0	U 100/50/5	s	14	850	3.450
			30,0	U 120/60/6	s	22	1.000	3.450
4.800	2.000	≤ 2.850	≤ 7,5	U 120/60/6	w			
+1350				U 100/50/5	s	10	550	3.550
			10,0	U 160/70/7	w			
				U 100/50/5	s	12	650	3.550
			15,0	U 100/50/5	s	14	750	3.550
			20,0	U 100/50/5	s	16	900	3.550
			30,0	U 120/60/6	s	22	1.000	3.550
5.000	1.800	≤ 3.000	≤ 7,5	U 160/70/7	w			
+1350				U 100/50/5	s	12	650	3.650
			10,0	U 100/50/5	s	12	700	3.650
			15,0	U 100/50/5	s	12	650	3.650
			20,0	U 120/60/6	s	20	900	3.650
			30,0	U 140/60/6	s	24	1.150	3.650
T06 T36 T07 T37	**FE 26.xxx 6x2-2, 6x2-4 BL (leaf-air / air-air)**							
4.600		≤ 2.400	≤ 30,0	No subframe required				
+1.350								
4.800	2.000	≤ 2.500	≤ 20,0	No subframe required				
+1.350			30,0	U 140/60/6	w			
				U 100/50/5	s	14	800	3.550
5.000	2.200	≤ 2.700	≤ 20,0	No subframe required				
+1.350			30,0	U 100/50/5	s	16	850	3.650
5.700	2.700	≤ 3.200	≤ 10,0	No subframe required				
+1.350			15,0	U 160/70/7	w			
				U 100/50/5	s	12	650	4.050
			20,0	U 100/50/5	s	14	700	4.050
			30,0	U 100/50/5	s	16	900	4.050

Dimensions in mm, loads in kN

cardiagn.com

Electrical connection

Electro-hydraulic tail-lifts require most careful design of their electrical supply. It is assumed that the information contained in Chapter 6 ‘Electrics, cables’, of the Guide to Fitting Bodies is applied. Ideally, the electrical interface for the tail-lift should be supplied ex-works (package comprises switches, warning lights, starter inhibitor and power supply for tail-lift). Retrofitting is a complex procedure and requires intervention in the vehicle‘s power supply, which may only be carried out by correspondingly qualified MAN service staff. The factory-fitted transport securing device must be removed. The body manufacturer must check the circuitry of the tail-lift for its compatibility with MAN vehicles. For electrical tail-lift interface see the Figures below.

cardiagn.com

Fig. 94: Additional wiring diagram, tail-lift for L2000 and M2000L MAN No. 85.99192-0228

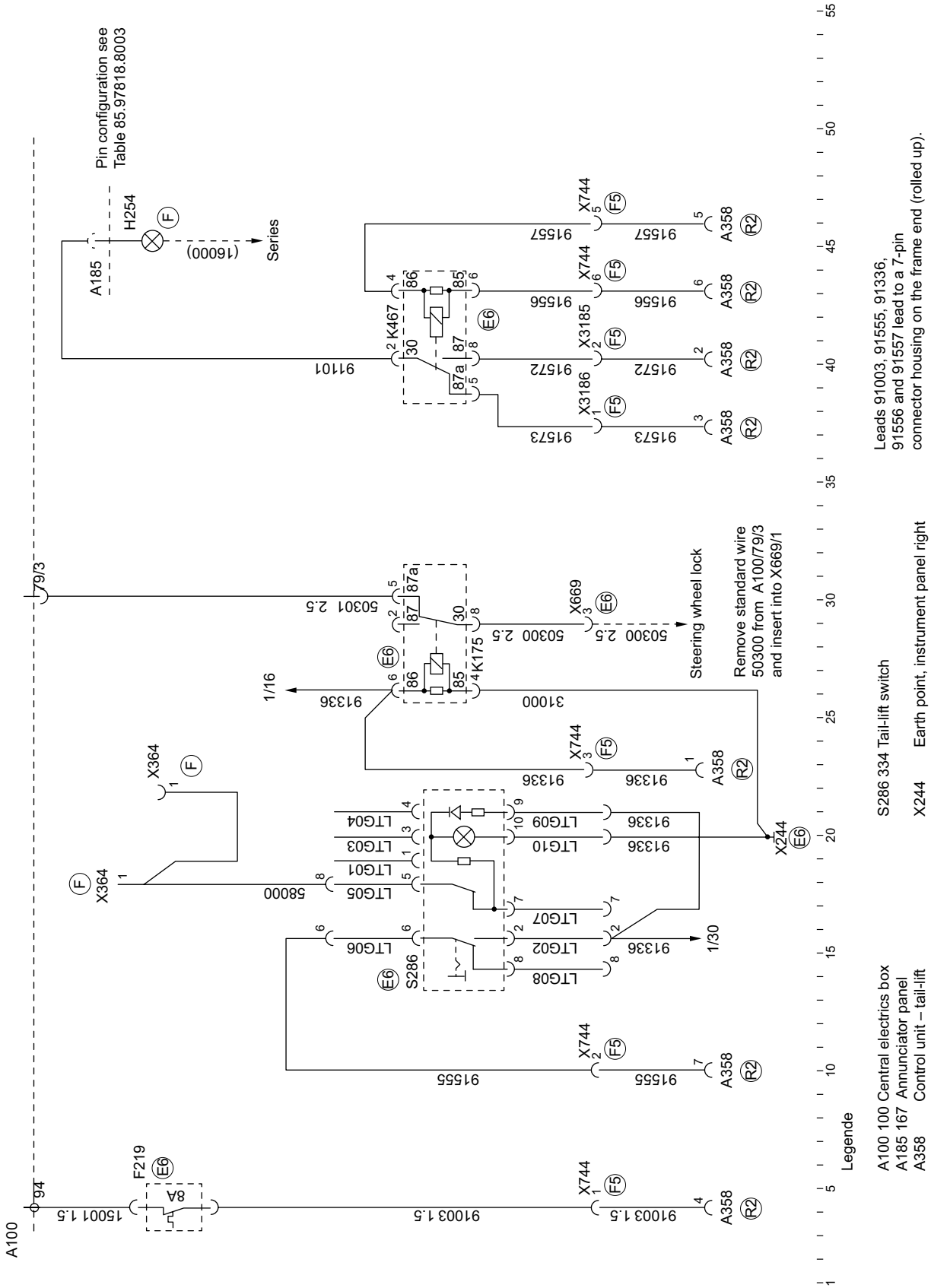

cardiagn.com

Fig. 95: Additional wiring diagram for tail-lift for M2000M and F2000 MAN item number 81.99192.1536

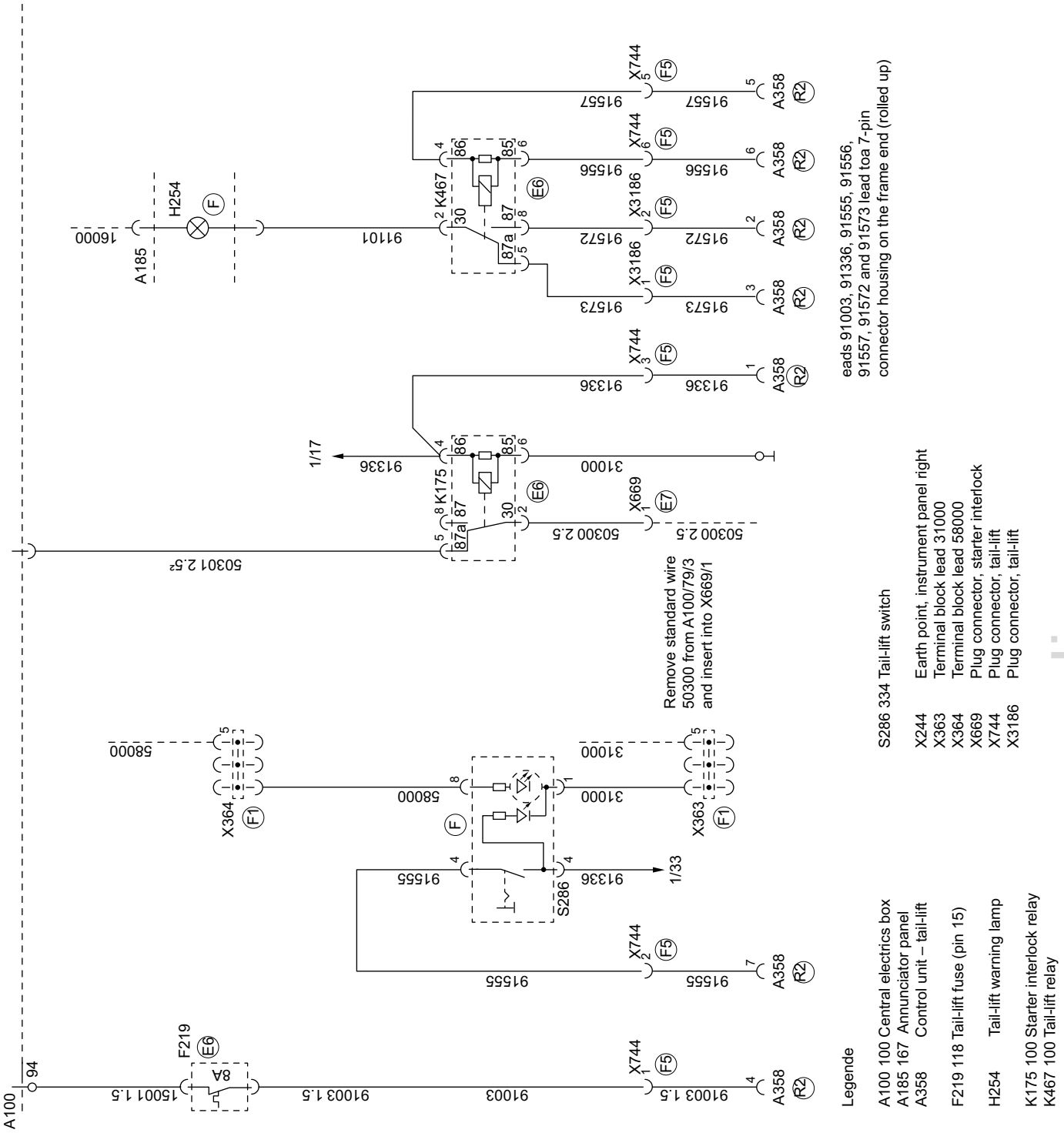

cardiagn.com

5.3.10 Cable winches

For installation of a cable winch the following points are important:

- Pulling force
- Installation location
  - At front
  - In the centre
  - At the rear
  - On the side
- Type of drive
  - Mechanical
  - Electromechanical
  - Electrohydraulic.

Axles, springs, frames, etc. must under no circumstances be overloaded by the operation of the cable winch. This is particularly important if the direction of the winch towing force is not in line with the vehicle longitudinal axis. It may be necessary to fit an automatic pulling force limiter, a device that cuts-in depending upon the direction from which the pulling force is applied.

When a winch is installed at the front, its maximum pulling power is limited by the technically permissible front axle load.
The technically permissible front axle load is found on the factory plate of the vehicle and in the vehicle documentation.
A winch design that has pulling forces above the technically permissible front axle load is permissible only after prior consultation with the ESC Department at MAN (see „Publisher“ above).

IUnder all circumstances, care must be taken to ensure proper guidance of the cable. The cable should have as few turns in it as possible. At the same time however, it must be ensured that the function of vehicle parts is in no way adversely affected.

A hydraulic winch drive is preferred because it offers better regulation and installation options. The efficiency of the hydraulic pump and motor is to be taken into account (see also Chapter 9 „Calculations“).

A check should be made to see whether existing hydraulic pumps such as those on the loading crane or the tipper can be used.
This can sometimes avoid the need for installing several power take-offs.
On worm gears in mechanical winches, the permissible input speed must be observed (normally < 2000/min). The ratio of the power take-off is to be selected accordingly. Take the low efficiency of the worm gear into consideration when calculating the minimum torque at the power take-off.

The instructions in Chapter 9 „Electrics, wiring“ are to be observed for electromechanical and electrohydraulic winches.

Documents:

- Accident prevention regulations „Winches, lifting and pulling equipment“ (VBG-8)
- DIN 14584 Pulling equipment with mechanical drives
- DIN 15020, Sheet 1 and 2, Fundamental principles for cable drives
- DIN 31000, Safety-oriented design of technical products – general rules
- DIN 31001 Sheet 1 and 2, Protective equipment
- Instruction leaflet no. 9 of the trade association for vehicle owners: „Safety when dealing with power operated drum winches“.

cardiagn.com

5.3.11 Transport mixers

In order to reduce the tendency to roll, transport mixers chassis must be fitted with anti-roll bars on both rear axles. Rear springs for a high vehicle centre of gravity must also be fitted. MAN's product range includes chassis that are prepared for the installation of a concrete mixer. These can be recognised by the additional code "**TM**" for **T**ransport **M**ixer, e.g. 32.364 VF-**TM**.

The concrete mixer is generally driven by the power take-off on the engine = camshaft output. Alternatively, an engine-dependent NMV power take-off from ZF may be fitted, but for this the vehicle must have a ZF gearbox. Retrofit installation of both these power take-off solutions is highly complicated and is therefore not recommended. In the event of retrofitting a drive system using a separate motor is to be preferred.

Fig. 96 shows an example of a mixer body. The body is rigid along virtually its entire length, the only exception being the front end of the subframe ahead of the drum mounting. The first two shear plates must be positioned in the area of the front mounting brackets for the drum. Factory-fitted concrete mixer chassis already have the shear plates fitted in the correct locations – in a retrofitting operation the layout of the shear plates must follow the rules specified here and the layout of the comparable concrete mixer chassis. Chassis drawings are available from our MANTED® on-line system or can be ordered by fax from the ESC Department (for address and fax number, see above under „Publisher").

Concrete conveyor belts and concrete pumps cannot easily be fitted onto standard concrete mixer chassis. This requires the approval of both MAN and the concrete mixer manufacturer. In some circumstances, a different subframe structure from the normal mixer subframe or a cross connection on the frame end is required (similar to rear loading crane bodies: see Section on „Rear loading cranes" in this booklet). Approval from the ESC department at MAN (for address see "Publisher" above) and from the concrete mixer manufacturer is essential. See the section on „Testing of bodies" in this Chapter for details on documentation to be submitted.

Fig. 96: Transport mixer body ESC-016

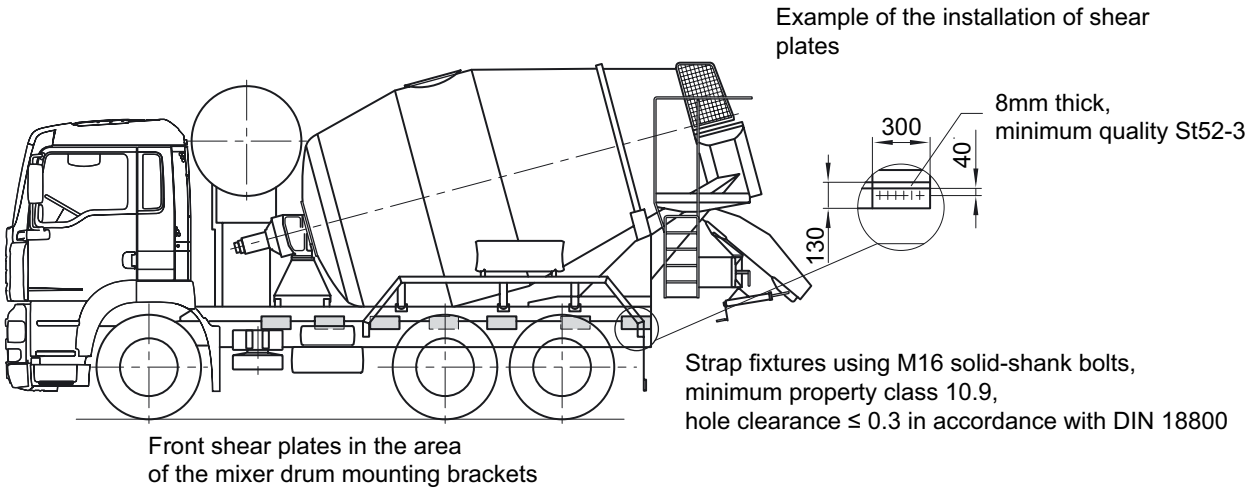

cardiagn.com

6. Electrics

6.1 Introduction

State-of-the-art technology requires modifications to electrical and electronics systems to be made at an ever increasing rate. This means that other documents and references will continue to be required, in addition to the Guide to Fitting Bodies, to describe and regulate the work carried out by the body builder on the electrical and electronic systems of the truck. The latest information can be obtained from MAN's MANTED® on-line service (www.manted.de).

6.2 References to repair manuals and standards

Comprehensive information on the individual systems can be obtained from the corresponding repair manuals. Repair manuals can be obtained from the spare parts division of MAN service branches. The electrical and electronic systems installed in the commercial vehicle comply with the respectively applicable national and European standards and Directives, which are to be regarded as minimum requirements. In some areas, however, the MAN standards are considerably more stringent than these. The latest currently applicable MAN standards can be obtained on request from MAN Nutzfahrzeuge AG, ESC Department (for address, see „Publisher“ above).

6.3 Starting, tow-starting and operating

The engine is started in the usual way for Diesel engines (see operator's manual). If in an emergency the engine has to be tow-started, this should only be done with the battery connected and following the procedures set out in the operator's manual)

- Vehicle to vehicle assist-starting is permissible provided the instructions in the operator's manual are followed (done using the assist-start socket or jump leads). Assist-starting using
  - a fast charger or
  - an assist-starting device

is not permitted.

When the engine is running:

- Do not switch off the main battery switch
- Do not loosen or disconnect the battery terminals.

6.4 Handling batteries

Even maintenance-free batteries require some attention. Maintenance-free means only that the fluid level does not have to be checked. Every battery self-discharges and if this is not monitored it may lead to full discharge which will damage the battery.

Therefore, the following steps should be taken during vehicle downtimes, including whilst the body is being fitted.

- Switch off all power consumers (e.g. lights, interior lights, radio).
- Always put a disc in the tachograph, shut it and switch to „Rest“ position. Reason: Power consumption per month is 19Ah in rest position, 72Ah with cover open.
- Do not actuate the battery main switch (if fitted) - it does not disconnect the tachograph from the vehicle electrical system.
- Avoid starting the engine unnecessarily (e.g. just for manoeuvring) - power consumption per starting operation is up to 2Ah
- Regularly measure the off-load voltage of each battery (at least once a month). Guidelines: 12.6V = fully charged; 12.3V = 50% discharged.
- Recharge immediately if off-load voltage is 12.25 V or less (do not fast charge).
- Vehicle batteries must be regularly recharged in accordance with charging plan and charging calendar until the vehicle is handed over to the end customer.
- The batteries reach off-load voltage approx. 10 hours after the last charge or approx. 1 hour after the last discharge.
- After each charging process leave the battery to rest for 1 hour before use.

cardiagn.com

- Regardless of how long the vehicle has been standing, check the off-load voltage if the battery has been subjected to high loads, e.g. if a tail-lift has been installed or repaired and then operated, or if the vehicle has been started frequently but has not been driven.
- If the vehicle has been standing for > 1 month: disconnect the batteries, but do not forget to measure the off-load voltage.

Deeply discharged batteries (batteries where crystalline sulphate deposits have formed) are not covered by the warranty.

No connection to the battery's negative terminal is permitted. For earthing (grounding) a separate cable must be routed to the common earth point. The common earth point is located:

- On the left rear engine mount for vehicles fitted with the D08 engine (L2000, M2000),
- On the right rear engine mount for vehicles fitted with the D28 engine (F2000, E2000), or
- (On all vehicles) behind the central electrics compartment or the instrumentation.

Power supply ($+U_{BAT}$) to body equipment and controls is drawn from the batteries via a separate and suitable fuse system. Power draw from just one 12V battery on the 24V vehicle network is not permitted (see also 6.6 „Fuses, power for additional consumers").

All MAN commercial vehicles are fitted with alternators. When carrying out arc welding follow the instructions in the „Welding the frame" section in the „Modifying the Chassis" chapter. Before beginning any welding work, disconnect the battery's positive and negative terminals and join the loose ends of the cables together. If a battery main switch is fitted, it must be closed (mechanical switch) or bridged (electrical switch). Special handling rules apply for vehicles fitted with natural gas engines. See the „Gas engine" section in the „Modifying the Chassis" chapter.

MAN's „Technical information for body manufacturers" publication (No. 96-01-2-66) provides information on batteries.
It can be obtained from the ESC Department (for address, see „Publisher" above)

6.5 Additional wiring diagrams and wiring harness drawings

Additional wiring diagrams and wiring harness drawings that for example contain or describe body fittings can be obtained from the ESC Department at MAN (for address, see „Publisher" above). It is the responsibility of the body manufacturer to make sure that the documents used by him, for example wiring diagrams and wiring harness drawings, correspond with the current status of equipment fitted to the vehicle. Further technical information can be obtained from the repair manuals.

cardiagn.com

6.6 Fuse, power for additional consumers

When retrofitting additional electrical power consumers comply with the following points:

- Modifications of any type, in particular however, to the vehicle's existing central electrical system, are not permitted. The body manufacturer will be liable for any damage caused by such modifications.
- There are no available fuses in the central electrical system does for use by the body manufacturer.
- If required, additional fuses can be mounted in a plastic holder in front of the central electrical system.
- Tapping into existing circuits of the vehicle electrical system or connecting additional power consumers to fuses that are already occupied is not permitted.
- Each circuit installed by the body manufacturer must be adequately sized and be protected by its own fuses. The size of the fuse should ensure the protection of the wiring and not that of the system connected to it. These electrical systems must ensure adequate protection against all possible faults without affecting the vehicle electrics.
- When selecting the size of the wire cross-section, the voltage drop and the heating of the conductor must be taken into account. Cross-sections below 1 mm^2 are to be avoided because their mechanical strength is not sufficient. Positive and negative wires must have the same minimum cross-section.
- Current draw for 12V equipment must be effected only via a voltage converter. Power draw from just one battery is not permitted because unequal charge statuses may cause the other battery to become overcharged and damaged.
- In some circumstances additional electrically operated equipment will require batteries of higher capacity. A more powerful alternator may also be required. The cross-section of the battery leads is to be matched to the new current draw. In most cases, these devices will come already factory-fitted. However, retrofitting is possible.

The highest possible battery capacity and alternator output must be provided particularly if:

- An electrohydraulic tail-lift is fitted, or
- An eddy-current braking system is fitted.

6.7 Type of electrical conductors and relays to be used

Only electrical conductors and relays that comply with MAN standard M3135 or the MAN specification on „Relays for commercial vehicles“ may be used on MAN commercial vehicles. If required, these documents can be obtained from the ESC Department (for address, see „Publisher“ above).

International standard ISO 6722 „Unshielded low voltage wiring“ in road vehicles must be observed.

6.8 Lighting installations

If the lighting equipment is modified the partial operating permit in accordance with EU Directive 76/756/EEC as amended by 97/28/EC becomes void. This is particularly so if the dimensioning of the lighting installation has been modified or if a light has been replaced by another that is not covered by the partial operating permit.

Vehicles longer than 6m overall are to be fitted with side marker lamps in accordance with the above mentioned Directive. Chassis may also be supplied fitted with side marker lamps ex-works. If no sideguards have been ordered, side marker lamps can be supplied temporarily mounted to the frame. The installation dimensions stated in the Directive must be observed.

After the body has been installed the basic beam alignment of the headlamps must be reset. This is to be carried out directly on the headlamps, even on vehicles fitted with headlamp range adjustment systems. To do this, read off the percentage dipping value on the type plate, check the value and adjust if necessary (for example using a headlamp adjusting device). If headlamps have to be set higher or lower, the percentage dipping value and the type plate are to be corrected in accordance with the above-mentioned EC Directive.

cardiagn.com

6.9 Interference suppression

The degree of interference suppression depends on the purpose for which the vehicle will be used. Regulations differ from country to country. The system shall be protected from interference using a suitable means of suppression.

Suitable means of suppression are, for example:

- Resistive suppressors
- Capacitors and inductors or interference-suppression filters
- Special wiring and wiring connections
- High-frequency shielding.

The various interference suppression classes must be observed, e.g. local and long-distance interference suppression.
In Germany, the conditions laid down in DIN 57879/VDE 0879, Part 1 and StVZO § 55a are definitive.

6.10 Electromagnetic compatibility

Because of interaction between the various electrical components, electronic systems, the vehicle and the environment, overall electromagnetic compatibility (EMC) must be tested. All systems in MAN commercial vehicles comply with the requirements of MAN standard M3285 (EMC).

Documents:

- MAN standard M3285 (available from the ESC Department at MAN – for address, see „Publisher“ above).
- EC Directive 72/245/EEC, as amended by 95/54/EEC.

When retrofitting electrical or electronic components electromagnetic compatibility must be tested. From 2002 Directive 72/245/EEC, as amended by 95/54/EEC, will be the minimum requirement throughout the EU for all electrical/electronic components in the vehicle's electrical system.

On delivery, MAN vehicles comply with the requirements of EC Directive 72/245/EEC, including 95/54/EC. All equipment (definition of equipment as in 89/336/EEC) installed in the vehicle by the body manufacturer must comply with the regulations in force at the time. The body manufacturer is responsible for the EMC of his components or his system and its interaction with other systems.
After installing such systems or components the body manufacturer is responsible for ensuring that the vehicle still meets the current legal requirements. Radio-operated equipment, e.g. a radio remote control for controlling various functions on the body, must not affect the functions of the commercial vehicle.

6.11 Interfaces on the vehicle

The interfaces provided by MAN (e.g. intermediate speed regulation) are located:

- Outside the cab behind the front flap on the passenger side on F2000, E2000 and M2000M vehicles, and
- Inside the cab on the passenger side underneath the central electrical compartment on L2000 and M2000L vehicles.

All existing interfaces on the vehicle are described in the corresponding information sheets for body manufacturers.
If required, these can be obtained from obtained from the ESC Department at MAN (for address, see „Publisher“ above).

cardiagn.com

6.12 Body fittings

If the vehicle is ordered with body fittings (e.g. start/stop device on the end of the frame), these are factory fitted and partly connected. The body manufacturer must use the corresponding wiring diagrams and wiring harness drawings. When the vehicle is transported to the body manufacturer it is fitted with transport securing devices. These must be removed properly so that the systems can be safely commissioned.

6.13 Setting customer-specific parameters with MAN-cats®

MAN-cats® is the standard MAN tool for diagnosing faults and setting parameters in vehicle electronic systems.
Changes to customer-specific parameters (e.g. intermediate speeds) are made using MAN-cats. MAN-cats® is used by all MAN service branches and MAN authorised workshops. If the body manufacturer or customer is able to inform the MAN Sales department of any customer-specific parameters at the order clarification stage, then these can be incorporated into the vehicle at the assembly plant using EOL programming (EOL = end of line). MAN-cats then has to be used if these parameters are to be changed.

6.14 Earth cable

On MAN vehicles the frame is not misused as the earth cable; instead, a separate earth cable is laid to the power consumer along with the positive lead. Additional power consumers such as tail-lifts therefore have to be fitted with an earth cable leading from the consumer to the common earth point.

Common earth points are located:

- Behind the central electrics compartment
- Behind the instrumentation
- On the rear right-hand engine mount on D28 engines (F2000, E2000) or on the rear left-hand engine mount on D08 engines (M2000, L2000).

No more than a total of 8 – 10A may be drawn from the common earth points behind the central electrics compartment and behind the instrumentation. Cigarette lighters and any additional sockets have their own power limits which are to be found in the operating manual. If higher power is required, the cable capacity must be checked with respect to the vehicle equipment, or an earth lead must be laid to the common earth point on the relevant engine mounting.

The housings of single-pole motors of non-MAN equipment must be connected to the common earth point on the relevant engine mounting by means of an earth cable. This is to prevent any damage to mechanical parts or to the electrical system when the starter is switched on.

All vehicles have a plate located inside the battery box, which expressly states that the vehicle frame is not connected to the battery negative terminal.

cardiagn.com

6.15 Installation and routing of electric cabling/pipework

Basic instructions for installing wiring/pipes:

- Cables must not be laid loosely; use the fixtures provided and/or conduits.
- Corrugated wiring harness pipes are to be attached to plastic consoles in the frame and in the engine area to prepared cable routes using cable ties or clips.
- Never attach several cables to one clip.
- Only PA pipes (PA = polyamide) designed in accordance with DIN 74324 Part 1 or MAN Standard M3230 Part 1 (extension of DIN 74324 Part 1) may be used.
- Add 1% to the length of the PA pipe (corresponding to 10mm for each metre of cable), because plastic pipes contract in the cold and the vehicles must be capable of working at temperatures down to - 40°C.
- Electric cables must never be bundled together with fuel or brake pipes and must be protected from the effects of heat and chafing.
- Plug-in connections are to be connected in such a way that the outgoing cable does not face upwards.
- If possible do not change electrical connections, including earth connections, fitted during manufacture production. When changing the lengths of cables or installing additional cables use water-tight plug-in connections to MAN standards. After installation the connections must be heat-shrunk to ensure they are water-tight. Watertight connectors and branching components can be obtained from the MAN spare parts service.
- Wiring harnesses that have been installed by the body manufacturer must run from wet areas to dry areas via the MAN cab through-holes that are already present. In this way, any sealing installed by MAN is not disturbed.
- The diameter of the corrugated pipes used must be matched to the size of the wiring harness being run through it; if the corrugated pipe is too large, the cable insulation may chafe on the inside of the corrugated pipe.
- If the installation position of electrical or electronic components is changed the length of the electric cables is to be adapted to the new conditions. If the cables are slightly too long, this should be compensated for by appropriate routing (select a longer path). Under no circumstances wind the cables up into rings or loops. This avoids any cable „antenna effect“.
- If the cables have to be run from one side of the frame to the other, use an existing hole. Make an additional hole only if there is no other option.

7. Power take-offs → see separate booklet

cardiagn.com

8. Brakes, lines

The braking system is among the most important safety items on a truck. No changes should be made to any part of the brake system including the brake lines except by suitably trained personnel. After any change a complete visual, audible, function and efficiency test of the complete braking system is to be performed.

8.1 Brake and compressed air lines

All brake lines leading to the spring-loaded parking brake must be corrosion and heat-resistant according to DIN 14502 Part 2 'Fire service vehicles – general requirements'. The most important basic principles to observe when installing air lines are repeated here.

8.1.1 Basic principles

- Polyamide (PA) tubes must in all circumstances:
  - be kept away from heat sources
  - be laid in such a way that no abrasion can occur
  - be free from trapped stresses
  - be laid without kinking.
- Only PA tubing in accordance with MAN standard M3230 Part 1 is to be used. In accordance with the standard this tubing is marked with a number starting with M3230 every 350 millimetres.
- Remove lines to protect them before welding work takes place. For welding work, see also the Chapter „Modifying the chassis – Welding the frame“ section.
- Effects of exposure to heat: note the risk of heat build-up in enclosed or encapsulated areas. Lines must not touch heat shield plates (minimum distance from such plates ≥ 100mm, from the exhaust > 200mm).
- In view of the risk of heat build-up, PA pipes must not be attached to metal pipes or holders that are connected to the following assemblies:
  - Engine
  - Air compressor
  - Heating
  - Radiator
  - Hydraulic system.

8.1.2 Plug connectors, changeover to Voss 232 system

For brake/air lines, only plug connectors as stated in Table 37 are permitted. The standards referred to contain detailed instructions that must be applied in all cases when installing pneumatic lines and assemblies. Body manufacturers can obtain the MAN standards listed here from the ESC Department (for address, see „Publisher“ above). Commencing with the TGA, all vehicle ranges will switch to using the VOSS quick connect system 203 from April 2000. The differences to the system 230 are set out in the following table.

cardiagn.com

Table 37: Voss connecting systems and their applications, use of the Voss system 232 connectors (for function and components see also Fig. 97):

Connecting system	MAN standard	Intended application
Voss 203	M3061 Part 3	Air supply, small pipes (4 x 1 and 6 x 1), all types
Voss 230	M3061 Part 2	Air supply for L2000, M2000L, M2000M, F2000, E2000
		(will be replaced by Voss 232 in April 2000)
Voss 232	M3298	TGA air supply, **all model lines will be converted to Voss 232 from April 2000 onwards**

The system has two detent stages. If the plug element has only been inserted as far as the first detent, the System 232 connection leaks deliberately; incorrect plug element engagement can be identified immediately by the noise that occurs.

- The system must be relieved of pressure before the union screw is slackened.
- After the connection between plug element and union screw has been separated the union screw must be renewed, since the retaining element is rendered unfit for further use when it is unscrewed.
- The union screw must therefore be slackened off when a line is detached from an assembly. The plastic pipe with plug element, union screw and retaining element constitutes a re-usable unit. Only the O-ring that seals the thread (see Fig. 97) has to be renewed. (Grease the O-ring and clean the union screw when installing).
- The plug connection unit described above is to be screwed into the assembly hand-tight, then finally tightened to 12 ± 2Nm (in metal) or 10 ± 1Nm (in plastic).

Fig. 97: Voss System 232, functional principle ESC-174

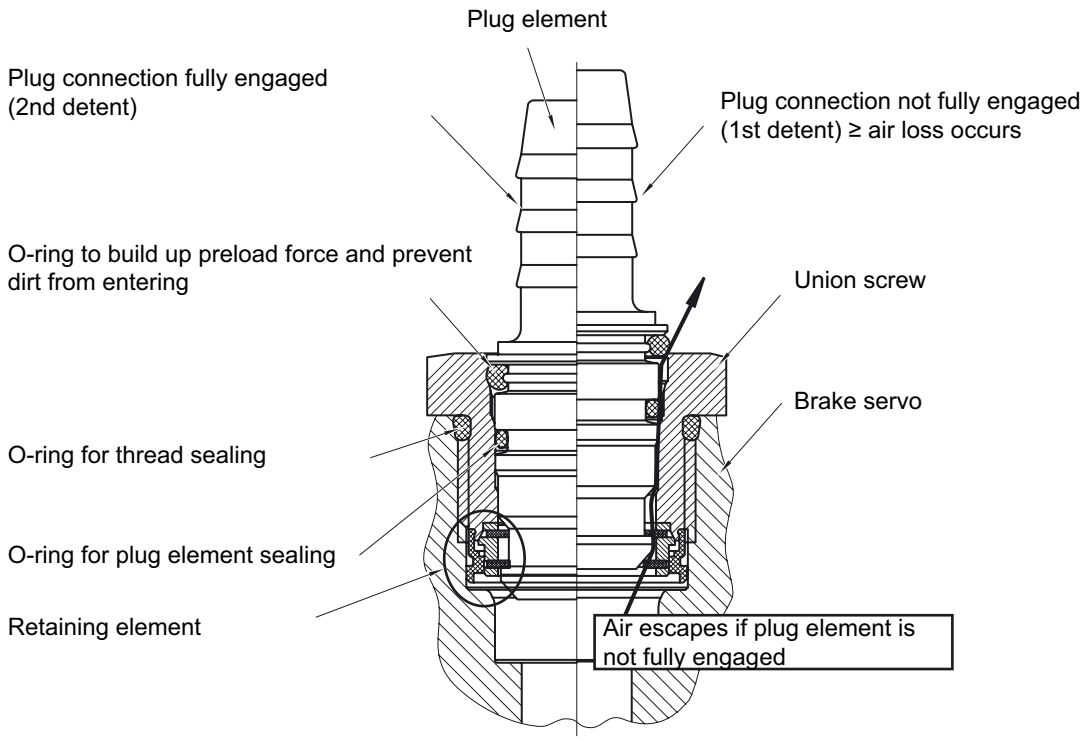

cardiagn.com

- If existing Voss System 230 plug connectors are replaced by the Voss System 232, the union screw on the assembly must also be replaced. If a System 230 spring element is still located in the assembly it must be removed, after which the System 232 union screw can be used without difficulty.
- If a System 230 plug element is to be inserted into a System 232 coupling unit, the System 232 union screw must be replaced by a System 230 union screw.

8.1.3 Installing and attaching lines

Basic principles for pipe laying:

- Lines must not be laid loose; existing means of attachment and/or conduits are to be used.
- Do not heat plastic pipes when installing them, even if they are to follow a curved path.
- When attaching pipes, make sure that the PA pipes cannot become twisted.
- Install a pipe clip or, in the case of a cluster of pipes, a cable tie at the beginning and end in each case.
- Corrugated wiring harness pipes are to be attached to plastic consoles in the frame or, in the engine area, to prepared cable routes using cable ties or clips.
- Never attach more than one line to the same hose clip.
- Only PA pipes (PA = polyamide) designed to DIN 74324 Part 1 or MAN Standard M3230 Part 1 (extension of DIN 74324 Part 1) may be used.
- Add 1% to the length of the PA pipe (corresponding to 10mm for each metre of cable), because plastic pipes contract in the cold and the vehicles must be capable of working at temperatures down to - 40°C.
- For brake and air lines, only those connectors listed in Table 38 are permitted; the standards listed give detailed work instructions and are binding for braking systems. MAN standards can be obtained from the ESC Department (for address, see „Publisher“ above).

Table 38: Voss connecting systems and their applications

Connecting system	MAN standard	Intended application
Voss 230	M3061 Part 2	Air supply for L2000, M2000L, M2000M, F2000, E2000
Voss 232	M3298	TGA air supply
Voss 203	M3061 Part 3	Air supply, small pipes (4 x 1 and 6 x 1), all types

- The pipes must not be heated when being installed.
- When cutting plastic pipes to length, use plastic pipe cutters; sawing them to length creates ridges on the cut faces and chippings get into the pipe.
- PA pipes may rest on the edges of the frame or in the frame openings. A minimal amount of flattening at the points of contact is tolerated (maximum depth of 0.3mm). However, notched abrasion is not permitted.
- PA pipes are allowed to come into contact with each other. There should be minimal flattening at the points where the pipes come into contact with each other.
- PA pipes can be bundled together with a cable tie but must be positioned parallel to each other (they should not cross over each other). PA pipes and corrugated pipes should only be bundled together with pipes of the same type. The restriction in movement caused by the pipes becoming stiffer when bundled together should be taken into account.
- Covering the edges of the frame with a cut corrugated pipe will cause damage; the PA pipe will be worn at the point where it comes into contact with the corrugated pipe.
- Points of contact with the edges of the frame can be protected with a protective spiral (see Fig. 98). The protective spiral must tightly and completely grip the pipe it is protecting. Exception: PA pipes ≤ 6mm).

cardiagn.com

Fig. 98: Protective spiral on a PA pipe

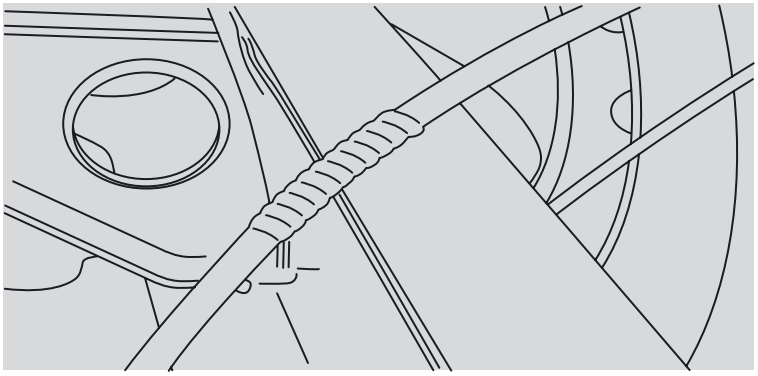

- PA pipes/PA corrugated pipes must not come into contact with aluminium alloys, e.g. aluminium tank, fuel filter housing; aluminium alloys are subject to mechanical wear (fire risk).
- Pipes that cross over and pulsate (e.g. fuel pipes) must not be joined together with a cable tie at the cross-over point (risk of chafing).
- No cables/pipes should be fixed rigidly to injection pipes and steel fuel feed pipes for the flame starting system (fire risk, risk of chafing).
- Accompanying central lubricating cables and ABS sensor cables may be attached to air hoses only if a rubber spacer is fitted.
- Nothing may be attached to coolant hoses and hydraulic hoses (e.g. steering hoses) by means of cable ties (risk of chafing).
- Under no circumstances should starter cables be bundled together with fuel or oil pipes; this is because it is essential that the cable from the positive terminal does not chafe.
- Effects of heat: watch out for a build-up of heat in encapsulated areas. Resting the pipes/cables on heat shields is not permitted (minimum distance from heat shields ≥ 100mm, from the exhaust ≥ 200mm)
- Metal pipes are pre-strengthened and must not be bent or installed in such a way that they bend during operation.

If assemblies/components are mounted in such a way that they can move with respect to each other, then the following basic rules must be followed when routing cables/pipes:

- The cable/pipe must be able to follow the movement of the assembly without any problem; ensure that there is sufficient distance between the moving parts for this (rebound/compression, steering angle, tilting of cab).
  The cables must not be stretched.
- The respective starting and end point of the movement is to be defined exactly and used as the fixed clamping point.
  The PA or corrugated pipe is gripped tightly at the clamping point using the widest cable tie possible or a clip suitable for the diameter of the pipe.
- If PA and corrugated pipes are laid at the same junction, the stiffer PA pipe is laid first. The softer corrugated pipe is then attached to the PA pipe.
- If a pipe is to tolerate movements at right angles to the direction in which it is laid, then sufficient distance between the clamping points must be guaranteed (rule of thumb: distance between clamping points ≥ 5 x the amplitude of movement to be withstood).
- Large amplitudes of movement are best withstood by laying the pipe in a U-shape and by permitting movement along the arms of the „U“.

Rule of thumb for the minimum length of the slack loop:
Minimum length of the slack loop = 1/2 • amplitude of movement • minimum radius • π

- The following minimum radii are to be observed for PA pipes (the respective start and end point of the movement is to be defined precisely as the fixed clamping point):

cardiagn.com

Table 39: Minimum bending radii for PA pipes

Nominal pipe diameter Ø [mm]	4	6	9	12	14	16
Bending radius r ≥ [mm]	20	30	40	60	80	95

- Use plastic clips to secure the lines and comply with the maximum clip spacing stated in Table 40.

Table 40: Maximum space between clips used to secure pipes in relation to pipe size

Pipe size	4x1	6x1	8x1	9x1,5	11x1,5	12x1,5	14x2	14x2,5	16x2
Clip spacing [mm]	500	500	600	600	700	700	800	800	800

8.1.4 Compressed air loss

Compressed air systems cannot achieve 100% efficiency and slight leakage is often unavoidable despite the most careful installation work. The question is therefore what degree of air pressure loss is unavoidable and when does the loss become too high? Simply put, any loss of air pressure that would render a vehicle undriveable once the engine is started after a period of 12 hours parked must be regarded as unacceptable. Based on this requirement there are two different methods of determining whether air loss is unavoidable or not:

- Within 12 hours of the system having been charged to its cutoff pressure, the pressure must not be below < 6 bar in any circuit. The check must be made with depressurised spring-loaded brake release units, in other words with the parking brake applied.
- The pressure in the tested circuit must not have fallen by more than 2% within ten minutes of charging the system to its cutoff pressure.

If air loss is greater than described above, an unacceptable leak is present and must be eliminated.

8.2 Connecting ancillary consumers

Compressed air for ancillary consumers must only be taken from the line system of connection 24 at the four-circuit protection valve (item no. G4.X in the function plans, see Figs. 100 and 101). A separate overflow valve is to be provided for every additional consumer with a pneumatic connector > NG6 (6x1mm). This does not apply to an auxiliary air-operated retarder or continuous brake; see section 8.4 „Retarders“.

MAN also connects its own consumers to connector 24 of the four-circuit protection valve; see Table 41. In this case a distributor coupling (Fig. 99) is provided to connector 52 to which air consumers required for the superstructure or body of the vehicle can be connected. Connections 61, 62, 63 and 64 on the distributor are not to be used since they are reserved for the service brake. Connections that are not in use must be tightly sealed (use screw plugs/sealing plugs from the relevant Voss system).

cardiagn.com

Table 41: Connections to the 10-way distributor

Distributor connection	Intended purpose	Nominal size (NG) of Voss plug connector	Connection on compressed air circuit
51	Transmission, clutch, Intarder	NG12	Circuit IV, union 24
52	Ancillary consumers on superstructure	NG12	
53	Supply line to four-circuit protection valve, connection 24	NG12	
54	Trailer tow hitch, other outputs	NG8	
55	Air springs for cab, other outputs for vehicles without air-sprung cab	Gewinde 9mm Rohr: DIN 74324 / DIN 73378	
56	Motorbremsbetätigung	NG8	
61	Reserved for brake circuit I,in no circumstances to be used forancillary consumers	NG12	Circuit I, union 21
62		NG12	
63		NG12	
64		NG12	

Fig. 99: Compressed air distributor coupling with 10 connections ESC-175

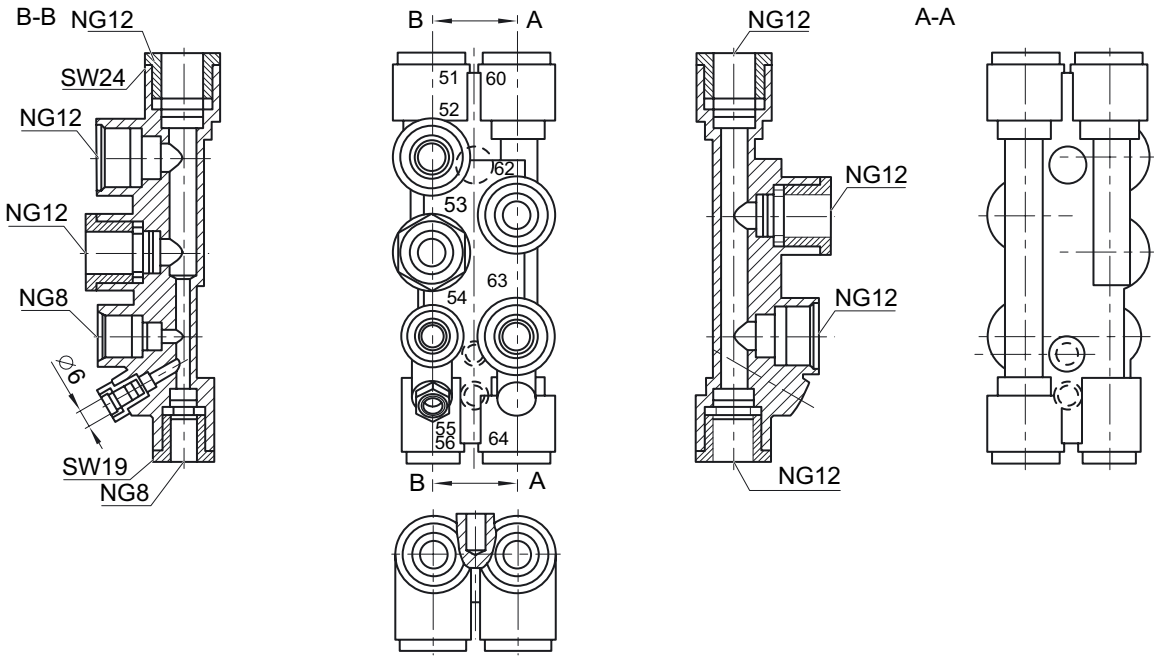

cardiagn.com

Figs. 100 and 101 show sections of the brake system function plans; the connection for the supply to ancillary consumers on the superstructure is marked „Additional ancillary consumers“.

Fig. 100: Detail of brake system function plan for leaf-sprung vehicles ESC-176

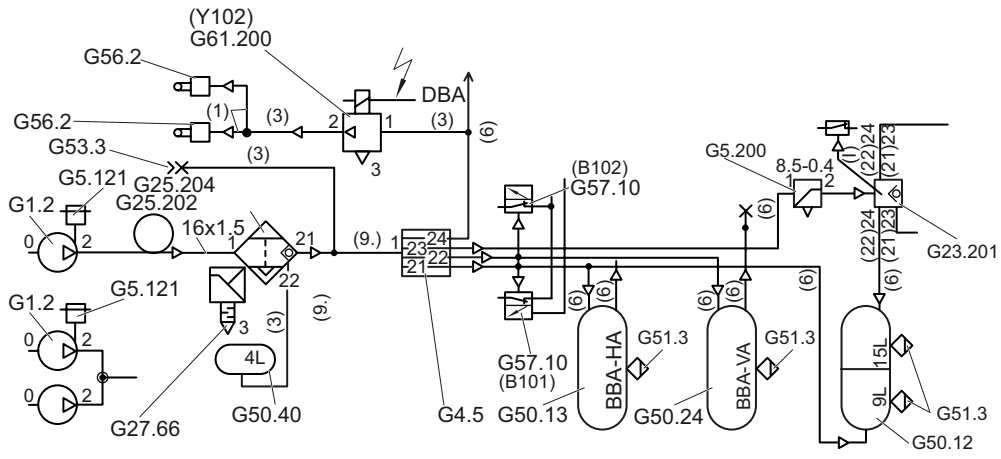

PRESSURE REGULATOR		4-circ. prot. valve circuit	1	2	3	4
Shutoff pressure (bar)	10 ± 0,2	Safety pressure (bar)	6,9 - 0,3		7,0 - 0,3	6,9 - 0,3
Switching hysteresis (bar)	1 + 0,5	Closing pressure (bar)	stat. ≥ 4,5 / dyn. ≥ 5,0			

Fig. 101: Detail of brake system function plan for air-sprung vehicles ESC-177

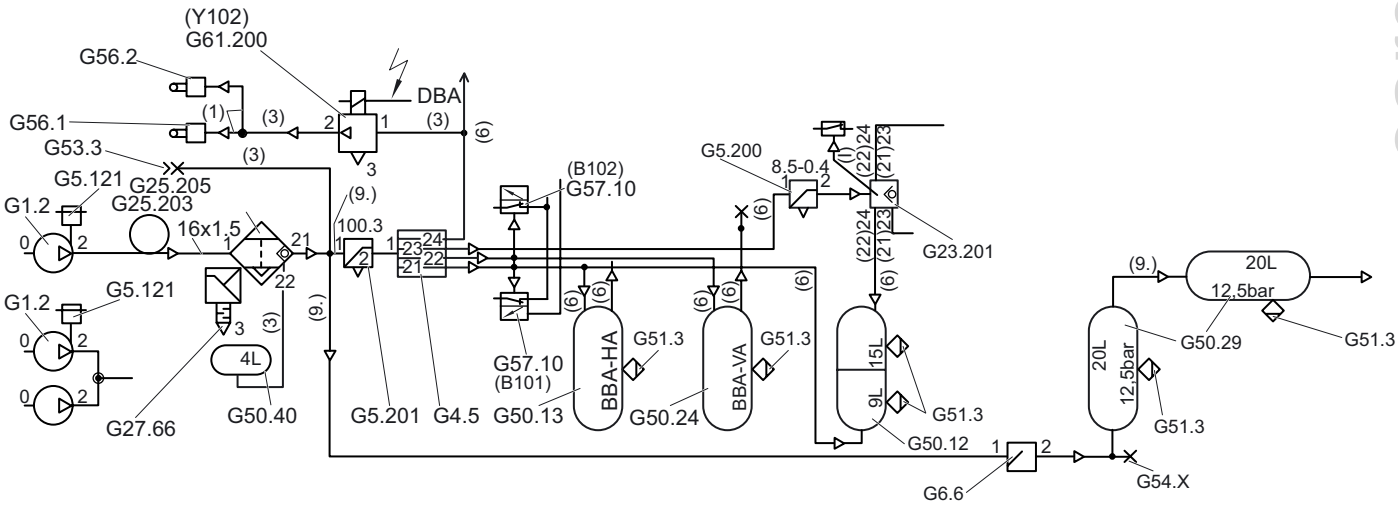

PRESSURE REGULATOR		4-circ. prot. valve circuit	1	2	3	4
Shutoff pressure (bar)	12,5 ± 0,2	Safety pressure (bar)	6,9 - 0,3		7,0 - 0,3	6,9 - 0,3
Switching hysteresis (bar)	1,3 + 0,7	Closing pressure (bar)	stat. ≥ 4,5 / dyn. ≥ 5,0			

cardiagn.com

8.3 Adjusting the automatic load-dependent brake system

The automatic load-dependent brake system (German abbreviation ALB) is adjusted at the factory to suit the chassis in question. After installing the superstructure the setting should be checked and corrected if necessary according to the values on the ALB plate.

In the case of one or more leaf-sprung rear axles, the spare part number for a rear spring must be listed on the ALB plate. It is essential to check that the rear springs are in agreement with the spring number on the ALB plate. A different ALB plate showing the appropriate new settings is necessary only if rear springs with different characteristics have to be installed. If the superstructure includes rear-end equipment that increases the unladen rear axle load (one or more rear axles), for instance a truck-mounted crane, tail-lift etc., the ALB does not have to be re-adjusted or a different ALB plate fitted.

8.4 Continuous brakes (retarders)

The truck's wheel brakes are not designed for continuous braking since using them for a lengthy period (e.g. when descending a steep gradient) could cause them to overheat. This leads to a reduction in the braking effect also known as „fading". It is therefore a legal requirement for vehicles above a certain gross weight to be fitted with a continuous brake or „retarder". On standard trucks this is the engine brake in the form of an exhaust brake. As a second form of engine brake, MAN supplies its **EVB** system (the initials stand for „**E**xhaust **V**alve **B**rake". This is actuated at the same time as the conventional flap-type exhaust brake and increases the continuous braking effect.

In order to obtain still higher continuous braking performance, MAN can equip its trucks ex-factory with further retarder systems. Like the exhaust brakes, these operate without causing any mechanical wear.

Hydrodynamic retarders are available ex-factory: depending on their design, they are classified as

- Primary retarders or
- Secondary retarders.

These terms are explained in Section 8.4.1 of this Chapter, „Hydrodynamic retarders".

Retrofitting of a retarder may be possible in certain circumstances, but it is a complex process. Please note the instructions below.

The following can be retrofitted:

- Hydrodynamic secondary retarders (mainly manufactured by Voith, for installation in the propeller-shaft section of the driveline)
- Eddy-current brakes.

8.4.1 Hydrodynamic retarders

The hydrodynamic retarder uses oil as a flow medium. The oil is forced outwards by the centrifugal forces and directed into the stator. The kinetic energy is converted into heat through friction. The heated oil is routed to a heat exchanger which dissipates the heat energy either to the surrounding atmosphere or to the engine's coolant.

The distinction between primary and secondary retarders is as follows:

The **primary retarder** is located ahead of the gearbox in the vehicle's driveline. When it is used to brake the vehicle the power flow is via the driven axle(s) and the gearbox. This makes the primary retarder's braking effect dependent on engine speed and the selected gear ratio, but independent of the vehicle's actual road speed.

The **secondary retarder** on the other hand, is mounted at the output end of the gearbox or in the propeller-shaft section of the driveline. When it is used to brake the vehicle the power flow is exclusively from the driven wheels to the retarder. The secondary retarder's braking effect depends on the final drive ratio at the driven axle(s) and the vehicle's road speed. It is unaffected by the selected gear ratio.

cardiagn.com

MAN can supply the following hydrodynamic retarders ex-factory:

- Primary retarders:
  - integrated between torque converter and planetary gears of ZF 5HP .. or 6HP .. automatic transmissions
  - integrated between torque converter and gear-shift clutch of gearboxes with a WSK converter lock-up clutch
- Secondary retarders:
  - Voith Type 115 with Eaton RTO …. and RTSO …. gearboxes
  - ZF Intarder with ZF 16S … gearboxes (see also „Power take-offs“ booklet).

All retarders are integrated into the corresponding gearbox or into the WSK; this also applies to the cooling circuit and, in the case of the ZF units, to the oil content, which is shared with the gearbox.

Retrofitting is possible in principle, but is a very complex process and economically viable only in conjunction with a gearbox exchange. Retrofitting is normally limited to hydrodynamic retarders with their own cooling circuit, such as Voith retarders, which are in most cases installed in the propeller-shaft section of the driveline.

If a retarder is mounted directly on the gearbox, this must be approved not only by MAN but also by the gearbox manufacturer. Clutch-dependent power take-offs cannot be attached if a retarder is retrofitted to the gearbox (this does not apply, however, to ex-factory integrated retarders; see also the „Power take-offs“ booklet).

If a pneumatic actuating system is installed for the retarder, compressed air must be taken only from connection 24 at the point where it is also supplied to the exhaust brake. In this case an overflow valve must not be installed. Connecting the retarder to the service or parking brake circuits is not permitted. It may be necessary to install an additional air reservoir.

Installation of a retarder in a drive system may lead to considerable changes in the vibrations of the system as a whole. When retrofitting a retarder ensure that no harmful vibrations can affect the drive system.

On vehicles with ABS, make sure that the retarder is switched off during an ABS regulating action. The manufacturers of ABS systems define the possible connections and their approval must therefore also be obtained before a retarder is retrofitted.

When installing a retarder in the propeller-shaft section of the driveline make sure that the maximum deflection angle between sections of the propeller shaft is not exceeded. Each universal-joint shaft in the driveline must not have a working angle exceeding 7° when the vehicle is laden; a tolerance of +1° is acceptable (for propeller shafts, see the „Modifying the chassis“ Chapter).

8.4.2 Eddy-current brakes

Electrical exciter coils are attached to a fixed disc (the stator). On either side of the stator a rotating disc (the rotor) is mounted on the continuous propeller shaft. Cooling ribs are provided to dissipate heat more effectively. The coils are supplied with the excitation current in order to induce a braking effect. As the braking discs rotate in the resulting magnetic field eddy currents are created which generate the braking moment. Its value depends on the amount of excitation applied to the stator coils and the speed of rotor disc rotation. The excitation current is taken from the vehicle’s electrical system.

Individual cases in which the installation of an eddy-current brake is envisaged must be co-ordinated with the ESC Department (for address, see „Publisher“ above). Such installations are prohibited unless valid written permission has been issued.

cardiagn.com

Permission will be granted only if the brake manufacturer (not the workshop carrying out the installation or the company building or installing the superstructure) confirms the following points:

- Installation at output end of gearbox:
  - gearbox manufacturer's approval.
  - retarder supported without trapped stresses; installation instructions/product documentation (see below) in accordance with these requirements must be available.
  - eddy-current brakes must not be mounted on the gearbox on vehicles with a five-cylinder in-line engine.
- Installation in the propeller-shaft section of the driveline
  - evidence that the eddy-current brake is rated to accept the maximum torque occurring in the driveline must be available.
  - the weight exerted by the brake and the blind torques at the universal-joint shafts must be absorbed by suitable cross-members installed without trapped stresses.
  - the maximum working angle of each driveline shaft when the vehicle is laden must not exceed 7°; a tolerance of +1° is acceptable (for propeller shafts, see also the Chapter „Modifying the chassis").
  - the universal joint manufacturer's approval is needed with regard to the thermal loads incurred at the universal joint pivots.
  - on the L2000 4x2, only lightweight propeller shaft joints are permissible; any modifications must be carried out solely by the manufacturer, Eugen Klein KG
- Electrics/electronics
  - please note the instructions in Chapter 6 „Electrics, wiring".
  - the largest alternator possible (28V, 80A, 2240W) and batteries of larger capacity (140Ah for the L2000, 180Ah for all other models) must be installed if not already provided.
  - the retarder's control box must be watertight (enclosure rating IP69K).
  - the load current must be protected by a suitably rated fuse.
  - the wiring connections at the retarder must be identified to avoid confusion.
  - the wiring must be of adequate cross-section, with minimum values as stated in the „Electrics, wiring" booklet.
  - the retarder must shut down automatically when the ABS is in the regulating mode and access to the relevant control unit must be confirmed by the manufacturer of the ABS system.
  - undervoltage protection must be provided to shut down the retarder automatically at ≤ 20V electrical system voltage.
  - electromagnetic compatibility (EMC): evidence of conformity with MAN EMC Standard M3285 or at least with 72/245/EEC and supplement 95/54/EEC (from 2002 onwards this will be the minimum requirement throughout the European Union for all electrical/electronic equipment in the vehicle's electrical system). The eddy-current brake manufacturer must always ensure that EMC standards are complied with by equipment for installation in MAN vehicles.
- Pneumatic actuation
  - Compressed air must be taken only from connection 24 at the point where it is also supplied to the engine (exhaust) brake. An overflow valve is not to be installed. It is forbidden to connect the device to the service or parking brake circuit. It may be necessary to install an additional air reservoir.
- Protection against high temperatures
  - Electrical wiring and air and fuel lines must be adequately protected against exposure to heat, e.g. with heat shield plates. Temperatures at lines and equipment must be ≤ 90°C.
- If vehicle is to carry hazardous goods
  - synthetic /plastic brake lines must be replaced with steel lines in, ahead of and behind the eddy-current brake.
  - the electrical system for the eddy-current brake must be equipped according to the relevant regulations.
  - the retarder's continuous braking effect must be confirmed in accordance with the relevant regulations.
  - the necessary expert report must be provided by the eddy-current brake manufacturer.
- Maintenance, quality assurance, product documentation
  - adequate service must be provided in the form of the relevant maintenance instructions, spare parts, tools and diagnostic equipment.
  - adequate product documentation must be provided, including the names of D parts (safety-relevant parts subject to documentation, which must not be modified).
  - records must be kept showing the relationship between the vehicle (vehicle identification number) and the retarder (e.g. model and serial number). These records must be made available to MAN at regular intervals.

The issue of an approval does not render MAN liable for the consequences of installing an eddy-current brake. The brake manufacturer's warranty and product liability or those of the seller of the brake or the company installing it remain in force in all cases.

cardiagn.com

9. Calculations

9.1 Speed

The following generally applies for the calculation of the driving speed on the basis of engine speed, tyre size and overall ratio:

Formula 24: Speed

$$v = \frac{0{,}06 \cdot n_{Mot} \cdot U}{i_G \cdot i_v \cdot i_A}$$

Where:

v	=	Driving speed, in [km/h]
n_{Mot}	=	Engine speed, in [1/min]
U	=	Tyre rolling circumference, in [m]
I_g	=	Transmission ratio
i_V	=	Transfer case ratio
i_A	=	Final drive ratio of the driven axle(s)

To calculate the theoretical maximum speed (or the design top speed), the engine speed is increased by 4%.
The formula therefore is as follows:

Formula 25: Theoretical maximum speed

$$v = \frac{0{,}0624 \cdot n_{Mot} \cdot U}{i_G \cdot i_v \cdot i_A}$$

Caution: This calculation is used exclusively to calculate the theoretical final speed on the basis of engine speed and transmission ratios. The formula does not take into consideration the fact that the actual maximum speed will be below this speed when driving resistances offset the driving forces. An estimate of the actual achievable speeds using a driving performance calculation in which air, rolling and climbing resistance on the one side and tractive force on the other offset each other, can be found in Section 9.8, „Driving resistances“. On vehicles with a speed limiter in accordance with 92/24/EEC, the design top speed is generally 85 km/h.

Example of a calculation:

Vehicle:	Model T42, 27.414 DFAK
Tyre size:	295/80 R 22.5
Rolling circumference:	3,185m
Transmission:	ZF 16S151 OD
Transmission ratio in lowest gear:	13,80
Transmission ratio in highest gear:	0,84
Minimum engine speed at maximum engine torque:	900/min
Maximum engine speed:	1.900/min
Ratio for transfer case VG 1700/2 in on-road applications:	1,007
Ratio for transfer case VG 1700/2 in off-road applications:	1,652
Final drive ratio:	4,77

The solution to following is required:

1. Minimum speed in off-road applications at maximum torque

2. Theoretical maximum speed without speed limiter

cardiagn.com

Solution 1:

$$v = \frac{0{,}06 \cdot 900 \cdot 3{,}185}{13{,}8 \cdot 1{,}652 \cdot 4{,}77}$$

$$v = 1{,}58 \text{km/h}$$

Solution 2:

$$v = \frac{0{,}0624 \cdot 1900 \cdot 3{,}185}{13{,}8 \cdot 1{,}652 \cdot 4{,}77}$$

v = 93,6km/h; however, the speed limiter determines it as 85 km/h.

9.2 Efficiency

The efficiency is the ratio of the power output to the power input. Since the power output is always smaller than the power input, efficiency η is always < 1 bzw. < 100%.

Formula 26: Efficiency

$$\eta = \frac{P_{ab}}{P_{zu}}$$

When several units are connected in series, the individual efficiencies are multiplied.

Example of a calculation for individual efficiency:

Efficiency of a hydraulic pump η = 0,7. If the required power output P_{ab} = 20kW, is 20 kW, what should the power input P_{zu} be?

Solution:

$$P_{zu} = \frac{P_{ab}}{\eta}$$

$$P_{zu} = \frac{20}{0{,}7}$$

$$P_{zu} = 28{,}6\text{kW}$$

cardiagn.com

Example of calculation for several efficiencies:

Efficiency of a hydraulic pump $\eta_1 = 0{,}7$. This pump drives a hydraulic motor via a jointed shaft system with two joints.

Individual efficiencies:

Hydraulic pump:	η_1	=	0,7
Jointed shaft joint a:	η_2	=	0,95
Jointed shaft joint b:	η_3	=	0,95
Hydraulic motor:	η_4	=	0,8

Power required, i.e., power output P_{ab} = 20kW

What is the power input P_{zu}?

Solution:

Overall efficiency:

$$\eta_{ges} = \eta_1 \cdot \eta_2 \cdot \eta_3 \cdot \eta_4$$

$$\eta_{ges} = 0{,}7 \cdot 0{,}95 \cdot 0{,}95 \cdot 0{,}8$$

$$\eta_{ges} = 0{,}51$$

Power input:

$$P_{zu} = \frac{20}{0{,}51}$$

$$P_{zu} = 39{,}2\text{kW}$$

9.3 Tractive force

The tractive force is dependent on:

- Engine torque
- Overall ratio (including that of the wheels)
- Efficiency of power transmission

Formula 27: Tractive force

$$F_z = \frac{2 \cdot \pi \cdot M_{Mot} \cdot \eta \cdot i_G \cdot i_V \cdot i_A}{U}$$

F_Z	=	Tractive force, in [N]
M_{Mot}	=	Engine torque, in [Nm]
η	=	Overall efficiency in the drive train – see guideline values in Table 43
i_G	=	Transmission ratio
i_V	=	Transfer case ratio
i_A	=	Final drive ratio of the driven axle(s)
U	=	Tyre rolling circumference, in [m]

For an example of tractive force, see 9.4.3 Calculating gradeability.

cardiagn.com

9.4 Gradeability

9.4.1 Distance travelled on uphill or downhill gradients

The gradeability of a vehicle is expressed as a percentage (%). For example, the figure 25% means that for a horizontal length of l = 100m, a height of h = 25m can be overcome. The same applies correspondingly to downhill gradients. The actual distance travelled c is calculated as follows:

Formula 28: Distance travelled on uphill or downhill gradients

$$c = \sqrt{l^2 + h^2} = l \cdot \sqrt{1 + \left[\frac{p}{100}\right]^2}$$

c	=	Distance travelled, in [m]
l	=	Horizontal length of an uphill or downhill gradient, in [m]
h	=	Vertical height of an uphill/downhill gradient, in [m]
p	=	Uphill/downhill gradient, in [%]

Example of a calculation:

Gradient p = 25%. What is the distance travelled for a length of 200m?

$$c = \sqrt{l^2 + h^2} = 200 \cdot \sqrt{1 + \left[\frac{25}{100}\right]^2}$$

$$c = 206\text{m}$$

9.4.2 Angle of uphill or downhill gradient

The angle of the uphill or downhill gradient α is calculated using the following formula:

Formula 29: Angle of uphill or downhill gradient

$$\tan \alpha = \frac{p}{100}, \quad \alpha = \arctan \frac{p}{100}, \quad \sin \alpha = \frac{h}{c}, \quad \alpha = \arcsin \frac{h}{c}$$

α	=	Angle of gradient, in [°]
p	=	Uphill/downhill gradient, in [%]
h	=	Vertical height of an uphill/downhill gradient, in [m]
c	=	Distance travelled, in [m]

Example of a calculation:

If the gradient is 25%, what is the angle of the gradient?

$$\tan \alpha = \frac{p}{100} = \frac{25}{100}$$

$$\alpha = \arctan 0{,}25$$
$$\alpha = 14°$$

cardiagn.com

Fig. 102: Gradient ratios, gradient, angle of gradient ESC-171

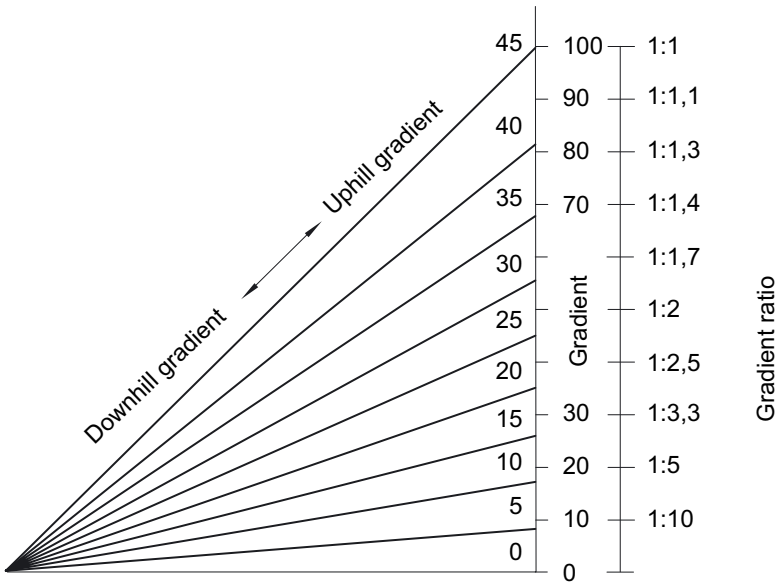

9.4.3 Calculating the gradeability

Gradeability is dependent on:

- Tractive force (see Formula 27)
- Overall combined mass, including overall mass of the trailer or semi-trailer
- Rolling resistance
- Adhesion (friction)

The following applies for gradeability:

Formula 30: Adhesion (friction)

$$p = 100 \cdot \left[\frac{F_z}{9{,}81 \cdot G_z} - f_R \right]$$

Where:

p	=	Gradeability, in [%]
F_z	=	Tractive force in [N] (calculated in accordance with Formula 27)
G_z	=	Overall combined mass, in [kg]
f_R	=	Coefficient of rolling resistance, see Table 42
i_G	=	Transmission ratio
i_A	=	Driven axle ratio
i_V	=	Transfer case ratio
M_{Mot}	=	Engine torque, in [Nm]
U	=	Tyre rolling circumference, in [m]
η	=	Overall efficiency in the drive train, see Table 43

cardiagn.com

The gradeability determined using Formula 7 calculates the vehicle's gradeability based on its characteristics of

- Engine torque
- Transmission, transfer case, final drive and tyre ratio and
- Overall combined mass

Here, only the vehicle's ability to tackle a specific gradient based on its characteristics is considered. Not taken into consideration is the actual adhesion between wheels and road which, in poor conditions (e.g. wet roads) can reduce traction so that hill-climbing performance is far below the value calculated here. Calculation of the actual conditions based on adhesion is addressed in Formula 31.

Table 42: Coefficients of rolling resistance

Road surface	Coefficient f_R
Good asphalt road	0,007
Wet asphalt road	0,015
Good concrete road	0,008
Rough concrete road	0,011
Block paving	0,017
Poor road	0,032
Dirt track	0,15...0,94
Loose sand	0,15...0,30

Table 43: Overall efficiency in the drive train

Number of driven axles	η
One driven axle	0,95
Two driven axles	0,9
Three driven axles	0,85
Four driven axles	0,8

Example of calculation:

Vehicle:	Model T42, 27.414 DFAK		
Max. engine torque:	M_{Mot}	=	1.850Nm
Efficiency with three driven axles:	η_{ges}	=	0,85
Transmission ratio in lowest gear:	i_G	=	13,80
Transfer case ratio - in on-road gear:	i_V	=	1,007
- in off-road gear:	i_V	=	1,652
Final drive ratio:	i_A	=	4,77
Tyre 295/80 R 22.5 with rolling circumference:	U	=	3,185m
Overall combined mass:	G_Z	=	100.000kg
Coefficient of rolling resistance:			
- smooth asphalt	f_R	=	0,007
- poor, rutted road	f_R	=	0,032

cardiagn.com

Required is:

Maximum gradeability p_f in on-road and off-road conditions.

Solution:

1. Maximum tractive force (for definition, see Formula 27) in on-road gear:

$$F_z = \frac{2\pi \cdot M_{Mot} \cdot \eta \cdot i_G \cdot i_V \cdot i_A}{U}$$

$$F_z = \frac{2\pi \cdot 1850 \cdot 0{,}85 \cdot 13{,}80 \cdot 1{,}007 \cdot 4{,}77}{3{,}185}$$

$$F_z = 205526N \approx 205{,}5kN$$

2. Maximum tractive force (for definition, see Formula 27) in off-road gear:

$$F_z = \frac{2\pi \cdot M_{Mot} \cdot \eta \cdot i_G \cdot i_V \cdot i_A}{U}$$

$$F_z = \frac{2\pi \cdot 1850 \cdot 0{,}85 \cdot 13{,}80 \cdot 1{,}652 \cdot 4{,}77}{3{,}185}$$

$$F_z = 337170N \approx 337{,}2kN$$

3. Maximum gradeability in on-road gear on good asphalt road:

$$p = 100 \cdot \left[\frac{F_z}{9{,}81 \cdot G_z} - f_R \right]$$

$$p = 100 \cdot \left[\frac{205526}{9{,}81 \cdot 100000} - 0{,}007 \right]$$

$$p = 20{,}25\%$$

4. Maximum gradeability in on-road gear on poor, rutted road:

$$p = 100 \cdot \left[\frac{205526}{9{,}81 \cdot 100000} - 0{,}032 \right]$$

$$p = 17{,}75\%$$

cardiagn.com

5. Maximum gradeability in off-road gear on good asphalt road:

$$p = 100 \cdot \left[\frac{337170}{9{,}81 \cdot 100000} - 0{,}007 \right]$$

$$p = 33{,}67\%$$

6. Maximum gradeability in off-road gear on poor, rutted road:

$$p = 100 \cdot \left[\frac{337170}{9{,}81 \cdot 100000} - 0{,}032 \right]$$

$$p = 31{,}17\%$$

Note:

The examples shown do not take into consideration whether adhesion between road and driven wheels (friction) will allow the tractive force required for tackling the gradient to be transmitted. The following formula is applied for this:

Formula 31: Gradeability taking into account road/tyre adhesion

$$p_R = 100 \cdot \left[\frac{\mu \cdot G_{an}}{G_z} - f_R \right]$$

Where:

p_R	=	Gradeability taking friction into account, in [%]
μ	=	Tyre/road surface coefficient of friction, on wet asphalt surface ~ 0,5
f_R	=	Coefficient of rolling resistance, on wet asphalt road surface ~ 0,015
G_{an}	=	Sum of the axle loads of the driven axles as mass, in [kg]
G_Z	=	Overall combined mass, in [kg]

Example of calculation:

Above vehicle:	Model T42, 27.414 DFAK		
coefficient, wet asphalt road:	μ	=	0,5
Coefficient of rolling resistance, wet asphalt:	f_R	=	0,015
Overall combined mass:	G_Z	=	100.000kg
Sum of the axle loads of all driven axles:	G_{an}	=	26.000kg

$$p_R = 100 \cdot \left[\frac{0{,}5 \cdot 26000}{100000} - 0{,}032 \right]$$

$$p_R = 11{,}5\%$$

cardiagn.com

9.5 Torque

If force and effective separation are known:

Formula 32: Torque with force and effective separation

$$M = F \cdot l$$

If power output and rotational speed are known:

Formula 33: Torque with power output and rotational speed

$$M = \frac{9550 \cdot P}{n \cdot \eta}$$

In hydraulic systems, if delivery rate (volume flow rate), pressure and rotational speed are known:

Formula 34: Torque with delivery rate, pressure and rotational speed

$$M = \frac{15{,}9 \cdot Q \cdot p}{n \cdot \eta}$$

Where:

M	=	Torque, in [Nm]
F	=	Force, in [N]
l	=	Distance from the line of action of the force to the centre of rotation, in [m]
P	=	Power output, in [kW]
n	=	Rotational speed, in [1/min]
η	=	Efficiency
Q	=	Volume flow rate, in [l/min]
p	=	Pressure, in [bar]

Example of calculation when force and effective separation are known:

A cable winch with a pulling force F of 50,000N has a drum diameter d = 0.3m.
Without taking efficiency into account, what is the torque?

Solution:

M = F • l = F • 0,5d (der Trommelradius ist der Hebelarm)

M = 50000N • 0,5 • 0,3m

M = 7500Nm

Example when power output and rotational speed are known:

A power take-off is to transmit a power P of 100kW at n = 1,500/min.
Without taking efficiency into account, what torque must the power take-off be able to transmit?

cardiagn.com

Solution:

$$M = \frac{9550 \cdot 100}{1500}$$

$$M = 637Nm$$

Example if delivery rate (volume flow rate), pressure and rotational speed are known for a hydraulic pump:

A hydraulic pump delivers a volume flow rate Q of 80 l/min at a pressure p of 170 bar and a pump rotational speed n of 1000/min. Without taking efficiency into account, what torque is required?

Solution:

$$M = \frac{15{,}9 \cdot 80 \cdot 170}{1000}$$

$$M = 216Nm$$

If efficiency is to be taken into account, the torques calculated in each case must be divided by the overall efficiency (see also Section 9.2, Efficiency).

9.6 Power output

For lifting motion:

Formula 35: Power output for lifting motion

$$M = \frac{9{,}81 \cdot m \cdot v}{1000 \cdot \eta}$$

For plane motion:

Formula 36: Power output for plane motion

$$P = \frac{F \cdot v}{1000 \cdot \eta}$$

For rotational motion:

Formula 37: Power output for rotational motion

$$P = \frac{M \cdot n}{9550 \cdot \eta}$$

cardiagn.com

In hydraulic systems:

Formula 38: Power output in hydraulic systems

$$P = \frac{Q \cdot p}{600 \cdot \eta}$$

Where:

P	=	Power output, in [kW]
m	=	Mass, in [kg]
v	=	Speed, in [m/s]
η	=	Efficiency
F	=	Force, in [N]
M	=	Torque, in [Nm]
n	=	Rotational speed, in [1/min]
Q	=	Delivery rate (volume flow rate), in [l/min]
p	=	Pressure, in [bar]

Example 1 = Lifting motion:

Tail-lift payload including its own weight	m	=	2. 600kg
Lift speed	v	=	0,2m/s

If efficiency is not taken into consideration, what is the power output?

Solution:

$$P = \frac{9{,}81 \cdot 2600 \cdot 0{,}2}{1000}$$

$$P = 5{,}1\text{kW}$$

Example 2: Plane motion:

Cable winch	F	=	100.000N
Cable speed	v	=	0,15m/s

If efficiency is not taken into consideration, what is the power output requirement?

$$P = \frac{100000 \cdot 0{,}15}{1000}$$

$$P = 15\text{kW}$$

Example 3 – Rotational motion:

Power take-off rotational speed	n	=	1.800/min
Permissible torque	M	=	600Nm

cardiagn.com

If efficiency is not taken into consideration, what power output is possible?

Solution:

$$P = \frac{600 \cdot 1800}{9550}$$

$$P = 113kW$$

Example 4: Hydraulic system:

Volume flow rate of the pump	Q	=	60 l/min
Pressure	p	=	170 bar

If efficiency is not taken into consideration, what is the power output?

Solution:

$$P = \frac{60 \cdot 170}{600}$$

$$P = 17kW$$

9.7 Rotational speeds for power take-offs at the transfer case

If the power take-off is operating on the transfer case and its operation is distance-dependent, its rotational speed n_N is given in revolutions per metre of distance covered. It is calculated from the following:

Formula 39: Revolutions per meter, power take-off at the transfer box

$$n_N = \frac{i_A \cdot i_V}{U}$$

The distance s in metres covered per revolution of the power take-off (reciprocal value of n_N) is calculated with:

Formula 40: Distance per revolution, power take-off on the transfer case

$$s = \frac{U}{i_A \cdot i_V}$$

Where:

n_N	=	Power take-off rotational speed, in [1/m]
i_A	=	Final drive ratio
i_V	=	Transfer case ratio
U	=	Tyre circumference, in [m]
S	=	Distance travelled, in [m]

Example:

Vehicle:	Model T34 19.464 FAC		
Tyres 295/80 R22.5 with rolling circumference:	U	=	3,185m
Final drive ratio:	i_A	=	5,26
Transfer case G1700, ratio in on-road gear:	i_v	=	1,007
Ratio in off-road applications:	i_v	=	1,652

cardiagn.com

Power take-off rotational speed in on-road gear:

$$n_N = \frac{5{,}26 \cdot 1{,}007}{3{,}185}$$

$$n_N = 1{,}663\ /m$$

This corresponds to a distance of:

$$s = \frac{3{,}185}{5{,}26 \cdot 1{,}007}$$

$$s = 0{,}601m$$

Power take-off rotational speed in off-road gear:

$$n_N = \frac{5{,}26 \cdot 1{,}652}{3{,}185}$$

$$n_N = 2{,}728\ /m$$

This corresponds to a distance of:

$$s = \frac{3{,}185}{5{,}26 \cdot 1{,}652}$$

$$s = 0{,}367m$$

9.8 Driving resistances

The main driving resistances are:

- Rolling resistance
- Climbing resistance
- Air resistance (drag).

A vehicle can move along only if the sum of all resistances is overcome. Resistances are forces that either balance out the driving force (uniform movement) or are smaller than the driving force (accelerated movement).

Formula 41: Rolling resistance force

$$F_R = 9{,}81 \cdot f_R \cdot G_z \cdot \cos\alpha$$

Formula 42: Climbing resistance force

$$F_S = 9{,}81 \cdot G_z \cdot \sin\alpha$$

cardiagn.com

Angle of gradient (= formula 29, see Section 9.4.2, Angle of uphill and downhill gradients)

$$\tan \alpha = \frac{p}{100}, \quad \alpha = \arctan \frac{p}{100}$$

Formula 43: Air resistance force

$$F_L = 0{,}6 \cdot c_W \cdot A \cdot v^2$$

Es bedeuten:

F_R	=	Rolling resistance force, in [N]
f_R	=	Coefficient of rolling resistance, see Table 42
G_Z	=	Overall combined mass, in [kg]
α	=	Angle of uphill gradient, in [°]
F_S	=	Climbing resistance force, in [N]
p	=	Uphill gradient, in [%]
F_L	=	Air resistance force, in [N]
c_W	=	Drag coefficient
A	=	Vehicle frontal area, in [m²]
v	=	Speed, in [m/s]

Example:

Articulated vehicle:	G_Z	=	40.000kg
Speed:	v	=	80km/h
Gradient:	p_f	=	3%
Vehicle frontal area:	A	=	7 m²
Coefficient of rolling resistance for good asphalt road:	f_R	=	0,007

A distinction is to be made between the following:

- with spoiler, $c_{W1} = 0{,}6$
- without spoiler, $c_{W2} = 1{,}0$

Solution:

Additional calculation 1:

Conversion of driving speed from km/h into m/s:

$$v = \frac{80}{3{,}6} = 22{,}22\text{m/s}$$

Additional calculation 2:

Conversion of gradeability from % into °:

$$\alpha = \arctan \frac{3}{100} = \arctan 0{,}03$$

$$\alpha = 1{,}72°$$

cardiagn.com

1. Calculation of rolling resistance:

$$F_R = 9{,}81 \cdot 0{,}007 \cdot 40000 \cdot \cos 1{,}72°$$

$$F_R = 2746N$$

2. Calculation of climbing resistance:

$$F_S = 9{,}81 \cdot 40000 \cdot \sin 1{,}72°$$

$$F_S = 11778N$$

3. Calculation of air resistance F_{L1} with spoiler:

$$F_{L1} = 0{,}6 \cdot 0{,}6 \cdot 7 \cdot 22{,}22^2$$

$$F_{L1} = 1244N$$

4. Calculation of air resistance F_{L2} without spoiler:

$$F_{L2} = 0{,}6 \cdot 1 \cdot 7 \cdot 22{,}22^2$$

$$F_{L2} = 2074N$$

5. Overall resistance F_{ges1} with spoiler:

$$F_{ges1} = F_R + F_s + F_{L1}$$

$$F_{ges1} = 2746 + 11778 + 1244$$

$$F_{ges1} = 15768N$$

6. Overall resistance F_{ges2} without spoiler:

$$F_{ges2} = F_R + F_s + F_{L2}$$

$$F_{ges2} = 2746 + 11778 + 2074$$

$$F_{ges2} = 16598N$$

7. Power output requirement P_1 with spoiler, not taking efficiency into consideration:

(power output in accordance with Formula 36, Power output for plane motion)

$$P_1' = \frac{F_{ges1} \cdot v}{1000}$$

$$P_1' = \frac{15768 \cdot 22{,}22}{1000}$$

$$P_1' = 350kW\ (476PS)$$

cardiagn.com

8. Power output requirement P_2 without spoiler, not taking efficiency into consideration:

$$P_2' = \frac{F_{ges2} \cdot v}{1000}$$

$$P_2' = \frac{16598 \cdot 22{,}22}{1000}$$

$$P_2' = 369\text{kW (502PS)}$$

9. Power output requirement P_1 with spoiler and overall driveline efficiency of $\eta = 0{,}95$:

$$P_1 = \frac{P_1'}{\eta} = \frac{350}{0{,}95}$$

$$P_1 = 368\text{kW (501PS)}$$

10. Power output requirement P_2 with spoiler and overall driveline efficiency of $\eta = 0{,}95$:

$$P_2 = \frac{P_2'}{\eta} = \frac{369}{0{,}95}$$

$$P_2 = 388\text{kW (528PS)}$$

9.9 Turning circle

When a vehicle is cornering, each wheel describes a turning circle. The outer turning circle, or its radius, is the main subject of interest. The calculation is not precise because when a vehicle is cornering the perpendiculars through the centres of all wheels do not intersect at the curve centre point (Ackermann condition). In addition, while the vehicle is moving dynamic forces will arise that will affect the cornering manoeuvre. However, the following formulae can be used for estimation purposes:

Formula 44: Distance between steering axes

$$j = s - 2r_o$$

Formula 45: Theoretical value of the outer steer angle

$$\cot ß_{ao} = \cot ß_i + \frac{j}{l_{kt}}$$

Formula 46: Steer angle deviation

$$ß_F = ß_a - ß_{ao}$$

Formula 47: Turning circle radius

$$r_s = \frac{l_{kt}}{\sin ß_{ao}} + r_o - 50 \cdot ß_F$$

cardiagn.com

Fig. 103: Kinematic interrelationships when calculating the turning circle ESC-172

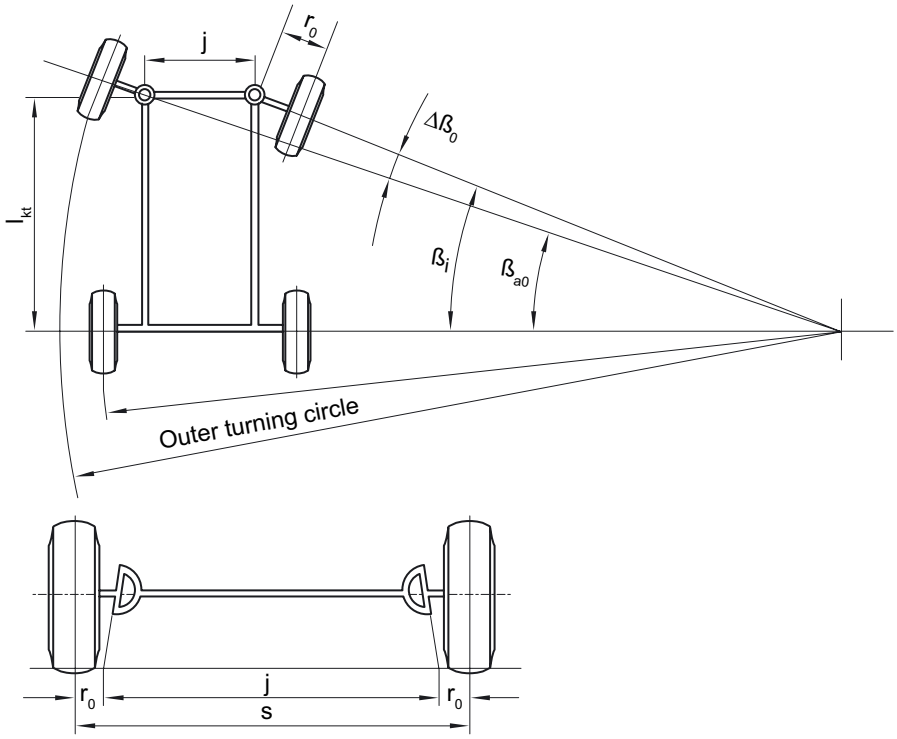

Example:

Vehicle:	Model T31, 19.314 FC
Wheelbase:	l_{kt} = 3.800mm
Front axle:	Model V9-82L
Tyres:	315/80 R 22.5
Rims:	22.5 x 9.00
Track width:	s = 2.058mm
Scrub radius:	r_0 = 58mm
Inner steer angle:	$ß_i$ = 50,0°
Outer steer angle:	$ß_a$ = 30°30‘ = 30,5°

1. Distance between steering axes

$$j = s - 2r_o = 2058 - 2 \cdot 58$$
$$j = 1942$$

2. Theoretical value for outer steer angle

$$\cot ß_{ao} = \cot ß_i + \frac{j}{l_{kt}} = 0{,}8391 + \frac{1942}{3800}$$

$$\cot ß_{ao} = 1{,}35$$

$$ß_{ao} = 36{,}53°$$

cardiagn.com

3. Steering deviation

$$ß_F = ß_a - ß_{ao} = 30{,}5° - 36{,}53° = -6{,}03°$$

4. Turning circle radius

$$r_s = \frac{3800}{\sin 36{,}53°} + 58 - 50 \cdot (-6{,}03°)$$

$$r_s = 6743\text{mm}$$

9.10 Axle load calculation

9.10.1 Performing an axle load calculation

To optimise the vehicle and achieve the correct superstructure ratings, an axle load calculation is essential. The body can be matched properly to the truck only if the vehicle is weighed before any body building work is carried out. The weights obtained in the weighing process are to be included in the axle load calculation.

The following section will explain an axle load calculation. The moment theorem is used to distribute the weight of the equipment to the front and rear axles. All distances are with respect to the theoretical front axle centreline. For ease of understanding, weight is not used in the sense of weight force (in N) in the following formulae but in the sense of mass (in kg).

Example:

A 400 litre tank is to be installed instead of a 140 litre tank.
A calculation of the weight distribution between the front and rear axles is required.

Difference in weight:	ΔG	=	400 - 140	=	260kg
Distance from theoretical front axle centreline		=	1.600mm		
Theoretical wheelbase	l_t	=	4.500mm		

Fig. 104: Axle load calculation: Tank layout ESC-173

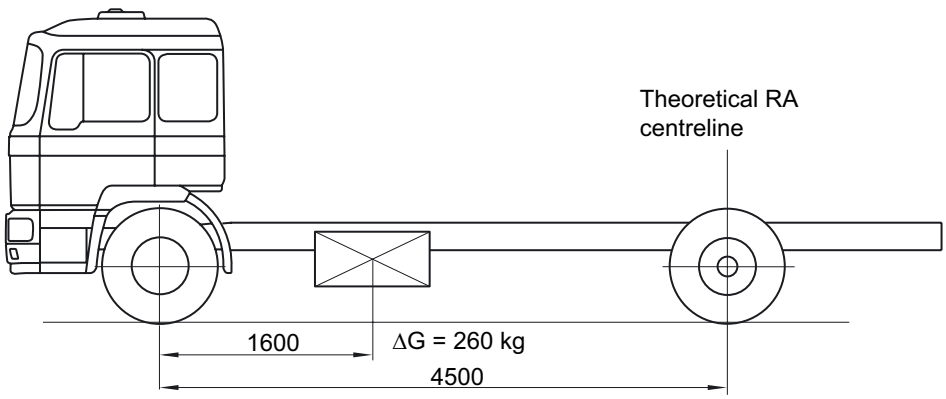

cardiagn.com

Solution:

Formula 48: Rear axle weight difference:

$$\Delta G_H = \frac{\Delta G \cdot a}{l_t}$$

$$= \frac{260 \cdot 1600}{4500}$$

$$\Delta G_H = 92 \text{ kg}$$

Formula 49: Front axle weight difference:

$$\Delta G_V = \Delta G \cdot \Delta G_H$$

$$= 260 - 92$$

$$\Delta G_V = 168\text{kg}$$

Rounding up or down to whole kilograms is sufficient in practice. Attention should be paid to the mathematically correct symbol, to which the following rule applies:

- Dimensions
  - all distances/clearances that are IN FRONT OF the theoretical front axle centreline have a MINUS sign (-)
  - all distances that are BEHIND the theoretical front axle centreline have a PLUS sign (+)
- Weights
  - all weights that are ADDED TO the vehicle have a PLUS sign (+)
  - all equipment weights that are REMOVED FROM the vehicle have a MINUS sign (-)

Example – Snowplough plate:

Weight:	ΔG	=	120kg
Distance from first axle centreline:	a	=	-1.600mm
Theoretical wheelbase:	l_t	=	4.500mm

A calculation of the weight distribution to the front and rear axle is required.

Rear axle:

$$\Delta G_H = \frac{\Delta G \cdot a}{l_t} = \frac{120 \cdot (-1600)}{4500}$$

ΔG_H = -43kg, the weight on the rear axle is reduced.

Front axle:

$$\Delta G_V = \Delta G - \Delta G_H = 120 - (-43)$$

ΔG_V = 163kg, the weight on the front axle is increased.

The following table shows an example of a full axle load calculation. In this example, two variants are compared (variant 2 has stronger front springs and larger tyres on the front axle, see Table 44).

cardiagn.com

Table 44: Example of an axle load calculation

AXLE LOAD CALCULATION
MAN - Nutzfahrzeuge AG, Postf. 500620, 80976 Munich

Abt.	:ESC	Vehicle, cab	:	26.314 FNLC / N - cab			2000-02-21
Compiled by	:	Wheelbase	:	4600+1350	Calc. - no.	:	T36-.....
Code	:	W - tech.	:	5135	KSW - no.	:	
Tel.	:	Overhang	:	2000 = Serie	AE - no.	:	
		Overhang	:	1850 = Sonder	Veh. - no	:	
		Overhang tech.	:	2665	File-no.	:	
VN	:	Vec.-drg. no.	:	82.99126.8008	ESC-no.	:	
Customer	:	Body	:	**6.300mm loading platform and rear-mounted crane -**			
Location	:			**rigidly fixed, total crane moment approx. 175kNm**			

Name	Dist. from techn.	Weight distribution to			Dist. from techn.	Weight distribution to		
	FA-centre	FA	RA	Total	FA-centre	FA	RA	Total
Chassis with driver, tools and spare wheel		4.425	3.645	8.070		4.425	3.645	8.070
Rear axle AP H9 - 13120	4.600	5	45	50	4.600	5	45	50
	0	0	0	0	0	0	0	0
Trailer coupling	7.800	-23	68	45	7.800	-23	68	45
Power take-off N../10 and pump	1.450	43	17	60	1.450	43	17	60
	0	0	0	0	0	0	0	0
Frame modification -150	7.875	5	-15	-10	7.875	5	-15	-10
Air-con	-600	45	-5	40	-600	45	-5	40
High-mounted exhaust pipe	400	18	2	20	400	18	2	20
Aluminium fuel tank 300 l	1.665	-14	-6	-20	1.665	-14	-6	-20
Batteries 2 x 180 Ah	1.500	11	4	15	1.500	11	4	15
REMOVAL: or rear mounted spare wheel	7.100	57	-207	-150	7.100	57	-207	-150
ADDITION: of side mounted spare wheel	2.500	72	68	140	2.500	72	68	140
Aluminium air tank	1.300	-34	-11	-45	1.300	-34	-11	-45
	0	0	0	0	0	0	0	0
Other	1.650	34	16	50	1.650	34	16	50
	0	0	0	0	0	0	0	0
Rear crane, arm folded down	6.070	-424	2.754	2.330	6.070	-424	2.754	2.330
Reinforcement in the crane area	6.000	-17	117	100	6.000	-17	117	100
Subframe	4.500	57	403	460	4.500	57	403	460
Oil tank	2.600	89	91	180	2.600	89	91	180
Tyres FA 385/65 R 22.5 ***					**0**	**60**	**0**	**60**
Front springs reinforced PARA 9,0 t ***					**0**	**40**	**0**	**40**

cardiagn.com

Chassis - unladen weight		4.350	6.985	11.335		4.450	6.985	11.435
Permissible loads	***	7.500	19.000	26.000	***	9.000	19.000	26.000
Difference between unladen weight & perm. loads		3.150	12.015	14.665		4.550	12.015	14.565
Centre of gravity for payload and FA fully laden X1 =	1.103	3.150	11.515	14.665	1.604	4.550	10.015	14.565
body with respect to RA fully laden X2 =	928	2.650	12.015	14.665	899	2.50	12.015	14.565
techn. RA centreline actual X3 =	1.400	3.998	10.667	14.665	1.400	3.971	10.594	14.565
Axle overload		848	-1.348			-579	-1421	
Loss of payload through axle overload				3.110				
With even loading there remains		3.150	8.405	11.555		3.971	10.594	14.565
Payload	0	0	0	0	0	0	0	0
Vehicle laden		7.500	15.390	22.890		8.421	17.579	26.000
Axle or vehicle loading		100,0%	81,0%	88,0%		93,6%	92,5%	100,0%
Axle load distribution		32,8%	67,2%	100,0%		32,4%	67,6%	100,0%
Vehicle unladen		4350	6985	11335		4450	6985	11435
Axle or vehicle loading		58,0%	36,8%	43,6%		49,4%	36,8%	44,0%
Axle load distribution		38,4%	61,6%	100,0%		38,9%	61,1%	100,0%
Vehicle overhang 51,9 %								
***** perm.FA load of 9,000kg reqired !!**								
Observe the weight tolerances acc. to DIN 70020 Information supplied withour liability								

9.10.2 Calculation of weight with trailing axle lifted

The weights given for trailing axle vehicles in the MANTED® system (www.manted.de) and other technical documents have been calculated with the trailing axle lowered. Distribution of the axle loads to the front and driven axle after the trailing axle has been lifted is easy to determine by calculation.

Weight on the 2nd axle (driven axle) with the 3rd axle (trailing axle) lifted.

Formula 50: Weight on the 2nd axle with 3rd axle lifted

$$G_{2an} = \frac{G_{23} \cdot l_t}{l_{12}}$$

Where:

G_{2an} = Unladen weight on the 2nd axle with the 3rd axle lifted, in [kg]
G_{23} = Unladen weight on the 2nd and 3rd axles, in [kg]
l_{12} = Wheelbase between 1st and 2nd axles, in [mm]
l_t = Theoretical wheelbase, in [mm]

Weight on the front axle with the 3rd axle (trailing axle) lifted:

Formula 51: Weight on the 1st axle with the 3rd axle lifted

$$G_{1an} = G - G_{2an}$$

cardiagn.com

Where:

G_{1an} = Unladen weight on the 1st axle with the trailing axle lifted, in [kg]
G = Unladen weight of the vehicle, in [kg]

Example:

Vehicle model:	Model T37, 26.414 FNLLC
Wheelbase:	4.800 + 1.350
Frame overhang:	2.000
Cab:	Large capacity

Unladen weight with the trailing axle lowered:

Front axle G_{1ab} = 4.705kg

Drive and trailing axle G_{23} = 3.585kg

Unladen weight G = 8.290kg

Permissible axle loads: 7.500kg / 11.500kg / 7.500kg

Solution:

1. Calculation of the theoretical wheelbase (see „General“ Chapter):

$$l_t = l_{12} + \frac{G_3 \cdot l_{23}}{G_2 + G_3}$$

$$l_t = 4800 + \frac{7500 \cdot 1350}{11500 + 7500}$$

$$l_t = 5333\text{mm}$$

2. Calculation of the unladen weight of the 2nd axle (= driven axle) with the 3rd axle (= trailing axle) lifted:

$$G_{2an} = l_{12} + \frac{G_{23} \cdot l_t}{l_{12}} = \frac{3585 \cdot 5333}{4800}$$

$$G_{2an} = 3983\text{kg}$$

3. Calculation of the unladen weight of the 1st axle (+ front axle) with the 3rd axle (= trailing axle) lifted:

$$G_{1an} = G - G_{2an}$$

$$G_{1an} = 7975 - 3840$$

$$G_{1an} = 4135\text{kg}$$

cardiagn.com

9.11 Support length for bodies without subframes

The calculation of the required support length in the following example does not take all influences into account. However, it does show one option and provides some good reference values for practical applications.

The support length is calculated using the following:

Formula 52: Formula for support length when no subframe is used

$$l = \frac{0{,}175 \cdot F \cdot E\,(r_R + r_A)}{\sigma_{0,2} \cdot r_R \cdot r_A}$$

If the frame and support are made of different materials, then the following applies:

Formula 53: Modulus of elasticity in the case of different materials

$$E = \frac{2E_R \cdot E_A}{E_R + E_A}$$

Where:

l	=	Support length for each support, in [mm]
F	=	Force per support, in [N]
E	=	Modulus of elasticity, in [N/mm²]
r_R	=	External radius of frame longitudinal member profile section, in [mm]
r_A	=	External radius of support profile section, in [mm]
$\sigma_{0,2}$	=	Yield point of the lower value material, in [N/mm²]
E_R	=	Modulus of elasticity of frame longitudinal member profile section, in [N/mm²]
E_A	=	Modulus of elasticity of support profile section, in [N/mm²]

Example:

Interchangeable body chassis 26.414 FNLLW, wheelbase 4,600 + 1,350, large-capacity cab, permissible gross weight 26,000kg, chassis unladen weight 8,615kg.

Solution:

For payload and body there remains approx.	26.000kg – 8.615kg = 17.385kg
For each support if there are 6 bearing points on the chassis	17.385 : 6 = 2.898kg
Force	F = 2.898kg • 9,81kg • m/s² = 28.429N
External radius of frame profile section	r_R = 18mm
External radius of support profile section	r_H = 16mm
Modulus of elasticity for steel	E = 210.000N/mm²
Yield point for both materials	$\sigma_{0,2}$ = 420N/mm²

Formula 52 can then be used to determine the approximate minimum length for every support:

$$l = \frac{0{,}175 \cdot 28429 \cdot 210000 \cdot (18+16)}{430^2 \cdot 18 \cdot 16}$$

$$l = 667\text{mm}$$

cardiagn.com

9.12 Coupling devices

9.12.1 Trailer coupling

The required trailer coupling size is determined by the D value.

The formula for the D value is as follows:

Formula 54: D value

$$D = \frac{9{,}81 \cdot T \cdot R}{T + R}$$

D	=	D value, in [kN]
T	=	Permissible gross weight of the towing vehicle, in [t]
R	=	Permissible gross weight of the trailer, in [t]

Example:

Vehicle T31, 19.464 FLC

Permissible gross weight 18,000 kg = T = 18t

Trailer load 22,000kg = R = 22t

D value:

$$D = \frac{9{,}81 \cdot 18 \cdot 22}{18 + 22}$$

$$D = 97\text{kN}$$

If the trailer gross weight R and the D value of the coupling device are specified, the permissible gross weight of the towing vehicle T can be determined using the following formula:

$$T = \frac{R \cdot D}{(9{,}81 \cdot R) - D}$$

If the permissible gross weight of the towing vehicle T and the D value of the coupling device are specified, the maximum permissible trailer load R can be determined using the following formula:

$$R = \frac{T \cdot D}{(9{,}81 \cdot T) - D}$$

9.12.2 Rigid drawbar trailers / central axle trailers

Other conditions apply for the rigid drawbar and central axle trailers in addition to the D value. Trailer couplings and end cross members have lower trailer loads because in this case the nose weight acting on the trailer coupling and the end cross member has to be taken into account.

In order to harmonise the regulations within the European Union, the terms D_c value and V value were introduced with Directive 94/20/EC.

cardiagn.com

The following formulae apply:

Formula 55: D_C value formula for rigid drawbar and central axle trailers

$$D_C = \frac{9{,}81 \cdot T \cdot C}{T + C}$$

Formula 56: V value formula for central axle and rigid drawbar trailers with a permissible nose weight of ≤ 10% of the trailer mass and not more than 1,000kg

$$V = a \cdot \frac{X^2}{l_2} \cdot C$$

If the values for x^2/l^2 have been calculated as < 1, a value of 1.0 is to be used.

Where:

D_C	=	Lower D value when operating with a central axle trailer, in [kN]
T	=	Permissible gross weight of the towing vehicle, in [t]
C	=	Sum of the axle loads of the central axle trailer loaded with the permissible mass, in t, not including nose weight S
V	=	V value, in [kN]
a	=	Reference acceleration in the coupling point, in m/s^2. Two values are to be used: 1.8 m/s^2 for air suspension or comparable suspension on the towing vehicle, and 2.4 m/s^2 on all other vehicles
x	=	Length of trailer body, see Fig. 105
l	=	Theoretical drawbar length, see Fig. 105
S	=	Nose weight of the drawbar on the coupling point, in [kg]

Fig. 105: Length of the trailer body and theoretical drawbar length (see also Chapter 4.16 „Coupling devices“) ESC-510

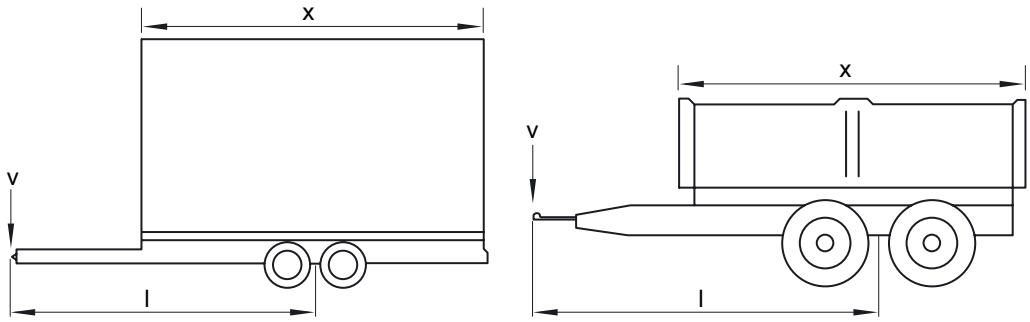

Example:

Vehicle:	L34, 8.224 LLC
Permissible gross weight:	
Trailer:	7.490kg = T = 7,49t
Sum of the axle loads:	11.000kg = C = 11t
Nose weight:	S = 700kg
Length of body:	x = 6,2m
Theoretical drawbar length:	l = 5,2m

Question: Can both vehicles be used in combination as a road train if the reinforced end cross member 81.51250.5151 and the Ringfeder 864 trailer coupling are fitted to the truck?

cardiagn.com

Solution:

D_C value:

$$D_C = \frac{9{,}81 \cdot T \cdot C}{T + C} = \frac{9{,}81 \cdot 7{,}49 \cdot 11}{7{,}49 + 11}$$

$$D_C = 43{,}7\text{kN}$$

D_C value for end cross member = 58kN (see Chapter „Coupling devices“, Table 28)

$$\frac{x^2}{l^2} = \frac{6{,}2^2}{5{,}2^2} = 1{,}42$$

$$V = a \frac{x^2}{l^2} \cdot C = 1{,}8 \cdot 1{,}42 \cdot 11$$ (1.8 if the truck rear axle is fitted with air suspension)

$$V = 28{,}12\text{kN}$$

V value for end cross member = 35kN (see Chapter „Coupling devices“, Table 28)

Both vehicles can be combined to form a road train; however, the minimum front axle load of 35% of the respective vehicle weight (including nose weight) must be observed, see Chapter 3 „General“, Table 19.

An unladen truck may pull only an unladen central axle trailer.

9.12.3 Fifth-wheel coupling

The required fifth-wheel coupling size is determined by the D value. The D value formula for fifth-wheel couplings is as follows:

Formula 57: D value for fifth-wheel coupling

$$D = \frac{0{,}6 \cdot 9{,}81 \cdot T \cdot R}{T + R - U}$$

If the D value is known and the permissible gross weight of the semitrailer is sought, the following applies:

Formula 58: Permissible gross weight of the semitrailer

$$R = \frac{D \cdot (T - U)}{(0{,}6 \cdot 9.81 \cdot T) - D}$$

If the permissible gross weight of the semitrailer and the D value of the fifth-wheel coupling are specified, the permissible gross weight of the tractor unit can be calculated with the following formula:

Formula 59: Permissible gross weight of the tractor unit

$$T = \frac{D \cdot (R - U)}{(0{,}6 \cdot 9.81 \cdot R) - D}$$

cardiagn.com

If the fifth-wheel load is sought and all other loads are known, the following formula can be used:

Formula 60: Formula for fifth-wheel load

$$U = T + R - \frac{0{,}6 \cdot 9{,}81 \cdot T \cdot R}{D}$$

Where:

D	=	D value, in [kN]
R	=	Permissible gross weight of the semitrailer in [t], including the fifth-wheel load
T	=	Permissible gross weight of the tractor unit in [t], including the fifth-wheel load
U	=	Fifth-wheel load, in [t]

Example:

Tractor unit:	19.314FS
Fifth wheel load, in accordance with trailer type plate:	U = 10t
Permissible gross weight of the tractor unit:	18.000kg = T = 18t
Permissible gross weight of the semitrailer:	32.000kg = R = 32t

D value:

$$D = \frac{0{,}6 \cdot 9{,}81 \cdot 18 \cdot 32}{18 + 32 - 10}$$

$$D = 84{,}8\text{kN}$$

cardiagn.com