https://truckmanualshub.com/

SP05A

Bunker Rake

Parts catalogue

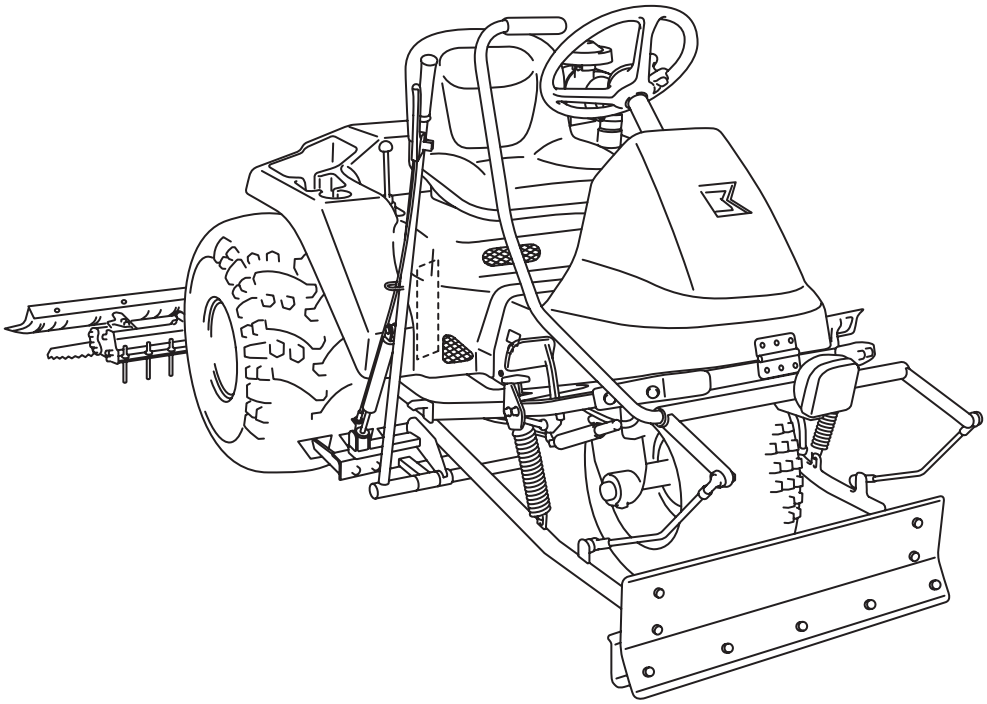

BARONESS®

Quality on Demand

Serial No.10001-

Ver.1.0

https://truckmanualshub.com/

Greeting

Thank you for purchasing Baroness machine.
This machine has been shipped from the factory after comprehensive test runs and inspections. However, the optimum performance of the machine depends on how you use and maintain it, including routine inspections, adjustments, and fuel supplies before and after the operation.
We hope you will use the machine safely, and take advantage of its best performance.

Note

(For inquiry about this machine)
Since the type of machine may be changed sequentially, inform us of the type and the serial number.
The information described in this manual is subject to change without prior notice.
When replacing parts, be sure to use Baroness parts or parts designated by Kyoeisha.
Note that the Baroness product warranty may not apply to defects caused by the use of parts from other companies.
(For ordering parts)
For prevention of delivery of wrong parts, be sure to inform us of the code number and the part name.

Example:	Code No.	Part Name	Qty
	SP05---0101DD	FRAME	1

https://truckmanualshub.com/

Contents

1.Frame section.....1-1
1-2

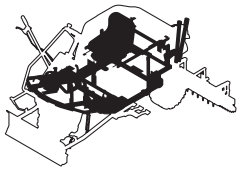

2.Steering section.....2-1
2-2

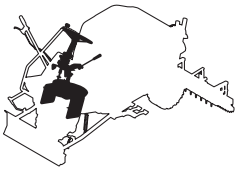

3.Front Cover section
.....3-1
3-2

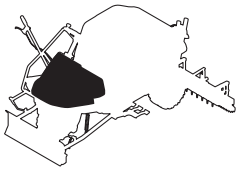

4.Rear Cover section
.....4-1

5.Front wheel section
(two-wheel drive)
.....5-1
5-2

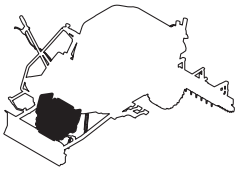

5.Front wheel section
(three-wheel drive)
.....5-3
5-4

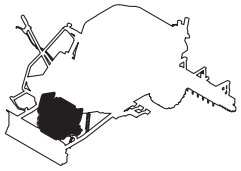

6.Rear wheel section
.....6-1
6-2

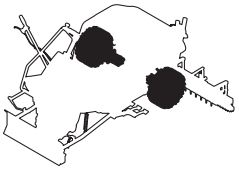

7.Brake pedal section
.....7-1
7-2

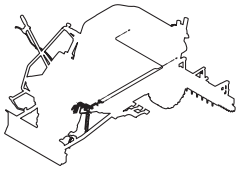

8.Engine section A
.....8-1
8-2

9.Engine section B
.....9-1

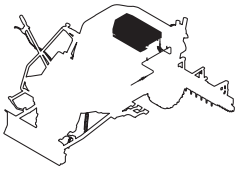

10.Engine section C
.....10-1

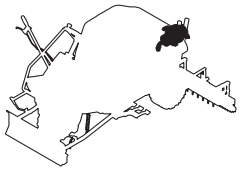

11.Belt tension section
.....11-1
11-2

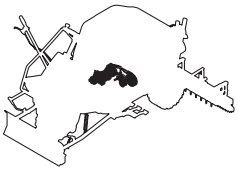

12.Traveling connection
section.....12-1
12-2

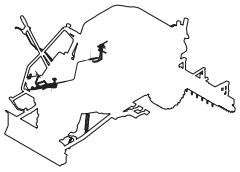

13.Traveling hydraulic
section A.....13-1
13-2

14.Traveling hydraulic
section B
(for three-wheel drive)
.....14-1
14-2

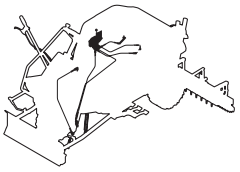

15.Hydraulic section C
(rake raise/lower)
.....15-1

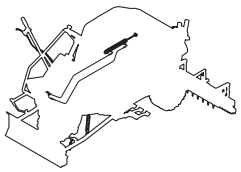

16.Hydraulic section D
(power steering)
.....16-1
16-2

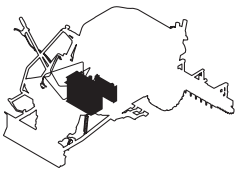

17.Rake section A
.....17-1
17-2

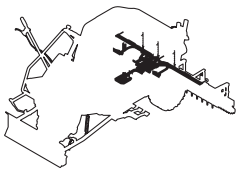

18.Rake section B
.....18-1
18-2

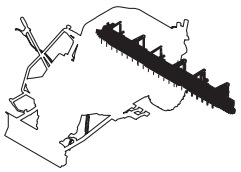

19.Electrical section
.....19-1
19-2

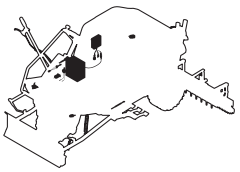

20.Accessory section
.....20-1

21.Front blade section
(option).....21-1
21-2

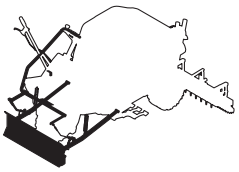

22.Sand cultivator section
(option).....22-1

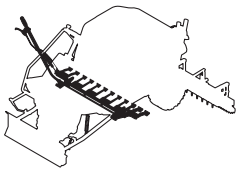

23.Finishing brush section
(option).....23-1

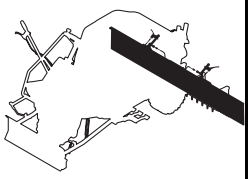

24.Light section.....24-1

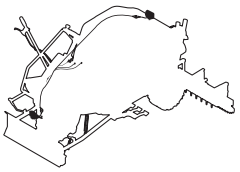

25.Cargo box section
(option).....25-1

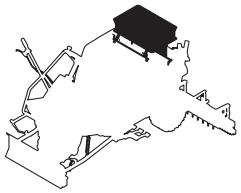

https://truckmanualshub.com/

1.Frame section

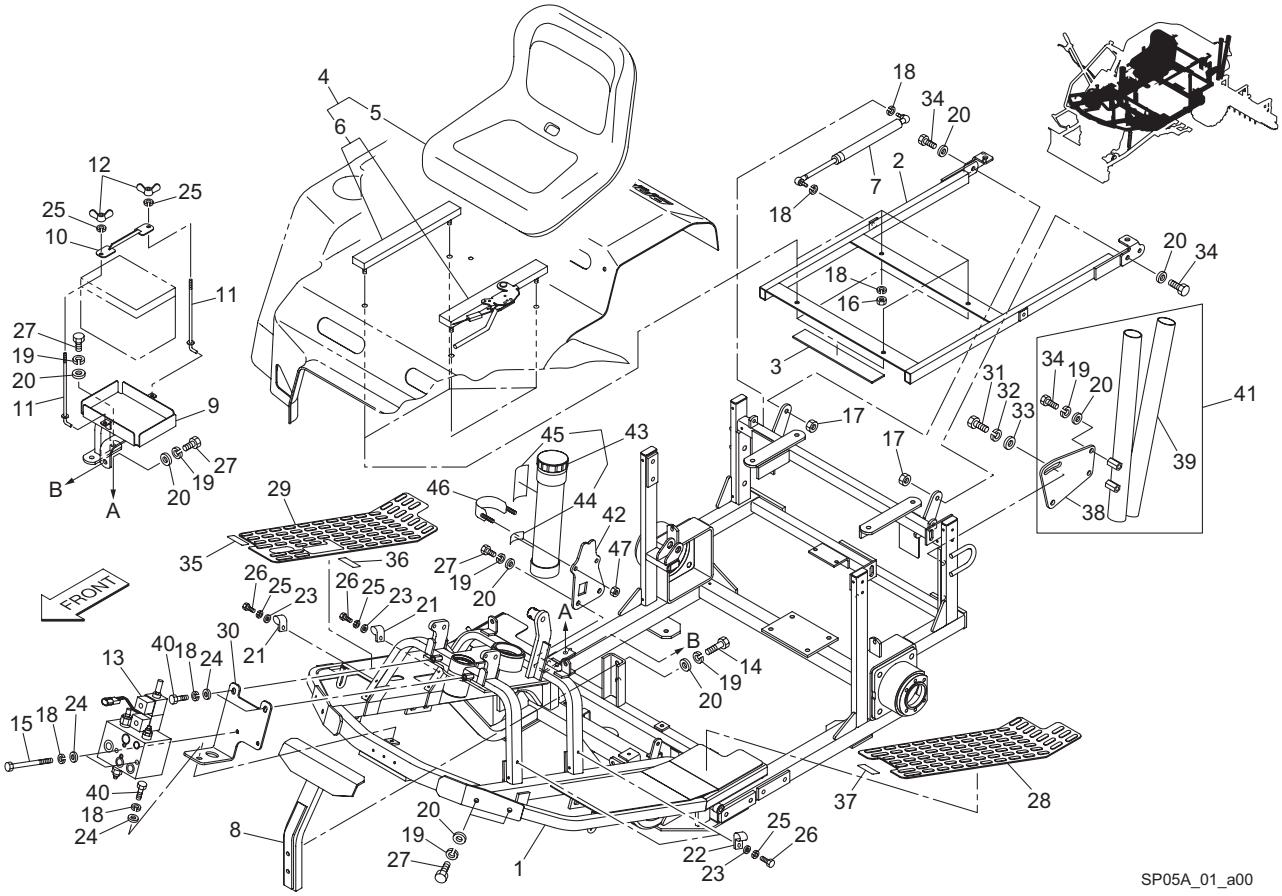

Cat No.	Code No.	Part name	Qty	Remark	SN of application
1 - 1	SP05---0101DD	FRAME	1		
1 - 2	SP05---0102BD	BASE, SEAT	1		
1 - 3	K4033000520	RUBBER, PLATE 4-40260	1		
1 - 4	K1700000240	SEAT ASSY, SLIDE XB-150	1		
1 - 5	K1700000230	SEAT, XB-150	1		
1 - 6	K1701000050	RAIL, SLIDE XB-180	1		
1 - 7	K3381000020	GAS-SPRING, C20	1		
1 - 8	SP05---0103ZD	HOLDER, SEAT BASE	1		
1 - 9	SP05---0104BD	BASE, BATTERY	1		
1 - 10	SP05---0105AD	CLAMPER, BATTERY	1		
1 - 11	SP05---0106B2	SCREW, HOLDING BATTERY	2		
1 - 12	K0141060002	NUT, WING M6-3	2		
1 - 13	K3313000320	VALVE, SOLENOID MODULE	1		
1 - 14	K0000100402	BOLT, M10-40	2		
1 - 15	K0003081002	BOLT, M8-100	2		
1 - 16	K0100080002	NUT, M8	4		
1 - 17	K0100100002	NUT, M10	2		
1 - 18	K0200080002	WASHER, SPRING M8	11		
1a - 19	K0200100002	WASHER, SPRING M10	13		
1a - 20	K5000100002	WASHER, M10	15		
1 - 21	K4270030080	CLIP, HARNESS 30 M8	2		
1 - 22	K4270050080	CLIP, HARNESS 50 M8	2		
1 - 23	K5000060002	WASHER, M6	4		
1 - 24	K5000080002	WASHER, M8	5		
1 - 25	K0200060002	WASHER, SPRING M6	6		
1 - 26	K0000060152	BOLT, M6-15	4		
1a - 27	K0000100202	BOLT, M10-20	9		
1 - 28	SP05---0121Z0	MAT, STEP (L)	1		
1 - 29	SP05---0120Z0	MAT, STEP (R)	1		
1 - 30	SP05---0114ZD	BRACKET, VALVE	1		

SP05A_01_a00

https://truckmanualshub.com/

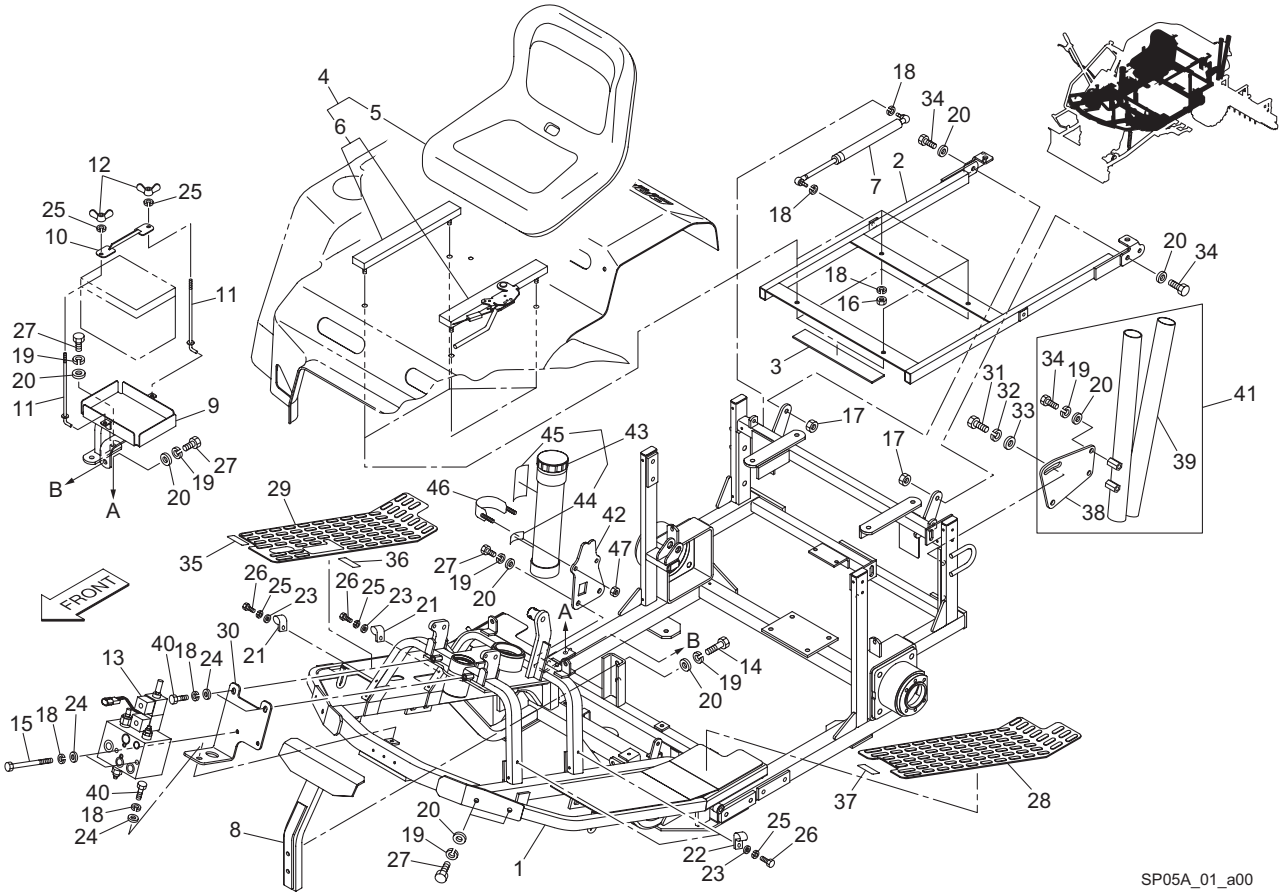

Cat No.	Code No.	Part name	Qty	Remark	SN of application
1 - 31	K0000120202	BOLT, M12-20	2		
1 - 32	K0200120002	WASHER, SPRING M12	2		
1 - 33	K5000120002	WASHER, M12	2		
1 - 34	K0000100302	BOLT, M10-30	4		
1 - 35	K4203001430	STICKER, FORWARD	1		
1 - 36	K4203001440	STICKER, BACKWARD	1		
1 - 37	K4203001450	STICKER, BRAKE	1		
1 - 38	SP05---0109ZD	BRACKET, BROOM STAND	1		
1 - 39	SP05---0110ZD	STAND, BROOM	1		
1 - 40	K0000080152	BOLT, M8-15	3		
1 - 41	SP05---0115Z0	STAND ASSY, BROOM	1		
1a - 42	SP05---2124ZD	BRACKET, MANUAL CASE	1		
1a - 43	SP05---2120Z0	CASE, FOR MANUALS	1		
1a - 44	K4209001300	DECAL, OWNERS MANUAL	1		
1a - 45	K4205001560	DECAL, READ OWNERS MANUAL	1		
1a - 46	SP05---2125Z2	BAND	1		
1a - 47	K0144080002	NUT, WITH F-RING, M8	2		

SP05A_01_a00

https://truckmanualshub.com/

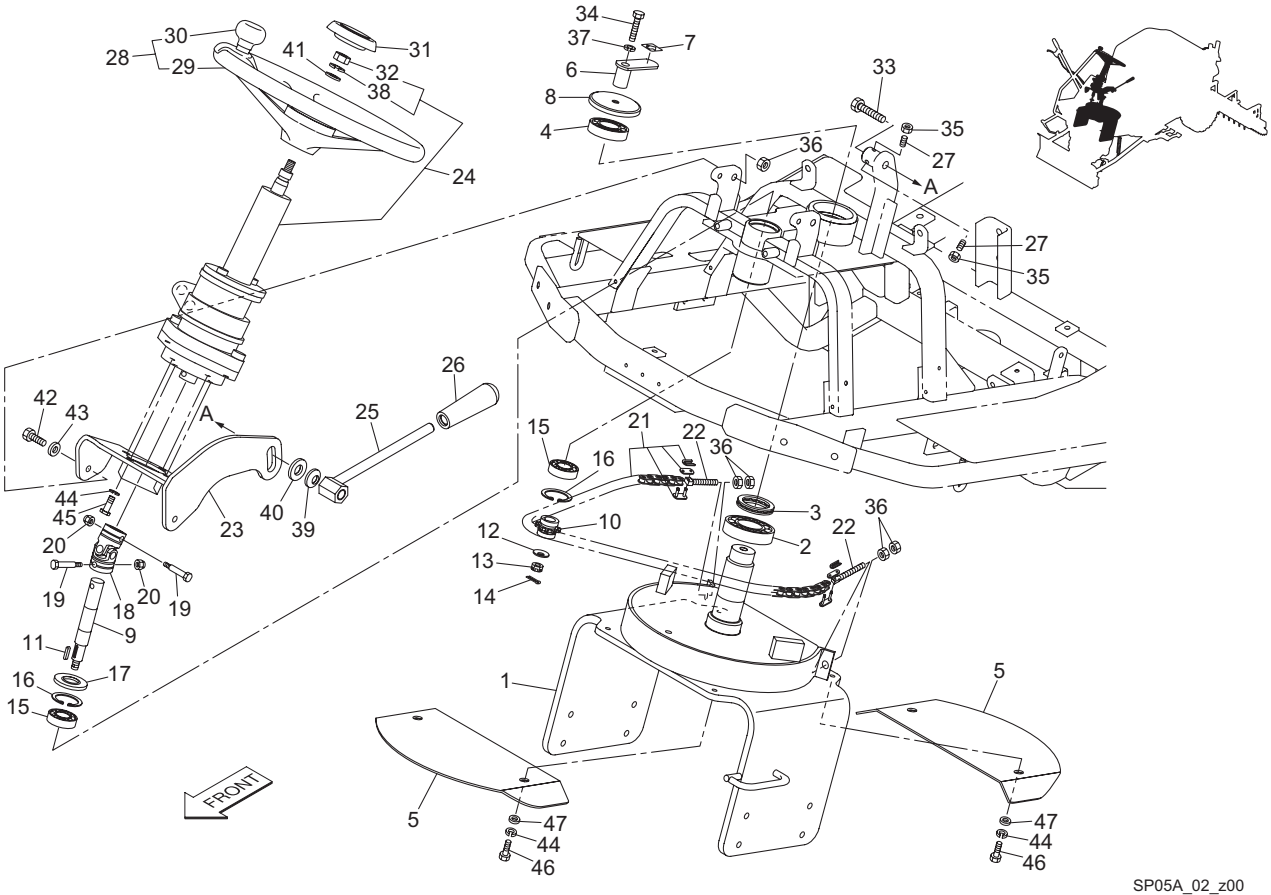

SP05A_02_z00

Cat No.	Code No.	Part name	Qty	Remark	SN of application
2 - 1	SP05---0201AD	ARM, FRONT WHEEL	1		
2 - 2	K0608062070	BEARING, BALL SEAL 2RS 6207	1		
2 - 3	K0640511070	BEARING, BALL THRUST 51107	1		
2 - 4	K0612062060	BEARING, BALL SEAL 2RD 6206	1		
2 - 5	SP05---0202ZD	PLATE, PREVENTING SAND	2		
2 - 6	SP05---0203ZR	FITTING, GUIDE	1		
2 - 7	K4209001180	DECAL, ARROW POINT	1		
2 - 8	K620400053D	COVER, FOR BEARING	1		
2 - 9	SP05---0204Z0	SHAFT, STEERING GEAR	1		
2 - 10	K2230000018	SPROCKET, KEY-SEATED 12.7-9	1		
2 - 11	K0500404200	KEY, BOTH ROUND M4-420	1		
2 - 12	K0210100002	SPRING, CONICAL DISC L M10	1		
2 - 13	K0124100002	NUT, THIN SLOTTED M10	1		
2 - 14	K0302025250	PIN, COTTER SUS M2.5-25	1		
2 - 15	K0612060040	BEARING, BALL SEAL 2RD 6004	2		
2 - 16	K0402042001	RING, RETAINING R M42	2		
2 - 17	K0822047060	OIL SEAL, MHSA20476	1		
2 - 18	K1620000220	JOINT	1		
2 - 19	K6121000370	SHAFT, THREADED JOINT PIN M8-35	2		
2 - 20	K0144060002	NUT, WITH F-RING, M6	2		
2 - 21	K2210000440	CHAIN, JOINT EK428SH 45JJ	1		
2 - 22	K6122000302	SCREW, ADJUSTING M10-70	2		
2 - 23	SP05---0205AD	BRACKET, HANDLE	1		
2 - 24	K3294000110	COLUMN ASSY, STEERING	1		
2 - 25	SP05---0206ZD	LEVER, TILT	1		
2 - 26	K1300000070	GRIP, RUBBER BLACK 9-22	1		
2 - 27	K0023080151	SETSCREW, M8-15	2		
2 - 28	K1710000070	STEERING, WITH KNOB V027220-0000	1		
2 - 29	K1710000080	STEERING, V027220-0101	1		
2 - 30	K1710000090	KNOB, V027220-0200 ASSY	1		

SP05A_02_z00

https://truckmanualshub.com/

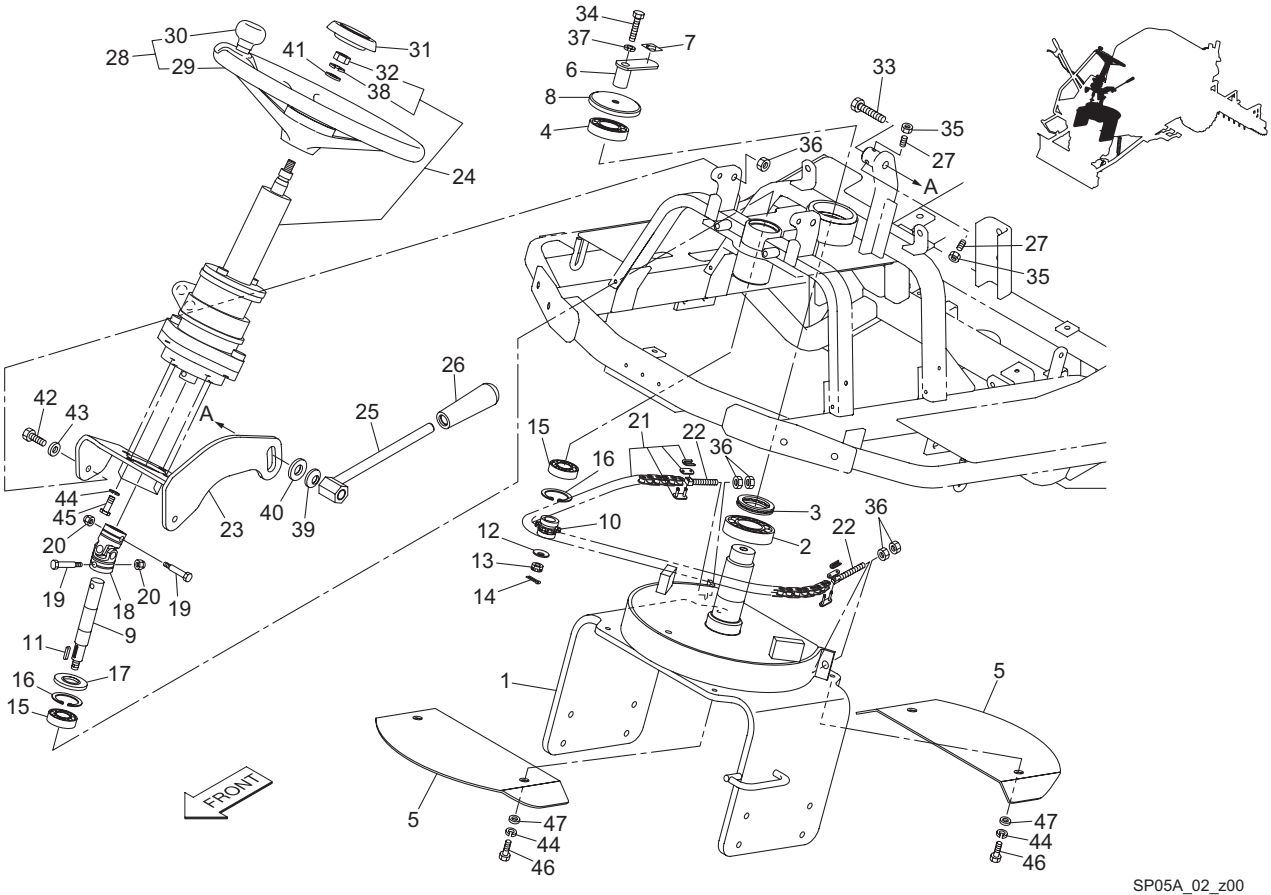

SP05A_02_z00

Cat No.	Code No.	Part name	Qty	Remark	SN of application
2 - 31	K1310000130	CAP, RUBBER	1		
2 - 32	K0105120002	NUT, P1.5 M12-3	1		
2 - 33	K0000120702	BOLT, M12-70	1		
2 - 34	K0010100502	BOLT, HT M10-50	1		
2 - 35	K0100080002	NUT, M8	2		
2 - 36	K0100100002	NUT, M10	6		
2 - 37	K0200100002	WASHER, SPRING M10	1		
2 - 38	K0200120002	WASHER, SPRING M12	1		
2 - 39	K0213120001	WASHER, DISK SPRING H M12-1	1		
2 - 40	K5073212352	WASHER, SPHC 3.2-12-35	1		
2 - 41	K5000120002	WASHER, M12	1		
2 - 42	K0000100252	BOLT, M10-25	2		
2 - 43	K5000100002	WASHER, M10	2		
2 - 44	K0200080002	WASHER, SPRING M8	8		
2 - 45	K0000080202	BOLT, M8-20	4		
2 - 46	K0000080152	BOLT, M8-15	4		
2 - 47	K5000080002	WASHER, M8	4		

SP05A_02_z00

https://truckmanualshub.com/

3.Front Cover section

SP05A

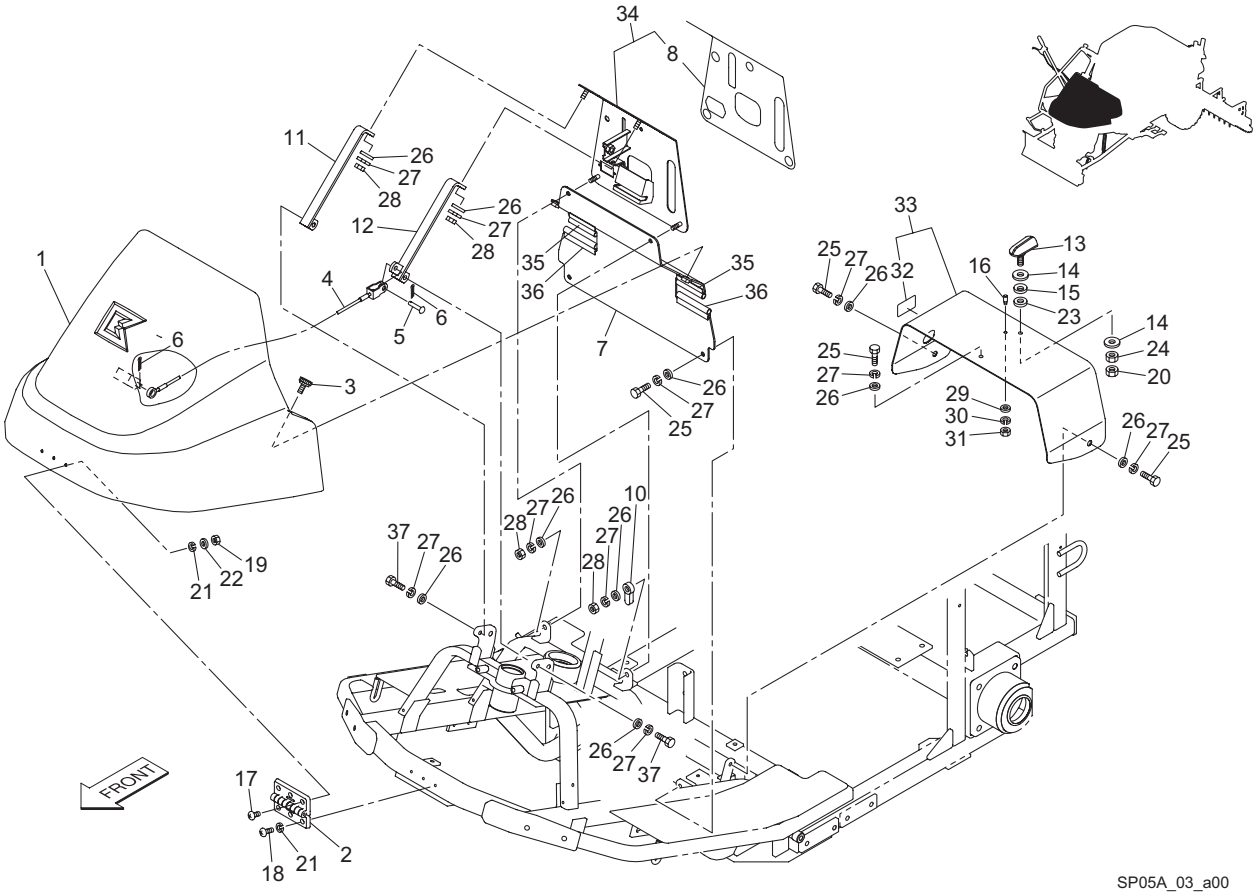

SP05A_03_a00

Cat No.	Code No.	Part name	Qty	Remark	SN of application
3 - 1	SP05---0501Z0	COVER COMP, FRONT	1		
3 - 2	K4520000260	HINGE, RESIN WITH HOLE 5.2-100	1		
3 - 3	K1320000250	KNOB, DIMPLE M8-16	2		
3 - 4	K1170037000	WIRE, HOOK 370	1		
3 - 5	K6040060282	PIN, ROUND HEAD M6-28	1		
3 - 6	K0300020202	PIN, COTTER M2-20	2		
3 - 7	SP05---0521AR	COVER, FRONT TIRE	1		
3 - 8	SP05---0560C0	STICKER, OPERATION	1		
3a - 9					
3 - 10	K4281000030	CLAMP, HARNESS 10.5 50	1		
3 - 11	SP05---0535AD	STAY, PANEL (R)	1		
3 - 12	SP05---0536AD	STAY, PANEL (L)	1		
3 - 13	SP05---0542ZR	FASTENER, COVER	1		
3 - 14	K5051010220	WASHER, C5191P 1-10-22	2		
3 - 15	K0210100002	SPRING, CONICAL DISC L M10	1		
3 - 16	K0071001122	PIN, M8 WITH TAPPED M6-16	1		
3 - 17	K0042050252	SCREW, + ROUND HEAD M5-25	3		
3 - 18	K0042050152	SCREW, + ROUND HEAD M5-15	3		
3 - 19	K0100050002	NUT, M5	3		
3 - 20	K0102100002	NUT, M10-3	1		
3 - 21	K0200050002	WASHER, SPRING M5	6		
3 - 22	K5000050002	WASHER, M5	3		
3 - 23	K5000100002	WASHER, M10	1		
3 - 24	K0100100002	NUT, M10	1		
3 - 25	K0000080152	BOLT, M8-15	5		
3 - 26	K5000080002	WASHER, M8	11		
3 - 27	K0200080002	WASHER, SPRING M8	11		
3 - 28	K0100080002	NUT, M8	4		
3 - 29	K5000060002	WASHER, M6	1		
3 - 30	K0200060002	WASHER, SPRING M6	1		

SP05A_03_a00

https://truckmanualshub.com/

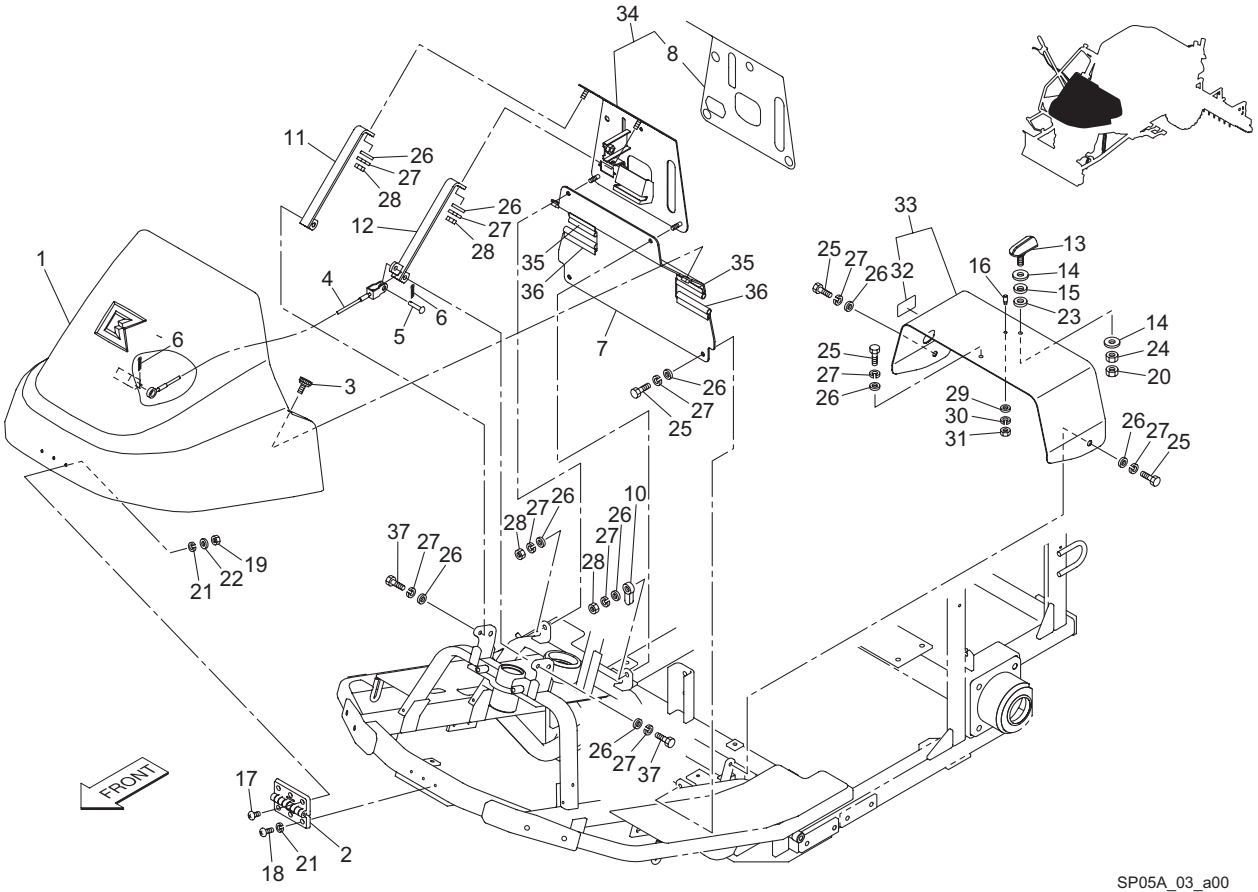

SP05A_03_a00

Cat No.	Code No.	Part name	Qty	Remark	SN of application
3 - 31	K0100060002	NUT, M6	1		
3 - 32	K4209001390	DECAL, HYDRAULIC OIL	1		
3 - 33	SP05---0540B0	COVER COMP, HYDRAULIC TANK	1		
3 - 34	SP05---2530Z0	OPERATION PANEL COMP	1		
3 - 35	K3198300800	TRIM, SEAL 6100-32C-0080	2		
3 - 36	K3198300900	TRIM, SEAL 6100-32C-0090	2		
3 - 37	K0000080202	BOLT, M8-20	2		
3a - 38					

SP05A_03_a00

https://truckmanualshub.com/

4.Rear Cover section

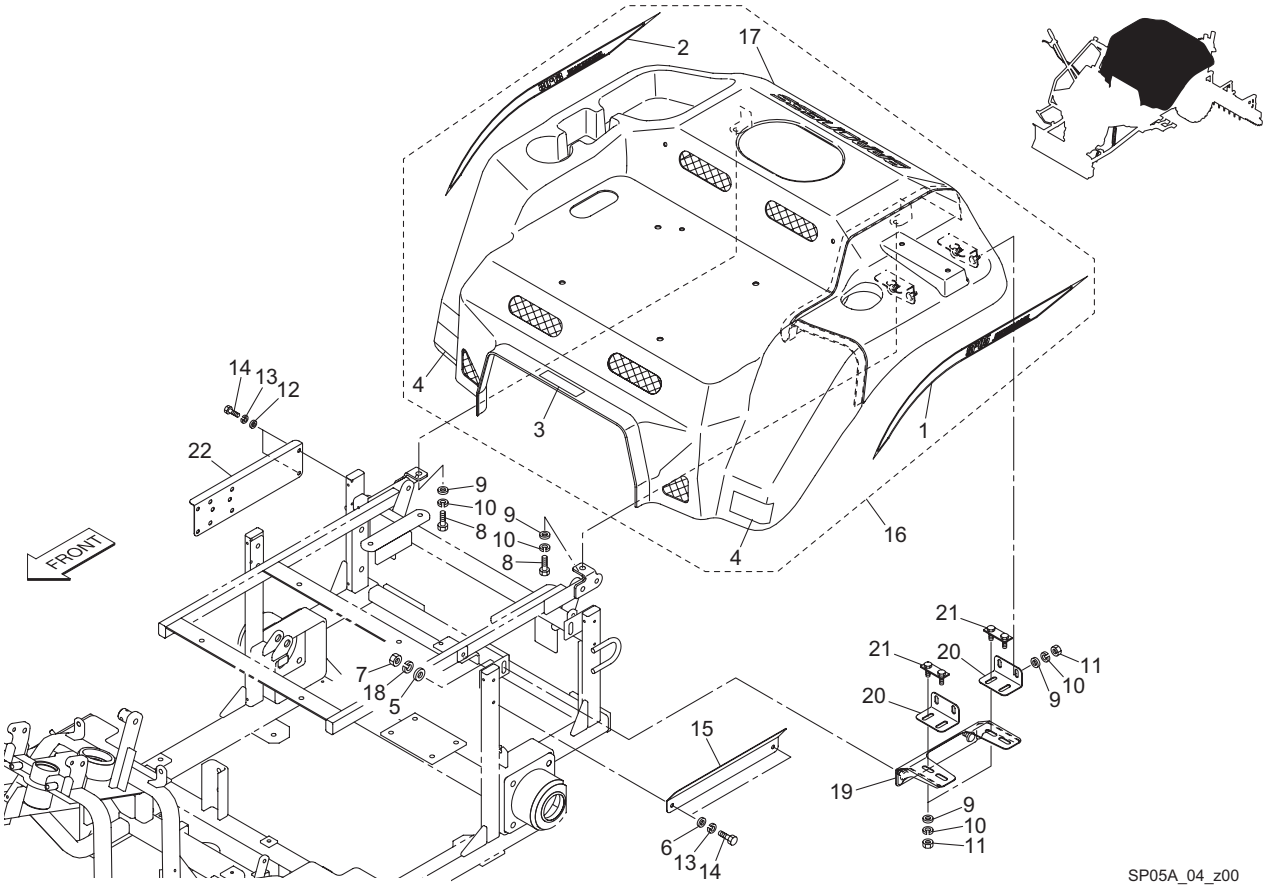

SP05A_04_z00

Cat No.	Code No.	Part name	Qty	Remark	SN of application
4 - 1	SP05A--0502Z0	STICKER, SP05A (L)	1		
4 - 2	SP05A--0503Z0	STICKER, SP05A (R)	1		
4 - 3	SP05---0515Z0	TAPE, ABRASION PROOF	1		
4 - 4	K4205001930	DECAL, CAUTION TO INJURE	2		
4 - 5	K5000100002	WASHER, M10	2		
4 - 6	K5011606202	WASHER, SPCC 1.6-6-20	2		
4 - 7	K0100100002	NUT, M10	2		
4 - 8	K0000080152	BOLT, M8-15	2		
4 - 9	K5000080002	WASHER, M8	10		
4 - 10	K0200080002	WASHER, SPRING M8	10		
4 - 11	K0100080002	NUT, M8	8		
4 - 12	K5000060002	WASHER, M6	4		
4 - 13	K0200060002	WASHER, SPRING M6	6		
4 - 14	K0000060152	BOLT, M6-15	6		
4 - 15	SP05---0561ZD	PLATE, PREVENTING SAND	1		
4 - 16	SP05A--0504Z0	COVER ASSY, REAR	1		
4 - 17	SP05---2505Z0	COVER COMP, REAR SIDE	1		
4 - 18	K0200100002	WASHER, SPRING M10	2		
4 - 19	SP05---2508ZD	BRACKET, COVER	1		
4 - 20	SP05---2509ZD	ADJUSTER	2		
4 - 21	SP05---2510Z2	FITTING, ADJUSTOR	2		
4 - 22	SP05---2604ZD	MOUNT, SUBSTRATE	1		

SP05A_04_z00

https://truckmanualshub.com/

5.Front wheel section(two-wheel drive)

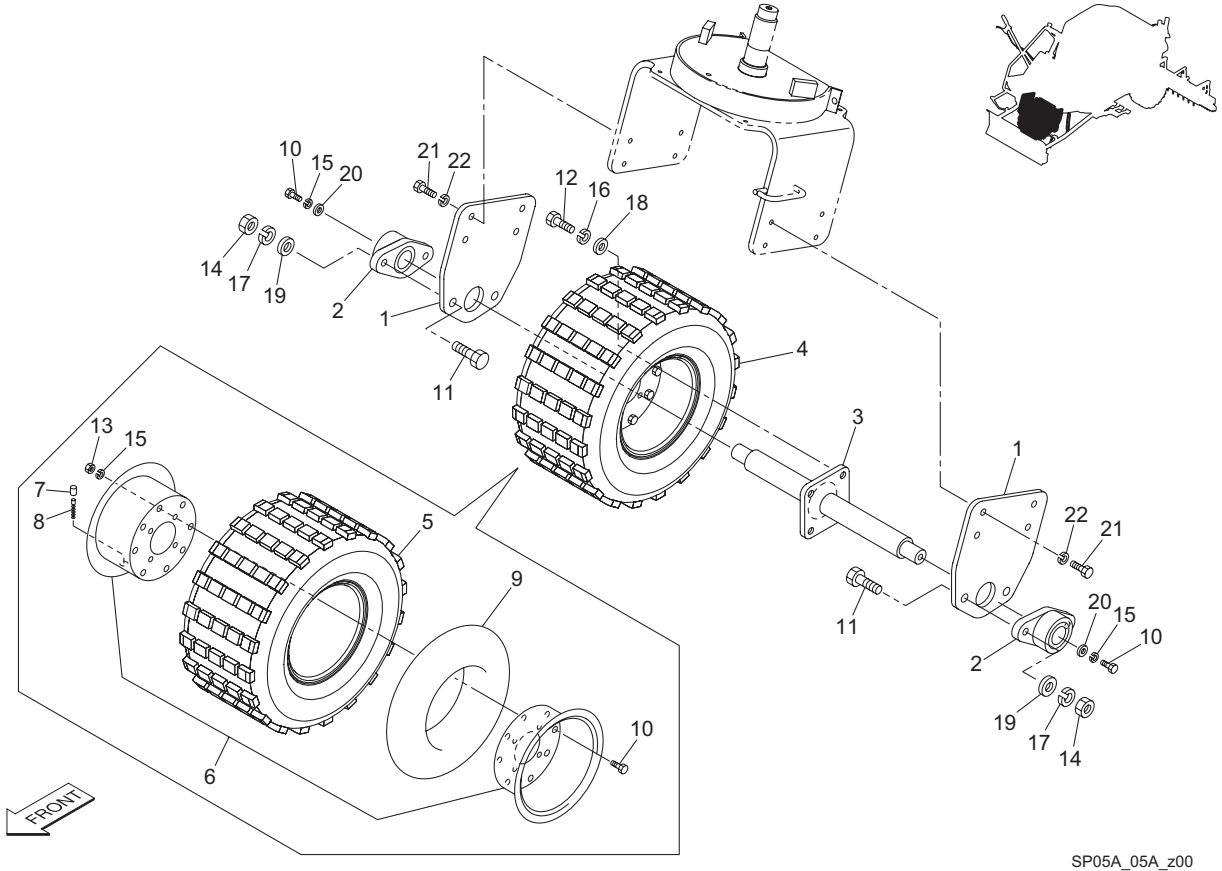

SP05A_05A_z00

Cat No.	Code No.	Part name	Qty	Remark	SN of application
5 - 1	SP05---0210ZD	BRACKET, FRONT WHEEL	2		
5 - 2	K0661205000	BEARING, BALL W/RHOMBIC UCFL 205	2		
5 - 3	SP05---0211ZD	AXIS, ARM	1		
5 - 4	K2000000360	TIRE ASSY, 21*11.00-10-4A	1		
5 - 5	K2001000090	TIRE, 21*11.00-10PD2	1		
5 - 6	K2081000050	WHEEL SET, 850SP-10	1		
5 - 7	K2093000010	CAP, VALVE	1		
5 - 8	K2092000010	CORE, VALVE NO.8000	1		
5 - 9	K2091000200	TUBE, 21*11.00-10	1		
5 - 10	K0000080152	BOLT, M8-15	10		
5 - 11	K0000140402	BOLT, M14-40	4		
5 - 12	K0011120302	BOLT, HT P1.5 M12-30	4		
5 - 13	K0100080002	NUT, M8	8		
5 - 14	K0100140002	NUT, M14	4		
5 - 15	K0200080002	WASHER, SPRING M8	10		
5 - 16	K0200120002	WASHER, SPRING M12	4		
5 - 17	K0200140002	WASHER, SPRING M14	4		
5 - 18	K5000120002	WASHER, M12	4		
5 - 19	K5000140002	WASHER, M14	4		
5 - 20	K5073208352	WASHER, SPHC 3.2-8-35	2		
5 - 21	K0000100202	BOLT, M10-20	8		
5 - 22	K0200100002	WASHER, SPRING M10	8		
5 - 23					
5 - 24					
5 - 25					
5 - 26					
5 - 27					
5 - 28					
5 - 29					
5 - 30					

SP05A_05A_z00

https://truckmanualshub.com/

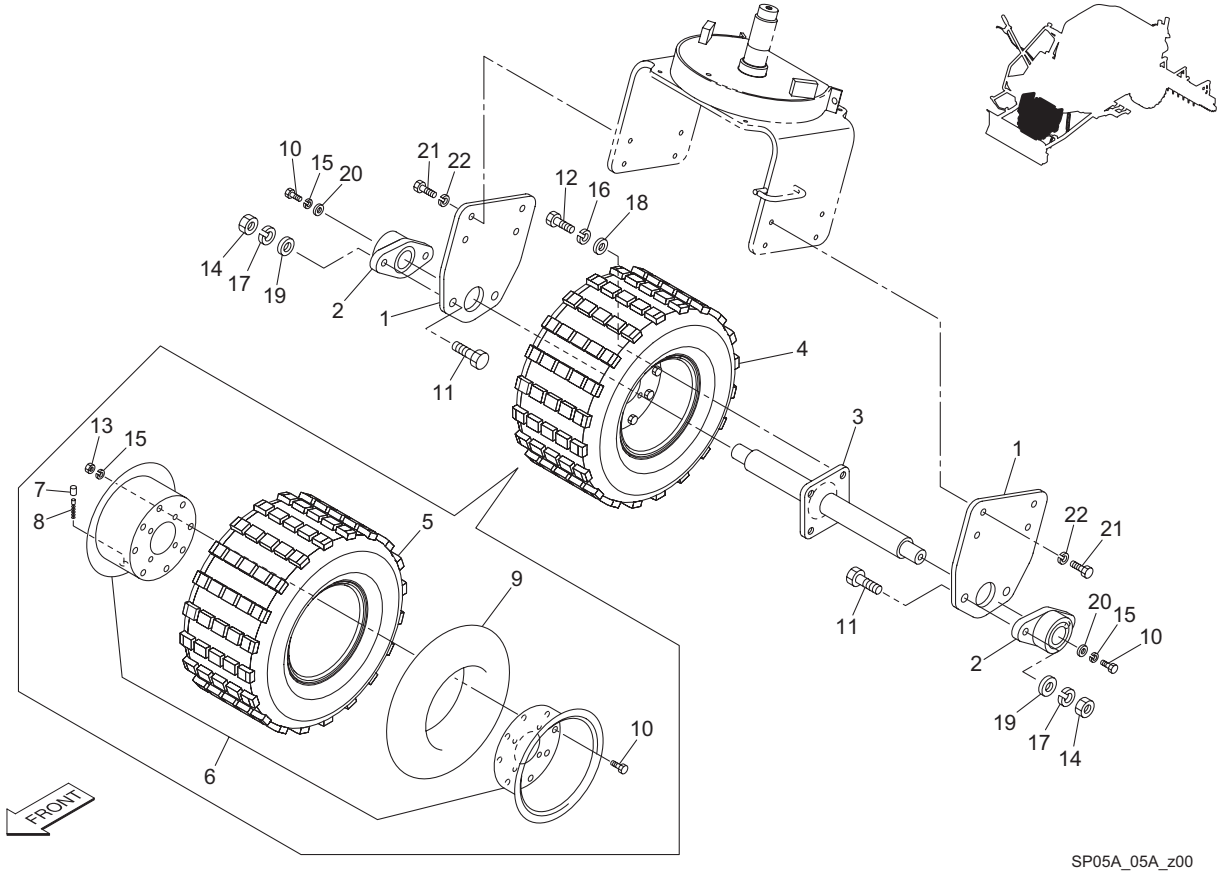

SP05A_05A_z00

Cat No.	Code No.	Part name	Qty	Remark	SN of application
5 - 31 5 - 32 5 - 33 5 - 34 5 - 35					

SP05A_05A_z00

https://truckmanualshub.com/

5.Front wheel section(three-wheel drive)

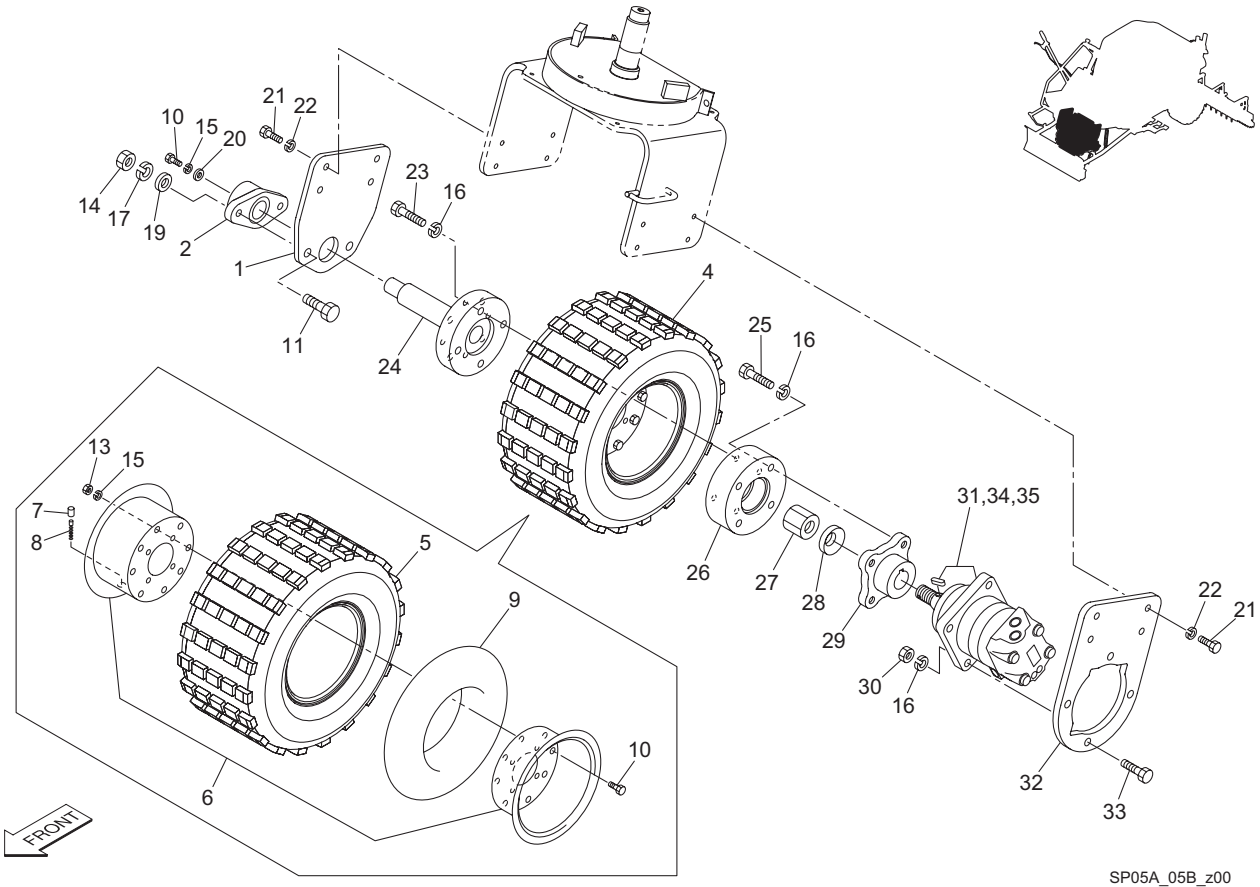

SP05A_05B_z00

Cat No.	Code No.	Part name	Qty	Remark	SN of application
5 - 1	SP05---0210ZD	BRACKET, FRONT WHEEL	2		
5 - 2	K0661205000	BEARING, BALL W/RHOMBIC UCFL 205	2		
5 - 3	SP05---0211ZD	AXIS, ARM	1		
5 - 4	K2000000360	TIRE ASSY, 21*11.00-10-4A	1		
5 - 5	K2001000090	TIRE, 21*11.00-10PD2	1		
5 - 6	K2081000050	WHEEL SET, 850SP-10	1		
5 - 7	K2093000010	CAP, VALVE	1		
5 - 8	K2092000010	CORE, VALVE NO.8000	1		
5 - 9	K2091000200	TUBE, 21*11.00-10	1		
5 - 10	K0000080152	BOLT, M8-15	10		
5 - 11	K0000140402	BOLT, M14-40	4		
5 - 12	K0011120302	BOLT, HT P1.5 M12-30	4		
5 - 13	K0100080002	NUT, M8	8		
5 - 14	K0100140002	NUT, M14	4		
5 - 15	K0200080002	WASHER, SPRING M8	10		
5 - 16	K0200120002	WASHER, SPRING M12	4		
5 - 17	K0200140002	WASHER, SPRING M14	4		
5 - 18	K5000120002	WASHER, M12	4		
5 - 19	K5000140002	WASHER, M14	4		
5 - 20	K5073208352	WASHER, SPHC 3.2-8-35	2		
5 - 21	K0000100202	BOLT, M10-20	8		
5 - 22	K0200100002	WASHER, SPRING M10	8		
5 - 23	K0014120602	BOLT, HT P1.5 M12-60	4		
5 - 24	SP05---0251ZD	SPINDLE, FRONT WHEEL	1		
5 - 25	K0014120502	BOLT, HT P1.5 M12-50	4		
5 - 26	SP05---0252ZD	MOUNT, MOTOR	1		
5 - 27	K0160000492	NUT, SPECIAL P1.5 M24	1		
5 - 28	K0214240001	WASHER, DISK SPRING L M24-2	1		
5 - 29	K216000009D	MOUNT, WHEEL 21*11.00	1		
5 - 30	K0100120002	NUT, M12	4		

SP05A_05B_z00

https://truckmanualshub.com/

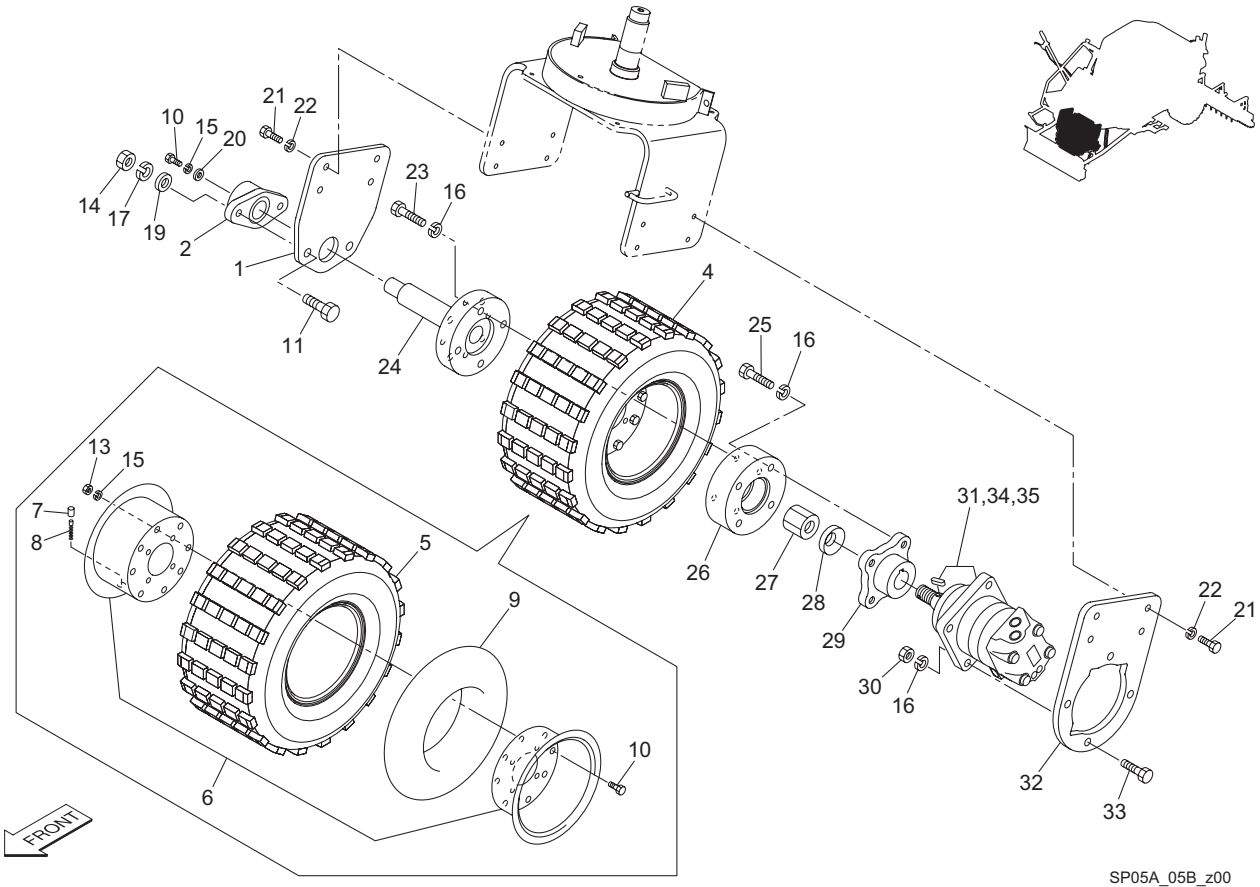

SP05A_05B_z00

Cat No.	Code No.	Part name	Qty	Remark	SN of application
5 - 31	K3291000210	MOTOR, WHEEL 2-100BS4S	1		
5 - 32	SP05---0250ZD	BRACKET, MOTOR	1		
5 - 33	K0000120452	BOLT, M12-45	4		
5 - 34	Y61090S	SEAL KIT, 2000 ORBIT MOTOR (REAR)	1		
5 - 35	Y61091S	SEAL KIT, 2000 ORBIT MOTOR (SHAFT)	1		

SP05A_05B_z00

https://truckmanualshub.com/

6.Rear wheel section

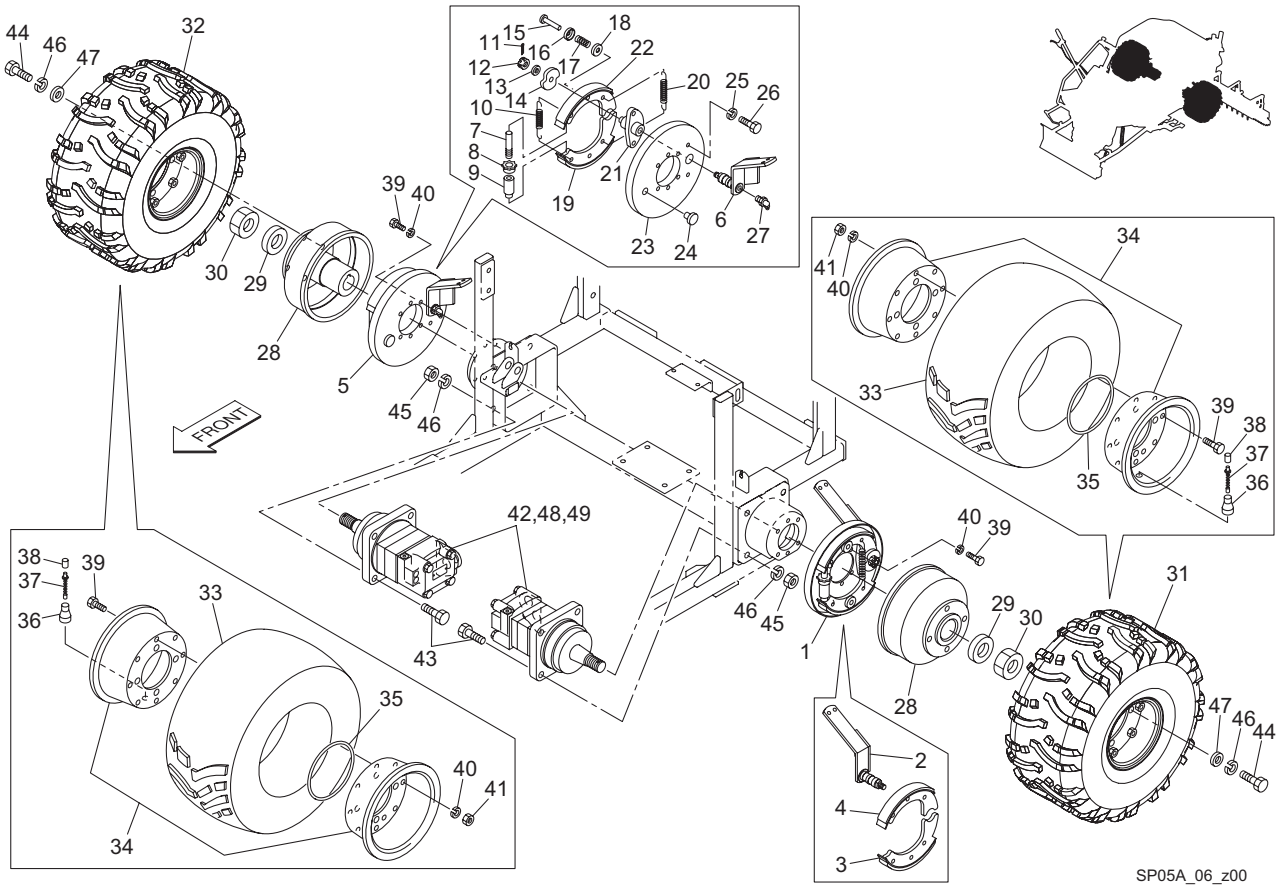

Cat No.	Code No.	Part name	Qty	Remark	SN of application
6 - 1	SP05---0223Z0	BRAKE ASSY, W/ LEVER (L)	1		
6 - 2	SP05---0224A2	LEVER, BRAKE (L)	1		
6 - 3	P741-8006-00	SHOE ASSY	1		
6 - 4	P741-8008-00	SHOE ASSY	1		
6 - 5	SP05---0225Z0	BRAKE ASSY, W/ LEVER (R)	1		
6 - 6	SP05---0226A2	LEVER, BRAKE (R)	1		
6 - 7	P722-7341-00	BOLT, ADJUSTING	2		
6 - 8	P722-7342-00	GEAR, ADJUSTING	2		
6 - 9	P723-7329-00	SLEEVE	2		
6 - 10	P153-8002-00	SPRING	2		
6 - 11	P601-2525-00	PIN, COTTER	2		
6 - 12	P535-1008-00	NUT, CASTLE	2		
6 - 13	P801-7308-00	WASHER	2		
6 - 14	P731-7335-00	CAM	2		
6 - 15	P713-7044-00	PIN, GUIDE	4		
6 - 16	P801-7012-00	SEAT, SPRING A	4		
6 - 17	P154-7033-00	SPRING	4		
6 - 18	P801-7023-00	SEAT, SPRING B	4		
6 - 19	P741-8005-00	SHOE ASSY	1		
6 - 20	P153-8004-00	SPRING	2		
6 - 21	P712-8003-00	BRACKET	2		
6 - 22	P741-8007-00	SHOE ASSY	1		
6 - 23	P711-8016-00	PLATE ASSY	2		
6 - 24	P319-7122-00	PLUG	2		
6 - 25	P573-1025-20	WASHER, SPRING	4		
6 - 26	P501-1016-10	BOLT	4		
6 - 27	P631-0675-00	GREASE NIPPLE	2		
6 - 28	K6909000252	MOUNT, WHEEL	2		
6 - 29	K0214240001	WASHER, DISK SPRING L M24-2	2		
6 - 30	K0160000492	NUT, SPECIAL P1.5 M24	2		

SP05A_06_z00

https://truckmanualshub.com/

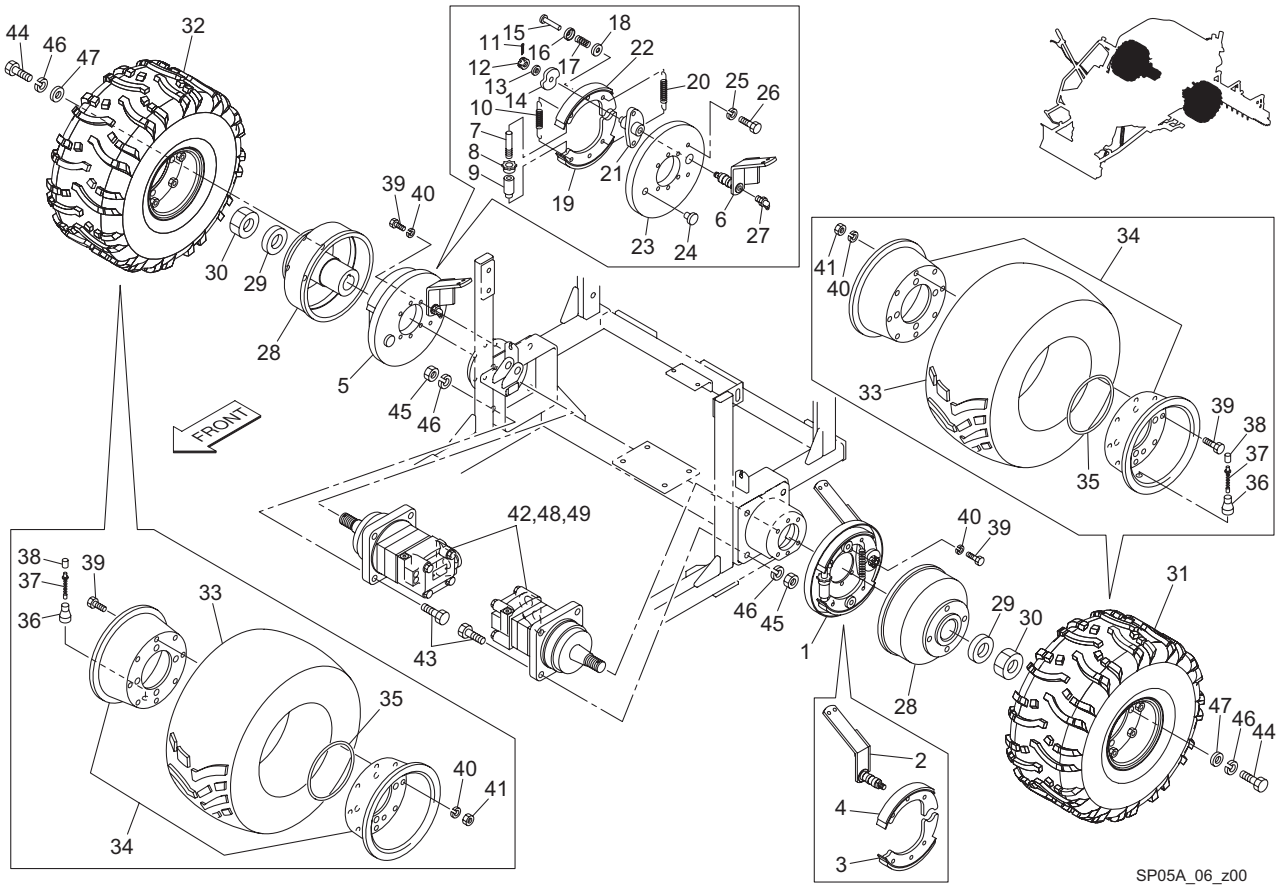

Cat No.	Code No.	Part name	Qty	Remark	SN of application
6 - 31	K2040000400	TIRE, C828-25*13.00-9AY-L	1		
6 - 32	K2040000410	TIRE, C828-25*13.00-9AY-R	1		
6 - 33	K2041000220	TIRE, C828-25*13.00-9	2		
6 - 34	K2081000060	WHEEL SET, 10SW-9	2		
6 - 35	K2098000010	O-RING	2		
6 - 36	K2097000010	VALVE, RIM TR413	2		
6 - 37	K2092000010	CORE, VALVE NO.8000	2		
6 - 38	K2093000010	CAP, VALVE	2		
6 - 39	K0000080152	BOLT, M8-15	2		
6 - 40	K0200080002	WASHER, SPRING M8	28		
6 - 41	K0100080002	NUT, M8	28		
6 - 42	K3291000190	MOTOR, WHEEL 2-200BS4S	16		
6 - 43	K0000120452	BOLT, M12-45	2		
6 - 44	K0011120302	BOLT, HT P1.5 M12-30	8		
6 - 45	K0100120002	NUT, M12	8		
6 - 46	K0200120002	WASHER, SPRING M12	8		
6 - 47	K5000120002	WASHER, M12	16		
6 - 48	Y61090S	SEAL KIT, 2000 ORBIT MOTOR (REAR)	8		
6 - 49	Y61091S	SEAL KIT, 2000 ORBIT MOTOR (SHAFT)	2		

SP05A_06_z00

https://truckmanualshub.com/

7.Brake pedal section

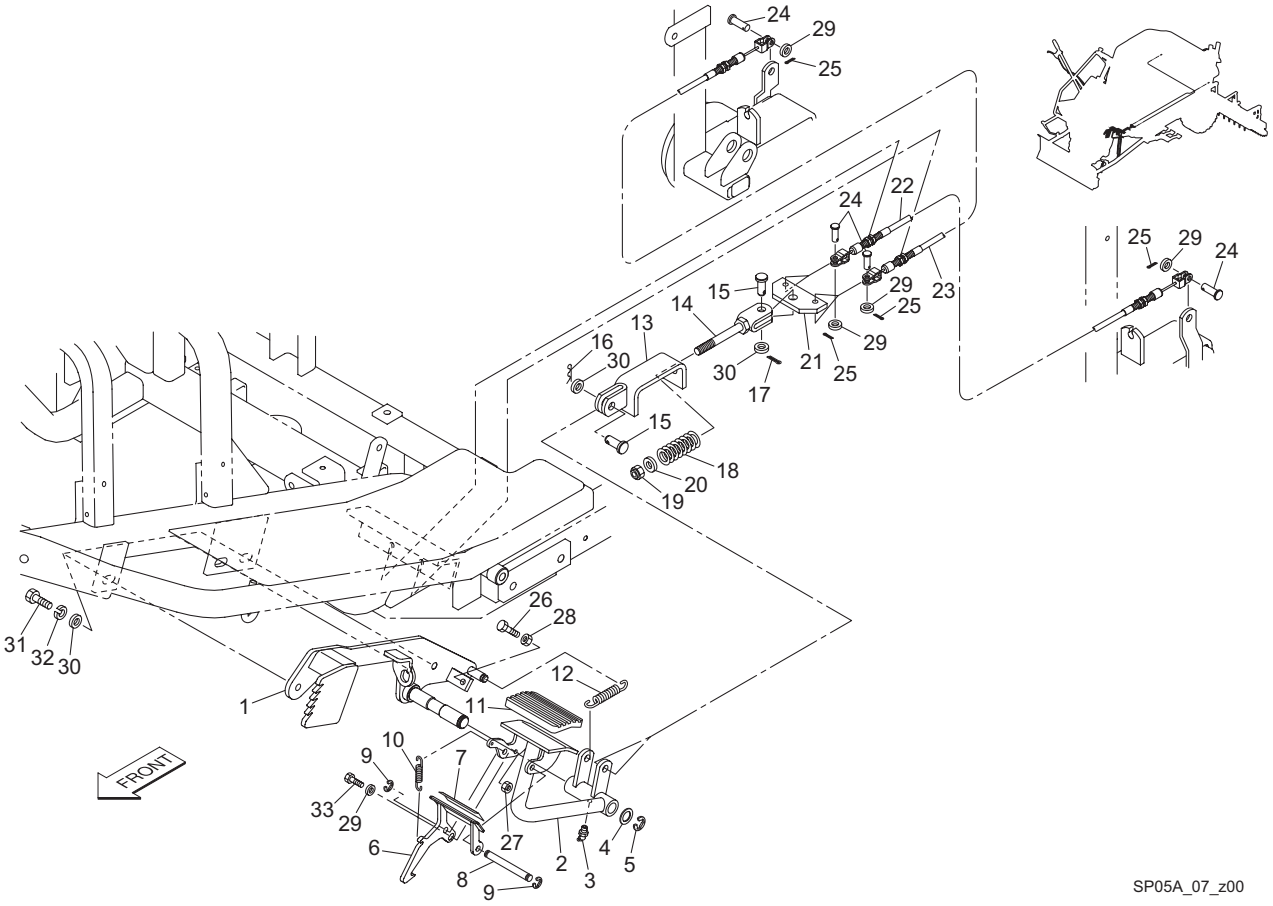

SP05A_07_z00

Cat No.	Code No.	Part name	Qty	Remark	SN of application
7 - 1	SP05A--0201ZD	FULCRUM, BRAKE	1		
7 - 2	SP05---0230ZD	PEDAL, BRAKE	1		
7 - 3	K1440000020	GREASE NIPPLE, C TYPE	1		
7 - 4	K5051016240	WASHER, C5191P 1-16-24	1		
7 - 5	K0400012002	RING, RETAINING E M12	1		
7 - 6	FS900--0309ZD	PEDAL, LOCKING BRAKE PEDAL	1		
7 - 7	SP160E-3412Z0	SEAT, LOCKING PEDAL	1		
7 - 8	SP160E-3411Z2	SHAFT, 8-78	1		
7 - 9	K0400006002	RING, RETAINING E M6	2		
7 - 10	K1030000108	SPRING, WITH U HOOK M1.2-9.4-35	1		
7 - 11	K4050000050	RUBBER, FOR PEDAL 70100	1		
7 - 12	K1030000048	SPRING, WITH U HOOK M2-14-80	1		
7 - 13	SP05---0221ZD	BRACKET, SPRING	1		
7 - 14	SP05---0220Z2	ROD, SPRING	1		
7 - 15	K6031100258	PIN, FLAT HEAD HT M10-25	2		
7 - 16	K0331000008	PIN, SNAP M10	1		
7 - 17	K0302025250	PIN, COTTER SUS M2.5-25	1		
7 - 18	K1000000458	SPRING, COMPRESSION M5-25-60	1		
7 - 19	K0144100002	NUT, WITH F-RING, M10	1		
7 - 20	K5073210262	WASHER, SPHC 3.2-10-26	1		
7 - 21	SP05---0222Z2	FITTING, BRAKE WIRE	1		
7 - 22	K1120086210	WIRE, BRAKE 862	1		
7 - 23	K1120145200	WIRE, BRAKE 1452	1		
7 - 24	K6031060172	PIN, FLAT-HEAD HT M6-17	4		
7 - 25	K0300020202	PIN, COTTER M2-20	4		
7 - 26	K0000080302	BOLT, M8-30	1		
7 - 27	K0100060002	NUT, M6	1		
7 - 28	K0100080002	NUT, M8	1		
7 - 29	K5000060002	WASHER, M6	5		
7 - 30	K5000100002	WASHER, M10	5		

SP05A_07_z00

https://truckmanualshub.com/

7.Brake pedal section

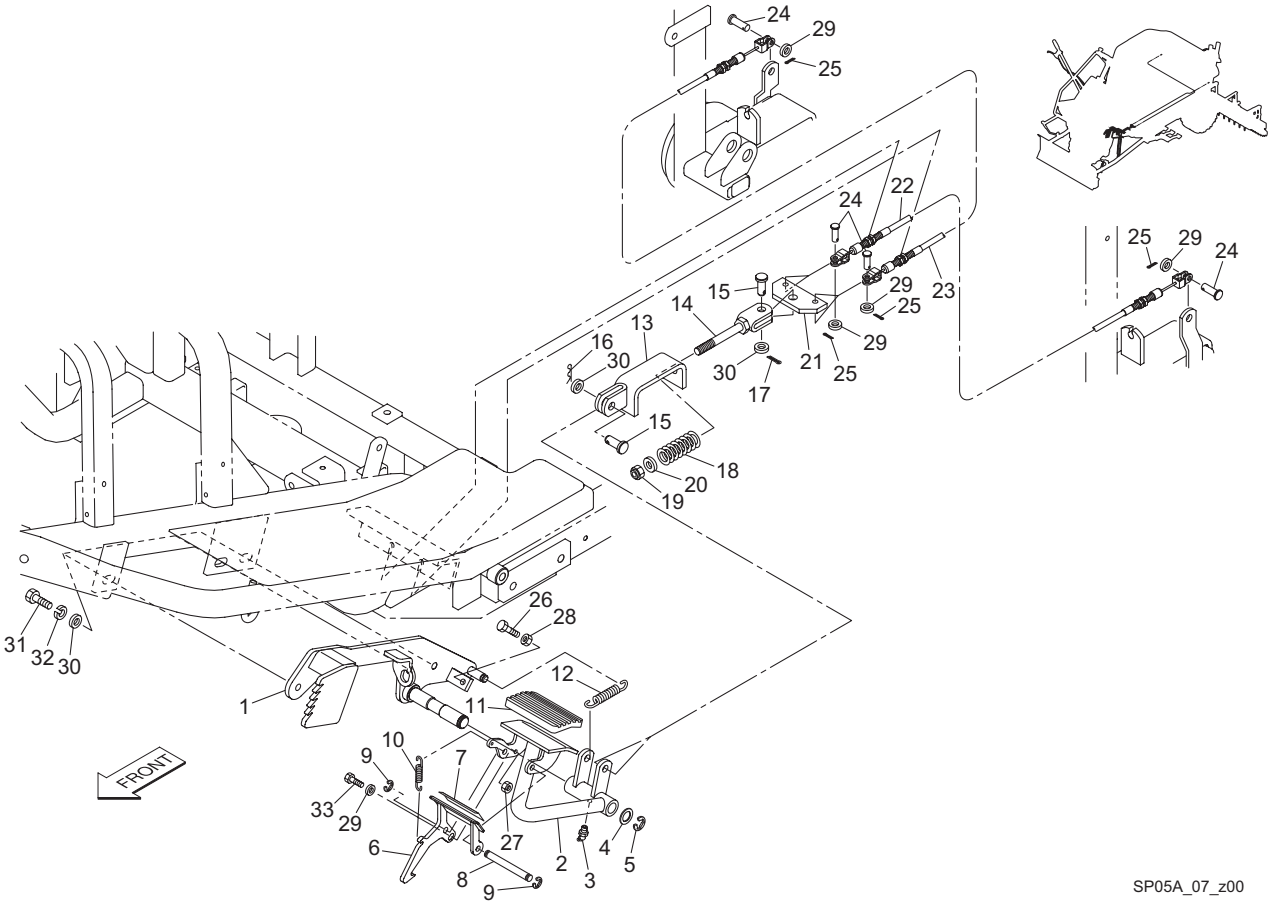

SP05A_07_z00

Cat No.	Code No.	Part name	Qty	Remark	SN of application
7 - 31	K0000100202	BOLT, M10-20	3		
7 - 32	K0200100002	WASHER, SPRING M10	3		
7 - 33	K0000060202	BOLT, M6-20	1		

SP05A_07_z00

https://truckmanualshub.com/

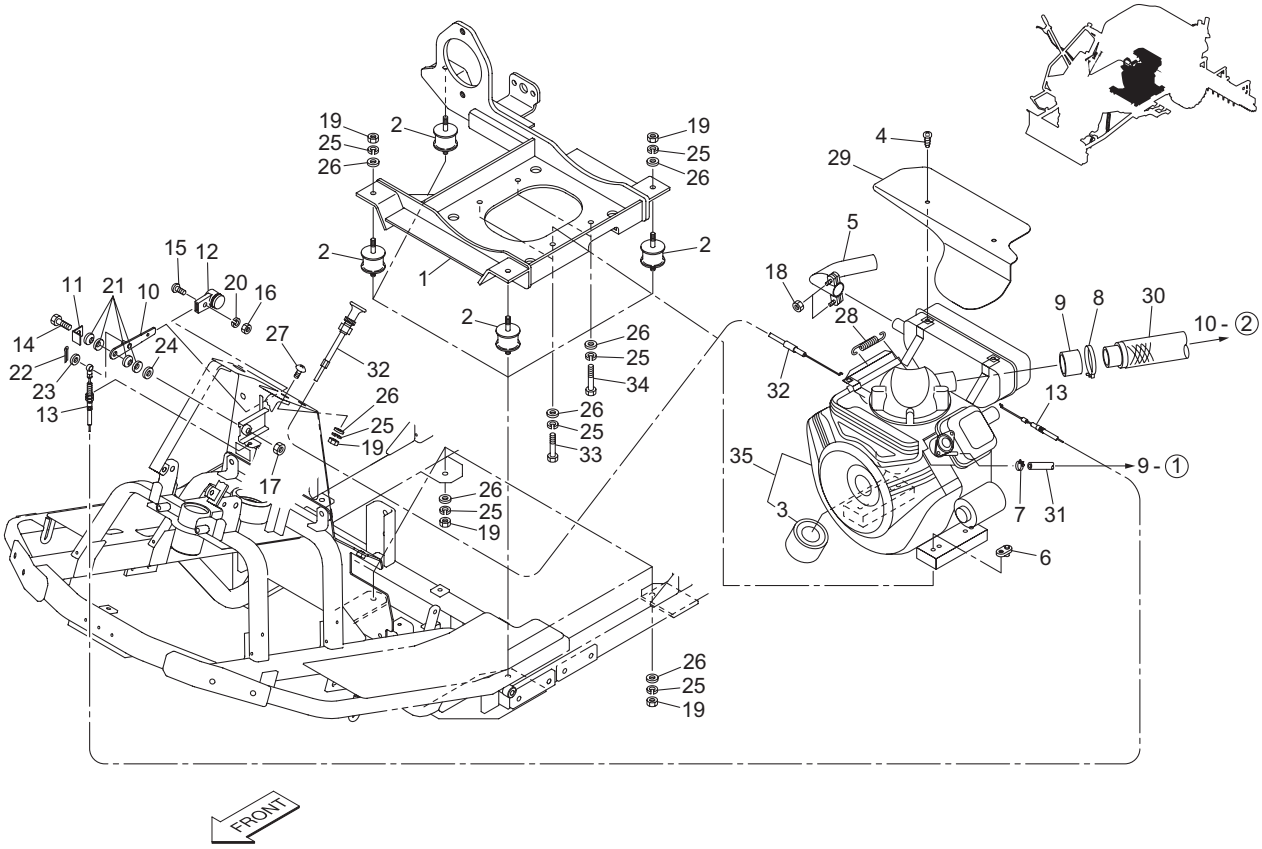

SP05A_08_z00

Cat No.	Code No.	Part name	Qty	Remark	SN of application
8 - 1	SP05---0301ZD	BASE, ENGINE	1		
8 - 2	K4040000130	RUBBER, VIBRATION PROOF EA4006	4		
8 - 3	PL492932S	FILTER, OIL	1		
8 - 4	K0069000112	SCREW, 6+ TRUSS TAP (TYPE 3-12)	2		
8 - 5	SP05---0311AU	PIPE, MUFFLER	1		
8 - 6	SP05---0309Z2	MOUNT, ENGINE	4		
8 - 7	K4260000150	CLAMP, HOSE 12	1		
8 - 8	K4261036000	CLAMP, HOSE 4669	1		
8 - 9	SP05---0312Z0	RUBBER, SPACER	1		
8 - 10	SP05---0340ZD	LEVER, THROTTLE	1		
8 - 11	SP05---0341Z2	PLATE, RETAINING	1		
8 - 12	K1301000150	GRIP, PLASTIC THROTTLE LEVER	1		
8 - 13	K1110143000	WIRE, THROTTLE 1430	1		
8 - 14	K0000100352	BOLT, M10-35	1		
8 - 15	K0042050082	SCREW, + ROUND HEAD M5-8	1		
8 - 16	K0100050002	NUT, M5	1		
8 - 17	K0100100002	NUT, M10	1		
8 - 18	K0144080002	NUT, WITH F-RING, M8	2		
8 - 19	K0100080002	NUT, M8	9		
8 - 20	K0200050002	WASHER, SPRING M5	1		
8 - 21	K0212100001	WASHER, DISK SPRING L M10-1	4		
8 - 22	K0300016122	PIN, COTTER M1.6-12	1		
8 - 23	K5000060002	WASHER, M6	1		
8 - 24	K5000100002	WASHER, M10	1		
8 - 25	K0200080002	WASHER, SPRING M8	13		
8 - 26	K5000080002	WASHER, M8	13		
8 - 27	K0056080200	SCREW, SUS + TRUSS M8-20	1		
8 - 28	K1020000208	SPRING, WITH ROUND HOOK M1.6-16.6-65.2	1		
8 - 29	SP05---2301Z0	COVER, MUFFLER	1		
8 - 30	SP05---2302Z0	HOSE COMP, CLEANER 420	1		

SP05A_08_z00

https://truckmanualshub.com/

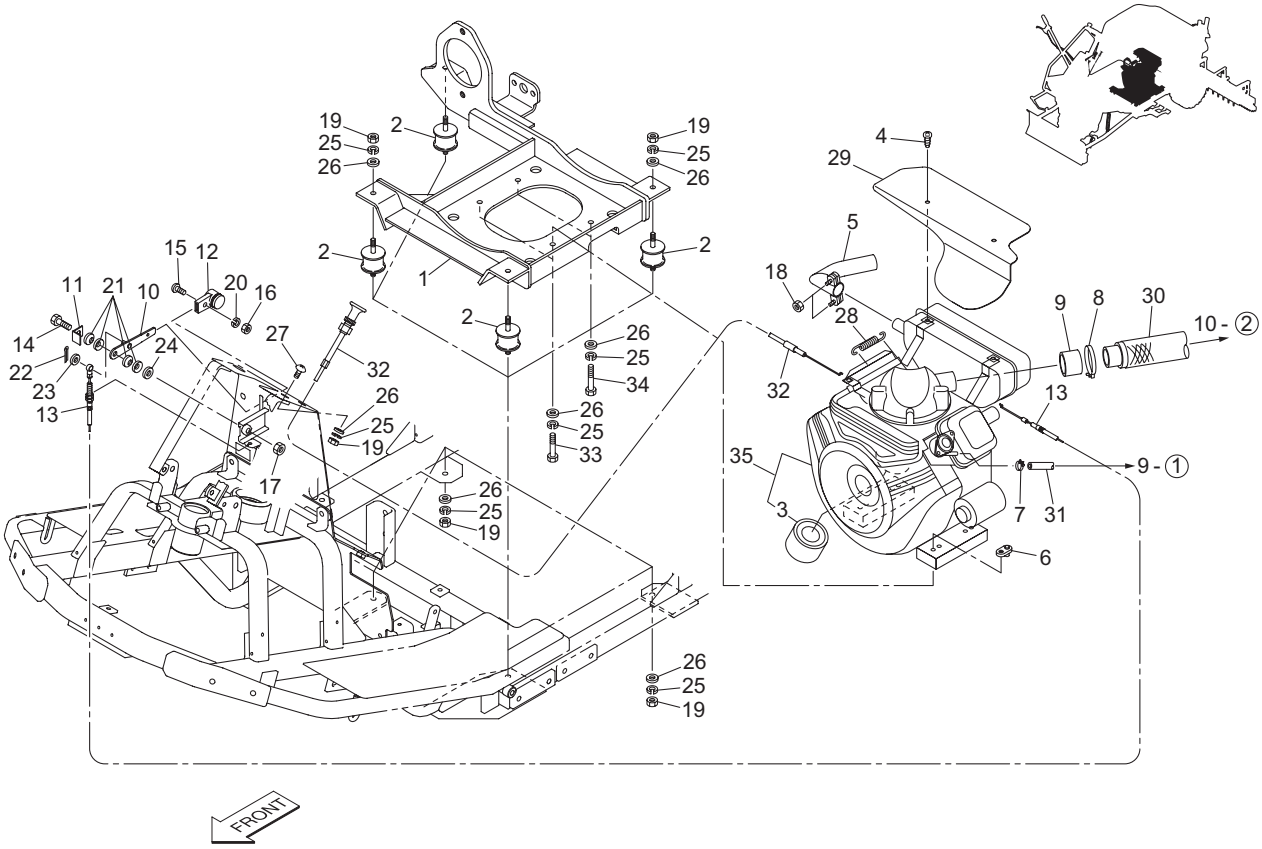

SP05A_08_z00

Cat No.	Code No.	Part name	Qty	Remark	SN of application
8 - 31	SP05---2304Z0	HOSE, LOW PALM 6.4-230	1		
8 - 32	K1100178510	WIRE, CHOKE 1785	1		
8 - 33	K0000080402	BOLT, M8-40	2		
8 - 34	K0000080502	BOLT, M8-50	2		
8 - 35	K2680000240	ENGINE, VANGUARD 356447	1		

SP05A_08_z00

https://truckmanualshub.com/

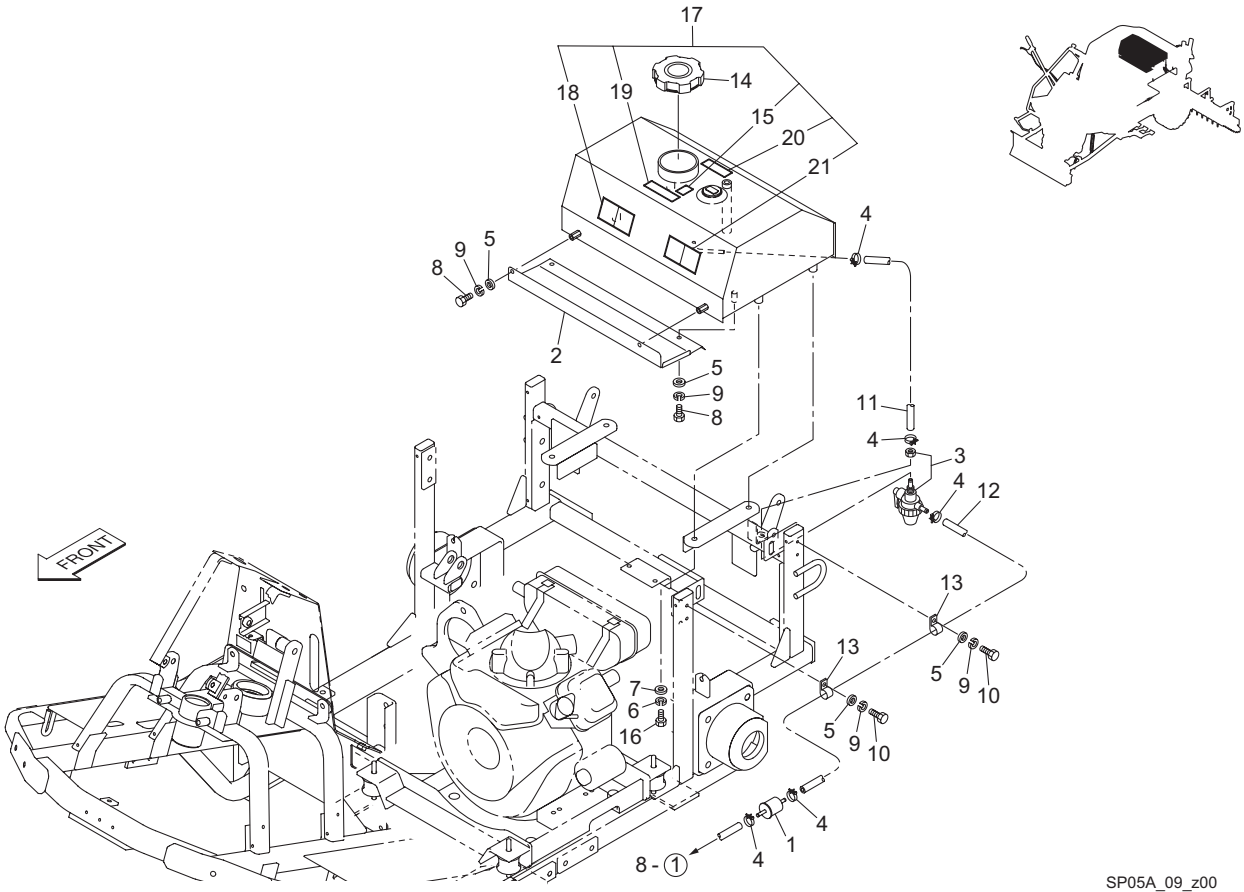

SP05A_09_z00

Cat No.	Code No.	Part name	Qty	Remark	SN of application
9 - 1	PL691035	FILTER, FUEL	1		
9 - 2	SP05---0316Z0	PLATE, INSULATING HEAT	1		
9 - 3	K3420000060	STRAINER, FUEL COCK 22	1		
9 - 4	K4260000150	CLAMP, HOSE 12	5		
9 - 5	K5000060002	WASHER, M6	6		
9 - 6	K0200080002	WASHER, SPRING M8	4		
9 - 7	K5000080002	WASHER, M8	4		
9 - 8	K0000060102	BOLT, M6-10	4		
9 - 9	K0200060002	WASHER, SPRING M6	6		
9 10	K0000060152	BOLT, M6-15	2		
9 - 11	SP05---2305Z0	HOSE, LOW PALM 6.4-330	1		
9 - 12	SP05---2306Z0	HOSE, LOW PALM 6.4-565	1		
9 - 13	K4270015060	CLIP, HARNESS 15 M6	2		
9 - 14	K1410000080	PLUG, OIL WITH AIR HOLE	1		
9 - 15	K4209001310	DECAL, LEAD-FREE GASOLINE	1		
9 - 16	K0000080202	BOLT, M8-20	4		
9 - 17	SP05A--0301Z0	TANK COMP, FUEL	1		
9 - 18	K4205001910	DECAL, CAUTION NOT TO GET CAUGHT IN	1		
9 - 19	K4205001940	DECAL, CAUTION FIRE	1		
9 - 20	K4205001920	DECAL, CAUTION TO HOT PARTS	1		
9 - 21	K4205001950	DECAL, CAUTION EXHAUST GAS	1		

SP05A_09_z00

https://truckmanualshub.com/

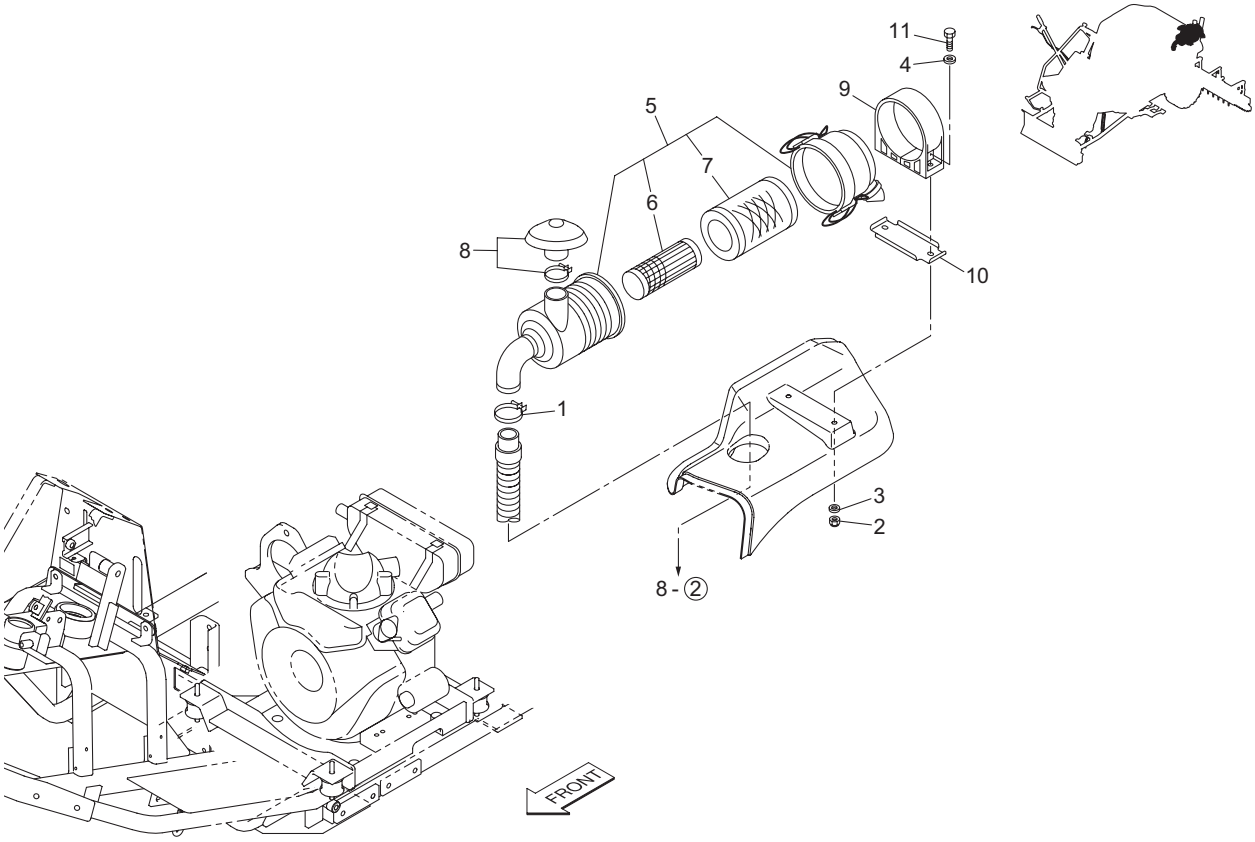

SP05A_10_z00

Cat No.	Code No.	Part name	Qty	Remark	SN of application
10 - 1	K4261036000	CLAMP, HOSE 4669	1		
10 - 2	K0144080002	NUT, WITH F-RING, M8	2		
10 - 3	K5012308352	WASHER, SPCC 2.3-8-35	2		
10 - 4	K5000080002	WASHER, M8	2		
10 - 5	PL809670	AIR CLEANER	1		
10 - 6	PL821136	AIR FILTER CARTRIDGE, INNER	1		
10 - 7	PL841497	AIR FILTER CARTRIDGE, OUTER	1		
10 - 8	PL809907	CAP, RAIN	1		
10 - 9	PL809878	CLAMP, AIR CLEANER	1		
10 10	PL841886	BRACKET, AIR CLEANER	1		
10 - 11	K0000080352	BOLT, M8-35	2		

SP05A_10_z00

https://truckmanualshub.com/

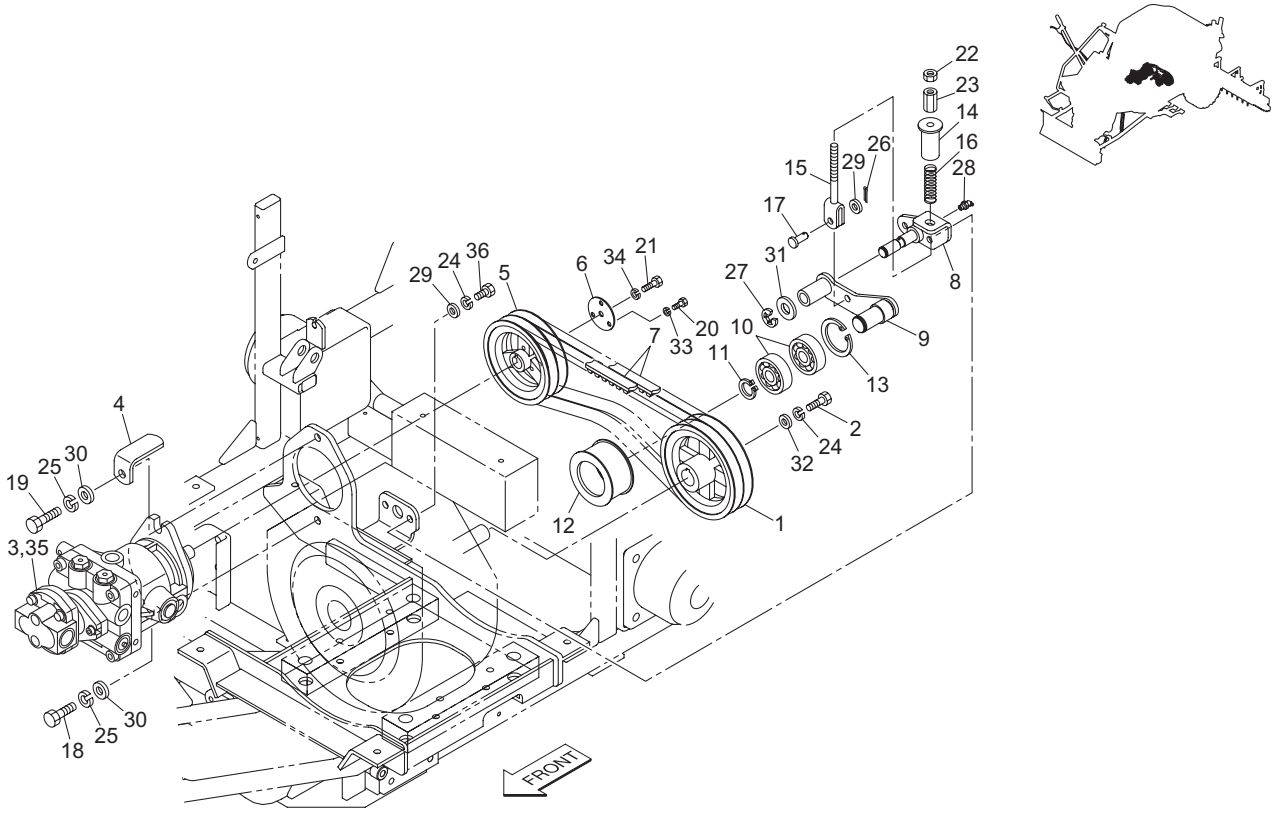

SP05A_11_z00

Cat No.	Code No.	Part name	Qty	Remark	SN of application
11 - 1	K242100007D	PULLEY, V B2-25.4-153	1		
11 - 2	K0069000052	BOLT, 3/8-24 UNF 25.4	1		
11 - 3	K3241000180	PUMP, PISTON PSV-16AHG-2	1		
11 - 4	SP05---0308ZD	ANGLE	1		
11 - 5	K242100008D	PULLEY, V B2-19-129	1		
11 - 6	K5130000452	PLATE, SPCC PULLEY STOPPER	1		
11 - 7	K2374220430	BELT, COGGED H-PXSB43-2	1		
11 - 8	SP05---0304ZD	FULCRUM, TENSION	1		
11 - 9	SP05---0305AD	LEVER, TENSION	1		
11 - 10	K0612063050	BEARING, BALL SEAL 2RD 6305	2		
11 - 11	K0400019002	RING, RETAINING E M19	1		
11 - 12	K2471400802	PULLEY, TENSION 4080	1		
11 - 13	K0402062001	RING, RETAINING R M62	1		
11 - 14	SP05---0307ZD	COVER, SPRING	1		
11 - 15	K7303000092	ADJUSTER, LEVER	1		
11 - 16	K1000000048	SPRING, COMPRESSION M3.2-16.9-60	1		
11 - 17	K6031100258	PIN, FLAT HEAD HT M10-25	1		
11 - 18	K0000120302	BOLT, M12-30	1		
11 - 19	K0000120352	BOLT, M12-35	1		
11 - 20	K0000060102	BOLT, M6-10	3		
11 - 21	K0000080202	BOLT, M8-20	1		
11 - 22	K0100100002	NUT, M10	1		
11 - 23	K0149107152	NUT, HIGH M10-17-15	1		
11 - 24	K0200100002	WASHER, SPRING M10	3		
11 - 25	K0200120002	WASHER, SPRING M12	2		
11 - 26	K0300025202	PIN, COTTER M2.5-20	1		
11 - 27	K0400012002	RING, RETAINING E M12	1		
11 - 28	K1440000030	GREASE NIPPLE, B TYPE	1		
11 - 29	K5000100002	WASHER, M10	3		
11 - 30	K5000120002	WASHER, M12	2		

SP05A_11_z00

https://truckmanualshub.com/

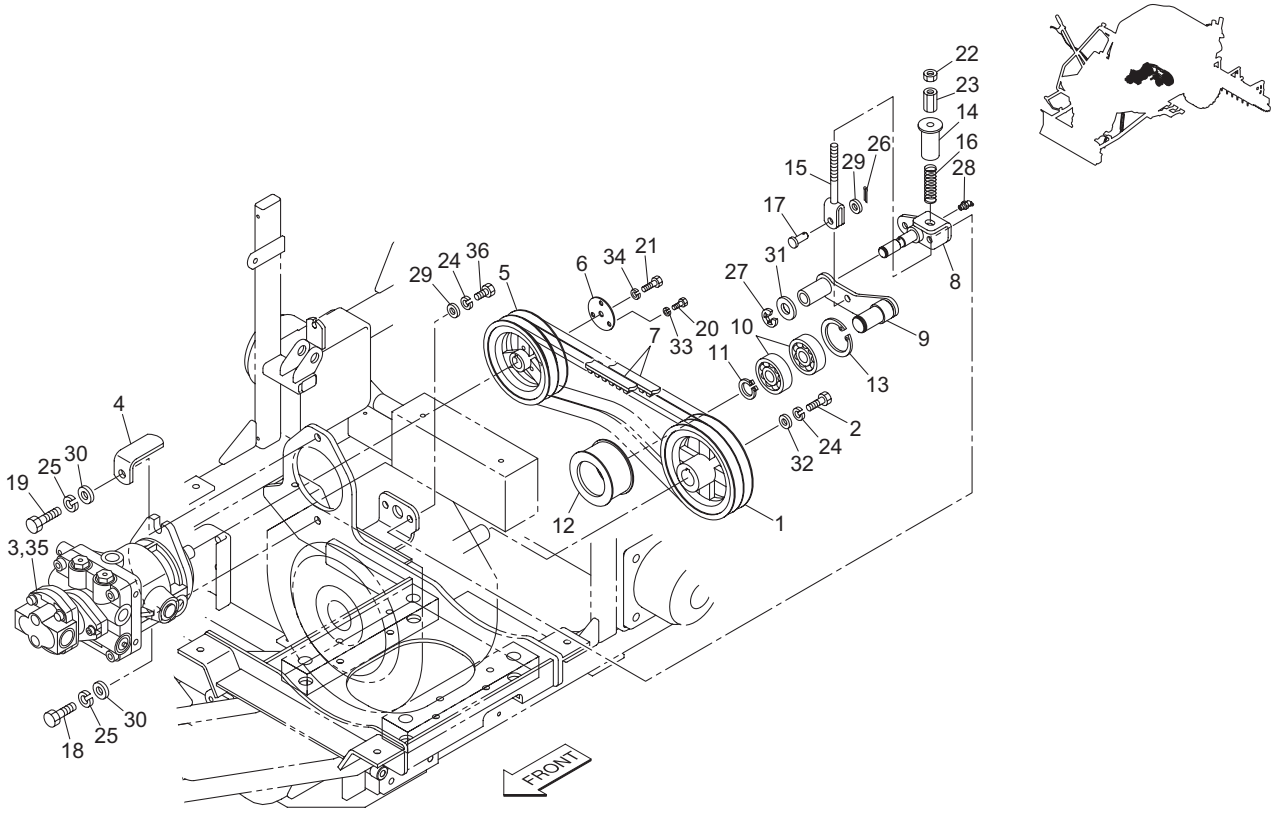

SP05A_11_z00

Cat No.	Code No.	Part name	Qty	Remark	SN of application
11 - 31	K5011016222	WASHER, SPCC 1-16-22	1		
11 - 32	K5073210352	WASHER, SPHC 3.2-10-35	1		
11 - 33	K0200060002	WASHER, SPRING M6	3		
11 - 34	K0200080002	WASHER, SPRING M8	1		
11 - 35	Y2063A-25114	REPAIR KIT, PSV-16C-2-GP	1		
11 - 36	K0000100202	BOLT, M10-20	2		

SP05A_11_z00

https://truckmanualshub.com/

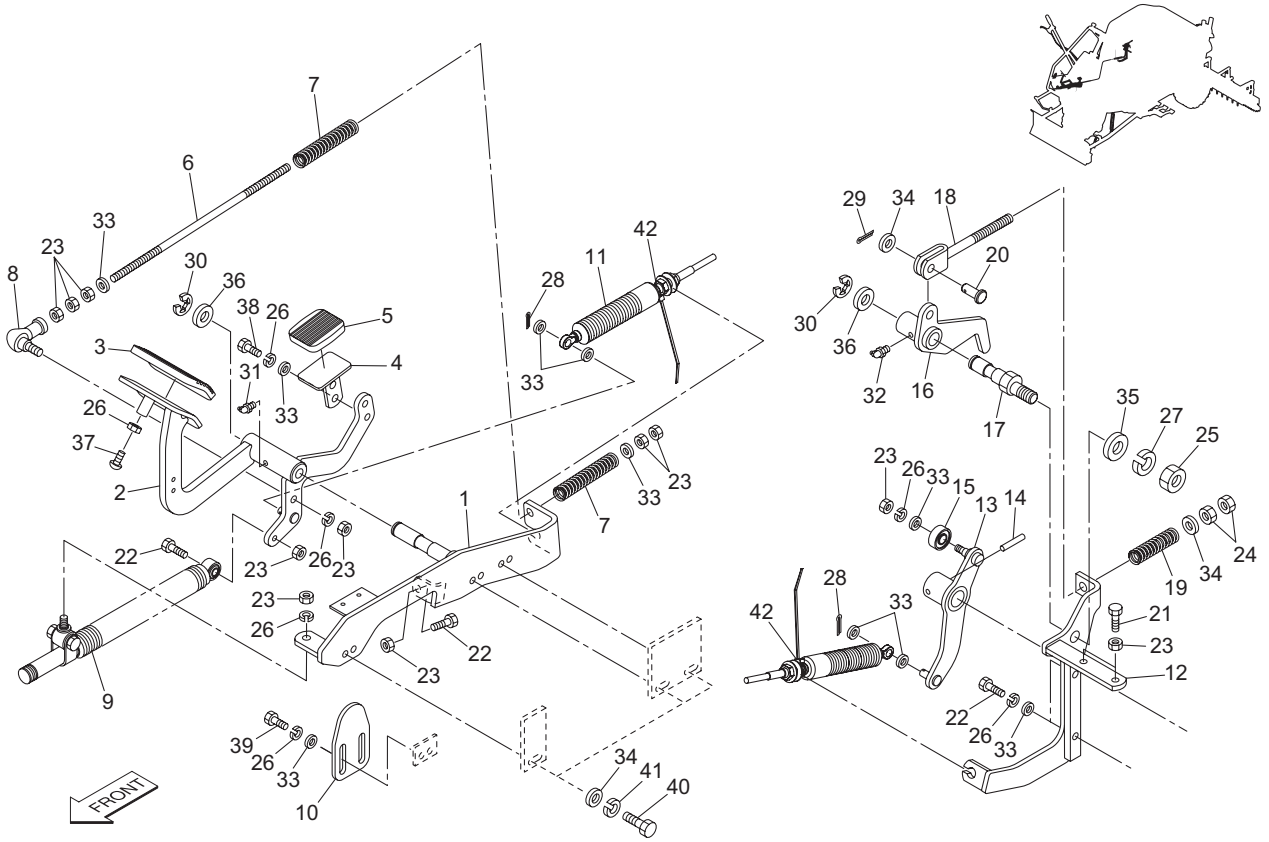

SP05A_12_z00

Cat No.	Code No.	Part name	Qty	Remark	SN of application
12 - 1	SP05---0321ZD	FULCRUM, TRAVELING PEDAL	1		
12 - 2	SP05---0320ZD	PEDAL, TRAVELING	1		
12 - 3	K4050000050	RUBBER, FOR PEDAL 70100	1		
12 - 4	SP05---0322AD	PEDAL, REVERSE	1		
12 - 5	K4050000020	RUBBER, FOR PEDAL 4560	1		
12 - 6	SP05---0323Z2	ROD, PEDAL NEUTRAL	1		
12 - 7	K1000000718	SPRING, COMPRESSION M2.3-15.6-80	2		
12 - 8	K1604080000	JOINT, SPHERICAL LHSA8	1		
12 - 9	K3380000030	DAMPER	1		
12 - 10	SP05---0324ZD	PLATE, ADJUSTING SPEED	1		
12 - 11	K1160075510	WIRE, ADJUSTING 755	1		
12 - 12	SP05---0330ZD	BRACKET, TRAVELING CABLE	1		
12 - 13	SP05---0331ZD	LEVER, TRUNNION	1		
12 - 14	K0324060321	PIN, SPIRAL M 6-32	1		
12 - 15	K0608006290	BEARING, BALL SEAL 2RS 629	1		
12 - 16	SP05---0332ZD	LEVER, NEUTRALIZING PUMP	1		
12 - 17	K6123000112	SHAFT, THREADED M14-95.5	1		
12 - 18	K7303000092	ADJUSTER, LEVER	1		
12 - 19	K1000000048	SPRING, COMPRESSION M3.2-16.9-60	1		
12 - 20	K6031100258	PIN, FLAT HEAD HT M10-25	1		
12 - 21	K0000080252	BOLT, M8-25	2		
12 - 22	K0000080302	BOLT, M8-30	4		
12 - 23	K0100080002	NUT, M8	12		
12 - 24	K0100100002	NUT, M10	2		
12 - 25	K0103140002	NUT, P1.5 M14	1		
12 - 26	K0200080002	WASHER, SPRING M8	9		
12 - 27	K0200140002	WASHER, SPRING M14	1		
12 - 28	K0300020202	PIN, COTTER M2-20	2		
12 - 29	K0300025202	PIN, COTTER M2.5-20	1		
12 - 30	K0400012002	RING, RETAINING E M12	2		

SP05A_12_z00

https://truckmanualshub.com/

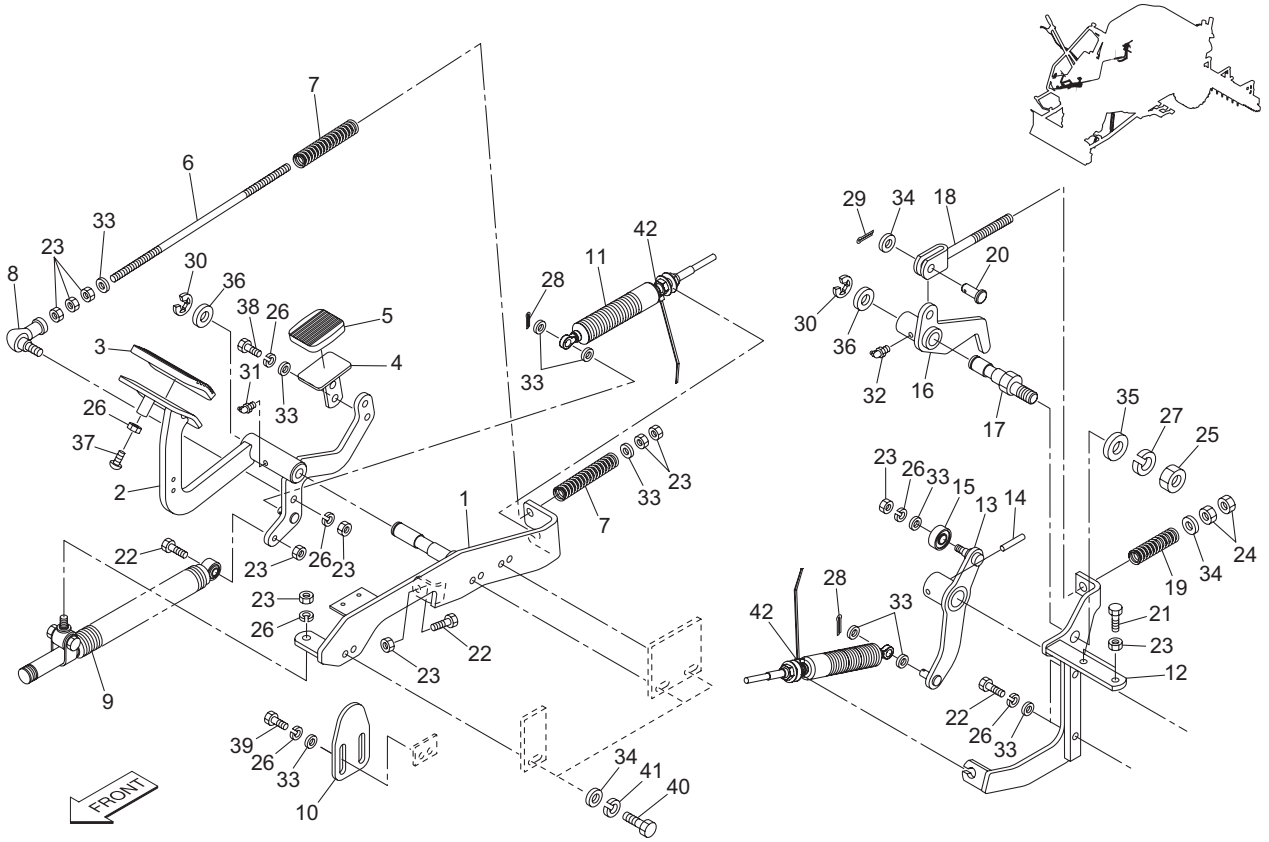

SP05A_12_z00

Cat No.	Code No.	Part name	Qty	Remark	SN of application
12 - 31	K1440000020	GREASE NIPPLE, C TYPE	1		
12 - 32	K1440000030	GREASE NIPPLE, B TYPE	1		
12 - 33	K5000080002	WASHER, M8	11		
12 - 34	K5000100002	WASHER, M10	5		
12 - 35	K5000140002	WASHER, M14	1		
12 - 36	K5051016240	WASHER, C5191P 1-16-24	2		
12 - 37	K0056080200	SCREW, SUS + TRUSS M8-20	1		
12 - 38	K0000080152	BOLT, M8-15	2		
12 - 39	K0000080202	BOLT, M8-20	2		
12 - 40	K0000100202	BOLT, M10-20	3		
12 - 41	K0200100002	WASHER, SPRING M10	3		
12 - 42	K4241000120	BAND, PLASTIC TRCV-100	2		

SP05A_12_z00

https://truckmanualshub.com/

13.Traveling hydraulic section A

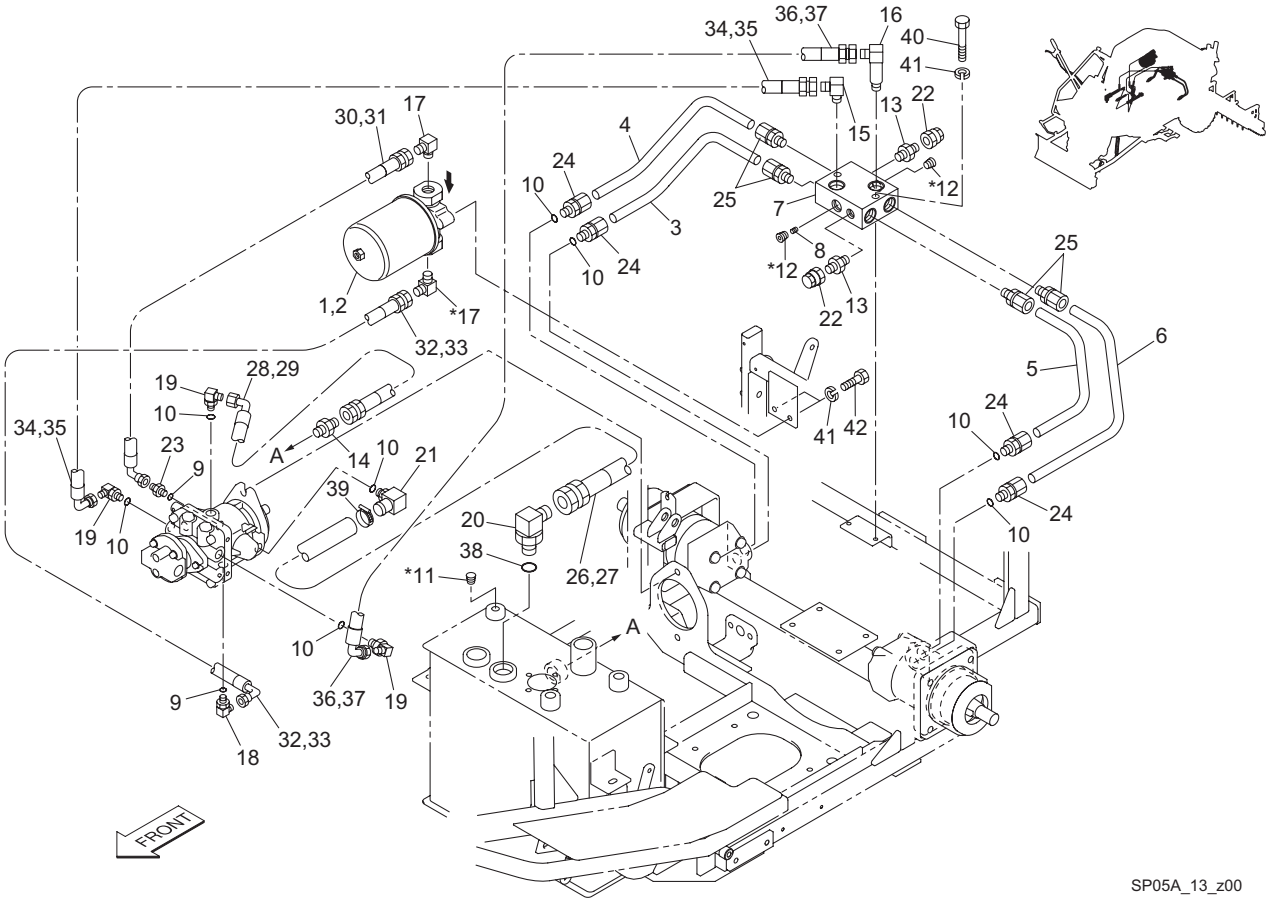

SP05A_13_z00

Cat No.	Code No.	Part name	Qty two-wheel drive	Qty three-wheel drive	Remark	SN of application
13 - 1	K3412000010	FILTER, CARTRIDGE SP04	1	1		
13 - 2	K3412000050	FILTER, CARTRIDGE C-SP04-10 (SUBSTITUTE)	1	1		
13 - 3	SP05---0403Z2-Y	PIPE, A	1	1		
13 - 4	SP05---0404Z2-Y	PIPE, B	1	1		
13 - 5	SP05---0405Z2-Y	PIPE, C	1	1		
13 - 6	SP05---0406Z2-Y	PIPE, D	1	1		
13 - 7	SP05---0414Z2-Y	MANIFOLD	1	1		
13 - 8	SP05---0407Z1	ORIFICE, PT1/8-0.7	1	1		
13 - 9	K0881014000	O-RING, P14B	2	2		
13 - 10	K0881018000	O-RING, P18B	8	8		
13 - 11	K1422104001-Y	PLUG, TAPER WITH HEX. HOLE T1, 1/4	1	0		
13 - 12	K1422106001-Y	PLUG, TAPER WITH HEX. HOLE T1, 3/8	2	0		
13 - 13	K3000060002-Y	ADAPTOR, 1013-6	2	2		
13 - 14	K3000120002-Y	ADAPTOR, 1013-12	1	1		
13 - 15	K3001120002-Y	ELBOW, 90 DEG 1033-12	1	1		
13 - 16	K3005000032-Y	ELBOW, LONG 1/2	1	1		
13 - 17	K3006000022-Y	ELBOW, ODD SIZED PT1/2*PF3/8	2	1		
13 - 18	K3008000032-Y	ADAPTOR, 90 DEG 1086-9	1	1		
13 - 19	K3008000042-Y	ADAPTOR, 90 DEG 1086-12	3	3		
13 - 20	K3008000052-Y	ADAPTOR, 90 DEG 1086-19	1	1		
13 - 21	K3008000422-Y	ADAPTOR, SFD4507	1	1		
13 - 22	K3008000482-Y	CAP, TAPPED FEMALE PF1/4	2	2		
13 - 23	K3009000142-Y	ADAPTOR, PF3/8PF3/8	1	1		
13 - 24	K3026315081-Y	CONNECTOR, KCO 15-040E	4	4		
13 - 25	K3026615081-Y	CONNECTOR, KCT 15-040E	4	4		
13 - 26	SP05---0412Z0	HOSE, SUCTION 620	1	1		
13 - 27	K3192004300	TUBE, SPIRAL SP-20 430	1	1		
13 - 28	K3100430320	HOSE, WP35-12-3-320	1	1		
13 - 29	K3191001700	TUBE, SPIRAL SP-15 170	1	1		
13 - 30	K3101330550	HOSE, WP70-9-3-550	1	1		

SP05A_13_z00

https://truckmanualshub.com/

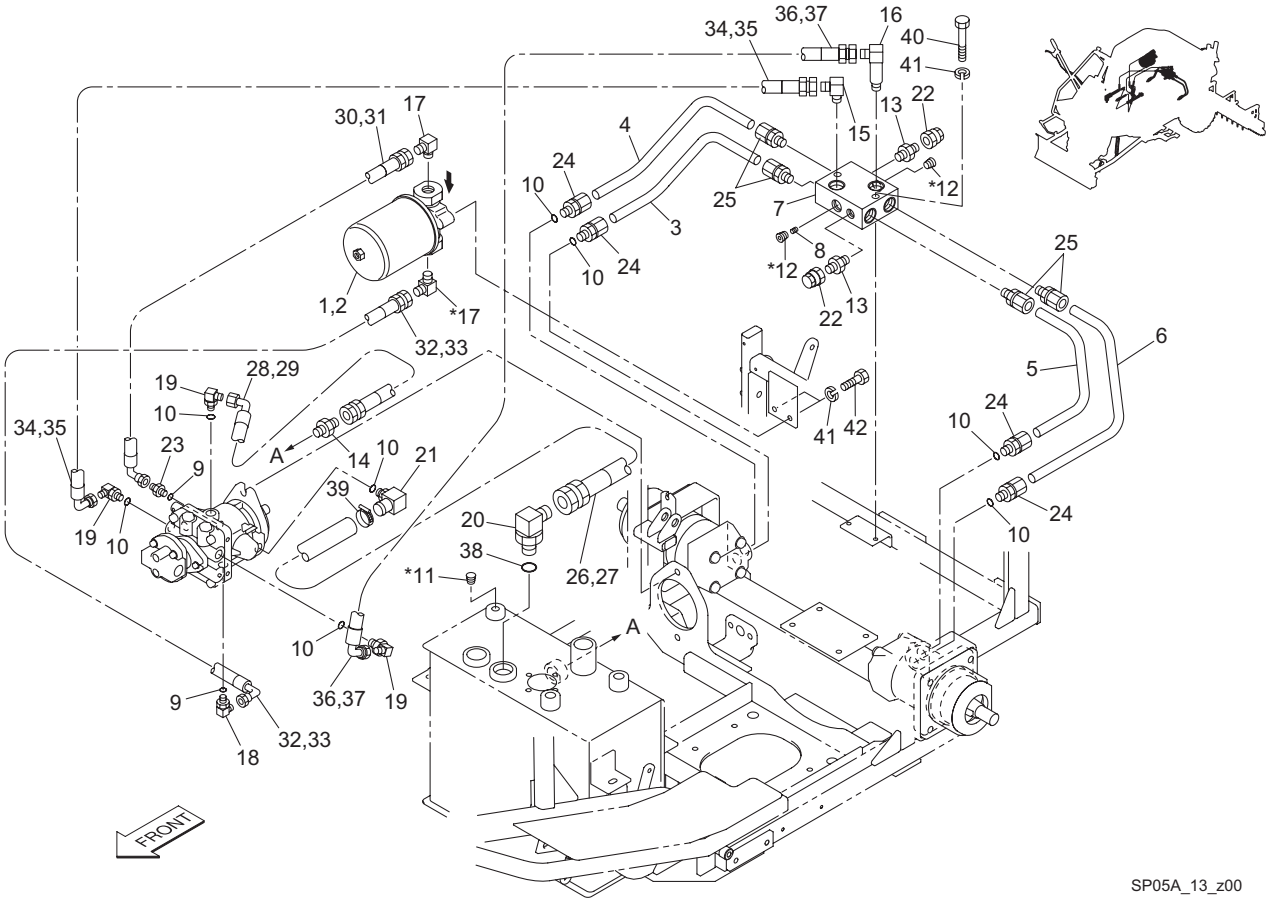

SP05A_13_z00

Cat No.	Code No.	Part name	Qty two-wheel drive	Qty three-wheel drive	Remark	SN of application
13 - 31	K3191004000	TUBE, SPIRAL SP-15 400	1	1		
13 - 32	K3101330600	HOSE, WP70-9-3-600	1	1		
13 - 33	K3191004500	TUBE, SPIRAL SP-15 450	1	1		
13 - 34	K3104430580	HOSE, WP175-12-3-580	1	1		
13 - 35	K3191004300	TUBE, SPIRAL SP-15 430	1	1		
13 - 36	K3104430630	HOSE, WP175-12-3-630	1	1		
13 - 37	K3191004800	TUBE, SPIRAL SP-15 480	1	1		
13 - 38	K0881024000	O-RING, P24B	1	1		
13 - 39	K4260000190	CLAMP, HOSE JUBILEE BAND 1	1	1		
13 - 40	K0000080402	BOLT, M8-40	2	2		
13 - 41	K0200080002	WASHER, SPRING M8	4	4		
13 - 42	K0000080202	BOLT, M8-20	2	2		

SP05A_13_z00

https://truckmanualshub.com/

14.Traveling hydraulic section B(for three-wheel drive) SP05A

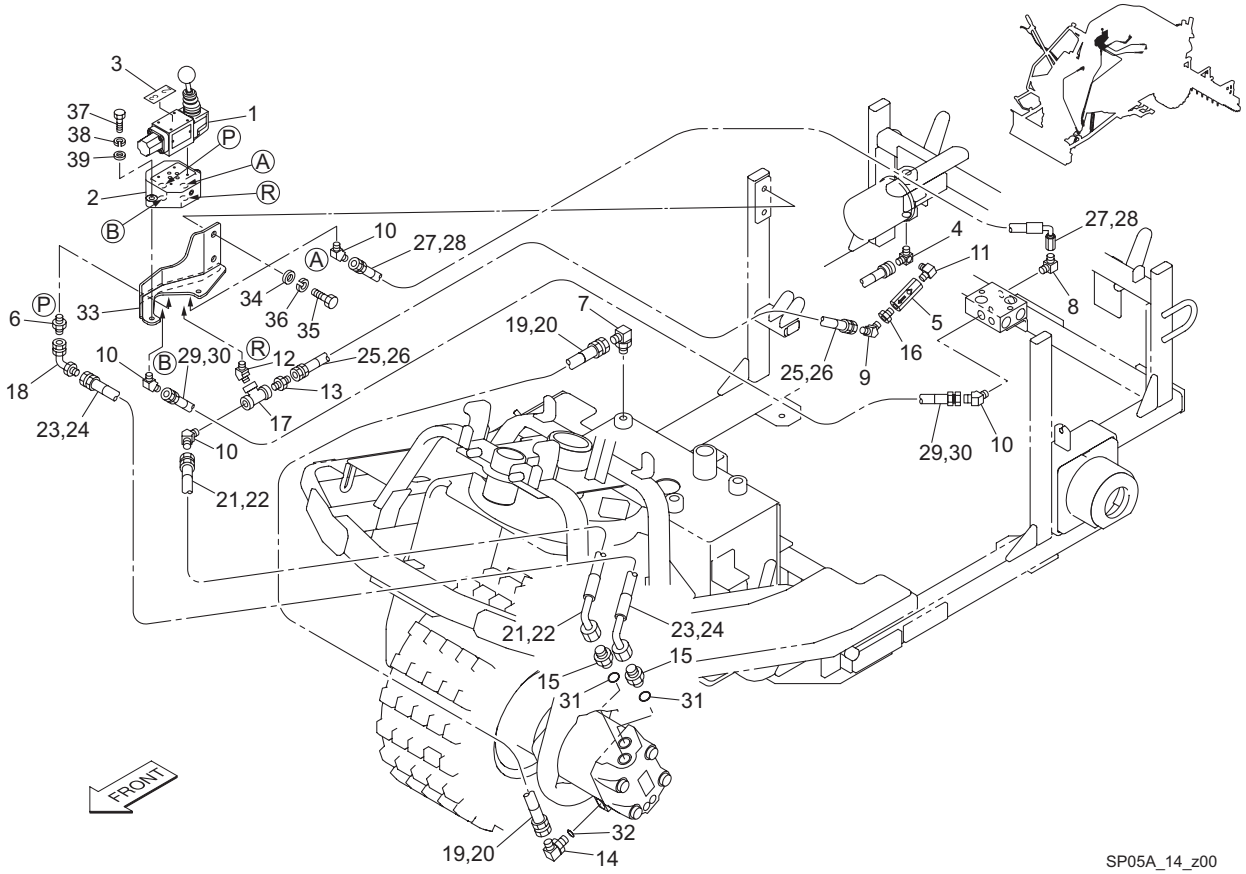

SP05A_14_z00

Cat No.	Code No.	Part name	Qty	Remark	SN of application
14 - 1	K3302000020	VALVE, MANUAL SWITCH HD-02376	1		
14 - 2	K3314000050	SUB-PLATE, SHD025-03T3A	1		
14 - 3	K4203001380	STICKER, 2WD-3WD SHIFT LEVER	1		
14 - 4	SP05---0413Z2-Y	ELBOW	1		
14 - 5	K3341000010	VALVE, CHECK HK3-ET1-03A	1		
14 - 6	K3000090002-Y	ADAPTOR, 1013-9	1		
14 - 7	K3001060002-Y	ELBOW, 90 DEG 1033-6	1		
14 - 8	K3001090002-Y	ELBOW, 90 DEG 1033-9	1		
14 - 9	K3003060002-Y	ELBOW, 45 DEG 1035-6	1		
14 - 10	K3003090002-Y	ELBOW, 45 DEG 1035-9	4		
14 - 11	K3006000032-Y	ELBOW, ODD SIZED PT1/4*PT3/8	1		
14 - 12	K3006000142-Y	ELBOW, 45 DEG PT3/8	1		
14 - 13	K3007000062-Y	ADAPTOR, ODD SIZED PT3/8*PF1/4	1		
14 - 14	K3008000442-Y	ADAPTOR, 90 DEG 1086-6	1		
14 - 15	K3009000022-Y	ADAPTOR, PF1/2*PF3/8	2		
14 - 16	K3020060401-Y	BUSHING, BUT 3/8*1/4	1		
14 - 17	K3021060002-Y	TEE, TEF PT3/8	1		
14 - 18	K3025069062-Y	ADAPTOR, FOR PIPE 069-06	1		
14 - 19	K3101211320	HOSE, WP70-6-1-1320	1		
14 - 20	K3190011700	TUBE, SPIRAL SP-12 1170	1		
14 - 21	K3103321580	HOSE, WP140-9-2-1580	1		
14 - 22	K3191014300	TUBE, SPIRAL SP-15 1430	1		
14 - 23	K3103321610	HOSE, WP140-9-2-1610	1		
14 - 24	K3191014600	TUBE, SPIRAL SP-15 1460	1		
14 - 25	K3101210220	HOSE, WP70-6-1-220	1		
14 - 26	K3190000700	TUBE, SPIRAL SP-12 70	1		
14 - 27	K3103330530	HOSE, WP140-9-3-530	1		
14 - 28	K3191003800	TUBE, SPIRAL SP-15 380	1		
14 - 29	K3103310480	HOSE, WP140-9-1-480	1		
14 - 30	K3191003300	TUBE, SPIRAL SP-15 330	1		

SP05A_14_z00

https://truckmanualshub.com/

14.Traveling hydraulic section B(for three-wheel drive)

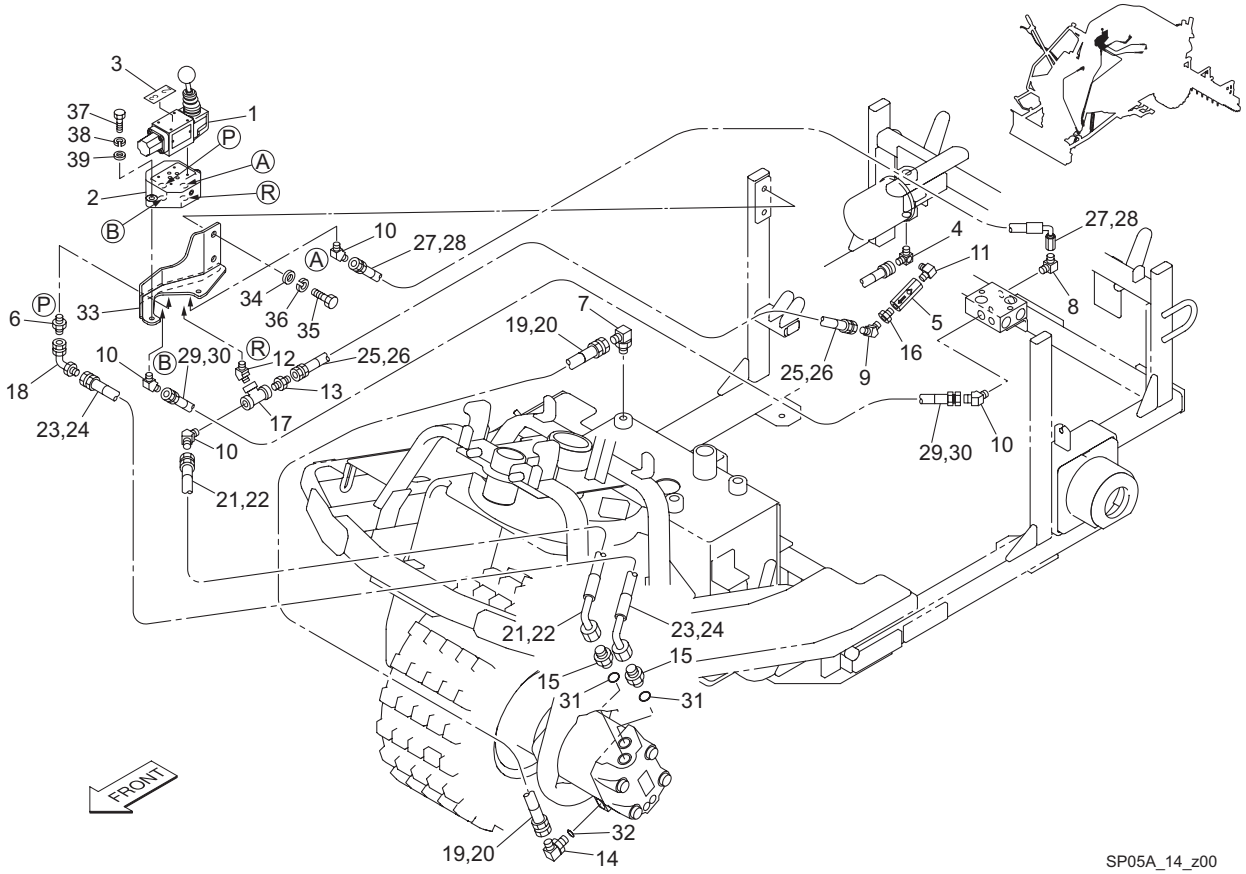

SP05A_14_z00

Cat No.	Code No.	Part name	Qty	Remark	SN of application
14 - 31	K0881018000	O-RING, P18B	2		
14 - 32	K0881011000	O-RING, P11B	1		
14 - 33	SP05---0421ZD	MOUNT, SWITCHING VALVE	1		
14 - 34	K5000100002	WASHER, M10	2		
14 - 35	K0000100202	BOLT, M10-20	2		
14 - 36	K0200100002	WASHER, SPRING M10	2		
14 - 37	K0000080252	BOLT, M8-25	2		
14 - 38	K0200080002	WASHER, SPRING M8	2		
14 - 39	K5000080002	WASHER, M8	2		

SP05A_14_z00

https://truckmanualshub.com/

15.Hydraulic section C(rake raise/lower)

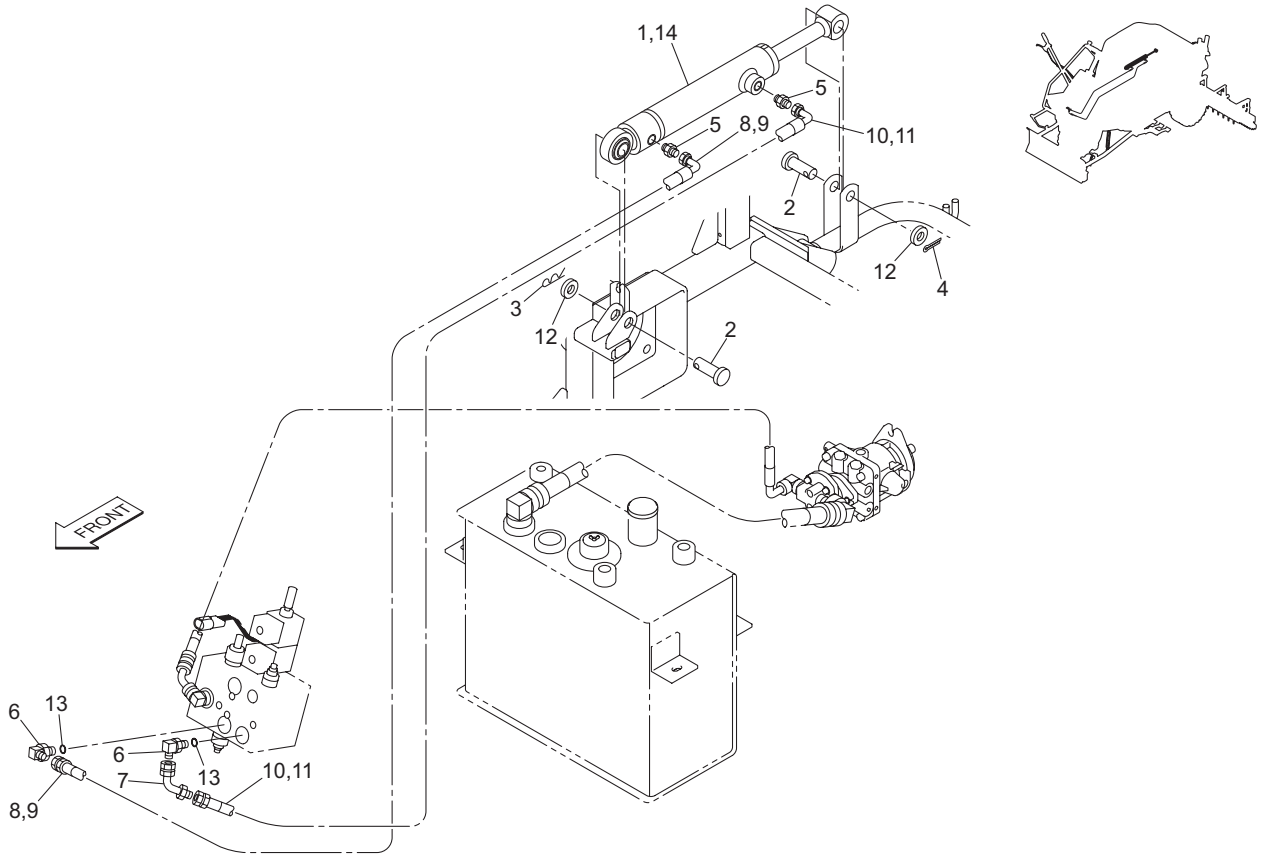

SP05A_15_z00

Cat No.	Code No.	Part name	Qty	Remark	SN of application
15 - 1	K321300004D	CYLINDER, 30-125-310	1		
15 - 2	K6031160402	PIN, FLAT HEAD HT M16-40	2		
15 - 3	K0331600008	PIN, SNAP M16	1		
15 - 4	K0300032252	PIN, COTTER M3.2-25	1		
15 - 5	K3000060002-Y	ADAPTOR, 1013-6	2		
15 - 6	K3008000442-Y	ADAPTOR, 90 DEG 1086-6	2		
15 - 7	K3025064042-Y	ADAPTOR, FOR PIPE 064-04	1		
15 - 8	K3102231530	HOSE, WP105-6-3-1530	1		
15 - 9	K3190013800	TUBE, SPIRAL SP-12 1380	1		
15 - 10	K3102231600	HOSE, WP105-6-3-1600	1		
15 - 11	K3190014700	TUBE, SPIRAL SP-12 1470	1		
15 - 12	K5000160002	WASHER, M16	2		
15 - 13	K0881011000	O-RING, P11B	2		
15 - 14	YIS-30B-SK	SEAL KIT, CYLINDER	1		

SP05A_15_z00

https://truckmanualshub.com/

16.Hydraulic section D(power steering)

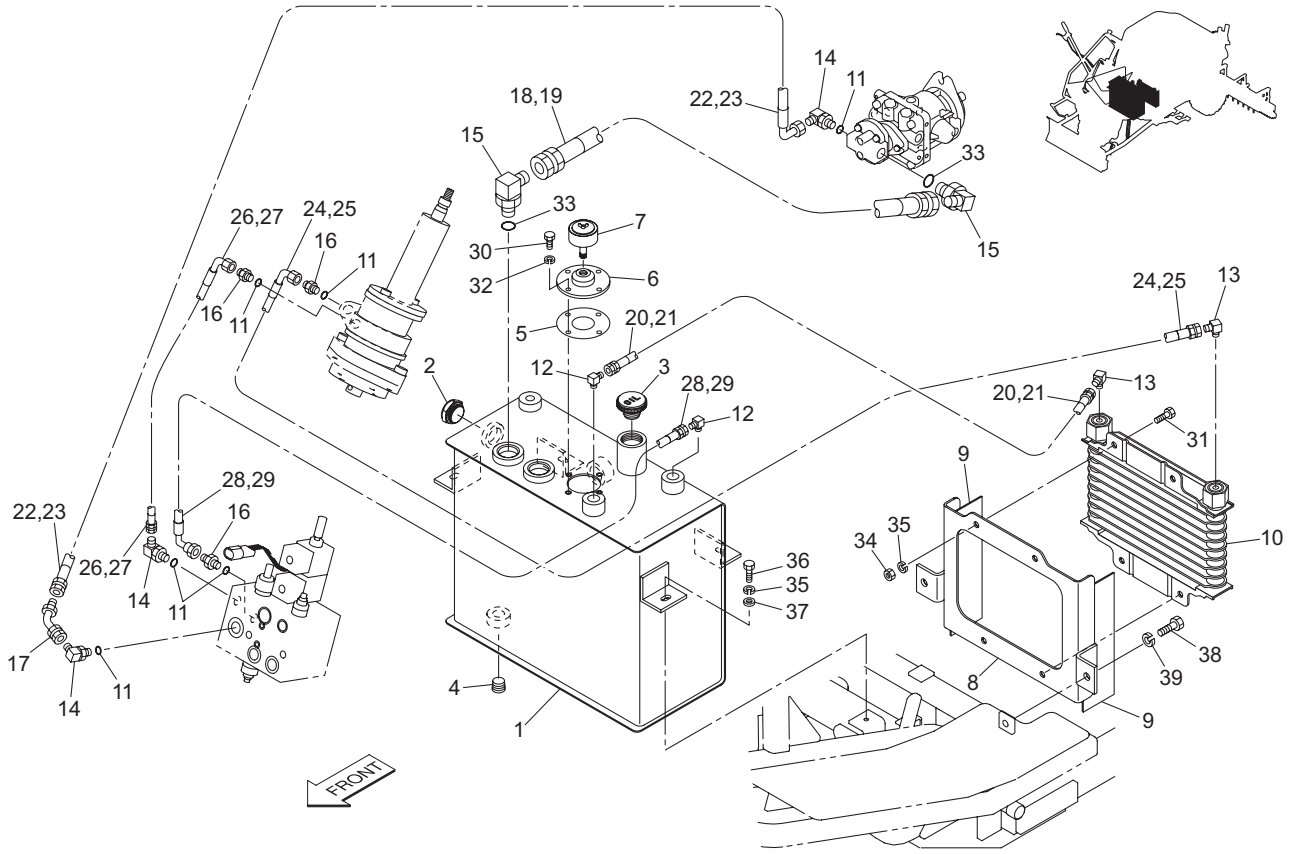

SP05A_16_z00

Cat No.	Code No.	Part name	Qty	Remark	SN of application
16 - 1	SP05---0401ZD-Y	TANK, HYDRAULIC	1		
16 - 2	K1400000044-Y	GAUGE, OIL M TYPEPF3/4	1		
16 - 3	K1310000140	CAP, OIL KRM-A4	1		
16 - 4	K1422106001-Y	PLUG, TAPER WITH HEX. HOLE T1, 3/8	1		
16 - 5	K4011000330	PACKING, OIL-SHEET 0.8-4575	1		
16 - 6	SP05---0402Z2-Y	MOUNT, BREATHER	1		
16 - 7	K1430000030	PLUG, AIR AP-02	1		
16 - 8	SP05---0410ZD	BRACKET, OIL COOLER	1		
16 - 9	K4033000510	RUBBER, PLATE 2-60200	2		
16 - 10	K3430000040	OIL COOLER	1		
16 - 11	K0881014000	O-RING, P14B	6		
16 - 12	K3001090002-Y	ELBOW, 90 DEG 1033-9	2		
16 - 13	K3006000022-Y	ELBOW, ODD SIZED PT1/2*PF3/8	2		
16 - 14	K3008000032-Y	ADAPTOR, 90 DEG 1086-9	3		
16 - 15	K3008000052-Y	ADAPTOR, 90 DEG 1086-19	2		
16 - 16	K3009000142-Y	ADAPTER, PF3/8PF3/8	3		
16 - 17	K3025064062-Y	ADAPTOR, FOR PIPE 064-06	1		
16 - 18	K3100610390	HOSE, WP35-19-1-390	1		
16 - 19	K3192001900	TUBE, SPIRAL SP-20 190	1		
16 - 20	K3101310190	HOSE, WP70-9-1-190	1		
16 - 21	K3191000400	TUBE, SPIRAL SP-15 40	1		
16 - 22	K3101331030	HOSE, WP70-9-3-1030	1		
16 - 23	K3191008800	TUBE, SPIRAL SP-15 880	1		
16 - 24	K3101331290	HOSE, WP70-9-3-1290	1		
16 - 25	K3191011400	TUBE, SPIRAL SP-15 1140	1		
16 - 26	K3102330320	HOSE, WP105-9-3-320	1		
16 - 27	K3191001700	TUBE, SPIRAL SP-15 170	1		
16 - 28	K3102331050	HOSE, WP105-9-3-1050	1		
16 - 29	K3191009000	TUBE, SPIRAL SP-15 900	1		
16 - 30	K0000060152	BOLT, M6-15	4		

SP05A_16_z00

https://truckmanualshub.com/

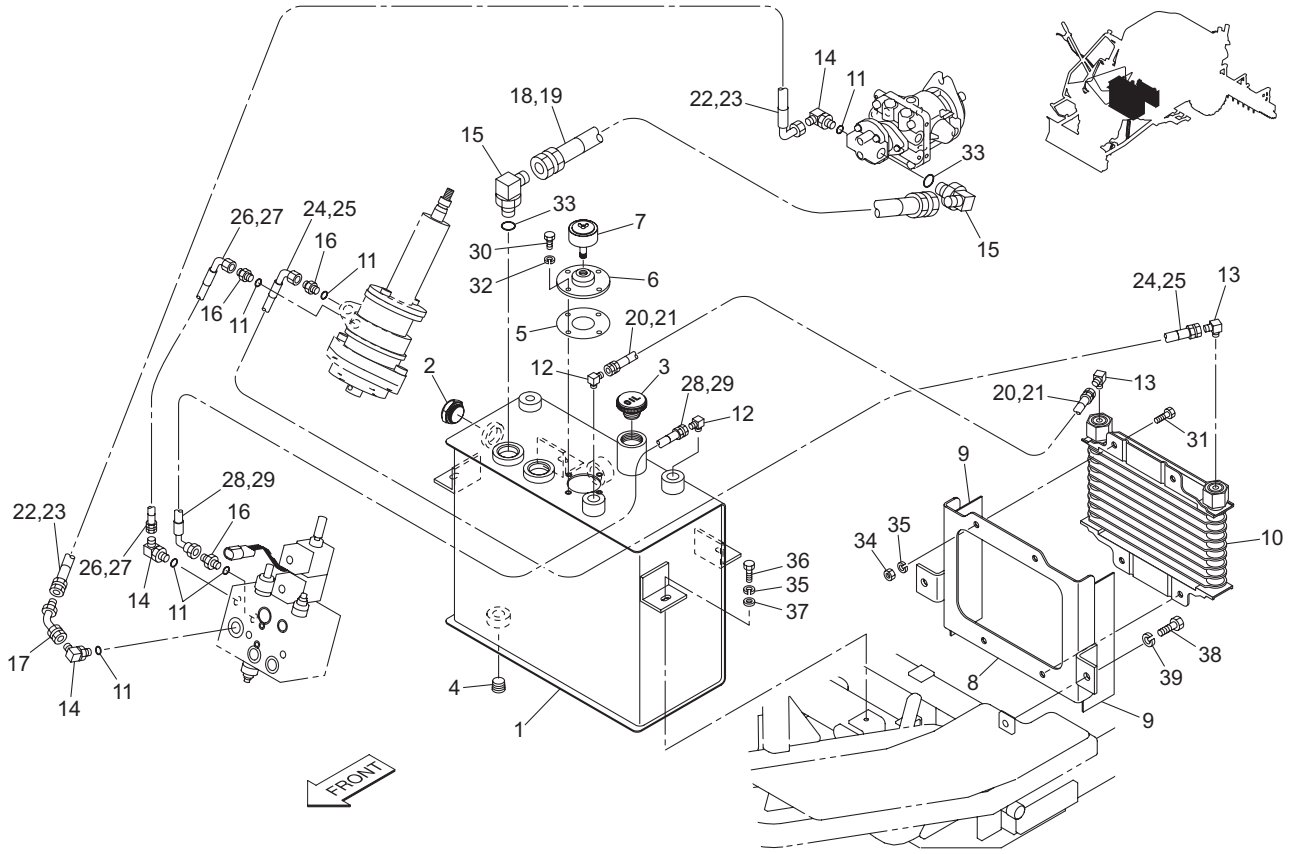

SP05A_16_z00

Cat No.	Code No.	Part name	Qty	Remark	SN of application
16 - 31	K0000080152	BOLT, M8-15	4		
16 - 32	K0200060002	WASHER, SPRING M6	4		
16 - 33	K0881024000	O-RING, P24B	2		
16 - 34	K0100080002	NUT, M8	4		
16 - 35	K0200080002	WASHER, SPRING M8	8		
16 - 36	K0000080152	BOLT, M8-15	4		
16 - 37	K5000080002	WASHER, M8	4		
16 - 38	K0000100152	BOLT, M10-15	2		
16 - 39	K0200100002	WASHER, SPRING M10	2		

SP05A_16_z00

https://truckmanualshub.com/

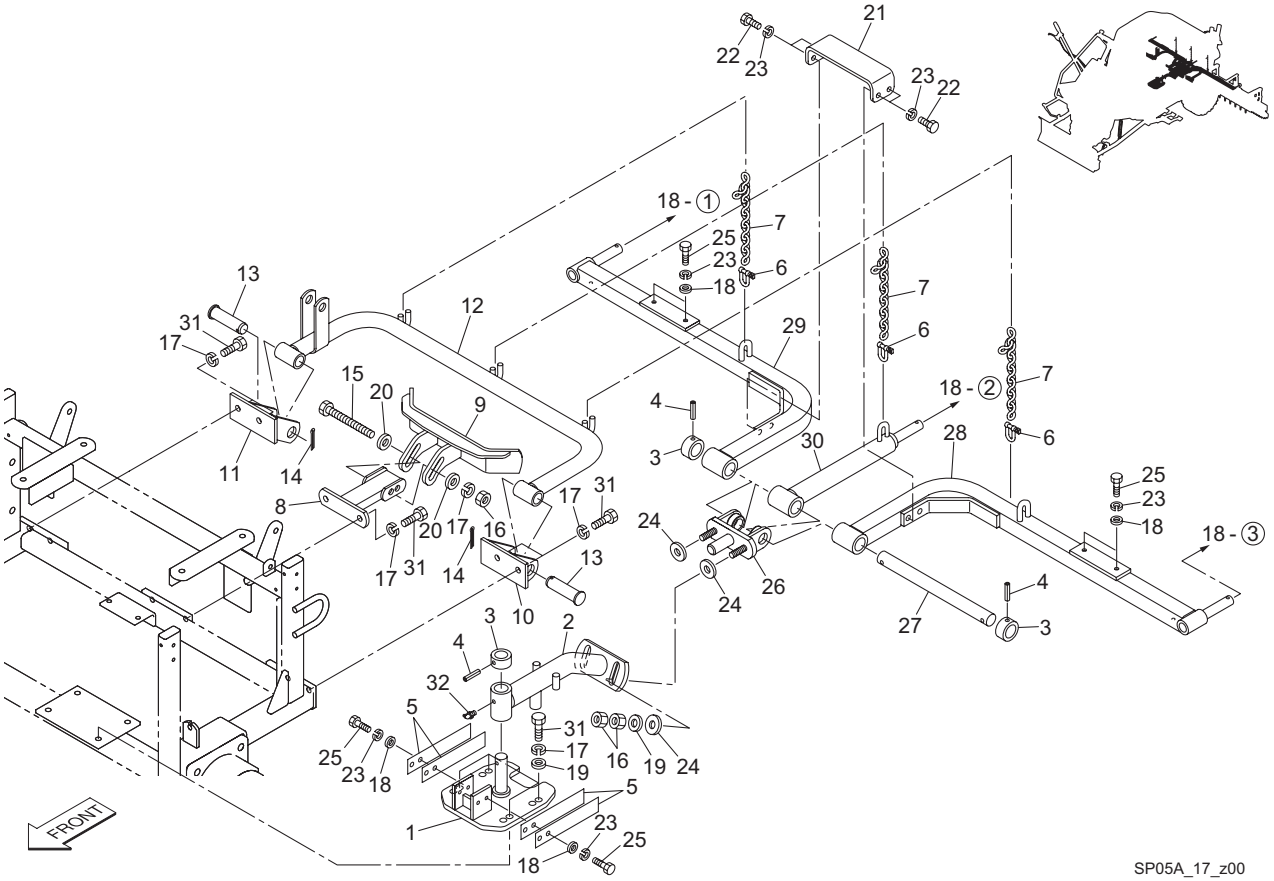

SP05A_17_z00

Cat No.	Code No.	Part name	Qty	Remark	SN of application
17 - 1	SP05---0701ZD	FULCRUM, RAKE	1		
17 - 2	SP05---0702ZD	PIPE, RAKE FULCRUM	1		
17 - 3	K6215000212	COLLAR, STKM WITH HOLE M20-30-17	3		
17 - 4	K0324060321	PIN, SPIRAL M 6-32	3		
17 - 5	K1090000110	SPRING, PLATE M2-40200	4		
17 - 6	K0410800002	SHACKLE, M8	3		
17 - 7	K4535000022	CHAINS, CROSS LINK B6-8	3		
17 - 8	SP05---0724ZD	STAY, RAKE FIXTURE	1		
17 - 9	SP05---0725ZD	FIXTURE, RAKE	1		
17 - 10	SP165--0602ZD	BRACKET, DOZER ARM (L)	1		
17 - 11	SP165--0603ZD	BRACKET, DOZER ARM (R)	1		
17 - 12	SP05---0727ZD	ARM, HANGING RAKE	1		
17 - 13	K6031200702	PIN, FLAT HEAD HT M20-70	2		
17 - 14	K0300040322	PIN, COTTER M4-32	2		
17 - 15	K0000100802	BOLT, M10-80	1		
17 - 16	K0100100002	NUT, M10	5		
17 - 17	K0200100002	WASHER, SPRING M10	11		
17 - 18	K5000080002	WASHER, M8	8		
17 - 19	K5000100002	WASHER, M10	6		
17 - 20	K5073210262	WASHER, SPHC 3.2-10-26	2		
17 - 21	SP05---0707ZD	FITTING, U-SHAPED 160	1		
17 - 22	K0010080152	BOLT, HT M8-15	4		
17 - 23	K0200080002	WASHER, SPRING M8	12		
17 - 24	K5051010260	WASHER, C5191P 1-10-26	4		
17 - 25	K0000080202	BOLT, M8-20	8		
17 - 26	SP05---0729AD	FULCRUM, SWINGING RAKE	1		
17 - 27	SP05---0730Z0	SHAFT, RAKE M20-194	1		
17 - 28	SP05---0731ZD	PIPE, RAKE (L)	1		
17 - 29	SP05---0732ZD	PIPE, RAKE (R)	1		
17 - 30	SP05---0733ZD	PIPE, RAKE (MIDDLE)	1		

SP05A_17_z00

https://truckmanualshub.com/

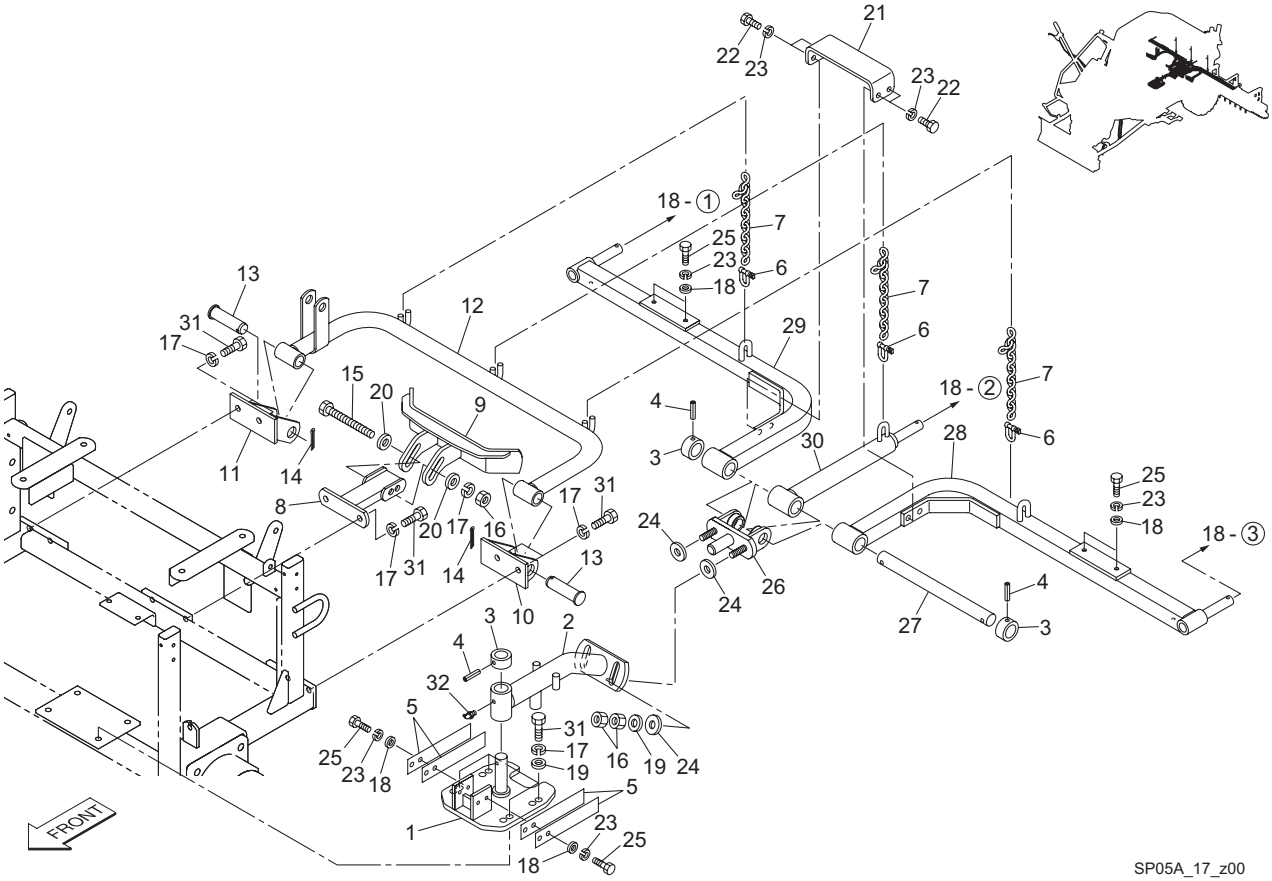

SP05A_17_z00

Cat No.	Code No.	Part name	Qty	Remark	SN of application
17 - 31	K0000100202	BOLT, M10-20	10		
17 - 32	K1440000030	GREASE NIPPLE, B TYPE	1		

SP05A_17_z00

https://truckmanualshub.com/

18.Rake section B

SP05A

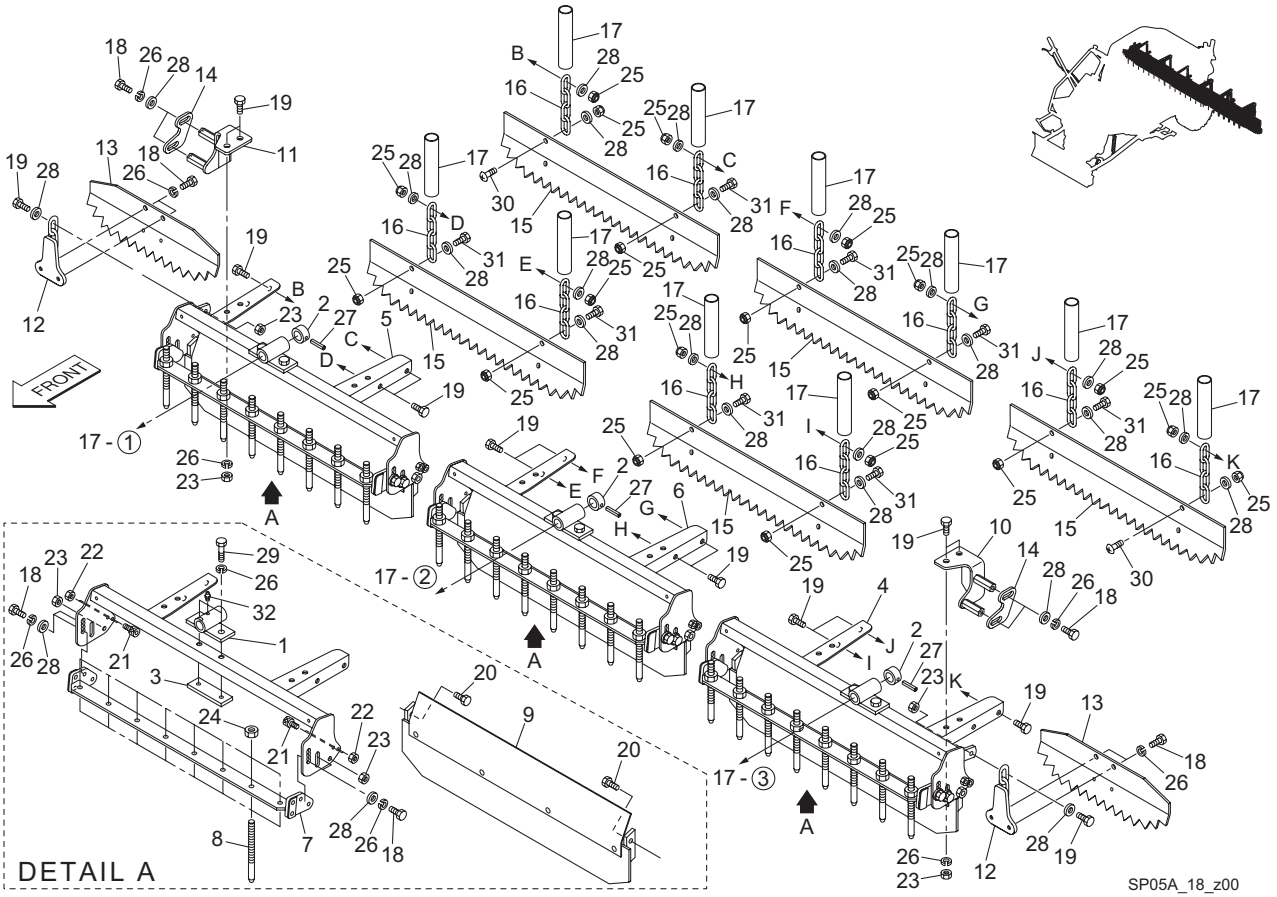

Cat No.	Code No.	Part name	Qty	Remark	SN of application
18 - 1	SP05---0711ZD	BRACKET, RAKE	3		
18 - 2	K6215000222	COLLAR, STKM WITH HOLE M16-25-13	3		
18 - 3	K514200040D	PLATE, 6 W/ 2-M8 2550	3		
18 - 4	SP05---0713ZD	FRAME, RAKE (L)	1		
18 - 5	SP05---0714ZD	FRAME, RAKE (R)	1		
18 - 6	SP05---0715ZD	FRAME, RAKE (CENTER)	1		
18 - 7	SP05---0716ZD	BRACKET, FORK	3		
18 - 8	K6175000218	BAR, THREADED FORK PRONG	24		
18 - 9	SP05---0717AD	BOARD, WARP	3		
18 - 10	SP05---0718ZD	GUIDE, SIDE SMOOTHER (L)	1		
18 - 11	SP05---0719ZD	GUIDE, SIDE SMOOTHER (R)	1		
18 - 12	SP05---0720ZD	BRACKET, SIDE SMOOTHER	2		
18 - 13	SP05---0723AD	PLATE, SIDE SMOOTHER 20-15 DEG	2		
18 - 14	SP05---0721ZD	STOPPER	2		
18 - 15	SP05---0722ZD	PLATE, SMOOTHER 20-15 DEG	5		
18 - 16	K4532000012	CHAINS, GENERAL USE 4.8-4	10		
18 - 17	K3172200800	HOSE, VINYL 19*23-80	10		
18 - 18	K0000080152	BOLT, M8-15	20		
18 - 19	K0000080202	BOLT, M8-20	16		
18 - 20	K0010080202	BOLT, HT M8-20	6		
18 - 21	K0060060120	BOLT, SUS WITH HEX. HOLE M6-12	12		
18 - 22	K0100060002	NUT, M6	12		
18 - 23	K0100080002	NUT, M8	12		
18 - 24	K0100100002	NUT, M10	24		
18 - 25	K0144080002	NUT, WITH F-RING, M8	20		
18 - 26	K0200080002	WASHER, SPRING M8	30		
18 - 27	K0320050251	PIN, SPRING M5-25	3		
18 - 28	K5000080002	WASHER, M8	38		
18 - 29	K0010080352	BOLT, HT M8-35	6		
18 - 30	K0056080300	SCREW, TRUSS STAINLESS WITH + M8-20SCREW,TRUSS S	2		

SP05A_18_z00

https://truckmanualshub.com/

18.Rake section B

SP05A

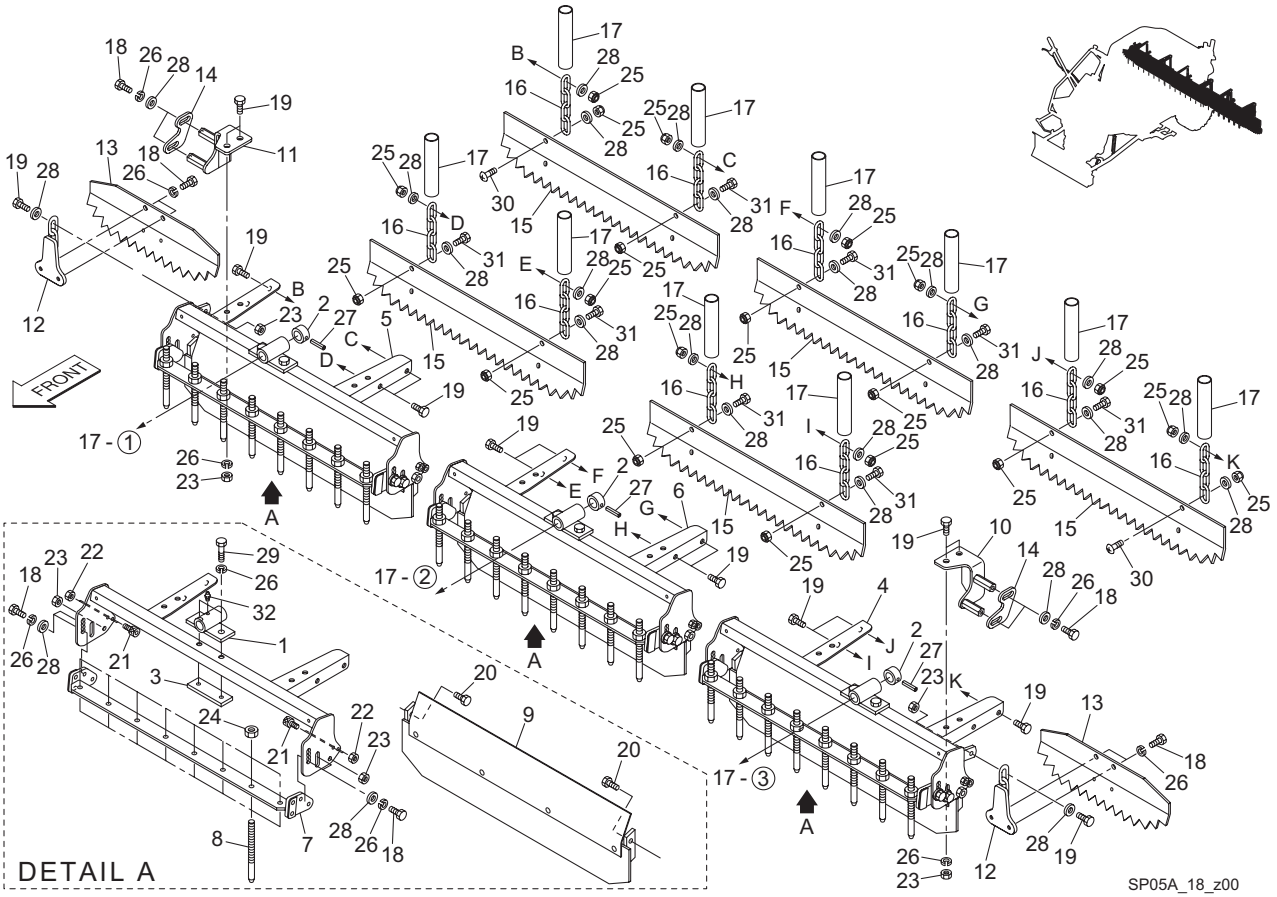

Cat No.	Code No.	Part name	Qty	Remark	SN of application
18 - 31	K0000080252	BOLT, M8-25	8		
18 - 32	K1440000010	GREASE NIPPLE, A TYPE	3		

SP05A_18_z00

https://truckmanualshub.com/

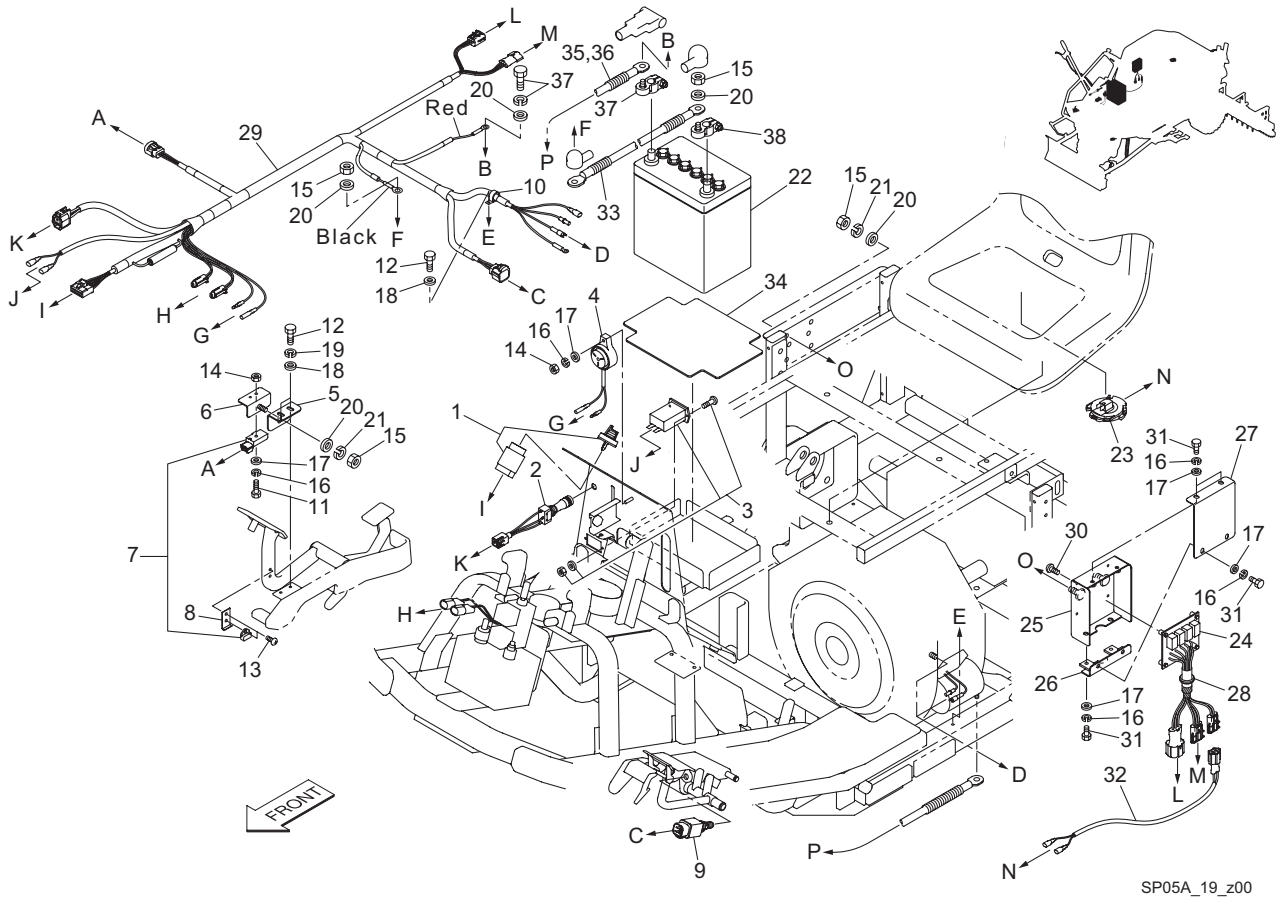

Cat No.	Code No.	Part name	Qty	Remark	SN of application
19 - 1	K3660000050	SWITCH, MAIN	1		
19 - 2	K3662000160	SWITCH, TOGGLE FOR AUTO RETURN	1		
19 - 3	K3650000040	HOUR METER, MINI	1		
19 - 4	K3700000010	BUZZER, EBM-12 TYPE	1		
19 - 5	SP05---0603ZD	PLATE, POSITIONING SENSOR	1		
19 - 6	SP05---0602ZD	BRACKET, SENSOR	1		
19 - 7	K3720000140	SENSOR, PROXIMITY SWITCH NC	1		
19 - 8	SP05---0605Z2	BRACKET, MAGNET	1		
19 - 9	K3671000160	SWITCH, LIMIT 2 CIRCUIT NO	1		
19 - 10	K4270022060	CLIP, HARNESS 22 M6	1		
19 - 11	K0000050202	BOLT, M5-20	1		
19 - 12	K0000060152	BOLT, M6-15	3		
19 - 13	K0048050102	SCREW, + ROUND HEAD WITH SW M5-10	2		
19 - 14	K0100050002	NUT, M5	2		
19 - 15	K0100080002	NUT, M8	5		
19 - 16	K0200050002	WASHER, SPRING M5	8		
19 - 17	K5000050002	WASHER, M5	8		
19 - 18	K5000060002	WASHER, M6	3		
19 - 19	K0200060002	WASHER, SPRING M6	2		
19 - 20	K5000080002	WASHER, M8	6		
19 - 21	K0200080002	WASHER, SPRING M8	6		
19 - 22	K3600000220	BATTERY, FB9000-46B19R	1		
19 - 23	K1701000140	SWITCH, SEAT NC C7247AS	1		
19 - 24	SP05---2605Z0	SAFETY CIRCUIT BOARD ASSY	1		
19 - 25	SP05---2601ZD	CASE, SUBSTRATE	1		
19 - 26	SP05---2602ZD	COVER, CASE A	1		
19 - 27	SP05---2603ZD	COVER, CASE B	1		
19 - 28	K0910000110	GROMMET, NG-79-J	1		
19 - 29	SP05A--0601Z0	HARNESS, MAIN	1		
19 - 30	K0044030082	SCREW, + ROUND HEAD WITH W/SW M3-8	4		

SP05A_19_z00

https://truckmanualshub.com/

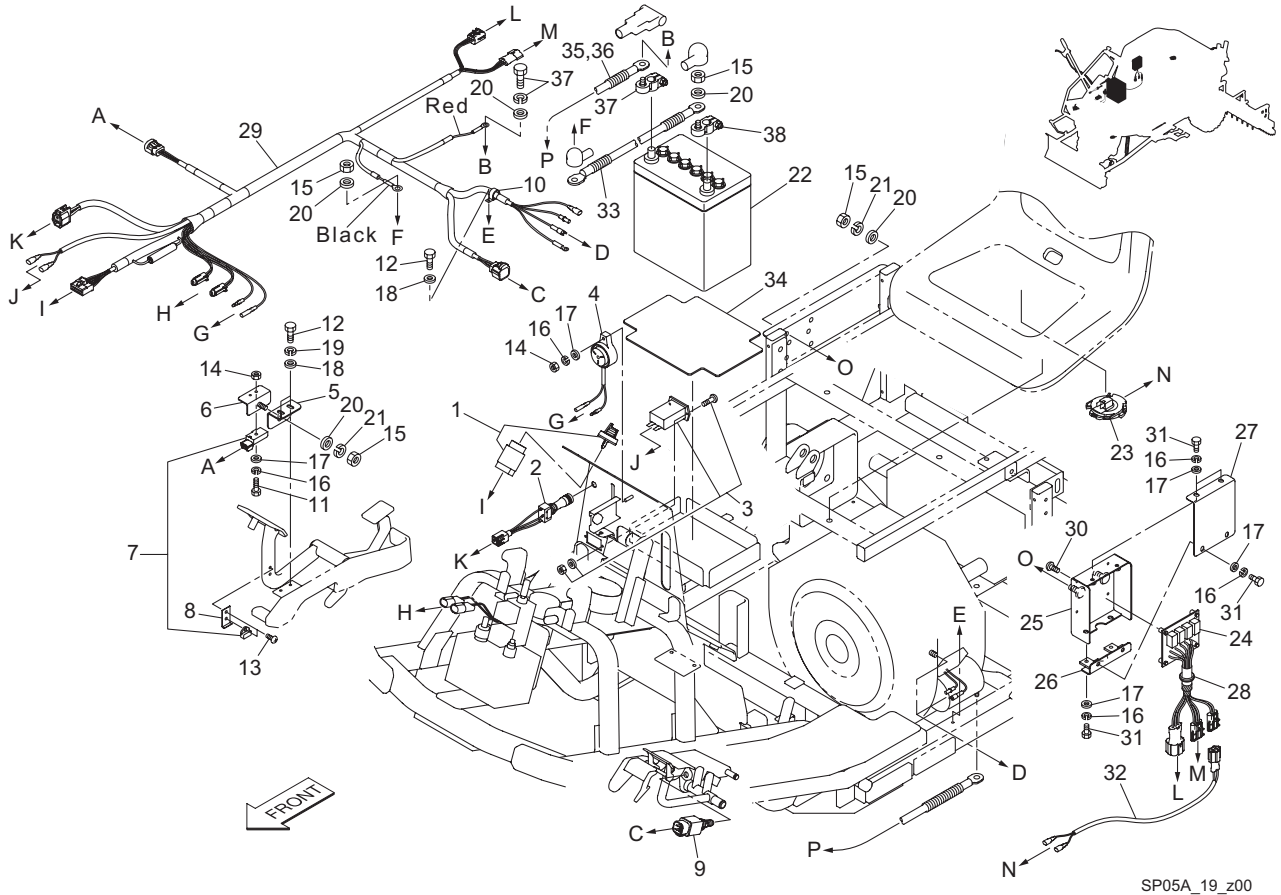

SP05A_19_z00

Cat No.	Code No.	Part name	Qty	Remark	SN of application
19 - 31	K0000050102	BOLT, M5-10	6		
19 - 32	SP05---2608Z0	SEAT SWITCH WIRING	1		
19 - 33	K3611000440	WIRE, TO EARTH 300	1		
19 - 34	K4033000530	RUBBER, BATTERY MOUNT	1		
19 - 35	K3610000570	WIRE, BATTERY (+) 1350	1		
19 - 36	K3194112900	TUBE, CORRUGATED M10-1290	1		
19 - 37	K3612000050	TERMINAL, BATTERY (+) DBS-1	1		
19 - 38	K3612000060	TERMINAL, BATTERY (-) DBS-2	1		

SP05A_19_z00

https://truckmanualshub.com/

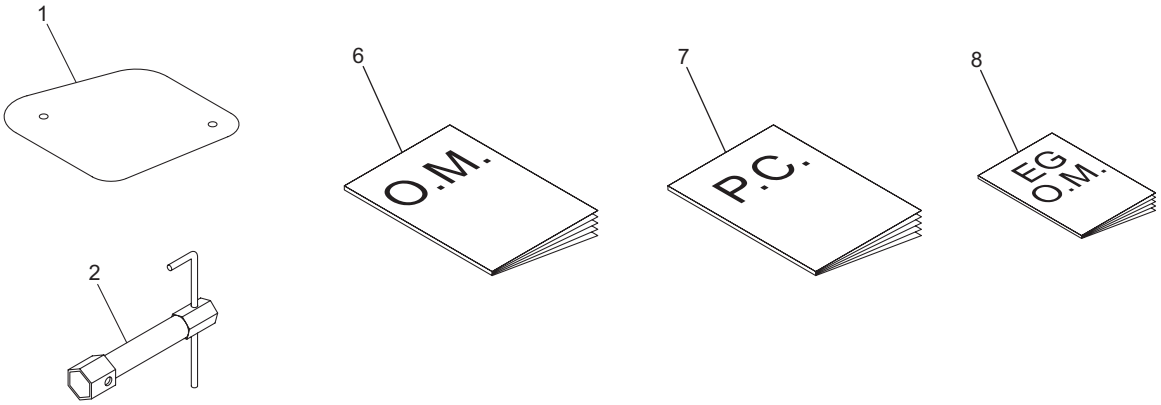

OPTION

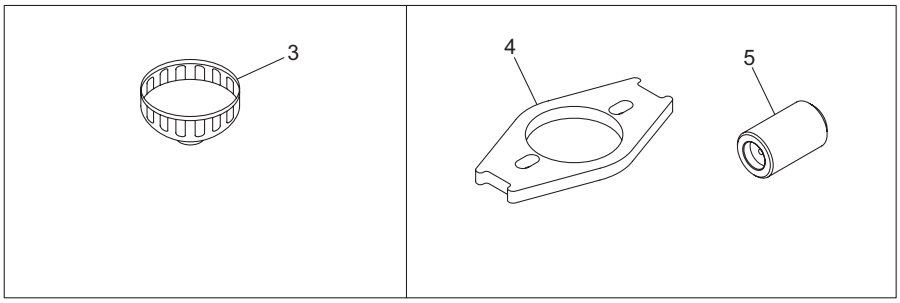

SP05A_20_z00

Cat No.	Code No.	Part name	Qty	Remark	SN of application
20 - 1	SP05---1501Z0	RUBBER, CARGO BOX	1		
20 - 2	K4817000020	WRENCH, PLUG 5/8-70	1		
20 - 3	K4821000010	WRENCH, OIL FILTER 9.5-74	1		
20 - 4	K480200044D	TOOL, BRAKE DRUM REMOVER A	1		
20 - 5	K4802000452	TOOL, BRAKE DRUM REMOVER B	1		
20a - 6	750103-94-A	OWNERS OPERATING MANUAL (SP05A) ENGLISH	1		
20a - 7	750103-94-B	PARTS CATALOG (SP05A) ENGLISH	1		
20a - 8	PL277106	MANUAL, ENGINE	1		

SP05A_20_b00

https://truckmanualshub.com/

21.Front blade section (option)

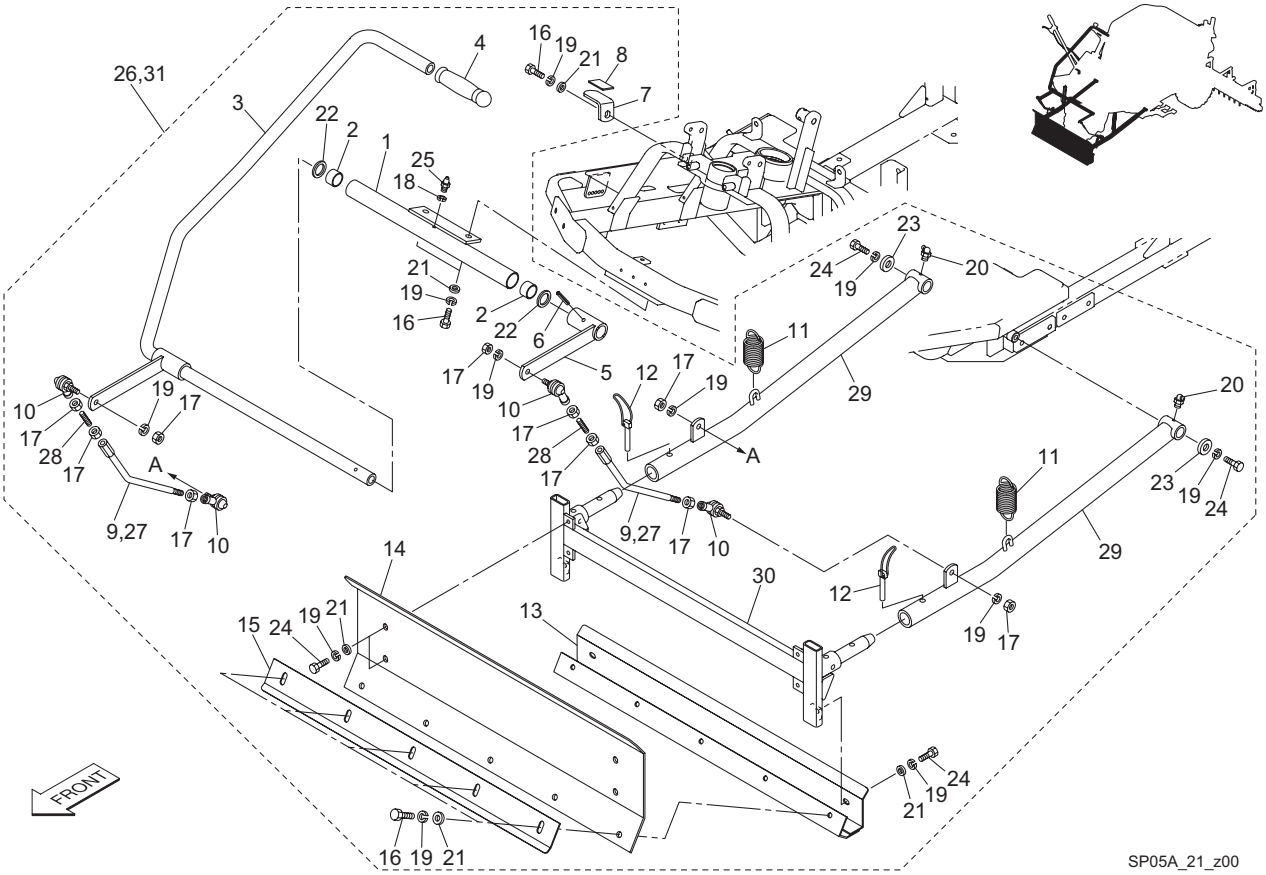

Cat No.	Code No.	Part name	Qty	Remark	SN of application
21 - 1	SP05---0801ZD	PIPE, DOZER LEVER FULCRUM	1		
21 - 2	K6000000390	BUSH, 25.4-30.2-20	2		
21 - 3	SP05---0802AD	LEVER, DOZER	1		
21 - 4	K1300000020	GRIP, RUBBER HANDLE 25.4	1		
21 - 5	SP05---0803ZD	ARM, LEVER	1		
21 - 6	K0320060361	PIN, SPRING M6-36	1		
21 - 7	SP05---0807ZD	BRACKET, ARM	1		
21 - 8	K4033000540	RUBBER, PLATE 3-2535	1		
21 - 9	SP05---0804Z2	SHAFT, CONNECTING	2		
21 - 10	K1604100000	JOINT, SPHERICAL LHSA10	4		
21 - 11	K103000026D	SPRING, WITH U HOOK M2.9-38-95	2		
21 - 12	K0450000028	PIN, DELTA M9	2		
21 - 13	SP160E-3802ZD	BRACKET, DOZER BOARD	1		
21 - 14	SP160E-3804ZD	BOARD, DOZER (LARGE)	1		
21 - 15	SP160E-3806ZD	BOARD, DOZER (SMALL)	1		
21 - 16	K0000100252	BOLT, M10-25	8		
21 - 17	K0100100002	NUT, M10	10		
21 - 18	K0200060002	WASHER, SPRING M6	1		
21 - 19	K0200100002	WASHER, SPRING M10	20		
21 - 20	K1440000020	GREASE NIPPLE, C TYPE	2		
21 - 21	K5000100002	WASHER, M10	14		
21 - 22	K5051025370	WASHER, C5191P 1-25.4-37	2		
21 - 23	K5073210352	WASHER, SPHC 3.2-10-35	2		
21 - 24	K0000100202	BOLT, M10-20	8		
21 - 25	K1440000010	GREASE NIPPLE, A TYPE	1		
21 - 26	SP05---0820Z0	SAND SPLASHBOARD ASSY	1		
21 - 27	SP160EA0812Z2	SHAFT, CONNECTING	2		
21 - 28	K0072000300	SHAFT, SCREWED M10-80	2		
21 - 29	SP160EA0810ZD	ARM, DOZER	2		
21 - 30	SP160EA0811ZD	FRAME, DOZER	1		

SP05A_21_z00

https://truckmanualshub.com/

21.Front blade section (option)

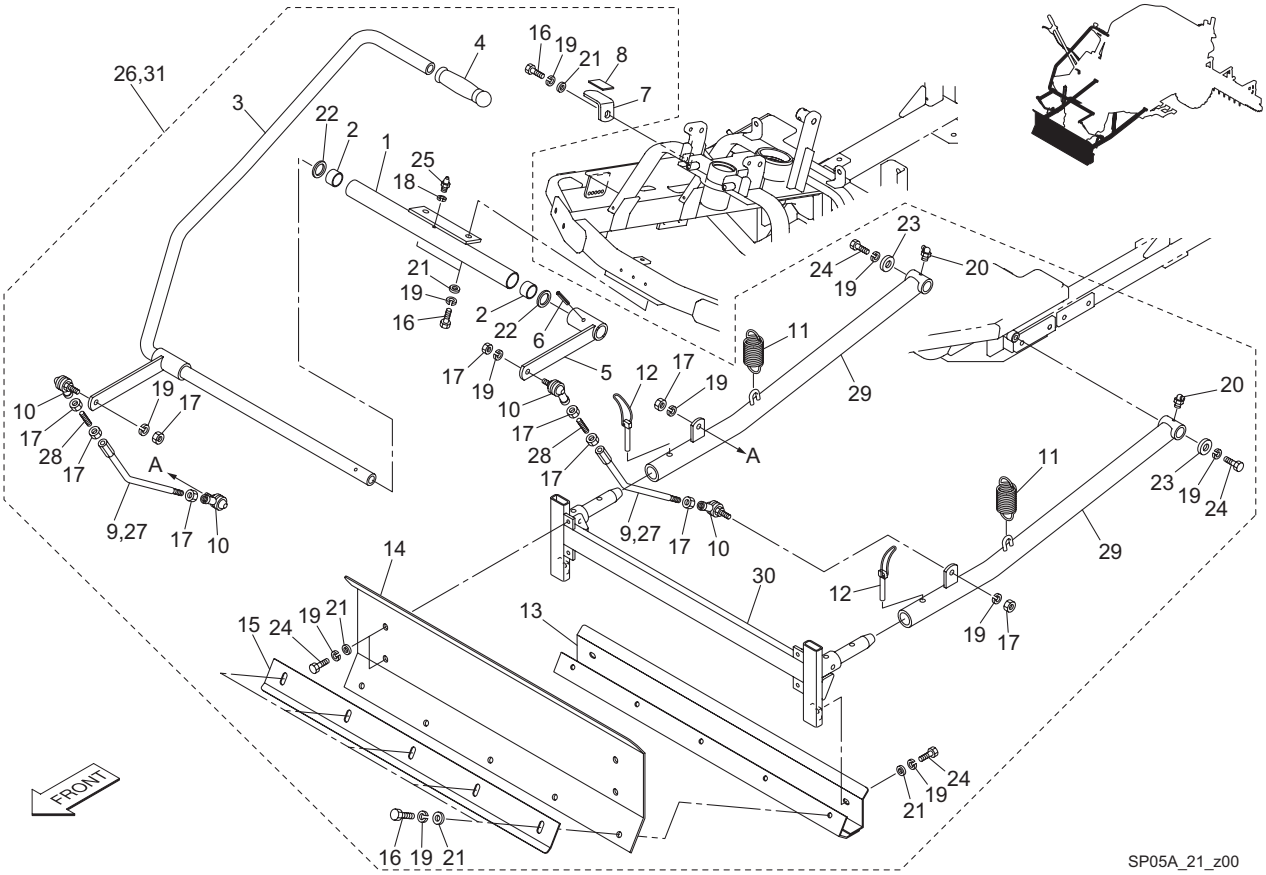

SP05A_21_z00

Cat No.	Code No.	Part name	Qty	Remark	SN of application
21 - 31	SP160EA0820Z0	FRONT BLADE ASSY	1		

SP05A_21_z00

https://truckmanualshub.com/

22.Sand cultivator section (option)

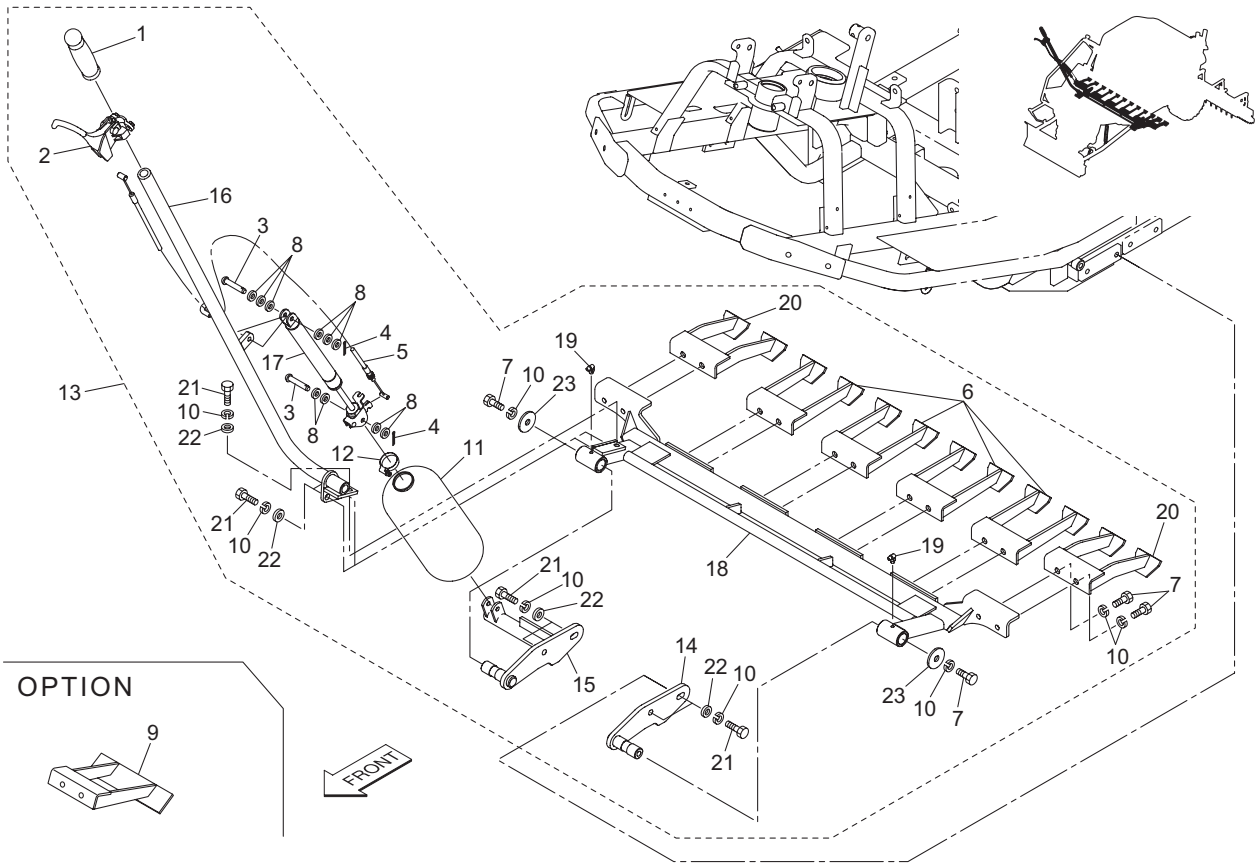

SP05A_22_z00

Cat No.	Code No.	Part name	Qty	Remark	SN of application
22 - 1	K1300000020	GRIP, RUBBER HANDLE 25.4	1		
22 - 2	K1211460000	LEVER, CLUTCH E146000	1		
22 - 3	K6041080428	PIN, ROUND HEAD HT M8-42	2		
22 - 4	K0300025162	PIN, COTTER M2.5-16	2		
22 - 5	K1160082000	WIRE, ADJUSTING CULTIVATOR 820	1		
22 - 6	SP05---0909ZD	TOOTH, TRAPEZOIDAL (CULTIVATOR)	4		
22 - 7	K0000100202	BOLT, M10-20	14		
22 - 8	K5000080002	WASHER, M8	10		
22 - 9	SP05---0910ZD	TOOTH, FLAT (CULTIVATOR)	6		
22 - 10	K0200100002	WASHER, SPRING M10	21		
22 - 11	SP05---0912Z0	COVER, GAS SPRING	1		
22 - 12	K4260000190	CLAMP, HOSE JUBILEE BAND 1	1		
22 - 13	SP05---0930Z0	SAND CULTIVATOR ASSY	1		
22 - 14	SP05---0931ZD	FULCRUM, (L)	1		
22 - 15	SP05---0932ZD	FULCRUM, (R)	1		
22 - 16	SP05---0933ZD	LEVER, CULTIBATOR	1		
22 - 17	K3381000040	GAS-SPRING, FLF90-25	1		
22 - 18	SP05---0934ZD	ARM, CULTIVATOR	1		
22 - 19	K1440000020	GREASE NIPPLE, C TYPE	2		
22 - 20	SP05---0935ZD	TOOTH, TRAPEZOIDAL SIDE (CULTIVATOR)	2		
22 - 21	K0000100252	BOLT, M10-25	7		
22 - 22	K5000100002	WASHER, M10	7		
22 - 23	K5073210352	WASHER, SPHC 3.2-10-35	2		

https://truckmanualshub.com/

23.Finishing brush section (option)

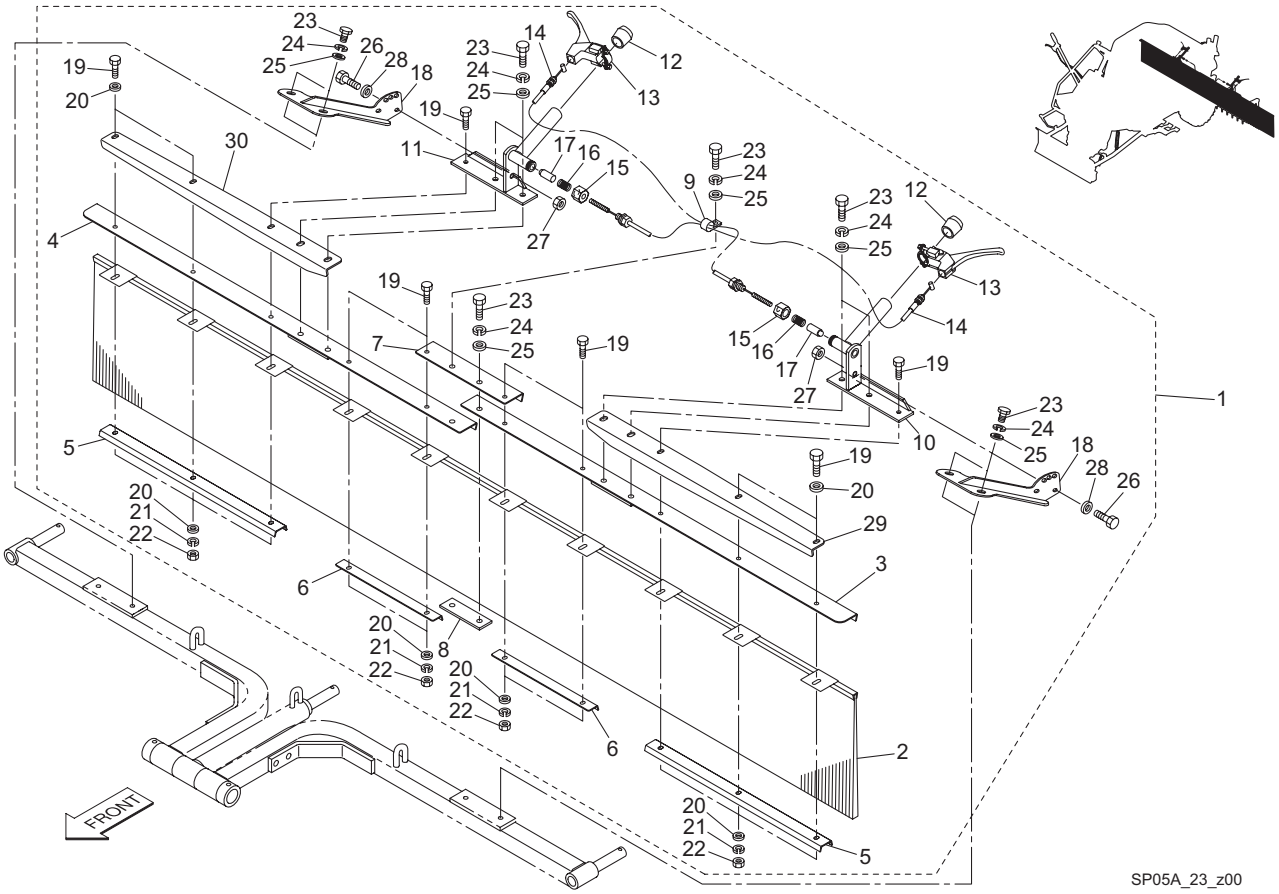

Cat No.	Code No.	Part name	Qty	Remark	SN of application
23 - 1	SP05---1601A0	FINISHING BRUSH ASSY	1		
23 - 2	SP05---1002Z0	BRUSH, FINISHING 1.0 (NY)	1		
23 - 3	SP05---1005AD	FRAME, BRUSH (L)	1		
23 - 4	SP05---1004AD	FRAME, BRUSH (R)	1		
23 - 5	SP05---1010ZD	PLATE, RETAINING BRUSH 450	2		
23 - 6	SP05---1008ZD	PLATE, RETAINING BRUSH 250	2		
23 - 7	SP05---1006ZD	PLATE, CONNECTING BRUSH FRAME	1		
23 - 8	K514200047D	PLATE, 6 W/ 2-M8 2570	1		
23 - 9	K4270020080	CLIP, HARNESS 20 M8	1		
23 - 10	SP05---1602ZD	ARM, MOVABLE (L)	1		
23 - 11	SP05---1603ZD	ARM, MOVABLE (R)	1		
23 - 12	K1310000160	CAP, RUBBER 24	2		
23 - 13	K1211260150	LEVER, CLUTCH E126015	2		
23 - 14	K1160089000	WIRE, ADJUSTING 890	2		
23 - 15	K6084000032	CAP	2		
23 - 16	K1000000668	SPRING, COMPRESSION M1.4-11.3-40	2		
23 - 17	BG90C--0710Z2	PIN, TAIL WHEEL UP/BTM FIXING PIN	2		
23 - 18	SP05---1604ZD	ARM	2		
23 - 19	K0000060252	BOLT, M6-25	10		
23 - 20	K5000060002	WASHER, M6	16		
23 - 21	K0200060002	WASHER, SPRING M6	10		
23 - 22	K0100060002	NUT, M6	10		
23 - 23	K0000080252	BOLT, M8-25	10		
23 - 24	K0200080002	WASHER, SPRING M8	10		
23 - 25	K5000080002	WASHER, M8	10		
23 - 26	K0000100202	BOLT, M10-20	2		
23 - 27	K0100100002	NUT, M10	2		
23 - 28	K5000100002	WASHER, M10	2		
23 - 29	SP05---1011ZD	PLATE, REINFORCING (L)	1		
23 - 30	SP05---1012ZD	PLATE, REINFORCING (R)	1		

SP05A_23_z00

https://truckmanualshub.com/

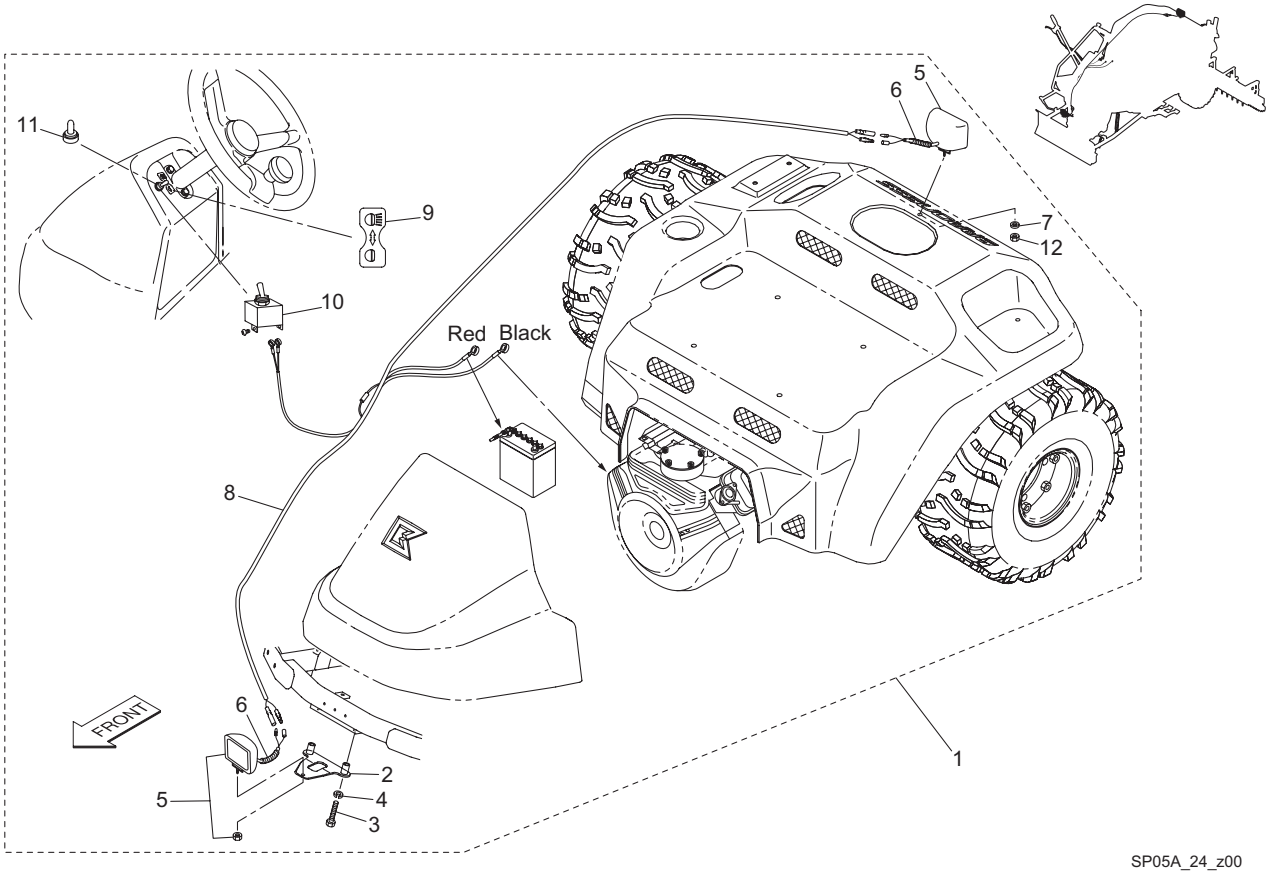

SP05A_24_z00

Cat No.	Code No.	Part name	Qty	Remark	SN of application
24 - 1	SP05A--1101Z0	LAMP & BRACKET ASSY	1		
24 - 2	SP05---1102ZD	BRACKET, LAMP	1		
24 - 3	K0000100552	BOLT, M10-55	2		
24 - 4	K0200100002	WASHER, SPRING M10	2		
24 - 5	K3640000070	LAMP, WORKING WL-B220A	2		
24 - 6	K3194001000	TUBE, CORRUGATED 7-100	2		
24 - 7	K5012308322	WASHER, SPCC 2.3-8-32	1		
24 - 8	SP05A--1102Z0	HARNESS, LAMP	1		
24 - 9	K4203001410	STICKER, LIGHT SWITCH	1		
24 - 10	K3662000060	SWITCH, TOGGLE ST115AT	1		
24 - 11	K4031000300	RUBBER, CAP WD1911	1		
24 - 12	K0144080002	NUT, WITH F-RING, M8	1		

SP05A_24_z00

https://truckmanualshub.com/

25.Cargo box section(option)

SP05A

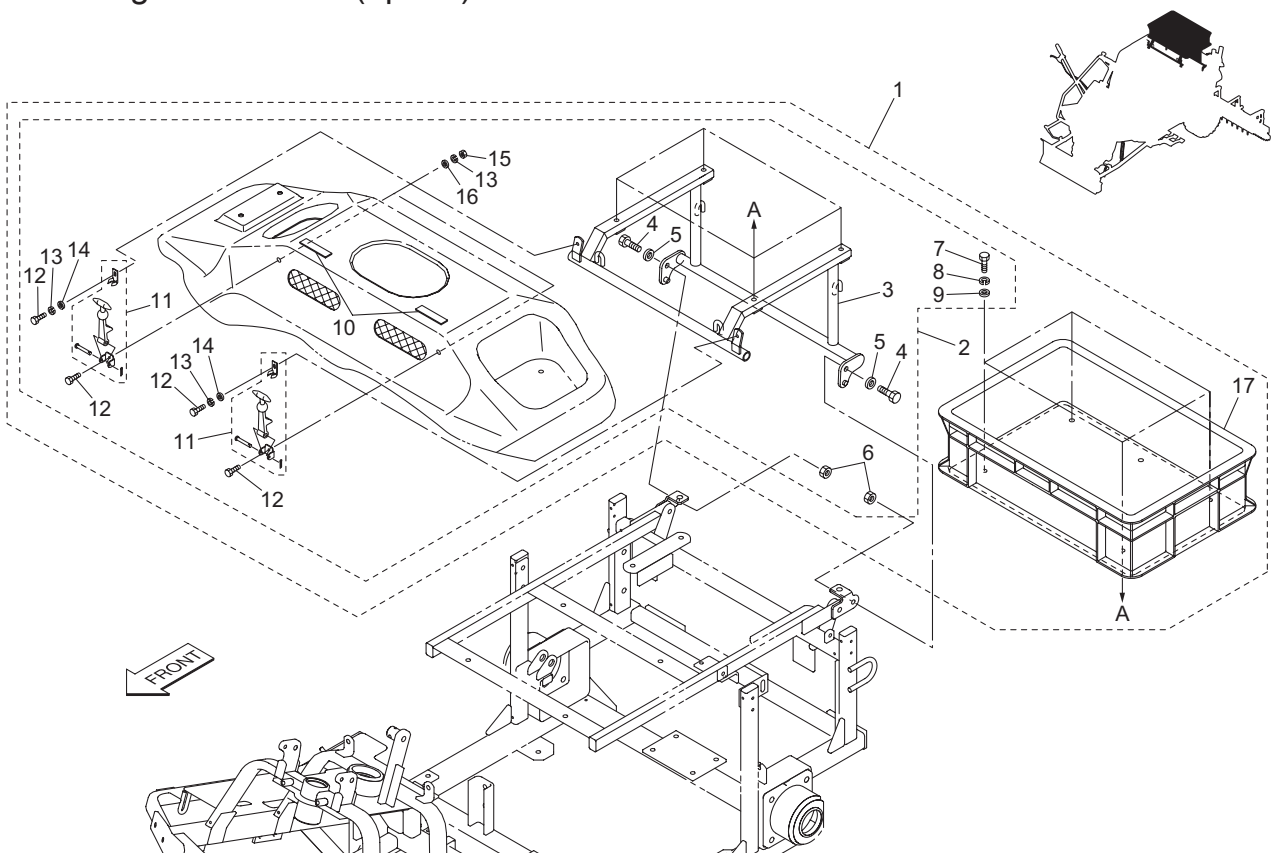

SP05A_25_z00

Cat No.	Code No.	Part name	Qty	Remark	SN of application
25 - 1	SP05---1301Z0	CARGO BOX KIT	1		
25 - 2	SP05---1302Z0	MOUNT ASSY, CARGO BOX	1		
25 - 3	SP05---1303ZR	MOUNT, CARGO BOX	1		
25 - 4	K0000100352	BOLT, M10-35	2		
25 - 5	K5000100002	WASHER, M10	2		
25 - 6	K0100100002	NUT, M10	2		
25 - 7	K0000080352	BOLT, M8-35	4		
25 - 8	K0200080002	WASHER, SPRING M8	4		
25 - 9	K5012308322	WASHER, SPCC 2.3-8-32	4		
25 - 10	K4033000550	RUBBER, PLATE 3-30120	2		
25 - 11	K1520000030	HOOK ASSY, RUBBER	2		
25 - 12	K0000060202	BOLT, M6-20	4		
25 - 13	K0200060002	WASHER, SPRING M6	4		
25 - 14	K5000060002	WASHER, M6	2		
25 - 15	K0100060002	NUT, M6	2		
25 - 16	K5011606222	WASHER, SPCC 1.6-6-22	2		
25 - 17	SP05---1304Z0	CARGO BOX	1		

SP05A_25_z00

https://truckmanualshub.com/

MEMO

https://truckmanualshub.com/

BARONESS®

Quality on Demand

KYOEISHA CO.,LTD.

Head Office 1-26, Miyuki-cho, Toyokawa, Aichi-Pref.442-8530 Japan.

Tel :(0533)84-1390
Fax:(0533)89-3623

SP05A---PC--GBZ/12E-00-S.K