https://truckmanualshub.com/

TADANO

MANTIS CRANES

20010

100 Ton Telescopic Boom Crawler Crane

SPECIFICATION SHEET NO. 481-03/11

GENERAL DATA

CRANE CAPACITY	100 ton at 10 feet (90t at 3.0m)
BOOM	4-section, 42'0" – 128'0" (12.8 m – 39.0 m)
DIMENSION	
Overall Length	54'0" (24.5 m)
Overall Width (tracks extended)	21'2" (6.45 m)
Overall Width (tracks retracted)	12' 9" (3.89 m)
Overall Width (tracks removed)	10'-8" (3.24 m)
Overall Height	14' 3" (4.35 m)
MASS	
Gross Vehicle Mass (Standard Equipment Package)	202,300 LB (91,762 kg)
PERFORMANCE	
Travel Speed	0.44 mph – 1.26 mph (0.7 km/h – 2.0 km/h)
Gradability	60%

CRANE SPECIFICATION

MODEL
20010

CAPACITY
100 ton at 10 feet (90t at 3.0m)

BOOM
4-section full power synchronized telescoping boom. Synchronized telescoping system consists of two double acting hydraulic cylinders with load holding valves and extension and retraction cables.

- Retracted Length: 42' 0" (12.8m)
- Extended Length: 128' 0" (39.0 m)
- Extension Time: 116 s
- Elevating Angles: -1° to 80°
- Elevating Time: `74 s
- Boom Head: Seven, 22 inch (559 mm) diameter cast nylon sheaves on heavy-duty roller bearings. (5 load bearing and 2 lead in sheaves)

AUXILIARY BOOM HEAD
Quick reeve, single 22 inch (559 mm) diameter high-strength, cast nylon sheave mounted on a heavy-duty roller bearing.

- Hook Block: 100 ton (90 t) hook block - Five 20 inch (508 mm) diameter sheaves mounted on heavy duty roller bearings with swivel hook and safety latch.
- Headache Ball: 12 ton (11t) ball includes a swivel hook with a safety latch

COUNTERWEIGHT
Total 35,240 LB (one piece 18,100 lb, one piece 17,140 lb)
15,984 kg (one piece 8,210 kg, one piece 7,774 kg)

WINCHES
Planetary geared two-speed winch includes a bent axis hydraulic motor, multi-disc internal brake and counterbalance valve. Drum rotation indicator is included (complete winch performance specs on Page 3)

- Main Winch
  - Rope Diameter and Length: 7/8" x 850 ft (22mm x 259m)
  - Single line pull: 24,000 lb (106.8 kN)(first layer)
  - Single line speed: 160 ft/min (48.8 m/min)(4th layer)
- Auxiliary Winch
  - Rope Diameter and Length: 7/8" x 500 ft (22mm x 152m)
  - Single line pull: 18,710 lb (78.1 kN) (first layer)
  - Single line speed: 189 ft/min (57.6 m/min) (at the 4th layer)

TRAVEL
Each side frame contains a pilot controlled, two-speed track drive with hydraulic axial piston motor and parking brake. Travel system provides skid steering and counter rotation.

- Low travel speed: 0.44 mph (0.7 km/h)
- High travel speed : 1.26 mph (2.0 km/h)
- Gradeability (unladen): 60%

SWING
Gear motor driving a planetary gear reducer with a shaft mounted pinion, external gear shear ball slew bearing bolted to the superstructure and the carbody allows the superstructure to rotate 360°

- Swing Speed: 0 - 2 rpm
- Swing Parking Brake: Spring applied failsafe brake with hydraulic release that is controlled from the operators cab
- Swing Service Brake: Hydraulically applied, controlled through foot actuated pedal
- House Lock System: 2-position, manually pinned

LOAD MOMENT INDICATOR
Standard Rated Capacity Limiter and Anti-Two Block system

- Control function shutdown. Audible and visual warnings
- LCD screen provides a continuous display of working boom length, boom angle, working load radius, tip height, parts-of-line (operator set), machine track configuration, relative load moment, maximum permissible load and actual load.
- Anti-two block weight allows quick reeving of hook block

FRAME
The frame is an all-steel, welded structure, precision machined to accept attachment of the boom and swing components.

https://truckmanualshub.com/

OPERATORS CAB

Fully-enclosed, air conditioned all-steel modular cab with lockable swinging door, acoustical lining, anti-slip floor and tinted safety glass.

- Cab tilts 20°.
- Rear view cameras are appropriately located as are three remote control work lights.
- Vent window in the rear of the cab.
- Grab bars and steps are located for easy access to the cab.
- Defroster, heater, circulating fan
- 2-speed windshield wiper, top glass wiper
- Six-way adjustable fabric seat with headrest, seat belt
- Dome light
- Dry-chemical fire extinguisher
- Two-way armrest mounted hydraulic joysticks control swing, , main winch, auxiliary winch. and boom hoist. Hydraulic foot pedals control the travel, boom extend, and swing service brake functions.
- Seat and armrest termination switches immediately disable all hydraulic functions as the operator rises from the seat or lifts the left hand armrest.

Dash instrumentation: tachometer, voltmeter, oil pressure gauge, temperature gauge, hour meter and fuel gauge. Indicators are provided for crane level, load moment, drum rotation, air filter restriction, hydraulic oil temperature and filter restriction, engine oil pressure and temperature.

ENGINE

- Make/ Model: Cummins QSM11
- Type: 6 Cylinder, Water cooled, 4 Cycle
- Aspiration: Turbocharged and Aftercooled
- Max.Output: 375 hp (280 kw) @ 2100 RPM
- Max Torque: 1,400 Lb-ft (1,898 Nm) @ 1400 RPM
- Piston Disp: 10.8 liter
- Bore x Stroke:107mm x 124mm
- Emission Cert: U.S. EPA Tier 3, Euromot Stage IIIA
- Alternator: 130 amp

ELECTRICAL SYSTEM

12 VDC

FUEL SYSTEM

- Capacity: 165 gallon (625 liter)
- Filtration: Inline fuel/water separator and engine mounted fuel filter

SIDE FRAMES

Two welded steel side frames are paired with a track group. The side frames extend and retract hydraulically and are controlled from the cab.

- Track Rollers: Two top and thirteen bottom sealed rollers on each track frame Idler: Oil filled, self lubricating with hydraulic type tensioner
- Track Shoes: 36 inch (900 mm), 3-bar semi grouser

HYDRAULIC SYSTEM

- Hydraulic Pumps: Two high pressure, variable axial piston pumps with load sense and power limiting control for crane functions. One variable axial piston pump for cooling loop
- Directional Valves: Multiple pressure and flow compensated valves with integrated relief valves controlled by hydraulic pilot signals.
- Pump output: 210 gpm (795 l/min) @ 2100 RPM engine speed. 4,800 psi (330 bar) maximum pressure
- Reservoir: 370 gallon (1,400 liter) capacity, spin-on filler/ breather, sight gauge, cleanout, and sump drain.
- Filtration: 5 micron, full flow tank mounted return filters with electrical clogging indicator. 5 micron pilot oil in-line pressure filter
- Diagnostic Ports: Provided for system, load sense, and pilot pressure..

OPTIONAL EQUIPMENT

- Boom Extension: Lattice type, swing away
  - Length: 35 feet (10.7 m)
  - Head: Two, 22-inch (559 mm) diameter cast nylon sheaves on heavy-duty roller bearings
  - Max. Lifting Height: 167 ft (50.9 m)
- Boom Jib: Lattice type, swing away, stores along boom extension
  - Length: 25 feet (7.62m)
  - Offset Angles: 15° & 30°
  - Max. Lifting Height: 191’ 6” feet (58.4 m)
- 50 ton (45t) hook block - Three 18 inch (457 mm) steel sheaves, swivel hook & safety latch
- Auger Ready Package: Includes hoses, fasteners and stowage bracket assembly mounted to the base section of the boom with a flow capability of 34 gpm (130 l/min)
- Complete Auger Package: Adds a two speed auger motor/gear box and one 60 inch (1.52 m) kelly bar to the Auger Ready Package.
- Tool Circuit: Provides 5 gpm (23 l/min) and 10 gpm (45 l/min) at 2,500 PSI (176 bar) through a 50 foot (15.2m) twin hose reel with quick disconnect fittings to operate open center tools.
- Free Fall Hoists: Winches are available in controlled free fall configurations.
- Cold Weather Packages: Cold weather options are available for operation to -40°C (Consult factory for application support)
- Work Platform: Model WP750 – 36 in x 72 in (0.9m x 1.8m) , all steel, welded, two person platform with maximum capacity of 750 lbs (340 kg).
- Radio control package.
- Rotation resistant wire rope.

https://truckmanualshub.com/

MAIN WINCH

Planetary geared two-speed winch includes a bent axis, variable displacement hydraulic motor and a multi-disc internal brake.
Wire Rope: 850 ft (259 m) 7/8 in (22 mm) 6 x 37 EIPS, IWRC, RRL. Line pulls are not based on wire rope strength.

Rope Layer	Maximum Line Pull		No Load Line Speed		Full Load Line Speed		Pitch Diameter		Layer		Total	
	lb	kN	ft/min	m/min	ft/min	m/min	in	mm	ft	m	ft	m
1	24,000	106.8	238	72.5	125	38.1	18.8	477.5	133	40.5	133	40.5
2	21,950	97.6	260	79.2	137	41.8	20.6	524.0	145	44.2	278	84.7
3	20,240	90.0	282	86.0	148	45.1	22.4	568.5	157	47.9	435	132.6
4	18,770	83.5	304	92.7	160	48.8	24.1	612.9	169	51.5	604	184.1
5	17,500	77.8	326	99.4	172	52.4	25.9	657.4	182	55.5	786	239.6
6	16,390	72.9	348	106.1	183	55.8	27.6	701.8	194	59.1	980	298.7
7	15,415	68.6	370	131.1	195	59.4	29.4	686.4	207	57.5	1187	342.8
8	14,550	64.7	392	119.5	206	62.8	31.1	790	218	66.4	1405	428.2

AUXILIARY HOIST

Planetary geared two-speed winch includes a bent axis, variable displacement hydraulic motor and a multi-disc internal brake.
Wire Rope: 500 ft (152 m) 7/8 in (22 mm) 6 x 37 EIPS, IWRC, RRL. Line pulls are not based on wire rope strength.

Rope Layer	Maximum Line Pull		No Load Line Speed		Full Load Line Speed		Pitch Diameter		Layer		Total	
	lb	kN	ft/min	m/min	ft/min	m/min	in	mm	ft	m	ft	m
1	18,710	83.2	347	105.8	162	49.4	16.8	426.7	117	35.7	117	35.7
2	17,130	76.2	372	113.4	174	53	17.6	447	123	37.5	240	73.2
3	15,790	70.2	389	118.6	181	55.2	18.3	464.8	128	38.9	368	112.1
4	14,650	65.2	405	123.4	189	57.6	19.1	485.1	133	40.6	501	152.8
5	13,660	60.8	430	131.1	200	61	19.9	505.5	139	42.3	640	195.1
6	12,800	56.9	438	133.5	204	62.2	20.7	525.8	145	44	785	239.2

MACHINE WEIGHTS	LB	KG
STANDARD CRANE WITH 4 SECTION 128 ft (39.01 m) BOOM, 2 PIECE COUNTERWEIGHT & 36 in (914 mm) TRACK SHOES	192,985	87,537
POWER UNIT: Crane Less Counterweight and Track Frames	100,745	45,699
Counterweight, 2 pieces [1 piece @ 18,100 lb (8,210 kg) and 1 piece @ 17,140 lb (7,775 kg)]	35,240	15,984
Track Frames, 2 pieces [each 28,500 lb (12,927 kg)]	57,000	25,854
OPTIONAL EQUIPMENT	**LB**	**KG**
35 ft (10.67 m) Lattice Extension	2,545	1,154
25 ft (7.62 m) Jib (connects to head of Lattice Extension ONLY)	836	379
Auxiliary Winch with Standard Rope	2,602	1,180
Auxiliary Nose Sheave	250	113
12 ton (11 mt) Headache Ball	585	270
100 ton (91 mt) Hook Block	2,500	1,134
Auger Ready Package	440	200
Complete Auger Package	1,520	690
60 in Kelly Bar	120	50

** Deduction from Standard Crane Weight*

https://truckmanualshub.com/

DIMENSIONS

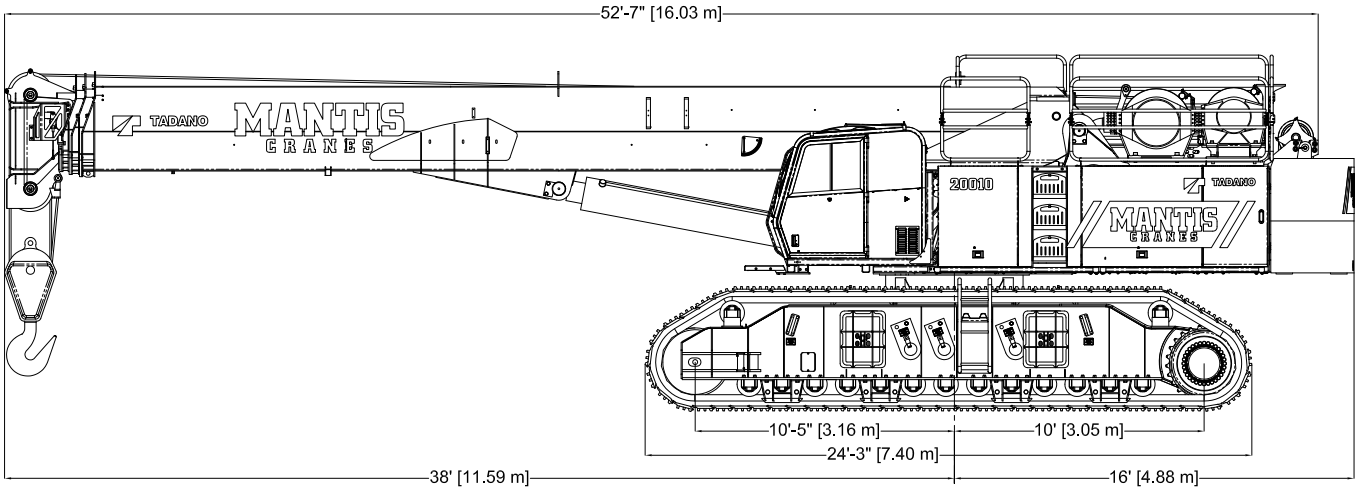

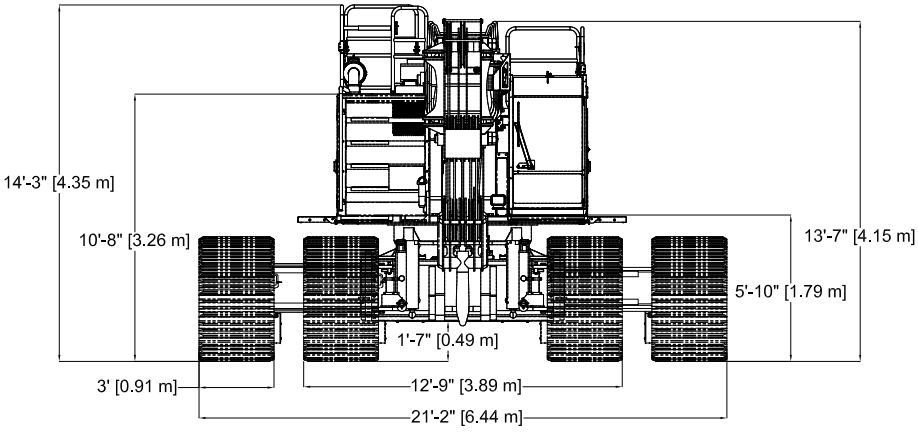

WIDTHS, WEIGHTS, AND GROUND PRESSURES*

Shoe Width	Overall Width		Area	Ground Pressure	Working Weight
	Retracted	Extended			
36 in (900 mm)	12 ft 11 in (3.94 m)	21 ft 1 in (6.43 m)	17,640 in² (11.38 m²)	11.4 psi (0.80 kg/cm²)	202,300 lb (91,762 kg)

** Crane equipped with: 128 ft boom, 35 ft extension, 25 ft jib, aux winch, nose sheave, 100 ton hook block and 12 ton headache ball*

https://truckmanualshub.com/

TRANSPORT PLAN

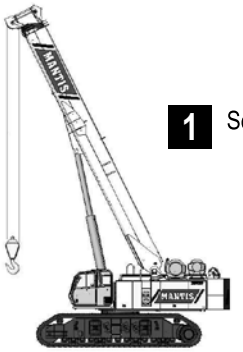

1 Select firm and level site

5 Remove track Frames

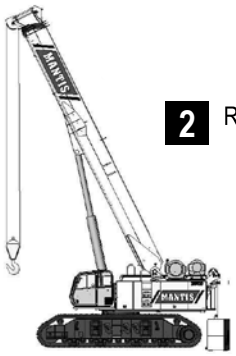

2 Remove counter weights

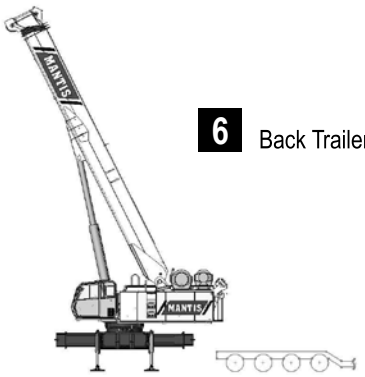

6 Back Trailer Under Crane

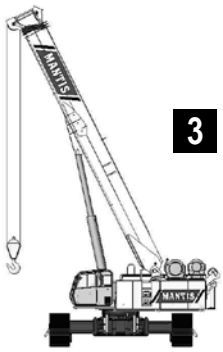

3 Rotate Upper over side

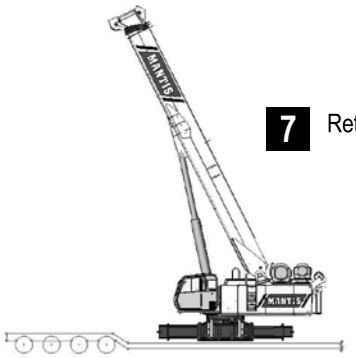

7 Retract Carbody Jacks

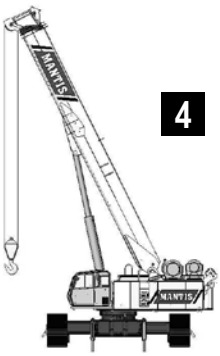

4 Extend Carbody Jacks

8 Lower Boom

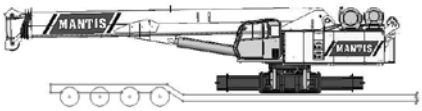

MAJOR COMPONENT SHIPPING WEIGHTS SHOWN ON PAGE 3.

https://truckmanualshub.com/

TRANSPORT DIMENSIONS (TRACKS REMOVED)

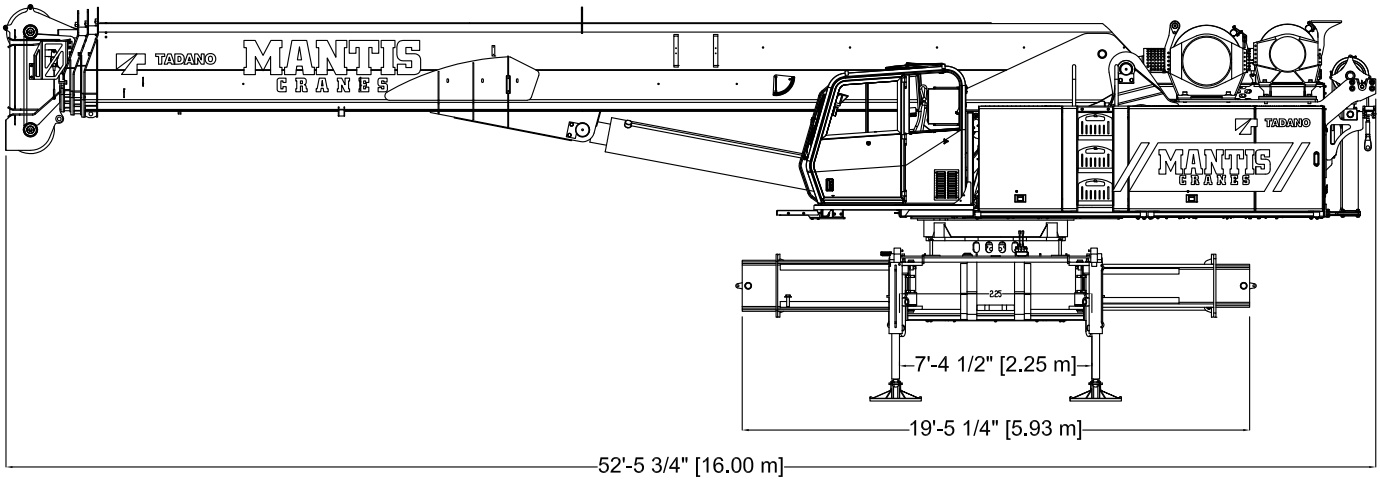

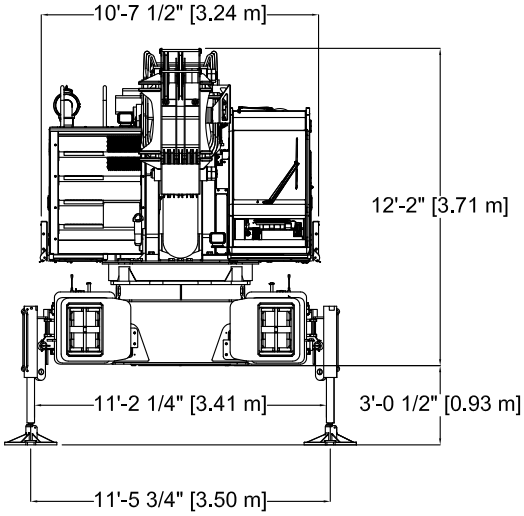

https://truckmanualshub.com/

TRANSPORT DIMENSIONS

Track Frames:
2 Pieces
28,500 lb (12,927 kg) each

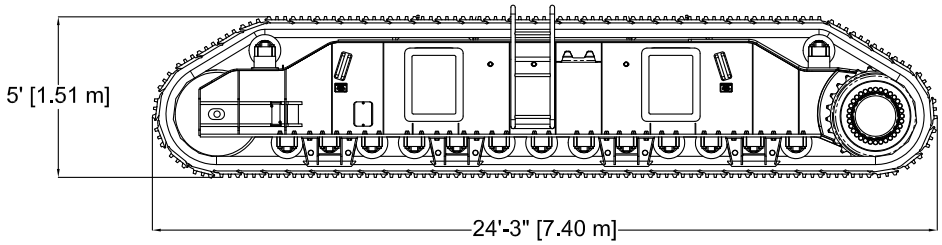

Upper Counterweight
1 Piece
17,140 lb (7,775 kg)

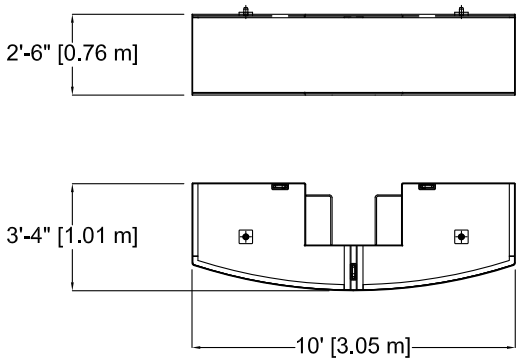

Lower Counterweight
1 Piece
18,100 lb (8,210 kg)

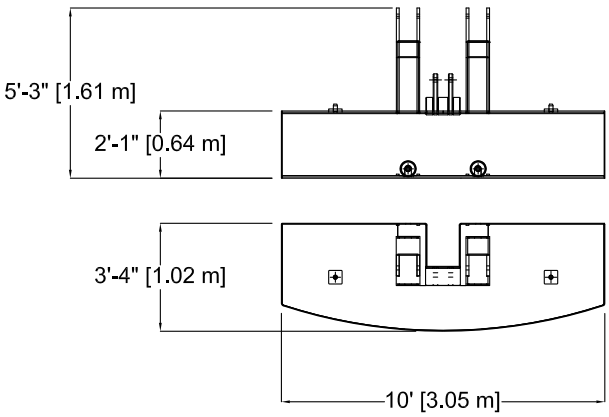

https://truckmanualshub.com/

111 FT 6 IN MAIN BOOM, 35 FT EXTENSION & 25 FT JIB

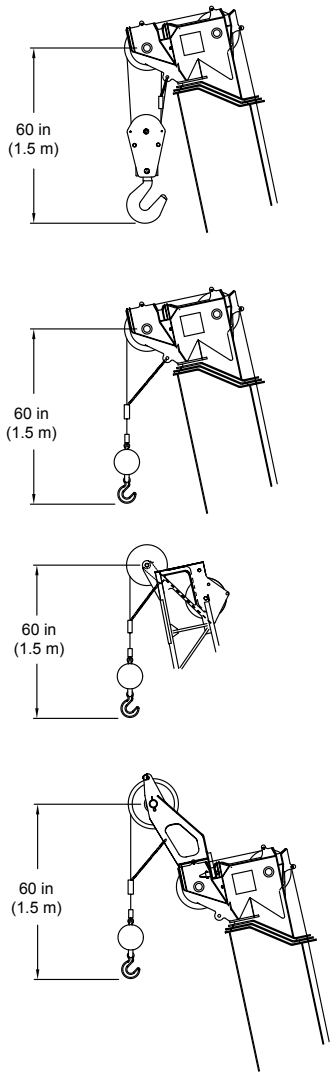

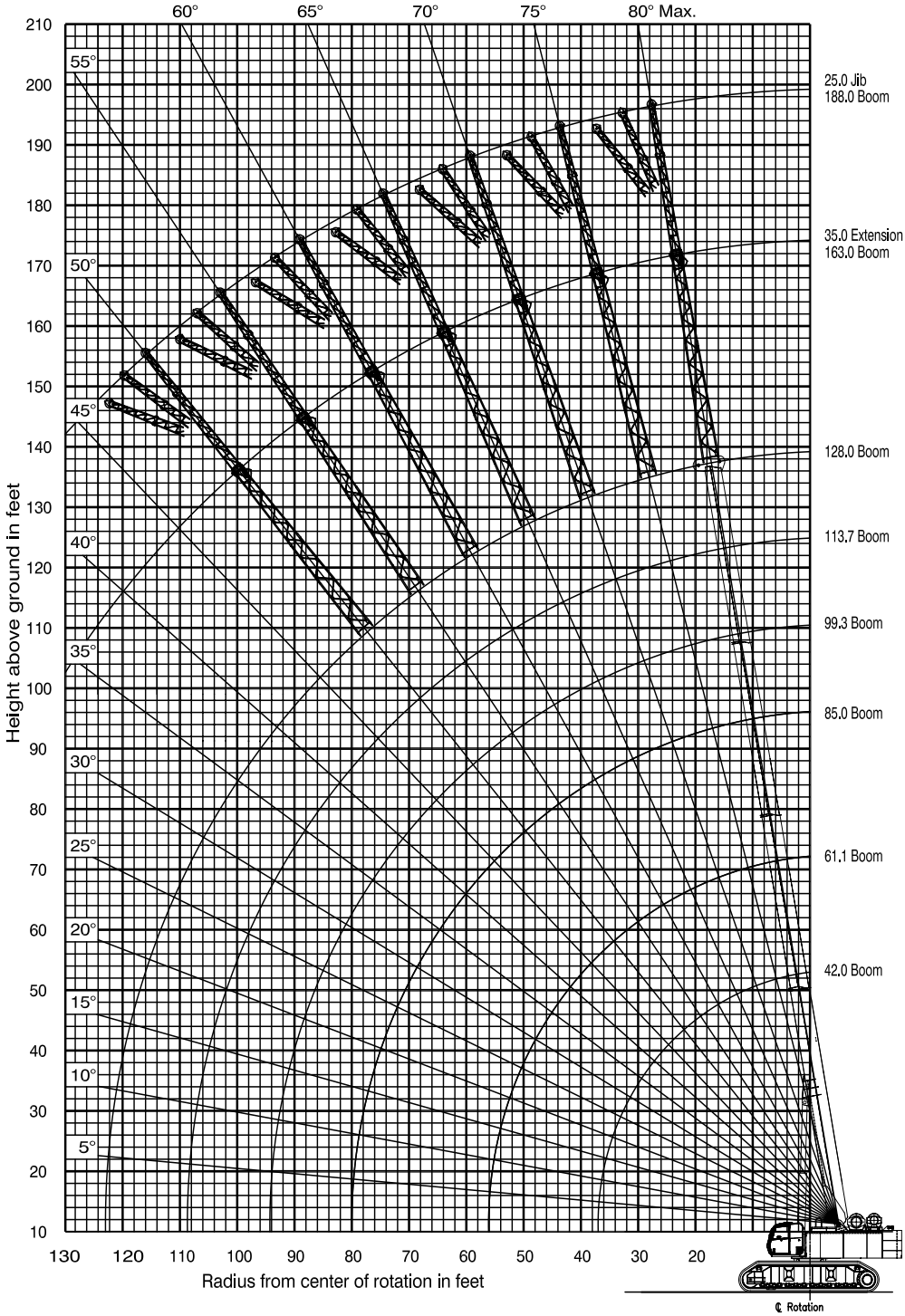

https://truckmanualshub.com/

LOAD CHARTS

360 DEGREE RATING - LOADS IN lb x 1000

MAIN BOOM with TRACKS FULLY EXTENDED									
35,000 lb COUNTERWEIGHT									
RADIUS (ft)	MAIN BOOM LENGTH (ft)								RADIUS (ft)
	42.0	51.6	61.1	70.7	85.0	99.3	113.7	128.0	
10	200.0	140.0	120.0	96.0					10
12	172.0	132.0	109.0	86.0	70.0				12
15	155.0	120.0	95.0	75.0	64.0	50.0			15
20	129.0	100.0	78.0	61.0	53.0	47.0	45.0	40.0	20
25	112.2	90.0	70.0	55.0	46.0	44.0	42.0	37.5	25
30	79.6	78.9	62.0	49.0	43.0	41.5	38.0	35.0	30
35	65.2	64.5	54.0	42.0	37.5	35.5	33.5	32.5	35
40		47.0	46.5	37.0	35.0	34.2	30.0	29.0	40
45		38.0	37.6	35.0	33.0	30.6	27.5	26.9	45
50			30.8	30.4	31.0	27.0	25.0	24.0	50
55			25.3	25.1	25.9	24.8	23.0	21.8	55
60				20.8	22.2	22.8	21.0	19.5	60
65				17.7	19.3	20.8	19.0	17.8	65
70					17.2	18.3	17.2	16.0	70
75					15.1	16.2	16.0	14.8	75
80					13.0	14.1	14.6	13.9	80
85						12.3	13.1	12.7	85
90						10.8	11.5	11.8	90
95							10.3	10.7	95
100							9.0	9.4	100
105							7.9	8.4	105
110								7.5	110
115								6.6	115
120								5.9	120

NOTE: Capacities appearing above the bold line are based on structural strength; tipping should not be relied upon as a capacity limitation.
Capacities appearing below the bold line are based on stability and do not exceed 75% of tipping.

https://truckmanualshub.com/

LOAD CHARTS

360 DEGREE RATING - LOADS IN lb x 1000

MAIN BOOM with TRACKS RETRACTED									
35,000 lb COUNTERWEIGHT									
RADIUS (ft)	MAIN BOOM LENGTH (ft)								RADIUS (ft)
	42.0	**51.6**	**61.1**	**70.7**	**85.0**	**99.3**	**113.7**	**128.0**	
10	200.0	140.0	120.0	96.0					**10**
12	169.0	132.0	109.0	86.0	70.0				**12**
15	124.7	120.0	95.0	75.0	64.0	50.0			**15**
20	80.7	79.1	78.0	61.0	53.0	47.0	45.0	40.0	**20**
25	59.9	58.6	58.0	55.0	46.0	44.0	42.0	37.5	**25**
30	43.2	42.5	42.3	41.1	43.0	41.5	38.0	35.0	**30**
35	31.1	30.3	29.7	28.8	30.1	35.5	33.5	32.5	**35**
40		25.9	25.5	24.6	25.9	27.2	30.0	29.0	**40**
45		20.5	20.1	19.4	20.9	22.4	23.0	26.9	**45**
50			16.0	15.4	16.9	18.5	19.3	20.0	**50**
55			13.0	12.4	13.8	15.2	15.9	16.5	**55**
60				10.1	11.4	12.6	13.3	13.9	**60**
65				8.2	9.3	10.5	11.2	11.9	**65**
70					8.1	8.8	9.5	10.1	**70**
75					6.6	7.3	8.0	8.6	**75**
80					5.5	6.2	6.8	7.3	**80**
85						5.2	5.7	6.1	**85**
90						4.4	4.7	5.0	**90**
95							3.6	4.1	**95**
100							2.9	3.3	**100**
105							2.3	2.6	**105**
110								2.1	**110**
115								NR	**115**
120								NR	**120**

NOTE: Capacities appearing above the bold line are based on structural strength; tipping should not be relied upon as a capacity limitation.
Capacities appearing below the bold line are based on stability and do not exceed 75% of tipping.

https://truckmanualshub.com/

LOAD CHARTS

360 DEGREE RATING - LOADS IN lb x 1000

MAIN BOOM with TRACKS FULLY EXTENDED									
18,100 lb COUNTERWEIGHT									
RADIUS (ft)	MAIN BOOM LENGTH (ft)								RADIUS (ft)
	42.0	51.6	61.1	70.7	85.0	99.3	113.7	128.0	
10	200.0	140.0	120.0	96.0					10
12	172.0	132.0	109.0	86.0	70.0				12
15	155.0	120.0	95.0	75.0	64.0	50.0			15
20	125.0	100.0	78.0	61.0	53.0	47.0	45.0	40.0	20
25	89.5	88.6	70.0	55.0	46.0	44.0	42.0	37.5	25
30	63.7	62.8	62.0	49.0	43.0	41.5	38.0	35.0	30
35	48.3	47.5	46.9	42.0	37.5	35.5	33.5	32.5	35
40		37.6	37.3	36.9	35.0	34.2	30.0	29.0	40
45		30.4	30.0	29.6	30.5	30.6	27.5	26.9	45
50			24.0	23.7	24.5	25.1	25.0	24.0	50
55			19.6	19.2	20.0	20.7	21.1	21.7	55
60				15.8	17.3	18.8	19.0	19.3	60
65				13.2	14.6	16.1	16.4	16.8	65
70					12.7	13.7	14.4	15.1	70
75					10.6	11.7	12.5	13.4	75
80					8.9	9.9	10.8	11.8	80
85						8.5	9.3	10.2	85
90						7.2	8.0	8.8	90
95							7.0	7.5	95
100							5.8	6.3	100
105							4.9	5.4	105
110								4.6	110
115								3.9	115
120								3.3	120

NOTE: Capacities appearing above the bold line are based on structural strength; tipping should not be relied upon as a capacity limitation.
Capacities appearing below the bold line are based on stability and do not exceed 75% of tipping.

https://truckmanualshub.com/

LOAD CHARTS

360 DEGREE RATING - LOADS IN lb x 1000

MAIN BOOM with TRACKS FULLY EXTENDED									
NO COUNTERWEIGHT									
RADIUS (ft)	MAIN BOOM LENGTH (ft)								RADIUS (ft)
	42.0	51.6	61.1	70.7	85.0	99.3	113.7	128.0	
10	200.0	140.0	120.0	96.0					10
12	172.0	132.0	109.0	86.0	70.0				12
15	154.1	120.0	95.0	75.0	64.0	50.0			15
20	100.4	100.0	78.0	61.0	53.0	47.0	45.0	40.0	20
25	68.9	68.2	67.5	55.0	46.0	44.0	42.0	37.5	25
30	49.2	48.4	48.1	47.9	43.0	41.5	38.0	35.0	30
35	36.3	36.5	36.7	36.9	37.2	35.5	33.5	32.5	35
40		27.3	26.8	26.3	28.1	29.9	30.0	29.0	40
45		20.5	20.1	19.7	21.3	23.0	24.6	26.3	45
50			15.7	15.4	16.9	18.5	19.4	20.4	50
55			12.6	12.3	13.7	15.2	15.9	16.7	55
60				10.1	11.3	12.5	13.3	14.1	60
65				8.4	9.3	10.3	11.1	12.0	65
70					7.5	8.4	9.3	10.1	70
75					6.0	6.8	7.6	8.5	75
80					4.5	5.4	6.2	6.9	80
85						4.2	4.9	5.6	85
90						3.2	3.8	4.4	90
95							2.9	3.4	95
100							2.2	2.6	100
105							NR	NR	105
110								NR	110
115								NR	115
120								NR	120

NOTE: Capacities appearing above the bold line are based on structural strength; tipping should not be relied upon as a capacity limitation.
Capacities appearing below the bold line are based on stability and do not exceed 75% of tipping.

https://truckmanualshub.com/

LOAD CHARTS

360 DEGREE RATING - LOADS IN lb x 1000

AUXILIARY BOOM NOSE SHEAVE with TRACKS FULLY EXTENDED									
35,000 lb COUNTERWEIGHT									
RADIUS (ft)	MAIN BOOM LENGTH (ft)								RADIUS (ft)
	42.0	51.6	61.1	70.7	85.0	99.3	113.7	128.0	
10	18.0	18.0	18.0	18.0					10
12	18.0	18.0	18.0	18.0	18.0				12
15	18.0	18.0	18.0	18.0	18.0	18.0			15
20	18.0	18.0	18.0	18.0	18.0	18.0	18.0	18.0	20
25	18.0	18.0	18.0	18.0	18.0	18.0	18.0	18.0	25
30	18.0	18.0	18.0	18.0	18.0	18.0	18.0	18.0	30
35	18.0	18.0	18.0	18.0	18.0	18.0	18.0	18.0	35
40		18.0	18.0	18.0	18.0	18.0	18.0	18.0	40
45		18.0	18.0	18.0	18.0	18.0	18.0	18.0	45
50			18.0	18.0	18.0	18.0	18.0	18.0	50
55			18.0	18.0	18.0	18.0	18.0	18.0	55
60				18.0	18.0	18.0	18.0	18.0	60
65				17.4	18.0	18.0	18.0	18.0	65
70					16.9	18.0	17.2	16.0	70
75					14.8	15.9	15.7	14.8	75
80					12.7	13.8	14.3	13.9	80
85						12.0	12.8	12.7	85
90						10.0	11.2	11.5	90
95							10.0	10.4	95
100							8.7	9.1	100
105							7.6	8.1	105
110								7.2	110
115								6.3	115
120								5.6	120

NOTE: Capacities appearing above the bold line are based on structural strength; tipping should not be relied upon as a capacity limitation.
Capacities appearing below the bold line are based on stability and do not exceed 75% of tipping.

https://truckmanualshub.com/

LOAD CHARTS

360 DEGREE RATING - LOADS IN lb x 1000

AUXILIARY BOOM NOSE SHEAVE with TRACKS RETRACTED									
35,000 lb COUNTERWEIGHT									
RADIUS (ft)	MAIN BOOM LENGTH (ft)								RADIUS (ft)
	42.0	51.6	61.1	70.7	85.0	99.3	113.7	128.0	
10	18.0	18.0	18.0	18.0					10
12	18.0	18.0	18.0	18.0	18.0				12
15	18.0	18.0	18.0	18.0	18.0	18.0			15
20	18.0	18.0	18.0	18.0	18.0	18.0	18.0	18.0	20
25	18.0	18.0	18.0	18.0	18.0	18.0	18.0	18.0	25
30	18.0	18.0	18.0	18.0	18.0	18.0	18.0	18.0	30
35	18.0	18.0	18.0	18.0	18.0	18.0	18.0	18.0	35
40		18.0	18.0	18.0	18.0	18.0	18.0	18.0	40
45		18.0	18.0	18.0	18.0	18.0	18.0	18.0	45
50			15.7	15.1	16.6	18.0	18.0	18.0	50
55			12.7	12.1	13.5	14.9	15.6	16.2	55
60				9.8	11.1	12.3	13.0	13.6	60
65				8.0	9.0	10.2	10.9	11.6	65
70					7.8	8.5	9.2	9.8	70
75					6.3	7.0	7.7	8.3	75
80					5.2	5.9	6.5	7.0	80
85						4.9	5.4	5.8	85
90						4.1	4.4	4.7	90
95							3.3	3.8	95
100							2.6	3.0	100
105							2.0	2.3	105
110								NR	110
115								NR	115
120								NR	120

NOTE: Capacities appearing above the bold line are based on structural strength; tipping should not be relied upon as a capacity limitation.
Capacities appearing below the bold line are based on stability and do not exceed 75% of tipping.

https://truckmanualshub.com/

LOAD CHARTS

360 DEGREE RATING - LOADS IN lb x 1000

AUXILIARY BOOM NOSE SHEAVE with TRACKS FULLY EXTENDED									
18,100 lb COUNTERWEIGHT									
RADIUS (ft)	MAIN BOOM LENGTH (ft)								RADIUS (ft)
	42.0	51.6	61.1	70.7	85.0	99.3	113.7	128.0	
10	18.0	18.0	18.0	18.0					10
12	18.0	18.0	18.0	18.0	18.0				12
15	18.0	18.0	18.0	18.0	18.0	18.0			15
20	18.0	18.0	18.0	18.0	18.0	18.0	18.0	18.0	20
25	18.0	18.0	18.0	18.0	18.0	18.0	18.0	18.0	25
30	18.0	18.0	18.0	18.0	18.0	18.0	18.0	18.0	30
35	18.0	18.0	18.0	18.0	18.0	18.0	18.0	18.0	35
40		18.0	18.0	18.0	18.0	18.0	18.0	18.0	40
45		18.0	18.0	18.0	18.0	18.0	18.0	18.0	45
50			18.0	18.0	18.0	18.0	18.0	18.0	50
55			18.0	18.0	18.0	18.0	18.0	18.0	55
60				15.5	17.0	18.0	18.0	18.0	60
65				12.9	14.3	15.8	16.1	16.5	65
70					12.4	13.4	14.1	14.8	70
75					10.3	11.4	12.2	13.1	75
80					8.6	9.6	10.5	11.5	80
85						8.2	9.0	9.9	85
90						6.9	7.7	8.5	90
95							6.7	7.2	95
100							5.5	6.0	100
105							4.6	5.1	105
110								4.3	110
115								3.6	115
120								3.0	120

NOTE: Capacities appearing above the bold line are based on structural strength; tipping should not be relied upon as a capacity limitation.
Capacities appearing below the bold line are based on stability and do not exceed 75% of tipping.

https://truckmanualshub.com/

LOAD CHARTS

360 DEGREE RATING - LOADS IN lb x 1000

AUXILIARY BOOM NOSE SHEAVE with TRACKS FULLY EXTENDED									
NO COUNTERWEIGHT									
RADIUS (ft)	MAIN BOOM LENGTH (ft)								RADIUS (ft)
	42.0	51.6	61.1	70.7	85.0	99.3	113.7	128.0	
10	18.0	18.0	18.0	18.0					10
12	18.0	18.0	18.0	18.0	18.0				12
15	18.0	18.0	18.0	18.0	18.0	18.0			15
20	18.0	18.0	18.0	18.0	18.0	18.0	18.0	18.0	20
25	18.0	18.0	18.0	18.0	18.0	18.0	18.0	18.0	25
30	18.0	18.0	18.0	18.0	18.0	18.0	18.0	18.0	30
35	18.0	18.0	18.0	18.0	18.0	18.0	18.0	18.0	35
40		18.0	18.0	18.0	18.0	18.0	18.0	18.0	40
45		18.0	18.0	18.0	18.0	18.0	18.0	18.0	45
50			15.4	15.1	16.6	18.0	18.0	18.0	50
55			12.3	12.0	13.4	14.9	15.6	16.4	55
60				9.8	11.0	12.2	13.0	13.8	60
65				8.1	9.0	10.0	10.8	11.7	65
70					7.2	8.1	9.0	9.8	70
75					5.7	6.5	7.3	8.2	75
80					4.2	5.1	5.9	6.6	80
85						3.9	4.6	5.3	85
90						2.9	3.5	4.1	90
95							2.6	3.1	95
100							1.9	2.3	100
105							NR	NR	105
110								NR	110
115								NR	115
120								NR	120

NOTE: Capacities appearing above the bold line are based on structural strength; tipping should not be relied upon as a capacity limitation.
Capacities appearing below the bold line are based on stability and do not exceed 75% of tipping.

https://truckmanualshub.com/

LOAD CHARTS

360 DEGREE RATING - LOADS IN lb x 1000

35' EXTENSION & 25' JIB with TRACKS FULLY EXTENDED

35,000 lb COUNTERWEIGHT

35' EXTENSION			25' JIB			
Boom Angle	Total Boom Length		Jib Offset Angles			Boom Angle
	77' to 150'	> 150'	0°	15°	30°	
80º	25.0	25.0	12.0	7.3	4.0	80º
78º	18.9	18.9	11.6	6.9	3.8	78º
75º	16.0	16.0	10.2	6.4	3.6	75º
72º	14.0	14.0	9.3	5.8	3.5	72º
70º	12.4	12.4	8.4	5.5	3.3	70º
68º	11.1	11.1	7.6	5.1	3.3	68º
65º	10.0	10.0	7.1	4.7	3.1	65º
62º	9.3	9.3	6.4	4.4	3.1	62º
60º	8.5	8.5	5.8	3.5	2.5	60º
58º	8.1	8.1	4.7	2.4	1.8	58º
55º	7.4	7.4	3.6	1.1	0.7	55º
52º	7.1	7.1	2.4	0.5	0.4	52º
50º	6.8	6.8	2.0	0.4	0.3	50º
48º	6.4	6.1				48º
45º	6.0	5.0				45º

Weight Reductions for Load Handling Devices	
Hookblocks	
100 Ton - 5 Sheave	2500 lb.
12 Ton Overhaul Ball w/Swivel	585 lb.
Optional Load Handling Devices	
35 ft. Extension - Stowed*	285 lb.
35 ft. Extension - Erected*	4115 lb.
35 ft. Ext. and 25 ft. Jib - Stowed*	280 lb.
35 ft. Ext. and 25 ft. Jib - Erected*	6640 lb.
Auxiliary Nose Sheave*	250 lb.
Auger Ready Package*	200 lb.
Auger Package Complete - Stowed*	450 lb.
Auger Package Complete - Erected*	1120 lb.
*Reduction of main boom capacities	

NOTE: Capacities appearing above the bold line are based on structural strength; tipping should not be relied upon as a capacity limitation.
Capacities appearing below the bold line are based on stability and do not exceed 75% of tipping.

https://truckmanualshub.com/

LOAD CHARTS

750 WORK PLATFORM
Installed on MANTIS MODEL 20010
as originally manufactured and equipped by Tadano Mantis Corporation

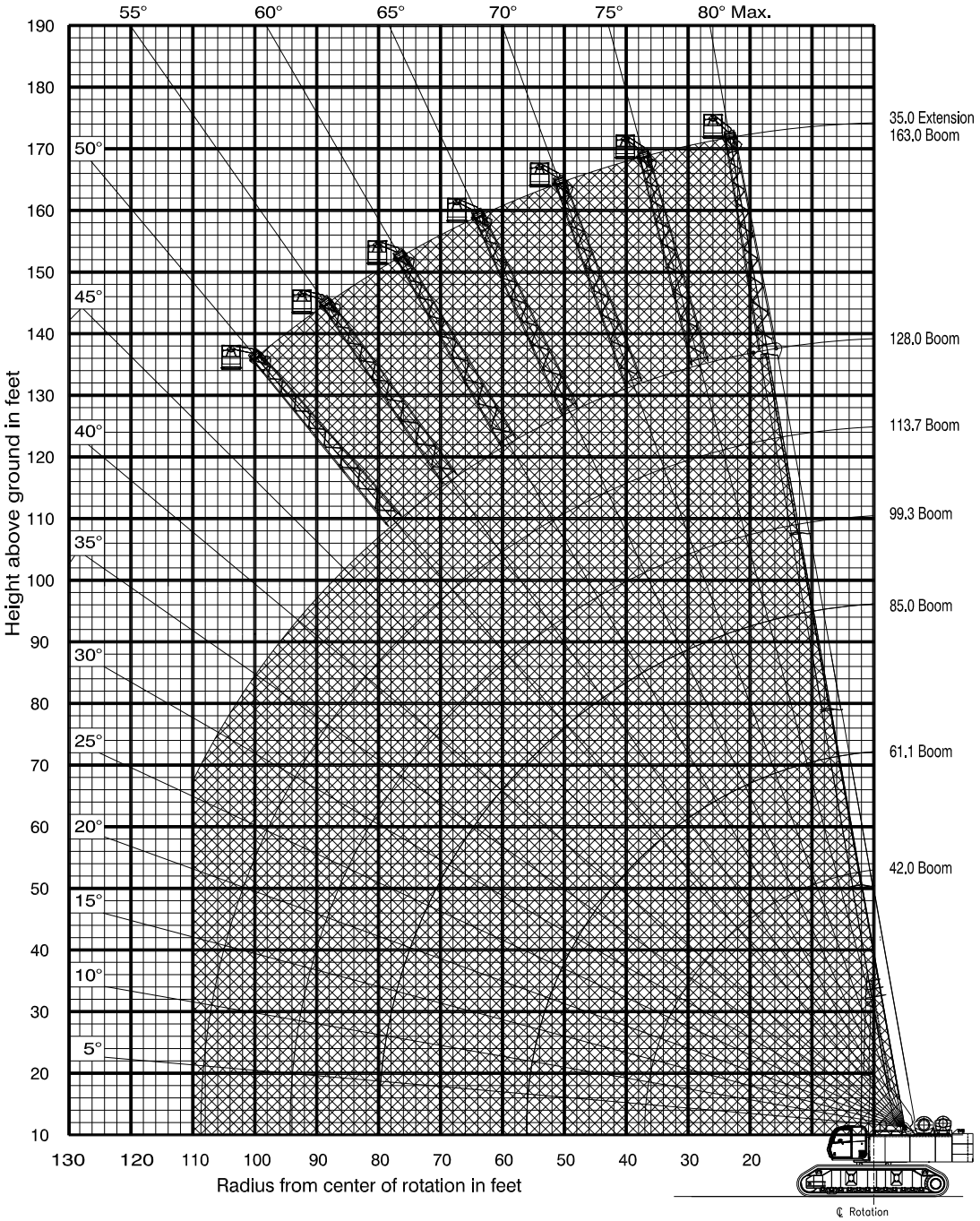

Limits of operation:
Maximum load capacity = 750 lb (340 kg)
Maximum radius when mounted on main boom = 110 ft (30.4 m)
Minimum boom angle when mounted on 35 ft extension = 50°

https://truckmanualshub.com/

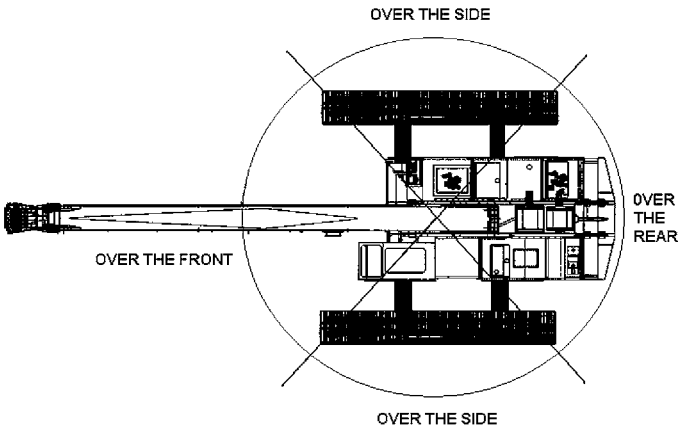

TADANO MANTIS 20010				
WIRE ROPE LINE PULL CAPACITIES				
PARTS OF LINE	MAIN WINCH (pounds)	AUX WINCH (pounds)	PARTS OF LINE	MAIN WINCH (pounds)
1	22,740	18,700	6	136,440
2	45,480	37,400	7	159,180
3	68,220	N/A	8	181,920
4	90,960	N/A	9	204,660
5	113,700	N/A	10	227,400
7/8 inch diameter wire rope, 6 x 37 Class, EIP, IWRC				

PLEASE READ, UNDERSTAND, AND FOLLOW THE MANUALS FURNISHED WITH THE CRANE (OPERATORS AND SAFETY) AS WELL AS THE CAPACITY LIMITATIONS AND GENERAL CONDITIONS LISTED BELOW PRIOR TO OPERATION OF THE CRANE. FAILURE TO DO SO MAY RESULT IN AN ACCIDENT.

This **MANTIS CRANE** as manufactured by Tadano Mantis Corporation meets the requirements of **ASME B30.5**. Structure and stability have been tested in accordance **with SAE J1063 and SAE J765**, respectively. Lifting capacities as determined by boom length, angle or radius, apply only to machines as originally equipped by manufacturer and in a properly maintained condition. Capacities given are maximum covered by the manufacturers warranty and are based on a freely suspended load with **NO** allowance for factors as out-of-level operation, supporting surface conditions, hazardous surroundings, experience of personnel, etc. The operator shall establish practical working loads based on prevailing operating conditions, such as, but not limited to the above.

When making lifts where capacities may be within a zone limited by structural strength, the operator shall determine that the weight of the load is known within plus or minus (+/-) ten percent (10%) before making lift. **DO NOT** lift load or extend boom without counterweight in place. Deductions from rated capacities must be made for the weight of the hook block, hook/ball, slings, spreader bar, or other suspended equipment.

Side pull on boom is extremely dangerous and must be avoided.

DO NOT exceed manufacturers maximum specified reeving.

DO NOT use this chart if wind speed exceeds 20 mph. Consult the manufacturer for specialized load ratings.

Load radius is defined as the horizontal distance from the axis of rotation (with no load) to the center of the lifting device after load is applied.
Boom angle is the included angle between the longitudinal axis of the boom base section and the Horizontal axis, after lifting load. The boom angle before lifting should be slightly greater than desired to account for boom deflection.

Boom angle/boom length relationships given are an approximation of the resulted load radius, which should be an accurate measurement.
Boom height dimensions are measured from ground to center of lower boom head sheave.

It is permissible to attempt to telescope boom with a load within the limits of rated capacities. However, boom angle system hydraulic pressure, and/or boom lubrication may affect operation.

It is permissible to travel with loads within the rated capacity of the crane. Travel speeds should be greatly reduced to reflect terrain limitations and minimize dynamic loads applied to the crane structure.

TADANO MANTIS CORPORATION

1705 Columbia Avenue • Franklin, TN 37064 USA • Toll-Free: 1-800-272-3325 • Fax: 615-790-6803 • mantiscranes.com

https://truckmanualshub.com/