https://truckmanualshub.com/

DEMOLITION APPLICATION
EXCAVATORS

LIUGONG

TOUGH WORLD. TOUGH EQUIPMENT.

https://truckmanualshub.com/

A POWERFUL VISION

Today, **LiuGong is a leader in China's construction equipment industry and is one of the fastest growing construction equipment companies in the world,** providing customers with quality, reliable support across a wide range of equipment.

WHAT MAKES LIUGONG A LEADER?

LiuGong built China's first modern wheel loader and continues to embrace its commitment to innovation by combining decades of know-how with leading technology from the world's best component suppliers.

LiuGong has established centers of excellence around the globe to guarantee service and support and ensure their customers can work efficiently and productively. LiuGong manufacture at 20 plants and have offices across all major regions of the world including Europe, North America, South America, Asia-Pacific, India, the Middle-East, South Africa and Russia.

An extensive network of regional parts depots operate around the globe to ensure customers receive the support they have come to expect from LiuGong.

Innovation and manufacturing excellence for over 60 years

https://truckmanualshub.com/

INNOVATIVE FROM THE START

Innovation drives industries forward and LiuGong has been **driving innovation for over 60 years.**

An 110,000m² Global Research & Development Centre in Liuzhou, China is equipped with world-class technology and run by industry experts including around 1,000 R&D engineers.

In addition to the Liuzhou facility LiuGong operates world-class R&D facilities in Poland, India, the United States and the United Kingdom, supporting their global vision of excellence.

Emphasis on quality is reflected in LiuGong's Six Sigma quality methodology and compliance with ISO 9000 standards.

LiuGong has established joint venture partnerships with some of the industry's best known names including:

- German drivetrain components manufacturer **ZF Friedrichshafen AG**
- Finnish mining and aggregates processing equipment manufacturer **Metso**
- North American diesel engine manufacturer **Cummins**

WE ARE LIUGONG

9,500+
Employees

20
Factories

13
Regional subsidiaries

300+
Dealers

1,000+
R&D engineers

5
R&D facilities

12
Regional parts depots

Over 60
Years' experience

DEMOLITION APPLICATION
EXCAVATORS

https://truckmanualshub.com/

https://truckmanualshub.com/

BUILT TO DEMOLISH

Demolition is the first step of progress with some tough and unforgiving work. No matter the task; moving, sorting, loading and processing debris, LiuGong excavators excel in the arena of demolishing. LiuGong E Series Excavators are built for maximum performance on all types of demolition sites with features that enhance efficiency, durability & safety.

FUELWISE CUMMINS ENGINE

All equipped with world-class Cummins engines, LiuGong excavators meet the strict EU Stage IV emissions standards while also delivering heavy-duty power without compromising on fuel economy.

The field proven engines feature cooled-EGR system and the latest AdBlue technology, complemented by Cummins' patented VGTTM Turbocharger which precisely adjusts the airflow delivered to the engine, increasing performance and ensuring excellent fuel efficiency.

ADVANCED HYDRAULICS

Within the advanced hydraulic system of LiuGong excavators, negative flow of the hydraulics optimizes the main control valve and helps to maximize the cycle time of the cylinders. This leads to improved efficiency and a higher rate of work completed. The hydraulic system is highly proficient in transferring engine power to the ground while providing precise control.

INTELLIGENT POWER CONTROL

LiuGong's advanced Intelligent Power Control (IPC) system delivers the power you need, when you need it, ensuring powerful performance without fuel wastage. The new-generation computer-aided IPC system utilizes the mechanical, electrical and hydraulic systems of the LiuGong Excavators to work in perfect harmony for quality, precise control. When the working load increases, engine power and hydraulic pump flow respond to meet the exacting demands of the job.

WORK YOUR WAY

LiuGong's six selectable work modes give you full control of the machine and enhanced performance under various operating conditions:

ALWAYS EFFICIENT

Automatic warm-up system brings the engine up to operating temperature swiftly, enhancing fuel consumption, reducing emissions and maximizing uptime.

E series excavators further increase fuel economy by regulating its idle speed. If there is no hydraulic request signal detected from the joystick, even for just one second, the engine speed is automatically dropped by 100 RPM. If no activity is detected over three seconds the engine speed will decrease to idle. As soon as the system detects the hydraulic signal once more, the engine will immediately return to the previous throttle speed setting.

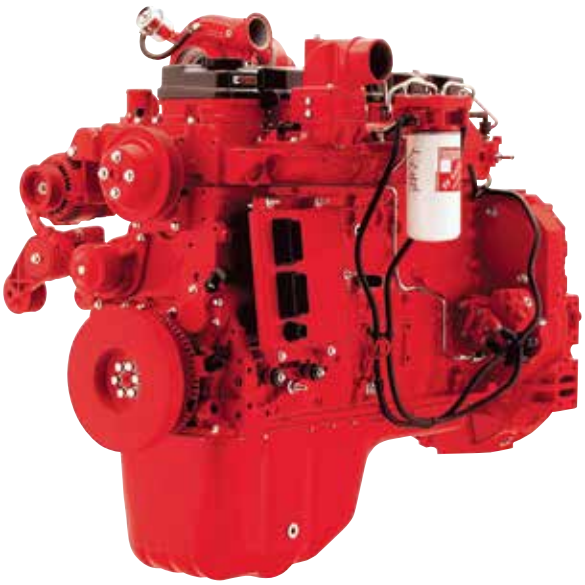

DEMOLITION APPLICATION
EXCAVATORS

https://truckmanualshub.com/

https://truckmanualshub.com/

STRUCTURED FOR DEMOLITION

The use of thick, high-tensile steel components, internal baffling and stress-relieved plates, make the structures on LiuGong E-series excavators strong and reliable.

We guarantee the quality and reliability of our machines throughout the manufacturing process by conducting rigorous tests and ultrasound inspections that identify defects well before they make it into production.

BOOM & ARM

Large cross-sectional supports incorporating one-piece steel castings are designed into the boom and arm structures. This solid engineering guarantees long-term durability and high resistance to torsional stresses. Standard rock-guard plates and vertical guards protect the arm in rocky digging conditions and tough work environments.

UPPER STRUCTURE

The upper structure is strongly reinforced by the use of an H-beam in the high cross section of the main structure providing even weight distribution and increased stability.

The platform's collision protection system has been welded into place to improve its strength, rigidity and overall service life.

The bolted on extra-heavy duty side protections on either side of the upper structure and heavy duty under covers that protect the upper structure for enhanced resistance to damage from debris help to withstand the extreme conditions of the demolition applications.

UNDERCARRIAGE

The high-strength undercarriage incorporates a welded X-frame construction for longevity and is designed to perform in the most challenging conditions. A long track beam and crawler system provides increased stability when using attachments for digging and truck loading. The result is superior strength and durability all around.

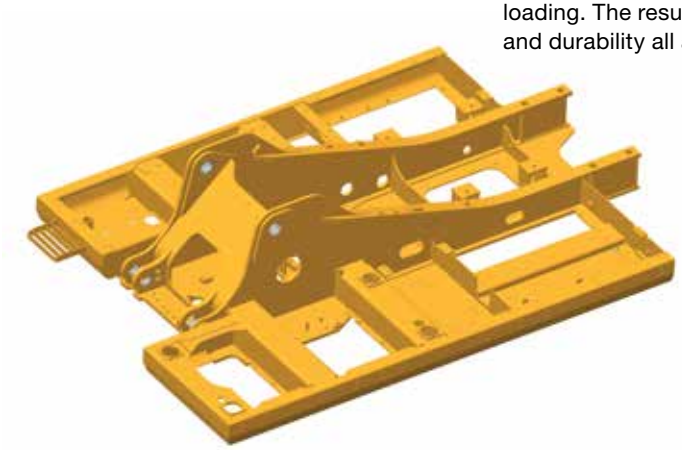

https://truckmanualshub.com/

SAFETY BUILT IN

LiuGong's commitment to you includes an equal commitment to your safety. E-series excavators are equipped with all the necessary safety features to give you peace of mind and help you focus on the job at hand.

SAFETY STANDARDS

LiuGong excavators are certified to European CE standards and meet ISO safety standards.

ENHANCED VISIBILITY

The large glass surface area of the E-series cab, combined with the optional 360 degrees camera, provides an extraordinary view of the surroundings. This ensures the operator is always aware of the immediate environment, while adding LED work lights provides clearer vision on jobsites.

ROLL OVER PROTECTION SYSTEM

The cab's high-strength ROPS ensures operator protection in a worst-case scenario.

FALLING OBJECT PROTECTION SYSTEM

For the extreme environments of demolition sites, the Falling Object Protection (FOPS) is an invaluable addition to operator safety.

SAFE ENTRY

Safety rails and well-positioned anti-slip tape on the upper part of the machine make it easier and safer during machine servicing.

https://truckmanualshub.com/

https://truckmanualshub.com/

READY FOR PEAK PERFORMANCE

Demolition contract periods are now becoming shorter and shorter and legislation is more and more stringent. The E Series excavators are designed to get a lot of work done in a short amount of time. Featuring stronger boom, arm and bucket breakout forces, greater hydraulic flows, higher swing speeds and improved cycle times, these excavators will make light work of powering through the toughest demolition sites.

PROVEN PERFORMANCE

LiuGong makes it easy for even the most inexperienced of operators to be productive by harnessing the engine power across the six working modes of the excavator. Just select the mode that matches the work type and the job can be completed in quick time.

SMART HYDRAULICS

Load-sensing hydraulics direct the engine's power to ensure hydraulic pump flow continually adjusts for smooth, quick and efficient operation. It's where intelligence meets brute force. Engine power and hydraulic pump flow are automatically reset to adjust for the load attachment, helping to optimize the productivity of the machine.

RUGGED MACHINE DESIGN

Tough and reliable frame provides increased strength, reduced wear, and improved transmission of power to the ground.

ALWAYS VERSATILE

LiuGong's quick coupler and PowerLatch tilt coupler maximize your uptime by making changeover of attachments like buckets, breakers and shears, quick and simple.

TAKE CONTROL

Ergonomically designed controls, clear and informative displays, enhanced visibility, and outstanding comfort increases operator efficiency and safety. Add to that the easily accessed service points for critical daily servicing and routine maintenance and this machine is sure to be well looked after.

https://truckmanualshub.com/

https://truckmanualshub.com/

HARD WORK MADE EASY

Demolition application is one of the most exhaustive operations. We understand how operators like to work and have designed the cab to ensure maximum operator comfort, enhanced productivity and excellent visibility all-round.

AT HOME IN THE CAB

Large and spacious cab has all the key features to make excavator operation as safe and comfortable as possible while boosting operator efficiency shift after shift.

The E-series cab is designed to reduce noise and vibration, putting operators comfort first. Convenient additions include cup holders, an AM/FM radio and MP3 player, refrigerated storage and personal luggage compartment. The cab is also fitted with a roof skylight that can be opened or closed as the operator chooses.

ADVANCED CLIMATE CONTROL

An advanced climate control system creates the right environment in any weather, all year round, while dust is eliminated thanks to the complete sealing of the pressurized cab.

COMMAND & CONTROL

LiuGong has carefully designed the cab controls to be perfectly positioned, right where you need them. All hand and foot controls are precisely placed to allow for ease of access and operation. In addition, the multi-adjustable, air-suspension seat has an option for electric heating.

https://truckmanualshub.com/

LARGE LCD MONITOR

The easy-to-read, full-color LCD monitor displays all the critical information you need about the machine, including working mode, hydraulic oil temperature, hydraulic pressure and service intervals.

ALL ROUND VISIBILITY

The cab features a large glass surface for exceptional jobsite visibility. With the addition of an optional 360 degree camera, the operator can safely see all around the machine.

https://truckmanualshub.com/

EASY SERVICE COMES STANDARD

LiuGong excavators have been specifically designed for easy service and maintenance in even the most remote and harsh environments.

MAXIMIZE YOUR UPTIME

If servicing is easy, it gets done. An automatic greasing system makes daily maintenance simple and quick, helping to lower maintenance costs and improve machine productivity. The automatic system improves bearing life and reduces repairs by delivering regular and precise amounts of grease to each bearing. Optimal design and layout of all other maintenance features makes it easy for the operator to complete essential servicing tasks.

EASILY ACCESSIBLE SERVICE POINTS MAKE DAILY CHECKS FAST AND EFFECTIVE:

- Easily visible hydraulic oil level gauge
- Accessible, grouped filters
- Easy to replace A/C filter next to the cab door
- Maintenance free air filter

ON BOARD MONITORING

Using the LCD display, the operator can easily check oil temperatures and pressure levels, receive service interval alerts and access other information that contributes to simple maintenance and servicing of the machine.

https://truckmanualshub.com/

PART OF YOUR PERFORMANCE

We know that confidence in your machine and those who support it is essential. So at LiuGong, we make sure we can always get what you need without delay, via our nine global parts depots, and the support of our network of local dealers across 130 countries worldwide.

LiuGong engineering sets high standards and all parts are rigorously tested to ensure they can meet the rigid quality specifications required for long lasting performance. No matter where you are in the world, we can ensure fast and efficient parts support to keep you going.

READY FOR ANY JOB

To ensure increased versatility on any jobsite, LiuGong provides a range of purpose designed attachments, hitches and tools for your excavator. In-cab dial-in hydraulic flow settings through the display screen optimizes the performance of your attachment.

BUCKETS

QUICK COUPLER

TILT COUPLER

BREAKER

SHEAR

DEMOLITION APPLICATION
EXCAVATORS

https://truckmanualshub.com/

https://truckmanualshub.com/

WHERE YOU NEED US WHEN YOU NEED US

We are there, where you need us, when you need us. LiuGong is committed to providing you with tough equipment backed by dependable support you can count on.

GLOBAL NETWORK

LiuGong offers local support through an extensive dealer network in more than 100 countries. Our dealers and customers are supported by 13 regional subsidiaries and 12 regional parts depots, all offering expert training, parts and service support.

PROFESSIONAL ADVICE

We are committed to reducing your total cost of ownership and increasing your profits. As part of this, LiuGong's experts will provide targeted advice on everything from choosing the right machine for your needs to maximizing its efficiency on site.

AFTERSALES EXPERIENCE

LiuGong supports you long after your purchase. With over 300 dealers, you can be confident we have the backup you need to maximize your machine's uptime whilst keeping your running costs down. A worldwide parts network will help make maintenance easy and parts available where and when you need them.

SERVICE AGREEMENTS

Take control of your costs by utilizing LiuGong's customer-focused service agreements. Talk to us today.

We are committed to reducing your total cost of ownership and increasing your profits.

https://truckmanualshub.com/

SPECIFICATIONS

Operating weight	24,500 kg (54,013 lbs)

Operating weight includes coolant, lubricants, full fuel tank, cab, standard shoes, boom, arm, bucket and operator 75 kg (165 lbs).

Bucket capacity	1.0 m³ (1.3 yd³)

ENGINE

Description

Cummins, EU Stage IV, 6-cylinder straight Variable-Geometry Turbocharger (VGT), high pressure common rail, electronically controlled direct injection. Air cleaner: Cummins direct flow air filter. Cooling system: Air-to-air intercooler

Emission rating	EU Stage IV
Engine manufacturer	Cummins
Engine model	QSB 6.7
Aspiration	Variable-Geometry Turbocharger (VGT)
Charged air cooling	Aftercooler
Cooling fan drive	Viscous clutch
Displacement	6.7 L (1.8 gal) 6,700 cm³ (409 in³)
Rated speed	2,100 rpm
Engine output - net (SAE J1349 / ISO 9249)	162 hp (119 kW)
Engine output - gross (SAE J1995 / ISO 14396)	175 hp (129 kW)
Maximum torque	800 N·m (590 lbf·ft) @1,500 rpm
Bore × Stroke	107 × 124 mm (4.2” x 4.9”)

UNDERCARRIAGE

Track shoe each side	49
Link pitch	190 mm (7.5”)
Shoe width, triple grouser	700 mm (28”)
Bottom rollers each side	9
Top rollers each side	2

SWING SYSTEM

Description

Planetary gear reduction driven by high torque axial piston motor, with oil disk brake. Swing parking brake resets within five seconds after swing pilot controls return to neutral.

Swing speed	11.4 rpm
Swing torque	78,200 N·m (57,677 lbf·ft)

HYDRAULIC SYSTEM

Main pump	
Type	Two variable displacement piston pumps
Maximum flow	2 × 224 L/min (2 x 79.3 gal/min)
Pilot pump	
Type	Gear pump
Maximum flow	19 L/min (5 gal/min)
Relief valve setting	
Implement	34.3/37.3 MPa (4,975 / 5,410 psi)
Travel circuit	34.3 MPa (4,975 psi)
Slew circuit	25.5 MPa (3,698 psi)
Pilot circuit	3.9 MPa (566 psi)
Hydraulic cylinders	
Boom Cylinder – Bore × Stroke	Φ120 × 1,335 mm (Φ4.7” × 4’5”)
Stick Cylinder – Bore × Stroke	Φ135 ×1,490 mm (Φ5.3” × 4’11”)
Bucket Cylinder – Bore × Stroke	Φ115 × 1,120 mm (Φ4.5” × 3’8”)

ELECTRIC SYSTEM

System Voltage	24 V
Batteries	2 x 12 V
Alternator	24 V - 70 A
Start motor	24 V - 7.8 kW (24 V - 10.5 hp)

SERVICE CAPACITIES

Fuel tank	420 L (111 gal)
Engine oil	25 L (6.6 gal)
Final drive (each)	5.5 L (1.5 gal)
Swing drive	3.4 L (0.9 gal)
Cooling system	25 L (6.6 gal)
Hydraulic reservoir	210 L (55.5 gal)
Hydraulic system total	330 L (87.2 gal)
DEF tank	35 L (9.2 gal)

SOUND PERFORMANCE

Interior Sound Power Level (ISO 6396)	69 dB(A)
Exterior Sound Power Level (ISO 6395)	100 dB(A)

DRIVE AND BRAKES

Description

2-speed axial piston motors with oil disk brakes. Steering controlled by two hand levers with pedals.

Max. travel speed	High: 5.6 km/h (3.5 mph) Low: 3.3 km/h (2.1 mph)
Gradeability	35°/70%
Max. drawbar pull	220 kN (49,458 lbf)

https://truckmanualshub.com/

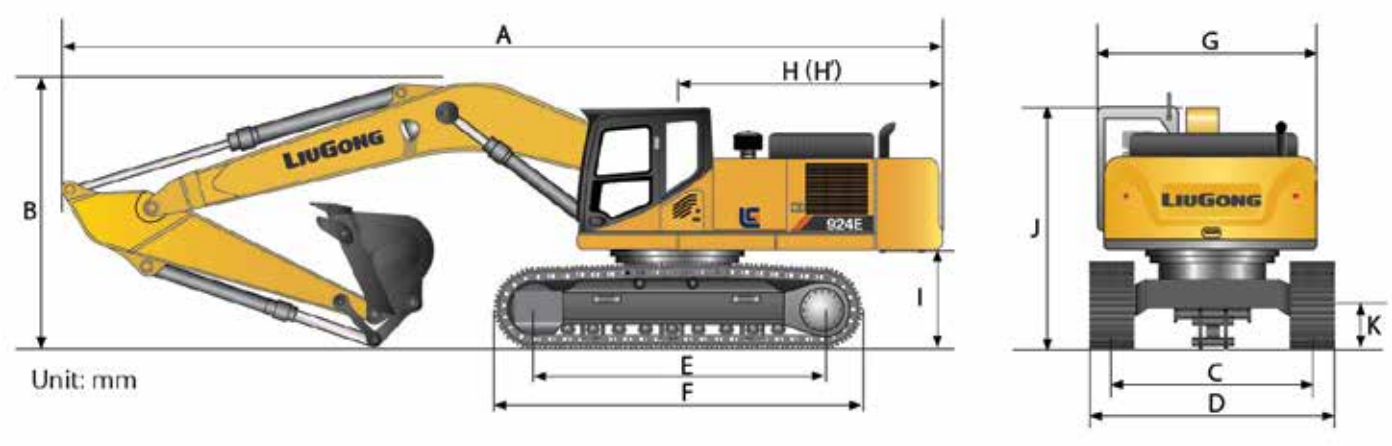

DIMENSIONS	
Boom	5,710 mm (18’9”)
Arm Options	2,915 mm (9’7”)
A Shipping Length	9,570 mm (31’5”)
B Shipping Height – Top of Boom	3,140 mm (10’4”)
C Track Gauge	2,390 mm (7’10”)
D Undercarriage Width – with 700 mm (28”) Shoes	3,090 mm (10’2”)
E Length to Center of Rollers	3,650 mm (12’)
F Track Length	4,440 mm (14’7”)
G Overall Width of Upper Structure	2,824 mm (9’3”)
H Tail Swing Radius	2,780 mm (9’1”)
I Counterweight Ground Clearance	1,070 mm (3’6”)
J Overall Height of Cab	3,040 mm (10’)
K Min. Ground Clearance	440 mm (1’5”)
L Track Shoe Width	700 mm (28”)

BOOM DIMENSIONS	
Boom	5,710 mm (18’9”)
Length	5,915 mm (19’5”)
Height	1,550 mm (5’1”)
Width	621 mm (2’)
Weight	1,895 kg (4,178 lbs)

Cylinder, piping and pin included.
Boom cylinder pin excluded.

ARM DIMENSIONS	
Arm	2,915 mm (9’7”)
Length	3,895 mm (12’9”)
Height	790 mm (2’7”)
Width	466 mm (1’6”)
Weight	1,110 kg (2,447 lbs)

Cylinder, linkage and pin included.

MACHINE WEIGHTS AND GROUND PRESSURE			
Shoe width	Operating weight	Ground pressure	Overall width
	5.7 m (18’9”) boom, 2.9 m (9’6”) arm, 1.0 m³ (1.3 yd³) bucket,4,000 kg (8,818 lbs) counterweight		
700 mm (28”)	24,500 kg (54,013 lbs)	43.2 kPa (6.3 psi)	3,090 mm (10’2”)

https://truckmanualshub.com/

SPECIFICATIONS

Operating weight	27,500 kg (60,627 lbs)

Operating weight includes coolant, lubricants, full fuel tank, cab, standard shoes, boom, arm, bucket and operator 75 kg (165 lbs).

Bucket capacity	1.2 m³ (1.57 yd³)

ENGINE

Description

Cummins, EU Stage IV, 6-cylinder straight Variable-Geometry Turbocharger (VGT), high pressure common rail, electronically controlled direct injection. Air cleaner: Cummins direct flow air filter. Cooling system: Air-to-air intercooler.

Emission rating	EU Stage IV
Engine manufacturer	Cummins
Engine model	QSB 6.7
Aspiration	Variable-Geometry Turbocharger (VGT)
Charged air cooling	After cooler
Cooling fan drive	Viscous clutch
Displacement	6.7 L (1.8 gal) 6,700 cm³ (409 in³)
Rated speed	2,000 rpm
Engine output - net (SAE J1349 / ISO 9249)	175 hp (129 kW)
Engine output - gross (SAE J1995 / ISO 14396)	193 hp (142 kW)
Maximum torque	809 N·m (597 lbf·ft) @1,500 rpm
Bore × Stroke	107 × 124 mm (4.2” x 4.9”)

UNDERCARRIAGE

Track shoe each side	51
Link pitch	190 mm (7.5”)
Shoe width, triple grouser	700 mm (28”)
Bottom rollers each side	9
Top rollers each side	2

SWING SYSTEM

Description

Planetary gear reduction driven by high torque axial piston motor, with oil disk brake. Swing parking brake resets within five seconds after swing pilot controls return to neutral.

Swing speed	11.6 rpm
Swing torque	80,800 N·m (59,595 lbf·ft)

HYDRAULIC SYSTEM

Main pump	
Type	Two variable displacement piston pumps
Maximum flow	2 × 240 L/min (2 × 63.4 gal/min)
Pilot pump	
Type	Gear pump
Maximum flow	19 L/min (5 gal/min)
Relief valve setting	
Implement	34.3/37.3 MPa (4,975 / 5,410 psi)
Travel circuit	34.3 MPa (4,975 psi)
Slew circuit	25.5 MPa (3,698 psi)
Pilot circuit	3.9 MPa (566 psi)
Hydraulic cylinders	
Boom Cylinder – Bore × Stroke	Φ130 × 1,350 mm (Φ5.1” × 4’5”)
Stick Cylinder – Bore × Stroke	Φ145 × 1,635 mm (Φ5.7” × 5’4”)
Bucket Cylinder – Bore × Stroke	Φ130 × 1,075 mm (Φ5.1” × 3’6”)

ELECTRIC SYSTEM

System voltage	24 V
Batteries	2 x 12 V
Alternator	24 V - 70 A
Start motor	24 V - 7.8 kW (24 V - 10.5 hp)

SERVICE CAPACITIES

Fuel tank	470 L (124.2 gal)
Engine oil	25 L (6.6 gal)
Final drive (each)	5.5 L (1.5 gal)
Swing drive	4.4 L (1.2 gal)
Cooling system	30 L (7.9 gal)
Hydraulic reservoir	210 L (55.5 gal)
Hydraulic system total	330 L (87.2 gal)
DEF tank	35 L (9.2 gal)

SOUND PERFORMANCE

Interior Sound Power Level (ISO 6396)	73 dB(A)
Exterior Sound Power Level (ISO 6395)	102 dB(A)

DRIVE AND BRAKES

Description

2-speed axial piston motors with oil disk brakes. Steering controlled by two hand levers with pedals.

Max. travel speed	High: 6.0 km/h (3.7 mph) Low: 3.5 km/h (2.2 mph)
Gradeability	35°/70%
Max. drawbar pull	229 kN (51,481 lbf)

https://truckmanualshub.com/

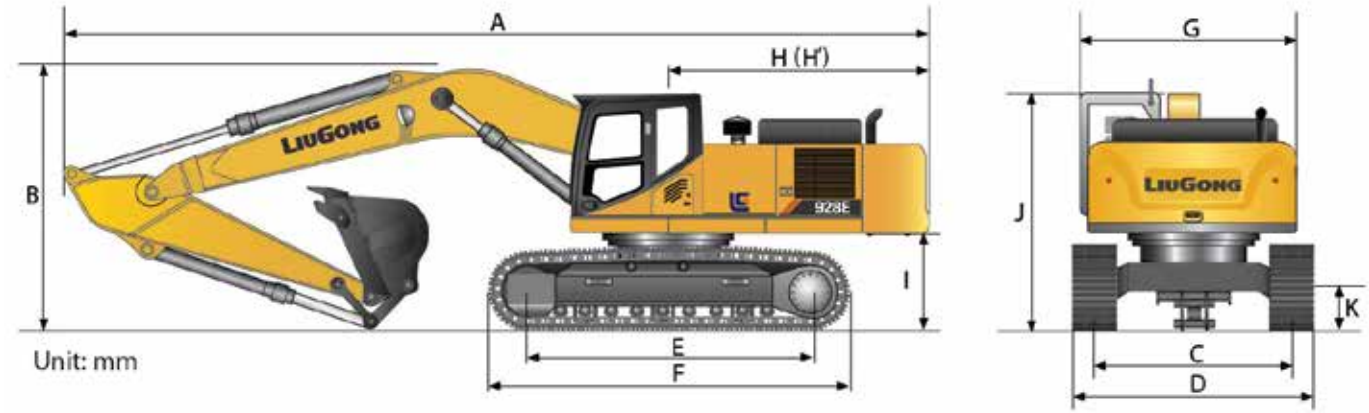

DIMENSIONS	
Boom	6,000 mm (19’8”)
Arm Options	2,980 mm (9’9”)
A Shipping Length	10,210 mm (33’6”)
B Shipping Height – Top of Boom	3,480 mm (11’5”)
C Track Gauge	2,590 mm (8’6”)
D Undercarriage Width – 700 mm (28”) Shoes	3,290 mm (10’10”)
E Length to Center of Rollers	3,840 mm (12’7”)
F Track Length	4,635 mm (15’2”)
G Overall Width of Upper Structure	2,824 mm (9’3”)
H Tail swing Radius	3,010 mm (9’11”)
I Counterweight Ground Clearance	1,055 mm (3’6”)
J Overall Height of Cab	3,050 mm (10’)
K Min. Ground Clearance	440 mm (1’5”)
L Track Shoe Width	700 mm (28”)

BOOM DIMENSIONS	
Boom	6,000 mm (19’8”)
Length	6,210 mm (20’4”)
Height	1,690 mm (5’7”)
Width	726 mm (2’5”)
Weight	2,450 kg (5,401 lbs)

Cylinder, piping and pin included.
Boom cylinder pin excluded.

ARM DIMENSIONS	
Arm	2,980 mm (9’9”)
Length	4,060 mm (13’4”)
Height	885 mm (2’11”)
Width	408 mm (1’4”)
Weight	1,240 kg (2,734 lbs)

Includes cylinder, linkage and pin.

MACHINE WEIGHTS AND GROUND PRESSURE			
Shoe width	Operating weight	Ground pressure	Overall width
	6.0 m (19’8”) boom, 2.98 m (9’9”) arm, 1.2 m³ (1.57 yd³) bucket, 5,000 kg (11,023 lbs) counterweight		
700 mm (28”)	27,500 kg (60,627 lbs)	46.7 kPa (6.8 psi)	3,290 mm (10’10”)

https://truckmanualshub.com/

SPECIFICATIONS

Operating weight	32,700 kg (72,091 lbs)

Operating weight includes coolant, lubricants, full fuel tank, cab, standard shoes, boom, arm, bucket and operator 75 kg (165 lbs).

Bucket capacity	1.4 m³ (1.83 yd³)

ENGINE

Description

Cummins, EU Stage IV, 6-cylinder straight Variable-Geometry Turbocharger (VGT), high pressure common rail, electronically controlled direct injection. Air cleaner: Cummins direct flow air filter. Cooling system: Air-to-air intercooler.

Emission rating	EU Stage IV
Engine manufacturer	Cummins
Engine model	QSB 6.7
Aspiration	Variable-Geometry Turbocharger (VGT)
Charged air cooling	After cooler
Cooling fan drive	Viscous clutch
Displacement	6.7 L (1.8 gal) 6,700 cm³ (409 in³)
Rated speed	2,200 rpm
Engine output - net (SAE J1349 / ISO 9249)	212 hp (156 kW)
Engine output - gross (SAE J1995 / ISO 14396)	228 hp (168 kW)
Maximum torque	949 N·m (700 lbf·ft) @1,500 rpm
Bore × Stroke	107 × 124 mm (4.2” x 4.9”)

UNDERCARRIAGE

Track shoe each side	48
Link pitch	216 mm (8.5”)
Shoe width, triple grouser	700 mm (28”)
Bottom rollers each side	9
Top rollers each side	2

SWING SYSTEM

Description

Planetary gear reduction driven by high torque axial piston motor, with oil disk brake. Swing parking brake resets within five seconds after swing pilot controls return to neutral.

Swing speed	10.3 rpm
Swing torque	105,000 N·m (77,444 lbf·ft)

HYDRAULIC SYSTEM

Main pump	
Type	Two variable displacement piston pumps
Maximum flow	2 x 266 L/min (2 x 70 gal/min)
Pilot pump	
Type	Gear pump
Maximum flow	19 L/min (5 gal/min)
Relief valve setting	
Implement	34.3/37.3 MPa (4,975 / 5,410 psi)
Travel circuit	34.3 MPa (4,975 psi)
Slew circuit	26.2 MPa (3,800 psi)
Pilot circuit	3.9 MPa (566 psi)
Hydraulic cylinders	
Boom Cylinder – Bore × Stroke	Φ140 × 1,342 mm (Φ5.5” ×4’5”)
Stick Cylinder – Bore × Stroke	Φ150 × 1,755 mm (Φ5.9” × 5’9”)
Bucket Cylinder – Bore × Stroke	Φ140 × 1,135 mm (Φ5.5” ×3’9”)

ELECTRIC SYSTEM

System Voltage	24 V
Batteries	2 x 12 V
Alternator	24 V - 70 A
Start motor	24 V - 7.8 kW (24 V - 10.5 hp)

SERVICE CAPACITIES

Fuel tank	520 L (137.4 gal)
Engine oil	23L (6.1 gal)
Final drive (each)	9.5 L (2.5 gal)
Swing drive	10.5 L (2.8 gal)
Cooling system	35 L (9.2 gal)
Hydraulic reservoir	195 L (51.5 gal)
Hydraulic system total	360 L (95.1 gal)
DEF tank	35 L (9.2 gal)

SOUND PERFORMANCE

Interior Sound Power Level (ISO 6396)	72 dB(A)
Exterior Sound Power Level (ISO 6395)	104 dB(A)

DRIVE AND BRAKES

Description

2-speed axial piston motors with oil disk brakes. Steering controlled by two hand levers with pedals.

Max. travel speed	High: 5.5 km/h (3.4 mph) Low: 3.0 km/h (1.9 mph)
Gradeability	35°/70%
Max. drawbar pull	300 kN (67,442 lbf)

https://truckmanualshub.com/

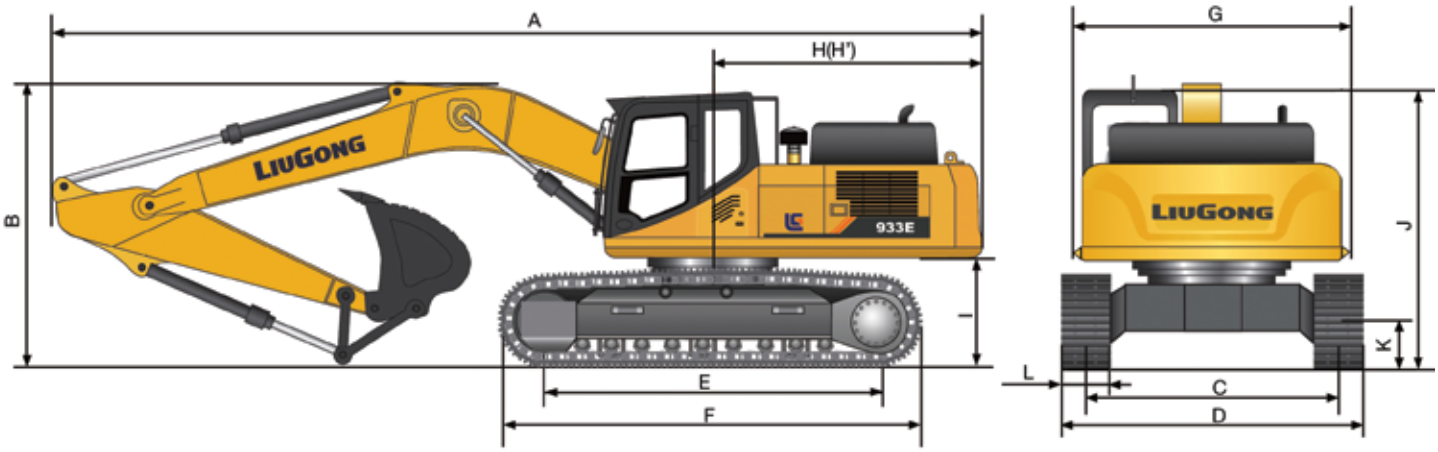

DIMENSIONS	
Boom	6,200 mm (20'4")
Arm Options	3,050 mm (10')
A Shipping Length	10,650 mm (34'11")
B Shipping Height – Top of Boom	3,525 mm (11'7")
C Track Gauge	2,590 mm (8'6")
D Undercarriage Width – with 700 mm (28")Shoes	3,290 mm (10'10")
E Length to Center of Rollers	4,050 mm (13'3")
F Track Length	4,980 mm (16'4")
G Overall Width of Upper Structure	3,077 mm (10'1") (including protective side beam)
H Tail Swing Radius	3,200 mm (10'6")
I Counterweight Ground Clearance	1,215 mm (4')
J Overall Height of Cab	3,325 mm (10'11") (with protective equipment)
K Min. Ground Clearance	500 mm (1'8")
L Track Shoe Width	700 mm (28")

BOOM DIMENSIONS	
Boom	6,200 mm (20'4")
Length	6,420 mm (21'1")
Height	1,788 mm (5'10")
Width	942 mm (3'1")
Weight	2,740 kg (6,041 lbs)

Cylinder, piping and pin included.
Boom cylinder pin excluded.

ARM DIMENSIONS	
Arm	3,050 mm (10')
Length	4,222 mm (13'10")
Height	1,046 mm (3'5")
Width	542 mm (1'9")
Weight	1,700 kg (3,748 lbs)

Cylinder, linkage and pin included.

MACHINE WEIGHTS AND GROUND PRESSURE			
Shoe width	Operating weight	Ground pressure	Overall width
	6.2 m (20'4") boom, 3.05 m (10') arm, 1.4 m³ (1.83 yd³) bucket, 5,500 kg (12,125 lbs) counterweight		
700 mm (28")	32,700 kg (72,091 lbs)	52.9 kPa (7.7 psi)	3,290 mm (10'10")

https://truckmanualshub.com/

SPECIFICATIONS

Operating weight	37,300 kg (82,232 lbs)

Operating weight includes coolant, lubricants, full fuel tank, cab, standard shoes, boom, arm, bucket and operator 75 kg (165 lbs).

Bucket capacity	1.6 m³ (2.09 yd³)

ENGINE

Description

Cummins, EU Stage IV, 6-cylinder straight Variable-Geometry Turbocharger (VGT), high pressure common rail, electronically controlled direct injection. Air cleaner: Cummins direct flow air filter. Cooling system: Air-to-air intercooler.

Emission rating	EU Stage IV
Engine manufacturer	Cummins
Engine model	QSL9
Aspiration	Variable-Geometry Turbocharger (VGT)
Charged air cooling	Aftercooler
Cooling fan drive	Viscous clutch
Displacement	8.9 L (2.35 gal) 8,900 cm³ (543 in³)
Rated speed	2,000 rpm
Engine output - net (SAE J1349 / ISO 9249)	284 hp (209 kW)
Engine output - gross (SAE J1995 / ISO 14396)	300 hp (221 kW)
Maximum torque	1,451 N·m (1070 lbf·ft) @1,400 rpm
Bore × Stroke	114 × 145 mm (4.5” × 5.7”)

UNDERCARRIAGE

Track shoe each side	48
Link pitch	216 mm (8.5”)
Shoe width, triple grouser	700 mm (28”)
Bottom rollers each side	9
Top rollers each side	2

SWING SYSTEM

Description

Planetary gear reduction driven by high torque axial piston motor, with oil disk brake. Swing parking brake resets within five seconds after swing pilot controls return to neutral.

Swing speed	10 rpm
Swing torque	111,000 N·m (81,132 lbf·ft)

HYDRAULIC SYSTEM

Main pump	
Type	Two variable displacement piston pumps
Maximum flow	2 × 300 L/min (2 × 79.3 gal/min)
Pilot pump	
Type	Gear pump
Maximum flow	19 L/min (5 gal/min)
Relief valve setting	
Implement	34.3/37.3 MPa (4,975 / 5,410 psi)
Travel circuit	34.3 MPa (4,975 psi)
Slew circuit	26.2 MPa (3,800 psi)
Pilot circuit	3.9 MPa (566 psi)
Hydraulic cylinders	
Boom Cylinder – Bore × Stroke	Φ140 × 1,505 mm (Φ5.5” × 4’11”)
Stick Cylinder – Bore × Stroke	Φ170 × 1,785 mm (Φ6.7” × 5’10”)
Bucket Cylinder – Bore × Stroke	Φ145 × 1,220 mm (Φ5.7” × 4’)

ELECTRIC SYSTEM

System Voltage	24 V
Batteries	2 x 12 V
Alternator	24 V - 70 A
Start motor	24 V - 7.8 kW (24 V - 10.5 hp)

SERVICE CAPACITIES

Fuel tank	620 L (163.8 gal)
Engine oil	30 L (7.9 gal)
Final drive (each)	9.5 L (2.5 gal)
Swing drive	10.5 L (2.8 gal)
Cooling system	37 L (9.8 gal)
Hydraulic reservoir	240 L (63.4 gal)
Hydraulic system total	450 L (118.9 gal)
DEF tank	35 L (9.2 gal)

SOUND PERFORMANCE

Interior Sound Power Level (ISO 6396)	75 dB(A)
Exterior Sound Power Level (ISO 6395)	105 dB(A)

DRIVE AND BRAKES

Description

2-speed axial piston motors with oil disk brakes. Steering controlled by two hand levers with pedals.

Max. travel speed	High: 5.5 km/h (3.4 mph) Low: 3.4 km/h (2.1 mph)
Gradeability	35°/70%
Max. drawbar pull	320 kN (71,939 lbf)

https://truckmanualshub.com/

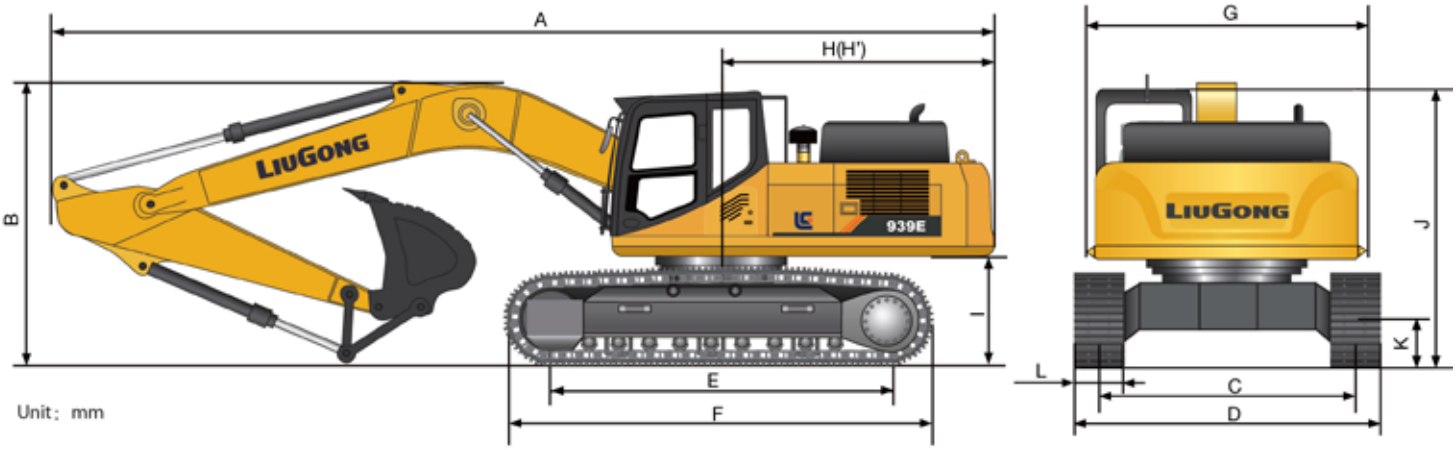

DIMENSIONS	
Boom	6,400 mm (21')
Arm Options	3,200 mm (10'6")
A Shipping Length	11,167 mm (36'8")
B Shipping Height – Top of Boom	3,530 mm (11'7")
C Track Gauge	2,590 mm (8'6")
D Undercarriage Width – with 700 mm (28") Shoes	3,290 mm (10'10")
E Length to Center of Rollers	4,050 mm (13'3")
F Track Length	4,944 mm (16'3")
G Overall Width of Upper Structure	3,227 mm (10'7") (including protective side beam)
H Tail Swing Radius	3,500 mm (11'6")
I Counterweight Ground Clearance	1,172 mm (3'10")
J Overall Height of Cab	3,318 mm (10'11") (with protective equipment)
K Min. Ground Clearance	532 mm (1'9")
L Track Shoe Width	700 mm (28")

BOOM DIMENSIONS	
Boom	6,400 mm (21')
Length	6,692 mm (21'11")
Height	1,980 mm (6'6")
Width	813 mm (2'8") with boom hinge pin 1,025 mm (3'4")
Weight	3,250 kg (7,165 lbs)

Cylinder, piping and pin included.
Boom cylinder pin excluded.

ARM DIMENSIONS	
Arm	3,200 mm (10'6")
Length	4,376 mm (14'4")
Height	1,055 mm (3'6")
Width	652 mm (2'2") (with hinge pin)
Weight	1,880 kg (4,145 lbs)

Cylinder, linkage and pin included.

MACHINE WEIGHTS AND GROUND PRESSURE			
Shoe width	Operating weight	Ground pressure	Overall width
	6.4 m (21') boom, 3.2 m (10'6") arm, 1.6 m³ (2.1 yd³) bucket, 6,500 kg (14,330 lbs) counterweight		
700 mm (28")	37,300 kg (82,232 lbs)	59.6 kPa (8.6 psi)	3,290 mm (10'10")

https://truckmanualshub.com/

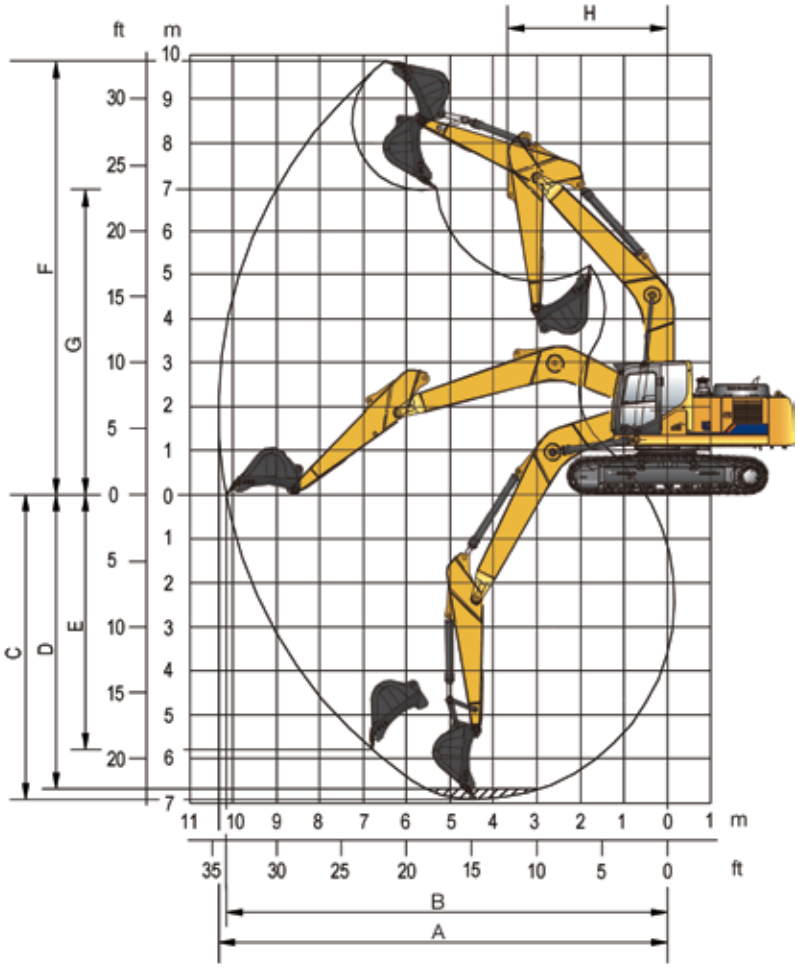

WORKING RANGE		924E	928E	933E	939E
Boom		5,710 mm (18’9”)	6,000 mm (19’8”)	6,200 mm (20’4”)	6,400 mm (21’)
Arm		2,915 mm (9’7”)	2,980 mm (9’9”)	3,050 mm (10’)	3,200 mm (10’6”)
A. Max. digging reach		9,870 mm (32’5”)	10,340 mm (33’11”)	10,653 mm (34’11”)	11,100 mm (36’5”)
B. Max. digging reach on ground		9,685 mm (31’9”)	10,150 mm (33’4”)	10,453 mm (34’4”)	10,900 mm (35’9”)
C. Max. digging depth		6,562 mm (21’6”)	6,925 mm (22’9”)	7,300 mm (23’11”)	7,340 mm (24’1”)
D. Max. digging depth, 2.44 m (8’) level		6,390 mm (21’)	6,675 mm (21’11”)	7,096 mm (23’3”)	7,180 mm (23’7”)
E. Max. vertical wall digging depth		5,080 mm (16’8”)	5,795 mm (19’)	6,216 mm (20’5”)	6,460 mm (21’2”)
F. Max. cutting height		9,945 mm (32’8”)	9,940 mm (32’7”)	10,300 mm (33’10”)	10,240 mm (33’7”)
G. Max. dumping height		7,170 mm (23’6”)	6,920 mm (22’8”)	7,265 mm (23’10”)	7,160 mm (23’6”)
H. Min. front swing radius		3,090 mm (10’2”)	3,695 mm (12’1”)	4,040 mm (13’3”)	4,465 mm (14’8”)
Bucket Digging Force (ISO)	Normal	140 kN (31,473 lbf)	165 kN (37,093 lbf)	187 kN (42,039 lbf)	232 kN (52,156 lbf)
	Power Boost	152 kN (34,171 lbf)	179 kN (40,241 lbf)	203 kN (45,636 lbf)	252 kN (56,652 lbf)
Arm Digging Force (ISO)	Normal	97 kN (21,806 lbf)	124 kN (27,876 lbf)	137 kN (30,799 lbf)	170 kN (38,218 lbf)
	Power Boost	105 kN (23,605 lbf)	134 kN (30,124 lbf)	149 kN (33,497 lbf)	185 kN (41,590 lbf)
Bucket Capacity		1.0 m^3 (1.31 yd^3)	1.2 m^3 (1.57 yd^3)	1.4 m^3 (1.83 yd^3)	1.6 m^3 (2.1 yd^3)
Bucket Tip Radius		1,450 mm (4’9”)	1,540 mm (5’1”)	1,606 mm (5’3”)	1,687 mm (5’6”)

https://truckmanualshub.com/

STANDARD EQUIPMENT

ENGINE SYSTEM
- Cummins diesel engine, turbocharged, inline 6-cylinder, 4 stroke, water cooled
- Auto-idle speed control
- Air filter with pre-cleaner
- Engine oil filter
- Pre-filter with water separator
- Radiator, oil cooler and intercooler
- IPC (Intelligent Power Control) System
- Engine overheating prevention system
- Electrical fuel refilling pump

DRIVETRAIN
- Hydraulic motor, one-piece two-gear piston and reducer
- 2-speed travel system with automatic shift

SWING SYSTEM
- High-torque piston swing motor with integral spring set and automatic hydraulic release swing brake

HYDRAULIC SYSTEM
- Main pump: two variable displacement piston pumps, ready for PTO
- Pilot pump: gear
- Cylinders: boom, stick, bucket
- Power boost function
- Boom and arm regeneration circuits
- Pilot oil filter
- Load holding valve
- Pilot control shut-off lever
- Hose burst safety valves, prevention of boom or arm supply dropped when the lines split (2 mounted on boom cylinders, 1 on arm cylinder)
- 6-working mode selection system: Power, Economy, Fine, Lifting, Breaker, Attachment

OPERATOR STATION
- Pressurized and sealed cab with all-around visibility, large roof window with slide sliding sun visor, front window wiper and removable lower window
- Roll-Over Protective System (ROPS)
- Skylight rooftop
- Air conditioner, heater, defroster
- Swing parking brake
- AM/FM Radio with MP3 audio jack
- Glass-breaking hammer
- Ashtray, cigarette lighter
- Cup holder
- Floor mat
- Storage box
- Fire extinguisher
- Rear view mirrors
- One key for all locks
- Travel alarm
- Rear view camera 5.7” monitor
- Air suspension seat
- Control joysticks with 2 switch & 1 proportional

INSTRUMENTATION
- Color LCD monitor with alarms, filter/fluid change, fuel rate, water temperature, work mode, fault code, working hour, etc.
- Fuel gauge
- Hydraulic oil level gauge

ELECTRICAL
- Alternator 70 A
- Dual batteries 12 V
- Working lights, 1 frame mounted, 2 boom mounted
- Rotating beacon
- Starting, 24 V

GUARDS
- Belly guards
- Cover plate under travel frame
- Track shields

OTHER STANDARD EQUIPMENT
- Maintenance tool kit
- Maintenance parts package

STANDARD DEMOLITION EQUIPMENT

HYDRAULIC SYSTEM
- Control pattern change valve
- Hydraulic lines:
  Breaker & shear
  Slope & rotator
  Grapple
  Quick coupler line
- Overloading valve
- Cushion valve

GUARDS
- Cab guard (including cab front and top guard, bar)
- Belly guard and 8 mm thickness platform bottom plate
- Bucket ram guard
- Boxing ring

OPTIONAL EQUIPMENT

HYDRAULIC SYSTEM
- Oil drain line
- Hydraulic quick coupler

OPERATOR STATION
- Power outlet 24 V to 12 V converter
- 4 LED cab top lights
- Working lights on cab (2 on top-front cab)
- Rain visor

https://truckmanualshub.com/

LIUGONG

TOUGH WORLD. TOUGH EQUIPMENT.

Guangxi LiuGong Machinery Co., Ltd.
No. 1 Liutai Road, Liuzhou, Guangxi 545007, PR China
T: +86 772 388 6124 E: overseas@liugong.com
www.liugong.com

Like and follow us:

LG-PB-DEM-924-928-933-939E-28-21042020-ENG

The LiuGong series of logos herein, including but not limited to word marks, device marks, letter of alphabet marks and combination marks, as the registered trademarks of Guangxi LiuGong Group Co., Ltd. are used by Guangxi LiuGong Machinery Co., Ltd. with legal permission, and shall not be used without permission. Specifications and designs are subject to change without notice. Illustrations and pictures may include optional equipment and may not include all standard equipment. Equipment and options varies by regional availability.