Link-Belt
EARTHMOVING • FORESTRY
MATERIAL HANDLING EQUIPMENT

330 LX Tier III

Operating Weight: 78,500 lbs (35 600 kg)

SAE Net Horsepower: 271 HP (202 kW)

Bucket Range: 1.26 – 2.93 yd^3 (.96 – 2.24 m^3)

LBX Company LLC

https://truckmanualshub.com/

Designed for Durability and Performance...

Smarter. Faster. Better.

Inte-LX® or ***Intelligent LX*** is the most advanced technology to date. Inte-LX® maximizes the balance between speed, power, and fuel efficiency. *Page 4*

First Electronic Engine Control in an Excavator

This results in increased responsiveness to the job requirements; faster cycle times, increased fuel efficiency, cleaner and quieter. *Page 6*

Reduced Maintenance and Extended Component Life

The Nephron® Filtration system means less wear and tear on the hydraulic components, reducing hydraulic system breakdowns and maintenance costs. *Page 8*

Faster Cycle Times

A smarter more efficient hydraulic system uses dual pump flow, auto power swing and regenerative circuits for increased productivity. *Page 5*

Anti-Theft System

To protect your investment, a password protected anti-theft system comes as standard equipment and can be activated at the users choice. *Page 4*

Superior Serviceability

On-board diagnostics with memory and fewer hydraulic oil changes result in superior serviceability. *Page 8*

Exceptional Travel Performance

High torque travel motors automatically shift to provide increased tractive effort when operating in difficult ground conditions. *Page 5*

Maximized Operator Comfort

The industry's largest cab providing low noise, climate controlled heat and air conditioning, standard. *Page 3*

Auto Power-Up

Auto power-up automatically increases system pressure by 9% to power through tough ground or when lifting a heavy load. *Page 4*

Cleaner Side-Wall Cuts

With Auto Power-Swing, Inte-LX® automatically prioritizes swing torque when simultaneously working the swing and attachment. *Page 5*

Low Ground Pressure and Exceptional Stability

LC undercarriage for low ground pressure and stability incorporates heavy-duty excavator style components. *Page 7*

Long Life Pin and Bushing Design

EMS chrome pins and brass bushings throughout the entire attachment, except bucket, hold up to torsional stresses and reduce greasing to six month intervals. *Page 7*

Heavy Duty Boom and Arm

Built to handle powerful breakout forces, strong lifting capacities and the stresses of allied attachments. *Page 7*

https://truckmanualshub.com/

Operator's Control Station

Large, Low Noise Cab Design

A wide cab design provides expanded leg and elbow room. **Six silicon filled isolation mounts** float the entire cab above the noise and vibration of an already quiet machine greatly reducing operator fatigue. Large entry door and access width makes entering and exiting the cab a breeze.

Control Panel

Many machine function switches are concentrated in a panel in clear view and easy reach of the operator.

Tilting Console and Sliding Seat

The seat slides independently of the control consoles to assure optimal joystick positions at all times. The joysticks can be tilted to any of three settings, allowing the operator to work in the most comfortable position. The entire platform can then be moved forward or backward for best foot pedal positioning.

Panoramic Visibility

This cab provides more window space than ever. Even the sunroof is large. The Operator's "office with a view" has rear and side windows made of LEXAN® MARGUARD™. Standard vandal covers protect the safety glass front windows and stow on top when you're working.

Informative LCD Monitor

Large size LCD Monitor displays graphically a wide range of operating information such as; engine temperature, hydraulic oil temperature, fuel level, travel speed, work mode and engine idle. Additional messages include system/machine warnings and service due messages in your choice of English and 13 other languages. Backlit illumination ensures displays are always readable – day and night.

All Weather Visibility

With built-in washer and intermittent speed control, the wiper keeps your windshield clear, whatever the condition outside. The "rise-up" design takes the wiper arm and blade out of the line of sight when its not in use, plus lifts the blade from the cab surface so that it doesn't freeze to the cab in icy weather.

Fresh Air Induction-Type Climate Control

LX provides exceptional heating/cooling capabilities with a climate control system that automatically regulates the temperature for the operator's comfort. Now with 6 vents, LX Series excavators provide exceptional air circulation for optimum operator comfort. Front-side air outlet and defroster ensure a comfortable operating environment while the open/close type rear window further improves the ventilation.

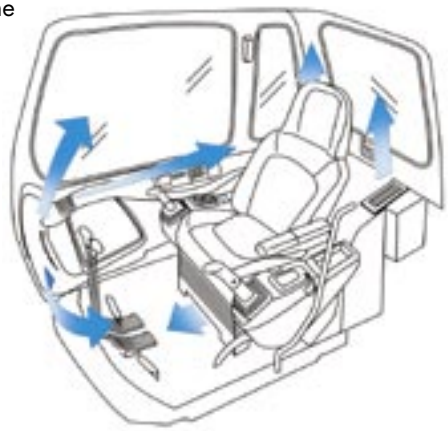

Best Seat at the Site

The KAB 515 seat adjusts to your size and comfort. The semi-bucket seat provides firm support and comfort with armrests, adjustable seat suspension, adjustable lumbar support, and durable urethane cushions.

Tripmeter

In addition to the hour meter, LX has added a Tripmeter. Every job or application can be measured.

AM/FM Stereo Radio

Standard equipment.

Emergency Escape Window

Allows operator to escape from the rear window in case of emergency.

https://truckmanualshub.com/

Inte-LX®

Inte-LX®, the intelligent computer command control system monitors hydraulic output, pressures, and regulates engine performance for the maximum balance between speed, power and fuel efficiency needed to handle the job.

Auto Power-Up

The LX series can quickly respond to changes in operating conditions, automatically supplying a power increase, without operator interaction and regardless of the work mode. Hydraulic pressure sensors detect resistance and pressure is increased by 9% for 8 seconds. Auto Power-Up stays on 100% of the time in the "L" mode.

Anti-Theft Device

Your Link-Belt distributor can set up your Inte-LX control system to include a password protection feature that requires the password to start and run the machine.

One-Touch and Auto Idle Control

When user-preset time has elapsed after leaving the control handles in the neutral position, auto-idling automatically drops the engine to idle speed (900 rpm). Or, you can choose to use the one-touch idling switch, located at the top of the right controller so that you are always in control.

Control Pattern Selector Valve (CPSV)

Standard equipment control pattern selector valve makes it easy to quickly switch between SAE and ISO controls. Easy access in battery compartment behind the cab.

Operating Modes

The LX series enables the operator to have a choice on how the machine is operated. Simply choose the work mode that matches the machines output to the job application. Five operating modes are available.

A: Auto-Mode

The most revolutionary approach to maximizing power & fuel efficiency available today. Just select the Auto-Mode with the switch panel. Using actual working pressure readings, Inte-LX® instantly changes modes assuring the best combination of speed and power while you can stay focused on the work at hand.

H: Heavy Mode

For heavy excavation or whenever you need extra power.

S: Standard Mode

For standard digging and loading operations reducing fuel consumption.

L: Lift Mode

For lifting and other operations that need fingertip accuracy.

Allied Attachment Work Mode

Automatically adjusts engine speed and pump output to match additional attachments such as hammers. The engine rpm's can be pre-set to match the hydraulic requirements.

On-Board Diagnostics

An on-board diagnostic system allows service personnel to quickly analyze up to 148 items in four categories;

- **Machine Status:** The diagnostic system provides a detailed view of pump pressure, engine rpm, water temperature, oil temperature, fuel temperature, throttle setting and ongoing operating functions such as auto power-up and auto-mode.
- **Troubleshooting:** Service personnel can easily locate system faults such as machine and engine sensor failures.
- **History:** An on-going record of machine faults is stored in the computer including the hour meter reading at time of the fault to assist in the diagnostics procedure.
- **Systems Configuration:** Service personnel can change machine operating characteristics such as; time delay for auto-idle, language selection, and engine rpm preset for allied attachment mode.

https://truckmanualshub.com/

Performance

Advanced Hydraulic System

Top-of-the-Class Cycle Times/Fuel Efficient
The LX Series hydraulic system efficiently delivers power, speed and control when and where it's needed. Fuel consumption and cycle times are more efficient in swing/dump operations over conventional models. This is accomplished by reducing system pressure loss, re-using return oil and providing double pump flow during key operations.

Regeneration System

By re-using the returning oil from the arm and the boom, ground excavating operation speed is increased.

Two Hydraulic Return Lines

Two hydraulic return lines mean faster speed in the system, and reduces back pressure build-up.

2 Speed Boom and Arm

The 2-speed boom lifting and arm opening and closing function provides the LX series with top-of-its-class lifting speed especially in swing/excavating simultaneous operations such as truck loading.

Auto Power-Swing

This patent pending design incorporates a selector valve that helps maintain attachment and hydraulic flow to achieve excellent swing and digging forces in side wall-cut operations. In normal digging when side pressure is not needed, LX sends all the flow to the attachment always insuring the best performance for either operation.

Cushioned Swing

This built-in special cushion valve greatly reduces the shock and vibration at the end of each swing cycle.

Cushioned Attachment Control

In addition to having cushioned cylinders, selectable cushioned attachment control lets you smooth out the attachment movements. A cushion valve in the boom and arm circuits reduce shock loading and vibration during attachment operation.

Free Swing

Allows the operator to disengage the swing brake providing crane-like precision and control when handling loads.

Single Pedal Travel

Allows the operator to engage both tracks at the same time using only one pedal. This keeps the machine in line with the ditch and provides safety and ease in loading/unloading the machine for transport.

Automatic Speed Shifting

When operating in difficult travel conditions, the travel motor automatically downshifts from high to low speed for increased tractive effort and then automatically returns to high speed when travel conditions permit.

Fuel Tank Capacity

The LX Series fuel tank provides the capacity to reduce refueling frequency, allowing for an extended work day.

https://truckmanualshub.com/

Dependable Isuzu Power

First In Class

The 330 LX is the first excavator in its class to utilize an electronic engine control function. By optimizing the level of fuel injection to match the load, this responsive new system assures more efficient use of fuel, plus by keeping the engine closer to the target engine speed, less lugging takes place so cycle times are faster, exhaust noise, vibration, and smoke are reduced making the environment in the cab and around the machine cleaner and quieter.

Electronic Engine Control (EEC)

Inte-LX™ maintains engine rpm's when load demands change. Engines equipped with mechanical governors spike rpm's up-and-down when operating loads increase and decrease. This phenomena causes engines to consume extra fuel and be louder.

Cleaner Emissions

Isuzu Tier III engines incorporate exhaust gas recirculation technology and fuel cooling to help reduce noxious emissions for a cleaner environment.

Tier III Certified

LX engines meet EPA standards requirements.

Idle Start

At start-up, the engine defaults to idle regardless of throttle position. This prevents over-revving a cold engine, helping to extend its service life.

Low Idle Up

When low temperatures or other conditions reduce engine rpm to a point that alternator output won't keep the battery charged, Inte-LX® automatically increases the idle speed from 900 to 1100 rpm keeping the batteries fully charged.

Auto Engine Warm-Up

If the engine temperature is low following start-up, the auto warm-up system will operate automatically and continue with engine speed increasing gradually until normal engine operating temperatures are reached.

Air Filtration

LX Series engines are equipped with a dual element air filter with an evacuator cup, a restriction indicator and ground line serviceability for ease of maintenance.

Bell-Mouth Type Fan Housing

Since the bell-mouth shaped fan housing is secured to the engine, there is less clearance between the fan and the fan housing, assuring a smoother air flow with reduced noise and increased cooling capability.

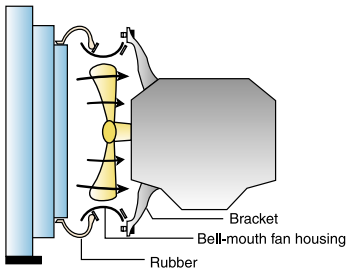

Larger Muffler

The LX series features a larger muffler which absorbs more sound and makes this the quietest Link-Belt yet.

Emergency Engine Shutdown

In emergency situations, the engine can be shut down with the push of a switch located on the control panel in the cab. This switch must be re-engaged prior to restarting the engine.

Engine Product Support

Isuzu North America offers 24-hour access to their full line of engine parts through 2 regional distribution centers, 27 Master Distributors and 690 Authorized Service Dealers.

Advantages of EEC

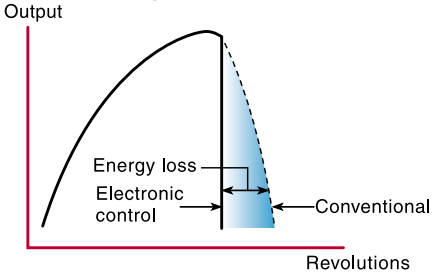

Maintaining engine revolution at a fixed rate regardless of the load prevents the energy loss that occurs when shifting cycle times to accommodate higher or lower loads.

Low Fuel Consumption

The electronic governor responds to changes in operating loads quicker than a mechanical governor. As a result, EEC regulates the amount of fuel injection accurately and quickly.

Lower, Cleaner Emissions

Low fuel consumption results in high ignition efficiency (cleaner emission) and low emissions.

Low Sound Levels

At high idle, EEC can control engine speed at rated horsepower. This means the engine doesn't overrun, resulting in lower sound levels.

Low Vibration

EEC causes engine rpm to be stable, resulting in low vibration.

https://truckmanualshub.com/

Upper and Attachments

Powerful Breakout Forces

Deep and wide box sections of high yield steel and deep groove welding hold up to high breakout forces, strong lifting capacities and the stresses of **allied attachments** such as hammers, thumbs, compactors, shears, grapples and crushers.

Strength and Durability

LX heavy duty booms and arms have internal baffles which provide better strength and durability to withstand torsional loads.

Improved Pin and Bushing Life

EMS chrome plated pins with brass bushings throughout the entire attachment (except bucket) make a durable and long

lasting connection at these high stress points. This also makes it possible to extend the lubrication interval on this type of pin to once every 6 months or 1,000 hours of operation, whichever comes first.

A. The surface of the bushing is stratified with a solid lubricant in hard brass to protect the parts from abrasion.

B. The pin's surface is plate-processed to increase hardness and protect from abrasion

C. The original dust seal is double-structured to keep out dust and dirt and protect from subsequent abrasion.

Three Arm Choices and a wide variety of buckets provide the reach and breakout forces for optimum productivity.

Auxiliary Piping Brackets

Standard equipment pipe brackets for auxiliary hydraulics allow for easy installation of aftermarket kits

Undercarriage

LC Undercarriage

Long undercarriages incorporate heavy duty excavator style components and improve both stability and ground bearing pressure. The modified X style carbody is integrally welded for maximum strength and durability. High torque compact final drives keep you going up steep grades and through deep mud.

Bearing Tub

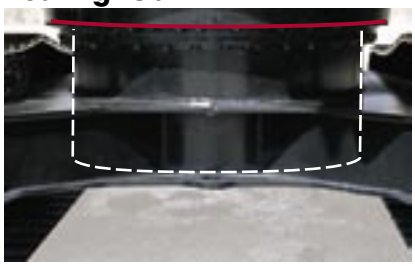

Built into the "X" style carbody is the turntable bearing "tub" which extends down through the top plate and is welded to the bottom of the carbody as well as the top for increased strength and durability.

Two-Speed Travel Motor

Offers smooth shifting and the needed pull when going up grades and making turns.

Strut Type Chain Links

There are no weak links in our chain. Struts reduce twisting and hold up to severe point loading when all of the machine weight is transferred through one roller.

Track Rollers

Filled with synthetic oil to reduce heat build up and for long term reliability.

Track Adjustment

Adjustments are made easy with standard grease cylinder track adjusters and shock absorbing springs.

Side Frames

Incorporate a peaked saddle shape and large cut-outs on top for reduced dirt build-up.

Heavy Duty Swivel Guard

Standard equipment swivel guard protects internal carbody components from damage, saving you unnecessary repair expense and downtime.

https://truckmanualshub.com/

Reliability/Serviceability

Nephron® Filtration Extends the Service Life of the Hydraulic System

The Nephron® Filtration System eliminates contaminants of 1 micron or more in size. This significantly reduces hydraulic system breakdown and maintenance costs under normal usage. Less wear and tear on the hydraulic components means more years of reliable performance.

Nephron® Filter Advantages

1. Problems associated with hydraulic system contamination are substantially reduced. Machine down time and costs for repairing are saved as a consequence.
2. The interval of hydraulic oil replacement is extended to every 5000 hours.
3. The wear of hydraulic components is reduced, which lengthens the service life of the machine.

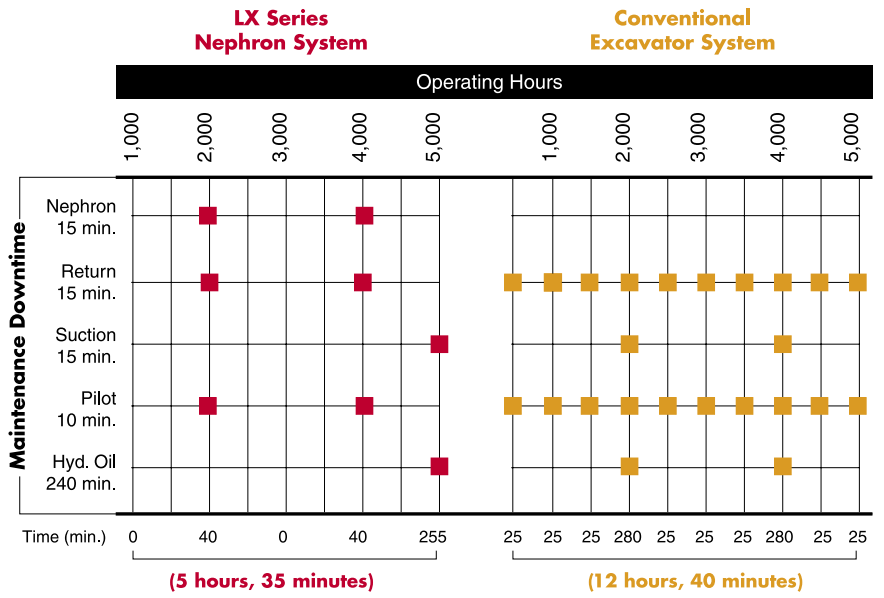

This chart shows the LX machine with the Nephron® filter vs. most other excavators. As you can see hydraulic fluid changes are reduced from every 2,000 hours to every 5,000 hours. Also, 22 filter changes on a typical excavator is reduced to 7 filter changes. All of this results in lower labor, downtime, and maintenance costs.

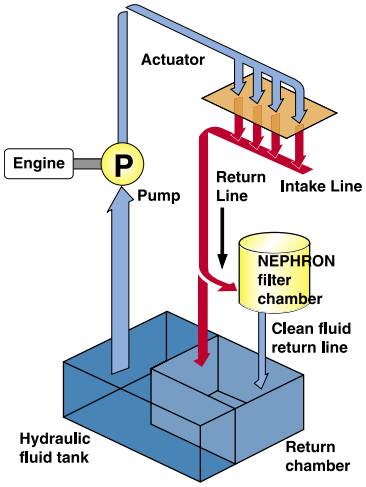

Inte-LX® On-Board Diagnostics

Inte-LX® monitors, stores, and displays information about the electrical and hydraulic systems such as; the current machine conditions, diagnostic warnings, history, and machine default settings. Information stored in Inte-LX® can also be downloaded to your personal computer using standard connectors.

Large wide opening access doors

These doors make it easy to get to all routine maintenance locations.

Hydraulic Fittings

"O" ring face seals are used as hydraulic connectors to assure tighter seals.

Air Conditioner Air Intake Filter

This filter lets in fresh clean air and is mounted on the outside of the cab, enabling easy cleaning and replacement.

Sealed Automotive Style Wiring Harness

These harnesses are sealed to eliminate dirt and moisture that can cause a circuit to short out. Wiring is also color and number coded to make trouble shooting faster and easier.

Remote Service Access

A remote engine oil filter and "green" plug for draining sump oil makes servicing your LX Series excavator even faster and simpler with easy access and minimal clean-up.

Exceptional Customer/ Product Support

Your investment in the Link-Belt LX Series Excavator is always protected. LBX Distribution is located from coast to coast; you're never far from quality service professionals. "Level Two" support takes the form of experienced factory service advisors, on-call at a moment's notice. And to expedite parts, LBX utilizes the proven parts system e-Spin…an on-line, around the clock parts distribution solution. You can be assured that we have the parts when you need them.

https://truckmanualshub.com/

Specifications

Engine

Isuzu AH-6HK1XYSS Electronic engine control, water cooled, 4-cycle diesel, 6 cylinder, turbo-charged with intercooler, 475 CID (7 790 cc), 4.53" (115 mm) bore x 4.92" (125 mm) stroke. EPA Tier III certified.

SAE net horsepower ..... 271 HP (202 kW) @ 2,000 rpm
Maximum torque ... 797 lbf-ft. (1080 N-m) @ 1,500 rpm
Starter ..... Electric, 24V
Alternator ..... 50 amp
Air cleaner ..... Double element
Governor ..... Electronic

Fuel Usage*

Heavy ..... 8.3 gph (31.4 l/hr)
Average ..... 6.7 gph (25.4 l/hr)
Light ..... 5.1 gph (19.3 l/hr)

*Fuel economy varies widely depending upon application. The "heavy" category represents nearly continuous operation in tough digging applications. The "light" category represents applications that utilize the machine about 50% of the time in easier digging.

Hydraulic System

Two variable displacement axial piston pumps and one gear pump for pilot controls.

Hydraulic Pumps
Two variable volume piston pumps provide power for attachment, swing and travel.
Maximum flow ..... 2 x 75 gpm (2 x 284 l/min)
Pilot pump max. flow ..... 7.9 gpm (30 l/min)

Relief Valve Settings
Boom/arm/bucket ..... 4,970 psi (350 kg/cm^2)
in Power-Up Mode ... 5,400 psi (380 kg/cm^2)
Swing circuit ..... 4,260 psi (300 kg/cm^2)
Travel ..... 4,970 psi (350 kg/cm^2)

Hydraulic Cylinders
number of cylinders – bore x rod x stroke
Boom ..... 2 – 5.7" x 3.9" x 58.9" (145 mm x 100 mm x 1 495 mm)
Arm ..... 1 – 6.7" x 4.7" x 68.8" (170 mm x 120 mm x 1 748 mm)
Excavator Bucket ..... 1 – 5.9" x 4.1" x 47.6" (150 mm x 105 mm x 1 210 mm

Oil Filtration
Nephron® filter ..... 1 micron
Return and pilot filters ..... 10 micron
Suction screen ..... 105 micron

Control Valve One 4-spool valve and one 5-spool valve with auxiliary spool.

Cab and Controls

Cab mounted on 6 fluid filled mountings. Features include a safety glass front window and LEXAN® MARGARD™ rear and side windows, reclining/sliding suspension seat with headrest, armrests, lumbar support, heater, air conditioner, AM/FM stereo, cigarette lighter, pop-up skylight window, and intermittent wiper with washer. Front window slides upward for storage and the lower front window is removable. Control levers are located in 3-position tilting control consoles. Reliable soft-touch switches. Control pattern selector valve. Easy-to-read illuminated LCD service monitor keeps operator in touch with critical machine functions.

Heater output ..... 20,240 BTU/hr (5 100 kcal/hr)
A/C output ..... 18,250 BTU/hr (4 600 kcal/hr)
Sound level (inside cab) ..... 73 dB(A)
Sound level (exterior) ..... 104 dB(A)

Swing

Planetary reduction powered by axial piston motor. Internal ring gear with grease cavity for swing pinion. Swing bearing is single-row shear type ball bearing. Swing cushion valve and dual stage relief valves for smooth swing deceleration and stops. Mechanical disc swing brake. Auto power swing.

Swing speed ..... 0 – 9.6 rpm
Tail swing ..... 11' 4" (3.45 m)
Swing torque ..... 82,680 lbf-ft. (112 kN•m)

Undercarriage

X-style carbody is integrally welded for strength and durability. Grease cylinder track adjusters with shock absorbing springs. LC undercarriage with sealed track, lubricated rollers and idlers. Three-bar grouser track shoes.

Carrier rollers ..... 2 per side
Track rollers ..... 8 per side
Track link pitch ..... 8.5" (216 mm)
Shoes ..... 48 per side
Shoe width ..... 31.5" (800 mm)
Ground pressure ..... 7.25 psi (.51 kg/cm^2)

Travel System

Two-speed independent hydrostatic travel with compact axial piston motors for increased performance. Hydraulic motor powered output shaft coupled to a planetary reduction unit and track sprocket. All hydraulic components mounted within the width of side frame.

Automatic Downshift: When operating in difficult travel conditions, the travel motor automatically downshifts from high to low speed for increased tractive effort and then automatically returns to high speed when travel conditions permit.

Max. travel speed ..... 2.0/3.4 mph (3.2/5.5 km/h)
Traction force ..... 61,820 lbs. (28 041 kg)
Gradeability 70%

Spring applied, hydraulically released disc parking brake built into each motor. Each travel motor equipped with counterbalance valve to prevent overspeeding down an incline and 3-stage reliefs for smooth starts and stops.

Lubricant and Coolant Capacity

Hydraulic tank ..... 46 gal. (175 liters)
Hydraulic system ..... 92 gal. (350 liters)
Final drive (per side) ..... 2.9 gal. (11 liters)
Swing drive ..... 1.6 gal. (6.0 liters)
Engine ..... 10 gal. (38 liters)
Fuel tank ..... 153 gal. (580 liters)
Cooling system ..... 7.9 gal. (30 liters)

Attachment

Boom ..... 21' 2" (6.45 m)

Available Arms	Digging Force*
• 10' 8" (3.25 m)	36,850 lbf. (164 kN)
in Auto Power-Up Mode	40,020 lbf. (178 kN)
• 8' 8" (2.63 m)	43,840 lbf. (195 kN)
in Auto Power-Up Mode	47,430 lbf. (211 kN)
• 13' 3" (4.04 m)	31,590 lbf. (140 kN)
in Auto Power-Up Mode	34,310 lbf. (153 kN)
Bucket Digging Force	51,440 lbf. (229 kN)
in Auto Power-Up Mode	55,840 lbf. (248 kN)

*Digging force ratings are based on ISO 6015, "Earthmoving Machinery – Hydraulic Excavators – Tool Forces".

Operating Weight

Working weight with 31.5" (800 mm) shoes, 21'2" (6.45 m) boom, 10' 8" (3.25 m) arm, 2,540 lb. (1 154 kg) bucket ..... 78,500 lbs. (35 600 kg)

https://truckmanualshub.com/

Specifications

Working Ranges

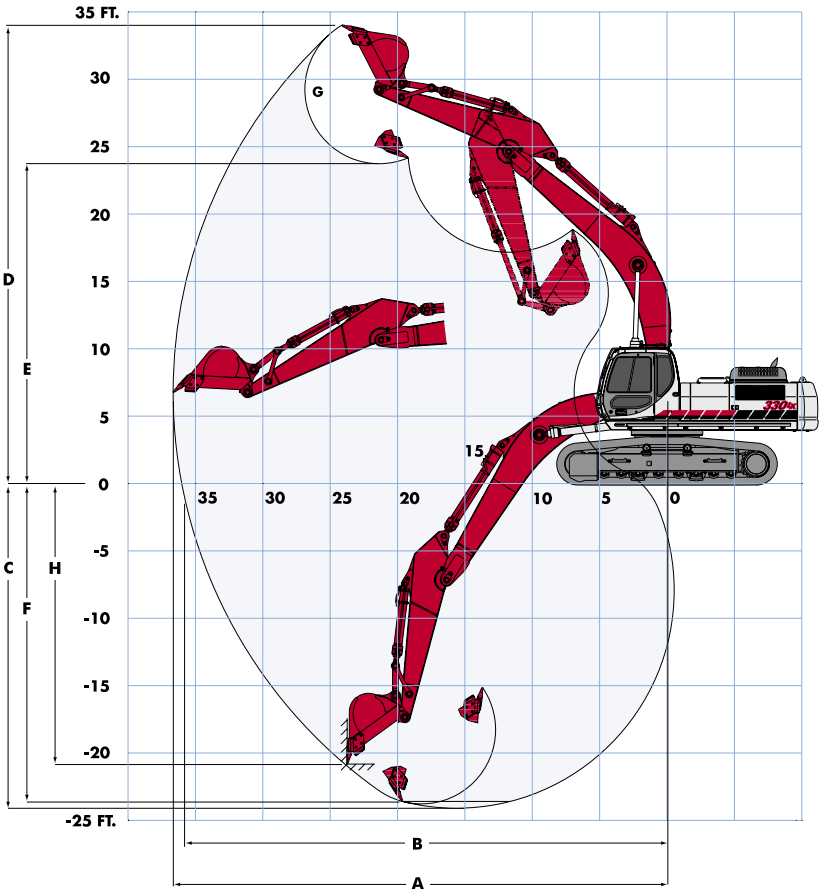

Machine equipped with 21′ 2″ (6.45 m) boom.	10′ 8″ Arm (3.25 m)	8′ 8″ Arm (2.63 m)	13′ 3″ Arm (4.04 m)
A Max. digging radius	36′ 8″ (11.17 m)	35′ 0″ (10.67 m)	39′ 1″ (11.90 m)
B Max. digging radius @ ground level	36′ 0″ (10.98 m)	34′ 4″ (10.47 m)	38′ 5″ (11.72 m)
C Max. digging depth	24′ 1″ (7.34 m)	22′ 1″ (6.73 m)	26′ 8″ (8.14 m)
D Max. digging height	34′ 0″ (10.37 m)	33′ 10″ (10.32 m)	35′ 0″ (10.67 m)
E Max. dumping height	23′ 9″ (7.23 m)	23′ 5″ (7.14 m)	24′ 9″ (7.54 m)
F Digging depth – 8' (2.44 m) level bottom	23′ 7″ (7.19 m)	21′ 6″ (6.55 m)	26′ 3″ (8.01 m)
G Bucket wrist angle	173°	173°	173°
H Max. vertical wall depth	20′ 10″ (6.35 m)	19′ 7″ (5.97 m)	23′ 5″ (7.15 m)

Dimensions

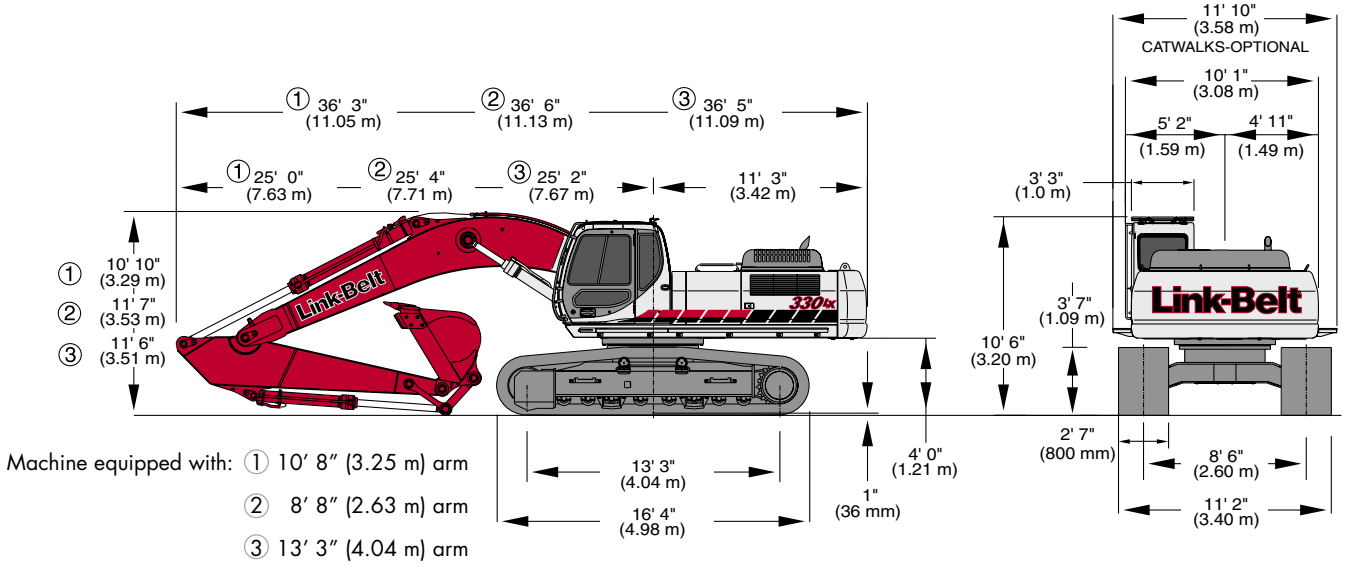

Machine equipped with: ① 10′ 8″ (3.25 m) arm
② 8′ 8″ (2.63 m) arm
③ 13′ 3″ (4.04 m) arm

https://truckmanualshub.com/

Lifting Capacities

10′ 8″ (3.25 m) Arm

with 21′ 2″ (6.45 m) Boom and 2, 577 lb. (1 169 kg) Bucket. Auto Power-Up Mode Applied

Bucket Hook Height		Radius of Load											
		10′ 0″ (3.05 m)		15′ 0″ (4.57 m)		20′ 0″ (6.10 m)		25′ 0″ (7.62 m)		30′ 0″ (9.14 m)		Cap. at Max. Reach	
		End	Side	End	Side	End	Side	End	Side	End	Side	End	Side
+25′ 0″ (7.62 m)	**lbs** kg											**13,880*** 6 290*	**13,880*** 6 290*
+20′ 0″ (6.10 m)	**lbs** kg							**16,370*** 7 420*	**14,930** 6 770			**10,020*** 4 540*	**10,020*** 4 540*
+15′ 0″ (4.57 m)	**lbs.** kg					**19,980*** 9 060*	**19,980*** 9 060*	**17,680*** 8 020*	**14,360** 6 510	**12,700*** 5 760*	**10,360** 4 700	**10,230*** 4 640*	**9,950** 4 510
+10′ 0″ (3.05 m)	**lbs.** kg	**35,030*** 15 890*	**35,030*** 15 890*	**31,300*** 14 190*	**30,440** 13 810	**23,460*** 10 640*	**19,460** 8 830	**19,500*** 8 840*	**13,640** 6 190	**16,060** 7 280	**10,010** 4 540	**10,820*** 4 900*	**9,120** 4 130
+5′ 0″ (1.52 m)	**lbs.** kg	**17,020*** 7 720*	**17,020*** 7 720*	**37,380*** 16 950*	**27,900** 12 650	**26,730*** 12 120*	**18,170** 8 240	**20,950** 9 500	**12,930** 5 860	**15,650** 7 100	**9,630** 4 370	**11,860*** 5 380*	**8,780** 3 980
Ground Line	**lbs.** kg	**24,050*** 10 910*	**24,050*** 10 910*	**40,320*** 18 290*	**26,520** 12 030	**28,890*** 13 100*	**17,260** 7 830	**20,340** 9 230	**12,380** 5 610	**15,340** 6 950	**9,340** 4 230	**13,580*** 6 160*	**8,870** 4 020
-5′ 0″ (1.52 m)	**lbs.** kg	**34,880*** 15 820*	**34,880*** 15 820*	**40,300*** 18 280*	**26,040** 11 810	**28,410** 12 880	**16,800** 7 620	**20,010** 9 070	**12,080** 5 480			**15, 640** 7 090	**9,480** 4 300
-10′ 0″ (3.05 m)	**lbs.** kg	**48,460*** 21 980*	**48,460*** 21 980*	**37,790*** 17 140*	**26,140** 11 850	**28,170*** 12 780*	**16,760** 7 600	**20,010** 9 070	**12,080** 5 480			**17,990** 8 160	**10,910** 4 950
-15′ 0″ (4.57 m)	**lbs.** kg	**44,360*** 20 120*	**44,360*** 20 120*	**32,340*** 14 660*	**26,730** 12 120	**24,160*** 10 960*	**17,150** 7 770					**19,980*** 9 060*	**14,090** 6 390
-20′ 0″ (6.10 m)	**lbs** kg			**21,580*** 9 790*	**21,580*** 9 790*							**19,050*** 8 640*	**19,050*** 8 640*

8′ 8″ (2.63 m) Arm

with 21′ 2″ (6.45 m) Boom and 2, 577 lb. (1 169 kg) Bucket. Auto Power-Up Mode Applied

Bucket Hook Height		Radius of Load											
		10′ 0″ (3.05 m)		15′ 0″ (4.57 m)		20′ 0″ (6.10 m)		25′ 0″ (7.62 m)		30′ 0″ (9.14 m)		Cap. at Max. Reach	
		End	Side	End	Side	End	Side	End	Side	End	Side	End	Side
+20′ 0″ (6.10 m)	**lbs** kg							**18,000*** 8 160*	**14,710** 6 670			**14,690*** 6 660*	**12,740** 5 770
+15′ 0″ (4.57 m)	**lbs.** kg					**21,890*** 9 930*	**20,450** 9 270	**19,090*** 8 660*	**14,190** 6 430			**14,970*** 6 790*	**10,950** 4 960
+10′ 0″ (3.05 m)	**lbs.** kg			**34,220*** 15 520*	**29,390** 13 330	**25,110*** 11 390*	**19,080** 8 650	**20,670*** 9 380*	**13,510** 6 120			**15,820*** 7 170*	**10,000** 4 530
+5′ 0″ (1.52 m)	**lbs.** kg			**39,200*** 17 780*	**27,160** 12 320	**27,930*** 12 660*	**17,890** 8 110	**20,860** 9 460	**12,860** 5 830	**15,690** 7 110	**9,670** 4 380	**15,630** 7 090	**9,630** 4 370
Ground Line	**lbs.** kg			**40,680*** 18 450*	**26,210** 11 890	**28,780** 13 050	**17,140** 7 770	**20,350** 9 230	**12,400** 5 620			**15,990** 7 250	**9,790** 4 440
-5′ 0″ (1.52 m)	**lbs.** kg	**36,130*** 16 390*	**36,130*** 16 390*	**39,450*** 17 890*	**26,050** 11 810	**28,440** 12 900	**16,850** 7 640	**20,150** 9 140	**12,210** 5 540			**17,350** 7 870	**10,590** 4 800
-10′ 0″ (3.05 m)	**lbs.** kg	**48,380*** 21 940*	**48,380*** 21 940*	**35,830*** 16 250*	**26,380** 11 960	**27,110*** 12 290*	**16,980** 7 700					**20,430** 9 270	**12,450** 5 650
-15′ 0″ (4.57 m)	**lbs.** kg	**37,810*** 17 150*	**37,810*** 17 150*	**28,870*** 13 090*	**27,240** 12 350	**21,300*** 9 660*	**17,660** 8 010					**20,280*** 9 200*	**16,910** 7 670

13′ 3″ (4.04 m) Arm

with 21′ 2″ (6.45 m) Boom and 2, 577 lb. (1 169 kg) Bucket. Auto Power-Up Mode Applied

Bucket Hook Height		Radius of Load											
		10′ 0″ (3.05 m)		15′ 0″ (4.57 m)		20′ 0″ (6.10 m)		25′ 0″ (7.62 m)		30′ 0″ (9.14 m)		Cap. at Max. Reach	
		End	Side	End	Side	End	Side	End	Side	End	Side	End	Side
+25′ 0″ (7.62 m)	**lbs** kg											**10,300*** 4 670*	**10,300*** 4 670*
+20′ 0″ (6.10 m)	**lbs** kg									**10,910*** 4 950*	**10,670** 4 840	**7,530*** 3 410*	**7,530*** 3 410*
+15′ 0″ (4.57 m)	**lbs.** kg							**15,560*** 7 050*	**14,490** 6 570	**14,320*** 6 490*	**10,350** 4 690	**7,640*** 3 460*	**7,640*** 3 460*
+10′ 0″ (3.05 m)	**lbs.** kg			**26,720*** 12 120*	**26,720*** 12 120*	**20,720*** 9 400*	**19,760** 8 960	**17,540*** 7 960*	**13,660** 6 190	**15,650*** 7 090*	**9,900** 4 490	**8,010*** 3 630*	**7,740** 3 510
+5′ 0″ (1.52 m)	**lbs.** kg	**28,270*** 12 820*	**28,270*** 12 820*	**33,720*** 15 290*	**28,380** 12 870	**24,400*** 11 070*	**18,230** 8 270	**19,620*** 8 900*	**12,810** 5 810	**15,470** 7 010	**9,420** 4 270	**8,680*** 3 930*	**7,420** 3 360
Ground Line	**lbs.** kg	**25,920*** 11 750*	**25,920*** 11 750*	**38,220*** 17 330*	**26,350** 11 950	**27,230*** 12 350*	**17,040** 7 730	**20,090** 9 110	**12,100** 5 490	**15,020** 6 810	**9,000** 4 080	**9,770*** 4 430*	**7,450** 3 380
-5′ 0″ (1.52 m)	**lbs.** kg	**32,210*** 14 610*	**32,210*** 14 610*	**39,750*** 18 030*	**25,400** 11 520	**27,950** 12 670	**16,330** 7 400	**19,570** 8 880	**11,630** 5 270	**14,740** 6 680	**8,750** 3 970	**11,530*** 5 230*	**7,860** 3 560
-10′ 0″ (3.05 m)	**lbs.** kg	**41,930*** 19 020*	**41,930*** 19 020*	**38,690*** 17 550*	**25,180** 11 420	**27,650** 12 540	**16,070** 7 290	**19,380** 8 790	**11,460** 5 200			**14,600*** 6 620*	**8,840** 4 010
-15′ 0″ (4.57 m)	**lbs.** kg	**50,180*** 22 760*	**50,180*** 22 760*	**34,970*** 15 860*	**25,530** 11 580	**25,960*** 11 770*	**16,240** 7 360	**19,520*** 8 850*	**11,650** 5 280			**17,980*** 8 150*	**10,870** 4 930
-20′ 0″ (6.10 m)	**lbs** kg	**38,150*** 17 300*	**38,150*** 17 300*	**27,450*** 12 450*	**26,470** 12 010	**19,820*** 8 990*	**16,960** 7 690					**18,260*** 8 280*	**15,740** 7 140

Notes: Excavator lifting capacities

1. Lifting capacities shown should not be exceeded. Weight of all lifting accessories must be deducted from the above lifting capacities.
2. Lifting capacities are based on machine standing on firm, uniform supporting surface. User must make allowances for job conditions such as soft or uneven ground.
3. Lifting capacities shown do not exceed 75% of minimum tipping loads or 87% of hydraulic capacities. Capacities marked with an asterisk (*) are limited by hydraulic capacities.
4. Least stable position is over the side.
5. Operator should be fully acquainted with the Operator's Manual & Operating Safety Booklet, furnished by LBX before operating the machine.
6. Capacities apply only to the machine as originally manufactured and normally equipped by LBX Company, LLC.
7. Lift capacity ratings are based on SAE J1097, "Lift Capacity Calculation and Test Procedure".

https://truckmanualshub.com/

Specifications

Bucket Sizes

Bucket Type	Capacity	Width Outside Lip	Weight	# Teeth	Arm 8′ 8″ (2.63 m)	Arm 10′ 8″ (3.25 m)	Arm 13′ 3″ (4.04 m)
ESCO STDP	1.26 yd³ (.96 m³)	30″ (762 mm)	2,306 lb. (1 046 kg)	4	H	H	H
	1.59 yd³ (1.22 m³)	36″ (914 mm)	2,516 lb. (1 141 kg)	4	H	H	H
	1.92 yd³ (1.47 m³)	42″ (1 067 mm)	2,786 lb. (1 264 kg)	5	H	H	M
	2.25 yd³ (1.72 m³)	48″ (1 219 mm)	2,956 lb. (1 341 kg)	5	H	M	L
	2.59 yd³ (1.98 m³)	54″ (1 372 mm)	3,226 lb. (1 463 kg)	6	M	L	L
	2.93 yd³ (2.24 m³)	60″ (1 524 mm)	3,396 lb. (1 540 kg)	6	L	L	N/A
ESCO HDP	1.22 yd³ (.93 m³)	30″ (762 mm)	2,886 lb. (1 309 kg)	4	H	H	H
	1.54 yd³ (1.18 m³)	36″ (914 mm)	3,131 lb. (1 420 kg)	4	H	H	H
	1.86 yd³ (1.42 m³)	42″ (1 067 mm)	3,459 lb. (1 569 kg)	5	H	H	M
	2.19 yd³ (1.67 m³)	48″ (1 219 mm)	3,704 lb. (1 680 kg)	5	H	M	L
	2.53 yd³ (1.93 m³)	54″ (1 372 mm)	4,031 lb. (1 828 kg)	6	M	L	L
ESCO XDP	1.12 yd³ (.86 m³)	30″ (762 mm)	3,327 lb. (1 509 kg)	4	H	H	H
	1.42 yd³ (1.09 m³)	36″ (914 mm)	3,620 lb. (1 642 kg)	4	H	H	H
	1.73 yd³ (1.32 m³)	42″ (1 067 mm)	3,994 lb. (1 812 kg)	5	H	H	M
	2.04 yd³ (1.56 m³)	48″ (1 219 mm)	4,287 lb. (1 945 kg)	5	H	M	L
ESCO HDC	1.47 yd³ (1.12 m³)	39″ (991 mm)	2,858 lb. (1 296 kg)	5	H	H	H
	1.76 yd³ (1.35 m³)	45″ (1 143 mm)	3,064 lb. (1 390 kg)	5	H	H	M
ESCO DITCH CLEANING	2.20 yd³ (1.68 m³)	72″ (1 829 mm)	2,971 lb. (1 348 kg)	–	H	M	L

Approval Code For Arm/Bucket Combinations

H - Heavy material (up to 3,370 lbs./ yd³)

M - Medium material (up to 2,700 lbs./ yd³)

L - Light material (up to 2,020 lbs./ yd³)

N/A - Not applicable

Standard Equipment

- Inte-LX® Computer Control System
- Five selectable working modes
- Auto Work Mode
- Attachment Work Mode
- Auto power-up mode
- Free swing control
- Cushioned attachment control
- Auto power swing
- Illuminated LCD service monitor
- Self-diagnostic system
- Control pattern selector valve
- Tier III Isuzu diesel engine with electronic control
- Auto idle start
- Auto engine warm up
- Auto idling system
- One-touch idle
- Low idle up
- Fuel cooler
- Low noise/low vibration cab floating on 6 fluid filled mounts
- Sliding/reclining, suspension cloth upholstered seat with adjustable arm rests and lumbar support, retracting seat belt
- 3-position tilting consoles
- 4th position on left console for entering and exiting the cab also serves as control lock-out
- Climate control heater and air conditioner
- Safety glass front windows with automatic lock and intermittent rise-up windshield wiper and washer, large LEXAN® rear/ side windows
- 12 volt accessory outlet for cell phones/ audio extras
- Horn, interior lighting, AM/FM STEREO radio, digital clock, floor mat, cigarette lighter
- Rear view mirror, coat hook, storage compartment
- Gate lock and gate lock lever (control lock-out device)
- Single pedal travel
- Travel alarm
- Common key for cab & house doors, engine hood, tool box, and fuel cap
- Vandalism locks/guarding
- Hand grab rails both sides
- Nephron® hydraulic filtration system
- Boom and arm holding valves
- Integral cylinder cushioning
- EMS (Extended Maintenance System) chrome pins with brass bushings throughout entire attachment except bucket
- Upper and lower undercovers
- Long undercarriage
- Sealed and lubricated track
- 16,310 lbs. (7 400 kg) counterweight

Options

- Catwalks
- Arms
  - 10′ 8″ (3.25 m)
  - 8′ 8″ (2.63m)
  - 13′ 3″ (4.04 m)
- Track
  - 31.5″ (800 mm) 3-Bar Grouser
  - 27.5″ (700 mm) 2-Bar Grouser
  - 33.5″ (850 mm) 3-Bar Grouser
- Auxiliary Hydraulics
  - Single Acting
  - Multi-Function
  - Thumb
- Hose Burst Check Valves
- Couplers (field install)
  - Hendrix Hydraulic Coupler
  - Esco Multi-Pin Grabber
- Thumbs (field install)
  - Esco Universal rigid
  - Esco Hydraulic non-link
  - Esco Hydraulic non-link (for coupler)
  - Esco Hydraulic link
  - Esco Hydraulic link (for coupler)

LBX Company LLC
Lexington, Kentucky www.lbxco.com

Litho in USA 1/06 #LBX2109 (supersedes #LBX2105)

® LBX and ® Link-Belt are registered trademarks. Copyright 2006. All rights reserved. We are constantly improving our products and therefore reserve the right to change designs and specifications.