https://truckmanualshub.com/

HYUNDAI
CONSTRUCTION EQUIPMENT

HX160 L, HX180 L

CRAWLER EXCAVATOR

SERVICE MANUAL

Table of Content

https://truckmanualshub.com/

Table of Content . . . 3
FOREWORD . . . 4
1. Structure . . . 4
2. How To Read The Service Manual . . . 5
3. Conversion Table . . . 6
SECTION 1 GENERAL . . . 12
Group 1 Safety . . . 13
Group 2 Specifications (hx160 L) . . . 22
Group 3 Specifications (hx180 L) . . . 41
SECTION 2 STRUCTURE AND FUNCTION . . . 63
Group 1 Pump Device . . . 64
Group 2 Main Control Valve . . . 82
Group 3 Swing Device (type 1) . . . 109
Group 3 Swing Device (type 2) . . . 120
Group 4 Travel Device . . . 131
Group 5 Rcv Lever . . . 139
Group 6 Rcv Pedal . . . 146
SECTION 3 HYDRAULIC SYSTEM . . . 152
Group 1 Hydraulic Circuit . . . 153
Group 2 Main Circuit . . . 154
Group 3 Pilot Circuit . . . 157
Group 4 Single Operation . . . 167
Group 5 Combined Operation . . . 179
SECTION 4 ELECTRICAL SYSTEM . . . 188
Group 1 Component Location . . . 189
Group 2 Electrical Circuit . . . 191
Memorandum . . . 196
Group 3 Electrical Component Specification . . . 213
Group 4 Connectors . . . 224
SECTION 5 MECHATRONICS SYSTEM . . . 249
Group 1 Outline . . . 250
Group 2 Mode Selection System . . . 252
Group 3 Automatic Deceleration System . . . 255
Group 4 Power Boost System . . . 256
Group 5 Travel Speed Control System . . . 257
Group 6 Automatic Warming Up System . . . 258
Group 7 Engine Overheat Prevention System . . . 259

Find manuals at https://best-manuals.com

https://truckmanualshub.com/
Group 8 Variable Power Control System . . . 260
Group 9 Attachment Flow Control System . . . 261
Group 10 Boom Floating Control System . . . 262
Group 11 Intelligent Power Control System . . . 263
Group 12 Anti-restart System . . . 265
Group 13 Self-diagnostic System . . . 266
Group 14 Engine Control System . . . 322
Group 15 Eppr Valve . . . 323
Group 16 Monitoring System . . . 328
Group 17 Fuel Warmer System . . . 366
SECTION 6 TROUBLESHOOTING . . . 367
Group 1 Before Troubleshooting . . . 368
Group 2 Hydraulic And Mechanical System . . . 371
Group 3 Electrical System . . . 391
Group 4 Mechatronics Systegroup System . . . 407
SECTION 7 MAINTENANCE STANDARD . . . 437
Group 1 Operational Performance Test . . . 438
Group 2 Major Component . . . 458
Group 3 Track And Work Equipment . . . 466
SECTION 8 DISASSEMBLY AND ASSEMBLY . . . 473
Group 1 Precautions . . . 474
Group 2 Tightening Torque . . . 476
Group 3 Pump Device . . . 480
Group 4 Main Control Valve . . . 502
Group 5 Swing Device (type 2) . . . 541
Group 6 Travel Device . . . 571
Group 7 Rcv Lever . . . 603
Group 8 Turning Joint . . . 617
Group 9 Boom, Arm And Bucket Cylinders . . . 622
Group 10 Undercarriage . . . 640
Group 11 Work Equipment . . . 652

Find manuals at https://best-manuals.com

https://truckmanualshub.com/

FOREWORD

1. STRUCTURE

This service manual has been prepared as an aid to improve the quality of repairs by giving the serviceman an accurate understanding of the product and by showing him the correct way to perform repairs and make judgements. Make sure you understand the contents of this manual and use it to full effect at every opportunity.
This service manual mainly contains the necessary technical information for operations performed in a service workshop.
For ease of understanding, the manual is divided into the following sections.

SECTION 1 GENERAL

This section explains the safety hints and gives the specification of the machine and major components.

SECTION 2 STRUCTURE AND FUNCTION

This section explains the structure and function of each component. It serves not only to give an understanding of the structure, but also serves as reference material for troubleshooting.

SECTION 3 HYDRAULIC SYSTEM

This section explains the hydraulic circuit, single and combined operation.

SECTION 4 ELECTRICAL SYSTEM

This section explains the electrical circuit, monitoring system and each component. It serves not only to give an understanding electrical system, but also serves as reference material for trouble shooting.

SECTION 5 MECHATRONICS SYSTEM

This section explains the computer aided power optimization system and each component.

SECTION 6 TROUBLESHOOTING

This section explains the troubleshooting charts correlating **problems** to **causes**.

SECTION 7 MAINTENANCE STANDARD

This section gives the judgement standards when inspecting disassembled parts.

SECTION 8 DISASSEMBLY AND ASSEMBLY

This section explains the order to be followed when removing, installing, disassembling or assembling each component, as well as precautions to be taken for these operations.

The specifications contained in this shop manual are subject to change at any time and without any advance notice. Contact your HYUNDAI distributor for the latest information.

Find manuals at https://best-manuals.com

https://truckmanualshub.com/

2. HOW TO READ THE SERVICE MANUAL

Distribution and updating

Any additions, amendments or other changes will be sent to HYUNDAI distributors.
Get the most up-to-date information before you start any work.

Filing method

1. See the page number on the bottom of the page.
   File the pages in correct order.
2. Following examples shows how to read the page number.
   Example 1
   2 - 3
   - 2: Item number (2. Structure and Function)
   - 3: Consecutive page number for each item.
3. Additional pages : Additional pages are indicated by a hyphen(-) and number after the page number. File as in the example.
   8 - 4
   8 - 4 - 1
   8 - 4 - 2
   8 - 5
   (8 - 4 - 1 and 8 - 4 - 2: Added pages)

Revised edition mark(①②③…)

When a manual is revised, an edition mark is recorded on the bottom outside corner of the pages.

Revisions

Revised pages are shown at the list of revised pages on the between the contents page and section 1 page.

Symbols

So that the shop manual can be of ample practical use, important places for safety and quality are marked with the following symbols.

Symbol	Item	Remarks
⚠	Safety	Special safety precautions are necessary when performing the work.
		Extra special safety precautions are necessary when performing the work because it is under internal pressure.
※	Caution	Special technical precautions or other precautions for preserving standards are necessary when performing the work.

Find manuals at https://best-manuals.com

https://truckmanualshub.com/

3. CONVERSION TABLE

Method of using the Conversion Table
The Conversion Table in this section is provided to enable simple conversion of figures. For details of the method of using the Conversion Table, see the example given below.

Example

1. **Method of using the Conversion Table to convert from millimeters to inches**
   Convert 55mm into inches.

   (1) Locate the number 50in the vertical column at the left side, take this as ⓐ, then draw a horizontal line from ⓐ.

   (2) Locate the number 5in the row across the top, take this as ⓑ, then draw a perpendicular line down from ⓑ.

   (3) Take the point where the two lines cross as ⓒ. This point ⓒ gives the value when converting from millimeters to inches. Therefore, 55mm = 2.165 inches.

2. Convert 550mm into inches.

   (1) The number 550 does not appear in the table, so divide by 10(Move the decimal point one place to the left) to convert it to 55mm.

   (2) Carry out the same procedure as above to convert 55mm to 2.165 inches.

   (3) The original value(550mm) was divided by 10, so multiply 2.165 inches by 10(Move the decimal point one place to the right) to return to the original value.
   This gives 550mm = 21.65 inches.

Millimeters to inches

1mm = 0.03937 in

	0	1	2	3	4	5 ⓑ	6	7	8	9
0		0.039	0.079	0.118	0.157	0.197	0.236	0.276	0.315	0.354
10	0.394	0.433	0.472	0.512	0.551	0.591	0.630	0.669	0.709	0.748
20	0.787	0.827	0.866	0.906	0.945	0.984	1.024	1.063	1.102	1.142
30	1.181	1.220	1.260	1.299	1.339	1.378	1.417	1.457	1.496	1.536
40	1.575	1.614	1.654	1.693	1.732	1.772	1.811	1.850	1.890	1.929
ⓐ 50	1.969	2.008	2.047	2.087	2.126	ⓒ 2.165	2.205	2.244	2.283	2.323
60	2.362	2.402	2.441	2.480	2.520	2.559	2.598	2.638	2.677	2.717
70	2.756	2.795	2.835	2.874	2.913	2.953	2.992	3.032	3.071	3.110
80	3.150	3.189	3.228	3.268	3.307	3.346	3.386	3.425	3.465	3.504
90	3.543	3.583	3.622	3.661	3.701	3.740	3.780	3.819	3.858	3.898

Find manuals at https://best-manuals.com

https://truckmanualshub.com/

Millimeters to inches

1mm = 0.03937in

	0	1	2	3	4	5	6	7	8	9
0		0.039	0.079	0.118	0.157	0.197	0.236	0.276	0.315	0.354
10	0.394	0.433	0.472	0.512	0.551	0.591	0.630	0.669	0.709	0.748
20	0.787	0.827	0.866	0.906	0.945	0.984	1.024	1.063	1.102	1.142
30	1.181	1.220	1.260	1.299	1.339	1.378	1.417	1.457	1.496	1.536
40	1.575	1.614	1.654	1.693	1.732	1.772	1.811	1.850	1.890	1.929
50	1.969	2.008	2.047	2.087	2.126	2.165	2.205	2.244	2.283	2.323
60	2.362	2.402	2.441	2.480	2.520	2.559	2.598	2.638	2.677	2.717
70	2.756	2.795	2.835	2.874	2.913	2.953	2.992	3.032	3.071	3.110
80	3.150	3.189	3.228	3.268	3.307	3.346	3.386	3.425	3.465	3.504
90	3.543	3.583	3.622	3.661	3.701	3.740	3.780	3.819	3.858	3.898

Kilogram to Pound

1kg = 2.2046lb

	0	1	2	3	4	5	6	7	8	9
0		2.20	4.41	6.61	8.82	11.02	13.23	15.43	17.64	19.84
10	22.05	24.25	26.46	28.66	30.86	33.07	35.27	37.48	39.68	41.89
20	44.09	46.30	48.50	50.71	51.91	55.12	57.32	59.5.	61.73	63.93
30	66.14	68.34	70.55	72.75	74.96	77.16	79.37	81.57	83.78	85.98
40	88.18	90.39	92.59	94.80	97.00	99.21	101.41	103.62	105.82	108.03
50	110.23	112.44	114.64	116.85	119.05	121.25	123.46	125.66	127.87	130.07
60	132.28	134.48	136.69	138.89	141.10	143.30	145.51	147.71	149.91	152.12
70	154.32	156.53	158.73	160.94	163.14	165.35	167.55	169.76	171.96	174.17
80	176.37	178.57	180.78	182.98	185.19	187.39	189.60	191.80	194.01	196.21
90	198.42	200.62	202.83	205.03	207.24	209.44	211.64	213.85	216.05	218.26

Find manuals at https://best-manuals.com

https://truckmanualshub.com/

Liter to U.S. Gallon

1 l = 0.2642 U.S.Gal

	0	1	2	3	4	5	6	7	8	9
0		0.264	0.528	0.793	1.057	1.321	1.585	1.849	2.113	2.378
10	2.642	2.906	3.170	3.434	3.698	3.963	4.227	4.491	4.755	5.019
20	5.283	5.548	5.812	6.6076	6.340	6.604	6.869	7.133	7.397	7.661
30	7.925	8.189	8.454	8.718	8.982	9.246	9.510	9.774	10.039	10.303
40	10.567	10.831	11.095	11.359	11.624	11.888	12.152	12.416	12.680	12.944
50	13.209	13.473	13.737	14.001	14.265	14.529	14.795	15.058	15.322	15.586
60	15.850	16.115	16.379	16.643	16.907	17.171	17.435	17.700	17.964	18.228
70	18.492	18.756	19.020	19.285	19.549	19.813	20.077	20.341	20.605	20.870
80	21.134	21.398	21.662	21.926	22.190	22.455	22.719	22.983	23.247	23.511
90	23.775	24.040	24.304	24.568	24.832	25.096	25.631	25.625	25.889	26.153

Liter to U.K. Gallon

1 l = 0.21997 U.K.Gal

	0	1	2	3	4	5	6	7	8	9
0		0.220	0.440	0.660	0.880	1.100	1.320	1.540	1.760	1.980
10	2.200	2.420	2.640	2.860	3.080	3.300	3.520	3.740	3.950	4.179
20	4.399	4.619	4.839	5.059	5.279	5.499	5.719	5.939	6.159	6.379
30	6.599	6.819	7.039	7.259	7.479	7.969	7.919	8.139	8.359	8.579
40	8.799	9.019	9.239	9.459	9.679	9.899	10.119	10.339	10.559	10.778
50	10.998	11.281	11.438	11.658	11.878	12.098	12.318	12.528	12.758	12.978
60	13.198	13.418	13.638	13.858	14.078	14.298	14.518	14.738	14.958	15.178
70	15.398	15.618	15.838	16.058	16.278	16.498	16.718	16.938	17.158	17.378
80	17.598	17.818	18.037	18.257	18.477	18.697	18.917	19.137	19.357	19.577
90	19.797	20.017	20.237	20.457	20.677	20.897	21.117	21.337	21.557	21.777

Find manuals at https://best-manuals.com

https://truckmanualshub.com/

kgf · m to lbf · ft

1kgf · m = 7.233lbf · ft

	0	1	2	3	4	5	6	7	8	9
		7.2	14.5	21.7	28.9	36.2	43.4	50.6	57.9	65.1
10	72.3	79.6	86.8	94.0	101.3	108.5	115.7	123.0	130.2	137.4
20	144.7	151.9	159.1	166.4	173.6	180.8	188.1	195.3	202.5	209.8
30	217.0	224.2	231.5	238.7	245.9	253.2	260.4	267.6	274.9	282.1
40	289.3	396.6	303.8	311.0	318.3	325.5	332.7	340.0	347.2	354.4
50	361.7	368.9	376.1	383.4	390.6	397.8	405.1	412.3	419.5	426.8
60	434.0	441.2	448.5	455.7	462.9	470.2	477.4	484.6	491.8	499.1
70	506.3	513.5	520.8	528.0	535.2	542.5	549.7	556.9	564.2	571.4
80	578.6	585.9	593.1	600.3	607.6	614.8	622.0	629.3	636.5	643.7
90	651.0	658.2	665.4	672.7	679.9	687.1	694.4	701.6	708.8	716.1
100	723.3	730.5	737.8	745.0	752.2	759.5	766.7	773.9	781.2	788.4
110	795.6	802.9	810.1	817.3	824.6	831.8	839.0	846.3	853.5	860.7
120	868.0	875.2	882.4	889.7	896.9	904.1	911.4	918.6	925.8	933.1
130	940.3	947.5	954.8	962.0	969.2	976.5	983.7	990.9	998.2	10005.4
140	1012.6	1019.9	1027.1	1034.3	1041.5	1048.8	1056.0	1063.2	1070.5	1077.7
150	1084.9	1092.2	1099.4	1106.6	1113.9	1121.1	1128.3	1135.6	1142.8	1150.0
160	1157.3	1164.5	1171.7	1179.0	1186.2	1193.4	1200.7	1207.9	1215.1	1222.4
170	1129.6	1236.8	1244.1	1251.3	1258.5	1265.8	1273.0	1280.1	1287.5	1294.7
180	1301.9	1309.2	1316.4	1323.6	1330.9	1338.1	1345.3	1352.6	1359.8	1367.0
190	1374.3	1381.5	1388.7	1396.0	1403.2	1410.4	1417.7	1424.9	1432.1	1439.4

Find manuals at https://best-manuals.com

https://truckmanualshub.com/

kgf/cm² to lbf/in²

1kgf / cm² = 14.2233lbf / in²

	0	1	2	3	4	5	6	7	8	9
		14.2	28.4	42.7	56.9	71.1	85.3	99.6	113.8	128.0
10	142.2	156.5	170.7	184.9	199.1	213.4	227.6	241.8	256.0	270.2
20	284.5	298.7	312.9	327.1	341.4	355.6	369.8	384.0	398.3	412.5
30	426.7	440.9	455.1	469.4	483.6	497.8	512.0	526.3	540.5	554.7
40	568.9	583.2	597.4	611.6	625.8	640.1	654.3	668.5	682.7	696.9
50	711.2	725.4	739.6	753.8	768.1	782.3	796.5	810.7	825.0	839.2
60	853.4	867.6	881.8	896.1	910.3	924.5	938.7	953.0	967.2	981.4
70	995.6	1010	1024	1038	1053	1067	1081	1095	1109	1124
80	1138	1152	1166	1181	1195	1209	1223	1237	1252	1266
90	1280	1294	1309	1323	1337	1351	1365	1380	1394	1408
100	1422	1437	1451	1465	1479	1493	1508	1522	1536	1550
110	1565	1579	1593	1607	1621	1636	1650	1664	1678	1693
120	1707	1721	1735	1749	1764	1778	1792	1806	1821	1835
130	1849	2863	1877	1892	1906	1920	1934	1949	1963	1977
140	1991	2005	2020	2034	2048	2062	2077	2091	2105	2119
150	2134	2148	2162	2176	2190	2205	2219	2233	2247	2262
160	2276	2290	2304	2318	2333	2347	2361	2375	2389	2404
170	2418	2432	2446	2460	2475	2489	2503	2518	2532	2546
180	2560	2574	2589	5603	2617	2631	2646	2660	2674	2688
200	2845	2859	2873	2887	2901	2916	2930	2944	2958	2973
210	2987	3001	3015	3030	3044	3058	3072	3086	3101	3115
220	3129	3143	3158	3172	3186	3200	3214	3229	3243	3257
230	3271	3286	3300	3314	3328	3343	3357	3371	3385	3399
240	3414	3428	3442	3456	3470	3485	3499	3513	3527	3542

Find manuals at https://best-manuals.com

https://truckmanualshub.com/

TEMPERATURE

Fahrenheit-Centigrade Conversion.

A simple way to convert a fahrenheit temperature reading into a centigrade temperature reading or vice verse is to enter the accompanying table in the center or boldface column of figures.

These figures refer to the temperature in either Fahrenheit or Centigrade degrees.

If it is desired to convert from Fahrenheit to Centigrade degrees, consider the center column as a table of Fahrenheit temperatures and read the corresponding Centigrade temperature in the column at the left.

If it is desired to convert from Centigrade to Fahrenheit degrees, consider the center column as a table of Centigrade values, and read the corresponding Fahrenheit temperature on the right.

˚C		˚F	˚C		˚F	˚C		˚F	˚C		˚F
-40.4	-40	-40.0	-11.7	11	51.8	7.8	46	114.8	27.2	81	117.8
-37.2	-35	-31.0	-11.1	12	53.6	8.3	47	116.6	27.8	82	179.6
-34.4	-30	-22.0	-10.6	13	55.4	8.9	48	118.4	28.3	83	181.4
-31.7	-25	-13.0	-10.0	14	57.2	9.4	49	120.2	28.9	84	183.2
-28.9	-20	-4.0	-9.4	15	59.0	10.0	50	122.0	29.4	85	185.0
-28.3	-19	-2.2	-8.9	16	60.8	10.6	51	123.8	30.0	86	186.8
-27.8	-18	-0.4	-8.3	17	62.6	11.1	52	125.6	30.6	87	188.6
-27.2	-17	1.4	-7.8	18	64.4	11.7	53	127.4	31.1	88	190.4
-26.7	-16	3.2	-6.7	20	68.0	12.8	55	131.0	32.2	90	194.0
-26.1	-15	5.0	-6.7	20	68.0	12.8	55	131.0	32.2	90	194.0
-25.6	-14	6.8	-6.1	21	69.8	13.3	56	132.8	32.8	91	195.8
-25.0	-13	8.6	-5.6	22	71.6	13.9	57	134.6	33.3	92	197.6
-24.4	-12	10.4	-5.0	23	73.4	14.4	58	136.4	33.9	93	199.4
-23.9	-11	12.2	-4.4	24	75.2	15.0	59	138.2	34.4	94	201.2
-23.3	-10	14.0	-3.9	25	77.0	15.6	60	140.0	35.0	95	203.0
-22.8	-9	15.8	-3.3	26	78.8	16.1	61	141.8	35.6	96	204.8
-22.2	-8	17.6	-2.8	27	80.6	16.7	62	143.6	36.1	97	206.6
-21.7	-7	19.4	-2.2	28	82.4	17.2	63	145.4	36.7	98	208.4
-21.1	-6	21.2	-1.7	29	84.2	17.8	64	147.2	37.2	99	210.2
-20.6	-5	23.0	-1.1	35	95.0	21.1	70	158.0	51.7	125	257.0
-20.0	-4	24.8	-0.6	31	87.8	18.9	66	150.8	40.6	105	221.0
-19.4	-3	26.6	0	32	89.6	19.4	67	152.6	43.3	110	230.0
-18.9	-2	28.4	0.6	33	91.4	20.0	68	154.4	46.1	115	239.0
-18.3	-1	30.2	1.1	34	93.2	20.6	69	156.2	48.9	120	248.0
-17.8	0	32.0	1.7	35	95.0	21.1	70	158.0	51.7	125	257.0
-17.2	1	33.8	2.2	36	96.8	21.7	71	159.8	54.4	130	266.0
-16.7	2	35.6	2.8	37	98.6	22.2	72	161.6	57.2	135	275.0
-16.1	3	37.4	3.3	38	100.4	22.8	73	163.4	60.0	140	284.0
-15.6	4	39.2	3.9	39	102.2	23.3	74	165.2	62.7	145	293.0
-15.0	5	41.0	4.4	40	104.0	23.9	75	167.0	65.6	150	302.0
-14.4	6	42.8	5.0	41	105.8	24.4	76	168.8	68.3	155	311.0
-13.9	7	44.6	5.6	42	107.6	25.0	77	170.6	71.1	160	320.0
-13.3	8	46.4	6.1	43	109.4	25.6	78	172.4	73.9	165	329.0
-12.8	9	48.2	6.7	44	111.2	26.1	79	174.2	76.7	170	338.0
-12.2	10	50.0	7.2	45	113.0	26.7	80	176.0	79.4	172	347.0

https://truckmanualshub.com/

SECTION 1 GENERAL

Group 1 Safety Hints 1-1
Group 2 Specifications (HX160 L) 1-10
Group 2 Specifications (HX180 L) 1-29

https://truckmanualshub.com/

GROUP 1 SAFETY

FOLLOW SAFE PROCEDURE

Unsafe work practices are dangerous. Understand service procedure before doing work; Do not attempt shortcuts.

WEAR PROTECTIVE CLOTHING

Wear close fitting clothing and safety equipment appropriate to the job.

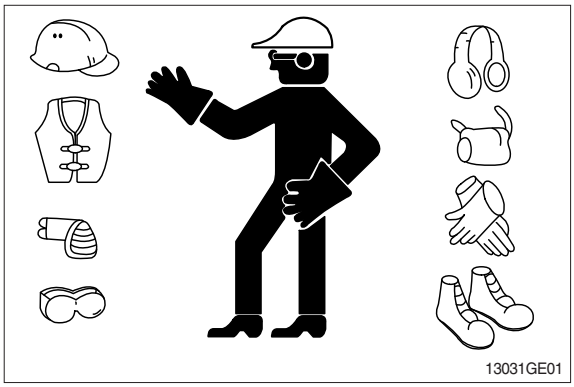

WARN OTHERS OF SERVICE WORK

Unexpected machine movement can cause serious injury.
Before performing any work on the excavator, attach a 「**Do Not Operate**」 tag on the right side control lever.

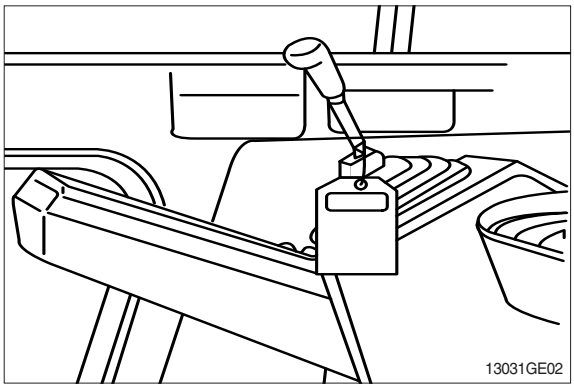

USE HANDHOLDS AND STEPS

Falling is one of the major causes of personal injury.
When you get on and off the machine, always maintain a three point contact with the steps and handrails and face the machine. Do not use any controls as handholds.
Never jump on or off the machine. Never mount or dismount a moving machine.
Be careful of slippery conditions on platforms, steps, and handrails when leaving the machine.

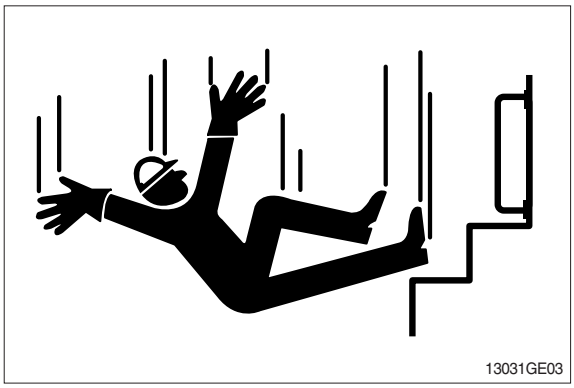

https://truckmanualshub.com/

PREPARE FOR EMERGENCIES

Be prepared if a fire starts.

Keep a first aid kit and fire extinguisher handy.

Keep emergency numbers for doctors, ambulance service, hospital, and fire department near your telephone.

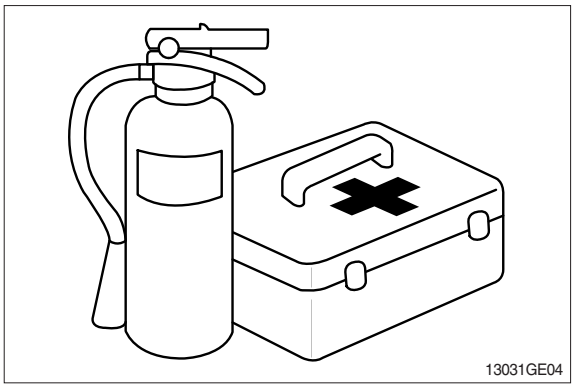

PROTECT AGAINST FLYING DEBRIS

Guard against injury from flying pieces of metal or debris; Wear goggles or safety glasses.

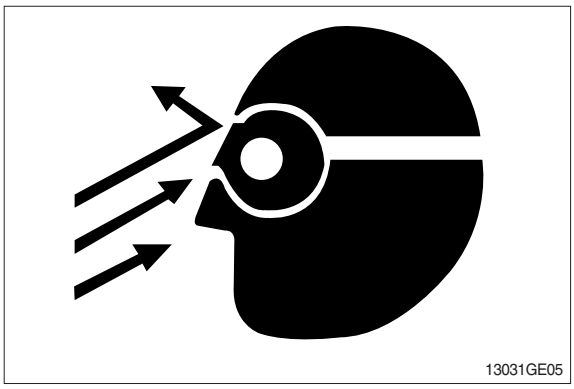

PROTECT AGAINST NOISE

Prolonged exposure to loud noise can cause impairment or loss of hearing.

Wear a suitable hearing protective device such as earmuffs or earplugs to protect against objectionable or uncomfortable loud noises.

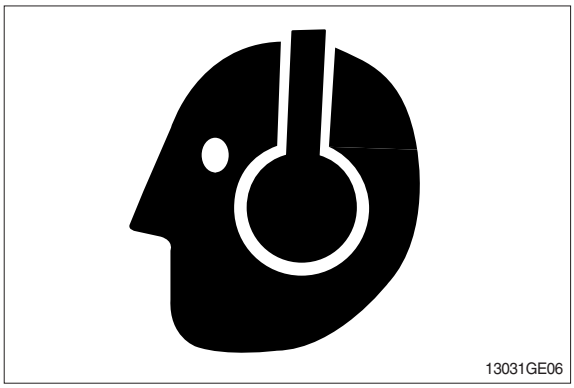

AVOID POWER LINES

Serious injury or death can result from contact with electric lines.

Never move any part of the machine or load closer to electric line than 3m(10ft) plus twice the line insulator length.

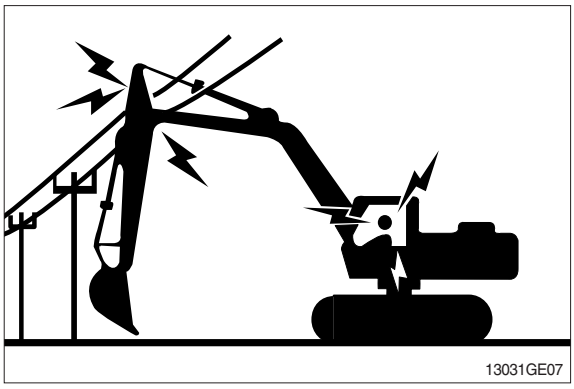

https://truckmanualshub.com/

KEEP RIDERS OFF EXCAVATOR

Only allow the operator on the excavator. Keep riders off.

Riders on excavator are subject to injury such as being struck by foreign objects and being thrown off the excavator. Riders also obstruct the operator's view resulting in the excavator being operated in an unsafe manner.

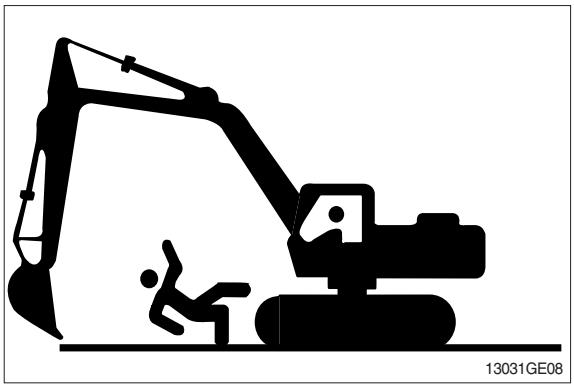

MOVE AND OPERATE MACHINE SAFELY

Bystanders can be run over. Know the location of bystanders before moving, swinging, or operating the machine.

Always keep the travel alarm in working condition. It warns people when the excavator starts to move.

Use a signal person when moving, swinging, or operating the machine in congested areas. Coordinate hand signals before starting the excavator.

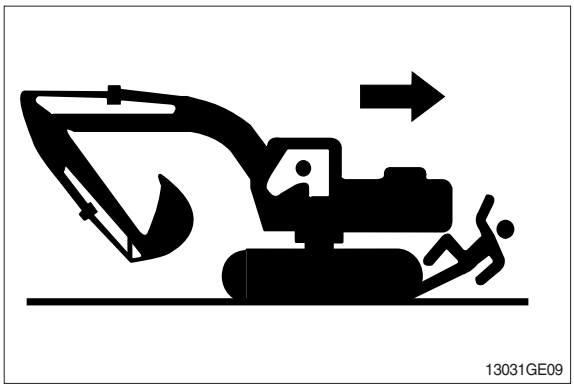

OPERATE ONLY FORM OPERATOR'S SEAT

Avoid possible injury machine damage. Do not start engine by shorting across starter terminals.

NEVER start engine while standing on ground. Start engine only from operator's seat.

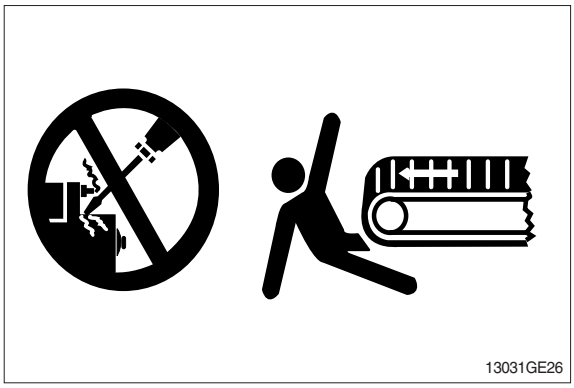

PARK MACHINE SAFELY

Before working on the machine:

- Park machine on a level surface.
- Lower bucket to the ground.
- Turn auto idle switch off.
- Run engine at low idle speed without load for 5 minutes.
- Turn key switch to OFF to stop engine. Remove key from switch.
- Place safety lever to locked position.
- Allow engine to cool.

https://truckmanualshub.com/

SUPPORT MACHINE PROPERLY

Always lower the attachment or implement to the ground before you work on the machine. If you must work on a lifted machine or attachment, securely support the machine or attachment.

Do not support the machine on cinder blocks, hollow tiles, or props that may crumble under continuous load.
Do not work under a machine that is supported solely by a jack.Follow recommended procedures in this manual.

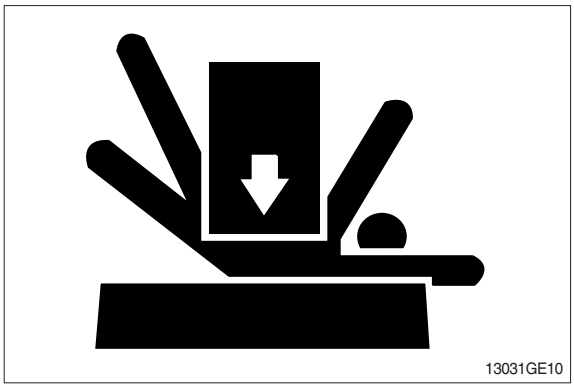

SERVICE COOLING SYSTEM SAFELY

Explosive release of fluids from pressurized cooling system can cause serious burns.

Shut off engine. Only remove filler cap when cool enough to touch with bare hands.

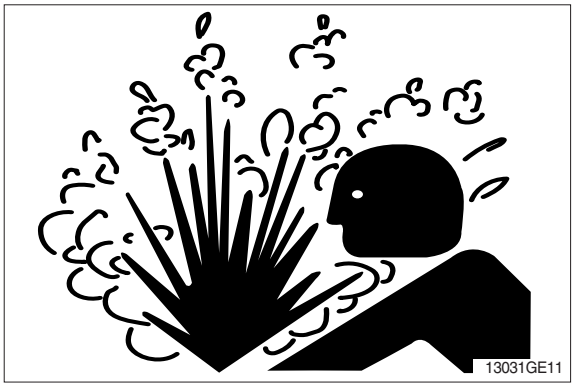

HANDLE FLUIDS SAFELY-AVOID FIRES

Handle fuel with care; It is highly flammable. Do not refuel the machine while smoking or when near open flame or sparks. Always stop engine before refueling machine.
Fill fuel tank outdoors.

Store flammable fluids away from fire hazards. Do not incinerate or puncture pressurized containers.

Make sure machine is clean of trash, grease, and debris.

Do not store oily rags; They can ignite and burn spontaneously.

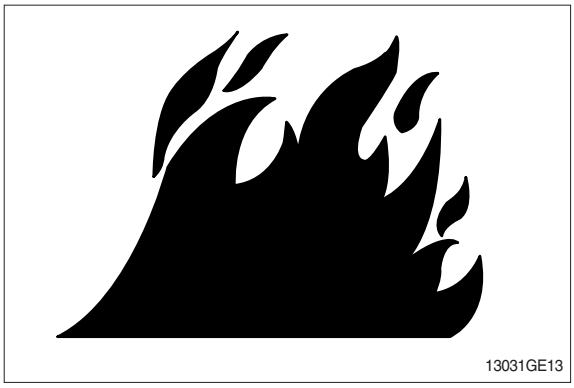

https://truckmanualshub.com/

BEWARE OF EXHAUST FUMES

Prevent asphyxiation. Engine exhaust fumes can cause sickness or death.

If you must operate in a building, be positive there is adequate ventilation. Either use an exhaust pipe extension to remove the exhaust fumes or open doors and windows to bring enough outside air into the area.

REMOVE PAINT BEFORE WELDING OR HEATING

Avoid potentially toxic fumes and dust.

Hazardous fumes can be generated when paint is heated by welding, soldering, or using a torch.

Do all work outside or in a well ventilated area. Dispose of paint and solvent properly.

Remove paint before welding or heating:

- If you sand or grind paint, avoid breathing the dust.
  Wear an approved respirator.
- If you use solvent or paint stripper, remove stripper with soap and water before welding. Remove solvent or paint stripper containers and other flammable material from area. Allow fumes to disperse at least 15 minutes before welding or heating.

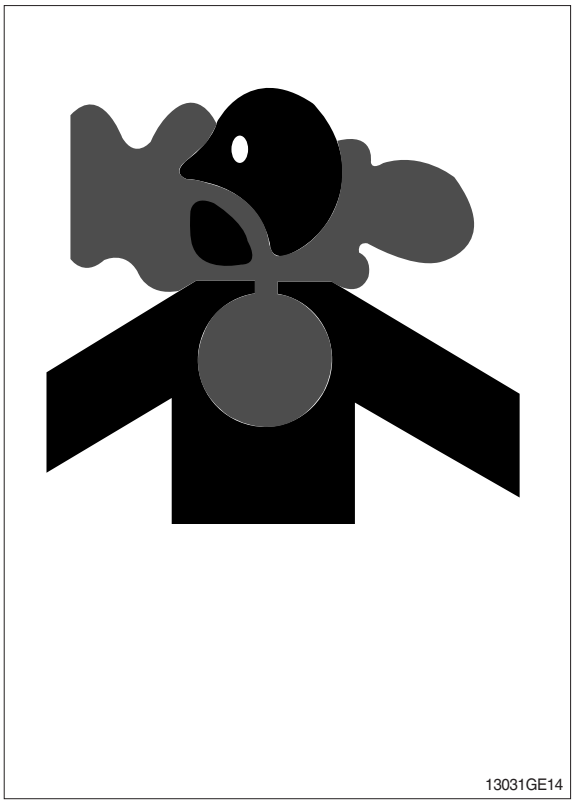
13031GE14

ILLUMINATE WORK AREA SAFELY

Illuminate your work area adequately but safely. Use a portable safety light for working inside or under the machine. Make sure the bulb is enclosed by a wire cage. The hot filament of an accidentally broken bulb can ignite spilled fuel or oil.

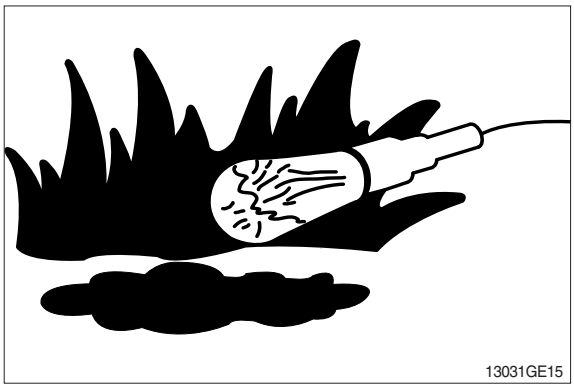
13031GE15

https://truckmanualshub.com/

SERVICE MACHINE SAFELY

Tie long hair behind your head. Do not wear a necktie, scarf, loose clothing or necklace when you work near machine tools or moving parts. If these items were to get caught, severe injury could result.

Remove rings and other jewelry to prevent electrical shorts and entanglement in moving parts.

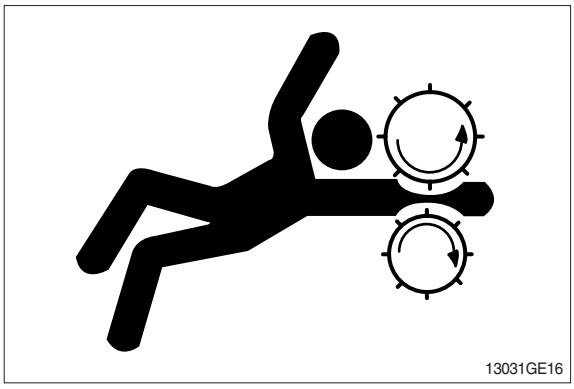

STAY CLEAR OF MOVING PARTS

Entanglements in moving parts can cause serious injury.

To prevent accidents, use care when working around rotating parts.

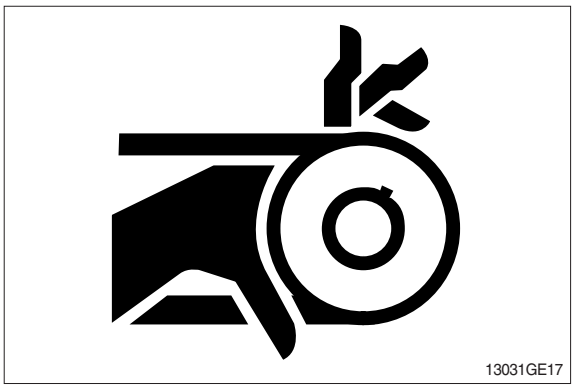

AVOID HIGH PRESSURE FLUIDS

Escaping fluid under pressure can penetrate the skin causing serious injury.

Avoid the hazard by relieving pressure before disconnecting hydraulic or other lines. Tighten all connections before applying pressure.

Search for leaks with a piece of cardboard. Protect hands and body from high pressure fluids.

If an accident occurs, see a doctor immediately. Any fluid injected into the skin must be surgically removed within a few hours or gangrene may result.

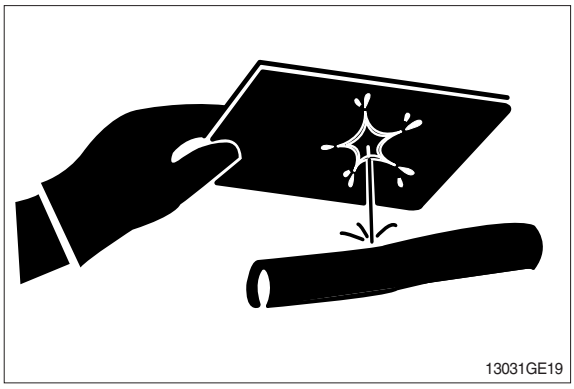

https://truckmanualshub.com/

AVOID HEATING NEAR PRESSURIZED FLUID LINES

Flammable spray can be generated by heating near pressurized fluid lines, resulting in severe burns to yourself and bystanders. Do not heat by welding, soldering, or using a torch near pressurized fluid lines or other flammable materials.

Pressurized lines can be accidentally cut when heat goes beyond the immediate flame area. Install fire resisting guards to protect hoses or other materials.

13031GE20

PREVENT BATTERY EXPLOSIONS

Keep sparks, lighted matches, and flame away from the top of battery.
Battery gas can explode.

Never check battery charge by placing a metal object across the posts. Use a volt-meter or hydrometer.

Do not charge a frozen battery; It may explode. Warm battery to 16° C (60° F).

13031GE21

https://truckmanualshub.com/

PREVENT ACID BURNS

Sulfuric acid in battery electrolyte is poisonous. It is strong enough to burn skin, eat holes in clothing, and cause blindness if splashed into eyes.

Avoid the hazard by:

1. Filling batteries in a well-ventilated area.
2. Wearing eye protection and rubber gloves.
3. Avoiding breathing fumes when electrolyte is added.
4. Avoiding spilling of dripping electrolyte.
5. Use proper jump start procedure.

If you spill acid on yourself:

1. Flush your skin with water.
2. Apply baking soda or lime to help neutralize the acid.
3. Flush your eyes with water for 10-15 minutes.
   Get medical attention immediate-ly.

If acid is swallowed:

1. Drink large amounts of water or milk.
2. Then drink milk of magnesia, beaten eggs, or vegetable oil.
3. Get medical attention immediately.

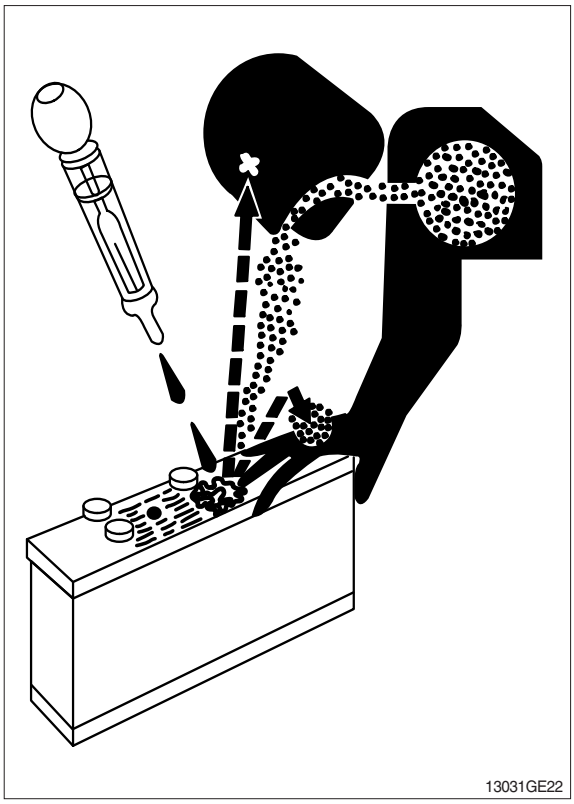

USE TOOLS PROPERLY

Use tools appropriate to the work. Makeshift tools, parts, and procedures can create safety hazards.

Use power tools only to loosen threaded tools and fasteners.

For loosening and tightening hardware, use the correct size tools.
DO NOT use U.S. measurement tools on metric fasteners. Avoid bodily injury caused by slipping wrenches.

Use only recommended replacement parts. (See Parts manual.)

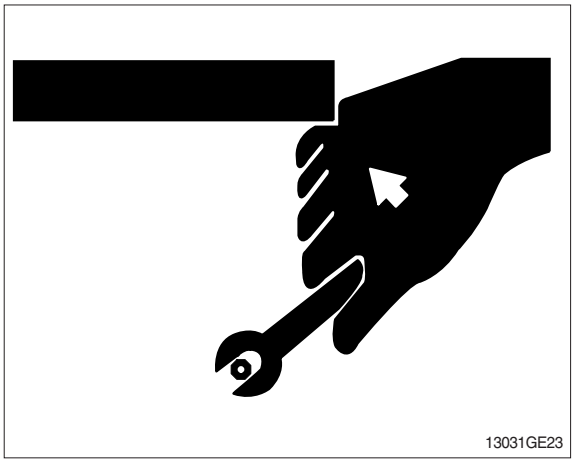

https://truckmanualshub.com/

DISPOSE OF FLUIDS PROPERLY

Improperly disposing of fluids can harm the environment and ecology. Before draining any fluids, find out the proper way to dispose of waste from your local environmental agency.

Use proper containers when draining fluids. Do not use food or beverage containers that may mislead someone into drinking from them.

DO NOT pour oil into the ground, down a drain, or into a stream, pond, or lake. Observe relevant environmental protection regulations when disposing of oil, fuel, coolant, brake fluid, filters, batteries, and other harmful waste.

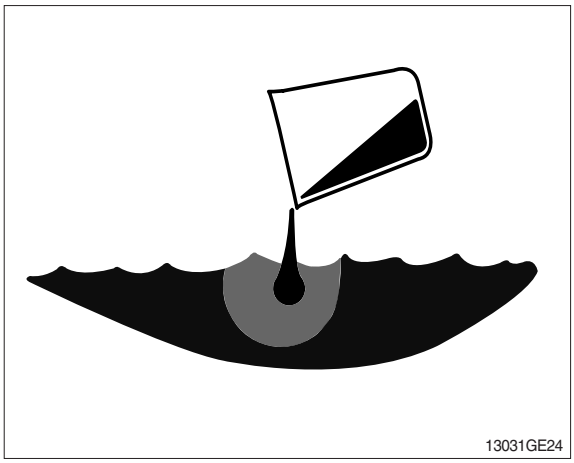

REPLACE SAFETY LABELS

Replace missing or damaged safety labels. See the machine operator's manual for correct safety label placement.

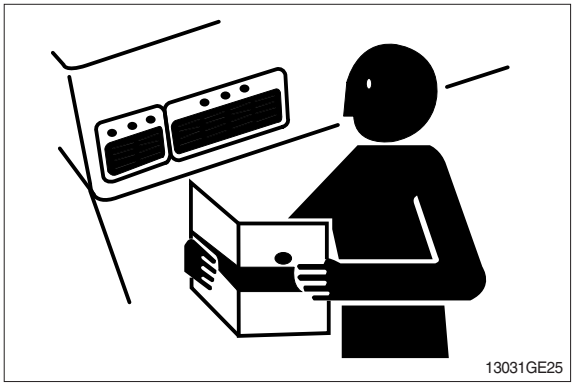

LIVE WITH SAFETY

Before returning machine to customer, make sure machine is functioning properly, especially the safety systems. Install all guards and shields.

https://truckmanualshub.com/

GROUP 2 SPECIFICATIONS (HX160 L)

1. MAJOR COMPONENT

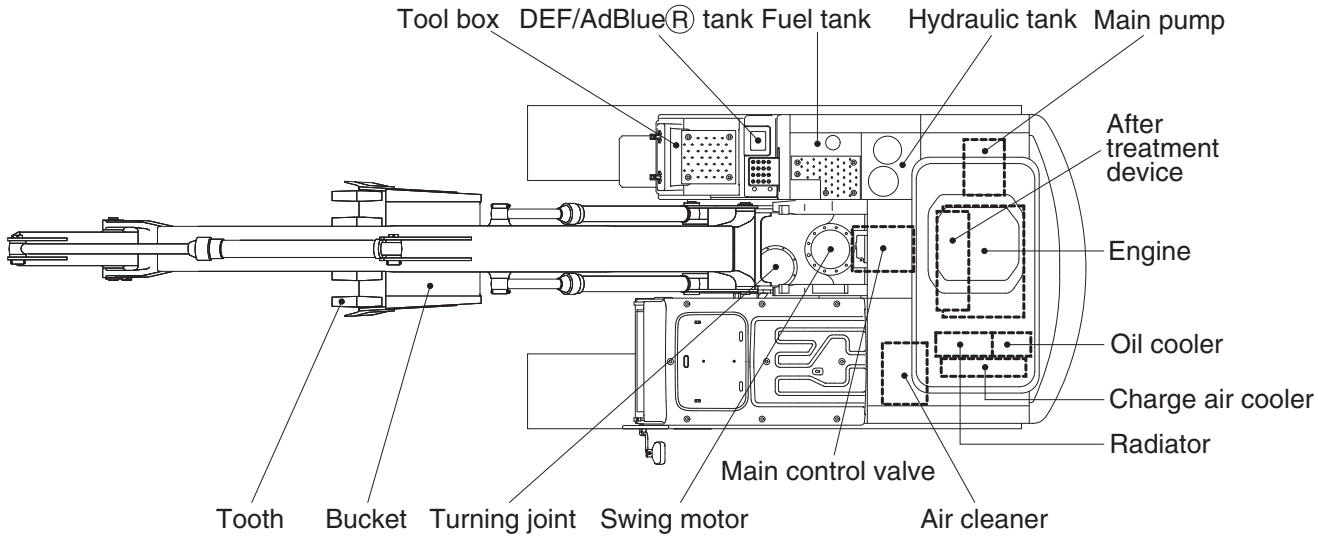

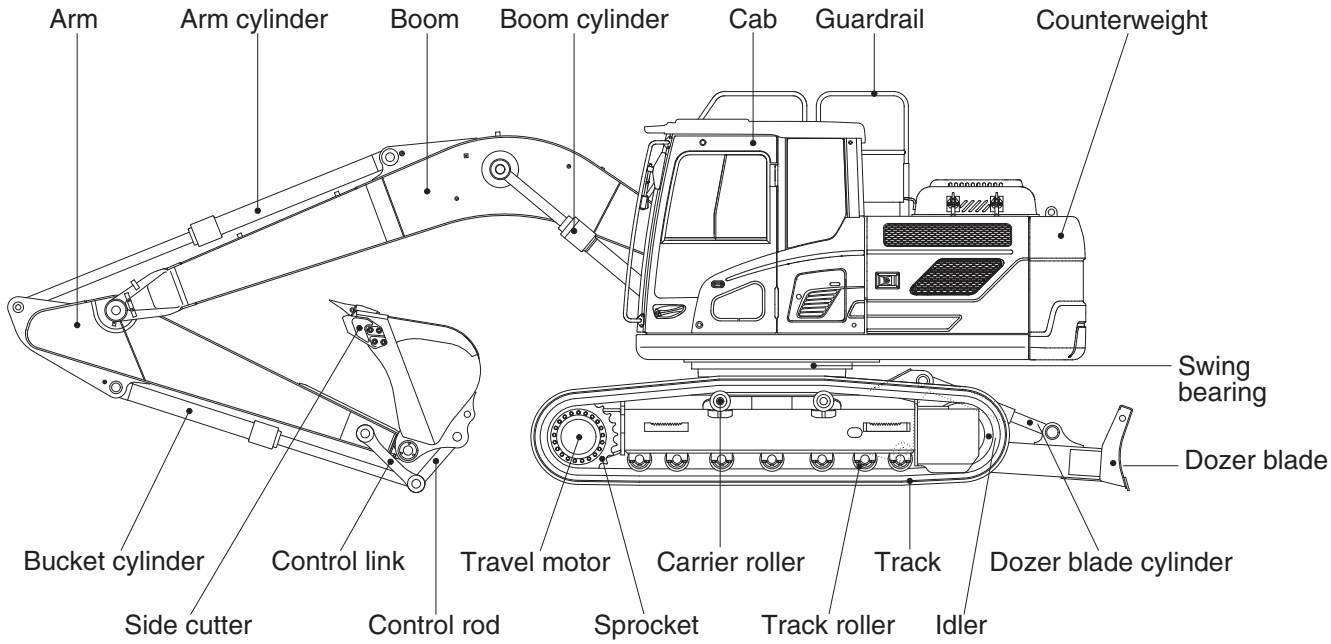

160F2SP01

https://truckmanualshub.com/

2. SPECIFICATIONS

1) HX160 L

· 5.1 m (16' 9") BOOM and 2.6 m (8' 6") ARM

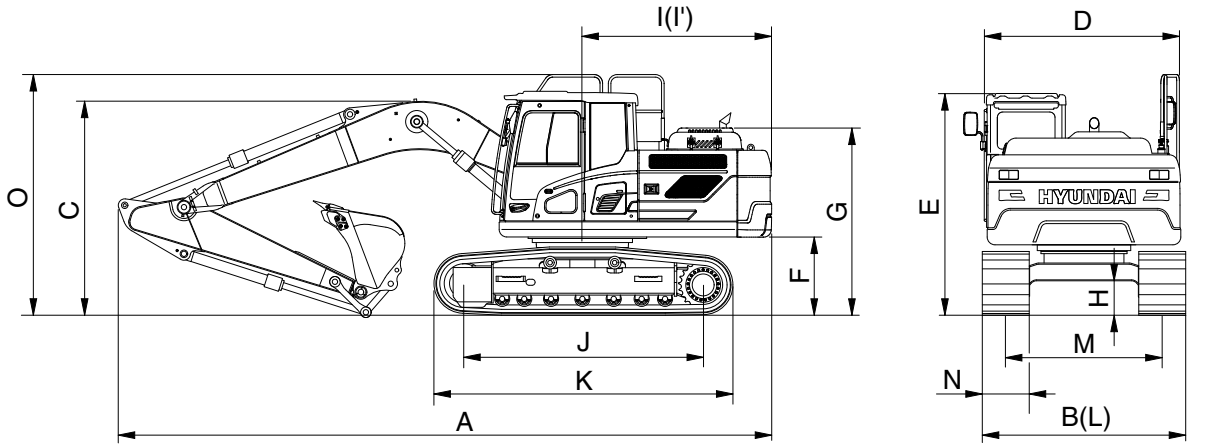

180F2SP02

Description		Unit	Specification
Operating weight		kg (lb)	18100 (39900)
Bucket capacity (SAE heaped), standard		m^3 (yd^3)	0.70 (0.92)
Overall length	A	mm (ft-in)	8650 (28' 5")
Overall width, with 600 mm shoe	B		2590 (8' 6")
Overall height of boom	C		2990 (9' 10")
Superstructure width	D		2475 (8' 1")
Overall height of cab	E		2980 (9' 9")
Ground clearance of counterweight	F		1055 (3' 6")
Engine cover height	G		2525 (8' 3")
Minimum ground clearance	H		460 (1' 6")
Rear-end distance	I		2480 (8' 2")
Rear-end swing radius	I'		2480 (8' 2")
Distance between tumblers	J		3170 (10' 5")
Undercarriage length	K		3926 (12' 11")
Undercarriage width	L		2590 (8' 6")
Track gauge	M		1990 (6' 6")
Track shoe width, standard	N		600 (24")
Overall height of guardrail	O		3220 (10' 6")
Travel speed (low/high)		km/hr (mph)	3.2/5.3 (2.0/3.3)
Swing speed		rpm	10.3
Gradeability		Degree (%)	35 (70)
Ground pressure (600 mm shoe)		kgf/cm^2(psi)	0.44 (6.26)
Max traction force		kg (lb)	17000 (37500)

https://truckmanualshub.com/

2) HX160 L

- 5.1 m (16' 9") HYDRAULIC ADJUSTABLE BOOM AND 2.6 m (8' 6") ARM

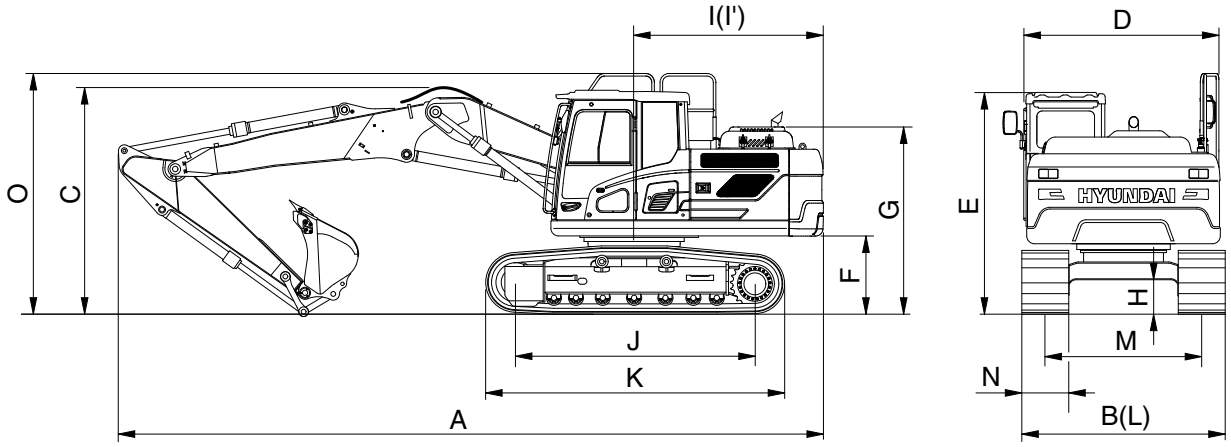

180F2SP03

Description		Unit	Specification
Operating weight		kg (lb)	19000 (41890)
Bucket capacity (SAE heaped), standard		m^3 (yd^3)	0.70 (0.92)
Overall length	A	mm (ft-in)	8610 (28' 3")
Overall width, with 600 mm shoe	B		2590 (8' 6")
Overall height of boom	C		3060 (10' 0")
Superstructure width	D		2475 (8' 1")
Overall height of cab	E		2980 (9' 9")
Ground clearance of counterweight	F		1055 (3' 6")
Engine cover height	G		2525 (8' 3")
Minimum ground clearance	H		460 (1' 6")
Rear-end distance	I		2480 (10' 5")
Rear-end swing radius	I'		2480 (8' 2")
Distance between tumblers	J		3170 (10' 5")
Undercarriage length	K		3926 (12' 11")
Undercarriage width	L		2590 (8' 6")
Track gauge	M		1990 (6' 6")
Track shoe width, standard	N		600 (24")
Overall height of guardrail	O		3220 (10' 6")
Travel speed (low/high)		km/hr (mph)	3.2/5.3 (2.0/3.3)
Swing speed		rpm	10.3
Gradeability		Degree (%)	35 (70)
Ground pressure (600 mm shoe)		kgf/cm^2(psi)	0.46 (6.54)
Max traction force		kg (lb)	17000 (37500)

https://truckmanualshub.com/

3) HX160 L

· 5.1 m (16' 9") BOOM and 2.6 m (8' 6") ARM WITH DOZER

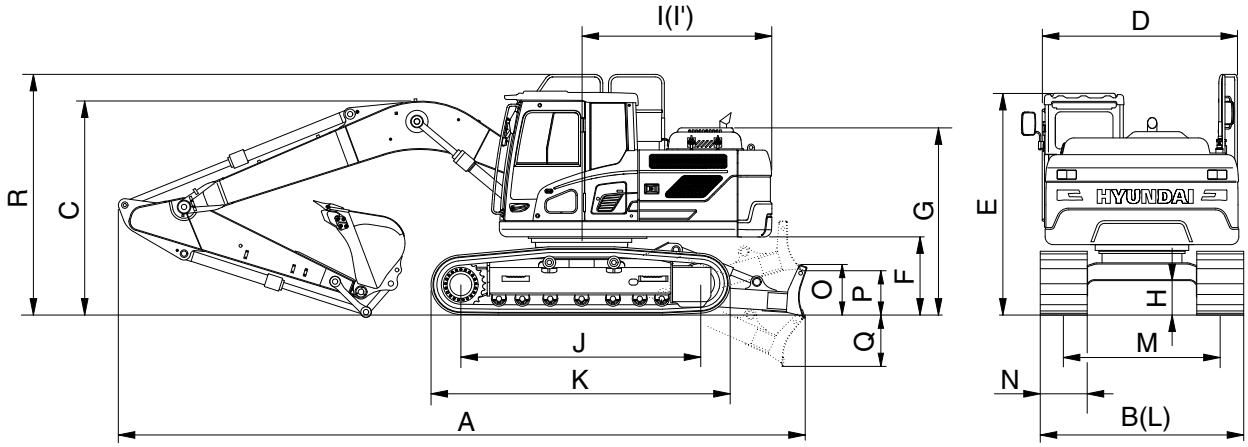

180F2SP04A

Description		Unit	Specification
Operating weight		kg (lb)	18900 (41670)
Bucket capacity (SAE heaped), standard		m^3 (yd^3)	0.70 (0.92)
Overall length	A	mm (ft-in)	9100 (29' 10")
Overall width, with 600 mm shoe	B		2590 (8' 6")
Overall height of boom	C		2990 (9' 10")
Superstructure width	D		2475 (8' 1")
Overall height of cab	E		2980 (9' 9")
Ground clearance of counterweight	F		1055 (3' 6")
Engine cover height	G		2525 (8' 3")
Minimum ground clearance	H		460 (1' 6")
Rear-end distance	I		2480 (8' 2")
Rear-end swing radius	I'		2480 (8' 2")
Distance between tumblers	J		3170 (10' 5")
Undercarriage length	K		3926 (12' 11")
Undercarriage width	L		2590 (8' 6")
Track gauge	M		1990 (6' 6")
Track shoe width, standard	N		600 (24")
Height of blade	O		645 (2' 1")
Ground clearance of blade up	P		615 (2' 0")
Depth of blade down	Q		675 (2' 3")
Overall height of guardrail	R		3220 (10' 6")
Travel speed (low/high)		km/hr (mph)	3.2/5.3 (2.0/3.3)
Swing speed		rpm	10.3
Gradeability		Degree (%)	35 (70)
Ground pressure (600 mm shoe)		kgf/cm^2(psi)	0.46 (6.54)
Max traction force		kg (lb)	17000 (37500)

https://truckmanualshub.com/

3. WORKING RANGE

1) 5.1 m (16' 9") MONO BOOM

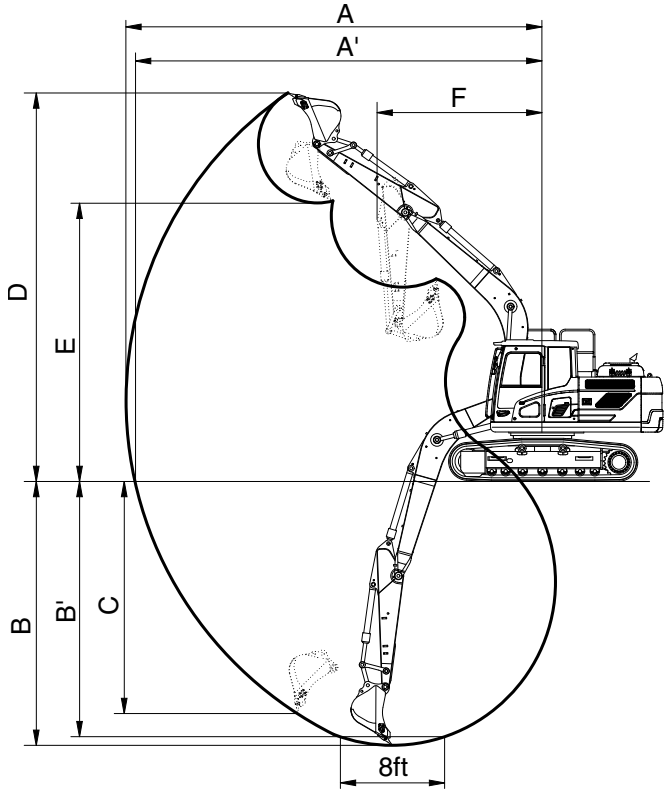

180F2SP06

Description		2.2 m (7' 3") Arm	2.6 m (8' 6") Arm	3.1 m (10' 2") Arm
Max digging reach	A	8690 mm (28' 6")	9020 mm (29' 7")	9450 mm (31' 0")
Max digging reach on ground	A'	8530 mm (27'12")	8860 mm (29' 1")	9300 mm (30' 6")
Max digging depth	B	5660 mm (18' 7")	6060 mm (19'11")	6560 mm (21' 6")
Max digging depth (8ft level)	B'	5430 mm (17'10")	5850 mm (19' 2")	6370 mm (20'11")
Max vertical wall digging depth	C	5120 mm (16'10")	5380 mm (17' 8")	5710 mm (18' 9")
Max digging height	D	8750 mm (28' 8")	8840 mm (29' 0")	8980 mm (29' 6")
Max dumping height	E	6110 mm (20' 1")	6220 mm (20' 5")	6390 mm (21' 0")
Min swing radius	F	3180 mm (10' 5")	3170 mm (10' 5")	3170 mm (10' 5")
Bucket digging force	SAE	107.9 [117.2] kN	107.9 [117.2] kN	107.9 [117.2] kN
		11000 [11940] kgf	11000 [11940] kgf	11000 [11940] kgf
		24250 [26330] lbf	24250 [26330] lbf	24250 [26330] lbf
	ISO	123.6 [134.2] kN	123.6 [134.2] kN	123.6 [134.2] kN
		12600 [13680] kgf	12600 [13680] kgf	12600 [13680] kgf
		27780 [30160] lbf	27780 [30160] lbf	27780 [30160] lbf
Arm crowd force	SAE	87.2 [94.7] kN	77.3 [83.9] kN	69.0 [74.9] kN
		8890 [9650] kgf	7880 [8560] kgf	7030 [7630] kgf
		19600 [21280] lbf	17370 [18860] lbf	15500 [16830] lbf
	ISO	91.0 [98.8] kN	80.3 [87.2] kN	71.4 [77.5] kN
		9280 [10080] kgf	8190 [8890] kgf	7280 [7900] kgf
		20460 [22210] lbf	18060 [19600] lbf	16050 [17430] lbf

[ ] : Power boost

https://truckmanualshub.com/

2) 5.1 m (16' 9") HYDRAULIC ADJUSTABLE BOOM

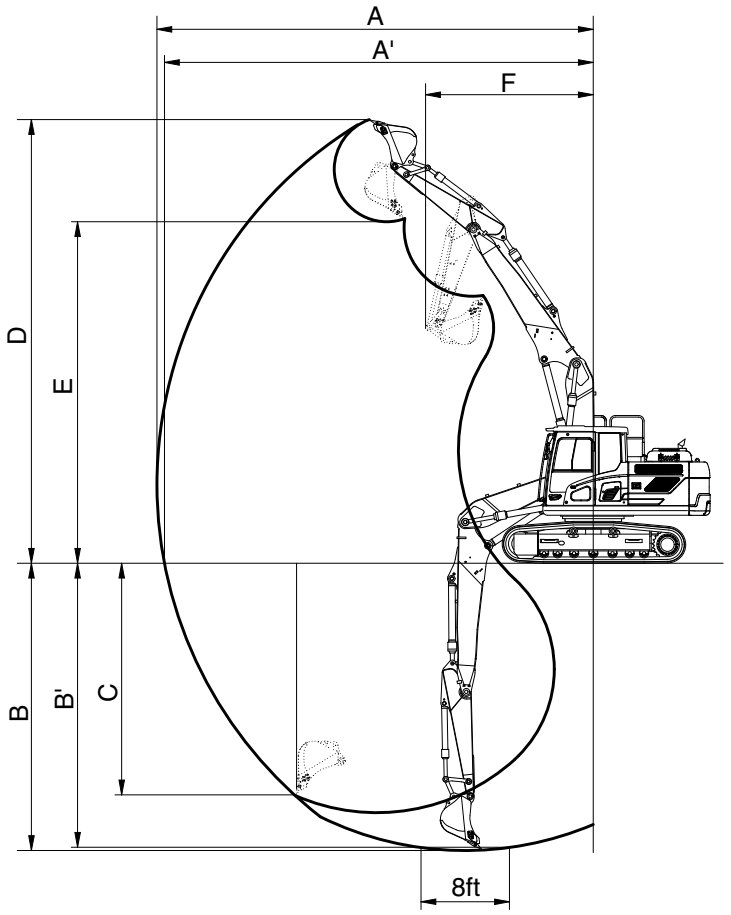

180F2SP08

Description		2.2 m (7' 3") Arm	2.6 m (8' 6") Arm
Max digging reach	A	8760 mm (28' 9")	9110 mm (29'11")
Max digging reach on ground	A'	8590 mm (28' 2")	8950 mm (29' 4")
Max digging depth	B	5430 mm (17' 10")	5830 mm (19' 2")
Max digging depth (8ft level)	B'	5330 mm (17' 6")	5730 mm (18'10")
Max vertical wall digging depth	C	4630 mm (15' 2")	4980 mm (16' 4")
Max digging height	D	9420 mm (30' 11")	9610 mm (31' 6")
Max dumping height	E	6710 mm (22' 0")	6910 mm (22' 8")
Min swing radius	F	3100 mm (10' 2")	2970 mm (9' 9")
Bucket digging force	SAE	107.9 [117.2] kN	107.9 [117.2] kN
		11000 [11940] kgf	11000 [11940] kgf
		24250 [26330] lbf	24250 [26330] lbf
	ISO	123.6 [134.2] kN	123.6 [134.2] kN
		12600 [13680] kgf	12600 [13680] kgf
		27780 [30160] lbf	27780 [30160] lbf
Arm crowd force	SAE	87.2 [94.7] kN	77.3 [83.9] kN
		8890 [9650] kgf	7880 [8560] kgf
		19600 [21280] lbf	17370 [18860] lbf
	ISO	91.0 [98.8] kN	80.3 [87.2] kN
		9280 [10080] kgf	8190 [8890] kgf
		20460 [22210] lbf	18060 [19600] lbf

[ ] : Power boost

https://truckmanualshub.com/

4. WEIGHT

Item	HX160 L		HX160 L (with dozer)	
	kg	lb	kg	lb
Upper structure assembly				
· Main frame weld assembly	1440	3170	←	
· Engine assembly	589	1300	←	
· Fan clutch assembly	45	100	←	
· Main pump assembly	89	200	←	
· Main control valve assembly	140	310	←	
· Swing motor assembly	250	550	←	
· Hydraulic oil tank assembly	150	330	←	
· Fuel tank assembly	130	290	←	
· Counterweight	2600	5730	←	
· Cab assembly	500	1100	←	
Lower chassis assembly				
· Track frame weld assembly	2290	5050	2270	5000
· Swing bearing	260	570	←	
· Travel motor assembly	300	660	←	
· Turning joint	60	130	←	
· Track recoil spring	132	290	←	
· Idler	151	330	←	
· Sprocket	54	120	←	
· Carrier roller	20	45	←	
· Track roller	40	90	←	
· Track-chain assembly (600 mm standard triple grouser shoe)	1180	2600	←	
Front attachment assembly				
· 5.1 m boom assembly	1060	2340	←	
· 2.6 m arm assembly	540	1190	←	
· 0.7 m^3 SAE heaped bucket	600	1320	←	
· Boom cylinder assembly	155	340	←	
· Arm cylinder assembly	180	400	←	
· Bucket cylinder assembly	125	280	←	
· Bucket control link assembly	120	265	←	
· Dozer blade assembly	-	-	655	1445
· Dozer blade cylinder assembly	-	-	66	146

※ This information is different with operating and transportation weight because it is not including harness, pipe, oil, fuel so on.

※ Refer to Transportation for actual weight information and Specifications for operating weight.

https://truckmanualshub.com/

5. LIFTING CAPACITIES

Model	Type	Boom	Arm	Counterweight	Shoe	Wheel	Dozer		Outtriger	
HX160 L	MONO BOOM	Length [mm]	Length [mm]	weight [kg]	width [mm]	width [mm]	Front	Rear	Front	Rear
		5100	2600	2600	600	-	-	-	-	-

· : Rating over-front · : Rating over-side or 360 degree

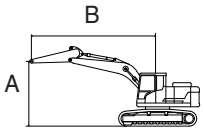

Lift-point height (A)		Lift-point radius (B)										At max. reach		
		1.5 m (4.9 ft)		3.0 m (9.8 ft)		4.5 m (14.8 ft)		6.0 m (19.7 ft)		7.5 m (24.6 ft)		Capacity		Reach
														m (ft)
7.5 m	kg											*3400	*3400	4.85
(24.6 ft)	lb											*7500	*7500	(15.9)
6.0 m	kg							*3830	3420			*2960	*2960	6.27
(19.7 ft)	lb							*8440	7540			*6530	*6530	(20.6)
4.5 m	kg					*4890	*4890	*4450	3370			*2840	2550	7.10
(14.8 ft)	lb					*10780	*10780	*9810	7430			*6260	5620	(23.3)
3.0 m	kg			*9410	9100	*6140	4940	*4960	3240	*3100	2290	*2870	2270	7.54
(9.8 ft)	lb			*20750	20060	*13540	10890	*10930	7140	*6830	5050	*6330	5000	(24.7)
1.5 m	kg					*7420	4610	5040	3090	3610	2230	*3050	2160	7.66
(4.9 ft)	lb					*16360	10160	11110	6810	7960	4920	*6720	4760	(25.1)
0.0 m	kg			*5280	*5280	7610	4410	4910	2980			*3420	2200	7.47
(0.0 ft)	lb			*11640	*11640	16780	9720	10820	6570			*7540	4850	(24.5)
-1.5 m	kg	*5070	*5070	*9170	8030	7530	4350	4860	2930			3960	2420	6.95
(-4.9 ft)	lb	*11180	*11180	*20220	17700	16600	9590	10710	6460			8730	5340	(22.8)
-3.0 m	kg	*9350	*9350	*10230	8160	*7160	4400	4930	2990			4910	2980	6.01
(-9.8 ft)	lb	*20610	*20610	*22550	17990	*15790	9700	10870	6590			10820	6570	(19.7)
-4.5 m	kg			*6920	*6920							*4590	*4590	4.39
(-14.8 ft)	lb			*15260	*15260							*10120	*10120	(14.4)

Note 1. Lifting capacity are based on ISO 10567.
2. Lifting capacity of the HX series does not exceed 75% of tipping load with the machine on firm, level ground or 87% of full hydraulic capacity.
3. The Lift-point is bucket pivot mounting pin on the arm (without bucket mass).
4. *Indicates load limited by hydraulic capacity.

※ **Lifting capacities are based upon a standard machine conditions.**
Lifting capacities will vary with different work tools, ground conditions and attachments.
The difference between the weight of a work tool attachment must be subtracted.
Consult your Hyundai dealer regarding the lifting capacities for specific work tools and attachments.

⚠ **Failure to comply to the rated load can cause possible personal injury or property damage.**
Make adjustments to the rated load as necessory for non-standard configurations.

https://truckmanualshub.com/

Model	Type	Boom	Arm	Counterweight	Shoe	Wheel	Dozer		Outtriger	
HX160 L	MONO BOOM	Length [mm]	Length [mm]	weight [kg]	width [mm]	width [mm]	Front	Rear	Front	Rear
		5100	2200	2600	600	-	-	-	-	-

· : Rating over-front · : Rating over-side or 360 degree

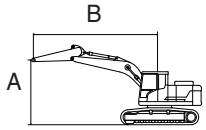

Lift-point height (A)		Lift-point radius (B)								At max. reach		
		3.0 m (9.8 ft)		4.5 m (14.8 ft)		6.0 m (19.7 ft)		7.5 m (24.6 ft)		Capacity		Reach
												m (ft)
7.5 m	kg									*3790	*3790	4.35
(24.6 ft)	lb									*8360	*8360	(14.3)
6.0 m	kg									*3140	*3140	5.90
(19.7 ft)	lb									*6920	*6920	(19.4)
4.5 m	kg			*5320	5180	*4740	3320			*2940	2710	6.77
(14.8 ft)	lb			*11730	11420	*10450	7320			*6480	5970	(22.2)
3.0 m	kg			*6530	4860	5160	3200			*2930	2390	7.23
(9.8 ft)	lb			*14400	10710	11380	7050			*6460	5270	(23.7)
1.5 m	kg			*7690	4550	5010	3060			*3070	2280	7.36
(4.9 ft)	lb			*16950	10030	11050	6750			*6770	5030	(24.1)
0.0 m	kg	*3900	*3900	7570	4380	4900	2960			*3410	2340	7.16
(0.0 ft)	lb	*8600	*8600	16690	9660	10800	6530			*7520	5160	(23.5)
-1.5 m	kg	*9210	8060	7530	4350	4880	2940			*4080	2600	6.62
(-4.9 ft)	lb	*20300	17770	16600	9590	10760	6480			*8990	5730	(21.7)
-3.0 m	kg	*9400	8230	*6720	4430					*4890	3310	5.62
(-9.8 ft)	lb	*20720	18140	*14820	9770					*10780	7300	(18.5)

https://truckmanualshub.com/

Model	Type	Boom	Arm	Counterweight	Shoe	Wheel	Dozer		Outtriger	
HX160 L	MONO BOOM	Length [mm]	Length [mm]	weight [kg]	width [mm]	width [mm]	Front	Rear	Front	Rear
		5100	3100	2600	600	-	-	-	-	-

· : Rating over-front · : Rating over-side or 360 degree

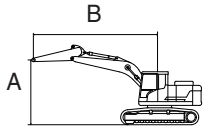

Lift-point height (A)		Lift-point radius (B)										At max. reach		
		1.5 m (4.9 ft)		3.0 m (9.8 ft)		4.5 m (14.8 ft)		6.0 m (19.7 ft)		7.5 m (24.6 ft)		Capacity		Reach
														m (ft)
7.5 m	kg											*2690	*2690	5.51
(24.6 ft)	lb											*5930	*5930	(18.1)
6.0 m	kg							*3680	3470			*2410	*2410	6.79
(19.7 ft)	lb							*8110	7650			*5310	*5310	(22.3)
4.5 m	kg							*4040	3400	*2550	2340	*2330	2300	7.56
(14.8 ft)	lb							*8910	7500	*5620	5160	*5140	5070	(24.8)
3.0 m	kg			*7980	*7980	*5570	5020	*4610	3260	3680	2290	*2370	2060	7.97
(9.8 ft)	lb			*17590	*17590	*12280	11070	*10160	7190	8110	5050	*5220	4540	(26.2)
1.5 m	kg			*6730	*6730	*6970	4660	5050	3090	3600	2210	*2520	1970	8.09
(4.9 ft)	lb			*14840	*14840	*15370	10270	11130	6810	7940	4870	*5560	4340	(26.5)
0.0 m	kg			*6140	*6140	7610	4400	4890	2950	3530	2150	*2810	1990	7.91
(0.0 ft)	lb			*13540	*13540	16780	9700	10780	6500	7780	4740	*6190	4390	(25.9)
-1.5 m	kg	*4780	*4780	*8740	7920	7480	4290	4810	2880			*3360	2160	7.42
(-4.9 ft)	lb	*10540	*10540	*19270	17460	16490	9460	10600	6350			*7410	4760	(24.3)
-3.0 m	kg	*8060	*8060	*11010	8010	7490	4310	4830	2900			4270	2580	6.56
(-9.8 ft)	lb	*17770	*17770	*24270	17660	16510	9500	10650	6390			9410	5690	(21.5)
-4.5 m	kg			*8340	8260	*5690	4450					*4680	3750	5.11
(-14.8 ft)	lb			*18390	18210	*12540	9810					*10320	8270	(16.8)

https://truckmanualshub.com/

Model	Type	Boom	Arm	Counterweight	Shoe	Wheel	Dozer		Outtriger	
HX160 L	2-PIECE BOOM	Length [mm]	Length [mm]	weight [kg]	width [mm]	width [mm]	Front	Rear	Front	Rear
		5100	2200	3250	600	-	-	-	-	-

· : Rating over-front · : Rating over-side or 360 degree

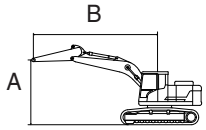

Lift-point height (A)		Lift-point radius (B)						At max. reach		
		3.0 m (9.8 ft)		4.5 m (14.8 ft)		6.0 m (19.7 ft)		Capacity		Reach
										m (ft)
7.5 m	kg							*4040	*4040	4.46
(24.6 ft)	lb							*8910	*8910	(14.6)
6.0 m	kg			*4490	*4490			*3260	*3260	5.98
(19.7 ft)	lb			*9900	*9900			*7190	*7190	(19.6)
4.5 m	kg			*5090	*5090	*4540	3630	*2980	2910	6.84
(14.8 ft)	lb			*11220	*11220	*10010	8000	*6570	6420	(22.5)
3.0 m	kg			*6250	5310	*4980	3500	*2910	2580	7.30
(9.8 ft)	lb			*13780	11710	*10980	7720	*6420	5690	(23.9)
1.5 m	kg			*7410	4970	5440	3350	*3000	2480	7.42
(4.9 ft)	lb			*16340	10960	11990	7390	*6610	5470	(24.3)
0.0 m	kg			*7990	4790	5330	3250	*3240	2540	7.23
(0.0 ft)	lb			*17610	10560	11750	7170	*7140	5600	(23.7)
-1.5 m	kg	*8220	*8220	*7850	4770	5310	3240	*3760	2830	6.69
(-4.9 ft)	lb	*18120	*18120	*17310	10520	11710	7140	*8290	6240	(21.9)

Model	Type	Boom	Arm	Counterweight	Shoe	Wheel	Dozer		Outtriger	
HX160 L	2-PIECE BOOM	Length [mm]	Length [mm]	weight [kg]	width [mm]	width [mm]	Front	Rear	Front	Rear
		5100	2600	3250	600	-	-	-	-	-

· : Rating over-front · : Rating over-side or 360 degree

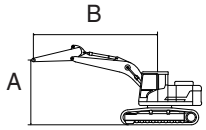

Lift-point height (A)		Lift-point radius (B)								At max. reach		
		3.0 m (9.8 ft)		4.5 m (14.8 ft)		6.0 m (19.7 ft)		7.5 m (24.6 ft)		Capacity		Reach
												m (ft)
7.5 m	kg			*4310	*4310					*3560	*3560	5.00
(24.6 ft)	lb			*9500	*9500					*7850	*7850	(16.4)
6.0 m	kg					*4130	3740			*3040	*3040	6.39
(19.7 ft)	lb					*9110	8250			*6700	*6700	(21.0)
4.5 m	kg			*4680	*4680	*4250	3690			*2860	2720	7.20
(14.8 ft)	lb			*10320	*10320	*9370	8140			*6310	6000	(23.6)
3.0 m	kg			*5880	5400	*4750	3540	*3650	2510	*2840	2440	7.63
(9.8 ft)	lb			*12960	11900	*10470	7800	*8050	5530	*6260	5380	(25.0)
1.5 m	kg			*7140	5040	*5340	3380	3930	2450	*2960	2330	7.75
(4.9 ft)	lb			*15740	11110	*11770	7450	8660	5400	*6530	5140	(25.4)
0.0 m	kg			*7900	4830	5340	3260	*3830	2410	*3240	2380	7.56
(0.0 ft)	lb			*17420	10650	11770	7190	*8440	5310	*7140	5250	(24.8)
-1.5 m	kg	*8270	*8270	*7970	4760	5290	3220			*3790	2620	7.05
(-4.9 ft)	lb	*18230	*18230	*17570	10490	11660	7100			*8360	5780	(23.1)
-3.0 m	kg			*7220	4830							
(-9.8 ft)	lb			*15920	10650							

https://truckmanualshub.com/

6. BUCKET SELECTION GUIDE

1) GENERAL AND HEAVY DUTY BUCKET

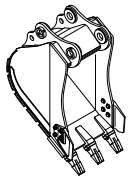	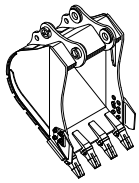	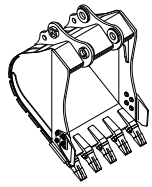	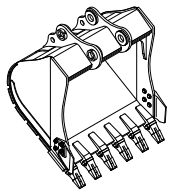
0.39 m³ SAE heaped bucket	0.50 m³ SAE heaped bucket	0.64, ※0.70, 0.76 m³ SAE heaped bucket	0.89, 1.05 m³ SAE heaped bucket

Capacity		Width		Weight	Recommendation				
					5.1 m (16' 9") Mono boom			5.1 m (16' 9") Hyd adjustable boom	
SAE heaped	CECE heaped	Without side cutter	With side cutter		2.2 m arm (7' 3")	2.6 m arm (8' 6")	3.1 m arm (10' 2")	2.2 m arm (7' 3")	2.6 m arm (8' 6")
0.39 m³ (0.51 yd³)	0.34 m³ (0.44 yd³)	620 mm (24.4")	740 mm (29.1")	410 kg (900 lb)	○	○	○	○	○
0.50 m³ (0.65 yd³)	0.44 m³ (0.58 yd³)	760 mm (29.9")	880 mm (34.6")	470 kg (1040 lb)	○	○	○	○	○
0.64 m³ (0.84 yd³)	0.55 m³ (0.72 yd³)	920 mm (36.2")	1040 mm (40.9")	510 kg (1120 lb)	○	○	⊙	○	⊙
※0.70 m³ (0.92 yd³)	0.60 m³ (0.78 yd³)	990 mm (39.0")	1110 mm (43.7")	600 kg (1320 lb)	○	⊙	●	⊙	●
0.76 m³ (0.99 yd³)	0.65 m³ (0.35 yd³)	1060 mm (41.7")	1180 mm (46.5")	620 kg (1370 lb)	⊙	●		⊙	●
0.89 m³ (1.16 yd³)	0.77 m³ (1.01 yd³)	1220 mm (48.0")	1340 mm (52.8")	610 kg (1340 lb)	⊙	●		●	
1.05 m³ (1.37 yd³)	0.90 m³ (1.18 yd³)	1400 mm (55.1")	1520 mm (59.8")	680 kg (1500 lb)	●			●	

※ : Standard bucket

○ Applicable for materials with density of 2000 kg/m³ (3370 lb/yd³) or less

⊙ Applicable for materials with density of 1600 kg/m³ (2700 lb/yd³) or less

● Applicable for materials with density of 1100 kg/m³ (1850 lb/yd³) or less

https://truckmanualshub.com/

2) HEAVY DUTY BUCKET

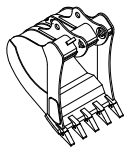	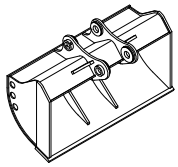
◈ 0.69, 0.72, 0.87 m³ SAE heaped bucket	⊙ 0.75 m³ SAE heaped bucket

Capacity		Width		Weight	Recommendation				
					5.1 m (16' 9") Mono boom			5.1 m (16' 9") Hyd adjustable boom	
SAE heaped	CECE heaped	Without side cutter	With side cutter		2.2 m arm (7' 3")	2.6 m arm (8' 6")	3.1 m arm (10' 2")	2.2 m arm (7' 3")	2.6 m arm (8' 6")
◈0.69 m³ (0.90 yd³)	0.62 m³ (0.81 yd³)	990 mm (39.0")	-	720 kg (1590 lb)	○	⊙	●	⊙	●
◈0.72 m³ (0.94 yd³)	0.65 m³ (0.85 yd³)	940 mm (37.0")	985 mm (38.8")	640 kg (1410 lb)	○	⊙	●	⊙	●
⊙0.75 m³ (0.98 yd³)	0.65 m³ (0.85 yd³)	1820 mm (71.7")	-	540 kg (1190 lb)	○	⊙	●	○	⊙
◈0.87 m³ (1.18 yd³)	0.78 m³ (1.02 yd³)	1090 mm (42.9")	1140 mm (44.9")	680 kg (1500 lb)	⊙	●		●	

◈ : Heavy duty bucket

⊙ : Ditch cleaning bucket

○ Applicable for materials with density of 2000 kg/m³ (3370 lb/yd³) or less

⊙ Applicable for materials with density of 1600 kg/m³ (2700 lb/yd³) or less

● Applicable for materials with density of 1100 kg/m³ (1850 lb/yd³) or less

https://truckmanualshub.com/

7. UNDERCARRIAGE

1) TRACKS

X-leg type center frame is integrally welded with reinforced box-section track frames. The design includes dry tracks, lubricated rollers, idlers, sprockets, hydraulic track adjusters with shock absorbing springs and assembled track-type tractor shoes with triple grousers.

2) TYPES OF SHOES

Model	Shapes		Triple grouser		
			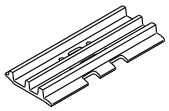		
HX160 L	Shoe width	mm (in)	500 (20)	※600 (24)	700 (28)
	Operating weight	kg (lb)	17855 (39360)	18100 (39900)	18345 (40440)
	Ground pressure	kgf/cm^2 (psi)	0.52 (7.39)	0.44 (6.26)	0.38 (5.40)
	Overall width	mm (ft-in)	2490 (8' 2")	2590 (8' 6")	2690 (8' 10")
HX160 L (with dozer)	Shoe width	mm (in)	500 (20)	※600 (24)	700 (28)
	Operating weight	kg (lb)	18655 (41130)	18900 (41670)	19145 (42210)
	Ground pressure	kgf/cm^2 (psi)	0.55 (7.82)	0.46 (6.54)	0.40 (5.69)
	Overall width	mm (ft-in)	2490 (8' 2")	2590 (8' 6")	2690 (8' 10")

※ : Standard

3) NUMBER OF ROLLERS AND SHOES ON EACH SIDE

Item	Quantity
Carrier rollers	2 EA
Track rollers	7 EA
Track shoes	49 EA

https://truckmanualshub.com/

4) SELECTION OF TRACK SHOE

Suitable track shoes should be selected according to operating conditions.

Method of selecting shoes

Confirm the category from the list of applications in **table 2**, then use **table 1** to select the shoe. Wide shoes (categories B) have limitations on applications. Before using wide shoes, check the precautions, then investigate and study the operating conditions to confirm if these shoes are suitable.

Select the narrowest shoe possible to meet the required flotation and ground pressure. Application of wider shoes than recommendations will cause unexpected problem such as bending of shoes, crack of link, breakage of pin, loosening of shoe bolts and the other various problems.

※ **Table 1**

Track shoe	Specification	Category
600 mm triple grouser	Standard	A
500 mm triple grouser	Option	A
700 mm triple grouser	Option	B

※ **Table 2**

Category	Applications	Applications
A	Rocky ground, river beds, normal soil	· Travel at low speed on rough ground with large obstacles such as boulders or fallen trees
B	Normal soil, soft ground	· These shoes cannot be used on rough ground with large obstacles such as boulders or fallen trees · Travel at high speed only on flat ground · Travel slowly at low speed if it is impossible to avoid going over obstacles

https://truckmanualshub.com/

8. SPECIFICATIONS FOR MAJOR COMPONENTS

1) ENGINE

Item	Specification
Model	Perkins 1204F
Type	4-cycle turbocharged charge air cooled diesel engine
Cooling method	Water cooling
Number of cylinders and arrangement	4 cylinders, in-line
Firing order	1-3-4-2
Combustion chamber type	Direct injection type
Cylinder bore × stroke	105 × 127 mm (4.1" × 5.0")
Piston displacement	4400 cc (268.5 cu in)
Compression ratio	16.5 : 1
Roted net horse power (SAE J1349)	128Hp (96 kW) at 2050 rpm
Rated gross horse power (SAE J1995)	137Hp (102.1 kW) at 2050 rpm
Maximum torque	57.1 kgf · m (413 lbf · ft) at 1400 rpm
Engine oil quantity	10.5 ℓ (2.8 U.S. gal)
Dry weight	589 kg (1300 lb)
High idling speed	2100 ± 50 rpm
Low idling speed	800 ± 100 rpm
Rated fuel consumption	164 g/Hp · hr at 2050 rpm
Starting motor	24 V-4.5 kW
Alternator	24 V-100 A
Battery	2 × 12 V × 100 Ah

2) MAIN PUMP

Item	Specification
Type	Variable displacement tandem axis piston pumps
Capacity	2 × 80 cc/rev
Maximum pressure	350 kgf/cm^2 (4980 psi) [380 kgf/cm^2 (5400 psi)]
Rated oil flow	2 × 164 ℓ /min (43.3 U.S. gpm / 36.1 U.K. gpm)
Maximum speed	2100 rpm

[ ] : Power boost

https://truckmanualshub.com/

3) GEAR PUMP

Item	Specification
Type	Fixed displacement gear pump single stage
Capacity	15cc/rev
Maximum pressure	40 kgf/cm^2 (570 psi)
Rated oil flow	31.5 ℓ /min (8.3 U.S. gpm / 6.9 U.K. gpm)

4) MAIN CONTROL VALVE

Item	Specification
Type	11 spools two-block
Operating method	Hydraulic pilot system
Main relief valve pressure	350 kgf/cm^2 (4980 psi) [380 kgf/cm^2 (5400 psi)]
Overload relief valve pressure	400 kgf/cm^2 (5690 psi)

[ ] : Power boost

5) SWING MOTOR

Item	Specification
Type	Axial pistons motor
Capacity	142.8 cc/rev
Relief pressure	285 kgf/cm^2 (4053 psi)
Braking system	Automatic, spring applied hydraulic released
Braking torque	66.5 kgf · m (481 lbf · ft)
Brake release pressure	22.3~36.6 kgf/cm^2 (317~521 psi)
Reduction gear type	2 - stage planetary

6) TRAVEL MOTOR

Item	Specification
Type	Two speed axial pistons motor with brake valve and parking brake
Relief pressure	350 kgf/cm^2 (4980 psi)
Reduction gear type	Planetary & differential type
Braking system	Automatic, spring applied hydraulic released
Brake release pressure	11 kgf/cm^2 (156 psi)
Braking torque	49.3 kgf · m (357 lbf · ft)

https://truckmanualshub.com/

7) CYLINDER

Item		Specification
Boom cylinder	Bore dia × Rod dia × Stroke	ø 115 × ø 80 × 1090 mm
	Cushion	Extend only
Arm cylinder	Bore dia × Rod dia × Stroke	ø 120 × ø 85 × 1355 mm
	Cushion	Extend and retract
Bucket cylinder	Bore dia × Rod dia × Stroke	ø 110 × ø 75 × 995 mm
	Cushion	Extend only
Adjust cylinder(opt)	Bore dia × Rod dia × Stroke	ø 160 × ø 85 × 650 mm
	-	-
Adjust boom cylinder(opt)	Bore dia × Rod dia × Stroke	ø 115 × ø 80 × 960 mm
	-	-
Dozer cylinder(opt)	Bore dia × Rod dia × Stroke	ø 110 × ø 85 × 320 mm
	-	-

※ **Discoloration of cylinder rod can occur when the friction reduction additive of lubrication oil spreads on the rod surface.**

※ **Discoloration does not cause any harmful effect on the cylinder performance.**

8) SHOE

Item		Width	Ground pressure	Link quantity	Overall width
HX160 L	Option	500 mm (20")	0.52 kgf/cm^2 (7.39 psi)	49	2490 mm (8' 2")
	Standard	600 mm (24")	0.44 kgf/cm^2 (6.26 psi)	49	2590 mm (8' 6")
	Option	700 mm (28")	0.38 kgf/cm^2 (5.40 psi)	49	2690 mm (8' 10")

9) BUCKET

Item	Capacity		Tooth quantity	Width	
	SAE heaped	CECE heaped		Without side cutter	With side cutter
HX160 L	0.39 m^3 (0.51 yd^3)	0.34 m^3 (0.44 yd^3)	3	620 mm (24.4")	740 mm (29.1")
	0.50 m^3 (0.65 yd^3)	0.44 m^3 (0.58 yd^3)	4	760 mm (29.9")	880 mm (34.6")
	0.64 m^3 (0.84 yd^3)	0.55 m^3 (0.72 yd^3)	5	920 mm (36.2")	1040 mm (40.9")
	0.70 m^3 (0.92 yd^3)	0.60 m^3 (0.78 yd^3)	5	990 mm (39.0")	1110 mm (43.7")
	0.76 m^3 (0.99 yd^3)	0.65 m^3 (0.85 yd^3)	5	1060 mm (41.7")	1180 mm (46.5")
	0.89 m^3 (1.16 yd^3)	0.77 m^3 (1.01 yd^3)	6	1220 mm (48.0")	1340 mm (52.8")
	1.05 m^3 (1.37 yd^3)	0.90 m^3 (1.18 yd^3)	6	1400 mm (55.1")	1520 mm (59.8")
	◈0.69 m^3 (0.90 yd^3)	0.62 m^3 (0.81 yd^3)	5	990 mm (39.0")	-
	★0.75 m^3 (0.98 yd^3)	0.65 m^3 (0.85 yd^3)	-	1820 mm (71.7")	-

◈ : Heavy duty bucket

★ : Ditch cleaning bucket

https://truckmanualshub.com/

9. RECOMMENDED OILS

HYUNDAI genuine lubricating oils have been developed to offer the best performance and service life for your equipment. These oils have been tested according to the specifications of HYUNDAI and, therefore, will meet the highest safety and quality requirements.

We recommend that you use only HYUNDAI genuine lubricating oils and grease officially approved by HYUNDAI.

Service point	Kind of fluid	Capacity ℓ (U.S. gal)	Ambient temperature ˚C(˚F) -50 (-58) -30 (-22) -20 (-4) -10 (14) 0 (32) 10 (50) 20 (68) 30 (86) 40 (104)
Engine oil pan	Engine oil	10.5 (2.8)	★SAE 5W-40 SAE 30 SAE 10W SAE 10W-30 SAE 15W-40
DEF/ AdBlue® Tank	Mixture of urea and deionized water	19.0 (5.0)	ISO 22241, High-purity urea + deionized water (32.5:67.5)
Swing drive	Gear oil	TYPE 1 : 5.0 (1.32) TYPE 2 : 6.2 (1.64)	★SAE 75W-90
Final drive	Gear oil	5.8×2 (1.5×2)	SAE 80W-90
Hydraulic tank	Hydraulic oil	Tank : 125 (33.0) System : 240 (63.4)	★ISO VG 15 ISO VG 32 ISO VG 46, HBHO VG 46★3 ISO VG 68
Fuel tank	Diesel fuel★1	290 (76.6)	★ASTM D975 NO.1 ASTM D975 NO.2
Fitting (grease nipple)	Grease	As required	★NLGI NO.1 NLGI NO.2
Radiator (reservoir tank)	Mixture of antifreeze and soft water★2	27.5 (7.3)	Ethylene glycol base permanent type (50 : 50) ★Ethylene glycol base permanent type (60 : 40)

SAE : Society of Automotive Engineers
API : American Petroleum Institute
ISO : International Organization for Standardization
NLGI : National Lubricating Grease Institute
ASTM : American Society of Testing and Material
UTTO : Universal Tractor Transmission Oil
DEF : Diesel Exhaust Fluid, DEF compatible with AdBlue®

★ : Cold region
Russia, CIS, Mongolia

★1 : Ultra low sulfur diesel
- sulfur content ≤ 15 ppm

★2 : Soft water
City water or distilled water

★3 : Hyundai Bio Hydarulic Oil
- For more information, contact HYUNDAI dealers.

※ Using any lubricating oils other than HYUNDAI genuine products may lead to a deterioration of performance and cause damage to major components.

※ Do not mix HYUNDAI genuine oil with any other lubricating oil as it may result in damage to the systems of major components.

※ Do not use any engine oil other than that specified above, as it may clog the diesel particulate filter(DPF).

※ For HYUNDAI genuine lubricating oils and grease for use in regions with extremely low temperatures, please contact HYUNDAI dealers.

https://truckmanualshub.com/

This as a preview PDF file from **best-manuals.com**

Best Manuals

Download full PDF manual at **best-manuals.com**