https://truckmanualshub.com/

TABLE OF CONTENTS

RUNNING STORES
0-0_RUNNING STORES..... 1
LOWER MACHINE
1-1_LOWER MACHINE ASS'Y..... 5
1-2_CRAWLER SHOE ASS'Y..... 7
1-3_CRAWLER SHOE ADJ. DEVICE..... 9
1-4_FRONT IDLER ASS'Y..... 11
1-5_LOWER ROLLER ASS'Y..... 13
1-6_UPPER ROLLER ASS'Y..... 15
1-7_LOWER TRAVEL PIPING ASS'Y..... 17
TURNTABLE
2-1_TURNTABLE & SWING BEARING ASS'Y..... 19
SWING DRIVE DEVICE
3-1_SWING DRIVE DEVICE..... 21
HYDRAULIC PIPING
4-1_RETURN & SUCTION PIPING ASS'Y..... 23
4-2_SWING & TRAVEL PIPING ASS'Y..... 27
4-3_PUMP DISCHARGE & BOOM SWING PIPING ASS'Y..... 29
4-4_CONTROL PIPING ASS'Y..... 31
4-4[A]_CONTROL PIPING ASS'Y (FOR A-D, A.B.G CHANGE)..... 35
4-4[B]_CONTROL PIPING ASS'Y (FOR A, F CHANGE)..... 39
HYDRAULIC INSTRUMENT
5-1_TRAVEL MOTOR ASS'Y..... 43
5-2_SWING MOTOR ASS'Y..... 47
5-3_ROTARY JOINT ASS'Y..... 49
5-4_CONTROL VALVE ASS'Y
5-4_CONTROL VALVE ASS'Y(1/2)..... 51
5-4_CONTROL VALVE ASS'Y(2/2)..... 52
5-5_REMOTE CONTROL VALVE ASS'Y..... 57
5-6_HYDRAULIC OIL TANK ASS'Y..... 59
5-7_OIL PUMP ASS'Y..... 61
5-8_BOOM CYLINDER ASS'Y..... 63
5-9_ARM CYLINDER ASS'Y..... 65
5-10_BUCKET CYLINDER ASS'Y..... 67
5-11_BOOM SWING CYLINDER ASS'Y..... 69
5-12_BLADE CYLINDER ASS'Y..... 71
5-13_PILOT VALVE ASS'Y (TRAVEL)..... 73
5-14_PILOT VALVE ASS'Y..... 75
5-15_MULTIPLE VALVE ASS'Y (FOR A-D CHANGE)..... 77
5-15[B]_MULTIPLE VALVE ASS'Y (FOR A, F CHANGE)..... 79
OPERATING CONTROLS
6-1_TRAVEL LEVER ASS'Y..... 81
6-2_CONTROL LEVER ASS'Y..... 83
6-3_BLADE & BOOM SWING CONTROL ASS'Y..... 87
6-4_ENGINE THROTTLE ASS'Y..... 89
POWER UNIT
7-1_ENGINE & ACCESSOORIES..... 91
7-2_AIR CLEANER & MUFFLER ASS'Y..... 95
7-3_OIL PUMP DRIVE DEVICE..... 97
7-4_FUEL TANK & PIPING ASS'Y..... 99
CAB & RELATED PARTS
8-1_COVER ASS'Y (1)..... 103
8-2_COVER ASS'Y (2)..... 105
8-3_NOISE ABSORBENT ASS'Y..... 109
8-4_CANOPY ASS'Y (FOR TOPS/ROPS)..... 113

https://truckmanualshub.com/

TABLE OF CONTENTS

8-4[A]_CANOPY ASS'Y..... 115
8-5_OPERATOR SEAT & MAT ASS'Y..... 117
8-6_COUNTER WEIGHT ASS'Y..... 119
8-7_NAME PLATE ASS'Y (FOR JAPANESE)..... 121
8-7[A]_NAME PLATE ASS'Y (FOR ENGLISH)..... 123
8-7[B]_NAME PLATE ASS'Y (FOR DUTCH)..... 125
8-7[C]_NAME PLATE ASS'Y (FOR FRENCH)..... 127
8-7[D]_NAME PLATE ASS'Y(FOR ITALIAN)..... 129
8-7[E]_NAME PLATE ASS'Y(FOR GERMAN)..... 131
8-7[F]_NAME PLATE ASS'Y(FOR DANISH)..... 133
8-7[G]_NAME PLATE ASS'Y (FOR SPANISH)..... 135
ELECTRIC SYSTEM
9-1_ELECTRIC SYSTEM..... 137
9-2_INSTRUMENT PANEL ASS'Y..... 141
TOOLS & ACCESSORIES
10-1_TOOLS & ACCESSORIES..... 145
HOE ATTACHMENT
11-1_HOE ATTACHMENT ASS'Y..... 147
11-2_BOOM SWING ASS'Y..... 151
11-3_HOE BUCKET ASS'Y..... 153
11-4_HOE ATTACHMENT PIPING ASS'Y..... 155
BLADE ATTACHMENT
12-1_BLADE ATTACHMENT ASS'Y..... 159
12-2_BLADE PIPING ASS'Y..... 161
OPTION SPECIFICATION
15-1_FIRST SPARE PIPING ASS'Y..... 163
15-2_SECOND SPARE PIPING ASS'Y..... 167
15-3_THIRD SPARE PIPING ASS'Y..... 169
15-4_ACCUMULATOR ASS'Y..... 173
15-5_OPERATOR ROOM ASS'Y (1)..... 175
15-6_OPERATOR ROOM ASS'Y (2)..... 177
15-7_OPERATOR ROOM ASS'Y (3)..... 181
15-8_OPERATOR ROOM ASS'Y (4)..... 185
15-9_CAR HEATER ASS'Y..... 189
OPTION SPECIFICATION
15-10_NAME PLATE ASS'Y (FOR JAPANESE)..... 191
OPTION SPECIFICATION
15-10[A]_NAME PLATE ASS'Y(FOR ENGLISH)..... 193
15-10[B]_NAME PLATE ASS'Y (FOR DUTCH)..... 195
15-10[C]_NAME PLATE ASS'Y (FOR FRENCH)..... 197
15-10[D]_NAME PLATE ASS'Y (FOR ITALIAN)..... 199
15-10[E]_NAME PLATE ASS'Y (FOR GERMAN)..... 201
15-10[F]_NAME PLATE ASS'Y (FOR DANISH)..... 203
15-10[G]_NAME PLATE ASS'Y (FOR SPANISH)..... 205
15-11_MIRROR ASS'Y..... 207
15-12_TRAVEL ALARM DEVICE..... 209
15-13_IMMOBILIZER ASS'Y..... 211
15-14_LIGHT ASS'Y..... 213
15-15_AIR CONDITIONER ASS'Y (1)..... 215
15-16_AIR CONDITIONER ASS'Y (2)..... 217
15-17_AIR CONDITIONER PIPING ASS'Y..... 219
CRANE SPECIFICATION
16-1_HYDRAULIC PIPING ASS'Y..... 221
16-2_HOLDING VALVE ASS'Y..... 223
16-3_HOLDING VALVE..... 225
16-4_HOOK BLOCK ASS'Y..... 227

https://truckmanualshub.com/

TABLE OF CONTENTS

16-5_ANGLE DETECTOR..... 229
16-6_ELECTRIC SYSTEM..... 231
16-7_CONTROLLER ASS'Y..... 233
16-8_NAME PLATE ASS'Y..... 235

https://truckmanualshub.com/

LIST OF CONSUMABLES

消耗品リスト

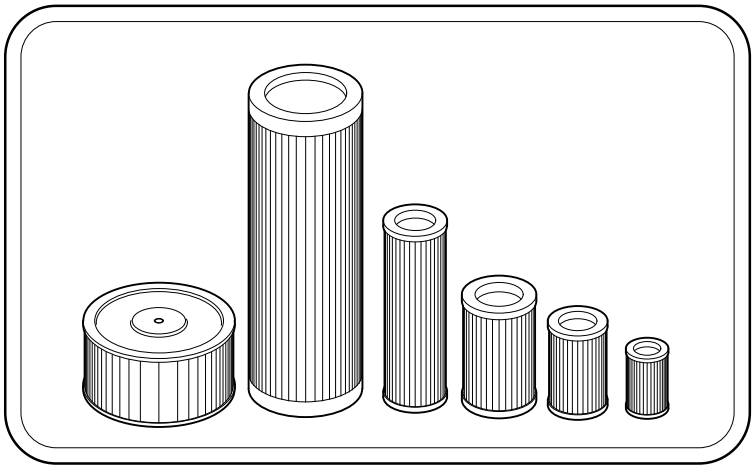

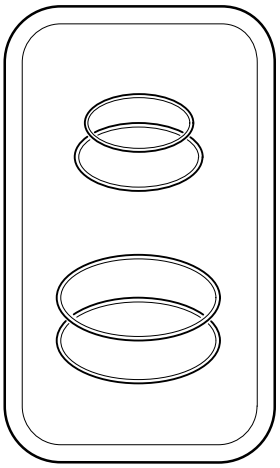

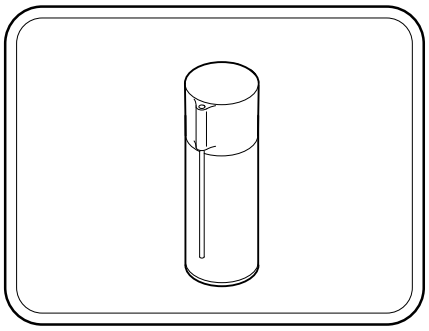

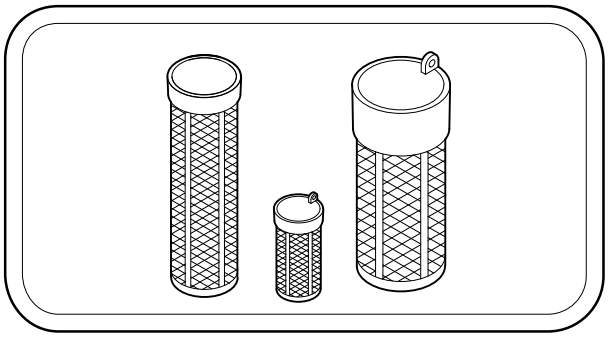

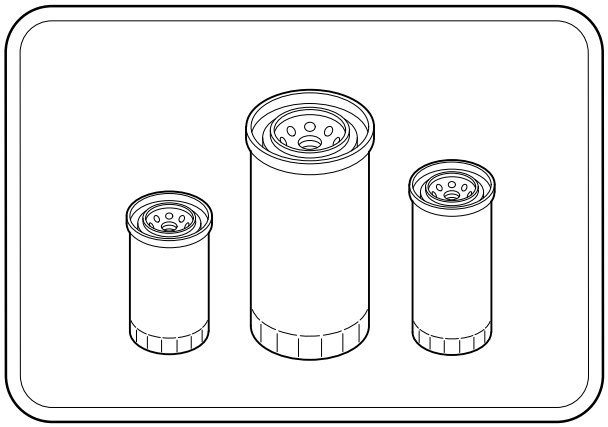

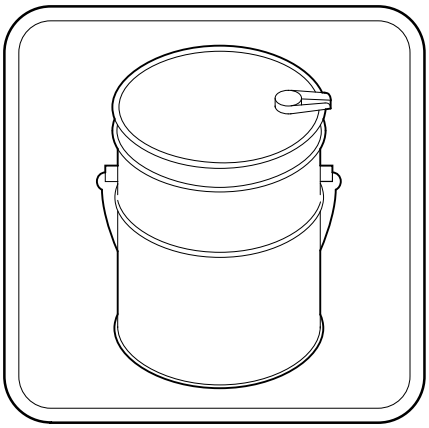

SHALL-000000-1

https://truckmanualshub.com/

KEY No.	SUP.	PART No.	DESCRIPTION	Q'TY	CHAN.	SERIAL No.	REMARKS
		＊＊＊＊＊	RUNNING STORES LIST				
1		0753 265 UA	Vaive, Check (Grease Up)	1		WZ010001-	Sh. No. 1-3
2		0759 106 UA	Strainer, Suction	1		WZ010001-	Sh. No. 5-6
3		0755 142 03	Cartridge, Return Filter	1		WZ010001-	Sh. No. 5-6
4		0775 551 93	Hose, Radiator	1		WZ010001-	Sh. No. 7-1
5		0775 551 95	Hose, Radiator	1		WZ010001-	Sh. No. 7-1
6		0745 265 08	Element, Air Cleaner	1		WZ010001-	Sh. No. 7-2
7		0745 265 09	Element, Air Cleaner(Inner)	1		WZ010001-	Sh. No. 7-2
8		0857 914 11	Element, Water Sedimenter	1		WZ010001-	Sh. No. 7-4
9		0729 910 73	Cap, Fuel	1		WZ010001-	Sh. No. 7-4
10		0820 215 10	Relay, Flip Flop	1		WZ010001-	Sh. No. 9-1
11		0820 215 11	Relay, Glow	1		WZ010001-	Sh. No. 9-1
12		0858 306 03	Switch Ass'y, Starter	1		WZ010001-	Sh. No. 9-2
13		0820 215 07	Relay	4		WZ010001-	Sh. No. 9-2
14		D013 408 00	Pin, Bucket	2		WZ010001-	Sh. No. 11-1
15		4511 501 01	Ring, O (For Bucket)	4		WZ010001-	Sh. No. 11-1
16		0650 002 04	Tooth, Bucket	AR		WZ010001-	18S,Sh. No. 11-3
17		0650 003 03	Pin, Lock	AR		WZ010001-	18-20M-PN,Sh. No. 11-3
18		0650 004 02	Pin, Rubber	AR		WZ010001-	18-20M-LK,Sh. No. 11-3
19		4123 040 00	Coutter, Side (R.H.)	1		WZ010001-	Sh. No. 11-3
20		4123 041 00	Coutter, Side (L.H.)	1		WZ010001-	Sh. No. 11-3
21		0555 140 40	Bolt, Treatment	6		WZ010001-	Sh. No. 11-3
22		0585 140 00	Nut, Treatment	6		WZ010001-	Sh. No. 11-3
23		D006 051 00	Washer, Treatment	6		WZ010001-	Sh. No. 11-3
23		＊＊＊＊＊	SEAL KIT				
24		0713 431 91	Rotary Joint	1		WZ010001-	Sh. No. 5-3
25		0782 441 93	Boom Cylinder (Head Side)	1		WZ010001-	Sh. No. 5-8
26		0782 439 93	Arm Cylinder (Head Side)	1		WZ010001-	Sh. No. 5-9
27		0782 435 93	Bucket Cylinder (Head Side)	1		WZ010001-	Sh. No. 5-10
28		0782 380 91	Boom Swing Cylinder (Head Side)	1		WZ010001-	Sh. No. 5-11
29		0782 608 91	Blade Cylinder (Head Side)	1		WZ010001-	Sh. No. 5-12
29		＊＊＊＊＊	ENGINE PARTS(V2403-M-DI-E3B-BHIH1)				
30		K15221 4317 0	Cartridge, Fuel Filter	1		WZ010001-	Sh. No. 7-4
31		KHH164 3243 0	Filter, Oil	1		WZ010001-	Engine P/C
32		KR1401 5135 2	Pump, Fuel	1		WZ010001-	Sh. No. 7-4
33		K1K574 6022 0	Relay	1		WZ010001-	Engine P/C
34		K1K533 6566 0	Controller	1		WZ010001-	Engine P/C

https://truckmanualshub.com/

KEY No.	SUP.	PART No.	DESCRIPTION	Q'TY	CHAN.	SERIAL No.	REMARKS
35		K1G382 9701 0	Belt, V	1		WZ010001-	Engine P/C
36		K1G924 7301 0	Thermostat	1		WZ010001-	Engine P/C
37		K1A021 6001 7	Solenoid, Stop	1		WZ010001-	Engine P/C
38		K15841 3901 0	Switch, Oil Pressure	1		WZ010001-	Engine P/C
39		K1J002 8304 0	Sensor, Thermo	1		WZ010001-	Engine P/C
39		＊＊＊＊＊	＊＊＊＊＊				
40		5988 009 00	＊＊＊＊＊	1		WZ010001-	400g × 20
41		5988 004 06	＊＊＊＊＊	1		WZ010001-	スプレー
41-1		5988 004 09	＊＊＊＊＊	1		WZ010001-	4k 缶
42		5988 004 32	＊＊＊＊＊	1		WZ010001-	スプレー
42-1		5988 004 33	＊＊＊＊＊	1		WZ010001-	4k 缶
43		ZG10100	＊＊＊＊＊	1		WZ010001-	38種-890ヶ
44		5988 022 01	＊＊＊＊＊	1		WZ010001-	18S= 1セット 20ヶ
45		ZG00451	＊＊＊＊＊	1		WZ010001-	1セット10枚
45-1		ZG00452	＊＊＊＊＊	1		WZ010001-	1セット10枚
45-2		ZG00453	＊＊＊＊＊	1		WZ010001-	1セット10枚
46		ZG00501	＊＊＊＊＊	1		WZ010001-	1セット10枚
46-1		ZG00502	＊＊＊＊＊	1		WZ010001-	1セット10枚
46-2		ZG00503	＊＊＊＊＊	1		WZ010001-	1セット10枚

https://truckmanualshub.com/

[Memo]

https://truckmanualshub.com/

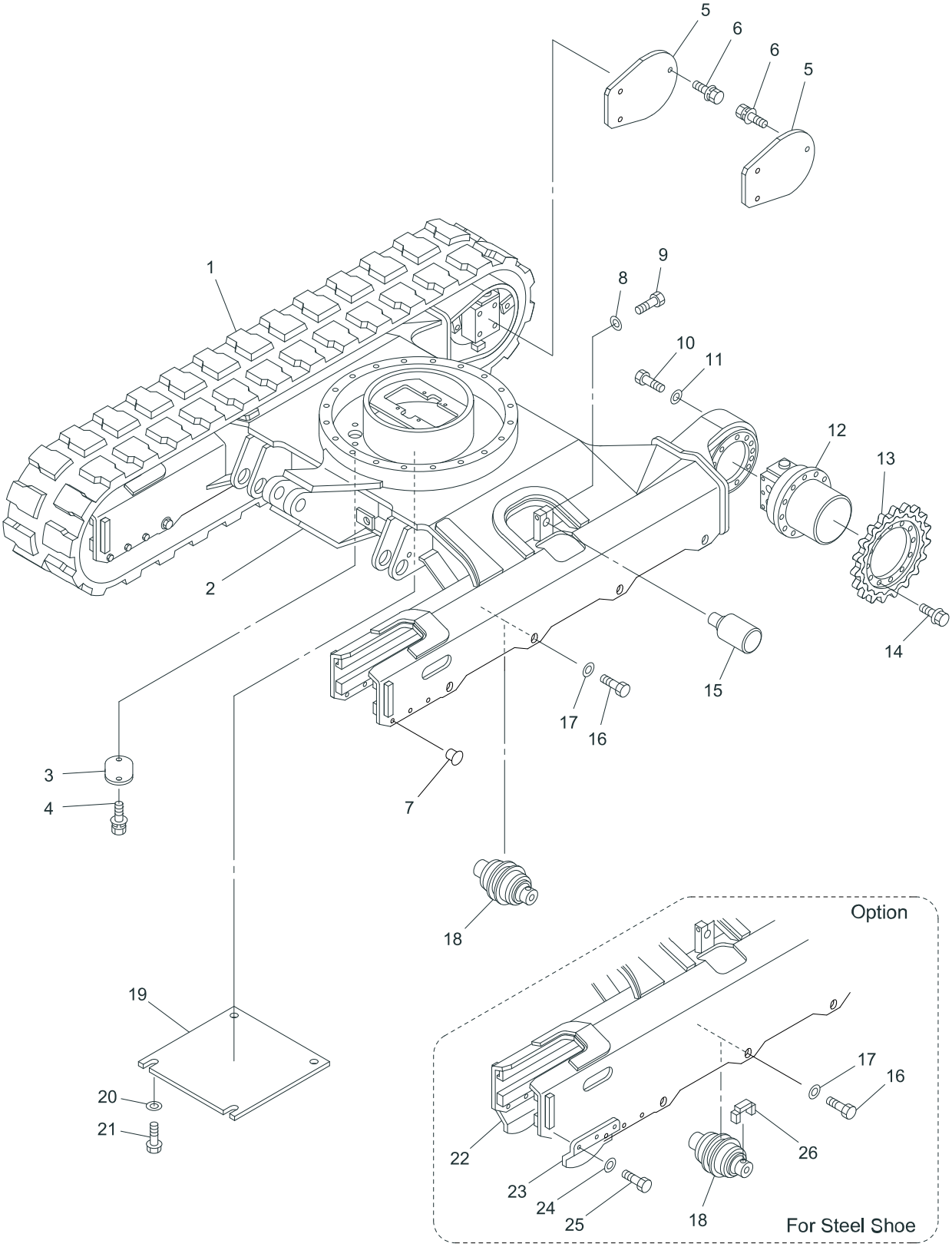

40V4-010100-1

https://truckmanualshub.com/

KEY No.	SUP.	PART No.	DESCRIPTION	Q'TY	CHAN.	SERIAL No.	REMARKS
0	×	**** *** **	Lower Machine Ass'y	1		WZ010001-	
1		0653 981 UA	*Shoe, Rubber Crawler	2		WZ010001-	
1-1	#	0653 974 UA	*Shoe Ass'y, Crawler (Steel)	2		WZ010001-	Sh. No. 1-2
2	×	**** *** **	*Frame, Lower	1		WZ010001-	
3		4460 756 00	*Cover	1		WZ010001-	
4		0517 080 12	*Bolt, Treatment (W/L.W, F.W)	2		WZ010001-	M8X12
5		D458 184 00	*Cover	2		WZ010001-	
6		0518 100 20	*Bolt, Treatment (W/L.W, F.W)	6		WZ010001-	M10X20 P=1.25
7		0690 201 09	*Plug	12		WZ010001-	
8		0595 160 00	*Washer, Treatment	2		WZ010001-	M16
9		0555 160 65	*Bolt, Treatment	2		WZ010001-	M16X65
10		0555 140 35	*Bolt, Treatment	24		WZ010001-	M14X35
11		0595 140 00	*Washer, Treatment	24		WZ010001-	M14
12	#	0781 372 UA	*Motor Ass'y, Travel	2		WZ010001-	Sh. No. 5-1
13		D234 037 00	*Sprocket, Drive	2		WZ010001-	
14		0457 140 35	*Bolt, Treatment (W/Flange)	24		WZ010001-	M14X35
15	#	0651 911 UA	*Roller Ass'y, Upper	2		WZ010001-	Sh. No. 1-6
16		0555 200 30	*Bolt, Treatment	16		WZ010001-	M20X30
17		0595 200 00	*Washer, Treatment	16		WZ010001-	M20
18	#	0653 984 UA	*Roller Ass'y, Lower	8		WZ010001-	Sh. No. 1-5
19		4461 932 00	*Cover, Under	1		WZ010001-	
20		0593 100 00	*Washer, Flat	4		WZ010001-	M10
21		0480 100 20	*Bolt, Treatment (W/Flange)	4		WZ010001-	M10X20 P=1.25
22		4475 591 00	*Guide, Shoe (R.H.)	2		WZ010001-	
23		4475 590 00	*Guide, Shoe (L.H.)	2		WZ010001-	
24		0595 120 00	*Washer, Treatment	12		WZ010001-	M12
25		0555 120 35	*Bolt, Treatment	12		WZ010001-	M12X35
26		D007 060 00	*Shim	16		WZ010001-	t=9.0

https://truckmanualshub.com/

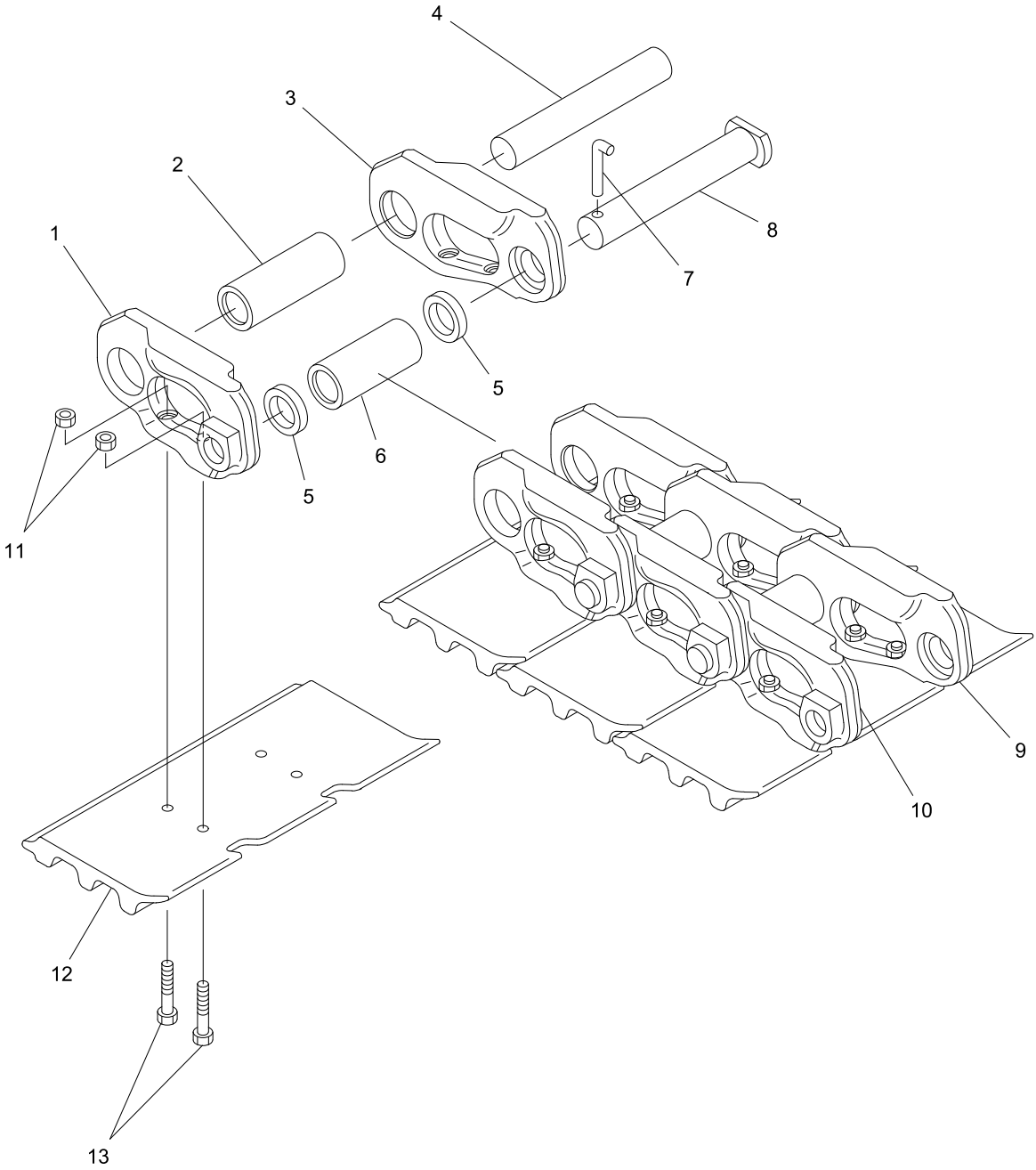

45VX-010200-1

https://truckmanualshub.com/

KEY No.	SUP.	PART No.	DESCRIPTION	Q'TY	CHAN.	SERIAL No.	REMARKS
0		0653 974 UA	Shoe Ass'y, Crawler	2		WZ010001-	L=400
0-1		0653 974 99	*Link, Ass'y	1		WZ010001-	
1		0653 973 04	**Link, Master (L.H.)	1		WZ010001-	
2		0653 973 05	**Bushing, Track	38		WZ010001-	
3		0653 973 03	**Link, Master (R.H.)	1		WZ010001-	
4		0653 973 06	**Pin, Track	38		WZ010001-	
5		0651 588 07	**Collar, Master	2		WZ010001-	
6		0653 973 07	**Bushing, Master	1		WZ010001-	
7		0653 924 10	**Pin, Lock	1		WZ010001-	
8		0653 973 08	**Pin, Master	1		WZ010001-	
9		0653 973 01	**Link, Track (R.H.)	38		WZ010001-	
10		0653 973 02	**Link, Track (L.H.)	38		WZ010001-	
11		0653 010 10	*Nut, Shoe	156		WZ010001-	
12		0653 779 01	*Plate, Shoe	39		WZ010001-	L=400
13		0653 010 09	*Bolt, Shoe	156		WZ010001-	

https://truckmanualshub.com/

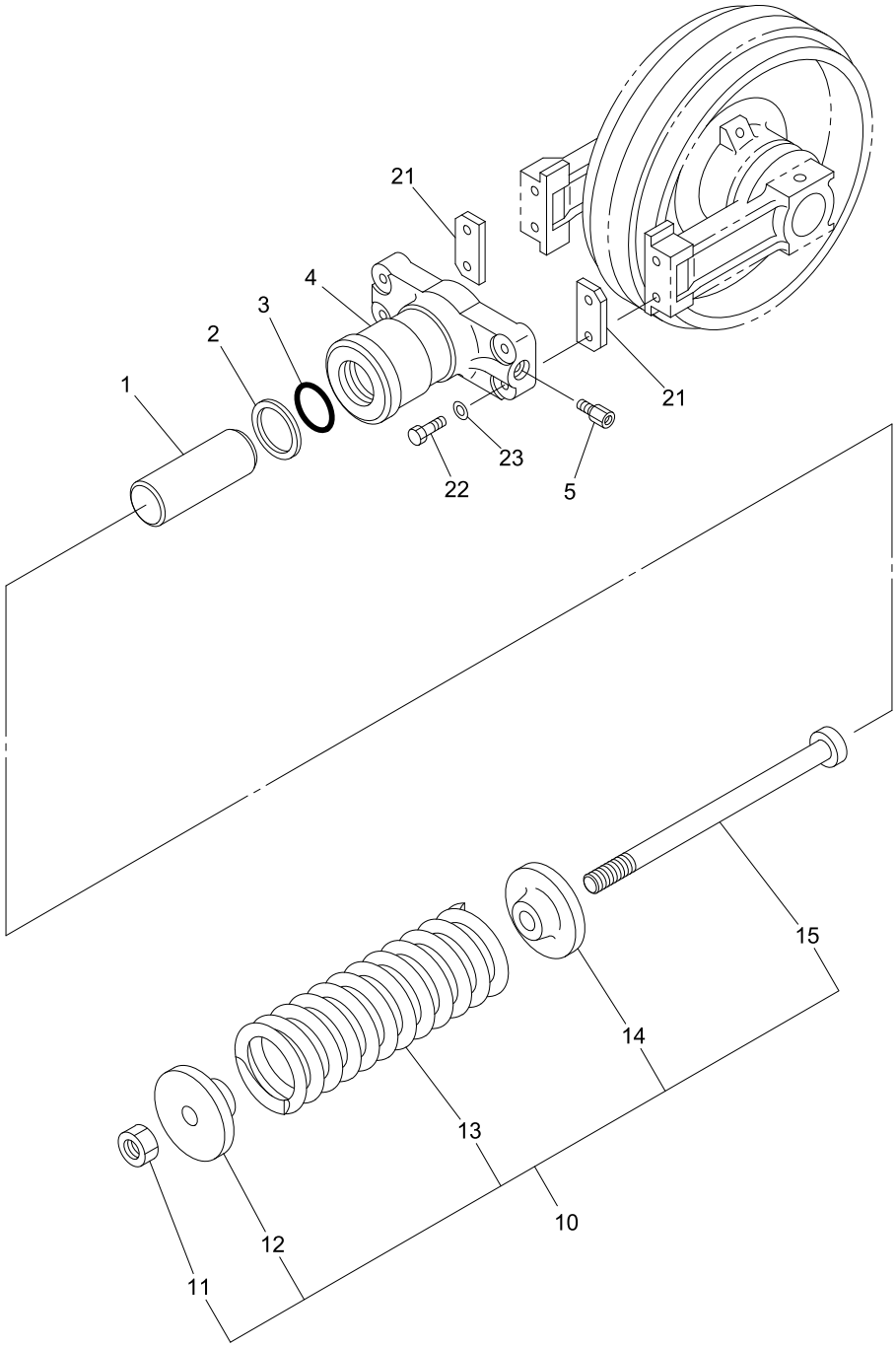

65VX-010300-1

https://truckmanualshub.com/

KEY No.	SUP.	PART No.	DESCRIPTION	Q'TY	CHAN.	SERIAL No.	REMARKS
0	×	5301 231 00	Adj. Device, Crawler Shoe	2		WZ010001-	
0-1		5301 232 02	*Cylinder Ass'y, Grease	1		WZ010001-	
1		4515 506 00	**Piston	1		WZ010001-	
2		0762 120 50	**Ring, Back-up	1		WZ010001-	P50-T2
3		0760 710 50	**Ring, O	1		WZ010001-	P50-90B
4		4514 549 00	**Cylinder, Grease	1		WZ010001-	
5		0753 265 UA	**Valve, Check	1		WZ010001-	
10		5300 759 99	*Unit Ass'y, Spring (For Rubber Shoe)	1		WZ010001-	
11		0580 200 00	**Nut, Hex.	1		WZ010001-	M20
12		4485 508 00	**Retainer, Spring	1		WZ010001-	
13		4170 126 00	**Spring	1		WZ010001-	
14		4485 509 00	**Retainer, Spring	1		WZ010001-	
15		4004 128 00	**Bolt, Adjust	1		WZ010001-	
21		4401 631 00	*Plate	2		WZ010001-	
22		0514 120 60	*Bolt, Treatment	4		WZ010001-	M12X60 P=1.25
23		0595 120 00	*Washer, Treatment	4		WZ010001-	M12

https://truckmanualshub.com/

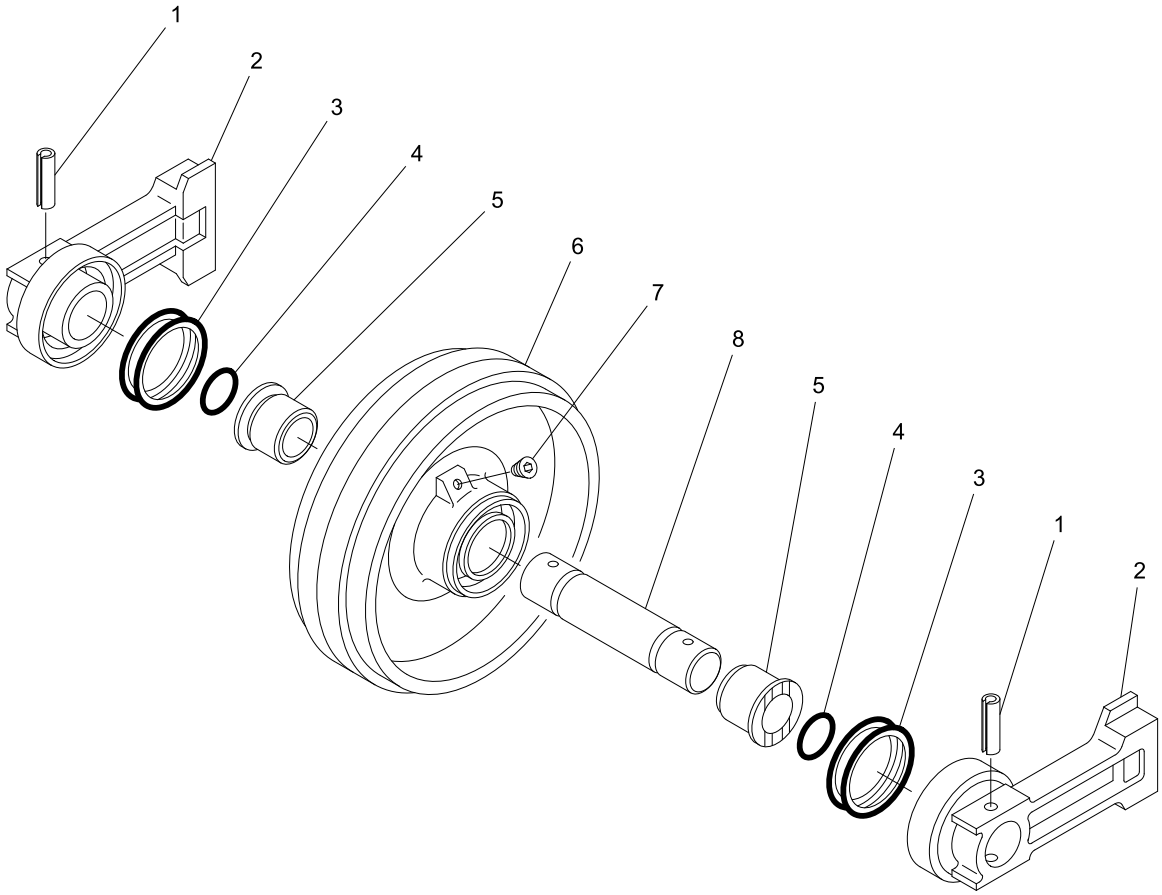

45VX-010400-1

https://truckmanualshub.com/

KEY No.	SUP.	PART No.	DESCRIPTION	Q'TY	CHAN.	SERIAL No.	REMARKS
0		F300 686 00	Idler Ass'y, Front	2		WZ010001-	
1		0494 651 75	*Pin, Spring	2		WZ010001-	d=10X75
2		4420 525 00	*Block, Bearing	2		WZ010001-	
3		0763 014 67	*Seal, Floating	2		WZ010001-	
4		0760 715 45	*Ring, O	2		WZ010001-	G45-90B
5		4047 035 02	*Bushing	2		WZ010001-	
6		D236 021 00	*Idler, Front	1		WZ010001-	
7		0710 201 01	*Plug	1		WZ010001-	PT1/8
8		4012 220 00	*Shaft	1		WZ010001-	

https://truckmanualshub.com/

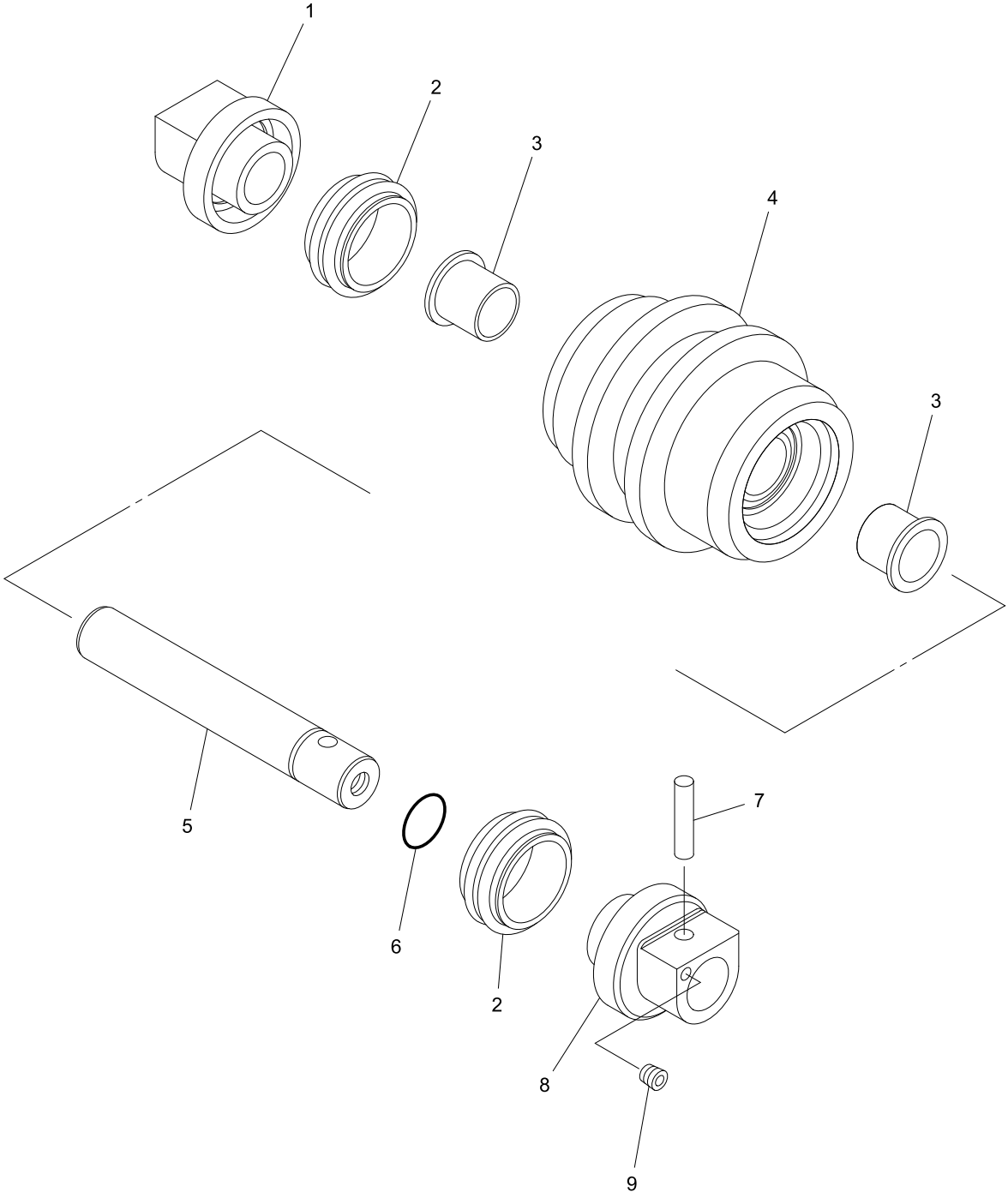

0653984UA-1

https://truckmanualshub.com/

KEY No.	SUP.	PART No.	DESCRIPTION	Q'TY	CHAN.	SERIAL No.	REMARKS
0		0653 984 UA	Roller Ass'y, Lower	8		WZ010001-	
1		0653 984 04	*Collar Roller	1		WZ010001-	
2		0763 014 60	*Seal, Floating	2		WZ010001-	
3		0653 984 05	*Bushing	2		WZ010001-	
4		0653 984 01	*Roller	1		WZ010001-	
5		0653 984 02	*Shaft	1		WZ010001-	
6		0760 715 35	*Ring, O	1		WZ010001-	G35-90B
7		0653 984 06	*Pin	1		WZ010001-	
8		0653 984 03	*Collar, Roller	1		WZ010001-	
9		0710 201 01	*Plug	1		WZ010001-	

https://truckmanualshub.com/

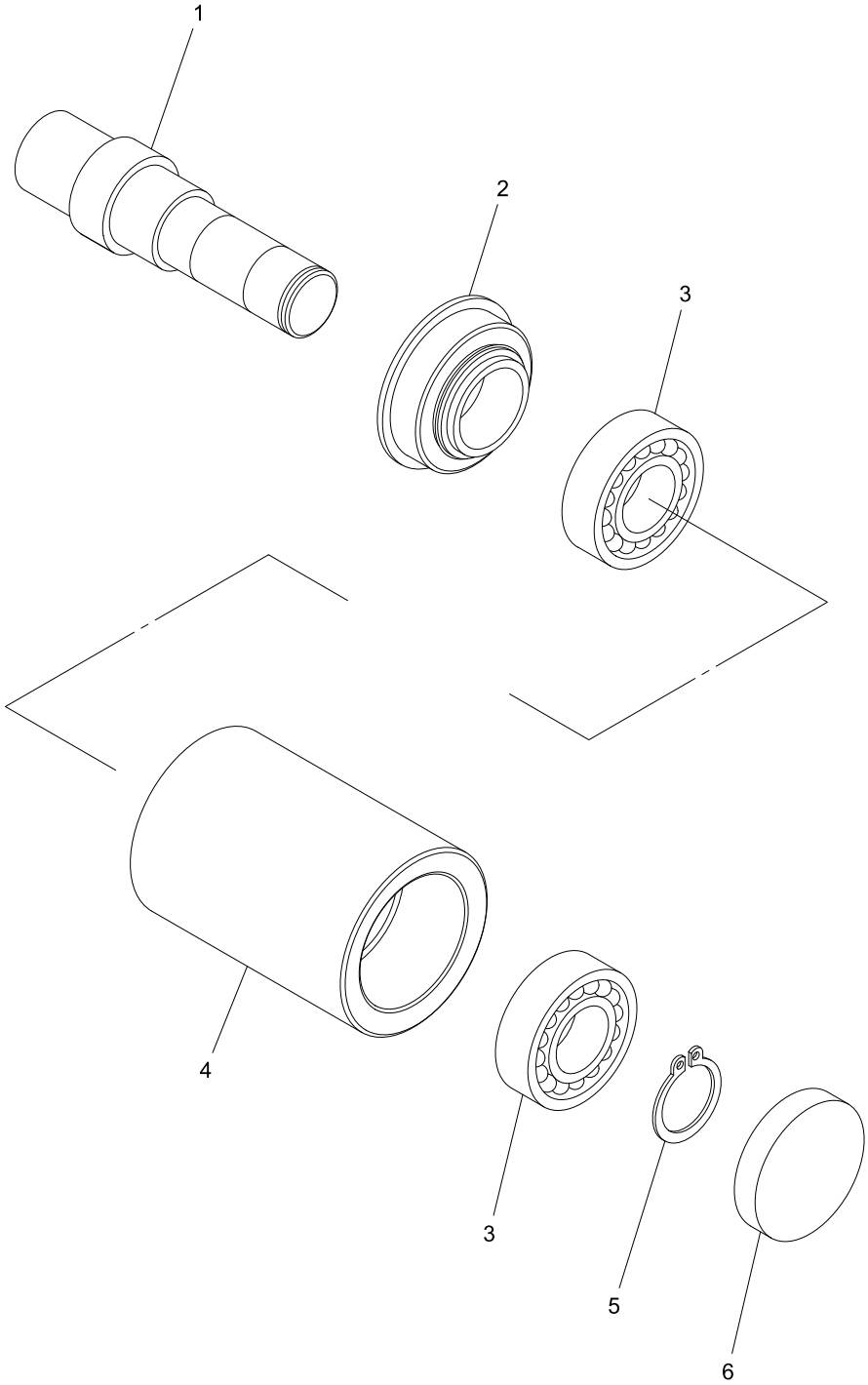

0651911UA-1

https://truckmanualshub.com/

KEY No.	SUP.	PART No.	DESCRIPTION	Q'TY	CHAN.	SERIAL No.	REMARKS
0		0651 911 UA	Roller Ass'y, Upper	2		WZ010001-	
1		0651 911 03	*Seal	1		WZ010001-	
2		0630 620 50	*Bearing	2		WZ010001-	#6205
3		0651 911 02	*Shaft, Roller	1		WZ010001-	
4		0493 510 25	*Ring, Snap	1		WZ010001-	d=25
5		0651 911 04	*Cap	1		WZ010001-	
6		0651 911 01	*Roller	1		WZ010001-	

https://truckmanualshub.com/

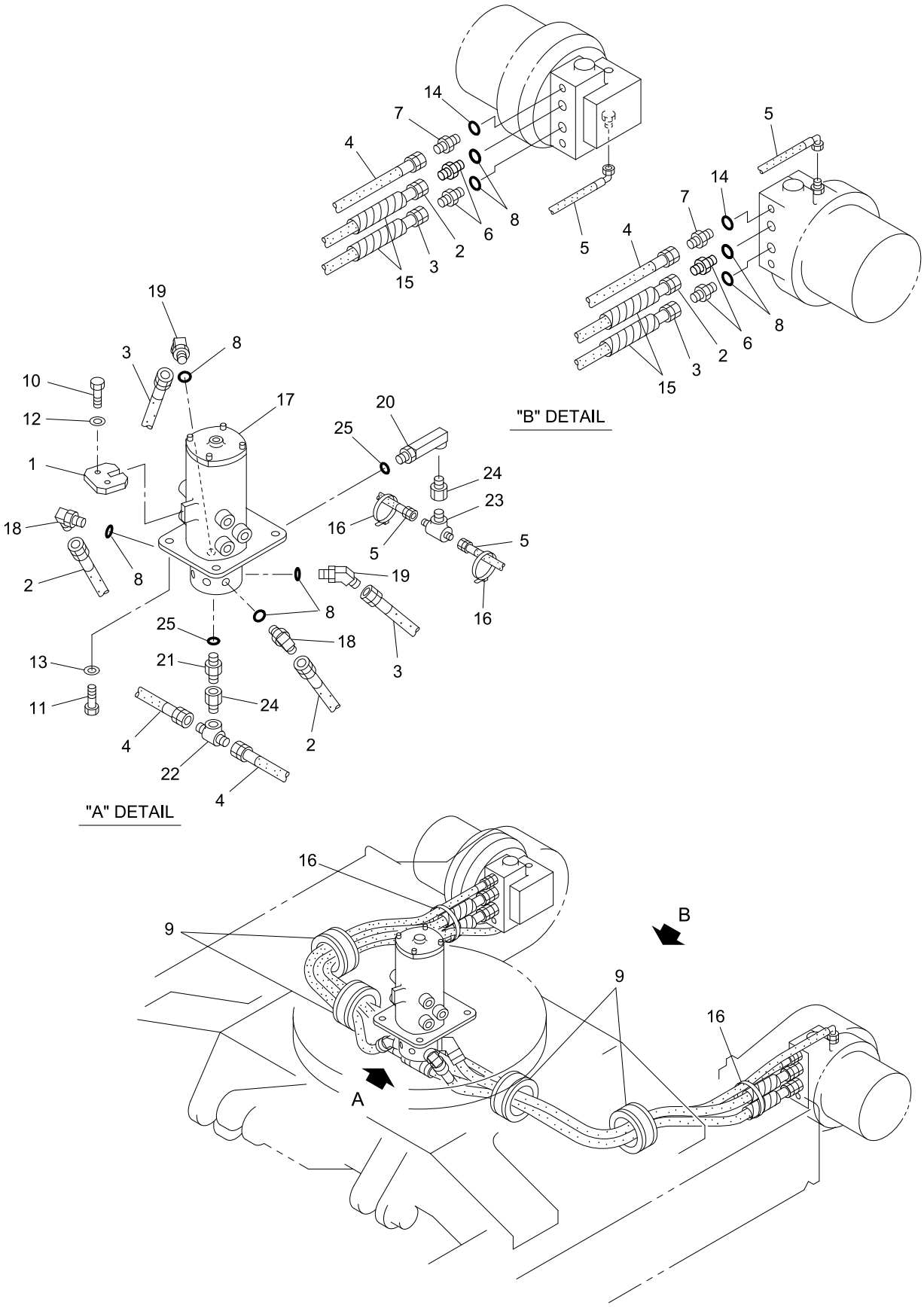

40V4-010700-1

https://truckmanualshub.com/

KEY No.	SUP.	PART No.	DESCRIPTION	Q'TY	CHAN.	SERIAL No.	REMARKS
0	×	F342 647 00	Piping Ass'y, Lower Travel	1		WZ010001-	
1		D260 516 00	*Stay	1		WZ010001-	
2		D070 350 05	*Hose Ass'y	2		WZ010001-	L=1400
3		D070 350 06	*Hose Ass'y	2		WZ010001-	L=1350
4		4070 015 26	*Hose Ass'y	2		WZ010001-	L=1350
5		4070 551 18	*Hose Ass'y	2		WZ010001-	L=1460
6		0713 700 04	*Adapter	4		WZ010001-	
7		0713 700 03	*Adapter	2		WZ010001-	
8		0760 710 19	*Ring, O	8		WZ010001-	P18-90B
9		4580 730 00	*Pad	4		WZ010001-	
10		0555 160 40	*Bolt, Treatment	2		WZ010001-	M16X40
11		0514 100 30	*Bolt, Treatment	4		WZ010001-	M10X30 P=1.25
12		0595 160 00	*Washer, Treatment	2		WZ010001-	M16
13		0595 100 00	*Washer, Treatment	4		WZ010001-	M10
14		0760 710 16	*Ring, O	2		WZ010001-	P14-90B
15		0790 000 02	*Tube, Spiral	M		WZ010001-	L=200X4
16		0820 067 05	*Band, Cable	4		WZ010001-	
17	#	0713 439 UA	*Joint Ass'y, Rotary	1		WZ010001-	Sh. No. 5-3
18		0710 113 44	*Elbow	2		WZ010001-	
19		0710 114 44	*Elbow, 45	2		WZ010001-	
20		0719 805 UA	*Elbow	1		WZ010001-	
21		0713 704 02	*Adapter	1		WZ010001-	
22		0710 707 04	*Tee	1		WZ010001-	
23		0710 707 02	*Tee	1		WZ010001-	Option
24		0710 503 02	*Socket	2		WZ010001-	
25		0760 710 12	*Ring, O	2		WZ010001-	P11-90B

https://truckmanualshub.com/

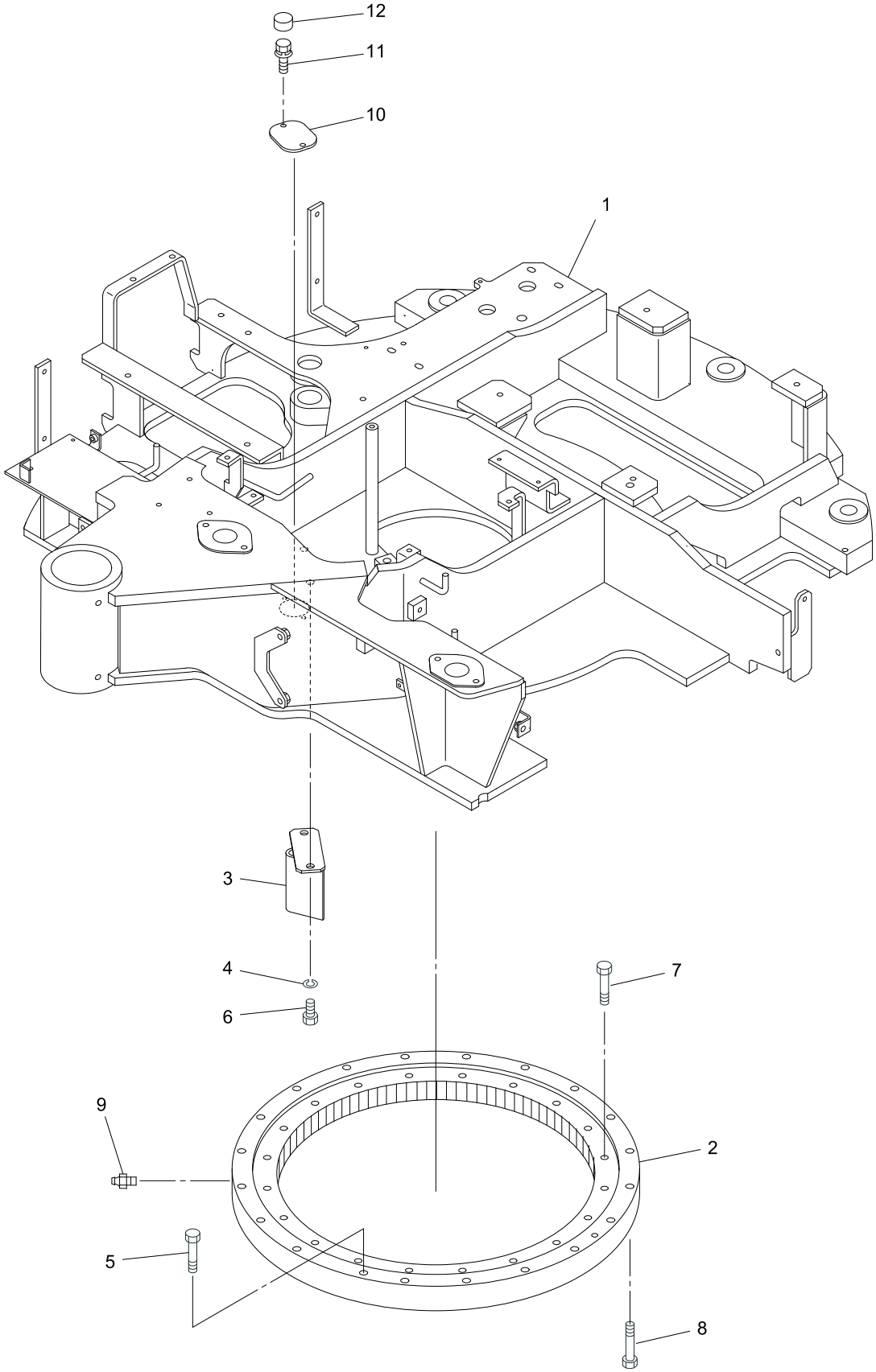

40V4-020100-1

https://truckmanualshub.com/

KEY No.	SUP.	PART No.	DESCRIPTION	Q'TY	CHAN.	SERIAL No.	REMARKS
0	×	F311 358 00	Frame Ass'y, Swing	1		WZ010001-	
0-1	×	F320 258 00	Bearing Ass'y, Swing	1		WZ010001-	
1	△	D204 356 00	*Frame, Swing	1		WZ010001-	
2		0605 416 UA	*Bearing, Swing	1		WZ010001-	
3		D416 789 00	*Bracket	1		WZ010001-	
4		0590 160 00	*Washer, Lock	2		WZ010001-	M16
5		D002 015 00	*Bolt, Reamer	1		WZ010001-	
6		0555 160 35	*Bolt, Treatment	2		WZ010001-	M16X35
7		0555 160 70	*Bolt, Treatment	20		WZ010001-	M16X70
8		0555 160 80	*Bolt, Treatment	19		WZ010001-	M16X80
9		0728 111 15	*Nipple, Grease	1		WZ010001-	PT1/8
10		4460 756 00	*Cover	1		WZ010001-	
11		0517 080 20	*Bolt, Treatment (W/L.W, F.W)	2		WZ010001-	M8X20
12		0690 202 56	*Cap	2		WZ010001-	

https://truckmanualshub.com/

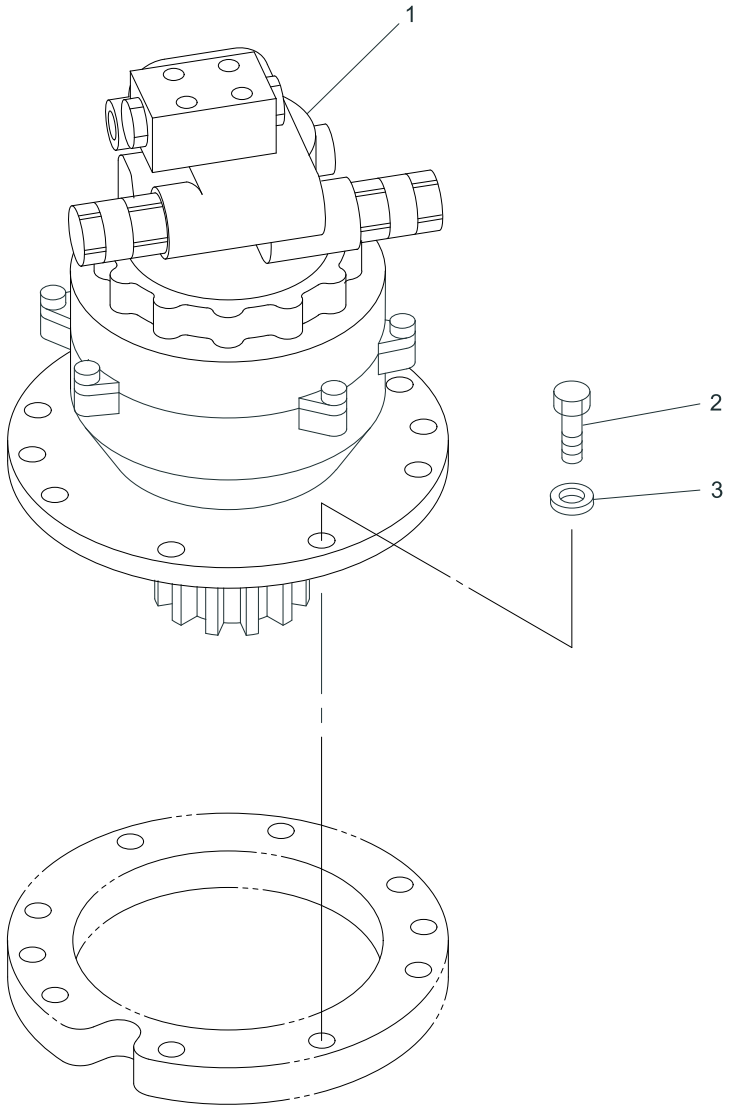

40V4-030100-1

https://truckmanualshub.com/

KEY No.	SUP.	PART No.	DESCRIPTION	Q'TY	CHAN.	SERIAL No.	REMARKS
0	×	F320 251 00	Swing Drive Device	1		WZ010001-	
1	#	0781 373 UA	*Motor Ass'y, Swing	1		WZ010001-	Sh. No. 5-2
2		0555 160 40	*Bolt, Treatment	10		WZ010001-	M16X40
3		0595 160 00	*Washer, Treatment	10		WZ010001-	M16

https://truckmanualshub.com/

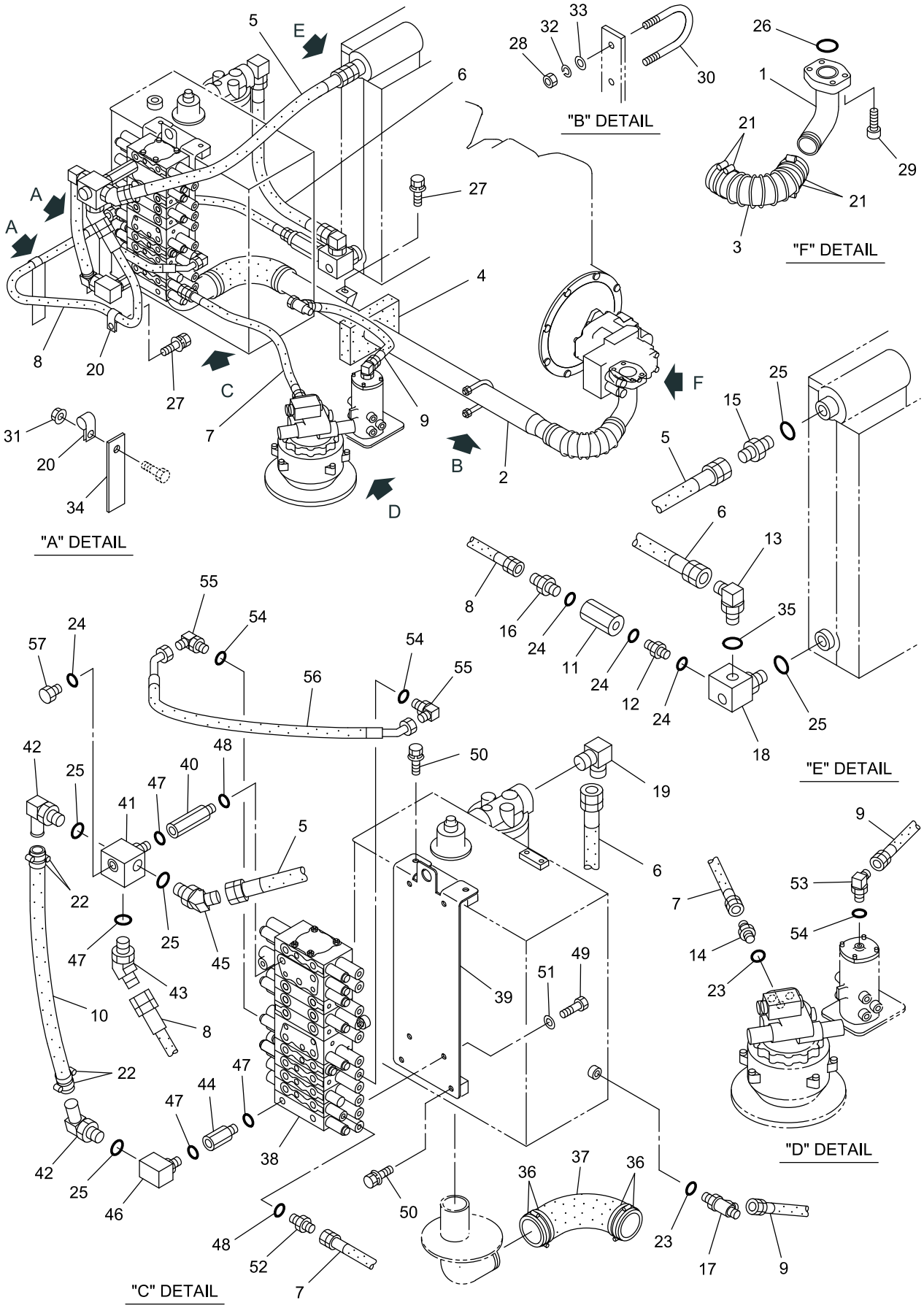

40V4-040100-1

https://truckmanualshub.com/

KEY No.	SUP.	PART No.	DESCRIPTION	Q'TY	CHAN.	SERIAL No.	REMARKS
0	×	F342 651 00	Piping Ass'y, Return & Suction	1		WZ010001-	
1		D286 277 00	*Tube	1		WZ010001-	
2		D286 347 00	*Tube	1		WZ010001-	
3		0776 600 08	*Hose	1		WZ010001-	
4		D493 668 00	*Panel, Sponge	1		WZ010001-	
5		D070 119 01	*Hose Ass'y	1		WZ010001-	L=680
6		4070 026 44	*Hose Ass'y	1		WZ010001-	L=700
7		4070 013 07	*Hose Ass'y	1		WZ010001-	L=650
8		4070 754 14	*Hose Ass'y	1		WZ010001-	L=1700
9		4070 015 14	*Hose Ass'y	1		WZ010001-	L=400
10		D070 572 01	*Hose	1		WZ010001-	L=320
11		0785 947 UA	*Valve, Check	1		WZ010001-	
12		D060 514 00	*Connector	1		WZ010001-	
13		0710 113 11	*Elbow	1		WZ010001-	
14		0713 700 94	*Adapter, Reducer	1		WZ010001-	PF3/8XPF1/2
15		0713 700 74	*Adapter	1		WZ010001-	
16		0713 700 73	*Adapter	1		WZ010001-	
17		0710 713 10	*Tee, Special	1		WZ010001-	
18		D060 531 00	*Connector	1		WZ010001-	
19		0712 310 55	*Elbow	1		WZ010001-	
20		4080 000 06	*Clamp, Hose	3		WZ010001-	
21		0690 078 12	*Clamp, Hose	4		WZ010001-	
22		0690 083 08	*Clamp, Hose	4		WZ010001-	
23		0760 710 16	*Ring, O	2		WZ010001-	P14-90B
24		0760 710 24	*Ring, O	4		WZ010001-	P22.4-90B
25		0760 710 30	*Ring, O	5		WZ010001-	P29-90B
26		0760 312 25	*Ring, O	1		WZ010001-	P225-90B
27		0518 100 20	*Bolt, Treatment (W/L.W, F.W)	2		WZ010001-	M10X20 P=1.25
28		0580 120 00	*Nut, Hex.	2		WZ010001-	M12
29		0562 120 35	*Bolt, Socket Head	4		WZ010001-	M12X35
30		4003 003 00	*Bolt, U	1		WZ010001-	
31		0524 100 00	*Nut, Hex. (W/F.W)	2		WZ010001-	M10 P=1.25
32		0590 120 00	*Washer, Lock	2		WZ010001-	M12
33		0595 120 00	*Washer, Treatment	2		WZ010001-	M12
34		D401 498 00	*Plate	2		WZ010001-	
35		0760 710 40	*Ring, O	1		WZ010001-	P38-90B
36		0690 083 13	*Clamp, Hose	4		WZ010001-	
37		0776 600 11	*Hose	1		WZ010001-	
38	#	0784 016 UA	*Valve Ass'y, Control	1		WZ010001-	Sh. No. 5-4
39		D419 060 00	*Bracket	1		WZ010001-	
40		D060 532 00	*Connector	1		WZ010001-	
41		D060 530 00	*Connector	1		WZ010001-	
42		0710 127 06	*Elbow	2		WZ010001-	
43		0710 114 66	*Elbow, 45	1		WZ010001-	

https://truckmanualshub.com/

KEY No.	SUP.	PART No.	DESCRIPTION	Q'TY	CHAN.	SERIAL No.	REMARKS
44		D060 533 00	*Connector	1		WZ010001-	
45		0710 114 88	*Elbow, 45	1		WZ010001-	PF1XPT1
46		D060 534 00	*Elbow	1		WZ010001-	
47		0760 710 25	*Ring, O	4		WZ010001-	P24-90B
48		0760 710 19	*Ring, O	2		WZ010001-	P18-90B
49		0513 100 16	*Bolt, Treatment	4		WZ010001-	M10X16
50		0518 100 25	*Bolt, Treatment (W/L.W, F.W)	4		WZ010001-	M10X25 P=1.25
51		0595 100 00	*Washer, Treatment	4		WZ010001-	M10
52		D060 526 00	*Adapter	1		WZ010001-	
53		0710 113 23	*Elbow, Reducer	1		WZ010001-	PF1/4XPF3/8
54		0760 710 12	*Ring, O	3		WZ010001-	P11-90B
55		0710 122 09	*Elbow	2		WZ010001-	
56		D070 605 00	*Hose Ass'y	1		WZ010001-	
57		0710 212 12	*Plug	1		WZ010001-	

https://truckmanualshub.com/

[Memo]

https://truckmanualshub.com/

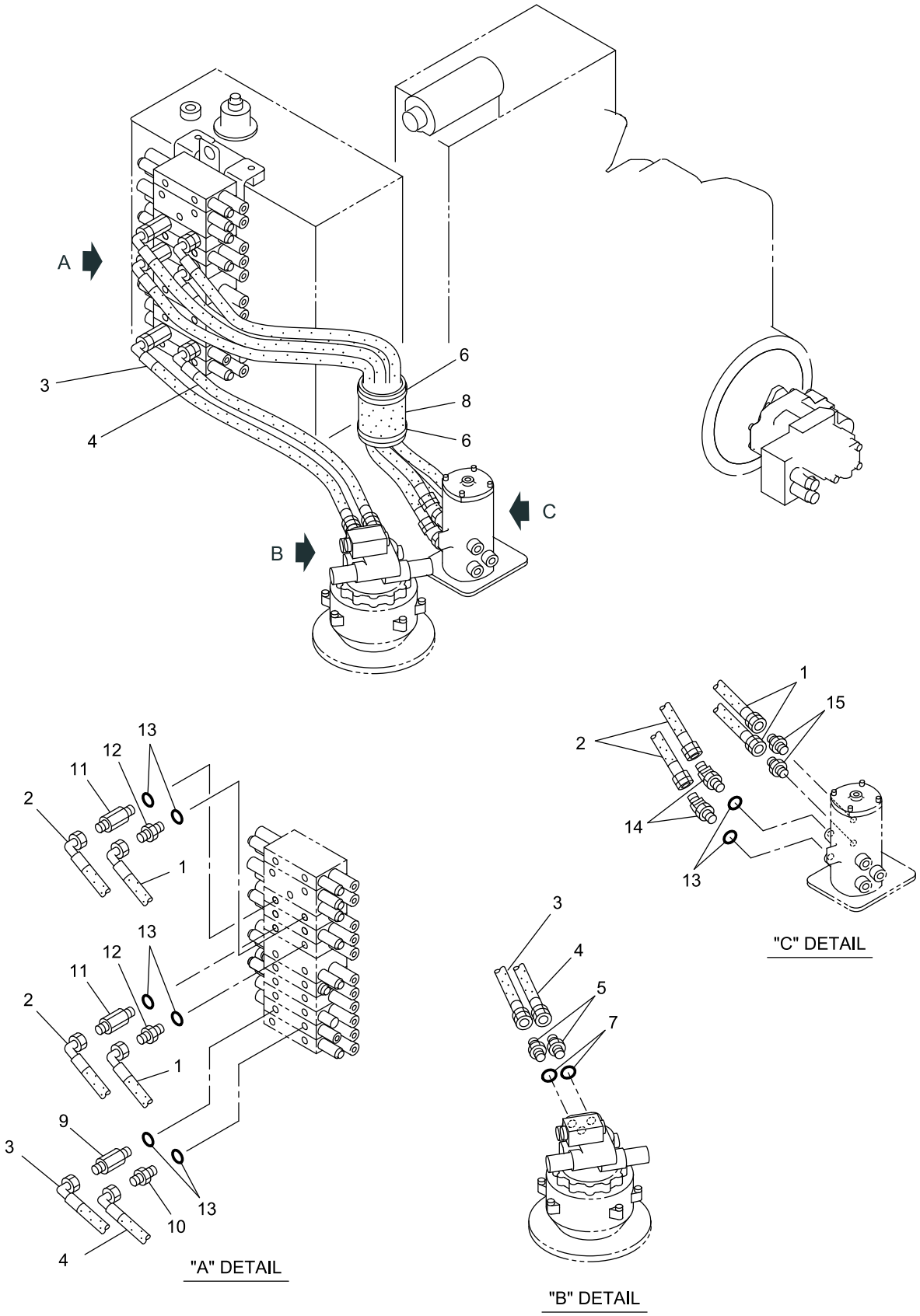

40V4-040200-1

https://truckmanualshub.com/

KEY No.	SUP.	PART No.	DESCRIPTION	Q'TY	CHAN.	SERIAL No.	REMARKS
0	×	F342 651 00	Piping Ass'y, Swing & Travel	1		WZ010001-	
1		D070 363 19	*Hose Ass'y	2		WZ010001-	L=1100
2		D070 363 04	*Hose Ass'y	2		WZ010001-	L=950
3		D070 362 14	*Hose Ass'y	1		WZ010001-	L=770
4		D070 362 12	*Hose Ass'y	1		WZ010001-	L=730
5		0713 700 03	*Adapter	2		WZ010001-	
6		0820 067 10	*Band, Cable	2		WZ010001-	
7		0760 710 16	*Ring, O	2		WZ010001-	P14-90B
8		4070 351 03	*Cover, Hose	1		WZ010001-	
9		D060 071 00	*Bush, Reducer	1		WZ010001-	PF1/2XPF3/8
10		0713 700 78	*Adapter, Reducer	1		WZ010001-	PF1/2XPF3/8
11		4072 971 00	*Connector	2		WZ010001-	PF1/2XPF3/8
12		0713 700 04	*Adapter	2		WZ010001-	
13		0760 710 19	*Ring, O	8		WZ010001-	P18-90B
14		0710 114 44	*Elbow, 45	2		WZ010001-	
15		0713 700 04	*Adapter	2		WZ010001-	

https://truckmanualshub.com/

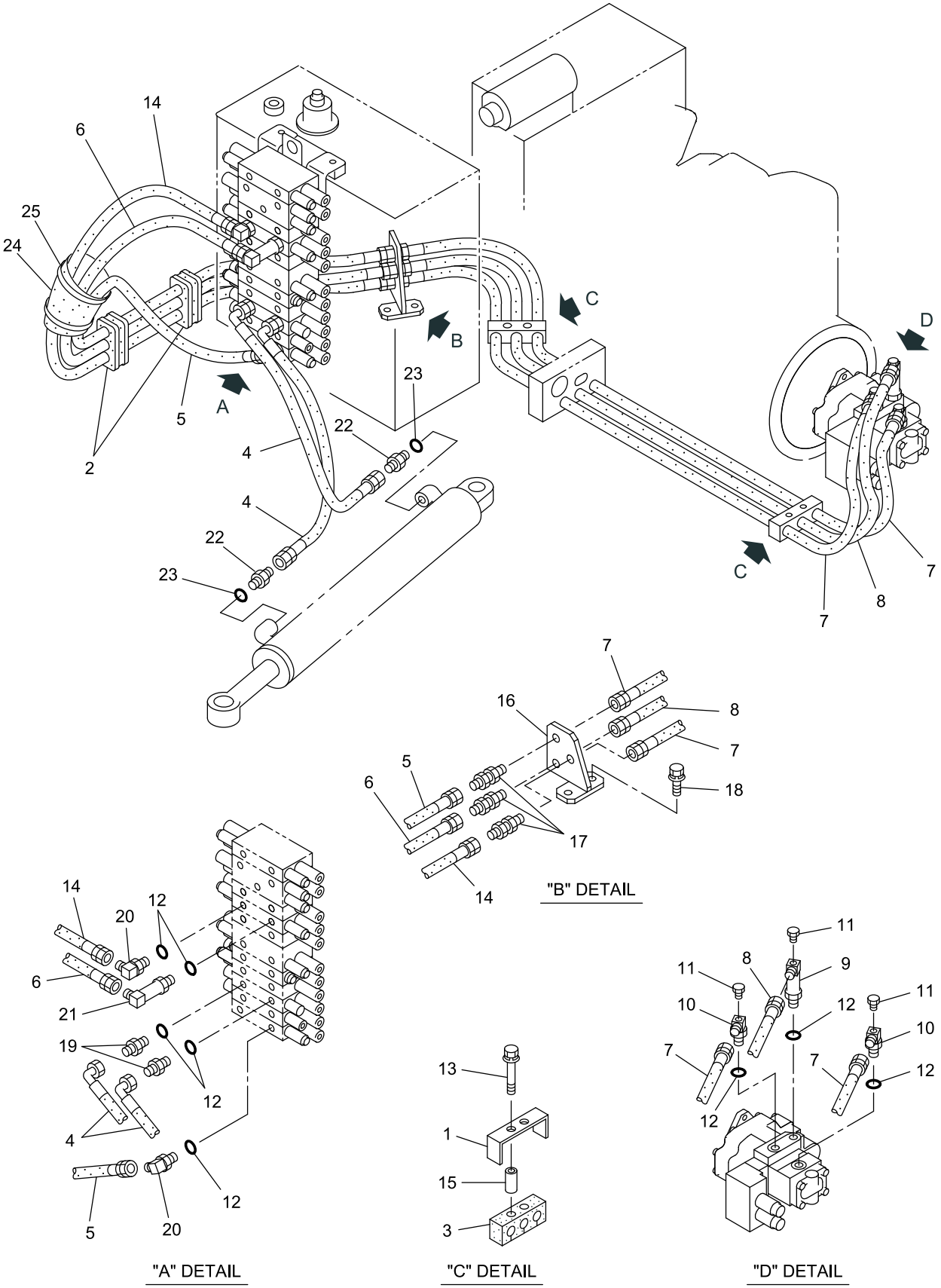

40V4-040300-1

https://truckmanualshub.com/

KEY No.	SUP.	PART No.	DESCRIPTION	Q'TY	CHAN.	SERIAL No.	REMARKS
0	×	F342 651 00	Piping Ass'y, Pump Discharge & Boom Swing	1		WZ010001-	
0-1	×	F388 388 00	Piping Ass'y, Pump Discharge & Boom Swing	1		WZ010001-	
1		D083 154 00	*Clamp	2		WZ010001-	
2		D580 170 00	*Pad	2		WZ010001-	
3		D580 184 00	*Pad	2		WZ010001-	
4		D070 360 02	*Hose Ass'y	2		WZ010001-	L=710
5		D070 350 11	*Hose Ass'y	1		WZ010001-	L=910
6		D070 350 06	*Hose Ass'y	1		WZ010001-	L=1350
7		D070 578 01	*Hose Ass'y	2		WZ010001-	L=2090
8		D070 578 02	*Hose Ass'y	1		WZ010001-	L=2170
9		D060 535 00	*Elbow, Long	1		WZ010001-	
10		D060 408 00	*Elbow	2		WZ010001-	
11		0710 202 02	*Plug	3		WZ010001-	
12		0760 710 19	*Ring, O	8		WZ010001-	P18-90B
13		0517 080 50	*Bolt, Treatment (W/L.W, F.W)	4		WZ010001-	M8X50
14		D070 350 10	*Hose Ass'y	1		WZ010001-	L=1290
15		D040 249 07	*Spacer	4		WZ010001-	
16		D419 490 00	*Bracket	1		WZ010001-	
17		D060 540 00	*Connector	3		WZ010001-	
18		0518 100 30	*Bolt, Treatment (W/L.W, F.W)	2		WZ010001-	M10X30 P=1.25
19		D060 503 00	*Adapter, Reducer	2		WZ010001-	PF1/2XPF1/4
20		0710 113 44	*Elbow	2		WZ010001-	
21		4072 769 00	*Elbow, Long	1		WZ010001-	
22		0713 700 77	*Adapter, Reducer	2		WZ010001-	PF3/8XPF1/4
23		0760 710 16	*Ring, O	2		WZ010001-	P14-90B
24		4070 390 03	*Cover, Hose	1		WZ010001-	
25		0820 067 10	*Band, Cable	2		WZ010001-	

https://truckmanualshub.com/

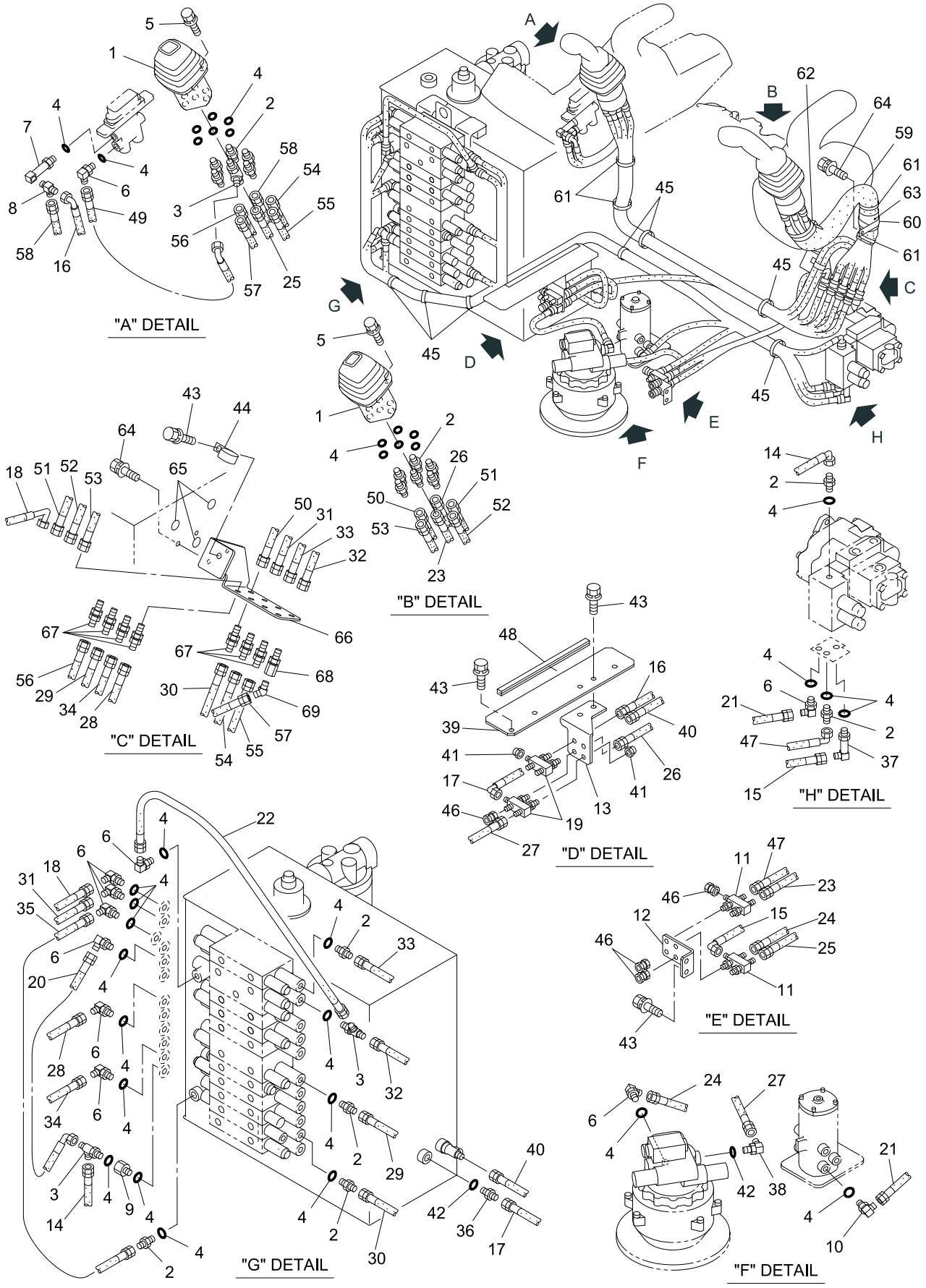

40V4-040400-1

https://truckmanualshub.com/

KEY No.	SUP.	PART No.	DESCRIPTION	Q'TY	CHAN.	SERIAL No.	REMARKS
0	×	F342 640 00	Piping Ass'y, Control	1		WZ010001-	
1	#	0783 964 UA	*Valve Assy Remote Control	2		WZ010001-	Sh. No. 5-5
2		0713 700 70	*Connector	17		WZ010001-	
3		0710 713 09	*Tee	3		WZ010001-	
4		0760 710 12	*Ring, O	34		WZ010001-	P11-90B
5		0517 060 25	*Bolt, Treatment (W/L.W, F.W)	6		WZ010001-	M6X25
6		0710 122 09	*Elbow	10		WZ010001-	
7		0719 805 UA	*Elbow	1		WZ010001-	
8		0710 709 02	*Tee	1		WZ010001-	
9		D060 525 00	*Connector	1		WZ010001-	
10		0710 117 02	*Elbow	1		WZ010001-	
11		D065 093 00	*Manifold	2		WZ010001-	
12		D418 943 00	*Bracket	1		WZ010001-	
13		D418 944 00	*Bracket	1		WZ010001-	
14		4070 551 34	*Hose Ass'y	1		WZ010001-	L=1900
15		4070 551 01	*Hose Ass'y	1		WZ010001-	L=1150
16		4070 551 22	*Hose Ass'y	1		WZ010001-	L=1000
16-1	☆	D407 818 04	*Decal (BT)	2		WZ010001-	D407 818 00
17		4070 124 09	*Hose Ass'y	1		WZ010001-	L=470
18		4070 551 43	*Hose Ass'y	1		WZ010001-	L=2450
18-1	☆	4405 308 01	*Decal (C1)	2		WZ010001-	4405 308 00
19		D065 094 00	*Manifold	2		WZ010001-	
20		4070 551 19	*Hose Ass'y	1		WZ010001-	L=600
21		4070 548 68	*Hose Ass'y	1		WZ010001-	L=1070
22		4070 548 57	*Hose Ass'y	1		WZ010001-	L=450
23		4070 548 40	*Hose Ass'y	1		WZ010001-	L=1650
23-1	☆	4405 311 02	*Decal (LP)	2		WZ010001-	4405 311 00
24		4070 548 82	*Hose Ass'y	1		WZ010001-	L=420
25		4070 548 69	*Hose Ass'y	1		WZ010001-	L=840
25-1	☆	4405 311 01	*Decal (RP)	2		WZ010001-	4405 311 00
26		4070 548 42	*Hose Ass'y	1		WZ010001-	L=1670
26-1	☆	4405 312 02	*Decal (LT)	2		WZ010001-	4405 312 00
27		4070 548 88	*Hose Ass'y	1		WZ010001-	L=780
28		4070 548 89	*Hose Ass'y	1		WZ010001-	L=2250
28-1	☆	4405 309 02	*Decal (A2)	2		WZ010001-	4405 309 00
29		4070 548 61	*Hose Ass'y	1		WZ010001-	L=1700
29-1	☆	4405 309 01	*Decal (A1)	2		WZ010001-	4405 309 00
30		4070 548 41	*Hose Ass'y	1		WZ010001-	L=1850
30-1	☆	4405 310 02	*Decal (S2)	2		WZ010001-	4405 310 00
31		4070 548 35	*Hose Ass'y	1		WZ010001-	L=2400
31-1	☆	4405 307 02	*Decal (B2)	2		WZ010001-	4405 307 00
32		4070 548 39	*Hose Ass'y	1		WZ010001-	L=2000
32-1	☆	4405 307 01	*Decal (B1)	2		WZ010001-	4405 307 00
33		4070 548 65	*Hose Ass'y	1		WZ010001-	L=1950
33-1	☆	4405 308 02	*Decal (C2)	2		WZ010001-	4405 308 00

https://truckmanualshub.com/

KEY No.	SUP.	PART No.	DESCRIPTION	Q'TY	CHAN.	SERIAL No.	REMARKS
34		4070 548 21	*Hose Ass'y	1		WZ010001-	L=2100
34-1	☆	4405 310 01	*Decal (S1)	2		WZ010001-	4405 310 00
35		4070 548 70	*Hose Ass'y	1		WZ010001-	L=680
36		0713 700 71	*Adapter	1		WZ010001-	
37		0710 117 02	*Elbow, Long	1		WZ010001-	
38		0710 113 32	*Elbow, Reducer	1		WZ010001-	PF3/8XPF1/4
39		D418 948 00	*Bracket	1		WZ010001-	
40		4070 782 06	*Hose Ass'y	1		WZ010001-	L=500
41		0710 303 03	*Plug, Swivel	2		WZ010001-	
42		0760 710 16	*Ring, O	2		WZ010001-	P14-90B
43		0518 100 20	*Bolt, Treatment (W/L.W, F.W)	7		WZ010001-	M10X20 P=1.25
44		4080 000 25	*Clamp, Hose	1		WZ010001-	
45		0820 067 05	*Band, Cable	7		WZ010001-	
46		0710 303 02	*Plug, Swivel	4		WZ010001-	PF1/4
47		4070 551 45	*Hose Ass'y	1		WZ010001-	L=950
48		D550 019 00	*Seal	1		WZ010001-	L=300
49		4070 551 15	*Hose Ass'y	1		WZ010001-	L=350
49-1	☆	D407 818 03	*Decal (BP)	2		WZ010001-	D407 818 00
50		4070 548 25	*Hose Ass'y	1		WZ010001-	L=700
50-1	☆	4405 309 03	*Decal (L1)	2		WZ010001-	4405 309 00
51		4070 548 25	*Hose Ass'y	1		WZ010001-	L=700
51-1	☆	4405 310 03	*Decal (L2)	2		WZ010001-	4405 310 00
52		4070 548 25	*Hose Ass'y	1		WZ010001-	L=700
52-1	☆	4405 309 04	*Decal (L3)	2		WZ010001-	4405 309 00
53		4070 548 25	*Hose Ass'y	1		WZ010001-	L=700
53-1	☆	4405 310 04	*Decal (L4)	2		WZ010001-	4405 310 00
54		4070 548 06	*Hose Ass'y	1		WZ010001-	L=1200
54-1	☆	4405 308 03	*Decal (R2)	2		WZ010001-	4405 308 00
55		4070 548 06	*Hose Ass'y	1		WZ010001-	L=1200
55-1	☆	4405 307 04	*Decal (R3)	2		WZ010001-	4405 307 00
56		4070 548 19	*Hose Ass'y	1		WZ010001-	L=1250
56-1	☆	4405 307 03	*Decal (R1)	2		WZ010001-	4405 307 00
57		4070 548 19	*Hose Ass'y	1		WZ010001-	L=1250
57-1	☆	4405 308 04	*Decal (R4)	2		WZ010001-	4405 308 00
58		4070 548 08	*Hose Ass'y	1		WZ010001-	L=300
58-1	☆	4405 312 01	*Decal (RT)	2		WZ010001-	4405 312 00
59		D070 577 01	*Hose	1		WZ010001-	
60		4080 000 09	*Clamp, Hose	1		WZ010001-	
61		0820 067 09	*Band, Cable	4		WZ010001-	
62		0820 067 10	*Band, Cable	1		WZ010001-	
63		4580 016 00	*Pad, Rubber	1		WZ010001-	
64		0518 100 25	*Bolt, Treatment (W/L.W, F.W)	3		WZ010001-	M10X25 P=1.25
65		D405 272 00	*Seal	3		WZ010001-	

https://truckmanualshub.com/

KEY No.	SUP.	PART No.	DESCRIPTION	Q'TY	CHAN.	SERIAL No.	REMARKS
66		D419 122 00	*Bracket	1		WZ010001-	
67		D060 137 00	*Adapter	7		WZ010001-	
68		0712 325 02	*Adapter	1		WZ010001-	
69		0712 310 40	*Elbow, 45	1		WZ010001-	

https://truckmanualshub.com/

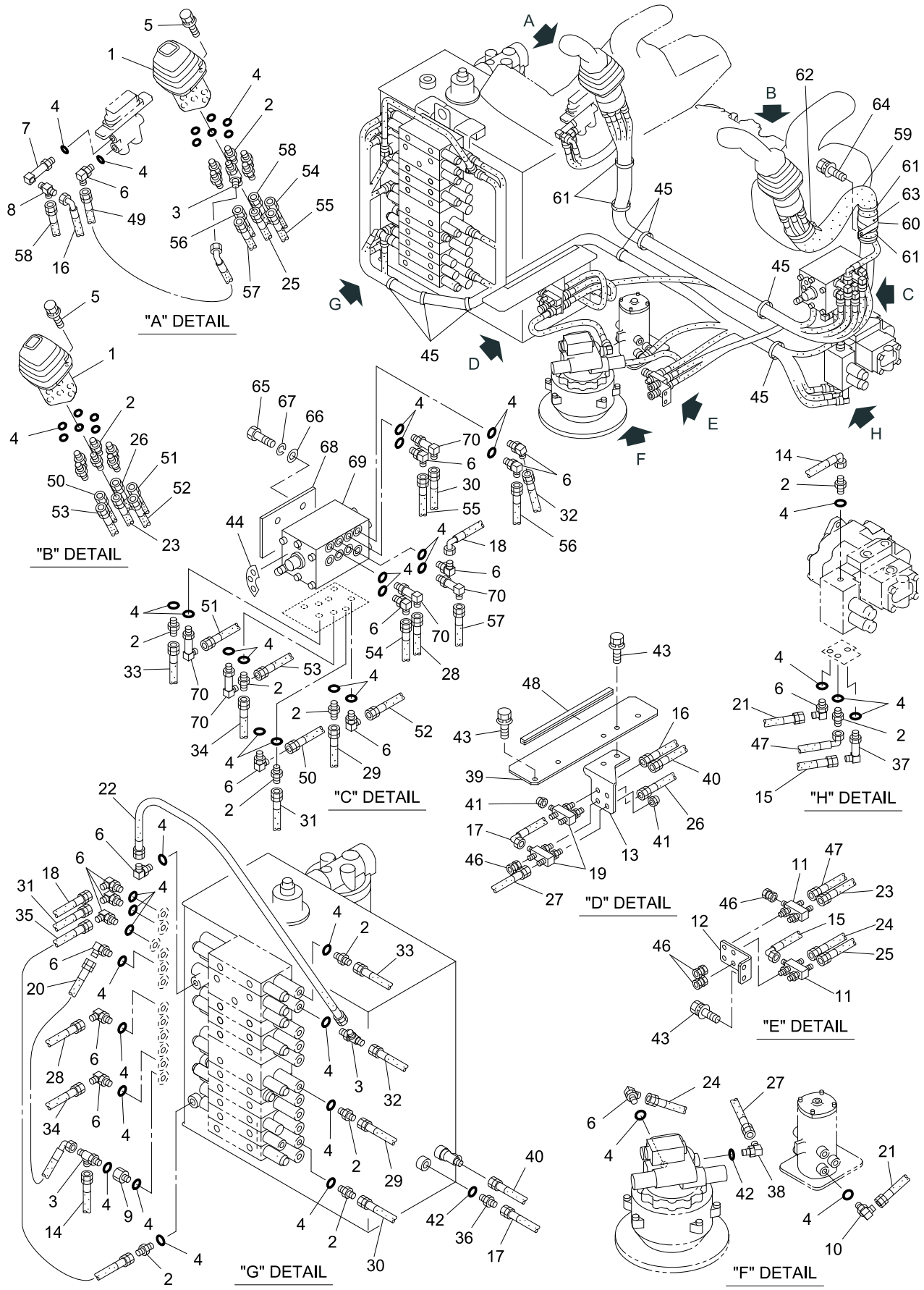

40V4-04040A-1

https://truckmanualshub.com/

KEY No.	SUP.	PART No.	DESCRIPTION	Q'TY	CHAN.	SERIAL No.	REMARKS
0	×	F342 640 00	Piping Ass'y, Control	1		WZ010001-	
1	#	0783 964 UA	*Valve Assy Remote Control	2		WZ010001-	Sh. No. 5-5
2		0713 700 70	*Connector	21		WZ010001-	
3		0710 713 09	*Tee	3		WZ010001-	
4		0760 710 12	*Ring, O	50		WZ010001-	P11-90B
5		0517 060 25	*Bolt, Treatment (W/L.W, F.W)	6		WZ010001-	M6X25
6		0710 122 09	*Elbow	17		WZ010001-	
7		0719 805 UA	*Elbow	1		WZ010001-	
8		0710 709 02	*Tee	1		WZ010001-	
9		D060 525 00	*Connector	1		WZ010001-	
10		0710 117 02	*Elbow	1		WZ010001-	
11		D065 093 00	*Manifold	2		WZ010001-	
12		D418 943 00	*Bracket	1		WZ010001-	
13		D418 944 00	*Bracket	1		WZ010001-	
14		4070 551 34	*Hose Ass'y	1		WZ010001-	L=1900
15		4070 551 01	*Hose Ass'y	1		WZ010001-	L=1150
16		4070 551 22	*Hose Ass'y	1		WZ010001-	L=1000
16-1	☆	D407 818 04	*Decal (BT)	2		WZ010001-	D407 818 00
17		4070 124 09	*Hose Ass'y	1		WZ010001-	L=470
18		4070 551 43	*Hose Ass'y	1		WZ010001-	L=2450
18-1	☆	4405 308 01	*Decal (C1)	2		WZ010001-	4405 308 00
19		D065 094 00	*Manifold	2		WZ010001-	
20		4070 551 19	*Hose Ass'y	1		WZ010001-	L=600
21		4070 548 68	*Hose Ass'y	1		WZ010001-	L=1070
22		4070 548 57	*Hose Ass'y	1		WZ010001-	L=450
23		4070 548 40	*Hose Ass'y	1		WZ010001-	L=1650
23-1	☆	4405 311 02	*Decal (LP)	2		WZ010001-	4405 311 00
24		4070 548 82	*Hose Ass'y	1		WZ010001-	L=420
25		4070 548 69	*Hose Ass'y	1		WZ010001-	L=840
25-1	☆	4405 311 01	*Decal (RP)	2		WZ010001-	4405 311 00
26		4070 548 42	*Hose Ass'y	1		WZ010001-	L=1670
26-1	☆	4405 312 02	*Decal (LT)	2		WZ010001-	4405 312 00
27		4070 548 88	*Hose Ass'y	1		WZ010001-	L=780
28		4070 548 89	*Hose Ass'y	1		WZ010001-	L=2250
28-1	☆	4405 309 02	*Decal (A2)	2		WZ010001-	4405 309 00
29		4070 548 61	*Hose Ass'y	1		WZ010001-	L=1700
29-1	☆	4405 309 01	*Decal (A1)	2		WZ010001-	4405 309 00
30		4070 548 41	*Hose Ass'y	1		WZ010001-	L=1850
30-1	☆	4405 310 02	*Decal (S2)	2		WZ010001-	4405 310 00
31		4070 548 35	*Hose Ass'y	1		WZ010001-	L=2400
31-1	☆	4405 307 02	*Decal (B2)	2		WZ010001-	4405 307 00
32		4070 548 39	*Hose Ass'y	1		WZ010001-	L=2000
32-1	☆	4405 307 01	*Decal (B1)	2		WZ010001-	4405 307 00
33		4070 548 65	*Hose Ass'y	1		WZ010001-	L=1950
33-1	☆	4405 308 02	*Decal (C2)	2		WZ010001-	4405 308 00

https://truckmanualshub.com/

KEY No.	SUP.	PART No.	DESCRIPTION	Q'TY	CHAN.	SERIAL No.	REMARKS
34		4070 548 21	*Hose Ass'y	1		WZ010001-	L=2100
34-1	☆	4405 310 01	*Decal (S1)	2		WZ010001-	4405 310 00
35		4070 548 70	*Hose Ass'y	1		WZ010001-	L=680
36		0713 700 71	*Adapter	1		WZ010001-	
37		0710 117 02	*Elbow, Long	1		WZ010001-	
38		0710 113 32	*Elbow, Reducer	1		WZ010001-	PF3/8XPF1/4
39		D418 948 00	*Bracket	1		WZ010001-	
40		4070 782 06	*Hose Ass'y	1		WZ010001-	L=500
41		0710 303 03	*Plug, Swivel	2		WZ010001-	
42		0760 710 16	*Ring, O	2		WZ010001-	P14-90B
43		0518 100 20	*Bolt, Treatment (W/L.W, F.W)	5		WZ010001-	M10X20 P=1.25
44		D405 447 00	*Decal (For A-D)	1		WZ010001-	
44-1		D405 518 00	*Decal (For A, B, G)	1		WZ010001-	
45		0820 067 05	*Band, Cable	7		WZ010001-	
46		0710 303 02	*Plug, Swivel	4		WZ010001-	PF1/4
47		4070 551 45	*Hose Ass'y	1		WZ010001-	L=950
48		D550 019 00	*Seal	1		WZ010001-	L=300
49		4070 551 15	*Hose Ass'y	1		WZ010001-	L=350
49-1	☆	D407 818 03	*Decal (BP)	2		WZ010001-	D407 818 00
50		4070 548 25	*Hose Ass'y	1		WZ010001-	L=700
50-1	☆	4405 309 03	*Decal (L1)	2		WZ010001-	4405 309 00
51		4070 548 25	*Hose Ass'y	1		WZ010001-	L=700
51-1	☆	4405 310 03	*Decal (L2)	2		WZ010001-	4405 310 00
52		4070 548 25	*Hose Ass'y	1		WZ010001-	L=700
52-1	☆	4405 309 04	*Decal (L3)	2		WZ010001-	4405 309 00
53		4070 548 25	*Hose Ass'y	1		WZ010001-	L=700
53-1	☆	4405 310 04	*Decal (L4)	2		WZ010001-	4405 310 00
54		4070 548 06	*Hose Ass'y	1		WZ010001-	L=1200
54-1	☆	4405 308 03	*Decal (R2)	2		WZ010001-	4405 308 00
55		4070 548 06	*Hose Ass'y	1		WZ010001-	L=1200
55-1	☆	4405 307 04	*Decal (R3)	2		WZ010001-	4405 307 00
56		4070 548 19	*Hose Ass'y	1		WZ010001-	L=1250
56-1	☆	4405 307 03	*Decal (R1)	2		WZ010001-	4405 307 00
57		4070 548 19	*Hose Ass'y	1		WZ010001-	L=1250
57-1	☆	4405 308 04	*Decal (R4)	2		WZ010001-	4405 308 00
58		4070 548 08	*Hose Ass'y	1		WZ010001-	L=300
58-1	☆	4405 312 01	*Decal (RT)	2		WZ010001-	4405 312 00
59		D070 577 01	*Hose	1		WZ010001-	
60		4080 000 09	*Clamp, Hose	1		WZ010001-	
61		0820 067 09	*Band, Cable	4		WZ010001-	
62		0820 067 10	*Band, Cable	1		WZ010001-	
63		4580 016 00	*Pad, Rubber	1		WZ010001-	
64		0518 100 25	*Bolt, Treatment (W/L.W, F.W)	1		WZ010001-	M10X25 P=1.25

https://truckmanualshub.com/

KEY No.	SUP.	PART No.	DESCRIPTION	Q'TY	CHAN.	SERIAL No.	REMARKS
65		0550 120 25	*Bolt, Hex.	3		WZ010001-	M12X25
66		0593 120 00	*Washer, Flat	3		WZ010001-	M12
67		0590 120 00	*Washer, Lock	3		WZ010001-	M12
68		D040 345 00	*Spacer	1		WZ010001-	
69	#	0784 112 UA	*Valve Ass'y, Multiple (For A-D)	1		WZ010001-	Sh. No. 5-15
69-1		0784 113 UA	*Valve Ass'y, Multiple (For A, B, G)	1		WZ010001-	
70		D060 028 00	*Elbow	5		WZ010001-	

https://truckmanualshub.com/

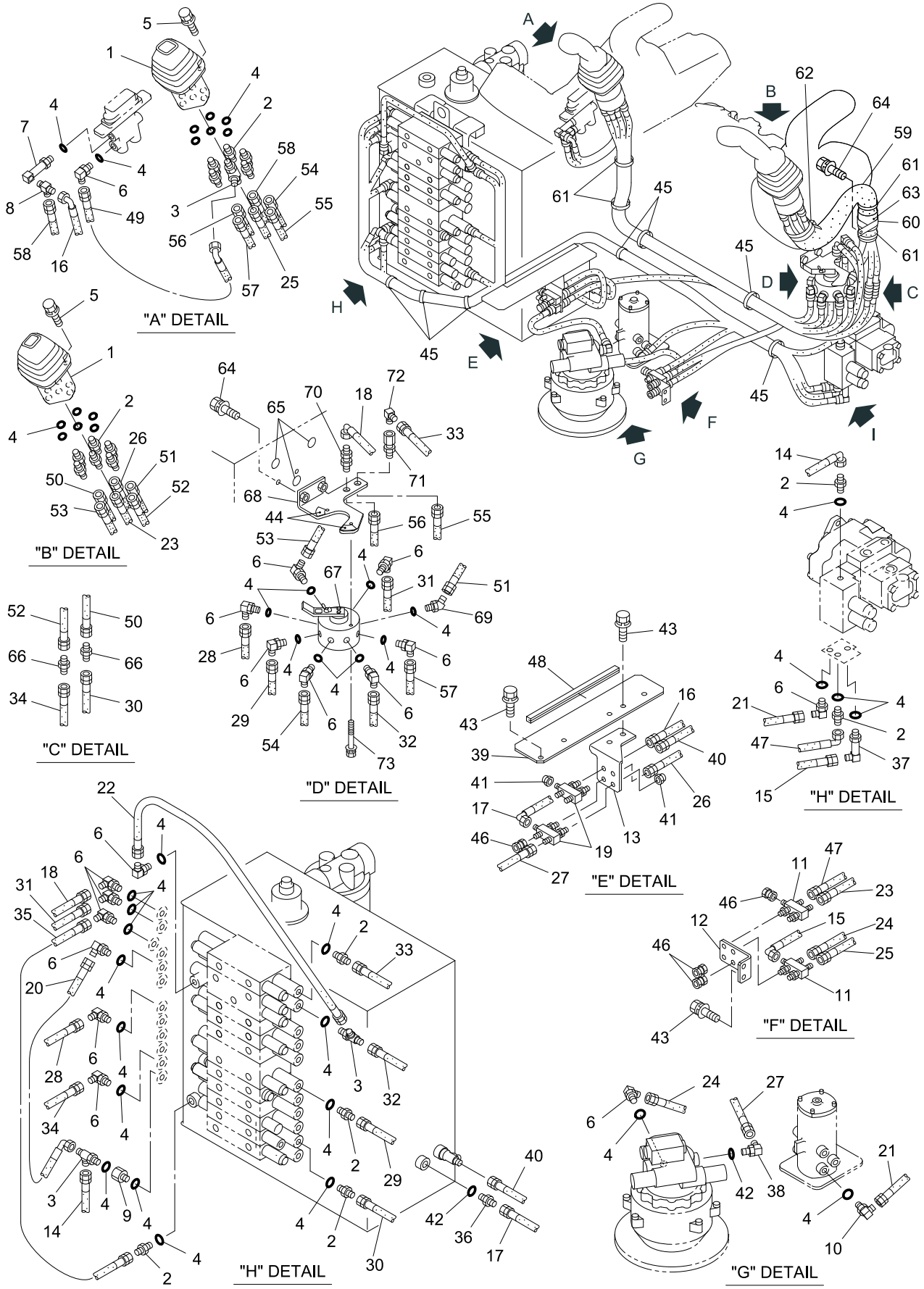

40V4-04040B-1

https://truckmanualshub.com/

KEY No.	SUP.	PART No.	DESCRIPTION	Q'TY	CHAN.	SERIAL No.	REMARKS
0	×	F342 640 00	Piping Ass'y, Control	1		WZ010001-	
1	#	0783 964 UA	*Valve Assy Remote Control	2		WZ010001-	Sh. No. 5-5
2		0713 700 70	*Connector	17		WZ010001-	
3		0710 713 09	*Tee	3		WZ010001-	
4		0760 710 12	*Ring, O	42		WZ010001-	P11-90B
5		0517 060 25	*Bolt, Treatment (W/L.W, F.W)	6		WZ010001-	M6X25
6		0710 122 09	*Elbow	17		WZ010001-	
7		0719 805 UA	*Elbow	1		WZ010001-	
8		0710 709 02	*Tee	1		WZ010001-	
9		D060 525 00	*Connector	1		WZ010001-	
10		0710 117 02	*Elbow	1		WZ010001-	
11		D065 093 00	*Manifold	2		WZ010001-	
12		D418 943 00	*Bracket	1		WZ010001-	
13		D418 944 00	*Bracket	1		WZ010001-	
14		4070 551 34	*Hose Ass'y	1		WZ010001-	L=1900
15		4070 551 01	*Hose Ass'y	1		WZ010001-	L=1150
16		4070 551 22	*Hose Ass'y	1		WZ010001-	L=1000
16-1	☆	D407 818 04	*Decal (BT)	2		WZ010001-	D407 818 00
17		4070 124 09	*Hose Ass'y	1		WZ010001-	L=470
18		4070 551 43	*Hose Ass'y	1		WZ010001-	L=2450
18-1	☆	4405 308 01	*Decal (C1)	2		WZ010001-	4405 308 00
19		D065 094 00	*Manifold	2		WZ010001-	
20		4070 551 19	*Hose Ass'y	1		WZ010001-	L=600
21		4070 548 68	*Hose Ass'y	1		WZ010001-	L=1070
22		4070 548 57	*Hose Ass'y	1		WZ010001-	L=450
23		4070 548 40	*Hose Ass'y	1		WZ010001-	L=1650
23-1	☆	4405 311 02	*Decal (LP)	2		WZ010001-	4405 311 00
24		4070 548 82	*Hose Ass'y	1		WZ010001-	L=420
25		4070 548 69	*Hose Ass'y	1		WZ010001-	L=840
25-1	☆	4405 311 01	*Decal (RP)	2		WZ010001-	4405 311 00
26		4070 548 42	*Hose Ass'y	1		WZ010001-	L=1670
26-1	☆	4405 312 02	*Decal (LT)	2		WZ010001-	4405 312 00
27		4070 548 88	*Hose Ass'y	1		WZ010001-	L=780
28		4070 548 89	*Hose Ass'y	1		WZ010001-	L=2250
28-1	☆	4405 309 02	*Decal (A2)	2		WZ010001-	4405 309 00
29		4070 548 61	*Hose Ass'y	1		WZ010001-	L=1700
29-1	☆	4405 309 01	*Decal (A1)	2		WZ010001-	4405 309 00
30		4070 548 41	*Hose Ass'y	1		WZ010001-	L=1850
30-1	☆	4405 310 02	*Decal (S2)	2		WZ010001-	4405 310 00
31		4070 548 35	*Hose Ass'y	1		WZ010001-	L=2400
31-1	☆	4405 307 02	*Decal (B2)	2		WZ010001-	4405 307 00
32		4070 548 39	*Hose Ass'y	1		WZ010001-	L=2000
32-1	☆	4405 307 01	*Decal (B1)	2		WZ010001-	4405 307 00
33		4070 548 65	*Hose Ass'y	1		WZ010001-	L=1950
33-1	☆	4405 308 02	*Decal (C2)	2		WZ010001-	4405 308 00

https://truckmanualshub.com/

KEY No.	SUP.	PART No.	DESCRIPTION	Q'TY	CHAN.	SERIAL No.	REMARKS
34		4070 548 21	*Hose Ass'y	1		WZ010001-	L=2100
34-1	☆	4405 310 01	*Decal (S1)	2		WZ010001-	4405 310 00
35		4070 548 70	*Hose Ass'y	1		WZ010001-	L=680
36		0713 700 71	*Adapter	1		WZ010001-	
37		0710 117 02	*Elbow, Long	1		WZ010001-	
38		0710 113 32	*Elbow, Reducer	1		WZ010001-	PF3/8XPF1/4
39		D418 948 00	*Bracket	1		WZ010001-	
40		4070 782 06	*Hose Ass'y	1		WZ010001-	L=500
41		0710 303 03	*Plug, Swivel	2		WZ010001-	
42		0760 710 16	*Ring, O	2		WZ010001-	P14-90B
43		0518 100 20	*Bolt, Treatment (W/L.W, F.W)	5		WZ010001-	M10X20 P=1.25
44		4448 987 00	*Decal (For A, F)	1		WZ010001-	
45		0820 067 05	*Band, Cable	7		WZ010001-	
46		0710 303 02	*Plug, Swivel	4		WZ010001-	PF1/4
47		4070 551 45	*Hose Ass'y	1		WZ010001-	L=950
48		D550 019 00	*Seal	1		WZ010001-	L=300
49		4070 551 15	*Hose Ass'y	1		WZ010001-	L=350
49-1	☆	D407 818 03	*Decal (BP)	2		WZ010001-	D407 818 00
50		4070 548 25	*Hose Ass'y	1		WZ010001-	L=700
50-1	☆	4405 309 03	*Decal (L1)	2		WZ010001-	4405 309 00
51		4070 548 25	*Hose Ass'y	1		WZ010001-	L=700
51-1	☆	4405 310 03	*Decal (L2)	2		WZ010001-	4405 310 00
52		4070 548 25	*Hose Ass'y	1		WZ010001-	L=700
52-1	☆	4405 309 04	*Decal (L3)	2		WZ010001-	4405 309 00
53		4070 548 25	*Hose Ass'y	1		WZ010001-	L=700
53-1	☆	4405 310 04	*Decal (L4)	2		WZ010001-	4405 310 00
54		4070 548 06	*Hose Ass'y	1		WZ010001-	L=1200
54-1	☆	4405 308 03	*Decal (R2)	2		WZ010001-	4405 308 00
55		4070 548 06	*Hose Ass'y	1		WZ010001-	L=1200
55-1	☆	4405 307 04	*Decal (R3)	2		WZ010001-	4405 307 00
56		4070 548 19	*Hose Ass'y	1		WZ010001-	L=1250
56-1	☆	4405 307 03	*Decal (R1)	2		WZ010001-	4405 307 00
57		4070 548 19	*Hose Ass'y	1		WZ010001-	L=1250
57-1	☆	4405 308 04	*Decal (R4)	2		WZ010001-	4405 308 00
58		4070 548 08	*Hose Ass'y	1		WZ010001-	L=300
58-1	☆	4405 312 01	*Decal (RT)	2		WZ010001-	4405 312 00
59		D070 577 01	*Hose	1		WZ010001-	
60		4080 000 09	*Clamp, Hose	1		WZ010001-	
61		0820 067 09	*Band, Cable	4		WZ010001-	
62		0820 067 10	*Band, Cable	1		WZ010001-	
63		4580 016 00	*Pad, Rubber	1		WZ010001-	
64		0518 100 25	*Bolt, Treatment (W/L.W, F.W)	3		WZ010001-	M10X25 P=1.25
65		D405 272 00	*Seal	3		WZ010001-	

https://truckmanualshub.com/

KEY No.	SUP.	PART No.	DESCRIPTION	Q'TY	CHAN.	SERIAL No.	REMARKS
66		0712 326 01	*Adapter	2		WZ010001-	
67	#	0756 094 UA	*Valve Ass'y, Selector	1		WZ010001-	Sh. No. 5-15[B]
68		D418 583 00	*Bracket	1		WZ010001-	
69		0710 121 00	*Elbow, 45	1		WZ010001-	
70		D060 137 00	*Adapter	1		WZ010001-	
71		0712 325 02	*Adapter	1		WZ010001-	
72		0712 310 50	*Elbow	1		WZ010001-	
73		0517 060 60	*Bolt, Treatment (W/L.W, F.W)	2		WZ010001-	M6X60

https://truckmanualshub.com/

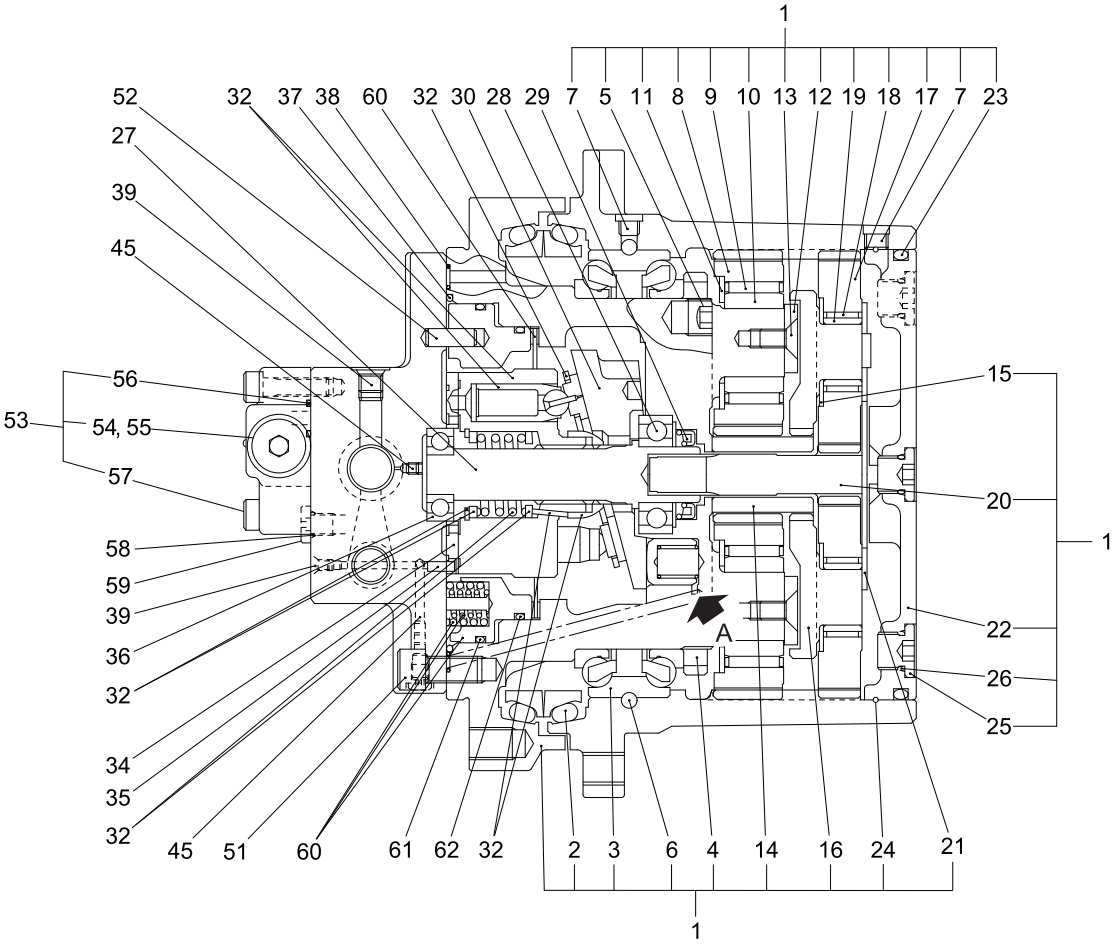

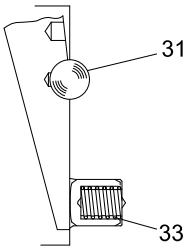

"A" DETAIL

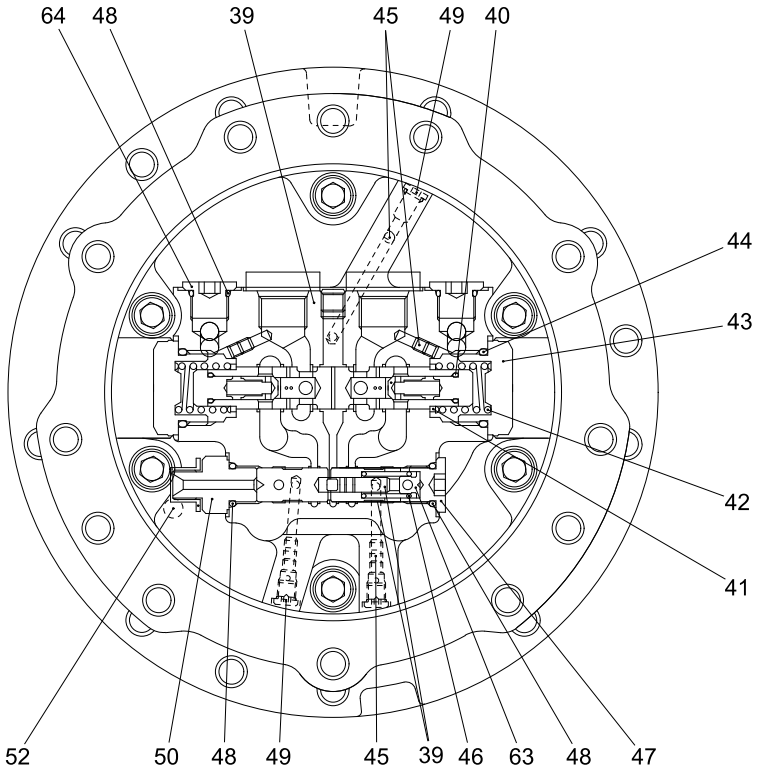

0781372UA-1

https://truckmanualshub.com/

KEY No.	SUP.	PART No.	DESCRIPTION	Q'TY	CHAN.	SERIAL No.	REMARKS
0		0781 372 UA	Motor Ass'y, Traction	2		WZ010001-	
1		0781 372 91	*Reduction Gear Ass'y	1		WZ010001-	
2		0753 713 05	**Seal, Floating	2		WZ010001-	
3		0757 606 04	**Bearing	1		WZ010001-	
4		0781 372 01	**Nut, Ring	1		WZ010001-	
5		0781 133 02	**Plug	2		WZ010001-	
6		0609 016 10	**Ball, Steel	99		WZ010001-	d=1/4
7		0710 201 01	**Plug	2		WZ010001-	PT1/8
8		0781 372 02	**Gear, Planetary (B)	4		WZ010001-	
9		0781 372 03	**Bearing	4		WZ010001-	
10		0781 372 04	**Race, Inner	4		WZ010001-	
11		0781 133 07	**Washer, Thrust	4		WZ010001-	
12		0781 372 05	**Plate, Thrust	1		WZ010001-	
13		0781 238 20	**Screw, Flat Head	4		WZ010001-	
14		0781 372 06	**Gear, Sun	1		WZ010001-	
15		0781 372 07	**Washer, Thrust	3		WZ010001-	
16		0781 372 08	**Holder	1		WZ010001-	
17		0781 372 09	**Gear, Planetary (A)	3		WZ010001-	
18		0757 606 20	**Bearing	3		WZ010001-	
19		0781 133 11	**Race, Inner	3		WZ010001-	
20		0781 372 10	**Gear, Drive	1		WZ010001-	
21		0781 372 93	**Plate, Thrust	AR		WZ010001-	
22		0781 372 11	**Cover	1		WZ010001-	
23		0760 716 90	**Ring, O	1		WZ010001-	G190-90B
24		0757 606 29	**Wire	1		WZ010001-	
25		0753 764 49	**Plug	3		WZ010001-	
26		0760 710 16	**Ring, O	3		WZ010001-	P14-90B
27		0781 372 12	*Shaft	1		WZ010001-	
28		0753 638 11	*Bearing	1		WZ010001-	
29		0781 372 13	*Seal, Oil	1		WZ010001-	
30		0781 372 14	*Plate, Swash	1		WZ010001-	
31		0781 133 17	*Ball, Steel	2		WZ010001-	
32		0781 372 94	*Block Ass'y, Cylinder	1		WZ010001-	
33		0781 372 15	*Spring	1		WZ010001-	
34		0753 764 40	*Plate, Valve	1		WZ010001-	
35		0753 795 11	*Pin	1		WZ010001-	
36		0753 764 41	*Bearing	1		WZ010001-	
37		0760 212 58	*Ring, O	1		WZ010001-	258-70B
38		0760 710 07	*Ring, O	4		WZ010001-	P7-90B
39		0782 372 95	*Plate Ass'y, Base	1		WZ010001-	
40		0760 710 10	**Ring, O	2		WZ010001-	P10-90B
41		0751 960 03	*Seat, Spring	2		WZ010001-	
42		0753 563 63	*Spring	1		WZ010001-	
43		0781 173 08	*Cap	2		WZ010001-	
44		0760 710 30	*Ring, O	2		WZ010001-	P29-90B

https://truckmanualshub.com/

KEY No.	SUP.	PART No.	DESCRIPTION	Q'TY	CHAN.	SERIAL No.	REMARKS
45		0753 764 51	*Orifice	10		WZ010001-	
46		0781 372 16	*Spring	1		WZ010001-	
47		0781 372 17	*Plug	1		WZ010001-	PF3/8
48		0760 710 16	*Ring, O	4		WZ010001-	P14-90B
49		0781 375 22	*Plug	3		WZ010001-	
50		0781 173 10	*Plug	1		WZ010001-	
51		0562 120 25	*Bolt, Socket Head	6		WZ010001-	M12X25
52		0753 563 53	*Pin	4		WZ010001-	
53		0781 372 92	*Valve Ass'y	1		WZ010001-	
54		0753 764 49	**Plug	2		WZ010001-	PT3/8
55		0760 710 16	**Ring, O	2		WZ010001-	P14-90B
56		0760 710 14	**Ring, O	3		WZ010001-	P12-90B
57		0562 080 30	**Bolt, Socket Head	3		WZ010001-	M8X30
58		0760 710 08	*Ring, O	2		WZ010001-	P8-90B
59		0757 785 06	*Plug	1		WZ010001-	
60		0781 372 96	*Piston, Brake	1		WZ010001-	
61		0781 372 18	*Ring, O	1		WZ010001-	
62		0781 372 19	*Ring, O	1		WZ010001-	
63		0781 372 20	*Seat, Spring	1		WZ010001-	
64		0753 764 49	*Plug	2		WZ010001-	

https://truckmanualshub.com/

[Memo]

https://truckmanualshub.com/

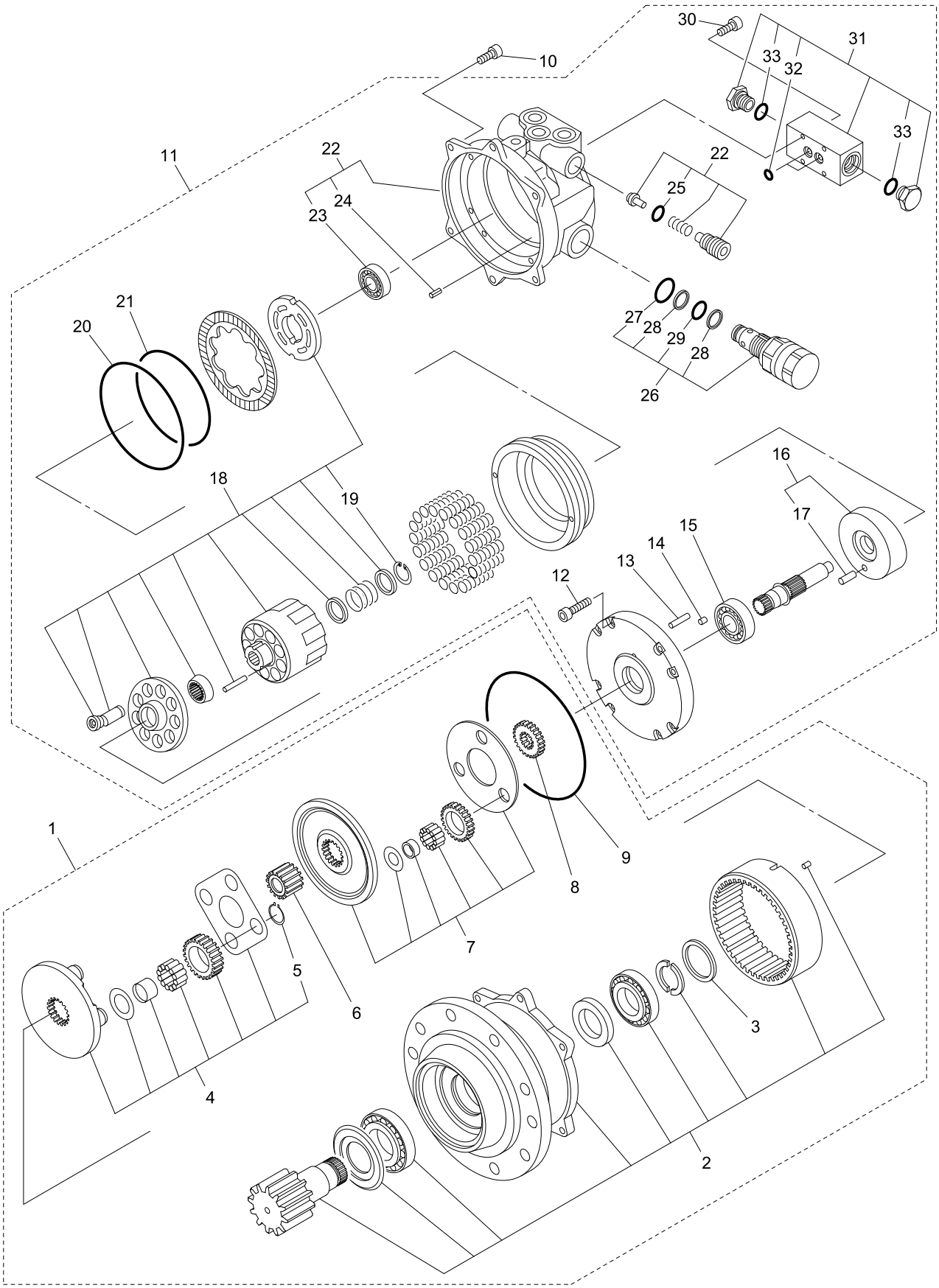

0781373UA-1

https://truckmanualshub.com/

KEY No.	SUP.	PART No.	DESCRIPTION	Q'TY	CHAN.	SERIAL No.	REMARKS
0		0781 373 UA	Swing Motor Ass'y	1		WZ010001-	
1		0781 261 92	*Gear Ass'y, Reduction	1		WZ010001-	
2		0781 261 94	**Pinion Ass'y	1		WZ010001-	
3		0781 261 03	**Ring	1		WZ010001-	
4		0781 261 95	**Carrier Ass'y	1		WZ010001-	
5		0493 510 22	***Ring, Snap	4		WZ010001-	d=22
6		0781 261 01	**Gear	1		WZ010001-	
7		0781 250 96	**Carrier Ass'y	1		WZ010001-	
8		0781 250 02	**Gear	1		WZ010001-	
9		0760 311 66	**Ring, O	1		WZ010001-	166-90B
10		0562 080 25	**Bolt, Socket Head	6		WZ010001-	M8X25
11		0781 373 91	*Motor Ass'y	1		WZ010001-	
12		0562 100 25	**Bolt, Socket Head	8		WZ010001-	M10X25
13		0753 636 19	**Pin	3		WZ010001-	
14		0757 618 20	**Filter	1		WZ010001-	
15		0630 600 44	**Bearing	1		WZ010001-	#6004Z
16		0781 313 92	**Plate Ass'y, Swash	1		WZ010001-	
17		0494 808 15	***Pin	1		WZ010001-	d=8X15
18		0781 261 97	**Barel Ass'y, Cylinder	1		WZ010001-	
19		0493 500 28	***Ring, Snap	1		WZ010001-	d=28
20		0760 716 25	**Ring, O	1		WZ010001-	G125-90B
21		0760 716 10	**Ring, O	1		WZ010001-	G110-90B
22		0781 261 96	**Body Ass'y	1		WZ010001-	
23		0630 620 10	***Bearing	1		WZ010001-	#6201
24		0494 608 12	***Pin, Spring	1		WZ010001-	d=5X12
25		0760 710 12	***Ring, O	1		WZ010001-	P11-90B
26		0781 373 92	**Valve Ass'y, Relief	2		WZ010001-	
27		0760 710 22	***Ring, O	1		WZ010001-	P22-90B
28		0762 120 16	***Ring, Back-up	2		WZ010001-	P14-T2
29		0760 710 16	***Ring, O	1		WZ010001-	P14-90B
30		0562 060 20	**Bolt, Socket Head	4		WZ010001-	M6X20
31		0757 641 92	**Valve Ass'y, By-pass	1		WZ010001-	
32		0760 710 09	***Ring, O	2		WZ010001-	P9-90B
33		0760 710 19	***Ring, O	2		WZ010001-	P18-90B

https://truckmanualshub.com/

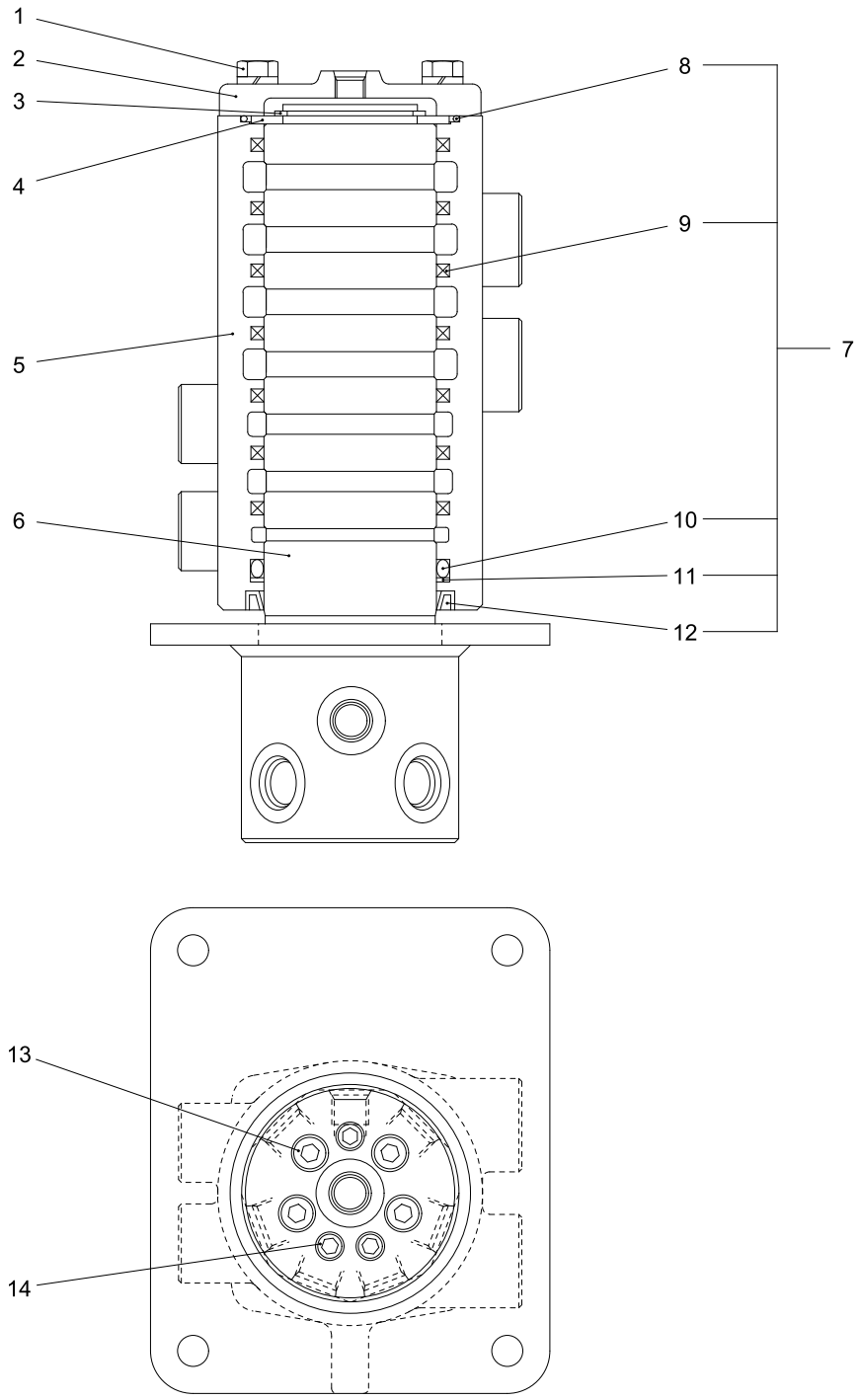

0713439UA-1

https://truckmanualshub.com/

KEY No.	SUP.	PART No.	DESCRIPTION	Q'TY	CHAN.	SERIAL No.	REMARKS
0		0713 439 UA	Joint Ass'y, Rotary	1		WZ010001-	
1		0519 080 25	*Bolt, Treatment (W/L.W)	4		WZ010001-	M8X25
2	△	0713 439 10	*Cover	1		WZ010001-	
3		0493 510 55	*Ring, Snap	1		WZ010001-	d=55
4		0713 439 07	*Ring	1		WZ010001-	
5	△	0713 439 02	*Hub	1		WZ010001-	
6	△	0713 439 01	*Shaft	1		WZ010001-	
7		0713 431 91	*Kit, Seal	1		WZ010001-	
8	×	0760 615 85	**Ring, O	1		WZ010001-	G85-70B
9	×	0713 431 02	**Seal, Oil	7		WZ010001-	
10	×	0760 710 70	**Ring, O	1		WZ010001-	P70-90B
11	×	0762 120 70	**Ring, Back-up	1		WZ010001-	P70-T2
12	×	0755 861 26	**Seal, Dust	1		WZ010001-	
13		0710 200 10	*Plug	4		WZ010001-	PT3/8
14		0710 200 14	*Plug	3		WZ010001-	PT1/4

https://truckmanualshub.com/

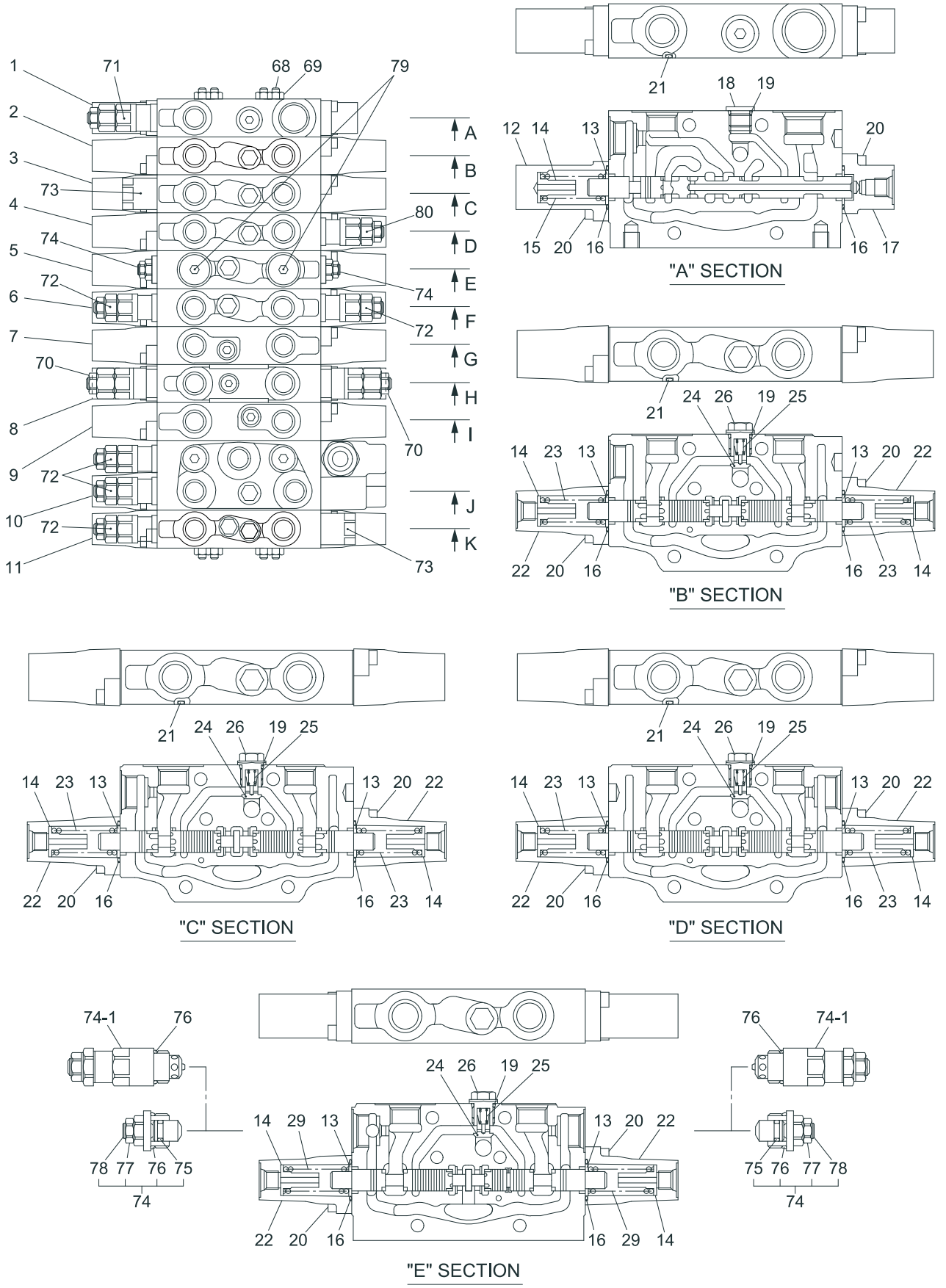

0784016UA-1

https://truckmanualshub.com/

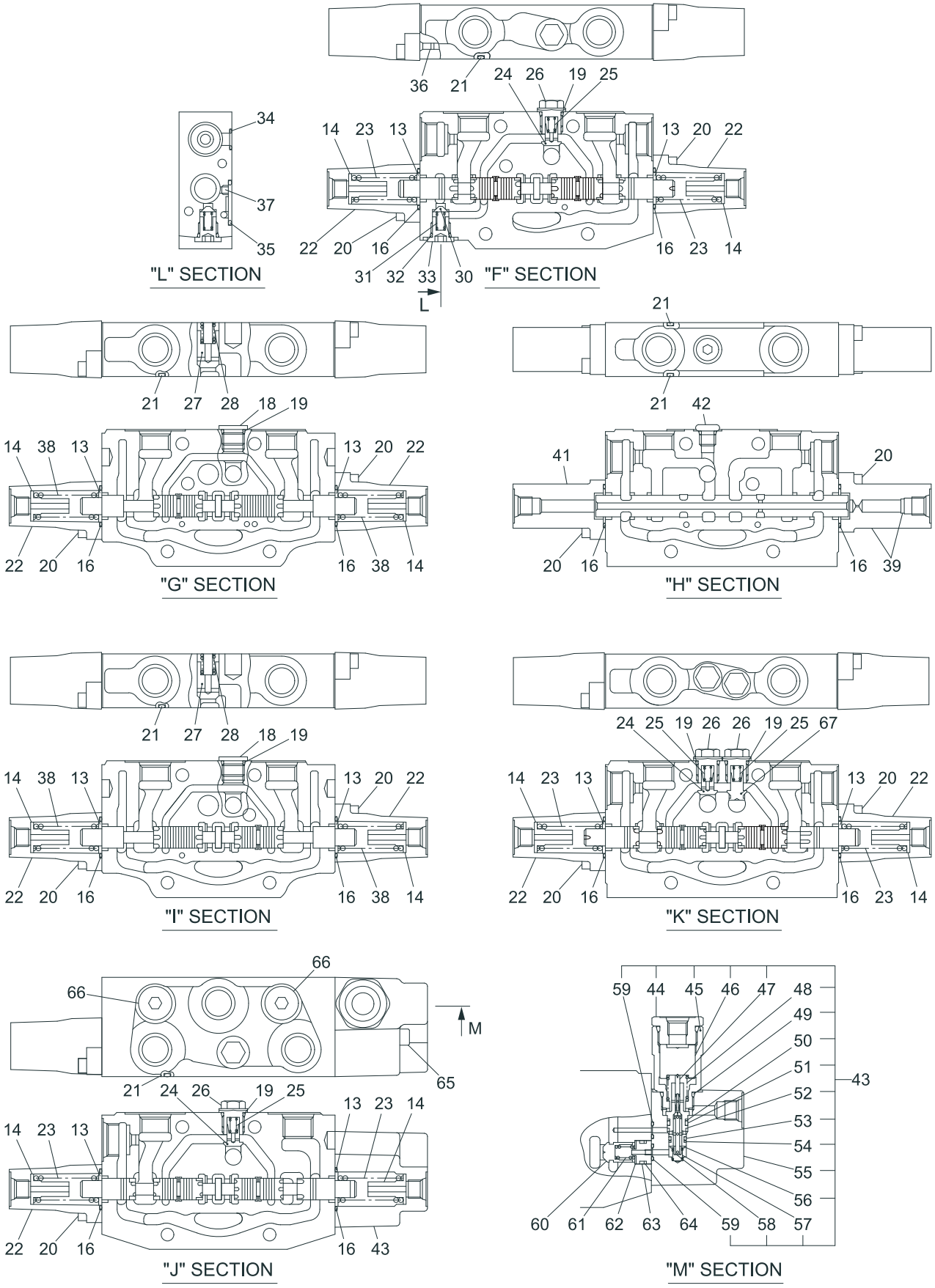

0784016UA-2

https://truckmanualshub.com/

KEY No.	SUP.	PART No.	DESCRIPTION	Q'TY	CHAN.	SERIAL No.	REMARKS
0		0784 016 UA	Valve Ass'y, Control	1		WZ010001-	
1		0784 015 90	*Block Ass'y	1		WZ010001-	
2		0784 015 91	*Block Ass'y, Swing	1		WZ010001-	
3		0784 015 92	*Block Ass'y, Boom Swing	1		WZ010001-	
4		0784 015 93	*Block Ass'y, Blade	1		WZ010001-	
5		0784 015 94	*Block Ass'y, Spare	1		WZ010001-	
6		0784 016 92	*Block Ass'y, Arm	1		WZ010001-	
7		0784 015 96	*Block Ass'y, Travel (L.H.)	1		WZ010001-	
8		0783 974 95	*Block Ass'y, Inlet	1		WZ010001-	
9		0784 015 97	*Block Ass'y, Travel (R.H.)	1		WZ010001-	
10		0784 015 98	*Block Ass'y, Boom	1		WZ010001-	
11		0784 016 91	*Block Ass'y, Backet	1		WZ010001-	
12		0783 677 02	**Cap	1		WZ010001-	
13		0756 339 05	**Seat, Spring	19		WZ010001-	
14		0783 677 03	**Seat, Spring	19		WZ010001-	
15		0783 677 04	**Spring	1		WZ010001-	
16		0756 339 08	**Ring, O	22		WZ010001-	S24-70B
17		0783 974 03	**Cap	1		WZ010001-	
18		0783 842 02	**Plug	3		WZ010001-	
19		0783 677 06	**Ring, O	11		WZ010001-	
20		0562 060 18	**Bolt, Socket Head	42		WZ010001-	M6X18
21		0760 615 70	**Ring, O	10		WZ010001-	G70-70B
22		0783 677 07	**Cap	17		WZ010001-	
23		0783 970 01	**Spring	12		WZ010001-	
24		0783 677 09	**Poppet	7		WZ010001-	
25		0783 677 10	**Spring	8		WZ010001-	
26		0783 677 05	**Plug	8		WZ010001-	
27		0756 339 20	**Poppet	2		WZ010001-	
28		0753 904 11	**Spring	2		WZ010001-	
29		0783 970 01	**Spring	2		WZ010001-	
30		0783 677 13	**Poppet	1		WZ010001-	
31		0756 339 17	**Spring	1		WZ010001-	
32		0760 710 12	**Ring, O	1		WZ010001-	P11-90B
33		0783 677 14	**Plug	1		WZ010001-	
34		0760 710 10	**Ring, O	1		WZ010001-	P10-90B
35		0760 710 20	**Ring, O	1		WZ010001-	P20-90B
36		0783 677 15	**Plug	1		WZ010001-	
37		0783 677 16	**Plug, Orifice	1		WZ010001-	
38		0783 970 01	**Spring	4		WZ010001-	
39		0783 974 04	**Cap Ass'y	1		WZ010001-	
41		0783 677 18	**Cap	1		WZ010001-	
42		0783 677 83	**Plug Ass'y	1		WZ010001-	
42-1		0760 710 08	***Ring, O	1		WZ010001-	P8-90B
43		0783 846 83	**Valve Ass'y, Anti drift	1		WZ010001-	
44		0756 339 80	***Plug Ass'y	1		WZ010001-	

https://truckmanualshub.com/

KEY No.	SUP.	PART No.	DESCRIPTION	Q'TY	CHAN.	SERIAL No.	REMARKS
45		0783 677 24	***Plug	1		WZ010001-	
46		0783 749 02	***Piston	1		WZ010001-	
47		0783 677 26	***Spool	1		WZ010001-	
48		0783 677 28	***Spring	1		WZ010001-	
49		0753 101 09	***Ring, O	1		WZ010001-	
50		0762 120 11	***Ring, Back-up	1		WZ010001-	P10A-T2
51	☆	0760 610 11	***Ring, O (P10A-70B)	1		WZ010001-	0760 710 11
52		0783 677 27	***Sleeve	1		WZ010001-	
53	☆	0760 610 09	***Ring, O (P9-70B)	1		WZ010001-	0760 710 09
54		0762 120 09	***Ring, Back-up	1		WZ010001-	P9-T2
55		0783 749 01	***Body	1		WZ010001-	
56		0783 677 30	***Seat, Spring	1		WZ010001-	
57		0783 677 29	***Spring	1		WZ010001-	
58		0783 677 23	***Poppet	1		WZ010001-	
59		0760 710 07	***Ring, O	2		WZ010001-	P7-90B
60		0783 677 21	**Poppet	1		WZ010001-	
61		0756 339 25	**Spring	1		WZ010001-	
62		0783 677 22	**Spacer	1		WZ010001-	
63		0760 610 15	**Ring, O	1		WZ010001-	P12.5-70B
64		0762 120 15	**Ring, Back-up	1		WZ010001-	P12.5-T2
65		0562 060 50	**Bolt, Socket Head	5		WZ010001-	M6X50
66		0783 646 83	**Plug Ass'y	2		WZ010001-	
66-1		0760 710 16	***Ring, O	1		WZ010001-	P14-90B
67		0783 677 31	**Poppet	1		WZ010001-	
68		0783 677 01	*Rod, Tie	4		WZ010001-	
69		0580 080 00	*Nut, Hex.	8		WZ010001-	M8
70		0784 015 88	*Valve Ass'y, Main Relief	2		WZ010001-	24.5MPa-60L
70-1		0760 319 10	**Ring, O	1		WZ010001-	910-90B
71		0784 015 87	*Valve Ass'y, Relief	1		WZ010001-	20.6MPa-44L
71-1		0760 319 10	**Ring, O	1		WZ010001-	910-90B
72		0784 015 86	*Valve Ass'y, Relief	5		WZ010001-	27.4MPa-10L
72-1		0760 319 10	**Ring, O	1		WZ010001-	910-90B
73		0783 846 88	*Valve Ass'y, Anti Void	2		WZ010001-	
73-1		0760 319 10	**Ring, O	1		WZ010001-	910-90B
74		0783 646 85	*Valve Ass'y, Shut-off	2		WZ010001-	
74-1		0785 606 UA	*Valve Ass'y, Over Load Relief	2		WZ010001-	Option 13.7MPa-100L
74-2		0785 607 UA	*Valve Ass'y, Over Load Relief	2		WZ010001-	Option 17.2MPa-100L
75	☆	0760 610 11	**Ring, O (P10A-70B)	1		WZ010001-	0760 710 11
76		0760 319 10	**Ring, O	1		WZ010001-	910-90B
77		0544 100 00	**Nut, Hex.	1		WZ010001-	M10
78		0561 100 20	**Screw, Set	1		WZ010001-	M10X20
79		0783 646 84	*Plug Ass'y	2		WZ010001-	
79-1		0760 710 19	**Ring, O	1		WZ010001-	P18-90B

https://truckmanualshub.com/

KEY No.	SUP.	PART No.	DESCRIPTION	Q'TY	CHAN.	SERIAL No.	REMARKS
80		0784 015 85	*Valve Ass'y, Relief	1		WZ010001-	24.5MPa-10L
80-1		0760 319 10	**Ring, O	1		WZ010001-	910-90B

https://truckmanualshub.com/

[Memo]

https://truckmanualshub.com/

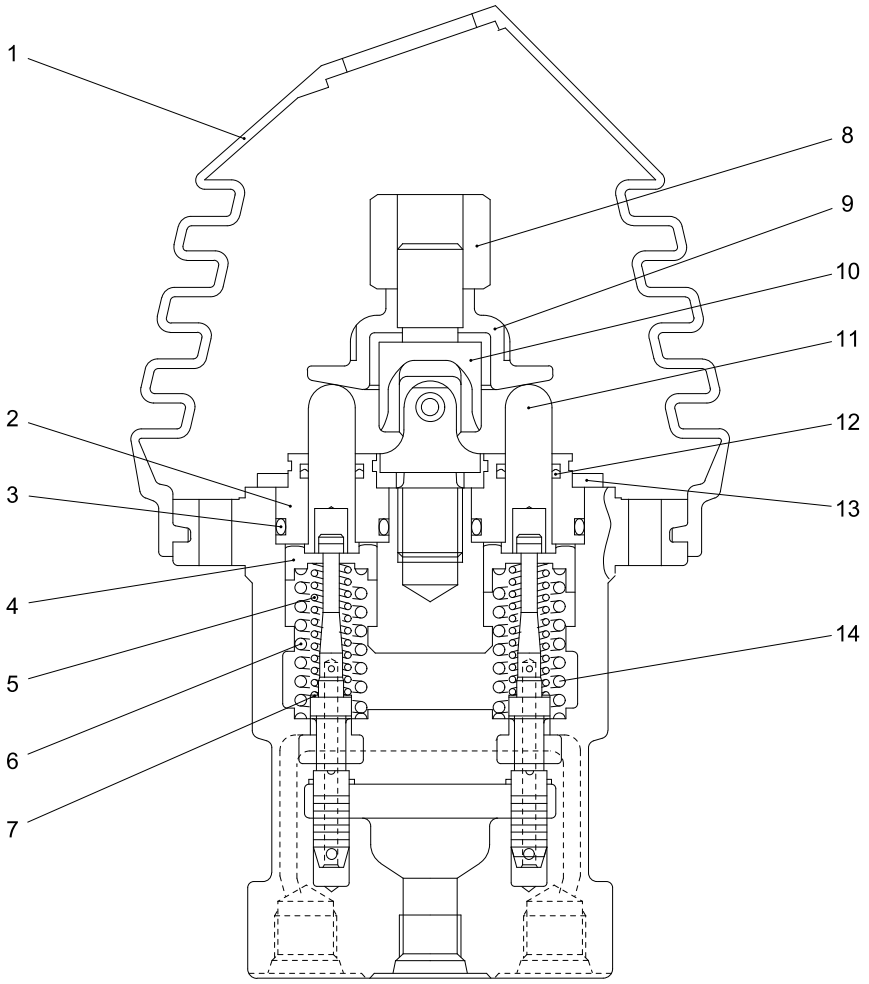

0783964UA-1
0783941UA-1

https://truckmanualshub.com/

KEY No.	SUP.	PART No.	DESCRIPTION	Q'TY	CHAN.	SERIAL No.	REMARKS
0		0783 964 UA	Valve Ass'y, Remote Control	2		WZ010001-	
1		0783 771 07	*Boot	1		WZ010001-	
2		0756 735 09	*Plug	4		WZ010001-	
3		0760 710 20	*Ring, O	4		WZ010001-	P20-90B
4		0783 700 08	*Seat, Spring	4		WZ010001-	
5		0783 964 01	*Spring	4		WZ010001-	
6		0783 700 09	*Spring (No.2, 4, Ports)	2		WZ010001-	
7		0756 735 15	*Washer	4		WZ010001-	
8		0783 771 03	*Nut, Adjusting	1		WZ010001-	
9		0783 700 12	*Plate	1		WZ010001-	
10		0756 303 07	*Joint	1		WZ010001-	
11		0756 744 11	*Rod, Push	4		WZ010001-	
12		0756 611 13	*Seal	4		WZ010001-	
13		0783 756 01	*Plate	1		WZ010001-	
14		0783 700 10	*Spring (No.1, 3, Ports)	2		WZ010001-	

https://truckmanualshub.com/

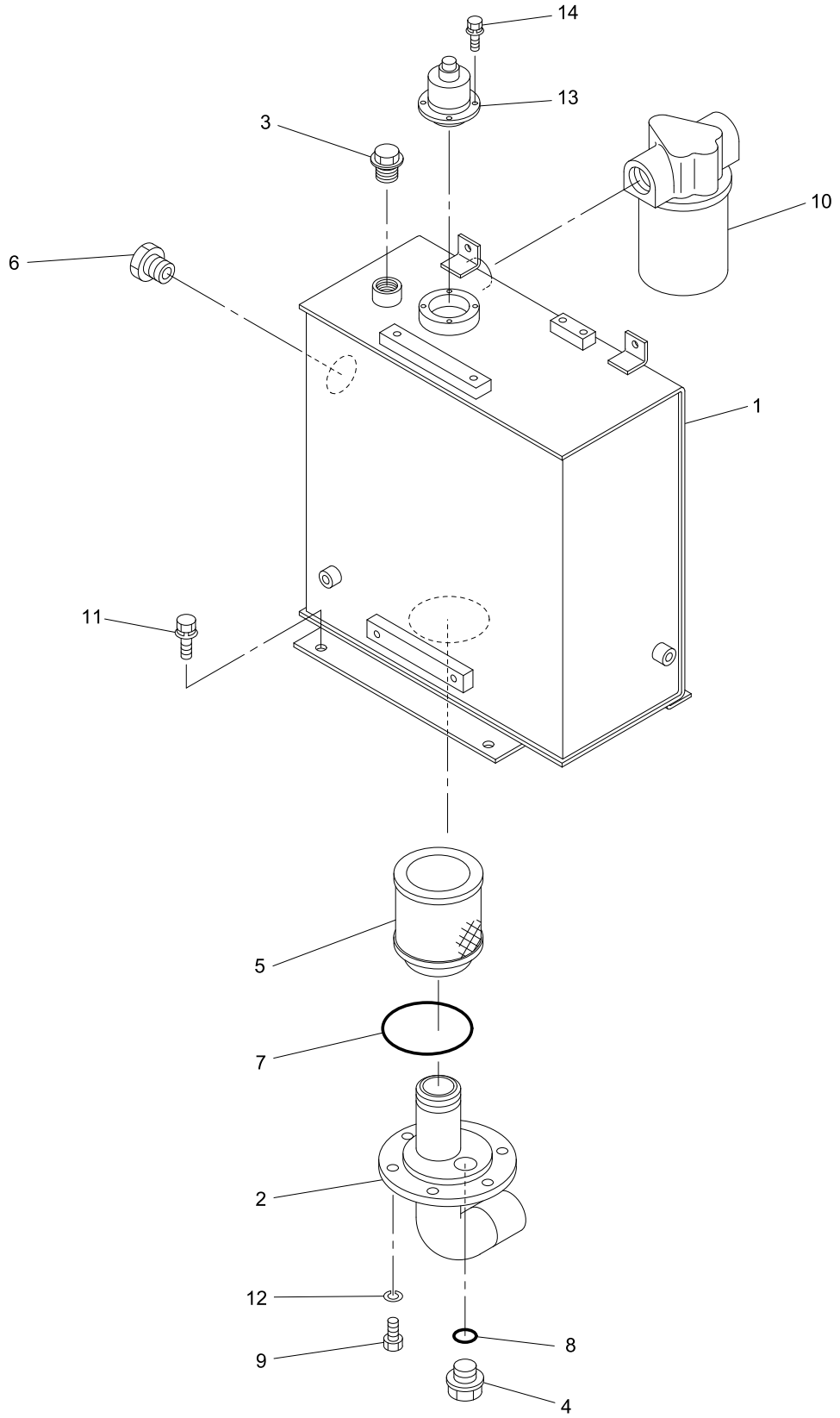

40V4-050600-1

https://truckmanualshub.com/

KEY No.	SUP.	PART No.	DESCRIPTION	Q'TY	CHAN.	SERIAL No.	REMARKS
0	×	F342 639 00	Tank Ass'y, Hydraulic Oil	1		WZ010001-	
1	△	D284 241 00	*Tank, Hydraulic Oil	1		WZ010001-	
2		D286 344 00	*Tube	1		WZ010001-	
3		4072 887 00	*Plug	1		WZ010001-	
4		4077 036 00	*Plug, Drain	1		WZ010001-	
5		0759 106 UA	*Strainer, Suction	1		WZ010001-	
6		4079 027 00	*Gauge, Level	1		WZ010001-	
7		0760 711 30	*Ring, O	1		WZ010001-	P130-90B
8		0760 312 11	*Ring, O	1		WZ010001-	211-90B
9		0555 100 20	*Bolt, Treatment	6		WZ010001-	M10X20
10		0759 115 UA	*Filter Ass'y, Return	1		WZ010001-	
10-1		0755 142 03	**Cartridge Ass'y	1		WZ010001-	
10-2		0759 114 UA	**Valve Ass'y	1		WZ010001-	
11		0518 120 25	*Bolt, Treatment (W/L.W, F.W)	4		WZ010001-	M12X25 P=1.25
12		0590 100 00	*Washer, Lock	6		WZ010001-	M10
13		0787 305 UA	*Breather, Air	1		WZ010001-	
14		0517 060 16	*Bolt, Treatment (W/L.W, F.W)	4		WZ010001-	M6X16

https://truckmanualshub.com/

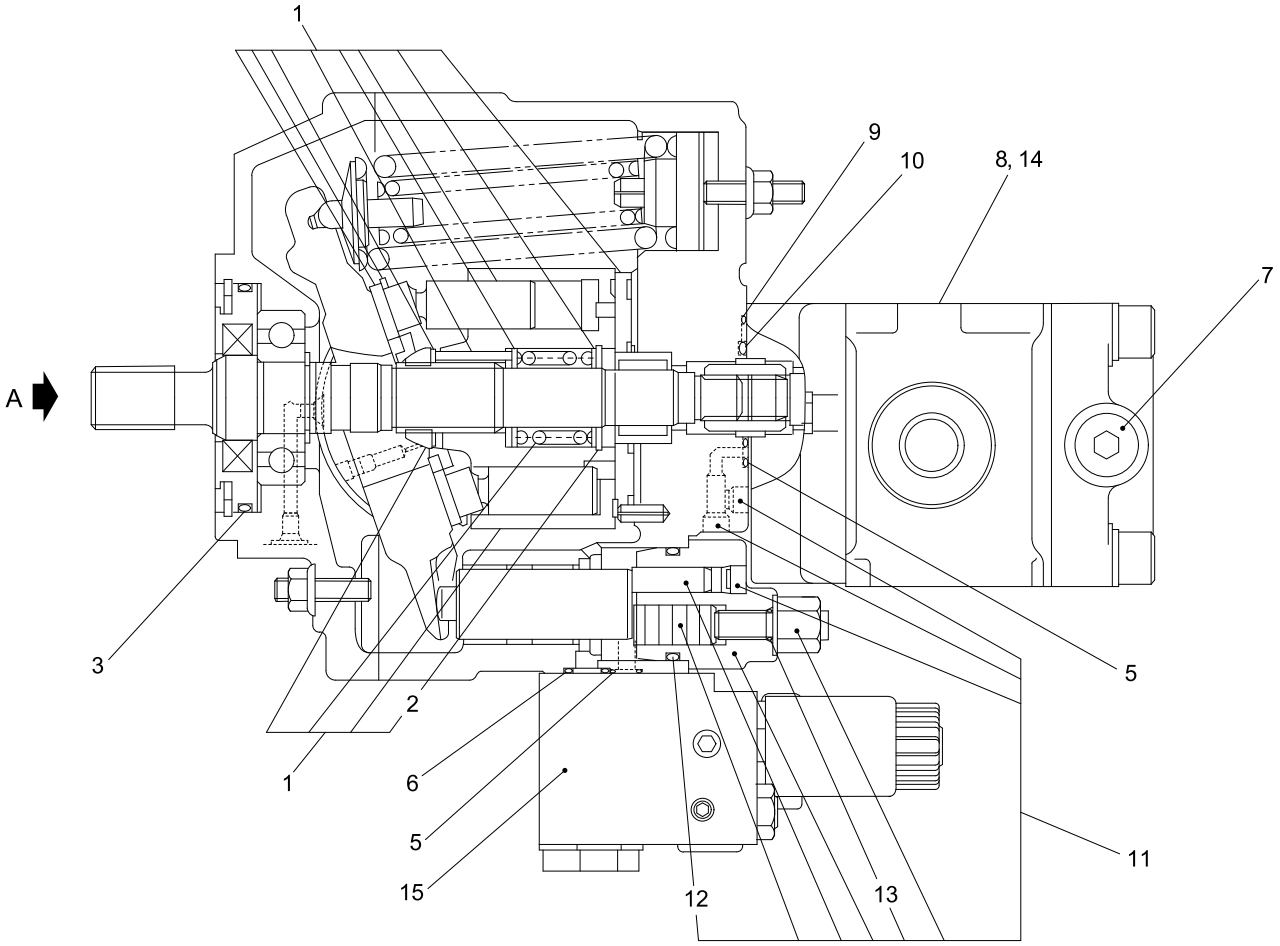

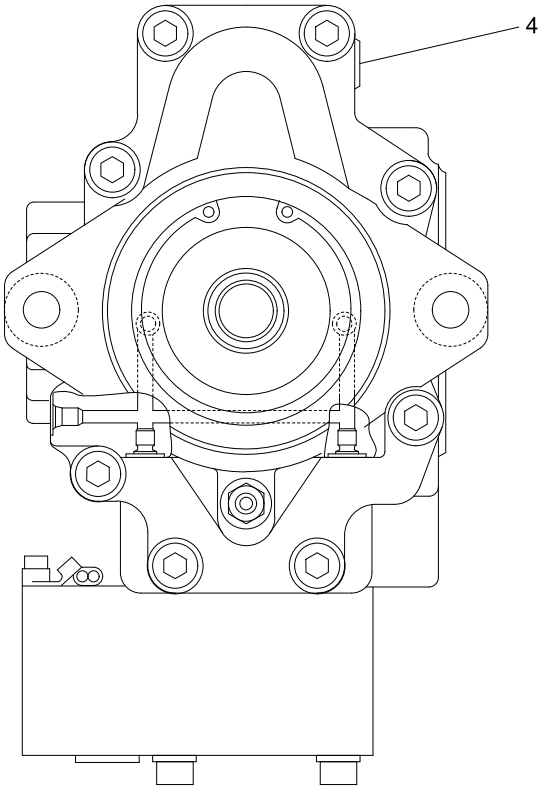

0780162UA-1

"A" VIEW

https://truckmanualshub.com/

KEY No.	SUP.	PART No.	DESCRIPTION	Q'TY	CHAN.	SERIAL No.	REMARKS
0		0780 162 UA	Pump Ass'y, Oil	1		WZ010001-	
1		0780 162 91	*Cylinder Ass'y	1		WZ010001-	
2		0493 500 35	**Ring, Snap	1		WZ010001-	d=35
3		0760 715 75	*Ring, O	1		WZ010001-	G75-90B
4		0760 710 12	*Ring, O	1		WZ010001-	P11-90B
5		0760 710 08	*Ring, O	2		WZ010001-	P8-90B
6		0760 710 14	*Ring, O	1		WZ010001-	P12-90B
7		0760 710 16	*Ring, O	1		WZ010001-	P14-90B
8		0760 710 30	*Ring, O	1		WZ010001-	P29-90B
9		0760 710 07	*Ring, O	1		WZ010001-	P7-90B
10		0760 715 55	*Ring, O	1		WZ010001-	G55-90B
11		0780 162 92	*Sleeve Ass'y	1		WZ010001-	
12		0760 715 35	**Ring, O	1		WZ010001-	G35-90B
13		0760 710 08	**Ring, O	1		WZ010001-	P8-90B
14		0780 162 93	*Pump Ass'y, Gear	1		WZ010001-	
15		0780 162 94	*Valve Ass'y	1		WZ010001-	

https://truckmanualshub.com/

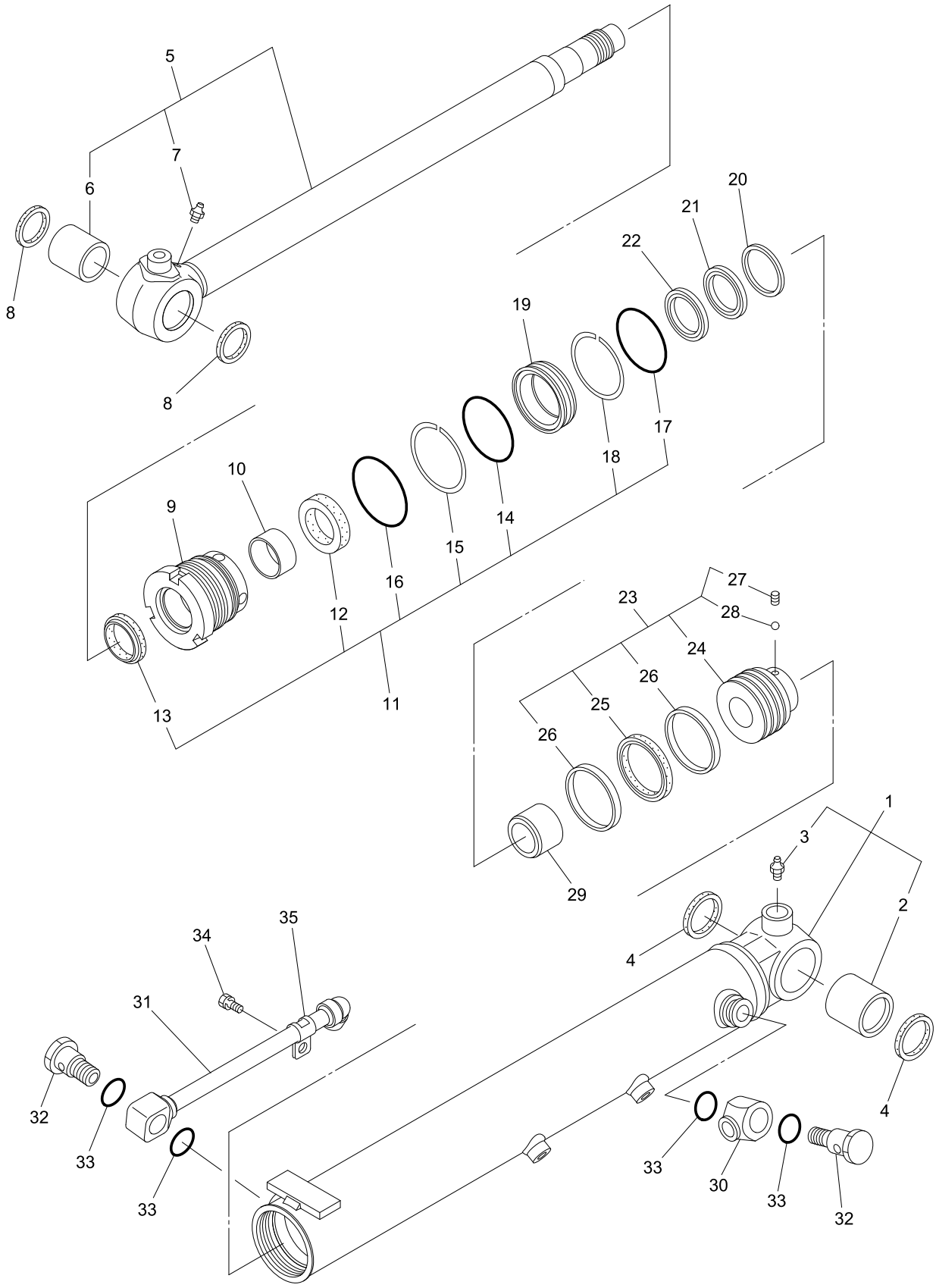

0782605UA-1
0782604UA-1

https://truckmanualshub.com/

KEY No.	SUP.	PART No.	DESCRIPTION	Q'TY	CHAN.	SERIAL No.	REMARKS
0		0782 605 UA	Cylinder Ass'y, Boom	1		WZ010001-	
1	×	**** *** **	*Tube Ass'y, Cylinder	1		WZ010001-	
2		0782 605 09	**Bushing	1		WZ010001-	
3		0728 111 15	**Nipple, Grease	1		WZ010001-	PT1/8
4		0765 033 28	*Seal, Dust	2		WZ010001-	
5		0782 605 02	*Rod Ass'y, Piston	1		WZ010001-	
6		0782 605 09	**Bushing	1		WZ010001-	
7		0728 111 15	**Nipple, Grease	1		WZ010001-	PT1/8
8		0765 033 28	*Seal, Dust	2		WZ010001-	
9		0782 605 03	*Head, Cylinder	1		WZ010001-	
10		0782 492 04	*Bushing	1		WZ010001-	
11		0782 441 93	*Kit, Seal	1		WZ010001-	
12	×	0752 935 04	**Ring, U	1		WZ010001-	
13	×	0758 850 06	**Ring, Wiper	1		WZ010001-	
14	×	0760 715 95	**Ring, O	1		WZ010001-	G95-90B
15	×	0782 397 04	**Ring, Back-up	1		WZ010001-	
16	×	0760 716 00	**Ring, O	1		WZ010001-	G100-90B
17	×	0760 715 95	**Ring, O	1		WZ010001-	G95-90B
18	×	0782 185 11	**Ring, Back-up	1		WZ010001-	
19		0782 441 10	*Holder	1		WZ010001-	
20		0782 605 04	*Spacer	1		WZ010001-	
21		0782 441 11	*Seal, Cushion	1		WZ010001-	
22		0782 605 05	*Collar	1		WZ010001-	
23		0782 605 93	*Piston Ass'y	1		WZ010001-	
24	×	**** *** **	**Piston	1		WZ010001-	
25		0752 184 24	**Ring Ass'y, Seal	1		WZ010001-	
26		0782 397 06	**Ring, Slide	2		WZ010001-	
27		0561 100 10	**Screw, Set	1		WZ010001-	M10X10
28		0609 016 10	**Ball, Steel	1		WZ010001-	d=1/4
29		0782 605 07	*Bearing, Cushion	1		WZ010001-	
30		0782 619 06	*Joint	1		WZ010001-	
31		0782 605 08	*Pipe	1		WZ010001-	
32		0782 491 09	*Plug	2		WZ010001-	
33		0760 710 28	*Ring, O	4		WZ010001-	P26-90B
34		0782 446 06	*Bolt	1		WZ010001-	
35		0782 440 27	*Holder, Pipe	1		WZ010001-	

https://truckmanualshub.com/

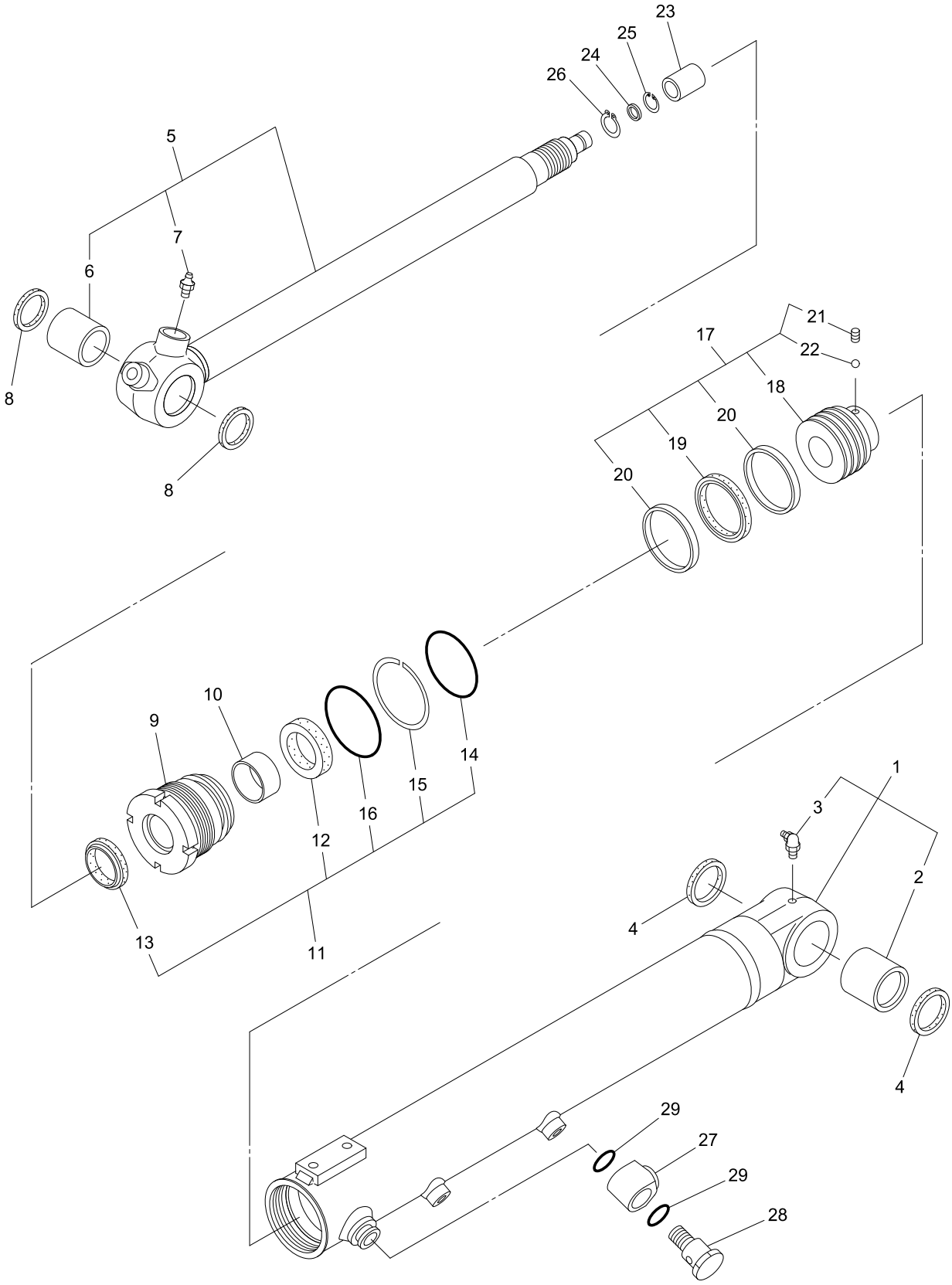

0782607UA-1
0782606UA-1

https://truckmanualshub.com/

KEY No.	SUP.	PART No.	DESCRIPTION	Q'TY	CHAN.	SERIAL No.	REMARKS
0		0782 607 UA	Cylinder Ass'y, Arm	1		WZ010001-	
1	×	**** *** **	*Tube Ass'y, Cylinder	1		WZ010001-	
2		0752 289 20	**Bushing	1		WZ010001-	
3		0728 111 65	**Nipple, Grease	1		WZ010001-	PT1/8X90
4		0751 796 24	*Seal, Dust	2		WZ010001-	
5		0782 607 02	*Rod Ass'y, Piston	1		WZ010001-	
6		0752 289 20	**Bushing	1		WZ010001-	
7		0728 111 15	**Nipple, Grease	1		WZ010001-	PT1/8
8		0751 796 24	*Seal, Dust	2		WZ010001-	
9		0782 494 03	*Head, Cylinder	1		WZ010001-	
10		0782 446 03	*Bushing	1		WZ010001-	
11		0782 439 93	*Kit, Seal	1		WZ010001-	
12	×	0752 756 05	**Ring, U	1		WZ010001-	
13	×	0758 698 09	**Ring, Wiper	1		WZ010001-	
14	×	0760 715 80	**Ring, O	1		WZ010001-	G80-90B
15	×	0782 407 04	**Ring, Back-up	1		WZ010001-	
16	×	0760 715 85	**Ring, O	1		WZ010001-	G85-90B
17		0782 607 93	*Piston Ass'y	1		WZ010001-	
18	×	**** *** **	**Piston	1		WZ010001-	
19		0752 873 06	**Ring Ass'y, Seal	1		WZ010001-	
20		0782 494 05	**Ring, Slide	2		WZ010001-	
21		0561 100 10	**Screw, Set	1		WZ010001-	M10X10
22		0609 016 10	**Ball, Steel	1		WZ010001-	d=1/4
23		0782 492 08	*Bearing, Cushion	1		WZ010001-	
24		0782 185 23	*Seal, Cushion	1		WZ010001-	
25		0758 696 25	*Stopper	2		WZ010001-	
26		0782 401 06	*Ring, Snap	1		WZ010001-	
27		0782 619 06	*Joint	1		WZ010001-	
28		0782 491 09	*Plug	1		WZ010001-	
29		0760 710 28	*Ring, O	2		WZ010001-	P26-90B

https://truckmanualshub.com/

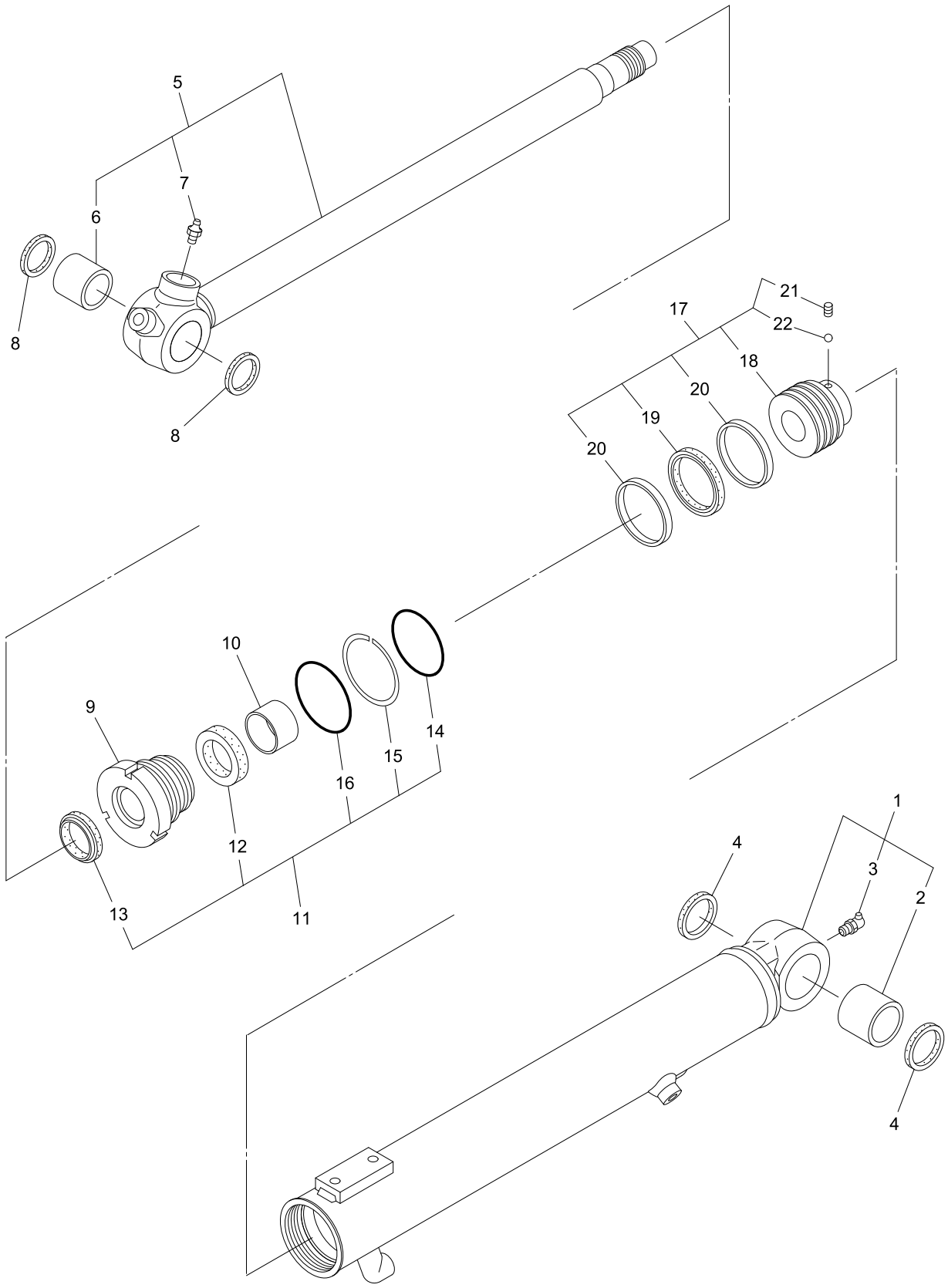

0782601UA-1

https://truckmanualshub.com/

KEY No.	SUP.	PART No.	DESCRIPTION	Q'TY	CHAN.	SERIAL No.	REMARKS
0		0782 601 UA	Cylinder Ass'y, Bucket	1		WZ010001-	
1	×	**** *** **	*Tube Ass'y, Cylinder	1		WZ010001-	
2		0752 289 20	**Bushing	1		WZ010001-	
3		0728 111 65	**Nipple, Grease	1		WZ010001-	PT1/8X90
4		0751 796 24	*Seal, Dust	2		WZ010001-	
5		0782 601 02	*Rod Ass'y, Piston	1		WZ010001-	
6		0752 289 20	**Bushing	1		WZ010001-	
7		0728 111 15	**Nipple, Grease	1		WZ010001-	PT1/8
8		0751 796 24	*Seal, Dust	2		WZ010001-	
9		0782 476 03	*Head, Cylinder	1		WZ010001-	
10		0782 396 13	*Bushing	1		WZ010001-	
11		0782 435 93	*Kit, Seal	1		WZ010001-	
12	×	0752 737 05	**Ring, U	1		WZ010001-	
13	×	0758 697 06	**Ring, Wiper	1		WZ010001-	
14	×	0760 715 75	**Ring, O	1		WZ010001-	G75-90B
15	×	0782 399 05	**Ring, Back-up	1		WZ010001-	
16	×	0760 715 80	**Ring, O	1		WZ010001-	G80-90B
17		0782 401 93	*Piston Ass'y	1		WZ010001-	
18	×	**** *** **	**Piston	1		WZ010001-	
19		0752 941 06	**Ring Ass'y, Seal	1		WZ010001-	
20		0782 399 12	**Ring, Slide	2		WZ010001-	
21		0561 080 08	**Screw, Set	1		WZ010001-	M8X8
22		0751 901 25	**Ball, Steel	1		WZ010001-	d=7/32

https://truckmanualshub.com/

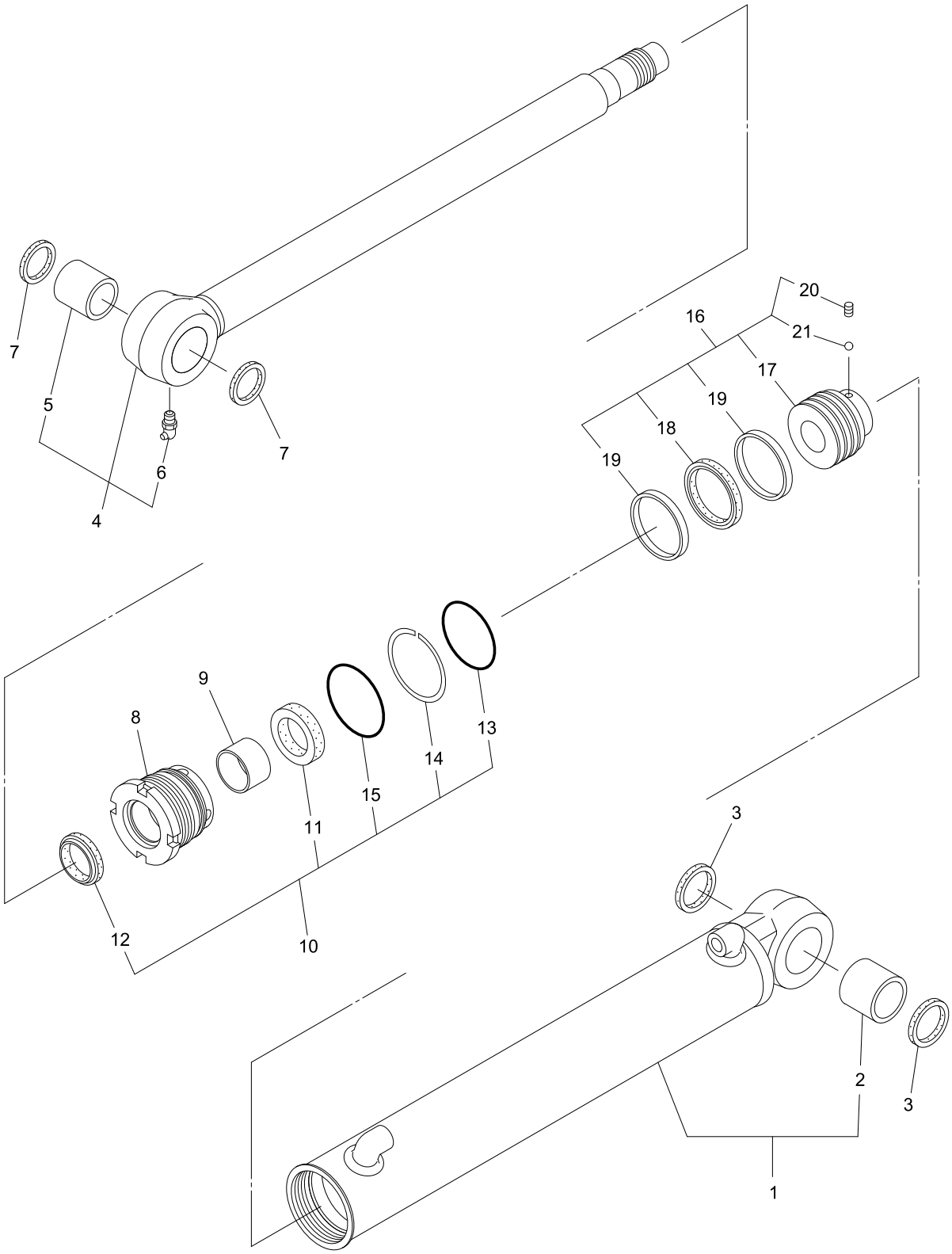

0782603UA-1

https://truckmanualshub.com/

KEY No.	SUP.	PART No.	DESCRIPTION	Q'TY	CHAN.	SERIAL No.	REMARKS
0		0782 603 UA	Cylinder Ass'y, Boom Swing	1		WZ010001-	
1	×	**** *** **	*Tube Ass'y, Cylinder	1		WZ010001-	
2		0752 159 21	**Bushing	1		WZ010001-	
3		0765 033 28	*Seal, Dust	2		WZ010001-	
4		0782 603 02	*Rod Ass'y, Piston	1		WZ010001-	
5		0752 159 21	**Bushing	1		WZ010001-	
6		0728 111 65	**Nipple, Grease	1		WZ010001-	PT1/8X90
7		0765 033 28	*Seal, Dust	2		WZ010001-	
8		0782 380 03	*Head, Cylinder	1		WZ010001-	
9		0782 446 03	*Bushing	1		WZ010001-	
10		0782 380 91	*Kit, Seal	1		WZ010001-	
11	×	0752 756 05	**Ring, U	1		WZ010001-	
12	×	0758 698 09	**Ring, Wiper	1		WZ010001-	
13	×	0760 715 85	**Ring, O	1		WZ010001-	G85-90B
14	×	0782 380 05	**Ring, Back-up	1		WZ010001-	
15	×	0760 715 90	**Ring, O	1		WZ010001-	G90-90B
16		0782 380 93	*Piston Ass'y	1		WZ010001-	
17	×	**** *** **	**Piston	1		WZ010001-	
18		0752 164 20	**Ring Ass'y, Seal	1		WZ010001-	
19		0782 380 07	**Ring, Slide	2		WZ010001-	
20		0561 080 08	**Screw, Set	1		WZ010001-	M8X8
21		0751 901 25	**Ball, Steel	1		WZ010001-	d=7/32

https://truckmanualshub.com/

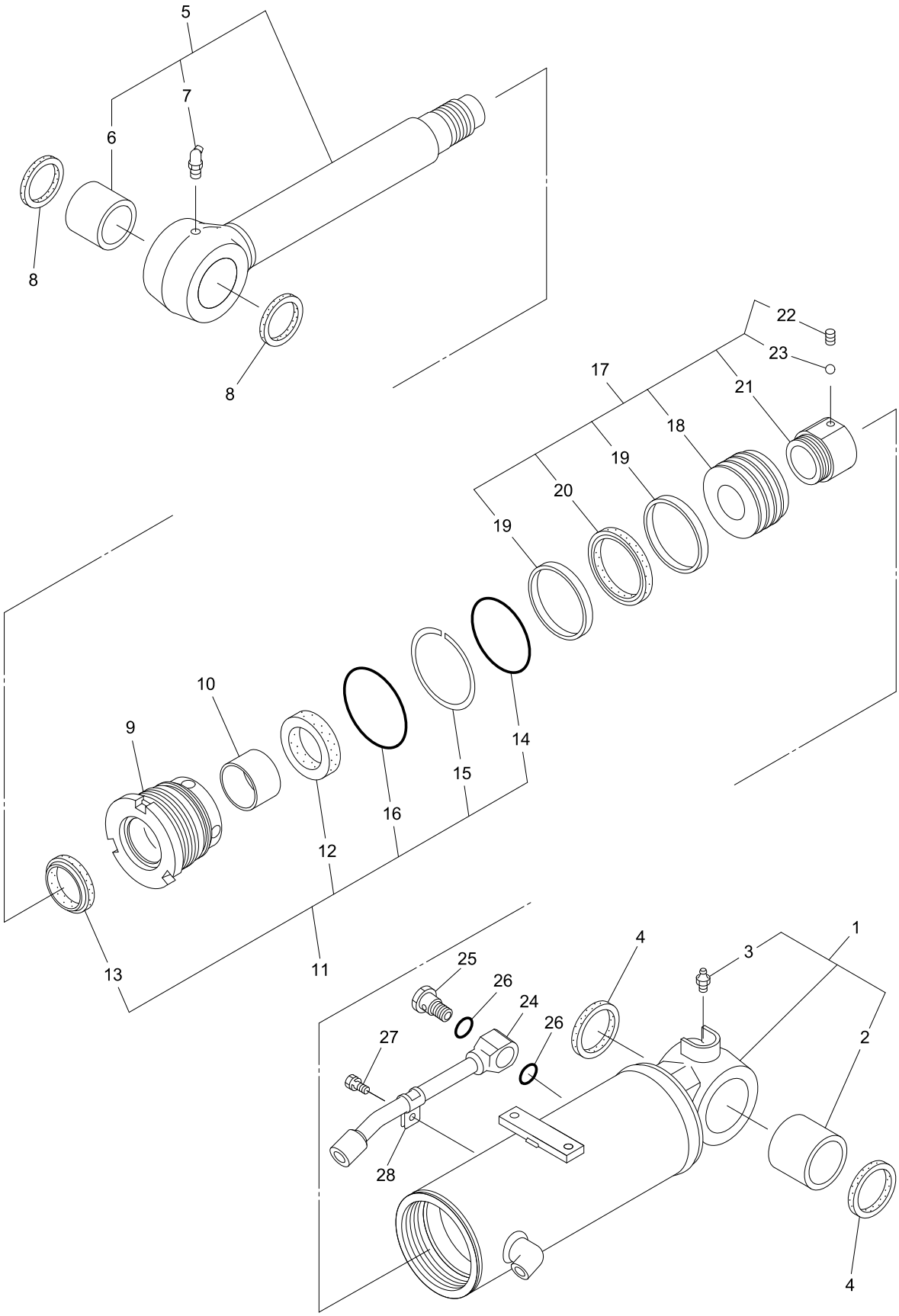

0782608UA-1

https://truckmanualshub.com/

KEY No.	SUP.	PART No.	DESCRIPTION	Q'TY	CHAN.	SERIAL No.	REMARKS
0		0782 608 UA	Cylinder Ass'y, Blade	1		WZ010001-	
1	×	**** *** **	*Tube Ass'y, Cylinder	1		WZ010001-	
2		0782 608 08	**Bushing	1		WZ010001-	
3		0728 111 15	**Nipple, Grease	1		WZ010001-	PT1/8
4		0758 850 12	*Seal, Dust	2		WZ010001-	
5		0782 608 02	*Rod Ass'y, Piston	1		WZ010001-	
6		0782 608 08	**Bushing	1		WZ010001-	
7		0728 111 55	**Nipple, Grease	1		WZ010001-	PT1/8X67.5
8		0758 850 12	*Seal, Dust	2		WZ010001-	
9		0782 608 03	*Head, Cylinder	1		WZ010001-	
10		0782 492 04	*Bushing	1		WZ010001-	
11		0782 608 91	*Kit, Seal	1		WZ010001-	
12	×	0752 935 04	**Ring, U	1		WZ010001-	
13	×	0758 850 06	**Ring, Wiper	1		WZ010001-	
14	×	0760 716 00	**Ring, O	1		WZ010001-	G100-90B
15	×	0782 608 04	**Ring, Back-up	1		WZ010001-	
16	×	0760 716 05	**Ring, O	1		WZ010001-	G105-90B
17		0782 608 93	*Piston Ass'y	1		WZ010001-	
18	×	**** *** **	**Piston	1		WZ010001-	
19		0782 608 06	**Ring, Slide	2		WZ010001-	
20		0752 922 11	**Ring Ass'y, Seal	1		WZ010001-	
21		0782 498 13	**Nut	1		WZ010001-	
22		0561 100 10	**Screw, Set	1		WZ010001-	M10X10
23		0609 016 10	**Ball, Steel	1		WZ010001-	d=1/4
24		0782 608 07	*Pipe	1		WZ010001-	
25		0782 446 05	*Plug	1		WZ010001-	
26		0760 710 23	*Ring, O	2		WZ010001-	P22A-90B
27		0782 446 06	*Bolt	1		WZ010001-	
28		0782 431 21	*Holder, Pipe	1		WZ010001-	

https://truckmanualshub.com/

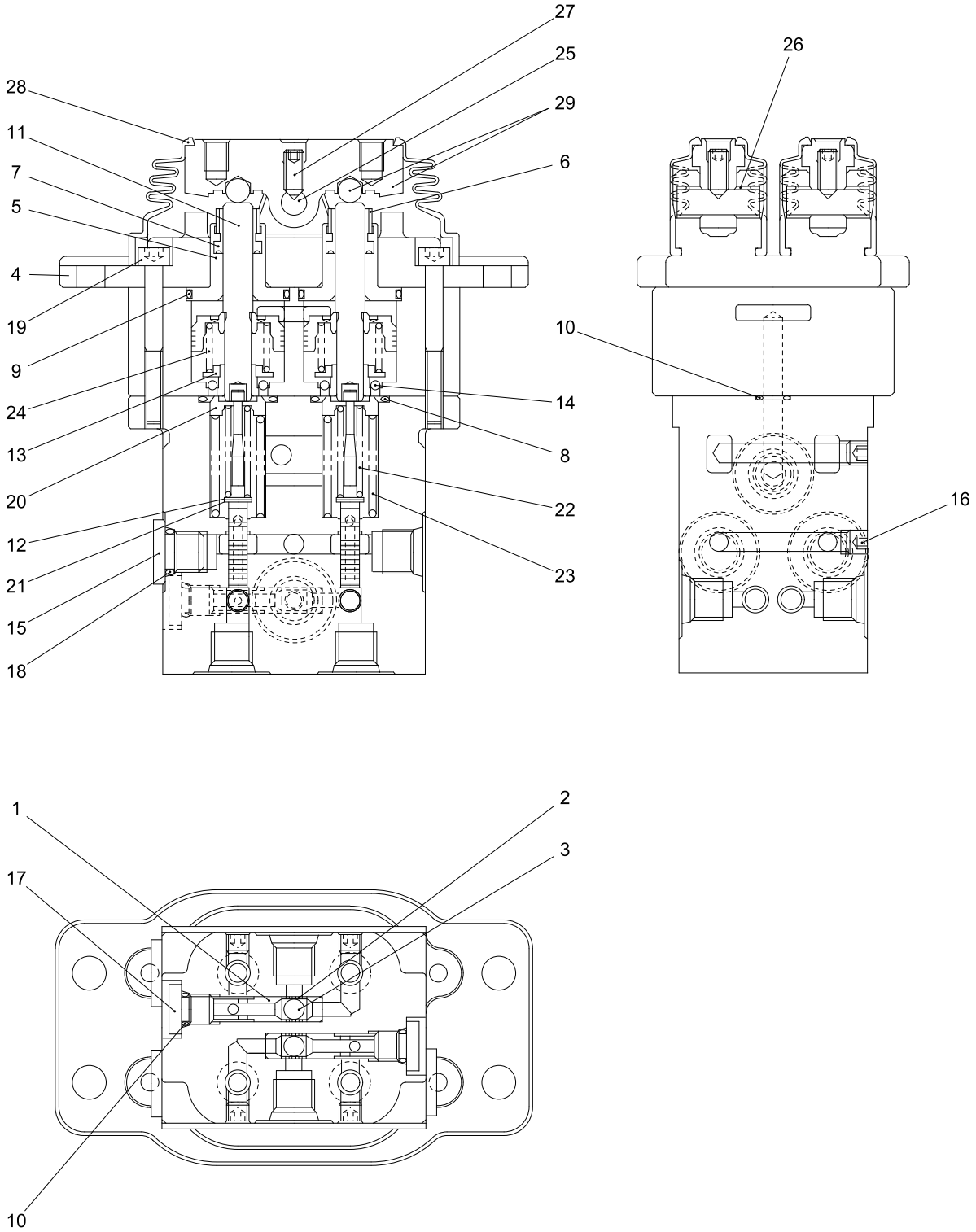

0783995UA-1
0783936UA-1

https://truckmanualshub.com/

KEY No.	SUP.	PART No.	DESCRIPTION	Q'TY	CHAN.	SERIAL No.	REMARKS
0		0783 995 UA	Valve Ass'y, Pilot	1		WZ010001-	
1		0783 951 01	*Seat	2		WZ010001-	
2		0783 951 02	*Bushing	2		WZ010001-	
3		0609 016 10	*Ball, Steel	2		WZ010001-	d=1/4
4		0783 951 03	*Cover	2		WZ010001-	
5		0783 951 04	*Plug	4		WZ010001-	
6		0783 951 05	*Cap, Grease	4		WZ010001-	
7		0783 951 06	*Packing	4		WZ010001-	
8		0760 310 20	*Ring, O	4		WZ010001-	020-90B
9		0760 310 25	*Ring, O	4		WZ010001-	025-90B
10		0760 710 08	*Ring, O	4		WZ010001-	P8-90B
11		0783 936 01	*Rod, Push	4		WZ010001-	
12		0783 951 08	*Shim	4		WZ010001-	
13		0783 951 09	*Seat, Spring	4		WZ010001-	
14		0751 948 06	*Ball, Steel	12		WZ010001-	
15		0756 357 03	*Plug	3		WZ010001-	
16		0750 198 15	*Plug	6		WZ010001-	
17		0783 920 06	*Plug	2		WZ010001-	
18		0760 710 12	*Ring, O	3		WZ010001-	P11-90B
19		0562 060 50	*Bolt, Socket Head	4		WZ010001-	M6X50
20		0783 951 10	*Seat, Spring	4		WZ010001-	
21		0783 951 11	*Washer	4		WZ010001-	
22		0783 995 01	*Spring	4		WZ010001-	
23		0783 951 13	*Spring	4		WZ010001-	
24		0783 951 14	*Spring	4		WZ010001-	
25		0783 951 15	*Shaft Cam	2		WZ010001-	
26		0783 951 16	*Bushing	4		WZ010001-	
27		0783 951 17	*Screw, Set	2		WZ010001-	
28		0783 951 18	*Boot	2		WZ010001-	
29		0783 951 91	*Cam Ass'y	2		WZ010001-	

https://truckmanualshub.com/

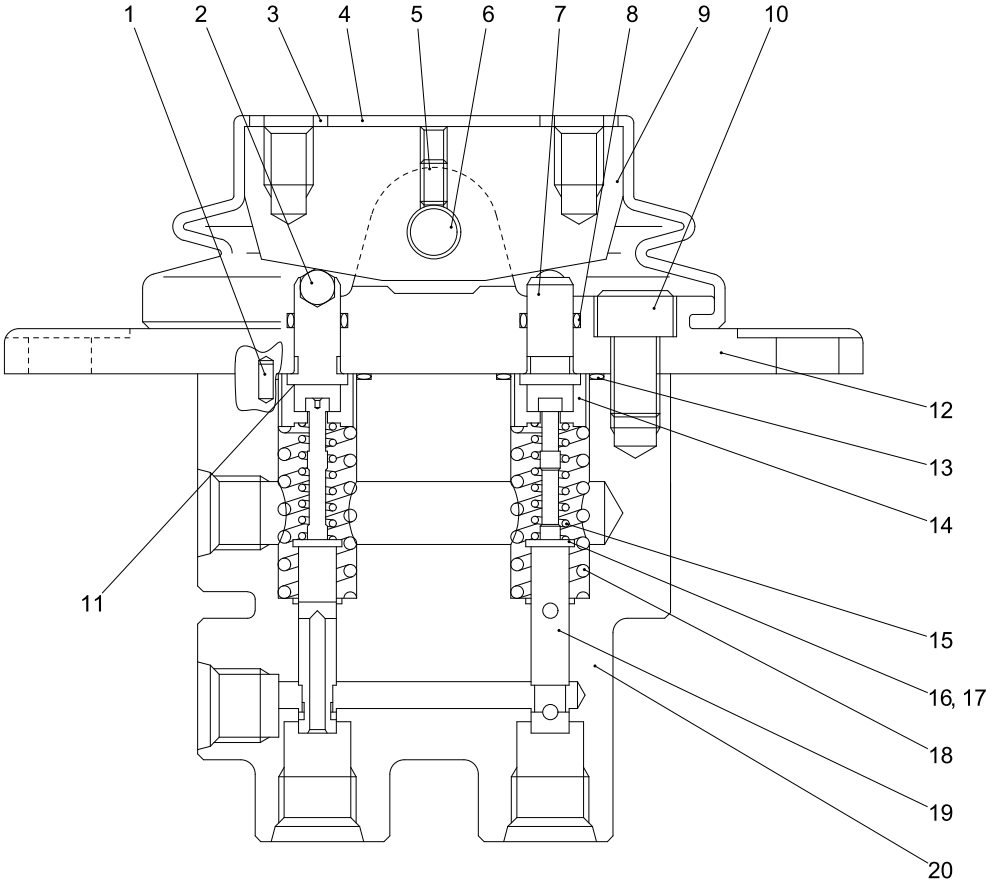

0783965UA-1
0783724UA-1

https://truckmanualshub.com/

KEY No.	SUP.	PART No.	DESCRIPTION	Q'TY	CHAN.	SERIAL No.	REMARKS
0		0783 965 UA	Valve Ass'y, Pilot	1		WZ010001-	
1		0756 326 22	*Pin, Spring	2		WZ010001-	d=3X6
2		0756 326 23	*Ball, Steel	2		WZ010001-	d=6
3		0756 326 20	*Washer, Flat	2		WZ010001-	M8
4		0756 326 10	*Boot	1		WZ010001-	
5		0567 040 08	*Screw, Set	1		WZ010001-	M4X8
6		0756 326 08	*Pin	1		WZ010001-	
7		0756 326 04	*Pusher	2		WZ010001-	
8		0760 610 08	*Ring, O	2		WZ010001-	P8-70B
9		0756 326 07	*Cam	1		WZ010001-	
10		0562 080 16	*Bolt, Socket Head	2		WZ010001-	M8X16
11		0783 965 02	*Shim	AR		WZ010001-	t=0.1
11-1		0783 965 03	*Shim	AR		WZ010001-	t=0.2
12		**** *** **	*Cover	1		WZ010001-	
13		0756 326 25	*Ring, O	2		WZ010001-	S16-90B
14		0756 065 13	*Holder, Spring	2		WZ010001-	
15		0783 965 11	*Spring	2		WZ010001-	
16		0756 326 19	*Washer, Flat	2		WZ010001-	M4
17		0756 326 06	*Shim	AR		WZ010001-	t=0.1
17-1		0756 065 11	*Shim	AR		WZ010001-	
18		0756 326 09	*Spring	2		WZ010001-	
19		0783 965 04	*Spool	2		WZ010001-	
20		**** *** **	*Body	1		WZ010001-	

https://truckmanualshub.com/

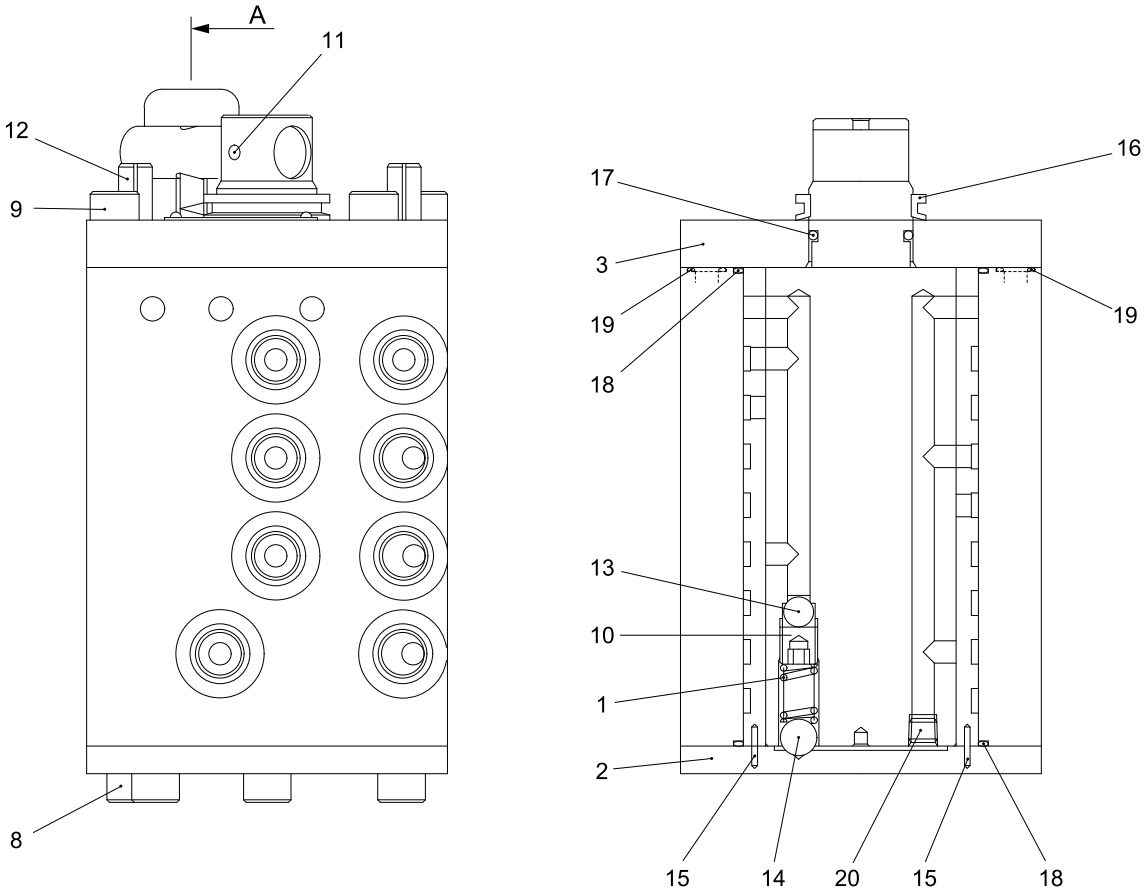

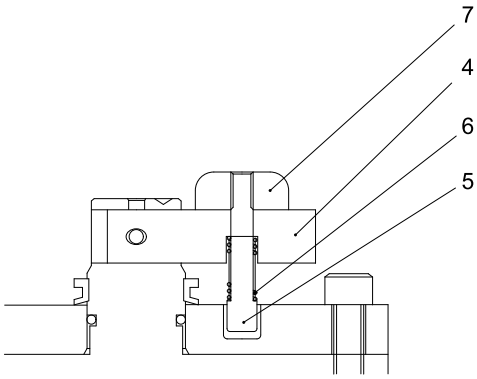

"A" SECTION

0784112UA-1

https://truckmanualshub.com/

KEY No.	SUP.	PART No.	DESCRIPTION	Q'TY	CHAN.	SERIAL No.	REMARKS
0		0784 112 UA	Valve Ass'y, Multiple (A-D Change)	1		WZ010001-	
1		0784 112 04	*Spring	1		WZ010001-	
2		0784 112 06	*Cover	1		WZ010001-	
3		0784 112 07	*Cover	1		WZ010001-	
4		0784 112 08	*Lever	1		WZ010001-	
5		0784 112 09	*Pin	1		WZ010001-	
6		0784 112 10	*Spring	1		WZ010001-	
7		0784 112 11	*Grip	1		WZ010001-	
8		0562 080 16	*Bolt, Socket Head	6		WZ010001-	M8X16
9		0562 080 25	*Bolt, Socket Head	6		WZ010001-	M8X25
10		0561 100 10	*Screw, Set	1		WZ010001-	M10X10
11		0494 606 25	*Pin, Spring	1		WZ010001-	d=4X25
12		0494 610 24	*Pin, Spring	2		WZ010001-	d=8X24
13		0756 781 14	*Ball, Steel	1		WZ010001-	d=8
14		0784 112 20	*Ball, Steel	1		WZ010001-	d=10
15		0783 637 16	*Roller, Needle	4		WZ010001-	d=2X9.8
16		0756 863 09	*Seal, Oil	1		WZ010001-	
17		0760 211 18	*Ring, O	1		WZ010001-	118-70B
18		0783 637 19	*Ring, O	2		WZ010001-	S65-70B
19		0783 637 20	*Ring, O	8		WZ010001-	S8-70B
20		0754 124 13	*Plug	7		WZ010001-	

https://truckmanualshub.com/

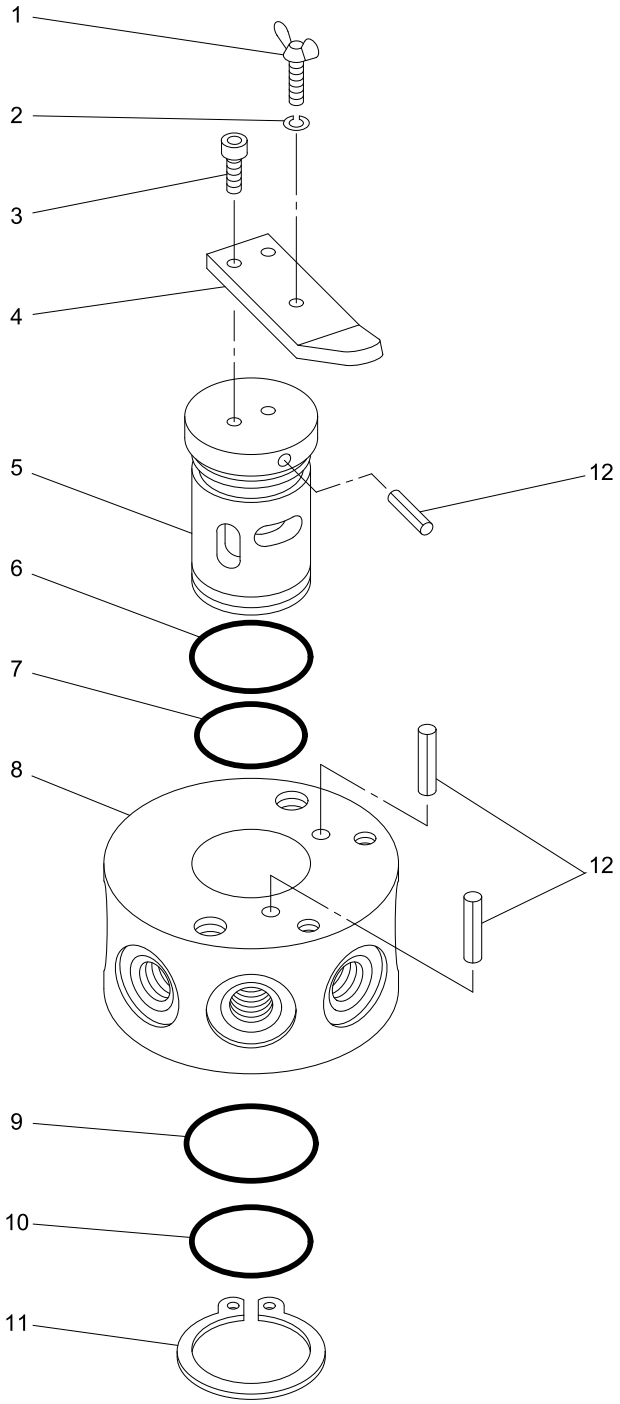

0756094UA-1

https://truckmanualshub.com/

KEY No.	SUP.	PART No.	DESCRIPTION	Q'TY	CHAN.	SERIAL No.	REMARKS
0		0756 094 UA	Valve Ass'y, Selector	1		WZ010001-	
1		0756 094 04	*Bolt, Wing	1		WZ010001-	
2		0590 050 00	*Washer, Lock	1		WZ010001-	M5
3		0562 050 14	*Bolt, Socket Head	2		WZ010001-	M5X14
4		0756 094 03	*Lever	1		WZ010001-	
5		0756 094 02	*Rotor	1		WZ010001-	
6		0756 094 08	*Ring, O	1		WZ010001-	
7		0756 094 07	*Ring, O	1		WZ010001-	
8		0756 094 01	*Body	1		WZ010001-	
9		0756 094 06	*Ring, O	1		WZ010001-	
10		0756 094 05	*Ring, O	1		WZ010001-	
11		0493 510 30	*Ring, Snap	1		WZ010001-	d=30
12		0494 606 12	*Pin, Spring	3		WZ010001-	d=4X12

https://truckmanualshub.com/

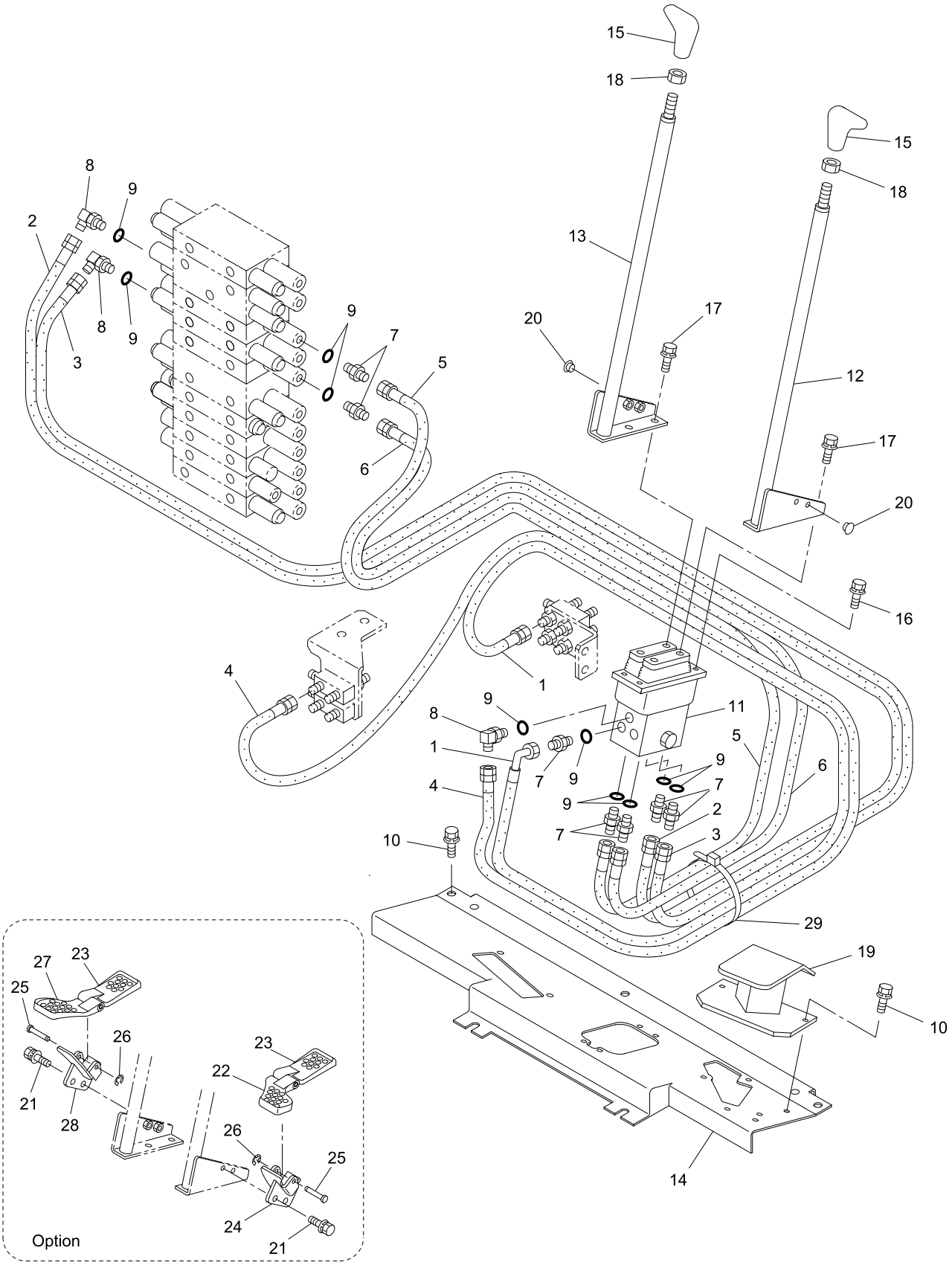

40V4-060100-1

https://truckmanualshub.com/

KEY No.	SUP.	PART No.	DESCRIPTION	Q'TY	CHAN.	SERIAL No.	REMARKS
0	×	F342 640 00	Lever Ass'y, Travel	1		WZ010001-	
0-1	×	F361 722 00	Lever Ass'y, Travel	1		WZ010001-	
1		4070 551 22	*Hose Ass'y	1		WZ010001-	L=1000
2		4070 548 89	*Hose Ass'y	1		WZ010001-	L=2250
2-1	☆	D406 499 01	*Decal (T1)	2		WZ010001-	D406 499 00
3		4070 548 21	*Hose Ass'y	1		WZ010001-	L=2100
3-1	☆	D406 499 03	*Decal (T3)	2		WZ010001-	D406 499 00
4		4070 548 06	*Hose Ass'y	1		WZ010001-	L=1200
5		4070 548 04	*Hose Ass'y	1		WZ010001-	L=1800
5-1	☆	D406 499 02	*Decal (T2)	2		WZ010001-	D406 499 00
6		4070 548 04	*Hose Ass'y	1		WZ010001-	L=1800
6-1	☆	D406 499 04	*Decal (T4)	2		WZ010001-	D406 499 00
7		0713 700 70	*Connector	7		WZ010001-	
8		0710 122 09	*Elbow	3		WZ010001-	
9		0760 710 12	*Ring, O	10		WZ010001-	P11-90B
10		0518 100 25	*Bolt, Treatment (W/L.W, F.W)	7		WZ010001-	M10X25 P=1.25
11	#	0783 995 UA	*Valve Ass'y, Pilot	1		WZ010001-	Sh. No. 5-13
12		D495 838 00	*Lever (L.H.)	1		WZ010001-	
13		D495 839 00	*Lever (R.H.)	1		WZ010001-	
14		D419 360 00	*Bracket	1		WZ010001-	
15		0690 283 72	*Grip	2		WZ010001-	
16		0517 080 25	*Bolt, Treatment (W/L.W, F.W)	4		WZ010001-	M8X25
17		0517 080 16	*Bolt, Treatment (W/L.W, F.W)	4		WZ010001-	M8X16
18		0549 140 00	*Nut, Half	2		WZ010001-	M14 P=1.5
19		D419 551 00	*Bracket	1		WZ010001-	
20		0690 201 05	*Plug, Hole	4		WZ010001-	
21		0517 080 25	*Bolt, Treatment (W/L.W, F.W)	4		WZ010001-	M8X25
22		D501 057 00	*Pedal	1		WZ010001-	Option
23		D501 076 00	*Pedal	2		WZ010001-	Option
24		D419 342 00	*Bracket	1		WZ010001-	Option
25		D013 384 00	*Pin,Head	2		WZ010001-	Option
26		0493 510 08	*Ring, Snap	2		WZ010001-	Option
27		D501 058 00	*Pedal	1		WZ010001-	Option
28		D419 343 00	*Bracket	1		WZ010001-	Option
29		0820 067 05	*Band, Cable	1		WZ010001-	

https://truckmanualshub.com/

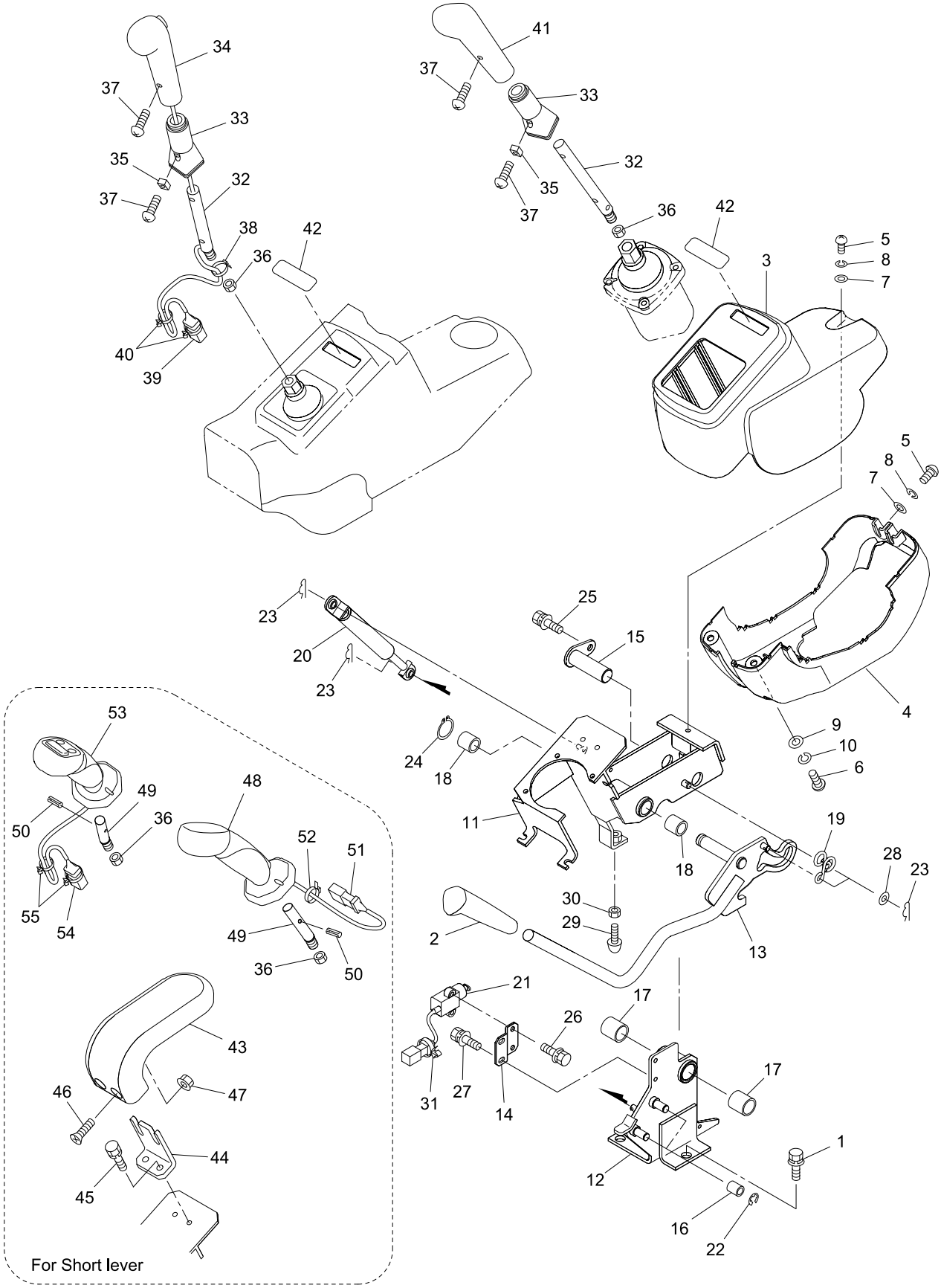

V4ALL-060200-1

https://truckmanualshub.com/

KEY No.	SUP.	PART No.	DESCRIPTION	Q'TY	CHAN.	SERIAL No.	REMARKS
0	×	F361 722 00	Lever Ass'y, Control	1		WZ010001-	
1		0518 100 25	*Bolt, Treatment (W/L.W, F.W)	3		WZ010001-	M10X25 P=1.25
2		0690 283 86	*Grip	1		WZ010001-	
3		D465 318 00	*Panel	1		WZ010001-	
4		D465 319 00	*Panel	1		WZ010001-	
5		4004 364 01	*Bolt, Button Head	3		WZ010001-	M6X18
6		0565 060 25	*Screw, Pan Head	2		WZ010001-	M6X25
7		0594 060 00	*Washer, Flat	3		WZ010001-	M6
8		0596 060 00	*Washer, Lock	3		WZ010001-	M6
9		0593 060 00	*Washer, Flat	2		WZ010001-	M6
10		0590 060 00	*Washer, Lock	2		WZ010001-	M6
11		D419 308 00	*Bracket	1		WZ010001-	
12		D418 302 00	*Bracket	1		WZ010001-	
13		D495 774 00	*Lever	1		WZ010001-	
14		D418 190 00	*Bracket	1		WZ010001-	
15		D017 225 00	*Pin	1		WZ010001-	
16		4040 867 00	*Spacer	2		WZ010001-	
17		0618 120 20	*Bushing	2		WZ010001-	
18		0618 116 15	*Bushing	2		WZ010001-	
19		D170 052 00	*Spring	1		WZ010001-	
20		0652 253 UA	*Stay, Dumper	1		WZ010001-	
21		0858 314 15	*Switch, Limit	1		WZ010001-	
22		0493 560 09	*Ring "E"	2		WZ010001-	
23		4016 030 04	*Pin, Snap	4		WZ010001-	
24		0493 510 16	*Ring, Snap	1		WZ010001-	d=16
25		0517 080 20	*Bolt, Treatment (W/L.W, F.W)	1		WZ010001-	M8X20
26		0517 060 16	*Bolt, Treatment (W/L.W, F.W)	2		WZ010001-	M6X16
27		0517 060 12	*Bolt, Treatment (W/L.W, F.W)	2		WZ010001-	M6X12
28		0593 080 00	*Washer, Flat	2		WZ010001-	M8
29		0690 202 50	*Pad, Rubber	1		WZ010001-	
30		0548 120 00	*Nut, Half	1		WZ010001-	M12
31		0690 082 08	*Band, Cable	1		WZ010001-	
32		D495 577 00	*Lever	2		WZ010001-	
33		D042 040 00	*Collar	2		WZ010001-	
34		0690 283 40	*Grip (W/Switch)	1		WZ010001-	
35		D040 178 00	*Spacer	2		WZ010001-	
36		0580 140 00	*Nut, Hex.	2		WZ010001-	M14
37		0565 040 12	*Screw, Pan Head	4		WZ010001-	M4X12
38		0820 067 07	*Band, Cable	1		WZ010001-	
39		D592 290 00	*Harness	1		WZ010001-	
40		0690 082 08	*Clamp, Hose	2		WZ010001-	
41		0690 283 41	*Grip	1		WZ010001-	
42		D408 281 00	*Seal	2		WZ010001-	
43		D480 009 00	*Rest, Arm	2		WZ010001-	

https://truckmanualshub.com/

KEY No.	SUP.	PART No.	DESCRIPTION	Q'TY	CHAN.	SERIAL No.	REMARKS
44		D418 139 00	*Bracket	2		WZ010001-	
45		0519 080 20	*Bolt, Treatment (W/L.W)	4		WZ010001-	M8X20
46		D004 049 02	*Bolt, Button Head	4		WZ010001-	M8X30
47		0521 080 00	*Nut, Hex..(W/F.W)	4		WZ010001-	M8
48		0690 283 85	*Grip	1		WZ010001-	
49		D495 843 00	*Lever	2		WZ010001-	
50		0494 608 40	*Pin, Spring	2		WZ010001-	d=5X40
51		0820 514 UA	*Connector	1		WZ010001-	
52		0820 067 03	*Band, Cable	1		WZ010001-	
53		0690 283 82	*Grip (W/Switch)	1		WZ010001-	
54		0820 513 UA	*Connector	1		WZ010001-	
55		0690 082 08	*Clamp, Hose	2		WZ010001-	

https://truckmanualshub.com/

[Memo]

https://truckmanualshub.com/

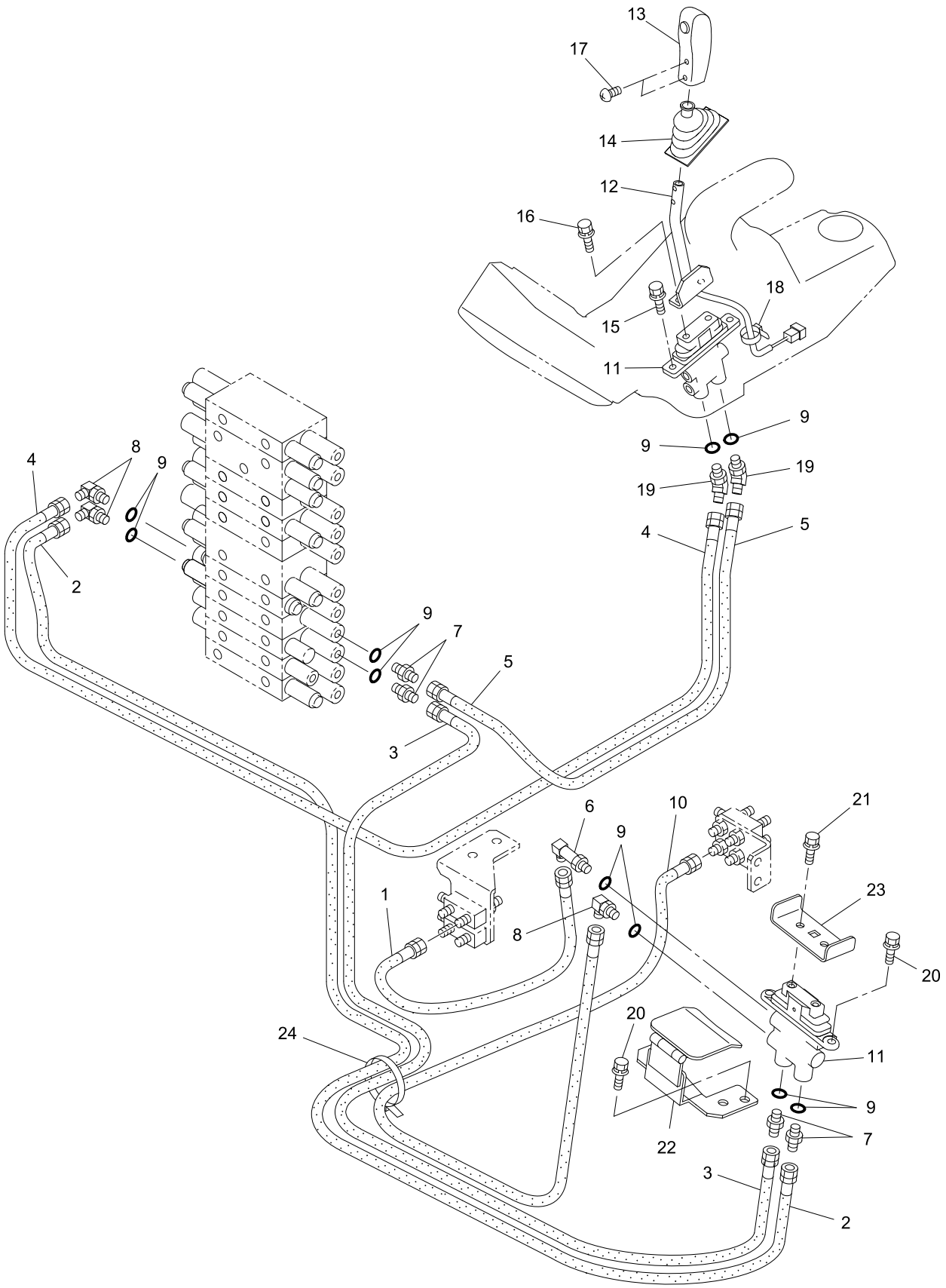

40V4-060300-1

https://truckmanualshub.com/

KEY No.	SUP.	PART No.	DESCRIPTION	Q'TY	CHAN.	SERIAL No.	REMARKS
0	×	F342 640 00	Control Ass'y, Blade & Boom Swing	1		WZ010001-	
1		4070 548 57	*Hose Ass'y	1		WZ010001-	L=450
2		4070 548 39	*Hose Ass'y	1		WZ010001-	L=2000
3		4070 548 19	*Hose Ass'y	1		WZ010001-	L=1250
4		4070 548 01	*Hose Ass'y	1		WZ010001-	L=1900
4-1	☆	D407 818 01	*Decal (BA)	2		WZ010001-	D407 818 00
5		4070 548 06	*Hose Ass'y	1		WZ010001-	L=1200
5-1	☆	D407 818 02	*Decal (BB)	2		WZ010001-	D407 818 00
6		0710 117 02	*Elbow, Long	1		WZ010001-	
7		0713 700 70	*Connector	4		WZ010001-	
8		0710 122 09	*Elbow	3		WZ010001-	
9		0760 710 12	*Ring, O	10		WZ010001-	P11-90B
10		4070 548 36	*Hose Ass'y	1		WZ010001-	L=550
11	#	0783 965 UA	*Valve Ass'y, Pilot	2		WZ010001-	Sh. No. 5-14
12		D495 808 00	*Lever	1		WZ010001-	
13		0690 283 81	*Grip (W/Switch)	1		WZ010001-	
14		D181 002 00	*Boots	1		WZ010001-	
15		0517 080 20	*Bolt, Treatment (W/L.W, F.W)	2		WZ010001-	M8X20
16		0517 080 16	*Bolt, Treatment (W/L.W, F.W)	2		WZ010001-	M8X16
17		0565 040 08	*Screw, Pan Head	2		WZ010001-	M4X8
18		0820 067 03	*Band, Cable	1		WZ010001-	
19		0710 121 00	*Elbow, 45	2		WZ010001-	
20		0518 100 25	*Bolt, Treatment (W/L.W, F.W)	4		WZ010001-	M10X25 P=1.25
21		0517 080 16	*Bolt, Treatment (W/L.W, F.W)	2		WZ010001-	M8X16
22		D419 286 00	*Bracket	1		WZ010001-	
23		D501 075 00	*Pedal	1		WZ010001-	
24		0820 067 05	*Band, Cable	1		WZ010001-	

https://truckmanualshub.com/

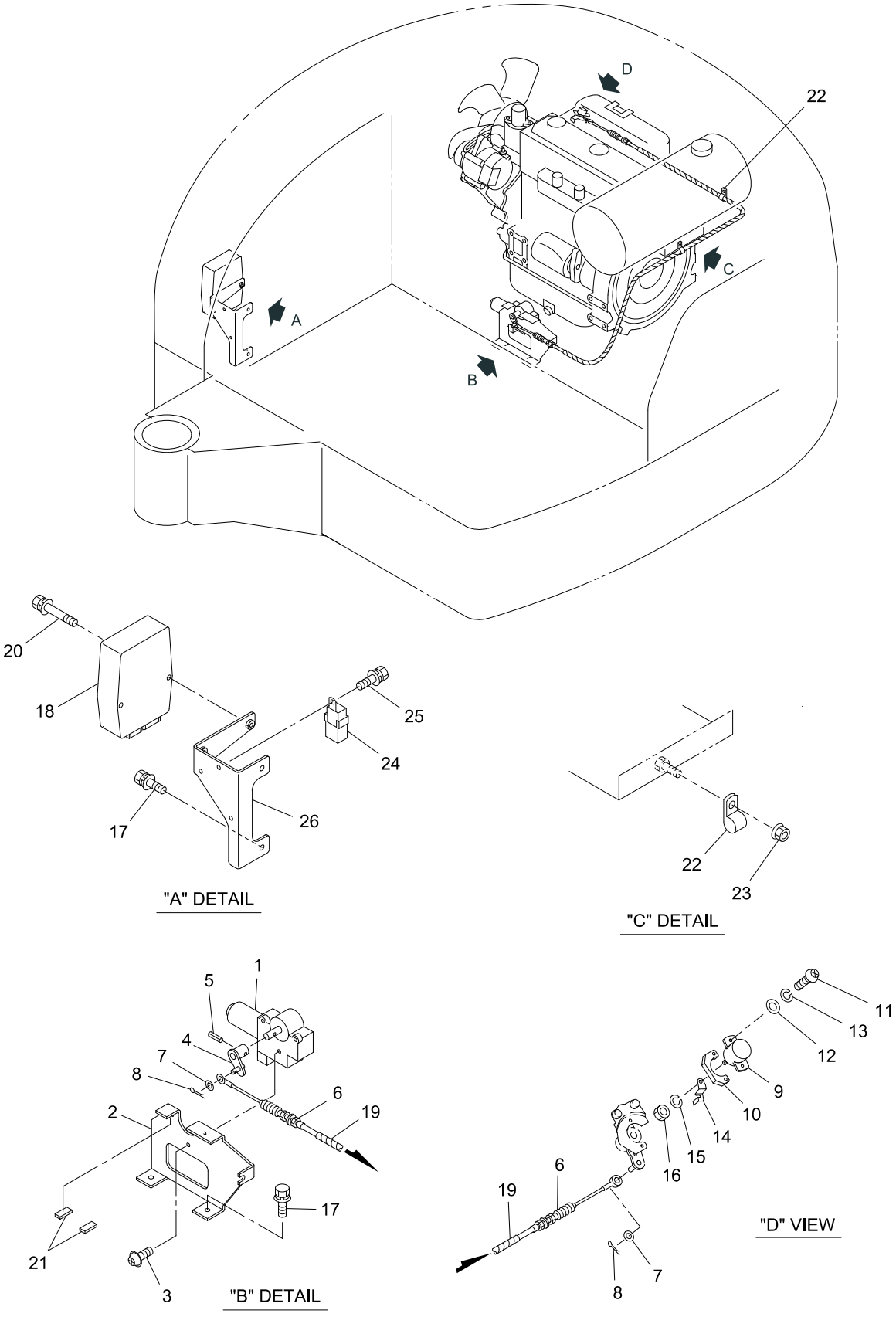

40V4-060400-1

https://truckmanualshub.com/

KEY No.	SUP.	PART No.	DESCRIPTION	Q'TY	CHAN.	SERIAL No.	REMARKS
0	×	F361 697 00	Control Ass'y, Engine	1		WZ010001-	
1		0891 802 UA	*Motor	1		WZ010001-	
2		D419 273 00	*Bracket	1		WZ010001-	
3		0528 050 16	*Screw, Tapping	3		WZ010001-	M5X16
4		D495 830 00	*Lever	1		WZ010001-	
5		0494 606 16	*Pin, Spring	1		WZ010001-	d=4X16
6		0690 511 47	*Cable, Control	1		WZ010001-	
7		0593 060 00	*Washer, Flat	2		WZ010001-	M6
8		0599 010 15	*Pin, Cotter	2		WZ010001-	d=1.6X15
9		0858 614 12	*Meter, Potention	1		WZ010001-	
10		D040 346 00	*Spacer	1		WZ010001-	
11		0565 040 20	*Screw, Pan Head	2		WZ010001-	M4X20
12		0593 040 00	*Washer, Flat	2		WZ010001-	M4
13		0590 040 00	*Washer, Lock	2		WZ010001-	M4
14		D495 810 00	*Lever	1		WZ010001-	
15		0590 060 00	*Washer, Lock	1		WZ010001-	M6
16		0580 060 00	*Nut, Hex.	1		WZ010001-	M6
17		0517 080 20	*Bolt, Treatment (W/L.W, F.W)	4		WZ010001-	M8X20
18		0891 922 UA	*Controller, Throttle	1		WZ010001-	
19		0820 803 01	*Tube, Corrugate	M		WZ010001-	L=1550
20		0517 060 60	*Bolt, Treatment (W/L.W, F.W)	2		WZ010001-	M6X60
21		D433 503 00	*Plate, Rubber	2		WZ010001-	
22		4080 000 03	*Clamp, Hose	2		WZ010001-	
23		0524 100 00	*Nut, Hex. (W/F.W)	1		WZ010001-	M10 P=1.25
24		0820 215 07	*Relay	1		WZ010001-	
25		0517 060 12	*Bolt, Treatment (W/L.W, F.W)	1		WZ010001-	M6X12
26		D419 347 00	*Bracket	1		WZ010001-	

https://truckmanualshub.com/

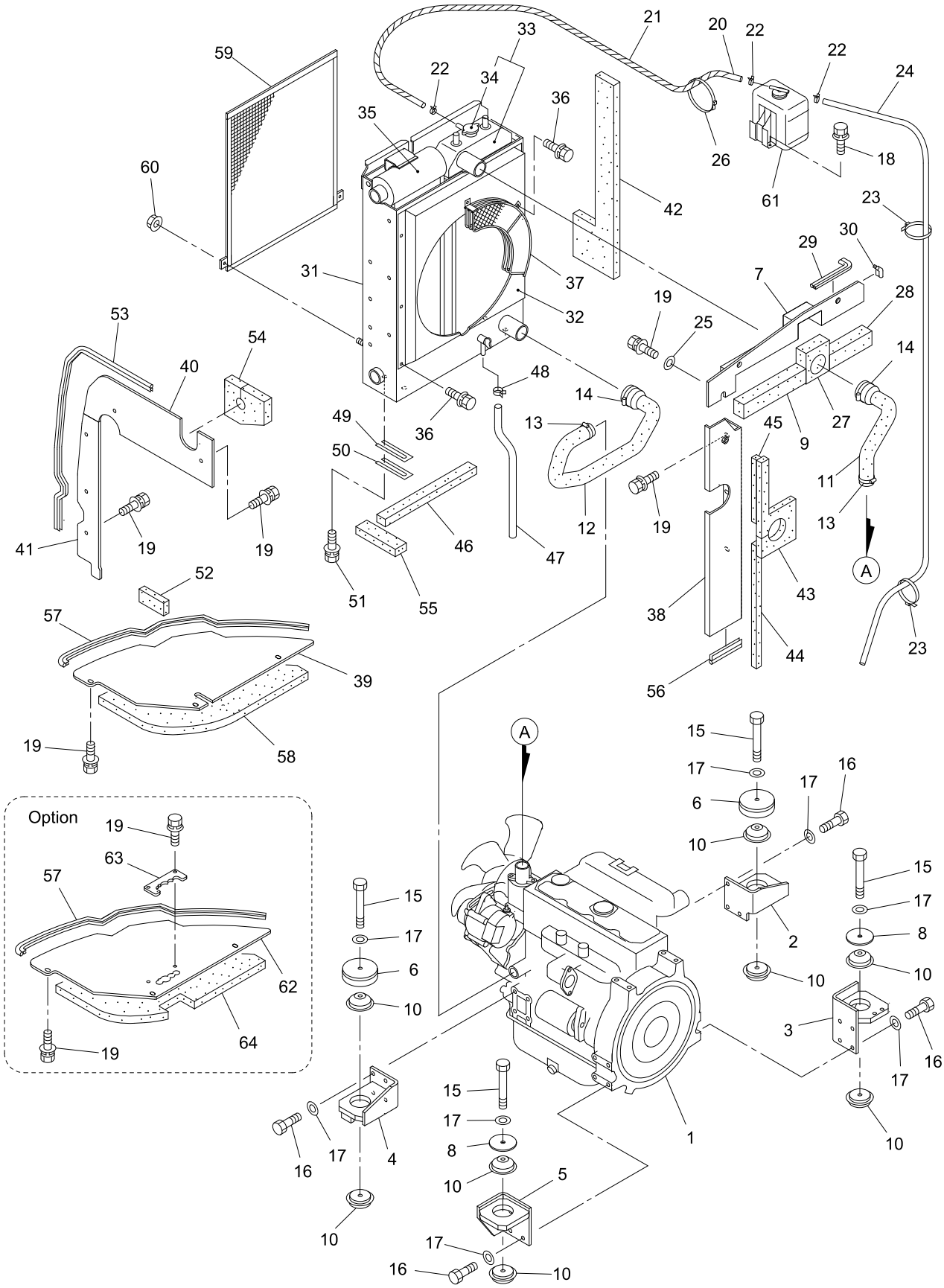

https://truckmanualshub.com/

KEY No.	SUP.	PART No.	DESCRIPTION	Q'TY	CHAN.	SERIAL No.	REMARKS
0	×	F330 676 00	Engine & Accessories	1		WZ010001-	
0-1	×	F330 678 00	Engine & Accessories	1		WZ010001-	
1		0676 253 UA	*Engine Ass'y	1		WZ010001-	V2403-M-DI-E3B-BHIH1
2		D419 258 00	*Bracket	1		WZ010001-	
3		D419 256 00	*Bracket	1		WZ010001-	
4		D419 259 00	*Bracket	1		WZ010001-	
5		D419 257 00	*Bracket	1		WZ010001-	
6		D481 022 00	*Holder	2		WZ010001-	
7		D458 445 00	*Cover	1		WZ010001-	
8		D006 144 00	*Washer	2		WZ010001-	
9		D493 657 00	*Panel, Sponge	1		WZ010001-	
10		0910 931 10	*Rubber, Cushion	8		WZ010001-	
11		0775 551 93	*Hose, Radiator	1		WZ010001-	
12		0775 551 95	*Hose, Radiator	1		WZ010001-	
13		0690 083 09	*Clamp, Hose	2		WZ010001-	
14		0690 083 12	*Clamp, Hose	2		WZ010001-	
15		0513 121 00	*Bolt, Treatment	4		WZ010001-	M12X100
16		0558 120 30	*Bolt, Treatment	14		WZ010001-	M12X30 P=1.25
17		0595 120 00	*Washer, Treatment	18		WZ010001-	M12
18		0517 080 25	*Bolt, Treatment (W/L.W, F.W)	2		WZ010001-	M8X25
19		0517 080 20	*Bolt, Treatment (W/L.W, F.W)	14		WZ010001-	M8X20
20		0779 002 97	*Hose	M		WZ010001-	L=1050
21		0820 803 03	*Tube, Corrugate	M		WZ010001-	L=1000
22		0690 074 12	*Clamp, Hose	3		WZ010001-	
23		0820 067 04	*Band, Cable	2		WZ010001-	
24		0779 002 97	*Hose	M		WZ010001-	L=750
25		4006 119 01	*Washer	3		WZ010001-	M8
26		0820 067 05	*Band, Cable	1		WZ010001-	
27		D493 658 00	*Panel, Sponge	1		WZ010001-	
28		D493 659 00	*Panel, Sponge	1		WZ010001-	
29		0910 870 05	*Seal	M		WZ010001-	L=178
30		0910 870 05	*Seal	M		WZ010001-	L=100
31		0668 246 UA	*Radiator Ass'y	1		WZ010001-	
32		0668 246 02	**Guide, Fan	1		WZ010001-	
33		0668 246 91	**Radiator	1		WZ010001-	
34		0668 088 02	***Radiator, Cap	1		WZ010001-	
35		0668 246 06	**Cooler Ass'y, Oil	1		WZ010001-	
36		0457 080 16	**Bolt, Treatment (W/Flange)	9		WZ010001-	M8X16
37		0668 246 15	**Guard, Fan	1		WZ010001-	
38		D458 411 00	*Cover	1		WZ010001-	
39		D458 432 00	*Cover	1		WZ010001-	
40		D458 274 00	*Cover	1		WZ010001-	
41		D458 464 00	*Cover	1		WZ010001-	

https://truckmanualshub.com/

KEY No.	SUP.	PART No.	DESCRIPTION	Q'TY	CHAN.	SERIAL No.	REMARKS
42		D493 662 00	*Panel, Sponge	1		WZ010001-	
43		D493 660 00	*Panel, Sponge	1		WZ010001-	
44		D493 507 00	*Panel, Sponge	1		WZ010001-	
45		D493 624 00	*Panel, Sponge	1		WZ010001-	
46		D493 625 00	*Panel, Sponge	1		WZ010001-	
47		D070 553 00	*Hose	1		WZ010001-	L=230
48		0690 081 90	*Clamp, Hose	1		WZ010001-	
49		D007 240 01	*Shim	AR		WZ010001-	t=6
50		D007 240 02	*Shim	AR		WZ010001-	t=3.2
51		0518 100 40	*Bolt, Treatment (W/L.W, F.W)	4		WZ010001-	M10X40 P=1.25
52		D493 663 00	*Panel, Sponge	1		WZ010001-	
53		4550 718 00	*Seal	M		WZ010001-	L=1100
54		D493 661 00	*Panel, Sponge	1		WZ010001-	
55		D493 614 00	*Panel, Sponge	1		WZ010001-	
56		4550 718 00	*Seal	M		WZ010001-	L=100
57		4550 718 00	*Seal	M		WZ010001-	L=1000
58		D493 665 00	*Panel, Sponge	1		WZ010001-	
59		0668 400 31	*Net	1		WZ010001-	
60		0521 080 00	*Nut, Hex. (W/F.W)	2		WZ010001-	M8
61		K1G642 72401	*Tank, Surge	1		WZ010001-	
62		D458 503 00	*Cover (For A/C)	1		WZ010001-	
63		D458 504 00	*Cover (For A/C)	1		WZ010001-	
64		D493 700 00	*Panel, Sponge (For A/C)	1		WZ010001-	

https://truckmanualshub.com/

[Memo]

https://truckmanualshub.com/

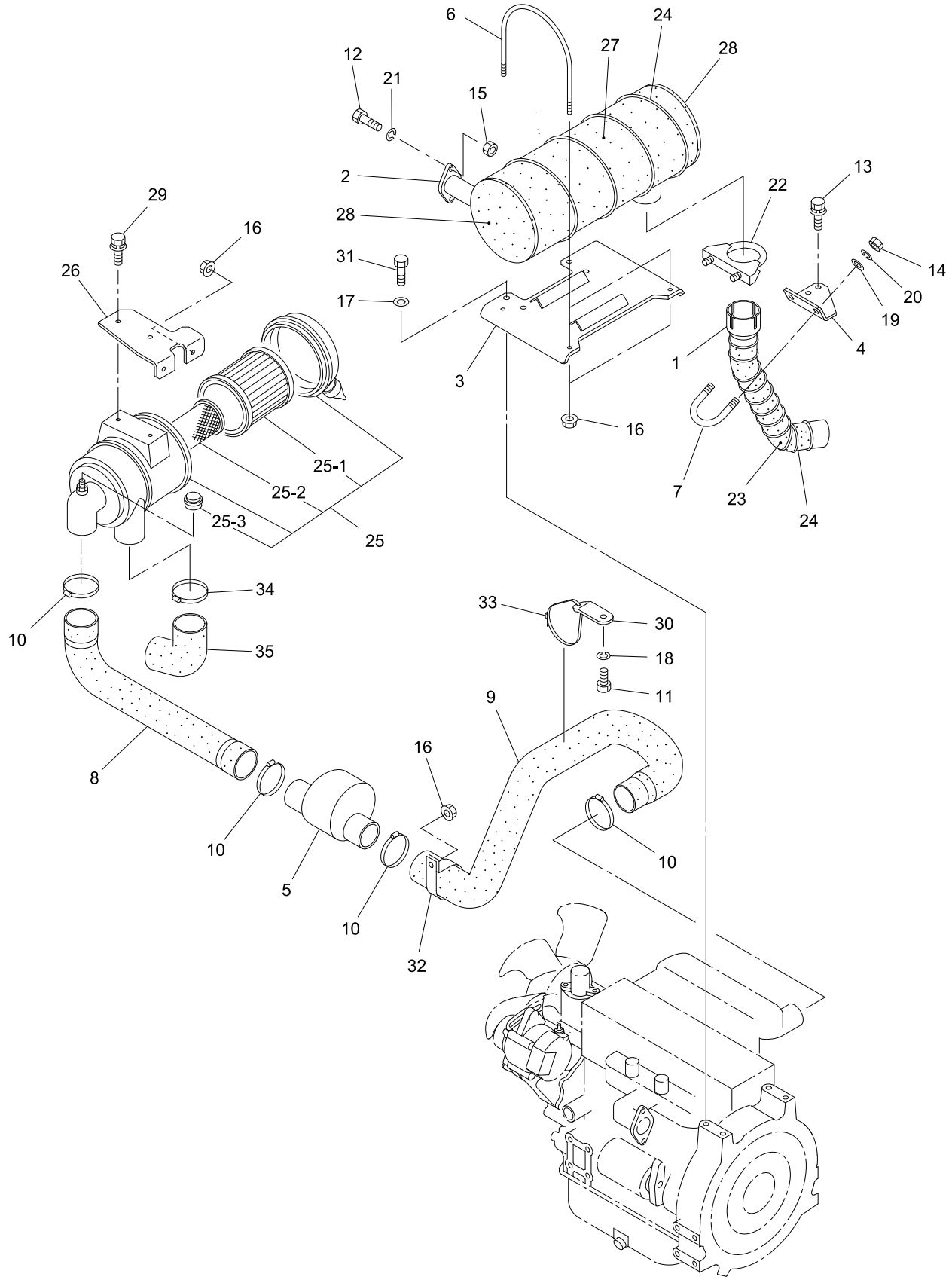

40V4-070200-1

https://truckmanualshub.com/

KEY No.	SUP.	PART No.	DESCRIPTION	Q'TY	CHAN.	SERIAL No.	REMARKS
0	×	F330 676 00	Air Cleaner & Muffler Ass'y	1		WZ010001-	
1		D584 141 00	*Pipe, Tail	1		WZ010001-	
2		0662 136 UA	*Muffler Ass'y	1		WZ010001-	
3		D419 294 00	*Bracket	1		WZ010001-	
4		D418 868 00	*Bracket	1		WZ010001-	
5		0661 800 29	*Resonator	1		WZ010001-	
6		D003 073 00	*Bolt, U	2		WZ010001-	
7		4003 021 01	*Bolt, U	1		WZ010001-	
8		0779 005 38	*Hose, Air Cleaner	1		WZ010001-	
9		0779 005 37	*Hose, Air Cleaner	1		WZ010001-	
10		0690 083 13	*Clamp, Hose	4		WZ010001-	
11		0555 160 30	*Bolt, Treatment	1		WZ010001-	M16X30
12		0514 100 30	*Bolt, Treatment	2		WZ010001-	M10X30 P=1.25
13		0518 100 20	*Bolt, Treatment (W/L.W, F.W)	2		WZ010001-	M10X20 P=1.25
14		0580 120 00	*Nut, Hex.	2		WZ010001-	M12
15		0535 100 00	*Nut, Treatment	2		WZ010001-	M10 P=1.25
16		0521 080 00	*Nut, Hex. (W/F.W)	7		WZ010001-	M8
17		0595 120 00	*Washer, Treatment	4		WZ010001-	M12
18		0590 160 00	*Washer, Lock	1		WZ010001-	M16
19		0593 120 00	*Washer, Flat	2		WZ010001-	M12
20		0590 120 00	*Washer, Lock	2		WZ010001-	M12
21		0590 100 00	*Washer, Lock	2		WZ010001-	M10
22		0690 089 36	*Clamp	1		WZ010001-	
23		4459 598 00	*Tape, Insulating	1		WZ010001-	
24		0322 108 99	*Wire	M		WZ010001-	L=1000X4
25		0745 265 UA	*Cleaner, Air	1		WZ010001-	
25-1		0745 265 08	**Element Ass'y	1		WZ010001-	
25-2		0745 265 09	**Element Ass'y (Inner)	1		WZ010001-	
25-3		D525 004 00	**Indicator	1		WZ010001-	
26		D419 289 00	*Bracket	1		WZ010001-	
27		D493 503 00	*Panel, Sponge	1		WZ010001-	
28		D493 504 00	*Panel, Sponge	2		WZ010001-	
29		0517 080 25	*Bolt, Treatment (W/L.W, F.W)	2		WZ010001-	M8X25
30		D419 496 00	*Bracket	1		WZ010001-	
31		0558 120 25	*Bolt, Treatment	4		WZ010001-	M12X25 P=1.25
32		D080 100 00	*Clamp, Hose	1		WZ010001-	
33		0820 067 10	*Band, Cable	1		WZ010001-	
34		0690 083 14	*Clamp, Hose	1		WZ010001-	
35		0779 003 59	*Hose	1		WZ010001-	

https://truckmanualshub.com/

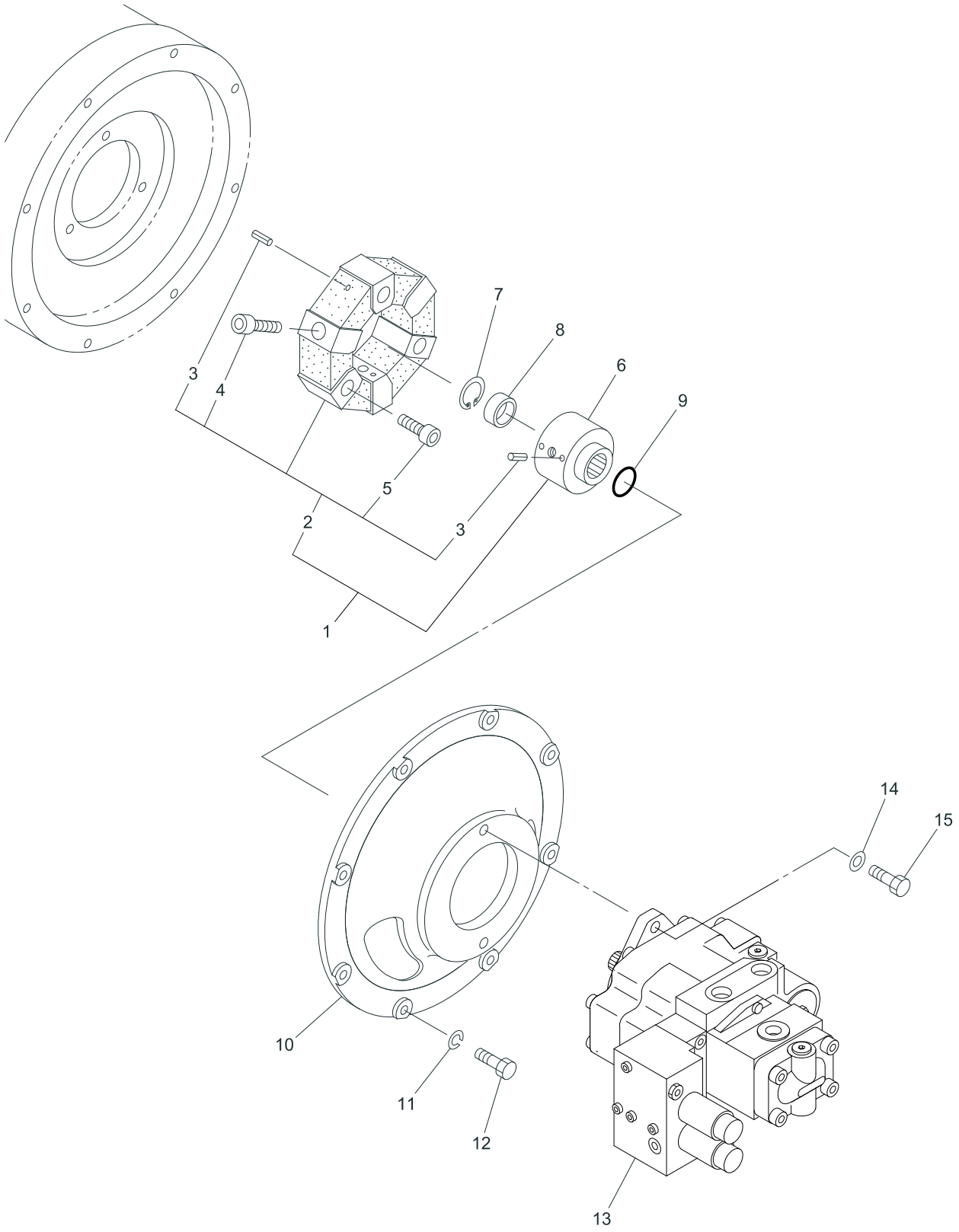

40V4-070300-1

https://truckmanualshub.com/

KEY No.	SUP.	PART No.	DESCRIPTION	Q'TY	CHAN.	SERIAL No.	REMARKS
0	×	F330 677 00	Drive Device, Oil Pump	1		WZ010001-	
1		0651 482 UA	*Cupling Ass'y	1		WZ010001-	
2		0651 421 UA	**Coupling Ass'y	1		WZ010001-	
3		0494 608 10	***Pin, Spring	9		WZ010001-	d=5X10
4		0562 140 45	***Bolt, Socket Head	3		WZ010001-	M14X45
5		0562 140 40	***Bolt, Socket Head	3		WZ010001-	M14X40
6		0651 482 02	**Hub, Coupling	1		WZ010001-	
7		0493 500 30	*Ring, Snap	1		WZ010001-	d=30
8		0761 721 20	*Cap	1		WZ010001-	
9		0760 710 19	*Ring, O	1		WZ010001-	P18-90B
10		D230 059 00	*Flange, Pump	1		WZ010001-	
11		0590 100 00	*Washer, Lock	8		WZ010001-	M10
12		0513 100 30	*Bolt, Treatment	8		WZ010001-	M10X30
13	#	0780 162 UA	**Pump Ass'y, Oil	1		WZ010001-	Sh. No. 5-7
14		0595 120 00	*Bolt, Treatment	2		WZ010001-	M12
15		0513 120 35	*Bolt, Treatment	2		WZ010001-	M12X35

https://truckmanualshub.com/

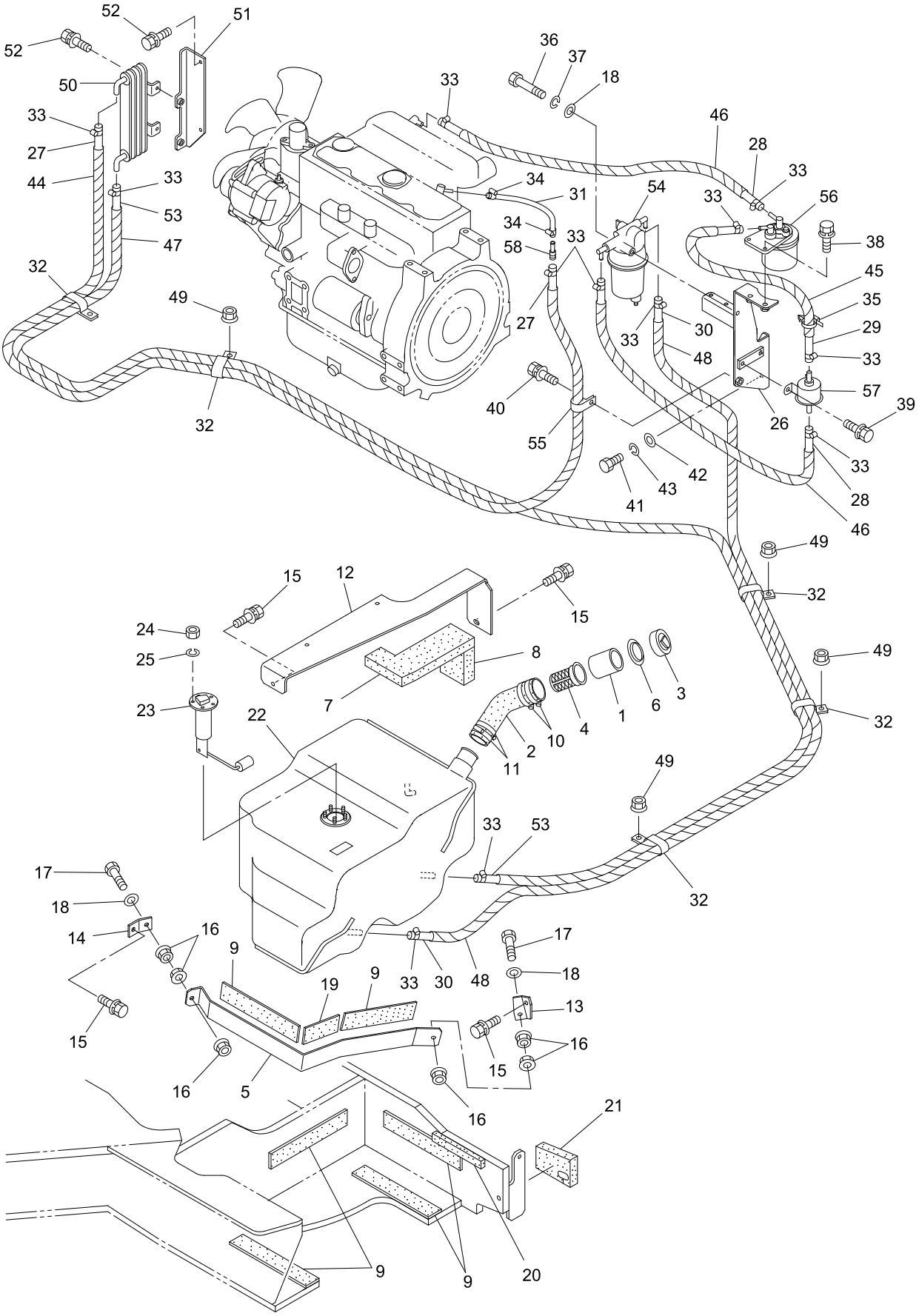

40V4-070400-1

https://truckmanualshub.com/

KEY No.	SUP.	PART No.	DESCRIPTION	Q'TY	CHAN.	SERIAL No.	REMARKS
0	×	F337 318 00	Tank Ass'y, Fuel	1		WZ010001-	
0-1	×	F337 321 00	Piping Ass'y, Fuel	1		WZ010001-	
1		0729 910 80	*Filter	1		WZ010001-	
2		D070 574 00	*Hose	1		WZ010001-	
3		0729 910 73	*Cap	1		WZ010001-	
4		0729 910 60	*Strainer	1		WZ010001-	
5		D083 152 00	*Clamp	1		WZ010001-	
6		D550 063 00	*Seal	1		WZ010001-	
7		D493 636 00	*Panel, Sponge	1		WZ010001-	
8		D493 644 00	*Panel, Sponge	1		WZ010001-	
9		D433 496 00	*Plate, Rubber	6		WZ010001-	
10		0690 083 14	*Clamp, Hose	2		WZ010001-	
11		0690 083 12	*Clamp, Hose	2		WZ010001-	
12		D206 825 00	*Frame	1		WZ010001-	
13		D418 836 00	*Bracket	1		WZ010001-	
14		D419 219 00	*Bracket	1		WZ010001-	
15		0518 100 20	*Bolt, Treatment (W/L.W, F.W)	4		WZ010001-	M10X20 P=1.25
16		0521 080 00	*Nut, Hex. (W/F.W)	6		WZ010001-	M8
17		0551 080 60	*Bolt, Hex.(Full-Thread)	2		WZ010001-	M8X60
18		0593 080 00	*Washer, Flat	3		WZ010001-	M8
19		D433 504 00	*Plate, Rubber	1		WZ010001-	
20		D493 645 00	*Panel, Sponge	1		WZ010001-	
21		D493 650 00	*Panel, Sponge	1		WZ010001-	
22		D284 229 00	*Tank, Fuel	1		WZ010001-	
23		0857 909 UA	*Gauge, Fuel	1		WZ010001-	
24		0580 050 00	*Nut, Hex.	5		WZ010001-	M5
25		0590 050 00	*Washer, Lock	5		WZ010001-	M5
26		D419 265 00	*Bracket	1		WZ010001-	
27		4070 572 51	*Hose, Fuel	M		WZ010001-	L=2300
28		4070 245 39	*Hose, Fuel	M		WZ010001-	L=450X2
29		4070 245 67	*Hose, Fuel	M		WZ010001-	L=330
30		4070 245 32	*Hose, Fuel	M		WZ010001-	L=1800
31		4070 899 04	*Hose, Fuel	M		WZ010001-	L=150
32		4080 000 29	*Clamp, Hose	5		WZ010001-	
33		0690 083 03	*Clamp, Hose	12		WZ010001-	
34		0690 081 90	*Clamp, Hose	2		WZ010001-	
35		0690 082 08	*Clamp, Hose	1		WZ010001-	
36		0550 080 70	*Bolt, Hex.	1		WZ010001-	M8X70
37		0590 080 00	*Washer, Lock	1		WZ010001-	M8
38		0517 080 25	*Bolt, Treatment (W/L.W, F.W)	2		WZ010001-	M8X25
39		0517 060 20	*Bolt, Treatment (W/L.W, F.W)	2		WZ010001-	M6X20
40		0518 100 20	*Bolt, Treatment (W/L.W, F.W)	1		WZ010001-	M10X20 P=1.25
41		0513 100 20	*Bolt, Teratment	2		WZ010001-	M10X20

https://truckmanualshub.com/

KEY No.	SUP.	PART No.	DESCRIPTION	Q'TY	CHAN.	SERIAL No.	REMARKS
42		0593 100 00	*Washer, Flat	2		WZ010001-	M10
43		0590 100 00	*Washer, Lock	2		WZ010001-	M10
44		0820 803 04	*Tube, Corrugate	M		WZ010001-	L=2200
45		0820 803 04	*Tube, Corrugate	M		WZ010001-	L=230
46		0820 803 04	*Tube, Corrugate	M		WZ010001-	L=350X2
47		0820 803 04	*Tube, Corrugate	M		WZ010001-	L=2550
48		0820 803 04	*Tube, Corrugate	M		WZ010001-	L=1700
49		0524 100 00	*Nut, Hex. (W/F.W)	4		WZ010001-	M10 P=1.25
50		0668 247 UA	*Cooler, Fuel	1		WZ010001-	
51		D419 195 00	*Bracket	1		WZ010001-	
51-1		D419 544 00	*Bracket	1		WZ010001-	For A/C
52		0517 080 20	*Bolt, Treatment (W/L.W, F.W)	4		WZ010001-	M8X20
53		4070 572 52	*Hose, Fuel	M		WZ010001-	L=2650
54		0857 914 UA	*Sedimenter, Water	1		WZ010001-	
54-1		0857 914 11	**Element Ass'y	1		WZ010001-	
55		4080 000 05	*Clamp, Hose	1		WZ010001-	
56		K15221 4317 0	*Cartridge, Fuel Filter	1		WZ010001-	
57		KR1401 5135 2	*Pump, Fuel	1		WZ010001-	
58		K17490 42360	*Joint, Pipe	1		WZ010001-	

https://truckmanualshub.com/

[Memo]

https://truckmanualshub.com/

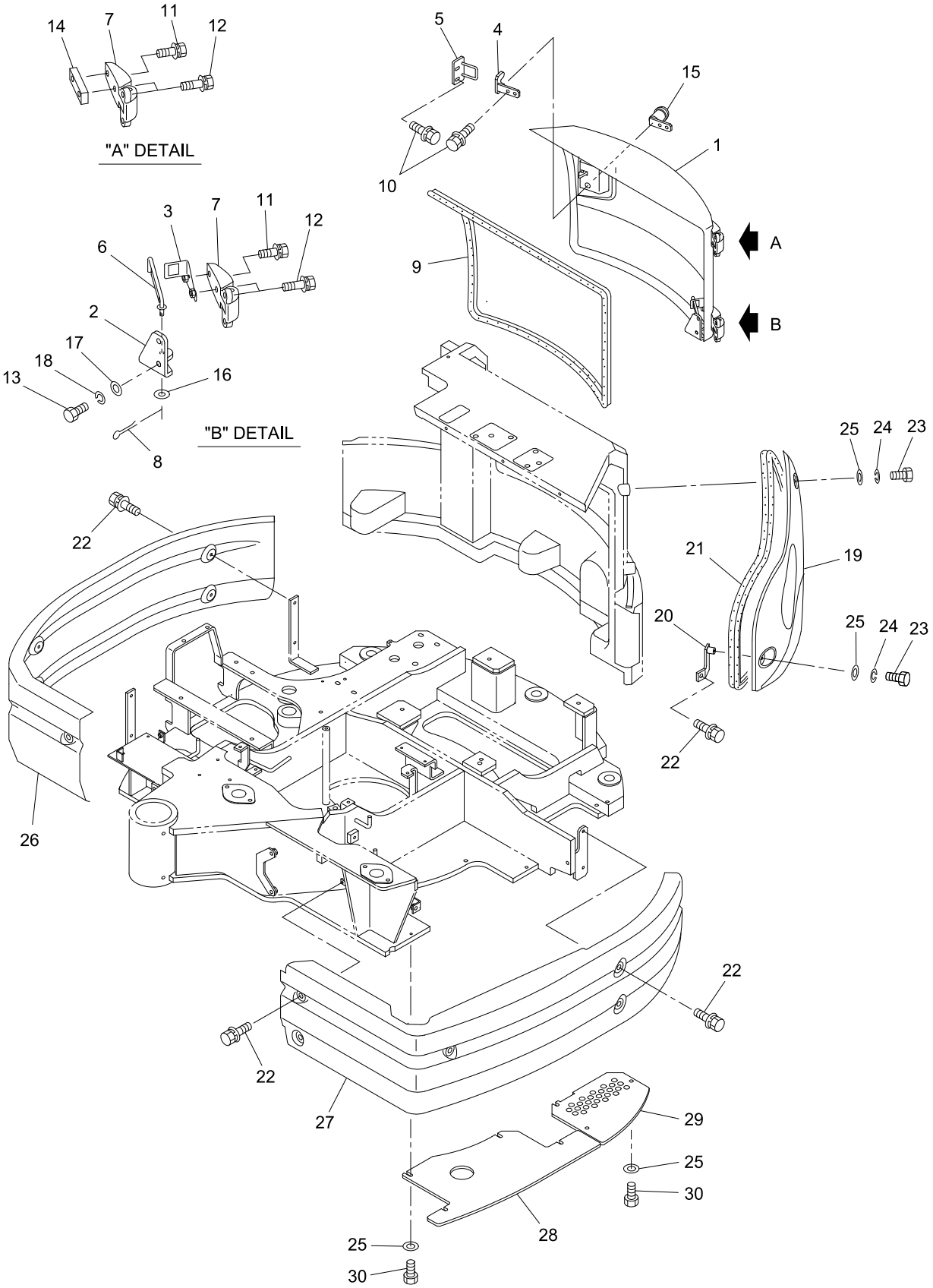

40V4-080100-1

https://truckmanualshub.com/

KEY No.	SUP.	PART No.	DESCRIPTION	Q'TY	CHAN.	SERIAL No.	REMARKS
0	×	F355 190 00	Cover Ass'y	1		WZ010001-	
0-1	×	F361 722 00	Cover Ass'y	1		WZ010001-	
1		D458 259 00	*Cover	1		WZ010001-	
2		D419 542 00	*Bracket	1		WZ010001-	
3		D418 908 00	*Bracket	1		WZ010001-	
4		D418 909 00	*Bracket	1		WZ010001-	
5		D419 323 00	*Bracket	1		WZ010001-	
6		D260 552 00	*Stay	1		WZ010001-	
7		0690 016 19	*Hinge	2		WZ010001-	
8		0599 010 15	*Pin, Cotter	1		WZ010001-	d=1.6X15
9		0910 870 05	*Seal	M		WZ010001-	L=2500
10		0517 080 16	*Bolt, Treatment (W/L.W, F.W)	4		WZ010001-	M8X16
11		0517 080 30	*Bolt, Treatment (W/L.W, F.W)	2		WZ010001-	M8X30
12		0517 080 35	*Bolt, Treatment (W/L.W, F.W)	6		WZ010001-	M8X35
13		0513 080 20	*Bolt, Treatment	2		WZ010001-	M8X20
14		D400 273 00	*Plate	1		WZ010001-	
15		0690 220 91	*Lock Ass'y	1		WZ010001-	
16		0593 060 00	*Washer, Flat	1		WZ010001-	M6
17		0593 080 00	*Washer, Flat	2		WZ010001-	M8
18		0590 080 00	*Washer, Lock	2		WZ010001-	M8
19		D458 257 00	*Cover	1		WZ010001-	
20		D418 945 00	*Bracket	1		WZ010001-	
21		0910 870 05	*Seal	M		WZ010001-	L=2300
22		0518 100 25	*Bolt, Treatment (W/L.W, F.W)	11		WZ010001-	M10X25 P=1.25
23		0550 100 20	*Bolt, Hex.	3		WZ010001-	M10X20
24		0590 100 00	*Washer, Lock	3		WZ010001-	M10
25		0593 100 00	*Washer, Flat	10		WZ010001-	M10
26		D458 059 00	*Cover	1		WZ010001-	
27		D458 060 00	*Cover	1		WZ010001-	
28		D458 288 00	*Cover	1		WZ010001-	
29		D458 468 00	*Cover	1		WZ010001-	
30		0480 100 20	*Bolt, Treatment (W/Flange)	7		WZ010001-	M10X20 P=1.25

https://truckmanualshub.com/

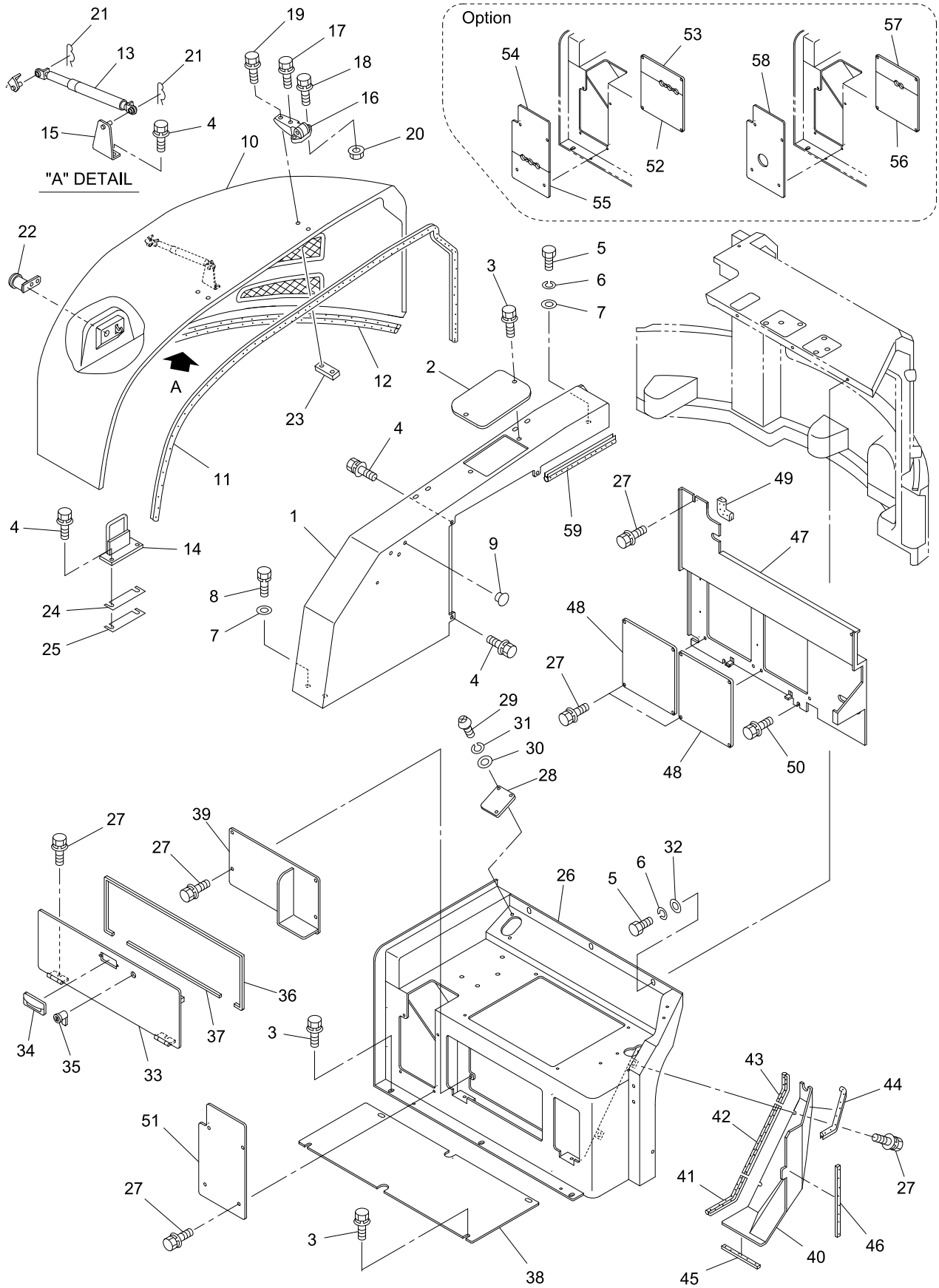

https://truckmanualshub.com/

KEY No.	SUP.	PART No.	DESCRIPTION	Q'TY	CHAN.	SERIAL No.	REMARKS
0	×	F355 190 00	Cover Ass'y	1		WZ010001-	
0-1	×	F361 722 00	Cover Ass'y	1		WZ010001-	
1		D458 634 00	*Cover	1		WZ010001-	
2		D458 279 00	*Cover	1		WZ010001-	
3		0518 100 25	*Bolt, Treatment (W/L.W, F.W)	9		WZ010001-	M10X25 P=1.25
4		0518 100 20	*Bolt, Treatment (W/L.W, F.W)	7		WZ010001-	M10X20 P=1.25
5		0550 100 20	*Bolt, Hex.	4		WZ010001-	M10X20
6		0590 100 00	*Washer, Lock	4		WZ010001-	M10
7		D006 136 00	*Washer	3		WZ010001-	
8		0520 100 20	*Bolt, Treatment (W/L.W)	2		WZ010001-	M10X20 P=1.25
9		0690 201 04	*Plug, Hole	3		WZ010001-	
10		D458 072 00	*Cover	1		WZ010001-	
11		4550 726 00	*Seal	M		WZ010001-	L=2300
12		4550 873 00	*Seal	M		WZ010001-	L=2150
13		0652 274 UA	*Stay, Dumper	1		WZ010001-	
14		D419 450 00	*Bracket	1		WZ010001-	
15		D419 276 00	*Bracket	1		WZ010001-	
16		0690 016 19	*Hinge	2		WZ010001-	
17		0517 080 50	*Bolt, Treatment (W/L.W, F.W)	2		WZ010001-	M8X50
18		0517 080 35	*Bolt, Treatment (W/L.W, F.W)	4		WZ010001-	M8X35
19		0517 080 40	*Bolt, Treatment (W/L.W, F.W)	2		WZ010001-	M8X40
20		0521 080 00	*Nut, Hex. (W/F.W)	4		WZ010001-	M8
21		4016 030 04	*Pin, Snap	2		WZ010001-	
22		0690 220 91	*Lock Ass'y	1		WZ010001-	
23		D400 273 00	*Plate	4		WZ010001-	
24		D007 023 00	*Shim	AR		WZ010001-	t=2.3
25		D007 034 02	*Shim	AR		WZ010001-	t=1.6
26		D206 906 00	*Frame	1		WZ010001-	
27		0517 080 20	*Bolt, Treatment (W/L.W, F.W)	18		WZ010001-	M8X20
28		D418 970 00	*Bracket	1		WZ010001-	
29		4004 364 01	*Bolt, Button Head	2		WZ010001-	M6X18
30		0594 060 00	*Washer, Flat	2		WZ010001-	M6
31		0596 060 00	*Washer, Lock	2		WZ010001-	M6
32		0593 100 00	*Washer, Flat	3		WZ010001-	M10
33		D458 236 00	*Cover	1		WZ010001-	
34		0690 211 08	*Handle	1		WZ010001-	
35		0690 220 92	*Lock Ass'y	1		WZ010001-	
36		D551 006 01	*Seal	1		WZ010001-	L=1000
37		D551 006 02	*Seal	1		WZ010001-	L=410
38		D418 564 00	*Bracket	1		WZ010001-	
39		D458 436 00	*Cover	1		WZ010001-	
40		D458 461 00	*Cover	1		WZ010001-	
41		0910 870 05	*Seal	M		WZ010001-	L=160

https://truckmanualshub.com/

KEY No.	SUP.	PART No.	DESCRIPTION	Q'TY	CHAN.	SERIAL No.	REMARKS
42		0910 870 05	*Seal	M		WZ010001-	L=225
43		0910 870 05	*Seal	M		WZ010001-	L=110
44		0910 870 05	*Seal	M		WZ010001-	L=270
45		D551 009 04	*Seal	1		WZ010001-	L=160
46		D551 009 05	*Seal	1		WZ010001-	L=270
47		D458 417 00	*Cover	1		WZ010001-	
48		D458 291 00	*Cover	2		WZ010001-	
49		0910 870 05	*Seal	M		WZ010001-	L=100
50		0518 100 30	*Bolt, Treatment (W/L.W, F.W)	2		WZ010001-	M10X30 P=1.25
51		D458 514 00	*Cover	1		WZ010001-	
52		D458 501 00	*Cover	1		WZ010001-	For A/C
53		D458 502 00	*Cover	1		WZ010001-	For A/C
54		D458 568 00	*Cover	1		WZ010001-	For A/C
55		D458 516 00	*Cover	1		WZ010001-	For A/C
56		D458 580 00	*Cover	1		WZ010001-	For Car Heater
57		D458 581 00	*Cover	1		WZ010001-	For Car Heater
58		D458 515 00	*Cover	1		WZ010001-	For Car Heater
59		0910 870 05	*Seal	M		WZ010001-	L=274

https://truckmanualshub.com/

[Memo]

https://truckmanualshub.com/

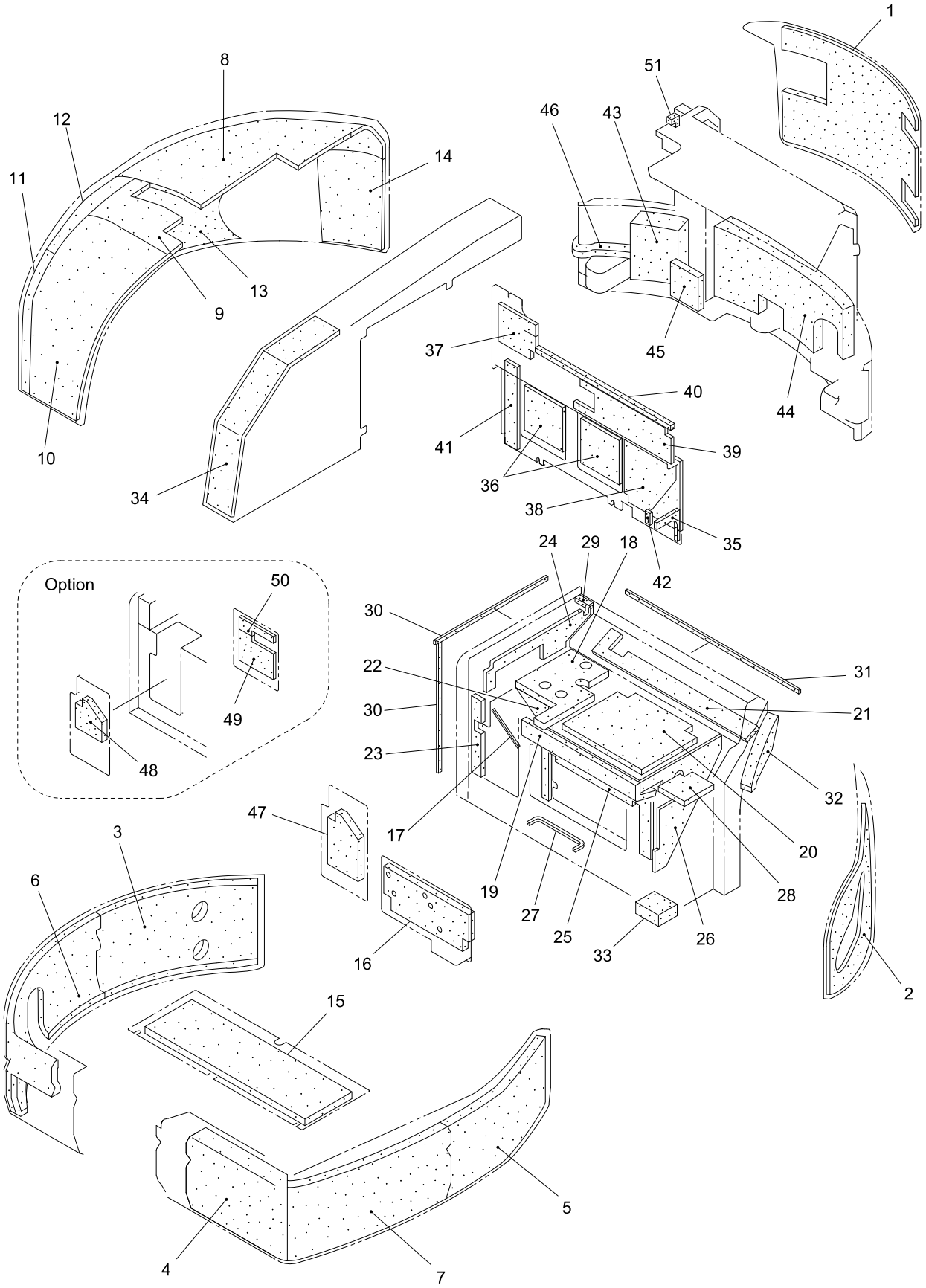

40V4-080300-1

https://truckmanualshub.com/

KEY No.	SUP.	PART No.	DESCRIPTION	Q'TY	CHAN.	SERIAL No.	REMARKS
0	×	F355 190 00	Absorbent Ass'y, Noise	1		WZ010001-	
0-1	×	F361 722 00	Absorbent Ass'y, Noise	1		WZ010001-	
1		D493 685 00	*Panel, Sponge	1		WZ010001-	
2		D493 638 00	*Panel, Sponge	1		WZ010001-	
3		D493 622 00	*Panel, Sponge	1		WZ010001-	
4		D493 535 00	*Panel, Sponge	1		WZ010001-	
5		D493 601 00	*Panel, Sponge	1		WZ010001-	
6		D493 599 00	*Panel, Sponge	1		WZ010001-	
7		D493 600 00	*Panel, Sponge	1		WZ010001-	
8		D493 528 00	*Panel, Sponge	1		WZ010001-	
9		D493 529 00	*Panel, Sponge	1		WZ010001-	
10		D493 530 00	*Panel, Sponge	1		WZ010001-	
11		D493 641 00	*Panel, Sponge	1		WZ010001-	
12		D493 686 00	*Panel, Sponge	1		WZ010001-	
13		D493 642 00	*Panel, Sponge	1		WZ010001-	
14		D493 643 00	*Panel, Sponge	1		WZ010001-	
15		D493 434 00	*Panel, Sponge	1		WZ010001-	
16		D493 640 00	*Panel, Sponge	1		WZ010001-	
17		D551 007 01	*Seal	1		WZ010001-	L=155
18		D493 462 00	*Panel, Sponge	1		WZ010001-	
19		D493 463 00	*Panel, Sponge	1		WZ010001-	
20		D493 478 00	*Panel, Sponge	1		WZ010001-	
21		D493 654 00	*Panel, Sponge	1		WZ010001-	
22		D493 480 00	*Panel, Sponge	1		WZ010001-	
23		D493 481 00	*Panel, Sponge	1		WZ010001-	
24		D493 482 00	*Panel, Sponge	1		WZ010001-	
25		D493 483 00	*Panel, Sponge	1		WZ010001-	
26		D493 484 00	*Panel, Sponge	1		WZ010001-	
27		4550 519 00	*Seal	M		WZ010001-	L=250
28		D493 679 00	*Panel, Sponge	1		WZ010001-	
29		D493 680 00	*Panel, Sponge	1		WZ010001-	
30		D551 009 06	*Panel, Sponge	2		WZ010001-	
31		D551 009 07	*Panel, Sponge	1		WZ010001-	
32		D493 687 00	*Panel, Sponge	1		WZ010001-	
33		D493 689 00	*Panel, Sponge	1		WZ010001-	
34		D493 637 00	*Panel, Sponge	1		WZ010001-	
35		D493 655 00	*Panel, Sponge	1		WZ010001-	
36		D493 541 00	*Panel, Sponge	2		WZ010001-	
37		D493 692 00	*Panel, Sponge	1		WZ010001-	
38		D493 667 00	*Panel, Sponge	1		WZ010001-	
39		D493 693 00	*Panel, Sponge	1		WZ010001-	
40		D551 008 01	*Panel, Sponge	1		WZ010001-	
41		D493 684 00	*Panel, Sponge	1		WZ010001-	
42		D493 656 00	*Panel, Sponge	1		WZ010001-	
43		D493 681 00	*Panel, Sponge	1		WZ010001-	

https://truckmanualshub.com/

KEY No.	SUP.	PART No.	DESCRIPTION	Q'TY	CHAN.	SERIAL No.	REMARKS
44		D493 516 00	*Panel, Sponge	1		WZ010001-	
45		D493 519 00	*Panel, Sponge	1		WZ010001-	
46		D493 682 00	*Panel, Sponge	1		WZ010001-	
47		D493 721 00	*Panel, Sponge	1		WZ010001-	
48		D493 696 00	*Panel, Sponge	1		WZ010001-	For A/C
49		D493 698 00	*Panel, Sponge	1		WZ010001-	For A/C
50		D493 699 00	*Panel, Sponge	1		WZ010001-	For A/C
51		D493 733 00	*Panel, Sponge	1		WZ010001-	

https://truckmanualshub.com/

[Memo]

https://truckmanualshub.com/

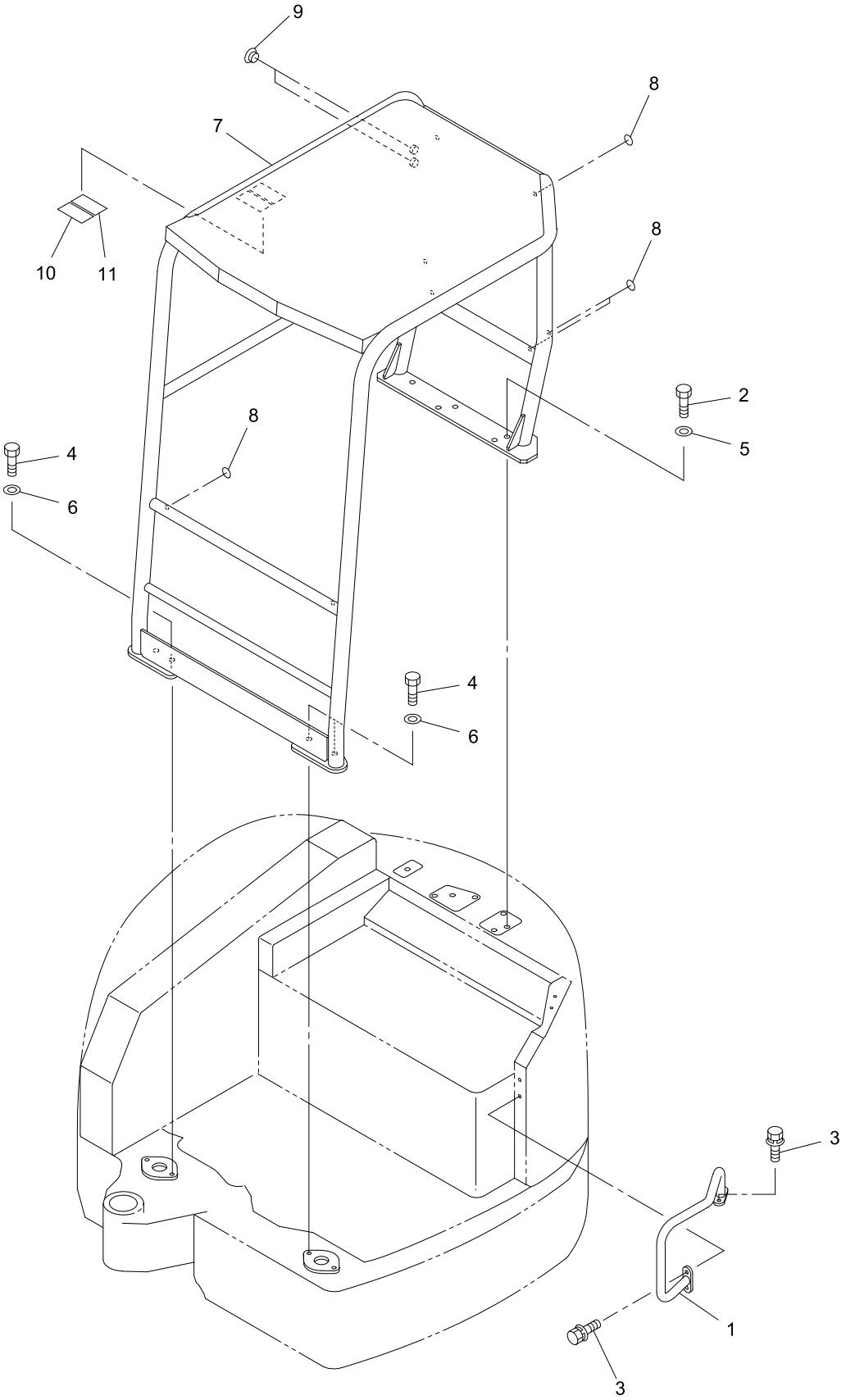

40V4-080400-1

https://truckmanualshub.com/

KEY No.	SUP.	PART No.	DESCRIPTION	Q'TY	CHAN.	SERIAL No.	REMARKS
0	×	F355 211 00	Canopy Ass'y (For Rops)	1		WZ010001-	
0-1	×	F355 221 00	Canopy Ass'y (For Tops/Rops)	1		WZ010001-	
1		D470 805 00	*Guard	1		WZ010001-	
2		0555 160 50	*Bolt, Treatment	5		WZ010001-	M16X50
3		0439 100 25	*Bolt, Treatment (W/L.W, F.W)	4		WZ010001-	M10X25 P=1.25
4		0555 120 40	*Bolt, Treatment	4		WZ010001-	M12X40
5		0595 160 00	*Washer, Treatment	5		WZ010001-	M16
6		0595 120 00	*Washer, Treatment	4		WZ010001-	M12
7		D206 875 00	*Frame	1		WZ010001-	
8		D405 272 00	*Seal	8		WZ010001-	
9		0690 201 08	*Plug, Hole	2		WZ010001-	M10
10		D408 376 00	*Decal (For Tops)	1		WZ010001-	
11		D408 375 00	*Decal (For Rops)	1		WZ010001-	

https://truckmanualshub.com/

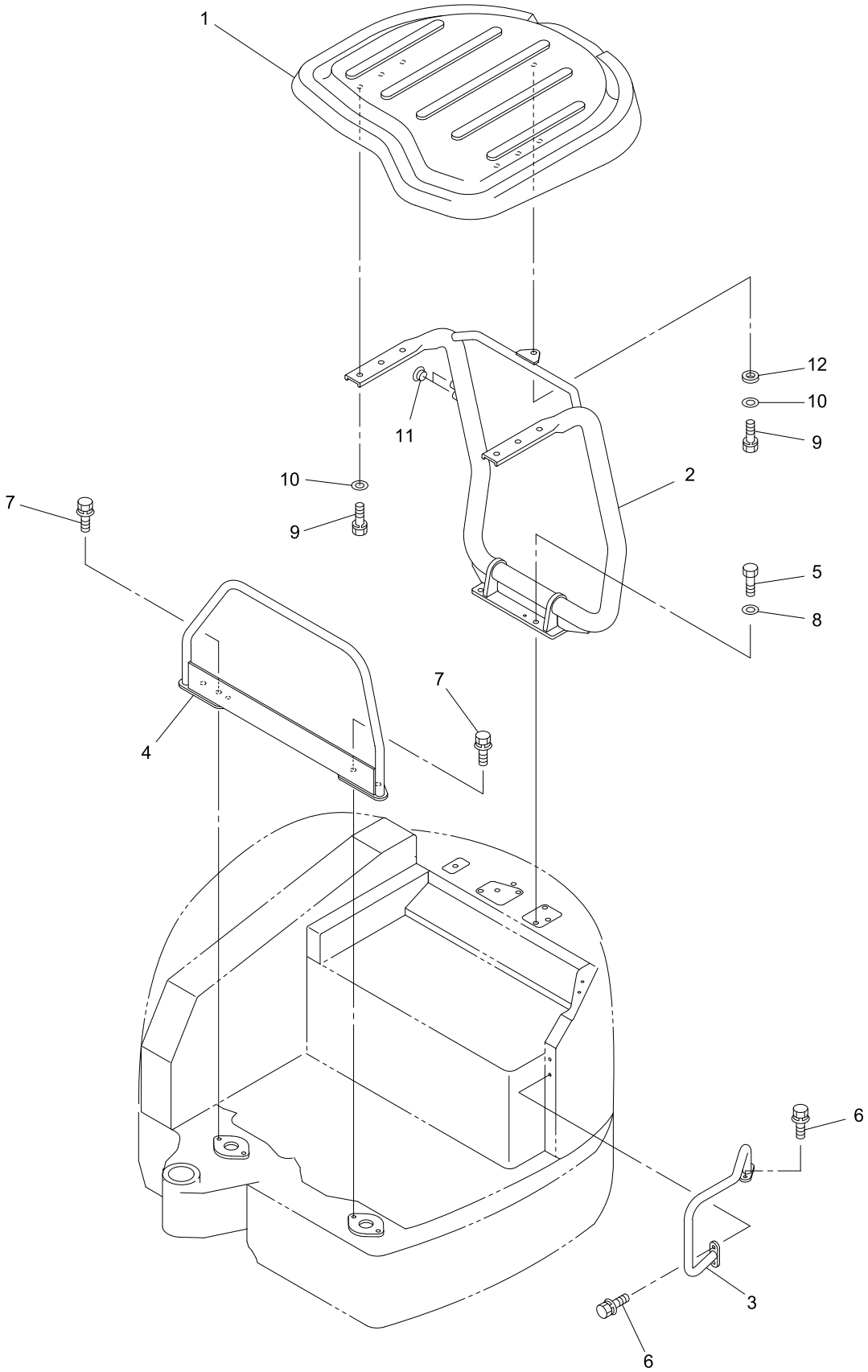

V4ALL-08040A-1

https://truckmanualshub.com/

KEY No.	SUP.	PART No.	DESCRIPTION	Q'TY	CHAN.	SERIAL No.	REMARKS
0	×	F355 197 00	Canopy Ass'y	1		WZ010001-	
1		D448 005 00	*Canopy	1		WZ010001-	
2		D206 873 00	*Frame	1		WZ010001-	
3		D470 805 00	*Guard	1		WZ010001-	
4		D470 700 00	*Guard	1		WZ010001-	
5		0555 160 50	*Bolt, Treatment	4		WZ010001-	M16X50
6		0439 100 25	*Bolt, Treatment (W/L.W, F.W)	4		WZ010001-	M10X25 P=1.25
7		0518 120 40	*Bolt, Treatment (W/L.W, F.W)	4		WZ010001-	M12X40 P=1.25
8		0595 160 00	*Washer, Treatment	4		WZ010001-	M16
9		0519 080 25	*Bolt, Treatment (W/L.W)	7		WZ010001-	M8X25
10		4006 119 01	*Washer	7		WZ010001-	M8
11		0690 201 08	*Plug	2		WZ010001-	M10
12		4006 386 00	*Washer, Rubber	1		WZ010001-	

https://truckmanualshub.com/

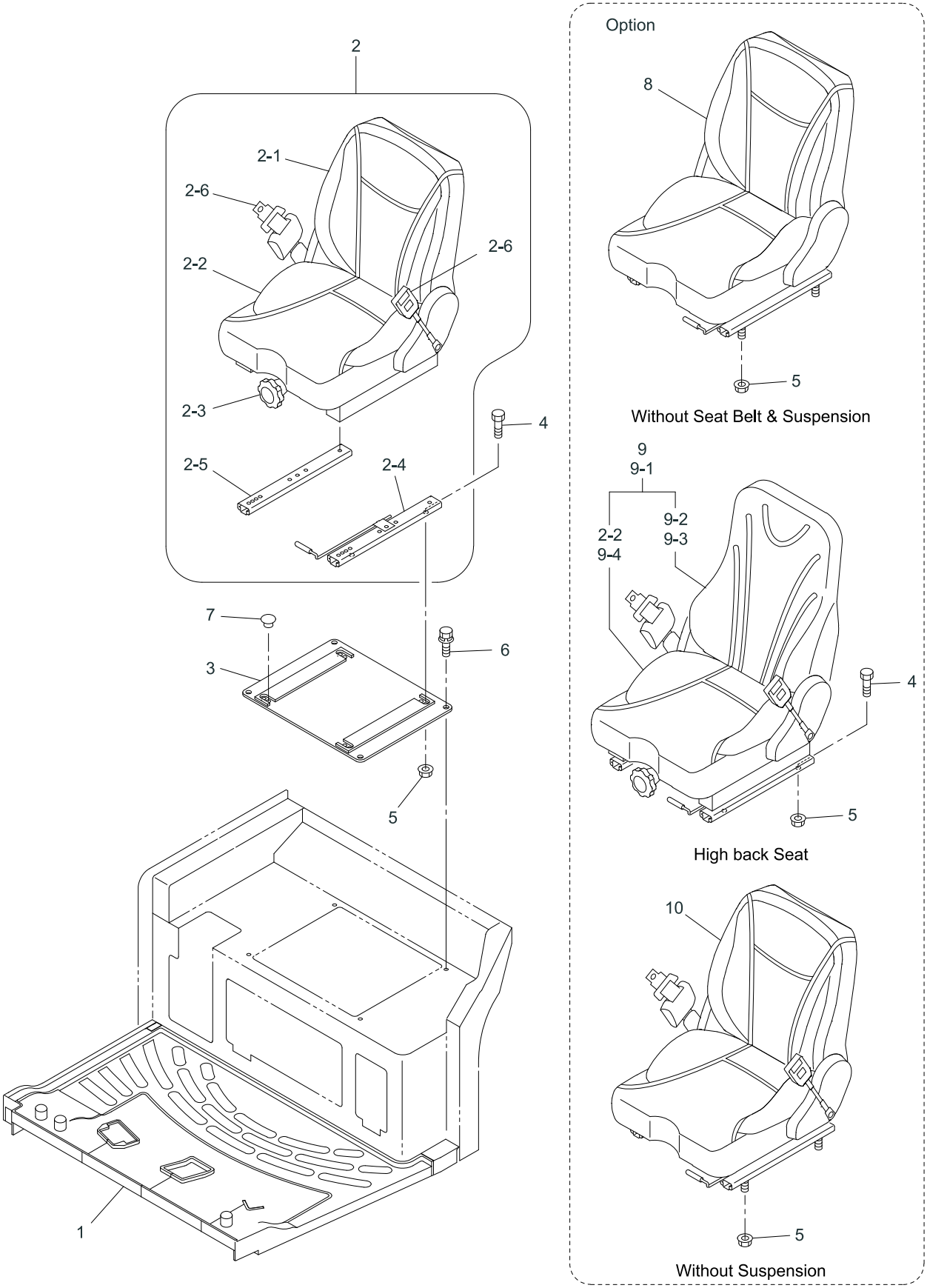

V4ALL-080500-1

https://truckmanualshub.com/

KEY No.	SUP.	PART No.	DESCRIPTION	Q'TY	CHAN.	SERIAL No.	REMARKS
0	×	F355 184 00	Seat Ass'y, Operator (W/Suspension)	1		WZ010001-	
0-1	×	F355 183 00	Seat Ass'y, Operator	1		WZ010001-	
0-2	×	F355 185 00	Seat Ass'y, Operator	1		WZ010001-	
0-3	×	F355 196 00	Seat Ass'y, Operator	1		WZ010001-	
0-3	×	F353 206 00	Mat Ass'y	1		WZ010001-	
1		D581 191 00	*Mat (For Canopy)	1		WZ010001-	STD
1-1		D581 203 00	*Mat (For Canopy, Pedal)	1		WZ010001-	
1-2		D581 204 00	*Mat (For Cabin)	1		WZ010001-	
1-3		D581 205 00	*Mat (For Cabin, Pedal)	1		WZ010001-	
2		0655 563 UA	*Seat, Operator (W/Suspension)	1		WZ010001-	W/Seat Belt
2-1		0655 563 01	**Seat Ass'y, Back	1		WZ010001-	
2-2		0655 563 02	**Seat Ass'y, Cushion	1		WZ010001-	
2-3		0655 563 03	**Suspension Ass'y	1		WZ010001-	
2-4		0655 563 04	**Rail Ass'y, Slid (L.H)	1		WZ010001-	
2-5		0655 563 05	**Rail Ass'y, Slid (R.H)	1		WZ010001-	
2-6		0655 563 10	**Belt Ass'y, Seat	1		WZ010001-	
3		D419 344 00	*BRACKET	1		WZ010001-	
4		0550 080 20	*Bolt, Hex.	4		WZ010001-	M8X20
5		0521 080 00	*Nut, Hex. (W/F.W)	4		WZ010001-	M8
6		0439 100 20	*Bolt, Treatment (W/L.W, F.W)	4		WZ010001-	M10X20 P=1.25
7		0690 201 09	*Plug	4		WZ010001-	
8		0655 567 UA	*Seat, Operator (W/O Seat Belt)	1		WZ010001-	
9		0655 568 UA	*Seat, Operator (High Back Seat)	1		WZ010001-	Leather
9-1		0655 569 UA	*Seat, Operator (High Back Seat)	1		WZ010001-	Fabric
9-2		0655 568 01	**Seat Ass'y, Back	1		WZ010001-	Leather
9-3		0655 569 01	**Seat Ass'y, Back	1		WZ010001-	Fabric
9-4		0655 569 02	**Seat Ass'y, Cushion	1		WZ010001-	Fabric
10		0655 564 UA	*Seat, Operator (Leather)	1		WZ010001-	W/O Suspension

https://truckmanualshub.com/

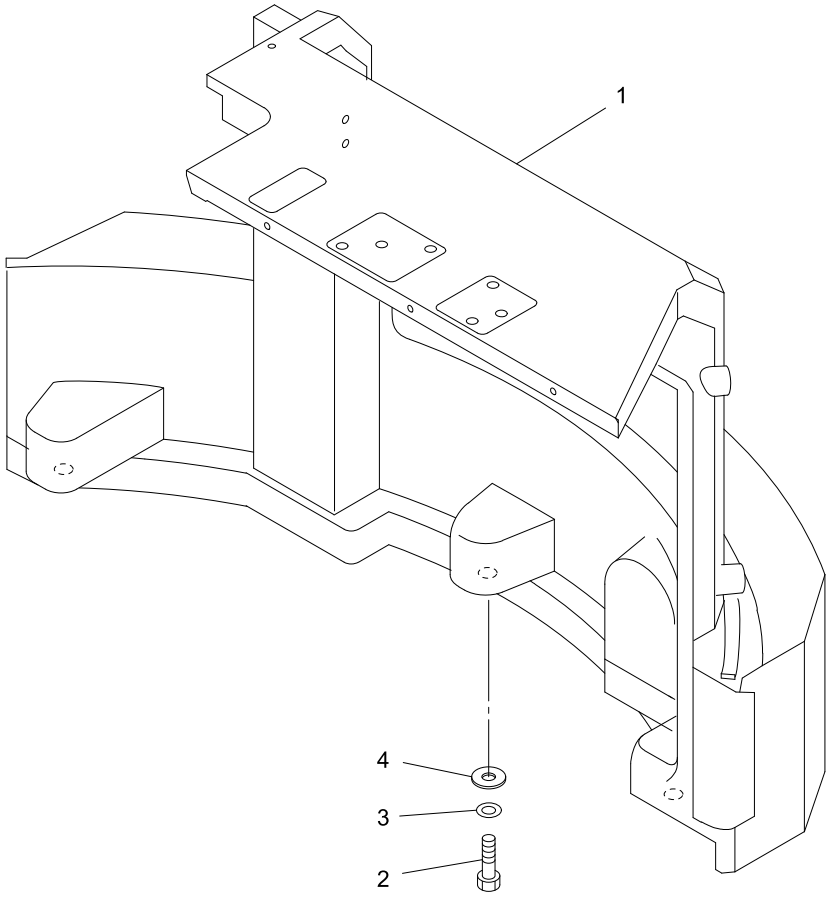

60V4-080600-1

https://truckmanualshub.com/

KEY No.	SUP.	PART No.	DESCRIPTION	Q'TY	CHAN.	SERIAL No.	REMARKS
0	×	F373 220 00	Weight Ass'y, Counter	1		WZ010001-	
1		D206 837 00	*Weight, Counter	1		WZ010001-	
2		0555 241 00	*Bolt, Treatment	3		WZ010001-	M24X100
3		0595 240 00	*Washer, Treatment	3		WZ010001-	M24
4		D006 032 00	*Washer	3		WZ010001-	M24

https://truckmanualshub.com/

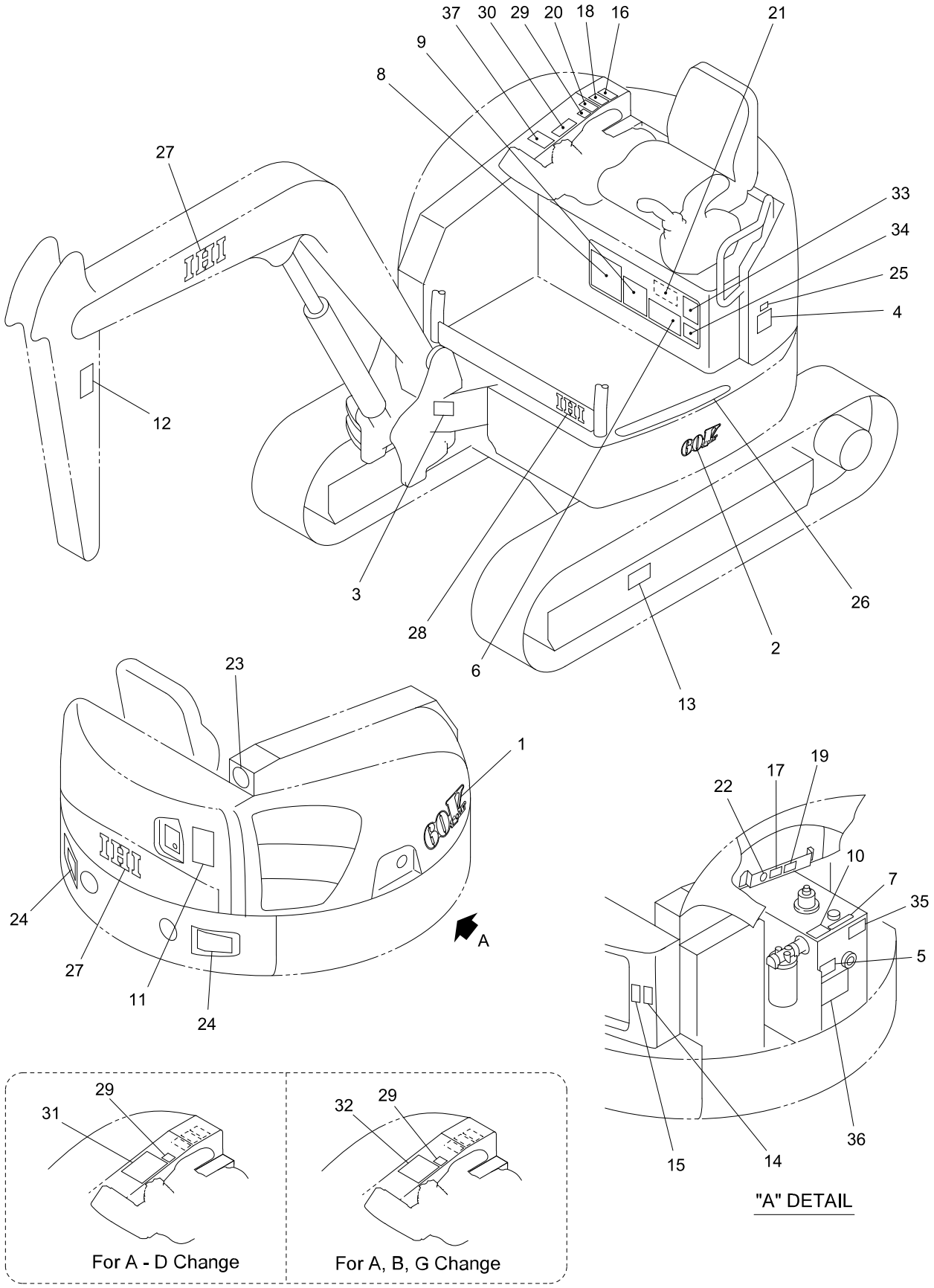

60V4-080700-1

https://truckmanualshub.com/

KEY No.	SUP.	PART No.	DESCRIPTION	Q'TY	CHAN.	SERIAL No.	REMARKS
0	×	F377 851 00	Decal Ass'y	1		WZ010001-	
0-1	×	F377 854 00	Decal Ass'y	1		WZ010001-	
0-2	×	F377 856 00	Decal Ass'y	1		WZ010001-	
1		D408 409 00	*Decal (Model)	1		WZ010001-	
2		D408 418 00	*Decal (Model)	1		WZ010001-	
3	×	D405 094 00	*Decal (Serial No.)	1		WZ010001-	
3-1		0497 035 00	*Screw, Drive	4		WZ010001-	d=3
4		D408 324 00	*Decal (Oil)	1		WZ010001-	
5		D406 490 00	*Decal (Oil Check)	1		WZ010001-	
6		D408 313 00	*Decal (Lub. Chart)	1		WZ010001-	
7		4447 479 00	*Decal (Oil)	1		WZ010001-	
8		D408 325 00	*Decal (Engine Daily Check)	1		WZ010001-	
9		D406 597 00	*Decal (Safety Works)	1		WZ010001-	
10		D408 328 00	*Decal (Tank Decompression)	1		WZ010001-	
11		D405 450 00	*Decal (Safety Swing)	1		WZ010001-	
12		D405 454 00	*Decal (Caution)	2		WZ010001-	
13		D405 455 00	*Decal (Caution)	2		WZ010001-	
14		D405 424 00	*Decal (Caution)	1		WZ010001-	
15		D405 452 00	*Decal (Caution)	1		WZ010001-	
16		D405 332 00	*Decal (Caution)	1		WZ010001-	
17		D405 462 00	*Decal (Caution)	1		WZ010001-	
18		D405 451 00	*Decal (Caution)	1		WZ010001-	
19		D405 463 00	*Decal (Caution)	1		WZ010001-	
20		D405 449 00	*Decal (Caution)	1		WZ010001-	
21		D405 373 00	*Decal (Caution)	1		WZ010001-	
22		4407 035 00	*Decal (Anti-Freezing Solution)	1		WZ010001-	
23		D406 631 00	*Decal (Environment)	1		WZ010001-	
24		D408 371 00	*Decal (Reflector)	2		WZ010001-	
25		D407 943 00	*Decal (EPA Regulation)	1		WZ010001-	
26		D408 370 00	*Plate, Nonslip	1		WZ010001-	
27		D408 402 00	*Decal (IHI)	3		WZ010001-	
28		D408 403 00	*Decal (IHI)	1		WZ010001-	
29		D406 602 00	*Decal (Blade, Pedal)	1		WZ010001-	
30		D406 603 00	*Decal (Control A)	1		WZ010001-	
30-1		D406 604 00	*Decal (Control B)	1		WZ010001-	
30-2		D406 605 00	*Decal (Control C)	1		WZ010001-	
30-3		D406 606 00	*Decal (Control D)	1		WZ010001-	
30-4		D406 608 00	*Decal (Control G)	1		WZ010001-	
31		D406 609 00	*Decal (Control A-D)	1		WZ010001-	
32		D406 610 00	*Decal (Control A, B, G)	1		WZ010001-	
33		D408 319 00	*Decal (Specification)	1		WZ010001-	
34		D408 321 00	*Decal (Bucket Specification)	1		WZ010001-	
35		4447 874 00	*Decal (Spare Piping Change)	1		WZ010001-	
36		4447 653 00	*Decal (Breaker Cation)	1		WZ010001-	
37		D408 354 00	*Decal (Spare Pedal)	1		WZ010001-	

https://truckmanualshub.com/

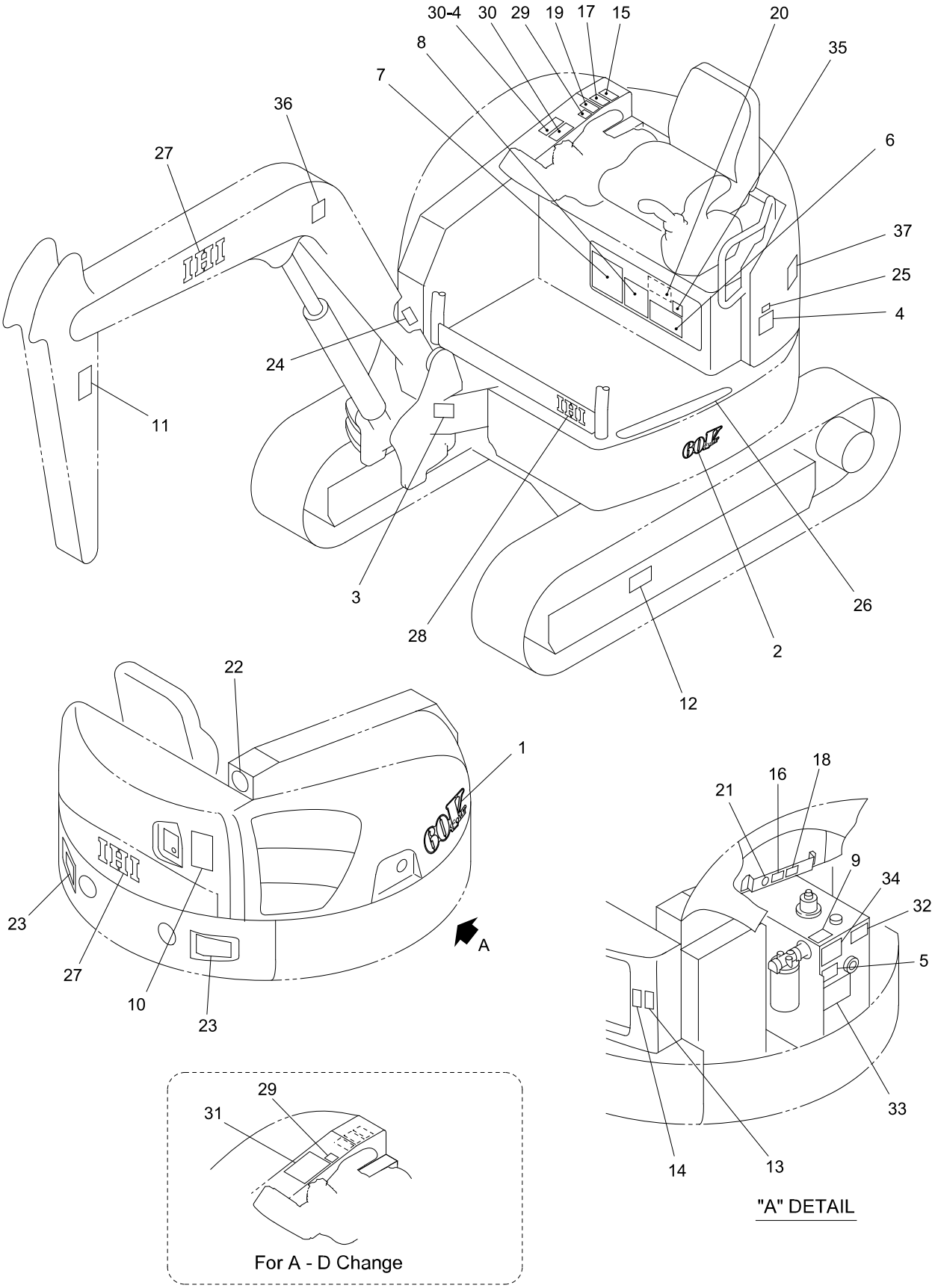

60V4-08070A-1

https://truckmanualshub.com/

KEY No.	SUP.	PART No.	DESCRIPTION	Q'TY	CHAN.	SERIAL No.	REMARKS
0	×	F377 851 00	Decal Ass'y	1		WZ010001-	
0-1	×	F377 854 00	Decal Ass'y	1		WZ010001-	
1		D408 409 00	*Decal (Model)	1		WZ010001-	
2		D408 418 00	*Decal (Model)	1		WZ010001-	
3	×	D405 094 00	*Decal (Serial No.)	1		WZ010001-	
3-1	×	D405 091 00	*Decal (Serial No.) (CE)	1		WZ010001-	
3-2		0497 035 00	*Screw, Drive	4		WZ010001-	d=3
4		4407 974 00	*Decal (Oil)	1		WZ010001-	
5		D406 504 00	*Decal (Oil Check)	1		WZ010001-	
6		D408 355 00	*Decal (Lub. Chart)	1		WZ010001-	
7		D408 326 00	*Decal (Engine Daily Check)	1		WZ010001-	
8		4406 458 00	*Decal (Safety Works)	1		WZ010001-	
9		D408 424 00	*Decal (Tank Decompression)	1		WZ010001-	
10		D405 507 00	*Decal (Safety Swing)	1		WZ010001-	
11		D405 511 00	*Decal (Caution)	2		WZ010001-	
12		D405 505 00	*Decal (Caution)	2		WZ010001-	
13		D405 366 00	*Decal (Caution)	1		WZ010001-	
14		D405 509 00	*Decal (Caution)	1		WZ010001-	
15		D405 359 00	*Decal (Caution)	1		WZ010001-	
16		D405 503 00	*Decal (Caution)	1		WZ010001-	
17		D405 508 00	*Decal (Caution)	1		WZ010001-	
18		D405 504 00	*Decal (Caution)	1		WZ010001-	
19		D405 506 00	*Decal (Caution)	1		WZ010001-	
20		D405 323 00	*Decal (Caution)	1		WZ010001-	
21		4407 035 00	*Decal (Anti-Freezing Solution)	1		WZ010001-	
22		D406 783 00	*Decal (Environment)	1		WZ010001-	
23		D408 371 00	*Decal (Reflector)	2		WZ010001-	
24	×	D405 097 00	*Decal (New Machine)	1		WZ010001-	
25		D407 943 00	*Decal (EPA Regulation)	1		WZ010001-	
26		D408 370 00	*Plate, Nonslip	1		WZ010001-	
27		D408 402 00	*Decal (IHI)	3		WZ010001-	
28		D408 403 00	*Decal (IHI)	1		WZ010001-	
29		D406 602 00	*Decal (Blade, Pedal)	1		WZ010001-	
30		D406 603 00	*Decal (Control A)	1		WZ010001-	
30-1		D406 604 00	*Decal (Control B)	1		WZ010001-	
30-2		D406 605 00	*Decal (Control C)	1		WZ010001-	
30-3		D406 606 00	*Decal (Control D)	1		WZ010001-	
30-4		D406 607 00	*Decal (Control F)	1		WZ010001-	
31		D406 609 00	*Decal (Control A-D)	1		WZ010001-	
32		4448 651 00	*Decal (Spare Piping Change)	1		WZ010001-	
33		4447 857 00	*Decal (Breaker Cation)	1		WZ010001-	
34		D408 322 00	*Decal (Boom Lowering)(CE)	1		WZ010001-	
35		4448 474 00	*Decal (Transport Fix)(CE)	1		WZ010001-	
36		D408 347 00	*Decal (Lifting Procedures)(CE)	1		WZ010001-	
37		D406 032 00	*Decal (Noise 97)(CE)	1		WZ010001-	

https://truckmanualshub.com/

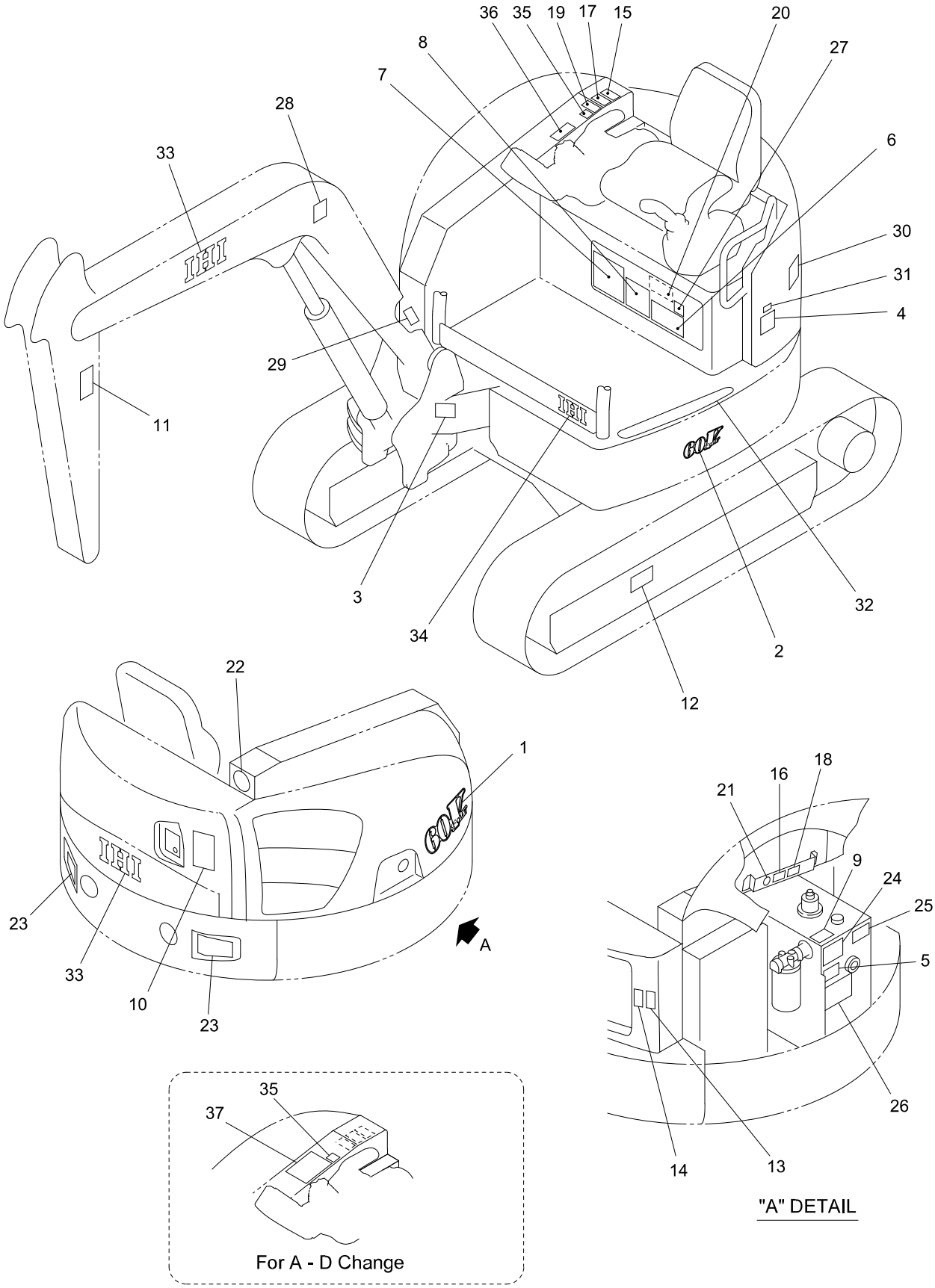

60V4-08070B-1

https://truckmanualshub.com/

KEY No.	SUP.	PART No.	DESCRIPTION	Q'TY	CHAN.	SERIAL No.	REMARKS
0	×	F377 851 00	Decal Ass'y	1		WZ010001-	
0-1	×	F377 854 00	Decal Ass'y	1		WZ010001-	
1		D408 409 00	*Decal (Model)	1		WZ010001-	
2		D408 418 00	*Decal (Model)	1		WZ010001-	
3	×	D405 091 00	*Decal (Serial No.)	1		WZ010001-	
3-1		0497 035 00	*Screw, Drive	4		WZ010001-	d=3
4		4405 457 00	*Decal (Oil)	1		WZ010001-	
5		D406 558 00	*Decal (Oil Check)	1		WZ010001-	
6		D408 360 00	*Decal (Lub. Chart)	1		WZ010001-	
7		D408 332 00	*Decal (Engine Daily Check)	1		WZ010001-	
8		4448 584 00	*Decal (Safety Works)	1		WZ010001-	
9		D408 429 00	*Decal (Tank Decompression)	1		WZ010001-	
10		D405 507 00	*Decal (Safety Swing)	1		WZ010001-	
11		D405 511 00	*Decal (Caution)	2		WZ010001-	
12		D405 505 00	*Decal (Caution)	2		WZ010001-	
13		D405 366 00	*Decal (Caution)	1		WZ010001-	
14		D405 509 00	*Decal (Caution)	1		WZ010001-	
15		D405 359 00	*Decal (Caution)	1		WZ010001-	
16		D405 503 00	*Decal (Caution)	1		WZ010001-	
17		D405 508 00	*Decal (Caution)	1		WZ010001-	
18		D405 504 00	*Decal (Caution)	1		WZ010001-	
19		D405 506 00	*Decal (Caution)	1		WZ010001-	
20		D405 559 00	*Decal (Caution)	1		WZ010001-	
21		4448 573 00	*Decal (Anti-Freezing Solution)	1		WZ010001-	
22		D406 783 00	*Decal (Environment)	1		WZ010001-	
23		D408 371 00	*Decal (Reflector)	2		WZ010001-	
24		D408 338 00	*Decal (Boom Lowering)	1		WZ010001-	
25		4449 003 00	*Decal (Spare Piping Change)	1		WZ010001-	
26		4448 587 00	*Decal (Breaker Cation)	1		WZ010001-	
27		4448 562 00	*Decal (Transport Fix)	1		WZ010001-	
28		D408 352 00	*Decal (Lifting Procedures)	1		WZ010001-	
29	×	D405 097 00	*Decal (New Machine)	1		WZ010001-	
30		D406 032 00	*Decal (Noise 97)	1		WZ010001-	
31		D407 943 00	*Decal (EPA Regulation)	1		WZ010001-	
32		D408 370 00	*Plate, Nonslip	1		WZ010001-	
33		D408 402 00	*Decal (IHI)	3		WZ010001-	
34		D408 403 00	*Decal (IHI)	1		WZ010001-	
35		D406 602 00	*Decal (Blade, Pedal)	1		WZ010001-	
36		D406 603 00	*Decal (Control A)	1		WZ010001-	
36-1		D406 604 00	*Decal (Control B)	1		WZ010001-	
36-2		D406 605 00	*Decal (Control C)	1		WZ010001-	
36-3		D406 606 00	*Decal (Control D)	1		WZ010001-	
37		D406 609 00	*Decal (Control A-D)	1		WZ010001-	

https://truckmanualshub.com/

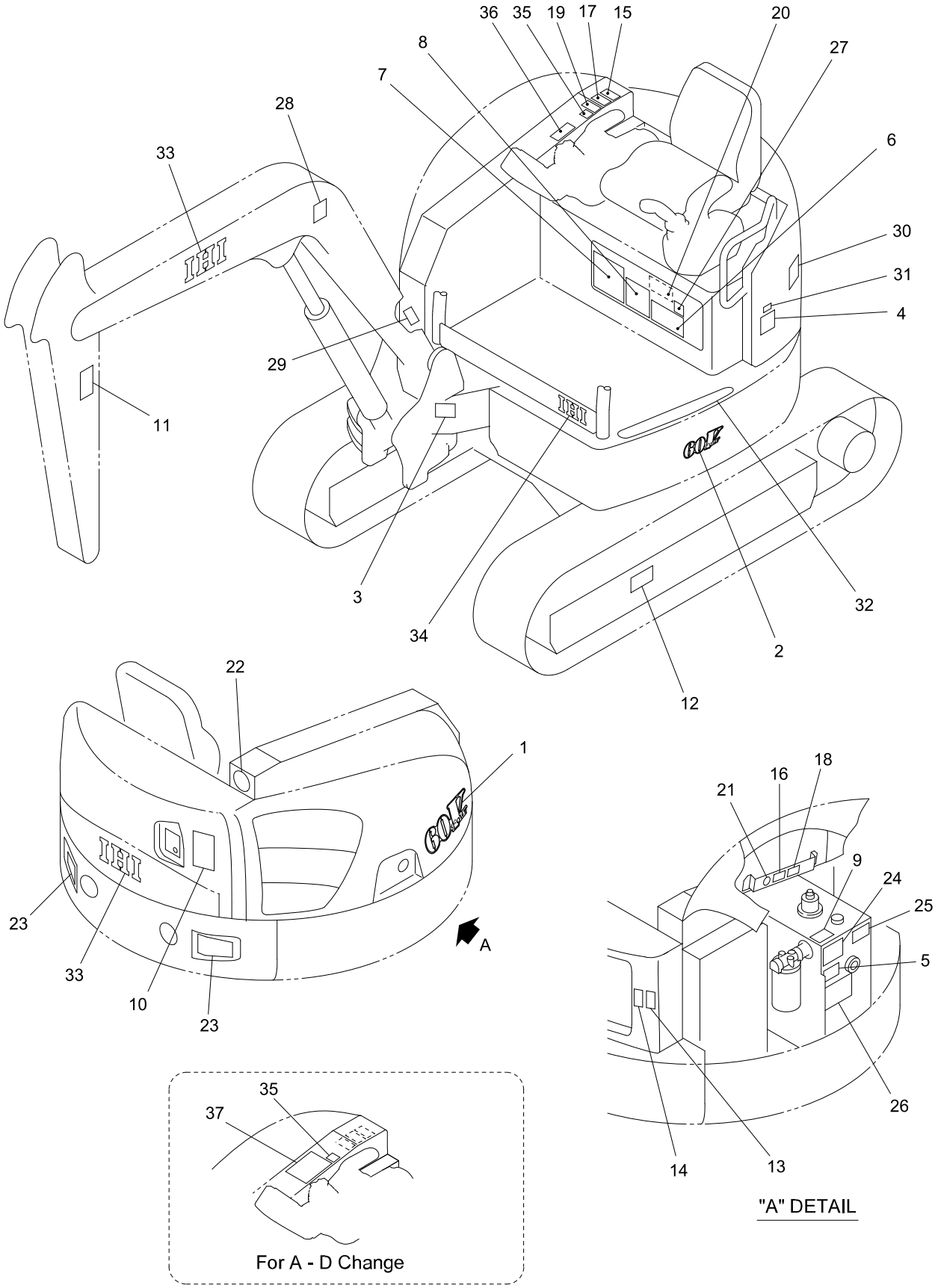

60V4-08070B-1

https://truckmanualshub.com/

KEY No.	SUP.	PART No.	DESCRIPTION	Q'TY	CHAN.	SERIAL No.	REMARKS
0	×	F377 851 00	Decal Ass'y	1		WZ010001-	
0-1	×	F377 854 00	Decal Ass'y	1		WZ010001-	
1		D408 409 00	*Decal (Model)	1		WZ010001-	
2		D408 418 00	*Decal (Model)	1		WZ010001-	
3	×	D405 091 00	*Decal (Serial No.)	1		WZ010001-	
3-1		0497 035 00	*Screw, Drive	4		WZ010001-	d=3
4		4407 974 00	*Decal (Oil)	1		WZ010001-	
5		D406 554 00	*Decal (Oil Check)	1		WZ010001-	
6		D408 356 00	*Decal (Lub. Chart)	1		WZ010001-	
7		D408 327 00	*Decal (Engine Daily Check)	1		WZ010001-	
8		4406 714 00	*Decal (Safety Works)	1		WZ010001-	
9		D408 425 00	*Decal (Tank Decompression)	1		WZ010001-	
10		D405 507 00	*Decal (Safety Swing)	1		WZ010001-	
11		D405 511 00	*Decal (Caution)	2		WZ010001-	
12		D405 505 00	*Decal (Caution)	2		WZ010001-	
13		D405 366 00	*Decal (Caution)	1		WZ010001-	
14		D405 509 00	*Decal (Caution)	1		WZ010001-	
15		D405 359 00	*Decal (Caution)	1		WZ010001-	
16		D405 503 00	*Decal (Caution)	1		WZ010001-	
17		D405 508 00	*Decal (Caution)	1		WZ010001-	
18		D405 504 00	*Decal (Caution)	1		WZ010001-	
19		D405 506 00	*Decal (Caution)	1		WZ010001-	
20		D405 575 00	*Decal (Caution)	1		WZ010001-	
20-1		D408 437 00	*Decal (Capacities Table)	1		WZ010001-	
21		4406 710 00	*Decal (Anti-Freezing Solution)	1		WZ010001-	
22		D406 783 00	*Decal (Environment)	1		WZ010001-	
23		D408 371 00	*Decal (Reflector)	2		WZ010001-	
24		D408 334 00	*Decal (Boom Lowering)	1		WZ010001-	
25		4448 687 00	*Decal (Spare Piping Change)	1		WZ010001-	
26		4447 996 00	*Decal (Breaker Cation)	1		WZ010001-	
27		4448 542 00	*Decal (Transport Fix)	1		WZ010001-	
28		D408 348 00	*Decal (Lifting Procedures)	1		WZ010001-	
29	×	D405 097 00	*Decal (New Machine)	1		WZ010001-	
30		D406 032 00	*Decal (Noise 97)	1		WZ010001-	
31		D407 943 00	*Decal (EPA Regulation)	1		WZ010001-	
32		D408 370 00	*Plate, Nonslip	1		WZ010001-	
33		D408 402 00	*Decal (IHI)	3		WZ010001-	
34		D408 403 00	*Decal (IHI)	1		WZ010001-	
35		D406 602 00	*Decal (Blade, Pedal)	1		WZ010001-	
36		D406 603 00	*Decal (Control A)	1		WZ010001-	
36-1		D406 604 00	*Decal (Control B)	1		WZ010001-	
36-2		D406 605 00	*Decal (Control C)	1		WZ010001-	
36-3		D406 606 00	*Decal (Control D)	1		WZ010001-	
37		D406 609 00	*Decal (Control A-D)	1		WZ010001-	

https://truckmanualshub.com/

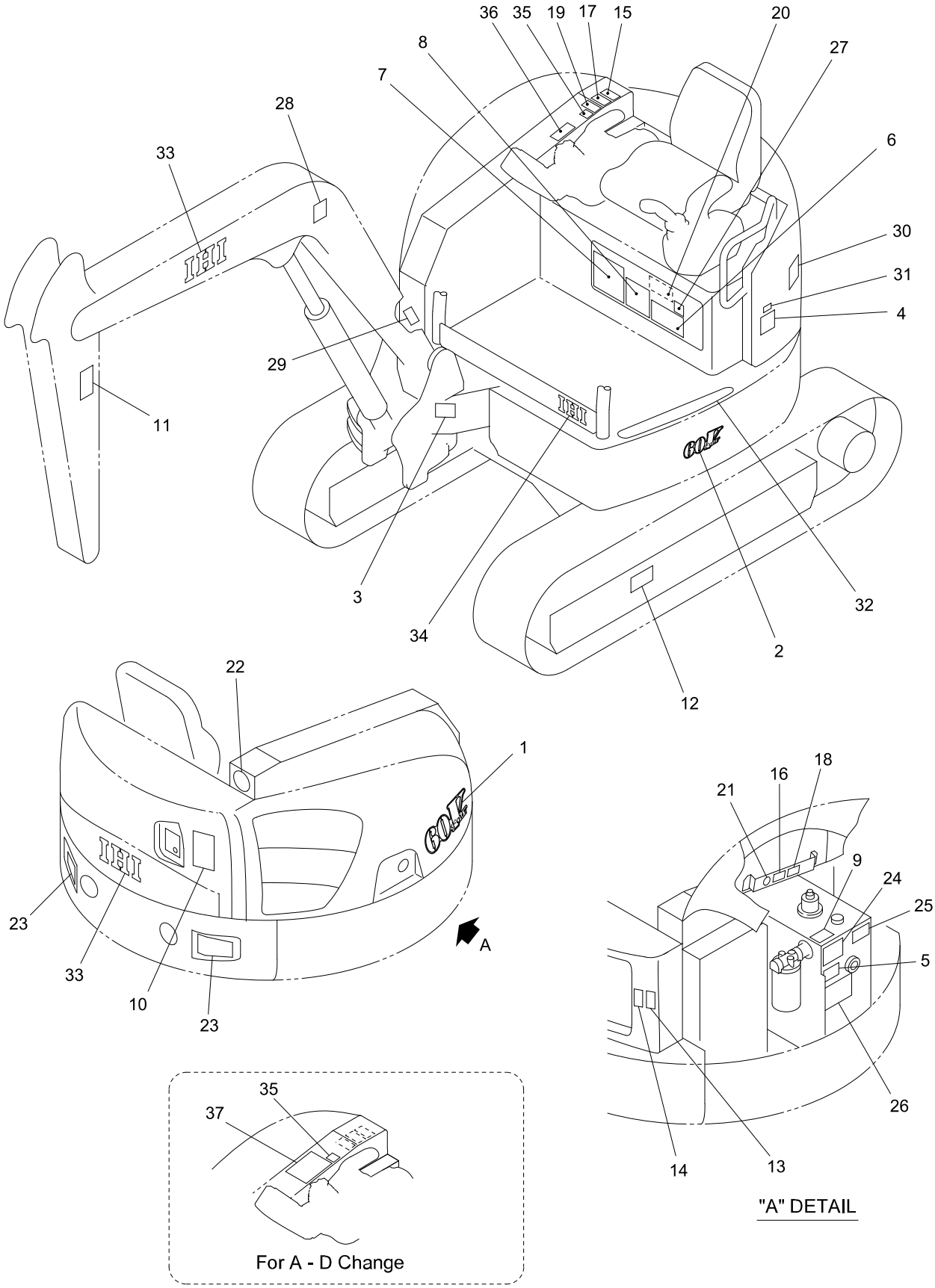

60V4-08070B-1

https://truckmanualshub.com/

KEY No.	SUP.	PART No.	DESCRIPTION	Q'TY	CHAN.	SERIAL No.	REMARKS
0	×	F377 851 00	Decal Ass'y	1		WZ010001-	
0-1	×	F377 854 00	Decal Ass'y	1		WZ010001-	
1		D408 409 00	*Decal (Model)	1		WZ010001-	
2		D408 418 00	*Decal (Model)	1		WZ010001-	
3	×	D405 091 00	*Decal (Serial No.)	1		WZ010001-	
3-1		0497 035 00	*Screw, Drive	4		WZ010001-	d=3
4		4405 457 00	*Decal (Oil)	1		WZ010001-	
5		D406 550 00	*Decal (Oil Check)	1		WZ010001-	
6		D408 357 00	*Decal (Lub. Chart)	1		WZ010001-	
7		D408 329 00	*Decal (Engine Daily Check)	1		WZ010001-	
8		4405 451 00	*Decal (Safety Works)	1		WZ010001-	
9		D408 426 00	*Decal (Tank Decompression)	1		WZ010001-	
10		D405 507 00	*Decal (Safety Swing)	1		WZ010001-	
11		D405 511 00	*Decal (Caution)	2		WZ010001-	
12		D405 505 00	*Decal (Caution)	2		WZ010001-	
13		D405 366 00	*Decal (Caution)	1		WZ010001-	
14		D405 509 00	*Decal (Caution)	1		WZ010001-	
15		D405 359 00	*Decal (Caution)	1		WZ010001-	
16		D405 503 00	*Decal (Caution)	1		WZ010001-	
17		D405 508 00	*Decal (Caution)	1		WZ010001-	
18		D405 504 00	*Decal (Caution)	1		WZ010001-	
19		D405 506 00	*Decal (Caution)	1		WZ010001-	
20		D405 571 00	*Decal (Caution)	1		WZ010001-	
21		4405 456 00	*Decal (Anti-Freezing Solution)	1		WZ010001-	
22		D406 783 00	*Decal (Environment)	1		WZ010001-	
23		D408 371 00	*Decal (Reflector)	2		WZ010001-	
24		D408 335 00	*Decal (Boom Lowering)	1		WZ010001-	
25		4448 944 00	*Decal (Spare Piping Change)	1		WZ010001-	
26		4447 925 00	*Decal (Breaker Cation)	1		WZ010001-	
27		4448 511 00	*Decal (Transport Fix)	1		WZ010001-	
28		D408 349 00	*Decal (Lifting Procedures)	1		WZ010001-	
29	×	D405 097 00	*Decal (New Machine)	1		WZ010001-	
30		D406 032 00	*Decal (Noise 97)	1		WZ010001-	
31		D407 943 00	*Decal (EPA Regulation)	1		WZ010001-	
32		D408 370 00	*Plate, Nonslip	1		WZ010001-	
33		D408 402 00	*Decal (IHI)	3		WZ010001-	
34		D408 403 00	*Decal (IHI)	1		WZ010001-	
35		D406 602 00	*Decal (Blade, Pedal)	1		WZ010001-	
36		D406 603 00	*Decal (Control A)	1		WZ010001-	
36-1		D406 604 00	*Decal (Control B)	1		WZ010001-	
36-2		D406 605 00	*Decal (Control C)	1		WZ010001-	
36-3		D406 606 00	*Decal (Control D)	1		WZ010001-	
37		D406 609 00	*Decal (Control A-D)	1		WZ010001-	

https://truckmanualshub.com/

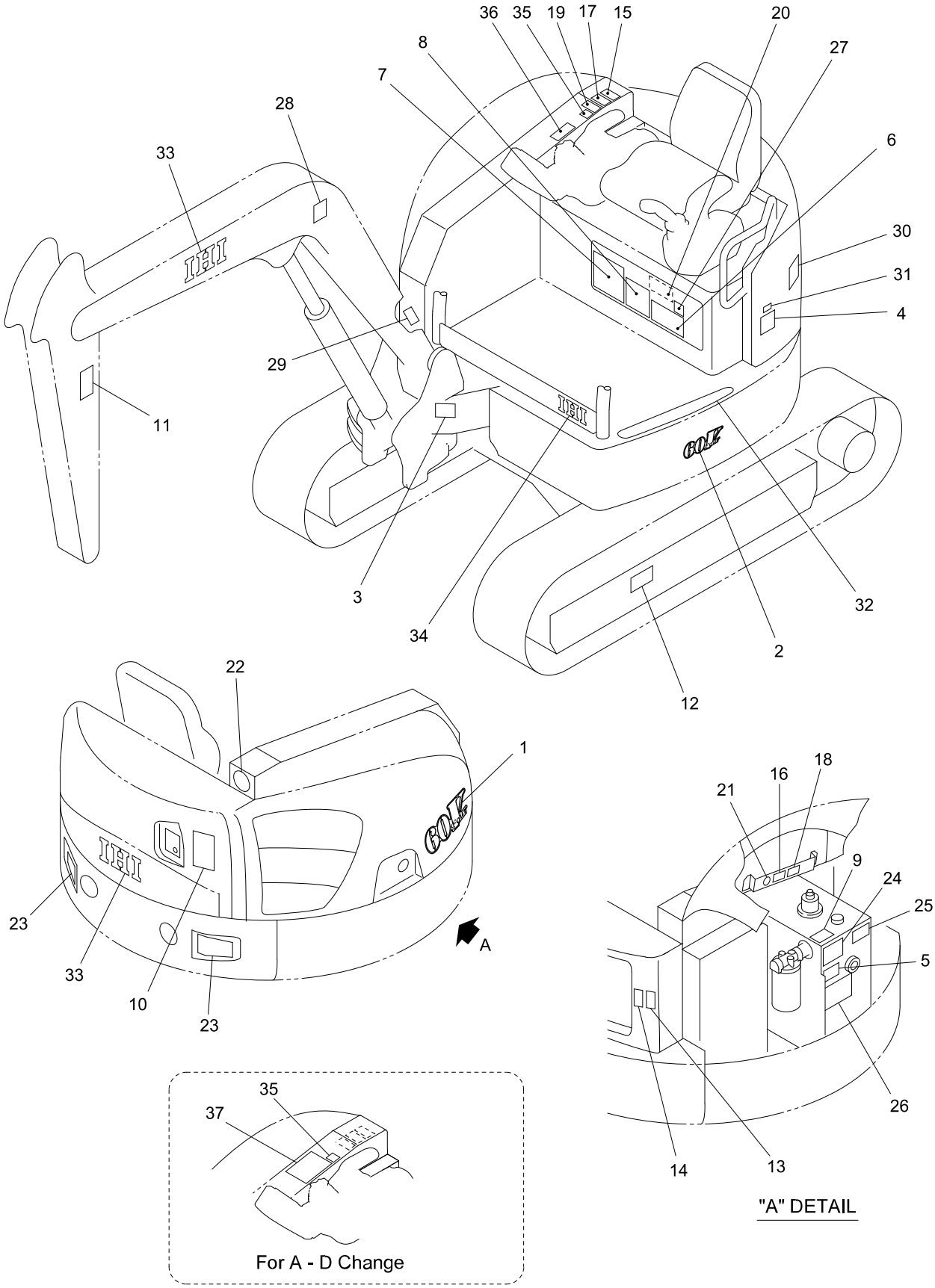

60V4-08070B-1

https://truckmanualshub.com/

KEY No.	SUP.	PART No.	DESCRIPTION	Q'TY	CHAN.	SERIAL No.	REMARKS
0	×	F377 851 00	Decal Ass'y	1		WZ010001-	
0-1	×	F377 854 00	Decal Ass'y	1		WZ010001-	
1		D408 409 00	*Decal (Model)	1		WZ010001-	
2		D408 418 00	*Decal (Model)	1		WZ010001-	
3	×	D405 091 00	*Decal (Serial No.)	1		WZ010001-	
3-1		0497 035 00	*Screw, Drive	4		WZ010001-	d=3
4		4405 457 00	*Decal (Oil)	1		WZ010001-	
5		D406 565 00	*Decal (Oil Check)	1		WZ010001-	
6		D408 358 00	*Decal (Lub. Chart)	1		WZ010001-	
7		D408 330 00	*Decal (Engine Daily Check)	1		WZ010001-	
8		D407 017 00	*Decal (Safety Works)	1		WZ010001-	
9		D408 427 00	*Decal (Tank Decompression)	1		WZ010001-	
10		D405 507 00	*Decal (Safety Swing)	1		WZ010001-	
11		D405 511 00	*Decal (Caution)	2		WZ010001-	
12		D405 505 00	*Decal (Caution)	2		WZ010001-	
13		D405 366 00	*Decal (Caution)	1		WZ010001-	
14		D405 509 00	*Decal (Caution)	1		WZ010001-	
15		D405 359 00	*Decal (Caution)	1		WZ010001-	
16		D405 503 00	*Decal (Caution)	1		WZ010001-	
17		D405 508 00	*Decal (Caution)	1		WZ010001-	
18		D405 504 00	*Decal (Caution)	1		WZ010001-	
19		D405 506 00	*Decal (Caution)	1		WZ010001-	
20		D405 587 00	*Decal (Caution)	1		WZ010001-	
21		4447 229 00	*Decal (Anti-Freezing Solution)	1		WZ010001-	
22		D406 783 00	*Decal (Environment)	1		WZ010001-	
23		D408 371 00	*Decal (Reflector)	2		WZ010001-	
24		D408 336 00	*Decal (Boom Lowering)	1		WZ010001-	
25		D405 256 00	*Decal (Spare Piping Change)	1		WZ010001-	
26		4448 350 00	*Decal (Breaker Cation)	1		WZ010001-	
27		D405 059 00	*Decal (Transport Fix)	1		WZ010001-	
28		D408 350 00	*Decal (Lifting Procedures)	1		WZ010001-	
29	×	D405 097 00	*Decal (New Machine)	1		WZ010001-	
30		D406 032 00	*Decal (Noise 97)	1		WZ010001-	
31		D407 943 00	*Decal (EPA Regulation)	1		WZ010001-	
32		D408 370 00	*Plate, Nonslip	1		WZ010001-	
33		D408 402 00	*Decal (IHI)	3		WZ010001-	
34		D408 403 00	*Decal (IHI)	1		WZ010001-	
35		D406 602 00	*Decal (Blade, Pedal)	1		WZ010001-	
36		D406 603 00	*Decal (Control A)	1		WZ010001-	
36-1		D406 604 00	*Decal (Control B)	1		WZ010001-	
36-2		D406 605 00	*Decal (Control C)	1		WZ010001-	
36-3		D406 606 00	*Decal (Control D)	1		WZ010001-	
37		D406 609 00	*Decal (Control A-D)	1		WZ010001-	

https://truckmanualshub.com/

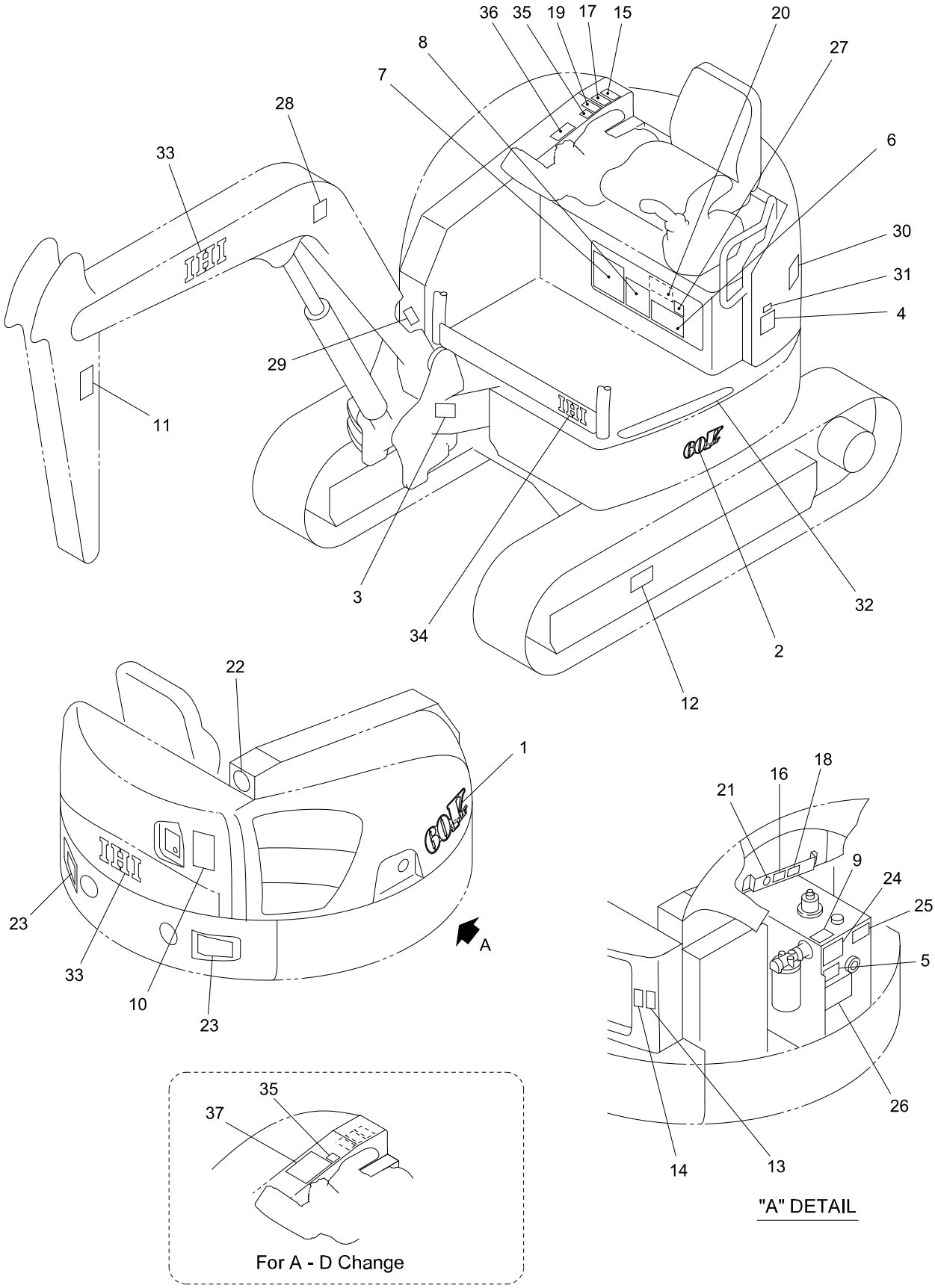

60V4-08070B-1

https://truckmanualshub.com/

KEY No.	SUP.	PART No.	DESCRIPTION	Q'TY	CHAN.	SERIAL No.	REMARKS
0	×	F377 851 00	Decal Ass'y	1		WZ010001-	
0-1	×	F377 854 00	Decal Ass'y	1		WZ010001-	
1		D408 409 00	*Decal (Model)	1		WZ010001-	
2		D408 418 00	*Decal (Model)	1		WZ010001-	
3	×	D405 091 00	*Decal (Serial No.)	1		WZ010001-	
3-1		0497 035 00	*Screw, Drive	4		WZ010001-	d=3
4		4405 457 00	*Decal (Oil)	1		WZ010001-	
5		D406 562 00	*Decal (Oil Check)	1		WZ010001-	
6		D408 359 00	*Decal (Lub. Chart)	1		WZ010001-	
7		D408 331 00	*Decal (Engine Daily Check)	1		WZ010001-	
8		4448 603 00	*Decal (Safety Works)	1		WZ010001-	
9		D408 428 00	*Decal (Tank Decompression)	1		WZ010001-	
10		D405 507 00	*Decal (Safety Swing)	1		WZ010001-	
11		D405 511 00	*Decal (Caution)	2		WZ010001-	
12		D405 505 00	*Decal (Caution)	2		WZ010001-	
13		D405 366 00	*Decal (Caution)	1		WZ010001-	
14		D405 509 00	*Decal (Caution)	1		WZ010001-	
15		D405 359 00	*Decal (Caution)	1		WZ010001-	
16		D405 503 00	*Decal (Caution)	1		WZ010001-	
17		D405 508 00	*Decal (Caution)	1		WZ010001-	
18		D405 504 00	*Decal (Caution)	1		WZ010001-	
19		D405 506 00	*Decal (Caution)	1		WZ010001-	
20		D405 594 00	*Decal (Caution)	1		WZ010001-	
21		4448 598 00	*Decal (Anti-Freezing Solution)	1		WZ010001-	
22		D406 783 00	*Decal (Environment)	1		WZ010001-	
23		D408 371 00	*Decal (Reflector)	2		WZ010001-	
24		D408 337 00	*Decal (Boom Lowering)	1		WZ010001-	
25		4449 406 00	*Decal (Spare Piping Change)	1		WZ010001-	
26		4448 607 00	*Decal (Breaker Cation)	1		WZ010001-	
27		4448 619 00	*Decal (Transport Fix)	1		WZ010001-	
28		D408 351 00	*Decal (Lifting Procedures)	1		WZ010001-	
29	×	D405 097 00	*Decal (New Machine)	1		WZ010001-	
30		D406 032 00	*Decal (Noise 97)	1		WZ010001-	
31		D407 943 00	*Decal (EPA Regulation)	1		WZ010001-	
32		D408 370 00	*Plate, Nonslip	1		WZ010001-	
33		D408 402 00	*Decal (IHI)	3		WZ010001-	
34		D408 403 00	*Decal (IHI)	1		WZ010001-	
35		D406 602 00	*Decal (Blade, Pedal)	1		WZ010001-	
36		D406 603 00	*Decal (Control A)	1		WZ010001-	
36-1		D406 604 00	*Decal (Control B)	1		WZ010001-	
36-2		D406 605 00	*Decal (Control C)	1		WZ010001-	
36-3		D406 606 00	*Decal (Control D)	1		WZ010001-	
37		D406 609 00	*Decal (Control A-D)	1		WZ010001-	

https://truckmanualshub.com/

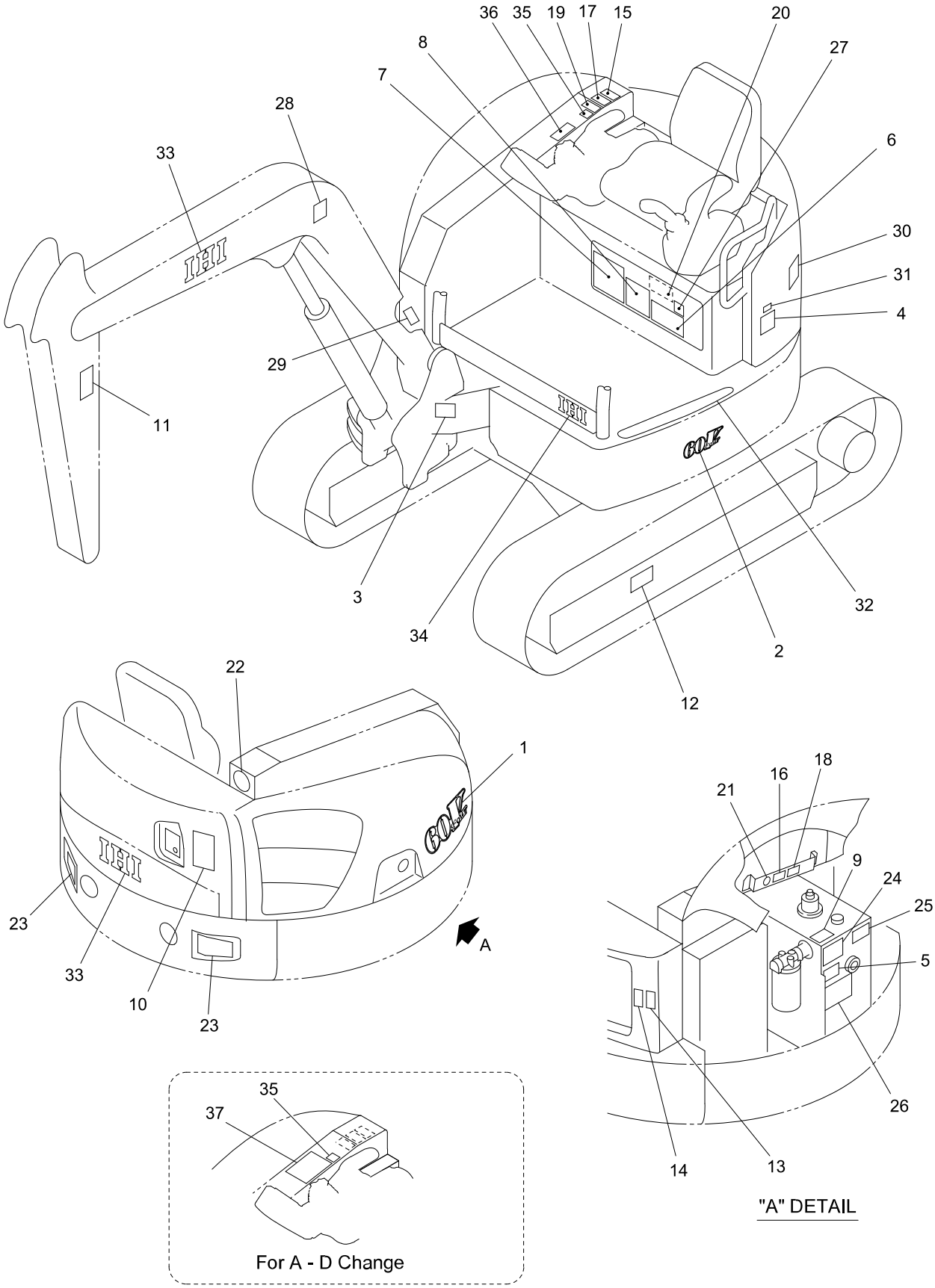

60V4-08070B-1

https://truckmanualshub.com/

KEY No.	SUP.	PART No.	DESCRIPTION	Q'TY	CHAN.	SERIAL No.	REMARKS
0	×	F377 851 00	Decal Ass'y	1		WZ010001-	
0-1	×	F377 854 00	Decal Ass'y	1		WZ010001-	
1		D408 409 00	*Decal (Model)	1		WZ010001-	
2		D408 418 00	*Decal (Model)	1		WZ010001-	
3	×	D405 091 00	*Decal (Serial No.)	1		WZ010001-	
3-1		0497 035 00	*Screw, Drive	4		WZ010001-	d=3
4		D406 000 00	*Decal (Oil)	1		WZ010001-	
5		D406 811 00	*Decal (Oil Check)	1		WZ010001-	
6		D408 361 00	*Decal (Lub. Chart)	1		WZ010001-	
7		D408 333 00	*Decal (Engine Daily Check)	1		WZ010001-	
8		D407 016 00	*Decal (Safety Works)	1		WZ010001-	
9		D408 430 00	*Decal (Tank Decompression)	1		WZ010001-	
10		D405 507 00	*Decal (Safety Swing)	1		WZ010001-	
11		D405 511 00	*Decal (Caution)	2		WZ010001-	
12		D405 505 00	*Decal (Caution)	2		WZ010001-	
13		D405 366 00	*Decal (Caution)	1		WZ010001-	
14		D405 509 00	*Decal (Caution)	1		WZ010001-	
15		D405 359 00	*Decal (Caution)	1		WZ010001-	
16		D405 503 00	*Decal (Caution)	1		WZ010001-	
17		D405 508 00	*Decal (Caution)	1		WZ010001-	
18		D405 504 00	*Decal (Caution)	1		WZ010001-	
19		D405 506 00	*Decal (Caution)	1		WZ010001-	
20		D406 005 00	*Decal (Caution)	1		WZ010001-	
21		D406 012 00	*Decal (Anti-Freezing Solution)	1		WZ010001-	
22		D406 783 00	*Decal (Environment)	1		WZ010001-	
23		D408 371 00	*Decal (Reflector)	2		WZ010001-	
24		D408 339 00	*Decal (Boom Lowering)	1		WZ010001-	
25		D406 720 00	*Decal (Spare Piping Change)	1		WZ010001-	
26		D406 002 00	*Decal (Breaker Cation)	1		WZ010001-	
27		D406 007 00	*Decal (Transport Fix)	1		WZ010001-	
28		D408 353 00	*Decal (Lifting Procedures)	1		WZ010001-	
29	×	D405 097 00	*Decal (New Machine)	1		WZ010001-	
30		D406 032 00	*Decal (Noise 97)	1		WZ010001-	
31		D407 943 00	*Decal (EPA Regulation)	1		WZ010001-	
32		D408 370 00	*Plate, Nonslip	1		WZ010001-	
33		D408 402 00	*Decal (IHI)	3		WZ010001-	
34		D408 403 00	*Decal (IHI)	1		WZ010001-	
35		D406 602 00	*Decal (Blade, Pedal)	1		WZ010001-	
36		D406 603 00	*Decal (Control A)	1		WZ010001-	
36-1		D406 604 00	*Decal (Control B)	1		WZ010001-	
36-2		D406 605 00	*Decal (Control C)	1		WZ010001-	
36-3		D406 606 00	*Decal (Control D)	1		WZ010001-	
37		D406 609 00	*Decal (Control A-D)	1		WZ010001-	

https://truckmanualshub.com/

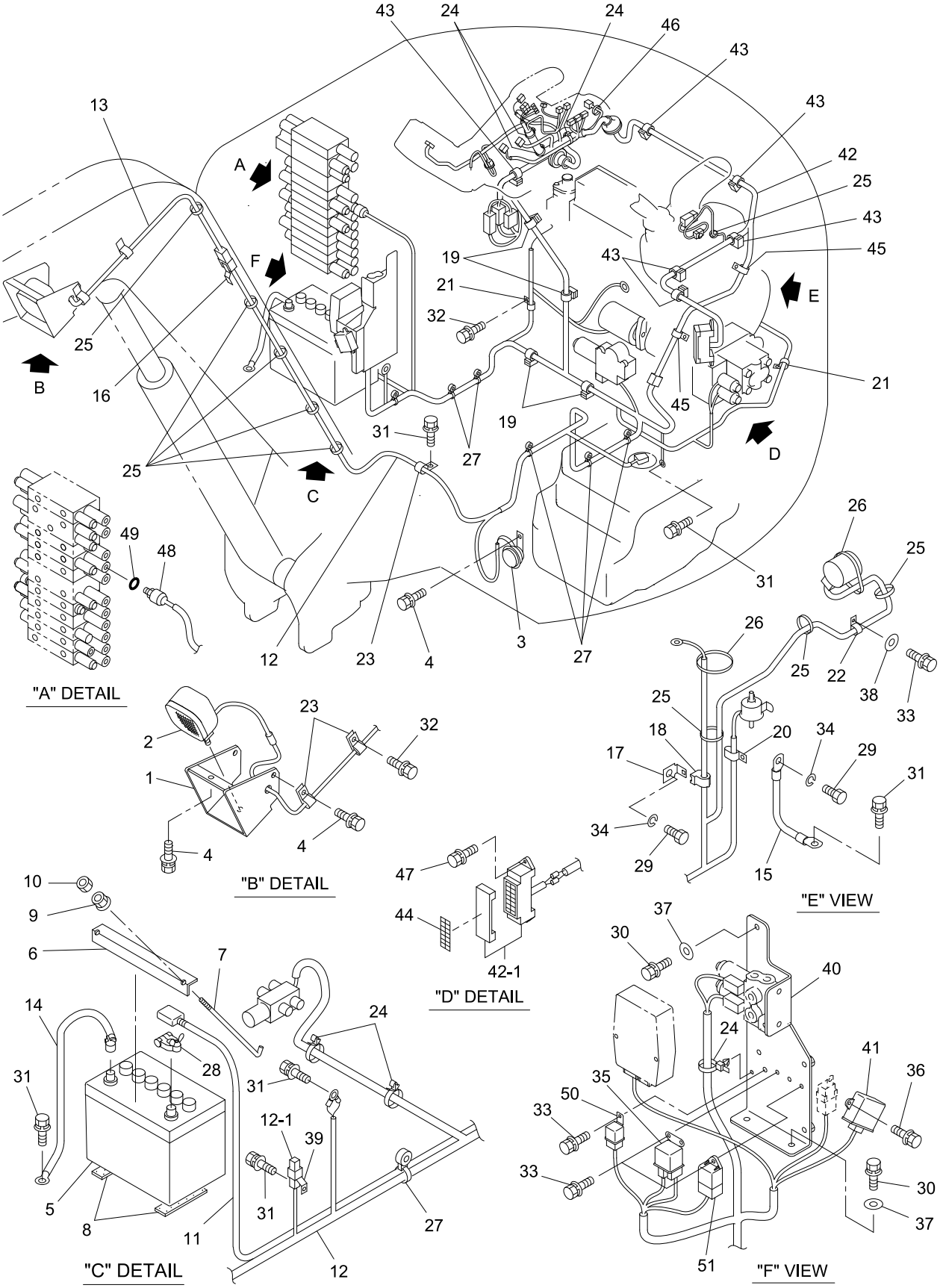

40V4-090100-1

https://truckmanualshub.com/

KEY No.	SUP.	PART No.	DESCRIPTION	Q'TY	CHAN.	SERIAL No.	REMARKS
0	×	F366 889 00	Electrical System	1		WZ010001-	
0-1	×	F355 102 00	Accessories Ass'y	1		WZ010001-	
0-2	×	F366 821 00	Battery Ass'y	1		WZ010001-	
1		D458 269 00	*Cover	1		WZ010001-	
2		0854 529 UA	*Light Ass'y	1		WZ010001-	
2-1		0854 529 05	**Bulb	1		WZ010001-	
2-2		0854 529 01	**Lens	1		WZ010001-	
2-3		0552 080 20	**Bolt, Hex.	1		WZ010001-	M8X20
2-4		0521 080 00	**Nut, Hex.(W/F.W)	1		WZ010001-	M8
3		0861 001 02	*Horn	1		WZ010001-	
4		0517 080 16	*Bolt, Treatment (W/L.W, F.W)	4		WZ010001-	M8X16
5		0851 000 01	*Battery	1		WZ010001-	
5-1		0851 000 02	*Battery (For Cold District)	1		WZ010001-	
6		4416 063 01	*Bracket	1		WZ010001-	
7		4004 022 04	*Bolt, Hook	2		WZ010001-	M6X280
8		4409 625 11	*Plate, Rubber	2		WZ010001-	
9		0521 060 00	*Nut, Hex. (W/F.W)	2		WZ010001-	M6
10		0544 060 00	*Nut, Hex.	2		WZ010001-	M6
11		4591 982 18	*Cable, Battery	1		WZ010001-	
12		D592 288 00	*Harness, Main	1		WZ010001-	
12-1		0830 291 01	**Link, Fusible	1		WZ010001-	65A
13		0879 551 30	*Harness	1		WZ010001-	
14		D592 194 02	*Cable, Battery	1		WZ010001-	
15		D592 195 03	*Band, Earth	1		WZ010001-	
16		0690 081 92	*Clamp	1		WZ010001-	
17		D417 041 00	*Bracket	1		WZ010001-	
18		0690 082 01	*Clamp	1		WZ010001-	
19		0690 082 05	*Clamp, Hose	4		WZ010001-	
20		4080 000 06	*Clamp, Hose	1		WZ010001-	
21		4080 000 04	*Clamp, Hose	2		WZ010001-	
22		4080 000 03	*Clamp, Hose	1		WZ010001-	
23		4080 000 02	*Clamp, Hose	3		WZ010001-	
24		0690 082 08	*Clamp, Hose	7		WZ010001-	
25		0820 067 03	*Band, Cable	9		WZ010001-	
26		0820 067 05	*Band, Cable	2		WZ010001-	
27		0820 067 31	*Band, Cable	6		WZ010001-	
28		0852 119 22	*Terminal	1		WZ010001-	
29		0541 120 16	*Bolt, Hex.	2		WZ010001-	M12X16 P=1.25
30		0518 100 25	*Bolt, Treatment (W/L.W, F.W)	3		WZ010001-	M10X25 P=1.25
31		0518 100 16	*Bolt, Treatment (W/L.W, F.W)	6		WZ010001-	M10X16 P=1.25
32		0517 080 12	*Bolt, Treatment (W/L.W, F.W)	2		WZ010001-	M8X12
33		0517 060 16	*Bolt, Treatment (W/L.W, F.W)	5		WZ010001-	M6X16
34		0590 120 00	*Washer, Lock	2		WZ010001-	M12

https://truckmanualshub.com/

KEY No.	SUP.	PART No.	DESCRIPTION	Q'TY	CHAN.	SERIAL No.	REMARKS
35		0820 215 11	*Relay, Glow	1		WZ010001-	
36		0517 060 20	*Bolt, Treatment (W/L.W, F.W)	2		WZ010001-	M6X20
37		4006 119 02	*Washer, Flat	3		WZ010001-	M10
38		0593 080 00	*Washer, Flat	1		WZ010001-	M8
39		0690 081 89	*Clip	1		WZ010001-	
40		D419 313 00	*Bracket	1		WZ010001-	
41		0820 215 10	*Relay, Flip-Flop	1		WZ010001-	
42		D592 285 00	*Harness	1		WZ010001-	
42-1		0858 140 01	**Box, Fuse	1		WZ010001-	
42-2		0830 107 11	**Fuse	1		WZ010001-	2A
42-3		0830 107 12	**Fuse	1		WZ010001-	5A
42-4		0830 107 06	**Fuse	8		WZ010001-	10A
42-5		0830 107 07	**Fuse	1		WZ010001-	15A
42-6		0830 107 08	**Fuse	2		WZ010001-	20A
42-7		0830 107 09	**Fuse	1		WZ010001-	25A
42-8		0830 107 10	**Fuse	2		WZ010001-	30A
43		0690 082 05	*Clamp, Hose	6		WZ010001-	
44		D408 292 00	*Decal	1		WZ010001-	
45		4080 000 05	*Clamp, Hose	2		WZ010001-	
46		0820 067 04	*Band, Cable	1		WZ010001-	
47		0517 060 20	*Bolt, Treatment (W/L.W, F.W)	2		WZ010001-	M6X20
48		0858 501 16	*Switch, Oil Pressure	1		WZ010001-	
49		0760 710 12	*Ring, O	1		WZ010001-	P11-90B
50		K1K574 60221	*Relay, Starter	1		WZ010001-	
51		K15694 65992	*Relay, Timer	1		WZ010001-	

https://truckmanualshub.com/

[Memo]

https://truckmanualshub.com/

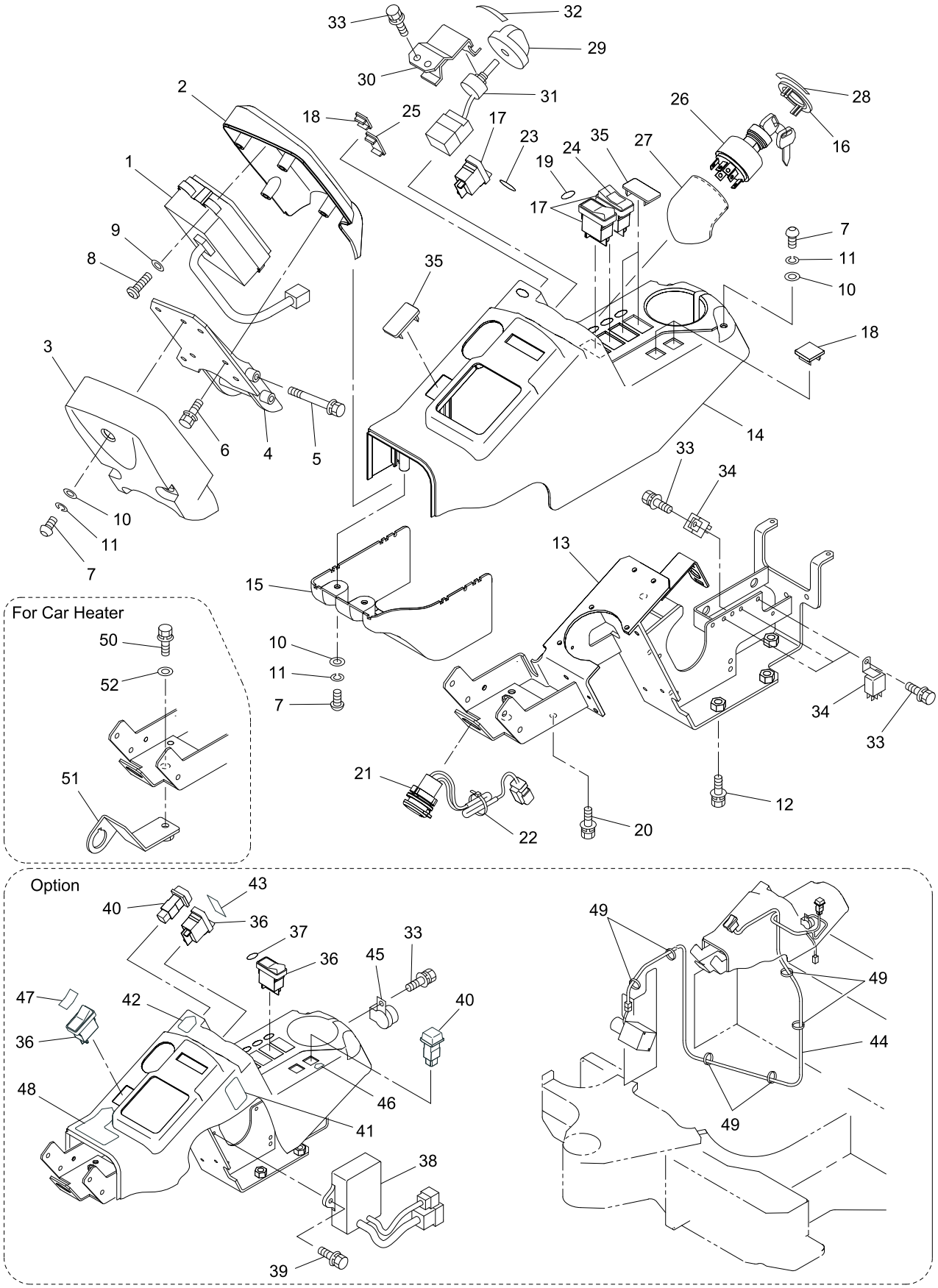

40V4-090200-1

https://truckmanualshub.com/

KEY No.	SUP.	PART No.	DESCRIPTION	Q'TY	CHAN.	SERIAL No.	REMARKS
0	×	F361 706 00	Panel Ass'y, Instrument	1		WZ010001-	
0-1	×	F361 707 00	Panel Ass'y, Instrument	1		WZ010001-	
1		0881 509 UA	*Monitor, OK	1		WZ010001-	
2		D465 380 00	*Panel	1		WZ010001-	
3		D465 381 00	*Panel	1		WZ010001-	
4		D419 580 00	*Bracket	1		WZ010001-	
5		0517 081 15	*Bolt, Treatment (W/L.W, F.W)	2		WZ010001-	M8X115
6		0517 060 20	*Bolt, Treatment (W/L.W, F.W)	4		WZ010001-	M6X20
7		4004 364 01	*Bolt, Button Head	7		WZ010001-	M6X18
8		0454 400 20	*Screw, Tapping	4		WZ010001-	M4X20
9		0593 040 00	*Washer, Flat	4		WZ010001-	M4
10		0594 060 00	*Washer, Flat	7		WZ010001-	M6
11		0596 060 00	*Washer, Lock	7		WZ010001-	M6
12		0518 100 25	*Bolt, Treatment (W/L.W, F.W)	4		WZ010001-	M10X25 P=1.25
13		D419 229 00	*Bracket	1		WZ010001-	
14		D465 313 00	*Panel	1		WZ010001-	
15		D465 314 00	*Panel	1		WZ010001-	
16		0690 203 44	*Cover	1		WZ010001-	
17		0858 314 33	*Switch Assy	3		WZ010001-	
18		D528 006 00	*Cap	AR		WZ010001-	
19		D407 819 00	*Decal (Light)	1		WZ010001-	
20		0517 060 16	*Bolt, Treatment (W/L.W, F.W)	2		WZ010001-	M6X16
21		0830 406 02	*Socket	1		WZ010001-	
22		0820 067 05	*Band, Cable	1		WZ010001-	
23		D408 280 00	*Decal	1		WZ010001-	
24		D408 447 00	*Decal	1		WZ010001-	
25		D528 005 00	*Cap	1		WZ010001-	
26		0858 306 03	*Switch Assy Starter	1		WZ010001-	
26-1		0858 306 04	*Switch Assy Starter	1		WZ010001-	Option 5080
26-2		0690 270 29	**Key	2		WZ010001-	#5080
27		4457 535 00	*Cover (Starter Switch)	1		WZ010001-	
28		D407 823 00	*Decal	1		WZ010001-	
29		0690 211 05	*Throttle, Dial	1		WZ010001-	
30		D418 304 00	*Bracket	1		WZ010001-	
31		0858 614 05	*Meter, Potention	1		WZ010001-	
32		D407 829 00	*Decal (Throttle)	1		WZ010001-	
33		0517 060 12	*Bolt, Treatment (W/L.W, F.W)	7		WZ010001-	M6X12
34		0820 215 07	*Relay	4		WZ010001-	
35		D528 005 00	*Cap	AR		WZ010001-	
36		0858 314 33	*Switch Assy	AR		WZ010001-	
37		D407 965 00	*Decal	1		WZ010001-	
38		0893 509 UA	*Controller Ass'y	1		WZ010001-	
39		0517 060 20	*Bolt, Treatment (W/L.W, F.W)	2		WZ010001-	M6X20
40		0858 314 35	*Switch Assy	AR		WZ010001-	

https://truckmanualshub.com/

KEY No.	SUP.	PART No.	DESCRIPTION	Q'TY	CHAN.	SERIAL No.	REMARKS
41		D408 285 00	*Decal	1		WZ010001-	
42		D407 963 00	*Decal	1		WZ010001-	
43		D407 964 00	*Decal	1		WZ010001-	
44		D592 206 00	*Harness	1		WZ010001-	
45		0857 011 57	*Buzzer	1		WZ010001-	
46		D407 966 00	*Decal	1		WZ010001-	
47		D407 967 00	*Decal	1		WZ010001-	
48		D407 968 00	*Decal	1		WZ010001-	
49		0820 067 09	*Band, Cable	6		WZ010001-	
50		0518 100 20	*Bolt, Treatment (W/L.W, F.W)	1		WZ010001-	M10X20 P=1.25
51		D419 477 00	*Bracket	1		WZ010001-	
52		4006 119 02	*Washer	1		WZ010001-	M10

https://truckmanualshub.com/

[Memo]

https://truckmanualshub.com/

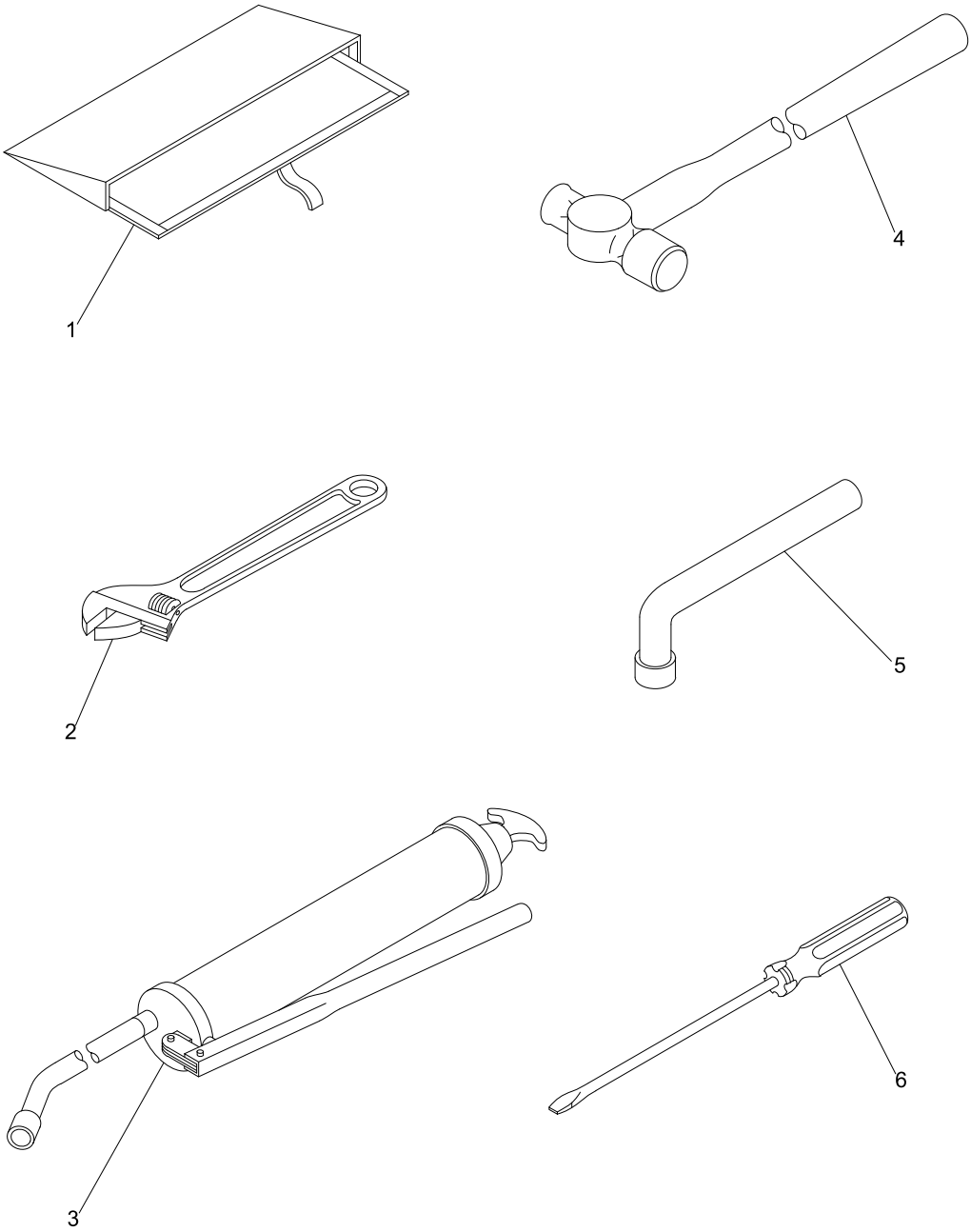

SHALL-100100-1

https://truckmanualshub.com/

KEY No.	SUP.	PART No.	DESCRIPTION	Q'TY	CHAN.	SERIAL No.	REMARKS
0	×	5388 510 00	Tools Set	1		WZ010001-	
1		4450 505 00	*Case, Tools	1		WZ010001-	
2	△	0931 109 25	*Wrench, Adjustable	1		WZ010001-	250mm
3		0931 370 11	*Gun, Grease	1		WZ010001-	
3-1		0931 370 10	*Gun, Grease	1		WZ010001-	For Export
3-2	☆	0931 371 01	**Hose, Grease	1		WZ010001-	48190-20540
4	△	0931 331 10	*Hammer	1		WZ010001-	
5	△	0931 070 24	*Wrench, L	1		WZ010001-	24mm
6	△	0931 301 04	*Driver (-)	1		WZ010001-	100mm

https://truckmanualshub.com/

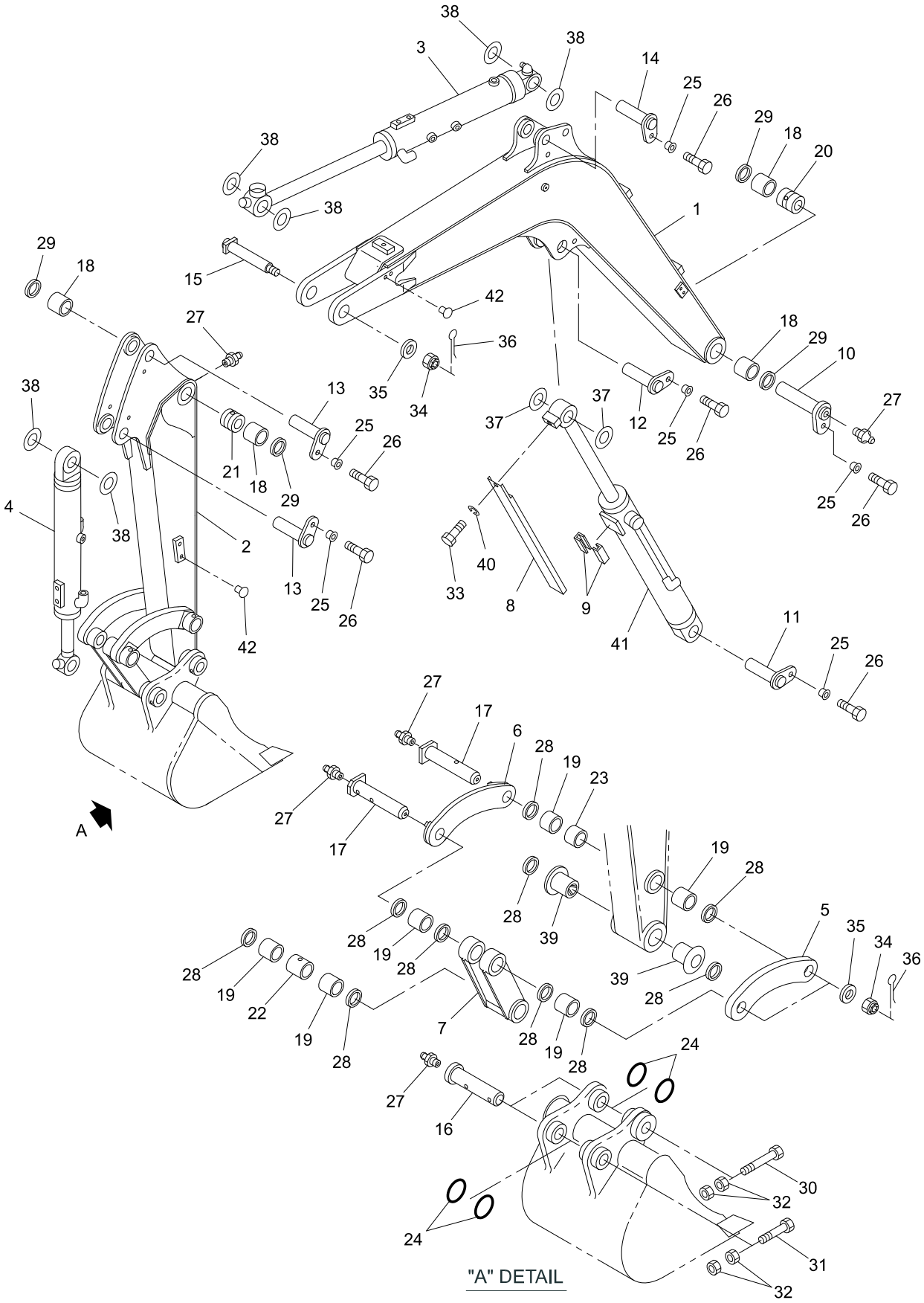

50V4-110100-1

https://truckmanualshub.com/

KEY No.	SUP.	PART No.	DESCRIPTION	Q'TY	CHAN.	SERIAL No.	REMARKS
0	×	F388 387 00	Attachment Ass'y, Hoe	1		WZ010001-	
1		D210 146 00	*Boom	1		WZ010001-	
2		D215 225 00	*Arm Ass'y	1		WZ010001-	
2-1		D215 235 00	*Arm Ass'y, Long	1		WZ010001-	
3	#	0782 607 UA	*Cylinder Ass'y, Arm	1		WZ010001-	Sh. No. 5-9
4	#	0782 601 UA	*Cylinder Ass'y, Bucket	1		WZ010001-	Sh. No. 5-10
5		D490 186 00	*Link, Arm (L.H.)	1		WZ010001-	
6		D490 374 00	*Link, Arm (R.H.)	1		WZ010001-	
7		D490 373 00	*Link, Bucket	1		WZ010001-	
8		D458 441 00	*Cover	1		WZ010001-	
9		D475 052 00	*Guide	2		WZ010001-	
10		D017 249 00	*Pin, Head	1		WZ010001-	
11		D017 234 04	*Pin, Head	1		WZ010001-	
12		D017 234 02	*Pin, Head	1		WZ010001-	
13		D017 237 01	*Pin, Head	2		WZ010001-	
14		D017 237 02	*Pin, Head	1		WZ010001-	
15		D013 398 01	*Pin, Head	1		WZ010001-	
16		D013 408 00	*Pin, Head	2		WZ010001-	
17		D013 409 00	*Pin, Head	2		WZ010001-	
18		4043 229 07	*Bushing	4		WZ010001-	
19		4043 231 12	*Bushing	6		WZ010001-	
20		4040 468 21	*Spacer	1		WZ010001-	
21		D040 192 04	*Spacer	1		WZ010001-	
22		4040 468 16	*Spacer	1		WZ010001-	
23		4040 468 02	*Spacer	1		WZ010001-	
24		4511 501 01	*Ring, O	4		WZ010001-	
25		D047 058 00	*Bushing	6		WZ010001-	
26		0555 160 30	*Bolt, Treatment	6		WZ010001-	M16X30
27		0728 111 15	*Nipple, Grease	6		WZ010001-	PT1/8
28		0765 033 27	*Seal, Dust	10		WZ010001-	
29		0765 033 28	*Seal, Dust	4		WZ010001-	
30		0514 121 20	*Bolt, Treatment	1		WZ010001-	M12X120 P=1.25
31		0514 120 90	*Bolt, Treatment	1		WZ010001-	M12X90 P=1.25
32		0535 120 00	*Nut, Treatment	4		WZ010001-	M12 P=1.25
33		0555 120 20	*Bolt, Treatment	1		WZ010001-	M12X20
34		0587 360 00	*Nut, Castle	3		WZ010001-	M36
35		4006 178 00	*Washer, Flat	3		WZ010001-	
36		0599 060 70	*Pin, Cotter	3		WZ010001-	d=6.0X70
37		4006 540 66	*Shim	AR		WZ010001-	d=50, t=1.0
37-1		4006 540 67	*Shim	AR		WZ010001-	d=50, t=2.0
38		4006 540 56	*Shim	AR		WZ010001-	d=45, t=1.0
38-1		4006 540 57	*Shim	AR		WZ010001-	d=45, t=2.0
39		D043 110 00	*Bushing	2		WZ010001-	

https://truckmanualshub.com/

KEY No.	SUP.	PART No.	DESCRIPTION	Q'TY	CHAN.	SERIAL No.	REMARKS
40		0590 120 00	*Washer, Lock	1		WZ010001-	M12
41	#	0782 605 UA	*Cylinder Ass'y, Boom	1		WZ010001-	Sh. No. 5-8
42		0910 911 00	*Plug	8		WZ010001-	

https://truckmanualshub.com/

[Memo]

https://truckmanualshub.com/

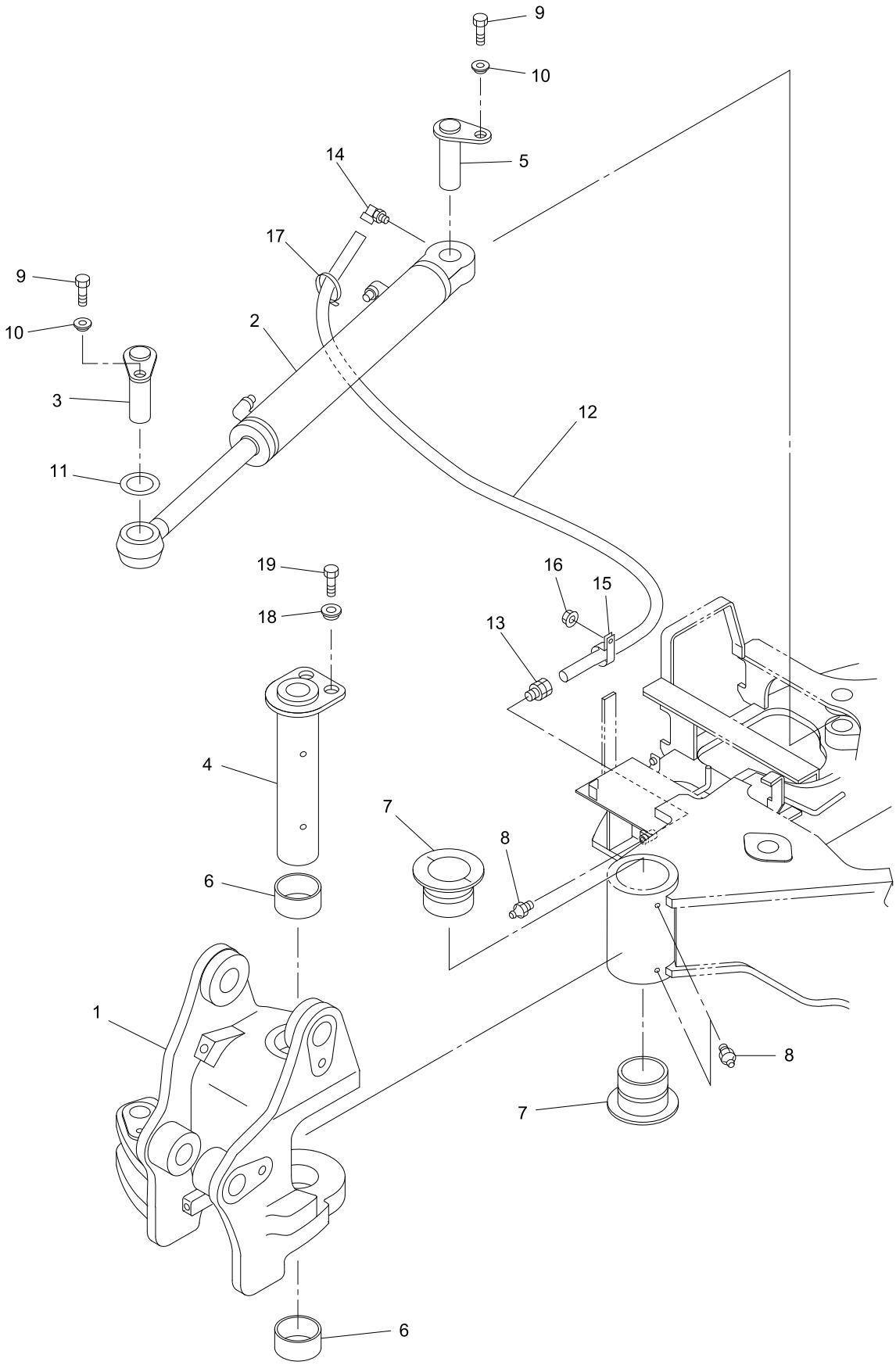

40V4-110200-1

https://truckmanualshub.com/

KEY No.	SUP.	PART No.	DESCRIPTION	Q'TY	CHAN.	SERIAL No.	REMARKS
0	×	F388 388 00	Swing Ass'y, Boom	1		WZ010001-	
1		D418 721 00	*Bracket, Boom Swing	1		WZ010001-	
2	#	0782 603 UA	*Cylinder Ass'y, Boom Swing	1		WZ010001-	Sh. No. 5-11
3		D017 234 03	*Pin	1		WZ010001-	
4		D017 259 00	*Pin	1		WZ010001-	
5		D017 234 05	*Pin	1		WZ010001-	
6		D043 030 00	*Bushing	2		WZ010001-	
7		D043 115 00	*Bushing	2		WZ010001-	
8		0728 111 15	*Nipple, Grease	3		WZ010001-	PT1/8
9		0555 160 30	*Bolt, Treatment	2		WZ010001-	M16X30
10		D047 058 00	*Bushing	2		WZ010001-	
11		4006 540 66	*Shim	AR		WZ010001-	d=50, t=1.0
11-1		4006 540 67	*Shim	AR		WZ010001-	d=50, t=2.0
12		0779 000 88	*Tube, Synflex	M		WZ010001-	L=1000
13		0710 106 27	*Connector	1		WZ010001-	
13-1		0713 100 02	**Sleeve	1		WZ010001-	
14		0710 107 27	*Elbow	1		WZ010001-	
14-1		0713 100 02	**Sleeve	1		WZ010001-	
15		4080 000 02	*Clamp, Hose	1		WZ010001-	
16		0524 100 00	*Nut, Hex. (W/F.W)	1		WZ010001-	M10 P=1.25
17		0820 067 05	*Band, Cable	1		WZ010001-	
18		D047 003 00	*Bushing	2		WZ010001-	
19		0555 160 35	*Bolt, Treatment	2		WZ010001-	M16X35

https://truckmanualshub.com/

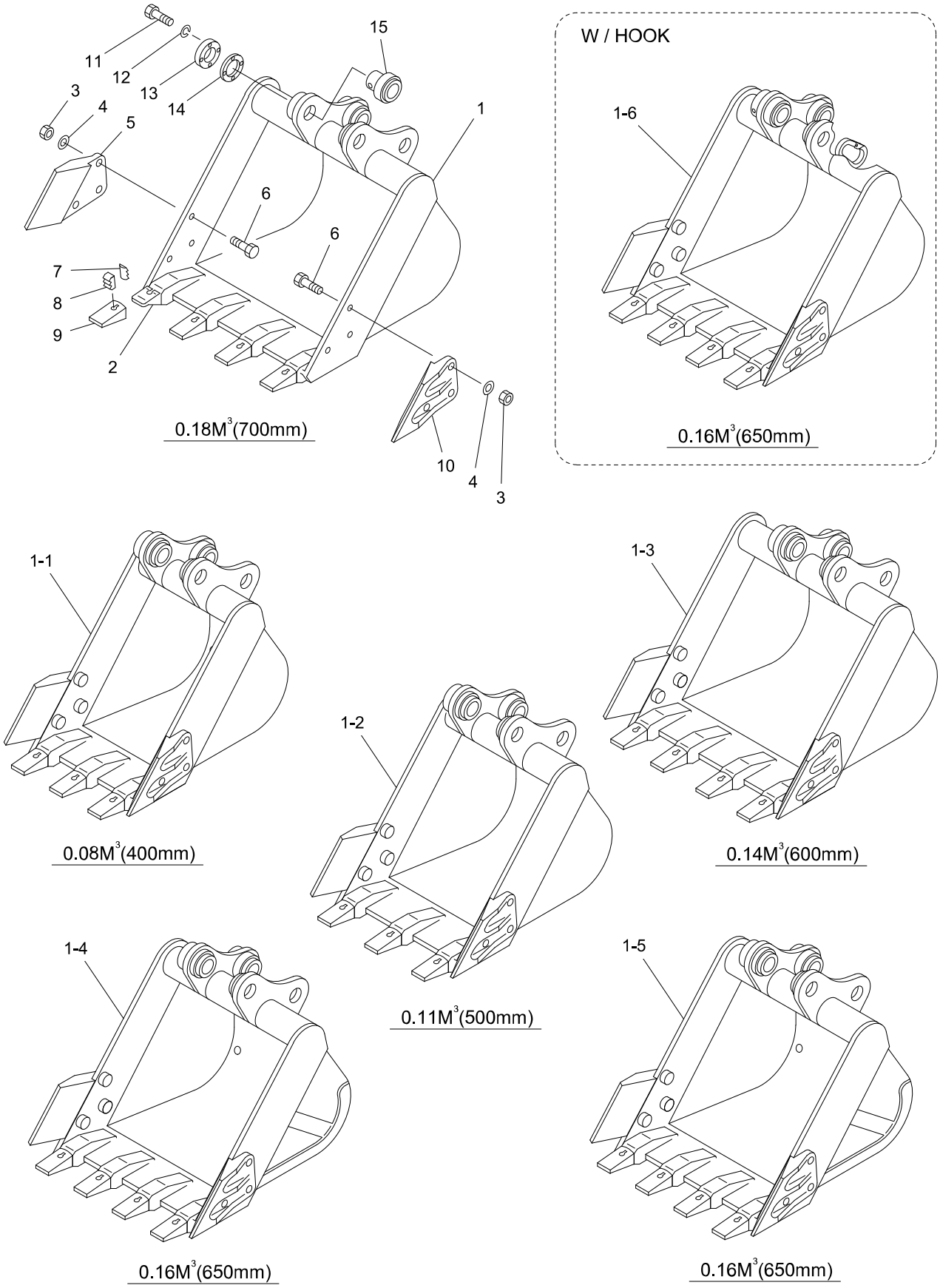

60V4-110300-1

https://truckmanualshub.com/

KEY No.	SUP.	PART No.	DESCRIPTION	Q'TY	CHAN.	SERIAL No.	REMARKS
0		F388 255 05	Bucket Ass'y, Hoe (0.18m3)	1		WZ010001-	Std.
0-1		F388 255 02	Bucket Ass'y, Hoe (0.08m3)	1		WZ010001-	
0-2		F388 255 03	Bucket Ass'y, Hoe (0.11m3)	1		WZ010001-	
0-3		F388 255 01	Bucket Ass'y, Hoe (0.14m3)	1		WZ010001-	
0-4		F388 255 04	Bucket Ass'y, Hoe (0.16m3)	1		WZ010001-	
0-5		F388 254 02	Bucket Ass'y, Hoe (Reinforced, 0.16m3)	1		WZ010001-	
0-6		F388 256 02	Bucket Ass'y, Hoe (0.16m3)	1		WZ010001-	W/Hook
1	×	D270 159 00	*Bucket, Hoe (0.18m3, 700mm)	1		WZ010001-	Std.
1-1	×	D270 156 00	*Bucket, Hoe (0.08m3, 400mm)	1		WZ010001-	
1-2	×	D270 157 00	*Bucket, Hoe (0.11m3, 500mm)	1		WZ010001-	
1-3	×	D270 155 00	*Bucket, Hoe (0.14m3, 600mm)	1		WZ010001-	
1-4	×	D270 158 00	*Bucket, Hoe (0.16m3, 650mm)	1		WZ010001-	
1-5	×	D270 154 00	*Bucket, Hoe (0.16m3, 650mm)	1		WZ010001-	強化, Reinforced
1-6	×	D270 161 00	*Bucket, Hoe (0.16m3, 650mm)	1		WZ010001-	W/Hook
2		0650 001 07	**Adapter, Tooth	AR		WZ010001-	
3		0585 140 00	*Nut, Treatment	6		WZ010001-	M14
4		D006 051 00	*Washer	6		WZ010001-	
5		4123 041 00	*Cutter, Side	1		WZ010001-	
6		0555 140 40	*Bolt, Treatment	6		WZ010001-	M14X40
7		0650 004 02	*Pin, Rubber	AR		WZ010001-	18-20M-LK
8		0650 003 03	*Pin, Lock	AR		WZ010001-	18-20M-PN
9		0650 002 04	*Tooth	AR		WZ010001-	18S
10		4123 040 00	*Cutter, Side	1		WZ010001-	
11		0513 100 30	*Bolt, Treatment	4		WZ010001-	M10X30
12		0590 100 00	*Washer, Lock	4		WZ010001-	M10
13		4435 636 00	*Flange	1		WZ010001-	
14		4007 308 00	*Shim	AR		WZ010001-	
15		D131 046 00	*Boss	1		WZ010001-	

https://truckmanualshub.com/

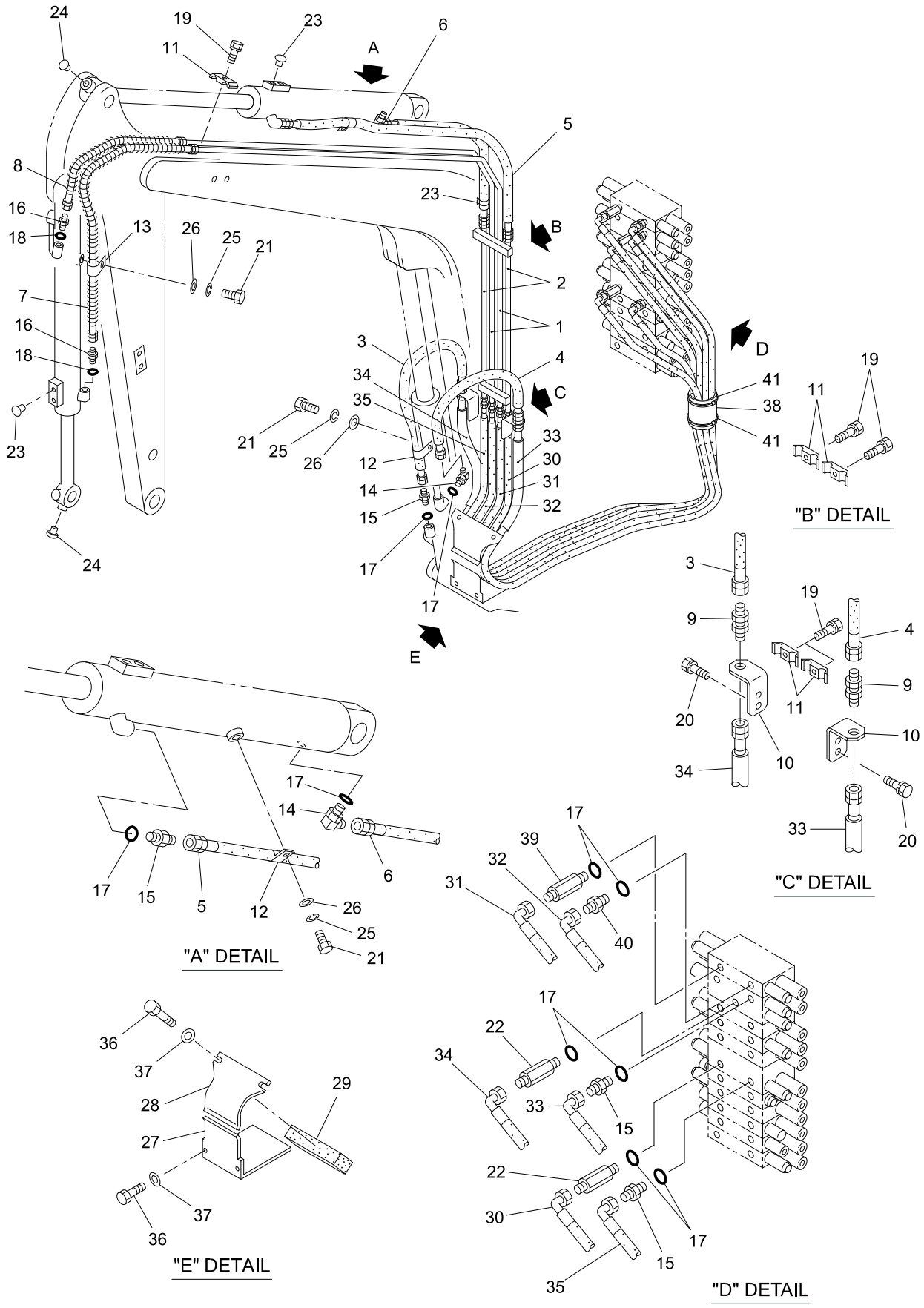

50V4-110400-1

https://truckmanualshub.com/

KEY No.	SUP.	PART No.	DESCRIPTION	Q'TY	CHAN.	SERIAL No.	REMARKS
0	×	F342 650 00	Piping Ass'y, Hoe Attachment	1		WZ010001-	
0-1	×	F342 651 00	Piping Ass'y, Hoe Attachment	1		WZ010001-	
1		D286 346 00	*Tube	2		WZ010001-	
2		D286 202 00	*Tube	2		WZ010001-	
3		D070 388 09	*Hose Ass'y	1		WZ010001-	L=1300
4		D070 388 01	*Hose Ass'y	1		WZ010001-	L=940
5		D070 388 13	*Hose Ass'y	1		WZ010001-	L=1600
6		D070 388 19	*Hose Ass'y	1		WZ010001-	L=840
7		D070 351 26	*Hose Ass'y	1		WZ010001-	L=1490
7-1		D070 351 05	*Hose Ass'y (For Long Arm)	1		WZ010001-	L=1750
8		D070 351 15	*Hose Ass'y	1		WZ010001-	L=890
8-1		D070 351 29	*Hose Ass'y (For Long Arm)	1		WZ010001-	L=1150
9		D060 451 00	*Connector	2		WZ010001-	
10		D418 756 00	*Bracket	2		WZ010001-	
11		4081 116 00	*Clamp, Tube	5		WZ010001-	
12		4080 000 06	*Clamp, Hose	2		WZ010001-	
13		4080 000 14	*Clamp, Hose	1		WZ010001-	
14		0710 113 44	*Elbow	2		WZ010001-	
15		0713 700 04	*Adapter	4		WZ010001-	
16		0713 700 03	*Adapter	2		WZ010001-	
17		0760 710 19	*Ring, O	10		WZ010001-	P18-90B
18		0760 710 16	*Ring, O	2		WZ010001-	P14-90B
19		0520 100 40	*Bolt, Treatment (W/L.W)	5		WZ010001-	M10X40 P=1.25
20		0520 100 20	*Bolt, Treatment (W/L.W)	4		WZ010001-	M10X20 P=1.25
21		0513 100 16	*Bolt, Treatment	3		WZ010001-	M10X16
22		4072 971 00	*Connector	2		WZ010001-	PF1/2XPF3/8
23		0690 201 08	*Plug	4		WZ010001-	
24		0690 201 09	*Plug	2		WZ010001-	
25		0590 100 00	*Washer, Lock	3		WZ010001-	M10
26		0593 100 00	*Washer, Flat	3		WZ010001-	M10
27		D458 444 00	*Cover	1		WZ010001-	
28		D458 434 00	*Cover	1		WZ010001-	
29		D580 163 00	*Pad	1		WZ010001-	
30		D070 385 09	*Hose Ass'y	1		WZ010001-	L=2830
30-1	☆	4405 320 01	*Decal (AA)	2		WZ010001-	4405 320 00
31		D070 386 03	*Hose Ass'y	1		WZ010001-	L=3080
31-1	☆	4405 319 01	*Decal (CA)	2		WZ010001-	4405 319 00
32		D070 386 04	*Hose Ass'y	1		WZ010001-	L=3000
32-1	☆	4405 319 02	*Decal (CB)	2		WZ010001-	4405 319 00
33		D070 385 06	*Hose Ass'y	1		WZ010001-	L=3170
33-1	☆	4405 318 02	*Decal (BB)	2		WZ010001-	4405 318 00
34		D070 385 07	*Hose Ass'y	1		WZ010001-	L=3100
34-1	☆	4405 318 01	*Decal (BA)	2		WZ010001-	4405 318 00

https://truckmanualshub.com/

KEY No.	SUP.	PART No.	DESCRIPTION	Q'TY	CHAN.	SERIAL No.	REMARKS
35		D070 385 08	*Hose Ass'y	1		WZ010001-	L=2770
35-1	☆	4405 320 02	*Decal (AB)	2		WZ010001-	4405 320 00
36		0550 120 20	*Bolt, Hex.	4		WZ010001-	M12X20
37		0595 120 00	*Washer, Treatment	4		WZ010001-	M12
38		4070 351 03	*Cover, Hose	1		WZ010001-	
39		D060 071 00	*Bush, Reducer	1		WZ010001-	PF1/2XPF3/8
40		0713 700 78	*Adapter, Reducer	1		WZ010001-	PF1/2XPF3/8
41		0820 067 10	*Band, Cable	2		WZ010001-	

https://truckmanualshub.com/

[Memo]

https://truckmanualshub.com/

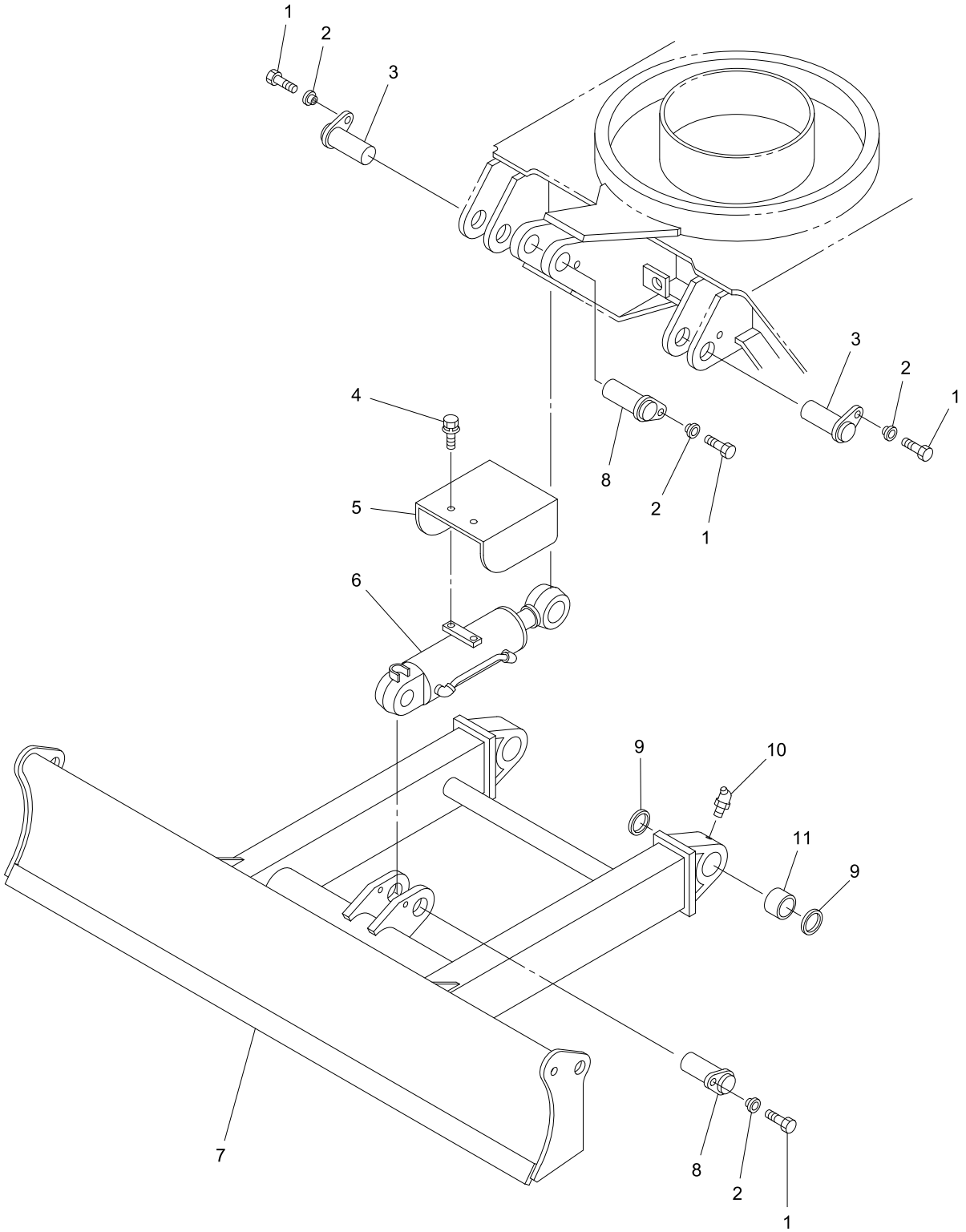

40V4-120100-1

https://truckmanualshub.com/

KEY No.	SUP.	PART No.	DESCRIPTION	Q'TY	CHAN.	SERIAL No.	REMARKS
0	×	F301 019 00	Attachment Ass'y, Blade	1		WZ010001-	
1		0558 160 30	*Bolt, Treatment	4		WZ010001-	M16X30 P=1.5
2		D047 058 00	*Bushing	4		WZ010001-	
3		D017 234 01	*Pin, Wing	2		WZ010001-	
4		0518 100 20	*Bolt, Treatment (W/L.W, F.W)	2		WZ010001-	M10X20 P=1.25
5		D456 908 00	*Cover	1		WZ010001-	
6	#	0782 608 UA	*Cylinder Ass'y, Blade	1		WZ010001-	Sh. No. 5-12
7		D257 110 00	*Blade	1		WZ010001-	
8		D017 254 01	*Pin, Wing	2		WZ010001-	
9		0765 033 28	*Seal, Dust	4		WZ010001-	
10		0728 111 65	*Nipple, Grease	2		WZ010001-	PT1/8X90
11		4043 376 01	*Bushing	2		WZ010001-	

https://truckmanualshub.com/

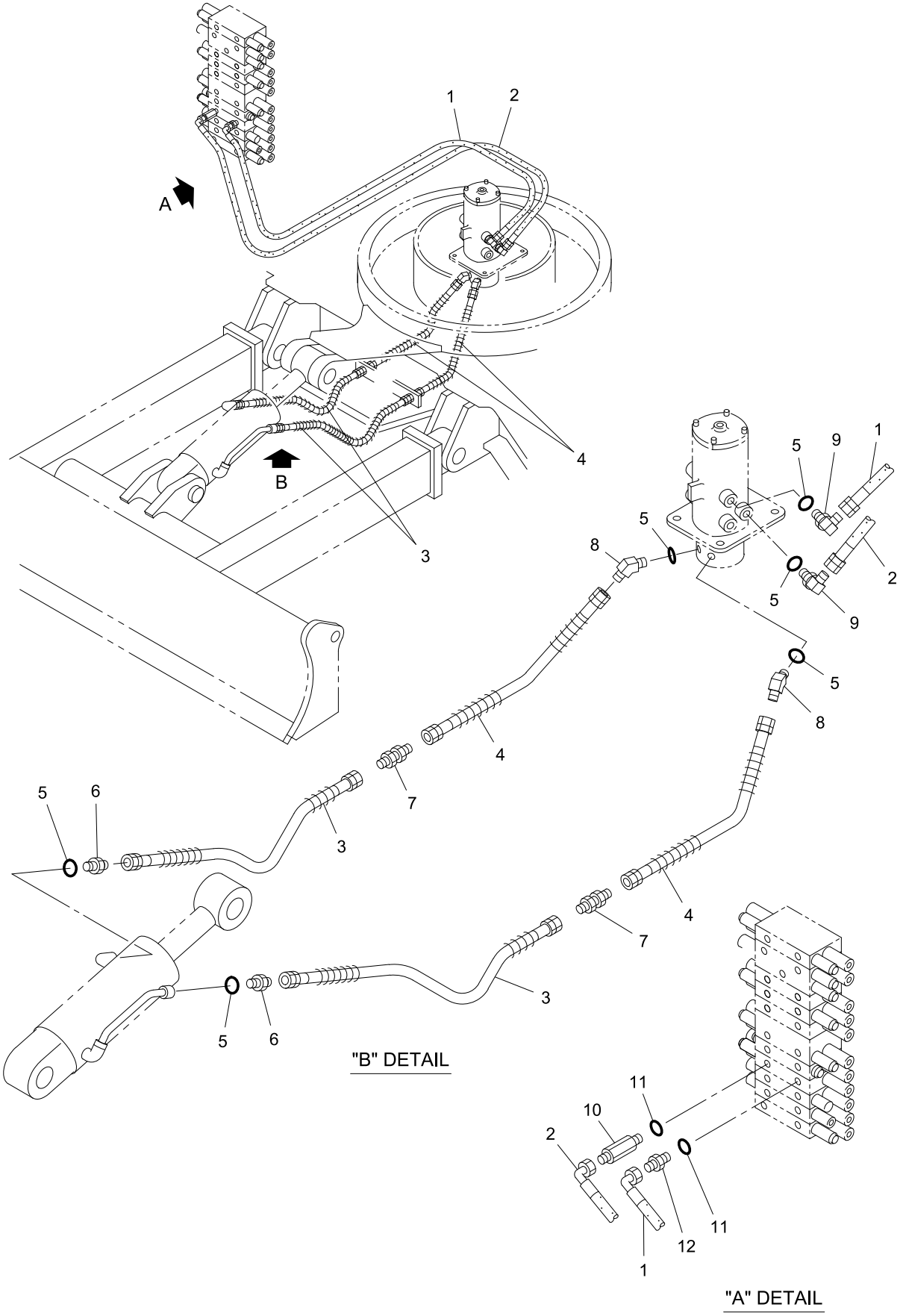

40V4-120200-1

https://truckmanualshub.com/

KEY No.	SUP.	PART No.	DESCRIPTION	Q'TY	CHAN.	SERIAL No.	REMARKS
0	×	F342 647 00	Piping Ass'y, Blade	1		WZ010001-	
0-1	×	F342 651 00	Piping Ass'y, Blade	1		WZ010001-	
1		D070 362 10	*Hose Ass'y	1		WZ010001-	L=1300
2		D070 362 11	*Hose Ass'y	1		WZ010001-	L=1390
3		D070 348 02	*Hose Ass'y	2		WZ010001-	L=500
4		D070 349 01	*Hose Ass'y	2		WZ010001-	L=370
5		0760 710 16	*Ring, O	6		WZ010001-	P14-90B
6		0713 700 03	*Adapter	2		WZ010001-	
7		D060 032 00	*Adapter	2		WZ010001-	
8		0710 114 33	*Elbow, 45	2		WZ010001-	
9		0710 122 02	*Elbow	2		WZ010001-	
10		D060 071 00	*Connector, Reducer	1		WZ010001-	PF1/2XPF3/8
11		0760 710 19	*Ring, O	2		WZ010001-	P18-90B
12		0713 700 78	*Connector, Reducer	1		WZ010001-	PF1/2XPF3/8

https://truckmanualshub.com/

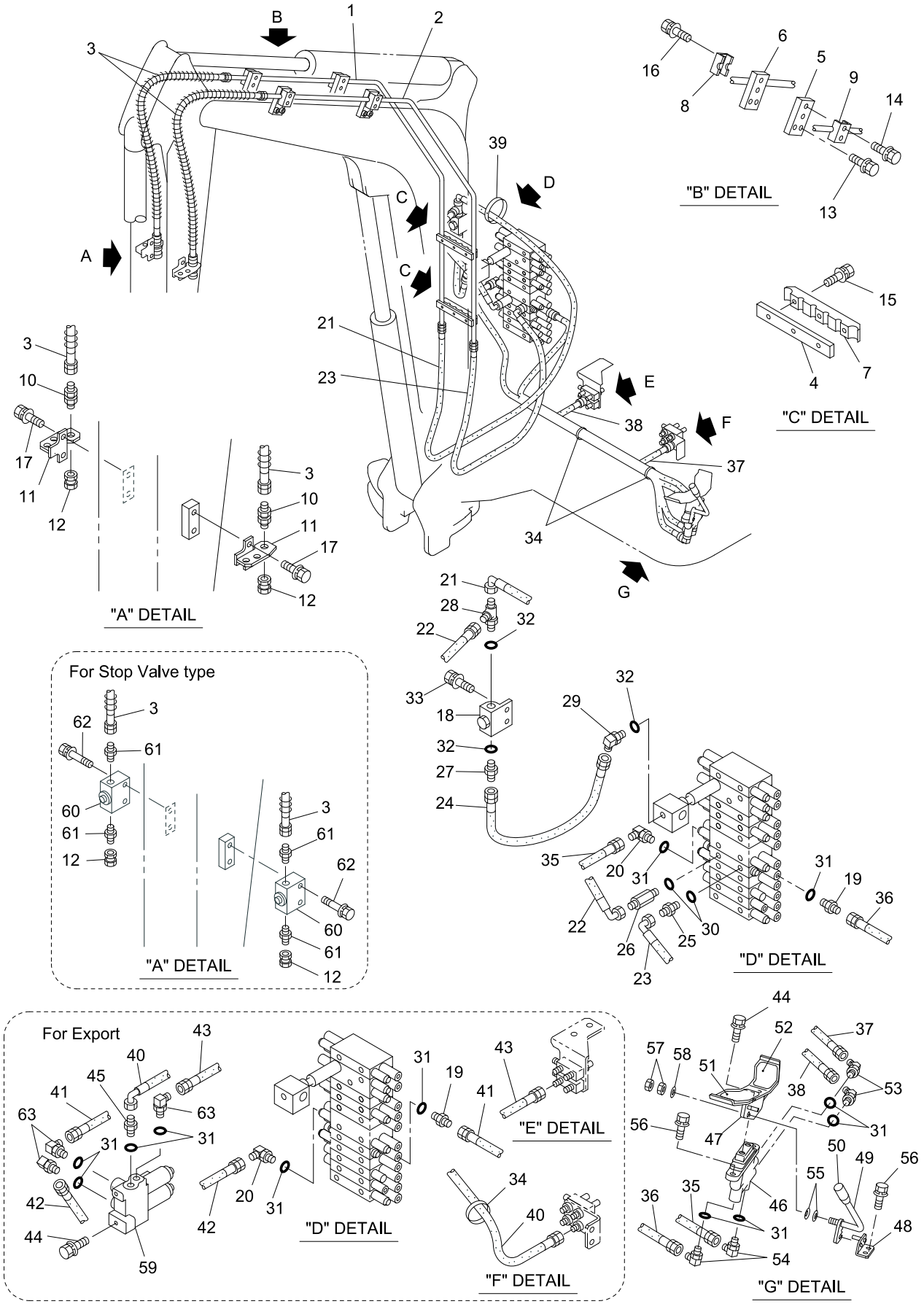

40V4-150100-1

https://truckmanualshub.com/

KEY No.	SUP.	PART No.	DESCRIPTION	Q'TY	CHAN.	SERIAL No.	REMARKS
0	×	F342 665 00	Piping Ass'y, First Spare	1		WZ010001-	
1		D286 246 00	*Tube	1		WZ010001-	
2		D286 247 00	*Tube	1		WZ010001-	
3		D070 372 01	*Hose Ass'y	2		WZ010001-	L=900
4		D082 034 00	*Seat, Clamp	2		WZ010001-	
5		D082 111 00	*Seat, Clamp	2		WZ010001-	
6		D082 110 00	*Seat, Clamp	2		WZ010001-	
7		D081 193 00	*Clamp, Tube	2		WZ010001-	
8		D081 195 00	*Clamp, Tube	2		WZ010001-	
9		D081 023 00	*Clamp, Tube	2		WZ010001-	
10		D060 500 00	*Connector	2		WZ010001-	
11		D418 813 00	*Bracket	2		WZ010001-	
12		0710 303 06	*Plug, Swivel	2		WZ010001-	
13		0518 100 25	*Bolt, Treatment (W/L.W, F.W)	8		WZ010001-	M10X25 P=1.25
14		0518 100 45	*Bolt, Treatment (W/L.W, F.W)	4		WZ010001-	M10X45 P=1.25
15		0518 100 50	*Bolt, Treatment (W/L.W, F.W)	6		WZ010001-	M10X50 P=1.25
16		0518 100 55	*Bolt, Treatment (W/L.W, F.W)	4		WZ010001-	M10X55 P=1.25
17		0518 100 20	*Bolt, Treatment (W/L.W, F.W)	4		WZ010001-	M10X20 P=1.25
18		0725 004 UA	*Valve, Stop	1		WZ010001-	
19		0713 700 70	*Adapter	1		WZ010001-	
20		0710 122 09	*Elbow	1		WZ010001-	
21		D070 387 02	*Hose Ass'y	1		WZ010001-	L=3450
22		D070 363 25	*Hose Ass'y	1		WZ010001-	L=420
23		D070 385 10	*Hose Ass'y	1		WZ010001-	L=2900
24		4070 754 25	*Hose Ass'y	1		WZ010001-	L=850
25		0713 700 72	*Adapter	1		WZ010001-	
26		4072 971 00	*Connector	1		WZ010001-	
27		0713 700 73	*Adapter	1		WZ010001-	
28		D060 511 00	*Tee	1		WZ010001-	
29		0710 113 66	*Elbow	1		WZ010001-	
30		0760 710 19	*Ring, O	2		WZ010001-	P18-90B
31		0760 710 12	*Ring, O	6		WZ010001-	P11-90B
32		0760 710 24	*Ring, O	3		WZ010001-	P22.4-90B
33		0517 080 30	*Bolt, Treatment (W/L.W, F.W)	2		WZ010001-	M8X30
34		0820 067 05	*Band, Cable	4		WZ010001-	
35		4070 548 41	*Hose Ass'y	1		WZ010001-	L=1850
35-1	☆	D407 125 02	*Decal (Y2)	2		WZ010001-	D407 125 00
36		4070 548 19	*Hose Ass'y	1		WZ010001-	L=1250
36-1	☆	D407 125 01	*Decal (Y1)	2		WZ010001-	D407 125 00
37		4070 548 27	*Hose Ass'y	1		WZ010001-	L=600
38		4070 548 16	*Hose Ass'y	1		WZ010001-	L=850

https://truckmanualshub.com/

KEY No.	SUP.	PART No.	DESCRIPTION	Q'TY	CHAN.	SERIAL No.	REMARKS
39		0820 067 04	*Band, Cable	1		WZ010001-	
40		4070 551 18	*Hose Ass'y	1		WZ010001-	L=1460
41		4070 548 50	*Hose Ass'y	1		WZ010001-	L=460
41-1	☆	D407 125 01	*Decal (Y1)	2		WZ010001-	D407 125 00
42		4070 548 18	*Hose Ass'y	1		WZ010001-	L=1050
42-1	☆	D407 125 02	*Decal (Y2)	2		WZ010001-	D407 125 00
43		4070 548 13	*Hose Ass'y	1		WZ010001-	L=1100
44		0517 080 16	*Bolt, Treatment (W/L.W, F.W)	2		WZ010001-	M8X16
45		0713 700 70	*Adapter	1		WZ010001-	
46	#	0783 965 UA	*Valve Ass'y, Pilot	1		WZ010001-	Sh. No. 5-14
47		D501 059 00	*Pedal	1		WZ010001-	
48		D416 915 00	*Bracket	1		WZ010001-	
49		4497 989 00	*Lever	1		WZ010001-	
50		4096 033 00	*Grip	1		WZ010001-	
51		D406 930 00	*Pad, Rubber	1		WZ010001-	
52		D406 931 00	*Pad, Rubber	1		WZ010001-	
53		0710 121 00	*Elbow, 45	2		WZ010001-	
54		0710 122 09	*Elbow	2		WZ010001-	
55		0591 080 00	*Washer, Conical Spring	2		WZ010001-	
56		0517 080 20	*Bolt, Treatment (W/L.W, F.W)	4		WZ010001-	M8X20
57		0544 080 00	*Nut, Hex.	2		WZ010001-	M8
58		0593 080 00	*Washer, Flat	1		WZ010001-	M8
59		0785 169 UA	*Valve, Solenoid	1		WZ010001-	
60		0754 805 UA	*Cock	2		WZ010001-	
61		0712 310 33	*Adapter	4		WZ010001-	
62		0520 100 70	*Bolt, Treatment (W/L.W)	4		WZ010001-	M10X70 P=1.25
63		0710 122 09	*Elbow	3		WZ010001-	

https://truckmanualshub.com/

[Memo]

https://truckmanualshub.com/

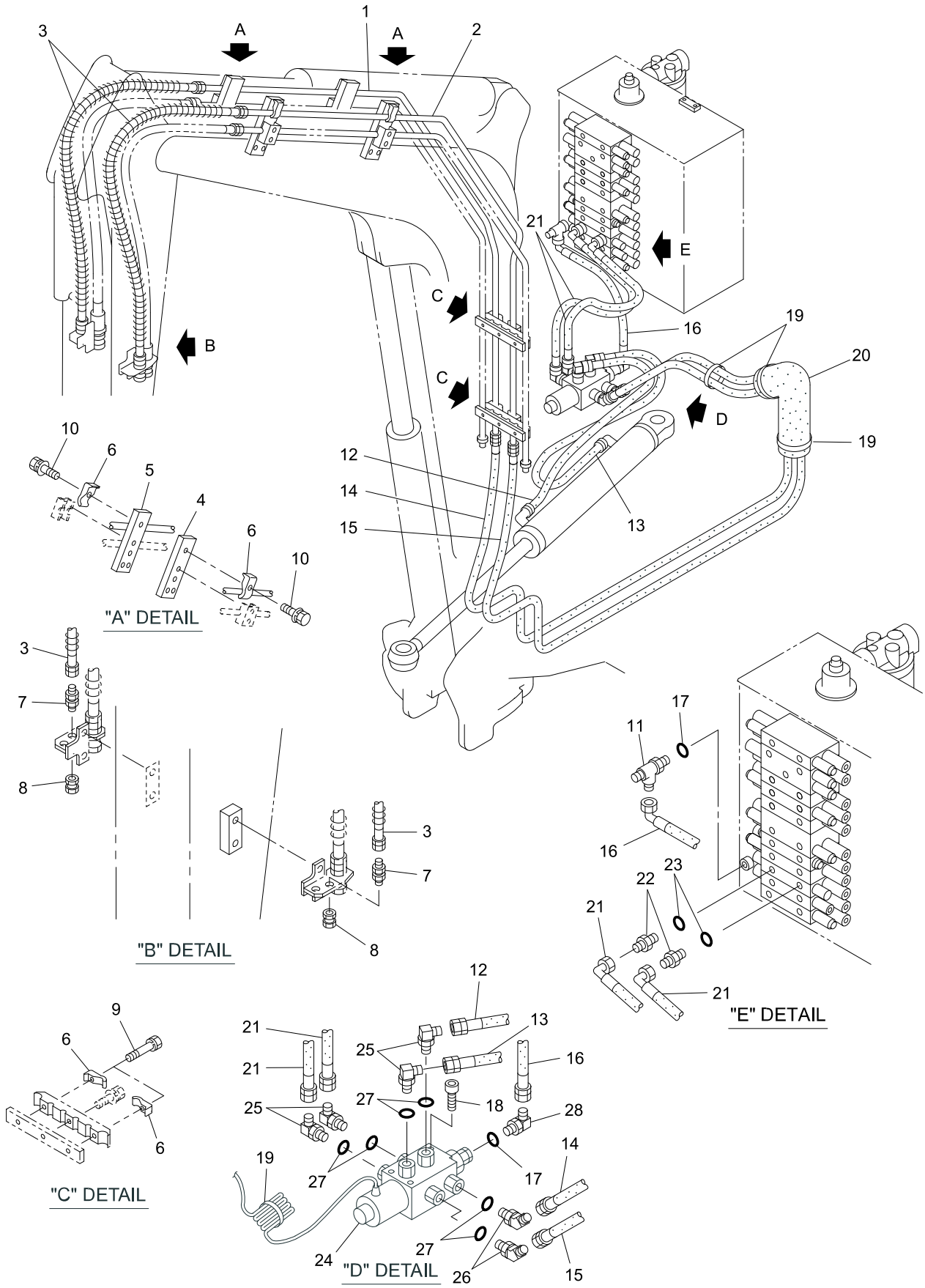

40V4-150200-1

https://truckmanualshub.com/

KEY No.	SUP.	PART No.	DESCRIPTION	Q'TY	CHAN.	SERIAL No.	REMARKS
0	×	F342 665 00	Piping Ass'y, Second Spare	1		WZ010001-	
1		D286 248 00	*TUBE	1		WZ010001-	
2		D286 249 00	*TUBE	1		WZ010001-	
3		D070 373 04	*Hose Ass'y	2		WZ010001-	L=980
4		D082 109 00	*Seat, Clamp	2		WZ010001-	
5		D082 108 00	*Seat, Clamp	2		WZ010001-	
6		4081 118 00	*Clamp, Tube	8		WZ010001-	
7		D060 137 00	*Adapter	2		WZ010001-	
8		0710 303 02	*Plug, Swivel	2		WZ010001-	PF1/4
9		0520 100 70	*Bolt, Treatment (W/L.W)	4		WZ010001-	M10X70 P=1.25
10		0518 100 40	*Bolt, Treatment (W/L.W, F.W)	4		WZ010001-	M10X40 P=1.25
11		0710 713 09	*Tee	1		WZ010001-	
12		D070 361 02	*Hose Ass'y	1		WZ010001-	L=390
13		D070 361 03	*Hose Ass'y	1		WZ010001-	L=490
14		D070 410 03	*Hose Ass'y	1		WZ010001-	L=2900
14-1	☆	4405 308 03	*Decal (R2)	2		WZ010001-	4405 308 00
15		D070 410 03	*Hose Ass'y	1		WZ010001-	L=2900
15-1	☆	4405 310 03	*Decal (L2)	2		WZ010001-	4405 310 00
16		4070 551 14	*Hose Ass'y	1		WZ010001-	L=260
17		0760 710 12	*Ring, O	2		WZ010001-	P11-90B
18		0562 060 35	*Bolt, Socket Head	3		WZ010001-	M6X35
19		0820 067 09	*Band, Cable	4		WZ010001-	
20		4070 854 11	*Cover, Hose	1		WZ010001-	L=200
21		D070 360 02	*Hose Ass'y	2		WZ010001-	L=710
22		D060 503 00	*Connector	2		WZ010001-	
23		0760 710 19	*Ring, O	2		WZ010001-	P18-90B
24		0786 988 UA	*Valve Ass'y, Solenoid	1		WZ010001-	
25		0710 113 32	*Elbow, Reducer	4		WZ010001-	PF3/8XPF1/4
26		0710 114 32	*Elbow, 45 Reducer	2		WZ010001-	PF1/4XPF3/8
27		0760 710 16	*Ring, O	6		WZ010001-	P14-90B
28		0710 122 09	*Elbow	1		WZ010001-	

https://truckmanualshub.com/

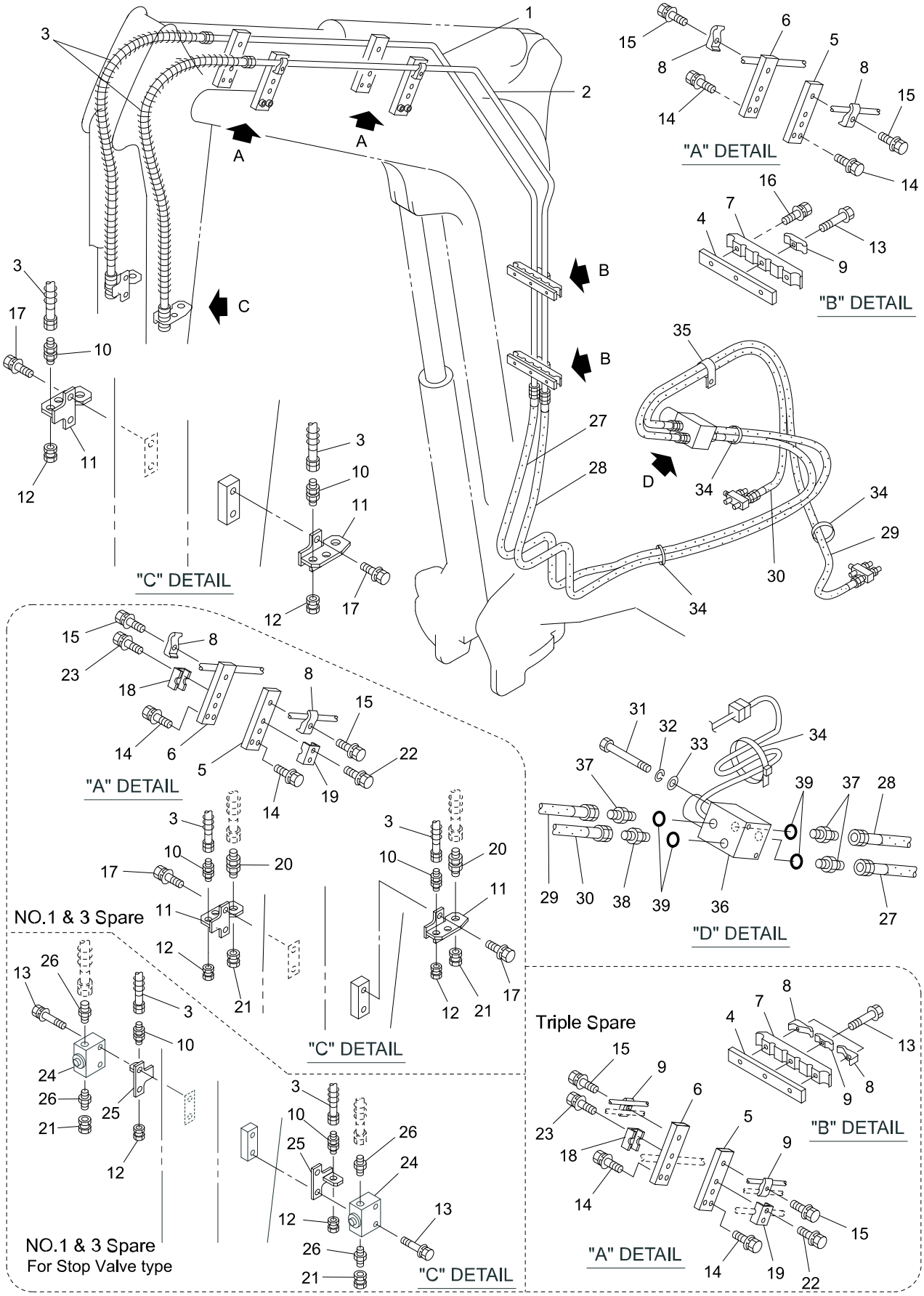

40V4-150300-1

https://truckmanualshub.com/

KEY No.	SUP.	PART No.	DESCRIPTION	Q'TY	CHAN.	SERIAL No.	REMARKS
0	×	F342 665 00	Piping Ass'y, Third Spare	1		WZ010001-	
1		D286 250 00	*TUBE	1		WZ010001-	
2		D286 251 00	*TUBE	1		WZ010001-	
3		D070 373 02	*Hose Ass'y	2		WZ010001-	L=1030
4		D082 034 00	*Seat, Clamp	2		WZ010001-	
5		D082 109 00	*Seat, Clamp	2		WZ010001-	
6		D082 108 00	*Seat, Clamp	2		WZ010001-	
7		D081 193 00	*Clamp, Tube	2		WZ010001-	
8		4081 118 00	*Clamp, Tube	4		WZ010001-	
9		4081 189 00	*Clamp, Tube	2		WZ010001-	
10		D060 137 00	*Adapter	2		WZ010001-	
11		D418 813 00	*Bracket	2		WZ010001-	
12		0710 303 02	*Plug, Swivel	2		WZ010001-	PF1/4
13		0520 100 70	*Bolt, Treatment (W/L.W)	3		WZ010001-	M10X70 P=1.25
14		0518 100 25	*Bolt, Treatment (W/L.W, F.W)	8		WZ010001-	M10X25 P=1.25
15		0518 100 40	*Bolt, Treatment (W/L.W, F.W)	4		WZ010001-	M10X40 P=1.25
16		0518 100 50	*Bolt, Treatment (W/L.W, F.W)	4		WZ010001-	M10X50 P=1.25
17		0518 100 20	*Bolt, Treatment (W/L.W, F.W)	4		WZ010001-	M10X20 P=1.25
18		D081 195 00	*Clamp, Tube	2		WZ010001-	
19		D081 023 00	*Clamp, Tube	2		WZ010001-	
20		D060 500 00	*Connector	2		WZ010001-	
21		0710 303 06	*Plug Swivel	2		WZ010001-	
22		0518 100 45	*Bolt, Treatment (W/L.W, F.W)	4		WZ010001-	M10X45 P=1.25
23		0518 100 55	*Bolt, Treatment (W/L.W, F.W)	4		WZ010001-	M10X55 P=1.25
24		0754 805 UA	*Cook	2		WZ010001-	
25		D418 815 00	*Bracket	2		WZ010001-	
26		0712 310 33	*Adapter	4		WZ010001-	
27		D070 195 22	*Hose Ass'y	1		WZ010001-	L=2590
27-1	☆	4405 307 04	*Decal (R3)	2		WZ010001-	4405 307 00
28		D070 195 22	*Hose Ass'y	1		WZ010001-	L=2590
28-1	☆	4405 309 04	*Decal (L3)	2		WZ010001-	4405 309 00
29		4070 548 61	*Hose Ass'y	1		WZ010001-	L=1700
30		4070 782 22	*Hose Ass'y	1		WZ010001-	L=1250
31		0513 080 90	*Bolt, Treatment	2		WZ010001-	M8X90
32		0590 080 00	*Washer, Lock	2		WZ010001-	M8
33		0593 080 00	*Washer, Flat	2		WZ010001-	M8
34		0820 067 09	*Band, Cable	4		WZ010001-	
35		4080 000 29	*Clamp, Hose	1		WZ010001-	
36		0785 171 UA	*Valve Ass'y, Solenoid	1		WZ010001-	
37		0713 700 70	*Connector	3		WZ010001-	

https://truckmanualshub.com/

KEY No.	SUP.	PART No.	DESCRIPTION	Q'TY	CHAN.	SERIAL No.	REMARKS
38		0713 700 93	*Adapter, Reducer	1		WZ010001-	PF1/4XPF3/8
39		0760 710 12	*Ring, O	4		WZ010001-	P11-90B

https://truckmanualshub.com/

[Memo]

https://truckmanualshub.com/

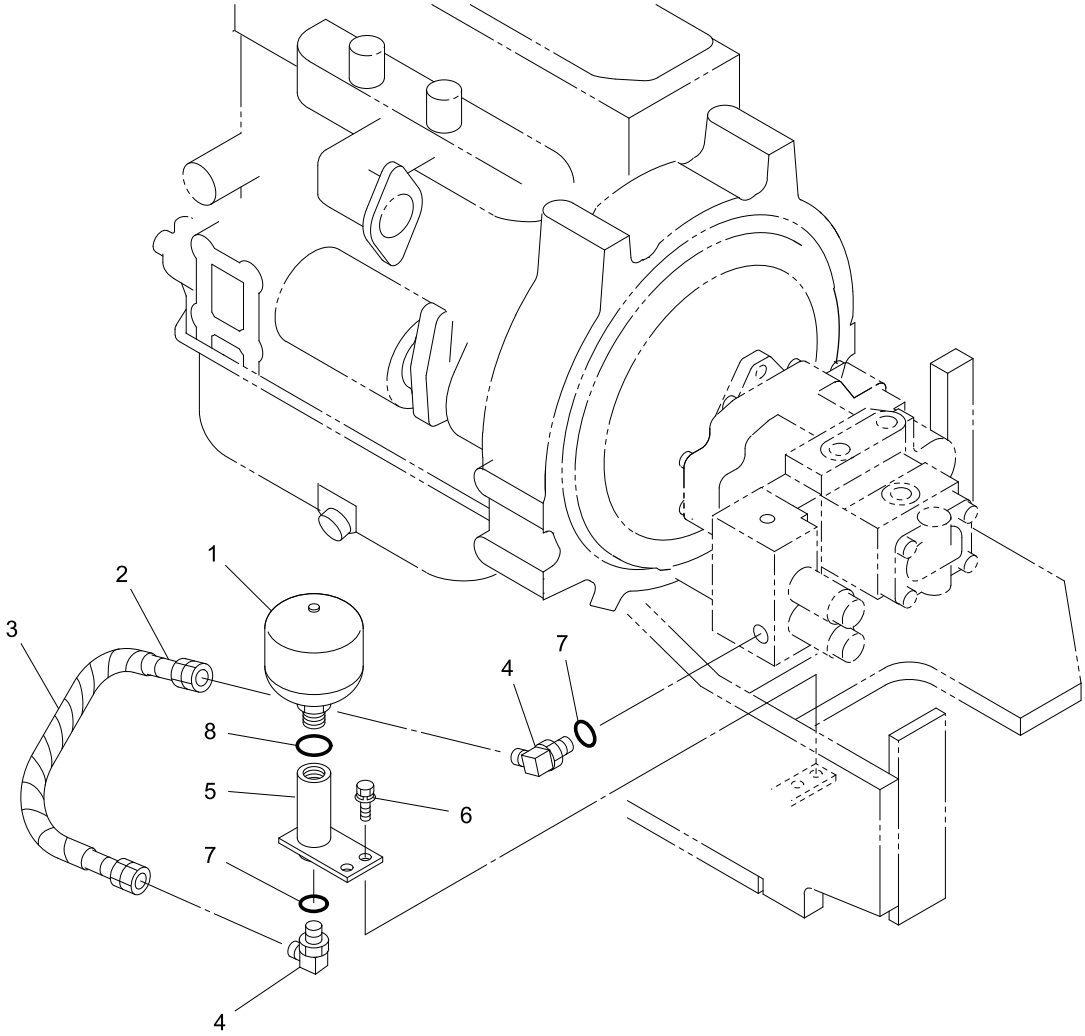

40V4-150400-1

https://truckmanualshub.com/

KEY No.	SUP.	PART No.	DESCRIPTION	Q'TY	CHAN.	SERIAL No.	REMARKS
0	×	F342 676 00	Accumulator Ass'y	1		WZ010001-	
1		0759 301 UA	*Accumulator	1		WZ010001-	
2		4070 056 32	*Hose Ass'y	1		WZ010001-	L=350
3		0820 803 05	*Tube, Corrugate	M		WZ010001-	L=350
4		0710 122 10	*Elbow	2		WZ010001-	
5		D060 512 00	*Connector	1		WZ010001-	
6		0517 080 20	*Bolt, Treatment (W/L.W, F.W)	2		WZ010001-	M8X20
7		0760 710 16	*Ring, O	2		WZ010001-	P14-90B
8		0760 710 19	*Ring, O	1		WZ010001-	P18-90B

https://truckmanualshub.com/

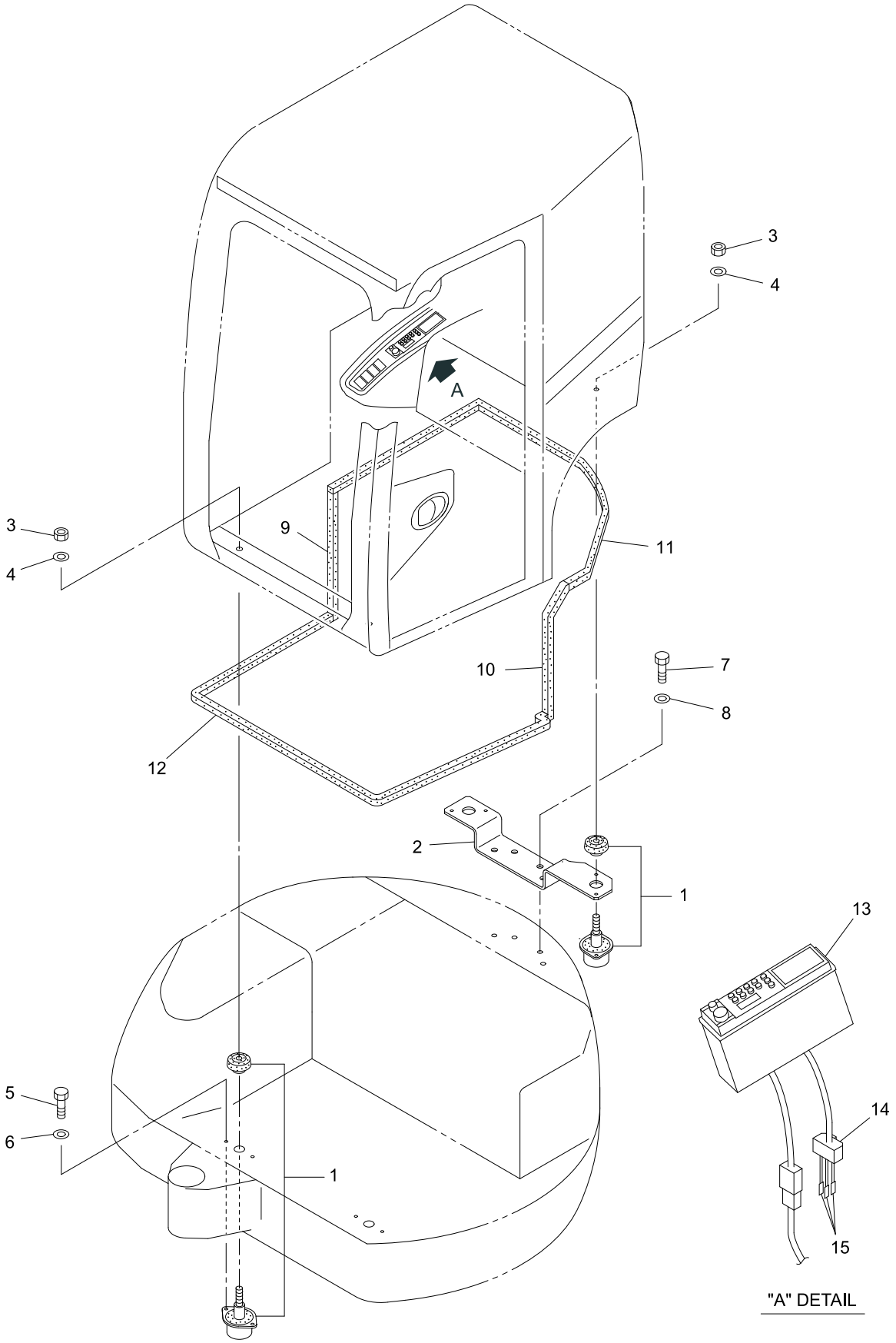

V4ALL-150500-1

https://truckmanualshub.com/

KEY No.	SUP.	PART No.	DESCRIPTION	Q'TY	CHAN.	SERIAL No.	REMARKS
0	×	F355 182 00	Room Ass'y, Operator	1		WZ010001-	
1		0690 203 15	*Mount, Cab	4		WZ010001-	
2		D418 455 00	*Bracket	1		WZ010001-	
3		0585 200 00	*Nut, Treatment	4		WZ010001-	M20, M20
4		0595 200 00	*Washer, Treatment	4		WZ010001-	M20, M20
5		0555 100 40	*Bolt, Treatment	8		WZ010001-	M10X40, M10X40
6		0595 100 00	*Washer, Treatment	8		WZ010001-	M10, M10
7		0555 160 50	*Bolt, Treatment	4		WZ010001-	M16X50, M16X50
8		0595 160 00	*Washer, Treatment	4		WZ010001-	M16, M16
9		4550 906 23	*Seal, Sponge	1		WZ010001-	L=500
10		4550 906 24	*Seal, Sponge	1		WZ010001-	L=550
11		4550 906 25	*Seal, Sponge	1		WZ010001-	L=1900
12		4550 906 26	*Seal, Sponge	1		WZ010001-	L=2250
13		0850 500 10	*Radio	1		WZ010001-	For Japanese
14		0830 408 00	*Housing	1		WZ010001-	
15		0820 657 08	*Terminal	3		WZ010001-	

https://truckmanualshub.com/

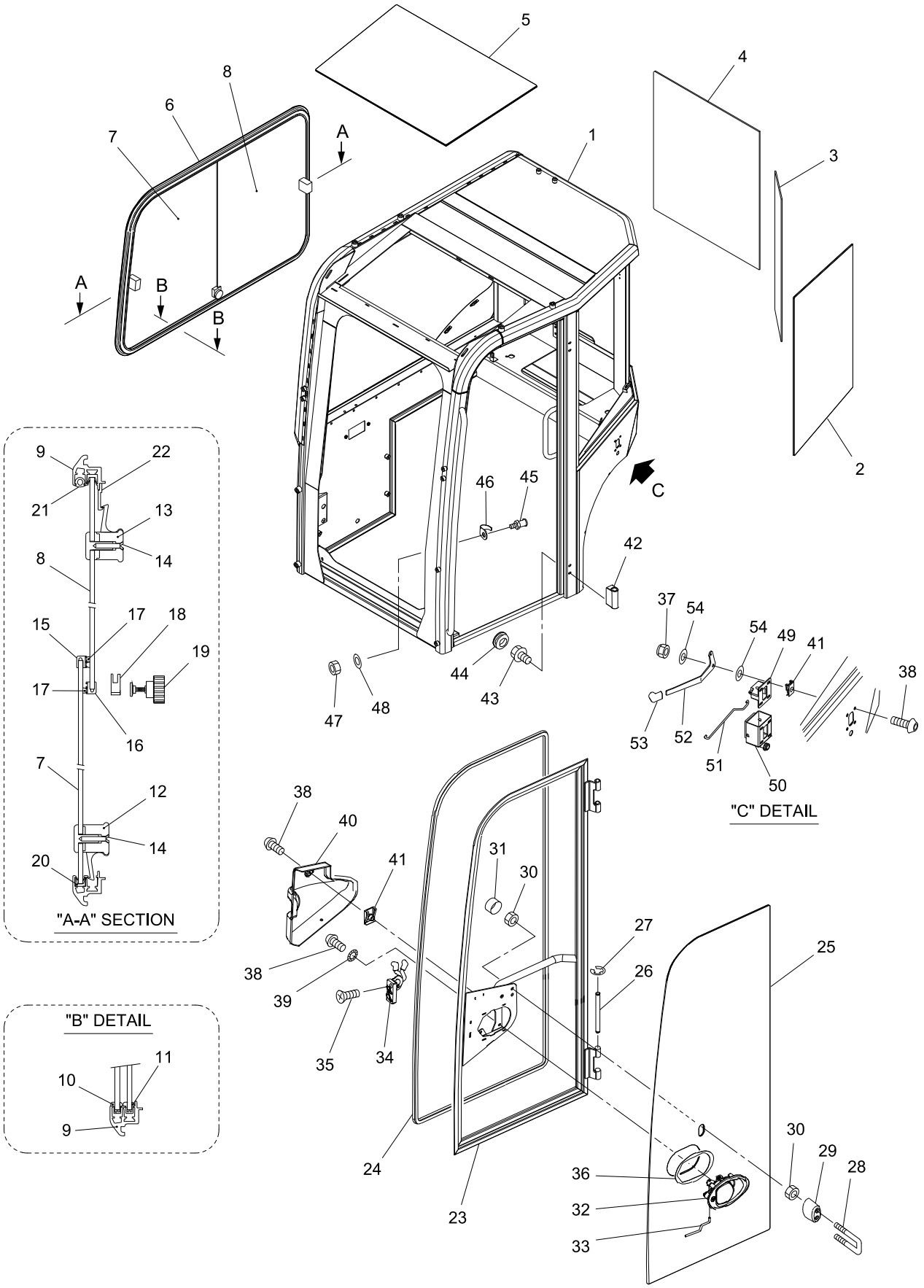

https://truckmanualshub.com/

KEY No.	SUP.	PART No.	DESCRIPTION	Q'TY	CHAN.	SERIAL No.	REMARKS
0	×	3034212018	Cabin Ass'y (Dark Grey)	1		WZ010001-	
0-1	×	3034212019	Cabin Ass'y (Light Grey)	1		WZ010001-	
1		F354 810 00	*Cabin (Dark Grey)	1		WZ010001-	
1-1		5290105300	*Cabin (Light Grey)	1		WZ010001-	
2		4016000000	*Glass (L.H.)	1		WZ010001-	
3		4016000001	*Glass (Rear Side)	1		WZ010001-	
4		4016000002	*Glass (Rear)	1		WZ010001-	
5		4016000003	*Glass (Roof)	1		WZ010001-	
6		4016000004	*Window Ass'y, Side	1		WZ010001-	
7		4016000005	**Glass (Front)	1		WZ010001-	
8		4016000006	**Glass (Rear)	1		WZ010001-	
9		4016000007	**Frame, Glass	1		WZ010001-	
10		4016000008	**Shoe (Front)	1		WZ010001-	
11		4016000009	**Shoe (Rear)	1		WZ010001-	
12		4016000010	**Handle, Sliding (Front)	1		WZ010001-	
13		4016000011	**Handle, Sliding (Rear)	1		WZ010001-	
14		4016000012	**Bolt	4		WZ010001-	4.8X32
15		4016000013	**Support, Brush (Front)	1		WZ010001-	
16		4016000014	**Support, Brush (Rear)	2		WZ010001-	
17		4016000015	**Brush	3		WZ010001-	
18		4016000016	**Glass Blocking	1		WZ010001-	
19		4016000017	**Handle, Glass Blocking	1		WZ010001-	
20		4016000018	**Support, Sliding	2		WZ010001-	
21		4016000019	**Gasket	2		WZ010001-	
22		4016000020	**Handle, Stop	1		WZ010001-	
23		4016000021	*Frame, Door (Dark Grey)	1		WZ010001-	
23-1		4016000022	*Frame, Door (Light Grey)	1		WZ010001-	
24		4016000023	*Gasket	1		WZ010001-	L=4050
25		4016000024	*Glass (Door)	1		WZ010001-	
26		4015000088	*Pin, Hinge	2		WZ010001-	
27		4015000092	*Ring, Elastic	4		WZ010001-	d=10
28		4016000025	*Hook, Door Stop	1		WZ010001-	L=94
28-1		4016000026	*Hook, Door Stop	1		WZ010001-	L=120
29		4016000027	*Absorber, Shock	1		WZ010001-	H=50
29-1		4016000028	*Absorber, Shock	1		WZ010001-	H=77
30		4016000029	*Nut, Special	4		WZ010001-	M8
31		4012000206	*Cap	2		WZ010001-	M8
32		4016000030	*Handle Ass'y	1		WZ010001-	
33		4016000031	*Rod	1		WZ010001-	
34		4013001426	*Lock, Door	1		WZ010001-	
35		3442505	*Bolt	1		WZ010001-	M8X40
36		4012000390	*Gasket	1		WZ010001-	
37		4015000091	*Nut	1		WZ010001-	M8
38		4016000033	*Bolt	10		WZ010001-	M6X16
39		4012000185	*Washer Toothed	4		WZ010001-	M6

https://truckmanualshub.com/

KEY No.	SUP.	PART No.	DESCRIPTION	Q'TY	CHAN.	SERIAL No.	REMARKS
40		4016000034	*Cover	1		WZ010001-	
41		4016000035	*Clip	6		WZ010001-	M6
42		4016000036	*Hinge	2		WZ010001-	
43		4016000037	*Bolt	4		WZ010001-	M8X16
44		4016000038	*Cap	4		WZ010001-	d=20
45		4013001417	*Block	1		WZ010001-	
46		4013001418	*Block, Security	1		WZ010001-	
47		4012000260	*Nut	1		WZ010001-	M12X1
48		4015000109	*Washer Flat	1		WZ010001-	12.5X28
49		4012000138	*Door Stop	1		WZ010001-	
50		4012000257	*Bracket	1		WZ010001-	
51		4016000039	*Rod, Tie	1		WZ010001-	
52		4016000040	*Lever	1		WZ010001-	
53		4012000259	*Handle	1		WZ010001-	
54		4016000041	*Washer Flat	2		WZ010001-	8.5X24

https://truckmanualshub.com/

[Memo]

https://truckmanualshub.com/

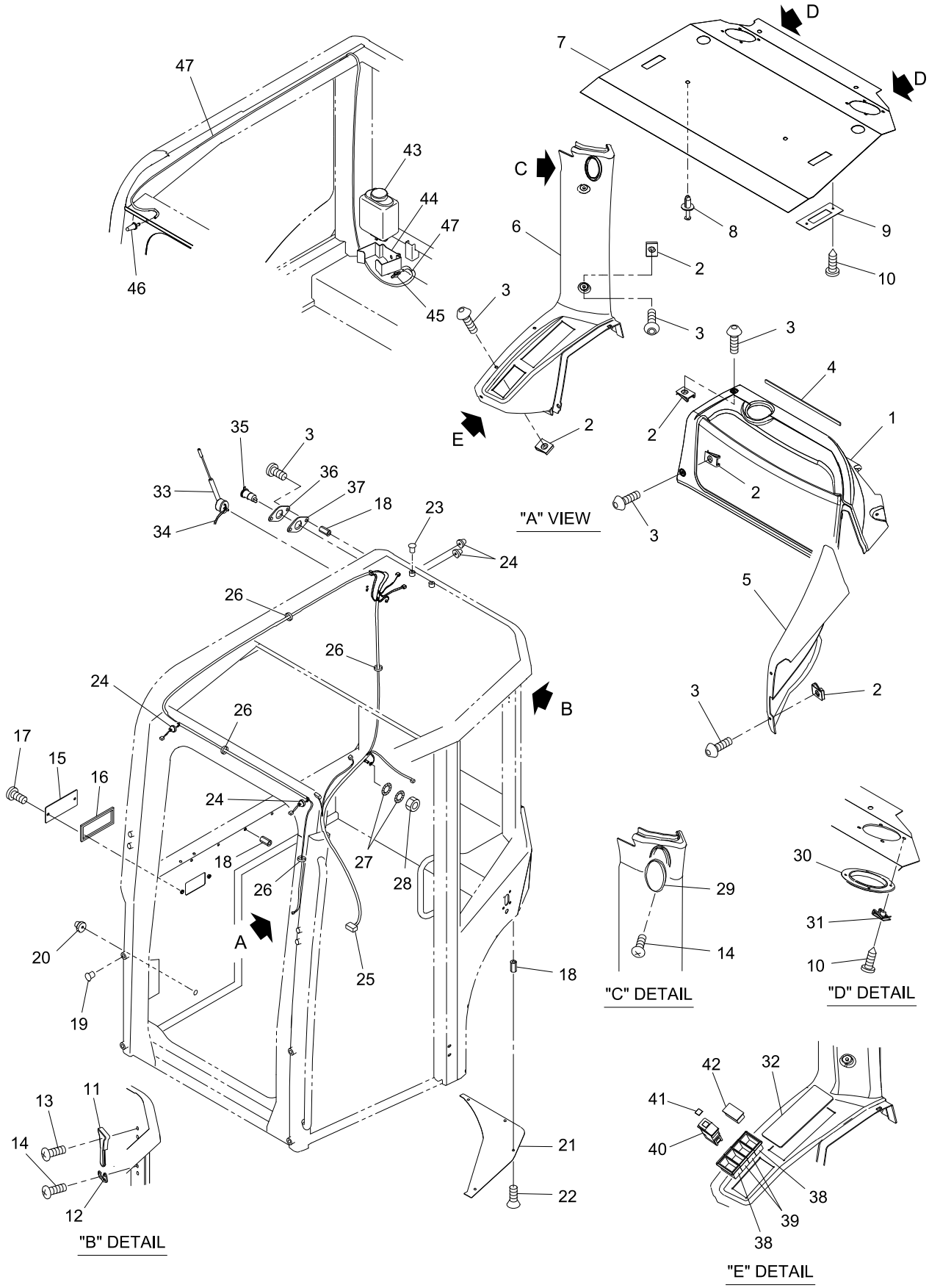

V4ALL-150700-1

https://truckmanualshub.com/

KEY No.	SUP.	PART No.	DESCRIPTION	Q'TY	CHAN.	SERIAL No.	REMARKS
0	×	3034212018	Cabin Ass'y (Dark Grey)	1		WZ010001-	
0-1	×	3034212019	Cabin Ass'y (Light Grey)	1		WZ010001-	
1		4016000042	*Cover (Rear)	1		WZ010001-	
2		4016000035	*Clip	12		WZ010001-	M6
3		4016000033	*Bolt	12		WZ010001-	M6X16
4		4016000043	*Gasket	1		WZ010001-	L=325
5		4016000044	*Cover (Left)	1		WZ010001-	
6		4016000045	*Cover (Right Upright)	1		WZ010001-	
7		4016000046	*Roof Coating	1		WZ010001-	
8		4016000047	*Clip	4		WZ010001-	d=8
9		4016000048	*Bracket	2		WZ010001-	
10		4016000049	*Bolt	8		WZ010001-	4.2X22
11		4016000050	*Hammer, Emergency	1		WZ010001-	
12		4012000239	*Hook	1		WZ010001-	
13		4012000291	*Bolt	2		WZ010001-	3.5X16
14		4016000051	*Bolt	4		WZ010001-	4.2X13
15		4016000052	*Bracket	1		WZ010001-	
16		4016000053	*Gasket	1		WZ010001-	L=470
17		4016000054	*Bolt	2		WZ010001-	M6X12
18		4012000356	*Nut	11		WZ010001-	M6
19		4016000055	*Plug	8		WZ010001-	d=13X11
20		4012000297	*Plug, Rubber	1		WZ010001-	
21		4016000056	*Plate (Lower)	1		WZ010001-	
22		4016000057	*Bolt	4		WZ010001-	M6X16
23		4016000058	*Plug	8		WZ010001-	d=12X11.5
24		4012000367	*Plug, Rubber	4		WZ010001-	
25		4016000059	*Harness	1		WZ010001-	
26		4016000060	*Band, Cable	6		WZ010001-	4.8X200
27		4012000185	*Washer Toothed	2		WZ010001-	M6
28		4012000303	*Nut	1		WZ010001-	M6
29		4016000061	*Light	1		WZ010001-	
30		4016000062	*Cover, Audio	1		WZ010001-	
31		4016000063	*Clip	4		WZ010001-	
32		4012000274	*Cover	1		WZ010001-	
33		4012000314	*Antenna	1		WZ010001-	
34		4012000316	*Cable, Antenna	1		WZ010001-	L=2300
35		4016000064	*Plug	1		WZ010001-	
36		4016000065	*Bracket	1		WZ010001-	
37		4016000066	*Gasket	1		WZ010001-	
38		4012000251	*Frame, Side Switch	2		WZ010001-	
39		4012000252	*Frame, Central Switch	2		WZ010001-	
40		4012000250	*Switch, Wiper	1		WZ010001-	
41		4012000254	*Label	1		WZ010001-	
42		4012000255	*Cap	3		WZ010001-	
43		4012000256	*Tank	1		WZ010001-	

https://truckmanualshub.com/

KEY No.	SUP.	PART No.	DESCRIPTION	Q'TY	CHAN.	SERIAL No.	REMARKS
44		4016000067	*Bracket	1		WZ010001-	
45		4012000216	*Valve, Connection	1		WZ010001-	
46		4012000245	*Atomizer	1		WZ010001-	
47		4016000068	*Pipe	1		WZ010001-	L=2550

https://truckmanualshub.com/

[Memo]

https://truckmanualshub.com/

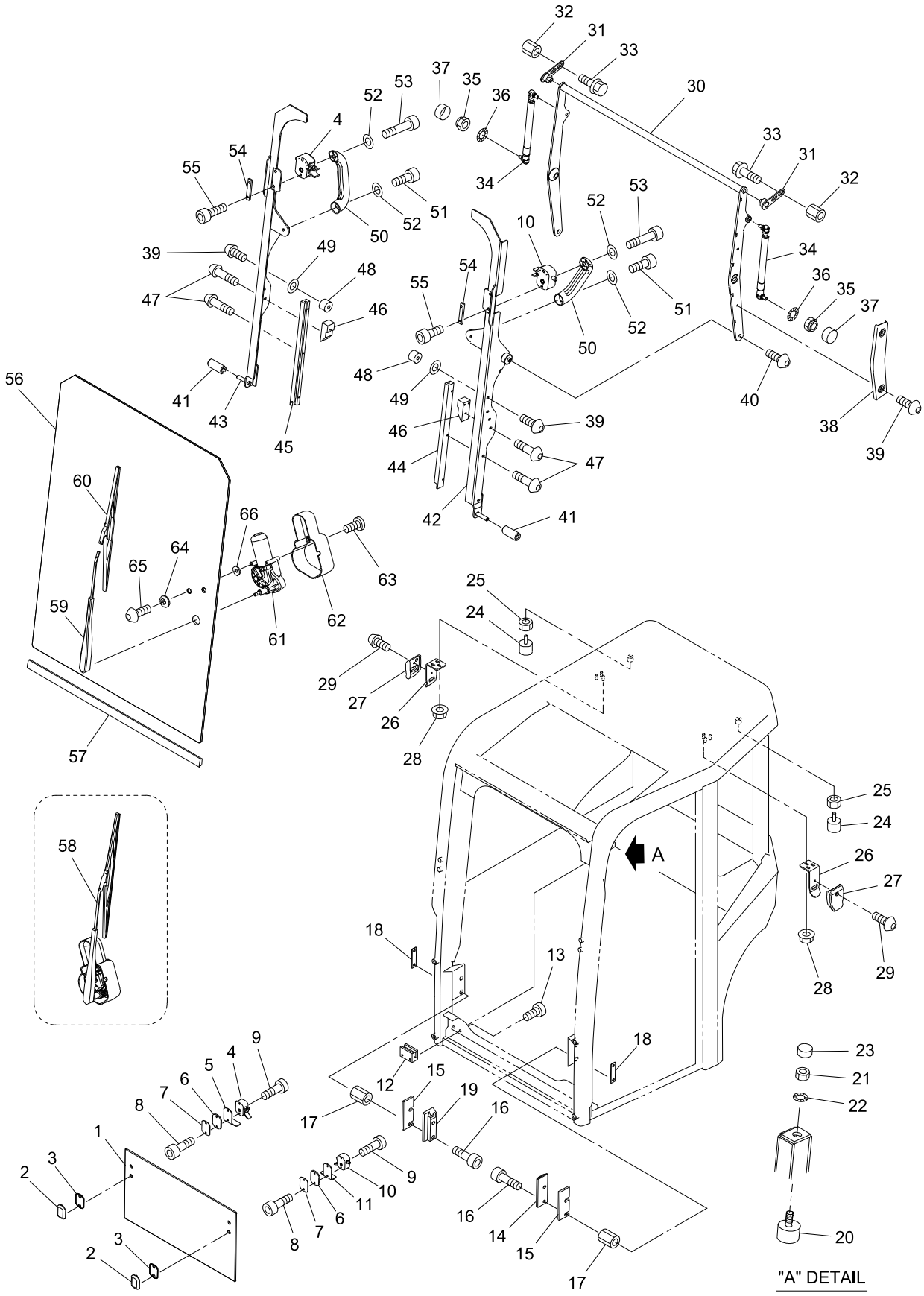

V4ALL-150800-1

https://truckmanualshub.com/

KEY No.	SUP.	PART No.	DESCRIPTION	Q'TY	CHAN.	SERIAL No.	REMARKS
0	×	3034212018	Cabin Ass'y (Dark Grey)	1		WZ010001-	
0-1	×	3034212019	Cabin Ass'y (Light Grey)	1		WZ010001-	
1		4016000069	*Glass	1		WZ010001-	
2		4016000070	*Lock, Cover	2		WZ010001-	
3		4016000071	*Gasket	2		WZ010001-	
4		4016000072	*Lock (R.H.)	2		WZ010001-	
5		4016000073	*Handle (R.H.)	1		WZ010001-	
6		4016000074	*Spacer	2		WZ010001-	
7		4016000075	*Gasket	2		WZ010001-	
8		4016000076	*Bolt	4		WZ010001-	M6X25
9		4016000077	*Bolt	2		WZ010001-	M8X25
10		4016000078	*Lock (L.H.)	2		WZ010001-	
11		4016000079	*Handle (L.H.)	1		WZ010001-	
12		4016000080	*Shoe (Lower)	2		WZ010001-	
13		4016000081	*Bolt	4		WZ010001-	M8X20
14		4016000082	*Shoe (L.H.)	1		WZ010001-	
15		4016000083	*Spacer	2		WZ010001-	
16		4016000084	*Bolt	4		WZ010001-	M8X35
17		4012000370	*Nut	4		WZ010001-	M8
18		4016000085	*Bracket	2		WZ010001-	
19		4016000086	*Shoe (R.H.)	1		WZ010001-	
20		4016000087	*Stopper, Rubber	2		WZ010001-	M6X15 H=15
21		4012000186	*Nut	2		WZ010001-	M6
22		4012000185	*Washer Toothed	2		WZ010001-	M6
23		4012000240	*Cap	2		WZ010001-	M6
24		4016000088	*Stopper, Rubber	2		WZ010001-	M6X18 H=20
25		4016000089	*Nut, Lock	2		WZ010001-	M6
26		4016000090	*Bracket	2		WZ010001-	
27		4016000091	*Protection, Door	2		WZ010001-	
28		4016000029	*Nut, Special	6		WZ010001-	M8
29		4016000033	*Bolt	2		WZ010001-	M6X16
30		4016000092	*Frame, Door	1		WZ010001-	
31		4016000093	*Bracket	2		WZ010001-	
32		4016000094	*Nut	4		WZ010001-	M8
33		4016000095	*Bolt	4		WZ010001-	M8X20
34		4016000096	*Spring, Gas	2		WZ010001-	400N-M8
35		4015000091	*Nut, Lock	2		WZ010001-	M8
36		4012000428	*Washer, Special	4		WZ010001-	M8
37		4012000206	*Cap	2		WZ010001-	M8
38		4016000097	*Cover	1		WZ010001-	
39		4016000054	*Bolt	4		WZ010001-	M6X12
40		4016000098	*Bolt	2		WZ010001-	M8X25
41		4016000099	*Bushing	2		WZ010001-	
42		4016000100	*Frame (L.H.)	1		WZ010001-	
43		4016000101	*Frame (R.H.)	1		WZ010001-	

https://truckmanualshub.com/

KEY No.	SUP.	PART No.	DESCRIPTION	Q'TY	CHAN.	SERIAL No.	REMARKS
44		4016000102	*Guide (L.H.)	1		WZ010001-	
45		4016000103	*Guide (R.H.)	1		WZ010001-	
46		4016000104	*Shoe	2		WZ010001-	
47		4013001450	*Bolt	10		WZ010001-	M5X16
48		4016000105	*Stopper, Rubber	2		WZ010001-	M6 H=15
49		4012000215	*Washer Flat	2		WZ010001-	
50		4016000106	*Handle	2		WZ010001-	
51		4016000107	*Bolt	2		WZ010001-	M8X20
52		4012000189	*Washer Flat	4		WZ010001-	M8
53		4016000108	*Bolt	2		WZ010001-	M8X40
54		4016000109	*Bracket	2		WZ010001-	
55		4016000110	*Bolt	4		WZ010001-	M6X14
56		4016000111	*Glass	1		WZ010001-	
57		4016000112	*Gasket	1		WZ010001-	L=775
58		4016000113	*Wiper	1		WZ010001-	
59		4013001438	**Arm, Wiper	1		WZ010001-	
60		4013001437	**Blade, Wiper	1		WZ010001-	L=400
61		4016000114	**Motor, Wiper	1		WZ010001-	
62		4012000352	**Cover, Motor	1		WZ010001-	
63		4016000033	*Bolt	2		WZ010001-	M6X16
64		4012000210	*Washer, Nylon	2		WZ010001-	d=19.5
65		4016000115	*Bolt	2		WZ010001-	M6X25
66		4016000116	*Washer, Special	2		WZ010001-	d=6.5X18

https://truckmanualshub.com/

[Memo]

https://truckmanualshub.com/

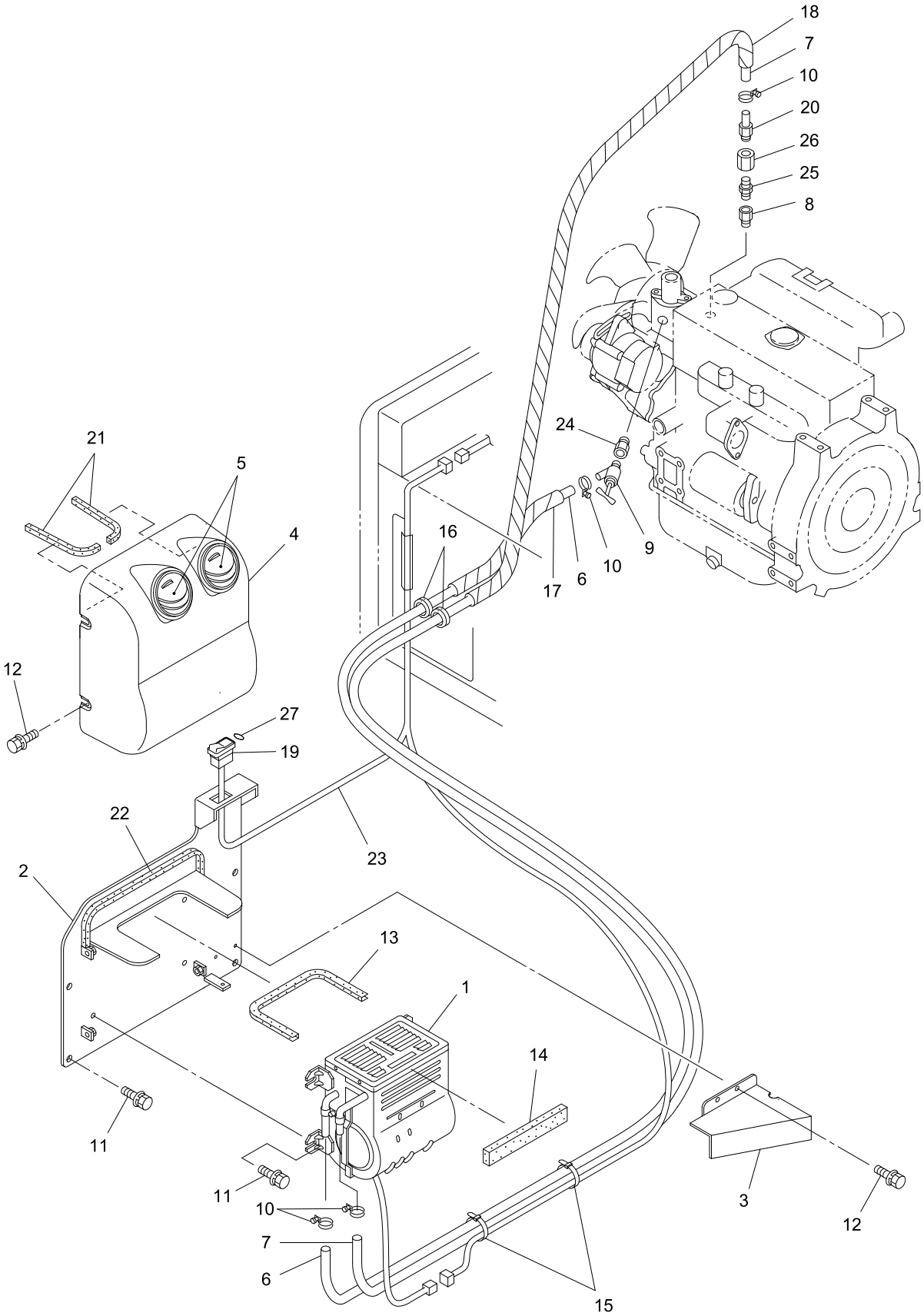

40V4-150900-1

https://truckmanualshub.com/

KEY No.	SUP.	PART No.	DESCRIPTION	Q'TY	CHAN.	SERIAL No.	REMARKS
0	×	F355 231 00	Heater Ass'y, Car	1		WZ010001-	
1		0857 056 03	*Heater, Car	1		WZ010001-	
2		D419 472 00	*Bracket	1		WZ010001-	
3		D458 149 00	*Cover	1		WZ010001-	
4		D465 358 00	*Panel	1		WZ010001-	
5		0820 023 16	*Duct	2		WZ010001-	
6		4070 102 40	*Hose, Water	M		WZ010001-	L=1030
7		4070 102 41	*Hose, Water	M		WZ010001-	L=1400
8		0710 503 02	*Socket	1		WZ010001-	
9		0729 910 35	*Valve	1		WZ010001-	
10		0690 083 05	*Clamp, Hose	4		WZ010001-	17～25
11		0518 100 20	*Bolt, Treatment (W/L.W, F.W)	8		WZ010001-	M10X20 P=1.25
12		0438 060 16	*Bolt, Treatment (W/L.W, F.W)	6		WZ010001-	M6X16
13		4550 726 00	*Seal	M		WZ010001-	L=400
14		D493 439 01	*Panel, Sponge	1		WZ010001-	
15		0820 067 05	*Band, Cable	2		WZ010001-	
16		0910 942 02	*Grommet	2		WZ010001-	
17		0820 803 06	*Tube, Corrugate	M		WZ010001-	L=200
18		0820 803 06	*Tube, Corrugate	M		WZ010001-	L=600
19		0858 314 34	*Switch Ass'y, Heater	1		WZ010001-	
20		4072 220 00	*Nipple	1		WZ010001-	
21		D493 626 00	*Panel, Sponge	2		WZ010001-	
22		D493 732 00	*Panel, Sponge	1		WZ010001-	
23		D592 309 00	*Harness	1		WZ010001-	
24		0710 503 03	*Socket	1		WZ010001-	
25		0710 600 13	*Nipple, Reducing	1		WZ010001-	
26		0710 501 03	*Socket	1		WZ010001-	
27		D407 820 00	*Decal	1		WZ010001-	

https://truckmanualshub.com/

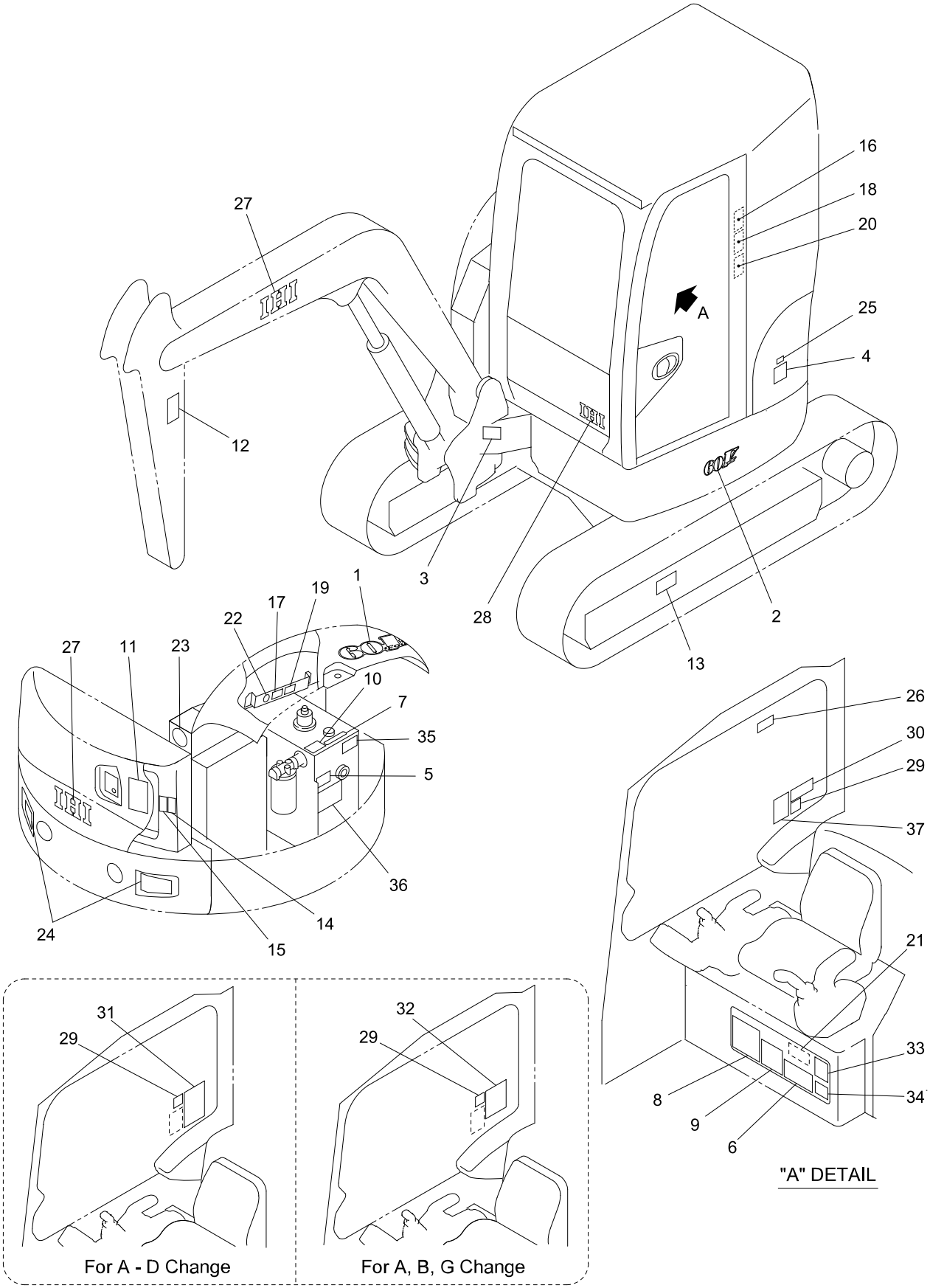

60V4-151000-1

https://truckmanualshub.com/

KEY No.	SUP.	PART No.	DESCRIPTION	Q'TY	CHAN.	SERIAL No.	REMARKS
0	×	F377 853 00	Decal Ass'y	1		WZ010001-	
0-1	×	F377 855 00	Decal Ass'y	1		WZ010001-	
0-2	×	F377 856 00	Decal Ass'y	1		WZ010001-	
1		D408 409 00	*Decal (Model)	1		WZ010001-	
2		D408 418 00	*Decal (Model)	1		WZ010001-	
3	×	D405 094 00	*Decal (Serial No.)	1		WZ010001-	
3-1		0497 035 00	*Screw, Drive	4		WZ010001-	d=3
4		D408 324 00	*Decal (Oil)	1		WZ010001-	
5		D406 490 00	*Decal (Oil Check)	1		WZ010001-	
6		D408 313 00	*Decal (Lub. Chart)	1		WZ010001-	
7		4447 479 00	*Decal (Oil)	1		WZ010001-	
8		D408 325 00	*Decal (Engine Daily Check)	1		WZ010001-	
9		D406 597 00	*Decal (Safety Works)	1		WZ010001-	
10		D408 328 00	*Decal (Tank Decompression)	1		WZ010001-	
11		D405 450 00	*Decal (Safety Swing)	1		WZ010001-	
12		D405 454 00	*Decal (Caution)	2		WZ010001-	
13		D405 455 00	*Decal (Caution)	2		WZ010001-	
14		D405 424 00	*Decal (Caution)	1		WZ010001-	
15		D405 452 00	*Decal (Caution)	1		WZ010001-	
16		D405 332 00	*Decal (Caution)	1		WZ010001-	
17		D405 462 00	*Decal (Caution)	1		WZ010001-	
18		D405 451 00	*Decal (Caution)	1		WZ010001-	
19		D405 463 00	*Decal (Caution)	1		WZ010001-	
20		D405 449 00	*Decal (Caution)	1		WZ010001-	
21		D405 373 00	*Decal (Caution)	1		WZ010001-	
22		4407 035 00	*Decal (Anti-Freezing Solution)	1		WZ010001-	
23		D406 631 00	*Decal (Environment)	1		WZ010001-	
24		D408 371 00	*Decal (Reflector)	2		WZ010001-	
25		D407 943 00	*Decal (EPA Regulation)	1		WZ010001-	
26		D405 453 00	*Decal (Caution)	1		WZ010001-	
27		D408 402 00	*Decal (IHI)	3		WZ010001-	
28		D408 403 00	*Decal (IHI)	1		WZ010001-	
29		D406 630 00	*Decal (Blade, Pedal)	1		WZ010001-	
30		D406 622 00	*Decal (Control A)	1		WZ010001-	
30-1		D406 623 00	*Decal (Control B)	1		WZ010001-	
30-2		D406 624 00	*Decal (Control C)	1		WZ010001-	
30-3		D406 625 00	*Decal (Control D)	1		WZ010001-	
30-4		D406 627 00	*Decal (Control G)	1		WZ010001-	
31		D406 628 00	*Decal (Control A-D)	1		WZ010001-	
32		D406 629 00	*Decal (Control A, B, G)	1		WZ010001-	
33		D408 319 00	*Decal (Specification)	1		WZ010001-	
34		D408 321 00	*Decal (Bucket Specification)	1		WZ010001-	
35		4447 874 00	*Decal (Spare Piping Change)	1		WZ010001-	
36		4447 653 00	*Decal (Breaker Cation)	1		WZ010001-	
37		D407 056 00	*Decal (Spare Pedal)	1		WZ010001-	

https://truckmanualshub.com/

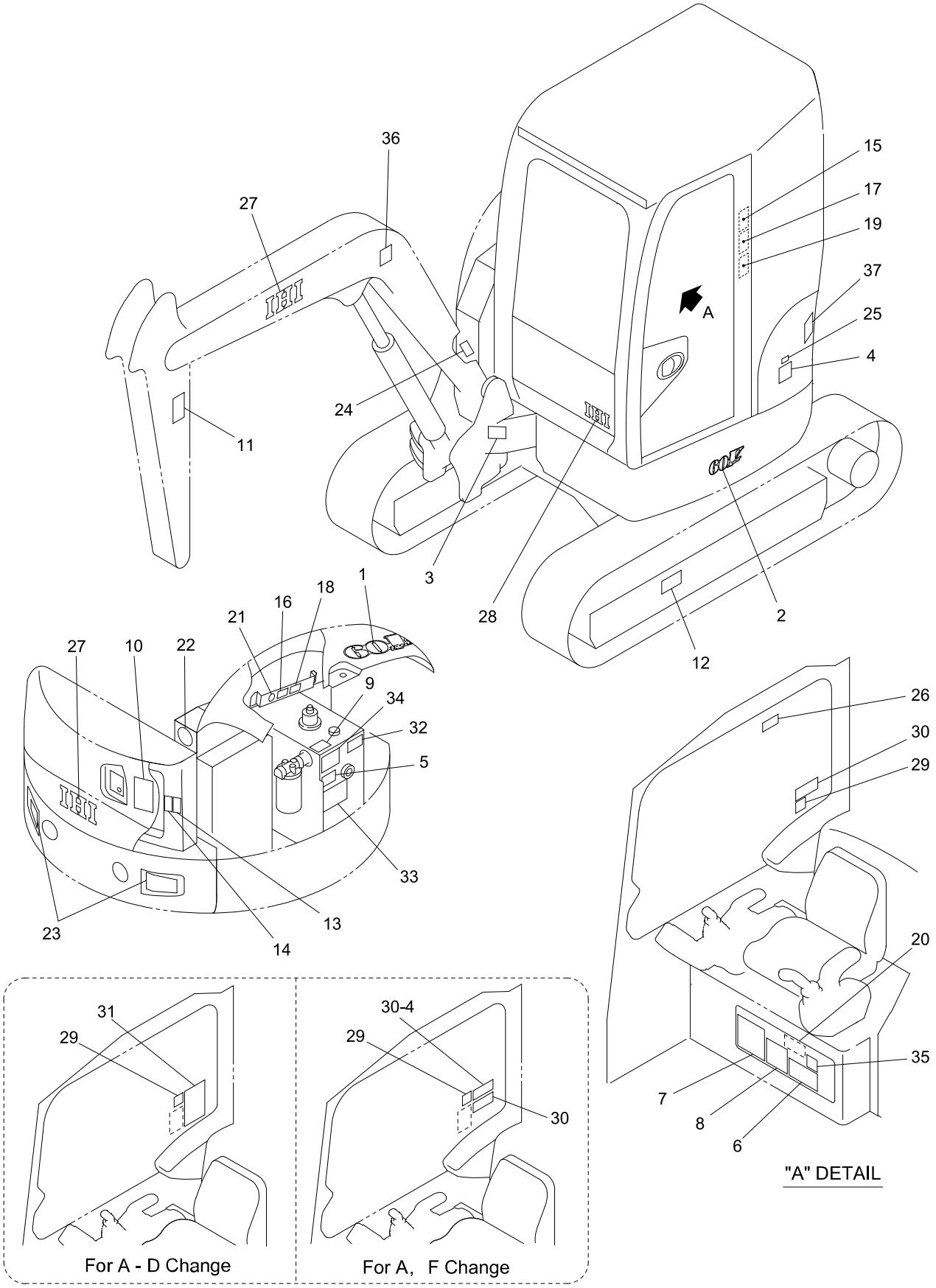

60V4-15100A-1

https://truckmanualshub.com/

KEY No.	SUP.	PART No.	DESCRIPTION	Q'TY	CHAN.	SERIAL No.	REMARKS
0	×	F377 853 00	Decal Ass'y	1		WZ010001-	
0-1	×	F377 855 00	Decal Ass'y	1		WZ010001-	
1		D408 409 00	*Decal (Model)	1		WZ010001-	
2		D408 418 00	*Decal (Model)	1		WZ010001-	
3	×	D405 094 00	*Decal (Serial No.)	1		WZ010001-	
3-1	×	D405 091 00	*Decal (Serial No.) (CE)	1		WZ010001-	
3-2		0497 035 00	*Screw, Drive	4		WZ010001-	d=3
4		4407 974 00	*Decal (Oil)	1		WZ010001-	
5		D406 504 00	*Decal (Oil Check)	1		WZ010001-	
6		D408 355 00	*Decal (Lub. Chart)	1		WZ010001-	
7		D408 326 00	*Decal (Engine Daily Check)	1		WZ010001-	
8		4406 458 00	*Decal (Safety Works)	1		WZ010001-	
9		D408 424 00	*Decal (Tank Decompression)	1		WZ010001-	
10		D405 507 00	*Decal (Safety Swing)	1		WZ010001-	
11		D405 511 00	*Decal (Caution)	2		WZ010001-	
12		D405 505 00	*Decal (Caution)	2		WZ010001-	
13		D405 366 00	*Decal (Caution)	1		WZ010001-	
14		D405 509 00	*Decal (Caution)	1		WZ010001-	
15		D405 359 00	*Decal (Caution)	1		WZ010001-	
16		D405 503 00	*Decal (Caution)	1		WZ010001-	
17		D405 508 00	*Decal (Caution)	1		WZ010001-	
18		D405 504 00	*Decal (Caution)	1		WZ010001-	
19		D405 506 00	*Decal (Caution)	1		WZ010001-	
20		D405 323 00	*Decal (Caution)	1		WZ010001-	
21		4407 035 00	*Decal (Anti-Freezing Solution)	1		WZ010001-	
22		D406 783 00	*Decal (Environment)	1		WZ010001-	
23		D408 371 00	*Decal (Reflector)	2		WZ010001-	
24	×	D405 097 00	*Decal (New Machine)	1		WZ010001-	
25		D407 943 00	*Decal (EPA Regulation)	1		WZ010001-	
26		D405 510 00	*Decal (Caution)	1		WZ010001-	
27		D408 402 00	*Decal (IHI)	3		WZ010001-	
28		D408 403 00	*Decal (IHI)	1		WZ010001-	
29		D406 630 00	*Decal (Blade, Pedal)	1		WZ010001-	
30		D406 622 00	*Decal (Control A)	1		WZ010001-	
30-1		D406 623 00	*Decal (Control B)	1		WZ010001-	
30-2		D406 624 00	*Decal (Control C)	1		WZ010001-	
30-3		D406 625 00	*Decal (Control D)	1		WZ010001-	
30-4		D406 626 00	*Decal (Control F)	1		WZ010001-	
31		D406 628 00	*Decal (Control A-D)	1		WZ010001-	
32		4448 651 00	*Decal (Spare Piping Change)	1		WZ010001-	
33		4447 857 00	*Decal (Breaker Cation)	1		WZ010001-	
34		D408 322 00	*Decal (Boom Lowering)(CE)	1		WZ010001-	
35		4448 474 00	*Decal (Transport Fix)(CE)	1		WZ010001-	
36		D408 347 00	*Decal (Lifting Procedures)(CE)	1		WZ010001-	
37		D406 032 00	*Decal (Noise 97)(CE)	1		WZ010001-	

https://truckmanualshub.com/

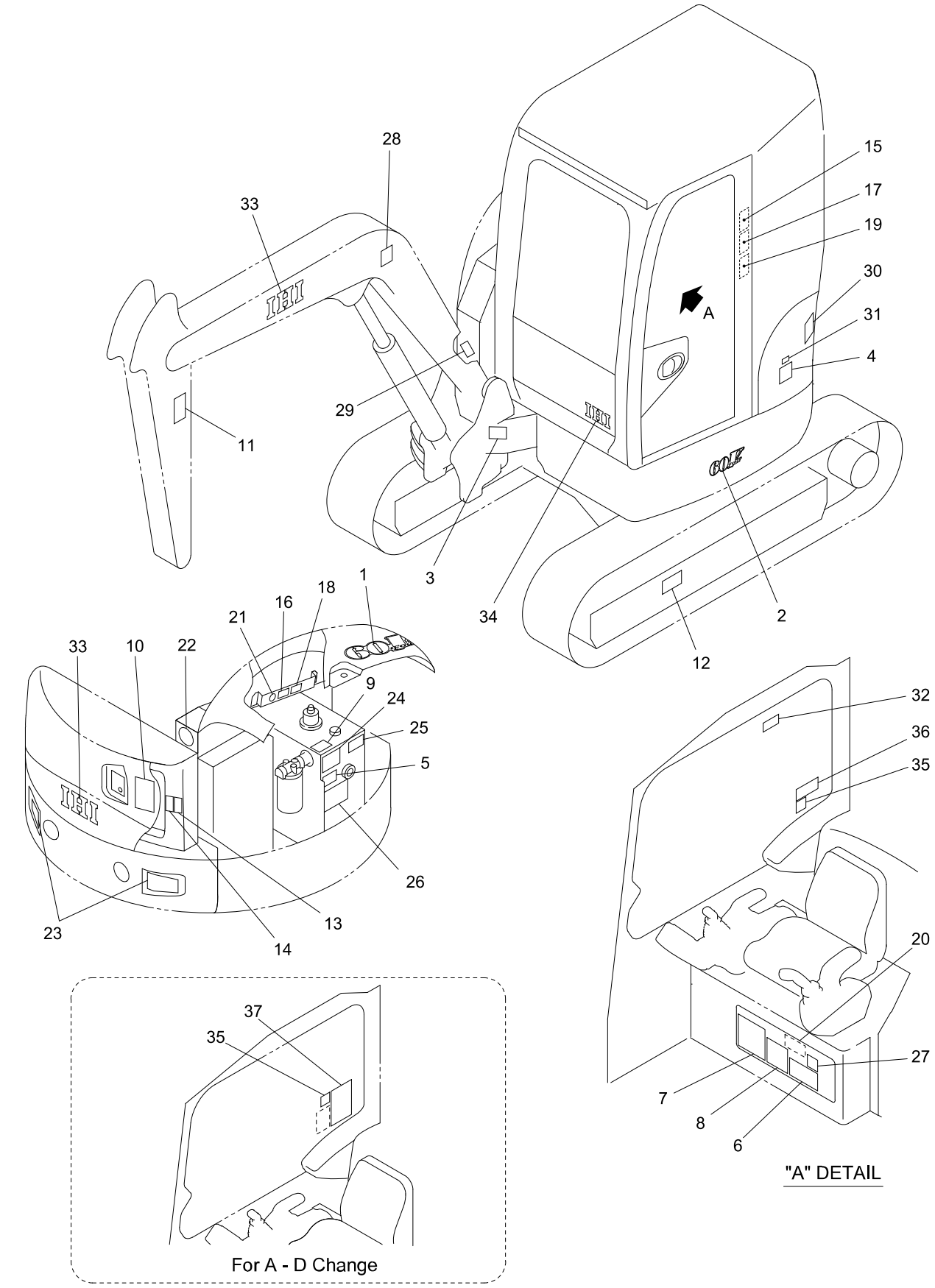

60V4-15100B-1

https://truckmanualshub.com/

KEY No.	SUP.	PART No.	DESCRIPTION	Q'TY	CHAN.	SERIAL No.	REMARKS
0	×	F377 853 00	Decal Ass'y	1		WZ010001-	
0-1	×	F377 855 00	Decal Ass'y	1		WZ010001-	
1		D408 409 00	*Decal (Model)	1		WZ010001-	
2		D408 418 00	*Decal (Model)	1		WZ010001-	
3	×	D405 091 00	*Decal (Serial No.)	1		WZ010001-	
3-1		0497 035 00	*Screw, Drive	4		WZ010001-	d=3
4		4405 457 00	*Decal (Oil)	1		WZ010001-	
5		D406 558 00	*Decal (Oil Check)	1		WZ010001-	
6		D408 360 00	*Decal (Lub. Chart)	1		WZ010001-	
7		D408 332 00	*Decal (Engine Daily Check)	1		WZ010001-	
8		4448 584 00	*Decal (Safety Works)	1		WZ010001-	
9		D408 429 00	*Decal (Tank Decompression)	1		WZ010001-	
10		D405 507 00	*Decal (Safety Swing)	1		WZ010001-	
11		D405 511 00	*Decal (Caution)	2		WZ010001-	
12		D405 505 00	*Decal (Caution)	2		WZ010001-	
13		D405 366 00	*Decal (Caution)	1		WZ010001-	
14		D405 509 00	*Decal (Caution)	1		WZ010001-	
15		D405 359 00	*Decal (Caution)	1		WZ010001-	
16		D405 503 00	*Decal (Caution)	1		WZ010001-	
17		D405 508 00	*Decal (Caution)	1		WZ010001-	
18		D405 504 00	*Decal (Caution)	1		WZ010001-	
19		D405 506 00	*Decal (Caution)	1		WZ010001-	
20		D405 559 00	*Decal (Caution)	1		WZ010001-	
21		4448 573 00	*Decal (Anti-Freezing Solution)	1		WZ010001-	
22		D406 783 00	*Decal (Environment)	1		WZ010001-	
23		D408 371 00	*Decal (Reflector)	2		WZ010001-	
24		D408 338 00	*Decal (Boom Lowering)	1		WZ010001-	
25		4449 003 00	*Decal (Spare Piping Change)	1		WZ010001-	
26		4448 587 00	*Decal (Breaker Cation)	1		WZ010001-	
27		4448 562 00	*Decal (Transport Fix)	1		WZ010001-	
28		D408 352 00	*Decal (Lifting Procedures)	1		WZ010001-	
29	×	D405 097 00	*Decal (New Machine)	1		WZ010001-	
30		D406 032 00	*Decal (Noise 97)	1		WZ010001-	
31		D407 943 00	*Decal (EPA Regulation)	1		WZ010001-	
32		D405 510 00	*Decal (Caution)	1		WZ010001-	
33		D408 402 00	*Decal (IHI)	3		WZ010001-	
34		D408 403 00	*Decal (IHI)	1		WZ010001-	
35		D406 630 00	*Decal (Blade, Pedal)	1		WZ010001-	
36		D406 622 00	*Decal (Control A)	1		WZ010001-	
36-1		D406 623 00	*Decal (Control B)	1		WZ010001-	
36-2		D406 624 00	*Decal (Control C)	1		WZ010001-	
36-3		D406 625 00	*Decal (Control D)	1		WZ010001-	
37		D406 628 00	*Decal (Control A-D)	1		WZ010001-	

https://truckmanualshub.com/

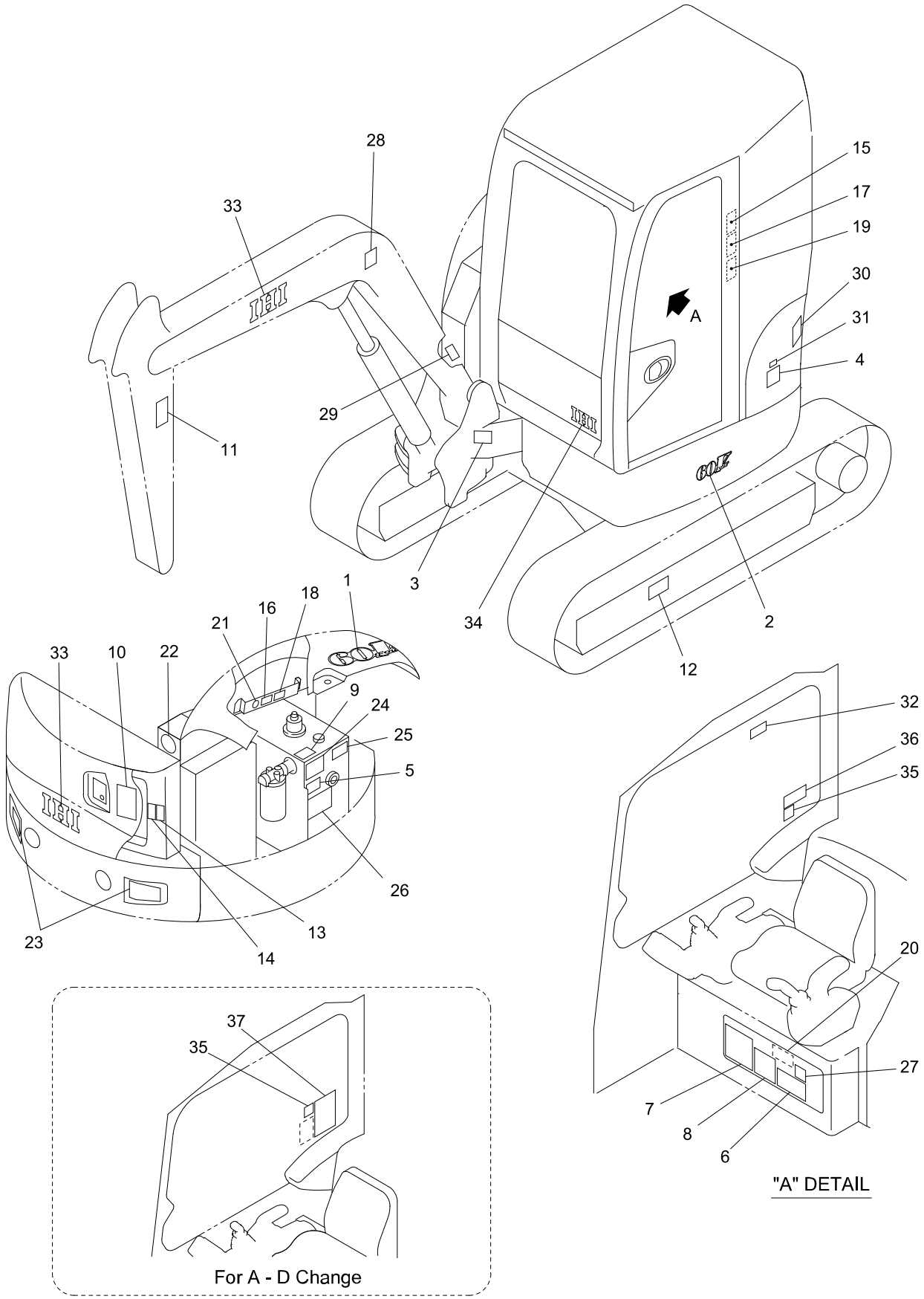

60V4-15100B-1

https://truckmanualshub.com/

KEY No.	SUP.	PART No.	DESCRIPTION	Q'TY	CHAN.	SERIAL No.	REMARKS
0	×	F377 853 00	Decal Ass'y	1		WZ010001-	
0-1	×	F377 855 00	Decal Ass'y	1		WZ010001-	
1		D408 409 00	*Decal (Model)	1		WZ010001-	
2		D408 418 00	*Decal (Model)	1		WZ010001-	
3	×	D405 091 00	*Decal (Serial No.)	1		WZ010001-	
3-1		0497 035 00	*Screw, Drive	4		WZ010001-	d=3
4		4407 974 00	*Decal (Oil)	1		WZ010001-	
5		D406 554 00	*Decal (Oil Check)	1		WZ010001-	
6		D408 356 00	*Decal (Lub. Chart)	1		WZ010001-	
7		D408 327 00	*Decal (Engine Daily Check)	1		WZ010001-	
8		4406 714 00	*Decal (Safety Works)	1		WZ010001-	
9		D408 425 00	*Decal (Tank Decompression)	1		WZ010001-	
10		D405 507 00	*Decal (Safety Swing)	1		WZ010001-	
11		D405 511 00	*Decal (Caution)	2		WZ010001-	
12		D405 505 00	*Decal (Caution)	2		WZ010001-	
13		D405 366 00	*Decal (Caution)	1		WZ010001-	
14		D405 509 00	*Decal (Caution)	1		WZ010001-	
15		D405 359 00	*Decal (Caution)	1		WZ010001-	
16		D405 503 00	*Decal (Caution)	1		WZ010001-	
17		D405 508 00	*Decal (Caution)	1		WZ010001-	
18		D405 504 00	*Decal (Caution)	1		WZ010001-	
19		D405 506 00	*Decal (Caution)	1		WZ010001-	
20		D405 575 00	*Decal (Caution)	1		WZ010001-	
20-1		D408 437 00	*Decal (Capacities Table)	1		WZ010001-	
21		4406 710 00	*Decal (Anti-Freezing Solution)	1		WZ010001-	
22		D406 783 00	*Decal (Environment)	1		WZ010001-	
23		D408 371 00	*Decal (Reflector)	2		WZ010001-	
24		D408 334 00	*Decal (Boom Lowering)	1		WZ010001-	
25		4448 687 00	*Decal (Spare Piping Change)	1		WZ010001-	
26		4447 996 00	*Decal (Breaker Cation)	1		WZ010001-	
27		4448 542 00	*Decal (Transport Fix)	1		WZ010001-	
28		D408 348 00	*Decal (Lifting Procedures)	1		WZ010001-	
29	×	D405 097 00	*Decal (New Machine)	1		WZ010001-	
30		D406 032 00	*Decal (Noise 97)	1		WZ010001-	
31		D407 943 00	*Decal (EPA Regulation)	1		WZ010001-	
32		D405 510 00	*Decal (Caution)	1		WZ010001-	
33		D408 402 00	*Decal (IHI)	3		WZ010001-	
34		D408 403 00	*Decal (IHI)	1		WZ010001-	
35		D406 630 00	*Decal (Blade, Pedal)	1		WZ010001-	
36		D406 622 00	*Decal (Control A)	1		WZ010001-	
36-1		D406 623 00	*Decal (Control B)	1		WZ010001-	
36-2		D406 624 00	*Decal (Control C)	1		WZ010001-	
36-3		D406 625 00	*Decal (Control D)	1		WZ010001-	
37		D406 628 00	*Decal (Control A-D)	1		WZ010001-	

https://truckmanualshub.com/

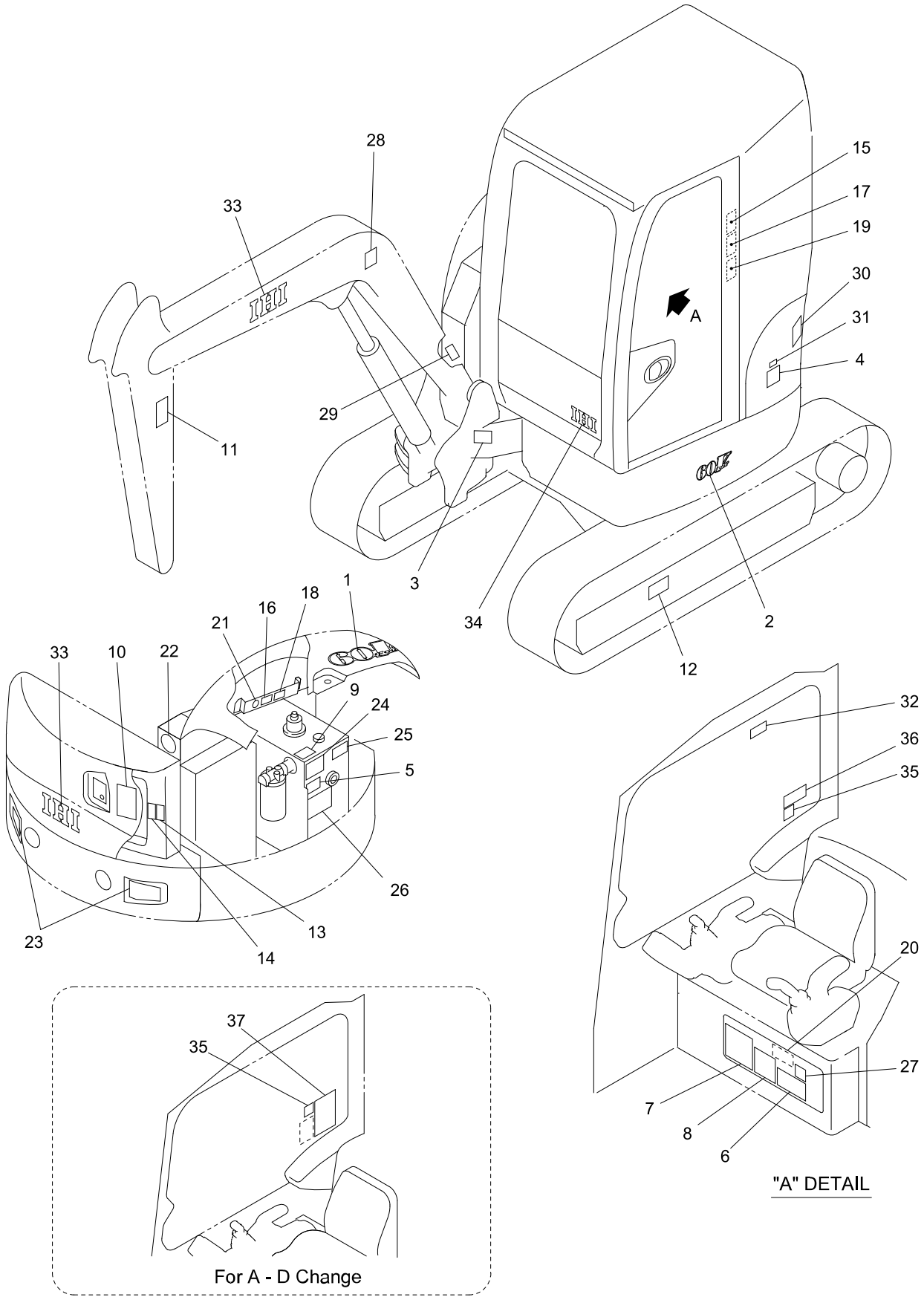

60V4-15100B-1

https://truckmanualshub.com/

KEY No.	SUP.	PART No.	DESCRIPTION	Q'TY	CHAN.	SERIAL No.	REMARKS
0	×	F377 853 00	Decal Ass'y	1		WZ010001-	
0-1	×	F377 855 00	Decal Ass'y	1		WZ010001-	
1		D408 409 00	*Decal (Model)	1		WZ010001-	
2		D408 418 00	*Decal (Model)	1		WZ010001-	
3	×	D405 091 00	*Decal (Serial No.)	1		WZ010001-	
3-1		0497 035 00	*Screw, Drive	4		WZ010001-	d=3
4		4405 457 00	*Decal (Oil)	1		WZ010001-	
5		D406 550 00	*Decal (Oil Check)	1		WZ010001-	
6		D408 357 00	*Decal (Lub. Chart)	1		WZ010001-	
7		D408 329 00	*Decal (Engine Daily Check)	1		WZ010001-	
8		4405 451 00	*Decal (Safety Works)	1		WZ010001-	
9		D408 426 00	*Decal (Tank Decompression)	1		WZ010001-	
10		D405 507 00	*Decal (Safety Swing)	1		WZ010001-	
11		D405 511 00	*Decal (Caution)	2		WZ010001-	
12		D405 505 00	*Decal (Caution)	2		WZ010001-	
13		D405 366 00	*Decal (Caution)	1		WZ010001-	
14		D405 509 00	*Decal (Caution)	1		WZ010001-	
15		D405 359 00	*Decal (Caution)	1		WZ010001-	
16		D405 503 00	*Decal (Caution)	1		WZ010001-	
17		D405 508 00	*Decal (Caution)	1		WZ010001-	
18		D405 504 00	*Decal (Caution)	1		WZ010001-	
19		D405 506 00	*Decal (Caution)	1		WZ010001-	
20		D405 571 00	*Decal (Caution)	1		WZ010001-	
21		4405 456 00	*Decal (Anti-Freezing Solution)	1		WZ010001-	
22		D406 783 00	*Decal (Environment)	1		WZ010001-	
23		D408 371 00	*Decal (Reflector)	2		WZ010001-	
24		D408 335 00	*Decal (Boom Lowering)	1		WZ010001-	
25		4448 944 00	*Decal (Spare Piping Change)	1		WZ010001-	
26		4447 925 00	*Decal (Breaker Cation)	1		WZ010001-	
27		4448 511 00	*Decal (Transport Fix)	1		WZ010001-	
28		D408 349 00	*Decal (Lifting Procedures)	1		WZ010001-	
29	×	D405 097 00	*Decal (New Machine)	1		WZ010001-	
30		D406 032 00	*Decal (Noise 97)	1		WZ010001-	
31		D407 943 00	*Decal (EPA Regulation)	1		WZ010001-	
32		D405 510 00	*Decal (Caution)	1		WZ010001-	
33		D408 402 00	*Decal (IHI)	3		WZ010001-	
34		D408 403 00	*Decal (IHI)	1		WZ010001-	
35		D406 630 00	*Decal (Blade, Pedal)	1		WZ010001-	
36		D406 622 00	*Decal (Control A)	1		WZ010001-	
36-1		D406 623 00	*Decal (Control B)	1		WZ010001-	
36-2		D406 624 00	*Decal (Control C)	1		WZ010001-	
36-3		D406 625 00	*Decal (Control D)	1		WZ010001-	
37		D406 628 00	*Decal (Control A-D)	1		WZ010001-	

https://truckmanualshub.com/

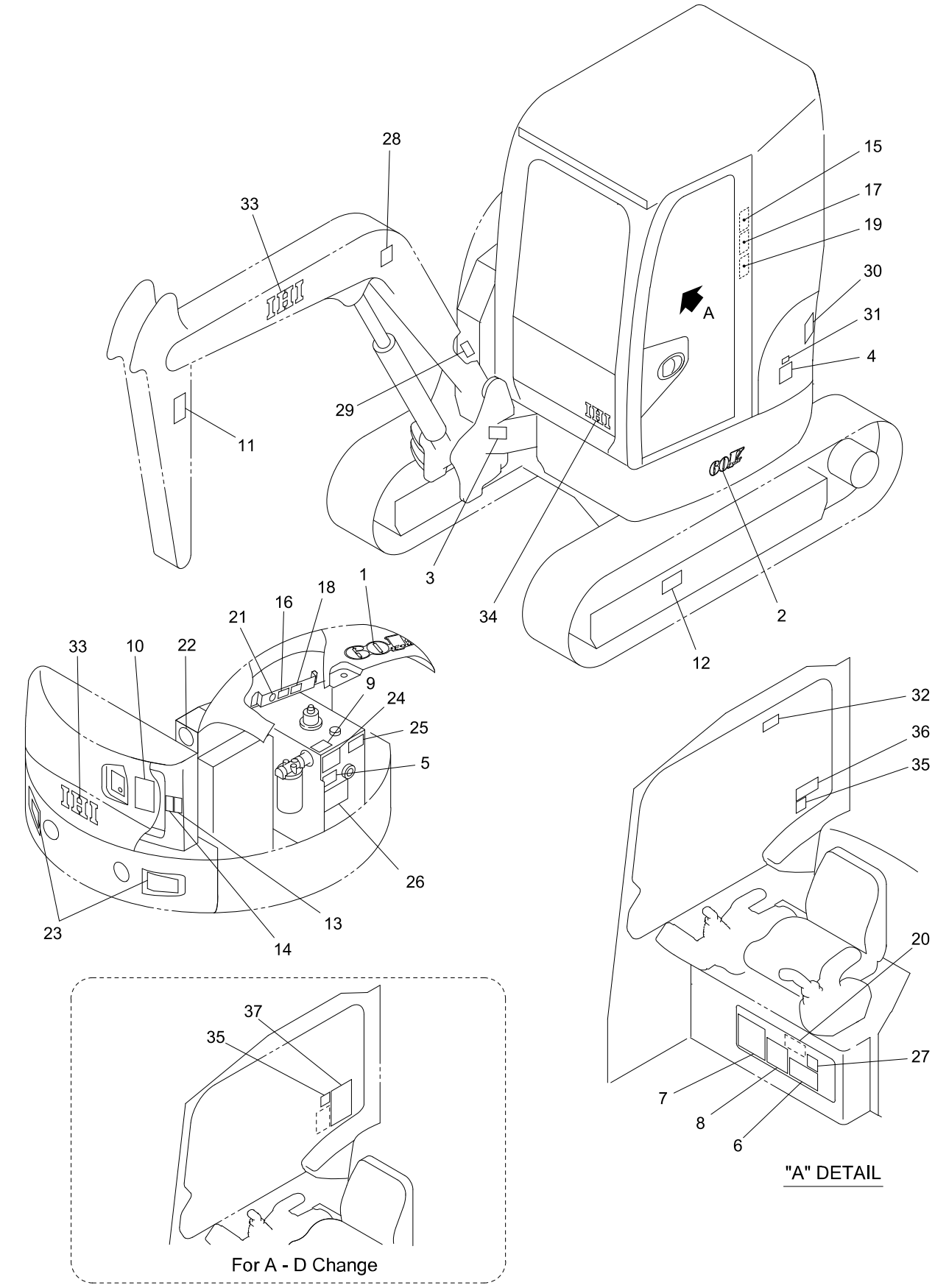

60V4-15100B-1

https://truckmanualshub.com/

KEY No.	SUP.	PART No.	DESCRIPTION	Q'TY	CHAN.	SERIAL No.	REMARKS
0	×	F377 853 00	Decal Ass'y	1		WZ010001-	
0-1	×	F377 855 00	Decal Ass'y	1		WZ010001-	
1		D408 409 00	*Decal (Model)	1		WZ010001-	
2		D408 418 00	*Decal (Model)	1		WZ010001-	
3	×	D405 091 00	*Decal (Serial No.)	1		WZ010001-	
3-1		0497 035 00	*Screw, Drive	4		WZ010001-	d=3
4		4405 457 00	*Decal (Oil)	1		WZ010001-	
5		D406 565 00	*Decal (Oil Check)	1		WZ010001-	
6		D408 358 00	*Decal (Lub. Chart)	1		WZ010001-	
7		D408 330 00	*Decal (Engine Daily Check)	1		WZ010001-	
8		D407 017 00	*Decal (Safety Works)	1		WZ010001-	
9		D408 427 00	*Decal (Tank Decompression)	1		WZ010001-	
10		D405 507 00	*Decal (Safety Swing)	1		WZ010001-	
11		D405 511 00	*Decal (Caution)	2		WZ010001-	
12		D405 505 00	*Decal (Caution)	2		WZ010001-	
13		D405 366 00	*Decal (Caution)	1		WZ010001-	
14		D405 509 00	*Decal (Caution)	1		WZ010001-	
15		D405 359 00	*Decal (Caution)	1		WZ010001-	
16		D405 503 00	*Decal (Caution)	1		WZ010001-	
17		D405 508 00	*Decal (Caution)	1		WZ010001-	
18		D405 504 00	*Decal (Caution)	1		WZ010001-	
19		D405 506 00	*Decal (Caution)	1		WZ010001-	
20		D405 587 00	*Decal (Caution)	1		WZ010001-	
21		4447 229 00	*Decal (Anti-Freezing Solution)	1		WZ010001-	
22		D406 783 00	*Decal (Environment)	1		WZ010001-	
23		D408 371 00	*Decal (Reflector)	2		WZ010001-	
24		D408 336 00	*Decal (Boom Lowering)	1		WZ010001-	
25		D405 256 00	*Decal (Spare Piping Change)	1		WZ010001-	
26		4448 350 00	*Decal (Breaker Cation)	1		WZ010001-	
27		D405 059 00	*Decal (Transport Fix)	1		WZ010001-	
28		D408 350 00	*Decal (Lifting Procedures)	1		WZ010001-	
29	×	D405 097 00	*Decal (New Machine)	1		WZ010001-	
30		D406 032 00	*Decal (Noise 97)	1		WZ010001-	
31		D407 943 00	*Decal (EPA Regulation)	1		WZ010001-	
32		D405 510 00	*Decal (Caution)	1		WZ010001-	
33		D408 402 00	*Decal (IHI)	3		WZ010001-	
34		D408 403 00	*Decal (IHI)	1		WZ010001-	
35		D406 630 00	*Decal (Blade, Pedal)	1		WZ010001-	
36		D406 622 00	*Decal (Control A)	1		WZ010001-	
36-1		D406 623 00	*Decal (Control B)	1		WZ010001-	
36-2		D406 624 00	*Decal (Control C)	1		WZ010001-	
36-3		D406 625 00	*Decal (Control D)	1		WZ010001-	
37		D406 628 00	*Decal (Control A-D)	1		WZ010001-	

https://truckmanualshub.com/

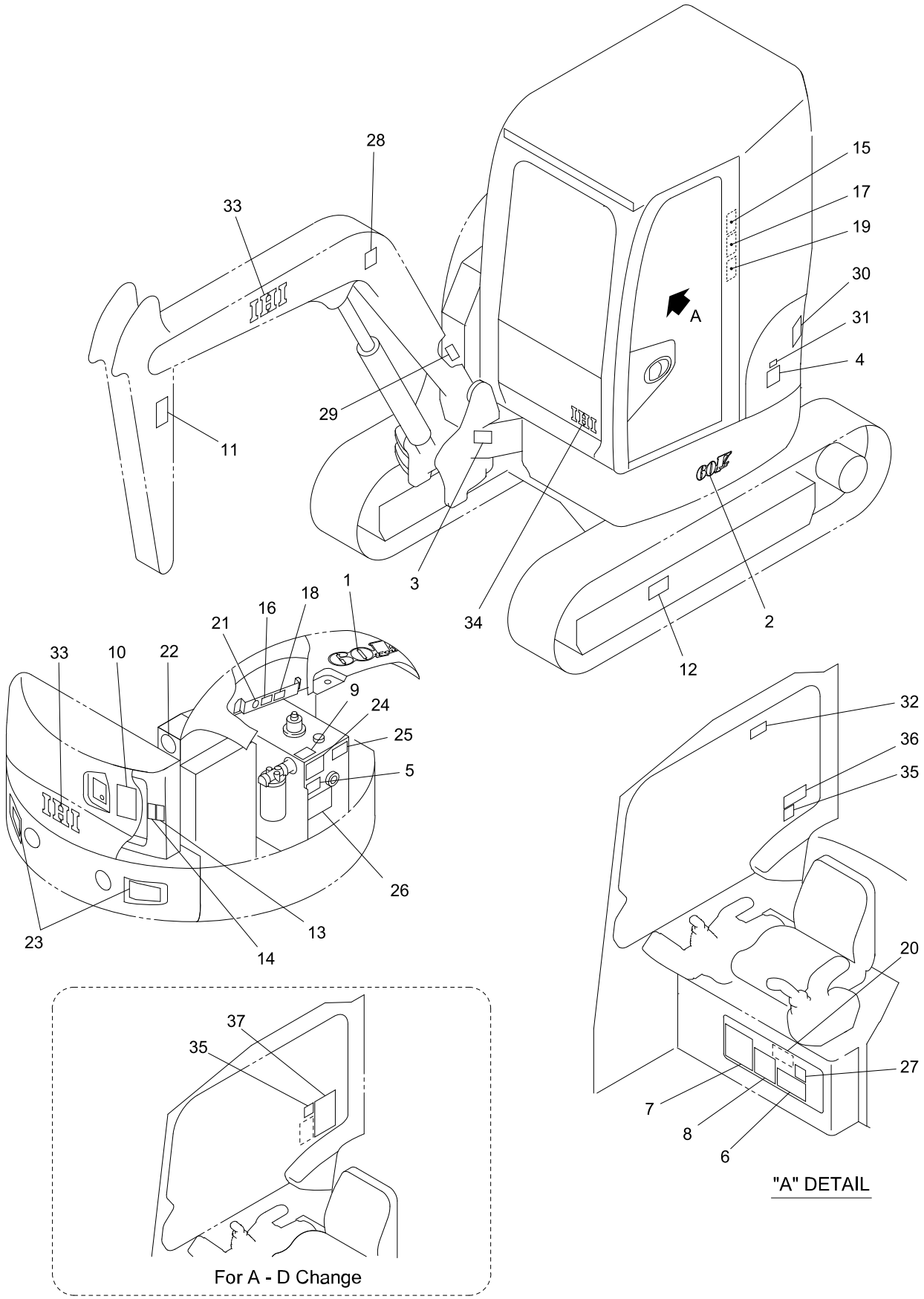

60V4-15100B-1

https://truckmanualshub.com/

KEY No.	SUP.	PART No.	DESCRIPTION	Q'TY	CHAN.	SERIAL No.	REMARKS
0	×	F377 853 00	Decal Ass'y	1		WZ010001-	
0-1	×	F377 855 00	Decal Ass'y	1		WZ010001-	
1		D408 409 00	*Decal (Model)	1		WZ010001-	
2		D408 418 00	*Decal (Model)	1		WZ010001-	
3	×	D405 091 00	*Decal (Serial No.)	1		WZ010001-	
3-1		0497 035 00	*Screw, Drive	4		WZ010001-	d=3
4		4405 457 00	*Decal (Oil)	1		WZ010001-	
5		D406 562 00	*Decal (Oil Check)	1		WZ010001-	
6		D408 359 00	*Decal (Lub. Chart)	1		WZ010001-	
7		D408 331 00	*Decal (Engine Daily Check)	1		WZ010001-	
8		4448 603 00	*Decal (Safety Works)	1		WZ010001-	
9		D408 428 00	*Decal (Tank Decompression)	1		WZ010001-	
10		D405 507 00	*Decal (Safety Swing)	1		WZ010001-	
11		D405 511 00	*Decal (Caution)	2		WZ010001-	
12		D405 505 00	*Decal (Caution)	2		WZ010001-	
13		D405 366 00	*Decal (Caution)	1		WZ010001-	
14		D405 509 00	*Decal (Caution)	1		WZ010001-	
15		D405 359 00	*Decal (Caution)	1		WZ010001-	
16		D405 503 00	*Decal (Caution)	1		WZ010001-	
17		D405 508 00	*Decal (Caution)	1		WZ010001-	
18		D405 504 00	*Decal (Caution)	1		WZ010001-	
19		D405 506 00	*Decal (Caution)	1		WZ010001-	
20		D405 594 00	*Decal (Caution)	1		WZ010001-	
21		4448 598 00	*Decal (Anti-Freezing Solution)	1		WZ010001-	
22		D406 783 00	*Decal (Environment)	1		WZ010001-	
23		D408 371 00	*Decal (Reflector)	2		WZ010001-	
24		D408 337 00	*Decal (Boom Lowering)	1		WZ010001-	
25		4449 406 00	*Decal (Spare Piping Change)	1		WZ010001-	
26		4448 607 00	*Decal (Breaker Cation)	1		WZ010001-	
27		4448 619 00	*Decal (Transport Fix)	1		WZ010001-	
28		D408 351 00	*Decal (Lifting Procedures)	1		WZ010001-	
29	×	D405 097 00	*Decal (New Machine)	1		WZ010001-	
30		D406 032 00	*Decal (Noise 97)	1		WZ010001-	
31		D407 943 00	*Decal (EPA Regulation)	1		WZ010001-	
32		D405 510 00	*Decal (Caution)	1		WZ010001-	
33		D408 402 00	*Decal (IHI)	3		WZ010001-	
34		D408 403 00	*Decal (IHI)	1		WZ010001-	
35		D406 630 00	*Decal (Blade, Pedal)	1		WZ010001-	
36		D406 622 00	*Decal (Control A)	1		WZ010001-	
36-1		D406 623 00	*Decal (Control B)	1		WZ010001-	
36-2		D406 624 00	*Decal (Control C)	1		WZ010001-	
36-3		D406 625 00	*Decal (Control D)	1		WZ010001-	
37		D406 628 00	*Decal (Control A-D)	1		WZ010001-	

https://truckmanualshub.com/

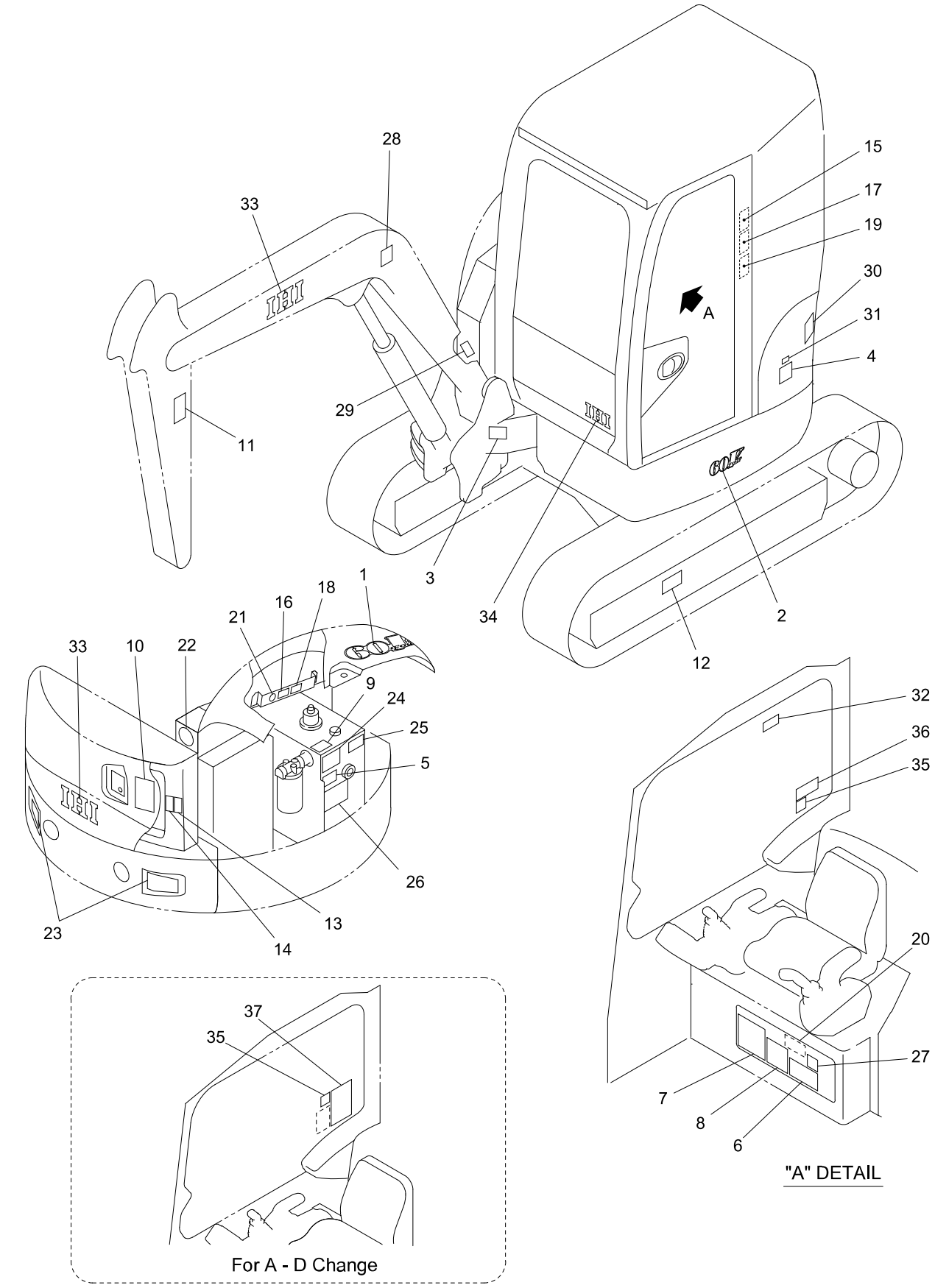

60V4-15100B-1

https://truckmanualshub.com/

KEY No.	SUP.	PART No.	DESCRIPTION	Q'TY	CHAN.	SERIAL No.	REMARKS
0	×	F377 853 00	Decal Ass'y	1		WZ010001-	
0-1	×	F377 855 00	Decal Ass'y	1		WZ010001-	
1		D408 409 00	*Decal (Model)	1		WZ010001-	
2		D408 418 00	*Decal (Model)	1		WZ010001-	
3	×	D405 091 00	*Decal (Serial No.)	1		WZ010001-	
3-1		0497 035 00	*Screw, Drive	4		WZ010001-	d=3
4		D406 000 00	*Decal (Oil)	1		WZ010001-	
5		D406 811 00	*Decal (Oil Check)	1		WZ010001-	
6		D408 361 00	*Decal (Lub. Chart)	1		WZ010001-	
7		D408 333 00	*Decal (Engine Daily Check)	1		WZ010001-	
8		D407 016 00	*Decal (Safety Works)	1		WZ010001-	
9		D408 430 00	*Decal (Tank Decompression)	1		WZ010001-	
10		D405 507 00	*Decal (Safety Swing)	1		WZ010001-	
11		D405 511 00	*Decal (Caution)	2		WZ010001-	
12		D405 505 00	*Decal (Caution)	2		WZ010001-	
13		D405 366 00	*Decal (Caution)	1		WZ010001-	
14		D405 509 00	*Decal (Caution)	1		WZ010001-	
15		D405 359 00	*Decal (Caution)	1		WZ010001-	
16		D405 503 00	*Decal (Caution)	1		WZ010001-	
17		D405 508 00	*Decal (Caution)	1		WZ010001-	
18		D405 504 00	*Decal (Caution)	1		WZ010001-	
19		D405 506 00	*Decal (Caution)	1		WZ010001-	
20		D406 005 00	*Decal (Caution)	1		WZ010001-	
21		D406 012 00	*Decal (Anti-Freezing Solution)	1		WZ010001-	
22		D406 783 00	*Decal (Environment)	1		WZ010001-	
23		D408 371 00	*Decal (Reflector)	2		WZ010001-	
24		D408 339 00	*Decal (Boom Lowering)	1		WZ010001-	
25		D406 720 00	*Decal (Spare Piping Change)	1		WZ010001-	
26		D406 002 00	*Decal (Breaker Cation)	1		WZ010001-	
27		D406 007 00	*Decal (Transport Fix)	1		WZ010001-	
28		D408 353 00	*Decal (Lifting Procedures)	1		WZ010001-	
29	×	D405 097 00	*Decal (New Machine)	1		WZ010001-	
30		D406 032 00	*Decal (Noise 97)	1		WZ010001-	
31		D407 943 00	*Decal (EPA Regulation)	1		WZ010001-	
32		D405 510 00	*Decal (Caution)	1		WZ010001-	
33		D408 402 00	*Decal (IHI)	3		WZ010001-	
34		D408 403 00	*Decal (IHI)	1		WZ010001-	
35		D406 630 00	*Decal (Blade, Pedal)	1		WZ010001-	
36		D406 622 00	*Decal (Control A)	1		WZ010001-	
36-1		D406 623 00	*Decal (Control B)	1		WZ010001-	
36-2		D406 624 00	*Decal (Control C)	1		WZ010001-	
36-3		D406 625 00	*Decal (Control D)	1		WZ010001-	
37		D406 628 00	*Decal (Control A-D)	1		WZ010001-	

https://truckmanualshub.com/

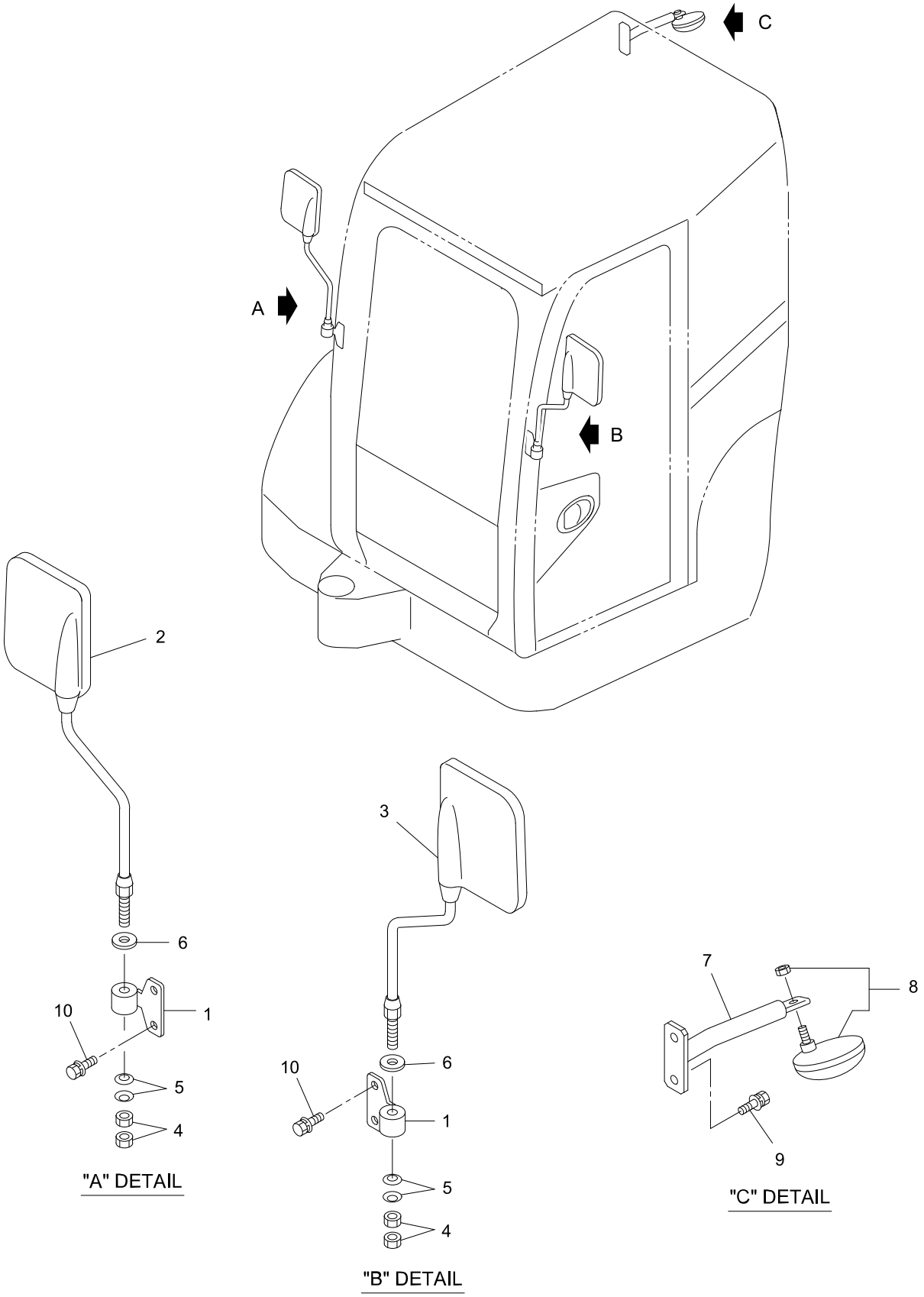

V4ALL-151100-1

https://truckmanualshub.com/

KEY No.	SUP.	PART No.	DESCRIPTION	Q'TY	CHAN.	SERIAL No.	REMARKS
0	×	F355 037 00	Mirror Ass'y	1		WZ010001-	
1		D416 701 00	*Bracket	2		WZ010001-	
2		0699 901 12	*Mirror, Back	1		WZ010001-	
3		0699 901 13	*Mirror, Back	1		WZ010001-	
4		0580 120 00	*Nut, Hex.	4		WZ010001-	M12
5		0491 800 12	*Washer, Conical Spring	4		WZ010001-	M12
6		0593 120 00	*Washer, Flat	2		WZ010001-	M12
7		D260 381 00	*Stay	1		WZ010001-	
8		0690 203 08	*Mirror, Under	1		WZ010001-	
9		0439 100 25	*Bolt, Treatment (W/L.W,F.W)	2		WZ010001-	M10X25 P=1.25
10		0439 100 20	*Bolt, Treatment (W/L.W,F.W)	4		WZ010001-	M10X20 P=1.25

https://truckmanualshub.com/

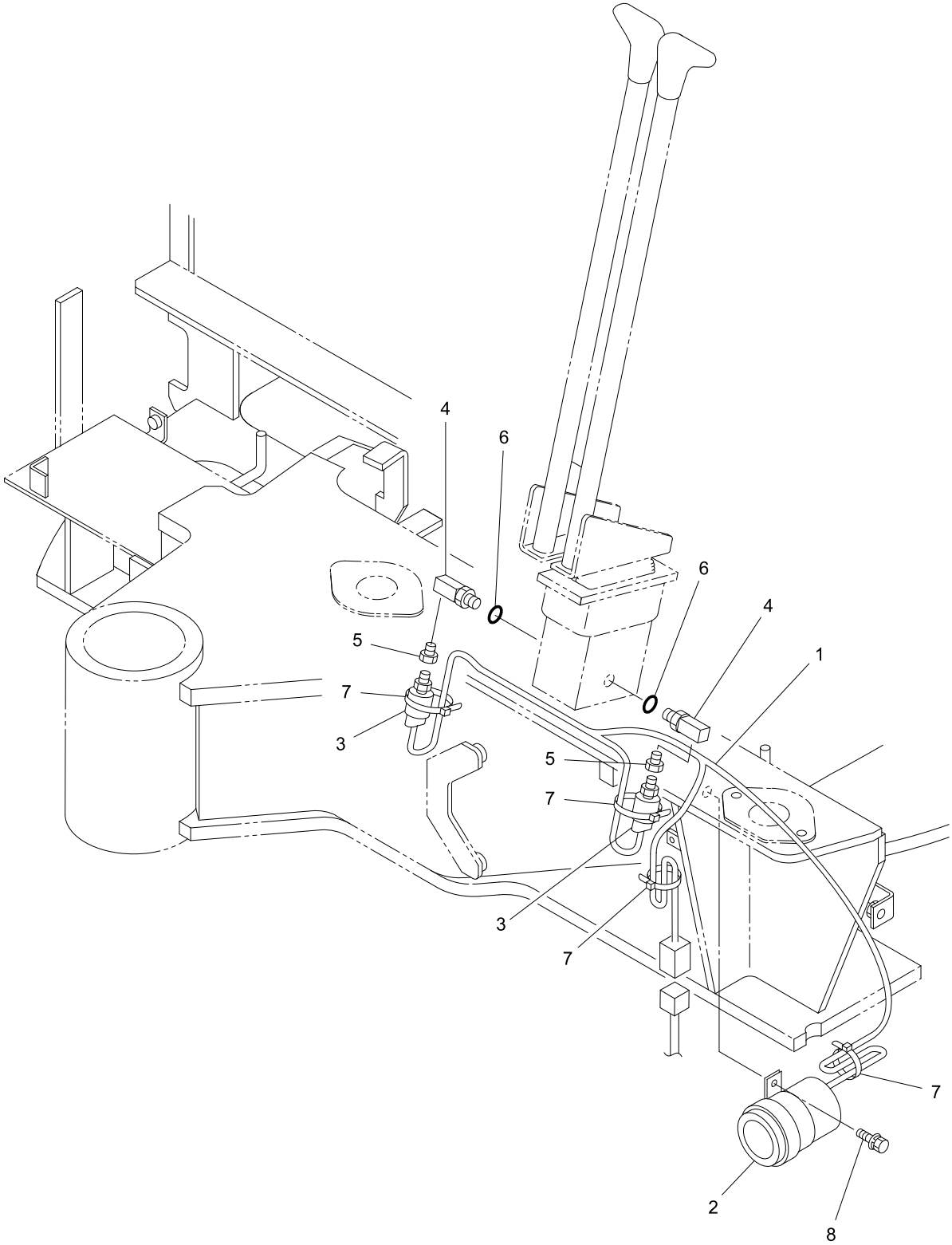

40V4-151200-1

https://truckmanualshub.com/

KEY No.	SUP.	PART No.	DESCRIPTION	Q'TY	CHAN.	SERIAL No.	REMARKS
0	×	F432 277 00	Alarm Device, Travvel	1		WZ010001-	
1		D592 161 00	*Harness	1		WZ010001-	
2		0857 011 48	*Horn, Back	1		WZ010001-	
3		0858 180 10	*Switch, Pressure	2		WZ010001-	
4		0719 804 UA	*Elbow	2		WZ010001-	
5		0710 400 24	*Bush, Reducer	2		WZ010001-	PT1/4XPT1/8
6		0760 710 12	*Ring, O	2		WZ010001-	P11-90B
7		0820 067 04	*Band, Cable	4		WZ010001-	
8		0517 080 25	*Bolt, Treatment (W/L.W, F.W)	1		WZ010001-	M8X25

https://truckmanualshub.com/

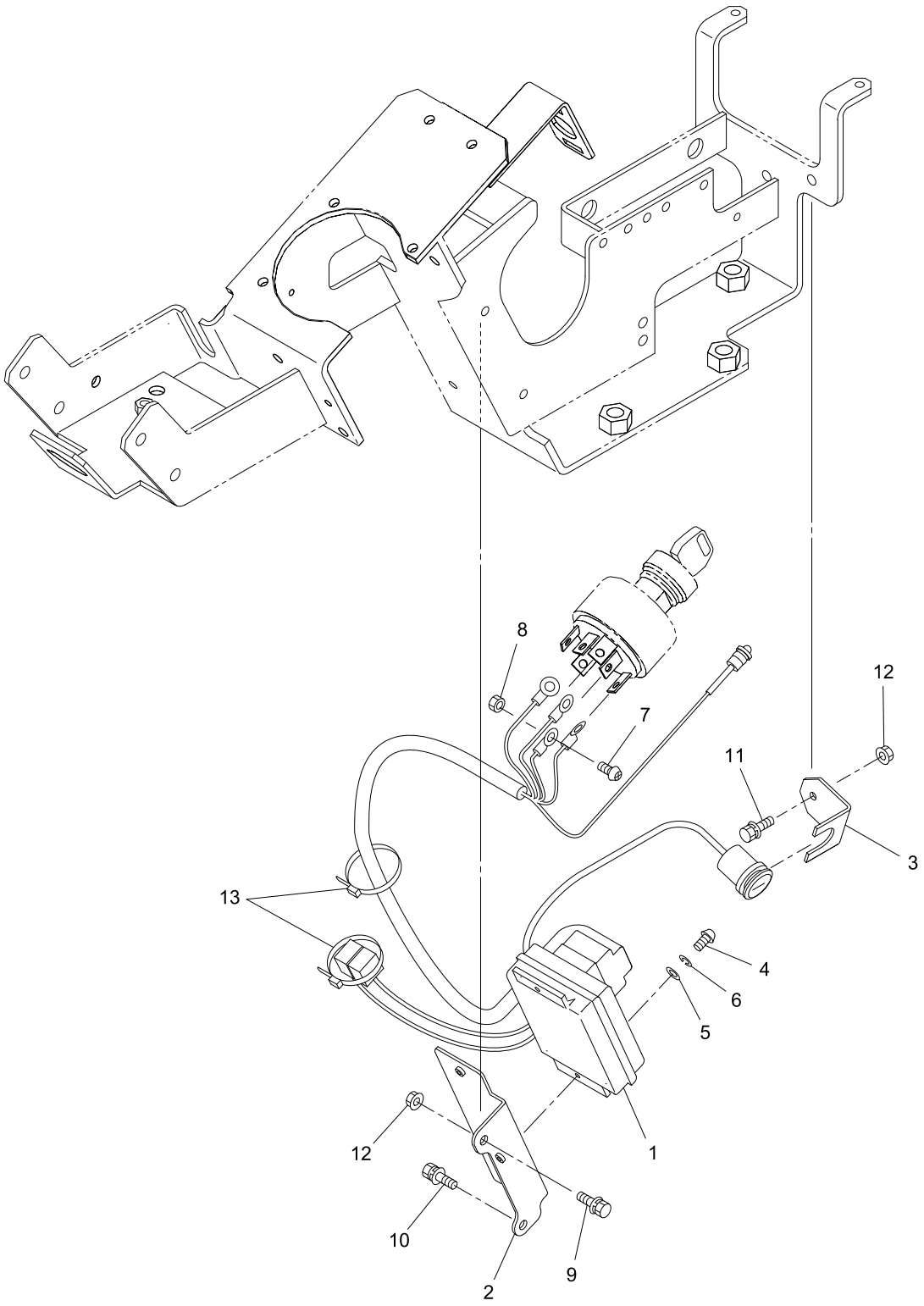

V4ALL-151300-1

https://truckmanualshub.com/

KEY No.	SUP.	PART No.	DESCRIPTION	Q'TY	CHAN.	SERIAL No.	REMARKS
0	×	F366 792 00	Immobilizer Ass'y	1		WZ010001-	
1		0893 508 UA	*Controller Ass'y	1		WZ010001-	
2		D418 688 00	*Bracket	1		WZ010001-	
3		D418 689 00	*Bracket	1		WZ010001-	
4		0565 040 10	*Screw, Pan Head	2		WZ010001-	M4X10
5		0593 040 00	*Washer, Flat	2		WZ010001-	M4
6		0590 040 00	*Washer, Lock	2		WZ010001-	M4
7		0565 050 10	*Screw, Pan Head	1		WZ010001-	M5X10
8		0580 050 00	*Nut, Hex.	1		WZ010001-	M5
9		0517 060 25	*Bolt, Treatment (W/L.W, F.W)	1		WZ010001-	M6X25
10		0517 060 12	*Bolt, Treatment (W/L.W, F.W)	1		WZ010001-	M6X12
11		0517 060 16	*Bolt, Treatment (W/L.W, F.W)	1		WZ010001-	M6X16
12		0521 060 00	*Nut, Hex. (W/F.W)	2		WZ010001-	M6
13		0820 067 03	*Band, Cable	2		WZ010001-	

https://truckmanualshub.com/

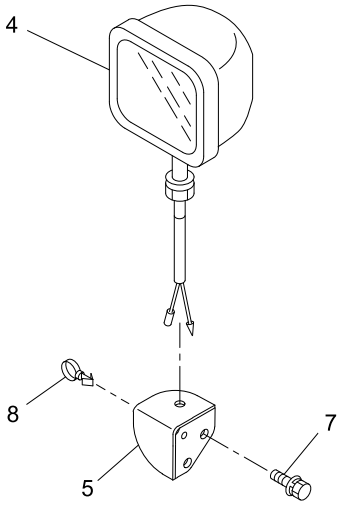

"A" DETAIL

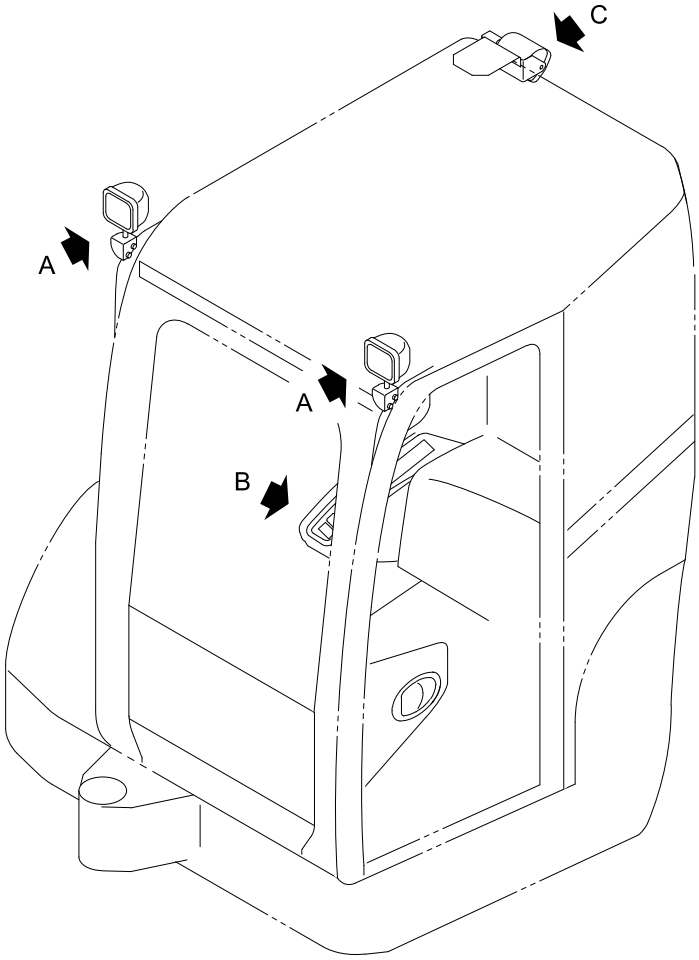

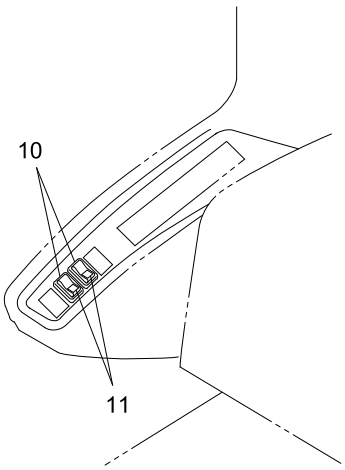

"B" DETAIL

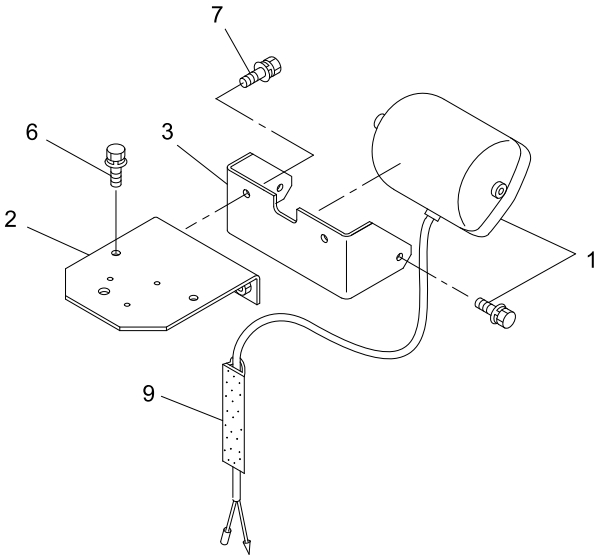

"C" DETAIL

V4ALL-151400-1

https://truckmanualshub.com/

KEY No.	SUP.	PART No.	DESCRIPTION	Q'TY	CHAN.	SERIAL No.	REMARKS
0	×	F385 402 00	Light Ass'y	1		WZ010001-	
1		0854 536 UA	*Lamp Ass'y	1		WZ010001-	
1-1		0854 536 01	**Lens	1		WZ010001-	
1-2		0854 536 11	**Bulb	1		WZ010001-	
2		D418 632 00	*Bracket	1		WZ010001-	
3		D418 630 00	*Bracket	1		WZ010001-	
4		0854 523 UA	*Light Ass'y	2		WZ010001-	
4-1		0854 523 01	**Lens	1		WZ010001-	
4-2		0854 523 06	**Bulb	1		WZ010001-	
5		D419 161 00	*Bracket	2		WZ010001-	
6		0439 100 20	*Bolt, Treatment (W/L.W, F.W)	2		WZ010001-	M10X20 P=1.25
7		0439 100 25	*Bolt, Treatment (W/L.W, F.W)	6		WZ010001-	M10X25 P=1.25
8		0690 082 08	*Clamp, Hose	2		WZ010001-	
9		4522 707 01	*Duct	1		WZ010001-	
10		0858 314 11	*Switch Ass'y, Light	2		WZ010001-	
11		0858 314 12	*Decal	2		WZ010001-	

https://truckmanualshub.com/

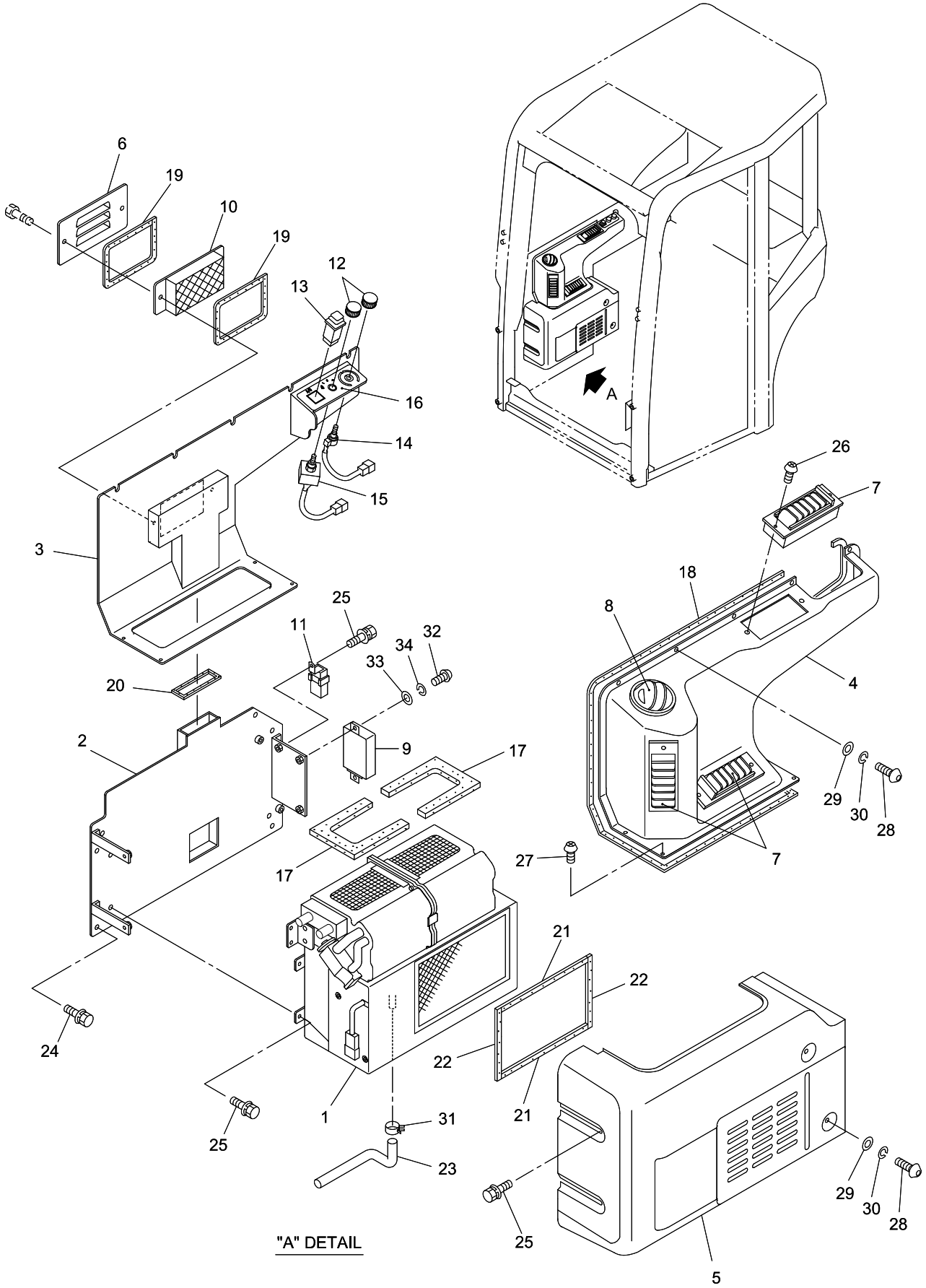

30V4-151500-1

https://truckmanualshub.com/

KEY No.	SUP.	PART No.	DESCRIPTION	Q'TY	CHAN.	SERIAL No.	REMARKS
0	×	F385 396 00	Air Conditioner Ass'y (1)	1		WZ010001-	
1		0892 270 UA	*Air Conditioner Ass'y	1		WZ010001-	
2		D419 359 00	*Bracket	1		WZ010001-	
3		D452 207 00	*Bracket	1		WZ010001-	
4		D465 382 00	*Duct	1		WZ010001-	
5		D465 383 00	*Panel	1		WZ010001-	
6		D458 508 00	*Cover	1		WZ010001-	
7		0820 023 19	*Louver	3		WZ010001-	
8		0820 023 18	*Louver	1		WZ010001-	
9		0898 000 02	*Amplifier	1		WZ010001-	
10		0745 142 UA	*Filter, Air	1		WZ010001-	
11		0820 215 07	*Relay	1		WZ010001-	
12		0690 210 86	*Knob	2		WZ010001-	
13		0898 000 05	*Switch	1		WZ010001-	
14		0898 000 03	*Volume, Thermodtat	1		WZ010001-	
15		0898 000 04	*Switch Ass'y, Blower	1		WZ010001-	
16		D408 205 00	*Decal	1		WZ010001-	
17		D493 694 00	*Seal, Sponge	2		WZ010001-	
18		D551 009 01	*Seal, Sponge	2		WZ010001-	L=1000
19		D551 009 02	*Seal, Sponge	2		WZ010001-	L=430
20		D551 009 03	*Seal, Sponge	1		WZ010001-	L=230
21		D551 010 01	*Seal, Sponge	2		WZ010001-	L=210
22		D551 010 02	*Seal, Sponge	2		WZ010001-	L=150
23		4070 740 01	*Hose, Fuel	1		WZ010001-	L=390
24		0518 100 20	*Bolt, Treatment (W/L.W, F.W)	4		WZ010001-	M10X20 P=1.25
25		0517 060 16	*Bolt, Treatment (W/L.W, F.W)	9		WZ010001-	M6X16
26		0454 300 12	*Screw, Tapping	6		WZ010001-	M3X12
27		0454 600 12	*Screw, Tapping	4		WZ010001-	M6X12
28		4004 280 01	*Bolt, Button Head	7		WZ010001-	M6X16
29		0593 060 00	*Washer, Flat	7		WZ010001-	M6
30		0590 060 00	*Washer, Lock	7		WZ010001-	M6
31		0690 082 07	*Clamp	1		WZ010001-	
32		0565 040 12	*Screw, Pan Head	2		WZ010001-	M4X12
33		0593 040 00	*Washer, Flat	2		WZ010001-	M4
34		0590 040 00	*Washer, Lock	2		WZ010001-	M4

https://truckmanualshub.com/

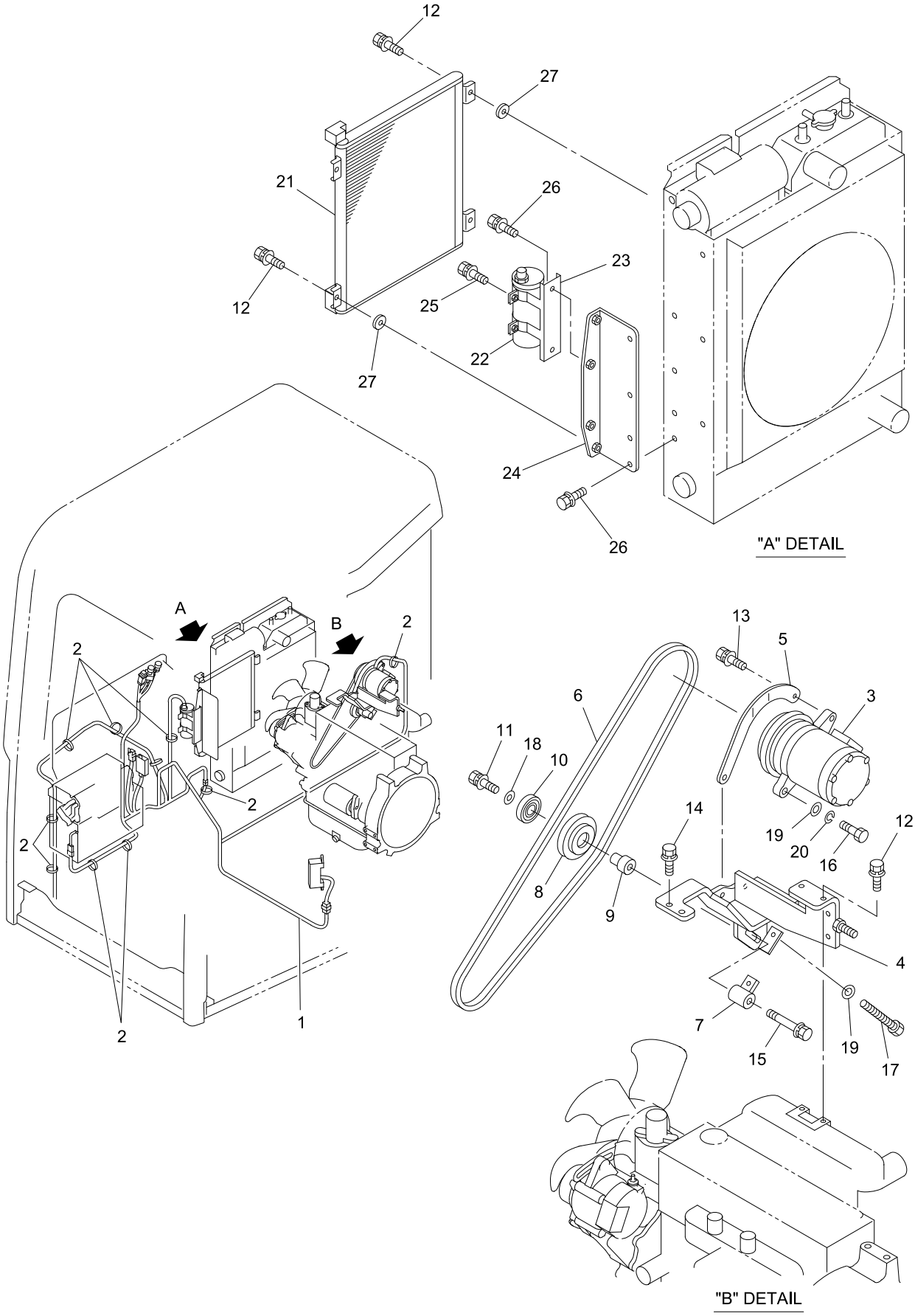

40V4-151600-1

https://truckmanualshub.com/

KEY No.	SUP.	PART No.	DESCRIPTION	Q'TY	CHAN.	SERIAL No.	REMARKS
0	×	F385 400 00	Air Conditioner Ass'y (2)	1		WZ010001-	
1		D592 307 00	*Harness	1		WZ010001-	
2		0820 067 04	*Band, Cable	8		WZ010001-	
3		0897 018 UA	*Compressor Ass'y	1		WZ010001-	
4		D419 349 00	*Bracket	1		WZ010001-	
5		D260 518 00	*Stay	1		WZ010001-	
6		0910 101 19	*Belt	1		WZ010001-	
7		D131 100 00	*Boss	1		WZ010001-	
8		D032 017 00	*Pully	1		WZ010001-	
9		D040 381 00	*Spacer	1		WZ010001-	
10		0630 620 33	*Bearing	1		WZ010001-	6203UU
11		0517 080 12	*Bolt, Treatment (W/L.W, F.W)	1		WZ010001-	M8X12
12		0517 080 25	*Bolt, Treatment (W/L.W, F.W)	6		WZ010001-	M8X25
13		0517 080 30	*Bolt, Treatment (W/L.W, F.W)	3		WZ010001-	M8X30
14		0517 080 40	*Bolt, Treatment (W/L.W, F.W)	2		WZ010001-	M8X40
15		0517 080 55	*Bolt, Treatment (W/L.W, F.W)	1		WZ010001-	M8X55
16		0513 080 40	*Bolt, Treatment	1		WZ010001-	M8X40
17		0551 080 60	*Bolt, Hex.(Full-Thread)	1		WZ010001-	M8X60
18		4006 119 01	*Washer	1		WZ010001-	M8
19		0593 080 00	*Washer, Flat	2		WZ010001-	M8
20		0590 080 00	*Washer, Lock	1		WZ010001-	M8
21		0897 019 UA	*Condenser	1		WZ010001-	
22		0897 002 UA	*Dryer, Recerver	1		WZ010001-	
23		0898 000 01	*Bracket	1		WZ010001-	
24		D419 370 00	*Bracket	1		WZ010001-	
25		0517 060 20	*Bolt, Treatment (W/L.W, F.W)	2		WZ010001-	M6X20
26		0517 080 20	*Bolt, Treatment (W/L.W, F.W)	5		WZ010001-	M8X20
27		F771 315 00	*Washer, Rubber	4		WZ010001-	

https://truckmanualshub.com/

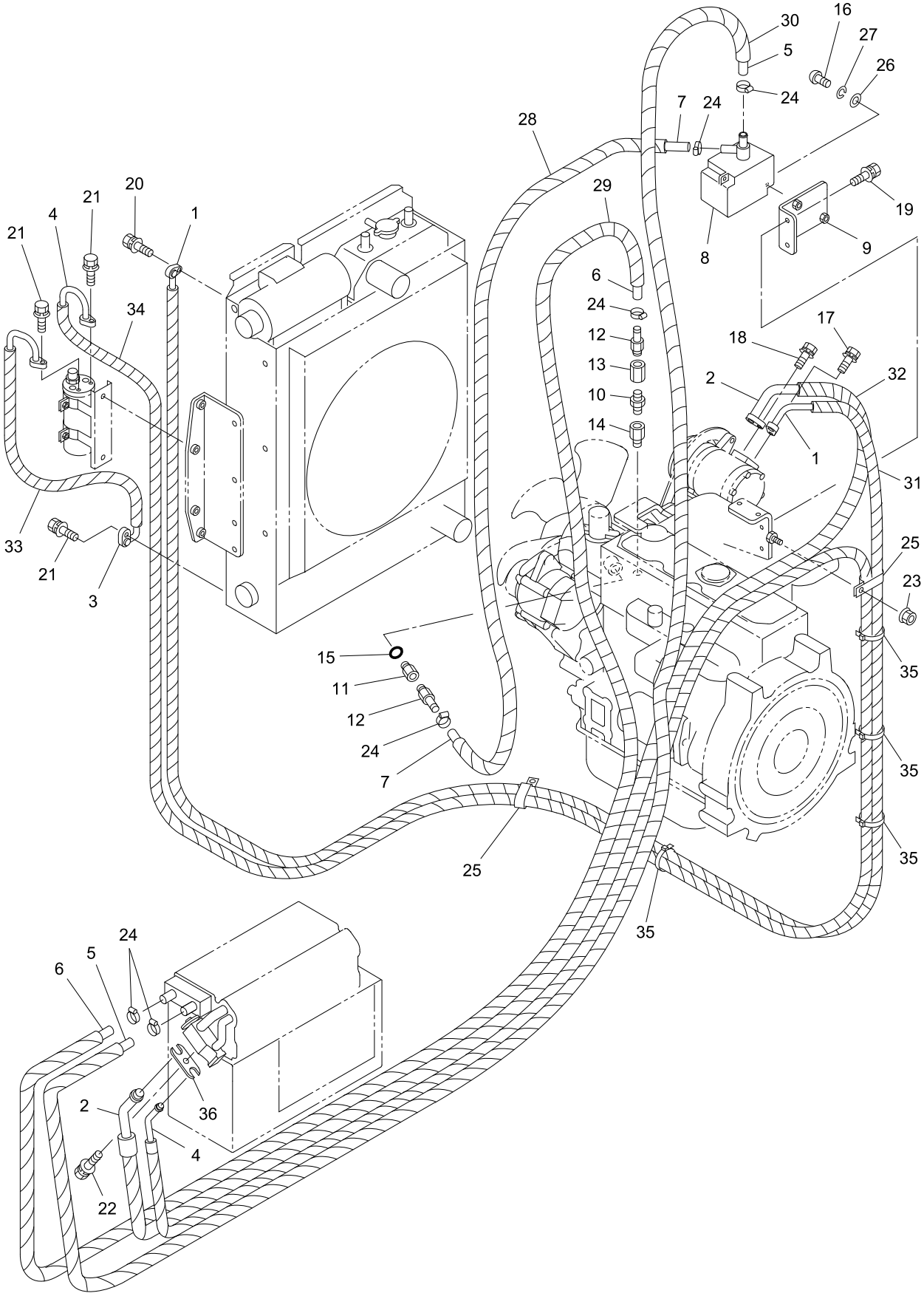

https://truckmanualshub.com/

KEY No.	SUP.	PART No.	DESCRIPTION	Q'TY	CHAN.	SERIAL No.	REMARKS
0	×	F385 394 00	Piping, Ass'y Air Conditioner	1		WZ010001-	
1		0898 000 68	*Hose	1		WZ010001-	
2		0898 000 69	*Hose	1		WZ010001-	
3		0898 000 70	*Hose	1		WZ010001-	
4		0898 000 71	*Hose	1		WZ010001-	
5		4070 102 44	*Hose, Water	M		WZ010001-	L=2000
6		4070 102 45	*Hose, Water	M		WZ010001-	L=1750
7		4070 102 31	*Hose, Water	M		WZ010001-	L=700
8		0898 000 00	*Valve, Water	1		WZ010001-	
9		D419 206 00	*Bracket	1		WZ010001-	
10		0710 600 13	*Nipple	1		WZ010001-	PT3/8XPT1/4
11		0713 704 03	*Connector	1		WZ010001-	
12		4072 220 00	*Nipple	2		WZ010001-	
13		0710 501 03	*Socket	1		WZ010001-	
14		0710 503 02	*Socket	1		WZ010001-	
15		0760 710 16	*Ring, O	1		WZ010001-	P14-90B
16		0565 050 10	*Screw, Pan Head	2		WZ010001-	M5X10
17		0517 080 35	*Bolt, Treatment (W/L.W, F.W)	1		WZ010001-	M8X35
18		0517 080 25	*Bolt, Treatment (W/L.W, F.W)	1		WZ010001-	M8X25
19		0517 080 20	*Bolt, Treatment (W/L.W, F.W)	2		WZ010001-	M8X20
20		0517 060 40	*Bolt, Treatment (W/L.W, F.W)	1		WZ010001-	M6X40
21		0517 060 25	*Bolt, Treatment (W/L.W, F.W)	3		WZ010001-	M6X25
22		0517 060 20	*Bolt, Treatment (W/L.W, F.W)	1		WZ010001-	M6X20
23		0524 100 00	*Nut, Hex. (W/F.W)	1		WZ010001-	M10 P=1.25
24		0690 083 04	*Clamp, Hose	6		WZ010001-	
25		4080 000 26	*Clamp, Hose	2		WZ010001-	
26		0593 050 00	*Washer, Flat	2		WZ010001-	M5
27		0590 050 00	*Washer, Lock	2		WZ010001-	M5
28		0820 803 06	*Tube, Corrugate	M		WZ010001-	L=600
29		0820 803 06	*Tube, Corrugate	M		WZ010001-	L=1650
30		0820 803 06	*Tube, Corrugate	M		WZ010001-	L=1900
31		0820 803 05	*Tube, Corrugate	M		WZ010001-	L=2100
32		0820 803 06	*Tube, Corrugate	M		WZ010001-	L=1650
33		0820 803 04	*Tube, Corrugate	M		WZ010001-	L=250
34		0820 803 04	*Tube, Corrugate	M		WZ010001-	L=3300
35		0820 067 04	*Band, Cable	4		WZ010001-	
36		**** *** **	*Plate, Flange	1		WZ010001-	

https://truckmanualshub.com/

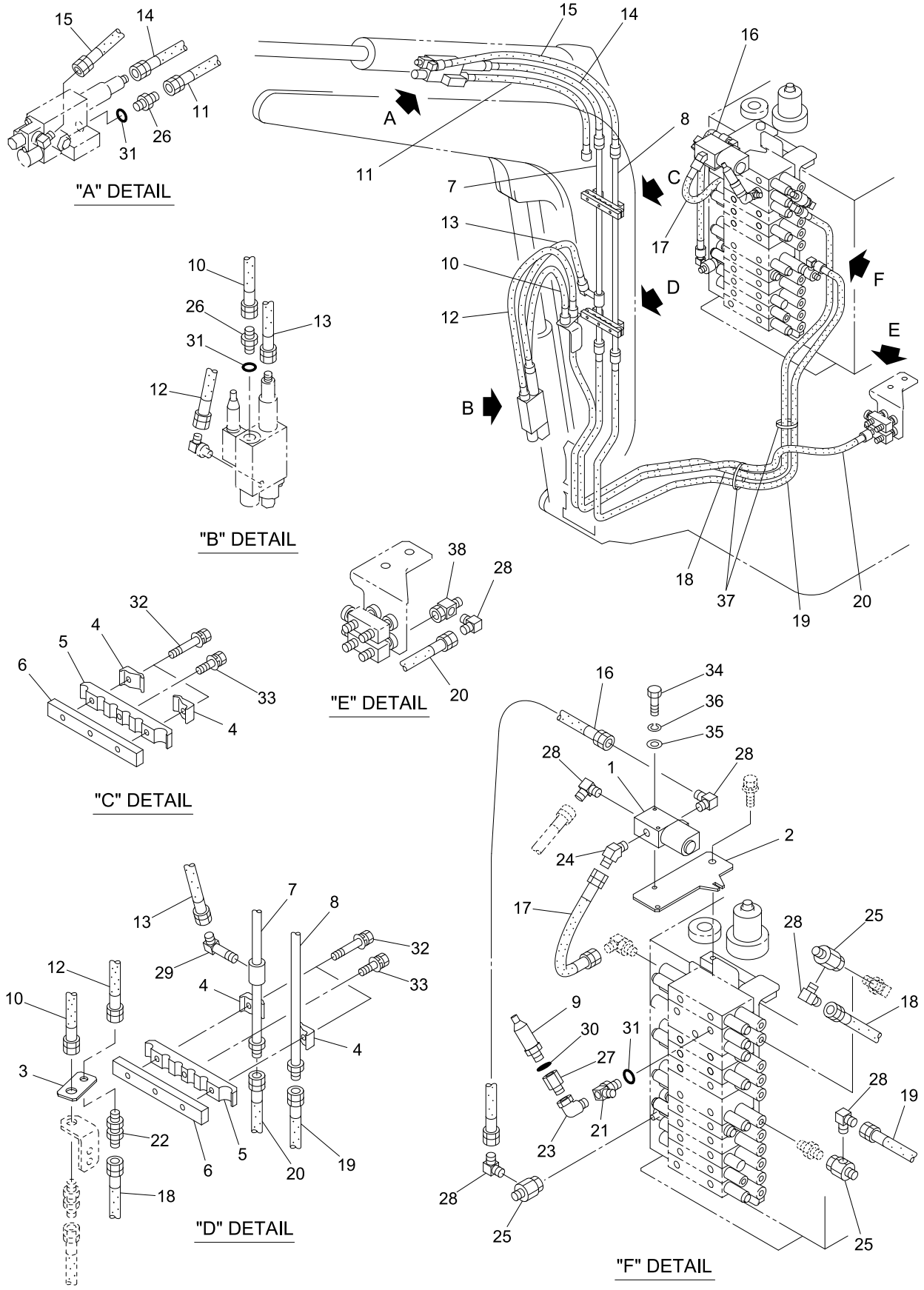

40V4-160100-1

https://truckmanualshub.com/

KEY No.	SUP.	PART No.	DESCRIPTION	Q'TY	CHAN.	SERIAL No.	REMARKS
0	×	F342 598 00	Piping Ass'y, Hydraulic	1		WZ010001-	
1		0785 118 UA	*Valve, Solenoid	1		WZ010001-	
2		D419 356 00	*Bracket	1		WZ010001-	
3		D419 193 00	*Bracket	1		WZ010001-	
4		4081 118 00	*Clamp, Tube	4		WZ010001-	
5		D081 193 00	*Clamp, Tube	2		WZ010001-	
6		D082 034 00	*Clamp, Seat	2		WZ010001-	
7		D286 305 00	*Tube	1		WZ010001-	
8		D286 306 00	*Tube	1		WZ010001-	
9		0858 601 16	*Sensor, Pressure	1		WZ010001-	
10		D070 388 01	*Hose Ass'y	1		WZ010001-	L=940
11		D070 388 22	*Hose Ass'y	1		WZ010001-	L=1100
12		4070 842 16	*Hose Ass'y	1		WZ010001-	L=1160
13		4070 842 33	*Hose Ass'y	1		WZ010001-	L=950
14		4070 842 28	*Hose Ass'y	1		WZ010001-	L=1050
15		4070 842 29	*Hose Ass'y	1		WZ010001-	L=1250
16		4070 548 27	*Hose Ass'y	1		WZ010001-	L=600
17		4070 548 55	*Hose Ass'y	1		WZ010001-	L=350
18		D070 195 21	*Hose Ass'y	1		WZ010001-	L=3000
19		D070 195 17	*Hose Ass'y	1		WZ010001-	L=2800
20		D070 195 03	*Hose Ass'y	1		WZ010001-	L=2450
21		D060 164 00	*Connector	1		WZ010001-	
22		D060 137 00	*Adapter	1		WZ010001-	
23		0710 102 02	*Elbow	1		WZ010001-	
24		0712 310 40	*Elbow, 45	1		WZ010001-	
25		4072 930 01	*Adapter, Union	3		WZ010001-	
26		0713 700 04	*Adapter	2		WZ010001-	
27		0713 705 02	*Socket	1		WZ010001-	
28		0712 310 50	*Elbow	6		WZ010001-	
29		4072 866 02	*Elbow, Long	1		WZ010001-	
30		0760 710 12	*Ring, O	1		WZ010001-	P11-90B
31		0760 710 19	*Ring, O	3		WZ010001-	P18-90B
32		0520 100 70	*Bolt, Treatment (W/L.W)	4		WZ010001-	M10X70 P=1.25
33		0518 100 50	*Bolt, Treatment (W/L.W, F.W)	2		WZ010001-	M10X50 P=1.25
34		0550 060 50	*Bolt, Hex.	2		WZ010001-	M6X50
35		0593 060 00	*Washer, Flat	2		WZ010001-	M6
36		0590 060 00	*Washer, Lock	2		WZ010001-	M6
37		0820 067 05	*Band, Cable	2		WZ010001-	
38		4072 930 02	*Union	1		WZ010001-	

https://truckmanualshub.com/

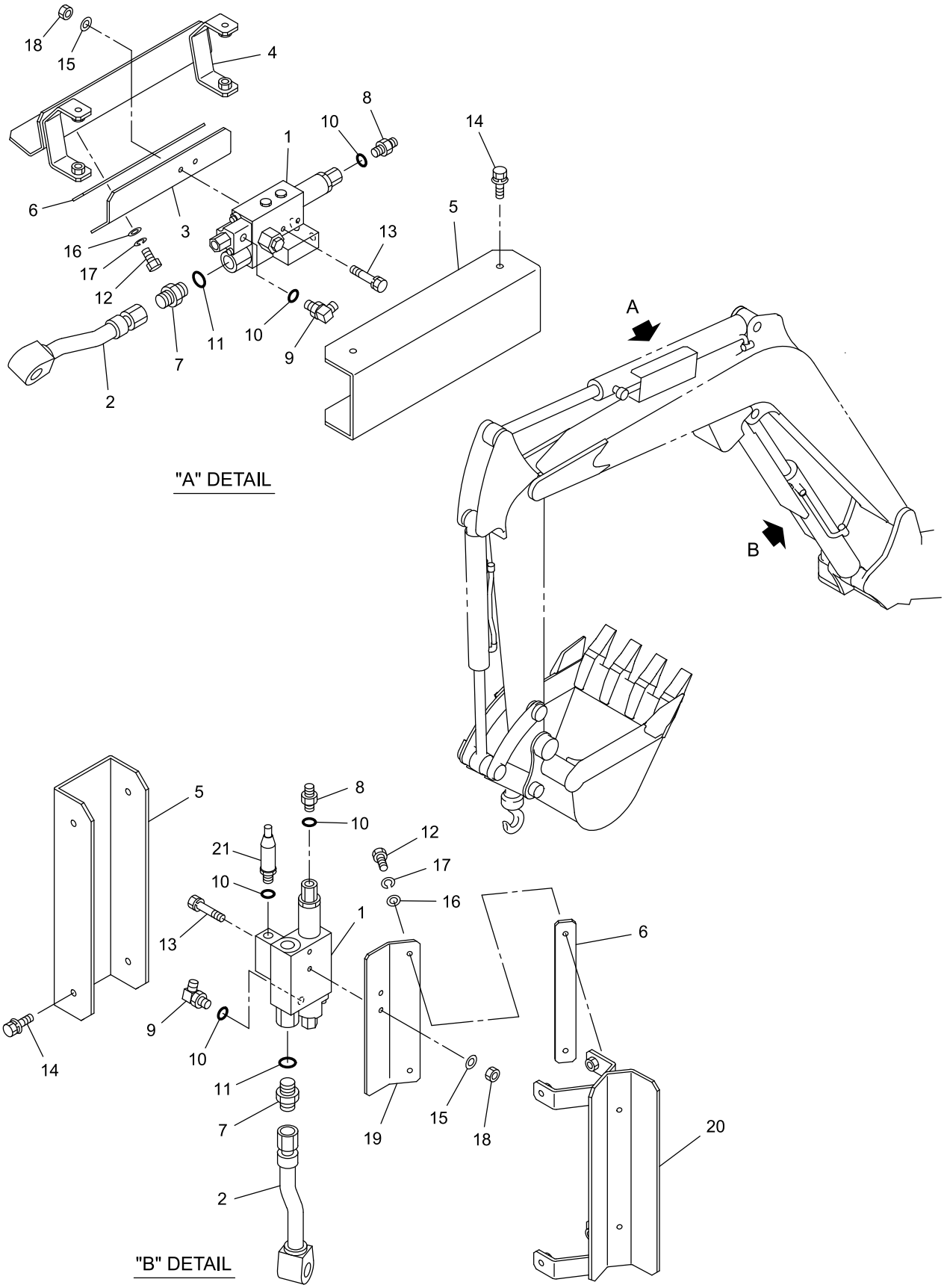

V4ALL-160200-1

https://truckmanualshub.com/

KEY No.	SUP.	PART No.	DESCRIPTION	Q'TY	CHAN.	SERIAL No.	REMARKS
0	×	F342 625 00	Valve Ass'y, Holding	1		WZ010001-	
0-1	×	F342 624 00	Valve Ass'y, Holding	1		WZ010001-	
1	#	0787 047 UA	*Valve, Holding	2		WZ010001-	Sh.No.16-3
2		D286 339 00	*Tube	2		WZ010001-	
3		D419 204 00	*Bracket	1		WZ010001-	
4		D419 208 00	*Bracket	1		WZ010001-	
5		D458 413 00	*Cover	2		WZ010001-	
6		D007 244 01	*Shim	AR		WZ010001-	t=1.6
6-1		D007 244 02	*Shim	AR		WZ010001-	t=4.5
6-2		D007 244 03	*Shim	AR		WZ010001-	t=6.0
7		0713 700 04	*Adapter	2		WZ010001-	
8		0713 700 02	*Adapter	2		WZ010001-	
9		0710 122 09	*Elbow	2		WZ010001-	
10		0760 710 12	*Ring, O	5		WZ010001-	P11-90B
11		0760 710 19	*Ring, O	2		WZ010001-	P18-90B
12		0550 100 20	*Bolt, Hex.	4		WZ010001-	M10X20
13		0519 080 55	*Bolt, Treatment (W/L.W)	4		WZ010001-	M8X55
14		0517 080 16	*Bolt, Treatment (W/L.W, F.W)	8		WZ010001-	M8X16
15		0593 080 00	*Washer, Flat	4		WZ010001-	M8
16		0593 100 00	*Washer, Flat	4		WZ010001-	M10
17		0590 100 00	*Washer, Lock	4		WZ010001-	M10
18		0521 080 00	*Nut, Hex. (W/F.W)	4		WZ010001-	M8
19		D419 203 00	*Bracket	1		WZ010001-	
20		D419 207 00	*Bracket	1		WZ010001-	
21		0858 601 16	*Sensor, Pressure	1		WZ010001-	

https://truckmanualshub.com/

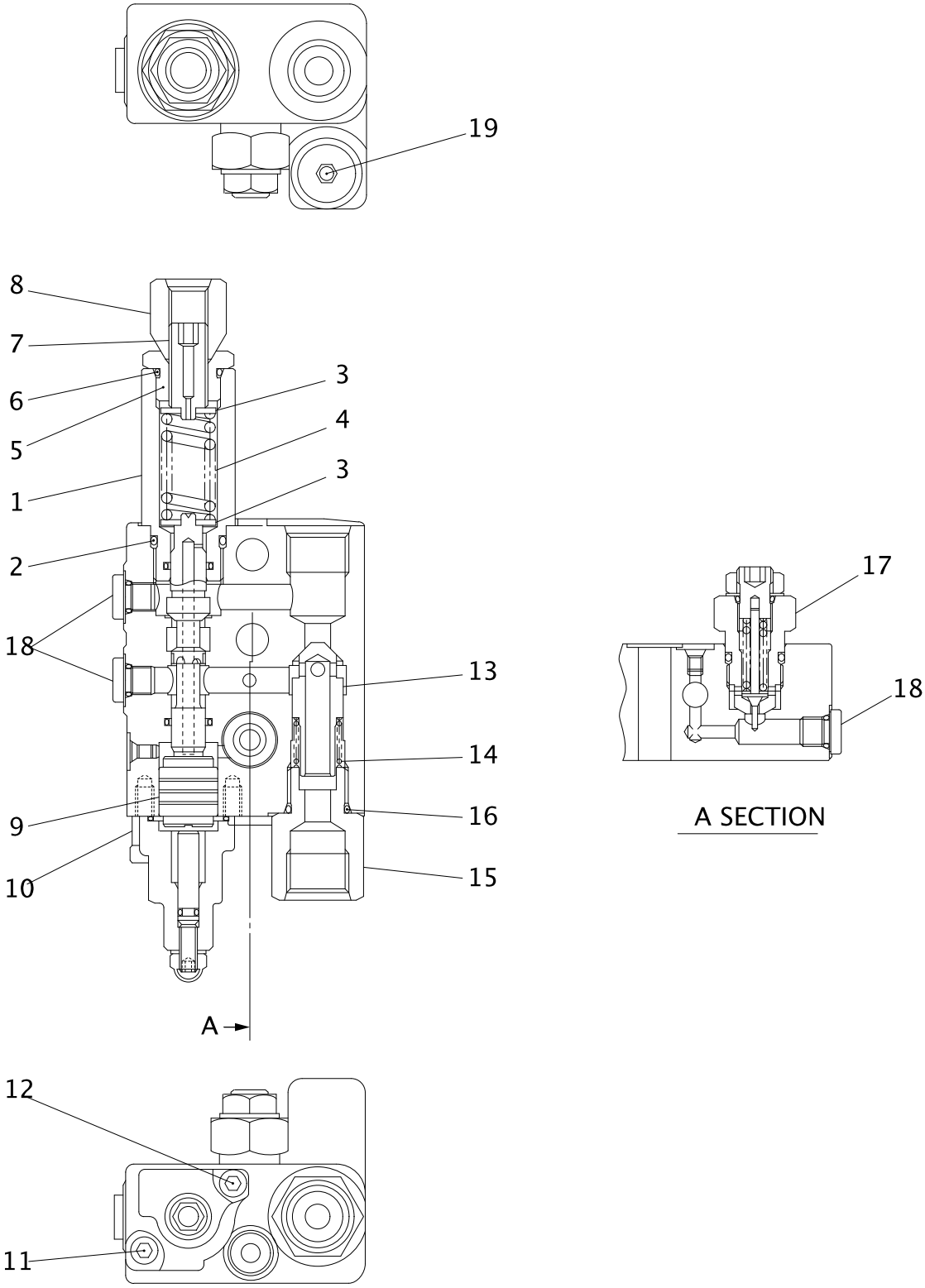

V4ALL-160300-1

https://truckmanualshub.com/

KEY No.	SUP.	PART No.	DESCRIPTION	Q'TY	CHAN.	SERIAL No.	REMARKS
0		0787 047 UA	Valve Ass'y, Holding	1		WZ010001-	
1		0787 047 04	*Plug	1		WZ010001-	
2		0760 710 22	*Ring, O	1		WZ010001-	P22-90B
3		0784 047 06	*Seat, Spring	2		WZ010001-	
4		0784 047 07	*Spring	1		WZ010001-	
5		0787 047 08	*Plug	1		WZ010001-	
6		0760 710 20	*Ring, O	1		WZ010001-	P20-90B
7		0784 047 10	*Adjuster	1		WZ010001-	
8		0784 047 11	*Nut, Hex.	1		WZ010001-	
9		0784 047 12	*Piston	1		WZ010001-	
10		0784 047 13	*Cap	1		WZ010001-	
11		0562 060 16	*Bolt, Socket Head	1		WZ010001-	M6X16
12		0562 060 35	*Bolt, Socket Head	1		WZ010001-	M6X35
13		0787 047 16	*Poppet	1		WZ010001-	
14		0787 047 17	*Spring	1		WZ010001-	
15		0787 047 18	*Plug	1		WZ010001-	
16		0760 710 19	*Ring, O	1		WZ010001-	P18-90B
17		0787 047 91	*Valve, Relief	1		WZ010001-	
18		0783 677 83	*Plug	3		WZ010001-	
19		0783 846 85	*Plug	1		WZ010001-	

https://truckmanualshub.com/

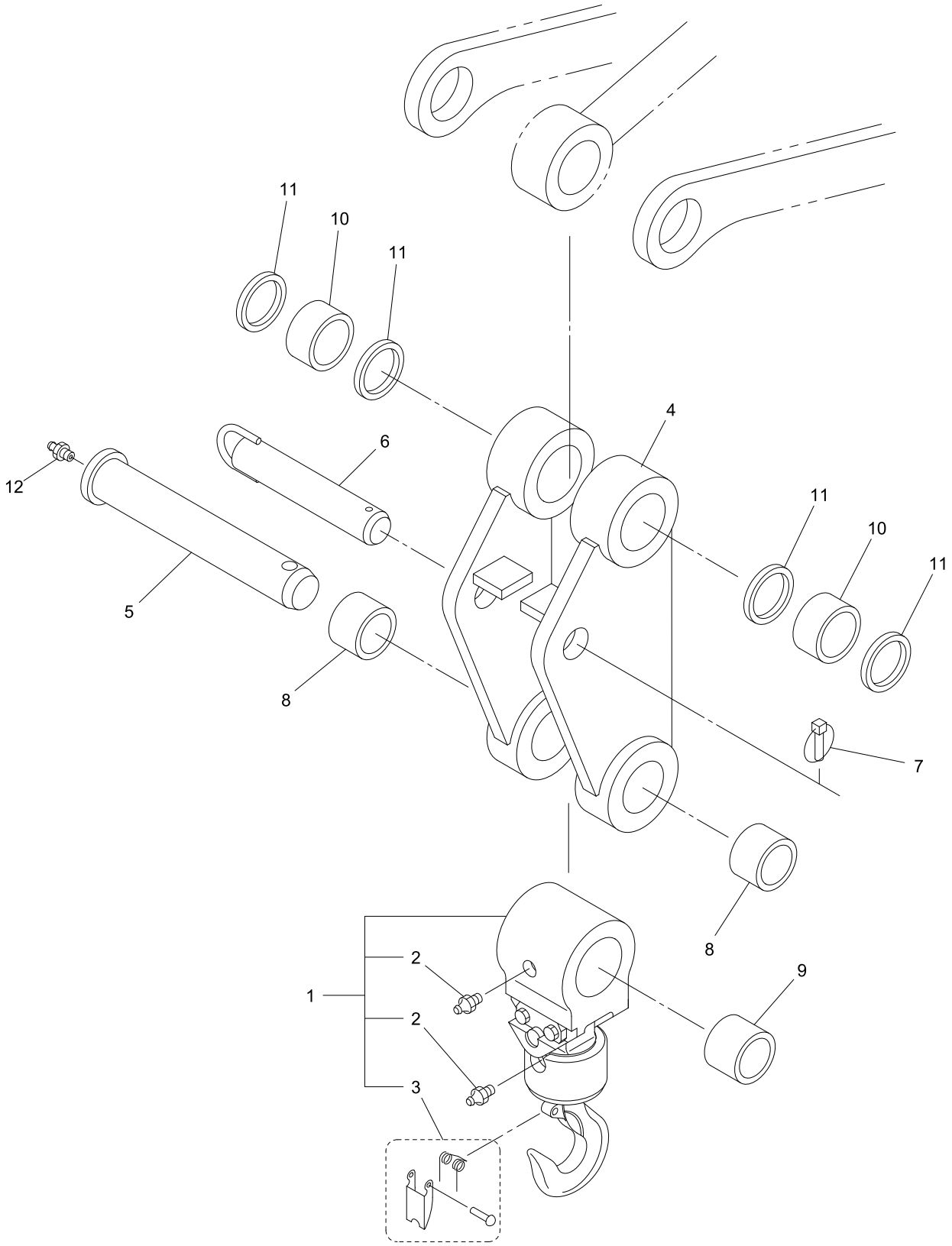

40V4-160400-1

https://truckmanualshub.com/

KEY No.	SUP.	PART No.	DESCRIPTION	Q'TY	CHAN.	SERIAL No.	REMARKS
0	×	F418 128 00	Block Ass'y, Hook	1		WZ010001-	
1		0652 965 UA	*Hook	1		WZ010001-	
2		0728 131 11	**Nipple, Grease	2		WZ010001-	
3		0652 923 UA	**Ratch Ass'y	1		WZ010001-	
4		D490 443 00	*Link, Backet	1		WZ010001-	
5		D013 444 00	*Pin, Head	1		WZ010001-	
6		D013 094 00	*Pin, Head	1		WZ010001-	
7		4017 252 01	*Pin, Ring	1		WZ010001-	
8		4043 231 02	*Bushing	2		WZ010001-	
9		4043 261 03	*Bushing	1		WZ010001-	
10		4043 231 12	*Bushing	2		WZ010001-	
11		0765 033 27	*Seal, Dust	4		WZ010001-	
12		0728 111 15	*Nipple, Grease	1		WZ010001-	PT1/8

https://truckmanualshub.com/

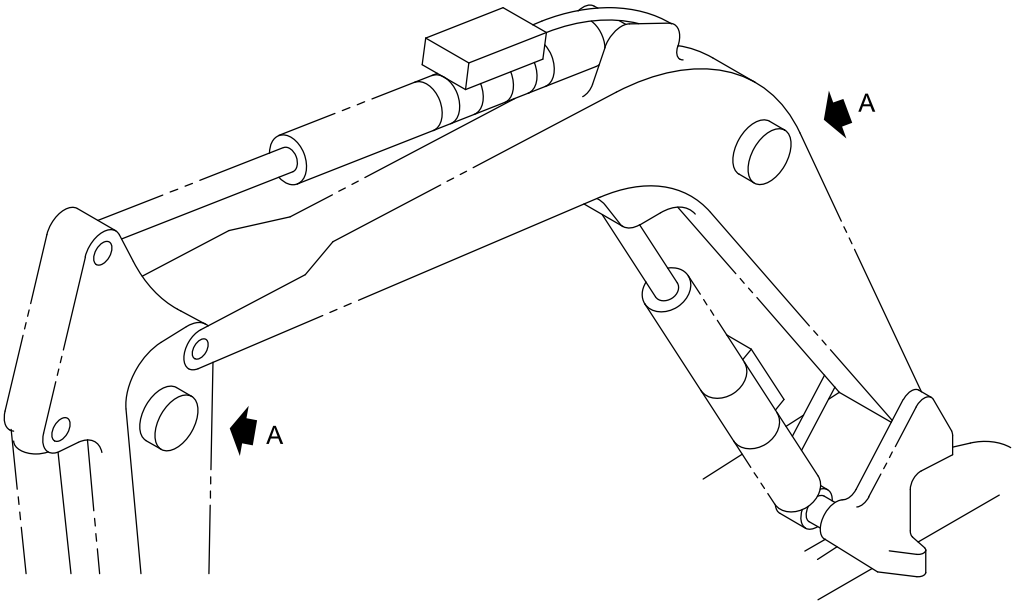

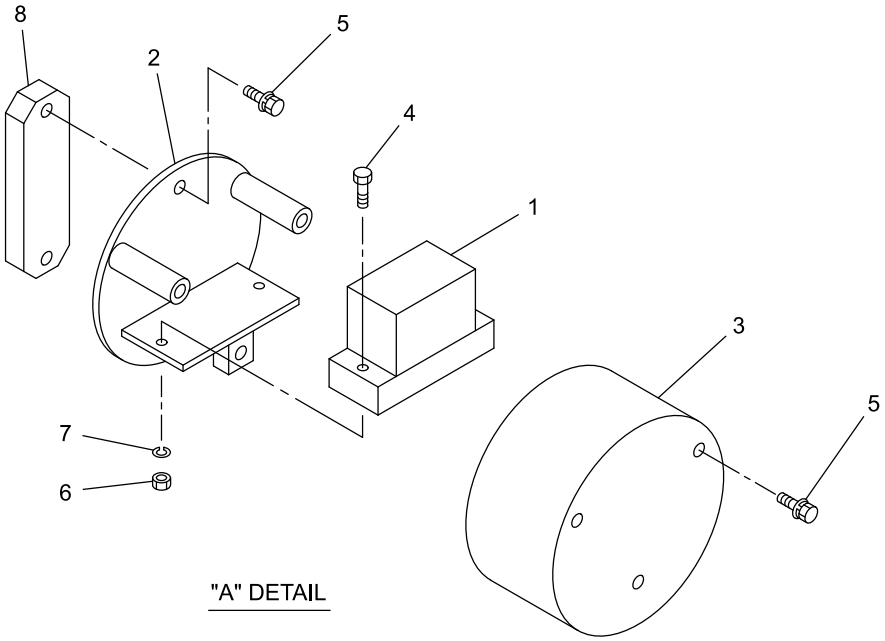

"A" DETAIL

V4ALL-160500-1

https://truckmanualshub.com/

KEY No.	SUP.	PART No.	DESCRIPTION	Q'TY	CHAN.	SERIAL No.	REMARKS
0	×	F370 340 00	Angle Detector	1		WZ010001-	
1		0881 100 UA	*Detector, Angle	2		WZ010001-	
2		D414 314 00	*Bracket	2		WZ010001-	
3		D455 737 00	*Cover	2		WZ010001-	
4		0550 060 30	*Bolt, Hex.	4		WZ010001-	M6X30
5		0518 100 20	*Bolt, Treatment (W/L.W, F.W)	10		WZ010001-	M10X20 P=1.25
6		0580 060 00	*Nut, Hex.	4		WZ010001-	M6
7		0590 060 00	*Washer, Lock	4		WZ010001-	M6
8		D260 329 00	*Stay	2		WZ010001-	

https://truckmanualshub.com/

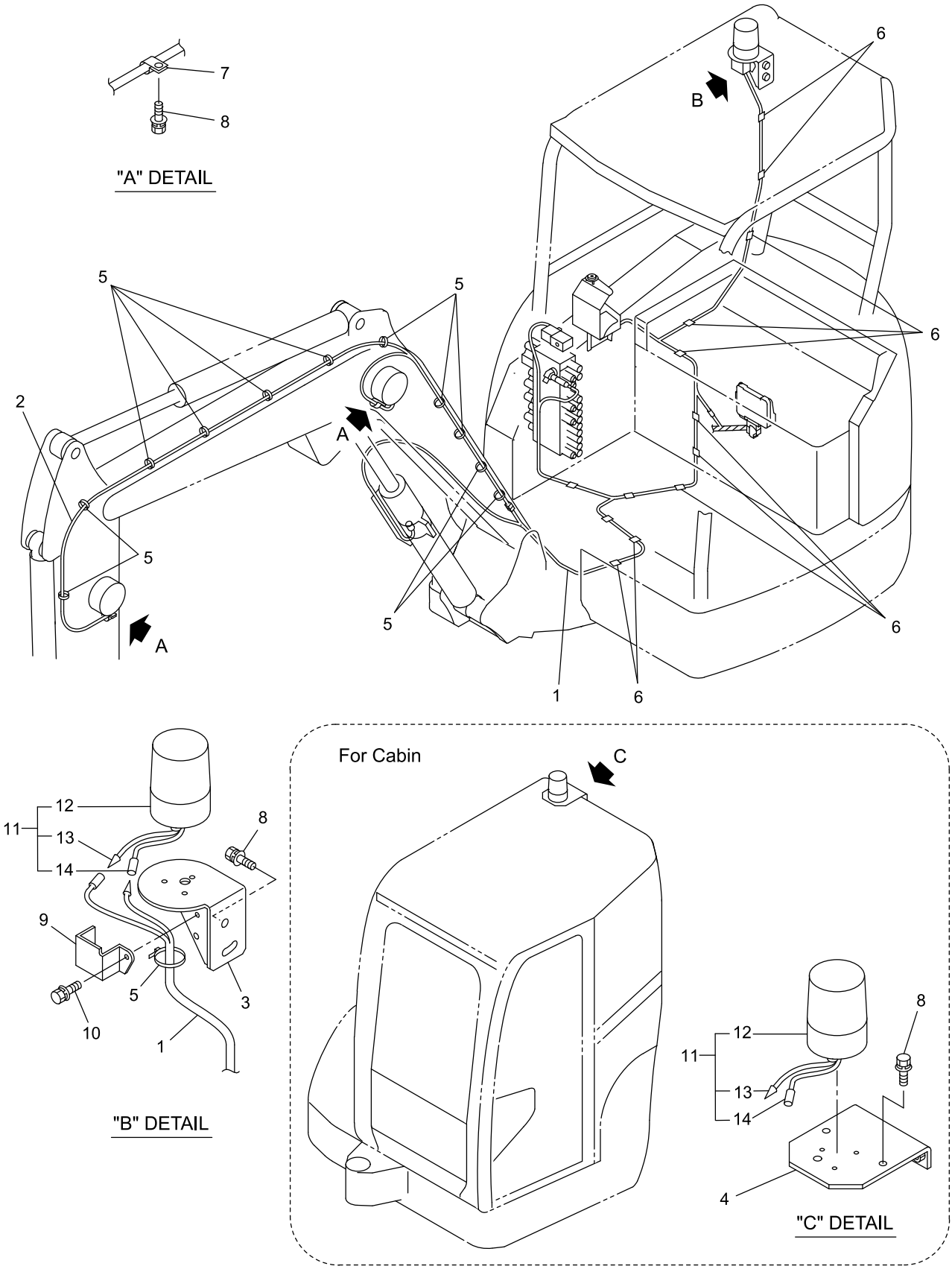

30V4-160600-1

https://truckmanualshub.com/

KEY No.	SUP.	PART No.	DESCRIPTION	Q'TY	CHAN.	SERIAL No.	REMARKS
0	×	F366 879 00	Electrical System	1		WZ010001-	
1		D592 304 00	*Harness	1		WZ010001-	
2		D592 305 00	*Harness	1		WZ010001-	
3		D418 456 00	*Bracket	1		WZ010001-	
4		D418 632 00	*Bracket	1		WZ010001-	
5		0820 067 04	*Band, Cable	AR		WZ010001-	
6		0820 069 03	*Sticker	AR		WZ010001-	
7		4080 000 02	*Clamp, Hose	1		WZ010001-	
8		0518 100 20	*Bolt, Treatment (W/L.W, F.W)	4		WZ010001-	M10X20 P=1.25
9		D457 127 00	*Cover	1		WZ010001-	
10		0517 080 16	*Bolt, Treatment (W/L.W, F.W)	1		WZ010001-	M8X16
11		F366 201 00	*Light Ass'y, Revolving	1		WZ010001-	
12		0854 060 01	**Light, Rotary	1		WZ010001-	
13		0820 650 20	**Terminal	1		WZ010001-	
13-1		0820 651 20	**Sleeve	1		WZ010001-	
14		0820 650 21	**Terminal	1		WZ010001-	
14-1		0820 651 21	**Sleeve	1		WZ010001-	

https://truckmanualshub.com/

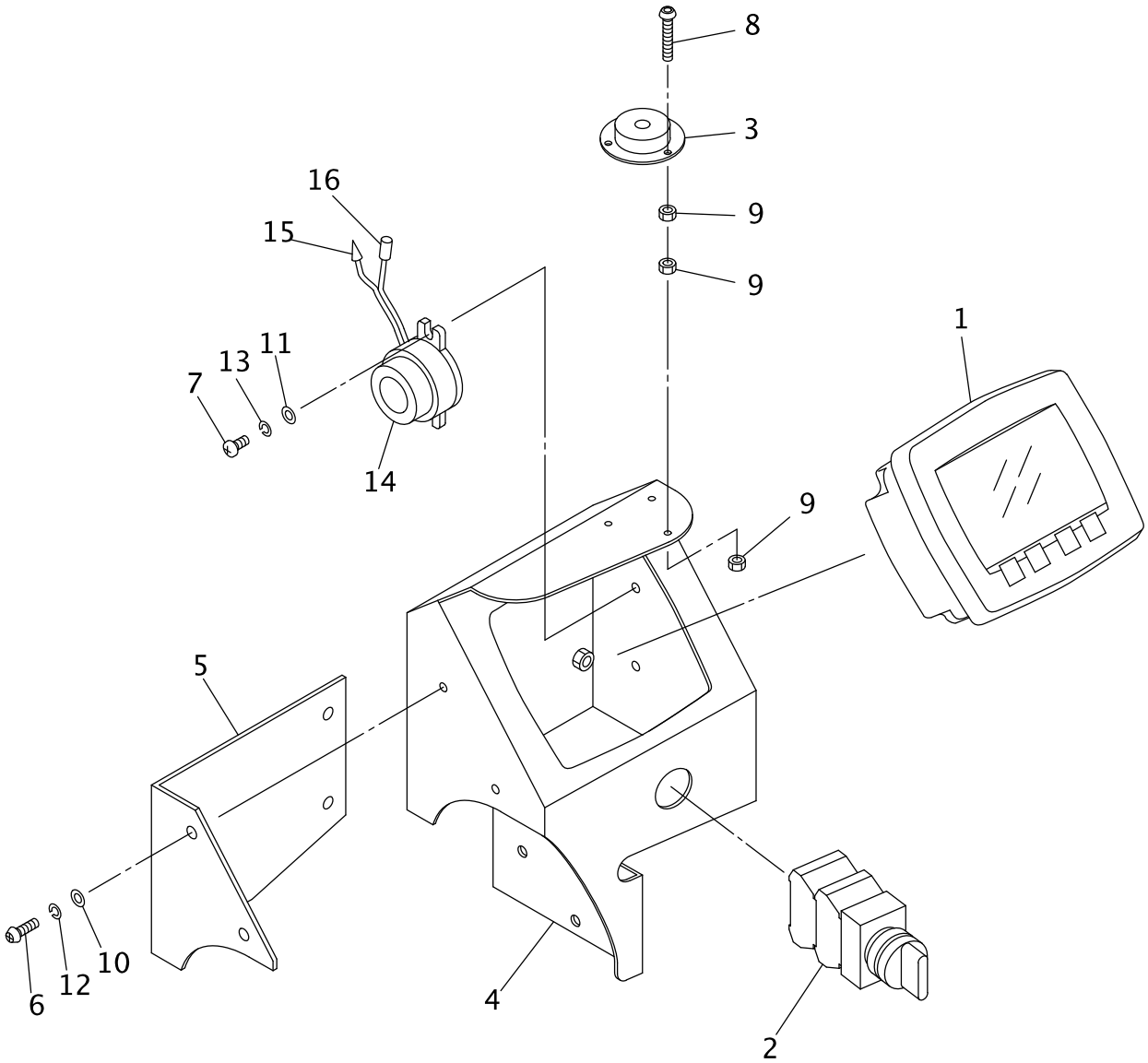

V4ALL-160700-1

https://truckmanualshub.com/

KEY No.	SUP.	PART No.	DESCRIPTION	Q'TY	CHAN.	SERIAL No.	REMARKS
0	×	F370 342 00	Controller Ass'y	1		WZ010001-	
1		0877 900 11	*Display	1		WZ010001-	
2		0858 308 23	*Switch, Select	1		WZ010001-	
3		0933 054 UA	*Gauge, Level	1		WZ010001-	
4		D419 357 00	*Bracket	1		WZ010001-	For Canopy
4-1		D419 355 00	*Bracket	1		WZ010001-	For Cabin
5		D458 497 00	*Cover	1		WZ010001-	
6		4004 364 01	*Bolt, Button Head	4		WZ010001-	M6X18
7		0565 040 08	*Screw, Pan Head	2		WZ010001-	M4X8
8		0565 030 20	*Screw, Pan Head	3		WZ010001-	M3X20
9		0580 030 00	*Nut, Hex.	9		WZ010001-	M3
10		0594 060 00	*Washer, Flat	4		WZ010001-	M6
11		0593 040 00	*Washer, Flat	2		WZ010001-	M4
12		0596 060 00	*Washer, Lock	4		WZ010001-	M6
13		0590 040 00	*Washer, Lock	2		WZ010001-	M4
14		0860 504 02	*Buzzer	1		WZ010001-	
15		0820 650 20	*Terminal	1		WZ010001-	
15-1		0820 651 20	*Sleeve	1		WZ010001-	
16		0820 650 21	*Terminal	1		WZ010001-	
16-1		0820 651 21	*Sleeve	1		WZ010001-	

https://truckmanualshub.com/

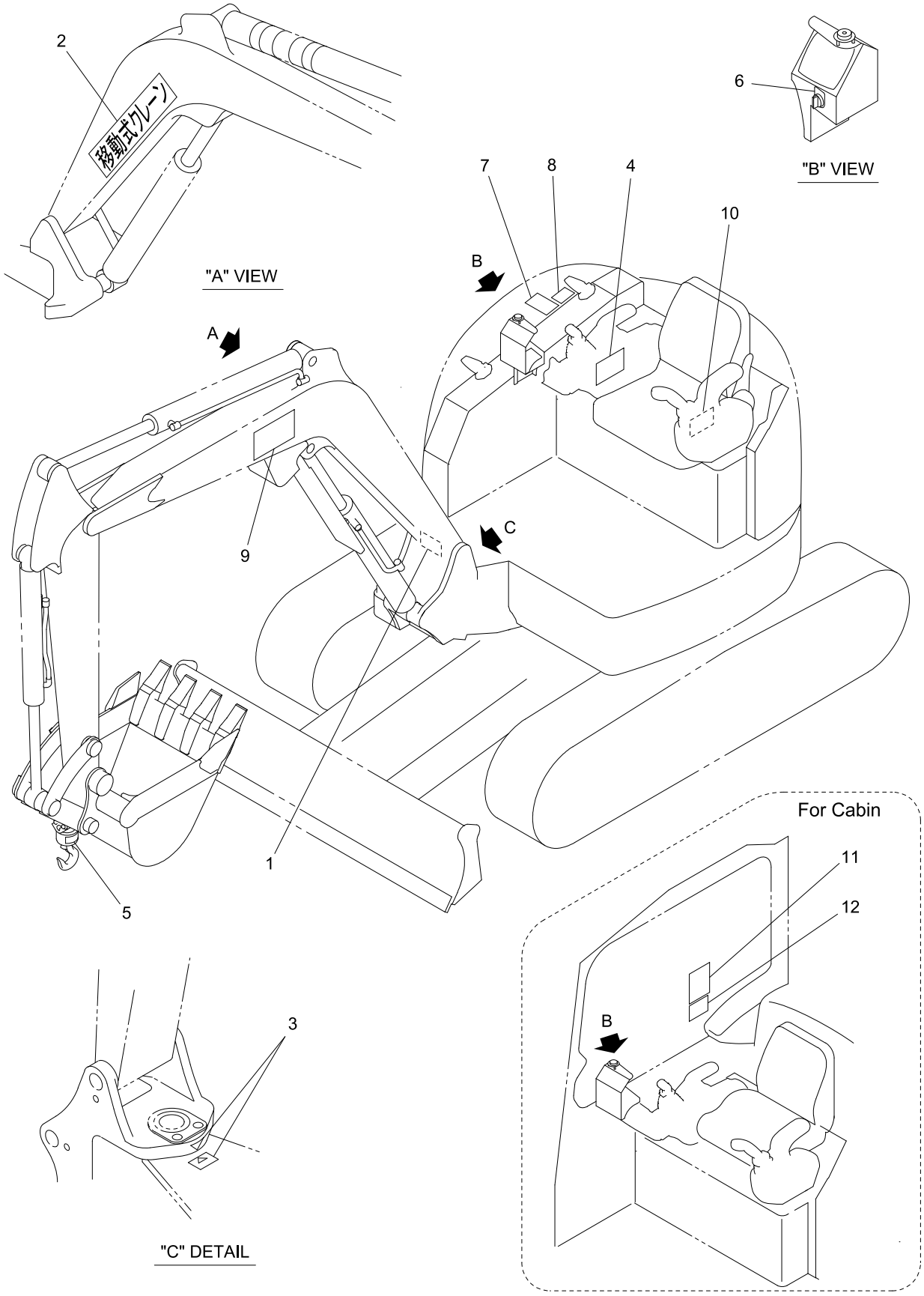

40V4-160800-1

https://truckmanualshub.com/

KEY No.	SUP.	PART No.	DESCRIPTION	Q'TY	CHAN.	SERIAL No.	REMARKS
0	×	F377 860 00	Decal Ass'y	1		WZ010001-	
1		D405 857 00	*Decal	1		WZ010001-	
1-1		0497 035 00	*Screw, Drive	4		WZ010001-	
2		D405 859 00	*Decal	1		WZ010001-	
3		D405 867 00	*Decal	1		WZ010001-	
4		D408 396 00	*Decal	1		WZ010001-	
5		D405 868 00	*Decal	1		WZ010001-	
6		D408 637 00	*Decal	1		WZ010001-	
7		D408 021 00	*Decal	1		WZ010001-	
8		D408 020 00	*Decal	1		WZ010001-	
9		D408 379 08	*Decal	1		WZ010001-	
10		D408 394 00	*Decal	1		WZ010001-	Canopy
10-1		D408 395 00	*Decal	1		WZ010001-	Cabin
11		D408 038 00	*Decal	1		WZ010001-	Cabin
12		D406 827 00	*Decal	1		WZ010001-	Cabin

https://truckmanualshub.com/

ALPHABETICAL INDEX

Parts Name	P/N	Page *1	Item
* * * * *	*****	2	39
ENGINE PARTS(V2403-M-DI-E3B-BHIH1)	*****	2	29
RUNNING STORES LIST	*****	2	
SEAL KIT	*****	2	23
Body	*********	76	20
Cover	*********	76	12
Frame, Lower	*********	6	2
Lower Machine Ass'y	*********	6	0
Piston	*********	64	24
Piston	*********	66	18
Piston	*********	68	18
Piston	*********	70	17
Piston	*********	72	18
Plate, Flange	*********	220	36
Tube Ass'y, Cylinder	*********	64	1
Tube Ass'y, Cylinder	*********	66	1
Tube Ass'y, Cylinder	*********	68	1
Tube Ass'y, Cylinder	*********	70	1
Tube Ass'y, Cylinder	*********	72	1
Wire	032210899	96	24
Bolt, Treatment (W/L.W, F.W)	043806016	190	12
Bolt, Treatment (W/L.W, F.W)	043910020	118	6
Bolt, Treatment (W/L.W, F.W)	043910020	214	6
Bolt, Treatment (W/L.W,F.W)	043910020	208	10
Bolt, Treatment (W/L.W, F.W)	043910025	114	3
Bolt, Treatment (W/L.W, F.W)	043910025	116	6
Bolt, Treatment (W/L.W, F.W)	043910025	214	7
Bolt, Treatment (W/L.W,F.W)	043910025	208	9
Screw, Tapping	045430012	216	26
Screw, Tapping	045440020	142	8
Screw, Tapping	045460012	216	27
Bolt, Treatment (W/Flange)	045708016	92	36
Bolt, Treatment (W/Flange)	045714035	6	14
Bolt, Treatment (W/Flange)	048010020	6	21
Bolt, Treatment (W/Flange)	048010020	104	30
Washer, Conical Spring	049180012	208	5
Ring, Snap	049350028	48	19
Ring, Snap	049350030	98	7
Ring, Snap	049350035	62	2
Ring, Snap	049351008	82	26
Ring, Snap	049351016	84	24
Ring, Snap	049351022	48	5
Ring, Snap	049351025	16	4
Ring, Snap	049351030	80	11
Ring, Snap	049351055	50	3

*1 Note

https://truckmanualshub.com/

ALPHABETICAL INDEX

Parts Name	P/N	Page *1	Item
Ring "E	049356009	84	22
Pin, Spring	049460612	80	12
Pin, Spring	049460616	90	5
Pin, Spring	049460625	78	11
Pin, Spring	049460810	98	3
Pin, Spring	049460812	48	24
Pin, Spring	049460840	84	50
Pin, Spring	049461024	78	12
Pin, Spring	049465175	12	1
Pin	049480815	48	17
Screw, Drive	049703500	122	3-1
Screw, Drive	049703500	124	3-2
Screw, Drive	049703500	126	3-1
Screw, Drive	049703500	128	3-1
Screw, Drive	049703500	130	3-1
Screw, Drive	049703500	132	3-1
Screw, Drive	049703500	134	3-1
Screw, Drive	049703500	136	3-1
Screw, Drive	049703500	192	3-1
Screw, Drive	049703500	194	3-2
Screw, Drive	049703500	196	3-1
Screw, Drive	049703500	198	3-1
Screw, Drive	049703500	200	3-1
Screw, Drive	049703500	202	3-1
Screw, Drive	049703500	204	3-1
Screw, Drive	049703500	206	3-1
Screw, Drive	049703500	236	1-1
Bolt, Treatment	051308020	104	13
Bolt, Treatment	051308040	218	16
Bolt, Treatment	051308090	170	31
Bolt, Treatment	051310016	24	49
Bolt, Treatment	051310016	156	21
Bolt, Teratment	051310020	100	41
Bolt, Treatment	051310030	98	12
Bolt, Treatment	051310030	154	11
Bolt, Treatment	051312035	98	15
Bolt, Treatment	051312100	92	15
Bolt, Treatment	051410030	18	11
Bolt, Treatment	051410030	96	12
Bolt, Treatment	051412060	10	22
Bolt, Treatment	051412090	148	31
Bolt, Treatment	051412120	148	30
Bolt, Treatment (W/L.W, F.W)	051706012	84	27
Bolt, Treatment (W/L.W, F.W)	051706012	90	25
Bolt, Treatment (W/L.W, F.W)	051706012	142	33
Bolt, Treatment (W/L.W, F.W)	051706012	212	10
Bolt, Treatment (W/L.W, F.W)	051706016	60	14

*1 Note

https://truckmanualshub.com/

ALPHABETICAL INDEX

Parts Name	P/N	Page *1	Item
Bolt, Treatment (W/L.W, F.W)	051706016	84	26
Bolt, Treatment (W/L.W, F.W)	051706016	138	33
Bolt, Treatment (W/L.W, F.W)	051706016	142	20
Bolt, Treatment (W/L.W, F.W)	051706016	212	11
Bolt, Treatment (W/L.W, F.W)	051706016	216	25
Bolt, Treatment (W/L.W, F.W)	051706020	100	39
Bolt, Treatment (W/L.W, F.W)	051706020	138	36
Bolt, Treatment (W/L.W, F.W)	051706020	138	47
Bolt, Treatment (W/L.W, F.W)	051706020	142	6
Bolt, Treatment (W/L.W, F.W)	051706020	142	39
Bolt, Treatment (W/L.W, F.W)	051706020	218	25
Bolt, Treatment (W/L.W, F.W)	051706020	220	22
Bolt, Treatment (W/L.W, F.W)	051706025	32	5
Bolt, Treatment (W/L.W, F.W)	051706025	36	5
Bolt, Treatment (W/L.W, F.W)	051706025	40	5
Bolt, Treatment (W/L.W, F.W)	051706025	212	9
Bolt, Treatment (W/L.W, F.W)	051706025	220	21
Bolt, Treatment (W/L.W, F.W)	051706040	220	20
Bolt, Treatment (W/L.W, F.W)	051706060	40	73
Bolt, Treatment (W/L.W, F.W)	051706060	90	20
Bolt, Treatment (W/L.W, F.W)	051708012	6	4
Bolt, Treatment (W/L.W, F.W)	051708012	138	32
Bolt, Treatment (W/L.W, F.W)	051708012	218	11
Bolt, Treatment (W/L.W, F.W)	051708016	82	17
Bolt, Treatment (W/L.W, F.W)	051708016	88	16
Bolt, Treatment (W/L.W, F.W)	051708016	88	21
Bolt, Treatment (W/L.W,	051708016	104	10

*1 Note

https://truckmanualshub.com/

ALPHABETICAL INDEX

Parts Name	P/N	Page *1	Item
F.W)			
Bolt, Treatment (W/L.W, F.W)	051708016	138	4
Bolt, Treatment (W/L.W, F.W)	051708016	164	44
Bolt, Treatment (W/L.W, F.W)	051708016	224	14
Bolt, Treatment (W/L.W, F.W)	051708016	232	10
Bolt, Treatment (W/L.W, F.W)	051708020	20	11
Bolt, Treatment (W/L.W, F.W)	051708020	84	25
Bolt, Treatment (W/L.W, F.W)	051708020	88	15
Bolt, Treatment (W/L.W, F.W)	051708020	90	17
Bolt, Treatment (W/L.W, F.W)	051708020	92	19
Bolt, Treatment (W/L.W, F.W)	051708020	100	52
Bolt, Treatment (W/L.W, F.W)	051708020	106	27
Bolt, Treatment (W/L.W, F.W)	051708020	164	56
Bolt, Treatment (W/L.W, F.W)	051708020	174	6
Bolt, Treatment (W/L.W, F.W)	051708020	218	26
Bolt, Treatment (W/L.W, F.W)	051708020	220	19
Bolt, Treatment (W/L.W, F.W)	051708025	82	16
Bolt, Treatment (W/L.W, F.W)	051708025	82	21
Bolt, Treatment (W/L.W, F.W)	051708025	92	18
Bolt, Treatment (W/L.W, F.W)	051708025	96	29
Bolt, Treatment (W/L.W, F.W)	051708025	100	38
Bolt, Treatment (W/L.W, F.W)	051708025	210	8
Bolt, Treatment (W/L.W, F.W)	051708025	218	12
Bolt, Treatment (W/L.W, F.W)	051708025	220	18
Bolt, Treatment (W/L.W, F.W)	051708030	104	11
Bolt, Treatment (W/L.W, F.W)	051708030	164	33
Bolt, Treatment (W/L.W, F.W)	051708030	218	13

*1 Note

https://truckmanualshub.com/

ALPHABETICAL INDEX

Parts Name	P/N	Page *1	Item
Bolt, Treatment (W/L.W, F.W)	051708035	104	12
Bolt, Treatment (W/L.W, F.W)	051708035	106	18
Bolt, Treatment (W/L.W, F.W)	051708035	220	17
Bolt, Treatment (W/L.W, F.W)	051708040	106	19
Bolt, Treatment (W/L.W, F.W)	051708040	218	14
Bolt, Treatment (W/L.W, F.W)	051708050	30	13
Bolt, Treatment (W/L.W, F.W)	051708050	106	17
Bolt, Treatment (W/L.W, F.W)	051708055	218	15
Bolt, Treatment (W/L.W, F.W)	051708115	142	5
Bolt, Treatment (W/L.W, F.W)	051810016	138	31
Bolt, Treatment (W/L.W, F.W)	051810020	6	6
Bolt, Treatment (W/L.W, F.W)	051810020	24	27
Bolt, Treatment (W/L.W, F.W)	051810020	32	43
Bolt, Treatment (W/L.W, F.W)	051810020	36	43
Bolt, Treatment (W/L.W, F.W)	051810020	40	43
Bolt, Treatment (W/L.W, F.W)	051810020	96	13
Bolt, Treatment (W/L.W, F.W)	051810020	100	15
Bolt, Treatment (W/L.W, F.W)	051810020	100	40
Bolt, Treatment (W/L.W, F.W)	051810020	106	4
Bolt, Treatment (W/L.W, F.W)	051810020	142	50
Bolt, Treatment (W/L.W, F.W)	051810020	160	4
Bolt, Treatment (W/L.W, F.W)	051810020	164	17
Bolt, Treatment (W/L.W, F.W)	051810020	170	17
Bolt, Treatment (W/L.W, F.W)	051810020	190	11
Bolt, Treatment (W/L.W, F.W)	051810020	216	24
Bolt, Treatment (W/L.W, F.W)	051810020	230	5
Bolt, Treatment (W/L.W,	051810020	232	8

*1 Note

https://truckmanualshub.com/

ALPHABETICAL INDEX

Parts Name	P/N	Page *1	Item
F.W)			
Bolt, Treatment (W/L.W, F.W)	051810025	24	50
Bolt, Treatment (W/L.W, F.W)	051810025	32	64
Bolt, Treatment (W/L.W, F.W)	051810025	36	64
Bolt, Treatment (W/L.W, F.W)	051810025	40	64
Bolt, Treatment (W/L.W, F.W)	051810025	82	10
Bolt, Treatment (W/L.W, F.W)	051810025	84	1
Bolt, Treatment (W/L.W, F.W)	051810025	88	20
Bolt, Treatment (W/L.W, F.W)	051810025	104	22
Bolt, Treatment (W/L.W, F.W)	051810025	106	3
Bolt, Treatment (W/L.W, F.W)	051810025	138	30
Bolt, Treatment (W/L.W, F.W)	051810025	142	12
Bolt, Treatment (W/L.W, F.W)	051810025	164	13
Bolt, Treatment (W/L.W, F.W)	051810025	170	14
Bolt, Treatment (W/L.W, F.W)	051810030	30	18
Bolt, Treatment (W/L.W, F.W)	051810030	106	50
Bolt, Treatment (W/L.W, F.W)	051810040	92	51
Bolt, Treatment (W/L.W, F.W)	051810040	168	10
Bolt, Treatment (W/L.W, F.W)	051810040	170	15
Bolt, Treatment (W/L.W, F.W)	051810045	164	14
Bolt, Treatment (W/L.W, F.W)	051810045	170	22
Bolt, Treatment (W/L.W, F.W)	051810050	164	15
Bolt, Treatment (W/L.W, F.W)	051810050	170	16
Bolt, Treatment (W/L.W, F.W)	051810050	222	33
Bolt, Treatment (W/L.W, F.W)	051810055	164	16
Bolt, Treatment (W/L.W, F.W)	051810055	170	23
Bolt, Treatment (W/L.W, F.W)	051812025	60	11

*1 Note

https://truckmanualshub.com/

ALPHABETICAL INDEX

Parts Name	P/N	Page *1	Item
Bolt, Treatment (W/L.W, F.W)	051812040	116	7
Bolt, Treatment (W/L.W)	051908020	84	45
Bolt, Treatment (W/L.W)	051908025	50	1
Bolt, Treatment (W/L.W)	051908025	116	9
Bolt, Treatment (W/L.W)	051908055	224	13
Bolt, Treatment (W/L.W)	052010020	106	8
Bolt, Treatment (W/L.W)	052010020	156	20
Bolt, Treatment (W/L.W)	052010040	156	19
Bolt, Treatment (W/L.W)	052010070	164	62
Bolt, Treatment (W/L.W)	052010070	168	9
Bolt, Treatment (W/L.W)	052010070	170	13
Bolt, Treatment (W/L.W)	052010070	222	32
Nut, Hex. (W/F.W)	052106000	138	9
Nut, Hex. (W/F.W)	052106000	212	12
Nut, Hex. (W/F.W)	052108000	92	60
Nut, Hex. (W/F.W)	052108000	96	16
Nut, Hex. (W/F.W)	052108000	100	16
Nut, Hex. (W/F.W)	052108000	106	20
Nut, Hex. (W/F.W)	052108000	118	5
Nut, Hex. (W/F.W)	052108000	224	18
Nut, Hex.(W/F.W)	052108000	138	2-4
Nut, Hex..(W/F.W)	052108000	84	47
Nut, Hex. (W/F.W)	052410000	24	31
Nut, Hex. (W/F.W)	052410000	90	23
Nut, Hex. (W/F.W)	052410000	100	49
Nut, Hex. (W/F.W)	052410000	152	16
Nut, Hex. (W/F.W)	052410000	220	23
Screw, Tapping	052805016	90	3
Nut, Treatment	053510000	96	15
Nut, Treatment	053512000	148	32
Bolt, Hex.	054112016	138	29
Nut, Hex.	054406000	138	10
Nut, Hex.	054408000	164	57
Nut, Hex.	054410000	53	77
Nut, Half	054812000	84	30
Nut, Half	054914000	82	18
Bolt, Hex.	055006030	230	4
Bolt, Hex.	055006050	222	34
Bolt, Hex.	055008020	118	4
Bolt, Hex.	055008070	100	36
Bolt, Hex.	055010020	104	23
Bolt, Hex.	055010020	106	5
Bolt, Hex.	055010020	224	12
Bolt, Hex.	055012020	156	36
Bolt, Hex.	055012025	36	65
Bolt, Hex.(Full-Thread)	055108060	100	17
Bolt, Hex.(Full-Thread)	055108060	218	17
Bolt, Hex.	055208020	138	2-3
Bolt, Treatment	055510020	60	9
Bolt, Treatment	055510040	176	5
Bolt, Treatment	055512020	148	33

*1 Note

https://truckmanualshub.com/

ALPHABETICAL INDEX

Parts Name	P/N	Page *1	Item
Bolt, Treatment	055512035	6	25
Bolt, Treatment	055512040	114	4
Bolt, Treatment	055514035	6	10
Bolt, Treatment	055514040	2	21
Bolt, Treatment	055514040	154	6
Bolt, Treatment	055516030	96	11
Bolt, Treatment	055516030	148	26
Bolt, Treatment	055516030	152	9
Bolt, Treatment	055516035	20	6
Bolt, Treatment	055516035	152	19
Bolt, Treatment	055516040	18	10
Bolt, Treatment	055516040	22	2
Bolt, Treatment	055516050	114	2
Bolt, Treatment	055516050	116	5
Bolt, Treatment	055516050	176	7
Bolt, Treatment	055516065	6	9
Bolt, Treatment	055516070	20	7
Bolt, Treatment	055516080	20	8
Bolt, Treatment	055520030	6	16
Bolt, Treatment	055524100	120	2
Bolt, Treatment	055812025	96	31
Bolt, Treatment	055812030	92	16
Bolt, Treatment	055816030	160	1
Screw, Set	056108008	68	21
Screw, Set	056108008	70	20
Screw, Set	056110010	64	27
Screw, Set	056110010	66	21
Screw, Set	056110010	72	22
Screw, Set	056110010	78	10
Screw, Set	056110020	53	78
Bolt, Socket Head	056205014	80	3
Bolt, Socket Head	056206016	226	11
Bolt, Socket Head	056206018	53	20
Bolt, Socket Head	056206020	48	30
Bolt, Socket Head	056206035	168	18
Bolt, Socket Head	056206035	226	12
Bolt, Socket Head	056206050	53	65
Bolt, Socket Head	056206050	74	19
Bolt, Socket Head	056208016	76	10
Bolt, Socket Head	056208016	78	8
Bolt, Socket Head	056208025	48	10
Bolt, Socket Head	056208025	78	9
Bolt, Socket Head	056208030	44	57
Bolt, Socket Head	056210025	48	12
Bolt, Socket Head	056212025	44	51
Bolt, Socket Head	056212035	24	29
Bolt, Socket Head	056214040	98	5
Bolt, Socket Head	056214045	98	4
Screw, Pan Head	056503020	234	8
Screw, Pan Head	056504008	88	17
Screw, Pan Head	056504008	234	7
Screw, Pan Head	056504010	212	4

*1 Note

https://truckmanualshub.com/

ALPHABETICAL INDEX

Parts Name	P/N	Page *1	Item
Screw, Pan Head	056504012	84	37
Screw, Pan Head	056504012	216	32
Screw, Pan Head	056504020	90	11
Screw, Pan Head	056505010	212	7
Screw, Pan Head	056505010	220	16
Screw, Pan Head	056506025	84	6
Screw, Set	056704008	76	5
Nut, Hex.	058003000	234	9
Nut, Hex.	058005000	100	24
Nut, Hex.	058005000	212	8
Nut, Hex.	058006000	90	16
Nut, Hex.	058006000	230	6
Nut, Hex.	058008000	53	69
Nut, Hex.	058012000	24	28
Nut, Hex.	058012000	96	14
Nut, Hex.	058012000	208	4
Nut, Hex.	058014000	84	36
Nut, Hex.	058020000	10	11
Nut, Treatment	058514000	2	22
Nut, Treatment	058514000	154	3
Nut, Treatment	058520000	176	3
Nut, Castle	058736000	148	34
Washer, Lock	059004000	90	13
Washer, Lock	059004000	212	6
Washer, Lock	059004000	216	34
Washer, Lock	059004000	234	13
Washer, Lock	059005000	80	2
Washer, Lock	059005000	100	25
Washer, Lock	059005000	220	27
Washer, Lock	059006000	84	10
Washer, Lock	059006000	90	15
Washer, Lock	059006000	216	30
Washer, Lock	059006000	222	36
Washer, Lock	059006000	230	7
Washer, Lock	059008000	100	37
Washer, Lock	059008000	104	18
Washer, Lock	059008000	170	32
Washer, Lock	059008000	218	20
Washer, Lock	059010000	60	12
Washer, Lock	059010000	96	21
Washer, Lock	059010000	98	11
Washer, Lock	059010000	100	43
Washer, Lock	059010000	104	24
Washer, Lock	059010000	106	6
Washer, Lock	059010000	154	12
Washer, Lock	059010000	156	25
Washer, Lock	059010000	224	17
Washer, Lock	059012000	24	32
Washer, Lock	059012000	36	67
Washer, Lock	059012000	96	20
Washer, Lock	059012000	138	34
Washer, Lock	059012000	148	40

*1 Note

https://truckmanualshub.com/

ALPHABETICAL INDEX

Parts Name	P/N	Page *1	Item
Washer, Lock	059016000	20	4
Washer, Lock	059016000	96	18
Washer, Conical Spring	059108000	164	55
Washer, Flat	059304000	90	12
Washer, Flat	059304000	142	9
Washer, Flat	059304000	212	5
Washer, Flat	059304000	216	33
Washer, Flat	059304000	234	11
Washer, Flat	059305000	220	26
Washer, Flat	059306000	84	9
Washer, Flat	059306000	90	7
Washer, Flat	059306000	104	16
Washer, Flat	059306000	216	29
Washer, Flat	059306000	222	35
Washer, Flat	059308000	84	28
Washer, Flat	059308000	100	18
Washer, Flat	059308000	104	17
Washer, Flat	059308000	138	38
Washer, Flat	059308000	164	58
Washer, Flat	059308000	170	33
Washer, Flat	059308000	218	19
Washer, Flat	059308000	224	15
Washer, Flat	059310000	6	20
Washer, Flat	059310000	100	42
Washer, Flat	059310000	104	25
Washer, Flat	059310000	106	32
Washer, Flat	059310000	156	26
Washer, Flat	059310000	224	16
Washer, Flat	059312000	36	66
Washer, Flat	059312000	96	19
Washer, Flat	059312000	208	6
Washer, Flat	059406000	84	7
Washer, Flat	059406000	106	30
Washer, Flat	059406000	142	10
Washer, Flat	059406000	234	10
Washer, Treatment	059510000	18	13
Washer, Treatment	059510000	24	51
Washer, Treatment	059510000	176	6
Bolt, Treatment	059512000	98	14
Washer, Treatment	059512000	6	24
Washer, Treatment	059512000	10	23
Washer, Treatment	059512000	24	33
Washer, Treatment	059512000	92	17
Washer, Treatment	059512000	96	17
Washer, Treatment	059512000	114	6
Washer, Treatment	059512000	156	37
Washer, Treatment	059514000	6	11
Washer, Treatment	059516000	6	8
Washer, Treatment	059516000	18	12
Washer, Treatment	059516000	22	3
Washer, Treatment	059516000	114	5
Washer, Treatment	059516000	116	8

*1 Note

https://truckmanualshub.com/

ALPHABETICAL INDEX

Parts Name	P/N	Page *1	Item
Washer, Treatment	059516000	176	8
Washer, Treatment	059520000	6	17
Washer, Treatment	059520000	176	4
Washer, Treatment	059524000	120	3
Washer, Lock	059606000	84	8
Washer, Lock	059606000	106	31
Washer, Lock	059606000	142	11
Washer, Lock	059606000	234	12
Pin, Cotter	059901015	90	8
Pin, Cotter	059901015	104	8
Pin, Cotter	059906070	148	36
Bearing, Swing	0605416UA	20	2
Ball, Steel	060901610	44	6
Ball, Steel	060901610	64	28
Ball, Steel	060901610	66	22
Ball, Steel	060901610	72	23
Ball, Steel	060901610	74	3
Bushing	061811615	84	18
Bushing	061812020	84	17
Bearing	063060044	48	15
Bearing	063062010	48	23
Bearing	063062033	218	10
Bearing	063062050	16	2
Adapter, Tooth	065000107	154	2
Tooth	065000204	154	9
Tooth, Bucket	065000204	2	16
Pin, Lock	065000303	2	17
Pin, Lock	065000303	154	8
Pin, Rubber	065000402	2	18
Pin, Rubber	065000402	154	7
Coupling Ass'y	0651421UA	98	2
Hub, Coupling	065148202	98	6
Cupling Ass'y	0651482UA	98	1
Collar, Master	065158807	8	5
Roller	065191101	16	6
Shaft, Roller	065191102	16	3
Seal	065191103	16	1
Cap	065191104	16	5
Roller Ass'y, Upper	0651911UA	6	15
Roller Ass'y, Upper	0651911UA	16	0
Stay, Dumper	0652253UA	84	20
Stay, Dumper	0652274UA	106	13
Ratch Ass'y	0652923UA	228	3
Hook	0652965UA	228	1
Bolt, Shoe	065301009	8	13
Nut, Shoe	065301010	8	11
Plate, Shoe	065377901	8	12
Pin, Lock	065392410	8	7
Link, Track (R.H.)	065397301	8	9
Link, Track (L.H.)	065397302	8	10
Link, Master (R.H.)	065397303	8	3
Link, Master (L.H.)	065397304	8	1

*1 Note

https://truckmanualshub.com/

ALPHABETICAL INDEX

Parts Name	P/N	Page *1	Item
Bushing, Track	065397305	8	2
Pin, Track	065397306	8	4
Bushing, Master	065397307	8	6
Pin, Master	065397308	8	8
Link, Ass'y	065397499	8	0-1
Shoe Ass'y, Crawler	0653974UA	8	0
Shoe Ass'y, Crawler (Steel)	0653974UA	6	1-1
Shoe, Rubber Crawler	0653981UA	6	1
Roller	065398401	14	4
Shaft	065398402	14	5
Collar, Roller	065398403	14	8
Collar Roller	065398404	14	1
Bushing	065398405	14	3
Pin	065398406	14	7
Roller Ass'y, Lower	0653984UA	6	18
Roller Ass'y, Lower	0653984UA	14	0
Seat Ass'y, Back	065556301	118	2-1
Seat Ass'y, Cushion	065556302	118	2-2
Suspension Ass'y	065556303	118	2-3
Rail Ass'y, Slid (L.H)	065556304	118	2-4
Rail Ass'y, Slid (R.H)	065556305	118	2-5
Belt Ass'y, Seat	065556310	118	2-6
Seat, Operator (W/Suspension)	0655563UA	118	2
Seat, Operator (Leather)	0655564UA	118	10
Seat, Operator (W/O Seat Belt)	0655567UA	118	8
Seat Ass'y, Back	065556801	118	9-2
Seat, Operator (High Back Seat)	0655568UA	118	9
Seat Ass'y, Back	065556901	118	9-3
Seat Ass'y, Cushion	065556902	118	9-4
Seat, Operator (High Back Seat)	0655569UA	118	9-1
Resonator	066180029	96	5
Muffler Ass'y	0662136UA	96	2
Radiator, Cap	066808802	92	34
Guide, Fan	066824602	92	32
Cooler Ass'y, Oil	066824606	92	35
Guard, Fan	066824615	92	37
Radiator	066824691	92	33
Radiator Ass'y	0668246UA	92	31
Cooler, Fuel	0668247UA	100	50
Net	066840031	92	59
Engine Ass'y	0676253UA	92	1
Hinge	069001619	104	7
Hinge	069001619	106	16
Clamp, Hose	069007412	92	22
Clamp, Hose	069007812	24	21
Clip	069008189	138	39
Clamp, Hose	069008190	92	48
Clamp, Hose	069008190	100	34

*1 Note

https://truckmanualshub.com/

ALPHABETICAL INDEX

Parts Name	P/N	Page *1	Item
Clamp	069008192	138	16
Clamp	069008201	138	18
Clamp, Hose	069008205	138	19
Clamp, Hose	069008205	138	43
Clamp	069008207	216	31
Band, Cable	069008208	84	31
Clamp, Hose	069008208	84	40
Clamp, Hose	069008208	84	55
Clamp, Hose	069008208	100	35
Clamp, Hose	069008208	138	24
Clamp, Hose	069008208	214	8
Clamp, Hose	069008303	100	33
Clamp, Hose	069008304	220	24
Clamp, Hose	069008305	190	10
Clamp, Hose	069008308	24	22
Clamp, Hose	069008309	92	13
Clamp, Hose	069008312	92	14
Clamp, Hose	069008312	100	11
Clamp, Hose	069008313	24	36
Clamp, Hose	069008313	96	10
Clamp, Hose	069008314	96	34
Clamp, Hose	069008314	100	10
Clamp	069008936	96	22
Plug, Hole	069020104	106	9
Plug, Hole	069020105	82	20
Plug	069020108	116	11
Plug	069020108	156	23
Plug, Hole	069020108	114	9
Plug	069020109	6	7
Plug	069020109	118	7
Plug	069020109	156	24
Pad, Rubber	069020250	84	29
Cap	069020256	20	12
Mirror, Under	069020308	208	8
Mount, Cab	069020315	176	1
Cover	069020344	142	16
Knob	069021086	216	12
Throttle, Dial	069021105	142	29
Handle	069021108	106	34
Lock Ass'y	069022091	104	15
Lock Ass'y	069022091	106	22
Lock Ass'y	069022092	106	35
Key	069027029	142	26-2
Grip (W/Switch)	069028340	84	34
Grip	069028341	84	41
Grip	069028372	82	15
Grip (W/Switch)	069028381	88	13
Grip (W/Switch)	069028382	84	53
Grip	069028385	84	48
Grip	069028386	84	2
Cable, Control	069051147	90	6
Mirror, Back	069990112	208	2

*1 Note

https://truckmanualshub.com/

ALPHABETICAL INDEX

Parts Name	P/N	Page *1	Item
Mirror, Back	069990113	208	3
Elbow	071010202	222	23
Connector	071010627	152	13
Elbow	071010727	152	14
Elbow	071011311	24	13
Elbow, Reducer	071011323	24	53
Elbow, Reducer	071011332	32	38
Elbow, Reducer	071011332	36	38
Elbow, Reducer	071011332	40	38
Elbow, Reducer	071011332	168	25
Elbow	071011344	18	18
Elbow	071011344	30	20
Elbow	071011344	156	14
Elbow	071011366	164	29
Elbow, 45 Reducer	071011432	168	26
Elbow, 45	071011433	162	8
Elbow, 45	071011444	18	19
Elbow, 45	071011444	28	14
Elbow, 45	071011466	24	43
Elbow, 45	071011488	24	45
Elbow	071011702	32	10
Elbow	071011702	36	10
Elbow	071011702	40	10
Elbow, Long	071011702	32	37
Elbow, Long	071011702	36	37
Elbow, Long	071011702	40	37
Elbow, Long	071011702	88	6
Elbow, 45	071012100	40	69
Elbow, 45	071012100	88	19
Elbow, 45	071012100	164	53
Elbow	071012202	162	9
Elbow	071012209	24	55
Elbow	071012209	32	6
Elbow	071012209	36	6
Elbow	071012209	40	6
Elbow	071012209	82	8
Elbow	071012209	88	8
Elbow	071012209	164	20
Elbow	071012209	164	54
Elbow	071012209	164	63
Elbow	071012209	168	28
Elbow	071012209	224	9
Elbow	071012210	174	4
Elbow	071012706	24	42
Plug	071020010	50	13
Plug	071020014	50	14
Plug	071020101	12	7
Plug	071020101	14	9
Plug	071020101	44	7
Plug	071020202	30	11
Plug	071021212	24	57
Plug, Swivel	071030302	32	46

*1 Note

https://truckmanualshub.com/

ALPHABETICAL INDEX

Parts Name	P/N	Page *1	Item
Plug, Swivel	071030302	36	46
Plug, Swivel	071030302	40	46
Plug, Swivel	071030302	168	8
Plug, Swivel	071030302	170	12
Plug, Swivel	071030303	32	41
Plug, Swivel	071030303	36	41
Plug, Swivel	071030303	40	41
Plug Swivel	071030306	170	21
Plug, Swivel	071030306	164	12
Bush, Reducer	071040024	210	5
Socket	071050103	190	26
Socket	071050103	220	13
Socket	071050302	18	24
Socket	071050302	190	8
Socket	071050302	220	14
Socket	071050303	190	24
Nipple	071060013	220	10
Nipple, Reducing	071060013	190	25
Tee	071070702	18	23
Tee	071070704	18	22
Tee	071070902	32	8
Tee	071070902	36	8
Tee	071070902	40	8
Tee	071071309	32	3
Tee	071071309	36	3
Tee	071071309	40	3
Tee	071071309	168	11
Tee, Special	071071310	24	17
Adapter	071231033	164	61
Adapter	071231033	170	26
Elbow, 45	071231040	32	69
Elbow, 45	071231040	222	24
Elbow	071231050	40	72
Elbow	071231050	222	28
Elbow	071231055	24	19
Adapter	071232502	32	68
Adapter	071232502	40	71
Adapter	071232601	40	66
Sleeve	071310002	152	13-1
Sleeve	071310002	152	14-1
Seal, Oil	071343102	50	9
Kit, Seal	071343191	50	7
Rotary Joint	071343191	2	24
Shaft	071343901	50	6
Hub	071343902	50	5
Ring	071343907	50	4
Cover	071343910	50	2
Joint Ass'y, Rotary	0713439UA	18	17
Joint Ass'y, Rotary	0713439UA	50	0
Adapter	071370002	224	8
Adapter	071370003	18	7
Adapter	071370003	28	5

*1 Note

https://truckmanualshub.com/

ALPHABETICAL INDEX

Parts Name	P/N	Page *1	Item
Adapter	071370003	156	16
Adapter	071370003	162	6
Adapter	071370004	18	6
Adapter	071370004	28	12
Adapter	071370004	28	15
Adapter	071370004	156	15
Adapter	071370004	222	26
Adapter	071370004	224	7
Adapter	071370070	164	19
Adapter	071370070	164	45
Connector	071370070	32	2
Connector	071370070	36	2
Connector	071370070	40	2
Connector	071370070	82	7
Connector	071370070	88	7
Connector	071370070	170	37
Adapter	071370071	32	36
Adapter	071370071	36	36
Adapter	071370071	40	36
Adapter	071370072	164	25
Adapter	071370073	24	16
Adapter	071370073	164	27
Adapter	071370074	24	15
Adapter, Reducer	071370077	30	22
Adapter, Reducer	071370078	28	10
Adapter, Reducer	071370078	156	40
Connector, Reducer	071370078	162	12
Adapter, Reducer	071370093	170	38
Adapter, Reducer	071370094	24	14
Adapter	071370402	18	21
Connector	071370403	220	11
Socket	071370502	222	27
Elbow	0719804UA	210	4
Elbow	0719805UA	18	20
Elbow	0719805UA	32	7
Elbow	0719805UA	36	7
Elbow	0719805UA	40	7
Valve, Stop	0725004UA	164	18
Nipple, Grease	072811115	20	9
Nipple, Grease	072811115	64	3
Nipple, Grease	072811115	64	7
Nipple, Grease	072811115	66	7
Nipple, Grease	072811115	68	7
Nipple, Grease	072811115	72	3
Nipple, Grease	072811115	148	27
Nipple, Grease	072811115	152	8
Nipple, Grease	072811115	228	12
Nipple, Grease	072811155	72	7
Nipple, Grease	072811165	66	3
Nipple, Grease	072811165	68	3
Nipple, Grease	072811165	70	6
Nipple, Grease	072811165	160	10

*1 Note

https://truckmanualshub.com/

ALPHABETICAL INDEX

Parts Name	P/N	Page *1	Item
Nipple, Grease	072813111	228	2
Valve	072991035	190	9
Strainer	072991060	100	4
Cap	072991073	100	3
Cap, Fuel	072991073	2	9
Filter	072991080	100	1
Filter, Air	0745142UA	216	10
Element Ass'y	074526508	96	25-1
Element, Air Cleaner	074526508	2	6
Element Ass'y (Inner)	074526509	96	25-2
Element, Air Cleaner(Inner)	074526509	2	7
Cleaner, Air	0745265UA	96	25
Plug	075019815	74	16
Seal, Dust	075179624	66	4
Seal, Dust	075179624	66	8
Seal, Dust	075179624	68	4
Seal, Dust	075179624	68	8
Ball, Steel	075190125	68	22
Ball, Steel	075190125	70	21
Ball, Steel	075194806	74	14
Seat, Spring	075196003	44	41
Bushing	075215921	70	2
Bushing	075215921	70	5
Ring Ass'y, Seal	075216420	70	18
Ring Ass'y, Seal	075218424	64	25
Bushing	075228920	66	2
Bushing	075228920	66	6
Bushing	075228920	68	2
Bushing	075228920	68	6
Ring, U	075273705	68	12
Ring, U	075275605	66	12
Ring, U	075275605	70	11
Ring Ass'y, Seal	075287306	66	19
Ring Ass'y, Seal	075292211	72	20
Ring, U	075293504	64	12
Ring, U	075293504	72	12
Ring Ass'y, Seal	075294106	68	19
Ring, O	075310109	53	49
Vaive, Check (Grease Up)	0753265UA	2	1
Valve, Check	0753265UA	10	5
Pin	075356353	44	52
Spring	075356363	44	42
Pin	075363619	48	13
Bearing	075363811	44	28
Seal, Floating	075371305	44	2
Plate, Valve	075376440	44	34
Bearing	075376441	44	36
Plug	075376449	44	25
Plug	075376449	44	54
Plug	075376449	44	64
Orifice	075376451	44	45
Pin	075379511	44	35

*1 Note

https://truckmanualshub.com/

ALPHABETICAL INDEX

Parts Name	P/N	Page *1	Item
Spring	075390411	53	28
Plug	075412413	78	20
Cock	0754805UA	164	60
Cook	0754805UA	170	24
Cartridge Ass'y	075514203	60	10-1
Cartridge, Return Filter	075514203	2	3
Seal, Dust	075586126	50	12
Shim	075606511	76	17-1
Holder, Spring	075606513	76	14
Body	075609401	80	8
Rotor	075609402	80	5
Lever	075609403	80	4
Bolt, Wing	075609404	80	1
Ring, O	075609405	80	10
Ring, O	075609406	80	9
Ring, O	075609407	80	7
Ring, O	075609408	80	6
Valve Ass'y, Selector	0756094UA	40	67
Valve Ass'y, Selector	0756094UA	80	0
Joint	075630307	58	10
Pusher	075632604	76	7
Shim	075632606	76	17
Cam	075632607	76	9
Pin	075632608	76	6
Spring	075632609	76	18
Boot	075632610	76	4
Washer, Flat	075632619	76	16
Washer, Flat	075632620	76	3
Pin, Spring	075632622	76	1
Ball, Steel	075632623	76	2
Ring, O	075632625	76	13
Seat, Spring	075633905	53	13
Ring, O	075633908	53	16
Spring	075633917	53	31
Poppet	075633920	53	27
Spring	075633925	53	61
Plug Ass'y	075633980	53	44
Plug	075635703	74	15
Seal	075661113	58	12
Plug	075673509	58	2
Washer	075673515	58	7
Rod, Push	075674411	58	11
Ball, Steel	075678114	78	13
Seal, Oil	075686309	78	16
Bearing	075760604	44	3
Bearing	075760620	44	18
Wire	075760629	44	24
Filter	075761820	48	14
Valve Ass'y, By-pass	075764192	48	31
Plug	075778506	44	59
Stopper	075869625	66	25
Ring, Wiper	075869706	68	13

*1 Note

https://truckmanualshub.com/

ALPHABETICAL INDEX

Parts Name	P/N	Page *1	Item
Ring, Wiper	075869809	66	13
Ring, Wiper	075869809	70	12
Ring, Wiper	075885006	64	13
Ring, Wiper	075885006	72	13
Seal, Dust	075885012	72	4
Seal, Dust	075885012	72	8
Strainer, Suction	0759106UA	2	2
Strainer, Suction	0759106UA	60	5
Valve Ass'y	0759114UA	60	10-2
Filter Ass'y, Return	0759115UA	60	10
Accumulator	0759301UA	174	1
Ring, O	076021118	78	17
Ring, O	076021258	44	37
Ring, O	076031020	74	8
Ring, O	076031025	74	9
Ring, O	076031166	48	9
Ring, O	076031211	60	8
Ring, O	076031225	24	26
Ring, O	076031910	53	70-1
Ring, O	076031910	53	71-1
Ring, O	076031910	53	72-1
Ring, O	076031910	53	73-1
Ring, O	076031910	53	76
Ring, O	076031910	53	80-1
Ring, O	076031910	53	70-1
Ring, O	076031910	53	71-1
Ring, O	076031910	53	72-1
Ring, O	076031910	53	73-1
Ring, O	076031910	53	80-1
Ring, O	076061008	76	8
Ring, O (P9-70B)	076061009	53	53
Ring, O (P10A-70B)	076061011	53	75
Ring, O (P10A-70B)	076061011	53	51
Ring, O	076061015	53	63
Ring, O	076061570	53	21
Ring, O	076061585	50	8
Ring, O	076071007	44	38
Ring, O	076071007	53	59
Ring, O	076071007	62	9
Ring, O	076071008	44	58
Ring, O	076071008	53	42-1
Ring, O	076071008	62	5
Ring, O	076071008	62	13
Ring, O	076071008	74	10
Ring, O	076071009	48	32
Ring, O	076071010	44	40
Ring, O	076071010	53	34
Ring, O	076071012	18	25
Ring, O	076071012	24	54
Ring, O	076071012	32	4
Ring, O	076071012	36	4
Ring, O	076071012	40	4

*1 Note

https://truckmanualshub.com/

ALPHABETICAL INDEX

Parts Name	P/N	Page *1	Item
Ring, O	076071012	48	25
Ring, O	076071012	53	32
Ring, O	076071012	62	4
Ring, O	076071012	74	18
Ring, O	076071012	82	9
Ring, O	076071012	88	9
Ring, O	076071012	138	49
Ring, O	076071012	164	31
Ring, O	076071012	168	17
Ring, O	076071012	170	39
Ring, O	076071012	210	6
Ring, O	076071012	222	30
Ring, O	076071012	224	10
Ring, O	076071014	44	56
Ring, O	076071014	62	6
Ring, O	076071016	18	14
Ring, O	076071016	24	23
Ring, O	076071016	28	7
Ring, O	076071016	30	23
Ring, O	076071016	32	42
Ring, O	076071016	36	42
Ring, O	076071016	40	42
Ring, O	076071016	44	26
Ring, O	076071016	44	48
Ring, O	076071016	44	55
Ring, O	076071016	48	29
Ring, O	076071016	53	66-1
Ring, O	076071016	62	7
Ring, O	076071016	156	18
Ring, O	076071016	162	5
Ring, O	076071016	168	27
Ring, O	076071016	174	7
Ring, O	076071016	220	15
Ring, O	076071019	18	8
Ring, O	076071019	24	48
Ring, O	076071019	28	13
Ring, O	076071019	30	12
Ring, O	076071019	48	33
Ring, O	076071019	53	79-1
Ring, O	076071019	98	9
Ring, O	076071019	156	17
Ring, O	076071019	162	11
Ring, O	076071019	164	30
Ring, O	076071019	168	23
Ring, O	076071019	174	8
Ring, O	076071019	222	31
Ring, O	076071019	224	11
Ring, O	076071019	226	16
Ring, O	076071020	53	35
Ring, O	076071020	58	3
Ring, O	076071020	226	6
Ring, O	076071022	48	27

*1 Note

https://truckmanualshub.com/

ALPHABETICAL INDEX

Parts Name	P/N	Page *1	Item
Ring, O	076071022	226	2
Ring, O	076071023	72	26
Ring, O	076071024	24	24
Ring, O	076071024	164	32
Ring, O	076071025	24	47
Ring, O	076071028	64	33
Ring, O	076071028	66	29
Ring, O	076071030	24	25
Ring, O	076071030	44	44
Ring, O	076071030	62	8
Ring, O	076071040	24	35
Ring, O	076071050	10	3
Ring, O	076071070	50	10
Ring, O	076071130	60	7
Ring, O	076071535	14	6
Ring, O	076071535	62	12
Ring, O	076071545	12	4
Ring, O	076071555	62	10
Ring, O	076071575	62	3
Ring, O	076071575	68	14
Ring, O	076071580	66	14
Ring, O	076071580	68	16
Ring, O	076071585	66	16
Ring, O	076071585	70	13
Ring, O	076071590	70	15
Ring, O	076071595	64	14
Ring, O	076071595	64	17
Ring, O	076071600	64	16
Ring, O	076071600	72	14
Ring, O	076071605	72	16
Ring, O	076071610	48	21
Ring, O	076071625	48	20
Ring, O	076071690	44	23
Cap	076172120	98	8
Ring, Back-up	076212009	53	54
Ring, Back-up	076212011	53	50
Ring, Back-up	076212015	53	64
Ring, Back-up	076212016	48	28
Ring, Back-up	076212050	10	2
Ring, Back-up	076212070	50	11
Seal, Floating	076301460	14	2
Seal, Floating	076301467	12	3
Seal, Dust	076503327	148	28
Seal, Dust	076503327	228	11
Seal, Dust	076503328	64	4
Seal, Dust	076503328	64	8
Seal, Dust	076503328	70	3
Seal, Dust	076503328	70	7
Seal, Dust	076503328	148	29
Seal, Dust	076503328	160	9
Hose, Radiator	077555193	2	4
Hose, Radiator	077555193	92	11

*1 Note

https://truckmanualshub.com/

ALPHABETICAL INDEX

Parts Name	P/N	Page *1	Item
Hose, Radiator	077555195	2	5
Hose, Radiator	077555195	92	12
Hose	077660008	24	3
Hose	077660011	24	37
Tube, Synflex	077900088	152	12
Hose	077900297	92	20
Hose	077900297	92	24
Hose	077900359	96	35
Hose, Air Cleaner	077900537	96	9
Hose, Air Cleaner	077900538	96	8
Cylinder Ass'y	078016291	62	1
Sleeve Ass'y	078016292	62	11
Pump Ass'y, Gear	078016293	62	14
Valve Ass'y	078016294	62	15
Pump Ass'y, Oil	0780162UA	62	0
Pump Ass'y, Oil	0780162UA	98	13
Plug	078113302	44	5
Washer, Thrust	078113307	44	11
Race, Inner	078113311	44	19
Ball, Steel	078113317	44	31
Cap	078117308	44	43
Plug	078117310	44	50
Screw, Flat Head	078123820	44	13
Gear	078125002	48	8
Carrier Ass'y	078125096	48	7
Gear	078126101	48	6
Ring	078126103	48	3
Gear Ass'y, Reduction	078126192	48	1
Pinion Ass'y	078126194	48	2
Carrier Ass'y	078126195	48	4
Body Ass'y	078126196	48	22
Barel Ass'y, Cylinder	078126197	48	18
Plate Ass'y, Swash	078131392	48	16
Nut, Ring	078137201	44	4
Gear, Planetary (B)	078137202	44	8
Bearing	078137203	44	9
Race, Inner	078137204	44	10
Plate, Thrust	078137205	44	12
Gear, Sun	078137206	44	14
Washer, Thrust	078137207	44	15
Holder	078137208	44	16
Gear, Planetary (A)	078137209	44	17
Gear, Drive	078137210	44	20
Cover	078137211	44	22
Shaft	078137212	44	27
Seal, Oil	078137213	44	29
Plate, Swash	078137214	44	30
Spring	078137215	44	33
Spring	078137216	44	46
Plug	078137217	44	47
Ring, O	078137218	44	61
Ring, O	078137219	44	62

*1 Note

https://truckmanualshub.com/

ALPHABETICAL INDEX

Parts Name	P/N	Page *1	Item
Seat, Spring	078137220	44	63
Reduction Gear Ass'y	078137291	44	1
Valve Ass'y	078137292	44	53
Plate, Thrust	078137293	44	21
Block Ass'y, Cylinder	078137294	44	32
Piston, Brake	078137296	44	60
Motor Ass'y, Traction	0781372UA	44	0
Motor Ass'y, Travel	0781372UA	6	12
Motor Ass'y	078137391	48	11
Valve Ass'y, Relief	078137392	48	26
Motor Ass'y, Swing	0781373UA	22	1
Swing Motor Ass'y	0781373UA	48	0
Plug	078137522	44	49
Ring, Back-up	078218511	64	18
Seal, Cushion	078218523	66	24
Plate Ass'y, Base	078237295	44	39
Head, Cylinder	078238003	70	8
Ring, Back-up	078238005	70	14
Ring, Slide	078238007	70	19
Boom Swing Cylinder (Head Side)	078238091	2	28
Kit, Seal	078238091	70	10
Piston Ass'y	078238093	70	16
Bushing	078239613	68	10
Ring, Back-up	078239704	64	15
Ring, Slide	078239706	64	26
Ring, Back-up	078239905	68	15
Ring, Slide	078239912	68	20
Ring, Snap	078240106	66	26
Piston Ass'y	078240193	68	17
Ring, Back-up	078240704	66	15
Holder, Pipe	078243121	72	28
Bucket Cylinder (Head Side)	078243593	2	27
Kit, Seal	078243593	68	11
Arm Cylinder (Head Side)	078243993	2	26
Kit, Seal	078243993	66	11
Holder, Pipe	078244027	64	35
Holder	078244110	64	19
Seal, Cushion	078244111	64	21
Boom Cylinder (Head Side)	078244193	2	25
Kit, Seal	078244193	64	11
Bushing	078244603	66	10
Bushing	078244603	70	9
Plug	078244605	72	25
Bolt	078244606	64	34
Bolt	078244606	72	27
Head, Cylinder	078247603	68	9
Plug	078249109	64	32
Plug	078249109	66	28
Bushing	078249204	64	10
Bushing	078249204	72	10
Bearing, Cushion	078249208	66	23

*1 Note

https://truckmanualshub.com/

ALPHABETICAL INDEX

Parts Name	P/N	Page *1	Item
Head, Cylinder	078249403	66	9
Ring, Slide	078249405	66	20
Nut	078249813	72	21
Rod Ass'y, Piston	078260102	68	5
Cylinder Ass'y, Bucket	0782601UA	68	0
Cylinder Ass'y, Bucket	0782601UA	148	4
Rod Ass'y, Piston	078260302	70	4
Cylinder Ass'y, Boom Swing	0782603UA	70	0
Cylinder Ass'y, Boom Swing	0782603UA	152	2
Rod Ass'y, Piston	078260502	64	5
Head, Cylinder	078260503	64	9
Spacer	078260504	64	20
Collar	078260505	64	22
Bearing, Cushion	078260507	64	29
Pipe	078260508	64	31
Bushing	078260509	64	2
Bushing	078260509	64	6
Piston Ass'y	078260593	64	23
Cylinder Ass'y, Boom	0782605UA	64	0
Cylinder Ass'y, Boom	0782605UA	148	41
Rod Ass'y, Piston	078260702	66	5
Piston Ass'y	078260793	66	17
Cylinder Ass'y, Arm	0782607UA	66	0
Cylinder Ass'y, Arm	0782607UA	148	3
Rod Ass'y, Piston	078260802	72	5
Head, Cylinder	078260803	72	9
Ring, Back-up	078260804	72	15
Ring, Slide	078260806	72	19
Pipe	078260807	72	24
Bushing	078260808	72	2
Bushing	078260808	72	6
Blade Cylinder (Head Side)	078260891	2	29
Kit, Seal	078260891	72	11
Piston Ass'y	078260893	72	17
Cylinder Ass'y, Blade	0782608UA	72	0
Cylinder Ass'y, Blade	0782608UA	160	6
Joint	078261906	64	30
Joint	078261906	66	27
Roller, Needle	078363716	78	15
Ring, O	078363719	78	18
Ring, O	078363720	78	19
Plug Ass'y	078364683	53	66
Plug Ass'y	078364684	53	79
Valve Ass'y, Shut-off	078364685	53	74
Rod, Tie	078367701	53	68
Cap	078367702	53	12
Seat, Spring	078367703	53	14
Spring	078367704	53	15
Plug	078367705	53	26
Ring, O	078367706	53	19
Cap	078367707	53	22
Poppet	078367709	53	24

*1 Note

https://truckmanualshub.com/

ALPHABETICAL INDEX

Parts Name	P/N	Page *1	Item
Spring	078367710	53	25
Poppet	078367713	53	30
Plug	078367714	53	33
Plug	078367715	53	36
Plug, Orifice	078367716	53	37
Cap	078367718	53	41
Poppet	078367721	53	60
Spacer	078367722	53	62
Poppet	078367723	53	58
Plug	078367724	53	45
Spool	078367726	53	47
Sleeve	078367727	53	52
Spring	078367728	53	48
Spring	078367729	53	57
Seat, Spring	078367730	53	56
Poppet	078367731	53	67
Plug	078367783	226	18
Plug Ass'y	078367783	53	42
Seat, Spring	078370008	58	4
Spring (No.2, 4, Ports)	078370009	58	6
Spring (No.1, 3, Ports)	078370010	58	14
Plate	078370012	58	9
Body	078374901	53	55
Piston	078374902	53	46
Plate	078375601	58	13
Nut, Adjusting	078377103	58	8
Boot	078377107	58	1
Plug	078384202	53	18
Valve Ass'y, Anti drift	078384683	53	43
Plug	078384685	226	19
Valve Ass'y, Anti Void	078384688	53	73
Plug	078392006	74	17
Rod, Push	078393601	74	11
Seat	078395101	74	1
Bushing	078395102	74	2
Cover	078395103	74	4
Plug	078395104	74	5
Cap, Grease	078395105	74	6
Packing	078395106	74	7
Shim	078395108	74	12
Seat, Spring	078395109	74	13
Seat, Spring	078395110	74	20
Washer	078395111	74	21
Spring	078395113	74	23
Spring	078395114	74	24
Shaft Cam	078395115	74	25
Bushing	078395116	74	26
Screw, Set	078395117	74	27
Boot	078395118	74	28
Cam Ass'y	078395191	74	29
Spring	078396401	58	5
Valve Ass'y, Remote Control	0783964UA	58	0

*1 Note

https://truckmanualshub.com/

ALPHABETICAL INDEX

Parts Name	P/N	Page *1	Item
Valve Assy Remote Control	0783964UA	32	1
Valve Assy Remote Control	0783964UA	36	1
Valve Assy Remote Control	0783964UA	40	1
Shim	078396502	76	11
Shim	078396503	76	11-1
Spool	078396504	76	19
Spring	078396511	76	15
Valve Ass'y, Pilot	0783965UA	76	0
Valve Ass'y, Pilot	0783965UA	88	11
Valve Ass'y, Pilot	0783965UA	164	46
Spring	078397001	53	23
Spring	078397001	53	29
Spring	078397001	53	23
Spring	078397001	53	38
Cap	078397403	53	17
Cap Ass'y	078397404	53	39
Block Ass'y, Inlet	078397495	53	8
Spring	078399501	74	22
Valve Ass'y, Pilot	0783995UA	74	0
Valve Ass'y, Pilot	0783995UA	82	11
Valve Ass'y, Relief	078401585	53	80
Valve Ass'y, Relief	078401586	53	72
Valve Ass'y, Relief	078401587	53	71
Valve Ass'y, Main Relief	078401588	53	70
Block Ass'y	078401590	53	1
Block Ass'y, Swing	078401591	53	2
Block Ass'y, Boom Swing	078401592	53	3
Block Ass'y, Blade	078401593	53	4
Block Ass'y, Spare	078401594	53	5
Block Ass'y, Travel (L.H.)	078401596	53	7
Block Ass'y, Travel (R.H.)	078401597	53	9
Block Ass'y, Boom	078401598	53	10
Block Ass'y, Backet	078401691	53	11
Block Ass'y, Arm	078401692	53	6
Valve Ass'y, Control	0784016UA	24	38
Valve Ass'y, Control	0784016UA	53	0
Seat, Spring	078404706	226	3
Spring	078404707	226	4
Adjuster	078404710	226	7
Nut, Hex.	078404711	226	8
Piston	078404712	226	9
Cap	078404713	226	10
Spring	078411204	78	1
Cover	078411206	78	2
Cover	078411207	78	3
Lever	078411208	78	4
Pin	078411209	78	5
Spring	078411210	78	6
Grip	078411211	78	7
Ball, Steel	078411220	78	14
Valve Ass'y, Multiple (A-D Change)	0784112UA	78	0

*1 Note

https://truckmanualshub.com/

ALPHABETICAL INDEX

Parts Name	P/N	Page *1	Item
Valve Ass'y, Multiple (For A-D)	0784112UA	36	69
Valve Ass'y, Multiple (For A, B, G)	0784113UA	36	69-1
Valve, Solenoid	0785118UA	222	1
Valve, Solenoid	0785169UA	164	59
Valve Ass'y, Solenoid	0785171UA	170	36
Valve Ass'y, Over Load Relief	0785606UA	53	74-1
Valve Ass'y, Over Load Relief	0785607UA	53	74-2
Valve, Check	0785947UA	24	11
Valve Ass'y, Solenoid	0786988UA	168	24
Plug	078704704	226	1
Plug	078704708	226	5
Poppet	078704716	226	13
Spring	078704717	226	14
Plug	078704718	226	15
Valve, Relief	078704791	226	17
Valve Ass'y, Holding	0787047UA	226	0
Valve, Holding	0787047UA	224	1
Breather, Air	0787305UA	60	13
Tube, Spiral	079000002	18	15
Duct	082002316	190	5
Louver	082002318	216	8
Louver	082002319	216	7
Band, Cable	082006703	84	52
Band, Cable	082006703	88	18
Band, Cable	082006703	138	25
Band, Cable	082006703	212	13
Band, Cable	082006704	92	23
Band, Cable	082006704	138	46
Band, Cable	082006704	164	39
Band, Cable	082006704	210	7
Band, Cable	082006704	218	2
Band, Cable	082006704	220	35
Band, Cable	082006704	232	5
Band, Cable	082006705	18	16
Band, Cable	082006705	32	45
Band, Cable	082006705	36	45
Band, Cable	082006705	40	45
Band, Cable	082006705	82	29
Band, Cable	082006705	88	24
Band, Cable	082006705	92	26
Band, Cable	082006705	138	26
Band, Cable	082006705	142	22
Band, Cable	082006705	152	17
Band, Cable	082006705	164	34
Band, Cable	082006705	190	15
Band, Cable	082006705	222	37
Band, Cable	082006707	84	38
Band, Cable	082006709	32	61

*1 Note

https://truckmanualshub.com/

ALPHABETICAL INDEX

Parts Name	P/N	Page *1	Item
Band, Cable	082006709	36	61
Band, Cable	082006709	40	61
Band, Cable	082006709	142	49
Band, Cable	082006709	168	19
Band, Cable	082006709	170	34
Band, Cable	082006710	28	6
Band, Cable	082006710	30	25
Band, Cable	082006710	32	62
Band, Cable	082006710	36	62
Band, Cable	082006710	40	62
Band, Cable	082006710	96	33
Band, Cable	082006710	156	41
Band, Cable	082006731	138	27
Sticker	082006903	232	6
Relay	082021507	2	13
Relay	082021507	90	24
Relay	082021507	142	34
Relay	082021507	216	11
Relay, Flip Flop	082021510	2	10
Relay, Flip-Flop	082021510	138	41
Relay, Glow	082021511	2	11
Relay, Glow	082021511	138	35
Connector	0820513UA	84	54
Connector	0820514UA	84	51
Terminal	082065020	232	13
Terminal	082065020	234	15
Terminal	082065021	232	14
Terminal	082065021	234	16
Sleeve	082065120	232	13-1
Sleeve	082065120	234	15-1
Sleeve	082065121	232	14-1
Sleeve	082065121	234	16-1
Terminal	082065708	176	15
Tube, Corrugate	082080301	90	19
Tube, Corrugate	082080303	92	21
Tube, Corrugate	082080304	100	44
Tube, Corrugate	082080304	100	45
Tube, Corrugate	082080304	100	46
Tube, Corrugate	082080304	100	47
Tube, Corrugate	082080304	100	48
Tube, Corrugate	082080304	220	33
Tube, Corrugate	082080304	220	34
Tube, Corrugate	082080305	174	3
Tube, Corrugate	082080305	220	31
Tube, Corrugate	082080306	190	17
Tube, Corrugate	082080306	190	18
Tube, Corrugate	082080306	220	28
Tube, Corrugate	082080306	220	29
Tube, Corrugate	082080306	220	30
Tube, Corrugate	082080306	220	32
Fuse	083010706	138	42-4
Fuse	083010707	138	42-5

*1 Note

https://truckmanualshub.com/

ALPHABETICAL INDEX

Parts Name	P/N	Page *1	Item
Fuse	083010708	138	42-6
Fuse	083010709	138	42-7
Fuse	083010710	138	42-8
Fuse	083010711	138	42-2
Fuse	083010712	138	42-3
Link, Fusible	083029101	138	12-1
Socket	083040602	142	21
Housing	083040800	176	14
Radio	085050010	176	13
Battery	085100001	138	5
Battery (For Cold District)	085100002	138	5-1
Terminal	085211922	138	28
Light, Rotary	085406001	232	12
Lens	085452301	214	4-1
Bulb	085452306	214	4-2
Light Ass'y	0854523UA	214	4
Lens	085452901	138	2-2
Bulb	085452905	138	2-1
Light Ass'y	0854529UA	138	2
Lens	085453601	214	1-1
Bulb	085453611	214	1-2
Lamp Ass'y	0854536UA	214	1
Horn, Back	085701148	210	2
Buzzer	085701157	142	45
Heater, Car	085705603	190	1
Gauge, Fuel	0857909UA	100	23
Element Ass'y	085791411	100	54-1
Element, Water Sedimenter	085791411	2	8
Sedimenter, Water	0857914UA	100	54
Box, Fuse	085814001	138	42-1
Switch, Pressure	085818010	210	3
Switch Ass'y, Starter	085830603	2	12
Switch Assy Starter	085830603	142	26
Switch Assy Starter	085830604	142	26-1
Switch, Select	085830823	234	2
Switch Ass'y, Light	085831411	214	10
Decal	085831412	214	11
Switch, Limit	085831415	84	21
Switch Assy	085831433	142	17
Switch Assy	085831433	142	36
Switch Ass'y, Heater	085831434	190	19
Switch Assy	085831435	142	40
Switch, Oil Pressure	085850116	138	48
Sensor, Pressure	085860116	222	9
Sensor, Pressure	085860116	224	21
Meter, Potention	085861405	142	31
Meter, Potention	085861412	90	9
Buzzer	086050402	234	14
Horn	086100102	138	3
Display	087790011	234	1
Harness	087955130	138	13
Detector, Angle	0881100UA	230	1

*1 Note

https://truckmanualshub.com/

ALPHABETICAL INDEX

Parts Name	P/N	Page *1	Item
Monitor, OK	0881509UA	142	1
Motor	0891802UA	90	1
Controller, Throttle	0891922UA	90	18
Air Conditioner Ass'y	0892270UA	216	1
Controller Ass'y	0893508UA	212	1
Controller Ass'y	0893509UA	142	38
Dryer, Recerver	0897002UA	218	22
Compressor Ass'y	0897018UA	218	3
Condenser	0897019UA	218	21
Valve, Water	089800000	220	8
Bracket	089800001	218	23
Amplifier	089800002	216	9
Volume, Thermodtat	089800003	216	14
Switch Ass'y, Blower	089800004	216	15
Switch	089800005	216	13
Hose	089800068	220	1
Hose	089800069	220	2
Hose	089800070	220	3
Hose	089800071	220	4
Belt	091010119	218	6
Seal	091087005	92	29
Seal	091087005	92	30
Seal	091087005	104	9
Seal	091087005	104	21
Seal	091087005	106	41
Seal	091087005	106	42
Seal	091087005	106	43
Seal	091087005	106	44
Seal	091087005	106	49
Seal	091087005	106	59
Plug	091091100	148	42
Rubber, Cushion	091093110	92	10
Grommet	091094202	190	16
Wrench, L	093107024	146	5
Wrench, Adjustable	093110925	146	2
Driver (-)	093130104	146	6
Hammer	093133110	146	4
Gun, Grease	093137010	146	3-1
Gun, Grease	093137011	146	3
Hose, Grease	093137101	146	3-2
Gauge, Level	0933054UA	234	3
Cabin Ass'y (Dark Grey)	3034212018	178	0
Cabin Ass'y (Dark Grey)	3034212018	182	0
Cabin Ass'y (Dark Grey)	3034212018	186	0
Cabin Ass'y (Light Grey)	3034212019	178	0-1
Cabin Ass'y (Light Grey)	3034212019	182	0-1
Cabin Ass'y (Light Grey)	3034212019	186	0-1
Bolt	3442505	178	35
Bolt, U	400300300	24	30
Bolt, U	400302101	96	7
Bolt, Hook	400402204	138	7
Bolt, Adjust	400412800	10	15

*1 Note

https://truckmanualshub.com/

ALPHABETICAL INDEX

Parts Name	P/N	Page *1	Item
Bolt, Button Head	400428001	216	28
Bolt, Button Head	400436401	84	5
Bolt, Button Head	400436401	106	29
Bolt, Button Head	400436401	142	7
Bolt, Button Head	400436401	234	6
Washer	400611901	92	25
Washer	400611901	116	10
Washer	400611901	218	18
Washer	400611902	142	52
Washer, Flat	400611902	138	37
Washer, Flat	400617800	148	35
Washer, Rubber	400638600	116	12
Shim	400654056	148	38
Shim	400654057	148	38-1
Shim	400654066	148	37
Shim	400654066	152	11
Shim	400654067	148	37-1
Shim	400654067	152	11-1
Shim	400730800	154	14
Door Stop	4012000138	178	49
Washer Toothed	4012000185	178	39
Washer Toothed	4012000185	182	27
Washer Toothed	4012000185	186	22
Nut	4012000186	186	21
Washer Flat	4012000189	186	52
Cap	4012000206	178	31
Cap	4012000206	186	37
Washer, Nylon	4012000210	186	64
Washer Flat	4012000215	186	49
Valve, Connection	4012000216	182	45
Hook	4012000239	182	12
Cap	4012000240	186	23
Atomizer	4012000245	182	46
Switch, Wiper	4012000250	182	40
Frame, Side Switch	4012000251	182	38
Frame, Central Switch	4012000252	182	39
Label	4012000254	182	41
Cap	4012000255	182	42
Tank	4012000256	182	43
Bracket	4012000257	178	50
Handle	4012000259	178	53
Nut	4012000260	178	47
Cover	4012000274	182	32
Bolt	4012000291	182	13
Plug, Rubber	4012000297	182	20
Nut	4012000303	182	28
Antenna	4012000314	182	33
Cable, Antenna	4012000316	182	34
Cover, Motor	4012000352	186	62
Nut	4012000356	182	18
Plug, Rubber	4012000367	182	24
Nut	4012000370	186	17

*1 Note

https://truckmanualshub.com/

ALPHABETICAL INDEX

Parts Name	P/N	Page *1	Item
Gasket	4012000390	178	36
Washer, Special	4012000428	186	36
Shaft	401222000	12	8
Block	4013001417	178	45
Block, Security	4013001418	178	46
Lock, Door	4013001426	178	34
Blade, Wiper	4013001437	186	60
Arm, Wiper	4013001438	186	59
Bolt	4013001450	186	47
Pin, Hinge	4015000088	178	26
Nut	4015000091	178	37
Nut, Lock	4015000091	186	35
Ring, Elastic	4015000092	178	27
Washer Flat	4015000109	178	48
Glass (L.H.)	4016000000	178	2
Glass (Rear Side)	4016000001	178	3
Glass (Rear)	4016000002	178	4
Glass (Roof)	4016000003	178	5
Window Ass'y, Side	4016000004	178	6
Glass (Front)	4016000005	178	7
Glass (Rear)	4016000006	178	8
Frame, Glass	4016000007	178	9
Shoe (Front)	4016000008	178	10
Shoe (Rear)	4016000009	178	11
Handle, Sliding (Front)	4016000010	178	12
Handle, Sliding (Rear)	4016000011	178	13
Bolt	4016000012	178	14
Support, Brush (Front)	4016000013	178	15
Support, Brush (Rear)	4016000014	178	16
Brush	4016000015	178	17
Glass Blocking	4016000016	178	18
Handle, Glass Blocking	4016000017	178	19
Support, Sliding	4016000018	178	20
Gasket	4016000019	178	21
Handle, Stop	4016000020	178	22
Frame, Door (Dark Grey)	4016000021	178	23
Frame, Door (Light Grey)	4016000022	178	23-1
Gasket	4016000023	178	24
Glass (Door)	4016000024	178	25
Hook, Door Stop	4016000025	178	28
Hook, Door Stop	4016000026	178	28-1
Absorber, Shock	4016000027	178	29
Absorber, Shock	4016000028	178	29-1
Nut, Special	4016000029	178	30
Nut, Special	4016000029	186	28
Handle Ass'y	4016000030	178	32
Rod	4016000031	178	33
Bolt	4016000033	178	38
Bolt	4016000033	182	3
Bolt	4016000033	186	29
Bolt	4016000033	186	63
Cover	4016000034	178	40

*1 Note

https://truckmanualshub.com/

ALPHABETICAL INDEX

Parts Name	P/N	Page *1	Item
Clip	4016000035	178	41
Clip	4016000035	182	2
Hinge	4016000036	178	42
Bolt	4016000037	178	43
Cap	4016000038	178	44
Rod, Tie	4016000039	178	51
Lever	4016000040	178	52
Washer Flat	4016000041	178	54
Cover (Rear)	4016000042	182	1
Gasket	4016000043	182	4
Cover (Left)	4016000044	182	5
Cover (Right Upright)	4016000045	182	6
Roof Coating	4016000046	182	7
Clip	4016000047	182	8
Bracket	4016000048	182	9
Bolt	4016000049	182	10
Hammer, Emergency	4016000050	182	11
Bolt	4016000051	182	14
Bracket	4016000052	182	15
Gasket	4016000053	182	16
Bolt	4016000054	182	17
Bolt	4016000054	186	39
Plug	4016000055	182	19
Plate (Lower)	4016000056	182	21
Bolt	4016000057	182	22
Plug	4016000058	182	23
Harness	4016000059	182	25
Band, Cable	4016000060	182	26
Light	4016000061	182	29
Cover, Audio	4016000062	182	30
Clip	4016000063	182	31
Plug	4016000064	182	35
Bracket	4016000065	182	36
Gasket	4016000066	182	37
Bracket	4016000067	182	44
Pipe	4016000068	182	47
Glass	4016000069	186	1
Lock, Cover	4016000070	186	2
Gasket	4016000071	186	3
Lock (R.H.)	4016000072	186	4
Handle (R.H.)	4016000073	186	5
Spacer	4016000074	186	6
Gasket	4016000075	186	7
Bolt	4016000076	186	8
Bolt	4016000077	186	9
Lock (L.H.)	4016000078	186	10
Handle (L.H.)	4016000079	186	11
Shoe (Lower)	4016000080	186	12
Bolt	4016000081	186	13
Shoe (L.H.)	4016000082	186	14
Spacer	4016000083	186	15
Bolt	4016000084	186	16

*1 Note

https://truckmanualshub.com/

ALPHABETICAL INDEX

Parts Name	P/N	Page *1	Item
Bracket	4016000085	186	18
Shoe (R.H.)	4016000086	186	19
Stopper, Rubber	4016000087	186	20
Stopper, Rubber	4016000088	186	24
Nut, Lock	4016000089	186	25
Bracket	4016000090	186	26
Protection, Door	4016000091	186	27
Frame, Door	4016000092	186	30
Bracket	4016000093	186	31
Nut	4016000094	186	32
Bolt	4016000095	186	33
Spring, Gas	4016000096	186	34
Cover	4016000097	186	38
Bolt	4016000098	186	40
Bushing	4016000099	186	41
Frame (L.H.)	4016000100	186	42
Frame (R.H.)	4016000101	186	43
Guide (L.H.)	4016000102	186	44
Guide (R.H.)	4016000103	186	45
Shoe	4016000104	186	46
Stopper, Rubber	4016000105	186	48
Handle	4016000106	186	50
Bolt	4016000107	186	51
Bolt	4016000108	186	53
Bracket	4016000109	186	54
Bolt	4016000110	186	55
Glass	4016000111	186	56
Gasket	4016000112	186	57
Wiper	4016000113	186	58
Motor, Wiper	4016000114	186	61
Bolt	4016000115	186	65
Washer, Special	4016000116	186	66
Pin, Snap	401603004	84	23
Pin, Snap	401603004	106	21
Pin, Ring	401725201	228	7
Spacer	404046802	148	23
Spacer	404046816	148	22
Spacer	404046821	148	20
Spacer	404086700	84	16
Bushing	404322907	148	18
Bushing	404323102	228	8
Bushing	404323112	148	19
Bushing	404323112	228	10
Bushing	404326103	228	9
Bushing	404337601	160	11
Bushing	404703502	12	5
Hose Ass'y	407001307	24	7
Hose Ass'y	407001514	24	9
Hose Ass'y	407001526	18	4
Hose Ass'y	407002644	24	6
Hose Ass'y	407005632	174	2
Hose, Water	407010231	220	7

*1 Note

https://truckmanualshub.com/

ALPHABETICAL INDEX

Parts Name	P/N	Page *1	Item
Hose, Water	407010240	190	6
Hose, Water	407010241	190	7
Hose, Water	407010244	220	5
Hose, Water	407010245	220	6
Hose Ass'y	407012409	32	17
Hose Ass'y	407012409	36	17
Hose Ass'y	407012409	40	17
Hose, Fuel	407024532	100	30
Hose, Fuel	407024539	100	28
Hose, Fuel	407024567	100	29
Cover, Hose	407035103	28	8
Cover, Hose	407035103	156	38
Cover, Hose	407039003	30	24
Hose Ass'y	407054801	88	4
Hose Ass'y	407054804	82	5
Hose Ass'y	407054804	82	6
Hose Ass'y	407054806	32	54
Hose Ass'y	407054806	32	55
Hose Ass'y	407054806	36	54
Hose Ass'y	407054806	36	55
Hose Ass'y	407054806	40	54
Hose Ass'y	407054806	40	55
Hose Ass'y	407054806	82	4
Hose Ass'y	407054806	88	5
Hose Ass'y	407054808	32	58
Hose Ass'y	407054808	36	58
Hose Ass'y	407054808	40	58
Hose Ass'y	407054813	164	43
Hose Ass'y	407054816	164	38
Hose Ass'y	407054818	164	42
Hose Ass'y	407054819	32	56
Hose Ass'y	407054819	32	57
Hose Ass'y	407054819	36	56
Hose Ass'y	407054819	36	57
Hose Ass'y	407054819	40	56
Hose Ass'y	407054819	40	57
Hose Ass'y	407054819	88	3
Hose Ass'y	407054819	164	36
Hose Ass'y	407054821	32	34
Hose Ass'y	407054821	36	34
Hose Ass'y	407054821	40	34
Hose Ass'y	407054821	82	3
Hose Ass'y	407054825	32	50
Hose Ass'y	407054825	32	51
Hose Ass'y	407054825	32	52
Hose Ass'y	407054825	32	53
Hose Ass'y	407054825	36	50
Hose Ass'y	407054825	36	51
Hose Ass'y	407054825	36	52
Hose Ass'y	407054825	36	53
Hose Ass'y	407054825	40	50
Hose Ass'y	407054825	40	51

*1 Note

https://truckmanualshub.com/

ALPHABETICAL INDEX

Parts Name	P/N	Page *1	Item
Hose Ass'y	407054825	40	52
Hose Ass'y	407054825	40	53
Hose Ass'y	407054827	164	37
Hose Ass'y	407054827	222	16
Hose Ass'y	407054835	32	31
Hose Ass'y	407054835	36	31
Hose Ass'y	407054835	40	31
Hose Ass'y	407054836	88	10
Hose Ass'y	407054839	32	32
Hose Ass'y	407054839	36	32
Hose Ass'y	407054839	40	32
Hose Ass'y	407054839	88	2
Hose Ass'y	407054840	32	23
Hose Ass'y	407054840	36	23
Hose Ass'y	407054840	40	23
Hose Ass'y	407054841	32	30
Hose Ass'y	407054841	36	30
Hose Ass'y	407054841	40	30
Hose Ass'y	407054841	164	35
Hose Ass'y	407054842	32	26
Hose Ass'y	407054842	36	26
Hose Ass'y	407054842	40	26
Hose Ass'y	407054850	164	41
Hose Ass'y	407054855	222	17
Hose Ass'y	407054857	32	22
Hose Ass'y	407054857	36	22
Hose Ass'y	407054857	40	22
Hose Ass'y	407054857	88	1
Hose Ass'y	407054861	32	29
Hose Ass'y	407054861	36	29
Hose Ass'y	407054861	40	29
Hose Ass'y	407054861	170	29
Hose Ass'y	407054865	32	33
Hose Ass'y	407054865	36	33
Hose Ass'y	407054865	40	33
Hose Ass'y	407054868	32	21
Hose Ass'y	407054868	36	21
Hose Ass'y	407054868	40	21
Hose Ass'y	407054869	32	25
Hose Ass'y	407054869	36	25
Hose Ass'y	407054869	40	25
Hose Ass'y	407054870	32	35
Hose Ass'y	407054870	36	35
Hose Ass'y	407054870	40	35
Hose Ass'y	407054882	32	24
Hose Ass'y	407054882	36	24
Hose Ass'y	407054882	40	24
Hose Ass'y	407054888	32	27
Hose Ass'y	407054888	36	27
Hose Ass'y	407054888	40	27
Hose Ass'y	407054889	32	28
Hose Ass'y	407054889	36	28

*1 Note

https://truckmanualshub.com/

ALPHABETICAL INDEX

Parts Name	P/N	Page *1	Item
Hose Ass'y	407054889	40	28
Hose Ass'y	407054889	82	2
Hose Ass'y	407055101	32	15
Hose Ass'y	407055101	36	15
Hose Ass'y	407055101	40	15
Hose Ass'y	407055114	168	16
Hose Ass'y	407055115	32	49
Hose Ass'y	407055115	36	49
Hose Ass'y	407055115	40	49
Hose Ass'y	407055118	18	5
Hose Ass'y	407055118	164	40
Hose Ass'y	407055119	32	20
Hose Ass'y	407055119	36	20
Hose Ass'y	407055119	40	20
Hose Ass'y	407055122	32	16
Hose Ass'y	407055122	36	16
Hose Ass'y	407055122	40	16
Hose Ass'y	407055122	82	1
Hose Ass'y	407055134	32	14
Hose Ass'y	407055134	36	14
Hose Ass'y	407055134	40	14
Hose Ass'y	407055143	32	18
Hose Ass'y	407055143	36	18
Hose Ass'y	407055143	40	18
Hose Ass'y	407055145	32	47
Hose Ass'y	407055145	36	47
Hose Ass'y	407055145	40	47
Hose, Fuel	407057251	100	27
Hose, Fuel	407057252	100	53
Hose, Fuel	407074001	216	23
Hose Ass'y	407075414	24	8
Hose Ass'y	407075425	164	24
Hose Ass'y	407078206	32	40
Hose Ass'y	407078206	36	40
Hose Ass'y	407078206	40	40
Hose Ass'y	407078222	170	30
Hose Ass'y	407084216	222	12
Hose Ass'y	407084228	222	14
Hose Ass'y	407084229	222	15
Hose Ass'y	407084233	222	13
Cover, Hose	407085411	168	20
Hose, Fuel	407089904	100	31
Nipple	407222000	190	20
Nipple	407222000	220	12
Elbow, Long	407276900	30	21
Elbow, Long	407286602	222	29
Plug	407288700	60	3
Adapter, Union	407293001	222	25
Union	407293002	222	38
Connector	407297100	28	11
Connector	407297100	156	22
Connector	407297100	164	26

*1 Note

https://truckmanualshub.com/

ALPHABETICAL INDEX

Parts Name	P/N	Page *1	Item
Plug, Drain	407703600	60	4
Gauge, Level	407902700	60	6
Clamp, Hose	408000002	138	23
Clamp, Hose	408000002	152	15
Clamp, Hose	408000002	232	7
Clamp, Hose	408000003	90	22
Clamp, Hose	408000003	138	22
Clamp, Hose	408000004	138	21
Clamp, Hose	408000005	100	55
Clamp, Hose	408000005	138	45
Clamp, Hose	408000006	24	20
Clamp, Hose	408000006	138	20
Clamp, Hose	408000006	156	12
Clamp, Hose	408000009	32	60
Clamp, Hose	408000009	36	60
Clamp, Hose	408000009	40	60
Clamp, Hose	408000014	156	13
Clamp, Hose	408000025	32	44
Clamp, Hose	408000026	220	25
Clamp, Hose	408000029	100	32
Clamp, Hose	408000029	170	35
Clamp, Tube	408111600	156	11
Clamp, Tube	408111800	168	6
Clamp, Tube	408111800	170	8
Clamp, Tube	408111800	222	4
Clamp, Tube	408118900	170	9
Grip	409603300	164	50
Coutter, Side (R.H.)	412304000	2	19
Cutter, Side	412304000	154	10
Coutter, Side (L.H.)	412304100	2	20
Cutter, Side	412304100	154	5
Spring	417012600	10	13
Plate	440163100	10	21
Decal (B1)	440530701	32	32-1
Decal (B1)	440530701	36	32-1
Decal (B1)	440530701	40	32-1
Decal (B2)	440530702	32	31-1
Decal (B2)	440530702	36	31-1
Decal (B2)	440530702	40	31-1
Decal (R1)	440530703	32	56-1
Decal (R1)	440530703	36	56-1
Decal (R1)	440530703	40	56-1
Decal (R3)	440530704	32	55-1
Decal (R3)	440530704	36	55-1
Decal (R3)	440530704	40	55-1
Decal (R3)	440530704	170	27-1
Decal (C1)	440530801	32	18-1
Decal (C1)	440530801	36	18-1
Decal (C1)	440530801	40	18-1
Decal (C2)	440530802	32	33-1
Decal (C2)	440530802	36	33-1
Decal (C2)	440530802	40	33-1

*1 Note

https://truckmanualshub.com/

ALPHABETICAL INDEX

Parts Name	P/N	Page *1	Item
Decal (R2)	440530803	32	54-1
Decal (R2)	440530803	36	54-1
Decal (R2)	440530803	40	54-1
Decal (R2)	440530803	168	14-1
Decal (R4)	440530804	32	57-1
Decal (R4)	440530804	36	57-1
Decal (R4)	440530804	40	57-1
Decal (A1)	440530901	32	29-1
Decal (A1)	440530901	36	29-1
Decal (A1)	440530901	40	29-1
Decal (A2)	440530902	32	28-1
Decal (A2)	440530902	36	28-1
Decal (A2)	440530902	40	28-1
Decal (L1)	440530903	32	50-1
Decal (L1)	440530903	36	50-1
Decal (L1)	440530903	40	50-1
Decal (L3)	440530904	32	52-1
Decal (L3)	440530904	36	52-1
Decal (L3)	440530904	40	52-1
Decal (L3)	440530904	170	28-1
Decal (S1)	440531001	32	34-1
Decal (S1)	440531001	36	34-1
Decal (S1)	440531001	40	34-1
Decal (S2)	440531002	32	30-1
Decal (S2)	440531002	36	30-1
Decal (S2)	440531002	40	30-1
Decal (L2)	440531003	32	51-1
Decal (L2)	440531003	36	51-1
Decal (L2)	440531003	40	51-1
Decal (L2)	440531003	168	15-1
Decal (L4)	440531004	32	53-1
Decal (L4)	440531004	36	53-1
Decal (L4)	440531004	40	53-1
Decal (RP)	440531101	32	25-1
Decal (RP)	440531101	36	25-1
Decal (RP)	440531101	40	25-1
Decal (LP)	440531102	32	23-1
Decal (LP)	440531102	36	23-1
Decal (LP)	440531102	40	23-1
Decal (RT)	440531201	32	58-1
Decal (RT)	440531201	36	58-1
Decal (RT)	440531201	40	58-1
Decal (LT)	440531202	32	26-1
Decal (LT)	440531202	36	26-1
Decal (LT)	440531202	40	26-1
Decal (BA)	440531801	156	34-1
Decal (BB)	440531802	156	33-1
Decal (CA)	440531901	156	31-1
Decal (CB)	440531902	156	32-1
Decal (AA)	440532001	156	30-1
Decal (AB)	440532002	156	35-1
Decal (Safety Works)	440545100	130	8

*1 Note

https://truckmanualshub.com/

ALPHABETICAL INDEX

Parts Name	P/N	Page *1	Item
Decal (Safety Works)	440545100	200	8
Decal (Anti-Freezing Solution)	440545600	130	21
Decal (Anti-Freezing Solution)	440545600	200	21
Decal (Oil)	440545700	126	4
Decal (Oil)	440545700	130	4
Decal (Oil)	440545700	132	4
Decal (Oil)	440545700	134	4
Decal (Oil)	440545700	196	4
Decal (Oil)	440545700	200	4
Decal (Oil)	440545700	202	4
Decal (Oil)	440545700	204	4
Decal (Safety Works)	440645800	124	8
Decal (Safety Works)	440645800	194	8
Decal (Anti-Freezing Solution)	440671000	128	21
Decal (Anti-Freezing Solution)	440671000	198	21
Decal (Safety Works)	440671400	128	8
Decal (Safety Works)	440671400	198	8
Decal (Anti-Freezing Solution)	440703500	122	22
Decal (Anti-Freezing Solution)	440703500	124	21
Decal (Anti-Freezing Solution)	440703500	192	22
Decal (Anti-Freezing Solution)	440703500	194	21
Decal (Oil)	440797400	124	4
Decal (Oil)	440797400	128	4
Decal (Oil)	440797400	194	4
Decal (Oil)	440797400	198	4
Plate, Rubber	440962511	138	8
Bracket	441606301	138	6
Block, Bearing	442052500	12	2
Flange	443563600	154	13
Decal (Anti-Freezing Solution)	444722900	132	21
Decal (Anti-Freezing Solution)	444722900	202	21
Decal (Oil)	444747900	122	7
Decal (Oil)	444747900	192	7
Decal (Breaker Cation)	444765300	122	36
Decal (Breaker Cation)	444765300	192	36
Decal (Breaker Cation)	444785700	124	33
Decal (Breaker Cation)	444785700	194	33
Decal (Spare Piping Change)	444787400	122	35
Decal (Spare Piping Change)	444787400	192	35
Decal (Breaker Cation)	444792500	130	26
Decal (Breaker Cation)	444792500	200	26
Decal (Breaker Cation)	444799600	128	26
Decal (Breaker Cation)	444799600	198	26

*1 Note

https://truckmanualshub.com/

ALPHABETICAL INDEX

Parts Name	P/N	Page *1	Item
Decal (Breaker Cation)	444835000	132	26
Decal (Breaker Cation)	444835000	202	26
Decal (Transport Fix)(CE)	444847400	124	35
Decal (Transport Fix)(CE)	444847400	194	35
Decal (Transport Fix)	444851100	130	27
Decal (Transport Fix)	444851100	200	27
Decal (Transport Fix)	444854200	128	27
Decal (Transport Fix)	444854200	198	27
Decal (Transport Fix)	444856200	126	27
Decal (Transport Fix)	444856200	196	27
Decal (Anti-Freezing Solution)	444857300	126	21
Decal (Anti-Freezing Solution)	444857300	196	21
Decal (Safety Works)	444858400	126	8
Decal (Safety Works)	444858400	196	8
Decal (Breaker Cation)	444858700	126	26
Decal (Breaker Cation)	444858700	196	26
Decal (Anti-Freezing Solution)	444859800	134	21
Decal (Anti-Freezing Solution)	444859800	204	21
Decal (Safety Works)	444860300	134	8
Decal (Safety Works)	444860300	204	8
Decal (Breaker Cation)	444860700	134	26
Decal (Breaker Cation)	444860700	204	26
Decal (Transport Fix)	444861900	134	27
Decal (Transport Fix)	444861900	204	27
Decal (Spare Piping Change)	444865100	124	32
Decal (Spare Piping Change)	444865100	194	32
Decal (Spare Piping Change)	444868700	128	25
Decal (Spare Piping Change)	444868700	198	25
Decal (Spare Piping Change)	444894400	130	25
Decal (Spare Piping Change)	444894400	200	25
Decal (For A, F)	444898700	40	44
Decal (Spare Piping Change)	444900300	126	25
Decal (Spare Piping Change)	444900300	196	25
Decal (Spare Piping Change)	444940600	134	25
Decal (Spare Piping Change)	444940600	204	25
Case, Tools	445050500	146	1
Cover (Starter Switch)	445753500	142	27
Tape, Insulating	445959800	96	23
Cover	446075600	6	3
Cover	446075600	20	10
Cover, Under	446193200	6	19
Guide, Shoe (L.H.)	447559000	6	23
Guide, Shoe (R.H.)	447559100	6	22
Retainer, Spring	448550800	10	12
Retainer, Spring	448550900	10	14
Lever	449798900	164	49
Ring, O	451150101	148	24
Ring, O (For Bucket)	451150101	2	15

*1 Note

https://truckmanualshub.com/

ALPHABETICAL INDEX

Parts Name	P/N	Page *1	Item
Cylinder, Grease	451454900	10	4
Piston	451550600	10	1
Duct	452270701	214	9
Seal	455051900	110	27
Seal	455071800	92	53
Seal	455071800	92	56
Seal	455071800	92	57
Seal	455072600	106	11
Seal	455072600	190	13
Seal	455087300	106	12
Seal, Sponge	455090623	176	9
Seal, Sponge	455090624	176	10
Seal, Sponge	455090625	176	11
Seal, Sponge	455090626	176	12
Pad, Rubber	458001600	32	63
Pad, Rubber	458001600	36	63
Pad, Rubber	458001600	40	63
Pad	458073000	18	9
Cable, Battery	459198218	138	11
Cabin (Light Grey)	5290105300	178	1-1
Unit Ass'y, Spring (For Rubber Shoe)	530075999	10	10
Adj. Device, Crawler Shoe	530123100	10	0
Cylinder Ass'y, Grease	530123202	10	0-1
Tools Set	538851000	146	0
* * * * *	598800406	2	41
* * * * *	598800409	2	41-1
* * * * *	598800432	2	42
* * * * *	598800433	2	42-1
* * * * *	598800900	2	40
* * * * *	598802201	2	44
Bolt, Reamer	D00201500	20	5
Bolt, U	D00307300	96	6
Bolt, Button Head	D00404902	84	46
Washer	D00603200	120	4
Washer	D00605100	154	4
Washer, Treatment	D00605100	2	23
Washer	D00613600	106	7
Washer	D00614400	92	8
Shim	D00702300	106	24
Shim	D00703402	106	25
Shim	D00706000	6	26
Shim	D00724001	92	49
Shim	D00724002	92	50
Shim	D00724401	224	6
Shim	D00724402	224	6-1
Shim	D00724403	224	6-2
Pin, Head	D01309400	228	6
Pin,Head	D01338400	82	25
Pin, Head	D01339801	148	15
Pin, Bucket	D01340800	2	14
Pin, Head	D01340800	148	16

*1 Note

https://truckmanualshub.com/

ALPHABETICAL INDEX

Parts Name	P/N	Page *1	Item
Pin, Head	D01340900	148	17
Pin, Head	D01344400	228	5
Pin	D01722500	84	15
Pin, Wing	D01723401	160	3
Pin, Head	D01723402	148	12
Pin	D01723403	152	3
Pin, Head	D01723404	148	11
Pin	D01723405	152	5
Pin, Head	D01723701	148	13
Pin, Head	D01723702	148	14
Pin, Head	D01724900	148	10
Pin, Wing	D01725401	160	8
Pin	D01725900	152	4
Pully	D03201700	218	8
Spacer	D04017800	84	35
Spacer	D04019204	148	21
Spacer	D04024907	30	15
Spacer	D04034500	36	68
Spacer	D04034600	90	10
Spacer	D04038100	218	9
Collar	D04204000	84	33
Bushing	D04303000	152	6
Bushing	D04311000	148	39
Bushing	D04311500	152	7
Bushing	D04700300	152	18
Bushing	D04705800	148	25
Bushing	D04705800	152	10
Bushing	D04705800	160	2
Elbow	D06002800	36	70
Adapter	D06003200	162	7
Bush, Reducer	D06007100	28	9
Bush, Reducer	D06007100	156	39
Connector, Reducer	D06007100	162	10
Adapter	D06013700	32	67
Adapter	D06013700	40	70
Adapter	D06013700	168	7
Adapter	D06013700	170	10
Adapter	D06013700	222	22
Connector	D06016400	222	21
Elbow	D06040800	30	10
Connector	D06045100	156	9
Connector	D06050000	164	10
Connector	D06050000	170	20
Adapter, Reducer	D06050300	30	19
Connector	D06050300	168	22
Tee	D06051100	164	28
Connector	D06051200	174	5
Connector	D06051400	24	12
Connector	D06052500	32	9
Connector	D06052500	36	9
Connector	D06052500	40	9
Adapter	D06052600	24	52

*1 Note

https://truckmanualshub.com/

ALPHABETICAL INDEX

Parts Name	P/N	Page *1	Item
Connector	D06053000	24	41
Connector	D06053100	24	18
Connector	D06053200	24	40
Connector	D06053300	24	44
Elbow	D06053400	24	46
Elbow, Long	D06053500	30	9
Connector	D06054000	30	17
Manifold	D06509300	32	11
Manifold	D06509300	36	11
Manifold	D06509300	40	11
Manifold	D06509400	32	19
Manifold	D06509400	36	19
Manifold	D06509400	40	19
Hose Ass'y	D07011901	24	5
Hose Ass'y	D07019503	222	20
Hose Ass'y	D07019517	222	19
Hose Ass'y	D07019521	222	18
Hose Ass'y	D07019522	170	27
Hose Ass'y	D07019522	170	28
Hose Ass'y	D07034802	162	3
Hose Ass'y	D07034901	162	4
Hose Ass'y	D07035005	18	2
Hose Ass'y	D07035006	18	3
Hose Ass'y	D07035006	30	6
Hose Ass'y	D07035010	30	14
Hose Ass'y	D07035011	30	5
Hose Ass'y (For Long Arm)	D07035105	156	7-1
Hose Ass'y	D07035115	156	8
Hose Ass'y	D07035126	156	7
Hose Ass'y (For Long Arm)	D07035129	156	8-1
Hose Ass'y	D07036002	30	4
Hose Ass'y	D07036002	168	21
Hose Ass'y	D07036102	168	12
Hose Ass'y	D07036103	168	13
Hose Ass'y	D07036210	162	1
Hose Ass'y	D07036211	162	2
Hose Ass'y	D07036212	28	4
Hose Ass'y	D07036214	28	3
Hose Ass'y	D07036304	28	2
Hose Ass'y	D07036319	28	1
Hose Ass'y	D07036325	164	22
Hose Ass'y	D07037201	164	3
Hose Ass'y	D07037302	170	3
Hose Ass'y	D07037304	168	3
Hose Ass'y	D07038506	156	33
Hose Ass'y	D07038507	156	34
Hose Ass'y	D07038508	156	35
Hose Ass'y	D07038509	156	30
Hose Ass'y	D07038510	164	23
Hose Ass'y	D07038603	156	31
Hose Ass'y	D07038604	156	32
Hose Ass'y	D07038702	164	21

*1 Note

https://truckmanualshub.com/

ALPHABETICAL INDEX

Parts Name	P/N	Page *1	Item
Hose Ass'y	D07038801	156	4
Hose Ass'y	D07038801	222	10
Hose Ass'y	D07038809	156	3
Hose Ass'y	D07038813	156	5
Hose Ass'y	D07038819	156	6
Hose Ass'y	D07038822	222	11
Hose Ass'y	D07041003	168	14
Hose Ass'y	D07041003	168	15
Hose	D07055300	92	47
Hose	D07057201	24	10
Hose	D07057400	100	2
Hose	D07057701	32	59
Hose	D07057701	36	59
Hose	D07057701	40	59
Hose Ass'y	D07057801	30	7
Hose Ass'y	D07057802	30	8
Hose Ass'y	D07060500	24	56
Clamp, Hose	D08010000	96	32
Clamp, Tube	D08102300	164	9
Clamp, Tube	D08102300	170	19
Clamp, Tube	D08119300	164	7
Clamp, Tube	D08119300	170	7
Clamp, Tube	D08119300	222	5
Clamp, Tube	D08119500	164	8
Clamp, Tube	D08119500	170	18
Clamp, Seat	D08203400	222	6
Seat, Clamp	D08203400	164	4
Seat, Clamp	D08203400	170	4
Seat, Clamp	D08210800	168	5
Seat, Clamp	D08210800	170	6
Seat, Clamp	D08210900	168	4
Seat, Clamp	D08210900	170	5
Seat, Clamp	D08211000	164	6
Seat, Clamp	D08211100	164	5
Clamp	D08315200	100	5
Clamp	D08315400	30	1
Boss	D13104600	154	15
Boss	D13110000	218	7
Spring	D17005200	84	19
Boots	D18100200	88	14
Frame, Swing	D20435600	20	1
Frame	D20682500	100	12
Weight, Counter	D20683700	120	1
Frame	D20687300	116	2
Frame	D20687500	114	7
Frame	D20690600	106	26
Boom	D21014600	148	1
Arm Ass'y	D21522500	148	2
Arm Ass'y, Long	D21523500	148	2-1
Flange, Pump	D23005900	98	10
Sprocket, Drive	D23403700	6	13
Idler, Front	D23602100	12	6

*1 Note

https://truckmanualshub.com/

ALPHABETICAL INDEX

Parts Name	P/N	Page *1	Item
Blade	D25711000	160	7
Stay	D26032900	230	8
Stay	D26038100	208	7
Stay	D26051600	18	1
Stay	D26051800	218	5
Stay	D26055200	104	6
Bucket, Hoe (0.16m3, 650mm)	D27015400	154	1-5
Bucket, Hoe (0.14m3, 600mm)	D27015500	154	1-3
Bucket, Hoe (0.08m3, 400mm)	D27015600	154	1-1
Bucket, Hoe (0.11m3, 500mm)	D27015700	154	1-2
Bucket, Hoe (0.16m3, 650mm)	D27015800	154	1-4
Bucket, Hoe (0.18m3, 700mm)	D27015900	154	1
Bucket, Hoe (0.16m3, 650mm)	D27016100	154	1-6
Tank, Fuel	D28422900	100	22
Tank, Hydraulic Oil	D28424100	60	1
Tube	D28620200	156	2
Tube	D28624600	164	1
Tube	D28624700	164	2
TUBE	D28624800	168	1
TUBE	D28624900	168	2
TUBE	D28625000	170	1
TUBE	D28625100	170	2
Tube	D28627700	24	1
Tube	D28630500	222	7
Tube	D28630600	222	8
Tube	D28633900	224	2
Tube	D28634400	60	2
Tube	D28634600	156	1
Tube	D28634700	24	2
Plate	D40027300	104	14
Plate	D40027300	106	23
Plate	D40149800	24	34
Decal (Transport Fix)	D40505900	132	27
Decal (Transport Fix)	D40505900	202	27
Decal (Serial No.)	D40509100	126	3
Decal (Serial No.)	D40509100	128	3
Decal (Serial No.)	D40509100	130	3
Decal (Serial No.)	D40509100	132	3
Decal (Serial No.)	D40509100	134	3
Decal (Serial No.)	D40509100	136	3
Decal (Serial No.)	D40509100	196	3
Decal (Serial No.)	D40509100	198	3
Decal (Serial No.)	D40509100	200	3
Decal (Serial No.)	D40509100	202	3
Decal (Serial No.)	D40509100	204	3
Decal (Serial No.)	D40509100	206	3
Decal (Serial No.) (CE)	D40509100	124	3-1
Decal (Serial No.) (CE)	D40509100	194	3-1
Decal (Serial No.)	D40509400	122	3
Decal (Serial No.)	D40509400	124	3
Decal (Serial No.)	D40509400	192	3
Decal (Serial No.)	D40509400	194	3

*1 Note

https://truckmanualshub.com/

ALPHABETICAL INDEX

Parts Name	P/N	Page *1	Item
Decal (New Machine)	D40509700	124	24
Decal (New Machine)	D40509700	126	29
Decal (New Machine)	D40509700	128	29
Decal (New Machine)	D40509700	130	29
Decal (New Machine)	D40509700	132	29
Decal (New Machine)	D40509700	134	29
Decal (New Machine)	D40509700	136	29
Decal (New Machine)	D40509700	194	24
Decal (New Machine)	D40509700	196	29
Decal (New Machine)	D40509700	198	29
Decal (New Machine)	D40509700	200	29
Decal (New Machine)	D40509700	202	29
Decal (New Machine)	D40509700	204	29
Decal (New Machine)	D40509700	206	29
Decal (Spare Piping Change)	D40525600	132	25
Decal (Spare Piping Change)	D40525600	202	25
Seal	D40527200	32	65
Seal	D40527200	40	65
Seal	D40527200	114	8
Decal (Caution)	D40532300	124	20
Decal (Caution)	D40532300	194	20
Decal (Caution)	D40533200	122	16
Decal (Caution)	D40533200	192	16
Decal (Caution)	D40535900	124	15
Decal (Caution)	D40535900	126	15
Decal (Caution)	D40535900	128	15
Decal (Caution)	D40535900	130	15
Decal (Caution)	D40535900	132	15
Decal (Caution)	D40535900	134	15
Decal (Caution)	D40535900	136	15
Decal (Caution)	D40535900	194	15
Decal (Caution)	D40535900	196	15
Decal (Caution)	D40535900	198	15
Decal (Caution)	D40535900	200	15
Decal (Caution)	D40535900	202	15
Decal (Caution)	D40535900	204	15
Decal (Caution)	D40535900	206	15
Decal (Caution)	D40536600	124	13
Decal (Caution)	D40536600	126	13
Decal (Caution)	D40536600	128	13
Decal (Caution)	D40536600	130	13
Decal (Caution)	D40536600	132	13
Decal (Caution)	D40536600	134	13
Decal (Caution)	D40536600	136	13
Decal (Caution)	D40536600	194	13
Decal (Caution)	D40536600	196	13
Decal (Caution)	D40536600	198	13
Decal (Caution)	D40536600	200	13
Decal (Caution)	D40536600	202	13
Decal (Caution)	D40536600	204	13
Decal (Caution)	D40536600	206	13
Decal (Caution)	D40537300	122	21

*1 Note

https://truckmanualshub.com/

ALPHABETICAL INDEX

Parts Name	P/N	Page *1	Item
Decal (Caution)	D40537300	192	21
Decal (Caution)	D40542400	122	14
Decal (Caution)	D40542400	192	14
Decal (For A-D)	D40544700	36	44
Decal (Caution)	D40544900	122	20
Decal (Caution)	D40544900	192	20
Decal (Safety Swing)	D40545000	122	11
Decal (Safety Swing)	D40545000	192	11
Decal (Caution)	D40545100	122	18
Decal (Caution)	D40545100	192	18
Decal (Caution)	D40545200	122	15
Decal (Caution)	D40545200	192	15
Decal (Caution)	D40545300	192	26
Decal (Caution)	D40545400	122	12
Decal (Caution)	D40545400	192	12
Decal (Caution)	D40545500	122	13
Decal (Caution)	D40545500	192	13
Decal (Caution)	D40546200	122	17
Decal (Caution)	D40546200	192	17
Decal (Caution)	D40546300	122	19
Decal (Caution)	D40546300	192	19
Decal (Caution)	D40550300	124	16
Decal (Caution)	D40550300	126	16
Decal (Caution)	D40550300	128	16
Decal (Caution)	D40550300	130	16
Decal (Caution)	D40550300	132	16
Decal (Caution)	D40550300	134	16
Decal (Caution)	D40550300	136	16
Decal (Caution)	D40550300	194	16
Decal (Caution)	D40550300	196	16
Decal (Caution)	D40550300	198	16
Decal (Caution)	D40550300	200	16
Decal (Caution)	D40550300	202	16
Decal (Caution)	D40550300	204	16
Decal (Caution)	D40550300	206	16
Decal (Caution)	D40550400	124	18
Decal (Caution)	D40550400	126	18
Decal (Caution)	D40550400	128	18
Decal (Caution)	D40550400	130	18
Decal (Caution)	D40550400	132	18
Decal (Caution)	D40550400	134	18
Decal (Caution)	D40550400	136	18
Decal (Caution)	D40550400	194	18
Decal (Caution)	D40550400	196	18
Decal (Caution)	D40550400	198	18
Decal (Caution)	D40550400	200	18
Decal (Caution)	D40550400	202	18
Decal (Caution)	D40550400	204	18
Decal (Caution)	D40550400	206	18
Decal (Caution)	D40550500	124	12
Decal (Caution)	D40550500	126	12
Decal (Caution)	D40550500	128	12

*1 Note

https://truckmanualshub.com/

ALPHABETICAL INDEX

Parts Name	P/N	Page *1	Item
Decal (Caution)	D40550500	130	12
Decal (Caution)	D40550500	132	12
Decal (Caution)	D40550500	134	12
Decal (Caution)	D40550500	136	12
Decal (Caution)	D40550500	194	12
Decal (Caution)	D40550500	196	12
Decal (Caution)	D40550500	198	12
Decal (Caution)	D40550500	200	12
Decal (Caution)	D40550500	202	12
Decal (Caution)	D40550500	204	12
Decal (Caution)	D40550500	206	12
Decal (Caution)	D40550600	124	19
Decal (Caution)	D40550600	126	19
Decal (Caution)	D40550600	128	19
Decal (Caution)	D40550600	130	19
Decal (Caution)	D40550600	132	19
Decal (Caution)	D40550600	134	19
Decal (Caution)	D40550600	136	19
Decal (Caution)	D40550600	194	19
Decal (Caution)	D40550600	196	19
Decal (Caution)	D40550600	198	19
Decal (Caution)	D40550600	200	19
Decal (Caution)	D40550600	202	19
Decal (Caution)	D40550600	204	19
Decal (Caution)	D40550600	206	19
Decal (Safety Swing)	D40550700	124	10
Decal (Safety Swing)	D40550700	126	10
Decal (Safety Swing)	D40550700	128	10
Decal (Safety Swing)	D40550700	130	10
Decal (Safety Swing)	D40550700	132	10
Decal (Safety Swing)	D40550700	134	10
Decal (Safety Swing)	D40550700	136	10
Decal (Safety Swing)	D40550700	194	10
Decal (Safety Swing)	D40550700	196	10
Decal (Safety Swing)	D40550700	198	10
Decal (Safety Swing)	D40550700	200	10
Decal (Safety Swing)	D40550700	202	10
Decal (Safety Swing)	D40550700	204	10
Decal (Safety Swing)	D40550700	206	10
Decal (Caution)	D40550800	124	17
Decal (Caution)	D40550800	126	17
Decal (Caution)	D40550800	128	17
Decal (Caution)	D40550800	130	17
Decal (Caution)	D40550800	132	17
Decal (Caution)	D40550800	134	17
Decal (Caution)	D40550800	136	17
Decal (Caution)	D40550800	194	17
Decal (Caution)	D40550800	196	17
Decal (Caution)	D40550800	198	17
Decal (Caution)	D40550800	200	17
Decal (Caution)	D40550800	202	17
Decal (Caution)	D40550800	204	17

*1 Note

https://truckmanualshub.com/

ALPHABETICAL INDEX

Parts Name	P/N	Page *1	Item
Decal (Caution)	D40550800	206	17
Decal (Caution)	D40550900	124	14
Decal (Caution)	D40550900	126	14
Decal (Caution)	D40550900	128	14
Decal (Caution)	D40550900	130	14
Decal (Caution)	D40550900	132	14
Decal (Caution)	D40550900	134	14
Decal (Caution)	D40550900	136	14
Decal (Caution)	D40550900	194	14
Decal (Caution)	D40550900	196	14
Decal (Caution)	D40550900	198	14
Decal (Caution)	D40550900	200	14
Decal (Caution)	D40550900	202	14
Decal (Caution)	D40550900	204	14
Decal (Caution)	D40550900	206	14
Decal (Caution)	D40551000	194	26
Decal (Caution)	D40551000	196	32
Decal (Caution)	D40551000	198	32
Decal (Caution)	D40551000	200	32
Decal (Caution)	D40551000	202	32
Decal (Caution)	D40551000	204	32
Decal (Caution)	D40551000	206	32
Decal (Caution)	D40551100	124	11
Decal (Caution)	D40551100	126	11
Decal (Caution)	D40551100	128	11
Decal (Caution)	D40551100	130	11
Decal (Caution)	D40551100	132	11
Decal (Caution)	D40551100	134	11
Decal (Caution)	D40551100	136	11
Decal (Caution)	D40551100	194	11
Decal (Caution)	D40551100	196	11
Decal (Caution)	D40551100	198	11
Decal (Caution)	D40551100	200	11
Decal (Caution)	D40551100	202	11
Decal (Caution)	D40551100	204	11
Decal (Caution)	D40551100	206	11
Decal (For A, B, G)	D40551800	36	44-1
Decal (Caution)	D40555900	126	20
Decal (Caution)	D40555900	196	20
Decal (Caution)	D40557100	130	20
Decal (Caution)	D40557100	200	20
Decal (Caution)	D40557500	128	20
Decal (Caution)	D40557500	198	20
Decal (Caution)	D40558700	132	20
Decal (Caution)	D40558700	202	20
Decal (Caution)	D40559400	134	20
Decal (Caution)	D40559400	204	20
Decal	D40585700	236	1
Decal	D40585900	236	2
Decal	D40586700	236	3
Decal	D40586800	236	5
Decal (Oil)	D40600000	136	4

*1 Note

https://truckmanualshub.com/

ALPHABETICAL INDEX

Parts Name	P/N	Page *1	Item
Decal (Oil)	D40600000	206	4
Decal (Breaker Cation)	D40600200	136	26
Decal (Breaker Cation)	D40600200	206	26
Decal (Caution)	D40600500	136	20
Decal (Caution)	D40600500	206	20
Decal (Transport Fix)	D40600700	136	27
Decal (Transport Fix)	D40600700	206	27
Decal (Anti-Freezing Solution)	D40601200	136	21
Decal (Anti-Freezing Solution)	D40601200	206	21
Decal (Noise 97)	D40603200	126	30
Decal (Noise 97)	D40603200	128	30
Decal (Noise 97)	D40603200	130	30
Decal (Noise 97)	D40603200	132	30
Decal (Noise 97)	D40603200	134	30
Decal (Noise 97)	D40603200	136	30
Decal (Noise 97)	D40603200	196	30
Decal (Noise 97)	D40603200	198	30
Decal (Noise 97)	D40603200	200	30
Decal (Noise 97)	D40603200	202	30
Decal (Noise 97)	D40603200	204	30
Decal (Noise 97)	D40603200	206	30
Decal (Noise 97)(CE)	D40603200	124	37
Decal (Noise 97)(CE)	D40603200	194	37
Decal (Oil Check)	D40649000	122	5
Decal (Oil Check)	D40649000	192	5
Decal (T1)	D40649901	82	2-1
Decal (T2)	D40649902	82	5-1
Decal (T3)	D40649903	82	3-1
Decal (T4)	D40649904	82	6-1
Decal (Oil Check)	D40650400	124	5
Decal (Oil Check)	D40650400	194	5
Decal (Oil Check)	D40655000	130	5
Decal (Oil Check)	D40655000	200	5
Decal (Oil Check)	D40655400	128	5
Decal (Oil Check)	D40655400	198	5
Decal (Oil Check)	D40655800	126	5
Decal (Oil Check)	D40655800	196	5
Decal (Oil Check)	D40656200	134	5
Decal (Oil Check)	D40656200	204	5
Decal (Oil Check)	D40656500	132	5
Decal (Oil Check)	D40656500	202	5
Decal (Safety Works)	D40659700	122	9
Decal (Safety Works)	D40659700	192	9
Decal (Blade, Pedal)	D40660200	122	29
Decal (Blade, Pedal)	D40660200	124	29
Decal (Blade, Pedal)	D40660200	126	35
Decal (Blade, Pedal)	D40660200	128	35
Decal (Blade, Pedal)	D40660200	130	35
Decal (Blade, Pedal)	D40660200	132	35
Decal (Blade, Pedal)	D40660200	134	35

*1 Note

https://truckmanualshub.com/

ALPHABETICAL INDEX

Parts Name	P/N	Page *1	Item
Decal (Blade, Pedal)	D40660200	136	35
Decal (Control A)	D40660300	122	30
Decal (Control A)	D40660300	124	30
Decal (Control A)	D40660300	126	36
Decal (Control A)	D40660300	128	36
Decal (Control A)	D40660300	130	36
Decal (Control A)	D40660300	132	36
Decal (Control A)	D40660300	134	36
Decal (Control A)	D40660300	136	36
Decal (Control B)	D40660400	122	30-1
Decal (Control B)	D40660400	124	30-1
Decal (Control B)	D40660400	126	36-1
Decal (Control B)	D40660400	128	36-1
Decal (Control B)	D40660400	130	36-1
Decal (Control B)	D40660400	132	36-1
Decal (Control B)	D40660400	134	36-1
Decal (Control B)	D40660400	136	36-1
Decal (Control C)	D40660500	122	30-2
Decal (Control C)	D40660500	124	30-2
Decal (Control C)	D40660500	126	36-2
Decal (Control C)	D40660500	128	36-2
Decal (Control C)	D40660500	130	36-2
Decal (Control C)	D40660500	132	36-2
Decal (Control C)	D40660500	134	36-2
Decal (Control C)	D40660500	136	36-2
Decal (Control D)	D40660600	122	30-3
Decal (Control D)	D40660600	124	30-3
Decal (Control D)	D40660600	126	36-3
Decal (Control D)	D40660600	128	36-3
Decal (Control D)	D40660600	130	36-3
Decal (Control D)	D40660600	132	36-3
Decal (Control D)	D40660600	134	36-3
Decal (Control D)	D40660600	136	36-3
Decal (Control F)	D40660700	124	30-4
Decal (Control G)	D40660800	122	30-4
Decal (Control A-D)	D40660900	122	31
Decal (Control A-D)	D40660900	124	31
Decal (Control A-D)	D40660900	126	37
Decal (Control A-D)	D40660900	128	37
Decal (Control A-D)	D40660900	130	37
Decal (Control A-D)	D40660900	132	37
Decal (Control A-D)	D40660900	134	37
Decal (Control A-D)	D40660900	136	37
Decal (Control A, B, G)	D40661000	122	32
Decal (Control A)	D40662200	192	30
Decal (Control A)	D40662200	194	30
Decal (Control A)	D40662200	196	36
Decal (Control A)	D40662200	198	36
Decal (Control A)	D40662200	200	36
Decal (Control A)	D40662200	202	36
Decal (Control A)	D40662200	204	36
Decal (Control A)	D40662200	206	36

*1 Note

https://truckmanualshub.com/

ALPHABETICAL INDEX

Parts Name	P/N	Page *1	Item
Decal (Control B)	D40662300	192	30-1
Decal (Control B)	D40662300	194	30-1
Decal (Control B)	D40662300	196	36-1
Decal (Control B)	D40662300	198	36-1
Decal (Control B)	D40662300	200	36-1
Decal (Control B)	D40662300	202	36-1
Decal (Control B)	D40662300	204	36-1
Decal (Control B)	D40662300	206	36-1
Decal (Control C)	D40662400	192	30-2
Decal (Control C)	D40662400	194	30-2
Decal (Control C)	D40662400	196	36-2
Decal (Control C)	D40662400	198	36-2
Decal (Control C)	D40662400	200	36-2
Decal (Control C)	D40662400	202	36-2
Decal (Control C)	D40662400	204	36-2
Decal (Control C)	D40662400	206	36-2
Decal (Control D)	D40662500	192	30-3
Decal (Control D)	D40662500	194	30-3
Decal (Control D)	D40662500	196	36-3
Decal (Control D)	D40662500	198	36-3
Decal (Control D)	D40662500	200	36-3
Decal (Control D)	D40662500	202	36-3
Decal (Control D)	D40662500	204	36-3
Decal (Control D)	D40662500	206	36-3
Decal (Control F)	D40662600	194	30-4
Decal (Control G)	D40662700	192	30-4
Decal (Control A-D)	D40662800	192	31
Decal (Control A-D)	D40662800	194	31
Decal (Control A-D)	D40662800	196	37
Decal (Control A-D)	D40662800	198	37
Decal (Control A-D)	D40662800	200	37
Decal (Control A-D)	D40662800	202	37
Decal (Control A-D)	D40662800	204	37
Decal (Control A-D)	D40662800	206	37
Decal (Control A, B, G)	D40662900	192	32
Decal (Blade, Pedal)	D40663000	192	29
Decal (Blade, Pedal)	D40663000	194	29
Decal (Blade, Pedal)	D40663000	196	35
Decal (Blade, Pedal)	D40663000	198	35
Decal (Blade, Pedal)	D40663000	200	35
Decal (Blade, Pedal)	D40663000	202	35
Decal (Blade, Pedal)	D40663000	204	35
Decal (Blade, Pedal)	D40663000	206	35
Decal (Environment)	D40663100	122	23
Decal (Environment)	D40663100	192	23
Decal (Spare Piping Change)	D40672000	136	25
Decal (Spare Piping Change)	D40672000	206	25
Decal (Environment)	D40678300	124	22
Decal (Environment)	D40678300	126	22
Decal (Environment)	D40678300	128	22
Decal (Environment)	D40678300	130	22
Decal (Environment)	D40678300	132	22

*1 Note

https://truckmanualshub.com/

ALPHABETICAL INDEX

Parts Name	P/N	Page *1	Item
Decal (Environment)	D40678300	134	22
Decal (Environment)	D40678300	136	22
Decal (Environment)	D40678300	194	22
Decal (Environment)	D40678300	196	22
Decal (Environment)	D40678300	198	22
Decal (Environment)	D40678300	200	22
Decal (Environment)	D40678300	202	22
Decal (Environment)	D40678300	204	22
Decal (Environment)	D40678300	206	22
Decal (Oil Check)	D40681100	136	5
Decal (Oil Check)	D40681100	206	5
Decal	D40682700	236	12
Pad, Rubber	D40693000	164	51
Pad, Rubber	D40693100	164	52
Decal (Safety Works)	D40701600	136	8
Decal (Safety Works)	D40701600	206	8
Decal (Safety Works)	D40701700	132	8
Decal (Safety Works)	D40701700	202	8
Decal (Spare Pedal)	D40705600	192	37
Decal (Y1)	D40712501	164	36-1
Decal (Y1)	D40712501	164	41-1
Decal (Y2)	D40712502	164	35-1
Decal (Y2)	D40712502	164	42-1
Decal (BA)	D40781801	88	4-1
Decal (BB)	D40781802	88	5-1
Decal (BP)	D40781803	32	49-1
Decal (BP)	D40781803	36	49-1
Decal (BP)	D40781803	40	49-1
Decal (BT)	D40781804	32	16-1
Decal (BT)	D40781804	36	16-1
Decal (BT)	D40781804	40	16-1
Decal (Light)	D40781900	142	19
Decal	D40782000	190	27
Decal	D40782300	142	28
Decal (Throttle)	D40782900	142	32
Decal (EPA Regulation)	D40794300	122	25
Decal (EPA Regulation)	D40794300	124	25
Decal (EPA Regulation)	D40794300	126	31
Decal (EPA Regulation)	D40794300	128	31
Decal (EPA Regulation)	D40794300	130	31
Decal (EPA Regulation)	D40794300	132	31
Decal (EPA Regulation)	D40794300	134	31
Decal (EPA Regulation)	D40794300	136	31
Decal (EPA Regulation)	D40794300	192	25
Decal (EPA Regulation)	D40794300	194	25
Decal (EPA Regulation)	D40794300	196	31
Decal (EPA Regulation)	D40794300	198	31
Decal (EPA Regulation)	D40794300	200	31
Decal (EPA Regulation)	D40794300	202	31
Decal (EPA Regulation)	D40794300	204	31
Decal (EPA Regulation)	D40794300	206	31
Decal	D40796300	142	42

*1 Note

https://truckmanualshub.com/

ALPHABETICAL INDEX

Parts Name	P/N	Page *1	Item
Decal	D40796400	142	43
Decal	D40796500	142	37
Decal	D40796600	142	46
Decal	D40796700	142	47
Decal	D40796800	142	48
Decal	D40802000	236	8
Decal	D40802100	236	7
Decal	D40803800	236	11
Decal	D40820500	216	16
Decal	D40828000	142	23
Seal	D40828100	84	42
Decal	D40828500	142	41
Decal	D40829200	138	44
Decal (Lub. Chart)	D40831300	122	6
Decal (Lub. Chart)	D40831300	192	6
Decal (Specification)	D40831900	122	33
Decal (Specification)	D40831900	192	33
Decal (Bucket Specification)	D40832100	122	34
Decal (Bucket Specification)	D40832100	192	34
Decal (Boom Lowering)(CE)	D40832200	124	34
Decal (Boom Lowering)(CE)	D40832200	194	34
Decal (Oil)	D40832400	122	4
Decal (Oil)	D40832400	192	4
Decal (Engine Daily Check)	D40832500	122	8
Decal (Engine Daily Check)	D40832500	192	8
Decal (Engine Daily Check)	D40832600	124	7
Decal (Engine Daily Check)	D40832600	194	7
Decal (Engine Daily Check)	D40832700	128	7
Decal (Engine Daily Check)	D40832700	198	7
Decal (Tank Decompression)	D40832800	122	10
Decal (Tank Decompression)	D40832800	192	10
Decal (Engine Daily Check)	D40832900	130	7
Decal (Engine Daily Check)	D40832900	200	7
Decal (Engine Daily Check)	D40833000	132	7
Decal (Engine Daily Check)	D40833000	202	7
Decal (Engine Daily Check)	D40833100	134	7
Decal (Engine Daily Check)	D40833100	204	7
Decal (Engine Daily Check)	D40833200	126	7
Decal (Engine Daily Check)	D40833200	196	7
Decal (Engine Daily Check)	D40833300	136	7
Decal (Engine Daily Check)	D40833300	206	7
Decal (Boom Lowering)	D40833400	128	24
Decal (Boom Lowering)	D40833400	198	24
Decal (Boom Lowering)	D40833500	130	24
Decal (Boom Lowering)	D40833500	200	24
Decal (Boom Lowering)	D40833600	132	24
Decal (Boom Lowering)	D40833600	202	24
Decal (Boom Lowering)	D40833700	134	24
Decal (Boom Lowering)	D40833700	204	24
Decal (Boom Lowering)	D40833800	126	24

*1 Note

https://truckmanualshub.com/

ALPHABETICAL INDEX

Parts Name	P/N	Page *1	Item
Decal (Boom Lowering)	D40833800	196	24
Decal (Boom Lowering)	D40833900	136	24
Decal (Boom Lowering)	D40833900	206	24
Decal (Lifting Procedures)(CE)	D40834700	124	36
Decal (Lifting Procedures)(CE)	D40834700	194	36
Decal (Lifting Procedures)	D40834800	128	28
Decal (Lifting Procedures)	D40834800	198	28
Decal (Lifting Procedures)	D40834900	130	28
Decal (Lifting Procedures)	D40834900	200	28
Decal (Lifting Procedures)	D40835000	132	28
Decal (Lifting Procedures)	D40835000	202	28
Decal (Lifting Procedures)	D40835100	134	28
Decal (Lifting Procedures)	D40835100	204	28
Decal (Lifting Procedures)	D40835200	126	28
Decal (Lifting Procedures)	D40835200	196	28
Decal (Lifting Procedures)	D40835300	136	28
Decal (Lifting Procedures)	D40835300	206	28
Decal (Spare Pedal)	D40835400	122	37
Decal (Lub. Chart)	D40835500	124	6
Decal (Lub. Chart)	D40835500	194	6
Decal (Lub. Chart)	D40835600	128	6
Decal (Lub. Chart)	D40835600	198	6
Decal (Lub. Chart)	D40835700	130	6
Decal (Lub. Chart)	D40835700	200	6
Decal (Lub. Chart)	D40835800	132	6
Decal (Lub. Chart)	D40835800	202	6
Decal (Lub. Chart)	D40835900	134	6
Decal (Lub. Chart)	D40835900	204	6
Decal (Lub. Chart)	D40836000	126	6
Decal (Lub. Chart)	D40836000	196	6
Decal (Lub. Chart)	D40836100	136	6
Decal (Lub. Chart)	D40836100	206	6
Plate, Nonslip	D40837000	122	26
Plate, Nonslip	D40837000	124	26
Plate, Nonslip	D40837000	126	32
Plate, Nonslip	D40837000	128	32
Plate, Nonslip	D40837000	130	32
Plate, Nonslip	D40837000	132	32
Plate, Nonslip	D40837000	134	32
Plate, Nonslip	D40837000	136	32
Decal (Reflector)	D40837100	122	24
Decal (Reflector)	D40837100	124	23
Decal (Reflector)	D40837100	126	23
Decal (Reflector)	D40837100	128	23
Decal (Reflector)	D40837100	130	23
Decal (Reflector)	D40837100	132	23
Decal (Reflector)	D40837100	134	23
Decal (Reflector)	D40837100	136	23
Decal (Reflector)	D40837100	192	24
Decal (Reflector)	D40837100	194	23

*1 Note

https://truckmanualshub.com/

ALPHABETICAL INDEX

Parts Name	P/N	Page *1	Item
Decal (Reflector)	D40837100	196	23
Decal (Reflector)	D40837100	198	23
Decal (Reflector)	D40837100	200	23
Decal (Reflector)	D40837100	202	23
Decal (Reflector)	D40837100	204	23
Decal (Reflector)	D40837100	206	23
Decal (For Rops)	D40837500	114	11
Decal (For Tops)	D40837600	114	10
Decal	D40837908	236	9
Decal	D40839400	236	10
Decal	D40839500	236	10-1
Decal	D40839600	236	4
Decal (IHI)	D40840200	122	27
Decal (IHI)	D40840200	124	27
Decal (IHI)	D40840200	126	33
Decal (IHI)	D40840200	128	33
Decal (IHI)	D40840200	130	33
Decal (IHI)	D40840200	132	33
Decal (IHI)	D40840200	134	33
Decal (IHI)	D40840200	136	33
Decal (IHI)	D40840200	192	27
Decal (IHI)	D40840200	194	27
Decal (IHI)	D40840200	196	33
Decal (IHI)	D40840200	198	33
Decal (IHI)	D40840200	200	33
Decal (IHI)	D40840200	202	33
Decal (IHI)	D40840200	204	33
Decal (IHI)	D40840200	206	33
Decal (IHI)	D40840300	122	28
Decal (IHI)	D40840300	124	28
Decal (IHI)	D40840300	126	34
Decal (IHI)	D40840300	128	34
Decal (IHI)	D40840300	130	34
Decal (IHI)	D40840300	132	34
Decal (IHI)	D40840300	134	34
Decal (IHI)	D40840300	136	34
Decal (IHI)	D40840300	192	28
Decal (IHI)	D40840300	194	28
Decal (IHI)	D40840300	196	34
Decal (IHI)	D40840300	198	34
Decal (IHI)	D40840300	200	34
Decal (IHI)	D40840300	202	34
Decal (IHI)	D40840300	204	34
Decal (IHI)	D40840300	206	34
Decal (Model)	D40840900	122	1
Decal (Model)	D40840900	124	1
Decal (Model)	D40840900	126	1
Decal (Model)	D40840900	128	1
Decal (Model)	D40840900	130	1
Decal (Model)	D40840900	132	1
Decal (Model)	D40840900	134	1
Decal (Model)	D40840900	136	1

*1 Note

https://truckmanualshub.com/

ALPHABETICAL INDEX

Parts Name	P/N	Page *1	Item
Decal (Model)	D40840900	192	1
Decal (Model)	D40840900	194	1
Decal (Model)	D40840900	196	1
Decal (Model)	D40840900	198	1
Decal (Model)	D40840900	200	1
Decal (Model)	D40840900	202	1
Decal (Model)	D40840900	204	1
Decal (Model)	D40840900	206	1
Decal (Model)	D40841800	122	2
Decal (Model)	D40841800	124	2
Decal (Model)	D40841800	126	2
Decal (Model)	D40841800	128	2
Decal (Model)	D40841800	130	2
Decal (Model)	D40841800	132	2
Decal (Model)	D40841800	134	2
Decal (Model)	D40841800	136	2
Decal (Model)	D40841800	192	2
Decal (Model)	D40841800	194	2
Decal (Model)	D40841800	196	2
Decal (Model)	D40841800	198	2
Decal (Model)	D40841800	200	2
Decal (Model)	D40841800	202	2
Decal (Model)	D40841800	204	2
Decal (Model)	D40841800	206	2
Decal (Tank Decompression)	D40842400	124	9
Decal (Tank Decompression)	D40842400	194	9
Decal (Tank Decompression)	D40842500	128	9
Decal (Tank Decompression)	D40842500	198	9
Decal (Tank Decompression)	D40842600	130	9
Decal (Tank Decompression)	D40842600	200	9
Decal (Tank Decompression)	D40842700	132	9
Decal (Tank Decompression)	D40842700	202	9
Decal (Tank Decompression)	D40842800	134	9
Decal (Tank Decompression)	D40842800	204	9
Decal (Tank Decompression)	D40842900	126	9
Decal (Tank Decompression)	D40842900	196	9
Decal (Tank Decompression)	D40843000	136	9
Decal (Tank Decompression)	D40843000	206	9
Decal (Capacities Table)	D40843700	128	20-1
Decal (Capacities Table)	D40843700	198	20-1
Decal	D40844700	142	24
Decal	D40863700	236	6
Bracket	D41431400	230	2
Bracket	D41670100	208	1
Bracket	D41678900	20	3
Bracket	D41691500	164	48
Bracket	D41704100	138	17
Bracket	D41813900	84	44
Bracket	D41819000	84	14
Bracket	D41830200	84	12
Bracket	D41830400	142	30
Bracket	D41845500	176	2

*1 Note

https://truckmanualshub.com/

ALPHABETICAL INDEX

Parts Name	P/N	Page *1	Item
Bracket	D41845600	232	3
Bracket	D41856400	106	38
Bracket	D41858300	40	68
Bracket	D41863000	214	3
Bracket	D41863200	214	2
Bracket	D41863200	232	4
Bracket	D41868800	212	2
Bracket	D41868900	212	3
Bracket, Boom Swing	D41872100	152	1
Bracket	D41875600	156	10
Bracket	D41881300	164	11
Bracket	D41881300	170	11
Bracket	D41881500	170	25
Bracket	D41883600	100	13
Bracket	D41886800	96	4
Bracket	D41890800	104	3
Bracket	D41890900	104	4
Bracket	D41894300	32	12
Bracket	D41894300	36	12
Bracket	D41894300	40	12
Bracket	D41894400	32	13
Bracket	D41894400	36	13
Bracket	D41894400	40	13
Bracket	D41894500	104	20
Bracket	D41894800	32	39
Bracket	D41894800	36	39
Bracket	D41894800	40	39
Bracket	D41897000	106	28
Bracket	D41906000	24	39
Bracket	D41912200	32	66
Bracket	D41916100	214	5
Bracket	D41919300	222	3
Bracket	D41919500	100	51
Bracket	D41920300	224	19
Bracket	D41920400	224	3
Bracket	D41920600	220	9
Bracket	D41920700	224	20
Bracket	D41920800	224	4
Bracket	D41921900	100	14
Bracket	D41922900	142	13
Bracket	D41925600	92	3
Bracket	D41925700	92	5
Bracket	D41925800	92	2
Bracket	D41925900	92	4
Bracket	D41926500	100	26
Bracket	D41927300	90	2
Bracket	D41927600	106	15
Bracket	D41928600	88	22
Bracket	D41928900	96	26
Bracket	D41929400	96	3
Bracket	D41930800	84	11
Bracket	D41931300	138	40

*1 Note

https://truckmanualshub.com/

ALPHABETICAL INDEX

Parts Name	P/N	Page *1	Item
Bracket	D41932300	104	5
Bracket	D41934200	82	24
Bracket	D41934300	82	28
BRACKET	D41934400	118	3
Bracket	D41934700	90	26
Bracket	D41934900	218	4
Bracket	D41935500	234	4-1
Bracket	D41935600	222	2
Bracket	D41935700	234	4
Bracket	D41935900	216	2
Bracket	D41936000	82	14
Bracket	D41937000	218	24
Bracket	D41945000	106	14
Bracket	D41947200	190	2
Bracket	D41947700	142	51
Bracket	D41949000	30	16
Bracket	D41949600	96	30
Bracket	D41954200	104	2
Bracket	D41954400	100	51-1
Bracket	D41955100	82	19
Bracket	D41958000	142	4
Plate, Rubber	D43349600	100	9
Plate, Rubber	D43350300	90	21
Plate, Rubber	D43350400	100	19
Canopy	D44800500	116	1
Bracket	D45220700	216	3
Cover	D45573700	230	3
Cover	D45690800	160	5
Cover	D45712700	232	9
Cover	D45805900	104	26
Cover	D45806000	104	27
Cover	D45807200	106	10
Cover	D45814900	190	3
Cover	D45818400	6	5
Cover	D45823600	106	33
Cover	D45825700	104	19
Cover	D45825900	104	1
Cover	D45826900	138	1
Cover	D45827400	92	40
Cover	D45827900	106	2
Cover	D45828800	104	28
Cover	D45829100	106	48
Cover	D45841100	92	38
Cover	D45841300	224	5
Cover	D45841700	106	47
Cover	D45843200	92	39
Cover	D45843400	156	28
Cover	D45843600	106	39
Cover	D45844100	148	8
Cover	D45844400	156	27
Cover	D45844500	92	7
Cover	D45846100	106	40

*1 Note

https://truckmanualshub.com/

ALPHABETICAL INDEX

Parts Name	P/N	Page *1	Item
Cover	D45846400	92	41
Cover	D45846800	104	29
Cover	D45849700	234	5
Cover	D45850100	106	52
Cover	D45850200	106	53
Cover (For A/C)	D45850300	92	62
Cover (For A/C)	D45850400	92	63
Cover	D45850800	216	6
Cover	D45851400	106	51
Cover	D45851500	106	58
Cover	D45851600	106	55
Cover	D45856800	106	54
Cover	D45858000	106	56
Cover	D45858100	106	57
Cover	D45863400	106	1
Panel	D46531300	142	14
Panel	D46531400	142	15
Panel	D46531800	84	3
Panel	D46531900	84	4
Panel	D46535800	190	4
Panel	D46538000	142	2
Panel	D46538100	142	3
Duct	D46538200	216	4
Panel	D46538300	216	5
Guard	D47070000	116	4
Guard	D47080500	114	1
Guard	D47080500	116	3
Guide	D47505200	148	9
Rest, Arm	D48000900	84	43
Holder	D48102200	92	6
Link, Arm (L.H.)	D49018600	148	5
Link, Bucket	D49037300	148	7
Link, Arm (R.H.)	D49037400	148	6
Link, Backet	D49044300	228	4
Panel, Sponge	D49343400	110	15
Panel, Sponge	D49343901	190	14
Panel, Sponge	D49346200	110	18
Panel, Sponge	D49346300	110	19
Panel, Sponge	D49347800	110	20
Panel, Sponge	D49348000	110	22
Panel, Sponge	D49348100	110	23
Panel, Sponge	D49348200	110	24
Panel, Sponge	D49348300	110	25
Panel, Sponge	D49348400	110	26
Panel, Sponge	D49350300	96	27
Panel, Sponge	D49350400	96	28
Panel, Sponge	D49350700	92	44
Panel, Sponge	D49351600	110	44
Panel, Sponge	D49351900	110	45
Panel, Sponge	D49352800	110	8
Panel, Sponge	D49352900	110	9
Panel, Sponge	D49353000	110	10

*1 Note

https://truckmanualshub.com/

ALPHABETICAL INDEX

Parts Name	P/N	Page *1	Item
Panel, Sponge	D49353500	110	4
Panel, Sponge	D49354100	110	36
Panel, Sponge	D49359900	110	6
Panel, Sponge	D49360000	110	7
Panel, Sponge	D49360100	110	5
Panel, Sponge	D49361400	92	55
Panel, Sponge	D49362200	110	3
Panel, Sponge	D49362400	92	45
Panel, Sponge	D49362500	92	46
Panel, Sponge	D49362600	190	21
Panel, Sponge	D49363600	100	7
Panel, Sponge	D49363700	110	34
Panel, Sponge	D49363800	110	2
Panel, Sponge	D49364000	110	16
Panel, Sponge	D49364100	110	11
Panel, Sponge	D49364200	110	13
Panel, Sponge	D49364300	110	14
Panel, Sponge	D49364400	100	8
Panel, Sponge	D49364500	100	20
Panel, Sponge	D49365000	100	21
Panel, Sponge	D49365400	110	21
Panel, Sponge	D49365500	110	35
Panel, Sponge	D49365600	110	42
Panel, Sponge	D49365700	92	9
Panel, Sponge	D49365800	92	27
Panel, Sponge	D49365900	92	28
Panel, Sponge	D49366000	92	43
Panel, Sponge	D49366100	92	54
Panel, Sponge	D49366200	92	42
Panel, Sponge	D49366300	92	52
Panel, Sponge	D49366500	92	58
Panel, Sponge	D49366700	110	38
Panel, Sponge	D49366800	24	4
Panel, Sponge	D49367900	110	28
Panel, Sponge	D49368000	110	29
Panel, Sponge	D49368100	110	43
Panel, Sponge	D49368200	110	46
Panel, Sponge	D49368400	110	41
Panel, Sponge	D49368500	110	1
Panel, Sponge	D49368600	110	12
Panel, Sponge	D49368700	110	32
Panel, Sponge	D49368900	110	33
Panel, Sponge	D49369200	110	37
Panel, Sponge	D49369300	110	39
Seal, Sponge	D49369400	216	17
Panel, Sponge	D49369600	110	48
Panel, Sponge	D49369800	110	49
Panel, Sponge	D49369900	110	50
Panel, Sponge (For A/C)	D49370000	92	64
Panel, Sponge	D49372100	110	47
Panel, Sponge	D49373200	190	22
Panel, Sponge	D49373300	110	51

*1 Note

https://truckmanualshub.com/

ALPHABETICAL INDEX

Parts Name	P/N	Page *1	Item
Lever	D49557700	84	32
Lever	D49577400	84	13
Lever	D49580800	88	12
Lever	D49581000	90	14
Lever	D49583000	90	4
Lever (L.H.)	D49583800	82	12
Lever (R.H.)	D49583900	82	13
Lever	D49584300	84	49
Pedal	D50105700	82	22
Pedal	D50105800	82	27
Pedal	D50105900	164	47
Pedal	D50107500	88	23
Pedal	D50107600	82	23
Indicator	D52500400	96	25-3
Cap	D52800500	142	25
Cap	D52800500	142	35
Cap	D52800600	142	18
Seal	D55001900	32	48
Seal	D55001900	36	48
Seal	D55001900	40	48
Seal	D55006300	100	6
Seal	D55100601	106	36
Seal	D55100602	106	37
Seal	D55100701	110	17
Panel, Sponge	D55100801	110	40
Seal, Sponge	D55100901	216	18
Seal, Sponge	D55100902	216	19
Seal, Sponge	D55100903	216	20
Seal	D55100904	106	45
Seal	D55100905	106	46
Panel, Sponge	D55100906	110	30
Panel, Sponge	D55100907	110	31
Seal, Sponge	D55101001	216	21
Seal, Sponge	D55101002	216	22
Pad	D58016300	156	29
Pad	D58017000	30	2
Pad	D58018400	30	3
Mat (For Canopy)	D58119100	118	1
Mat (For Canopy, Pedal)	D58120300	118	1-1
Mat (For Cabin)	D58120400	118	1-2
Mat (For Cabin, Pedal)	D58120500	118	1-3
Pipe, Tail	D58414100	96	1
Harness	D59216100	210	1
Cable, Battery	D59219402	138	14
Band, Earth	D59219503	138	15
Harness	D59220600	142	44
Harness	D59228500	138	42
Harness, Main	D59228800	138	12
Harness	D59229000	84	39
Harness	D59230400	232	1
Harness	D59230500	232	2
Harness	D59230700	218	1

*1 Note

https://truckmanualshub.com/

ALPHABETICAL INDEX

Parts Name	P/N	Page *1	Item
Harness	D59230900	190	23
Idler Ass'y, Front	F30068600	12	0
Attachment Ass'y, Blade	F30101900	160	0
Frame Ass'y, Swing	F31135800	20	0
Swing Drive Device	F32025100	22	0
Bearing Ass'y, Swing	F32025800	20	0-1
Air Cleaner & Muffler Ass'y	F33067600	96	0
Engine & Accessories	F33067600	92	0
Drive Device, Oil Pump	F33067700	98	0
Engine & Accessories	F33067800	92	0-1
Tank Ass'y, Fuel	F33731800	100	0
Piping Ass'y, Fuel	F33732100	100	0-1
Piping Ass'y, Hydraulic	F34259800	222	0
Valve Ass'y, Holding	F34262400	224	0-1
Valve Ass'y, Holding	F34262500	224	0
Tank Ass'y, Hydraulic Oil	F34263900	60	0
Control Ass'y, Blade & Boom Swing	F34264000	88	0
Lever Ass'y, Travel	F34264000	82	0
Piping Ass'y, Control	F34264000	32	0
Piping Ass'y, Control	F34264000	36	0
Piping Ass'y, Control	F34264000	40	0
Piping Ass'y, Blade	F34264700	162	0
Piping Ass'y, Lower Travel	F34264700	18	0
Piping Ass'y, Hoe Attachment	F34265000	156	0
Piping Ass'y, Blade	F34265100	162	0-1
Piping Ass'y, Hoe Attachment	F34265100	156	0-1
Piping Ass'y, Pump Discharge & Boom Swing	F34265100	30	0
Piping Ass'y, Return & Suction	F34265100	24	0
Piping Ass'y, Swing & Travel	F34265100	28	0
Piping Ass'y, First Spare	F34266500	164	0
Piping Ass'y, Second Spare	F34266500	168	0
Piping Ass'y, Third Spare	F34266500	170	0
Accumulator Ass'y	F34267600	174	0
Mat Ass'y	F35320600	118	0-3
Cabin (Dark Grey)	F35481000	178	1
Mirror Ass'y	F35503700	208	0
Accessories Ass'y	F35510200	138	0-1
Room Ass'y, Operator	F35518200	176	0
Seat Ass'y, Operator	F35518300	118	0-1
Seat Ass'y, Operator (W/Suspension)	F35518400	118	0
Seat Ass'y, Operator	F35518500	118	0-2
Absorbent Ass'y, Noise	F35519000	110	0
Cover Ass'y	F35519000	104	0
Cover Ass'y	F35519000	106	0
Seat Ass'y, Operator	F35519600	118	0-3

*1 Note

https://truckmanualshub.com/

ALPHABETICAL INDEX

Parts Name	P/N	Page *1	Item
Canopy Ass'y	F35519700	116	0
Canopy Ass'y (For Rops)	F35521100	114	0
Canopy Ass'y (For Tops/Rops)	F35522100	114	0-1
Heater Ass'y, Car	F35523100	190	0
Control Ass'y, Engine	F36169700	90	0
Panel Ass'y, Instrument	F36170600	142	0
Panel Ass'y, Instrument	F36170700	142	0-1
Absorbent Ass'y, Noise	F36172200	110	0-1
Cover Ass'y	F36172200	104	0-1
Cover Ass'y	F36172200	106	0-1
Lever Ass'y, Control	F36172200	84	0
Lever Ass'y, Travel	F36172200	82	0-1
Light Ass'y, Revolving	F36620100	232	11
Immobilizer Ass'y	F36679200	212	0
Battery Ass'y	F36682100	138	0-2
Electrical System	F36687900	232	0
Electrical System	F36688900	138	0
Angle Detector	F37034000	230	0
Controller Ass'y	F37034200	234	0
Weight Ass'y, Counter	F37322000	120	0
Decal Ass'y	F37785100	122	0
Decal Ass'y	F37785100	124	0
Decal Ass'y	F37785100	126	0
Decal Ass'y	F37785100	128	0
Decal Ass'y	F37785100	130	0
Decal Ass'y	F37785100	132	0
Decal Ass'y	F37785100	134	0
Decal Ass'y	F37785100	136	0
Decal Ass'y	F37785300	192	0
Decal Ass'y	F37785300	194	0
Decal Ass'y	F37785300	196	0
Decal Ass'y	F37785300	198	0
Decal Ass'y	F37785300	200	0
Decal Ass'y	F37785300	202	0
Decal Ass'y	F37785300	204	0
Decal Ass'y	F37785300	206	0
Decal Ass'y	F37785400	122	0-1
Decal Ass'y	F37785400	124	0-1
Decal Ass'y	F37785400	126	0-1
Decal Ass'y	F37785400	128	0-1
Decal Ass'y	F37785400	130	0-1
Decal Ass'y	F37785400	132	0-1
Decal Ass'y	F37785400	134	0-1
Decal Ass'y	F37785400	136	0-1
Decal Ass'y	F37785500	192	0-1
Decal Ass'y	F37785500	194	0-1
Decal Ass'y	F37785500	196	0-1
Decal Ass'y	F37785500	198	0-1
Decal Ass'y	F37785500	200	0-1
Decal Ass'y	F37785500	202	0-1
Decal Ass'y	F37785500	204	0-1

*1 Note

https://truckmanualshub.com/

ALPHABETICAL INDEX

Parts Name	P/N	Page *1	Item
Decal Ass'y	F37785500	206	0-1
Decal Ass'y	F37785600	122	0-2
Decal Ass'y	F37785600	192	0-2
Decal Ass'y	F37786000	236	0
Piping, Ass'y Air Conditioner	F38539400	220	0
Air Conditioner Ass'y (1)	F38539600	216	0
Air Conditioner Ass'y (2)	F38540000	218	0
Light Ass'y	F38540200	214	0
Bucket Ass'y, Hoe (Reinforced, 0.16m3)	F38825402	154	0-5
Bucket Ass'y, Hoe (0.14m3)	F38825501	154	0-3
Bucket Ass'y, Hoe (0.08m3)	F38825502	154	0-1
Bucket Ass'y, Hoe (0.11m3)	F38825503	154	0-2
Bucket Ass'y, Hoe (0.16m3)	F38825504	154	0-4
Bucket Ass'y, Hoe (0.18m3)	F38825505	154	0
Bucket Ass'y, Hoe (0.16m3)	F38825602	154	0-6
Attachment Ass'y, Hoe	F38838700	148	0
Piping Ass'y, Pump Discharge & Boom Swing	F38838800	30	0-1
Swing Ass'y, Boom	F38838800	152	0
Block Ass'y, Hook	F41812800	228	0
Alarm Device, Travvel	F43227700	210	0
Washer, Rubber	F77131500	218	27
Cartridge, Fuel Filter	K1522143170	2	30
Cartridge, Fuel Filter	K1522143170	100	56
Relay, Timer	K1569465992	138	51
Switch, Oil Pressure	K1584139010	2	38
Joint, Pipe	K1749042360	100	58
Solenoid, Stop	K1A02160017	2	37
Belt, V	K1G38297010	2	35
Tank, Surge	K1G64272401	92	61
Thermostat	K1G92473010	2	36
Sensor, Thermo	K1J00283040	2	39
Controller	K1K53365660	2	34
Relay	K1K57460220	2	33
Relay, Starter	K1K57460221	138	50
Filter, Oil	KHH16432430	2	31
Pump, Fuel	KR140151352	2	32
Pump, Fuel	KR140151352	100	57
＊＊＊＊＊	ZG00451	2	45
＊＊＊＊＊	ZG00452	2	45-1
＊＊＊＊＊	ZG00453	2	45-2
＊＊＊＊＊	ZG00501	2	46
＊＊＊＊＊	ZG00502	2	46-1
＊＊＊＊＊	ZG00503	2	46-2
＊＊＊＊＊	ZG10100	2	43

*1 Note

https://truckmanualshub.com/

[Memo]

https://truckmanualshub.com/

初版発行

不許複製

Published,

60V4

パーツカタログ
PARTS CATALOG

編集及び発行所

IHI建機株式会社　設計部　技術管理Ｇ

Editing & Publishing Office

IHI Construction Machinery Limited
Design Department

〒236-8611　神奈川県横浜市金沢区昭和町 3174
3174 Syowa-machi, Kanazawa-ku, Yokohama, Kanagawa, 236-8611, Japan

https://truckmanualshub.com/