Operation & Maintenance Manual

UEAM003700

PW200-7K
PW220-7K

WHEELED EXCAVATOR

SERIAL NUMBER

PW200-7K - K40146 and up
PW220-7K - K40146 and up

WARNING

Unsafe use of this machine may cause serious injury or death. Operators and maintenance personnel must read this manual before operating or maintaining this machine. This manual should be kept inside the cab for reference and periodically reviewed by all personnel who will come into contact with the machine.

KOMATSU

FOREWORD

This manual provides rules and guidelines which will help you use this machine safely and effectively. Keep this manual handy and have all personnel read it periodically. If this manual has been lost or has become dirty and can not be read, request a replacement manual from Komatsu or your Komatsu distributor.

If you sell the machine, be sure to give this manual to the new owners.

Continuing improvements in the design of this machine can lead to changes in detail which may not be reflected in this manual. Consult Komatsu or your Komatsu distributor for the latest available information for your machine or for questions regarding information in this manual.

⚠ WARNING

- **This operation & maintenance manual may contain attachments and optional equipment that are not available in your area. Please consult your local Komatsu distributor for those items you require.**
- **This machine complies with EC directive (89/392/EEC). Machines complying with this directive display the CE mark**
- **Improper operation and maintenance of this machine can be hazardous and could result in serious injury or death.**
- **Operators and maintenance personnel should read this manual thoroughly before beginning operation or maintenance.**
- **Some actions involved in operation and maintenance of the machine can cause a serious accident, if they are not done in a manner described in this manual.**
- **The procedures and precautions given in this manual apply only to intended uses of the machine. If you use your machine for any unintended uses that are not specifically prohibited, you must be sure that it is safe for you and others. In no event should you or others engage in prohibited uses or actions as described in this manual.**
- **Komatsu delivers machines that comply with all applicable regulations and standards of the country to which it has been shipped. If this machine has been purchased in another country or purchased from someone in another country, it may lack certain safety devices and specifications that are necessary for use in your country. If there is any question about whether your product complies with the applicable standards and regulations of your country, consult Komatsu or your Komatsu distributor before operating the machine.**
- **The description of safety is given, see "SAFETY INFORMATION (4)" and in "SAFETY" from page 19.**

SAFETY INFORMATION

SAFETY MESSAGES

Most accidents are caused by the failure to follow fundamental safety rules for the operation and maintenance of machines.

To avoid accidents, read, understand and follow all precautions and warnings in this manual and on the machine before performing operation and maintenance.

To identify hazards on the machine pictorial decals are used (see POSITION FOR ATTACHING SAFETY LABELS).

RED WARNING TRIANGLE - This is used on safety labels where there is a high probability of serious injury or death if the hazard is not avoided. These safety messages or labels usually describe precautions that must be taken to avoid the hazard. Failure to avoid this hazard may also result in serious damage to the machine.

ORANGE WARNING TRIANGLE - This is used on safety labels where there is a potentially dangerous situation which could result in serious injury or death if the hazard is not avoided. These safety messages or labels usually describe precautions that must be taken to avoid the hazard. Failure to avoid this hazard may also result in serious damage of the machine

YELLOW SAFETY TRIANGLE - This is used on safety labels for hazards which could result in minor or moderate injury if the hazard is not avoided. This word might also be used for a hazard where the only result could be damage to the machine.

NOTICE - This word is used for precautions that must be taken to avoid actions which could shorten the life of the machine.

Safety precautions are described in SAFETY from page 19.

Komatsu cannot predict every circumstance that might involve a potential hazard in operation and maintenance. Therefore the safety message in this manual and on the machine may not include all possible safety precautions. If any procedures or actions not specifically recommended or allowed in this manual are used, you must be sure that you and others can do such procedures and actions safely and without damaging the machine. If you are unsure about the safety of some procedures, contact Komatsu or your Komatsu distributor.

NOISE

- Sound pressure level at the operator's station, measured according to ISO6396 (Dynamic test method, simulated working cycle).

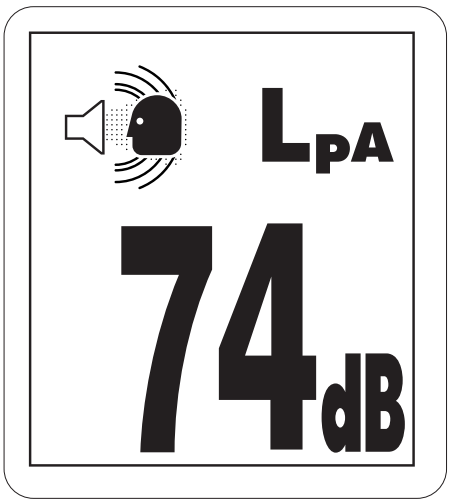

- Sound power level emitted. This is the guaranteed value as specified in the European directive 2000/14/EC

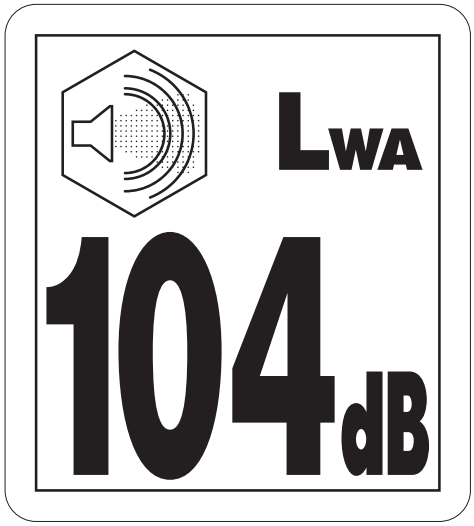

VIBRATION

- The weighted root mean square acceleration value to which the operator's arms are subjected does not exceed 2.5 m/s²
- The weighted root mean square acceleration value to which the operator's body is subjected was measured at 0.64 m/s²

These results were obtained by accelerometers during trench digging.

EMERGENCY STEERING

This machine is equipped with an emergency steering system and complies to ISO 5010 (BSEN 12643). In the advent of failure of the source of power for the steering system (engine failure) whilst travelling, the machine can be steered allowing the machine to be safely stopped.

In such a case, the effort required at the steering wheel and the number of turns to steer the machine will increase. To confirm function of emergency steering system, raise the front wheels off the ground (using the work equipment) and with the engine off, turn the steering wheel and check movement of the wheels.

EMERGENCY BRAKING

This machine is equipped with an emergency braking system and complies to ISO 3450. In the advent of failure of the source of power for the braking system (engine failure) whilst travelling, the brakes can be actuated from stored energy in the accumulators to bring the machine safely to a stop.

In such a case, seven brake applications can be made before exhausting the energy in the accumulators. In the advent of service brake failure, the park brake can be used as an emergency brake to bring the machine to a stop.

INTRODUCTION

INTENDED USE

This Komatsu HYDRAULIC EXCAVATOR is designed to be used mainly for the following work:

- Digging
- Smoothing work
- Ditching work
- Loading work

  See the section see "WORK POSSIBLE USING HYDRAULIC EXCAVATOR (226)" for further details

FEATURES

- This Komatsu HYDRAULIC EXCAVATOR is equipped with various controls based on an advanced electronics system.
- The monitor panel greatly facilitates daily maintenance and self-diagnosis.
- Working mode & travel speed are selectable.
- Digging and lifting force can be increased by light-touch control. (For details, see operation section.)
- Adjustable wrist control levers make operations smooth and easy.
- Fresh filtered air conditioner assures comfortable operation.
- Low noise level and smart urban style design and colouring.
- Superb operation performance provided by powerful engine and high-performance hydraulic pump.
- Low fuel consumption controlled by an electronic control system provides an environment-friendly machine.
- Sophisticated drive train provides fast and smooth travelling on the highway and off road.

BREAKING IN YOUR NEW MACHINE

Your Komatsu machine has been thoroughly adjusted and tested before shipment.

However, operating the machine under severe conditions at the beginning can adversely affect the performance and shorten the machine life.

Be sure to break in the machine for the initial 100 hours (as indicated by the hour meter.)

During breaking in:

- Idle the engine for 5 minutes after starting it up.
- Avoid operation with heavy loads or at high speeds.
- Sudden starting or acceleration, unnecessarily abrupt braking and sharp turning should be avoided except in cases of emergency.

Additionally for the first 20 hours

- Avoid operating engine for prolonged periods at constant speed (including idle.)
- Avoid high speed travelling for periods of more than 5 minutes.

Pay particular attention to oil pressure and temperature indicators & check coolant and oil levels frequently during breaking in.

The precautions given in this manual for operating, maintenance, and safety procedures are only those that apply when this product is used for the specified purpose. If the machine is used for a purpose that is not listed in this manual, Komatsu cannot bear any responsibility for safety. All consideration of safety in such operations is the responsibility of the user.

Operations that are prohibited in this manual must never be carried out under any circumstances.

LOCATIONS OF PLATES, TABLE TO ENTER SERIAL NO. AND DISTRIBUTOR

MACHINE SERIAL NO. PLATE POSITION

On the front left of the undercarriage

ENGINE SERIAL NO. PLATE POSITION

On the gear case front corner.

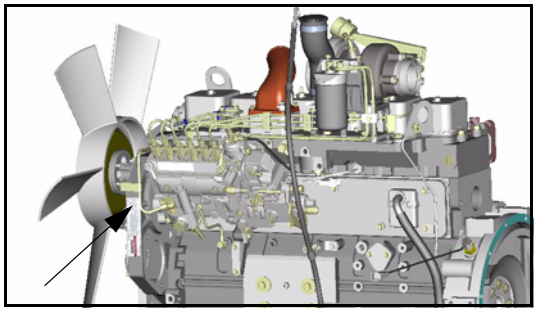

TABLE TO ENTER SERIAL NO. AND DISTRIBUTOR

Machine serial No.:

Engine Serial No.:

Product Identificaiton Number :

Manufacturer’s name: Komatsu UK Ltd.

Address

Durham Road
Birtley
Chester-Le-Street
County Durham DH32QX
United Kingdom

Distributor

Address

Phone

MACHINE SERIAL PLATES

STANDARD SERIAL PLATE

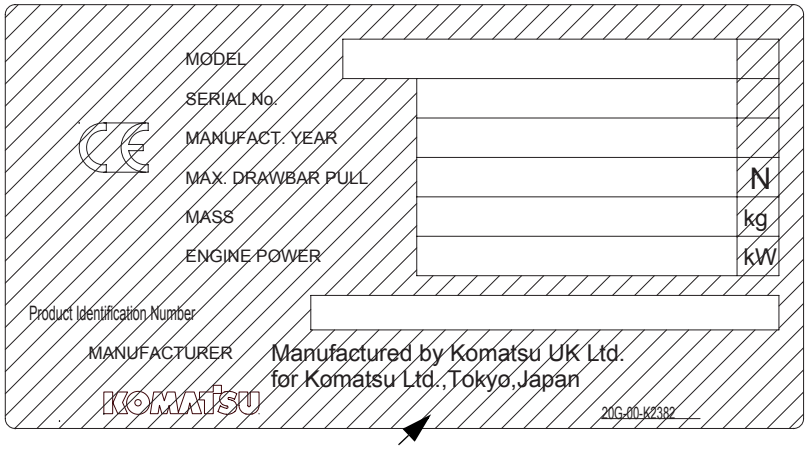

Manufactured by Komatsu UK Ltd.
for Komatsu Ltd., Tokyo, Japan

GERMANY SERIAL PLATE

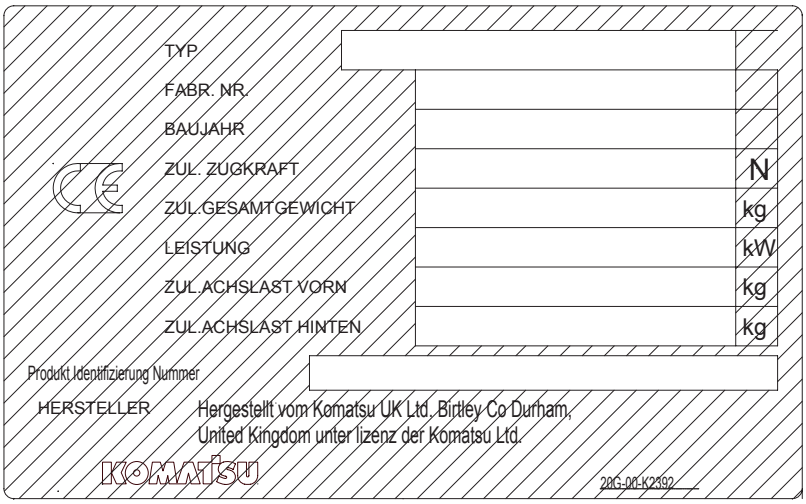

ITALIAN SERIAL PLATE

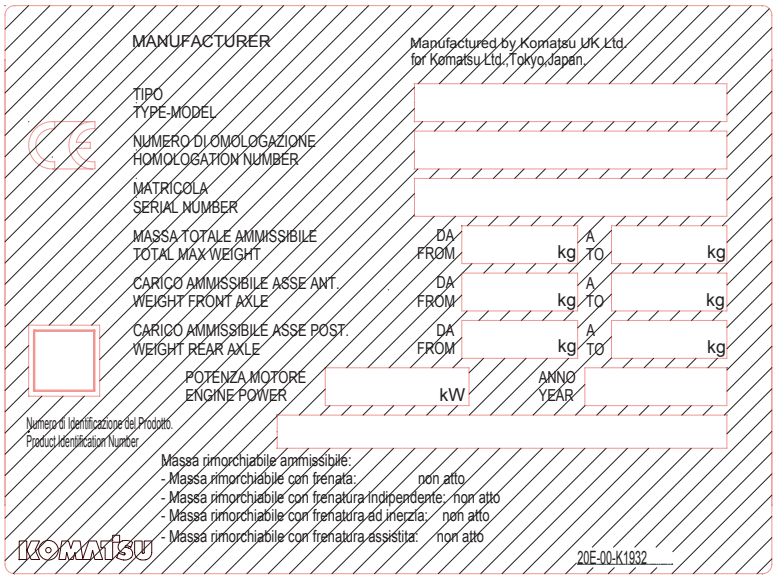

CONTENTS

FOREWORD **3**

SAFETY INFORMATION **4**
- SAFETY MESSAGES 4
- NOISE 5
- VIBRATION 5
- EMERGENCY STEERING 6

INTRODUCTION **7**
- INTENDED USE 7
- FEATURES 7
- BREAKING IN YOUR NEW MACHINE 8

LOCATIONS OF PLATES, TABLE TO ENTER SERIAL NO. AND DISTRIBUTOR **9**
- MACHINE SERIAL NO. PLATE POSITION 9
- ENGINE SERIAL NO. PLATE POSITION 9
- TABLE TO ENTER SERIAL NO. AND DISTRIBUTOR 9
- MACHINE SERIAL PLATES 10

SAFETY **19**

GENERAL PRECAUTIONS **20**

PRECAUTION DURING OPERATION **26**
- BEFORE STARTING ENGINE 26
- OPERATING MACHINE 27
- TRANSPORTATION 33
- BATTERY 34
- TOWING 35
- BUCKET WITH HOOK OR BUCKET LINK WITH LIFTING EYE 36

PRECAUTIONS FOR MAINTENANCE **39**
- BEFORE CARRYING OUT MAINTENANCE 39
- DURING MAINTENANCE 42

POSITION FOR ATTACHING SAFETY LABELS **45**
- POSITION FOR ATTACHING SAFETY LABELS 45

LIFTING CAPACITY CHART PW200-7K **53**
- ONE PIECE BOOM Lift capacity tables for 2.5 metre undercarriage 53
- ONE PIECE BOOM Lift capacity tables for 2.75 metre undercarriage 60
- TWO PIECE BOOM Lift capacity tables for 2.5 metre undercarriage 67
- TWO PIECE BOOM Lift capacity tables for 2.75 metre undercarriage 74

LIFTING CAPACITY CHART PW220-7K **81**
- ONE PIECE BOOM Lift capacity tables for 2.75 metre undercarriage and heavy duty counterweight. 81

ONE PIECE BOOM Lift capacity tables for 2.75 metre undercarriage 88
TWO PIECE BOOM Lift capacity tables for 2.75 metre undercarriage and heavy duty counterweight 95
TWO PIECE BOOM Lift capacity tables for 2.75 metre undercarriage 102

OPERATION 111

GENERAL VIEW 112
GENERAL VIEW OF MACHINE 112
GENERAL VIEW OF CONTROLS AND GAUGES 113

EXPLANATION OF COMPONENTS 114
1. MACHINE MONITOR 114
BASIC CHECK ITEMS 117

SWITCHES 146

CONTROL LEVERS, PEDALS 154
FRONT WINDOW 159
EMERGENCY EXIT FROM OPERATOR'S CAB 163
DOOR LOCK 164
CAP, COVER WITH LOCK 165
FUSE 166
LUGGAGE TRAY 167
ASHTRAY 167
CUP HOLDER 167
HOT AND COOL BOX 167
CAB RADIO 168
POWER PICK-UP PORT 168
HANDLING AIR CONDITIONER 169
FUSIBLE LINK 182
CONTROLLER 182
TOOL BOX 183
REFUELLING PUMP 183
WARNING LAMPS 185
HANDLING ACCUMULATORS 186

OPERATION 187
CHECK BEFORE STARTING ENGINE 187

OPERATIONS AND CHECKS BEFORE STARTING ENGINE 199
STARTING ENGINE 201
MOVING MACHINE OFF 210
STEERING 213
TRAVELLING ON PUBLIC HIGHWAY 214
STOPPING & PARKING 215
SWINGING (Slewing the upper carriage) 217
OPERATION OF WORK EQUIPMENT 218
WORKING MODE SELECTION 221

PROHIBITIONS FOR OPERATION 222
PRECAUTIONS FOR OPERATION 223
PRECAUTIONS WHEN TRAVELLING UP OR DOWN HILLS 225
HOW TO ESCAPE FROM MUD 226
WORK POSSIBLE USING HYDRAULIC EXCAVATOR 226
REPLACEMENT AND INVERSION OF BUCKET 228
STOPPING ENGINE 230
CHECK AFTER FINISHING WORK 230

CHECK AFTER STOPPING ENGINE 231
LOCKING 231
OVERLOAD WARNING DEVICE 231
HANDLING THE WHEELS 231

TRANSPORTATION 235
LOADING, UNLOADING WORK 235
PRECAUTIONS FOR LOADING 237
PRECAUTIONS FOR TRANSPORTATION 239
TRAVELLING POSTURE 240

COLD WEATHER OPERATION 241
PRECAUTIONS FOR LOW TEMPERATURE 241
PRECAUTIONS AFTER COMPLETION OF WORK 243
AFTER COLD WEATHER 243

LONG-TERM STORAGE 244
BEFORE STORAGE 244
DURING STORAGE 244
AFTER STORAGE 245
STARTING MACHINE AFTER LONG-TERM STORAGE 245

TROUBLESHOOTING 246
PHENOMENA THAT ARE NOT FAILURES 246
METHOD OF TOWING MACHINE 247
PRECAUTIONS ON PARTICULAR JOBSITES 247
DISCHARGED BATTERY 248
OTHER TROUBLE 252

MAINTENANCE. 257

GUIDES TO MAINTENANCE 258

OUTLINE OF SERVICE 261
USE OF BIO-DEGRADEABLE OIL 261
If an abnormality is found in the characteristics of the oil, change the oil immediately. 261
OUTLINE OF OIL, FUEL, COOLANT 262
OUTLINE OF ELECTRIC SYSTEM 266
OUTLINE OF HYDRAULIC SYSTEM 266

WEAR PARTS LIST **268**

USE FUEL, COOLANT AND LUBRICANTS ACCORDING TO AMBIENT TEMPERATURE **269**
PROPER SELECTION OF FUEL, COOLANT AND LUBRICANTS 269

USE FUEL, COOLANT AND LUBRICANTS ACCORDING TO AMBIENT TEMPERATURE CONT. **271**

STANDARD TIGHTENING TORQUES FOR BOLTS AND NUTS **273**
INTRODUCTION OF NECESSARY TOOLS 273

TIGHTENING TORQUE SPECIFICATIONS **274**
TIGHTENING TORQUE LIST 274

PERIODIC REPLACEMENT OF SAFETY CRITICAL PARTS **275**
SAFETY CRITICAL PARTS 276

MAINTENANCE SCHEDULE CHART **277**
KEY TO LUBRICATION POINTS 281

SERVICE PROCEDURE **283**
INITIAL 250 HOURS SERVICE 283
WHEN REQUIRED 284
CHECKING COOLANT LEVEL 292
CHECK AND TIGHTEN WHEEL NUTS 295
CHECK ELECTRICAL INTAKE AIR HEATER 295
CHECK ALTERNATOR 295
REPLACE BUCKET SIDE CUTTERS 296
REPLACE BUCKET TEETH 297
ADJUST BUCKET CLEARANCE 301
CHECK WINDOW WASHER FLUID LEVEL, ADD FLUID 302
CHECK AND ADJUST AIR CONDITIONER 303
DRAIN ENGINE BREATHER OIL CATCHER 304
CHECK BEFORE STARTING 305
CHECK COOLANT LEVEL, ADD WATER 305
EVERY 50 HOURS 309
EVERY 100 HOURS SERVICE 309
EVERY 250 HOURS MAINTENANCE 315
EVERY 500 HOURS SERVICE 320
EVERY 1000 HOURS SERVICE 328
EVERY 2000 HOURS SERVICE 334
EVERY 4000 HOURS SERVICE 335
EVERY 5000 HOURS SERVICE 336

SPECIFICATIONS. 339

SPECIFICATIONS **340**
1 - PIECE BOOM 341
2 - PIECE BOOM 343

WORKING RANGE: ONE PIECE BOOM 345
WORKING RANGE: TWO PIECE BOOM 346

OPTIONS, ATTACHMENTS 347

GENERAL PRECAUTIONS 348
PRECAUTIONS RELATED TO SAFETY 348

PRECAUTIONS WHEN INSTALLING ATTACHMENTS 349

HANDLING BUCKET WITH HOOK 351
CHECKING FOR DAMAGE TO BUCKET WITH HOOK 351
PROHIBITED OPERATIONS 351
PRECAUTIONS DURING OPERATIONS 351

MACHINES READY FOR ATTACHMENTS 352
GENERAL LOCATIONS 352
HANDLING THE CLAMSHELL BUCKET 354
OPERATION 355
METHOD FOR RELEASING PRESSURE IN CONTROL CIRCUIT OF MACHINES EQUIPPED WITH ACCUMULATOR 357
LONG-TERM STORAGE 357

INTRODUCTION OF ATTACHMENTS AND EXTENDING MACHINE SERVICE LIFE 358
HYDRAULIC BREAKER 358
POWER RIPPER 361
FORK GRAB 362
GRAPPLE BUCKET 363
SCRAP GRAPPLE 364
CRUSHER & SMASHER 366
HYDRAULIC PILE DRIVER 367
HYDRAULIC EXCAVATOR WITH MULTIPURPOSE CRANE 368

SAFETY

⚠ WARNING

Read and follow all safety precautions. Failure to do so may result in serious injury or death.

This safety section also contains precautions for optional equipment and attachments.

⚠ WARNING: For reasons of safety, always follow these safety precautions.

GENERAL PRECAUTIONS

SAFETY RULES

- ONLY trained and authorised personnel can operate and maintain the machine.
- Follow all safety rules, precautions and instructions when operating or performing maintenance on the machine.
- When working with another operator or a person on work site traffic duty, be sure all personnel understand all hand signals that are to be used.

SAFETY FEATURES

- Be sure all guards and covers are in their proper position. Have guards and covers repaired if damaged.
- Use safety features such as safety lock lever at all times.
- NEVER remove any safety features. ALWAYS keep them in good operating condition.
- Always wear safety belt when operating machine.
- Improper use of safety features could result in serious bodily injury or death.

CLOTHING AND PERSONAL PROTECTIVE ITEMS

- Avoid loose clothing, jewellery, and loose long hair. They can catch on controls or in moving parts and cause serious injury or death. Also, do not wear oily cloths because they are flammable.
- Wear a hard hat, safety glasses, safety shoes, mask or gloves when operating or maintaining the machine. Always wear safety goggles, hard hat and heavy gloves if your job involves scattering metal chips or minute materials, this is so particularly when driving pins with a hammer and when cleaning the air cleaner element with compressed air.
  Check also that there is no one near the machine.

  Driving in pins, see"REPLACEMENT AND INVERSION OF BUCKET (228)"

  Cleaning of air cleaner element, see "WHEN REQUIRED (284)" in service procedure.

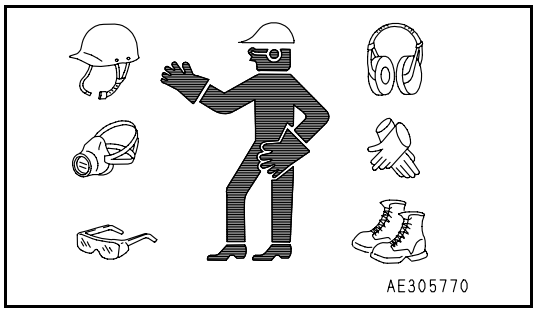

UNAUTHORISED MODIFICATION

- Any modification made without authorisation from Komatsu can create hazards.
- Before making a modification, consult your Komatsu distributor. Komatsu will not be responsible for any injury or damage caused by any unauthorised modification.

⚠ WARNING: Failure to follow these safety precautions may lead to a serious accident.

ALWAYS APPLY (RAISE) SAFETY LOCK LEVER WHEN LEAVING OPERATOR'S SEAT

- When standing up from the operator's seat, always raise the safety lock lever to the LOCK position. If you accidentally touch the travel, attachment or swing lever when they are not locked, the machine may suddenly move and cause serious injury or damage.
- When leaving the machine, lower the work equipment completely to the ground, set the safety lock lever to the LOCK position, then stop the engine and use the key to lock the machine. Always take the key with you.

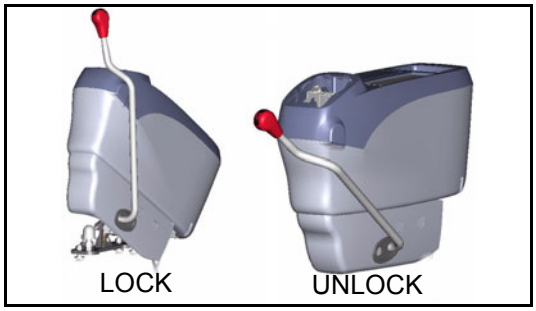

⚠ WARNING

If the control lever is touched by accident, the work equipment or the machine may move suddenly, and this may lead to a serious accident. Before leaving the operator's compartment, always raise the safety lock lever to lock the work equipment controls.

MOUNTING AND DISMOUNTING

- NEVER jump on or off the machine. NEVER get on or off a moving machine.
- When mounting or dismounting, always face the machine and use the handrails (A), machine or chassis steps (B).
- Do not hold any control levers when getting on or off the machine.
- Ensure safety by always maintaining at least three-point contact of hands and feet with the handrails, steps or wheels.
- Always remove any oil or mud from the handrails, steps and track shoes. If they are damaged, repair them and tighten any loose bolts.
- If grasping the door handrail when mounting or dismounting or moving on the chassis steps, open and lock the door securely in the open position. Otherwise, the door may move suddenly, causing you to lose balance and fall.

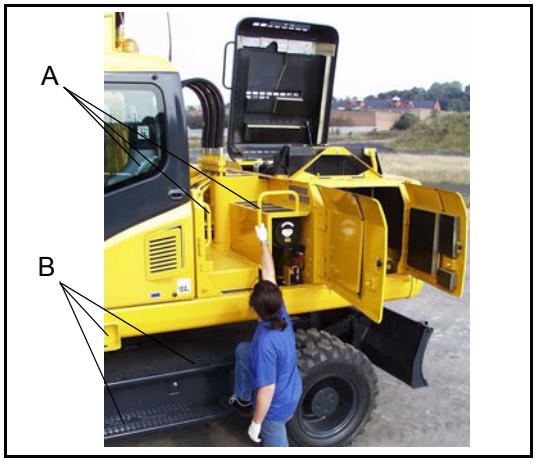

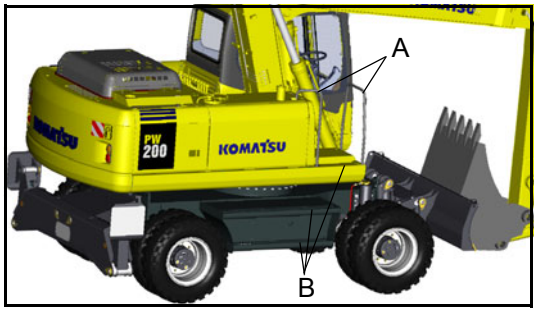

⚠ WARNING: For reasons of safety, always follow these safety precautions.

FIRE PREVENTION FOR FUEL AND OIL

Fuel, oil, and antifreeze can be ignited by a flame. Fuel is particularly FLAMMABLE and can be HAZARDOUS.

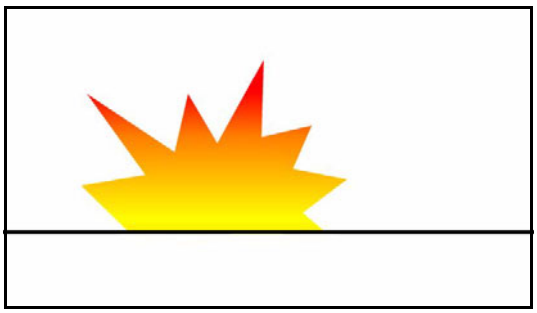

- Keep flames away from flammable fluids.
- Stop the engine and do not smoke when refuelling.
- Tighten all fuel and oil caps securely.

- Refuelling and oiling should be carried out in well ventilated areas.

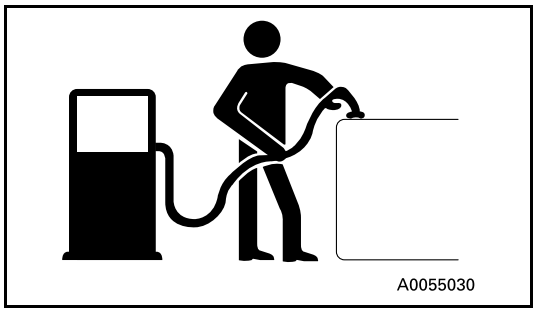

- Keep oil and fuel in a secure place and do not allow unauthorised persons to enter.

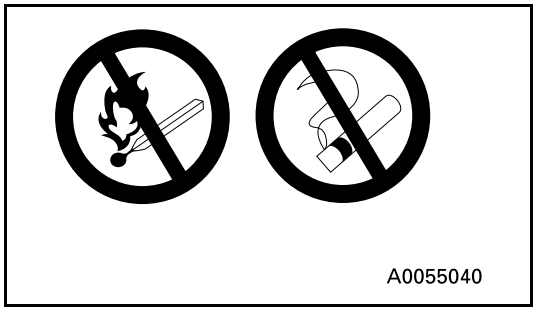

PRECAUTIONS WHEN HANDLING AT HIGH TEMPERATURES

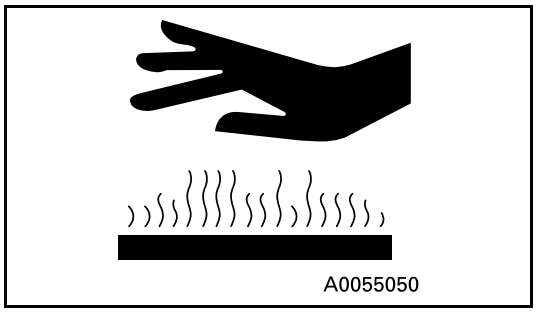

- Immediately after operations are stopped, the engine coolant, engine oil, and hydraulic oil are at high temperatures, and are still under pressure. Attempting to remove the cap, drain the oil or water, or replace the filters may lead to serious burns. Always wait for the temperature to go down, and follow the specified procedures when carrying out these operations.
- To prevent hot water from spurting out:

1. Turn engine off.
2. Allow water to cool.
3. Slowly loosen cap to relieve pressure before removing.

- To prevent hot oil from spurting out:

1. Turn engine off.
2. Allow oil to cool.
3. Slowly loosen cap to relieve pressure before removing.

⚠ WARNING: Failure to follow these safety precautions may lead to a serious accident.

MACHINES FITTED WITH WHEELS

Never perform any repair work or modifications to wheel rims while the tyres are fitted, and never apply heat in the vicinity of the tyres.

ASBESTOS DUST HAZARD PREVENTION

Asbestos dust can be HAZARDOUS to your health if it is inhaled.

Your Komatsu machine and genuine Komatsu spare parts do not contain any asbestos. Use only genuine Komatsu spare parts. If spare parts containing asbestos are used, the following precautions must be observed:

- NEVER use compressed air for cleaning.
- Use water for cleaning to keep down the dust.
- Operate the machine with the wind to your back, whenever possible.
- Use an approved respirator if necessary.

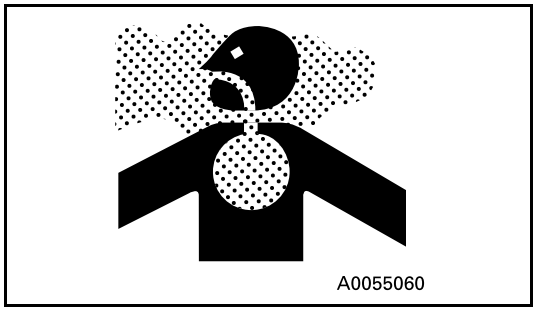
A0055060

CRUSHING OR CUTTING PREVENTION

Do not enter, or put your hand or arm or any other part of your body between movable parts such as between the work equipment and cylinders, or between the machine and work equipment.
If the work equipment is operated, the clearance will change and this may lead to serious damage or personal injury.

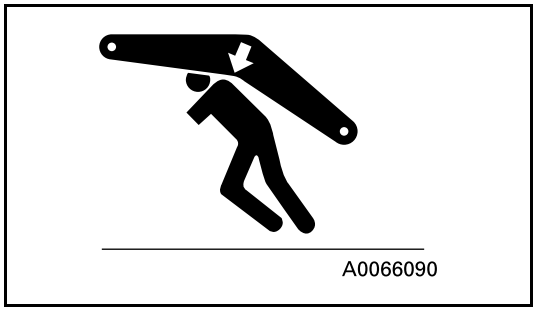
A0066090

FIRE EXTINGUISHER AND FIRST AID KIT

- Know how to use fire extinguisher (if installed).
- Provide a first aid kit at the storage point.
- Know what to do in the event of a fire.
- Be sure you know the phone numbers of persons you should contact in case of an emergency.

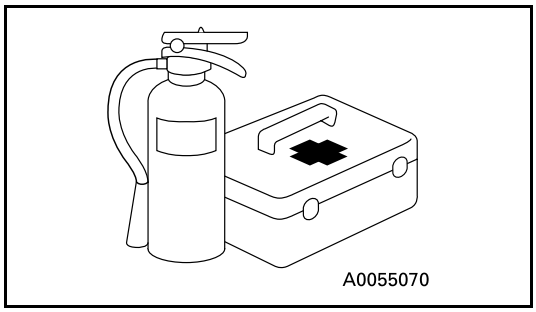
A0055070

PROTECTION AGAINST FALLING OR FLYING OBJECTS

If there is any danger of falling or flying objects hitting the operator, install protective guards to protect the operator as required for each particular situation.

- For work with breakers, install a front guard on the windshield. Also, place a laminate coating sheet over the windshield.
- For demolition or shear work, install a front guard on the windshield and a top guard on the cab. Also, place a laminate coating sheet over the windshield.

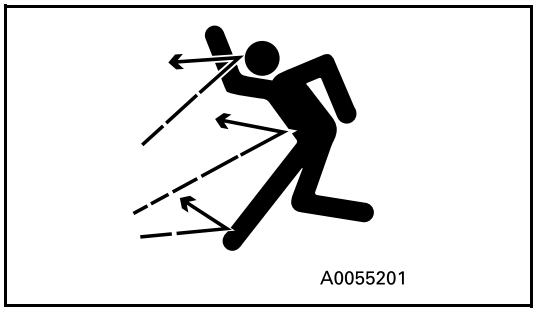
A0055201

⚠ WARNING: For reasons of safety, always follow these safety precautions.

- For work in mines, quarries, demolition, tunnels or other places where there is danger of falling rocks, put FOPS (falling object protective structure) in place. Also, place a laminate coating sheet over the windshield.

The above comments are made with regards to typical working conditions. By all means you should put on other guards if required by conditions at your particular site.
For details of safety guards, please contact your Komatsu distributor.

Also, even for other types of work, if there is any danger of being hit by falling or flying objects or of objects entering the operator's cab, select and install a guard that matches the working conditions.

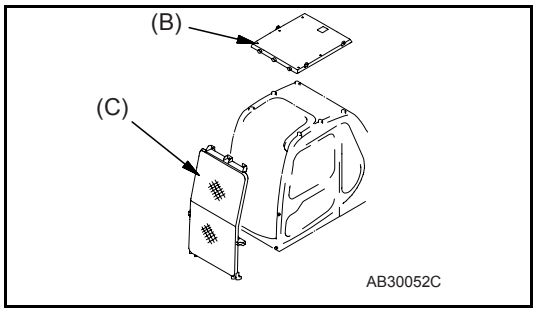

(B): Top guard	(C): Front guard

Be sure to close the front window before commencing work.

When carrying out the above operations, make sure to keep all persons other than the operator outside the range of falling or flying objects. Be particularly sure to maintain a proper distance when carrying out shear operations.

PRECAUTIONS FOR ATTACHMENTS

- When installing and using an optional attachment, read the instruction manual for the attachment and the information related to attachments in this manual.
- Do not use attachments that are not authorised by Komatsu or your Komatsu distributor. Use of unauthorised attachments could create a safety problem and adversely affect the proper operation and useful life of the machine.
- Any injuries, accidents, product failures resulting from the use of unauthorised attachments will not be the responsibility of Komatsu.

MACHINES WITH ACCUMULATOR

On machines equipped with an accumulator, for a short time after the engine is stopped, the work equipment will lower under its own weight when the work equipment control lever is shifted to LOWER. After the engine is stopped, raise safety lock lever to the LOCK position.

When releasing the pressure inside the work equipment circuit on machines equipped with an accumulator, follow the procedure given in the inspection and maintenance section.

Method of releasing pressure, see "HANDLING ACCUMULATORS (186)"

The accumulator is filled with high-pressure nitrogen gas, and it is extremely dangerous if it is handled in the wrong way. Always observe the following precautions.

⚠ WARNING: Failure to follow these safety precautions may lead to a serious accident.

- Never make any hole in the accumulator or expose it to flame or fire.
- Do not weld anything to the accumulator.
- When carrying out disassembly or maintenance of the accumulator, or when disposing of the accumulator, it is necessary to release the gas from the accumulator. A special bleed valve is necessary for this operation, so please contact your Komatsu distributor.

  Gas in accumulator, see "HANDLING ACCUMULATORS (186)"

EMERGENCY EXIT

- When exit by normal means is prevented in an emergency you can get out through the emergency exit (rear window).
- Pull the ring at the bottom of the window and remove strip. This will allow you to push out glass.

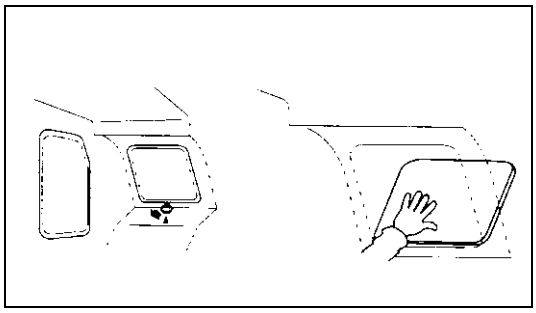

ROTATING BEACON (Option)

- When the machine is operated on or beside a road, a rotating beacon is required to avoid a traffic accident.
- Contact your Komatsu distributor to install beacon lamp.

ELECTROMAGNETIC INTERFERENCE

When this machine is operating close to a source of high electromagnetic interference, such as a radar station, some abnormal phenomena may be observed.

- The display on the monitor panel may behave erratically.
- The warning buzzer may sound.

These effects do not signify a malfunction and the machine will return to normal as soon as the source of interference is removed.

⚠ WARNING: For reasons of safety, always follow these safety precautions.

PRECAUTION DURING OPERATION

BEFORE STARTING ENGINE

SAFETY AT WORKSITE

- Before starting the engine, thoroughly check the area for any unusual conditions that could be dangerous.
- Before starting the engine, examine the terrain and soil conditions of the work site. Determine the best and safest method of operation.
- Make the slope as horizontal as possible before continuing operations.
- If you need to operate on a street, protect pedestrians and cars by designating a person for work site traffic duty or by installing fences around the work site.
- If water lines, gas lines, and high-voltage electrical lines may be buried under the work site, contact each utility and identify their locations. Be careful not to sever or cut any of these lines.
- Check the depth and flow of water before operating in water or crossing a river. NEVER be in water which is in excess of the permissible water depth.

  Permissible water depth, see "PRECAUTIONS FOR OPERATION (223)"

FIRE PREVENTION

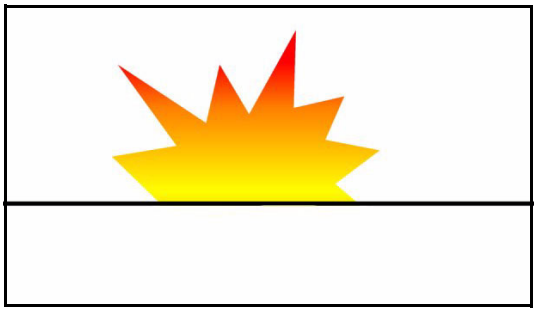

- Thoroughly remove wood chips, leaves, paper and other flammable things accumulated in the engine compartment. They could cause a fire.
- Check fuel, lubrication, and hydraulic systems for leaks. Have any leaks repaired. Wipe up any excess oil, fuel or other flammable fluids.

  Check point, see "WALK-AROUND CHECK (187)"
- Be sure a fire extinguisher is present and working.

IN OPERATOR'S CAB

- Do not leave tools or spare parts lying around in the operator's compartment. They may damage or break the control levers or switches. Always put them in the tool box on the front right side of the revolving frame or in the tool boxes on the undercarriage.
- Keep the cab floor, controls, steps and handrails free of oil, grease, snow, and excess dirt.

⚠ WARNING: Failure to follow these safety precautions may lead to a serious accident.

VENTILATION FOR ENCLOSED AREAS

If it is necessary to start the engine within an enclosed area, provide adequate ventilation. Exhaust fumes from the engine can KILL.

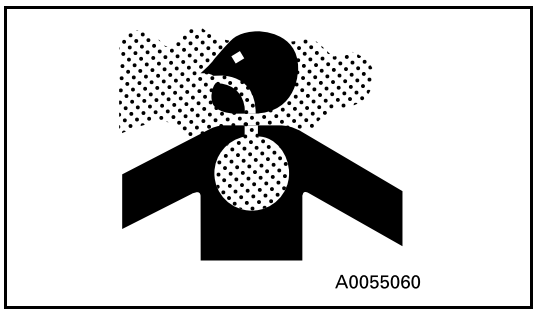

PRECAUTIONS FOR MIRRORS, WINDOWS AND LIGHTS

- Remove all dirt from the surface of the windows and lights to ensure that you can see well.
- Adjust the rear view mirrors so that you can see clearly from the operator's seat, and always keep the surface of the mirrors clean. If any glass is broken, replace it with a new part.
- Check that the head lamps and working lamps are installed to match the operating conditions. Check also that they light up properly.

OPERATING MACHINE

WHEN STARTING THE ENGINE

- Walk around for machine again just before mounting it, to check for people and objects that might be in the way.
- NEVER start the engine if a warning tag has been attached to the wrist control.
- Before starting the engine, sound the horn as an alert.
- Start and operate the machine only while seated.
- Do not allow anyone other than the operator to ride in the cab or on the machine body.
- For machines equipped with a reverse alarm buzzer, check that the warning device operates correctly.

CHECK DIRECTION BEFORE STARTING MACHINE

Before operating the travel pedal, check the direction of the under carriage.
If the fixed axle is at the front, the forward/neutral/reverse lever and steering will function in the opposite direction.

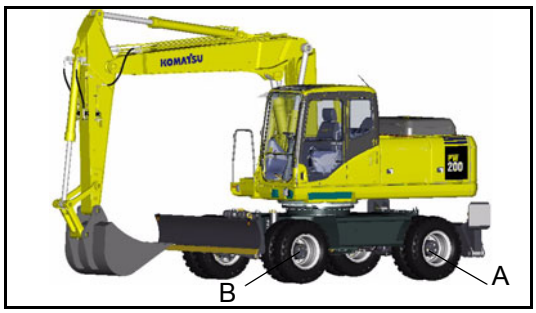

A	Fixed axle
B	Oscillating axle

Travel operations, see "MOVING MACHINE OFF (210)"

⚠ WARNING: For reasons of safety, always follow these safety precautions.

CHECK THAT NO ONE IS IN THE AREA BEFORE SWINGING OR TRAVELLING IN REVERSE

- Always position a signalman when operating in dangerous places or places where the view is not clear.
- Make sure that no one comes inside the swing radius or direction of travel.
- Before starting to move, sound the horn or give a signal to warn people not to come close to the machine.

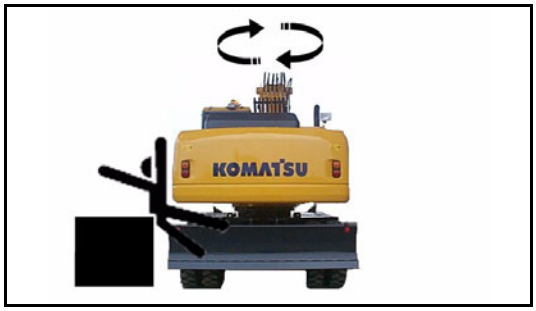

- There are blind spots behind the machine, so if necessary, swing the upper structure to check that there is no one behind the machine before travelling in reverse.

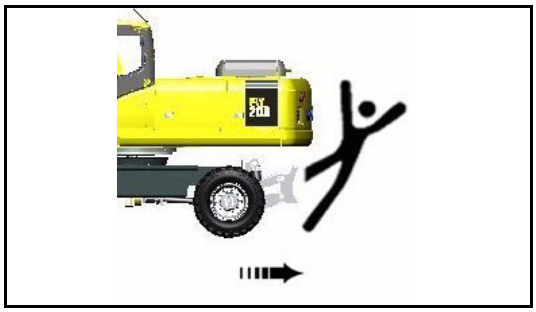

PRECAUTIONS WHEN TRAVELLING

- Fold in the work equipment as shown in the diagram, and keep it at a height of 40-50 cm from the ground level before starting to travel.
- Before travelling on public roads, fully raise dozer blade and outriggers, lock the outriggers in position with the safety pin, lock the bucket and arm cylinder with isolation valves, and insert swing lock pin.

  For details, see "TRAVELLING ON PUBLIC HIGHWAY (214)"

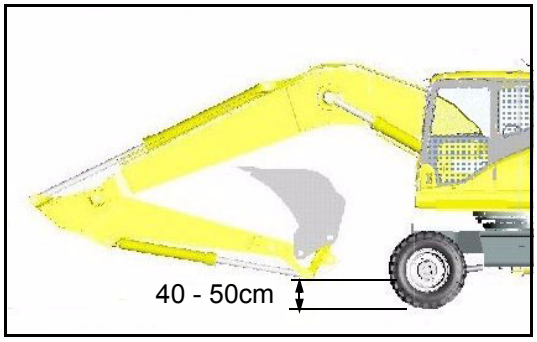

- When travelling on public roads the safety lock lever should be down (UNLOCKED) and lock lever switch engaged. This prevents operation of the control levers and activates the rear facing brake lamp circuit.
- When travelling on rough ground, travel at low speed, and avoid sudden changes in direction.
- Avoid travelling over obstacles as far as possible. If the machine has to travel over an obstacle, keep the work equipment as close to the ground as possible and travel at low speed. Never travel over obstacles which make the machine tilt strongly (10° or more).

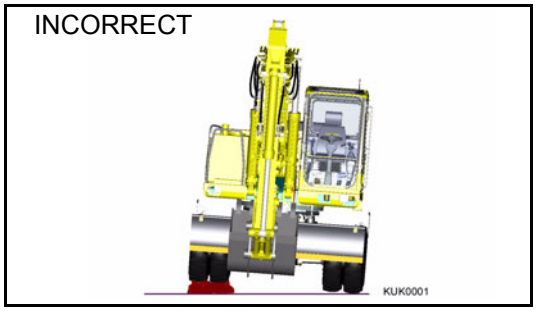

⚠ WARNING: Failure to follow these safety precautions may lead to a serious accident.

TRAVELLING ON SLOPES

- Travelling on hills, banks or slopes that are steep could result in the machine tipping over or slipping.
- On hills, banks or slopes, carry the bucket closer to the ground, approximately 20 to 30 cm above the ground. In case of emergency, quickly lower the bucket to the ground to help the machine stop and prevent it from tipping over.

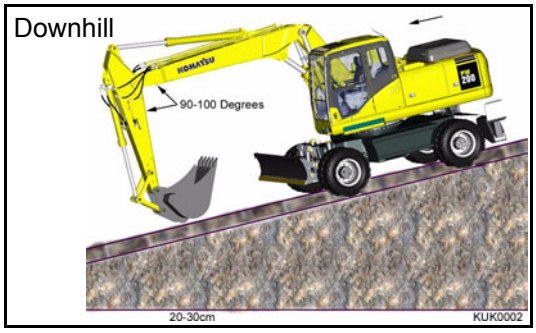

- Do not turn on slopes or travel across slopes. Always go down to a flat place to perform these operations.

  Method of travelling on slopes, see "PRECAUTIONS WHEN TRAVELLING UP OR DOWN HILLS (225)"

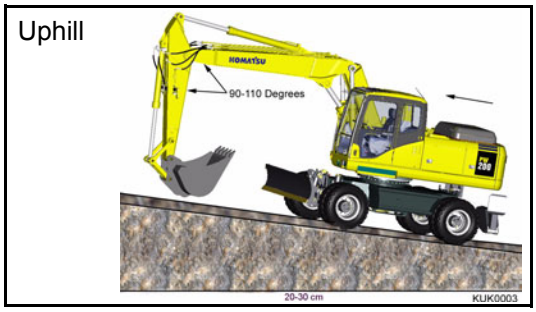

Do not travel up and down on grass, fallen leaves, and wet steel plates. These materials may allow the machine to slip, if it is travelling sideways. Keep travel speed very low.

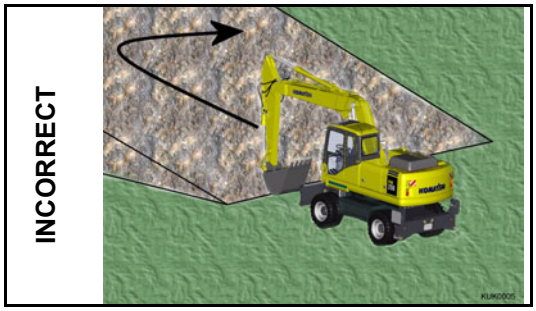

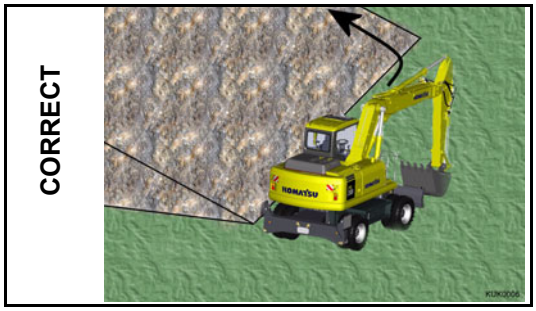

⚠ WARNING: For reasons of safety, always follow these safety precautions.

PROHIBITED OPERATIONS

- Do not dig the work face under an overhang. This may cause the overhang to collapse and fall on top of the machine.

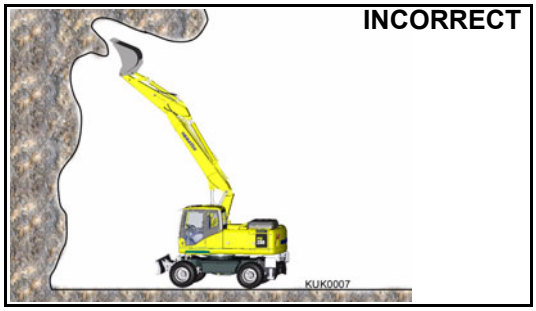

- Do not carry out deep digging under the front of the machine. The ground under the machine may collapse and cause the machine to fall.

.

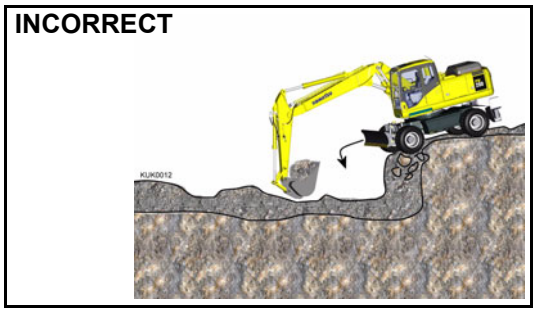

DO NOT GO CLOSE TO HIGH-VOLTAGE CABLES

Going close to high-voltage cables can cause electric shock. Always maintain the safe distance given below, between the machine and the electric cable.

- The following actions are effective in preventing accidents.
  1) Wear shoes with rubber or leather soles.
  2) Use a signalman to give warning if the machine approaches too close to the electric cable.
- If the work equipment should touch the electric cable, the operator should not leave the operator's compartment.
- When carrying out operations near high voltage cables, do not let anyone come close to the machine.
- Check with the electricity company about the voltage of the cables before starting operations.

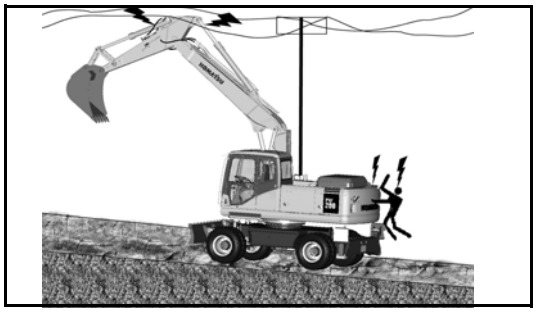

Voltage	Min. safety distance
6.6 kV	3 m
33.0 kV	4 m
66.0 kV	5 m
154.0 kV	8 m
275.0 kV	10 m

⚠ WARNING: Failure to follow these safety precautions may lead to a serious accident.

DO NOT HIT WORK EQUIPMENT

- When working in places where there are height limits, such as in tunnels, under bridges, under electric cables, or in garages, be extremely careful not to hit the boom or arm.

ENSURE GOOD VISIBILITY

- When working in dark places, install working lamps, and set up lighting in the work area if necessary.
- Stop operations if the visibility is poor, such as in mist, snow, or rain, and wait for the weather to improve to a condition that allows the operation to be carried out safely.

OPERATE CAREFULLY ON SNOW

- When working on snow or icy roads, even a slight slope may cause the machine to slip to the side, so always travel at low speed and avoid sudden starting, stopping, or turning.
- When there has been heavy snow, the road shoulder and objects placed beside the road are buried in the snow and cannot be seen, so always carry out snow-clearing operations carefully.

WORKING ON LOOSE GROUND

- Avoid operating your machine too close to the edge of cliffs, overhangs, and deep ditches. If these areas collapse, your machine could fall or tip over and result in serious injury or death. Remember that the soil after heavy rain or blasting is weakened in these areas.
- Earth laid on the ground and the soil near ditches are loose. They can collapse under the weight or vibration of your machine.
- Install the HEAD GUARD (FOPS) if working in areas where there is danger of falling rocks and dirt.

DO NOT HIT THE OPERATOR CAB (for two piece boom only)

- When the second boom cylinder is retracted, the bucket or the attachment can hit the operator cab or chassis.
- Operate work equipment slowly and carefully to avoid any injury and damage.

⚠ WARNING: For reasons of safety, always follow these safety precautions.

OPERATIONS ON SLOPES

- When working on slopes, there is danger that the machine may lose its balance and turn over when the swing or work equipment are operated. Always carry out these operations carefully.
- Do not swing the work equipment from the uphill side to the downhill side when the bucket is loaded. This operation is dangerous.
  (See the upper diagram on the right.)

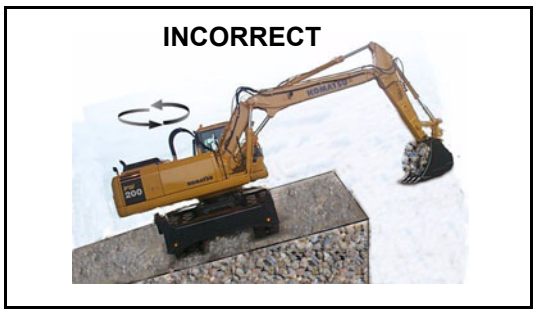

- If the machine has to be used on a slope, pile the soil to make a platform that will keep the machine as horizontal as possible.
  (See the lower diagram on the right.)

  Piled soil on slope, see "PRECAUTIONS WHEN TRAVELLING UP OR DOWN HILLS (225)"

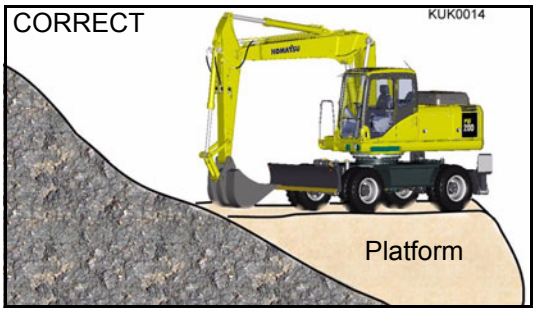

PARKING THE MACHINE

Park on level ground whenever possible. If not possible, chock the wheels, lower the bucket to the ground and thrust the bucket in the ground.

- When parking on public roads, provide fences and signs, such as flags or lights, on the machine to warn passersby to be careful. Be sure that the machine, flags or lights do not obstruct traffic.
- When leaving the machine, lower the work equipment completely to the ground, raise the safety lock lever to the LOCK position, then stop the engine and use the key to lock the machine. Always take the key with you.

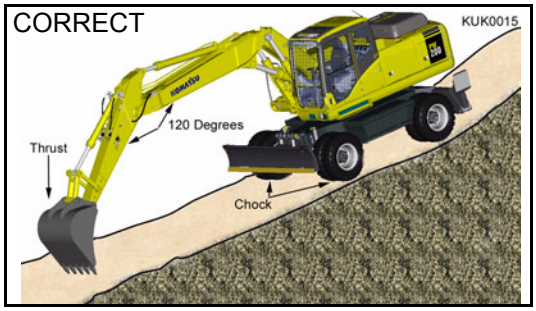

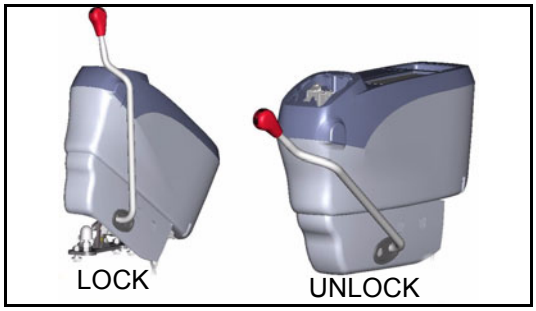

⚠ WARNING

if the control lever is touched by accident, the work equipment or the machine may move suddenly, and this may lead to a serious accident. Before leaving the operator's compartment, always raise the safety lock lever to lock the work equipment controls.

Places to lock, see "LOCKING (231)"

⚠ WARNING: Failure to follow these safety precautions may lead to a serious accident.

TRANSPORTATION

LOADING AND UNLOADING

- Loading and unloading the machine always involves potential hazards. EXTREME CAUTION SHOULD BE USED.
  When loading or unloading the machine, run the engine at low idling and travel at low speed.
- Perform loading and unloading on firm, level ground only. Maintain a safe distance from the edge of a road.
- ALWAYS block the wheels of the hauling vehicle and place blocks under both ramps before loading and unloading.
- ALWAYS use ramps of adequate strength. Be sure the ramps are wide and long enough to provide a safe loading slope.
- Be sure that the ramps are securely positioned and fastened, and that the two sides are at the same level as one another.
- Be sure the ramp surface is clean and free of grease, oil, ice and loose materials. Remove dirt from the machine wheels.
- NEVER correct your steering on the ramps. If necessary, drive away from the ramps and climb again.
- Swing the upper structure with extreme care on the trailer to avoid a possible accident caused by body instability.
- After loading, block the machine wheels and secure the machine with tie-downs.

Loading and unloading, see "TRANSPORTATION (235)"

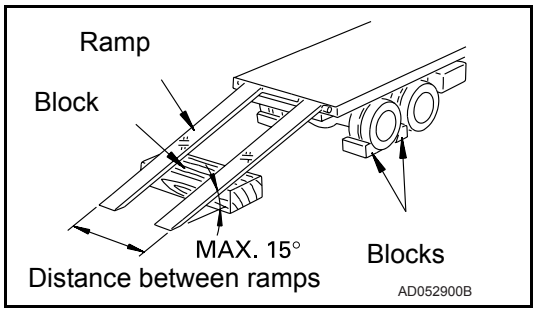

SHIPPING

- When shipping the machine on a hauling vehicle, obey all state and local laws governing the weight, width, and length of a load. Also obey all applicable traffic regulations.
- Determine the shipping route while taking into account the width, height and weight of the load.

⚠ WARNING: For reasons of safety, always follow these safety precautions.

BATTERY

BATTERY HAZARD PREVENTION

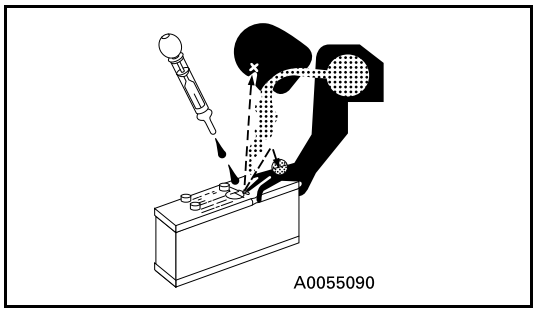

- Battery electrolyte contains sulphuric acid and can quickly burn the skin and eat holes in clothing. If you spill acid on yourself, immediately flush the area with water.
- Battery acid could cause blindness if splashed into the eyes. If acid gets into the eyes, flush them immediately with large quantities of water and see a doctor at once.
- If you accidentally drink acid, drink a large quantity of water or milk, beaten egg or vegetable oil. Call a doctor or poison prevention centre immediately.
- When working with batteries. ALWAYS wear safety glasses or goggles.

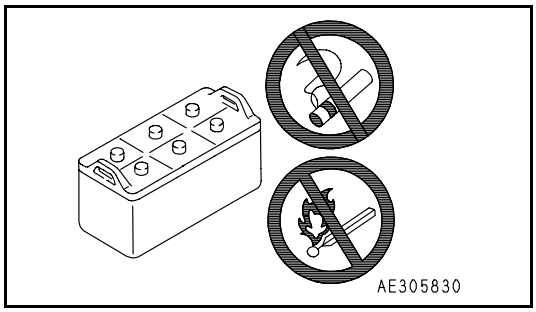

- Batteries generate hydrogen gas. Hydrogen gas is very EXPLOSIVE, and is easily ignited with a small spark or flame.
- Before working with batteries, stop the engine and turn the starting switch to the OFF position.
- Avoid short-circuiting the battery terminals through accidental contact with metallic objects, such as tools, across the terminals.

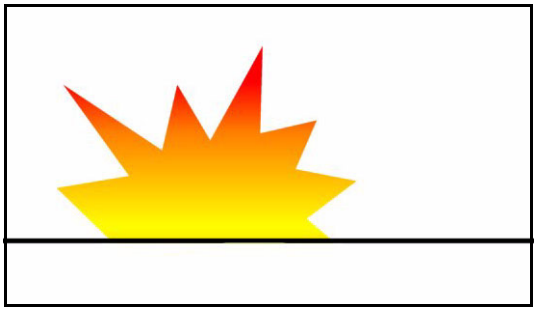

- When removing or installing, check which is the positive (+) terminal and negative (-) terminal.
- Tighten the battery cap securely.
- Tighten the battery terminals securely. Loosened terminals can generate sparks and lead to an explosion.
- When removing battery cap wear rubber groves to prevent electrolyte contact with skin.

STARTING WITH BOOSTER CABLES

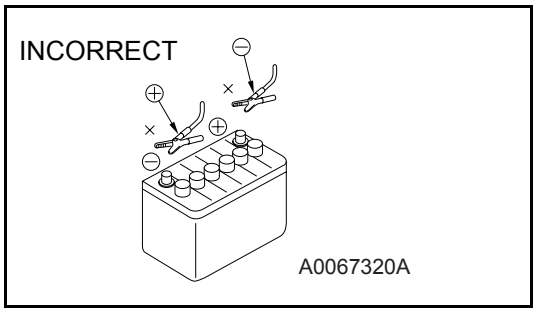

- ALWAYS wear safety glasses or goggles when starting the machine with booster cables.
- When starting from another machine, do not allow the two machines to touch.
- Be sure to connect the positive (+) cable first when installing the booster cables. Disconnect the ground or negative (-) cable first when removing them.
- If any tool touches between the positive (+) terminal and the chassis, it will cause sparks. This is dangerous, so be sure to work carefully.
- Connect the batteries in parallel: positive to positive and negative to negative.

⚠ WARNING: Failure to follow these safety precautions may lead to a serious accident.

- When connecting the ground cable to the frame of the machine to be started, be sure to connect it as far away as possible from the battery.

  Starting with booster cables, see "DISCHARGED BATTERY (248)"

TOWING

WHEN TOWING, ATTACH WIRE TO FRAME

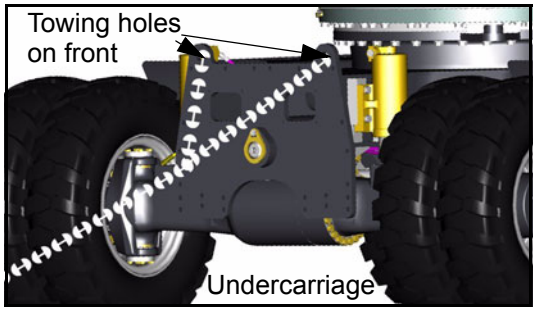

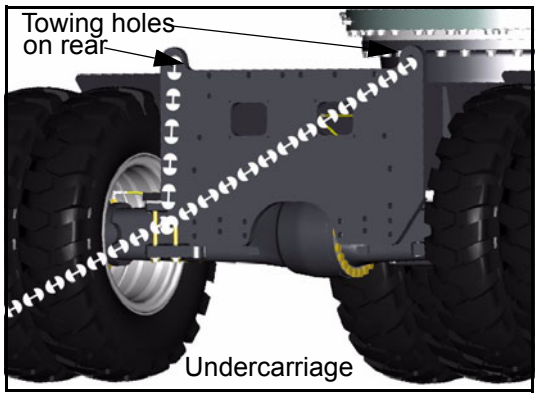

- Injury or death could result if a disabled machine is towed incorrectly.
- If your machine is towed by another machine, ALWAYS use a wire rope with a sufficient towing capacity.
- NEVER allow a disabled machine to be towed on a slope.
- Do not use a chinked or frayed wire rope.
- If towing on the highway, a rigid tow bar should be used and not a tow rope of any kind.
- Do not straddle the towing cable or wire rope.
- When connecting up a towing machine, do not let anyone enter the area between the towing machine and the equipment being towed.
- Set the towing machine and the towing connection of the equipment being towed in a straight line when connecting it.
- Place pieces of wood between the wire ropes and chassis body to protect them from wear of damage.

  Towing method, see "METHOD OF TOWING MACHINE (247)"

When towing the machine without the engine running or in the advent of loss of hydraulic pressure, its is necessary to manually release the park brake, as follows.

View on transmission

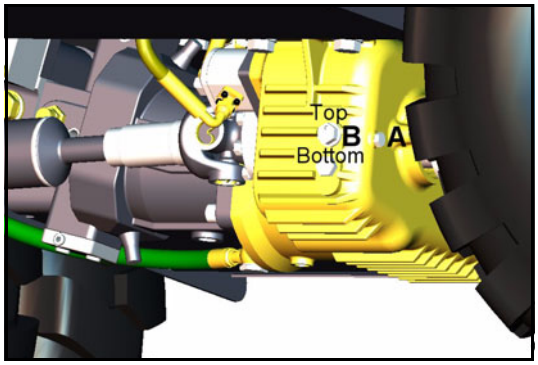

Releasing the park brake before towing:

1. Unscrew bolt (A) 2-3 turns which will allow bolt (B) to rotate (DO NOT REMOVE BOLT ’A’).
2. Turn park brake release bolt (B) 180 degrees, the indicator mark located at the top, moves to the bottom, which will disengage the park brake.
3. Re-tighten bolt (A) to lock the park brake in the disengaged position for towing.

To reset the park brake:

1. Unscrew bolt (A) 2~3 turns, this allows bolt (B) to rotate. (DO NOT REMOVE BOLT ’A’)

⚠ WARNING: For reasons of safety, always follow these safety precautions.

2. Turn park brake release bolt (B) 180 degrees so that indicator mark is located at the top position.
3. Re-tighten bolt (A)

BUCKET WITH HOOK OR BUCKET LINK WITH LIFTING EYE

GENERAL PRECAUTIONS

SPECIAL HOOK

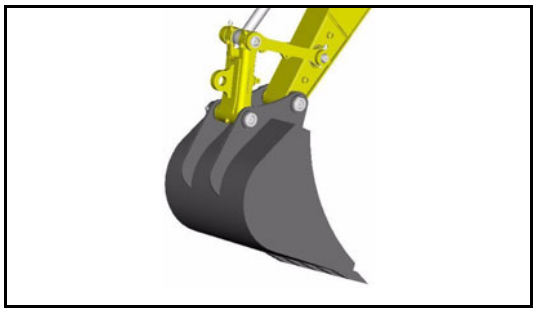

- When carrying out lifting work, a special lifting hook or lifting eye is necessary.
- The lifting hook must be fitted with a safety latch to prevent accidental un-hooking of the load.

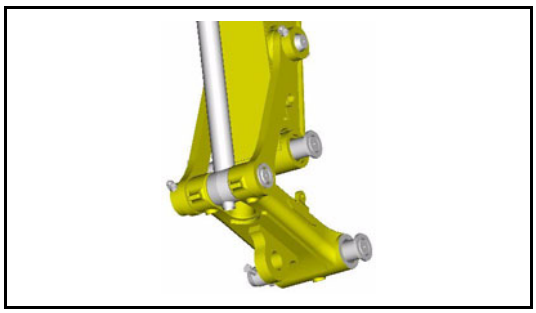

- The following operations are prohibited.
  - Lifting loads with a wire rope fitted around the bucket teeth.
  - Lifting loads with the wire rope wrapped directly around the boom or arm.
  - Check safe working load of lifting equipment.

CHECKING HOOK

- When lifting a load, carry out the following checks to confirm that there is no abnormality before starting operations.
  - Check that there are no cracks or deformation in the lifting equipment.
  - Check that there is no abnormality in the safety latch of the hook.

HOOKING WIRE ROPE SECURELY TO HOOK

- When performing lifting operation, securely hook the wire rope onto the special lifting hook or lifting eye.

PRECAUTIONS FOR MACHINE INSTALLATION

- After carrying out a preliminary inspection of ground conditions, select a flat, solid location. Confirm that the machine can be safely operated without toppling or rolling.

PROHIBITED OPERATIONS OTHER THAN MAIN APPLICATIONS

- When performing lifting operation, never raise or lower a person.

⚠ WARNING: Failure to follow these safety precautions may lead to a serious accident.

NO PERSONS SHALL BE PERMITTED TO ENTER THE WORKING AREA

- Due to the possible danger of the load falling or of collision with the load, no persons shall be allowed in the working area.

OPERATION SUPERVISOR

- Before performing lifting operation, designate an operation supervisor.
  Always execute operation according to his instructions.
  - Execute operating methods and procedures under his direction.
  - Select a person responsible for signalling. Operate only on signals given by such person.

HANDLING OF WIRE ROPES ETC.

- Wear leather gloves when handling wire ropes.

PROTECTING EYES

- Some oils and fluids can damage eyes. Refer to manufactured data sheet for handling and storage instructions.

PRECAUTIONS FOR LIFTING OPERATION

GRADUAL LIFTING OPERATION

- When carrying out lifting operations, run the engine at low idling and use the L (lifting operation mode).
- Avoid sudden lever shifting and acceleration.
- Swing speed is three to four times that of mobile cranes. Therefore, be especially careful when performing swing operation.

⚠ WARNING: For reasons of safety, always follow these safety precautions.

NEVER LEAVE THE OPERATOR'S SEAT

- Never leave the operator's seat while lifting a load.

NEVER CARRY OUT EXCESSIVE OPERATIONS

- Operation exceeding machine performance may result in accident or failure.
- Carry out lifting operation within specified load limit of machine and lifting equipment.
- Never carry out operations which may damage the machine such as overload or over-impact-load.
- Never drag a load laterally or longitudinally, nor retract the arm, otherwise, a dangerous situation may result.

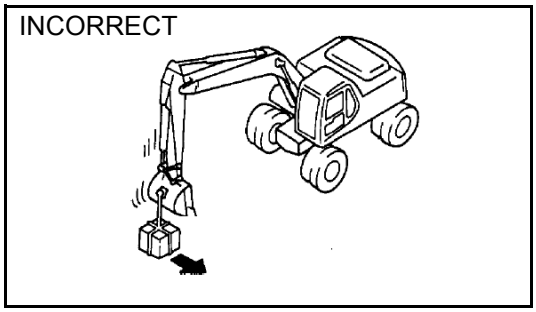

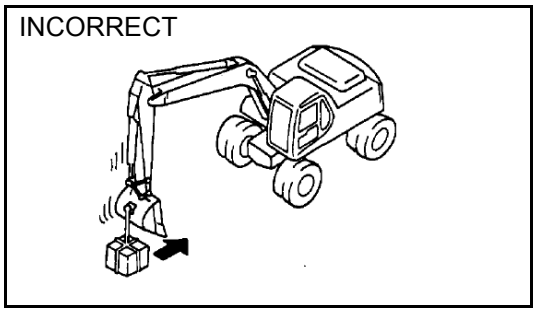

NEVER TRAVEL WHILE LIFTING A LOAD

- Never travel while carrying a load.

OPERATING POSTURE

- If the machine posture is not correct, the wire ropes or ring may detach from the hook. Confirm that the hook angle is correct to avoid this.

HANDLING OF FLUIDS

- Some oils and other fluids, such as Antifreeze, can be harmful to you and the environment, you should therefore always follow the manufacturers instructions regarding storage, handling and disposal.

HANDLING OF USED ENGINE OILS

- Avoid contact with used engine oils.
- Refer to engine oils data sheet for handling and storage precautions.

HANDLING OF OILS

- For diesel oils, hydraulic oils and oils used in the swing machinery, PTO, transmission axles and hubs avoid prolonged or frequent contact with skin.
- Refer to manufacturers data sheet for handling and storage precautions.

HANDLING OF FLUIDS

- For antifreeze and grease refer to manufacturers data sheet for handling and storage precautions.

⚠ WARNING: Failure to follow these safety precautions may lead to a serious accident.

PRECAUTIONS FOR MAINTENANCE

BEFORE CARRYING OUT MAINTENANCE

WARNING TAG

- If others start the engine or operate the controls while you are performing service or lubrication, you could suffer serious injury or death.
- ALWAYS attach the WARNING TAG to the control lever in the operator's cab to alert others that you are working on the machine. Attach additional warning tags around the machine, if necessary.
- These tags are available from your Komatsu distributor. (Part no. 20E-00-K1340)

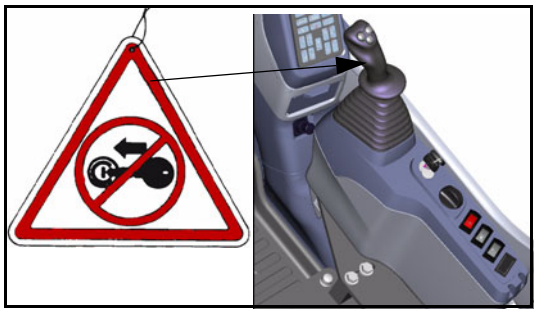

PROPER TOOLS

- Use only tools suited to the task. Using damaged, low quality, faulty, or makeshift tools could cause personal injury.

  Tools, see "INTRODUCTION OF NECESSARY TOOLS (273)"

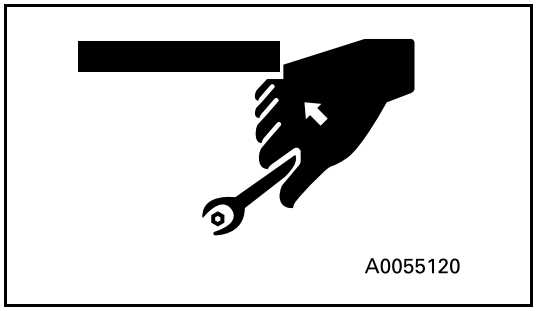

PERIODIC REPLACEMENT OF SAFETY CRITICAL PARTS

- Replace the following fire-related components periodically:
  Fuel system: Fuel hose, spilling hose, and fuel tube cap.
  Hydraulic system: Pump outlet hose.
- Replace these components periodically with new ones, regardless of whether or not they appear to be defective. These components deteriorate over time.
- Replace or repair any such components if any defect is found, event though they have not reached the time specified.

  Replacement of safety critical components, see "PERIODIC REPLACEMENT OF SAFETY CRITICAL PARTS (275)"

STOP THE ENGINE BEFORE CARRYING OUT INSPECTION AND MAINTENANCE

- Always stop the machine on firm flat ground and stop the engine before carrying out inspection and maintenance.
- If it is necessary to run the engine when carrying out maintenance, such as when cleaning the inside of the radiator, Raise the safety lock lever to the LOCK position and carry out the operation with two workers.

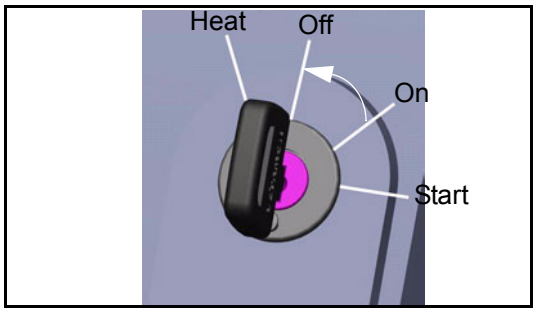

⚠ WARNING: For reasons of safety, always follow these safety precautions.

- One worker should sit in the operator's seat so that he can stop the engine immediately if necessary. He should also be extremely careful not to touch any lever by mistake. Touch the levers only when they have to be operated.
- The worker carrying out the maintenance should be extremely careful not to touch or get caught in the moving parts.

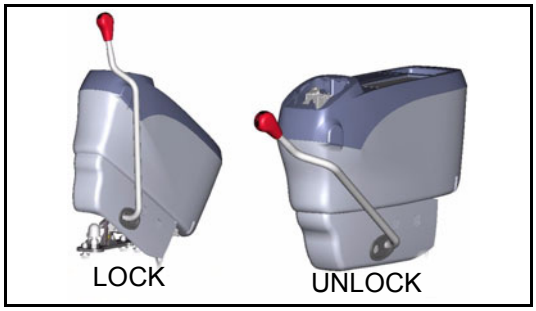

RULES TO FOLLOW WHEN ADDING FUEL OR OIL

- Spilt fuel and oil may cause you to slip, so always wipe it up immediately.
- Always tighten the cap of the fuel and oil fillers securely.

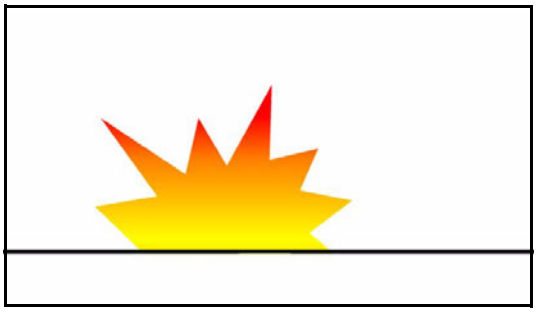

- Never use fuel for washing any parts.

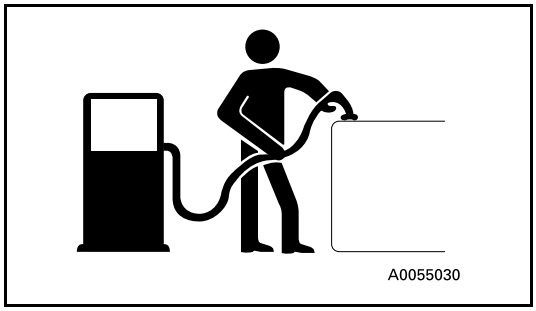

- Always add fuel and oil in a well-ventilated place.

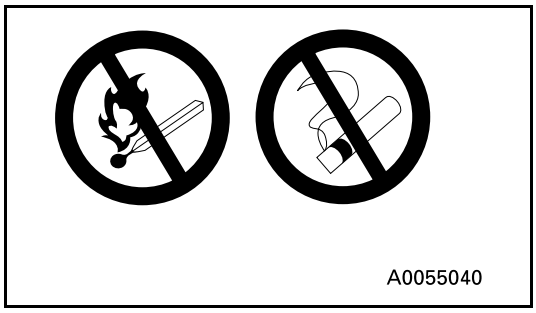

⚠ WARNING: Failure to follow these safety precautions may lead to a serious accident.

RADIATOR WATER LEVEL

- If it is necessary to add water to the radiator, stop the engine and allow the engine and radiator to cool down before adding the water.

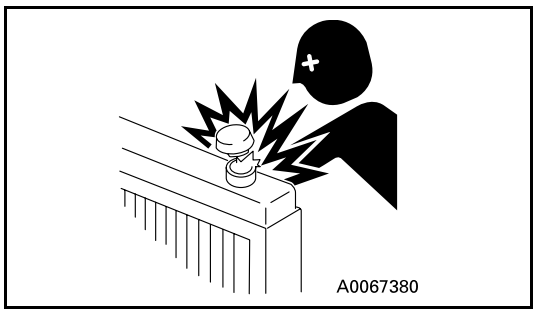

- Slowly loosen the caps to relieve pressure before removing the caps.

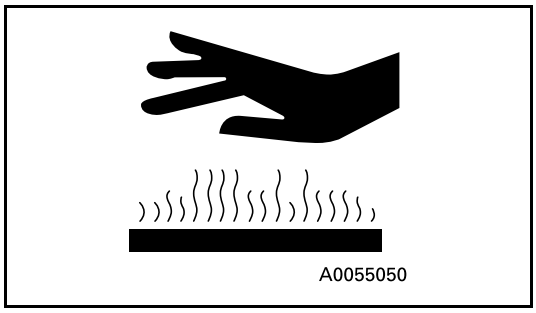

USE OF LIGHTING

- When checking fuel, oil, coolant, or battery electrolyte, always use lighting with anti-explosion specifications.
  If such lighting equipment is not used, there is danger of explosion.

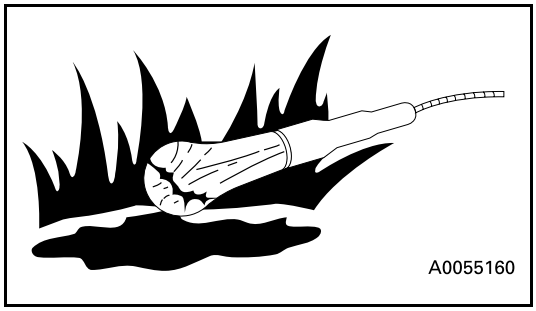

⚠ WARNING: For reasons of safety, always follow these safety precautions.

DURING MAINTENANCE

PERSONNEL

- Only authorised personnel can service and repair the machine. Extra precaution should be used when grinding, welding, and using a sledge-hammer.

ATTACHMENTS

- Place attachments that have been removed from the machine in a safe place so that they do not fall. If they fall on you or others, serious injury could result.

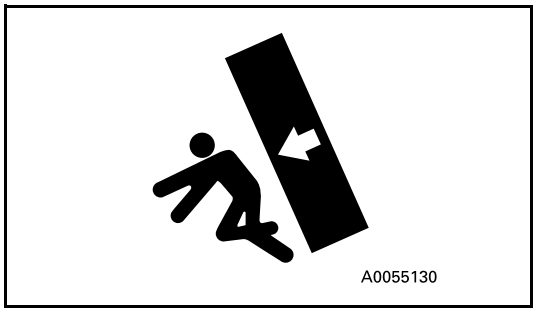

WORK UNDER THE MACHINE

- Always lower all movable work equipment to the ground or to their lowest position before performing service or repairs under the machine.
- Always chock the wheels of the machine securely.
- Never work under the machine if the machine is poorly supported.

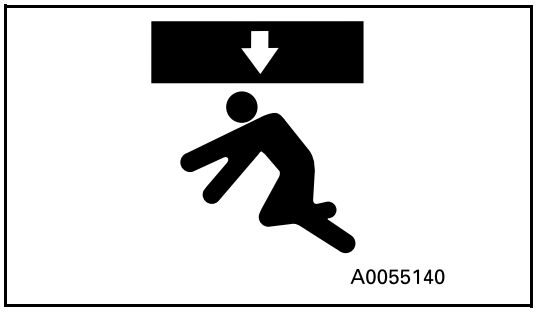

KEEP THE MACHINE CLEAN

- Spilt oil or grease, or scattered tools or broken pieces are dangerous because they may cause you to slip or trip.
  Always keep your machine clean and tidy.
- If water gets into the electrical system, there is danger that the machine may not move or may move unexpectedly.
  Do not use water or steam to clean the sensors, connectors, or the inside of the operator's compartment.

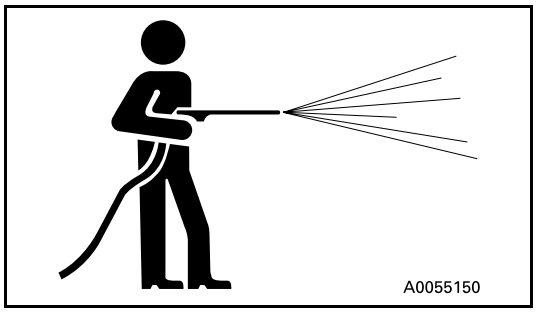

PRECAUTIONS WITH BATTERY

- When repairing the electrical system or when carrying out electrical welding, remove the negative (-) terminal of the battery to stop the flow of current.

HANDLING HIGH-PRESSURE HOSES

- Do not bend high-pressure hoses or hit them with hard objects. Do not use any bent or cracked piping, tubes or hoses. They may burst during use.
- Always repair any loose or broken fuel hoses or oil hoses. If fuel or oil leaks, it may cause a fire.

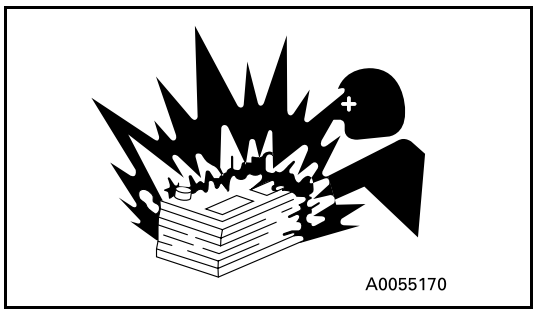

⚠ WARNING: Failure to follow these safety precautions may lead to a serious accident.

PRECAUTIONS WITH HIGH PRESSURE OIL

- Do not forget that the work equipment circuits are always under pressure.
- Do not add oil, drain oil, or carry out maintenance or inspection before completely releasing the internal pressure.
- If oil is leaking under high pressure from small holes, it is dangerous if the jet of high-pressure oil hits your skin or enters your eyes. Always wear safety glasses and thick gloves, and use a piece of cardboard or a sheet of wood to check for oil leakage.
- If you are hit by a jet of high-pressure oil, consult a doctor immediately for medical attention.

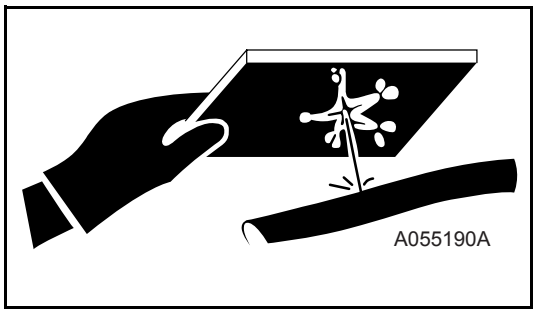

PRECAUTIONS WHEN CARRYING OUT MAINTENANCE AT HIGH TEMPERATURE OR HIGH PRESSURE

- Immediately after stopping operations, the engine cooling water and oil at all parts is at high temperature and under high pressure.
  In this condition, if the cap is removed, or the oil or water are drained, or the filters are replaced, this may result in burns or other injury. Wait for the temperature to go down, then carry out the inspection and maintenance in accordance with the procedures given in this manual.

  Cleaning inside or cooling system, see "WHEN REQUIRED (284)"

  Checking cooling water level, hydraulic oil level, see "CHECK BEFORE STARTING (305)"

  Checking lubricating oil level, adding oil, see "MAINTENANCE SCHEDULE CHART (277)"

  Changing oil, replacing filters, see "MAINTENANCE SCHEDULE CHART (277)"

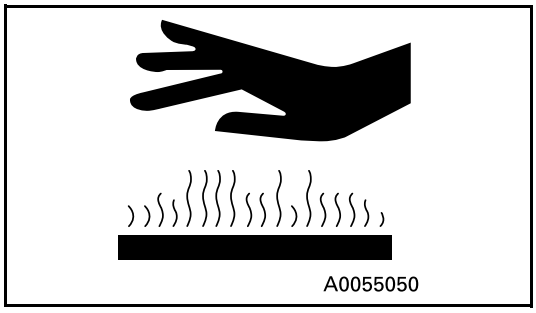

⚠ WARNING: For reasons of safety, always follow these safety precautions.

ROTATING FAN AND BELT

- Keep away from rotating parts and be careful not to let anything get caught in them.
- If your body or tools touch the fan blades or fan belt, they may be cut off or sent flying, so never touch any rotating parts.

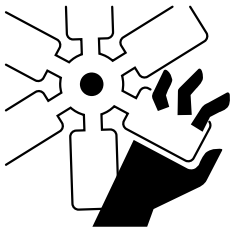

WASTE MATERIALS

- Never dump waste oil in a sewer system, rivers, etc.
- Always put oil drained from your machine in containers. Never drain oil directly on the ground.
- Obey appropriate laws and regulations when disposing of harmful materials such as oil, fuel, coolant, solvent, filters, batteries, and others.

⚠ WARNING: Failure to follow these safety precautions may lead to a serious accident.

POSITION FOR ATTACHING SAFETY LABELS

Always keep these labels clean. If they are lost or damaged, attach them again or replace them with a new label
There are other labels in addition to the safety labels listed as follows, so handle them in the same way.

Safety labels are available from your Komatsu distributor.

POSITION FOR ATTACHING SAFETY LABELS

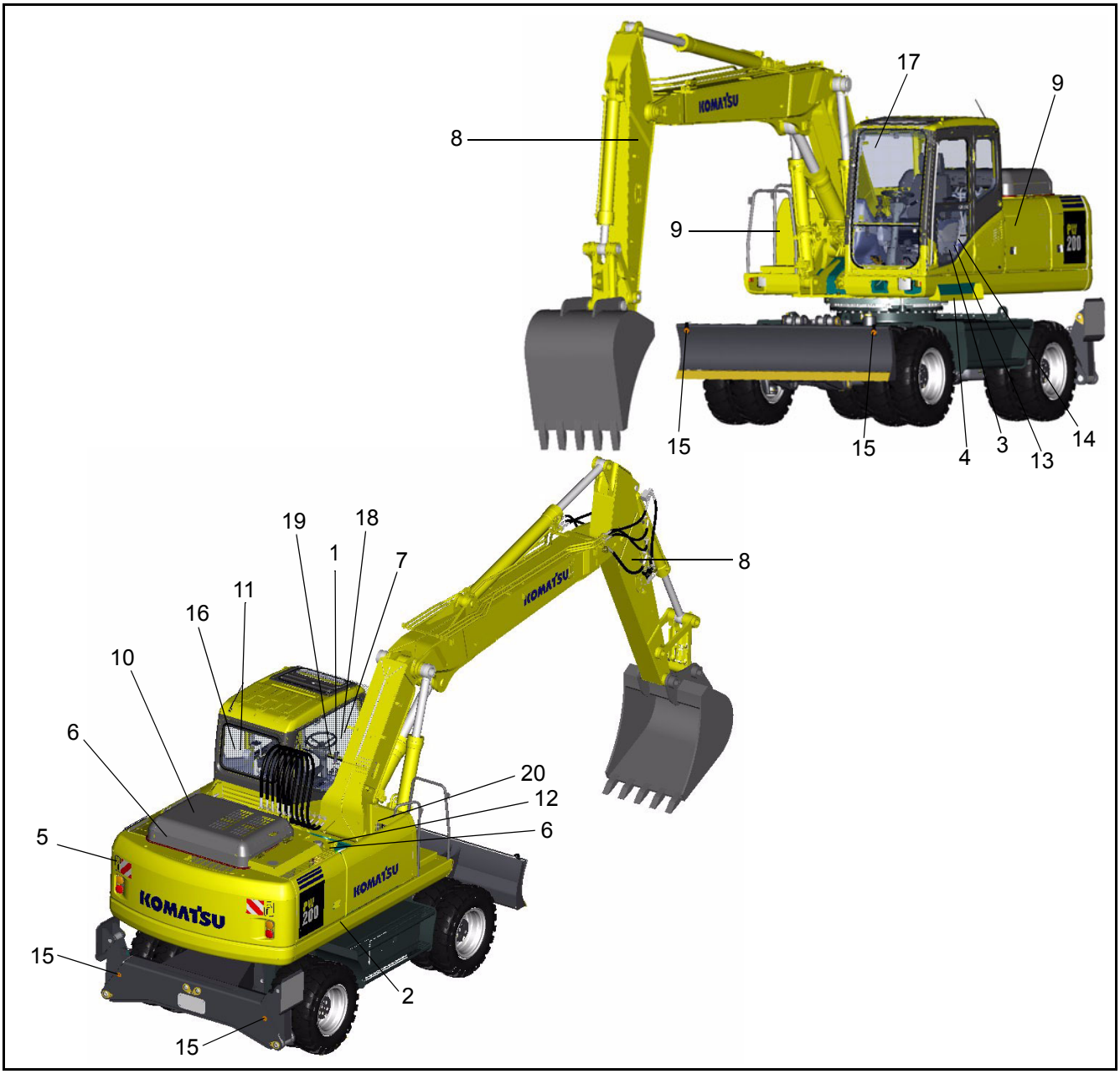

⚠ WARNING: For reasons of safety, always follow these safety precautions.

1. Warnings for read the manuals, safety lock, emergency steering, power lines, do not ride on machine, falling objects and bucket hitting cab. This is located on the right hand window inside the cab (20E-00-K1890)

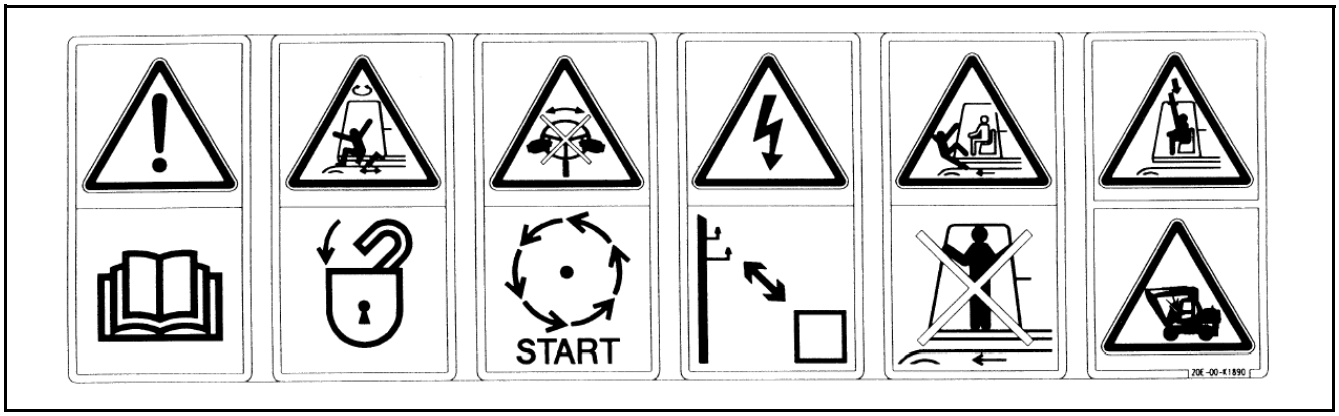

- Improper operation and maintenance can cause serious injury or death.
- Read the manuals before operation.
- Follow instructions and warnings in the manuals and labels on the machine.
- Keep this manual in the machine cab, near operator.
- If this manual is lost, please contact Komatsu distributor for replacement.
- Always raise safety lock lever when leaving operators seat.
- Normal steering can only be operated when the engine is running.
- Emergency steering is only to be used when stopping the machine safely.
- Serious injury or death can occur if the machine or attachments are not kept a safe distance away from electric lines.
- No passengers allowed to ride on machine while it is moving.
- Do not operate where a danger of falling objects exists. Consult your dealer for fitting of FOPS protection.
- Bucket hits operator cab. Read manual before operation.

⚠ WARNING: Failure to follow these safety precautions may lead to a serious accident.

2. There are 6 amber reflectors located on the revolving frame and arm of the machine (20G-46-K1681)

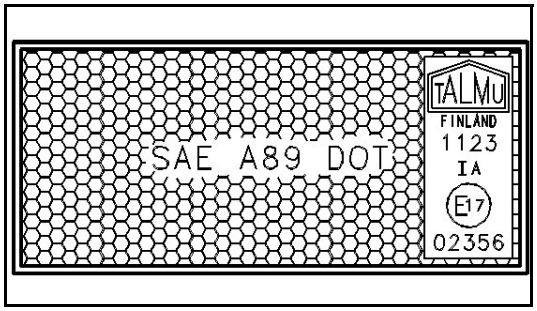

3. Warning for unsafe machine. Located on the left or right hand levers (20E-00-K1340)

- Do not start the engine.

4. Warning for accumulator is located below operator cab (20E-00-K1210)

   Warnings for handling accumulator.
   Explosion hazard

- Keep away from flame.
- Do not weld or drill.
- Read operation manual before operation.

5. Warning for staying clear (20K-00-31280)

Keeping out of moving area.
To prevent SEVERE INJURY or DEATH.
Do the following before moving the machine or its attachments:

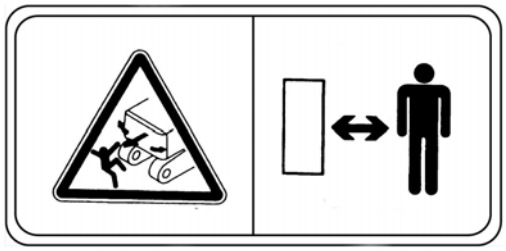

- Sound horn to alert people nearby.
- Be sure no one is on or near machine or in the swing area.
- Rotate cab for full view of travel path if it can be done safely.
- Use spotter if view is obstructed. Follow above even if machine equipped with travel alarm and mirrors.

⚠ WARNING: For reasons of safety, always follow these safety precautions.

6. Warning for hot objects (20E-00-K1190)

Warning for high temperature coolant and oil, hot water and oil hazard.

To prevent hot water and oil from spurting out:

- Turn engine off.
- Allow water to cool.
- Slowly loosen cap to relieve pressure before removing.
- Read operation manual before operation.

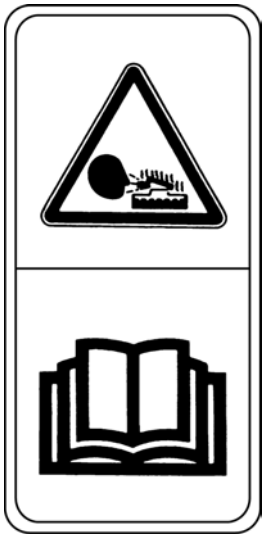

7. Safety lock. This is located on the right hand window of the machine (20E-00-K1850)

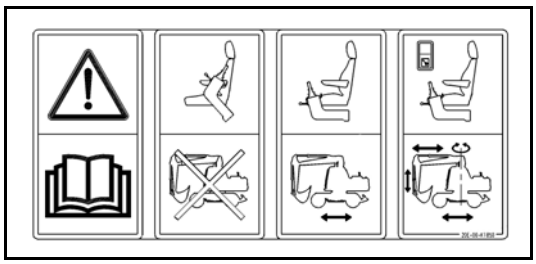

- Read operation manual before operation.
- With safety lock lever raised the control levers are disabled.
- With safety lock lever lowered and control lever lock switch on the machine can travel.
- With safety lock lever lowered and control lever lock switch off work equipment and travel can be operated.

8. Warning for staying clear. This is fitted on both sides of arm (20E-00-K1140)

Keeping out of moving area.

To prevent SEVERE INJURY or DEATH.

Do the following before moving the machine or its attachments:

- Sound horn to alert people nearby.
- Be sure no one is on or near machine or in the swing area.
- Rotate cab for full view of travel path if it can be done safely.
- Use spotter if view is obstructed. Follow above even if machine equipped with travel alarm and mirrors.

⚠ WARNING: Failure to follow these safety precautions may lead to a serious accident.

9. Falling from upper structure warning. This is located on the front of the fuel tank, on inside of walkway door, top of the counterweight.(20E-00-K1110)

- WARNING
  falling from upper structure.
- Keep away from sides of machine.
- Keep off counterweight.
- Do not ride on machine when it is moving.

10. Stop engine warning (20E-00-K1310)

- Do not open cover while engine is running.

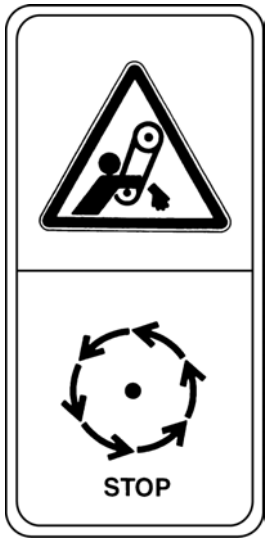

11. Front window lock warning. This is located on the rear window (20E-00-K1230)

- Always lock window in raised or lowered position.

12. High pressure oil warning (20E-00-K1270)

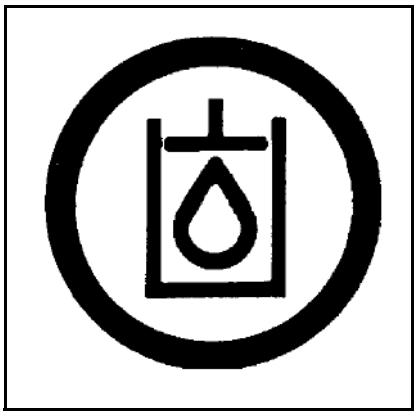

13. (20E-00-31350)

Pump control override switch and swing lock override switch. This is located inside the cab.

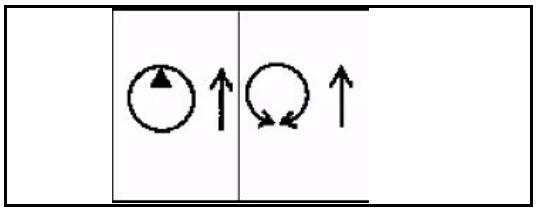

14. 20K-00-31360

Read operation manual before operation.This is located inside the cab.

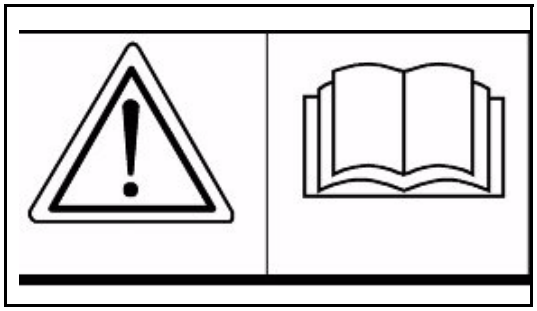

15. Red reflector (20G-47-K1690)

16. 20Y-00-K2220

- Emergency exit
- Read operation manual before operation

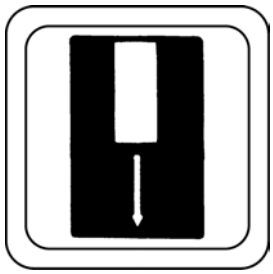

17. Travel Height -UK spec only. This is fitted to the top right hand corner of the front window (20E-00-K1720)

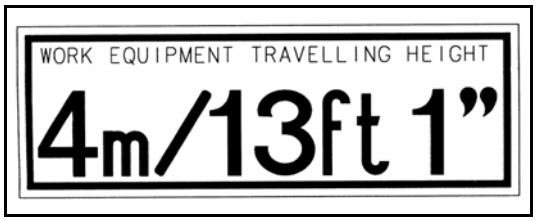

18. Operation of attachments is located on the right hand window (20K-00-31140)

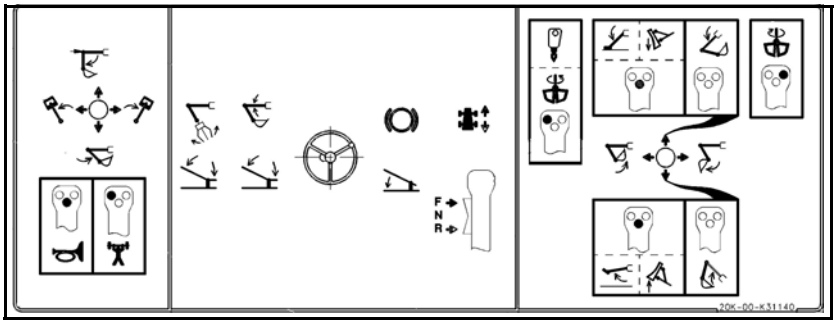

19. Lift warning plate. This is located on the right hand window (20E-00-K1450)

- Do not lift more than the specified load of the machine.

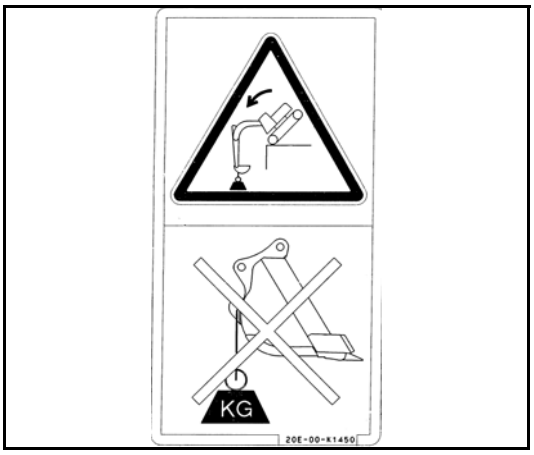

20. Warning don’t step on fuel tank. This is located on top of the fuel tank

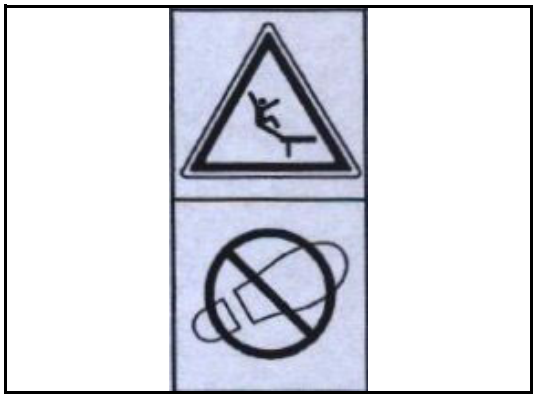

LIFTING CAPACITY CHART PW200-7K

ONE PIECE BOOM Lift capacity tables for 2.5 metre undercarriage

When removing bucket, linkage or cylinder, lifting capacities can be increased by their respective weights.

A - Reach from swing center

B - Bucket hook height

C - Lifting capacities, including bucket (760 kg), linkage (130 kg) and bucket cylinder (182 kg)

OF: Lifting capacity (rating over front)
OS: Lifting capacity (Rating over side)

- MAX: Rating at maximum reach

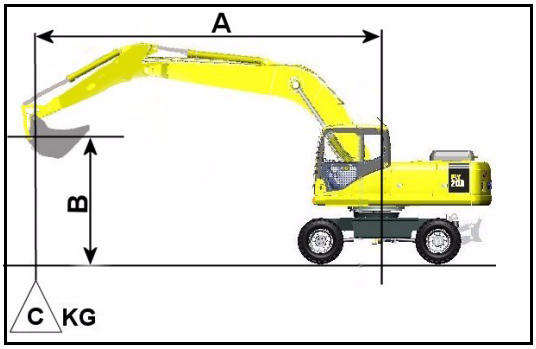

Model	Arm	Height (B)	Reach (A)													
			MAX		9.0m		7.5m		6.0m		4.5m		3.0m		1.5m	
			OF	OS	OF	OS	OF	OS	OF	OS	OF	OS	OF	OS	OF	OS
Attachment less Undercarriage	1.8M	7.5m	*5150	3300												
		6.0m	3550	2150					4600	2900						
		4.5m	2900	1700			2900	1700	4450	2750	7300	4500				
		3.0m	2550	1450			2850	1650	4200	2500	6650	3900				
		1.5m	2450	1350			2750	1550	3950	2300	6100	3450				
		0.0m	2550	1400			2700	1500	3700	2050	5900	3300				
		-1.5m	2850	1600					3700	2050	5950	3300	*8450	6400		
		-3.0m	*3500	2100					3900	2250	*5700	3450				
	2.4M	7.5m	*4250	2700					4650	2950						
		6.0m	3150	1900					4700	3000						
		4.5m	2600	1500			3000	1800	4550	2850	7550	4700				
		3.0m	2300	1300			2900	1700	4300	2600	6800	4050				
		1.5m	2200	1200			2800	1600	4050	2350	6300	3650				
		0.0m	2250	1250			2700	1500	3750	2100	6000	3350				
		-1.5m	2500	1400			2650	1450	3650	2050	5950	3300	*9750	6300		
		-3.0m	3050	1750					3800	2150	6050	3400	*8200	6550		
	2.9M	7.5m	*2650	2250					*4450	3050						
		6.0m	*2550	1600			3100	1850	4800	3050						
		4.5m	2300	1300			3050	1850	4600	2900						
		3.0m	2050	1100			2900	1700	4350	2650	7100	4300	14600	7950		
		1.5m	1950	1050			2800	1600	4050	2400	6450	3750				
		0.0m	2000	1050			2650	1500	3800	2150	6050	3400	*5950	*5950		
		-1.5m	2200	1150			2600	1400	3600	1950	5900	3250	*9200	6200		
		-3.0m	2600	1450			2650	1450	3650	2050	5950	3300	*10200	6400		
	3.5M	7.5m	*2650	1850			*2700	1900								
		6.0m	2400	1350			3150	1900								
		4.5m	2000	1100	2050	1150	3100	1850	4700	2950						
		3.0m	1800	950	2000	1100	2950	1750	4400	2700	7300	4450				
		1.5m	1750	900	1950	1050	2800	1600	4100	2400	6600	3850				
		0.0m	1750	900	1900	950	2650	1450	3850	2150	6100	3400	*6500	6200		
		-1.5m	1900	950			2550	1350	3550	1950	5850	3200	*8750	6100	*5200	*5200
		-3.0m	2250	1150			2550	1350	3550	1900	5800	3200	*12150	6200	*8200	*8200

Model	Arm	Height (B)	Reach (A)													
			MAX		9.0m		7.5m		6.0m		4.5m		3.0m		1.5m	
			OF	OS	OF	OS	OF	OS	OF	OS	OF	OS	OF	OS	OF	OS
Rear Dozer Undercarriage	1.8M	7.5m	*4800	3900												
		6.0m	*4450	2600					*7450	3300						
		4.5m	*4450	2050			*4450	2020	7750	3200	*10150	5200	*15600	9950		
		3.0m	4550	1800			5000	2000	7450	2950	*11400	4600				
		1.5m	4400	1700			4900	1900	7100	2700	*11500	4100				
		0.0m	4550	1750			4850	1850	6850	2500	*10350	3950				
		-1.5m	*4750	1950			4850	1850	*6500	2500	*8450	3950	*8400	7700		
		-3.0m	*3600	2550					*4100	2700	*5700	4150				
	2.4M	7.5m	*4250	3150					*5050	3400						
		6.0m	*4000	2250					*6800	3450						
		4.5m	*4050	1800			5200	2150	*7450	3300	*9450	5400				
		3.0m	4100	1600			5050	2050	7550	3050	*10850	4750				
		1.5m	3950	1500			4950	1900	7250	2800	*11650	4300				
		0.0m	4050	1550			4800	1850	6900	2550	*11050	4050				
		-1.5m	4500	1700			4800	1800	6800	2450	*9500	3950	*9750	7650		
		-3.0m	*3950	2100					*5300	2600	*7100	4050	*8200	7900		
	2.9M	7.5m	*2650	2600					*4450	3500						
		6.0m	*2550	1900			*3850	2200	*5300	3500						
		4.5m	*2550	1550			5250	2150	*6600	3350						
		3.0m	*2650	1400			5100	2050	7650	3100	*10350	4950	*16700	9350		
		1.5m	*2900	1300			4950	1900	7300	2850	*11450	4400				
		0.0m	*3300	1350			4800	1800	6950	2550	*11350	4050	*5950	*5950		
		-1.5m	4000	1450			4750	1750	6750	2400	*10150	3900	*9200	7500		
		-3.0m	*3900	1750			*4950	1800	*5950	2450	*8050	3950	*10200	7700		
	3.5M	7.5m	*2650	2200			*2700	2200								
		6.0m	*2550	1650			*4150	2250								
		4.5m	*2550	1350	*2850	1400	*4950	2200	*5400	3400						
		3.0m	*2650	1200	3650	1350	5100	2050	*7300	3150	*9600	5150				
		1.5m	*2900	1100	3550	1300	4950	1900	7350	2850	*11100	4500				
		0.0m	*3250	1150	3500	1200	4800	1750	7050	2600	*11450	4100	*6500	*6500		
		-1.5m	3550	1250			4700	1700	6700	2350	*10700	3850	*8750	7400	*5200	*5200
		-3.0m	*3900	1450			4650	1700	*6550	2350	*8950	3850	*12200	7500	*8200	*8200

Model	Arm	Height (B)	Reach (A)													
			MAX		9.0m		7.5m		6.0m		4.5m		3.0m		1.5m	
			OF	OS	OF	OS	OF	OS	OF	OS	OF	OS	OF	OS	OF	OS
Rear Outrigger Undercarriage	1.8M	7.5m	*4800	4450												
		6.0m	*4450	3000					*7450	3850						
		4.5m	*4400	2400			*4450	2400	*7850	3700	*10150	6000	*15600	11800		
		3.0m	*4650	2150			5600	2350	*8250	3450	*11400	5400				
		1.5m	4950	2000			5500	2250	8050	3200	*11500	4900				
		0.0m	5100	2100			5400	2200	*7750	3000	*10350	4700				
		-1.5m	*4750	2350					*6500	3000	*8450	4750	*8400	*8400		
		-3.0m	*3600	3000					*4100	3200	*5700	4900				
	2.4M	7.5m	*4250	3650					*5050	3900						
		6.0m	*4000	2600					*6800	3950						
		4.5m	*4050	2150			5800	2500	*7450	3800	*9450	6250				
		3.0m	*4200	1900			5650	2400	*8050	3550	*10850	5550				
		1.5m	4450	1800			5500	2300	8200	3300	*11650	5100				
		0.0m	4550	1850			5400	2200	7850	3050	*11050	4800				
		-1.5m	*4650	2050			*5150	2150	*7050	2950	*9500	4750	*9750	9350		
		-3.0m	*3950	2500					*5300	3100	*7100	4850	*8200	*8200		
	2.9M	7.5m	*2650	*2650					*4450	4050						
		6.0m	*2550	2250			*3850	2550	*5300	4000						
		4.5m	*2550	1650			*5300	2550	*6600	3850						
		3.0m	*2650	1450			5700	2400	*7750	3600	*10350	5800	*16700	11200		
		1.5m	*2900	1400			5550	2300	8250	3350	*11450	5200				
		0.0m	*3250	1400			5400	2150	7900	3050	*11350	4850	*5950	*5950		
		-1.5m	*3900	1500			5300	2100	*7400	2900	*10150	4700	*9200	*9200		
		-3.0m	*3900	1800			*3950	2150	*5950	2950	*8050	4750	*10200	9400		
	3.5M	7.5m	*2650	2550			*2700	2600								
		6.0m	*2550	2100			*4150	2650								
		4.5m	*2550	1750	*2850	1700	*4950	2550	*5400	3950						
		3.0m	*2650	1550	*3950	1650	5750	2450	*7300	3650	*9600	6000				
		1.5m	*2850	1450	4000	1550	5550	2250	*8000	3350	*11100	5350				
		0.0m	*3200	1450	3900	1500	5350	2150	7950	3100	*11450	4850	*6500	*6500		
		-1.5m	*3800	1600			5250	2050	7650	2850	*10700	4650	*8750	*8750	*5200	*5200
		-3.0m	*4900	1900			*4750	2050	*6550	2850	*8950	4600	*12200	9200	*8200	*8200

Model	Arm	Height (B)	Reach (A)													
			MAX		9.0m		7.5m		6.0m		4.5m		3.0m		1.5m	
			OF	OS	OF	OS	OF	OS	OF	OS	OF	OS	OF	OS	OF	OS
Front Dozer Undercarriage	1.8M	7.5m	*4800	4000												
		6.0m	*4450	2650					7250	3400						
		4.5m	*4400	2100			*4450	2100	7100	3300	*10150	5350	*15600	10200		
		3.0m	4200	1850			4600	2050	6800	3050	11350	4700				
		1.5m	4050	1750			4500	1950	6450	2800	10700	4250				
		0.0m	4200	1800			4400	1900	6200	2600	*10350	4100				
		-1.5m	4700	2050					6200	2600	*8450	4100	*8400	8000		
		-3.0m	*3600	2600					*4100	2800	*5700	4250				
	2.4M	7.5m	*4350	3200					*5100	3450						
		6.0m	*4100	2250					*6900	3500						
		4.5m	*4100	1850			4800	2150	7200	3450	*9600	5500				
		3.0m	3750	1600			4650	2050	6900	3100	*11000	4800				
		1.5m	3650	1550			4550	1950	6600	2850	11000	4400				
		0.0m	3750	1550			4450	1850	6300	2600	10650	4100				
		-1.5m	4150	1750			4400	1850	6200	2500	*9650	4050	*9900	7800		
		-3.0m	*4000	2150					*5400	2650	*7200	4150	*8400	8050		
	2.9M	7.5m	*2700	2650					*4500	3550						
		6.0m	*2600	1950			*3900	2250	*5400	3550						
		4.5m	*2600	1600			4800	2200	*6700	3400						
		3.0m	*2700	1400			4700	2100	7000	3150	*10550	5050	*16950	9550		
		1.5m	*2950	1350			4550	1950	6650	2900	11150	4500				
		0.0m	*3350	1350			4400	1850	6350	2600	10700	4150	*6050	*6050		
		-1.5m	*4050	1500			4350	1800	6150	2450	*10350	4000	*9300	7700		
		-3.0m	*4000	1800			*4000	1800	*6050	2500	*8200	4050	*10400	7900		
	3.5M	7.5m	*2700	2250			*2750	2250								
		6.0m	*2600	1700			*4200	2300								
		4.5m	*2600	1400	*2900	1450	4900	2250	*5500	3450						
		3.0m	*2700	1200	3350	1400	4700	2100	7100	3200	*9750	5250				
		1.5m	*2950	1150	3250	1300	4550	1950	6700	2900	*11250	4600				
		0.0m	3000	1150	3200	1250	4400	1800	6400	2650	10750	4150	*6600	*6600		
		-1.5m	3250	1250			4300	1750	6100	2400	10450	3950	*8900	7550	*5300	*5300
		-3.0m	3750	1500			4250	1700	6100	2400	*9100	3950	*12400	7700	*8350	*8350

Model	Arm	Height (B)	Reach (A)													
			MAX		9.0m		7.5m		6.0m		4.5m		3.0m		1.5m	
			OF	OS	OF	OS	OF	OS	OF	OS	OF	OS	OF	OS	OF	OS
Dozer & Outrigger Undercarriage	1.8M	7.5m	*4850	*4850												
		6.0m	*4500	4000					*7600	5050						
		4.5m	*4500	3250			*4500	3250	7800	4900	*10300	8000	*15800	*15800		
		3.0m	4700	2900			5150	3200	7550	4650	*11550	7300				
		1.5m	4550	2800			5050	3100	7200	4350	*11700	6750				
		0.0m	4700	2850			4950	3050	6950	4150	*10550	6600				
		-1.5m	*4800	3200					*6600	4150	*8600	6600	*8550	*8550		
		-3.0m	*3700	*3700					*4200	*4200	*5800	*5800				
	2.4M	7.5m	*4350	*4350					*5100	*5100						
		6.0m	*4100	3500					*6900	5150						
		4.5m	*4100	2900			5300	3350	*7550	5000	*9600	8200				
		3.0m	4200	2600			5200	3250	7650	4750	*11000	7450				
		1.5m	4100	2500			5050	3100	7350	4450	*11850	7000				
		0.0m	4200	2550			4950	3000	7000	4200	*11250	6700				
		-1.5m	4650	2800			4900	3000	6900	4100	*9650	6600	*9900	*9900		
		-3.0m	*4000	3450					*5400	4250	*7200	6700	*8400	*8400		
	2.9M	7.5m	*2700	*2700					*4500	*4500						
		6.0m	*2600	*2600			*3900	3400	*5400	5250						
		4.5m	*2600	2550			5350	3350	*6700	5050						
		3.0m	*2700	2350			5200	3250	7700	4800	*10550	7750	*16950	15950		
		1.5m	*2950	2250			5050	3100	7400	4500	*11650	7100				
		0.0m	*3350	2300			4950	3000	7050	4200	*11550	6700	*6050	*6050		
		-1.5m	*4050	2500			4850	2950	6850	4050	*10350	6550	*9300	*9300		
		-3.0m	*5350	3150			*4000	2950	*6050	4100	*8200	6600	*10400	*10400		
	3.5M	7.5m	*2700	*2700			*2750	*2750								
		6.0m	*2600	*2600			*4200	3500								
		4.5m	*2600	2300	*2900	2350	*5050	3400	*5500	5150						
		3.0m	*2700	2050	3750	2300	5250	3250	*7450	4850	*9750	7950				
		1.5m	*2950	2000	3700	2200	5050	3100	7450	4550	*11250	7250				
		0.0m	*3300	2000	3600	2150	4900	2950	7150	4300	*11650	6750	*6600	*6600		
		-1.5m	3650	2150			4800	2900	6850	4000	*10850	6500	*8900	*8900	*5300	*5300
		-3.0m	*3950	2550			4800	2850	*6650	4000	*9100	6500	*12400	*12400	*8350	*8350

Model	Arm	Height (B)	Reach (A)													
			MAX		9.0m		7.5m		6.0m		4.5m		3.0m		1.5m	
			OF	OS	OF	OS	OF	OS	OF	OS	OF	OS	OF	OS	OF	OS
4 X Outrigger Undercarriage	1.8M	7.5m	*4800	*4800												
		6.0m	*4450	*4450					*7450	6200						
		4.5m	*4400	4000			*4450	4000	*7850	6050	*10150	10000	*15600	*15600		
		3.0m	*4650	3600			6200	3950	*8250	5750	*11400	9250				
		1.5m	*5100	3500			6050	3850	*8350	5450	*11500	8650				
		0.0m	*5350	3600			*5750	3800	*7750	5250	*10350	8450				
		-1.5m	*4750	4050					*6500	5250	*8450	*8450	*8400	*8400		
		-3.0m	*3600	*3600					*4100	*4100	*5700	*5700				
	2.4M	7.5m	*4350	*4350					*5100	*5100						
		6.0m	*4100	*4100					*6900	6300						
		4.5m	*4100	3600			5900	4100	*7550	6150	*9600	*9600				
		3.0m	*4300	3250			5800	4000	*8150	5850	*11000	9450				
		1.5m	4550	3150			5650	3900	8250	5600	*11850	8900				
		0.0m	4700	3200			5550	3800	7950	5300	*11250	8550				
		-1.5m	*4750	3550			*5250	3750	*7200	5200	*9650	8500	*9900	*9900		
		-3.0m	*4000	*4000					*5400	5350	*7200	*7200	*8400	*8400		
	2.9M	7.5m	*2700	*2700					*4500	*4500						
		6.0m	*2600	*2600			*3900	*3900	*5400	*5400						
		4.5m	*2600	*2600			*5400	4150	*6700	6200						
		3.0m	*2700	*2700			5800	4050	*7850	5950	*10550	9750	*16950	*16950		
		1.5m	*2950	2800			5650	3900	8300	5600	*11650	9050				
		0.0m	*3350	2900			5550	3750	8000	5300	*11550	8600	*6050	*6050		
		-1.5m	*4050	3150			5450	3700	*7550	5150	*10350	8450	*9300	*9300		
		-3.0m	*4000	3700			*4000	3750	*6050	5200	*8200	*8200	*10400	*10400		
	3.5M	7.5m	*2700	*2700			*2750	*2750								
		6.0m	*2600	*2600			*4200	*4200								
		4.5m	*2600	*2600			*5050	4200	*5500	*5500						
		3.0m	*2700	2650	*2900	*2900	5850	4050	*7450	6000	*9750	*9750				
		1.5m	*2950	2550	*4000	2900	5650	3900	*8100	5650	*11250	9200				
		0.0m	*3300	2550	4100	2800	5500	3750	8050	5400	*11650	8650	*6600	*6600		
		-1.5m	*3950	2750	4050	2750	5400	3650	7750	5100	*10850	8400	*8900	*8900	*5300	*5300
		-3.0m	*3950	3200			*4800	3650	*6650	5050	*9100	8350	*12400	*12400	*8350	*8350

.Note for lift capacity tables:
1. Ratings are based on ISO 10567
2. Lifting capacities are given for:
   a) 75% of tipping load
   b) rated hydraulic lift capacity 87% of max.
3. Capacities marked with an asterisk (*) are limited by hydraulic capacities

ONE PIECE BOOM Lift capacity tables for 2.75 metre undercarriage

When removing bucket, linkage or cylinder, lifting capacities can be increased by their respective weights.

A - Reach from swing center

B - Bucket hook height

C - Lifting capacities, including bucket (760 kg), linkage (130 kg) and bucket cylinder (182 kg)

OF: Lifting capacity (rating over front)
OS: Lifting capacity (Rating over side)

-MAX: Rating at maximum reach

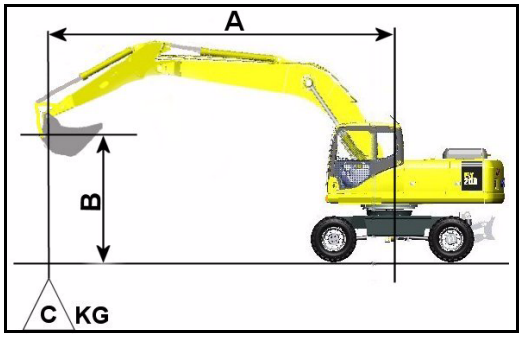

Model	Arm	Height (B)	Reach (A)													
			MAX		9.0m		7.5m		6.0m		4.5m		3.0m		1.5m	
			OF	OS	OF	OS	OF	OS	OF	OS	OF	OS	OF	OS	OF	OS
Attachment less Undercarriage	1.8M	7.5m	*4800	3850												
		6.0m	3750	2550					4700	3300						
		4.5m	3000	2000			3000	2000	4600	3150	7500	5150	*15600	9850		
		3.0m	2650	1750			2950	1950	4350	2950	6800	4550				
		1.5m	2550	1650			2850	1850	4050	2650	6300	4050				
		0.0m	2650	1700			2800	1800	3800	2450	6100	3900				
		-1.5m	2950	1950					3800	2450	6150	3900	*8400	7650		
		-3.0m	*3600	2500					4050	2650	*5700	4050				
	2.4M	7.5m	*4250	3150					4850	3400						
		6.0m	3300	2300					4900	3450						
		4.5m	2750	1850			3200	2150	4750	3350	7850	5400				
		3.0m	2500	1650			3100	2100	4500	3100	7150	4800				
		1.5m	2400	1550			2950	2000	4300	2900	6700	4700				
		0.0m	2450	1600			2900	1900	4000	2650	6400	4150				
		-1.5m	2700	1750			2850	1850	3900	2550	6350	4100	*9750	7850		
		-3.0m	3300	2150					4050	2650	6400	4150	*8450	8100		
	2.9M	7.5m	*2650	2600					*4450	3450						
		6.0m	*2550	1900			3200	2150	4900	3450						
		4.5m	2350	1550			3150	2100	4750	3300						
		3.0m	2150	1350			3000	2000	4450	3050	7250	4900	14950	9250		
		1.5m	2050	1300			2850	1900	4200	2800	6600	4350				
		0.0m	2100	1300			2750	1750	3900	2550	6200	4000	*5950	*5950		
		-1.5m	2250	1450			2700	1700	3700	2350	6100	3850	*9200	7400		
		-3.0m	2700	1750			2750	1750	3800	2400	6100	3900	*10200	7600		
	3.5M	7.5m	*2650	2150			*2700	2200								
		6.0m	2450	1650			3250	2250								
		4.5m	2100	1350	2150	1350	3150	2150	4850	3400						
		3.0m	1900	1150	2100	1350	3050	2050	4550	3100	7500	5100				
		1.5m	1800	1100	2000	1250	2850	1850	4200	2800	6750	4450				
		0.0m	1850	1100	1950	1200	2750	1750	3950	2550	6250	4000	*6500	*6500		
		-1.5m	2000	1200			2650	1650	3700	2350	6050	3800	*8750	7300	*5200	*5200
		-3.0m	2300	1450			2600	1650	3650	2300	6000	3800	*12150	7400	*8200	*8200

Model	Arm	Height (B)	Reach (A)													
			MAX		9.0m		7.5m		6.0m		4.5m		3.0m		1.5m	
			OF	OS	OF	OS	OF	OS	OF	OS	OF	OS	OF	OS	OF	OS
Rear Dozer Undercarriage	1.8M	7.5m	*4800	4400												
		6.0m	*4450	2950					*7450	3800						
		4.5m	*4400	2350			*4450	2400	*7850	3650	*10150	5900	*15600	11550		
		3.0m	4650	2100			5150	2300	7650	3400	*11400	5300				
		1.5m	4550	2000			5050	2250	7300	3150	*11500	4800				
		0.0m	4700	2050			4950	2150	7050	2950	*10350	4650				
		-1.5m	*4750	2300					*6500	2950	*8450	4650	*8400	*8400		
		-3.0m	*3600	2950					*4100	3150	*5700	4800				
	2.4M	7.5m	*4250	3600					*5050	3850						
		6.0m	*4000	2550					*6800	3900						
		4.5m	*4050	2100			5300	2450	*7450	3750	*9450	6150				
		3.0m	4200	1850			5200	2350	7750	3500	*10850	5450				
		1.5m	4100	1750			5050	2250	7450	3250	*11650	5000				
		0.0m	4200	1800			4950	2150	7100	3000	*11050	4700				
		-1.5m	4650	2000			4950	2150	7000	2900	*9500	4650	*9750	9100		
		-3.0m	*3950	2450					*5300	3050	*7100	4750	*8200	*8200		
	2.9M	7.5m	*2650	*2650					*4450	3950						
		6.0m	*2550	2250			*3850	2550	*5300	3950						
		4.5m	*2550	1850			*5300	2500	*6600	3800						
		3.0m	*2650	1650			5250	2350	*7750	3550	*10350	5700	*16700	10950		
		1.5m	*2900	1550			5100	2250	7500	3300	*11450	5100				
		0.0m	*3300	1600			4950	2150	7150	3000	*11350	4750	*5950	*5950		
		-1.5m	*4000	1750			4900	2050	6950	2850	*10150	4600	*9200	9000		
		-3.0m	*3900	2100			*3950	2100	*5950	2900	*8050	4650	*10200	9200		
	3.5M	7.5m	*2650	2550			*2700	2550								
		6.0m	*2550	1950			*4150	2600								
		4.5m	*2550	1600	*2850	1650	*4950	2500	*5400	3900						
		3.0m	*2650	1450	3750	1600	5250	2400	*7300	3600	*9600	5900				
		1.5m	*2900	1350	3650	1550	5100	2250	7550	3300	*11100	5250				
		0.0m	*3250	1400	3600	1500	4900	2100	7250	3050	*11450	4750	*6500	*6500		
		-1.5m	*3650	1500			4800	2000	6900	2800	*10700	4550	*8750	*8750	*5200	*5200
		-3.0m	*3900	1750			*4750	2000	*6550	2800	*8950	4550	*12200	8950	*8200	*8200

Model	Arm	Height (B)	Reach (A)													
			MAX		9.0m		7.5m		6.0m		4.5m		3.0m		1.5m	
			OF	OS	OF	OS	OF	OS	OF	OS	OF	OS	OF	OS	OF	OS
Rear Outrigger Undercarriage	1.8M	7.5m	*4800	*4800												
		6.0m	*4450	3400					*7450	4250						
		4.5m	*4400	2700			*4450	2700	*7850	4150	*10150	6700	*15600	13400		
		3.0m	*4650	2400			5750	2650	*8250	3900	*11400	6050				
		1.5m	5100	2300			5650	2550	8250	3600	*11500	5550				
		0.0m	5250	2350			5600	2500	*7750	3400	*10350	5350				
		-1.5m	*4750	2650					*6500	3400	*8450	5400	*8400	*8400		
		-3.0m	*3600	3400					*4100	3600	*5700	5550				
	2.4M	7.5m	*4250	4050					*5050	4350						
		6.0m	*4000	2950					*6800	4400						
		4.5m	*4050	2400			5950	2800	*7450	4250	*9450	6900				
		3.0m	*4200	2150			5800	2700	*8050	4000	*10850	6200				
		1.5m	4550	2050			5700	2600	*8350	3750	*11650	5750				
		0.0m	4700	2100			5550	2500	*8050	3450	*11050	5450				
		-1.5m	*4650	2300			*5150	2450	*7050	3350	*9500	5400	*9750	*9750		
		-3.0m	*3950	2850					*5300	3500	*7100	5500	*8200	*8200		
	2.9M	7.5m	*2650	*2650					*4450	*4450						
		6.0m	*2550	*2550			*3850	2900	*5300	4450						
		4.5m	*2550	2150			*5300	2850	*6600	4300						
		3.0m	*2650	1900			5850	2700	*7750	4050	*10350	6500	*16700	12750		
		1.5m	*2900	1850			5700	2600	*8250	3750	*11450	5850				
		0.0m	*3300	1850			5550	2450	8100	3500	*11350	5500	*5950	*5950		
		-1.5m	*4000	2050			5500	2400	*7400	3300	*10150	5350	*9200	*9200		
		-3.0m	*3900	2450			*3950	2450	*5950	3350	*8050	5400	*10200	*10200		
	3.5M	7.5m	*2650	*2650			*2700	*2700								
		6.0m	*2550	2250			*4150	2950								
		4.5m	*2550	1900	*2850	1900	*4950	2850	*5400	4350						
		3.0m	*2650	1700	*3950	1900	5900	2750	*7300	4100	*9600	6650				
		1.5m	*2900	1600	4100	1800	5700	2600	*8000	3800	*11100	6000				
		0.0m	*3250	1650	4050	1750	5550	2450	8200	3550	*11450	5500	*6500	*6500		
		-1.5m	*3900	1750			5400	2350	*7700	3300	*10700	5300	*8750	*8750	*5200	*5200
		-3.0m	*3900	2050			*4750	2350	*6550	3250	*8950	5250	*12200	10650	*8200	*8200

Model	Arm	Height (B)	Reach (A)													
			MAX		9.0m		7.5m		6.0m		4.5m		3.0m		1.5m	
			OF	OS	OF	OS	OF	OS	OF	OS	OF	OS	OF	OS	OF	OS
Front Dozer Undercarriage	1.8M	7.5m	*4850	4450												
		6.0m	*4500	3000					7400	3800						
		4.5m	*4500	2400			*4500	2400	7200	3700	*10300	5950	*15600	11650		
		3.0m	4300	2100			4700	2350	6950	3450	11550	5350				
		1.5m	4150	2000			4600	2250	6600	3200	10900	4850				
		0.0m	4300	2050			4500	2200	6350	2950	*10550	4700				
		-1.5m	4800	2350					6350	2950	*8600	4700	*8550	*8550		
		-3.0m	*3700	3000					*4200	3150	*5800	4850				
	2.4M	7.5m	*4350	3600					*5100	3900						
		6.0m	*4100	2600					*6900	3950						
		4.5m	*4100	2100			4850	2500	7350	3800	*9600	6200				
		3.0m	3850	1900			4750	2400	7050	3550	*11000	5500				
		1.5m	3700	1800			4600	2250	6750	3300	11200	5050				
		0.0m	3800	1850			4500	2200	6400	3000	10800	4750				
		-1.5m	4200	2050			4500	2150	6300	2950	*9650	4700	*9900	9250		
		-3.0m	*4000	2500					*5400	3050	*7200	4800	*8400	*8400		
	2.9M	2.9M	*2700	*2700					*4500	4000						
		6.0m	*2600	2250			*3900	2550	*5400	4000						
		4.5m	*2600	1850			4900	2500	*6700	3850						
		3.0m	*2700	1650			4800	2400	7100	3600	*10550	5750	*16950	11050		
		1.5m	*2950	1600			4600	2250	6800	3300	11350	5150				
		0.0m	*3350	1600			4500	2150	6450	3050	10850	4800	*6050	*6050		
		-1.5m	3750	1750			4450	2100	6250	2850	*10350	4650	*9300	9100		
		-3.0m	*4000	2100			*4000	2150	*6050	2950	*8200	4700	*10400	9300		
	3.5M	7.5m	*2700	2550			*2750	2550								
		6.0m	*2600	1950			*4200	2600								
		4.5m	*2600	1650	*2900	1700	4950	2550	*5500	3900						
		3.0m	*2700	1450	3400	1650	4800	2400	7200	3650	*9750	5950				
		1.5m	*2950	1400	3350	1550	4650	2250	6850	3350	*11250	5300				
		0.0m	3100	1400	3250	1500	4450	2100	6550	3100	10950	4800	*6600	*6600		
		-1.5m	3300	1500			4350	2050	6250	2850	10650	4600	*8900	*8900	*5300	*5300
		-3.0m	3850	1800			4350	2000	6200	2800	*9100	4600	*12400	9100	*8350	*8350

Model	Arm	Height (B)	Reach (A)													
			MAX		9.0m		7.5m		6.0m		4.5m		3.0m		1.5m	
			OF	OS	OF	OS	OF	OS	OF	OS	OF	OS	OF	OS	OF	OS
Dozer & Outrigger Undercarriage	1.8M	7.5m	*4850	*4850												
		6.0m	*4500	4350					*7600	5450						
		4.5m	*4500	3550			*4500	3550	*7950	5300	*10300	8650	*15800	*15800		
		3.0m	*4700	3150			5250	3450	7700	5050	*11550	7950				
		1.5m	4650	3050			5150	3350	7350	4750	*11700	7400				
		0.0m	4800	3150			5100	3300	7100	4550	*10550	7200				
		-1.5m	*4800	3500					*6600	4550	*8600	7250	*8550	*8550		
		-3.0m	*3700	*3700					*4200	*4200	*5800	*5800				
	2.4M	7.5m	*4350	*4350					*5100	*5100						
		6.0m	*4100	3750					*6900	5550						
		4.5m	*4100	3150			5400	3600	*7550	5400	*9600	8900				
		3.0m	*4300	2850			5300	3500	7800	5150	*11000	8150				
		1.5m	4200	2750			5150	3400	7500	4850	*11850	7650				
		0.0m	4300	2800			5050	3300	7200	4600	*11250	7300				
		-1.5m	4750	3100			5050	3250	7050	4500	*9650	7250	*9900	*9900		
		-3.0m	*4000	3750					*5400	4650	*7200	*7200	*8400	*8400		
	2.9M	7.5m	*2700	*2700					*4500	*4500						
		6.0m	*2600	*2600			*3900	3700	*5400	*5400						
		4.5m	*2600	*2600			*5400	3650	*6700	5450						
		3.0m	*2700	2550			5350	3550	*7850	5200	*10550	8400	*16950	*16950		
		1.5m	*2950	2450			5200	3400	7550	4900	*11650	7750				
		0.0m	*3350	2500			5050	3300	7200	4600	*11550	7350	*6050	*6050		
		-1.5m	*4050	2750			5000	3200	7000	4450	*10350	7200	*9300	*9300		
		-3.0m	*5350	3250			*4000	3250	*6050	4500	*8200	7250	*10400	*10400		
	3.5M	7.5m	*2700	*2700			*2750	*2750								
		6.0m	*2600	*2600			*4200	3750								
		4.5m	*2600	2500	*2900	2550	*5050	3700	*5500	*5500						
		3.0m	*2700	2300	3850	2500	5350	3550	*7450	5250	*9750	8650				
		1.5m	*2950	2200	3750	2450	5200	3400	7600	4950	*11250	7900				
		0.0m	*3300	2250	3700	2350	5000	3250	7300	4650	*11650	7400	*6600	*6600		
		-1.5m	3750	2400			4900	3150	7000	4400	*10850	7150	*8900	*8900	*5300	*5300
		-3.0m	*3950	2800			*4800	3150	*6650	4350	*9100	7150	*12400	*12400	*8350	*8350

Model	Arm	Height (B)	Reach (A)													
			MAX		9.0m		7.5m		6.0m		4.5m		3.0m		1.5m	
			OF	OS	OF	OS	OF	OS	OF	OS	OF	OS	OF	OS	OF	OS
4 X Outrigger Undercarriage	1.8M	7.5m	*4850	*4850												
		6.0m	*4500	*4500					*7600	6550						
		4.5m	*4500	4300			*4500	4300	*7950	6400	*10300	*10300	*15800	*15800		
		3.0m	*4700	3850			5850	4250	*8400	6150	*11550	9900				
		1.5m	*5150	3700			5750	4150	8300	5850	*11700	9300				
		0.0m	5400	3850			5700	4050	*7900	5600	*10550	9100				
		-1.5m	*4800	4300					*6600	5600	*8600	*8600	*8550	*8550		
		-3.0m	*3700	*3700					*4200	*4200	*5800	*5800				
	2.4M	7.5m	*4350	*4350					*5100	*5100						
		6.0m	*4100	*4100					*6900	6700						
		4.5m	*4100	3800			6050	4400	*7550	6500	*9600	*9600				
		3.0m	*4300	3450			5900	4300	*8150	6250	*11000	10100				
		1.5m	4700	3350			5800	4150	8450	5950	*11850	9550				
		0.0m	4800	3450			5700	4050	8100	5650	*11250	9200				
		-1.5m	*4750	3800			*5250	4000	*7200	5550	*9650	9150	*9900	*9900		
		-3.0m	*4000	*4000					*5400	*5400	*7200	*7200	*8400	*8400		
	2.9M	7.5m	*2700	*2700					*4500	*4500						
		6.0m	*2600	*2600			*3900	*3900	*5400	*5400						
		4.5m	*2600	*2600			*5400	4400	*6700	6600						
		3.0m	*2700	*2700			5950	4300	*7850	6300	*10550	10400	*16950	*16950		
		1.5m	*2950	*2950			5800	4150	*8350	6000	*11650	9700				
		0.0m	*3350	3100			5650	4050	8150	5700	*11550	9250	*6050	*6050		
		-1.5m	*4050	3350			5600	3950	*7550	5500	*10350	9100	*9300	*9300		
		-3.0m	*4000	*4000			*4000	4000	*6050	5550	*8200	*8200	*10400	*10400		
	3.5M	7.5m	*2700	*2700			*2750	*2750								
		6.0m	*2600	*2600			*4200	*4200								
		4.5m	*2600	*2600	*2900	*2900	*5050	4450	*5500	*5500						
		3.0m	*2700	*2700	*4000	3100	6000	4300	*7450	6400	*9750	*9750				
		1.5m	*2950	2700	4200	3000	5800	4150	*8100	6050	*11250	9850				
		0.0m	*3300	2750	4150	2950	5650	4000	8250	5750	*11650	9300	*6600	*6600		
		-1.5m	*3950	3000			5550	3900	*7850	5500	*10850	9050	*8900	*8900	*5300	*5300
		-3.0m	*3950	3450			*4800	3900	*6650	5450	*9100	9000	*12400	*12400	*8350	*8350

.Note for lift capacity tables:
1. Ratings are based on ISO 10567
2. Lifting capacities are given for:
   a) 75% of tipping load
   b) rated hydraulic lift capacity 87% of max.
3. Capacities marked with an asterisk (*) are limited by hydraulic capacities

TWO PIECE BOOM Lift capacity tables for 2.5 metre undercarriage

When removing bucket, linkage or cylinder, lifting capacities can be increased by their respective weights.

A - Reach from swing center

B - Bucket hook height

C - Lifting capacities, including bucket (760 kg),

linkage (130 kg) and bucket cylinder (182 kg)

OF: Lifting capacity (rating over front)
OS: Lifting capacity (Rating over side)

-MAX: Rating at maximum reach

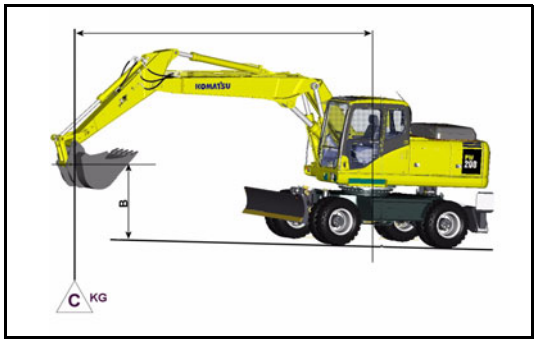

Model	Arm	Height (B)	Reach (A)													
			MAX		9.0m		7.5m		6.0m		4.5m		3.0m		1.5m	
			OF	OS	OF	OS	OF	OS	OF	OS	OF	OS	OF	OS	OF	OS
Attachment less Undercarriage	1.8M	7.5m	*5050	3900							*6400	5000				
		6.0m	4000	2450					4650	2900	*6550	5050				
		4.5m	3150	1850					4550	2800	7600	4650	*11000	9000		
		3.0m	2750	1550			2900	1650	4300	2550	6700	3900				
		1.5m	2650	1450			2800	1550	4050	2350	6300	3550				
		0.0m	2700	1500			2700	1500	3800	2150	6000	3300				
		-1.5m	3050	1700					3800	2100	6000	3300	*12050	6250		
		-3.0m									6150	3450				
	2.4M	7.5m	*4400	3050												
		6.0m	3450	2050					4850	3050						
		4.5m	2800	1600			3050	1800	4700	2900	*6850	4900				
		3.0m	2450	1400			2950	1700	4400	2650	7200	4300				
		1.5m	2350	1300			2800	1600	4100	2400	6500	3750				
		0.0m	2400	1300			2700	1500	3900	2200	6100	3400				
		-1.5m	2650	1450			2700	1450	3750	2100	6000	3300	*10950	6200		
		-3.0m	3300	1850					3850	2150	6050	3350	12800	6450		
	2.9M	7.5m	*2800	2500					*4150	3100						
		6.0m	*2600	1750			3100	1850	*4800	3100						
		4.5m	2450	1400			3100	1850	4750	3000	*6050	5050				
		3.0m	2200	1200			3000	1750	4500	2750	7400	4450	*12400	8500		
		1.5m	2100	1100			2850	1600	4150	2450	6650	3850	*6350	*6350		
		0.0m	2100	1100			2700	1450	3900	2200	6150	3400	*6950	6200		
		-1.5m	2300	1200			2600	1400	3750	2050	5950	3250	*10200	6100		
		-3.0m	2800	1500					3750	2050	5950	3250	12550	6250		
	3.5M	7.5m	*2700	2050												
		6.0m	*2550	1500			3200	1950	*4100	3200						
		4.5m	2150	1200			3150	1900	*4700	3050						
		3.0m	1950	1000	2050	1100	3000	1750	4600	2800	*7000	4650	*10000	9200		
		1.5m	1850	900	1950	1000	2850	1600	4250	2500	6750	3900				
		0.0m	1850	900	1900	950	2700	1450	3900	2200	62550	3500	*7600	6300		
		-1.5m	2000	1000			2550	1350	3700	2000	5950	3200	*9700	6050	*5400	*5400
		-3.0m	2350	1250			2550	1350	3650	1950	5850	3150	12350	6100		

Model	Arm	Height (B)	Reach (A)													
			MAX		9.0m		7.5m		6.0m		4.5m		3.0m		1.5m	
			OF	OS	OF	OS	OF	OS	OF	OS	OF	OS	OF	OS	OF	OS
Rear Dozer Undercarriage	1.8M	7.5m	*5050	4450							*6400	5750				
		6.0m	*4550	2850					*6050	3350	*6550	5750				
		4.5m	*4450	2200					*6400	3250	*7750	5400	*11000	10500		
		3.0m	*4600	1900			5100	2000	*7150	3050	*9400	4600				
		1.5m	4750	1800			5000	1900	7350	2800	*10950	4200				
		0.0m	4900	1800			4900	1850	7100	2550	*11300	3950				
		-1.5m	5550	2050					7050	2550	*10650	3950	*12050	7600		
		-3.0m									*8950	4100				
	2.4M	7.5m	*4400	3500												
		6.0m	*4100	2450					*5350	3500						
		4.5m	*4050	1950			5300	2150	*5850	3350	*6850	5600				
		3.0m	*4200	1650			5200	2050	*6700	3100	*8750	5000				
		1.5m	4250	1550			5050	1950	7450	2850	*10500	4400				
		0.0m	4350	1600			4900	1850	7150	2650	*11300	4050				
		-1.5m	4850	1800			4900	1800	7000	2550	*11100	3950	*10950	7550		
		-3.0m	*6000	2250					*7100	2600	*9900	4000	*14050	7800		
	2.9M	7.5m	*2800	*2800					*4150	3550						
		6.0m	*2600	2100			*3200	2200	*4800	3600						
		4.5m	*2550	1700			*4950	2200	*5350	3450	*6050	5750				
		3.0m	*2650	1450			5250	2050	*6250	3200	*7950	5200	*12400	9950		
		1.5m	*2900	1350			5050	1950	*7200	2900	*9900	4550	*6350	*6350		
		0.0m	*3250	1400			4900	1800	7200	2650	*11050	4100	*6950	*6950		
		-1.5m	*3950	1500			4800	1750	7000	2500	*11200	3900	*10200	7450		
		-3.0m	5150	1850					7000	2500	*10400	3950	*15250	7650		
	3.5M	7.5m	*2750	2400												
		6.0m	*2550	1800			*3950	2300	*4100	3700						
		4.5m	*2550	1450			*4500	2250	*4700	3550						
		3.0m	*2650	1250	*3350	1350	*4950	2100	*5650	3250	*7000	5400	*10000	*10000		
		1.5m	*2850	1200	3650	1300	5100	1950	*6750	2950	*9050	4600				
		0.0m	*3200	1200	3550	1200	4900	1800	7250	2650	*10600	4150	*7600	*7600		
		-1.5m	3750	1300			4750	1700	7000	2450	*11150	3900	*9750	7400	*5400	*5400
		-3.0m	4400	1550			4750	1650	6900	2400	*10750	3800	*13700	7450		

Model	Arm	Height (B)	Reach (A)													
			MAX		9.0m		7.5m		6.0m		4.5m		3.0m		1.5m	
			OF	OS	OF	OS	OF	OS	OF	OS	OF	OS	OF	OS	OF	OS
Rear Outrigger Undercarriage	1.8M	7.5m	*5050	*5050							*6400	*6400				
		6.0m	*4550	3300					*6050	3900	*6550	*6550				
		4.5m	*4450	2600					6400	3800	*7750	6250	*11000	*11000		
		3.0m	*4600	2250			5700	2350	*7150	3550	*9400	5400				
		1.5m	*5050	2150			5600	2250	*7850	3300	*10950	5000				
		0.0m	5500	2200			5500	2200	8050	3100	*11300	4750				
		-1.5m	6250	2500					7800	3050	*10650	4750	*12050	9350		
		-3.0m									*8950	4900				
	2.4M	7.5m	*4400	4050												
		6.0m	*4100	2850					*5350	4050						
		4.5m	*4050	2300			*5350	2500	*5850	3900	*6850	6450				
		3.0m	*4200	2000			*5700	2450	*6700	3650	*8750	5850				
		1.5m	*4550	1900			5650	2300	*7550	3350	*10500	5250				
		0.0m	*4900	1950			5550	2200	*8050	3150	*11300	4850				
		-1.5m	5450	2150			5500	2150	8000	3050	*11100	4750	*10950	9300		
		-3.0m	*6000	2700					*7100	3100	*9900	4850	*14050	9550		
	2.9M	7.5m	*2800	*2800					*4150	4100						
		6.0m	*2600	2450			*3200	2600	*4800	4150						
		4.5m	*2550	2000			*4950	2550	*5350	4000	*6050	*6050				
		3.0m	*2650	1750			*5350	2450	*6250	3700	*7950	6050	*12400	11900		
		1.5m	*2900	1700			5650	2300	*7200	3400	*9900	5350	*6350	*6350		
		0.0m	*3250	1700			5500	2200	*7900	3150	*11050	4900	*6950	*6950		
		-1.5m	*3950	1850			5450	2100	*7950	3000	*11200	4700	*10200	9200		
		-3.0m	*5250	2250					*7500	3000	*10400	4750	*15250	9350		
	3.5M	7.5m	*2750	*2750												
		6.0m	*2550	2100			*3950	2700	*4100	*4100						
		4.5m	*2550	1750			*4500	2600	*4700	4100						
		3.0m	*2650	1550	*3350	1650	4950	2500	*5650	3800	*7000	6250	*10000	*10000		
		1.5m	*2850	1450	*3950	1550	*5500	2300	*6750	3450	*9050	5450				
		0.0m	*3200	1450	*3650	1500	5500	2150	*7550	3150	*10600	4950	*7600	*7600		
		-1.5m	*3800	1600			5400	2050	7950	3000	*11150	4700	*9750	9100	*5400	*5400
		-3.0m	*4900	1900			5350	2050	*7750	2950	*10750	4600	*13700	9150		

Model	Arm	Height (B)	Reach (A)													
			MAX		9.0m		7.5m		6.0m		4.5m		3.0m		1.5m	
			OF	OS	OF	OS	OF	OS	OF	OS	OF	OS	OF	OS	OF	OS
Front Dozer Undercarriage	1.8M	7.5m	*5100	4600							*6500	5900				
		6.0m	*4600	2950					*6150	3450	*6650	5900				
		4.5m	*4500	2250					*6550	3350	*7900	5500	*11200	10800		
		3.0m	4500	1950			4650	2050	7000	3100	*9550	4750				
		1.5m	4350	1850			4550	1950	6700	2850	11050	4350				
		0.0m	4500	1900			4500	1900	6400	2650	10700	4100				
		-1.5m	5100	2150					6400	2650	10650	4100	*12250	7850		
		-3.0m									*9150	4250				
	2.4M	7.5m	*4500	3600												
		6.0m	*4150	2450					*5450	3550						
		4.5m	*4100	1950			4900	2150	*5950	3450	7000	5700				
		3.0m	4050	1700			4750	2100	*6850	3200	*8900	5100				
		1.5m	3900	1600			4650	1950	6800	2900	*10650	4500				
		0.0m	4000	1650			4500	1850	6550	2700	10900	4150				
		-1.5m	4450	1800			4500	1850	6400	2600	10750	4050	*11150	7750		
		-3.0m	5500	2300					6500	2650	*10050	4100	*14250	8000		
	2.9M	7.5m	*2850	*2850					*4250	3600						
		6.0m	*2650	2100			*3250	2250	*4850	3650						
		4.5m	*2600	1700			4950	2200	*5450	3500	*6150	5850				
		3.0m	*2700	1500			4800	2100	*6350	3250	*8100	5250	*12550	10150		
		1.5m	*2950	1400			4650	1950	6850	2950	*10050	4650	*6450	*6450		
		0.0m	*3350	1400			4500	1850	6550	2700	10950	4200	*7050	*7050		
		-1.5m	3900	1550			4400	1800	6350	2550	10700	4000	*10350	7650		
		-3.0m	4700	1900					6400	2550	*10550	4000	*15450	7800		
	3.5M	7.5m	*2750	2450												
		6.0m	*2600	1800			*4000	2350	*4200	3750						
		4.5m	*2600	1500			*4550	2300	*4800	3600						
		3.0m	*2700	1300	3400	1400	4850	2150	*5750	3300	*7100	5500	*10150	*10150		
		1.5m	*2900	1200	3350	1300	4650	2000	*6850	3000	*9200	4700				
		0.0m	3200	1200	3250	1250	4500	1800	6600	2700	*10800	4250	*7700	*7700		
		-1.5m	3450	1300			4350	1700	6350	2500	10700	3950	*9850	7550	*5500	*5500
		-3.0m	4050	1600			4350	1700	6300	2450	10600	3900	*13900	7600		

Model	Arm	Height (B)	Reach (A)													
			MAX		9.0m		7.5m		6.0m		4.5m		3.0m		1.5m	
			OF	OS	OF	OS	OF	OS	OF	OS	OF	OS	OF	OS	OF	OS
Dozer & Outrigger Undercarriage	1.8M	7.5m	*5100	*5100							*6500	*6500				
		6.0m	*4600	4450					*6150	5150	*6650	*6650				
		4.5m	*4500	3500					*6550	*5050	*7900	*7900	*11200	*11200		
		3.0m	*4700	3100			5700	3250	*7300	4800	*9550	7450				
		1.5m	*5100	2950			5600	3150	*8000	4500	*11150	7000				
		0.0m	5500	3050			5500	3050	*7900	4300	*11450	6700				
		-1.5m	6200	3450					7900	4250	*10850	6700	*12250	*12250		
		-3.0m									*9150	6850				
	2.4M	7.5m	*4500	*4500												
		6.0m	*4150	3800					*5450	5300						
		4.5m	*4100	3100			*5450	3400	*5950	5150	*7000	*7000				
		3.0m	*4250	2800			5750	3300	*6850	4900	*8900	7900				
		1.5m	*4600	2650			5600	3150	*7700	4600	*10650	7200				
		0.0m	4850	2700			5500	3050	8000	4350	*11450	6850				
		-1.5m	5400	3000			5450	3050	7850	4250	*11250	6700	*11150	*11150		
		-3.0m	*6100	3700					*7250	4300	*10050	6800	*14250	*14250		
	2.9M	7.5m	*2850	*2850					*4250	*4250						
		6.0m	*2650	*2650			*3250	*3250	*4850	*4850						
		4.5m	*2600	*2600			*5000	3450	*5450	5250	*6150	*6150				
		3.0m	*2700	2500			*5450	3350	*6350	4950	*8100	8100	*12550	*12550		
		1.5m	*2950	2400			5650	3200	*7300	4650	*10050	7350	*6450	*6450		
		0.0m	*3350	2400			5500	3050	*8000	4400	*11250	6900	*7050	*7050		
		-1.5m	*4000	2650			5400	3000	7800	4200	*11400	6700	*10350	*10350		
		-3.0m	*5350	3150					*7650	4200	*10550	6700	*15450	*14050		
	3.5M	7.5m	*2750	*2750												
		6.0m	*2600	*2600			*4000	3550	*4200	*4200						
		4.5m	*2600	2450			*4550	3500	*4800	*4800						
		3.0m	*2700	2200	*3400	2300	*5050	3350	*5750	5050	*7100	*7100	*10150	*10150		
		1.5m	*2900	2100	*4000	2250	*5600	3200	*6850	4700	*9200	7500				
		0.0m	*3250	2150	*3700	2200	5500	3050	*7700	4400	*10800	6950	*7700	*7700		
		-1.5m	*3850	2300			5350	2900	7800	4200	*11350	6650	*9850	*9850	*5500	*5500
		-3.0m	4950	2700			5350	2900	7750	4150	*10950	6550	*13900	*13800		

Model	Arm	Height (B)	Reach (A)													
			MAX		9.0m		7.5m		6.0m		4.5m		3.0m		1.5m	
			OF	OS	OF	OS	OF	OS	OF	OS	OF	OS	OF	OS	OF	OS
4 X Outrigger Undercarriage	1.8M	7.5m	*5100	*5100							*6500	*6500				
		6.0m	*4600	*4600					*6150	*6150	*6650	*6650				
		4.5m	*4500	4350					*6550	6200	*7900	*7900	*11200	*11200		
		3.0m	*4700	3850			5850	4000	*7300	5900	*9550	9400				
		1.5m	*5100	3700			5700	3900	*8000	5650	*11150	8900				
		0.0m	5650	3800			5650	3850	8100	5400	*11450	8600				
		-1.5m	6400	4300					*7950	5350	*10850	8600	*12250	*12250		
		-3.0m									*9150	8750				
	2.4M	7.5m	*4500	*4500												
		6.0m	*4150	*4150					*5450	*5450						
		4.5m	*4100	3850			*5450	4200	*5950	*5950	*7000	*7000				
		3.0m	*4250	3450			*5800	4100	*6850	6000	*8900	*8900				
		1.5m	*4600	3300			5750	3950	*7700	5700	*10650	9150				
		0.0m	5000	3400			5650	3850	*8200	5450	*11450	8750				
		-1.5m	5550	3750			5600	3800	8050	5350	*11250	8600	*11150	*11150		
		-3.0m	*6100	4650					*7250	5400	*10050	8700	*14250	*14250		
	2.9M	7.5m	*2850	*2850					*4250	*4250						
		6.0m	*2650	*2650			*3250	*3250	*4850	*4850						
		4.5m	*2600	*2600			*5000	4250	*5450	*5450	*6150	*6150				
		3.0m	*2700	*2700			*5450	4100	*6350	6100	*8100	*8100	*12550	*12550		
		1.5m	*2950	*2950			5800	3950	*7300	5750	*10050	9300	*6450	*6450		
		0.0m	*3350	3050			5650	3800	*8000	5500	*11250	8800	*7050	*7050		
		-1.5m	*4000	3350			5550	3750	8000	5300	*11400	8550	*10350	*10350		
		-3.0m	*5350	4000					*7650	5300	*10550	8550	*15450	*15450		
	3.5M	7.5m	*2750	*2750												
		6.0m	*2600	*2600			*4000	*4000	*4200	*4200						
		4.5m	*2600	*2600			*4550	4300	*4800	*4800						
		3.0m	*2700	*2700	*3400	2900	*5050	4150	*5750	*5750	*7100	*7100	*10150	*10150		
		1.5m	*2900	2700	*4000	2850	*5600	3950	*6850	5850	*9200	*9200				
		0.0m	*3250	2700	*3700	2750	5600	3800	*7700	5500	*10800	8900	*7700	*7700		
		-1.5m	*3850	2950			5500	3700	8050	5300	*11350	8550	*9850	*9850	*5500	*5500
		-3.0m	*5000	3400			5500	3650	*7850	5250	*10950	8450	*13900	*13900		

.Note for lift capacity tables:
1. Ratings are based on ISO 10567
2. Lifting capacities are given for:
   a) 75% of tipping load
   b) rated hydraulic lift capacity 87% of max.
3. Capacities marked with an asterisk (*) are limited by hydraulic capacities

TWO PIECE BOOM Lift capacity tables for 2.75 metre undercarriage

When removing bucket, linkage or cylinder, lifting capacities can be increased by their respective weights.

A - Reach from swing center

B - Bucket hook height

C - Lifting capacities, including bucket (760 kg),

linkage (130 kg) and bucket cylinder (182 kg)

OF: Lifting capacity (rating over front)
OS: Lifting capacity (Rating over side)

-MAX: Rating at maximum reach

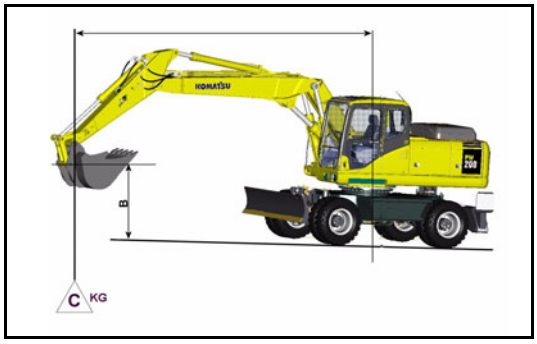

Model	Arm	Height (B)	Reach (A)													
			MAX		9.0m		7.5m		6.0m		4.5m		3.0m		1.5m	
			OF	OS	OF	OS	OF	OS	OF	OS	OF	OS	OF	OS	OF	OS
Attachment less Undercarriage	1.8M	7.5m	*5050	4400							*6400	5700				
		6.0m	4100	2800					4800	3300	*6550	5700				
		4.5m	3250	2150					4700	3200	*7750	5350	*11000	10400		
		3.0m	2850	1850			2950	1950	4450	3000	6900	4550				
		1.5m	2700	1750			2900	1850	4150	2750	6450	4150				
		0.0m	2800	1800			2800	1800	3950	2550	6200	3900				
		-1.5m	3150	2050					3900	2500	6150	3900	*12050	7500		
		-3.0m									6350	4050				
	2.4M	7.5m	*4400	3500												
		6.0m	3500	2400					4950	3450						
		4.5m	2850	1900			3150	2100	4800	3350	*6850	5550				
		3.0m	2550	1650			3050	2000	4500	3100	7350	4950				
		1.5m	2450	1550			2900	1900	4250	2800	6700	4350				
		0.0m	2500	1550			2800	1800	4000	2600	6300	4000				
		-1.5m	2750	1750			2750	1750	3900	2500	6200	3900	*10950	7450		
		-3.0m	3400	2200					3950	2550	6250	3950	*13150	7700		
	2.9M	7.5m	*2800	*2800					*4150	3500						
		6.0m	*2600	2050			*3200	2150	*4800	3550						
		4.5m	2550	1650			3200	2150	4900	3400	*6050	5700				
		3.0m	2250	1450			3050	2050	4600	3150	7550	5150	*12400	9850		
		1.5m	2150	1350			2900	1900	4300	2850	6850	4500	*6350	*6350		
		0.0m	2200	1350			2800	1750	4050	2600	6350	4050	*6950	*6950		
		-1.5m	2400	1500			2700	1700	3850	2450	6150	3850	*10200	7350		
		-3.0m	2900	1850					3850	2450	6150	3850	12950	7550		
	3.5M	7.5m	*2700	2400												
		6.0m	*2550	1750			3300	2250	*4100	3650						
		4.5m	2250	1400			3250	2200	*4700	2500						
		3.0m	2000	1250	2100	1300	3100	2050	4700	3200	*7000	5350	*10000	*10000		
		1.5m	1900	1150	2050	1250	2950	1900	4350	2900	6950	4550				
		0.0m	1950	1150	1950	1200	2750	1750	4050	2600	6400	4100	*7600	7550		
		-1.5m	2100	1250			2650	1650	3850	2450	6100	3850	*9700	7300	*5400	*5400
		-3.0m	2450	1500			2650	1650	3800	2350	6050	3750	12700	7350		

Model	Arm	Height (B)	Reach (A)													
			MAX		9.0m		7.5m		6.0m		4.5m		3.0m		1.5m	
			OF	OS	OF	OS	OF	OS	OF	OS	OF	OS	OF	OS	OF	OS
Rear Dozer Undercarriage	1.8M	7.5m	*5050	5050							*6400	*6400				
		6.0m	*4550	3250					*6050	3850	*6550	6500				
		4.5m	*4450	2550					*6400	3750	*7750	6150	*11000	*11000		
		3.0m	*4600	2200			5250	2300	*7150	3500	*9400	5300				
		1.5m	4850	2100			5150	2250	7550	3250	*10950	4900				
		0.0m	5050	2150			5050	2150	7300	3050	*11300	4650				
		-1.5m	5750	2450					7250	3000	*10650	4650	*12050	9100		
		-3.0m									*8950	4800				
	2.4M	7.5m	*4400	4000												
		6.0m	*4100	4800					*5350	4000						
		4.5m	*4050	2250			*5350	2450	*5850	3850	*6850	6350				
		3.0m	*4200	1950			5350	2400	*6700	3600	*8750	5750				
		1.5m	4350	1850			5200	2250	*7550	3300	*10500	5150				
		0.0m	4500	1900			5050	2150	7350	3100	*11300	4750				
		-1.5m	4950	2100			5000	2150	7250	3000	*11100	4650	*10950	9050		
		-3.0m	*6000	2650					*7100	3050	*9900	4750	*14050	9300		
	2.9M	7.5m	*2800	*2800					*4150	4050						
		6.0m	*2600	2400			*3200	2550	*4800	4050						
		4.5m	*2550	1950			*4950	2500	*5350	3900	*6050	*6050				
		3.0m	*2650	1750			*5350	2400	*6250	3650	*7950	5950	*12400	11600		
		1.5m	*2900	1650			5200	2250	*7200	3350	*9900	5250	*6350	*6350		
		0.0m	*3250	1650			5050	2150	*7400	3100	*11050	4800	*6950	*6950		
		-1.5m	*3950	1800			4950	2050	*7200	2950	*11200	4600	*10200	8950		
		-3.0m	*5250	2200					*7200	2950	*10400	4650	*15250	9150		
	3.5M	7.5m	*2750	*2750												
		6.0m	*2550	2100			*3950	2650	*4100	*4100						
		4.5m	*2550	1700			*4500	2600	*4700	4000						
		3.0m	*2650	1500	*3350	1600	*4950	2450	*5650	3750	*7000	6150	*10000	*10000		
		1.5m	*2850	1450	3750	1550	5200	2250	*6750	3400	*9050	5350				
		0.0m	*3200	1450	*3650	1450	5050	2100	7450	3100	*10600	4850	*7600	*7600		
		-1.5m	*3800	1550			4900	2000	7200	2900	*11150	4600	*9750	8850	*5400	*5400
		-3.0m	4550	1850			4900	2000	7100	2850	*10750	4500	*13700	8950		

Model	Arm	Height (B)	Reach (A)													
			MAX		9.0m		7.5m		6.0m		4.5m		3.0m		1.5m	
			OF	OS	OF	OS	OF	OS	OF	OS	OF	OS	OF	OS	OF	OS
Rear Outrigger Undercarriage	1.8M	7.5m	*5050	*5050							*6400	*6400				
		6.0m	*4550	3700					*6050	4350	*6550	*6550				
		4.5m	*4450	2950					*6400	4250	*7750	6950	*11000	*11000		
		3.0m	*4600	2550			5850	2650	*7100	4000	*9400	6100				
		1.5m	*5050	2450			5750	2550	*7850	3700	*10950	5700				
		0.0m	5650	2500			5700	2500	*8100	3500	*11300	5450				
		-1.5m	*6300	2850					*7800	3500	*10650	5400	12050	10800		
		-3.0m									*8950	5600				
	2.4M	7.5m	*4400	*4400												
		6.0m	*4100	3200					*5350	4500						
		4.5m	*4050	2600			*5350	2850	*5850	4350	*6850	*6850				
		3.0m	*4200	2300			*5700	2750	*6700	4100	*8750	6550				
		1.5m	*4550	2150			5800	2600	*7550	3800	*10500	5900				
		0.0m	5000	2200			5700	2500	*8050	3600	*11300	5550				
		-1.5m	5600	2450			5650	2450	*8000	3450	*11100	5400	*10950	*10750		
		-3.0m	*6000	3050					*7100	3550	*9900	5500	*14050	11050		
	2.9M	7.5m	*2800	*2800					*4150	*4150						
		6.0m	*2600	*2600			*3200	2900	*4800	4550						
		4.5m	*2550	2300			*4950	2900	*5350	4400	*6050	*6050				
		3.0m	*2650	2050			*5350	2750	*6250	4150	*7950	6750	*12400	*12400		
		1.5m	*2900	1950			*5850	2600	*7200	3850	*9900	6050	*6350	*6350		
		0.0m	*3250	1950			5650	2500	*7900	3600	*11050	5600	*6950	*6950		
		-1.5m	*3950	2150			5600	2400	*8000	3400	*11200	5400	*10200	*10200		
		-3.0m	*5250	2600					*7500	3450	*10400	5400	*15250	10850		
	3.5M	7.5m	*2750	*2750												
		6.0m	*2550	2400			*3950	3000	*4100	*4100						
		4.5m	*2550	2000			*4500	2950	4700	4500						
		3.0m	*2650	1800	*3350	1900	*4950	2800	*5650	4250	*7000	6950	*10000	*10000		
		1.5m	*2850	1700	*3950	1800	*5500	2650	*6750	3900	*9050	6150				
		0.0m	*3200	1700	*3650	1750	5650	2450	*7550	3600	*10600	5650	*7600	*7600		
		-1.5m	*3800	1850			5550	2350	*7950	3400	*11150	5350	*9750	*9750	*5400	*5400
		-3.0m	*4900	2200			5500	2350	*7750	3350	*10750	5300	13700	10650		

Model	Arm	Height (B)	Reach (A)													
			MAX		9.0m		7.5m		6.0m		4.5m		3.0m		1.5m	
			OF	OS	OF	OS	OF	OS	OF	OS	OF	OS	OF	OS	OF	OS
Front Dozer Undercarriage	1.8M	7.5m	*5100	*5100							*6500	*6500				
		6.0m	*4600	3300					*6150	3850	*6650	6600				
		4.5m	*4500	2600					*6550	3750	*7900	6200	*11200	*11200		
		3.0m	4600	2250			4800	2350	7150	3500	*9550	5400				
		1.5m	4450	2100			4650	2250	6800	3250	*11150	5000				
		0.0m	4600	2200			4600	2200	6550	3050	10900	4700				
		-1.5m	5200	2450					6550	3050	*10850	4700	*12250	9200		
		-3.0m									*9150	4850				
	2.4M	7.5m	*4500	4050												
		6.0m	*4150	2800					*5450	4000						
		4.5m	*4100	2250			4950	2500	*5950	3900	7000	6400				
		3.0m	4100	2000			4850	2400	*6850	3600	*8900	5800				
		1.5m	3950	1900			4700	2300	6900	3350	*10650	5200				
		0.0m	4050	1900			4600	2200	6650	3150	11050	4800				
		-1.5m	4500	2150			4550	2150	6500	3000	10900	4700	*11150	9150		
		-3.0m	5600	2650					6600	3100	*10050	4800	*14250	9450		
	2.9M	7.5m	*2850	*2850					*4250	4050						
		6.0m	*2650	2450			*3250	2550	*4850	4100						
		4.5m	*2600	2000			*5000	2550	*5450	3950	*6150	*6150				
		3.0m	*2700	1750			4900	2450	*6350	3700	*8100	6000	*12550	11750		
		1.5m	*2950	1650			4750	2300	7000	3400	*10050	5300	*6450	*6450		
		0.0m	*3350	1700			4600	2150	6700	3150	11150	4850	*7050	*7050		
		-1.5m	4000	1850			4500	2100	6450	2950	10900	4700	*10350	9050		
		-3.0m	4800	2250					6500	3000	*10550	4700	*15450	9250		
	3.5M	7.5m	*2750	*2750												
		6.0m	*2550	2400			*3950	3000	*4100	*4100						
		4.5m	*2550	2000			*4500	2950	*4700	4500						
		3.0m	*2650	1800	*3350	1900	*4950	2800	*5650	4250	*7000	6950	*10000	*10000		
		1.5m	*2850	1700	*3950	1800	*5500	2650	*6750	3900	*9050	6150				
		0.0m	*3200	1700	*3650	1750	5650	2450	*7550	3600	*10600	5650	*7600	*7600		
		-1.5m	*3800	1850			5550	2350	*7950	3400	*11150	5350	*9750	*9750	*5400	*5400
		-3.0m	*4900	2200			5500	2350	*7750	3350	*10750	5300	*13700	10650		

Model	Arm	Height (B)	Reach (A)													
			MAX		9.0m		7.5m		6.0m		4.5m		3.0m		1.5m	
			OF	OS	OF	OS	OF	OS	OF	OS	OF	OS	OF	OS	OF	OS
Dozer & Outrigger Undercarriage	1.8M	7.5m	*5100	*5100							*6500	*6500				
		6.0m	*4600	*4600					*6150	5600	*6650	*6650				
		4.5m	*4500	3850					*6550	5500	*7900	*7900	*11200	*11200		
		3.0m	*4700	3400			5800	3550	*7300	5200	*9550	8150				
		1.5m	*5100	3250			5700	3450	*8000	4950	*11150	7700				
		0.0m	5600	3350			5600	3400	8050	4700	*11450	7400				
		-1.5m	6350	3800					*7950	4700	*10850	7400	*12250	*12250		
		-3.0m									*9150	7600				
	2.4M	7.5m	*4500	*4500												
		6.0m	*4150	4150					*5450	*5450						
		4.5m	*4100	3400			*5450	3700	*5950	5600	*7000	*7000				
		3.0m	*4250	3050			*5800	3600	*6850	5350	*8900	8650				
		1.5m	*4600	2950			5750	3500	*7700	5050	*10650	7950				
		0.0m	4950	3000			5600	3400	8150	4800	*11450	7550				
		-1.5m	5500	3300			5550	3350	8000	4650	*11250	7400	*11150	*11150		
		-3.0m	*6100	4100					*7250	4750	*10050	7500	*14250	*14250		
	2.9M	7.5m	*2850	*2850					*4250	*4250						
		6.0m	*2650	*2650			*3250	*3250	*4850	*4850						
		4.5m	*2600	*2600			*5000	3750	*5450	*5450	*6150	*6150				
		3.0m	*2700	*2700			*5450	3650	*6350	5400	*8100	8100	*12550	*12550		
		1.5m	*2950	2650			5750	3500	*7300	5100	*10050	8100	*6450	*6450		
		0.0m	*3350	2650			5600	3350	*8000	4800	*11250	7600	*7050	*7050		
		-1.5m	*4000	2900			5500	3300	7950	4650	*11400	7400	*10350	*10350		
		-3.0m	*5350	3500					*7650	4650	*10550	7400	*15450	*15450		
	3.5M	7.5m	*2750	*2750												
		6.0m	*2600	*2600			*4000	3900	*4200	*4200						
		4.5m	*2600	*2600			*4550	3850	*4800	*4800						
		3.0m	*2700	2450	*3400	2550	*5050	3700	*5750	5500	*7100	*7100	*10150	*10150		
		1.5m	*2900	2350	*4000	2500	*5600	3500	*6850	5150	*9200	8200				
		0.0m	*3250	2350	*3700	2400	5600	3350	*7700	4850	*10800	7650	*7700	*7700		
		-1.5m	*3850	2550			5450	3250	7950	4600	*11350	7350	*9850	*9850	*5500	*5500
		-3.0m	*5000	3000			5450	3200	*7850	4550	*10950	7300	*13900	13900		

Model	Arm	Height (B)	Reach (A)													
			MAX		9.0m		7.5m		6.0m		4.5m		3.0m		1.5m	
			OF	OS	OF	OS	OF	OS	OF	OS	OF	OS	OF	OS	OF	OS
4 X Outrigger Undercarriage	1.8M	7.5m	*5100	*5100							*6500	*6500				
		6.0m	*4600	*4600					*6150	*6150	*6650	*6650				
		4.5m	*4500	*4500					*6550	*6550	*7900	*7900	*11200	*11200		
		3.0m	*4700	4100			5950	4300	*7300	6300	*9550	*9550				
		1.5m	*5100	3950			5850	4200	*8000	6000	*11150	9550				
		0.0m	5750	4100			5800	4100	*8250	5750	*11450	9250				
		-1.5m	6400	4600					*7950	5750	*10850	9250	*12250	*12250		
		-3.0m									*9150	*9150				
	2.4M	7.5m	*4500	*4500												
		6.0m	*4150	*4150					*5450	*5450						
		4.5m	*4100	4100			*5450	4450	*5950	*5950	*7000	*7000				
		3.0m	*4250	3700			*5800	4350	*6850	6400	*8900	*8900				
		1.5m	*4600	3550			5900	4200	*7700	6100	*10650	9800				
		0.0m	5150	3650			5800	4100	*8200	5850	*11450	9400				
		-1.5m	5700	4050			5750	4050	*8150	5700	*11250	9250	*11150	*11150		
		-3.0m	*6100	4950					*7250	5800	*10050	*9300	*14250	*14250		
	2.9M	7.5m	*2850	*2850					*4250	*4250						
		6.0m	*2650	*2650			*3250	*3250	*4850	*4850						
		4.5m	*2600	*2600			*5000	4500	*5450	*5450	*6150	*6150				
		3.0m	*2700	*2700			*5450	4400	*6350	*6350	*8100	*8100	*12550	*12550		
		1.5m	*2950	*2950			5900	4250	*7300	6150	*10050	10000	*6450	*6450		
		0.0m	*3350	3250			5750	4100	*8000	5850	*11250	9450	*7050	*7050		
		-1.5m	*4000	3550			5700	4000	*8150	5700	*11400	9200	*10350	*10350		
		-3.0m	*5350	4250					*7650	5700	*10550	8550	*15450	*15450		
	3.5M	7.5m	*2750	*2750												
		6.0m	*2600	*2600			*4000	*4000	*4200	*4200						
		4.5m	*2600	*2600			*4550	*4550	*4800	*4800						
		3.0m	*2700	*2700	*3400	3100	*5050	4450	*5750	*5750	*7100	*7100	*10150	*10150		
		1.5m	*2900	2900	*4000	3050	*5600	4250	*6850	6200	*9200	*9200				
		0.0m	*3250	2900	*3700	2950	5750	4050	*7700	5900	*10800	9550	*7700	*7700		
		-1.5m	*3850	3150			5650	3950	*8100	5700	*11350	9200	*9850	*9850	*5500	*5500
		-3.0m	*5000	3650			5600	3950	*7850	5600	*10950	9100	*13900	*13900		

.Note for lift capacity tables:
1. Ratings are based on ISO 10567
2. Lifting capacities are given for:
   a) 75% of tipping load
   b) rated hydraulic lift capacity 87% of max.
3. Capacities marked with an asterisk (*) are limited by hydraulic capacities

LIFTING CAPACITY CHART PW220-7K

ONE PIECE BOOM Lift capacity tables for 2.75 metre undercarriage and heavy duty counterweight.

When removing bucket, linkage or cylinder, lifting capacities can be increased by their respective weights.

A - Reach from swing center

B - Bucket hook height

C - Lifting capacities, including bucket (760 kg),

linkage (130 kg) and bucket cylinder (182 kg)

OF: Lifting capacity (rating over front)
OS: Lifting capacity (Rating over side)

-MAX: Rating at maximum reach

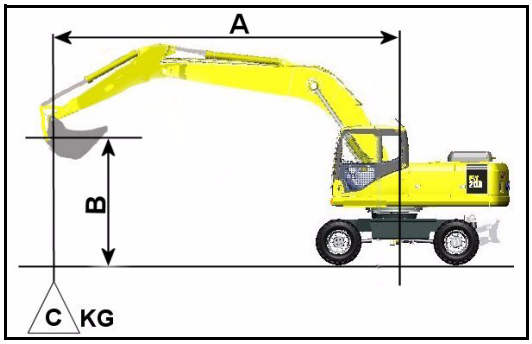

Model	Arm	Height (B)	Reach (A)													
			MAX		9.0m		7.5m		6.0m		4.5m		3.0m		1.5m	
			OF	OS	OF	OS	OF	OS	OF	OS	OF	OS	OF	OS	OF	OS
Attachment less Undercarriage	1.8M	7.5m	*4800	4300												
		6.0m	4150	2900					5200	3700						
		4.5m	3350	2300			3350	2300	5050	3550	8200	5700	*16900			
		3.0m	3000	2050			3300	2250	4800	3350	7550	5100				
		1.5m	2900	1950			3200	2200	4500	3050	7000	4650				
		0.0m	3000	2000			3150	2100	4300	2850	6800	4450				
		-1.5m	3350	2250					4300	2850	6850	4500	*9300			
		-3.0m	*4050	2850					4500	3050	*6300	4650				
	2.4M	7.5m	*4250	3500					*5050	3750						
		6.0m	3600	2500					5300	3800						
		4.5m	3000	2050			3450	2400	5150	3650	8450	5900				
		3.0m	2700	1800			3350	2300	4900	3400	7700	5250				
		1.5m	2600	1750			3250	2200	4650	3150	7200	4800				
		0.0m	2650	1750			3150	2100	4350	2900	6900	4550				
		-1.5m	2950	1950			3100	2100	4250	2800	6850	4500	*9750	8550		
		-3.0m	3550	2400					4400	2950	6950	4600	*9100	8800		
	2.9M	7.5m	*2650	*2650					*4450	3850						
		6.0m	*2550	2200			3550	2450	*5300	3850						
		4.5m	*2550	1800			3500	2450	5200	3700						
		3.0m	2450	1600			3350	2300	4950	3450	8000	5500	16400	10300		
		1.5m	2350	1550			3250	2200	4650	3200	7350	4900				
		0.0m	2400	1550			3100	2100	4400	2950	6950	4550	*5950	*5950		
		-1.5m	2600	1700			3050	2000	4200	2750	6800	4450	*9200	8450		
		-3.0m	3050	2050			3100	2050	4250	2800	6850	4450	*11250	8650		
	3.5M	7.5m	*2650	2450			*2700	2500								
		6.0m	*2550	1900			3600	2550								
		4.5m	2400	1600	2450	1600	3550	2450	5300	3800						
		3.0m	2150	1400	2400	1550	3400	2350	5000	3500	8200	5650				
		1.5m	2100	1350	2300	1500	3250	2200	4700	3200	7500	5050				
		0.0m	2100	1350	2250	1450	3100	2050	4450	2950	7000	4600	*6500	*6500		
		-1.5m	2250	1450			3000	1950	4150	2750	6750	4400	*8750	8300	*5200	*5200
		-3.0m	2650	1700			3000	1950	4150	2700	6700	4350	*12350	8400	*8200	*8200

Model	Arm	Height (B)	Reach (A)													
			MAX		9.0m		7.5m		6.0m		4.5m		3.0m		1.5m	
			OF	OS	OF	OS	OF	OS	OF	OS	OF	OS	OF	OS	OF	OS
Rear Dozer Undercarriage	1.8M	7.5m	*4800	*4800												
		6.0m	*4450	3350					*7700	4200						
		4.5m	*4400	2700			*4450	2700	*8550	4050	*11050	6550	*16900	12650		
		3.0m	*4650	2400			5650	2650	8300	3850	*12400	5900				
		1.5m	5000	2300			5550	2550	8000	3550	*12550	5400				
		0.0m	5150	2350			5450	2500	7700	3350	*11350	5250				
		-1.5m	*5500	2500					7700	3350	*10050	5250	*8000	*8000		
		-3.0m	*4050	3350					*4600	3550	*6300	5450				
	2.4M	7.5m	*4250	4050					*5050	4350						
		6.0m	*4000	2950					*6800	4400						
		4.5m	*4050	2450			5900	2850	*8200	4250	*9950	6800				
		3.0m	*4200	2200			5800	2750	8550	4000	*11950	6200				
		1.5m	4600	2150			5650	2650	8250	3800	*12850	5750				
		0.0m	4700	2200			5550	2600	7950	3550	*12300	5500				
		-1.5m	5200	2400			5550	2550	7850	3450	*10600	5450	*9750	*9750		
		-3.0m	*4450	2900					*6000	3600	*8000	5550	*9350	*9350		
	2.9M	7.5m	*2650	*2650					*4450	4400						
		6.0m	*2550	2550			*3850	2850	*5300	4400						
		4.5m	*2550	2100			*5300	2800	*6600	4250						
		3.0m	*2650	1900			5700	2700	*8450	3950	*11300	6300	*18150	12050		
		1.5m	*2900	1800			5550	2550	8150	3700	*12500	5700				
		0.0m	*3300	1850			5450	2450	7850	3450	*12400	5350	*5950	*5950		
		-1.5m	*4000	2000			5350	2400	7600	3250	*11150	5200	*9200	*9200		
		-3.0m	*4350	2400			*4400	2400	*6600	3300	*8850	5250	*11250	10300		
	3.5M	7.5m	*2650	*2650			*2700	*2700								
		6.0m	*2550	2200			*4150	2900								
		4.5m	*2550	1850	*2850	1900	*4950	2850	*5400	4300						
		3.0m	*2650	1700	*3950	1850	5750	2700	*7750	4050	*10450	6500				
		1.5m	*2900	1600	4050	1800	5550	2550	8200	3750	*12100	5850				
		0.0m	*3250	1600	3950	1750	5400	2400	7900	3500	*12550	5400	*6500	*6500		
		-1.5m	*3900	1750			5300	2350	7600	3250	*11700	5150	*8750	*8750	*5200	*5200
		-3.0m	*4300	2050			*5250	2300	*7200	3200	*9850	5150	*12350	10100	*8200	*8200

Model	Arm	Height (B)	Reach (A)													
			MAX		9.0m		7.5m		6.0m		4.5m		3.0m		1.5m	
			OF	OS	OF	OS	OF	OS	OF	OS	OF	OS	OF	OS	OF	OS
Rear Outrigger Undercarriage	1.8M	7.5m	*4800	*4800												
		6.0m	*4450	3750					*7700	4700						
		4.5m	*4400	3050			*4450	3050	*8550	4600	*11050	7350	*16900	14600		
		3.0m	*4650	2700			6300	3000	*9050	4350	*12400	6700				
		1.5m	*5100	2600			6150	2900	9000	4050	*12550	6200				
		0.0m	5750	2700			6100	2850	*8500	3850	*11350	6000				
		-1.5m	*5250	3000					*7150	3850	*9300	6050	*9300	*9300		
		-3.0m	*4050	3800					*4600	4050	*6300	6200				
	2.4M	7.5m	*4250	*4250					*5050	4800						
		6.0m	*4000	3250					*6800	4850						
		4.5m	*4050	2700			*6300	3150	*8100	4700	*9950	7550				
		3.0m	*4200	2450			6350	3050	*8800	4450	*11800	6850				
		1.5m	*4600	2350			6200	2900	9150	4150	*12700	6400				
		0.0m	5150	2400			6100	2850	8800	2900	*12100	6100				
		-1.5m	*5150	2650			*5700	2800	*7800	3800	*10450	6050	*9750	*9750		
		-3.0m	*4350	3200					*5900	3950	*7800	6150	*9100	*9100		
	2.9M	7.5m	*2650	*2650					*4450	*4450						
		6.0m	*2550	*2550			*3850	3200	*5300	4900						
		4.5m	*2550	2400			*5300	3150	*6600	4750						
		3.0m	*2650	2200			6350	3050	*8450	4500	*11300	7150	*18150	13950		
		1.5m	*2900	2100			6200	2900	9000	4200	*12500	6500				
		0.0m	*3300	2150			6050	2800	8850	3950	*12400	6150	*5950	*5950		
		-1.5m	*4000	2350			6000	2750	8150	3750	*11150	6000	*9200	*9200		
		-3.0m	*4350	2750			*4400	2800	*6600	3800	*8850	6050	*11250	*11250		
	3.5M	7.5m	*2650	*2650			*2700	*2700								
		6.0m	*2550	2500			*4150	3300								
		4.5m	*2550	2150	*2850	2200	*4950	3200	*5400	4800						
		3.0m	*2650	1950	*3950	2150	*6200	3050	*7750	4550	*10450	7300				
		1.5m	*2900	1850	4500	2100	6200	2900	*8750	4250	*12100	6650				
		0.0m	*3250	1900	4450	2000	6050	2800	8900	3950	*12550	6150	*6500	*6500		
		-1.5m	*3900	2050			5950	2700	*8450	3700	*11700	5950	*8750	*8750	*5200	*5200
		-3.0m	*4300	2350			*5250	2650	*7200	3700	*9850	5950	*12350	11900	*8200	*8200

Model	Arm	Height (B)	Reach (A)													
			MAX		9.0m		7.5m		6.0m		4.5m		3.0m		1.5m	
			OF	OS	OF	OS	OF	OS	OF	OS	OF	OS	OF	OS	OF	OS
Front Dozer Undercarriage	1.8M	7.5m	*4850	*4850												
		6.0m	*4500	3350					*7850	4250						
		4.5m	*4500	2700			*4500	2700	7850	4100	*11200	6600	*17150	12800		
		3.0m	*4700	2400			5150	2650	7550	3850	12600	5950				
		1.5m	4550	2300			5050	2550	7250	3600	11950	5450				
		0.0m	4700	2400			5000	2500	7000	3400	*11550	5300				
		-1.5m	5300	2650					7000	3400	*9450	5300	*9500	*9500		
		-3.0m	*4150	3400					*4700	3600	*6450	5500				
	2.4M	7.5m	*4350	4000					*5100	4300						
		6.0m	*4100	2950					*6900	4350						
		4.5m	*4100	2400			5300	2800	7950	4200	*10100	6800				
		3.0m	4250	2150			5200	2700	7650	3950	*12000	6100				
		1.5m	4100	2050			5100	2600	7350	3700	12200	5650				
		0.0m	4200	2100			5000	2500	7050	3450	11850	5400				
		-1.5m	4650	2350			4950	2500	6950	3350	*10600	5300	*9900	*9900		
		-3.0m	*4450	2850					*6000	3500	*7950	5400	*9300	*9300		
	2.9M	7.5m	*2700	*2700					*4500	4450						
		6.0m	*2600	2250			*3900	2900	*5400	4400						
		4.5m	*2600	2150			5350	2850	*6700	4250						
		3.0m	*2700	1950			5250	2700	7750	4000	*11450	6350	*18400	12150		
		1.5m	*2950	1850			5100	2600	7400	3750	12350	5750				
		0.0m	*3350	1850			4950	2450	7100	3450	11900	5400	*6050	*6050		
		-1.5m	*4050	2050			4900	2400	6900	3300	*11300	5300	*9300	*9300		
		-3.0m	*4450	2450			*4500	2450	*6700	3350	*9000	5300	*11450	10400		
	3.5M	7.5m	*2700	*2700			*2750	*2750								
		6.0m	*2600	2250			*4200	2950								
		4.5m	*2600	1900	*2900	1950	*5050	2850	*5500	4350						
		3.0m	*2700	1700	3750	1900	5250	2750	7850	4050	*10600	6550				
		1.5m	*2950	1650	3700	1800	5100	2600	7450	3750	*12300	5900				
		0.0m	*3300	1650	3600	1750	4950	2450	7150	3500	11950	5450	*6600	*6600		
		-1.5m	3700	1750			4850	2350	6850	3250	11650	5200	*8900	*8900	*5300	*5300
		-3.0m	4250	2050			4800	2350	6850	3250	*10000	5200	*12550	10200	*8350	*8350

Model	Arm	Height (B)	Reach (A)													
			MAX		9.0m		7.5m		6.0m		4.5m		3.0m		1.5m	
			OF	OS	OF	OS	OF	OS	OF	OS	OF	OS	OF	OS	OF	OS
Dozer & Outrigger Undercarriage	1.8M	7.5m	*4850	*4850												
		6.0m	*4500	*4500					*7850	5950						
		4.5m	*4500	3900			*4500	3900	8600	5800	*11200	9400	*17150			
		3.0m	*4700	3500			5700	3850	8350	5550	*12600	8700				
		1.5m	5050	3400			5600	3750	8000	5250	*12750	8150				
		0.0m	5250	3500			5550	3700	7750	5050	*11550	7950				
		-1.5m	*5350	3900					*7250	5000	*9450	8000	*9500			
		-3.0m	*4150	*4150					*4700	*4700	*6450	*6450				
	2.4M	7.5m	*4350	*4350					*5100	*5100						
		6.0m	*4100	*4100					*6900	6050						
		4.5m	*4100	3500			5900	4000	*8250	5900	*10100	9650				
		3.0m	*4300	3150			5750	3900	8450	5650	*12000	8900				
		1.5m	4600	3050			5650	3750	8150	5350	*12900	8400				
		0.0m	4700	3150			5550	3700	7800	5100	*12300	8050				
		-1.5m	5200	3450			5500	3650	7700	5000	*10600	8000	*9900			
		-3.0m	*4450	4150					*6000	5150	*7950	*7950	*9300			
	2.9M	7.5m	*2700	*2700					*4500	*4500						
		6.0m	*2600	*2600			*3900	*3900	*5400	*5400						
		4.5m	*2600	*2600			*5400	4050	*6700	5950						
		3.0m	*2700	*2700			5800	3900	8500	5700	*11450	9150	*18400	*18400		
		1.5m	*2950	2750			5650	3750	8200	5400	*12700	8500				
		0.0m	*3350	2800			5500	3650	7850	5100	*12600	8100	*6050	*6050		
		-1.5m	*4050	3050			5450	3600	7650	4950	*11300	7950	*9300	*9300		
		-3.0m	*4450	3600			*4500	3600	*6700	5000	*9000	8000	*11450	*11450		
	3.5M	7.5m	*2700	*2700			*2750	*2750								
		6.0m	*2600	*2600			*4200	4150								
		4.5m	*2600	*2600	*2900	2850	*5050	4050	*5500	*5500						
		3.0m	*2700	2550	*4000	2800	5800	3950	*7900	5750	*10600	9400				
		1.5m	*2950	2500	4150	2750	5650	3750	8250	5450	*12300	8650				
		0.0m	*3300	2500	4050	2650	5500	3600	7950	5150	*12750	8150	*6600	*6600		
		-1.5m	*3950	2700			5400	3550	7600	4900	*11900	7900	*8900	*8900	*5300	*5300
		-3.0m	*4400	3100			*5350	3500	*7350	4850	*10000	7900	*12550	*12550	*8350	*8350

Model	Arm	Height (B)	Reach (A)													
			MAX		9.0m		7.5m		6.0m		4.5m		3.0m		1.5m	
			OF	OS	OF	OS	OF	OS	OF	OS	OF	OS	OF	OS	OF	OS
4 X Outrigger Undercarriage	1.8M	7.5m	*4850	*4850												
		6.0m	*4500	*4500					*7850	7100						
		4.5m	*4500	*4500			*4500	*4500	*8700	6950	*11200	*11200	*17150	*17150		
		3.0m	*4700	4250			6350	4650	*9200	6700	*12600	10750				
		1.5m	*5150	4100			6250	4550	9000	6400	*12750	10150				
		0.0m	5850	4250			6200	4450	*8650	6150	*11550	9950				
		-1.5m	*5350	4750					*7250	6150	*9450	*9450	*9500	*9500		
		-3.0m	*4150	*4150					*4700	*4700	*6450	*6450				
	2.4M	7.5m	*4350	*4350					*5100	*5100						
		6.0m	*4100	*4100					*6900	*6900						
		4.5m	*4100	*4100			*6350	4800	*8250	7100	*10100	*10100				
		3.0m	*4300	3850			6400	4700	*8900	6800	*12000	10950				
		1.5m	*4700	3700			6300	4550	9150	6500	*12900	10400				
		0.0m	5250	3800			6150	4450	8800	6200	*12300	10050				
		-1.5m	*5250	4200			*5800	4450	*7900	6100	*10600	10000	*9900	*9900		
		-3.0m	*4450	*4450					*6000	*6000	*7950	*7950	*9300	*9300		
	2.9M	7.5m	*2700	*2700					*4500	*4500						
		6.0m	*2600	*2600			*3900	*3900	*5400	*5400						
		4.5m	*2600	*2600			*5400	4400	*6700	6600						
		3.0m	*2700	*2700			5950	4300	*8500	6300	*11300	10400	*18150	*18150		
		1.5m	*2950	*2950			5800	4150	8500	6000	*12650	9700				
		0.0m	*3350	3100			5650	4050	8150	5700	*12650	9250	*6050	*6050		
		-1.5m	*4050	3350			5600	3950	7950	5500	*11500	9100	*9300	*9300		
		-3.0m	*4600	4000			*4650	4000	*6900	5550	*9300	9150	*11450	*11450		
	3.5M	7.5m	*2700	*2700			*2750	*2750								
		6.0m	*2600	*2600			*4200	*4200								
		4.5m	*2600	*2600	*2900	*2900	*5050	4900	*5500	*5500						
		3.0m	*2700	*2700	*4000	3400	*6300	4750	*7900	6950	*10600	*10600				
		1.5m	*2950	2950	4600	3350	6300	4550	*8900	6600	*12300	10700				
		0.0m	*3300	3100	4500	3250	6150	4400	8950	6300	*12750	10150	*6600	*6600		
		-1.5m	*3950	3300			6050	4300	*8600	6050	*11900	9900	*8900	*8900	*5300	*5300
		-3.0m	*4400	3800			*5350	6400	*7350	6000	*10000	9850	*12550	*12550	*8350	*8350

.Note for lift capacity tables:
1. Ratings are based on ISO 10567
2. Lifting capacities are given for:
   a) 75% of tipping load
   b) rated hydraulic lift capacity 87% of max.
3. Capacities marked with an asterisk (*) are limited by hydraulic capacities

ONE PIECE BOOM Lift capacity tables for 2.75 metre undercarriage

When removing bucket, linkage or cylinder, lifting capacities can be increased by their respective weights.

A - Reach from swing center

B - Bucket hook height

C - Lifting capacities, including bucket (760 kg),

linkage (130 kg) and bucket cylinder (182 kg)

OF: Lifting capacity (rating over front)
OS: Lifting capacity (Rating over side)

-MAX: Rating at maximum reach

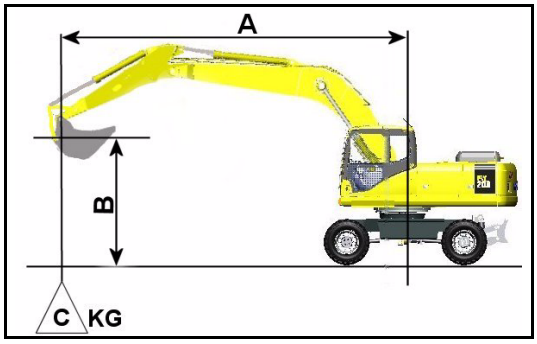

Model	Arm	Height (B)	Reach (A)													
			MAX		9.0m		7.5m		6.0m		4.5m		3.0m		1.5m	
			OF	OS	OF	OS	OF	OS	OF	OS	OF	OS	OF	OS	OF	OS
Attachment less Undercarriage	1.8M	7.5m	*4800	3850												
		6.0m	3750	2550					4700	3300						
		4.5m	3000	2000			3000	2000	4600	3150	7500	5150	15700	9850		
		3.0m	2650	1750			2950	1950	4350	2950	6800	4550				
		1.5m	2550	1650			2850	1850	4050	2650	6300	4050				
		0.0m	2650	1700			2800	1800	3800	2450	6100	3900				
		-1.5m	2950	1950					3800	2450	6150	3900	*9300	7650		
		-3.0m	3800	2500					4050	2650	6300	4050				
	2.4M	7.5m	*4250	3100					4800	3350						
		6.0m	3250	2200					4850	3400						
		4.5m	2650	1750			3100	2100	4700	3250	7750	5350				
		3.0m	2400	1550			3000	2000	4400	3000	7000	4650				
		1.5m	2300	1450			2900	1900	4150	2750	6500	4250				
		0.0m	2350	1500			2800	1800	3850	2500	6200	3950				
		-1.5m	2600	1650			2750	1800	3800	2400	6150	3900	*9750	7550		
		-3.0m	3150	2050					3900	2550	6250	4000	*9100	7800		
	2.9M	7.5m	*2650	2600					*4450	3450						
		6.0m	*2550	1900			3200	2150	4900	3450						
		4.5m	2350	1550			3150	2100	4750	3300						
		3.0m	2150	1350			3000	2000	4450	3050	7250	4900	14950	9250		
		1.5m	2050	1300			2850	1900	4200	2800	6600	4350				
		0.0m	2100	1300			2750	1750	3900	2550	6200	4000	*5950	*5950		
		-1.5m	2250	1450			2700	1700	3700	2350	6100	3850	*9200	7400		
		-3.0m	2700	1750			2750	1750	3800	2400	6100	3900	*11250	7600		
	3.5M	7.5m	*2650	2150			*2700	2200								
		6.0m	2450	1650			3250	2250								
		4.5m	2100	1350	2150	1350	3150	2150	4850	3400						
		3.0m	1900	1150	2100	1350	3050	2050	4550	3100	7500	5100				
		1.5m	1800	1100	2000	1250	2850	1850	4200	2800	6750	4450				
		0.0m	1850	1100	1950	1200	2750	1750	3950	2550	6250	4000	*6500	*6500		
		-1.5m	2000	1200			2650	1650	3700	2350	6050	3800	*8750	7300	*5200	*5200
		-3.0m	2300	1450			2600	1650	3650	2300	6000	3800	*12350	7400	*8200	*8200

Model	Arm	Height (B)	Reach (A)													
			MAX		9.0m		7.5m		6.0m		4.5m		3.0m		1.5m	
			OF	OS	OF	OS	OF	OS	OF	OS	OF	OS	OF	OS	OF	OS
Rear Dozer Undercarriage	1.8M	7.5m	*4800	4400												
		6.0m	*4450	3000					*7700	3800						
		4.5m	*4400	2350			*4450	2400	7950	3650	*11050	5900	*16900	11550		
		3.0m	4650	2100			5150	2300	7650	3400	*12400	5300				
		1.5m	4550	2000			5050	2250	7300	3150	12300	4800				
		0.0m	4700	2050			4950	2150	7050	2950	*11350	4650				
		-1.5m	*5250	2300					7050	2950	*9300	4650	*9300	9200		
		-3.0m	*4050	2950					*4600	3150	*6300	4800				
	2.4M	7.5m	*4250	3600					*5050	3850						
		6.0m	*4000	2550					*6800	3900						
		4.5m	*4050	2100			5300	2450	*8050	3750	*9950	6150				
		3.0m	4200	1850			5200	2350	7750	3500	*11800	5450				
		1.5m	4100	1750			5050	2250	7450	3250	*12600	5000				
		0.0m	4200	1800			4950	2150	7100	3000	*12100	4700				
		-1.5m	4650	2000			4950	2150	7000	2900	*10450	4650	*9750	9100		
		-3.0m	*4350	2450					*5900	3050	*7800	4750	*9100	*9100		
	2.9M	7.5m	*2650	*2650					*4450	3950						
		6.0m	*2550	2250			*3850	2550	*5300	3950						
		4.5m	*2550	1850			*5300	2500	*6600	3800						
		3.0m	*2650	1650			5250	2350	7850	3550	*11300	5700	*18150	10950		
		1.5m	*2900	1550			5100	2250	7500	3300	*12500	5100				
		0.0m	*3300	1600			4950	2150	7150	3000	12250	4750	*5950	*5950		
		-1.5m	*4000	1750			4900	2050	6950	2850	*11150	4600	*9200	9000		
		-3.0m	*4350	2100			*4400	2100	*6600	2900	*8850	4650	*11250	9200		
	3.5M	7.5m	*2650	2550			*2700	2550								
		6.0m	*2550	1950			*4150	2600								
		4.5m	*2550	1600	*2850	1650	*4950	2500	*5400	3900						
		3.0m	*2650	1450	3750	1600	5250	2400	*7750	3600	*10450	5900				
		1.5m	*2900	1350	3650	1550	5100	2250	7550	3300	*12100	5250				
		0.0m	*3250	1400	3600	1500	4900	2100	7250	3050	12350	4750	*6500	*6500		
		-1.5m	3650	1500			4800	2000	6900	2800	*11700	4550	*8750	*8750	*5200	*5200
		-3.0m	4250	1750			4800	2000	6900	2800	*9850	4550	*12350	8950	*8200	*8200

Model	Arm	Height (B)	Reach (A)													
			MAX		9.0m		7.5m		6.0m		4.5m		3.0m		1.5m	
			OF	OS	OF	OS	OF	OS	OF	OS	OF	OS	OF	OS	OF	OS
Rear Outrigger Undercarriage	1.8M															
		7.5m	*4800	*4800												
		6.0m	*4450	3400					*7700	4250						
		4.5m	*4400	2700			*4450	2700	*8550	4150	*11050	6700	*16900	13400		
		3.0m	*4650	2400			5750	2650	8600	3900	*12400	6050				
		1.5m	5100	2300			5650	2550	8250	3600	*12550	5550				
		0.0m	5250	2350			5600	2500	8000	3400	*11350	5350				
		-1.5m	*5250	2650					*7150	3400	*9300	5400	*9300	*9300		
		-3.0m	*4050	3400					*4600	3600	*6300	5550				
	2.4M	7.5m	*4250	4050					*5050	4350						
		6.0m	*4000	2950					*6800	4400						
		4.5m	*4050	2400			5950	2800	*8100	4250	*9950	6900				
		3.0m	*4200	2150			5800	2700	8750	4000	*11800	6200				
		1.5m	4550	2050			5700	2600	8400	3750	*12700	5750				
		0.0m	4700	2100			5550	2500	8050	3450	*12100	5450				
		-1.5m	*5150	2300			5550	2450	*7800	3350	*10450	5400	*9750	*9750		
		-3.0m	*4350	2850					*5900	3500	*7800	5500	*9100	*9100		
	2.9M	7.5m	*2650	*2650					*4450	*4450						
		6.0m	*2550	*2550			*3850	2900	*5300	4450						
		4.5m	*2550	2150			*5300	2850	*6600	4300						
		3.0m	*2650	1900			5850	2700	*8450	4050	*11300	6500	*18150	12750		
		1.5m	*2900	1850			5700	2600	8450	3750	*12500	5850				
		0.0m	*3300	1850			5550	2450	8100	3500	*12400	5500	*5950	*5950		
		-1.5m	*4000	2050			5500	2400	7900	3300	*11150	5350	*9200	*9200		
		-3.0m	*4350	2450			*4400	2450	*6600	3350	*8850	5400	*11250	10900		
	3.5M	7.5m	*2650	*2650			*2700	*2700								
		6.0m	*2550	2250			*4150	2950								
		4.5m	*2550	1900	*2850	1900	*4950	2850	*5400	4350						
		3.0m	*2650	1700	*3950	1900	5900	2750	*7750	4100	*10250	6650				
		1.5m	*2900	1600	4100	1800	5700	2600	8500	3800	*11950	6000				
		0.0m	*3250	1650	4050	1750	5550	2450	8200	3550	*12500	5500	*6500	*6500		
		-1.5m	*3900	1750			5450	2350	7850	3300	*11850	5300	*8750	*8750	*5200	*5200
		-3.0m	*4450	2050			*5400	2350	*7400	3250	*10050	5300	*12350	10650	*8200	*8200

Model	Arm	Height (B)	Reach (A)													
			MAX		9.0m		7.5m		6.0m		4.5m		3.0m		1.5m	
			OF	OS	OF	OS	OF	OS	OF	OS	OF	OS	OF	OS	OF	OS
Front Dozer Undercarriage	1.8M															
		7.5m	*4850	4450												
		6.0m	*4500	3000					7400	3800						
		4.5m	*4500	2400			*4500	2400	7200	3700	*11200	5950	17150	11650		
		3.0m	4300	2100			4700	2350	6950	3450	11600	5350				
		1.5m	4150	2000			4600	2250	6600	3200	10900	4850				
		0.0m	4300	2050			4500	2200	6350	2950	10700	4700				
		-1.5m	4800	2350					6350	2950	*9450	4700	*9500	9300		
		-3.0m	*4150	3000					*4700	3150	*6450	4850				
	2.4M	7.5m	*4350	3600					*5100	3900						
		6.0m	*4100	2600					*6900	3950						
		4.5m	*4100	2100			4850	2500	7350	3800	*10100	6200				
		3.0m	3850	1900			4750	2400	7050	3550	11800	5500				
		1.5m	3700	1800			4600	2250	6750	3300	11200	5050				
		0.0m	3800	1850			4500	2200	6400	3000	10800	4750				
		-1.5m	4200	2050			4500	2150	6300	2950	*10600	4700	*9900	9250		
		-3.0m	*4450	2500					*6000	3050	*7950	4800	*9300	*9300		
	2.9M	7.5m	*2700	*2700					*4500	4000						
		6.0m	*2600	2250			*3900	2550	*5400	4000						
		4.5m	*2600	1850			4900	2500	*6700	3850						
		3.0m	*2700	1650			4800	2400	7100	3600	*11450	5750	*18400	11050		
		1.5m	*2950	1600			4600	2250	6800	3300	11350	5150				
		0.0m	*3350	1600			4500	2150	6450	3050	10850	4800	*6050	*6050		
		-1.5m	3750	1750			4450	2100	6250	2850	10700	4650	*9300	9100		
		-3.0m	*4450	2100			4450	2150	6300	2950	*9000	4700	*11450	9300		
	3.5M	7.5m	*2700	2550			*2750	2550								
		6.0m	*2600	1950			*4200	2600								
		4.5m	*2600	1650	*2900	1700	4950	2550	*5500	3900						
		3.0m	*2700	1450	3400	1650	4800	2400	7200	3650	*10600	5950				
		1.5m	*2950	1400	3350	1550	4650	2250	6850	3350	*11550	5300				
		0.0m	3100	1400	3250	1500	4450	2100	6550	3100	10950	4800	*6600	*6600		
		-1.5m	3300	1500			4350	2050	6250	2850	10650	4600	*8900	*8900	*5300	*5300
		-3.0m	3850	1800			4350	2000	6200	2800	*10000	4600	*12550	9100	*8350	*8350

Model	Arm	Height (B)	Reach (A)													
			MAX		9.0m		7.5m		6.0m		4.5m		3.0m		1.5m	
			OF	OS	OF	OS	OF	OS	OF	OS	OF	OS	OF	OS	OF	OS
Dozer & Outrigger Undercarriage	1.8M															
		7.5m	*4850	*4850												
		6.0m	*4500	4350					*7850	5450						
		4.5m	*4500	3550			*4500	3550	8000	5300	*11200	8650	*17150	*17150		
		3.0m	*4700	3150			5250	3450	7700	5050	*12600	7950				
		1.5m	4650	3050			5150	3350	7350	4750	12150	7400				
		0.0m	4800	3150			5100	3300	7100	4550	*11550	7200				
		-1.5m	*5350	3500					7100	4550	*9450	7250	*9500	*9500		
		-3.0m	*4150	*4150					*4700	*4700	*6450	*6450				
	2.4M	7.5m	*4350	*4350					*5100	*5100						
		6.0m	*4100	3750					*6900	5550						
		4.5m	*4100	3150			5400	3600	8100	5400	*10100	8900				
		3.0m	*4300	2850			5300	3500	7800	5150	*12000	8150				
		1.5m	4200	2750			5150	3400	7500	4850	12400	7650				
		0.0m	4300	2800			5050	3300	7200	4600	12050	7300				
		-1.5m	4750	3100			5050	3250	7050	4500	*10600	7250	*9900	*9900		
		-3.0m	*4450	3750					*6000	4650	*7950	7350	*9300	*9300		
	2.9M	7.5m	*2700	*2700					*4500	*4500						
		6.0m	*2600	*2600			*3900	3700	*5400	*5400						
		4.5m	*2600	*2600			*5400	3650	*6700	5450						
		3.0m	*2700	2550			5350	3550	7900	5200	*11450	8400	*18400	17650		
		1.5m	*2950	2450			5200	3400	7550	4900	12600	7750				
		0.0m	*3350	2500			5050	3300	7200	4600	12100	7350	*6050	*6050		
		-1.5m	*4050	2750			5000	3200	7000	4450	*11300	7200	*9300	*9300		
		-3.0m	*4450	3250			*4500	3250	*6700	4500	*9000	7250	*11450	*11450		
	3.5M	7.5m	*2700	*2700			*2750	*2750								
		6.0m	*2600	*2600			*4200	3750								
		4.5m	*2600	2500	*2900	2550	*5050	3700	*5500	*5500						
		3.0m	*2700	2300	3850	2500	5350	3550	*7900	5250	*10600	8650				
		1.5m	*2950	2200	3750	2450	5200	3400	7600	4950	*12300	7900				
		0.0m	*3300	2250	3700	2350	5000	3250	7300	4650	*12150	7400	*6600	*6600		
		-1.5m	3750	2400			4900	3150	7000	4400	11850	7150	*8900	*8900	*5300	*5300
		-3.0m	4350	2800			4900	3150	6950	4350	*10000	7150	*12550	*12550	*8350	*8350

Model	Arm	Height (B)	Reach (A)													
			MAX		9.0m		7.5m		6.0m		4.5m		3.0m		1.5m	
			OF	OS	OF	OS	OF	OS	OF	OS	OF	OS	OF	OS	OF	OS
4 X Outrigger Undercarriage	1.8M	7.5m	*4850	*4850												
		6.0m	*4500	*4500					*7850	6550						
		4.5m	*4500	4300			*4500	4300	*8700	6400	*11200	10650	*17150	*17150		
		3.0m	*4700	3850			5850	4250	8650	6150	*12600	9900				
		1.5m	*5150	3700			5750	4150	8300	5850	*12750	9300				
		0.0m	5400	3850			5700	4050	*8050	5600	*11550	9100				
		-1.5m	*5350	4300					*7250	5600	*9450	9150	*9500	*9500		
		-3.0m	*4150	*4150					*4700	*4700	*6450	*6450				
	2.4M	7.5m	*4350	*4350					*5100	*5100						
		6.0m	*4100	*4100					*6900	6700						
		4.5m	*4100	3800			6050	4400	*8250	6500	*10100	*10100				
		3.0m	*4300	3450			5900	4300	*8750	6250	*12000	10100				
		1.5m	4700	3350			5800	4150	8450	5950	*12900	9550				
		0.0m	4800	3450			5700	4050	8100	5650	*12300	9200				
		-1.5m	*5250	3800			5650	4000	*7900	5550	*10600	9150	*9900	*9900		
		-3.0m	*4450	*4450					*6000	5700	*7950	*7950	*9300	*9300		
	2.9M	7.5m	*2700	*2700					*4500	*4500						
		6.0m	*2600	*2600			*3900	*3900	*5400	*5400						
		4.5m	*2600	*2600			*5400	4400	*6700	6600						
		3.0m	*2700	*2700			5950	4300	*8600	6300	*11450	10400	*18400	*18400		
		1.5m	*2950	*2950			5800	4150	8500	6000	*12700	9700				
		0.0m	*3350	3100			5650	4050	8150	5700	*12600	9250	*6050	*6050		
		-1.5m	*4050	3350			5600	3950	7950	5500	*11300	9100	*9300	*9300		
		-3.0m	*4450	*4000			*4500	4000	*6700	5550	*9000	*9000	*11450	*11450		
	3.5M	7.5m	*2700	*2700			*2750	*2750								
		6.0m	*2600	*2600			*4200	*4200								
		4.5m	*2600	*2600	*2900	*2900	*5050	4450	*5500	*5500						
		3.0m	*2700	*2700	*4000	3100	6000	4300	*7900	6400	*10600	*10600				
		1.5m	*2950	2700	4200	3000	5800	4150	8550	6050	*12300	9850				
		0.0m	*3300	2750	4150	2950	5650	4000	8250	5750	*12750	9300	*6600	*6600		
		-1.5m	*3950	3000			5550	3900	7950	5500	*11900	9050	*8900	*8900	*5300	*5300
		-3.0m	*4400	3450			*5350	3900	*7350	5450	*10000	9000	*12550	*12550	*8350	*8350

.Note for lift capacity tables:
1. Ratings are based on ISO 10567
2. Lifting capacities are given for:
   a) 75% of tipping load
   b) rated hydraulic lift capacity 87% of max.
3. Capacities marked with an asterisk (*) are limited by hydraulic capacities

TWO PIECE BOOM Lift capacity tables for 2.75 metre undercarriage and heavy duty counterweight

When removing bucket, linkage or cylinder, lifting capacities can be increased by their respective weights.

A - Reach from swing center

B - Bucket hook height

C - Lifting capacities, including bucket (760 kg),

linkage (130 kg) and bucket cylinder (182 kg)

OF: Lifting capacity (rating over front)
OS: Lifting capacity (Rating over side)

-MAX: Rating at maximum reach

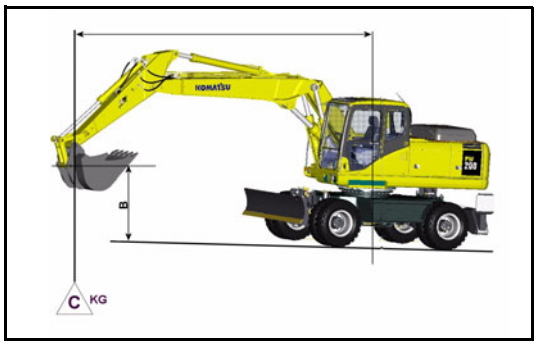

Model	Arm	Height (B)	Reach (A)													
			MAX		9.0m		7.5m		6.0m		4.5m		3.0m		1.5m	
			OF	OS	OF	OS	OF	OS	OF	OS	OF	OS	OF	OS	OF	OS
Attachment less Undercarriage	1.8M	7.5m	*5050	4900							*7000	6250				
		6.0m	*4550	3200					5250	3700	*7100	6300				
		4.5m	3650	2500					5150	3600	*8450	5900	*12000	11450		
		3.0m	3200	2150			3350	2250	4900	3400	7600	5100				
		1.5m	3050	2050			3250	2150	4650	3150	7200	4750				
		0.0m	3150	2100			3150	2100	4400	2950	6900	4500				
		-1.5m	3550	2350					4400	2900	6900	4450	*12050	8500		
		-3.0m									7050	4600				
	2.4M	7.5m	*4400	3900												
		6.0m	3900	2700					5450	3850						
		4.5m	3200	2200			3500	2400	5300	3750	*7500	6100				
		3.0m	2850	1900			3400	2300	5000	3500	8100	5500				
		1.5m	2750	1800			3300	2200	4750	3200	7400	4950				
		0.0m	2800	1850			3150	2100	4500	3000	7000	4600				
		-1.5m	3000	1950			3150	2050	4400	2900	6900	4500	*9150	8450		
		-3.0m	3850	2550					4450	2950	6950	4550	14550	8700		
	2.9M	7.5m	*2800	*2800					*4150	3900						
		6.0m	*2600	2350			*3200	2500	*5150	3950						
		4.5m	*2550	1900			3550	2450	5400	3800	*6300	6300				
		3.0m	2550	1700			3450	2350	5100	3550	8300	5700	*13450	10900		
		1.5m	2450	1600			3300	2200	4750	3250	7550	5050	*6350	*6350		
		0.0m	2500	1600			3150	2100	4500	3000	7050	4600	*6950	*6950		
		-1.5m	2750	1750			3100	2000	4350	2850	6850	4450	*10200	8400		
		-3.0m	3250	2150					4350	2850	6850	4450	14350	8550		
	3.5M	7.5m	*2700	2700												
		6.0m	*2550	2050			3650	2550	*4500	4050						
		4.5m	2550	1700			3600	2500	*5100	3900						
		3.0m	2300	1500	2400	1550	3450	2400	5200	3600	*7650	5900	*10850	*10850		
		1.5m	2200	1400	2350	1500	3300	2200	4850	3300	7650	5150				
		0.0m	2200	1400	2250	1450	3150	2050	4500	3000	7150	4700	*7600	*7600		
		-1.5m	2400	1500			3000	1950	4300	2850	6850	4400	*9700	8300	*5400	*5400
		-3.0m	2800	1800			3000	1950	4250	2750	6750	4350	*13700	8350		

Model	Arm	Height (B)	Reach (A)													
			MAX		9.0m		7.5m		6.0m		4.5m		3.0m		1.5m	
			OF	OS	OF	OS	OF	OS	OF	OS	OF	OS	OF	OS	OF	OS
Rear Dozer Undercarriage	1.8M	7.5m	*5050	*5050							*7000	*7000				
		6.0m	*4550	3650					*6600	4250	*7100	*7100				
		4.5m	*4450	2900					*7050	4150	*8450	6750	*12000	*12000		
		3.0m	*4600	2550			5750	2650	*7850	3900	*10300	5950				
		1.5m	*5050	2400			5600	2550	8200	3650	*12000	5550				
		0.0m	5550	2450			5550	2500	7950	3450	*12350	5300				
		-1.5m	6250	2800					7950	3450	*11700	5250	*12050	10200		
		-3.0m									*9850	5400				
	2.4M	7.5m	*4400	*4400												
		6.0m	*4100	3150					*5850	4400						
		4.5m	*4050	2550			*5550	2800	*6450	4250	*7500	6950				
		3.0m	*4200	2250			5800	2700	*7350	4000	*9550	6350				
		1.5m	*4550	2150			5650	2600	*8300	3750	*11450	5750				
		0.0m	4900	2200			5550	2500	8050	3500	*12350	5400				
		-1.5m	5450	2400			5500	2450	7900	3400	*12150	5250	*10950	10150		
		-3.0m	*6600	3000					*7800	3450	*10850	5350	*15400	10400		
	2.9M	7.5m	*2800	*2800					*4150	*4150						
		6.0m	*2600	*2600			*3200	2850	*5150	4500						
		4.5m	*2550	2250			*4950	2850	*5850	4350	*6300	*6300				
		3.0m	*2650	2000			5850	2750	*6850	4050	*8700	6550	*13450	12700		
		1.5m	*2900	1900			5700	2600	*7900	3750	*10850	5850	*6350	*6350		
		0.0m	*3250	1950			5550	2450	8100	3550	*12100	5400	*6950	*6950		
		-1.5m	*3950	2100			5450	2400	7850	3350	*12250	5250	*10200	10050		
		-3.0m	*5250	2550					7900	3400	*11400	5250	*15250	10250		
	3.5M	7.5m	*2750	*2750												
		6.0m	*2550	2350			*3950	2950	*4500	*4500						
		4.5m	*2550	2000			*4750	2900	*5100	4450						
		3.0m	*2650	1800	*3350	1850	*5450	2750	*6250	4150	*7650	6750	*10850	*10850		
		1.5m	*2850	1700	*3950	1800	5700	2600	*7400	3800	*9900	5950				
		0.0m	*3200	1700	*3650	1750	5550	2450	8100	3550	*11650	5500	*7600	*7600		
		-1.5m	*3800	1850			5400	2350	7850	3350	*12200	5200	*9750	*9750	*5400	*5400
		-3.0m	*4900	2150			5400	2300	7800	3300	*11800	5150	*13700	10050		

Model	Arm	Height (B)	Reach (A)													
			MAX		9.0m		7.5m		6.0m		4.5m		3.0m		1.5m	
			OF	OS	OF	OS	OF	OS	OF	OS	OF	OS	OF	OS	OF	OS
Rear Outrigger Undercarriage	1.8M	7.5m	*5050	*5050							*7000	*7000				
		6.0m	*4550	4100					*6600	4750	*7100	*7100				
		4.5m	*4450	3300					*7050	4650	*8450	7600	*12000	*12000		
		3.0m	*4600	2900			*6150	3000	*7850	4400	*10300	6750				
		1.5m	*5050	2750			6300	2900	*8600	4150	*12000	6350				
		0.0m	*5800	2850			*6000	2850	*8900	3950	*12350	6100				
		-1.5m	*6950	3200					*8550	3950	*11700	6050	*12050	12050		
		-3.0m									*9850	6250				
	2.4M	7.5m	*4400	*4400												
		6.0m	*4100	3550					*5850	4900						
		4.5m	*4050	2900			*5550	3150	*6450	4800	*7500	*7500				
		3.0m	*4200	2600			*6250	3050	*7350	4550	*9550	7200				
		1.5m	*4550	2450			6300	2950	*8300	4250	*11450	6550				
		0.0m	*5200	2500			6200	2850	*8850	4000	*12350	6200				
		-1.5m	6100	2800			6150	2800	*8800	3900	*12150	6050	*10950	*10950		
		-3.0m	*6600	3450					*7800	3950	*10850	6150	*15400	12250		
	2.9M	7.5m	*2800	*2800					*4150	*4150						
		6.0m	*2600	*2600			*3200	*3200	*5150	5000						
		4.5m	*2550	*2550			*4950	3200	*5850	4850	*6300	*6300				
		3.0m	*2650	2300			*5900	3100	*6850	4600	*8700	7400	*13450	*13450		
		1.5m	*2900	2200			6350	2950	*7900	4300	*10850	6700	*6350	*6350		
		0.0m	*3250	2250			6200	2800	*8650	4050	*12100	6250	*6950	*6950		
		-1.5m	*3950	2450			6100	2750	*8800	3850	*12250	6050	*10200	*10200		
		-3.0m	*5250	2950					*8250	3900	*11400	6050	*15250	12100		
	3.5M	7.5m	*2750	*2750												
		6.0m	*2550	*2550			*3950	3350	*4500	*4500						
		4.5m	*2550	2300			*4750	3250	*5100	4950						
		3.0m	*2650	2050	*3350	2150	*5450	3150	*6250	4700	*7650	7600	*10850	*10850		
		1.5m	*2850	1950	*3950	2100	*6050	2950	*7400	4350	*9900	6800				
		0.0m	*3200	2000	*3650	2000	6200	2800	*8300	4050	*11650	6300	*7600	*7600		
		-1.5m	*3800	2150			6050	2700	*8750	3850	*12200	6000	*9750	*9750	*5400	*5400
		-3.0m	*4900	2500			6050	2700	*8500	3850	*11800	5950	*13700	11850		

Model	Arm	Height (B)	Reach (A)													
			MAX		9.0m		7.5m		6.0m		4.5m		3.0m		1.5m	
			OF	OS	OF	OS	OF	OS	OF	OS	OF	OS	OF	OS	OF	OS
Front Dozer Undercarriage	1.8M	7.5m	*5100	*5100							*7100	*7100				
		6.0m	*4600	3700					*6700	4300	*7250	7200				
		4.5m	*4500	2900					*7150	4200	*8600	6800	*12150	*12150		
		3.0m	*4700	2550			5250	2650	7750	3950	*10450	6000				
		1.5m	4850	2450			5150	2550	7450	3700	*12200	5600				
		0.0m	5050	2500			5050	2500	7200	3500	11950	5350				
		-1.5m	5700	2800					7200	3450	*11900	5300	*12250	10300		
		-3.0m									*10050	5450				
	2.4M	7.5m	*4500	4500												
		6.0m	*4150	3150					*5950	4450						
		4.5m	*4100	2600			5400	2800	*6550	4300	*7600	7050				
		3.0m	*4250	2300			5300	2750	*7500	4050	*9750	6400				
		1.5m	4350	2150			5150	2600	7550	3750	*11650	5800				
		0.0m	4500	2200			5050	2500	7300	3550	12100	5450				
		-1.5m	4950	2450			5000	2450	7150	3450	11950	5350	*11150	10300		
		-3.0m	6150	3050					7250	3500	*11000	5400	*15650	10550		
	2.9M	7.5m	*2850	*2850					*4250	*4250						
		6.0m	*2650	*2650			*3250	2900	*5250	4550						
		4.5m	*2600	2300			*5000	2850	*5950	4400	*6400	*6400				
		3.0m	*2700	2050			5350	2750	*6950	4100	*8850	6600	*13700	12850		
		1.5m	*2950	1950			5200	2600	7600	3800	*11000	5950	*6450	*6450		
		0.0m	*3350	1950			5050	2500	7300	3550	12150	5500	*7050	*7050		
		-1.5m	*4000	2150			4950	2400	7100	3400	11900	5300	*10350	10200		
		-3.0m	5250	2600					7150	3400	*11600	5300	*15450	10350		
	3.5M	7.5m	*2750	*2750												
		6.0m	*2600	2400			*4000	3000	*4550	*4550						
		4.5m	*2600	2000			*4850	2950	*5200	4450						
		3.0m	*2700	1800	*3400	1900	5400	2800	*6350	4200	*7750	6800	*11050	*11050		
		1.5m	*2900	1700	3750	1800	5200	2600	*7500	3850	*10100	6000				
		0.0m	*3250	1700	3700	1750	5050	2450	7350	3550	*11800	5550	*7700	*7700		
		-1.5m	*3850	1850			4900	2350	7100	3400	11900	5250	*9850	*9850	*5500	*5500
		-3.0m	4550	2200			4900	2350	7050	3300	11800	5300	*13900	10150		

Model	Arm	Height (B)	Reach (A)													
			MAX		9.0m		7.5m		6.0m		4.5m		3.0m		1.5m	
			OF	OS	OF	OS	OF	OS	OF	OS	OF	OS	OF	OS	OF	OS
Dozer & Outrigger Undercarriage	1.8M	7.5m	*5100	*5100							*7100	*7100				
		6.0m	*4600	*4600					*6700	6100	*7250	*7250				
		4.5m	*4500	4250					*7150	6000	*8600	*8600	*12150	*12150		
		3.0m	*4700	3800			*6250	3900	*8000	5700	*10450	8900				
		1.5m	*5100	3650			6200	3800	*8750	5450	*12200	8450				
		0.0m	*5900	3750			6100	3750	8750	5200	*12550	8200				
		-1.5m	6900	4200					*8700	5200	*11900	8150	*12250	*12250		
		-3.0m									*10050	8350				
	2.4M	7.5m	*4500	*4500												
		6.0m	*4150	*4150					*5950	*5950						
		4.5m	*4100	3750			*5600	4100	*6550	6100	*7600	*7600				
		3.0m	*4250	3400			6350	4000	*7500	5850	*9750	9400				
		1.5m	*4600	3250			6200	3850	*8400	5550	*11650	8700				
		0.0m	*5250	3350			6100	3750	8850	5300	*12550	8300				
		-1.5m	6000	3700			6050	3700	8700	5150	*12350	8150	*11150	*11150		
		-3.0m	*6700	4500					*7950	5250	*11050	8250	*15650	*15650		
	2.9M	7.5m	*2850	*2850					*4250	*4250						
		6.0m	*2650	*2650			*3250	*3250	*5250	*5250						
		4.5m	*2600	*2600			*5000	4150	*5950	*5950	*6400	*6400				
		3.0m	*2700	*2700			*6000	4000	*6950	*5900	*8850	*8850	*13700	*13700		
		1.5m	*2950	*2950			6250	3850	*8050	5600	*11000	8850	*6450	*6450		
		0.0m	*3350	3000			6100	3750	*8800	5300	*12300	8350	*7050	*7050		
		-1.5m	*4000	3250			6000	3650	8650	5150	*12450	8150	*10350	*10350		
		-3.0m	*5350	3150					*8400	5150	*11600	8150	*15450	*15450		
	3.5M	7.5m	*2750	*2750												
		6.0m	*2600	*2600			*4000	*4000	*4550	*4550						
		4.5m	*2600	*2600			*4850	4200	*5200	*5200						
		3.0m	*2700	*2700	*3400	2850	*5550	4050	*6350	6000	*7750	*7750	*11050	*11050		
		1.5m	*2900	2650	*4000	2800	*6150	3900	*7500	5650	*10100	8950				
		0.0m	*3250	2650	*3700	2700	6100	3700	*8450	5350	*11800	8450	*7700	*7700		
		-1.5m	*3850	2850			5950	3600	8650	5100	*12450	8100	*9850	*9850	*5500	*5500
		-3.0m	*5000	3350			5950	3600	8600	5050	*12000	8050	*13900	*13800		

Model	Arm	Height (B)	Reach (A)													
			MAX		9.0m		7.5m		6.0m		4.5m		3.0m		1.5m	
			OF	OS	OF	OS	OF	OS	OF	OS	OF	OS	OF	OS	OF	OS
4 X Outrigger Undercarriage	1.8M	7.5m	*5100	*5100							*7100	*7100				
		6.0m	*4600	*4600					*6700	*6700	*7250	*7250				
		4.5m	*4500	*4500					*7150	7150	*8600	*8600	*12150	*12150		
		3.0m	*4700	4500			*6250	4700	*8000	6850	*10450	*10450				
		1.5m	*5100	4350			6350	4600	*8750	6550	*12200	10400				
		0.0m	*5900	4500			*6100	4500	9000	6350	*12550	10100				
		-1.5m	*7050	5050					*8700	6300	*11900	10100	*12250	*12250		
		-3.0m									*10050	*10050				
	2.4M	7.5m	*4500	*4500												
		6.0m	*4150	*4150					*5950	*5950						
		4.5m	*4100	*4100			*5600	4850	*6550	*6550	*7600	*7600				
		3.0m	*4250	4050			*6350	4750	*7500	6950	*9750	*9750				
		1.5m	*4600	3900			6400	4650	*8400	6650	*11650	10650				
		0.0m	*5250	4000			6250	4500	*9000	6400	*12550	10250				
		-1.5m	6150	4450			6250	4500	8950	6300	*12350	10100	*11150	*11150		
		-3.0m	*6700	5450					*7950	6350	*11000	10200	*15650	*15650		
	2.9M	7.5m	*2850	*2850					*4250	*4250						
		6.0m	*2650	*2650			*3250	*3250	*5250	*5250						
		4.5m	*2600	*2600			*5000	4500	*5950	*5950	*6400	*6400				
		3.0m	*2700	*2700			*6000	4400	*6950	6500	*8850	*8850	*13700	*13700		
		1.5m	*2950	*2950			5900	4250	*8050	6150	*11000	10000	*6450	*6450		
		0.0m	*3350	3250			5750	4100	8400	5850	*12300	9450	*7050	*7050		
		-1.5m	*4000	3550			5700	4000	8200	5700	*12450	9200	*10350	*10350		
		-3.0m	*5350	4250					8250	5700	*11600	9200	*15450	*15450		
	3.5M	7.5m	*2750	*2750												
		6.0m	*2600	*2600			*4000	*4000	*4550	*4550						
		4.5m	*2600	*2600			*4850	*4850	*5200	*5200						
		3.0m	*2700	*2700	*3400	*3400	*5550	4850	*6350	*6350	*7750	*7750	*11050	*11050		
		1.5m	*2900	*2900	*4000	3350	*6150	4650	*7500	6750	*10100	*10100				
		0.0m	*3250	*3250	*3700	3300	6250	4500	*8450	6450	*11800	10400	*7700	*7700		
		-1.5m	*3850	3500			6150	4350	8900	6250	*12450	10050	*9850	*9850	*5500	*5500
		-3.0m	*5000	4050			6100	4350	*8650	6150	*12000	9950	*13900	*13900		

.Note for lift capacity tables:
1. Ratings are based on ISO 10567
2. Lifting capacities are given for:
   a) 75% of tipping load
   b) rated hydraulic lift capacity 87% of max.
3. Capacities marked with an asterisk (*) are limited by hydraulic capacities

TWO PIECE BOOM Lift capacity tables for 2.75 metre undercarriage

When removing bucket, linkage or cylinder, lifting capacities can be increased by their respective weights.

A - Reach from swing center

B - Bucket hook height

C - Lifting capacities, including bucket (760 kg),

linkage (130 kg) and bucket cylinder (182 kg)

OF: Lifting capacity (rating over front)
OS: Lifting capacity (Rating over side)

-MAX: Rating at maximum reach

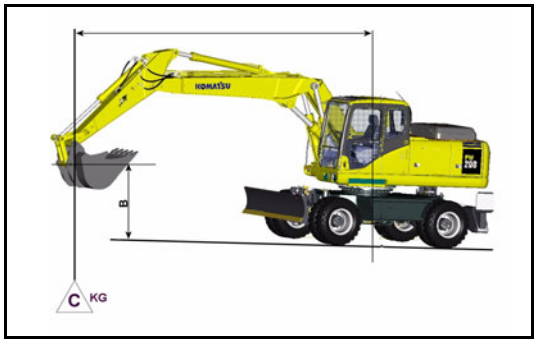

Model	Arm	Height (B)	Reach (A)													
			MAX		9.0m		7.5m		6.0m		4.5m		3.0m		1.5m	
			OF	OS	OF	OS	OF	OS	OF	OS	OF	OS	OF	OS	OF	OS
Attachment less Undercarriage	1.8M	7.5m	*5050	4400							*7000	5700				
		6.0m	4100	2800					4800	3300	*7100	5700				
		4.5m	3250	2150					4700	3200	7800	5350	*12000	10400		
		3.0m	2850	1850			2950	1950	4450	3000	6900	4550				
		1.5m	2700	1750			2900	1850	4150	2750	6450	4150				
		0.0m	2800	1800			2800	1800	3950	2550	6200	3900				
		-1.5m	3150	2050					3900	2500	6150	3900	*12050	7500		
		-3.0m									6350	4050				
	2.4M	7.5m	*4400	3500												
		6.0m	3500	2400					4950	3450						
		4.5m	2850	1900			3150	2100	4800	3350	*7500	5550				
		3.0m	2550	1650			3050	2000	4550	3100	7350	4950				
		1.5m	2450	1550			2900	1900	4250	2800	6700	4350				
		0.0m	2500	1550			2800	1800	4000	2600	6300	4000				
		-1.5m	2750	1750			2750	1750	3900	2500	6200	3900	*10950	7450		
		-3.0m	3400	2200					3950	2550	6250	3950	13150	7700		
	2.9M	7.5m	*2800	*2800					*4150	3500						
		6.0m	*2600	2050			*3200	2150	5050	3550						
		4.5m	2550	1650			3200	2150	4900	3400	*6300	5700				
		3.0m	2250	1450			3050	2050	4600	3150	7550	5150	*13450	9850		
		1.5m	2150	1350			2900	1900	4300	2850	6850	4500	*6350	*6350		
		0.0m	2200	1350			2800	1750	4050	2600	6350	4050	*6950	*6950		
		-1.5m	2400	1500			2700	1700	3850	2450	6150	3850	*10200	7350		
		-3.0m	2900	1850					3850	2450	6150	3850	12950	7550		
	3.5M	7.5m	*2700	2400												
		6.0m	*2550	1750			3300	2250	*4500	3650						
		4.5m	2250	1400			3250	2200	5000	3500						
		3.0m	2000	1250	2100	1300	3100	2050	4700	3200	*7650	5350	*10850	10600		
		1.5m	1900	1150	2050	1250	2950	1900	4350	2900	6950	4550				
		0.0m	1950	1150	1950	1200	2750	1750	4050	2600	6400	4100	*7600	7550		
		-1.5m	2100	1250			2650	1650	3850	2450	6100	3850	*9700	7300	*5400	*5400
		-3.0m	2450	1500			2650	1650	3800	2350	6050	3750	12700	7350		

Model	Arm	Height (B)	Reach (A)													
			MAX		9.0m		7.5m		6.0m		4.5m		3.0m		1.5m	
			OF	OS	OF	OS	OF	OS	OF	OS	OF	OS	OF	OS	OF	OS
Rear Dozer Undercarriage	1.8M	7.5m	*5050	5050							*7000	*6500				
		6.0m	*4550	3250					*6600	3850	*7100	6500				
		4.5m	*4450	2550					*7050	3750	*8450	6150	*12000	*12000		
		3.0m	*4600	2200			5250	2300	*7850	3500	*10300	5300				
		1.5m	4850	2100			5150	2250	7550	3250	*12000	4900				
		0.0m	5050	2150			5050	2150	7300	3050	12350	4650				
		-1.5m	5750	2450					7250	3000	*11700	4650	*12050	9100		
		-3.0m									*9850	4800				
	2.4M	7.5m	*4400	4000												
		6.0m	*4100	2800					*5850	4000						
		4.5m	*4050	2250			5450	2450	*6450	3850	*7500	6350				
		3.0m	*4200	1950			5350	2400	*7350	3600	*9550	5750				
		1.5m	4350	1850			5200	2250	7650	3300	*11450	5150				
		0.0m	4500	1900			5050	2150	7400	3100	*12350	4750				
		-1.5m	4950	2100			5000	2150	7250	3000	*12150	4650	*10950	9050		
		-3.0m	6200	2650					7300	3050	*10850	4750	*15400	9300		
	2.9M	7.5m	*2800	*2800					*4150	4050						
		6.0m	*2600	2400			*3200	2550	*5150	4050						
		4.5m	*2550	1950			*4950	2500	*5850	3900	*6300	*6300				
		3.0m	*2650	1750			5350	2400	*6850	3650	*8700	5950	*13450	11600		
		1.5m	*2900	1650			5200	2250	7700	3350	*10850	5250	*6350	*6350		
		0.0m	*3250	1650			5050	2150	7400	3100	*12100	4800	*6950	*6950		
		-1.5m	*3950	1800			4950	2050	7200	2950	*12250	4600	*10200	8950		
		-3.0m	*5250	2200					7200	2950	*11400	4650	*15250	9150		
	3.5M	7.5m	*2750	*2750												
		6.0m	*2550	2100			*3950	2650	*4500	*4200						
		4.5m	*2550	1700			*4750	2600	*5100	4000						
		3.0m	*2650	1500	*3350	1600	5400	2450	*6250	3750	*7650	6150	*10850	*10850		
		1.5m	*2850	1450	3750	1550	5200	2250	*7400	3400	*9900	5350				
		0.0m	*3200	1450	*3650	1450	5050	2100	7450	3100	*11650	4850	*7600	*7600		
		-1.5m	*3800	1550			4900	2000	7200	2900	*12200	4600	*9750	8850	*5400	*5400
		-3.0m	4550	1850			4900	2000	7100	2850	*11800	4500	*13700	8950		

Model	Arm	Height (B)	Reach (A)													
			MAX		9.0m		7.5m		6.0m		4.5m		3.0m		1.5m	
			OF	OS	OF	OS	OF	OS	OF	OS	OF	OS	OF	OS	OF	OS
Rear Outrigger Undercarriage	1.8M	7.5m	*5050	*5050							*7000	*7000				
		6.0m	*4550	3700					*6600	4350	*7100	*7100				
		4.5m	*4450	2950					*7050	4250	*8450	6950	*12000	*12000		
		3.0m	*4600	2550			5850	2650	*7850	4000	*10300	6100				
		1.5m	*5050	2450			5750	2550	8550	3700	*12000	5700				
		0.0m	5650	2500			5700	2500	8250	3500	*12350	5450				
		-1.5m	6450	2850					8250	3500	*11700	5400	12050	10800		
		-3.0m									*9850	5600				
	2.4M	7.5m	*4400	*4400												
		6.0m	*4100	3200					*5850	4500						
		4.5m	*4050	2600			*5550	2850	*6450	4350	*7500	7200				
		3.0m	*4200	2300			5950	2750	*7350	4100	*9550	6550				
		1.5m	*4550	2150			5800	2600	*8300	3800	*11450	5900				
		0.0m	5000	2200			5700	2500	8350	3600	*12350	5550				
		-1.5m	5600	2450			5650	2450	8200	3450	*12150	5400	*10950	10750		
		-3.0m	*6600	3050					*7800	3550	*10850	5500	*14050	11050		
	2.9M	7.5m	*2800	*2800					*4150	*4150						
		6.0m	*2600	*2600			*3200	2900	*5150	4550						
		4.5m	*2550	2300			*4950	2900	*5850	4400	*6300	*6300				
		3.0m	*2650	2050			*5900	2750	*6850	4150	*8700	6750	*13450	*13400		
		1.5m	*2900	1950			5850	2600	*7900	3850	*10850	6050	*6350	*6350		
		0.0m	*3250	1950			5650	2500	8400	3600	*12100	5600	*6950	*6950		
		-1.5m	*3950	2150			5600	2400	8150	3400	*12250	5400	*10200	*10200		
		-3.0m	*5250	2600					8200	3450	*11400	5400	*15250	10850		
	3.5M	7.5m	*2750	*2750												
		6.0m	*2550	2400			*3950	3000	*4500	*4500						
		4.5m	*2550	2000			*4750	2950	*5100	4500						
		3.0m	*2650	1800	*3350	1900	*5450	2800	*6250	4250	*7650	6950	*10850	*10850		
		1.5m	*2850	1700	*3950	1800	5850	2650	*7400	3900	*9900	6150				
		0.0m	*3200	1700	*3650	1750	5650	2450	*8300	3600	*11650	5650	*7600	*7600		
		-1.5m	*3800	1850			5550	2350	8150	3400	*12200	5350	*9750	*9750	*5400	*5400
		-3.0m	*4900	2200			5500	2350	8100	3350	*11800	5300	*13700	10650		

Model	Arm	Height (B)	Reach (A)													
			MAX		9.0m		7.5m		6.0m		4.5m		3.0m		1.5m	
			OF	OS	OF	OS	OF	OS	OF	OS	OF	OS	OF	OS	OF	OS
Front Dozer Undercarriage	1.8M	7.5m	*5100	*5100							*7100	*6550				
		6.0m	*4600	3300					*6700	3850	*7250	6600				
		4.5m	*4500	2600					*7150	3750	*8600	6200	*12150	*12150		
		3.0m	4600	2250			4800	2350	7150	3500	*10450	5400				
		1.5m	4450	2100			4650	2250	6800	3250	11250	5000				
		0.0m	4600	2200			4600	2200	6550	3050	10900	4700				
		-1.5m	5200	2450					6550	3050	10900	4700	*12250	9200		
		-3.0m									*10050	4850				
	2.4M	7.5m	*4500	4050												
		6.0m	*4150	2800					*5950	4000						
		4.5m	*4100	2250			4950	2500	*6550	3900	*7600	6400				
		3.0m	4100	2000			4850	2400	7250	3600	*9750	5800				
		1.5m	3950	1900			4700	2300	6900	3350	11550	5200				
		0.0m	4050	1900			4600	2200	6550	3150	11050	4800				
		-1.5m	4500	2150			4550	2150	6500	3000	10900	4700	*11150	9150		
		-3.0m	5600	2650					6600	3100	11000	4800	*15650	9450		
	2.9M	7.5m	*2850	*2850					*4250	4050						
		6.0m	*2650	2450			*3250	2550	*5250	4100						
		4.5m	*2600	2000			*5000	2550	*5950	3950	*6400	*6400				
		3.0m	*2700	1750			4900	2450	*6950	3700	*8850	6000	*13700	11750		
		1.5m	*2950	1650			4750	2300	7000	3400	*11000	5300	*6450	*6450		
		0.0m	*3350	1700			4600	2150	6700	3150	11150	4850	*7050	*7050		
		-1.5m	4000	1850			4500	2100	6450	2950	10900	4700	*10350	9050		
		-3.0m	4800	2250					6500	3000	10900	4700	*15450	9250		
	3.5M	7.5m	*2750	*2750												
		6.0m	*2600	2100			*4000	2650	*4550	*4200						
		4.5m	*2600	1750			*4850	2600	*5200	4050						
		3.0m	*2700	1550	*3400	1650	4950	2450	*6350	3750	*7750	6200	*10150	*10150		
		1.5m	*2900	1450	3400	1550	4750	2300	7050	3450	*10100	5400				
		0.0m	3250	1450	3330	1500	4550	2150	6700	3150	11250	4950	*7700	*7700		
		-1.5m	3500	1600			4450	2050	6500	2950	10850	4650	*9850	7550	*5400	*5400
		-3.0m	4100	1850			4450	2000	6400	2900	10800	4600	*13900	7600		

Model	Arm	Height (B)	Reach (A)													
			MAX		9.0m		7.5m		6.0m		4.5m		3.0m		1.5m	
			OF	OS	OF	OS	OF	OS	OF	OS	OF	OS	OF	OS	OF	OS
Dozer & Outrigger Undercarriage	1.8M	7.5m	*5100	*5100							*7100	*7100				
		6.0m	*4600	*4600					*6700	5600	*7250	*7250				
		4.5m	*4500	3850					*7150	5050	*8600	*8600	*12150	*12150		
		3.0m	*4700	3400			5800	3550	*8000	5200	*10450	8150				
		1.5m	*5100	3250			5700	3450	8350	4950	*12200	7700				
		0.0m	5600	3350			5600	3400	8050	4700	*12550	7400				
		-1.5m	6350	3800					8050	4700	*11900	7400	*12250	*12250		
		-3.0m									*10050	7600				
	2.4M	7.5m	*4500	*4500												
		6.0m	*4150	4150					*5950	5750						
		4.5m	*4100	3400			*5600	3700	*6550	5600	*7600	*7600				
		3.0m	*4250	3050			5900	3600	*7500	5350	*9750	8650				
		1.5m	*4600	2950			5750	3500	*8400	5050	*11650	7950				
		0.0m	4950	3000			5600	3400	8150	4800	*12550	7550				
		-1.5m	5500	3300			5550	3350	8000	4650	*12350	7400	*11150	*11150		
		-3.0m	*6700	4100					*7950	4750	*11050	7500	*15650	*15650		
	2.9M	7.5m	*2850	*2850					*4250	*4250						
		6.0m	*2650	*2650			*3250	*3250	*5250	*5250						
		4.5m	*2600	*2600			*5000	3750	*5950	5700	*6400	*6400				
		3.0m	*2700	*2700			5900	3650	*6950	5400	*8850	8850	*13700	*13700		
		1.5m	*2950	2650			5750	3500	*8050	5100	*11000	8100	*6450	*6450		
		0.0m	*3350	2650			5600	3350	8200	4800	*12300	7600	*7050	*7050		
		-1.5m	*4000	2900			5500	3300	7950	4650	*12450	7400	*10350	*10350		
		-3.0m	*5350	3500					*8000	4650	*11600	7400	*15450	*15450		
	3.5M	7.5m	*2750	*2750												
		6.0m	*2600	*2600			*4000	3900	*4550	*4550						
		4.5m	*2600	*2600			*4850	3850	*5200	*5200						
		3.0m	*2700	2450	*3400	2550	*5550	3700	*6350	5500	*7750	*7750	*11050	*11050		
		1.5m	*2900	2350	*4000	2500	5750	3500	*7500	5150	*10100	8200				
		0.0m	*3250	2350	*3700	2400	5600	3350	8200	4850	*11800	7650	*7700	*7700		
		-1.5m	*3850	2550			5450	3250	7950	4600	*12450	7350	*9850	*9850	*5500	*5500
		-3.0m	*5000	3000			5450	3200	7900	4550	*12000	7300	*13900	13900		

Model	Arm	Height (B)	Reach (A)													
			MAX		9.0m		7.5m		6.0m		4.5m		3.0m		1.5m	
			OF	OS	OF	OS	OF	OS	OF	OS	OF	OS	OF	OS	OF	OS
4 X Outrigger Undercarriage	1.8M	7.5m	*5100	*5100							*7100	*7100				
		6.0m	*4600	*4600					*6700	*6700	*7250	*7250				
		4.5m	*4500	*4500					*7150	6550	*8600	*8600	*12150	*12150		
		3.0m	*4700	4100			5950	4300	*8000	6300	*10450	10050				
		1.5m	*5100	3950			5850	4200	8550	6000	*12250	9550				
		0.0m	5750	4100			5800	4100	8300	5750	*12550	9250				
		-1.5m	6550	4600					8300	5750	*11900	9250	*12250	*12250		
		-3.0m									*10050	9400				
	2.4M	7.5m	*4500	*4500												
		6.0m	*4150	*4150					*5950	*5950						
		4.5m	*4100	4100			*5600	4450	*6550	*6550	*7600	*7600				
		3.0m	*4250	3700			6050	4350	*7500	6400	*9750	*9750				
		1.5m	*4600	3550			5900	4200	*8400	6100	*11650	9800				
		0.0m	5150	3650			5800	4100	8400	5850	*12550	9400				
		-1.5m	5700	4050			5750	4050	8250	5700	*12350	9250	*11150	*11150		
		-3.0m	*6700	4950					*7950	5800	*11000	9300	*15650	*15650		
	2.9M	7.5m	*2850	*2850					*4250	*4250						
		6.0m	*2650	*2650			*3250	*3250	*5250	*5250						
		4.5m	*2600	*2600			*5000	4500	*5950	*5950	*6400	*6400				
		3.0m	*2700	*2700			*6000	4400	*6950	6500	*8850	*8850	*13700	*13700		
		1.5m	*2950	*2950			5900	4250	*8050	6150	*11000	10000	*6450	*6450		
		0.0m	*3350	3250			5750	4100	8400	5850	*12300	9450	*7050	*7050		
		-1.5m	*4000	3550			5700	4000	8200	5700	*12450	9200	*10350	*10350		
		-3.0m	*5350	4250					8250	5700	*11600	9200	*15450	*15450		
	3.5M	7.5m	*2750	*2750												
		6.0m	*2600	*2600			*4000	*4000	*4550	*4550						
		4.5m	*2600	*2600			*4850	4600	*5200	*5200						
		3.0m	*2700	*2700	*3400	3100	*5550	4450	*6350	*6350	*7750	*7750	*10150	*10150		
		1.5m	*2900	2900	*4000	3050	5950	4250	*7500	6200	*10100	*10100				
		0.0m	*3250	2900	*3700	2950	5750	4050	8450	5900	*11800	9550	*7700	*7700		
		-1.5m	*3850	3150			5650	3950	8200	5700	*12450	9200	*9850	*9850	*5500	*5500
		-3.0m	*5000	3650			5600	3950	8150	5600	*12000	9100	*13900	*13900		

.Note for lift capacity tables:
1. Ratings are based on ISO 10567
2. Lifting capacities are given for:
   a) 75% of tipping load
   b) rated hydraulic lift capacity 87% of max.
3. Capacities marked with an asterisk (*) are limited by hydraulic capacities

OVERLOAD CAUTION

This machine is equipped with an overload caution system which gives a visual warning (on monitor) and an audible warning when lifting a load close to the lift capacity of the machine (active in L mode only).

A decal inside the operators cab shows the loads at which the caution warning is given for various work equipment positions.

Due to the simple nature of the system the overload warning is given at a lower load than actually allowable (see full lift capacity charts)

If lifting to the full capacity of the machine is required it is necessary to fit a full overload caution system (with work equipment position sensing to the machine.)

Decal showing lifting loads (in kg) at overload warning.

PW200-7K

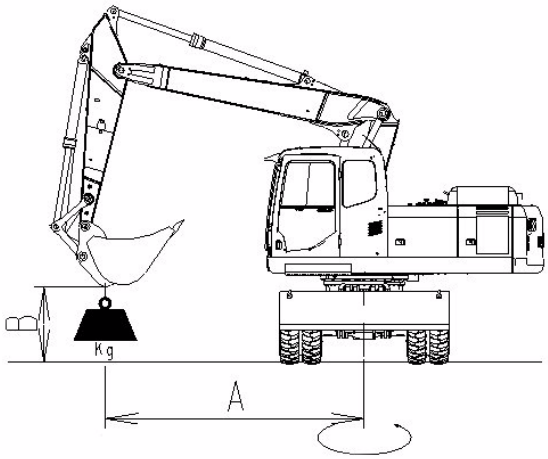

B \ A	9.0m	7.5m	6.0m	4.5m	3.0m
6.0m		750	900		
4.5m		800	1050		
3.0m	700	900	1250	1900	3250
1.5m	700	1050	1500	2250	
0.0m	700	1100	1650	2650	2550

20K-00-31150

PW220-7K

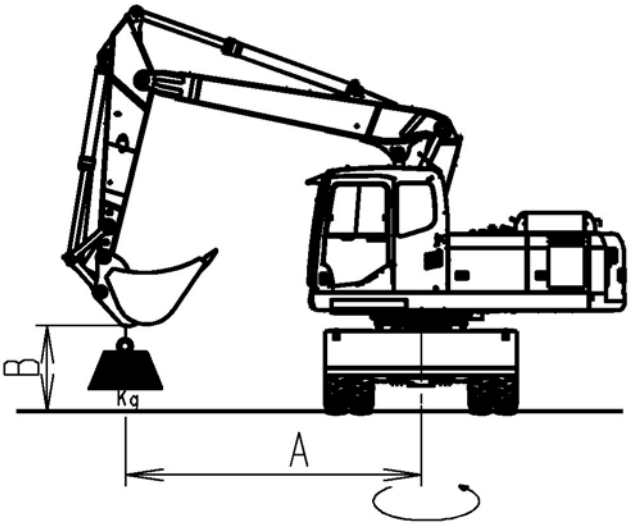

B \ A	9.0m	7.5m	6.0m	4.5m	3.0m
6.0m		950	1100		
4.5m		1000	1250		
3.0m	800	1150	1500	2150	3600
1.5m	950	1250	1800	2650	
0.0m	950	1350	2000	3100	2550

20K-00-31180

OPERATION

⚠ WARNING

Please read and make sure that you understand the safety volume before reading this section.

GENERAL VIEW

GENERAL VIEW OF MACHINE

If directions are indicated in this section, they refer to the directions shown by in the arrows in the diagram below.

A: FRONT	B: REAR	C: RIGHT	D: LEFT

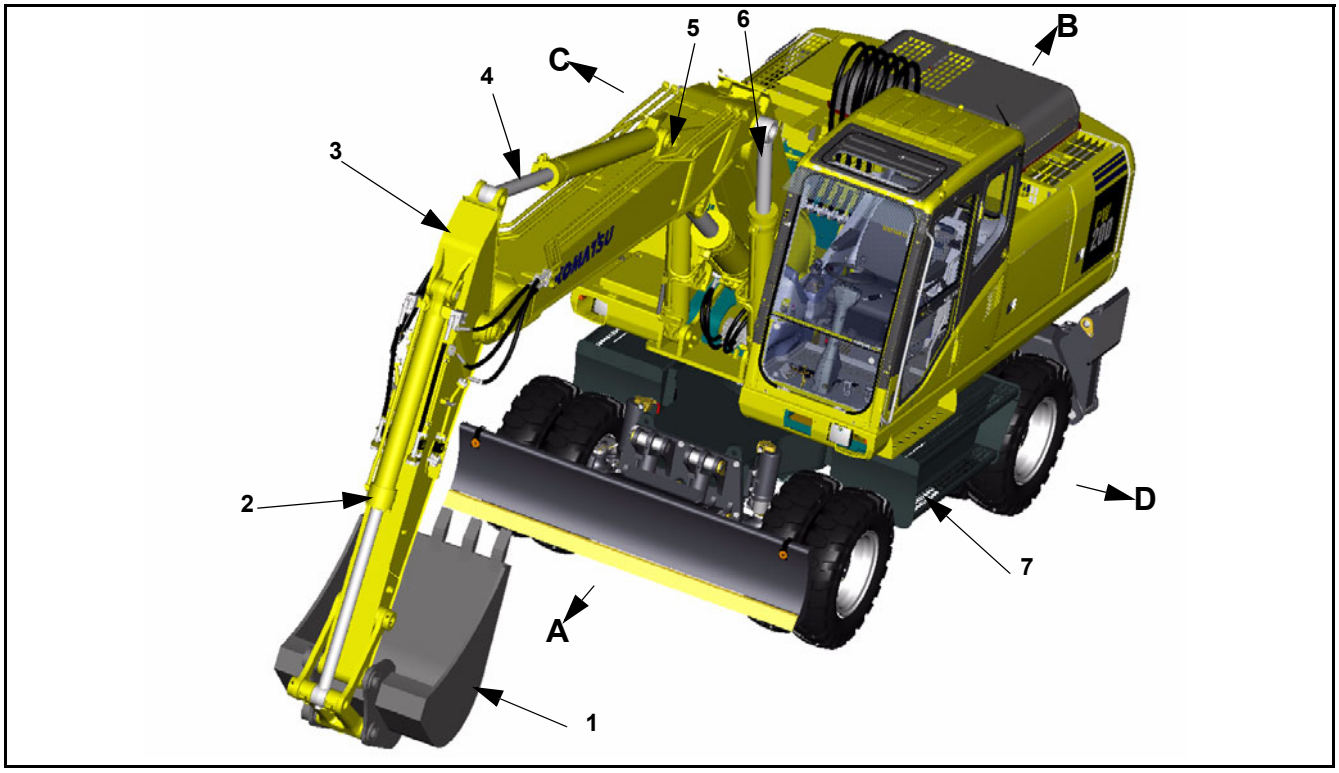

1. Bucket	5. Boom
2. Bucket cylinder	6. Boom Cylinder
3. Arm	7. Undercarriage
4. Arm cylinder	

GENERAL VIEW OF CONTROLS AND GAUGES

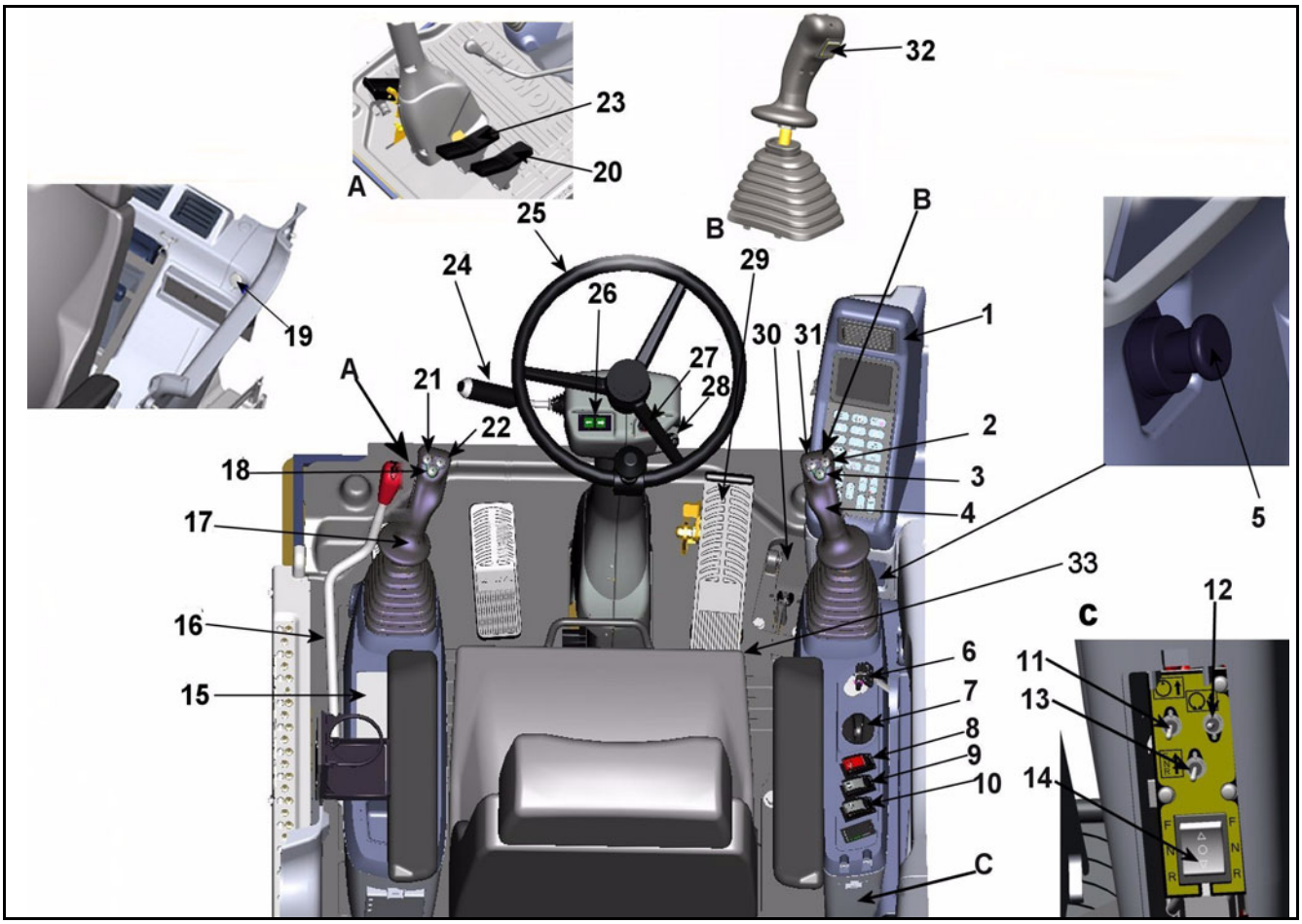

1. Machine monitor	18. Horn
2. Clamshell rotate right	19. 12V power supply
3. Boom and chassis attachment select	20. HCU Pedal (Option extra)
4. Right control lever	21. Power max button
5. cigarette lighter	22. Spare
6. Starter switch	23. Hydraulic Adjust Boom pedal (Option extra)
7. Fuel control dial	24. Indicator stalk (horn, windscreen wash/wipe, direction indicators, roadlight dip/main beam/flash)
8. Park brake switch	25. Steering wheel
9. Swing lock	26. Turn indicator warning lights
10. Quick coupler	27. Park light override
11. Pump override	28. Driving light
12. Swing override	29. Brake pedal
13.Travel override	30.Travel pedal
14. Override F/N/R	31. Clamshell rotate left
15. Air conditioner location	32. F/N/R switch
16. Safety lock lever	33. Mechanical swing lock
17. Left control lever	

EXPLANATION OF COMPONENTS

The following is an explanation of the devices needed for operating the machine.

To carry out suitable operations correctly and safely, it is important to understand fully the methods of operating the equipment and the meanings of the displays.

1. MACHINE MONITOR

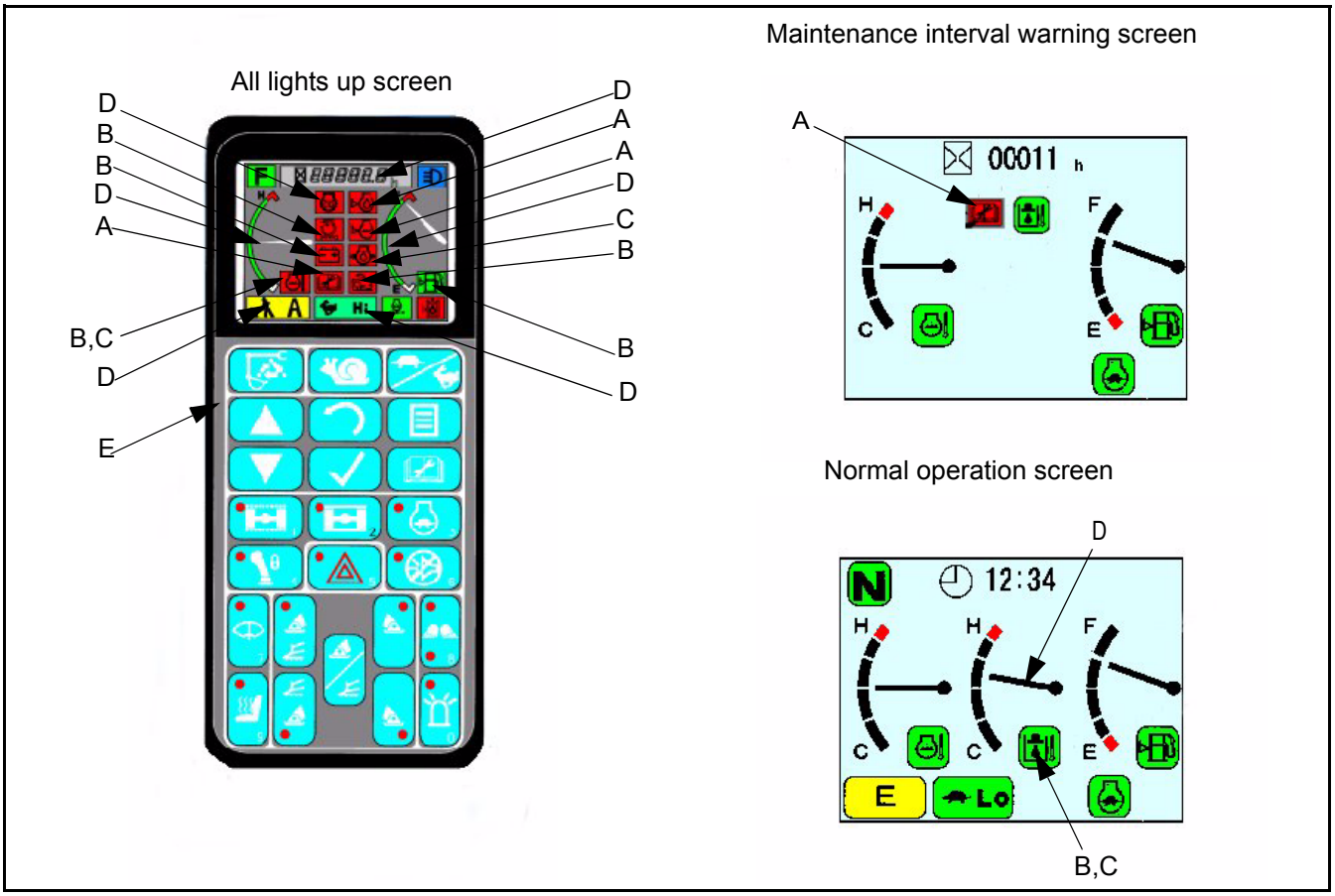

A: Basic check Items	D: Meter Display Portion, Pilot Display Portion
B: Caution Items	E: Monitor Switches
C: Emergency Stop Items	

BASIC OPERATION OF MACHINE MONITOR

If there is abnormality when starting engine

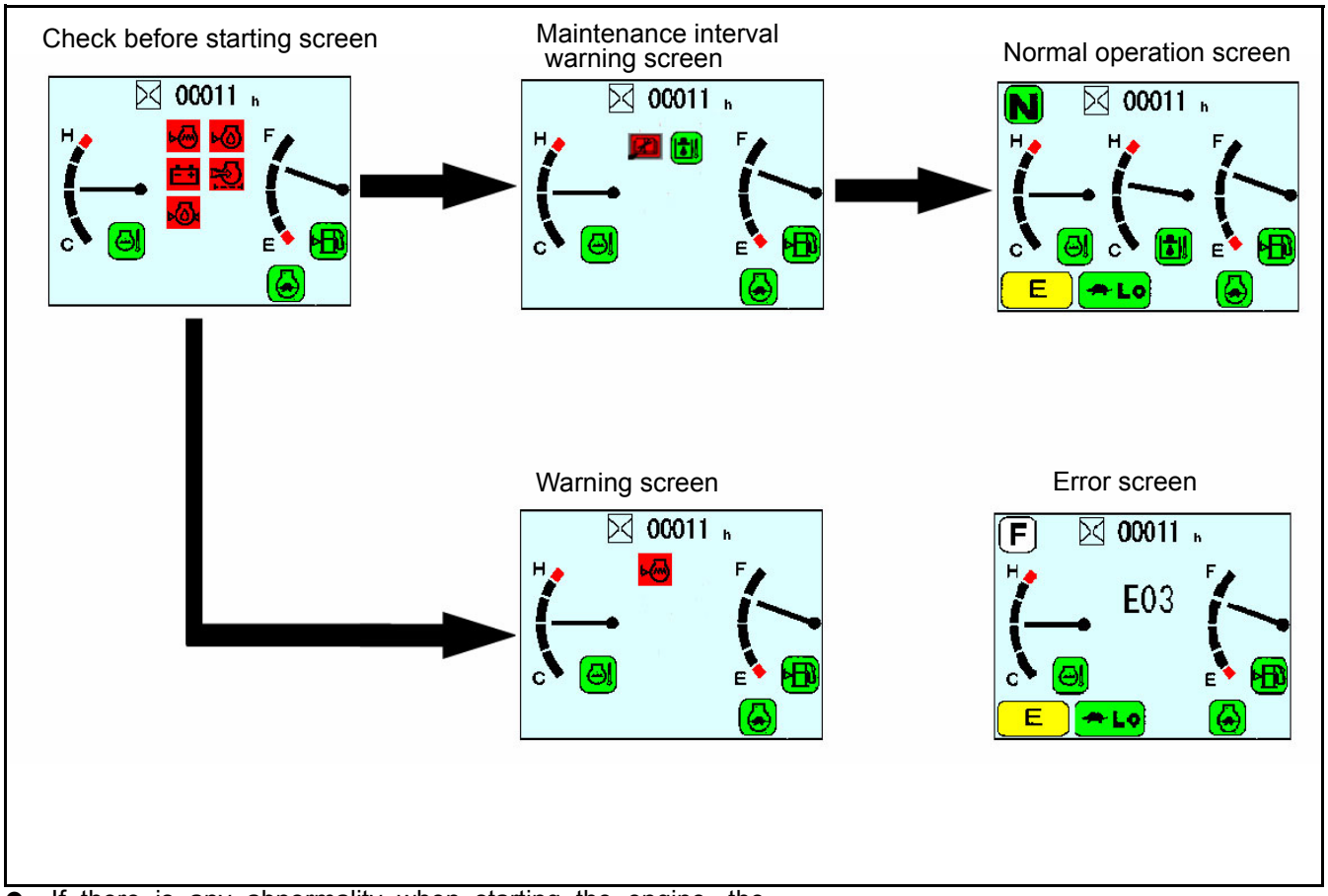

- If there is any abnormality when starting the engine, the check before starting screen changes to the maintenance interval warning screen, warning screen, or error screen.
- After displaying the check before starting screen for 2 seconds, the screen changes to the maintenance interval warning screen.
- After displaying the maintenance interval warning screen for 30 seconds, the screen returns to the normal screen.
- After displaying the check before starting screen for 2 seconds, the screen changes to the warning screen or error screen.

If any abnormality occurs during operation

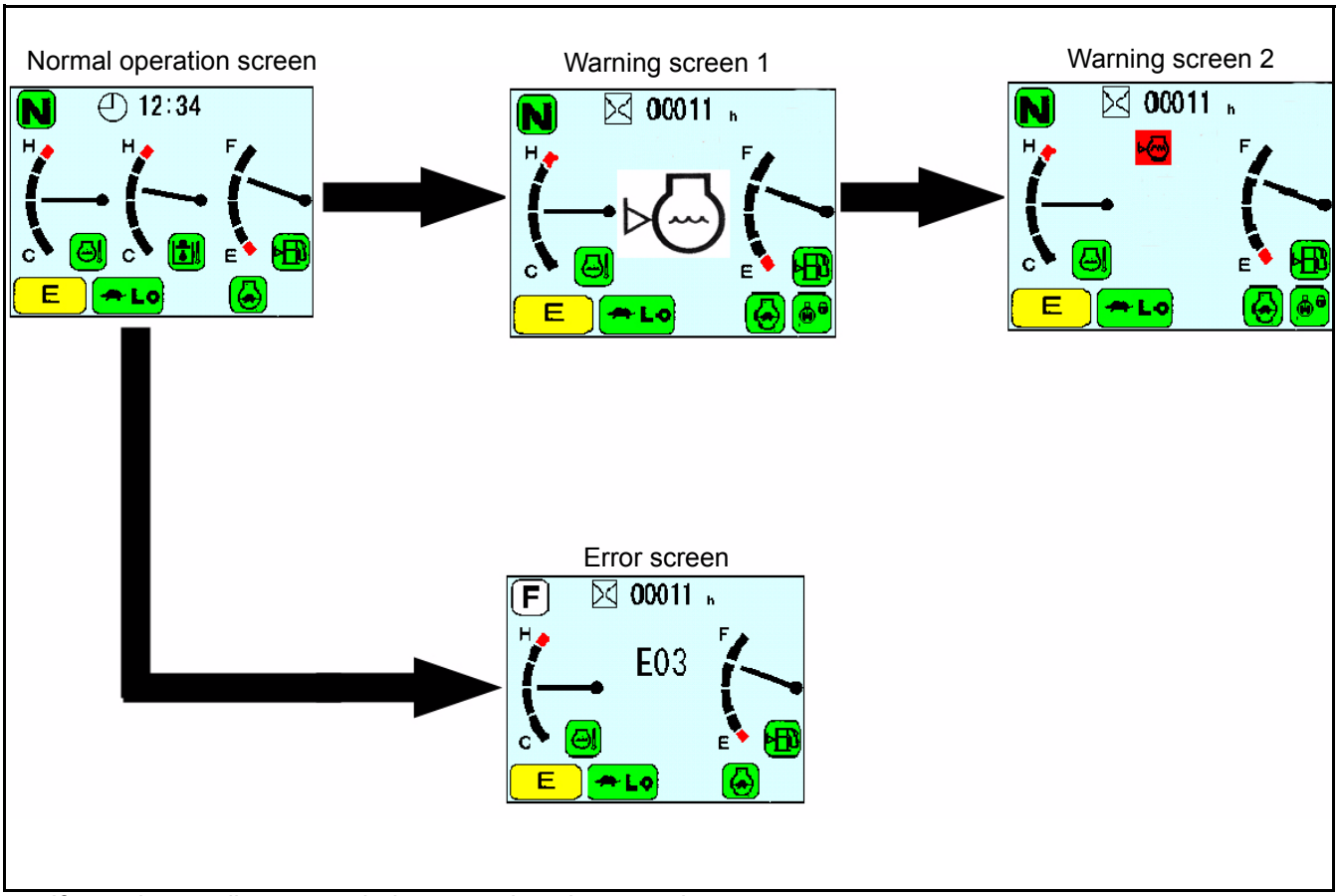

- If any abnormality occurs during operation, the normal operation screen changes to warning screen (1) or the error screen.
- After displaying warning screen (1) for 2 seconds, the screen automatically changes to warning screen (2), with exception of low brake pressure when warning screen (1) remains permanently active.

BASIC CHECK ITEMS

WARNING

These monitors are not a guarantee of the condition of the machine. Do not simply rely on the monitors when carrying out checks before starting (daily checks). Always get off the machine and check each item directly.

This displays the basic items that must be checked before starting the engine. If there is any abnormality, the monitor for the location of the abnormality will light up.

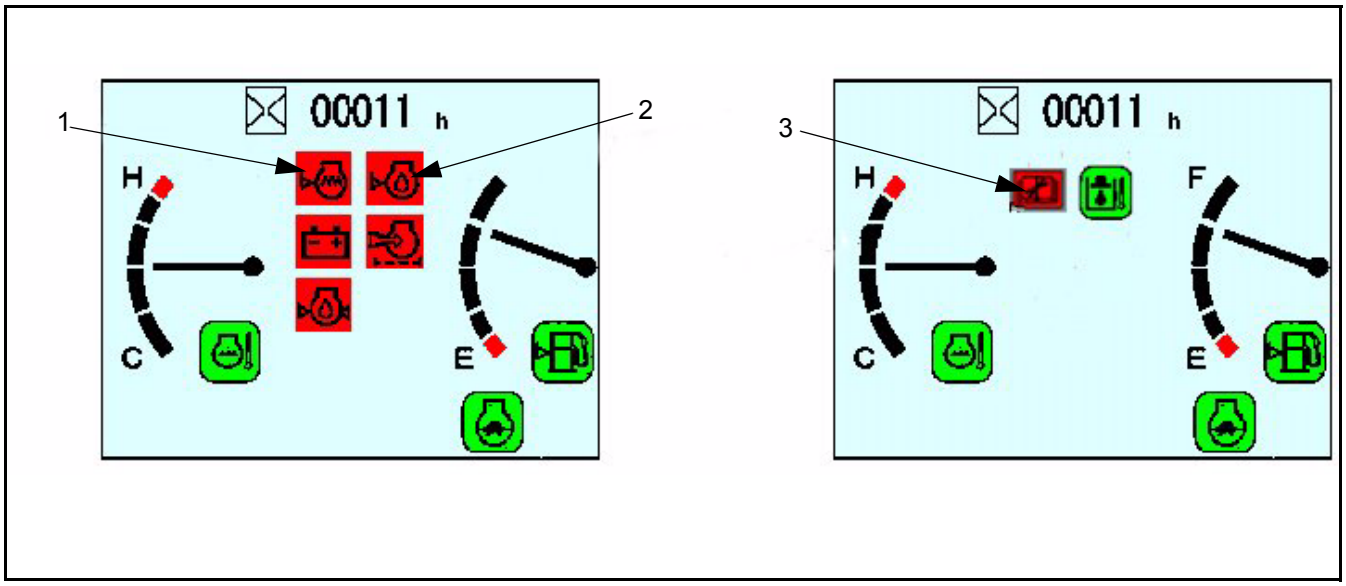

1. RADIATOR WATER LEVEL MONITOR

(1) Radiator water level monitor	(3) Maintenance monitor
(2) Engine oil level monitor	

This monitor (1) warns the operator that there has been a drop in the radiator water level. If the radiator water level is low, the lamp lights up red, so check the water level in the radiator and the sub-tank, and add water.

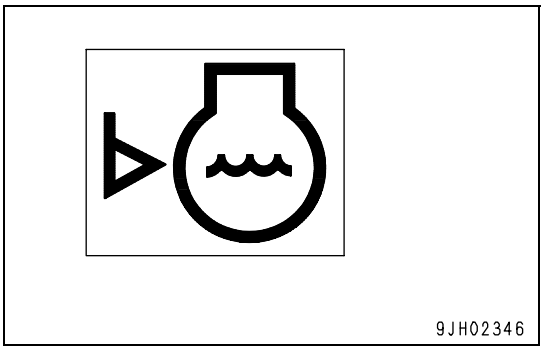

2. ENGINE OIL LEVEL MONITOR

This monitor (2) warns the operator that there has been a drop in the oil level in the engine oil pan. If the oil level in the engine oil pan is low, the lamp lights up red, so check the oil level in the engine oil pan, and add oil.

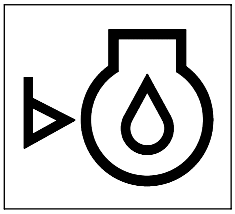

9JH01663

3. MAINTENANCE INTERVAL MONITOR

This monitor (3) lights up to warn the operator that the set time has passed since the maintenance was last carried out.

This monitor screen goes out after 30 seconds and returns to the normal operation screen.

For details of the method of checking the maintenance interval, see "FRONT AND REAR WORKLIGHTS SWITCH (143)".

If it is desired to change the setting of the maintenance interval, please consult your Komatsu distributor.

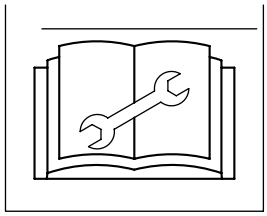

9JH02347

CAUTION ITEMS

⚠ CAUTION

If the warning monitor lights up red, stop operations as soon as possible and carry out inspection and maintenance at the applicable location. If the warning is ignored, it may lead to failure.

These are items that should be observed while the engine is running. If any abnormality occurs, the screen displays the item that needs immediate action.

If there is an abnormality, the monitor for the abnormal location lights up red.

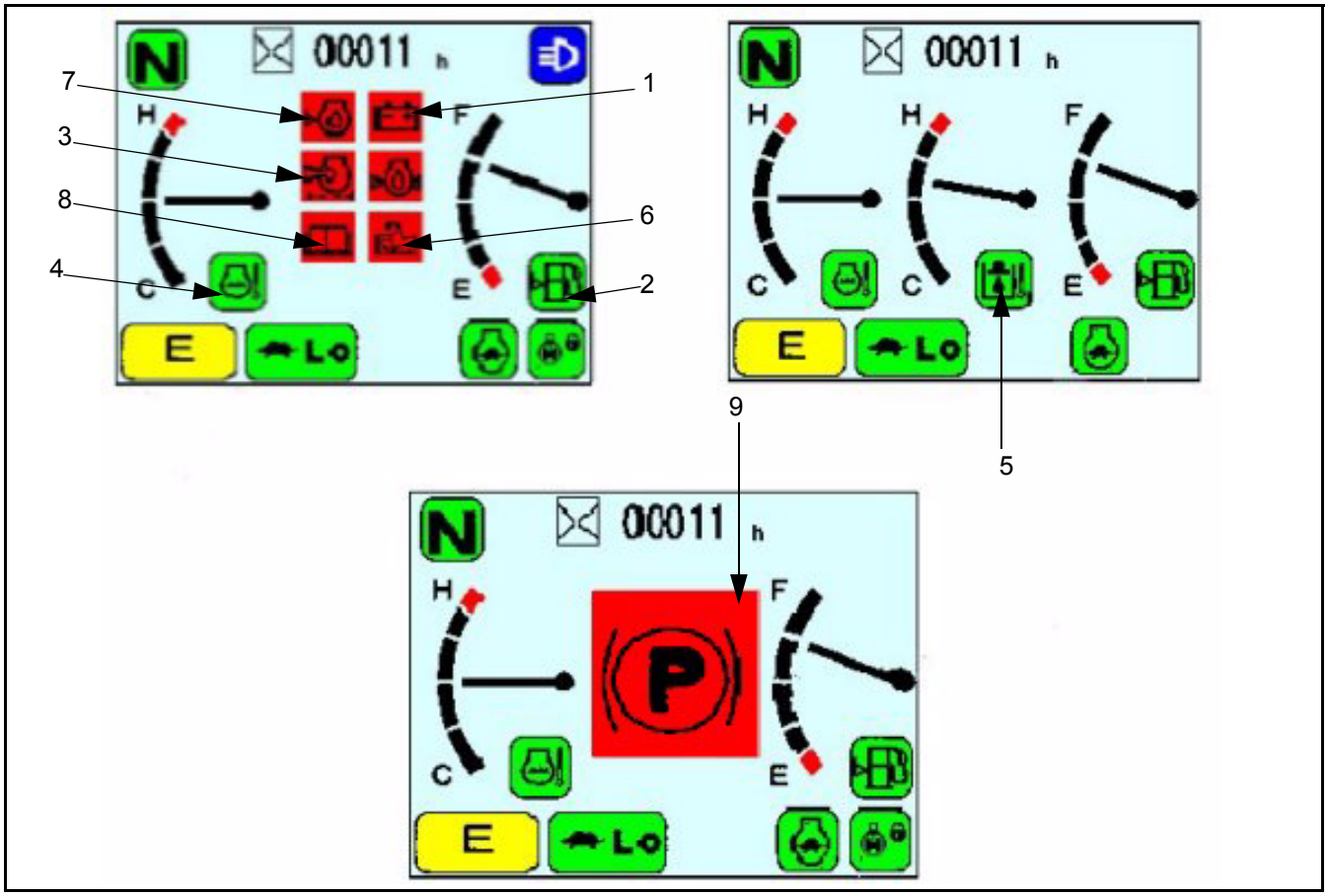

(1) Charge level monitor	(6) Overload Caution Monitor
(2) Fuel level monitor	(7) Engine oil level low
(3) Air cleaner clogging monitor	(8) Service machine-over due
(4) Engine water temperature monitor	(9) Park brake
(5) Hydraulic oil temperature monitor	

1. CHARGE MONITOR

This monitor (1) warns the operator that there is an abnormality in the charging system when the engine is running. If the battery is not being charged properly while the engine is running, it lights up red.

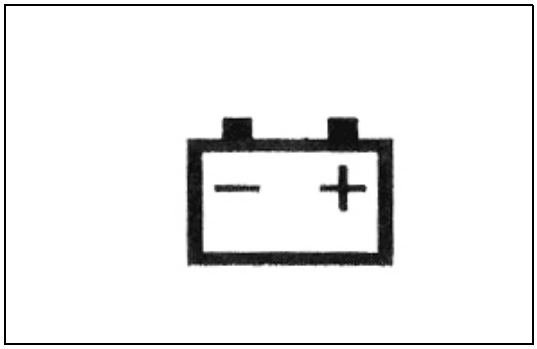

If it lights up red, check for looseness of the V-belt. If any abnormality is found, take the necessary action. For details, see "OTHER TROUBLE (252)".

REMARK

While the starting switch is ON, the lamp will remain lit and will go off once the engine is started.

REMARK

When the engine is started or stopped with the starting switch at the ON position, the lamp may light up and the buzzer may sound momentarily, but this does not indicate any abnormality.

2. FUEL LEVEL MONITOR

This monitor (2) lights up to warn the operator that the level in the fuel tank is low.

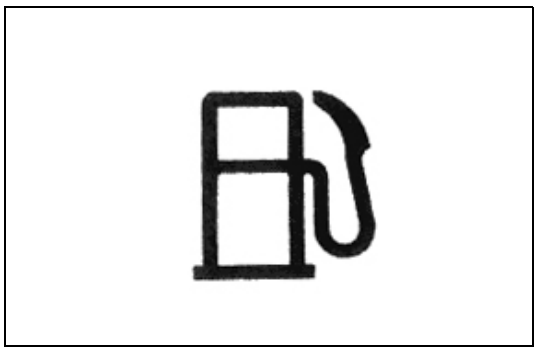

If the remaining amount of fuel goes down to 41 liters, the light changes from green to red, so add fuel as soon as possible.

3. AIR CLEANER CLOGGING MONITOR

This monitor (3) warns the operator that the air cleaner is clogged.

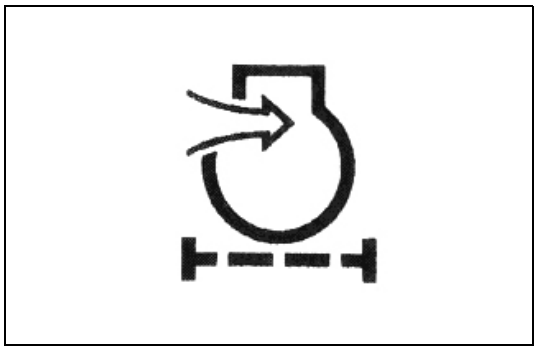

If it lights up red, stop the engine and inspect and clean the air cleaner.

4. ENGINE WATER TEMPERATURE MONITOR

If this monitor (4) lights up white in low temperatures, carry out the warming-up operation.

For details, see "WARMING UP OPERATION (204)".

Continue the warming-up operation until monitor (4) changes to green.

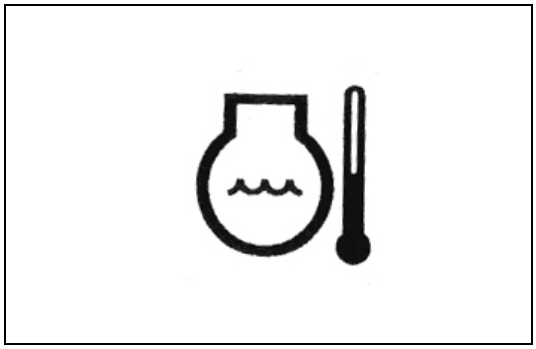

5. HYDRAULIC OIL TEMPERATURE MONITOR

If this monitor (5) lights up white in low temperatures, carry out the warming-up operation.

For details, see "WARMING UP OPERATION (204)".

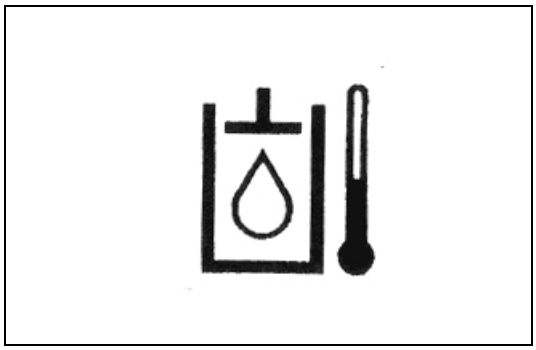

6. OVERLOAD CAUTION (When lifting)

This monitor warns that the machine is close to tipping due to the load (an audible warning is also given), if the warning is given lower the load.Refer the lifting capacity chart for safe load.

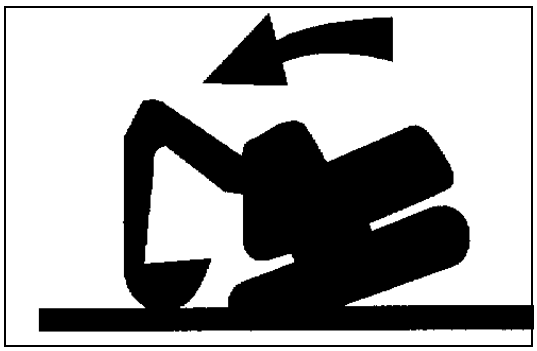

7. ENGINE OIL LEVEL LOW

When monitor (7) lights up, the engine oil level is insufficient. Stop machine immediately and refill to recommended levels

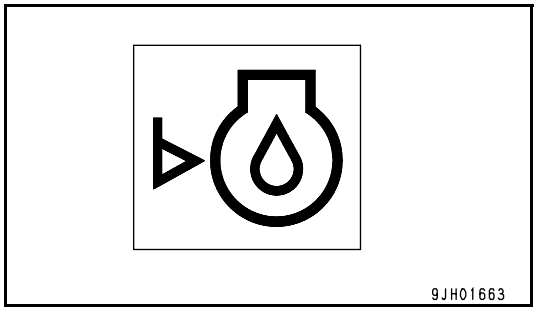

8. SERVICE MACHINE - OVERDUE

This monitor (8) lights red when the machine service is overdue. The machine should be serviced immediately or damage may occur.

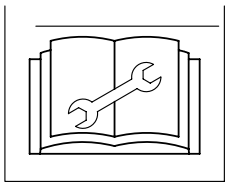

9. PARK BRAKE

When park brake is applied, this lamp will illuminate.

EMERGENCY STOP ITEMS

⚠ CAUTION

If the monitor lights up red, stop the engine immediately or run it at low idle, then check the applicable location and carry out the necessary action.

These are items that should be observed while the engine is running. If there is an abnormality, the monitor for the abnormal location lights up red and the buzzer sounds, so carry out action immediately.

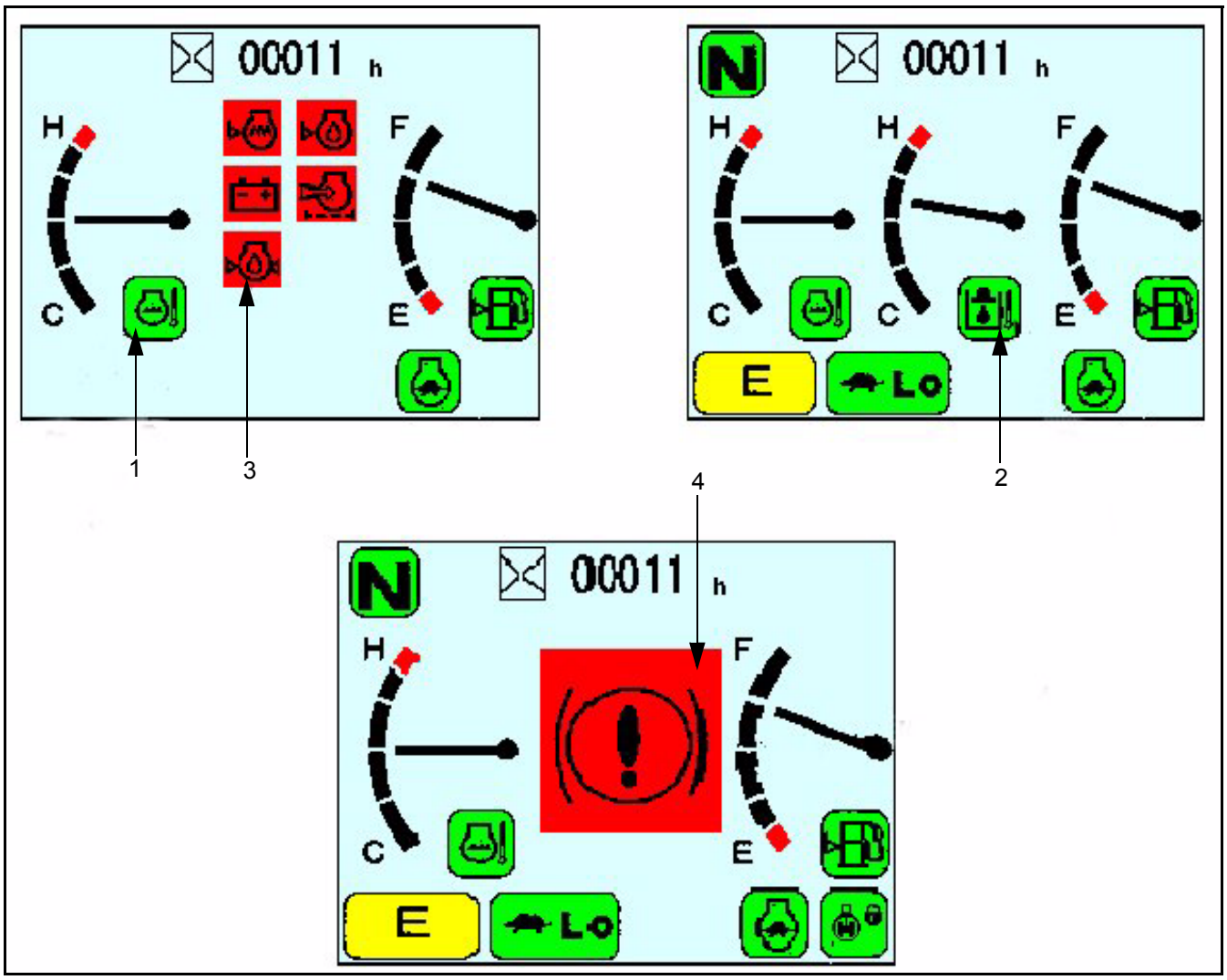

(1) Engine water temperature monitor	(3) Engine oil pressure monitor
(2) Hydraulic oil temperature monitor	(4) Low brake pressure

1. ENGINE WATER TEMPERATURE MONITOR

This monitor (1) warns the operator that the engine water temperature has risen.

If the engine water temperature becomes abnormally high, the monitor lights up red, the overheat prevention system is automatically actuated, and the engine speed goes down.

Stop operations and run the engine at low idle until monitor (1) changes to green.

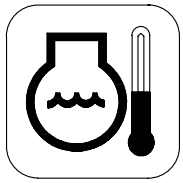

2. HYDRAULIC OIL TEMPERATURE MONITOR

This monitor (2) warns the operator that the hydraulic oil temperature has risen. If it lights up red during operations, run the engine at low idle or stop the engine and wait until the oil temperature goes down and the monitor changes to green.

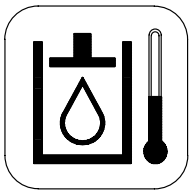

3. ENGINE OIL PRESSURE MONITOR

This monitor (3) lights up red if the engine lubrication oil pressure goes below the normal level. If it lights up red, stop the engine, and check the lubrication system and the level of oil in the oil pan.

REMARK

When the starting switch is ON, this lamp remains lighted up, and after the engine starts, it goes out. When the engine starts, the buzzer sounds momentarily, but this is not an abnormality.

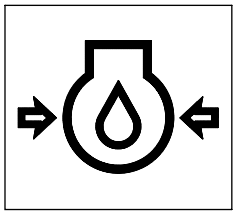

4. LOW BRAKE PRESSURE

When brake system hydraulic pressure is abnormal, this lamp will illuminate.

⚠ CAUTION

Do not drive machine with low brake pressure warning lamp illuminated.

REMARK

The color when the monitor lights up for the basic check items, caution items, and emergency stop items is as follows.

Type of monitor	Color when monitor lights up		
	When normal	When abnormal	At low temperature
Radiator water level monitor	OFF	Red	–
Engine oil level monitor	OFF	Red	–
Maintenance interval monitor	OFF	Red	–
Charge monitor	OFF	Red	–
Fuel level monitor	Green	Red	–
Air cleaner clogging monitor	OFF	Red	–
Engine water temperature monitor	Green	Red	White
Hydraulic oil temperature monitor	Green	Red	White
Engine oil pressure monitor	OFF	Red	–
Overload caution monitor	OFF	Red	–
Low brake pressure	OFF	Red	-

METER DISPLAY PORTION

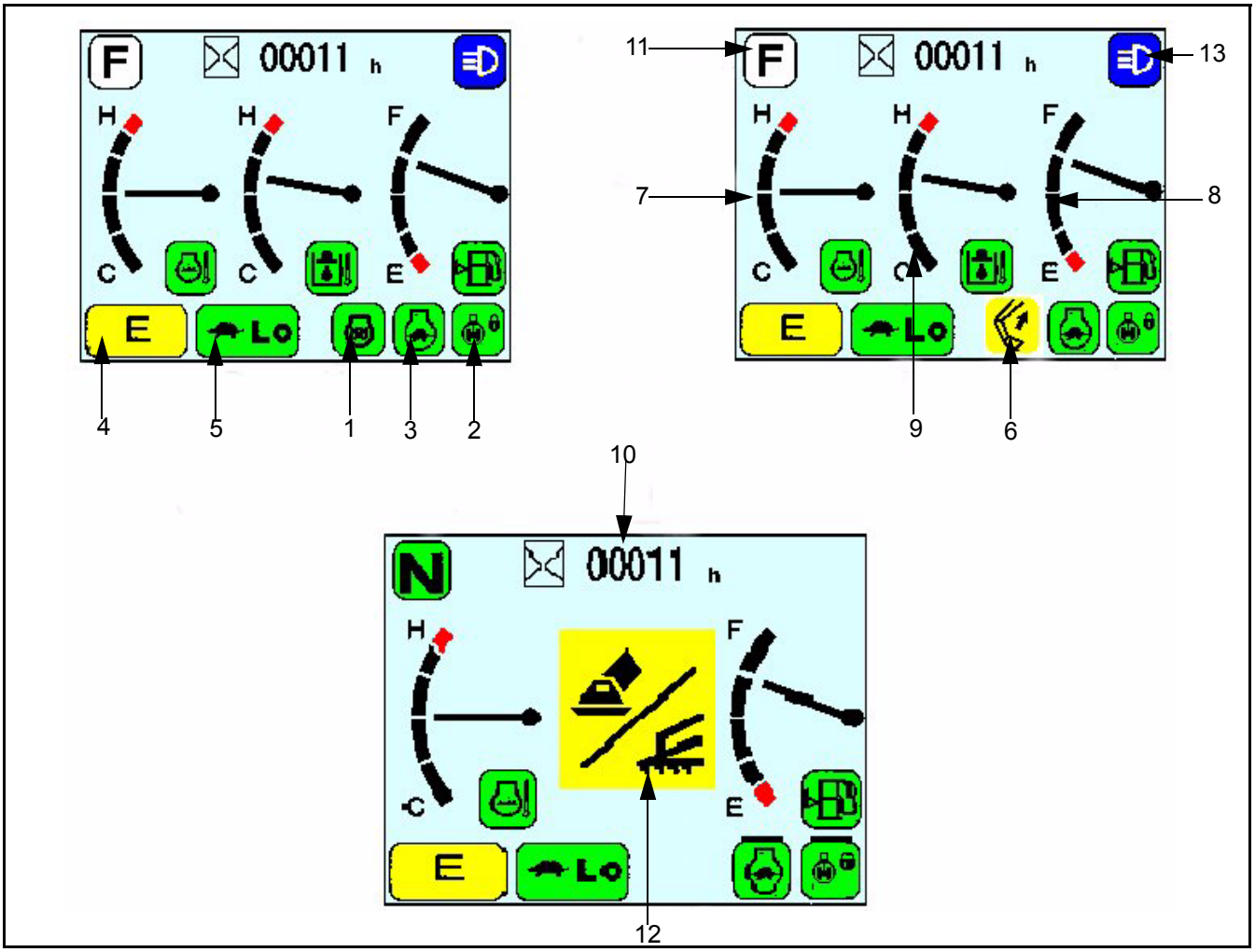

(1) Engine Pre-heating Monitor	(8) Fuel Gauge
(2) Swing Lock Monitor	(9)Hydraulic oil temperature gauge
(3) Auto-deceleration monitor	(10) Service Meter and clock
(4) Working mode monitor	(11) Travel direction monitor
(5) Travel mode monitor	(12) Undercarriage attachment monitor
(6) One touch power up monitor	(13) Main beam monitor
(7) Engine water temperature gauge	

PILOT DISPLAY

When the starting switch is ON, the pilot display lights up when the display items are functioning.

1. ENGINE PRE-HEATING MONITOR

This monitor lamp (1) indicates the pre-heating time required when starting the engine at an ambient temperature below 0°C.

The monitor lamp lights when the starting switch is turned to the HEAT position and flashes after about 30 seconds to show that the pre-heating is completed. (The monitor lamp will go off after about 10 seconds.)

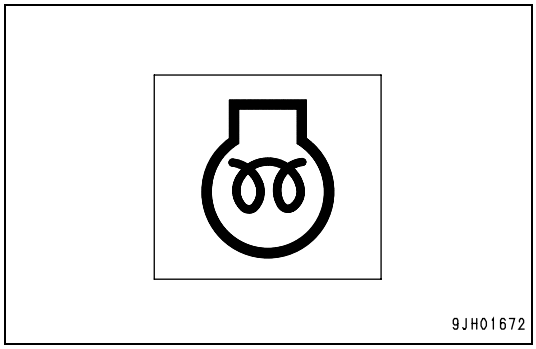

2. SWING LOCK MONITOR

This monitor (2) informs the operator that the swing lock is being actuated.

Actuated: Lights up

When the swing lock switch is turned ON (ACTUATED), the monitor lamp lights up.
This monitor flashes when the swing holding brake cancel switch is turned on.

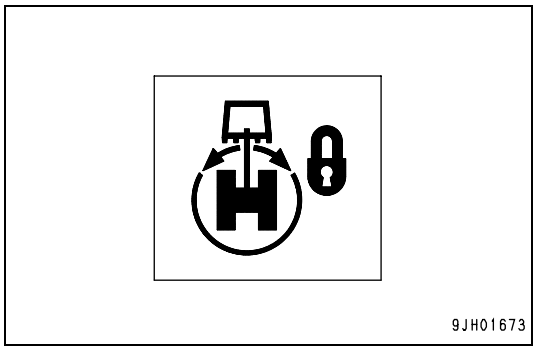

REMARK

The swing motor is equipped with a disc brake that mechanically stops the rotation. When the swing lock monitor lamp is lit up, the brake remains applied.

3. AUTO-DECELERATION MONITOR

This monitor (3) shows if the auto-deceleration function has been actuated.

The monitor display when the auto-deceleration switch is operated is as follows.

Auto-deceleration monitor ON: Auto-deceleration actuated.

Auto-deceleration monitor OFF: Auto-deceleration canceled.

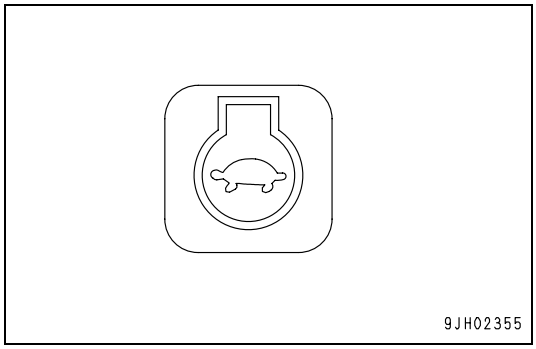

4. WORKING MODE MONITOR

This monitor (4) displays the set working mode.

The monitor display when the working mode switch is operated is as follows.

A	A mode (for heavy-load operations)
E	E mode (for operations with emphasis on fuel economy)
L	L mode (for fine-control operations)
B	B mode (for breaker operations)

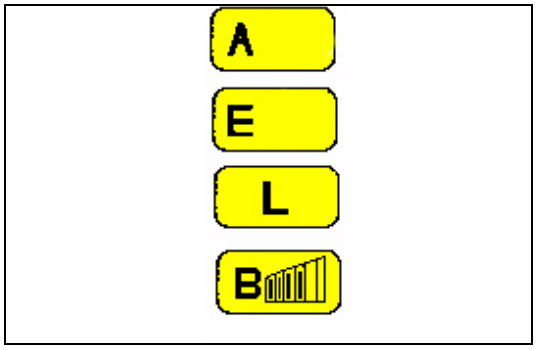

5. TRAVEL MODE MONITOR

This monitor (5) displays the set mode for the travel speed.

When one of the travel mode selector switches is operated the monitor displays one of the following selections.

CR	Creep mode
Lo	Low mode
HI	High mode
AT	Automatic mode

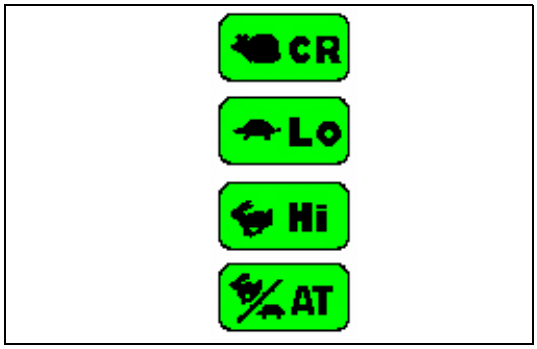

6. POWER MAX MONITOR

This monitor (6) shows if the power max function has been actuated.

The monitor display (when the knob switch on the left control lever is operated) is as follows.

Monitor lights up: Digging power is increased for 8.5 seconds.

REMARK

The digging power is increased while the knob switch is being pressed only for working modes A and E. Note that this operation should be used to overcome heavy operating conditions and not for continuos use.

Monitor goes out: Power max function stopped

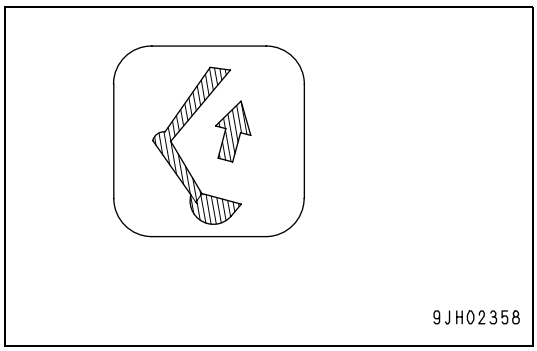

METERS

7. ENGINE WATER TEMPERATURE GAUGE

This meter (7) indicates the engine cooling water temperature.

During normal operations, the indicator should be in the black range. If the indicator enters the red range during operations, the overheat prevention system is actuated.

The overheat prevention system acts as follows.

Red range position (A): Engine water temperature monitor (1) turns red.

Red range position (B): Engine speed is reduced to low idle, engine water temperature monitor lamp (C) turns red, and the alarm buzzer sounds at the same time.

The overheat prevention system remains actuated until the indicator returns to the black range.

When the engine is started, if the indicator is at position (C), engine water temperature monitor (1) lights up white.

In this case, carry out the warming-up operation. For details, see "WARMING UP OPERATION (204)".

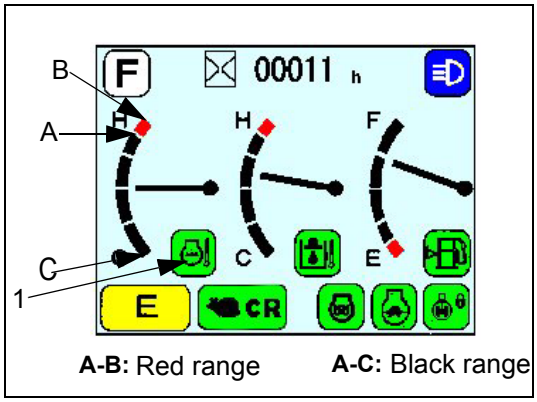

8. FUEL GAUGE

This meter (8) displays the level of fuel in the fuel tank.

During operations, the indicator should be in the black range.

If the indicator enters red range (A) during operations, there are less than 100 liters of fuel remaining in the tank, so check and add fuel.

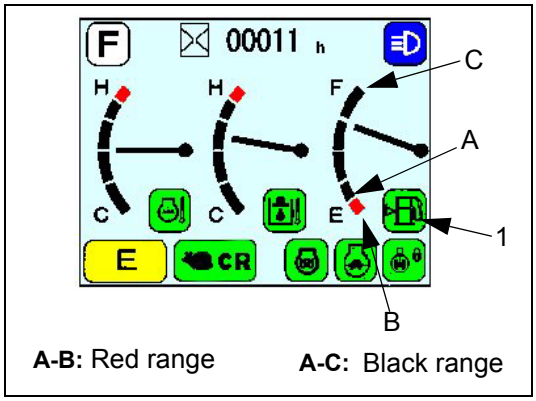

REMARK

If the indicator enters red range (B), there are less than 41 liters of fuel remaining.

When the indicator is in the red range (A) to (B), fuel level monitor (1) lights up red. When indicator is between A and C the fuel level monitor (1) remains green.

The correct fuel level may not be displayed for a short time when the starting switch is turned ON, but this is not an abnormality.

9. HYDRAULIC OIL TEMPERATURE GAUGE

This meter (9) displays the hydraulic oil temperature.

During operations, the indicator should be in the black range.

If the indicator enters red range (A) during operations, the hydraulic oil temperature has gone above 102°C. Stop the engine or run it at low idle and wait for the hydraulic oil temperature to go down.

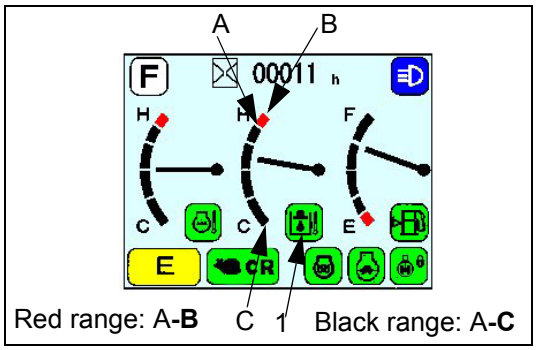

REMARK

When the indicator is in the red range (A) to (B), the hydraulic oil temperature is as follows.

Red range position (A): More than 102°C.

Red range position (B): More than 105°C.

When the indicator is in the red range (A) to (B), hydraulic oil temperature monitor (1) lights up red. When indicator is between A and C the fuel monitor (1) remains green.

If the indicator is at position (C) when the engine is started, the hydraulic oil temperature is more than 25°C, and hydraulic oil temperature monitor (1) lights up white. In this case, carry out the warming-up operation.

For details, see "WARMING UP OPERATION (204)".

NOTE: If other warnings are displayed, only monitor (1) is displayed and not the range indicator.

10. SERVICE METER AND CLOCK

This monitor (10) displays the total time that the machine has been operated. When the engine is running this display changes to a clock.

Use the time display to set the maintenance interval. When the starting switch is ON, the service meter advances even if the machine is not moving.

The service meter advances by 1 for every hour of operation, regardless of the engine speed.

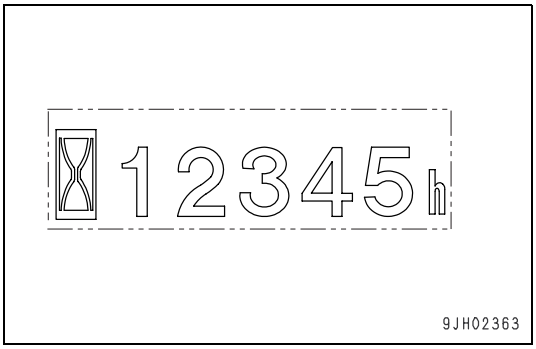

11. TRAVEL DIRECTION SELECTION

This monitor (11) displays the set travel direction.

When one of the travel direction switches is selected the monitor displays one of the following selections.

F	Forward mode
N	Neutral mode
R	Reverse mode

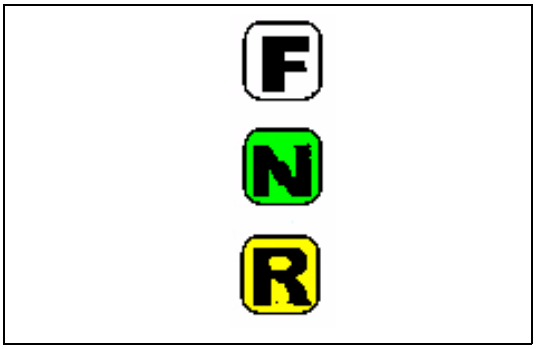

12. UNDERCARRIAGE ATTACHMENT MONITOR

When undercarriage attachment is selected from right control lever switch (3) monitor (12) will be displayed. this Sybil will remain until undercarriage attachment has been de-select.

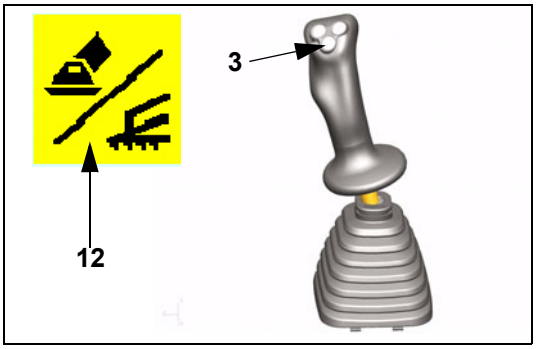

13. HIGH BEAM MONITOR

This lamp (13) will illuminate when the main beam is switched on.

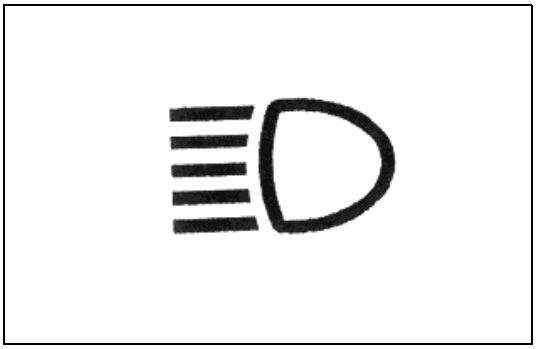

MONITOR SWITCHES

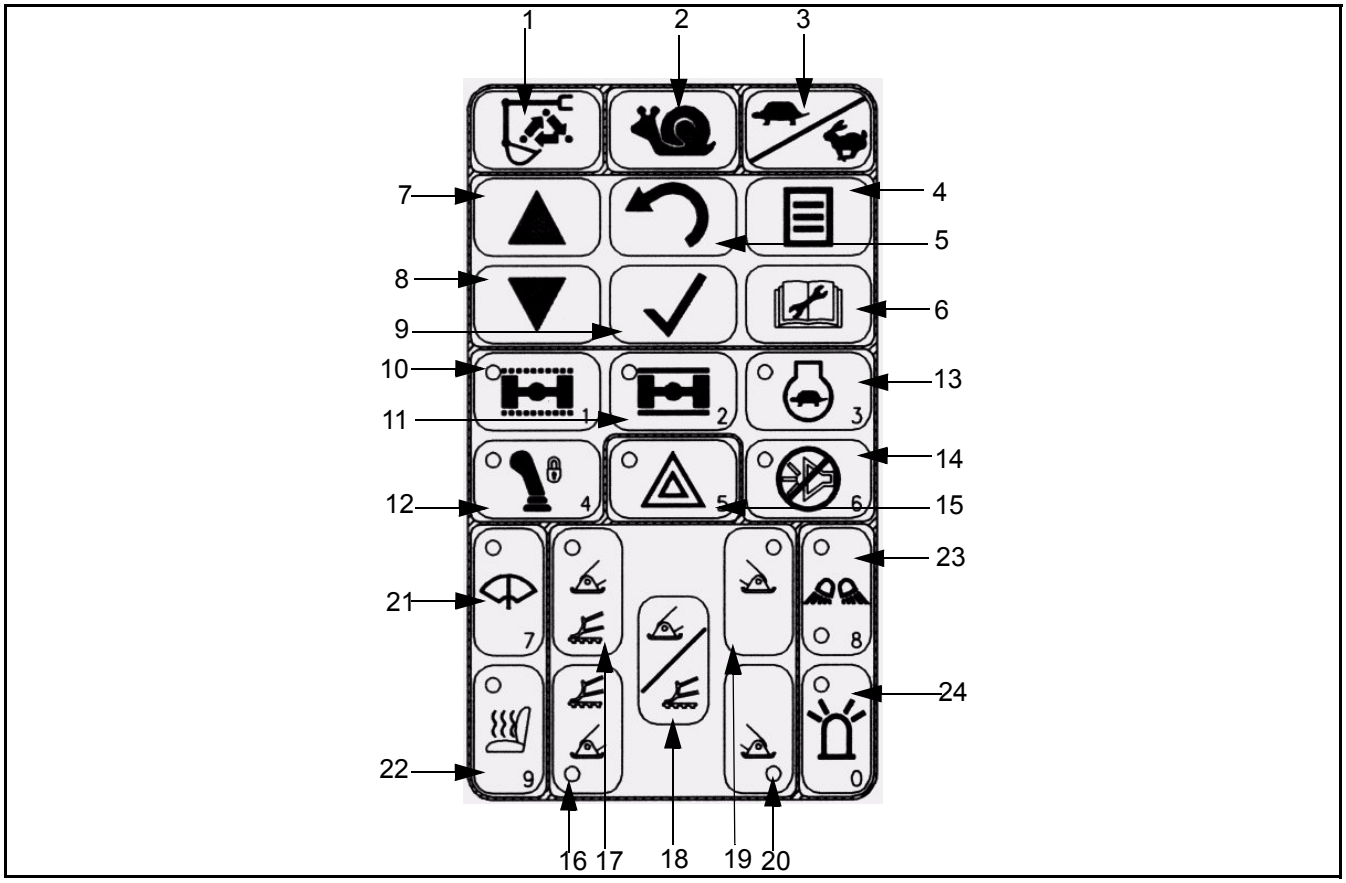

(1) Working mode select	(13) Engine auto deceleration
(2) Creep speed	(14) Buzzer cancel
(3) High/low speed select	(15) Hazard warning
(4) Menu select key	(16) Rear left outrigger/blade
(5) Undo key	(17) Front left outrigger/blade
(6) Service menu	(18) Select all chassis attachment
(7) Scroll up	(19) Front right outrigger
(8) Scroll down	(20) Rear right outrigger
(9) Accept key	(21) Lower wiper
(10) Suspension auto lock	(22) Heated seat
(11) Suspension lock	(23) Front and rear worklights
(12) Control lever lock	(24) Beacon warning light

1. WORKING MODE SELECTOR SWITCH (BASIC SWITCH)

This switch (1) is used to set the power and movement of the work equipment.

Operations can be carried out more easily by selecting the mode to match the type of operation.

A mode: For heavy-load operations

E mode: For operations with emphasis on fuel economy

L mode: For fine-control operations

B mode: For breaker operations

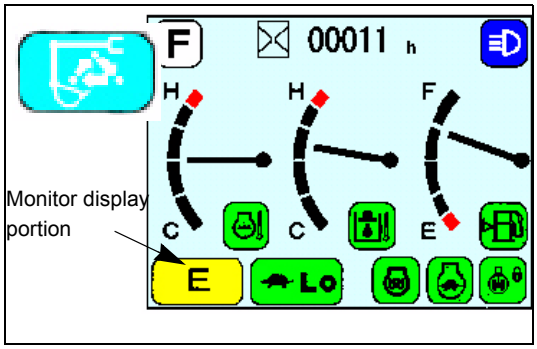

- When the engine is started, the working mode is set automatically to A mode. When the switch is pressed, the system will scroll through each mode in turn. The display on the monitor display portion changes for each mode.
- If you require a default setting other than 'A mode' please consult your Komatsu distributor or dealership to have the setting amended.

REMARK

When the mode selector switch is pressed, the mode is displayed in the center of the monitor display, and the screen returns to the normal screen after 2 seconds. (The diagram on the right is an example of the display for the E mode.)

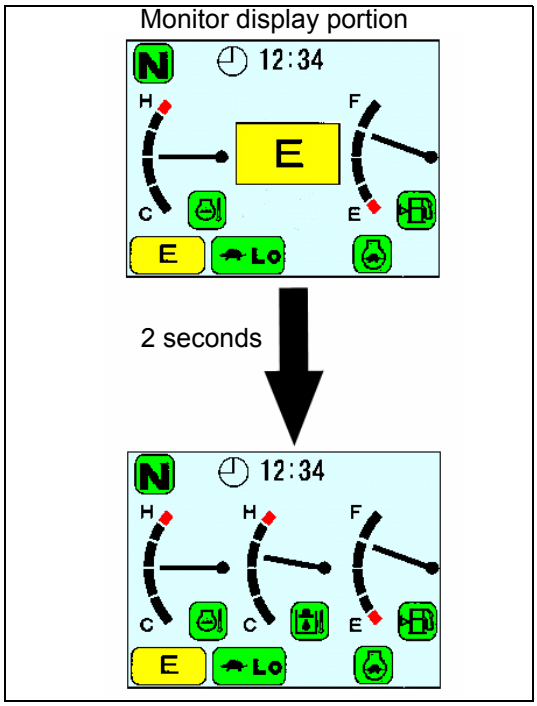

WARNING

When using the breaker, do not use A mode. There is danger that the breaker may be damaged.

2. CREEP SPEED SELECTOR SWITCH

This switch (2) is used to set the travel mode to creep.

CR lights up: Creep mode travel (0-1.5kph).

To cancel creep speed, press Hi/Lo switch.

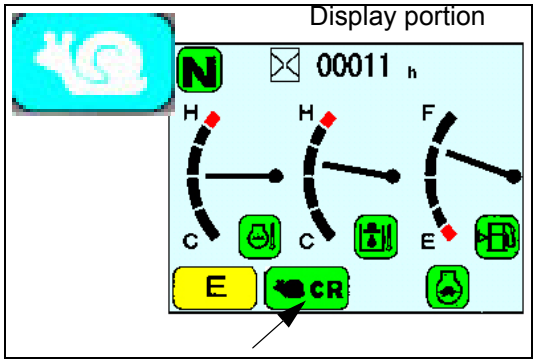

REMARK

When creep speed is selected the mode is displayed in the centre of the screen for 2 seconds before returning to the normal screen display.

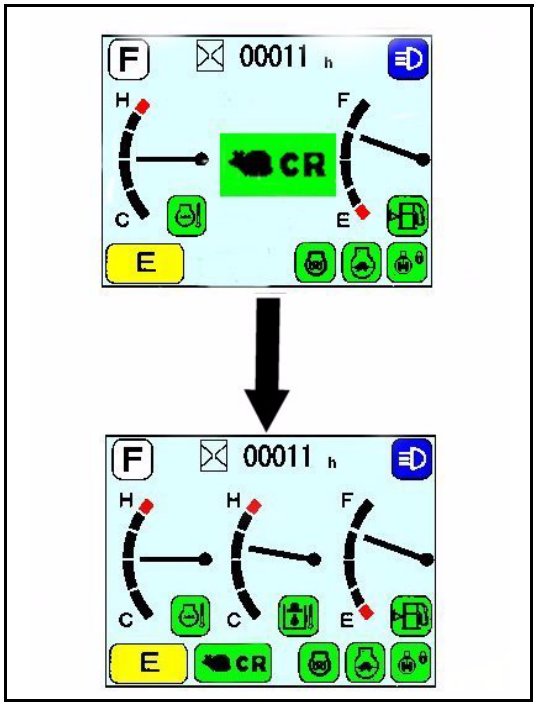

3. HIGH/LOW SPEED SELECTOR SWITCH

This switch (3) is used to set the travel speed to 3 stages.

Lo lights up:	Low-mode travel
Hi lights up:	Hi-mode travel
At lights up:	Auto mode travel

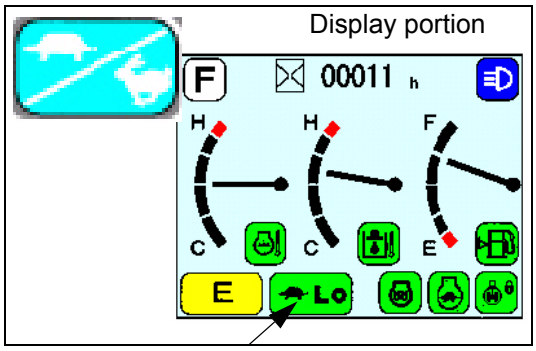

When the engine is started, the speed is automatically set to the last value before engine was stopped.

Each time that the switch is pressed, the display changes Lo→Hi→At→Lo in turn.

When travelling in auto mode (At), if more travel torque is needed, such as when traveling on soft ground or on slopes, the speed automatically switches to low speed (Lo), so there is no need to operate the switch.

- When loading or unloading from a trailer, always travel at low speed. Never operate the travel speed selector switch during the loading or unloading operation.

REMARK

Each time that the travel speed selector switch is operated, the mode is displayed in the center of the monitor display, and the screen returns to the normal screen after 2 seconds.

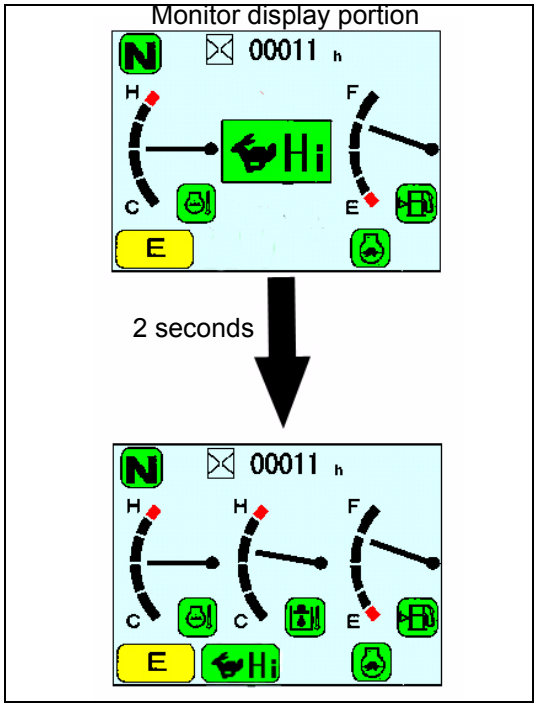

4. MENU SELECT SWITCH

This switch (4) is used to select the hydraulic flow setting in each of the working modes A, E, and B.

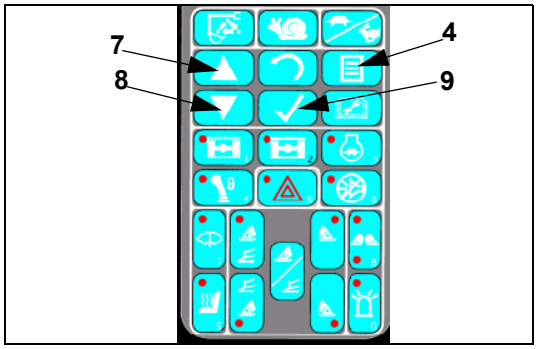

- When the working mode is A or E

1. Press select switch (4) and the normal screen on the monitor display changes to the flow setting screen shown in the diagram on the right.

Press up switch (7) or down switch (8) to adjust to the desired flow. Each segments value is shown below.

2. After completing the flow setting, press input confirmation switch (9).
   The monitor display will return to the normal screen.

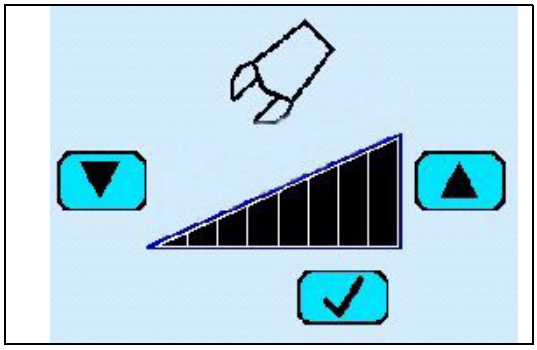

REMARK

The flow can be adjusted for the attachment installed.

- When the working mode is B mode

1. Press select switch (9) and the normal screen on the monitor display changes to the flow setting screen shown in the diagram on the right.
2. Press up switch (7) or down switch (8) to adjust to the desired flow.
3. After completing the flow setting, press input confirmation switch (9).

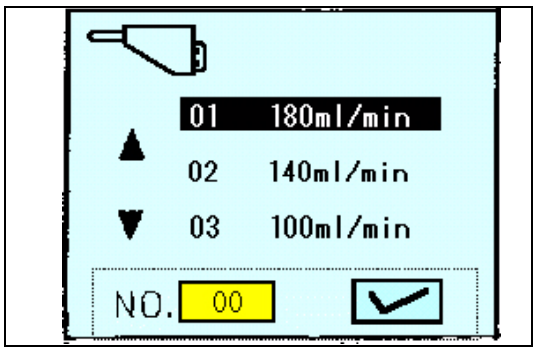

4. With the operation in Step (3), the flow setting screen changes to the fine flow adjustment screen shown in the diagram on the right.
5. Press up switch (7) or down switch (8) to adjust to the desired flow.
6. After completing the flow setting, press input confirmation switch (9).
   The monitor display will return to the normal screen.

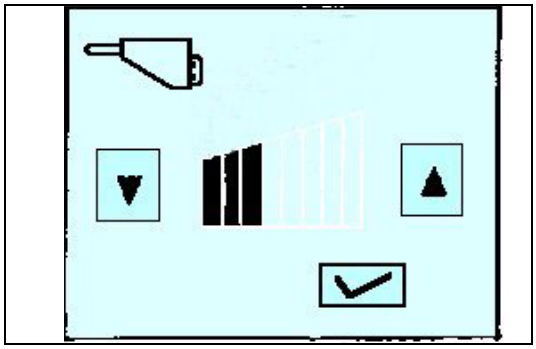

5. UNDO SWITCH

Pressing switch (5) whilst in the monitor menu screens, will return you back to the previous screen displayed.

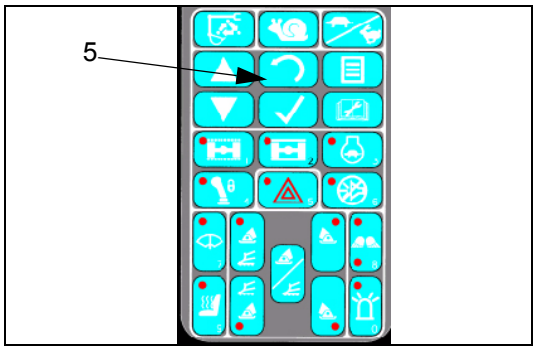

6. SERVICE MENU SWITCH

- This switch (6) is used to check the time remaining to maintenance.

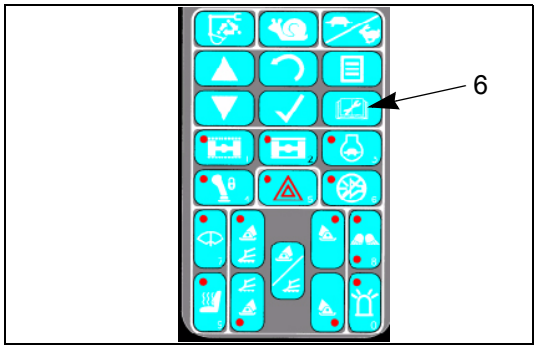

- When this switch (6) is pressed, the screen on the monitor display changes to the maintenance screen shown in the diagram on the right.

  The time remaining to maintenance is indicated by the color of each monitor display. After confirming the maintenance time, carry out the maintenance.

  White display:More than 30 hours remaining to maintenance

  Yellow display:Less than 30 hours remaining to maintenance

  Red display:Maintenance time has already passed

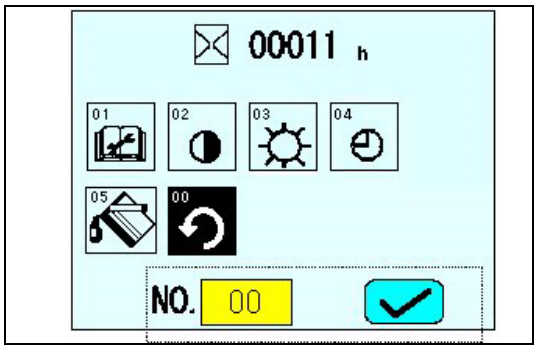

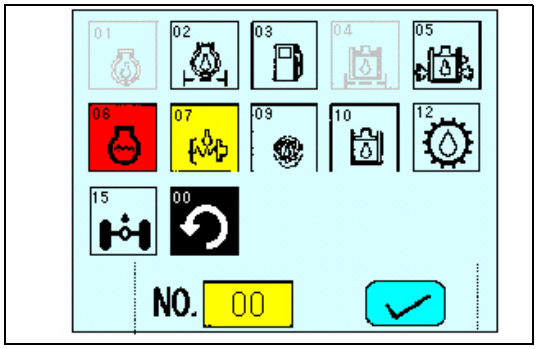

NOTICE

- **If the monitor display changes to the maintenance warning screen when the engine is started or when the machine is being operated, stop operations immediately. When this happens, the monitor corresponding to the maintenance warning screen will light up red.**
- **Press switch (17) to display the maintenance screen and check that there is no abnormality in any other monitor.**
- **If another monitor is lit up red on the maintenance screen, carry out maintenance for that item also.**

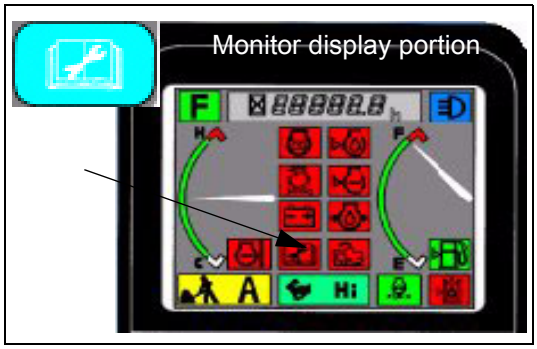

- The maintenance display items are as follows.

Monitor No.	Maintenance item	Default set screen (H)
01	Change engine oil	500
02	Replace engine oil filter	500
03	Replace fuel filter	500
04	Replace hydraulic oil filter	1000
05	Replace hydraulic tank breather	500
07	Check damper case oil level, add oil	1000
09	Change swing machinery case oil	1000
10	Change hydraulic oil	5000
12	Transmission	1000
15	Axles	1000

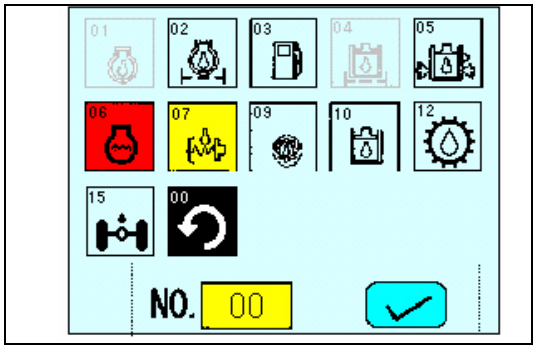

If it is desired to change the setting for the maintenance interval, please contact your Komatsu distributor.

- The method of checking the time remaining to maintenance is as follows.

1. Look at the maintenance screen, press up switch (7) or down switch (8) on the monitor switch portion, until required item is highlighted.
   (The color of the monitor for the selected item is inverted to black.)

NOTE: It is possible to enter the number of the item from the key-pad (i.e. enter 12 for transmission oil)

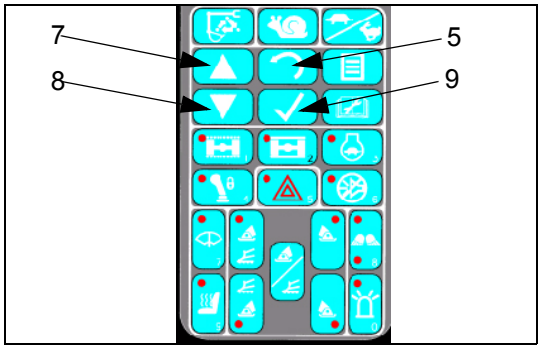

2. After highlighting the monitor item, press input confirmation switch (9). The display screen will switch to the time remaining to maintenance.
   (Press back switch (5) to return to the previous screen.)

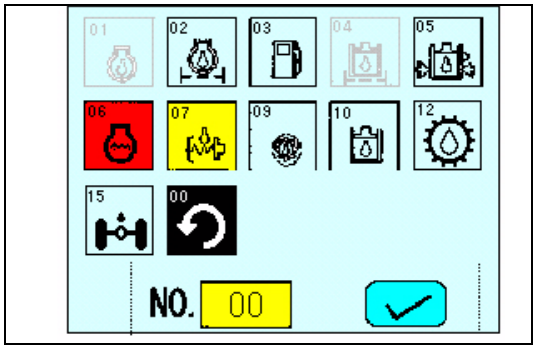

3. Check the time remaining to maintenance.

   (a): Time remaining to maintenance

   (b): Default setting for maintenance interval

   When only checking the time remaining to maintenance, press back switch (5) twice.

   The screen will return to the normal operation monitor screen.

   When canceling the time remaining to maintenance and returning to the default time setting, press input confirmation switch (9). The screen will switch to the default setting screen.

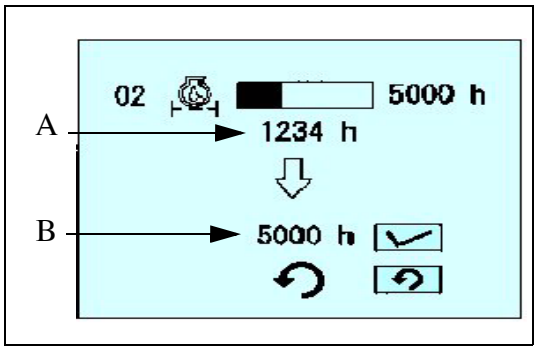

4. After checking the time on the default setting screen, press input confirmation switch (9).
   The screen will return to the maintenance screen.
   (Press back switch (5) to return to the previous screen.)

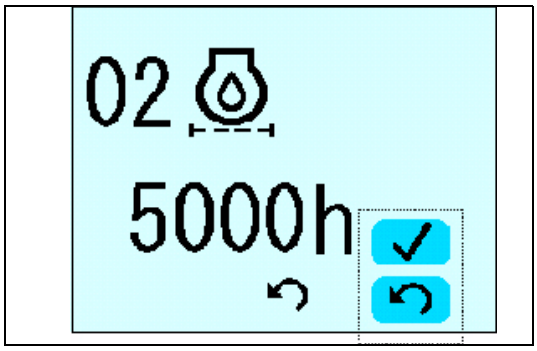

7. SCROLL UP
8. SCROLL DOWN

Press up switch (7) or down switch (8) when in the menu screens will allow you to move up and down the menu options.

In certain menus they can also be used to increase and decrease displayed values (i.e. breaker force)

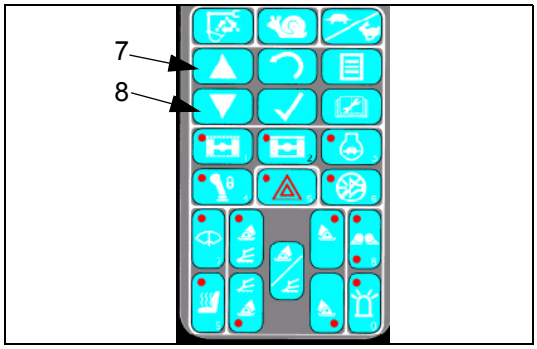

9. INPUT CONFIRMATION SWITCH

Press this switch (9) to confirm the selected mode when in the maintenance mode, brightness/contrast adjustment mode, or select mode.

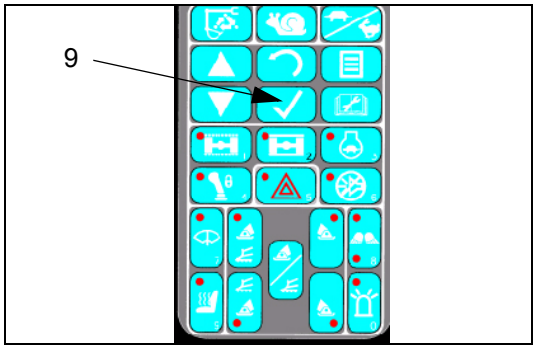

10. AUTOMATIC SUSPENSION LOCK SWITCH

Release the front axle suspension lock, using switch.

Press switch (10) for Front axle suspension ‘auto’ mode i.e. when travel pedal is depressed, front axle suspension travels freely and when travel pedal is not depressed, front axle suspension is locked, as long as machine is stationary. To disengage press (10) again.

The lamp within the switch will illuminate when automatic suspension lock is selected.

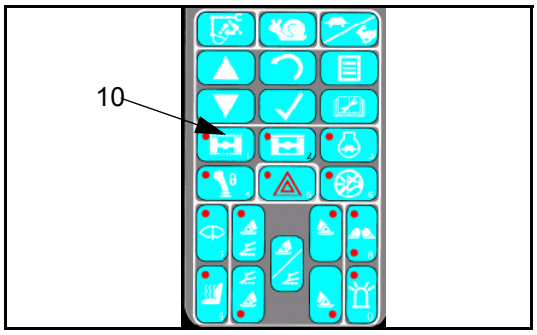

⚠ WARNING

Take care when using undercarriage attachments to stabilize the machine, and suspension lock simultaneously, as locked front axle may suddenly become free.

NOTE: Permanent and automatic suspension lock cannot be active at the same time. Each mode can be turned on and off by their individual switches.

In the case that auto mode is on and permanent switch is pressed, auto mode will cancel to allow permanent activation and vice versa.

11. PERMANENT SUSPENSION LOCK SWITCH

Press switch (11) in order to engage permanent front axle lock. Front axle will be fixed in place when engaged, red light will illuminate. To disengage lock, press switch (11) again.

NOTE: When front axle is locked it is not possible to travel in high. If high speed travel is selected, axle will not lock.

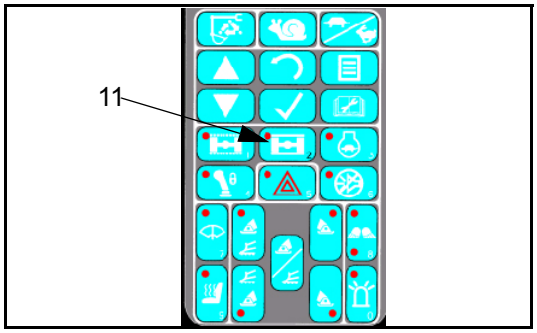

12. CONTROL LEVER LOCK SWITCH

Depressing control lever lock switch will stop lever functionality. Lever lock switch must be engaged when machine travels on highway to prevent accidental use of work equipment.

Light on switch will illuminate when active.

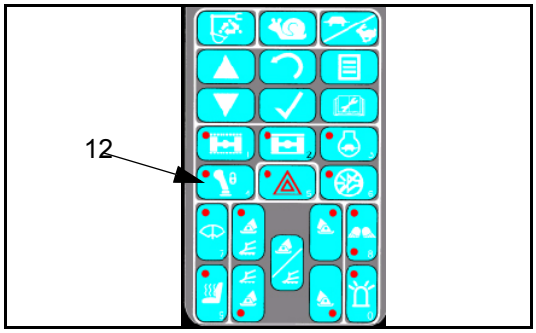

13. AUTO-DECELERATION SWITCH

When this auto-deceleration switch (13) is depressed, the auto-deceleration is actuated, if the control levers and foot pedals are in the neutral position, the engine speed is automatically lowered to reduce fuel consumption.

Monitor display ON: Auto-deceleration actuated.

Monitor display OFF: Auto-deceleration canceled.

When activated, the switch lamp is also illuminated.

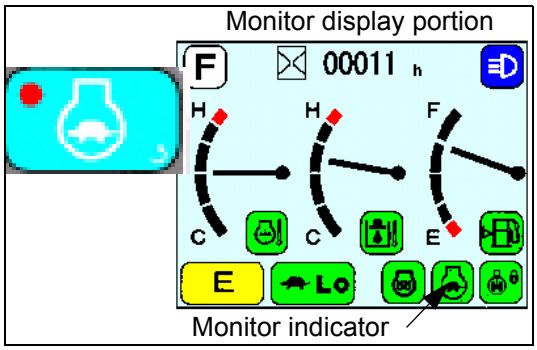

REMARK

When the auto-deceleration switch is pressed and the auto-deceleration is actuated, the mode is displayed in the center of the monitor display, and the screen returns to the normal screen after 2 seconds.

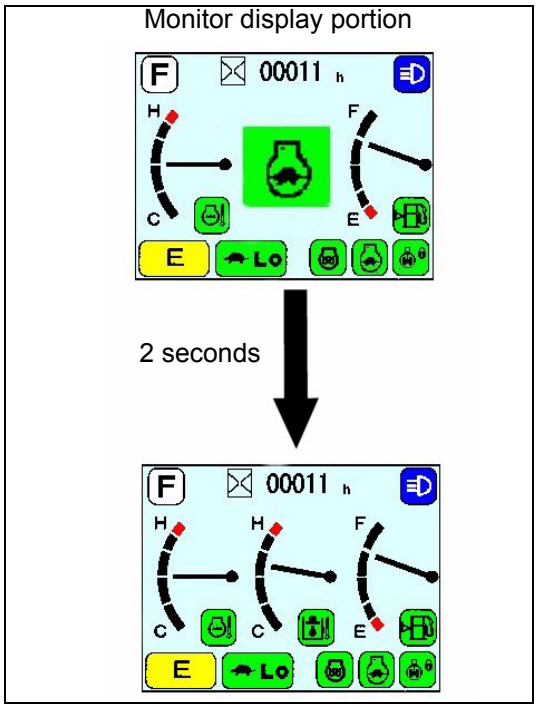

14. BUZZER CANCEL SWITCH

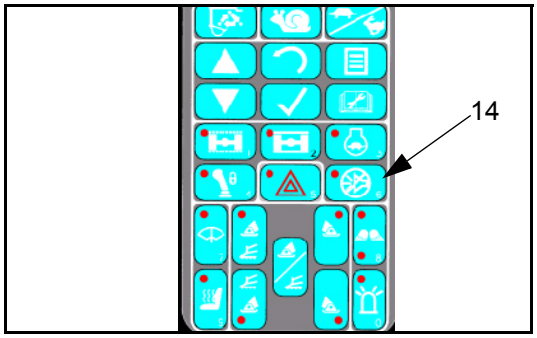

This is used to stop the alarm buzzer when it has sounded to warn of some abnormality that has occurred whilst the machine is operating.

NOTE: The lamp on the switch will illuminate when the warning buzzer is sounding.

15. HAZARD WARNING SWITCH

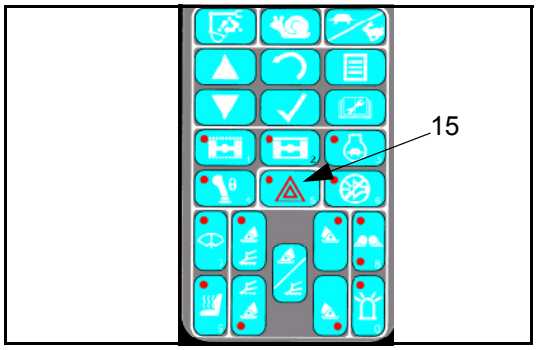

This switch is used to switch on the hazard warning lights.

OFF: Hazard warning lights off.

ON: Hazard warning lights on.

(Warning light within switch will flash when switched on).

Keep pressing the switch for 2 seconds, when starter switch is off.

16. REAR LEFT OUTRIGGER/BLADE SWITCH

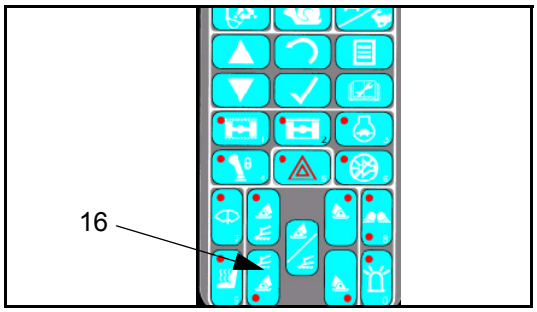

This switch enables selection of rear left outrigger or rear blade Light illuminates when active.

17. FRONT LEFT OUTRIGGER/BLADE SWITCH

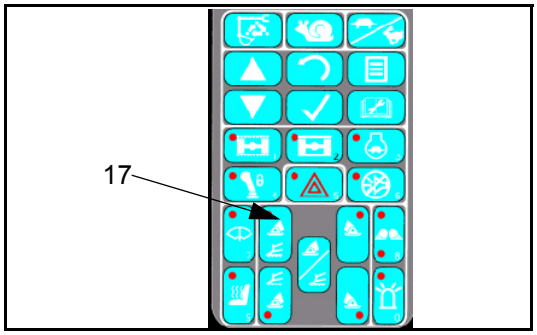

This switch enables selection of front left outrigger / front blade. Light illuminates when active.

18. SELECT ALL CHASSIS ATTACHMENT SWITCH

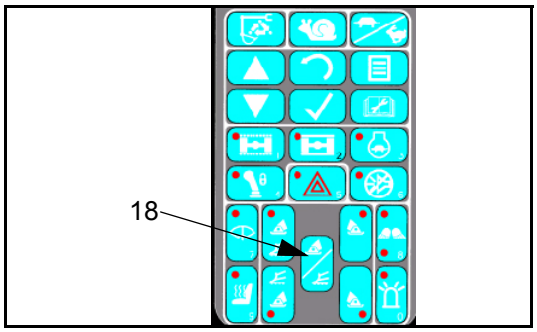

This switch enables selection of all outriggers and/or dozer blade simultaneously.

Lights on switches 16,17,19 and 20 will illuminate to show selection.

A second press will deactivate any currently active blade/outrigger combination.

19. FRONT RIGHT OUTRIGGER SWITCH

Allows operation of front right outrigger only.

Light on switch illuminates when activated.

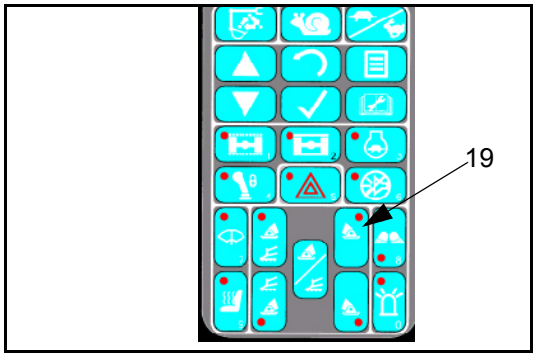

20. REAR RIGHT OUTRIGGER SWITCH

Allows operation of rear right outrigger.

Light on switch illuminates when activated.

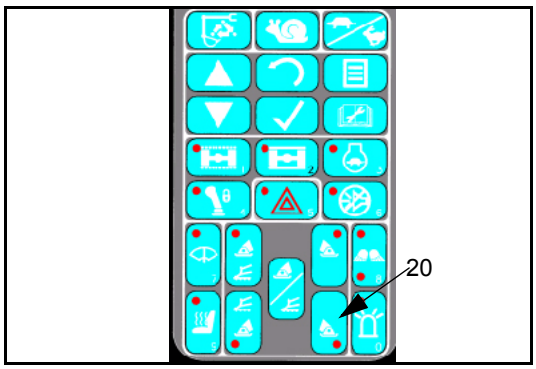

21. LOWER WIPER SWITCH

This switch (21) actuates the front lower wiper. The lamp on the switch will illuminate when wiper is activated.

OFF: wiper stops

ON: wiper moves continuously

NB. Do not operate with front lower screen removed.

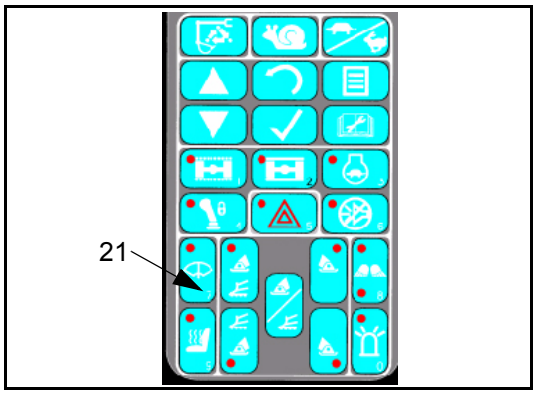

22. HEATED SEAT SWITCH

This switch is used to switch on the heated seat.

OFF: seat not heated

ON: seat heated

Light will illuminate when active.

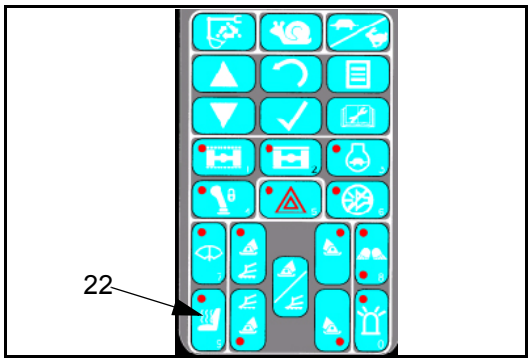

23. FRONT AND REAR WORKLIGHTS SWITCH

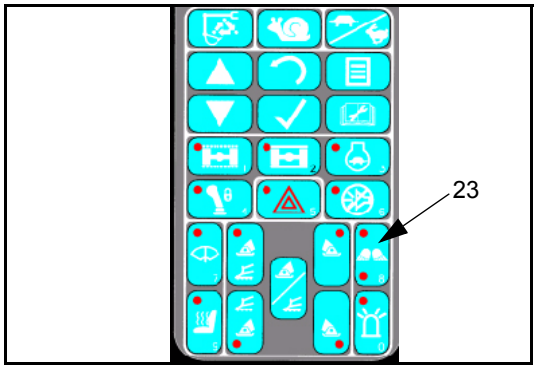

Switch operates the front and rear worklights of the machine. All optional extra lamp units will be included.

Machine at startup: Front lights off and rear lights off

1st button press: Front lights on and rear lights off

2nd button press: Front lights on and rear lights on

3rd button press: Front lights off and rear lights off

NOTE: The lights fitted for highway use (headlights, brake lights, etc.) are in no way effected by this switch.

24. BEACON WARNING LIGHT SWITCH

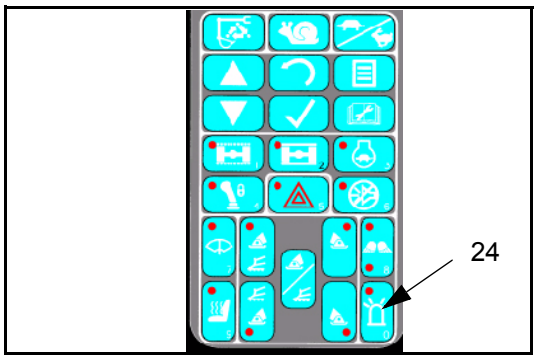

This switch is used to switch on the rotating beacon.

OFF: beacon light not illuminated.
ON: beacon light illuminates and rotates.

Light on switch illuminates when activated.

LIQUID CRYSTAL MONITOR ADJUSTMENT SWITCH

Press this switch (6) to adjust the brightness and contrast of the monitor display screen.

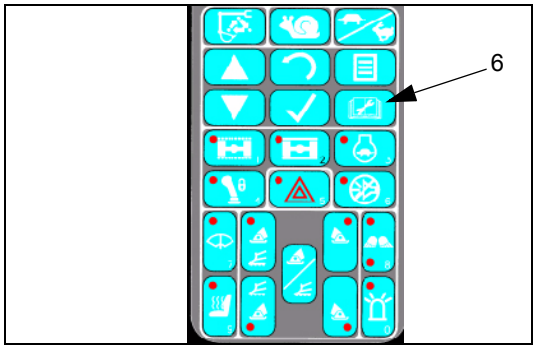

Adjustment screens

1. When monitor adjustment switch (6) is pressed, the monitor display screen changes to the screen shown in the diagram on the right.

(A)	Contrast adjust
(B)	Brightness adjust
(C)	Clock adjust
(D)	Background adjust

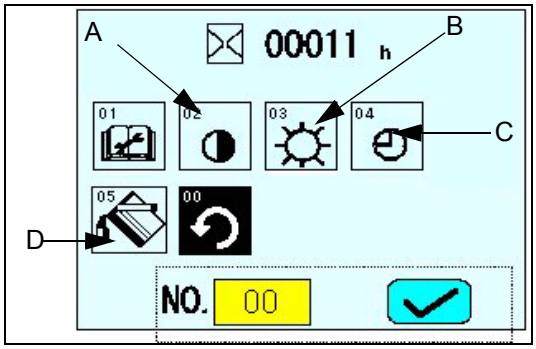

- (A).Adjusting contrast

2. Use the brightness/contrast screen and press up switch (7) or down switch (8) to select the contrast monitor.
(The selected monitor is inverted to black.)

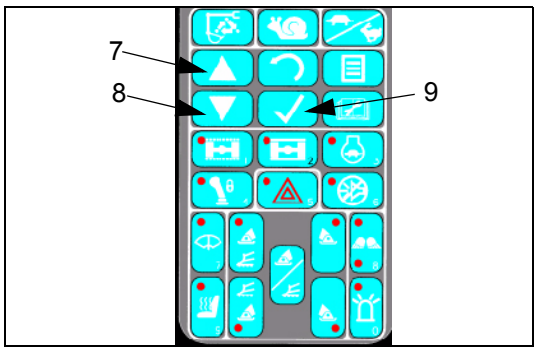

3. When the screen changes to the contrast adjustment screen, press up switch (7) or down switch (8) to adjust the contrast.

4. After completing adjustment of the contrast, press input confirmation switch (9). This will store the new setting and return you to the adjustment menu.

NOTE: As normal, within any menu, press switch (5) to return to the previous screen at any time.

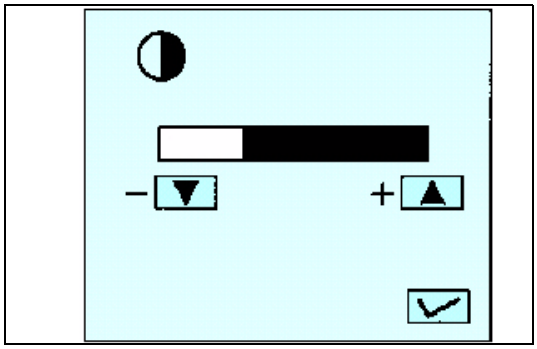

- (B). Adjusting brightness

1. Use the adjustment screen and press up switch (7) or down switch (8) to select the brightness monitor.
(The selected monitor is inverted to black.)

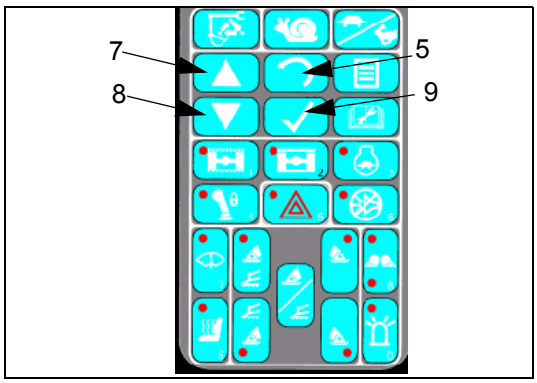

2. When the screen changes to the brightness adjustment screen, press up switch (7) or down switch (8) to adjust the brightness.

3. After completing adjustment of the brightness, press input confirmation switch (9). This will return you to the above menu and store the new setting.

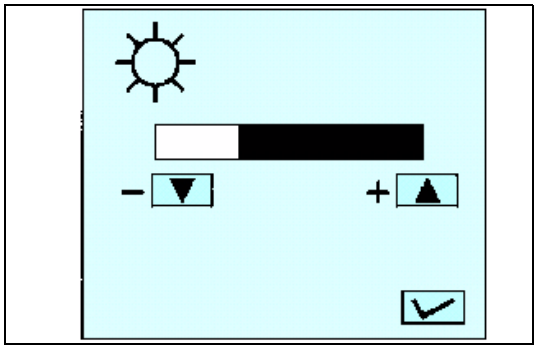

- (C). Adjusting the clock

1. Use the adjustment screen and press up switch (7) or down switch (8) to select the clock monitor.
   (The selected monitor is inverted to black.)
2. When the screen changes to the clock adjustment screen, press up switch (7) or down switch (8) to adjust the year, to move to the date press input confirmation switch (9), the order in which the cursor moves is shown below:

   Year → Month → Day → Hour → Minute

3. After completing adjustment of the clock, press input confirmation switch (9). This will return you to the above menu and store the new setting.

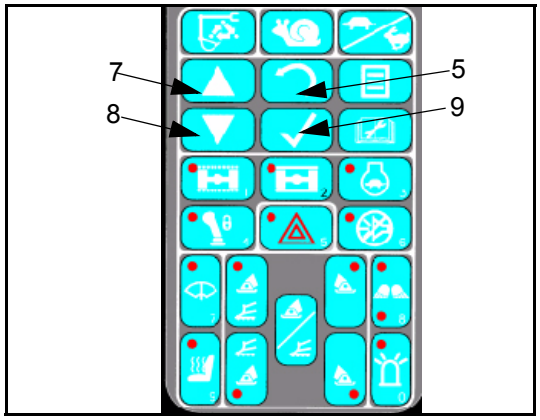

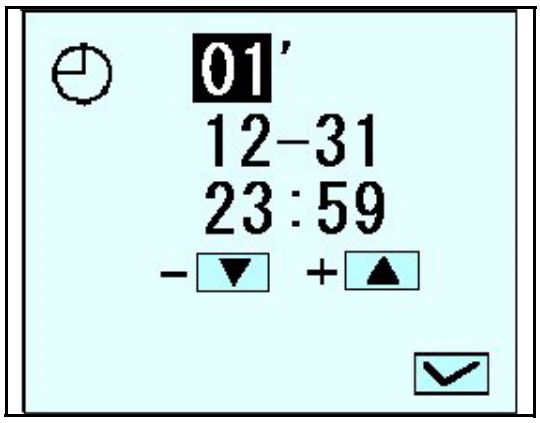

- (D). Adjusting background colour

1. Use the adjustment screen and press up switch (7) or down switch (8) to select the background colour monitor.
   (The selected monitor is inverted to black.)
2. When the screen changes to the background colour adjustment screen, press up switch (7) or down switch (8) to adjust the colour day time and for night time, the different combinations of colours are shown below: Day time/Night time.

   Light blue/Dark blue → Dark blue/Light blue

3. After completing adjustment of the background colour, press input confirmation switch (9). This will return you to the above menu and store the new setting.

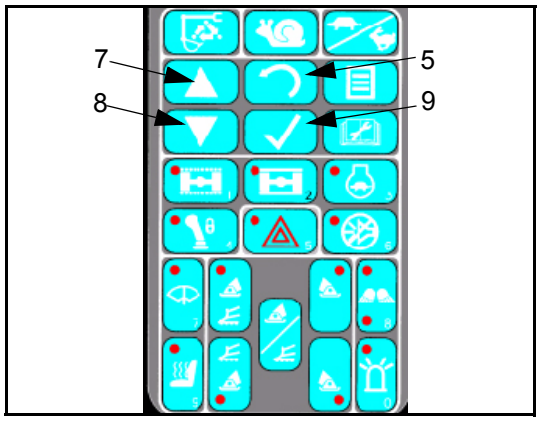

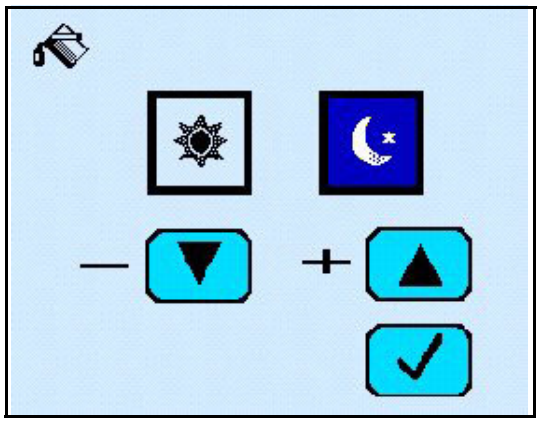

SWITCHES

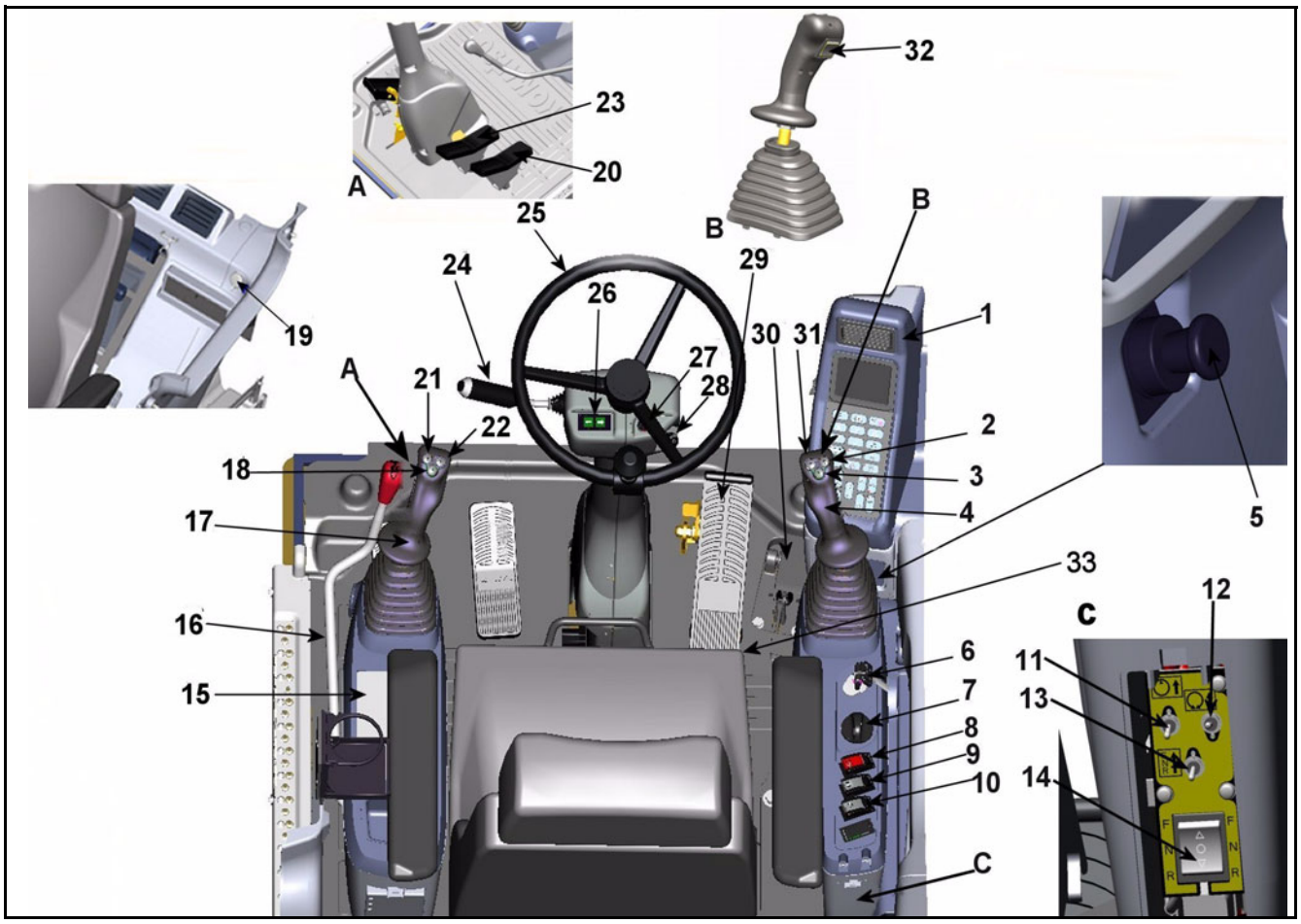

1. Machine monitor	18. Horn
2. Clamshell rotate right	19. 12V power supply
3. Boom and chassis attachment select	20. HCU Pedal (Option extra)
4. Right control lever	21. Power max button
5. cigarette lighter	22. Spare
6. Starter switch	23. Hydraulic Adjust Boom pedal (Option extra)
7. Fuel control dial	24. Indicator stalk (horn, windscreen wash/wipe, direction indicators, roadlight dip/main beam/flash)
8. Park brake switch	25. Steering wheel
9. Swing lock	26. Turn indicator warning lights
10. Quick coupler	27. Park light override
11. Pump override	28. Driving light
12. Swing override	29. Brake pedal
13.Travel override	30.Travel pedal
14. Override F/N/R	31. Clamshell rotate left
15. Air conditioner location	32. F/N/R switch
16. Safety lock lever	33. Mechanical swing lock

STARTING SWITCH

This switch (6) is used to start or stop the engine.

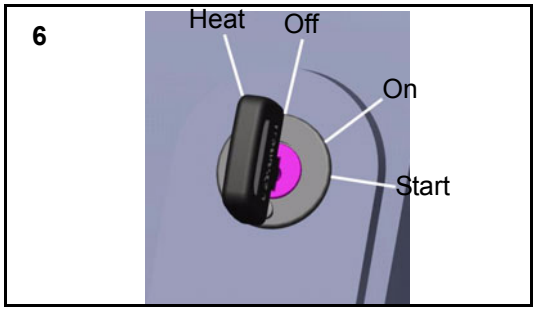

OFF position

The key can be inserted or withdrawn. Except for the park light override switch,12V phone socket, seat compressor and interior light, the switches for the electric system are all turned off and the engine is stopped.

ON position

Electric current flows in the charging and lamp circuits.
Keep the starting switch key at the ON position while the engine is running.

START position

This is the engine-start position. Keep the key at this position during cranking. Immediately after starting the engine, release the key which will automatically return to the ON position.

HEAT (preheat) position

When starting the engine in winter, set the key to this position. When the key is set to the HEAT position, the pre-heating monitor lights up.

Keep the key at this position until the monitor lamp goes off. Immediately after the pre-heating monitor goes off, release the key. The key automatically returns to the OFF position. Then, start the engine by turning the key to the START position.

FUEL CONTROL DIAL (WITH AUTO-DECELERATION MECHANISM)

Fuel Control Dial (7) adjusts the engine speed and output.

(1) Low idling (MIN): Turned fully to the left.
(2) Full speed (MAX): Turned fully to the right.

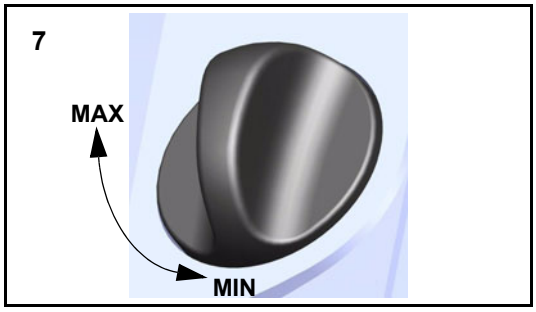

CIGARETTE LIGHTER

This is used to light cigarettes. To use, push the lighter in. After a few seconds it will spring back.

Pull out the lighter (5) and light your cigarette.
Nothing may be connected to the cigarette lighter without the prior permission of an authorized Komatsu distributor.

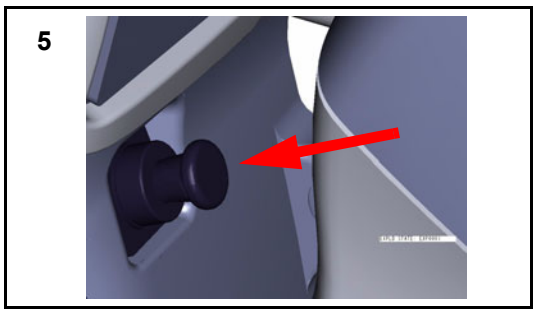

SWING LOCK SWITCH

WARNING

- **When the machine is travelling under its own power, or when the swing is not being operated, always set the switch to the ON (ACTUATED) position.**
- **On a slope, the work equipment may swing to the down side even if the swing lock switch is located at the ON position. Be careful concerning this point.**

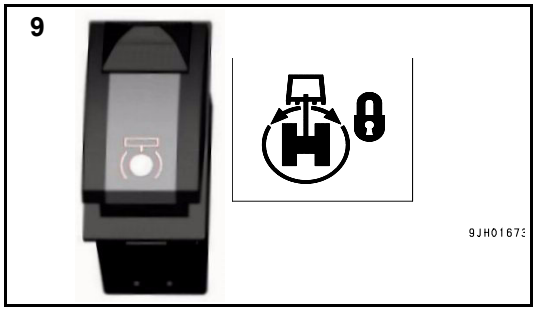

This switch is used to lock the upper structure so that it cannot swing. ON position (actuated):

When swing lock switch (9) is activated, the swing lock is always applied and the upper structure will not swing even if the swing lever is activated. In this condition the swing lock switch lamp and monitor switch light up.

OFF position (cancelled):

The swing lock switch should only be activated when the upper structure is motionless and with the swing lock lever in the neutral position.

HORN BUTTON

When the lower button on the left control lever (18) is pressed, the horn will sound.
Note: Additional horn switch is on end of steering column stalk (24a).

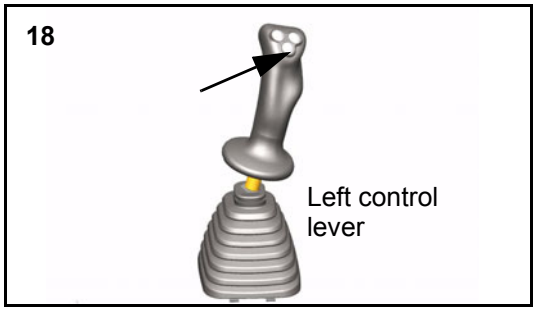

POWER MAX BUTTON

The upper button (21) of the left control lever is used to actuate the power max function. Press the button once (single click) and keep it depressed the power max. function actuates for a max. 8.5 seconds in A and E mode.

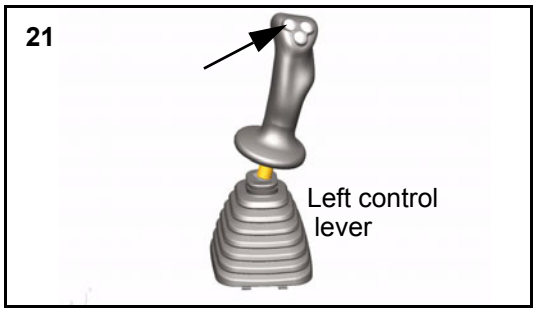

CAB LAMP SWITCH

This lights up the cab lamp.

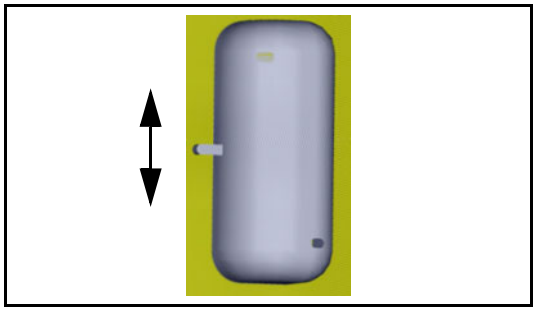

ON position: Lights up
The cab lamp can be turned on even when the starting switch is at the OFF position, so be careful not to leave it on by mistake.

PUMP CONTROL OVERRIDE SWITCH

When normal: Switch (11) is down

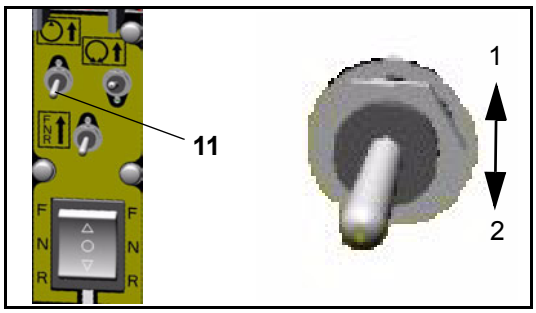

Position	Status
1	Abnormal
2	Normal

(1) When abnormal: When the monitor display shows E02 (TVC valve system error), it is possible to carry out operation when this switch is moved up. The pump control override switch is designed to allow operations to be carried out for a short period when there is an abnormality in the pump control system (TVC valve system error). The abnormality must be repaired immediately.

SWING LOCK OVERRIDE SWITCH

When normal: Switch (12) is down

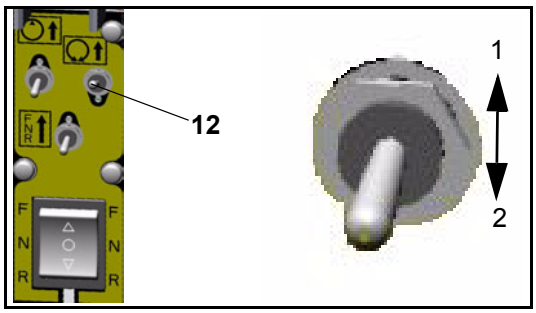

Position	Status
1	Abnormal
2	Normal

(1) When abnormal: When the monitor display shows E03 (swing brake system error), the brake is cancelled and it becomes possible to swing the upper structure when this switch is moved up, so normal operations can be carried out. However, the swing brake remains cancelled.

The swing lock override switch is designed to allow operations to be carried out for a short period when there is an abnormality in the swing brake electrical system (swing brake system error). The abnormality must be repaired immediately.

TRAVEL OVERRIDE SWITCHES

Emergency Travel Switch - If there is a problem with the controller or the signals being supplied to the controller and travel is not possible, the Emergency Travel Switch (13) can be used to move the machine in a situation of emergency.

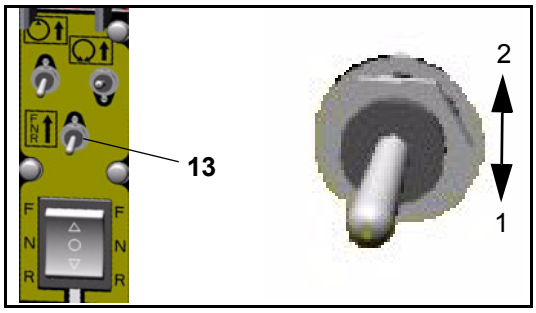

Position	Status
1	Normal
2	Abnormal

Emergency F / N / R Switch - When the Emergency Travel Switch has been activated the F / N / R switch on the right control lever will no longer function. The emergency F / N / R switch located at the rear of the right pod should be used in conjunction with the Emergency Travel Switch in a situation of emergency.

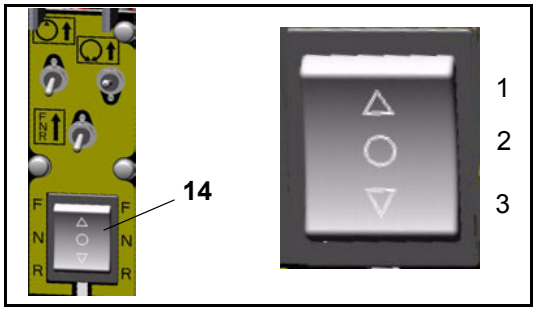

Position	Status
1	Forward
2	Neutral
3	Reverse

PARK BRAKE SWITCH

This switch (8) is used to apply and release park brake.

OFF: Park brake released (warning light not illuminated)
ON: Park brake applied (warning light illuminated)

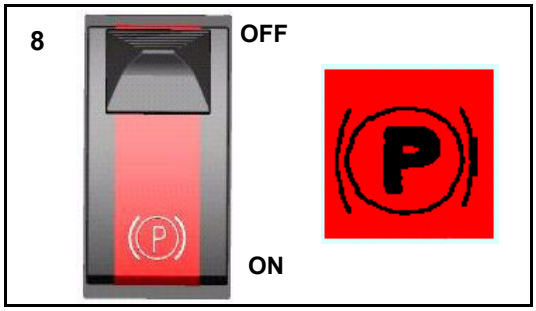

NOTE: When moving off from a standstill up an incline it will be necessary to depress the travel pedal slightly before releasing park brake to build pressure to the travel hydraulics and prevent initial rearwards movement

Do not apply the park brake while the machine is in motion except in an emergency or the park brake may be damaged.

PARK LIGHT OVERIDE

To operate the parking lights when the ignition is switched "OFF" use switch (27) located on the steering column cover.

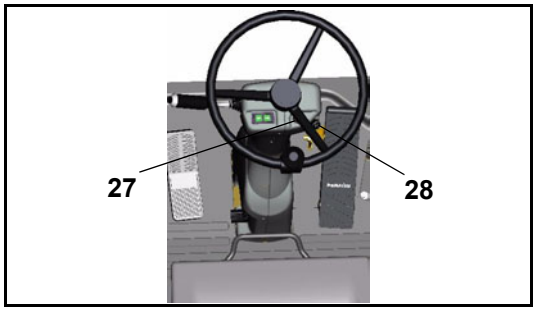

ADDITIONAL DRIVING LIGHT SWITCH

Switch (28) has three functions
OFF
Sidelights
Dipped Headlights

NOTE: Engine compartment light will only illuminate when side-lights are on.

FORWARD / NEUTRAL / REVERSE (F / N / R) SWITCH

The F / N / R switch (32) (located on the front of the right control lever) is used to select direction of travel. (1) Forward (2) Neutral (3) Reverse.

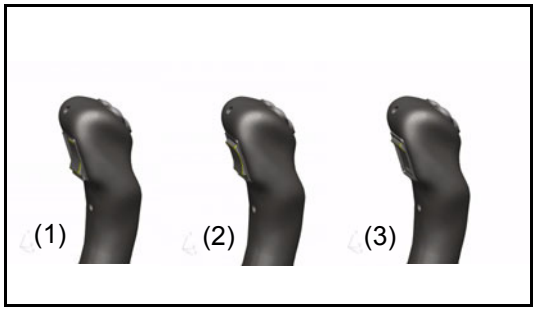

QUICK COUPLER SWITCH - (when fitted)

The Quick Coupler Switch (10) is used for the quick changeover of the bucket.

BOOM / UNDERCARRIAGE ATTACHMENT SWITCH

Switch (3) changes the function of the right control lever between boom and undercarriage attachment operation.

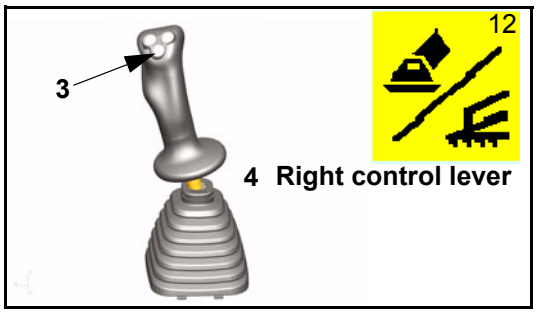

WARNING

Lights on the monitor panel indicate when the undercarriage attachments are in operation.

CLAMSHELL ROTATION CLOCKWISE/BREAKER SWITCH

Switch (2) operates clockwise rotation of clamshell (if fitted) or operation of breaker (if fitted).

CLAMSHELL ROTATION ANTI-CLOCKWISE

Switch (31) operates anti-clockwise rotation of clamshell (if fitted)

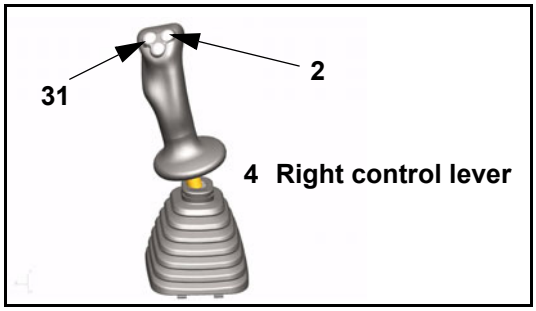

HORN SWITCH

When the button at the tip of the steering column stalk (24a) is pressed the horn will sound.

NOTE: Additional horn switch is switch (18).

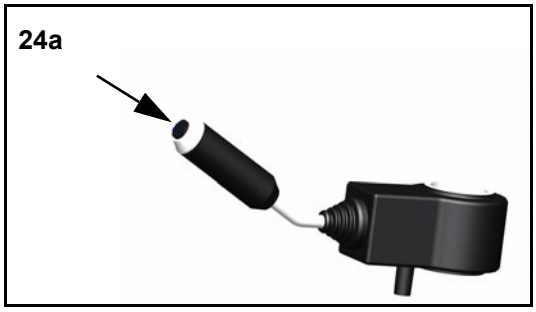

WINDSCREEN WASH SWITCH

When the sleeve switch on the steering column stalk (24b) is pushed towards the steering column the windscreen wash will operate.

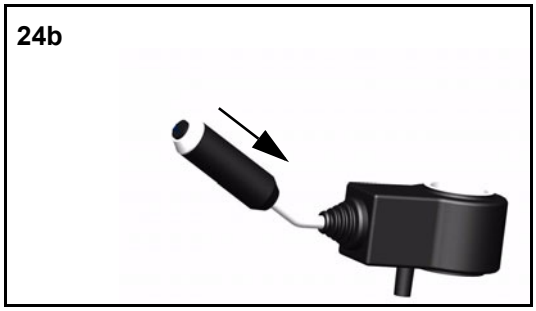

DIRECTION INDICATOR SWITCH

This switch (24) is used to indicate the driver's intention to change direction.

(1) Turn right: push lever fully forward

(2) Turn left: pull lever fully back
(direction indicator (a) to the rear of the steering wheel hub will flash and buzzer will sound)

To cancel, return lever to neutral position (no auto-cancel function exists)

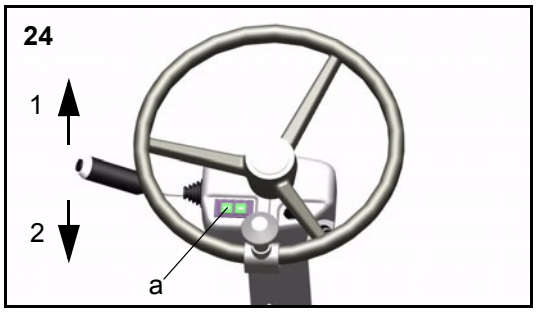

ROADLIGHTS DIP/MAIN BEAM/FLASH SWITCH

This switch (24c) has two functions.

- To alternate between headlight dipped and main beams. For main beam push steering column stalk fully downwards. (Note road lights switch (28) must be at position (3) for this function) Reverse operation to return to dipped beam
  Warning light (13) will illuminate on the monitor panel when main beam headlights are illuminated.
- To flash headlights pull steering column stalk fully upwards and release.

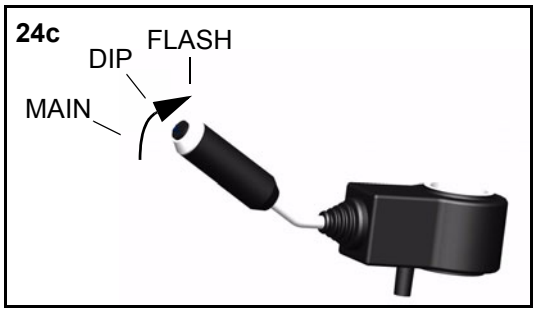

MAIN WINDSCREEN WIPER SWITCH

This rotary switch (24d) on column stalk controls main windscreen wiper.

- Rotate switch 30° away.
  From operator for intermittent wipe
- Rotate switch a further 30° away
  From operator for continuous wipe.

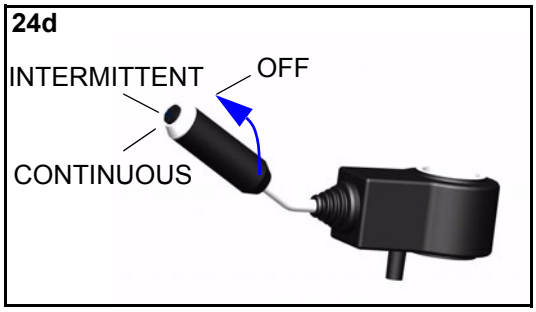

12V POWER SUPPLY

The 12V socket (19) provided on the cab rear left panel may be used only for electrical accessories drawing 1,5 A. maximum. Any accessories attached to this socket must carry the EC mark.

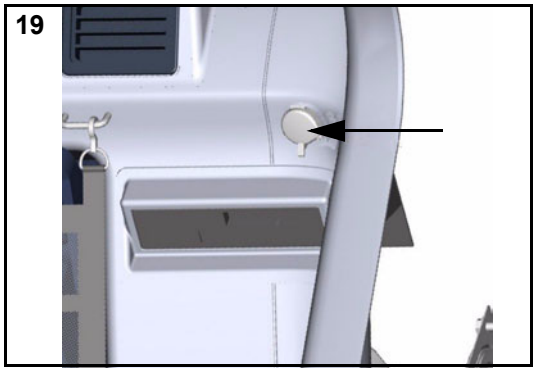

CONTROL LEVERS, PEDALS

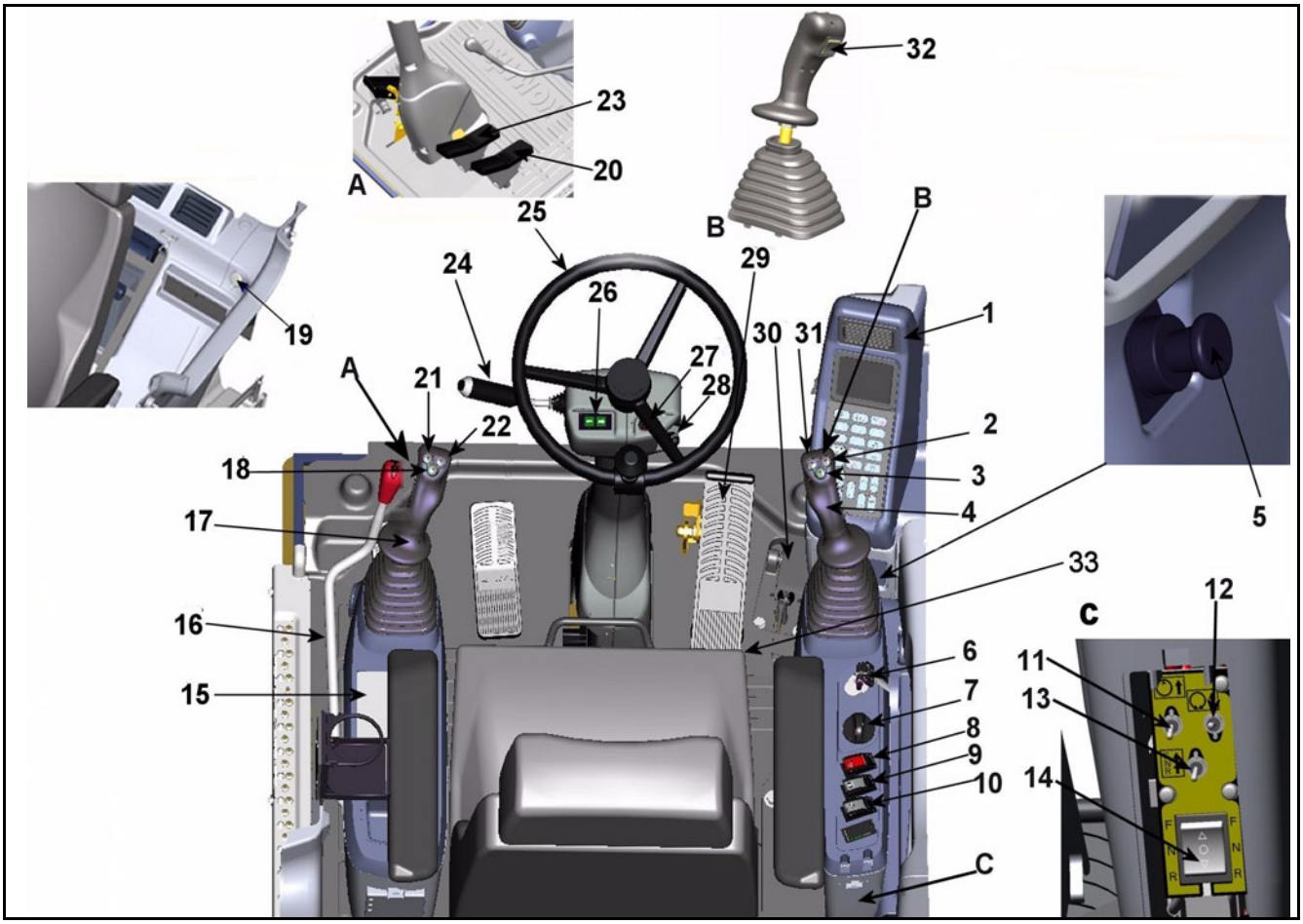

1. Machine monitor	18. Horn
2. Clamshell rotate right	19. 12V power supply
3. Boom and chassis attachment select	20. HCU Pedal (Option extra)
4. Right control lever	21. Power max button
5. cigarette lighter	22. Spare
6. Starter switch	23. Hydraulic Adjust Boom pedal (Option extra)
7. Fuel control dial	24. Indicator stalk (horn, windscreen wash/wipe, direction indicators, roadlight dip/main beam/flash)
8. Park brake switch	25. Steering wheel
9. Swing lock	26. Turn indicator warning lights
10. Quick coupler	27. Park light override
11. Pump override	28. Driving light
12. Swing override	29. Brake pedal
13.Travel override	30.Travel pedal
14. Override F/N/R	31. Clamshell rotate left
15. Air conditioner location	32. F/N/R switch
16. Safety lock lever	33. Mechanical swing lock

⚠ WARNING

- **When leaving the operator's compartment, switch control lever lock switch to OFF position, raise the safety lock lever to the LOCK position. If the control levers are not locked, and they are touched by mistake, this may lead to a serious accident.**
  If the safety lock lever is not raised in the LOCK position and lock switch is not OFF, the control levers may not be properly locked. Check that the situation is as shown in the diagram.
- **When the safety lock lever is being raised, take care not to touch the work equipment control lever. If the safety lock lever is not properly locked at the upper position, the work equipment, travel, attachment and swing will move, creating a potentially dangerous situation.**
- **When the safety lock lever is lowered, take care not to touch the work equipment, attachment or travel control lever.**

SAFETY LOCK LEVER

The safety lock lever LOCKS the work equipment, travel, attachment and swing controls.

This device is a hydraulic lock, so even if it is in the lock position, the work equipment control lever will move, but the work equipment and swing motor will not work.

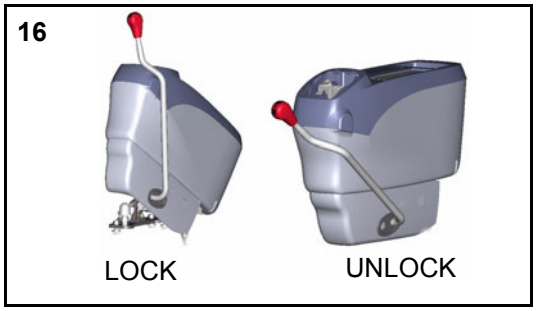

LEFT WORK EQUIPMENT CONTROL LEVER (with auto-deceleration device)

⚠ WARNING

If any lever is operated when in the deceleration range, the engine speed will suddenly increase, so be careful when operating the levers.

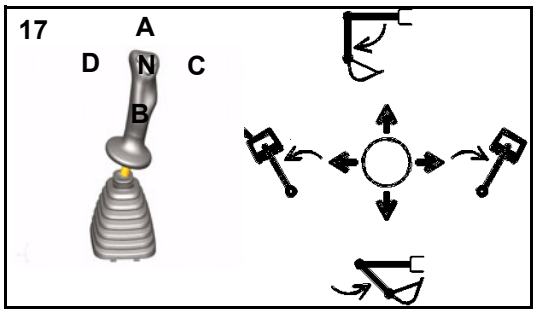

Lever (17) is used to operate the arm and upper structure.

Arm operation	Swing operation
(A) Arm OUT	(C) Swing to right
(B) Arm IN	(D) Swing to left
N (Neutral)	

When the lever in this position, the upper structure and the arm will be retained in the position in which they stop.

RIGHT WORK EQUIPMENT CONTROL LEVER
(with auto-deceleration device)

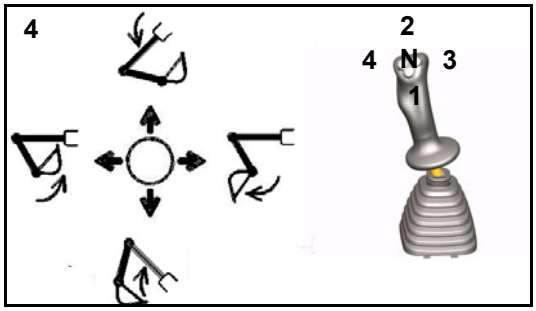

WARNING

If an lever is operated when in the deceleration range, the engine speed will suddenly increase, so be careful when operating the levers.

Lever (4) is used to operate the boom and bucket.

Boom operation	Bucket operation
(1) RAISE	(3) DUMP
(2) LOWER	(4) CURL
N (Neutral)	

When the lever in the N (neutral position), the boom and the bucket will be retained in the position in which they stop.

The engine speed changes as follows because of the auto-deceleration mechanism.

- When the travel pedal and work equipment control levers are at neutral, even if the fuel control dial is above the mid-range position, the engine speed will drop to a mid-range speed. If any of the levers are operated, the engine speed will rise to the speed set by the fuel control dial.
- If all control levers are set to neutral, the engine speed will drop by approx. 100 rpm, and after approx. 4 seconds, the engine speed will drop to the deceleration speed (approx. 1400 rpm).

CONTROL LEVER LOCK SWITCH

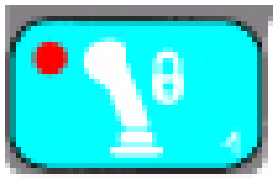

WARNING

The Control lever lock switch (located on the monitor panel) should be engaged when travelling on the Public Highway to prevent accidental use of the work equipment.

For details, see "CONTROL LEVER LOCK SWITCH (140)"
ON position (actuated):

TRAVEL PEDAL

The travel pedal is used in conjunction with the Forward / Neutral / Reverse (F / N / R) switch (32) located on the right control lever. Select the direction required using F / N / R switch then depress travel pedal (30) to commence travel.

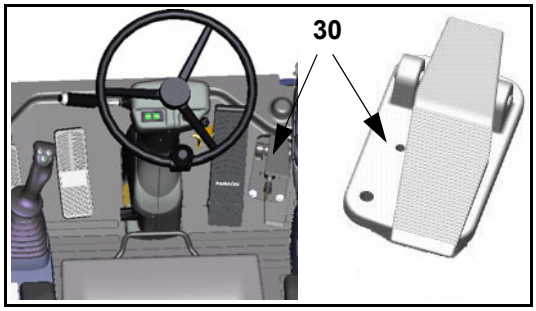

(1)	Forward
(2)	Neutral
(3	Reverse

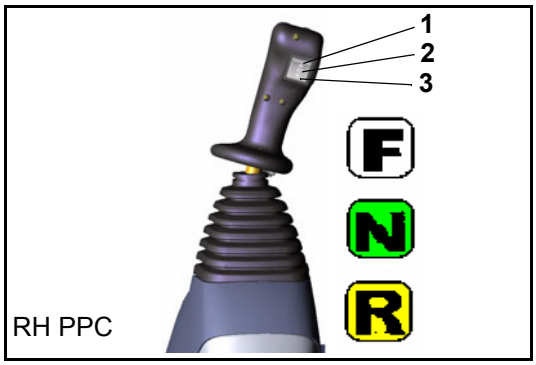

BRAKE PEDAL

The service brakes are operated by depressing pedal (29). To lock the service brakes in the ON position fully depress the brake pedal. To unlock the service brakes depress latch (A).

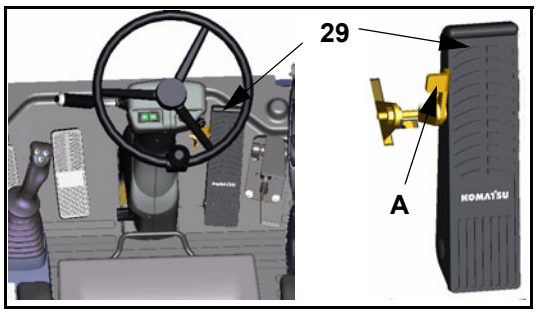

STEERING WHEEL

The machine can be steered by turning steering wheel in the desired direction.

The position of the steering column can be adjusted fore and aft by depressing pedal (1), moving column to desired position and releasing pedal (1).

WARNING

Steering actions will be reversed if undercarriage is facing opposite direction.

HYDRAULIC ADJUST BOOM PEDAL

Pedal (23) is used to operate the second boom.

(1) Raise	Pedal pushed forward
(2) Lower	Pedal pushed back

Neutral position: Boom is stopped and held in the same position.

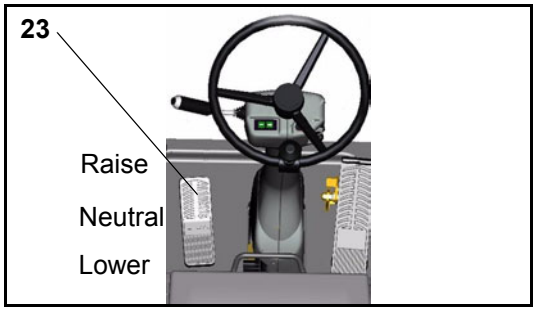

⚠ CAUTION

Do not rest foot on the pedal unless in use.

HCU PEDAL (OPTION)

Pedal (20) is used to operate the attachment.

NOTE: Confirm with attachment manufacturer at time of installation, correct pedal and attachment operation before use.

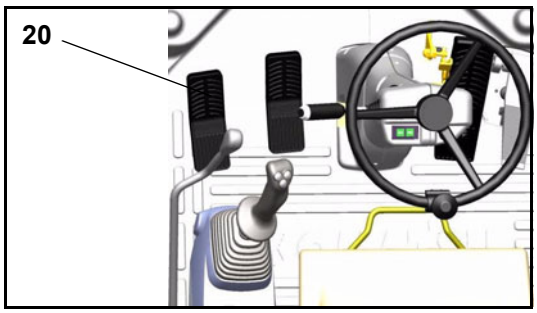

MECHANICAL SWING LOCK

Mechanical swing lock (33) located beneath front right of the operators seat, must engage prior to transportation and travelling on public roads. It is the legal requirement in some countries to use a mechanical swing lock when driving on public roads.

The mechanical swing lock should be operated as follows:
Line the machine up in the correct driving position with the pin in the raised, free position. Once the machine is correctly aligned lower the pin into the locked position.
To disengage the mechanical swing lock raise the pin from the ’lock’’ position to the ’free’ position.

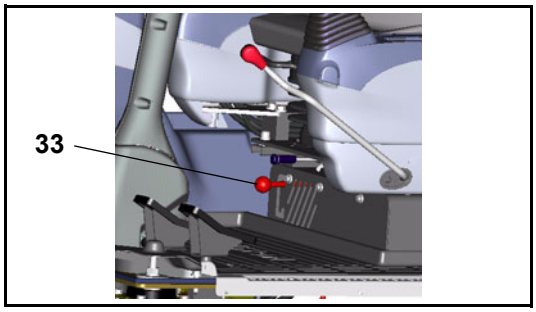

NOTE: Do not lower the pin to ’lock’ position whilst aligning the machine. The pin does not self locate and therefore this action may result in damage to the machine.
The swing lock pin must be disengaged prior to swinging or damage to the machine may occur.

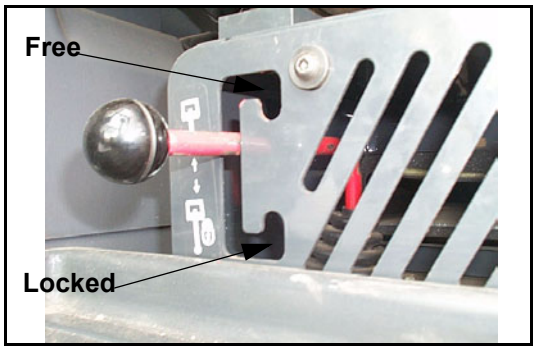

FRONT WINDOW

WARNING

- **When opening or closing the ceiling window, front window, bottom window, or door, always set the safety lock lever to the LOCK position.**
  If the control levers are not locked and they are touched by accident, a serious accident may occur.
- **When opening or closing the window at the front of the cab, stop the machine on horizontal ground, lower the work equipment completely to the ground, stop the engine, then carry out the operation.**
- **When opening the front window, hold the grip securely with both hands, pull up, and do not let go until the automatic lock catch is locked.**
- **When closing the front window, the window will move quicker under its own weight. Hold the grips securely with both hands when closing it.**

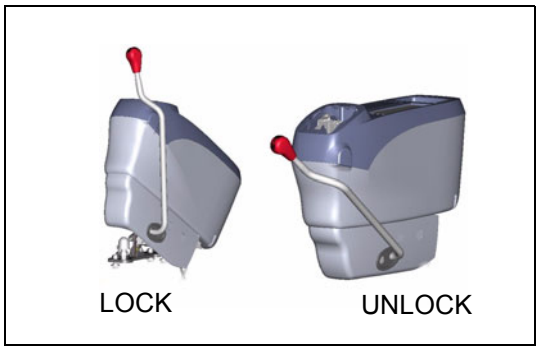

It is possible to store (pull up) the front window (top) in the roof of the operator's compartment.

When opening

1. Place the work equipment on flat ground and stop the engine.
2. Raise safety lock lever.

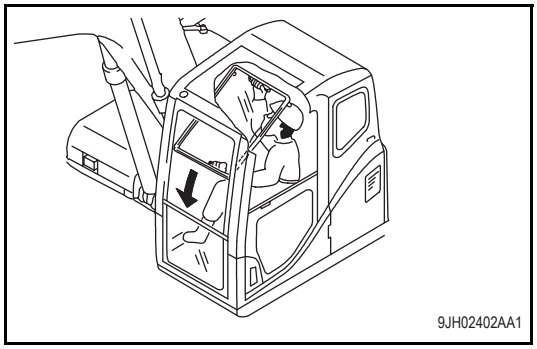

3. Check that the wiper blade (A) is stored in the right frame.

WARNING

When the front window is open, there is danger that it will fall, so always lock it with left and right lock pins (A).

4. Grip knobs (A) at the top, bottom, left, and right of the front window, and pull lock lever (B) to release the lock at the top of the front window. The top of the front window will come out.

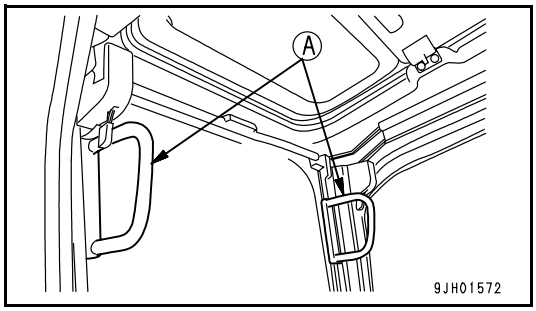

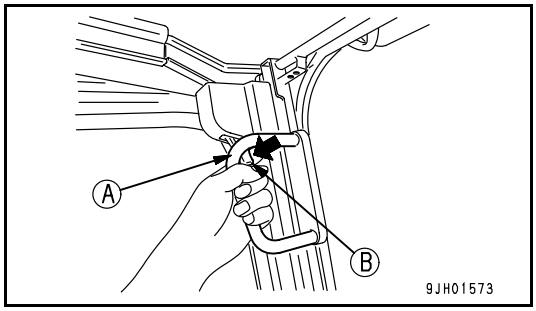

5. Hold lower knob (C) with your left hand from inside the operator's cab, and with your right hand, grip top knob (D), pull it up, and firmly push it against lock catch (E) at the rear of the cab to securely lock the window.

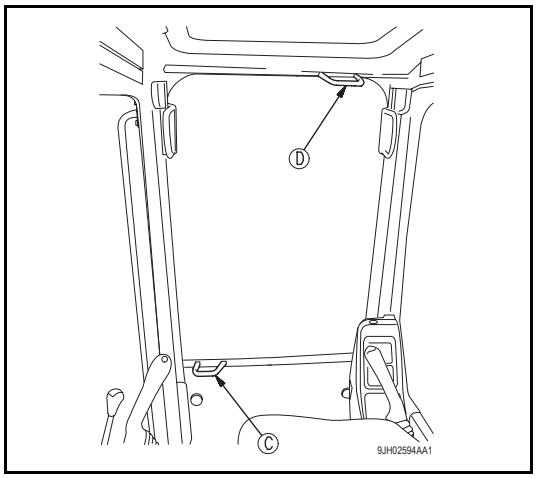

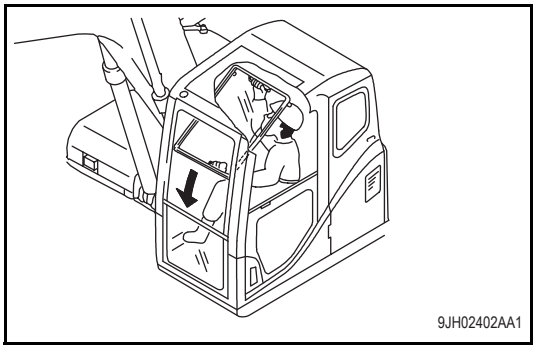

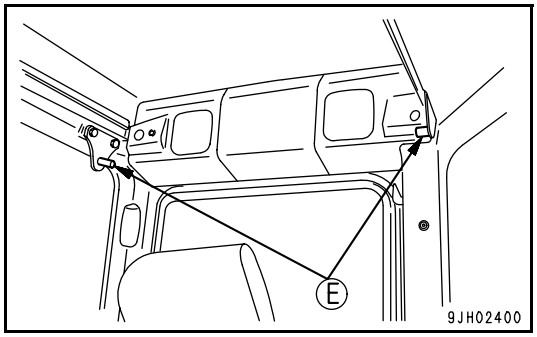

6. Check that lock lever (B) is secured at the LOCK position.

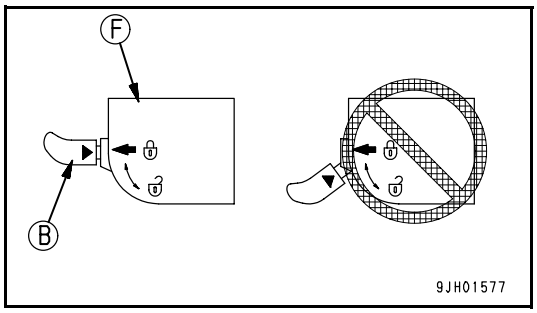

- The lock is engaged if the arrow on lock case (F) lines up with the arrow on lock lever (B). Check it visually.
- If the arrow on lock case (F) does not line up with the arrow on lock lever (B), the lock is not properly engaged. Repeat the operation in Step 5 to engage the lock.

When closing

WARNING

When closing the window, lower it slowly and be careful not to get your hand caught.

1. Place the work equipment on flat ground and stop the engine.
2. Raise the safety lock lever.

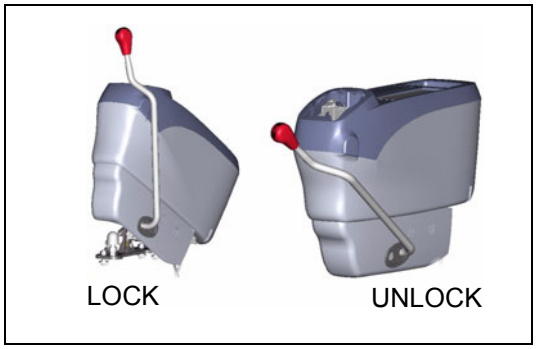

3. Grip left and right knobs (A), and pull down lock lever (B) to release the lock.

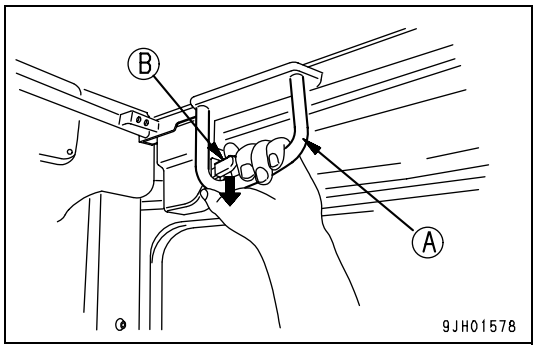

4. Grip knob (C) at the bottom of the front window with your left hand and knob (D) at the top with your right hand, push the window to the front, then lower it slowly.

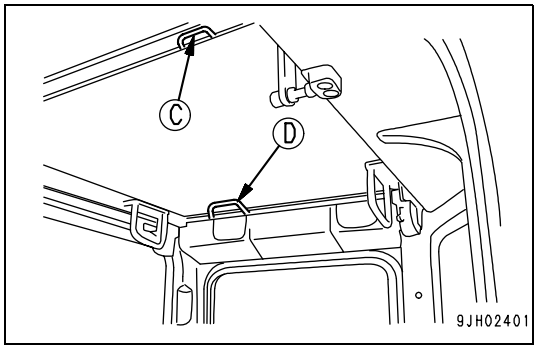

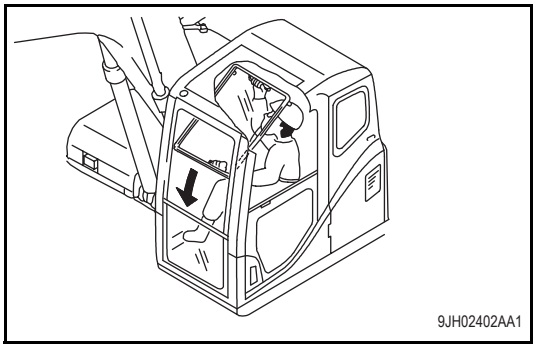

5. When the bottom of the window reaches the top of the bottom window, push the top of the window to the front to push it against left and right lock catches (G) and engage the locks.

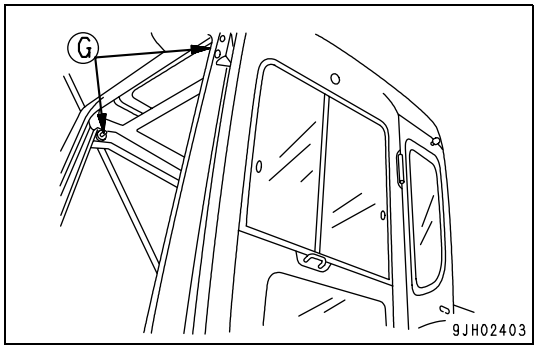

6. Check that lock lever (B) is secured at the LOCK position.

   - The lock is engaged if the arrow on lock case (F) lines up with the arrow on lock lever (B). Check it visually.
   - If the arrow on lock case (F) does not line up with the arrow on lock lever (B), the lock is not engaged. Repeat the operation in Step 5 to engage the lock.

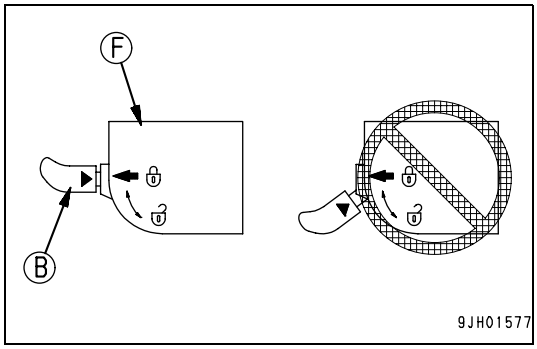

Removing front bottom window

1. Open the front window, then hold grip (A), pull up, and remove the bottom window.

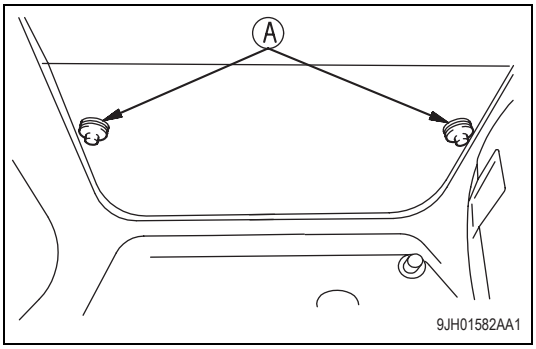

2. After removing the bottom window, store it at the rear of the operator's cab and lock it securely with left and right locks (B).
   - ○ When removing, always hold the glass with one hand and release the lock with the other hand.

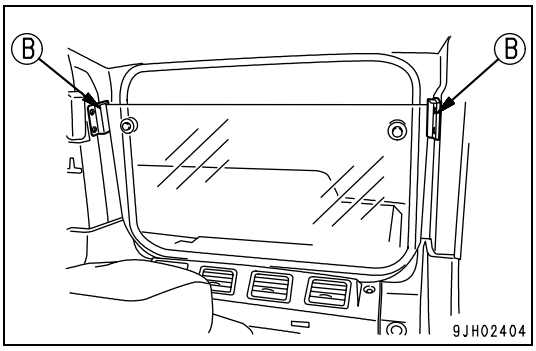

EMERGENCY EXIT FROM OPERATOR'S CAB

- If for some reason, the cab door does not open, open the rear window and use it as an emergency escape exit.
- Remove the rear window as follows.

1. Pull ring (1) and completely remove seal (2) from the rubber core.
2. When the corner of the front window glass is pushed strongly, it can be removed to the outside.
3. Do not remove the rear window except when using it as an emergency exit.

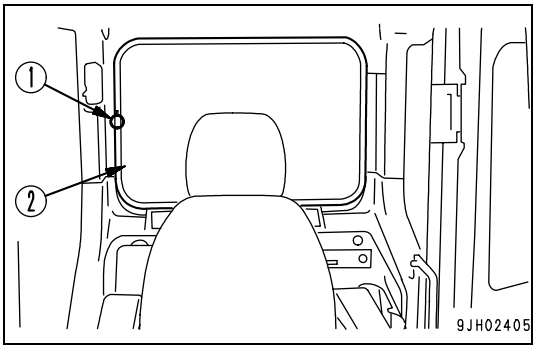

CEILING WINDOW

The operator cab is provided with a fixed clear ceiling widow for improved visibility. An optional guard can be provided for working in areas at risk from falling or flying objects.

CLEAR RAIN VISOR

The cab is fitted with a clear rain visor to prevent rainfall on the windscreen above the area cleared by the wiper.

PULL DOWN SUN VISOR

The operator cab is fitted with a pull down sun visor. The visor is simply pulled down and hooked into the retainers mounted on the front window. The position of the retainers can be adjusted to one of three pre-set locations by removing the bolts holding the brackets, and re-attaching to one of the other prepared locations.

A second set of retainers is positioned at the bottom of the front window to allow coverage of the clear roof when the front window is in the raised position.

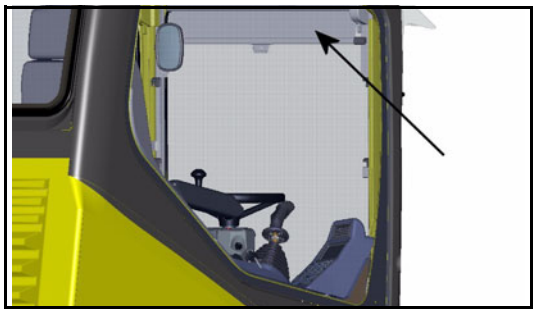

DOOR LOCK

Use the door lock to fix the door in position after opening it.

1. The door will become fixed in place when it is pressed against catch (1).
2. To release the lock, press knob (2) down at the left side of the operator's seat to release the catch.
   When fixing the door, fix it firmly to the catch.

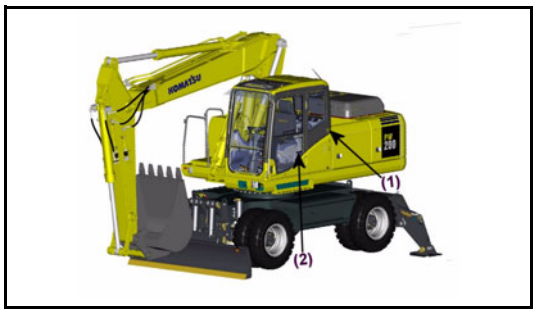

CAP, COVER WITH LOCK

The fuel filler, hydraulic tank filler, operator's cab, engine hood, tool box cover, right side door and left side door of the machine body are fitted with locks.
Use the starting switch key to lock or unlock these places.

METHOD OF OPENING AND CLOSING CAP WITH LOCK (For the fuel tank filler port)

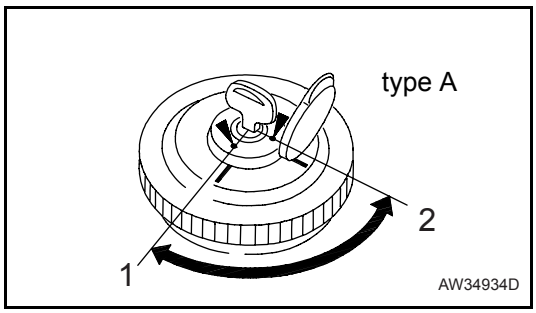

To open the cap

1. Insert the key into the cap.
2. Turn the key clockwise, align the match mark on the cap with the rotor groove, then remove the cap.

To lock the cap

1. Turn the cap into place.
2. Turn the key and take the key out.

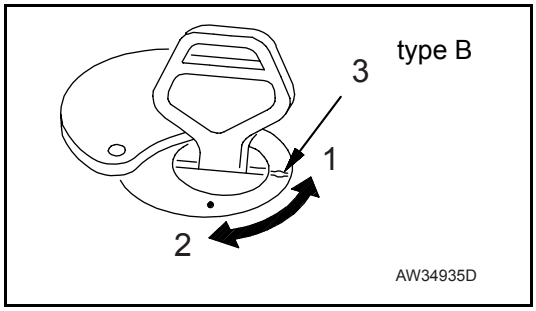

Insert the key as far as it will go. If the key is turned before it is inserted all the way, it may break.

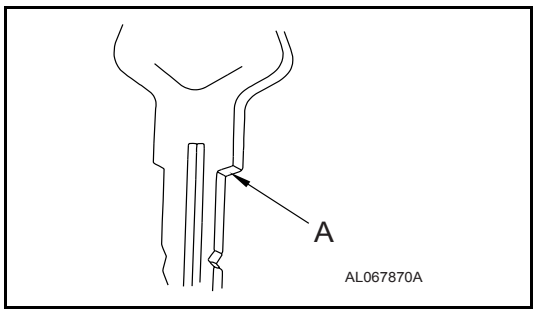

METHOD OF OPENING AND CLOSING COVER WITH LOCK (cover with lock)

To open the cover (locked cover)

1. Insert the key.
2. Turn it counterclockwise and open the cover by pulling the cover grip.

To lock the cover

1. Close the cover and insert the key.
2. Turn the key clockwise and take the key out.

FUSE

NOTE: Before replacing a fuse, be sure to turn off the starting switch.

The fuses protect the electrical equipment and wiring from burning out.

If the fuse becomes corroded, or white powder can be seen, or the fuse is loose in the fuse holder, replace the fuse.

Replace a fuse with another of the same capacity.

Fuse capacity and name of circuit

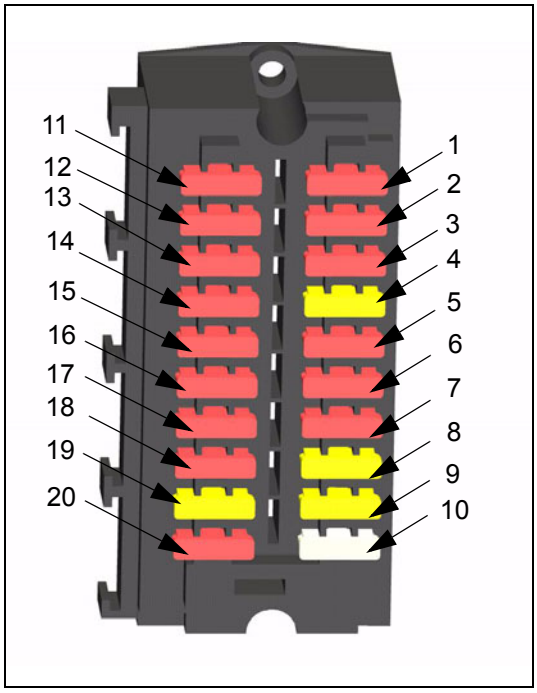

No	Fuse capacity	Name of circuit
(1)	10 A	Controller (switched power)
(2)	20 A	Solenoid (controller)
(3)	10 A	PPC lock, axle lock, park brake and f-n-r
(4)	10 A	Window washer, cigar lighter and quick coupler
(5)	30 A	Head lights, main beam and horn
(6)	10 A	Lower wiper
(7)	10 A	Beacon
(8)	10 A	Travel sensor and low brake pressure
(9)	5 A	Power max switch
(10)	10 A	Refuelling pump
(11)	25 A	A/C unit
(12)	20 A	Monitor (switched power)
(13)	20 A	Work lights
(14)	10 A	Opt power supply (24V)
(15)	15 A	Heated seat, clamshell and chassis attachments
(16)	10 A	Radio, phone socket (12V) and seat compressor
(17)	10 A	Monitor (regular power)
(18)	10 A	Starter switch
(19)	10 A	Cab interior light
(20)	10 A	Hazard warning, wiper control and park lights

LUGGAGE TRAY

This tray is located to the rear of the operator's seat. Always keep the operation & maintenance manual in this tray for easy reading access.

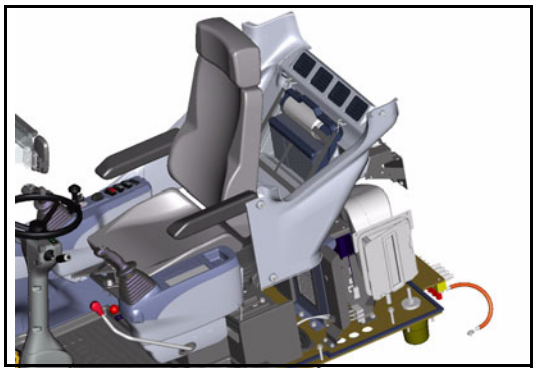

ASHTRAY

The ashtray is under the machine monitor at the front right of the operator compartment. Always ensure when cigarettes are extinguished they are put in ashtray and the lid closed.

CUP HOLDER

A cup holder is provided to the left of the operator for holding cups or cans. Drinks should not be left in the cup holder whilst operating the machine, because spillage may occur.

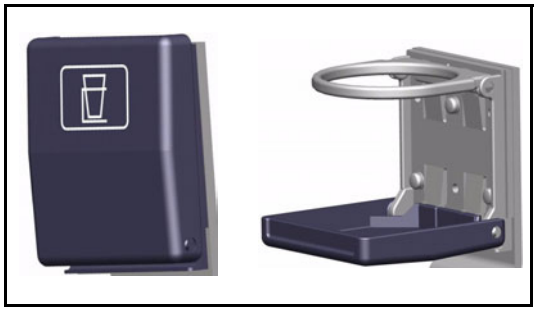

HOT AND COOL BOX

The box is at the rear right of the operator's seat. It is interconnected with the air conditioner, it warms when the heater is being used and cools when the air conditioner is being used.

CAB RADIO

Located to rear left of the operator's seat.

Refer to the separate operations manual for radio cassette.

NOTE: Ensure radio is switched off when leaving the machine for long periods to prevent draining of battery charge.

NOTICE
Before transporting the machine or putting inside a building store the antenna to prevent any interference.

Antenna storage location

PRECAUTION OF USE

- To ensure safe operation, adjust the volume level so that external noise is still audible.
- Ensure no water is splashed over the speaker case or cab radio to prevent malfunction.
- Never use solution such as benzine or thinners to clean the dial or buttons. These should be wiped with a dry, soft cloth. (Use a cloth dipping in alcohol for very dirty surfaces.)
- At battery replacement, all the memory pre-set with the pre-set buttons will be cleared. Perform pre-setting again.

POWER PICK-UP PORT

24V power source.

NOTICE
Do not use cigarette lighter as the power source for 12V equipment. It will cause damage to the equipment.

If the cigarette lighter is removed, it can be used as a power source. The capacity of the cigarette lighter is 85W (24V x 3.5A).

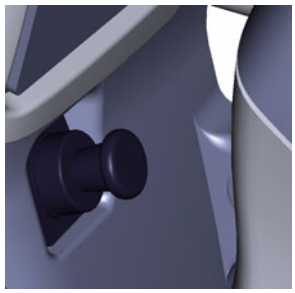

HANDLING AIR CONDITIONER

GENERAL LOCATIONS OF CONTROL PANEL

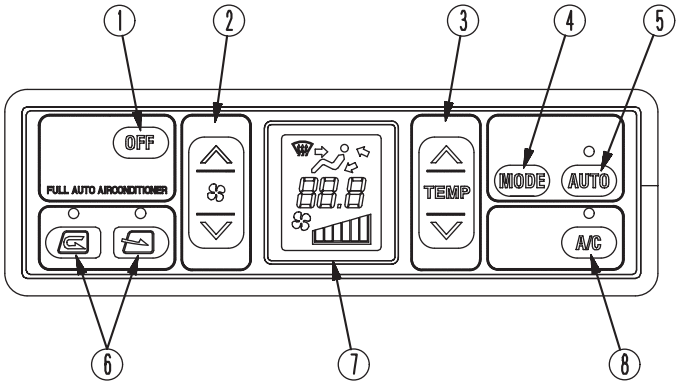

9EH02410AA1

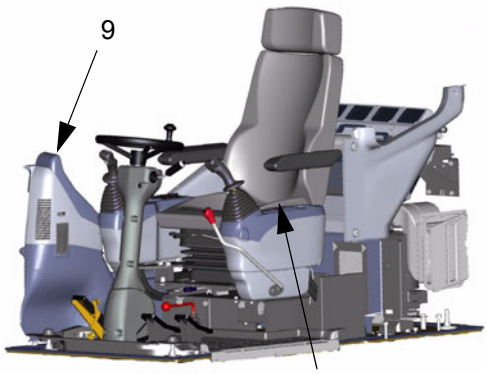

Air conditioner control panel

(1) OFF switch	(6) FRESH/RECIRC selector switch
(2) Fan switch	(7) Display monitor
(3) Temperature control switch	(8) Air conditioner switch
(4) Vent selector switch	(9) Defroster selector lever
(5) Auto switch	

OFF SWITCH

This switch (1) is used to stop the fan and air conditioner.

- When OFF switch (1) is pressed, the set temperature and air flow display on display monitor (7) and the lamps above auto switch (5) and air conditioner switch (8) go out, and operation stops.

9JH02411

FAN SWITCH

This switch (2) is used to adjust the air flow.

The air flow can be adjusted to six levels.

- Press the ∧ switch to increase the air flow; press the ∨ switch to reduce the air flow.
- During auto operation, the air flow is automatically adjusted.

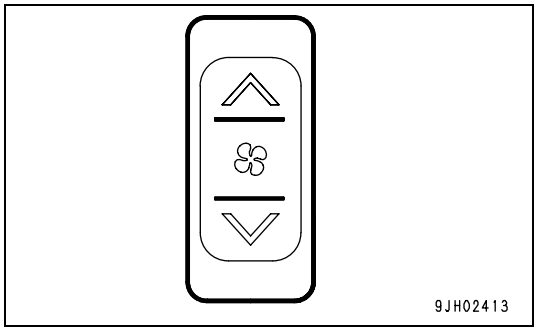

Monitor display and air flow	
Liquid crystal display	Air flow
	Air flow "low"
	Air flow "medium 1"
	Air flow "medium 2"
	Air flow "medium 3"
	Air flow "medium 4"
	Air flow "high"

TEMPERATURE SET SWITCH

This switch (3) is used to control the temperature inside the cab. The temperature can be set between 18°C and 32°C.

- Press the ∧ switch to raise the set temperature; press the ∨ switch to lower the set temperature.
- The temperature is generally set at 25°C.
- The temperature can be set in stages of 0.5°C.

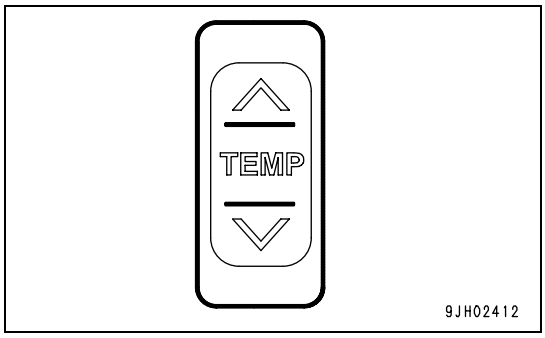

<Monitor display and the function>

Monitor display (°C)	Set temperature
18.0	Max. cooling
18.5 to 31.5	Adjusts temperature inside cab to set temperature
32.0	Max. heating

VENT SELECTOR SWITCH

This switch (4) is used to select the vents.

- When switch (4) is pressed, the display on monitor display (7) switches and air blows out from the vents displayed.
- If AUTO operation is selected, the vents are selected automatically.

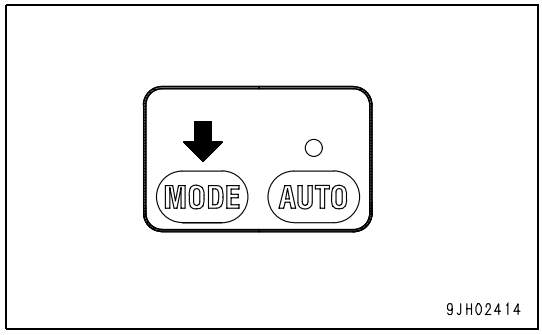

(A): Rear vents (4 places)

(B): Face vent (1 place)

(C): Foot vent (1 place)

(D1): Front window vent (1 place)

(D2): Front window vent (1 place)

- Front window vent (D2) can be opened or closed by hand.

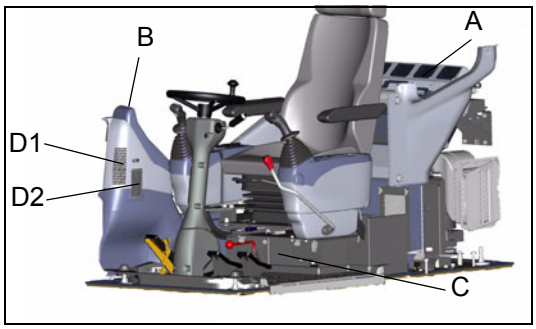

Liquid crystal display	Vent mode	Vent				Remarks
		(A)	(B)	(C)	(D)	
	Front and rear vents (including defroster vent)	O	O		(O)	-
	Front and rear vents (including defroster vent)	O	O	O	(O)	-
	Foot vent			O		-
	Foot, foot vents (including defroster vent)		O	O	(O)	Cannot be selected for automatic operation
	Front vents (including defroster vent)		O		(O)	Cannot be selected for automatic operation

AUTO SWITCH

With this switch (5), the air flow, vents, and air source (RECIRC/FRESH) are automatically selected according to the set temperature.

This switch also acts as the air conditioner main switch.

- When auto switch (5) is pressed, the lamp at the top of the auto switch lights up.
- Normally, press this switch, then use temperature control switch (3) to set the temperature, and run the air conditioner under automatic control.
- When the control is switched from automatic operation to manual operation, it is then possible to operate the switch to change the air flow, vents, and air source (RECIRC/FRESH). When the manual control is used, the lamp at the top of the auto switch goes out.

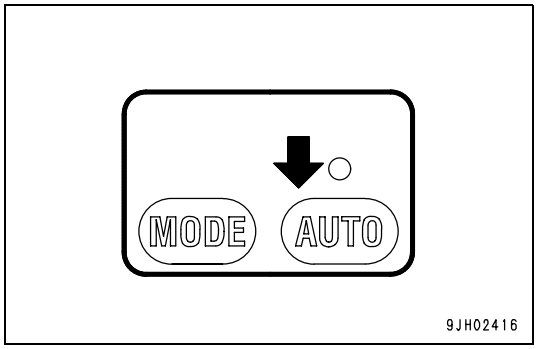

RECIRC/FRESH SELECTOR SWITCH

This switch (6) is used to switch the air source between recirculation of the air inside the cab and intake of air from the outside.

- When switch (6) is pressed, the lamp at the top of the selector switch lights up to show that air is being blown out.
- During automatic operation, the selection of inside air (RECIRC) and outside air (FRESH) is carried out automatically.

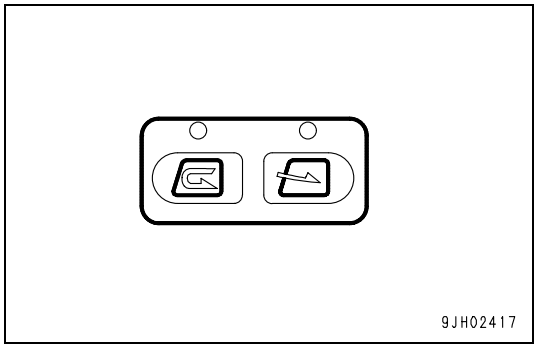

RECIRC	The outside air is shut off and only the air inside the cab is circulated. Use this position to carry out rapid cooling of the cab or when the outside air is dirty.
FRESH	Outside air is taken into the cab. Use this position to take in fresh air or when carrying out demisting.

DISPLAY MONITOR

- This display monitor displays the status of temperature setting (a), air flow (b), and vents (c).
- When OFF switch (1) is pressed, the display of temperature setting (a) and air flow (b) goes out, and operation stops.

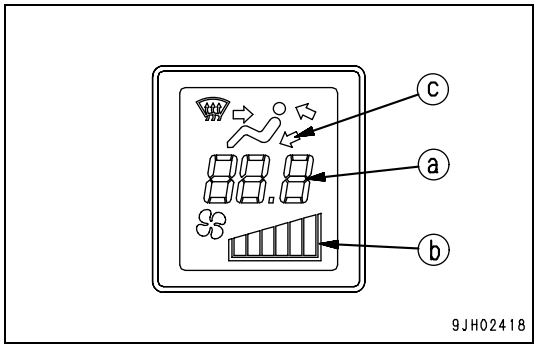

AIR CONDITIONER SWITCH

This switch (8) is used to turn the air conditioner (cooling, dehumidifying, heating) ON or OFF.

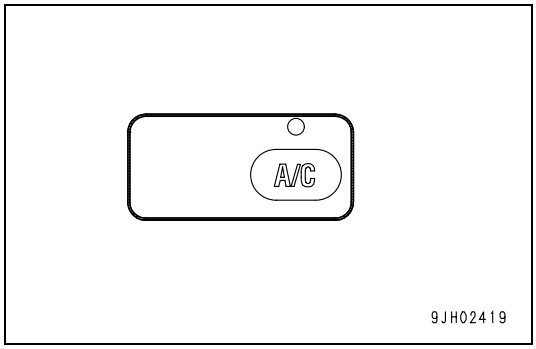

- When the fan is actuated (the display monitor shows (b)) and air conditioner switch (8) is pressed, the air conditioner is switched ON, the lamp at the top of the air conditioner switch lights up, and the air conditioner starts. When it is pressed again to the OFF position, the lamp at the top of the air conditioner switch goes out.
- The air conditioner cannot be operated while the fan is stopped.

DEFROSTER SELECTOR LEVER

This switch (9) is used in cold or rainy weather to remove the mist that forms on the front glass.

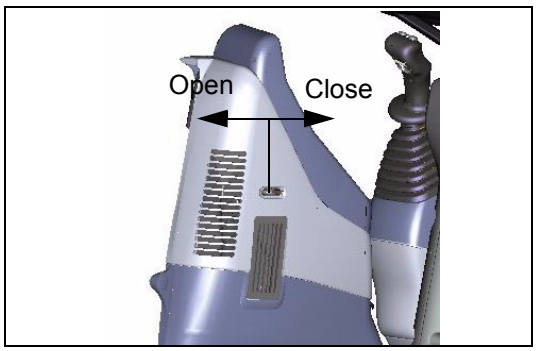

Selector lever forward: To defroster (open)

Selector lever back: Closed

The defroster can be used when the vent selector switch is set to face or face and foot.

METHOD OF OPERATION

The air conditioner can be operated automatically or manually. Select the method of operation as desired.

AUTOMATIC OPERATION

1. Turn auto switch (5) ON.
   - ○ The lamp at the top of switch (5) lights up.
   - ○ The set temperature (a) and air flow (b) are displayed on the monitor.

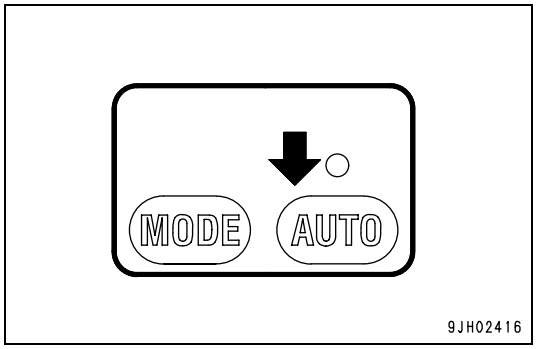

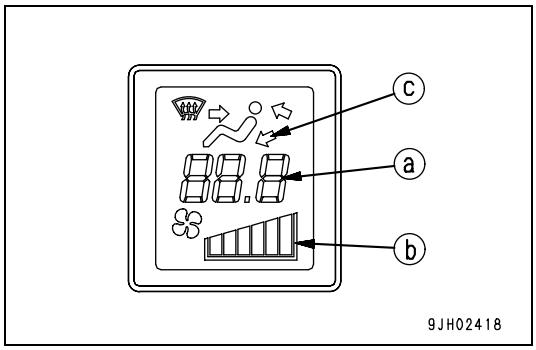

2. Use temperature set switch (3) to set to the desired temperature. The air flow, combination of vents, and selection of fresh or recirculated air is automatically selected according to the set temperature, and the air conditioner is operated automatically to provide the set temperature.

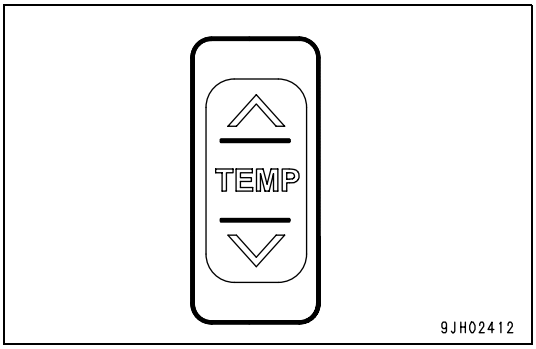

REMARK

When vent display monitor (c) displays (d) or (e), and the engine water temperature is low, the air flow is automatically limited to prevent cold air from blowing out.

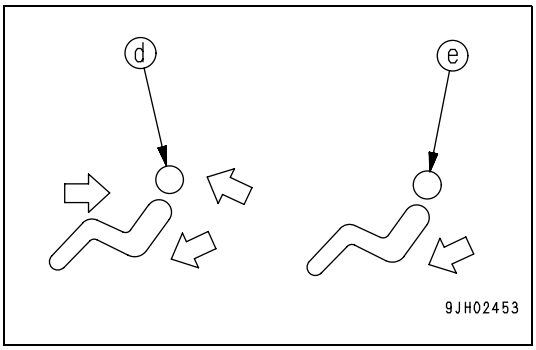

STOPPING AUTOMATIC OPERATION

Press OFF switch (1). The displays for temperature setting (a) and air flow (b) on the display monitor, and the lamps above auto switch (5) and air conditioner switch (8) go out, and the operation stops.

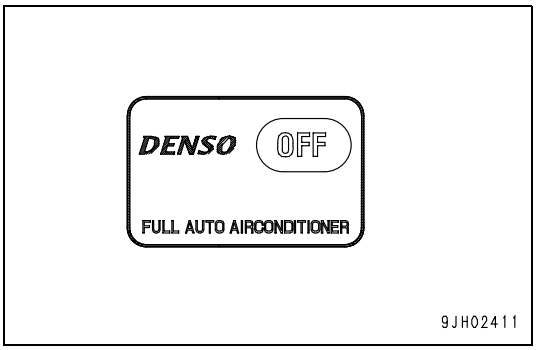

MANUAL OPERATION

1. Press fan switch (2) and adjust the air flow. When doing this, check that temperature setting (a) and air flow (b) are displayed on the display monitor.

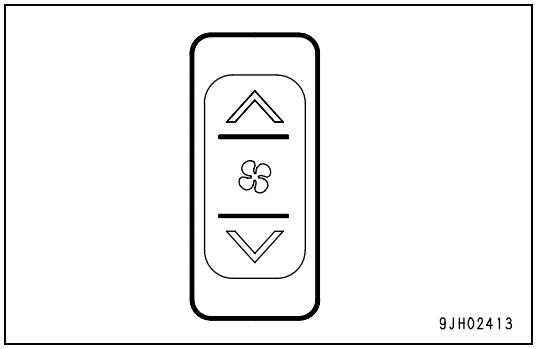

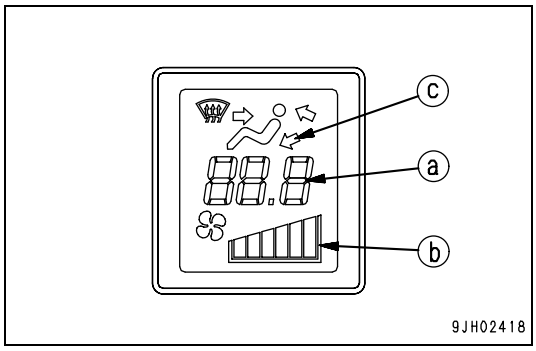

2. Turn air conditioner switch (8) ON. Check that the lamp at the top of the air conditioner switch lights up.

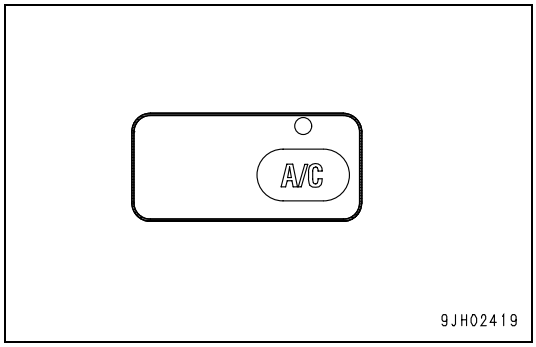

3. Press the temperature setting switch and adjust the temperature inside the cab.

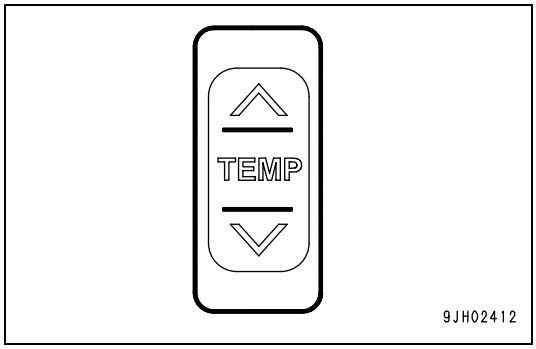

4. Press vent selector switch (4) and select the desired vents. When this is done, the display for vent (c) of the display monitor changes according to the selection.

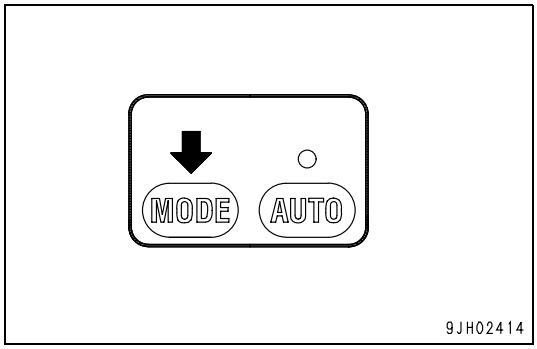

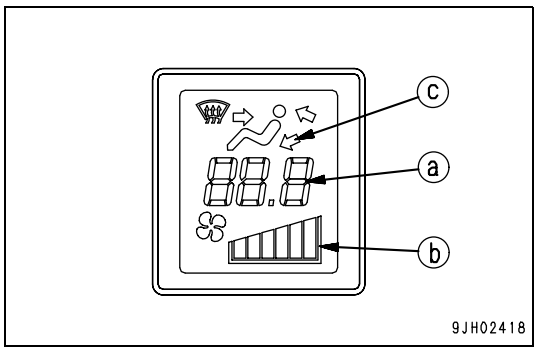

5. Press RECIRC/FRESH selector switch (6) and select recirculation of the air inside the cab (RECIRC) or intake of fresh air from outside (FRESH).

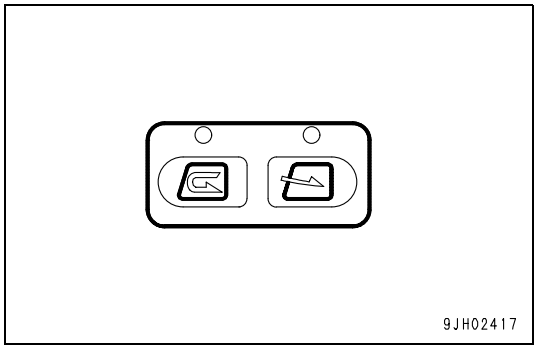

STOPPING MANUAL OPERATION

Press OFF switch (1). The displays for temperature setting (a) and air flow (b) on the display monitor, and the lamps above auto switch (5) and air conditioner switch (8) go out, and the operation stops.

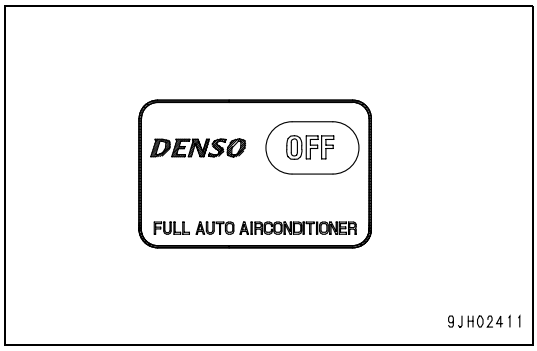

OPERATION WITH COLD AIR TO FACE AND WARM AIR TO FEET

To operate with cold air blowing to the face and warm air blowing to the feet, set as follows.

1. Press fan switch (2) and adjust the air flow. When doing this, check that temperature setting (a) and air flow (b) are displayed on the display monitor.

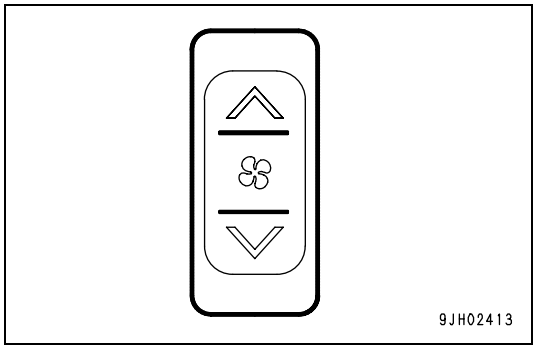

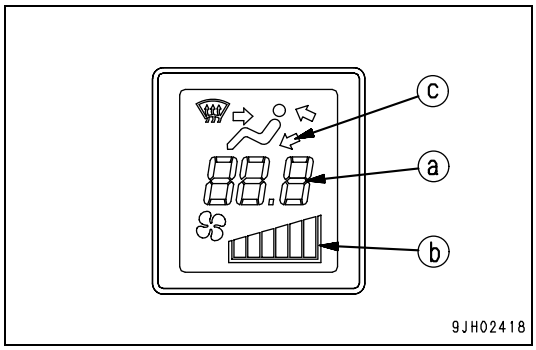

2. Press vent selector switch (4) and set the vent display on the display monitor to the display shown in the diagram on the right.

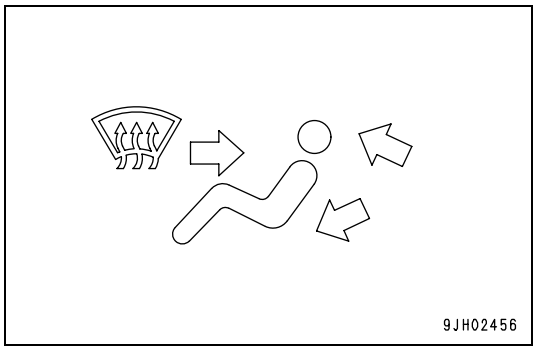

3. Turn air conditioner switch (8) ON. When this is done, the lamp above the air conditioner switch lights up.

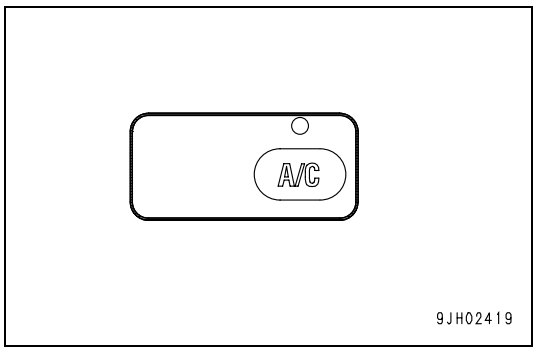

4. Adjust fan switch (2), temperature setting switch (3) and FRESH/RECIRC selector switch (6) to the desired positions.

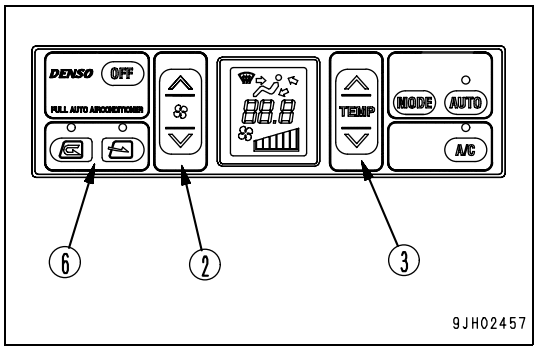

DEFROSTER OPERATION

1. Press fan switch (2) and adjust the air flow. When doing this, check that temperature setting (a) and air flow (b) are displayed on the display monitor.

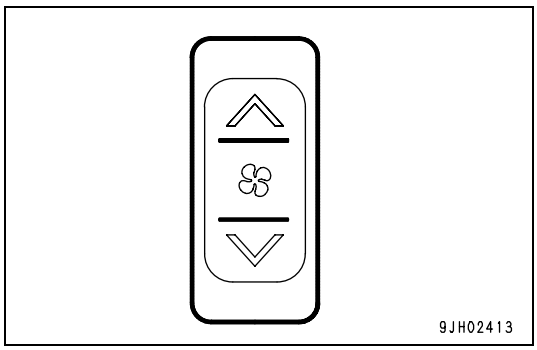

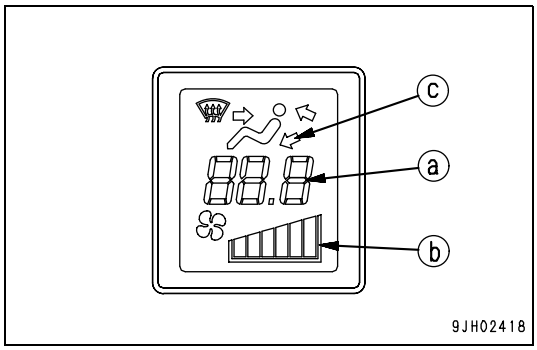

2. Press vent selector switch (4) and set the vent display on the display monitor to the display shown in (f) or (g) in the diagram on the right.

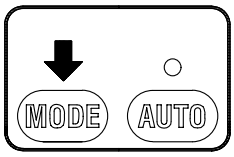

9JH02414

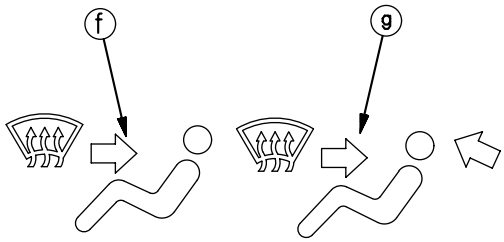

9JH02458

3. Press FRESH/RECIRC selector switch (6) and set it to take in fresh air.

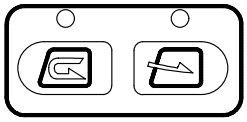

9JH02417

4. Press temperature setting switch (3) and set the set temperature display on the display monitor to the maximum heating temperature of 32°C.

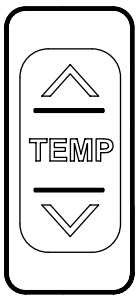

9JH02412

5. Adjust vents (A), (B), and (D2) so that the air blows onto the window glass.
   (Vents (C) and (D1) are fixed and cannot be adjusted.)

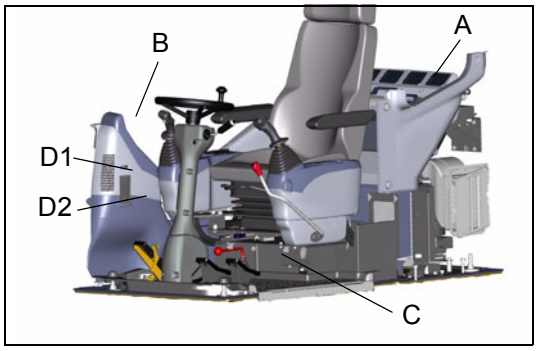

When operating in the rainy season or when it is desired to remove the mist from the window glass or to dehumidify the air, turn air conditioner switch (8) ON.

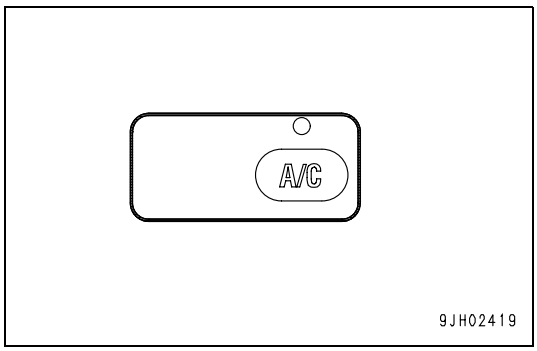

PRECAUTIONS WHEN USING AIR CONDITIONER

NOTICE

- **When running the air conditioner, always start with the engine running at low speed. Never start the air conditioner when the engine is running at high speed. It will cause failure of the air conditioner.**
- **If water gets into the control panel or sunlight sensor, it may lead to unexpected failure, so be careful not to let water get on these parts. In addition, never bring any flame near these parts.**
- **For the auto function of the air conditioner to work properly, always keep the sunlight sensor clean and do not leave anything around the sunlight sensor that may interfere with its sensor function.**

Ventilate the cab from time to time when using the cooler.

- If you smoke when the cooler is on, the smoke may start to hurt your eyes, so open the window and carry out ventilation and cooling for a short time to remove the smoke.

When running the air conditioner for a long time, carry out ventilation and cooling together once each hour.

Be careful not to make the temperature in the cab too low.

When the cooler is on, set the temperature so that it feels slightly cool when entering the cab (5 - 6ºC) lower than the outside temperature). This temperature difference is considered to be the most suitable for your health. Adjust the temperature properly.

CHECK, MAINTAIN MACHINE EQUIPPED WITH AIR CONDITIONER

When carrying out inspection of a machine equipped with an air conditioner, see the "MAINTENANCE SCHEDULE CHART (277)" and carry out inspection according to the table.

OTHER FUNCTIONS

SELF-DIAGNOSTIC FUNCTION

It is possible to carry out troubleshooting of the various sensors and equipment used on the air conditioner.

1. Press OFF switch (1). The temperature setting and air flow display on the liquid crystal display portion go out and operation stops.
2. If the "∧" and "∨" parts of temperature setting switch (3) are kept pressed at the same time for at least 3 seconds, the troubleshooting mode is displayed on the liquid crystal display.

<Monitor display and failure mode>

Display	Failure mode
E--	No failure
E11	Disconnection in recirculated air sensor
E12	Short circuit in recirculated air sensor
E13	Disconnection in fresh air sensor
E14	Short circuit in fresh air sensor
E15	Disconnection in water temperature sensor
E16	Short circuit in water temperature sensor
E18	Short circuit in sunlight sensor
E21	Disconnection in vent sensor
E22	Short circuit in vent sensor
E43	Abnormality in vent damper
E44	Abnormality in air mix damper
E45	Abnormality in FRESH/RECIRC air damper
E51	Abnormality in refrigerant pressure

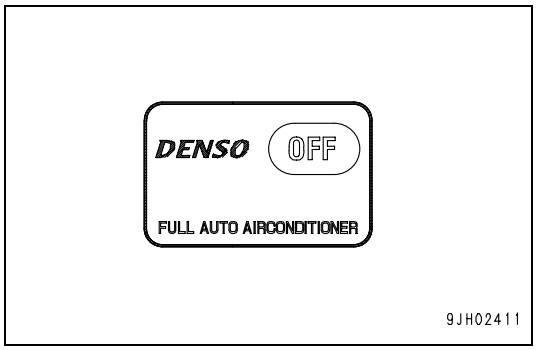

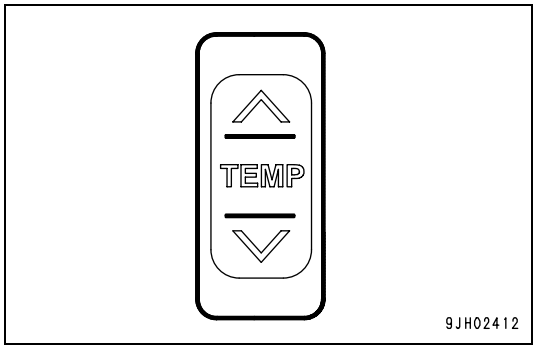

- When more than one failure is detected, press the "∧" or "∨" portion of temperature setting switch (3) to display the failures in turn.
- After completing the troubleshooting, press OFF switch (1) again to return to the normal display.

If any abnormality is detected by the self-diagnostic function, ask your Komatsu distributor to carry out inspection and repair.

SWITCH SET TEMPERATURE DISPLAY BETWEEN °F AND °C

It is possible to switch the set temperature display between °F and °C.

If the "∧" and "∨" portions of temperature setting switch (3) are pressed at the same time for more than 5 seconds while the fan is running, the temperature display will switch between °F and °C. (Note that the unit is not displayed.)

	Liquid crystal display range
°C	18.0 to 32.0
°F	63 to 91

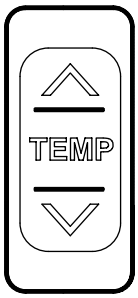

FUSIBLE LINK

If the starting motor will not rotate when the starting switch is turned ON, a possible cause is disconnection of wire-type fusible link. Open the door on the left side of the machine body to inspect the fusible link and, if necessary, replace it.

REMARK

A fusible link is a large-sized fuse wire installed in the high current flow portion of the circuit to protect electrical components and wiring from burning, similar to an ordinary fuse.

CONTROLLER

A pump and governor controller is provided. Is located underneath the seat.

NOTICE

- **Never splash or spill water, mud or drink over the controller as this may cause a fault.**
- **If a fault occurs in the controller, do not attempt repair, but consult your Komatsu distributor.**

TOOL BOX

This is used for keeping the tools.

REFUELLING PUMP

SAFETY

- Do not bring fire or sparks near fuel - smoking is prohibited.
- In event of ingested fuel - do not induce vomiting. Drink large quantity of milk or water and seek medical attention.
- Skin protection - wear protective gloves when dispensing fuel. Plastic gloves conforming to EN388 cat: 2 are recommended.
- Attendance - transfer of fuel must always take place under the supervision of the operator.
- Location for refuelling: Ensure that refueling takes place away from hazardous areas.

PROCEDURE

1. When the machine is operated on sites with no fuel container and pump, the machine may be refuelled, using the refuelling pump, from fuel barrels.

2. The refuelling pump is located in the compartment at front right hand side of the machine, in front of the fuel tank.

3. Stop the machine engine.
4. Open the cap on the foot valve by unscrewing fully.
5. Check strainer on the fuel hose end is clean.
6. Place the fuel hose into the fuel barrel, ensuring that the foot valve is placed at the bottom of the barrel.
7. Open the cap on top of the tank.
8. Switch on the pump.
9. Check that the pump primes properly (should prime within 1 minute). If it does not, stop the pump and check that the strainer is clean and hose is immersed in the fuel.

10. When the level indicator(1) shows the tank to be full, stop the pump. Take care not to allow fuel to overflow from the tank.

11. Close the cap on the foot valve by screwing fully.

12. Replace the hose and the tank cap.

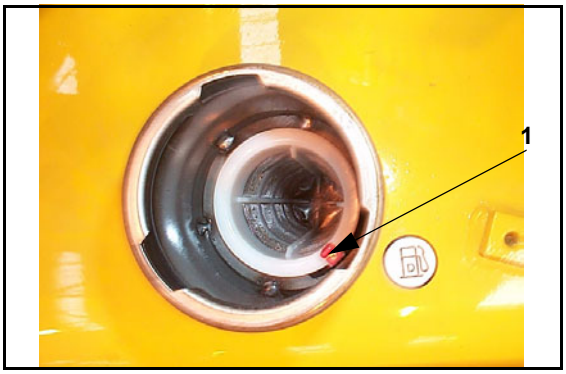

NOTE: The pump is protected by a fuse. If pump fails to function, check fuse (15A).
Do not allow the pump to run dry, as this will overheat the motor. If the barrel is emptied during the refuelling stop the pump immediately.
The maximum permitted running time for the pump is 30 minutes. The tank should be full well within this time. Do not allow the pump to run for longer than this as damage will occur to the motor.

MAINTENANCE

Weekly: Clean the suction filter.
Monthly: Check hose joints, electrical cables and clean the pump body of impurities.
Storage: If the pump is not to be used for a period, ensure that fuel is sprayed into the motor housing every two weeks to prevent risk of rusting to the rotor.

WARNING LAMPS

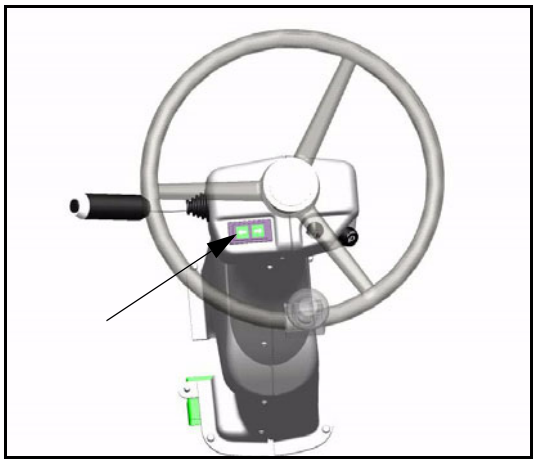

1. INDICATOR WARNING LAMP

When the indicator is pulled fully backward, warning light (A) will flash to indicate the driver's intention to turn to the left.

When the indicator is pushed fully forward, warning light (B) will flash to indicate the driver's intention to turn to the right.

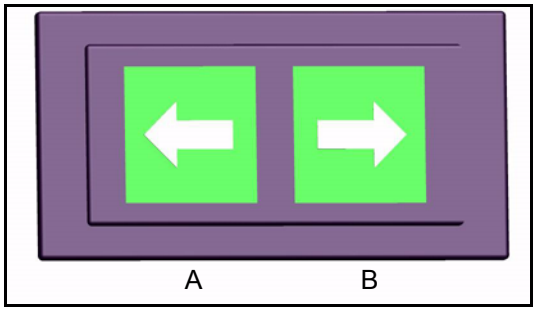

HANDLING ACCUMULATORS

⚠ WARNING

After stopping the engine, always raise the safety lock to the LOCK position.

The accumulators are filled with high-pressure nitrogen gas, and it is extremely dangerous if they are handled in the wrong way.
Always observe the following precautions.

- **Never make any hole in the accumulators or expose them to flame or fire.**
- **Do not weld any boss to the accumulators.**
- **When disposing of accumulators, it is necessary to release the gas from the accumulators, so please contact your Komatsu distributor.**

Brake circuit accumulators

This machine is equipped with accumulators in the brake circuits.

The accumulator is a device to store the pressure in the circuit, and when it is installed, the circuit can be operated for a short time even after the engine is stopped.

The accumulators are installed to the position shown in the diagram on the right.

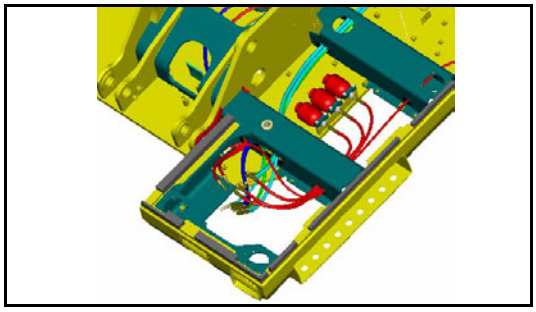

Control circuit accumulator

This machine is equipped with an accumulator in the control circuit. The accumulator is a device to store the pressure in the control circuit, and when it is installed, the control circuit can be operated for a short time even after the engine is stopped. Therefore, if the control lever is moved in the direction to lower the work equipment, it is possible for the work equipment to move under its own weight.

The accumulator is installed to the position shown in the diagram on the right.

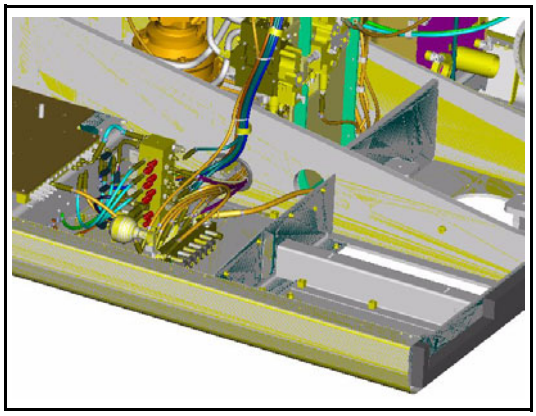

OPERATION

CHECK BEFORE STARTING ENGINE

WALK-AROUND CHECK

⚠ WARNING

Dirt, oil or fuel around the parts of the engine which reach high temperatures may cause fire and damage to the machine.
Check carefully, and if any abnormality is found, always repair it or contact your Komatsu distributor.

Before starting the engine, look around the machine and under the machine to check for loose nut or bolts, or leakage of oil, fuel, or coolant, and check the condition of the work equipment and hydraulic system.
Check also for loose wiring, play, and collection of dust at places which reach high temperatures.

Always carry out the items in this section before starting the engine each day.

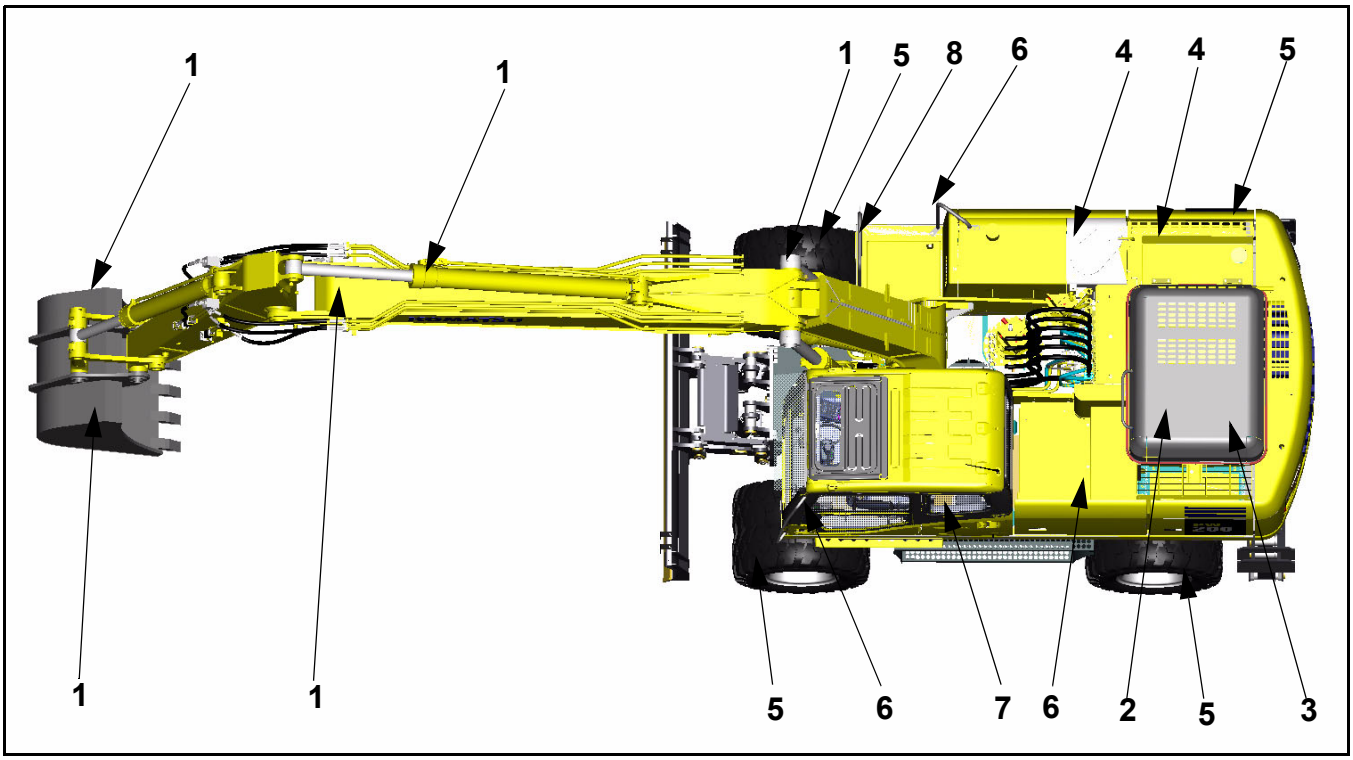

1. Check for damage, wear, play in work equipment, cylinders, linkage, hoses.

Check that there are no cracks, excessive wear, or play in the work equipment, cylinders, linkage, or hoses. If any abnormality is found, repair it.

2. Remove dirt from around engine, radiator, battery

Check that there is no dirt accumulated around the engine, battery or radiator. If any dirt is found, remove it. Also check for flammable material (rags, leaves, twigs, grass etc.) and remove.

3. Check for leakage of water or oil around engine

Check that there is no leakage of oil from the engine or leakage of water from the cooling system. If any abnormality is found, repair it.

4. Check for oil leakage from hydraulic equipment, hydraulic tank, hoses, joints

Check that there is no oil leakage. If any abnormality is found, repair the place where the oil is leaking.

5. Check for damage to wheels + tyres

6. Check for damage to handrail, loose bolts

Repair any damage and tighten any loose.

7. Check for damage to gauges, monitor, loose bolts

Check that there is no damage to the gauges and monitor in the operator's cab. If any abnormality is found, replace the parts. Clean off any dirt on the surface.

8. Clean rear view mirror, check for damage

Check that there is no damage to the rear view mirror. If it is damaged, replace it with a new mirror. Clean the surface of the mirror and adjust the angle so that the view to the rear can be seen from the operator's seat.

9. Check lifting eye for damage

Check the lifting eye (or hook and safety latch) for damage. If damage is found, contact your Komatsu distributor for repair.

10. Check seat belt and mounting clamps.

Check there is no abnormality in the seat belt or mounting clamps. If there is any damage, replace with new parts

CHECK BEFORE STARTING

Always carry out the items in this section before starting the engine each day.

CHECK COOLANT LEVEL, ADD WATER

⚠ WARNING

- **Do not open the radiator cap unless necessary. When checking the coolant, always check the radiator reserve tank when the engine is cold.**
- **Immediately after the engine is stopped, the coolant is at a high temperature and the radiator is under high internal pressure. If the cap is removed to drain the coolant in this condition, there is danger of burns. Wait for the temperature to go down, then turn the cap slowly to release the pressure before removing it.**

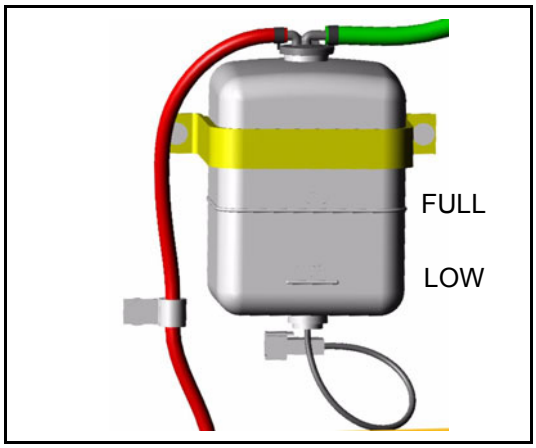

1. Open the rear door on the left side of the machine and check that the cooling water level is between the FULL and LOW marks on radiator reserve tank (1) (shown in the diagram on the right). If the water level is low, add water through the water filler of reserve tank to the FULL level.
2. After adding water, tighten the cap securely.
3. If the reserve tank becomes empty, first inspect for water leaks and then fill the radiator and the reserve tank with water.

CHECK OIL LEVEL IN ENGINE OIL PAN, ADD OIL

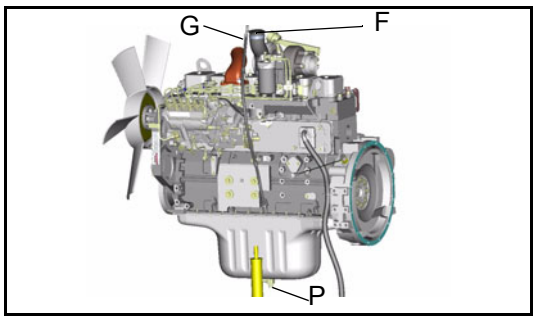

1. Open the engine hood.
2. Remove dipstick (G) and wipe the oil off with a cloth.
3. Insert dipstick (G) fully in the oil filler pipe, then take it out again.
4. The oil level should be between the H and L marks on dipstick (G)

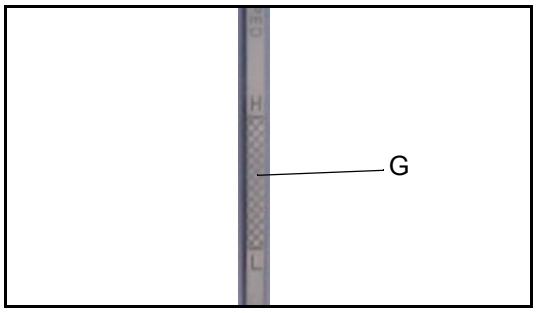

If the oil level is below the L mark, add engine oil through oil filler (F).

For details of the oil to use, see "USE FUEL, COOLANT AND LUBRICANTS ACCORDING TO AMBIENT TEMPERATURE (269)"

5. If the oil is above the H mark, drain the excess engine oil from drain plug (P), and check the oil level again.
6. If the oil level is correct, tighten the oil filler cap securely and close the engine hood.

REMARK

Ensure the machine is level when checking oil level and wait 15 minutes after stopping engine before checking the oil level.

WARNING

Allow the engine to cool before checking the oil level to avoid burns by touching hot engine parts.

CHECK FUEL LEVEL, ADD FUEL

WARNING

When adding fuel, never let the fuel overflow. This may cause a fire. If spilling fuel, thoroughly clean up any spillage.

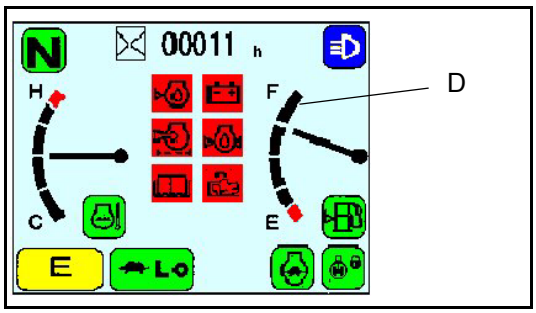

1. Check fuel level on monitor panel (D).

2. If fuel level is on the E marker you need to refill the tank.
3. Open fuel filler cap (F) on fuel tank.
4. When the fuel filler cap (F) is opened, float gauge within filler neck will rise according to fuel level. Check that the fuel tank is full by looking into tank and checking float gauge.
5. If the tank is not full, add fuel through the fuel filler until the float gauge (G) rises to the maximum position. Fuel tank capacity: 370 litres. Position of tip of float gauge (G) when tank is full: Approx. 50 mm from top of surface of fuel tank.
6. After adding fuel, push float gauge (G) straight down with fuel filler cap (F). Be careful not to get float gauge (G) caught in the tab of fuel filler cap (F), and tighten fuel filler cap (F) securely.

   For details of the fuel to use, see "USE FUEL, COOLANT AND LUBRICANTS ACCORDING TO AMBIENT TEMPERATURE (269)"

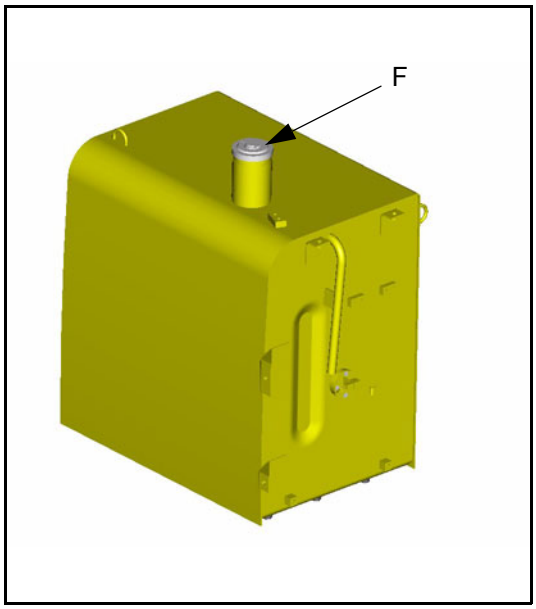

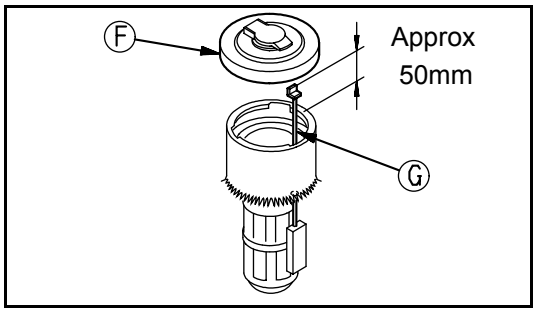

REMARK

If breather holes (1) on the cap is clogged, the pressure in the tank will drop and fuel will not flow.
Clean the hole from time to time.

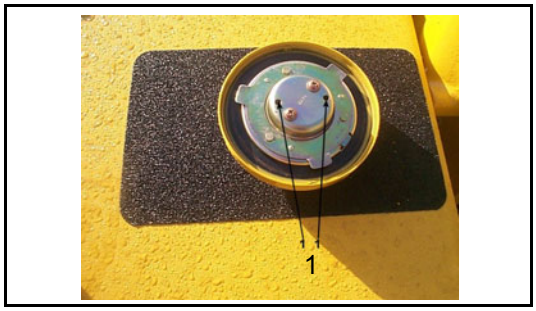

CHECK OIL LEVEL IN HYDRAULIC TANK, ADD OIL

⚠ WARNING

- **When removing the oil filler cap, oil may spurt out, so turn the cap slowly to release the internal pressure before removing the cap.**
- **If oil has been added to above the H mark, stop the engine and wait for the hydraulic oil to cool down, then drain the excess oil from the drain plug (P).**

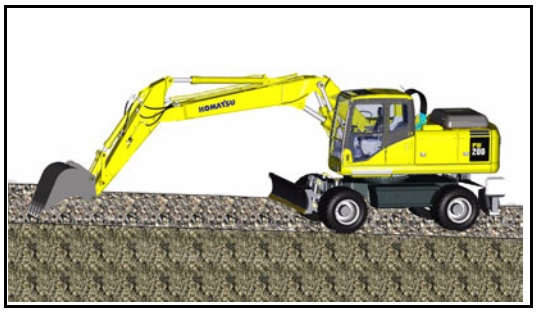

1. If the work equipment is not in the condition shown in the diagram on the right, start the engine, run the engine at low speed, retract the arm and bucket cylinders, then lower the boom, set the bucket teeth in contact with the ground, and stop the engine.
2. Check sight gauge (G). The oil level is normal if midway between the H and L marks.

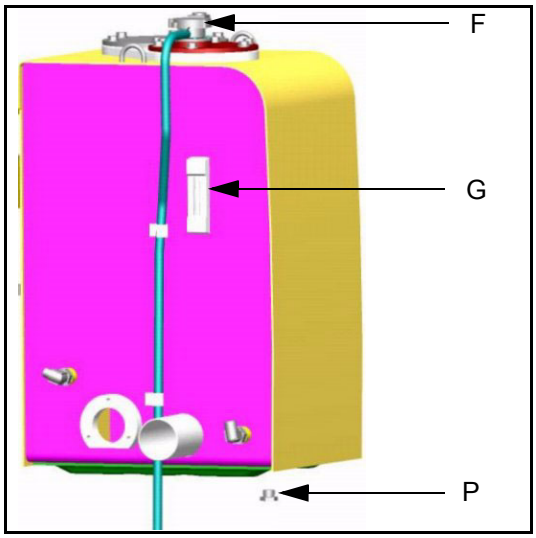

NOTICE

Do not add oil if the level is above the H line. This will damage the hydraulic equipment and cause oil to spurt out.

3. If the level is below the L mark, remove cap (F) from the hydraulic tank and add oil.

For details of the oil to use, see "USE FUEL, COOLANT AND LUBRICANTS ACCORDING TO AMBIENT TEMPERATURE (269)"

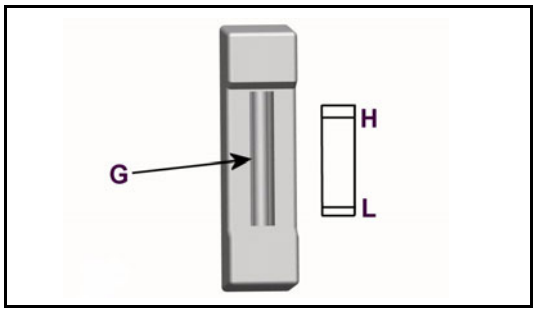

REMARK

The oil level will vary depending upon the oil temperature

Accordingly, use the following as a guide:

- Before operation: around midway between H and L
  (Oil temperature 10 to 30°C)
- Normal operation: around H level
  (Oil temperature 50 to 80°C)

CHECK AIR CLEANER FOR CLOGGING

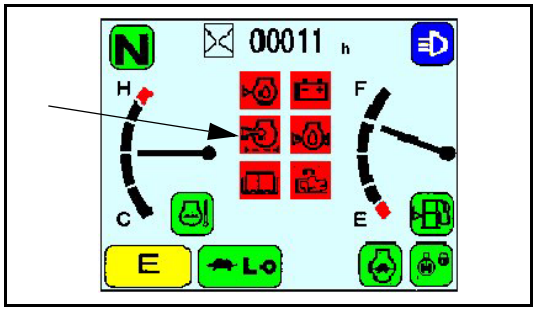

1. Confirm that the air cleaner clogging monitor is not lit
2. If lit, immediately clean or replace the element.

   For details of the method of cleaning the element, see "CLEAN INSIDE OF COOLING SYSTEM (290)"

CHECK ELECTRIC WIRING

⚠ WARNING

- **If the fuses frequently blow, if there are traces of short circuits in the electrical wiring, locate the cause immediately and carry out repairs, or contact your Komatsu distributor for repairs.**
- **Keep the top surface of the battery clean and check the breather hole in the battery cap. If it is clogged with dirt or dust, wash the battery cap to clean the breather hole.**

Check for damage, wrong fuse capacity, and any sign of disconnection or short circuit in the electric wiring. Check for loose terminals and tighten any loose parts.

In particular check the wiring of the "battery", "starting motor" and "alternator" carefully.

When carrying out walk-around checks or checks before starting, always check if there is any accumulation of flammable material around the battery, and remove it.

Please contact your Komatsu distributor for investigation and correction of the cause.

CHECK FUNCTION OF HORN

1. Turn the starting switch to the ON position.
2. Confirm that the horn sounds without delay when the horn button is pressed. If the horn does not sound, ask your Komatsu distributor for repair.

CHECK FOR WATER AND SEDIMENT IN WATER SEPARATOR, DRAIN WATER

Do not over tighten the valve. Over tightening can damage the threads.

1. Open the door at the rear right of the machine.
2. Inspect the water separator, and check if the ring inside has risen to the marked line.
3. If the ring has risen to the marked line, carry out the procedure from Step 4.

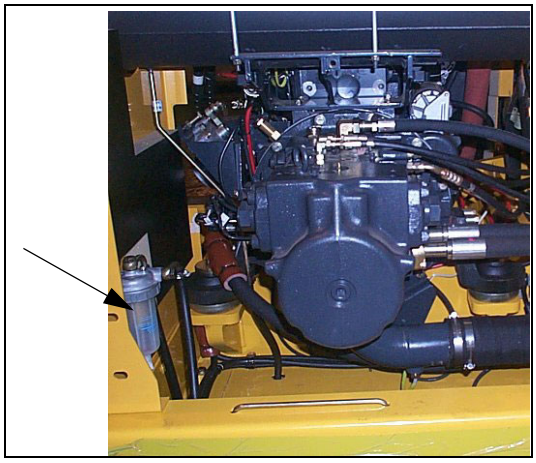

4. Set a container under the water separator to catch the drained FUEL.
5. Secure fuel line to prevent leakage.
6. Remove air bleed plug (5) at the top of the water separator.
7. Loosen drain valve (1) at the bottom of the water separator, and drain the water and sediment into the container.
8. Loosen ring nut (2), then remove filter case (3).
9. Remove element (4) from the separator base.
10. Wash element (4) in clean diesel oil.
11. Check element (4), and replace it if it is damaged.
12. When installing element (4), perform Steps 9 and 8 in the opposite order.
    Tightening torque of ring nut (2): 40 ± 3 N•m
    {4.1 ± 0.3 kgf•m}
13. Fill filter case (3) with fuel. When the fuel comes out from air bleed plug (5), tighten air bleed plug (5).

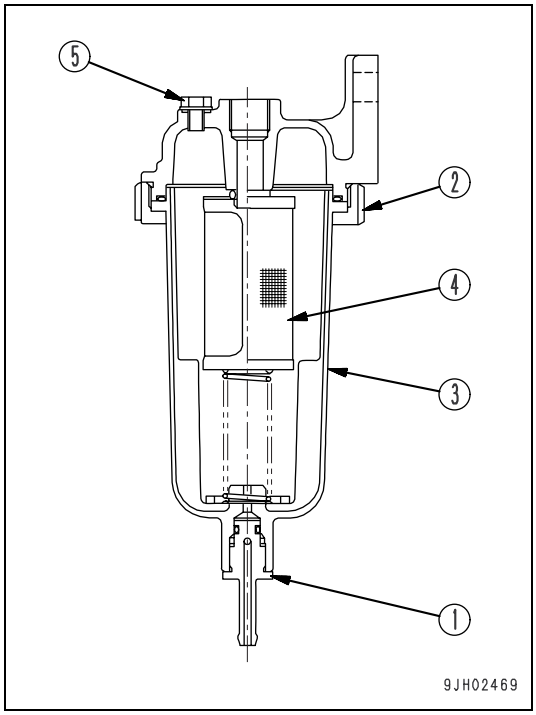

ADJUSTMENT BEFORE OPERATION OPERATOR'S SEAT (AIR SUSPENSION SEAT)

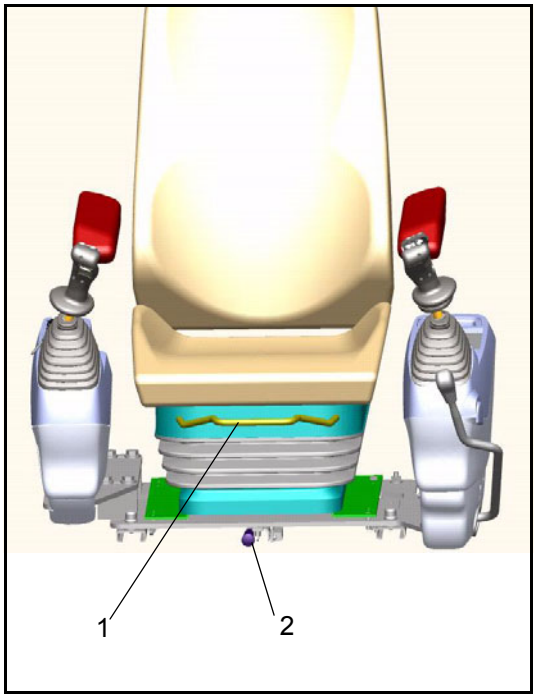

(A) Fore-and-aft adjustment of seat

Pull lever (1) up. After the seat is set to the desired position, release the lever.

NOTE: This operation will affect relative position of seat and wrist control levers.

(B) Forward/aft adjustment of seat and base

Pull lever (2) sideways. After the seat is set to the desired position release the lever.

NOTE: This operation will not affect relative position of seat and wrist control levers.

(C) Adjustment of reclining seat

The backrest is adjusted using the locking lever (3). Once locking lever (3) is in locked position it should not be possible to move onto another position.

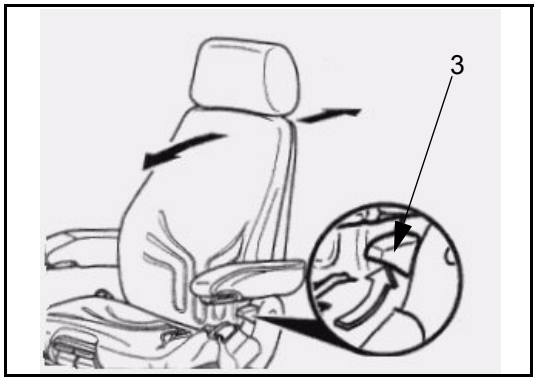

(D) Adjustment of arm rest height

The inclination of the armrests can be modified by turning the adjustment knob.

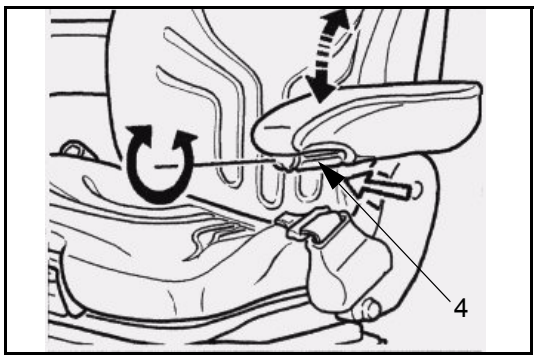

(E) Adjustment of tilting seat angle

To adjust the tilt of the seat lift left hand handle (5). By exerting pressure on or off the seat it can be moved to the desired angle position.

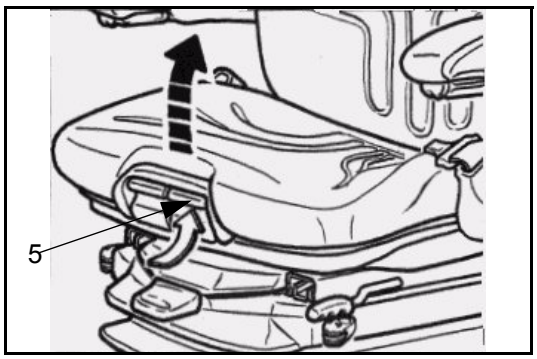

(F) Suspension adjustment

The seat should be adjusted for the drivers weight by briefly pulling the actuator lever of the automatic and height adjuster (6) with the vehicle at a standstill and the driver sitting on the seat, the driver must sit absolutely still during adjustment.

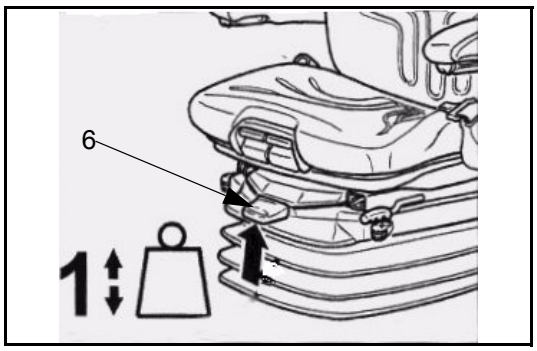

(G) Lumbar adjustment

The curve of the backrest cushion can be individually adjusted by pressing the upper and lower switches (7).

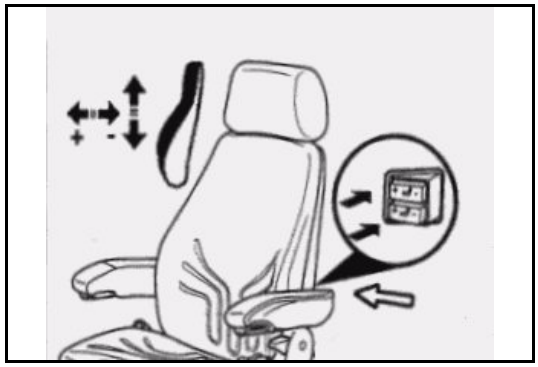

(H) Height adjustment

The height can be altered by pulling or pressing the actuator lever fully out or in (8) if the adjustment reaches the top or bottom end stop, the height is adjusted automatically in order to guarantee a minimum spring level.

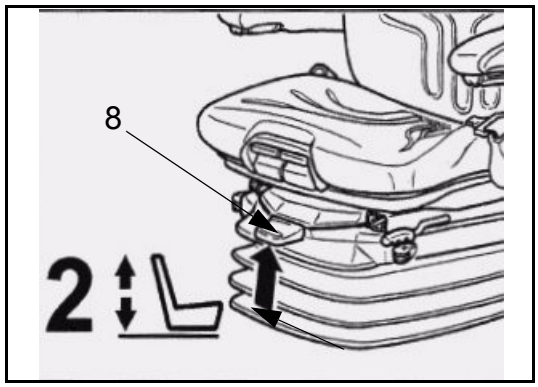

(I) Seat depth adjustment

To adjust the depth of the seat cushion, lift the right hand handle (9). By moving the seat cushion backwards or forwards the desired seating position can be reached.

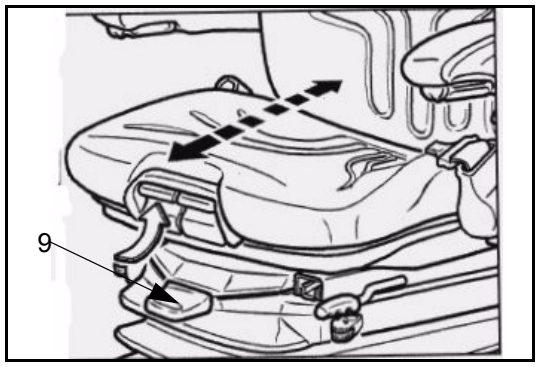

SEAT BELT

- Before fitting the seat belt, check that there is no abnormality in the belt or its mounting bracket. If it is worn or damaged, replace the seat belt.
- Even if the seat belt appears normal, replace it every 3 years. The date of manufacture of the belt is shown on the back of the belt.
- Always wear the seat belt during operations.
- Fit the seat belt so that it is not twisted.

FASTENING AND REMOVING SEAT BELT

This seat belt has a retractor, so it is not necessary to adjust the length.

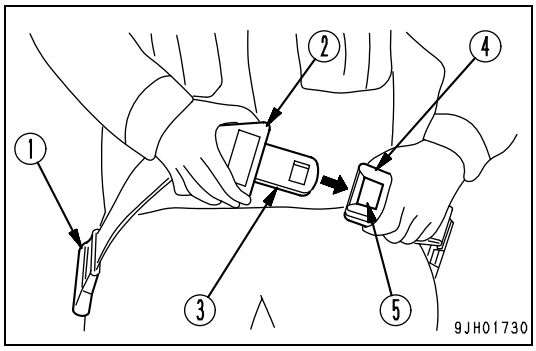

Fastening seat belt

Hold grip (2) and pull the belt out from the retractor (1), check that the belt is not twisted, then insert tongue (3) into buckle (4) securely.
Pull the belt lightly to check that it is properly locked.

Removing belt

Press button (5) in buckle (4), and remove tongue (3) from the buckle (4).
The belt is automatically spooled, hold grip (2) and return the belt slowly to the retractor (1).

ADJUSTMENT BEFORE OPERATION OPERATOR'S SEAT (MECHANICAL SEAT)

(A) Fore-and aft adjustment of seat

For details, see "(A) Fore-and-aft adjustment of seat (194)"

(B) Forward/aft adjustment of seat

For details, see "(B) Forward/aft adjustment of seat and base (194)"

(C) Adjusting of reclining seat

For details, see "(C) Adjustment of reclining seat (195)"

(D) Adjustment of arm rest height

For details, see "(D) Adjustment of arm rest height (195)"

(E) Adjustment of tilting seat angle

For details, see "(E) Adjustment of tilting seat angle (195)"

(F) Weight adjustment

The seat should be adjusted for the drivers weight by turning the weight adjuster lever (6) with the seat empty. The set weight can be read from the indicator.

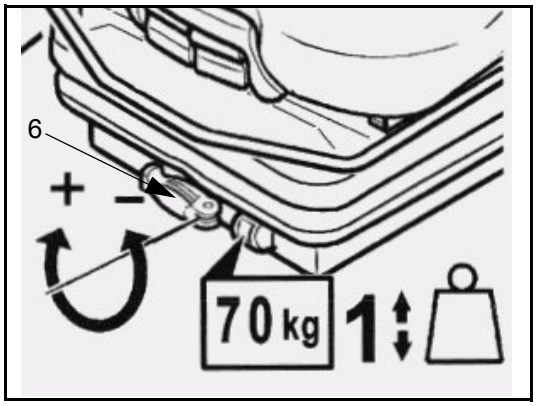

(G) Lumbar adjustment

By turning the adjustment knob (7) to the left or right, both the height and curvature of the backrest cushion can be individually adjusted.

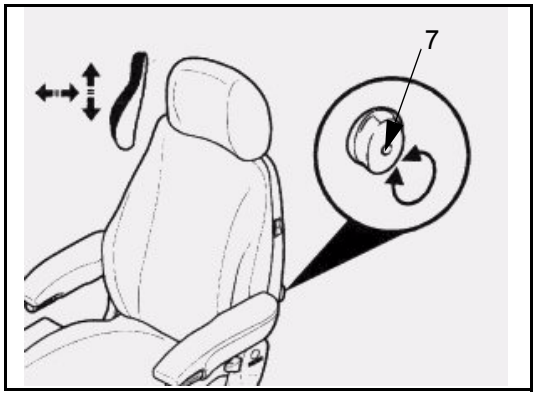

(H) Height adjustment

For details, see "(H) Height adjustment (196)"

(I) Seat depth adjustment

For details, see "(I) Seat depth adjustment (196)"

SEAT BELT

For details, see "SEAT BELT (196)"

OPERATIONS AND CHECKS BEFORE STARTING ENGINE

⚠ WARNING

- **If the control lever is touched by accident, the work equipment or the machine may move suddenly.**
- **When leaving the operator's compartment, always raise the safety lock lever to the LOCK position.**

1. Check that safety lock lever (16) is in the LOCK position.

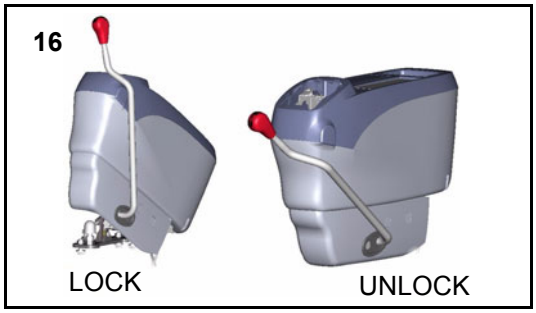

2. Select neutral on the right control lever.

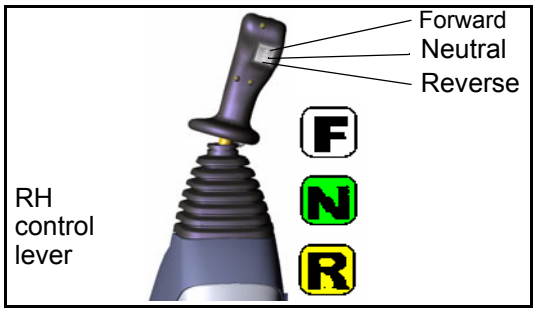

3. Insert the key in starting switch (7), turn the key to the ON position, then carry out the following checks.

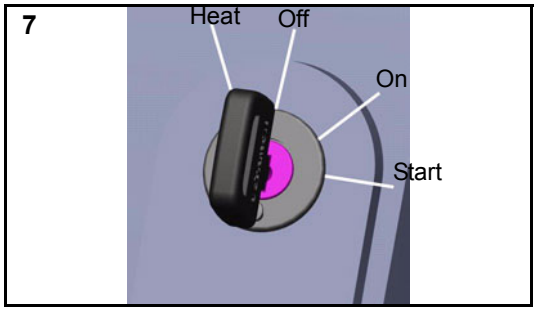

The buzzer will sound for approx. 1 sec., and the following switch lights will illuminate approx. 2 sec.

- Suspension Auto lock (1)
- Suspension lock (2)
- Control lever lock (3)
- Engine Auto Decel (4)
- Buzzer cancel (5)
- Hazard Warning (6)
- Rear Left Outrigger / Blade (7)
- Front Left Outrigger / Blade (8)
- Rear Right Outrigger (9)
- Front Right Outrigger (10)
- Front and Rear work light (11)
- Lower wiper (12))
- Heated Seat (13)
- Beacon Warning Light (14)
- Swing lock monitor (15)

If the monitors or gauges do not light up or the buzzer does not sound, there is probably a broken bulb or disconnection in the monitor wiring, so contact your Komatsu distributor for repairs.

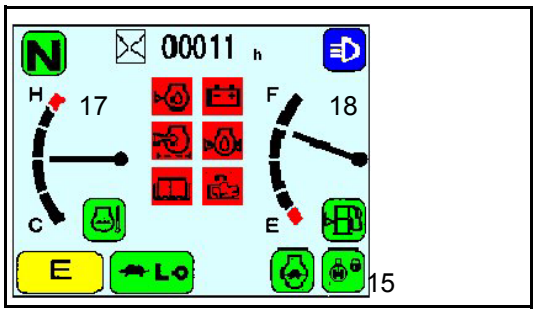

After approx. 3 sec., the following gauges will remain on and the other monitors will go out.

The buzzer will sound intermittently and the monitor will show the low brake pressure symbol if the machine has been idle for some time.

- Engine water temperature gauge (17)
- Fuel gauge (18)

Press lamp switch (11) to turn on the front and rear work lamps.

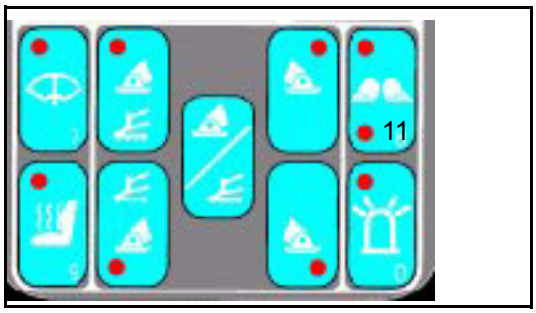

If the lamps do not light up, there is probably a broken bulb or disconnection in the wiring, so contact your Komatsu distributor for repairs.

⚠ CAUTION

It is illegal to travel on the road in certain countries with rearward facing worklights illuminated.

STARTING ENGINE

NORMAL STARTING

⚠ WARNING

- **Check that there are no persons or obstacles in the surrounding area, then sound the horn and start the engine.**
- **Exhaust gas is toxic, when starting the engine in confined spaces, ensure adequate ventilation at all times.**

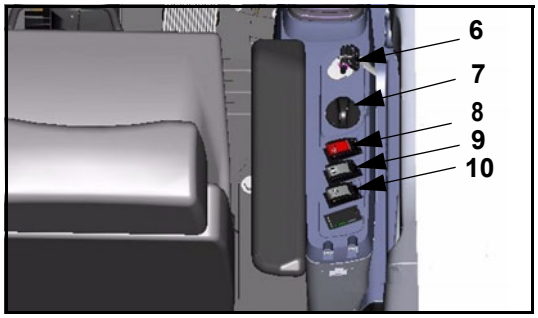

1. Set fuel control dial at the low idling (MIN) position.

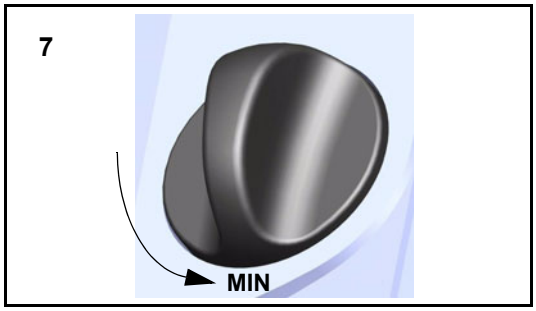

2. Turn the key in starting switch to the START position. The engine will start.

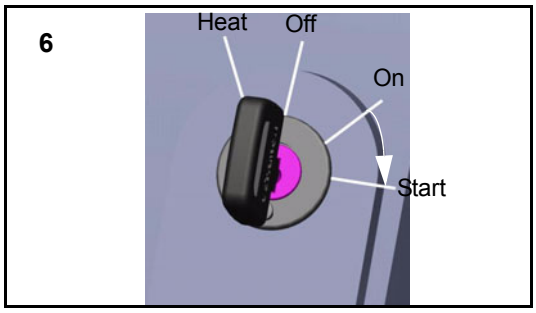

3. When the engine starts, release the key in starting switch. The key will return automatically to the ON position.

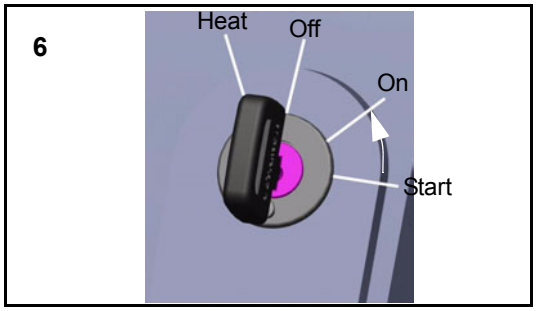

STARTING IN COLD WEATHER

⚠ WARNING

- **Check that there are no persons or obstacles in the surrounding area, then sound the horn and start the engine.**
- **Never use starting aid fluids as they may cause explosions.**

NOTICE

Do not keep the starting motor rotating continuously for more than 20 seconds.
If the engine fails to start, repeat steps from 2 after waiting for about 2 minutes.

When starting in low temperatures, do as follows.

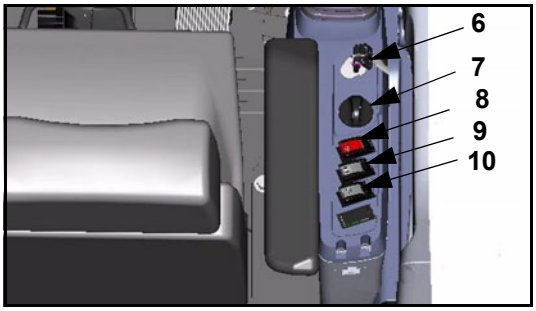

1. Set fuel control dial (7) at the low idling (MIN) position.

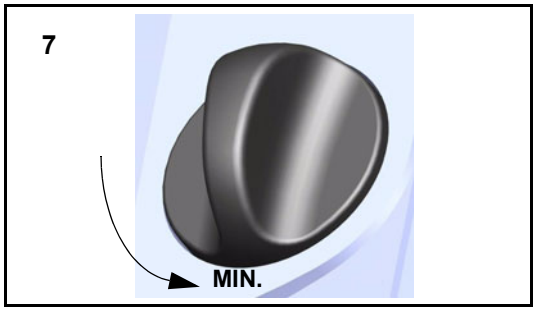

2. Hold the key in starting switch (6) at the HEAT position, and check that preheating monitor lights up.
   After about 30 seconds, preheating monitor will flash for about 10 seconds to indicate that preheating is finished.

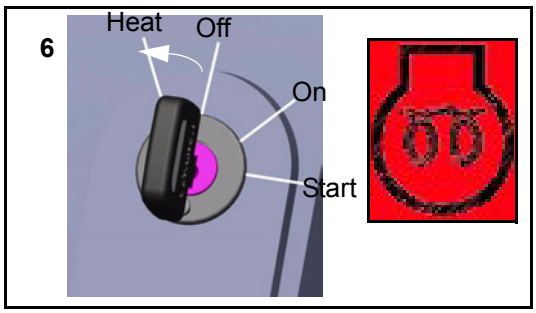

REMARK

The monitor and gauge also light up when the key is at the HEAT position, but this does not indicate any abnormality. If the temperature is low, the monitor screen may become dark or it may take time for the display to appear. This is normal.

3. When preheating monitor flashes, turn the key in starting switch (6) to the START position to start the engine.

Ambient temperature	Preheating time
Above 0° C	-
0°C to -10°C	20 seconds
-10°C to -20°C	30 seconds

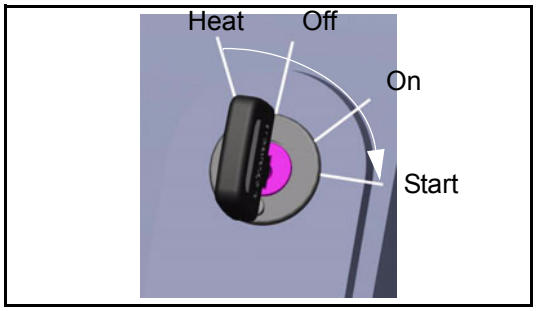

4. When the engine starts, release the key in starting switch(6). The key will return automatically to the ON position.

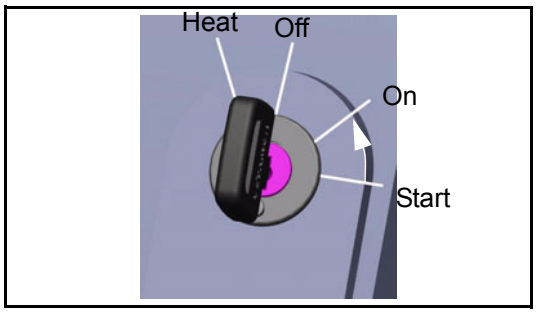

OPERATIONS AND CHECKS AFTER STARTING ENGINE

⚠ WARNING

- **Emergency stop**
  If there has been any abnormal actuation or trouble, turn the starting switch key to the OFF position.
- **If the work equipment is operated without warming the machine up sufficiently, the response of the work equipment to the movement of the control lever will be slow, and the work equipment may not move as the operator desires, so always carry out the warming-up operation. Particularly in cold areas, be sure to carry out the warming-up operation fully.**

WARMING UP OPERATION

NOTICE

- **When the hydraulic oil is at a low temperature, do not carry out operations or move the levers suddenly. Always carry out the warming-up operation. This will help to extend the machine life.**
  Do not suddenly accelerate the engine before the warming-up operation is completed.
- **Do not run the engine at low idling or high idling continuously for more than 20 minutes. This will cause leakage of oil from the turbocharger oil supply piping.**
  If it is necessary to run the engine at idling, apply a load from time to time or run the engine at a mid-range speed.

REMARK

If water temp is above 30°C, to protect the turbocharger, the engine speed does not rise for 2 seconds after starting, even if the fuel control dial is turned.
If the hydraulic oil temperature is low, the hydraulic oil temperature monitor display will be white

After starting the engine, do not immediately start operations. First, carry out the following operations and checks.

1. Turn fuel control dial (7) to the center position between LOW IDLING (MIN) and HIGH IDLING (MAX) and run the engine at medium speed for about 5 minutes with no load.

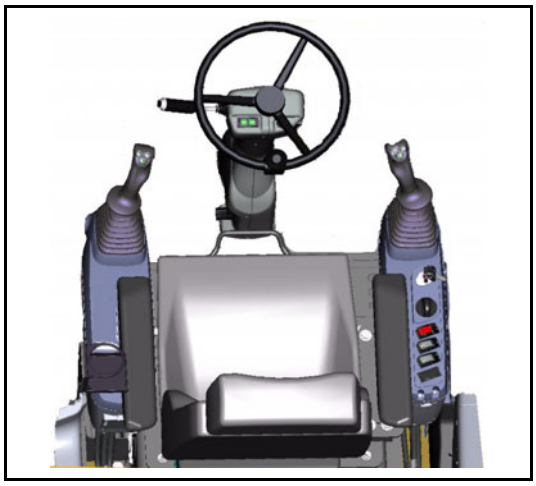

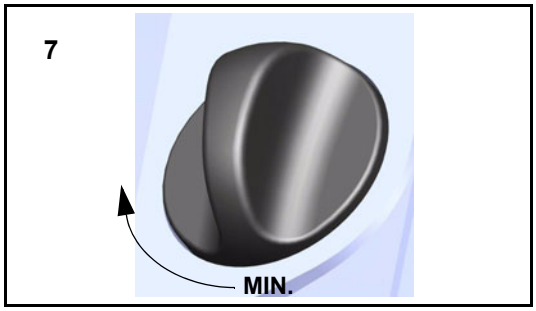

2. Lower the safety lock lever to the UNLOCK position, switch OFF the control lever lock switch and raise the bucket from the ground.

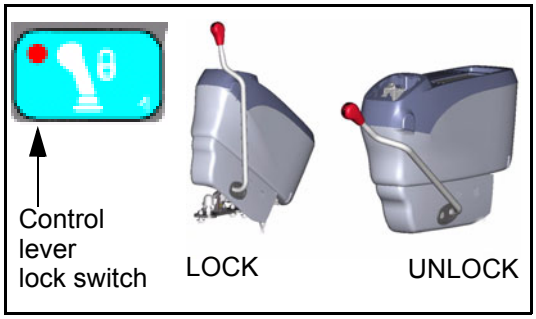

3. Operate bucket control - right control lever, and arm control - left control lever (slowly to move the bucket cylinder and arm cylinder to the end of the stroke.

(A) IN	(C) CURL
(B) OUT	(D) DUMP

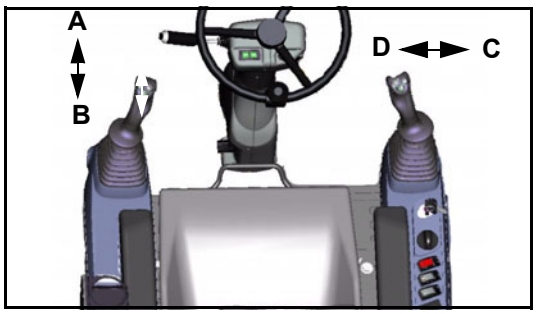

4. Carry out bucket and arm operation for 5 minutes at full stroke, alternating between bucket operation and arm operation at 30 second intervals.
   If the swing lock switch (9) is set to the ON (actuated) position and swing control lever is operated at full stroke, oil temperature rise can be increased quicker.

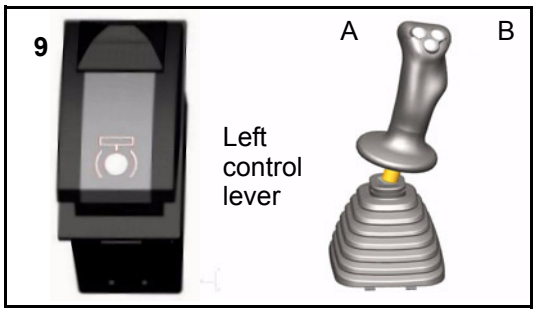

NOTICE

When the work equipment is retracted, take care that it does not interfere with the machine body or ground.

A	Left swing
B	Right swing

5. After carrying out the warming-up operation, check that each gauge and monitor lamp is in the following condition.

- Engine water temperature gauge (1): Inside black range
- Fuel gauge (2): Inside green range
- Engine water temperature monitor (3): green
- Radiator water level monitor (4): off
- Engine oil pressure monitor (5): off
- Charge level monitor (6): off
- Fuel level monitor (7): green
- Air cleaner clogging monitor (8): off
- Engine pre-heating lamp (9): green
- Engine oil level monitor (10): off
- Hydraulic oil temperature (11): green
- Hydraulic oil temperature gauge (12):inside black range
- Replacement monitor of engine oil: off (13)

6. Check that there is no abnormal exhaust gas colour, noise, or vibration. If any abnormality is found, repair it.

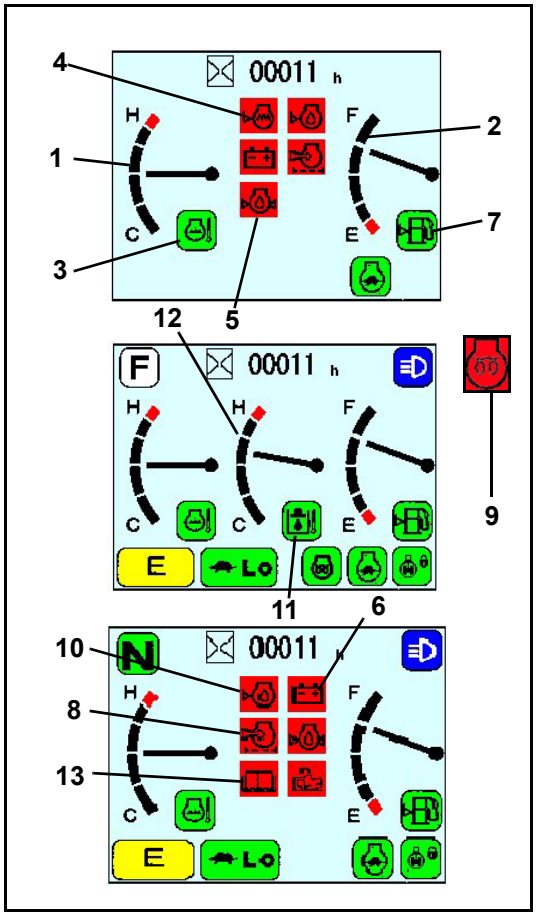

7. Press power mode select on the monitor panel until the lamp of the mode to be used lights up.

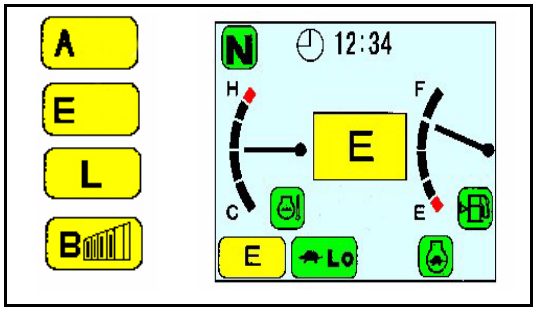

IN COLD AREAS (AUTOMATIC WARMING-UP OPERATION)

When starting the engine in cold areas, carry out the automatic warming-up operation after starting the engine.

When the engine is started, if the engine water temperature is low (below 30°), the warming-up operation is carried out automatically.

The automatic warming-up operation is cancelled if the engine water temperature reaches the specified temperature (30°C) or if the warming-up operation is continued for 10 minutes. If the engine water temperature or hydraulic oil temperature are low after the automatic warming-up operation, warm the engine up further as follows.

NOTICE

- **When the hydraulic oil is at a low temperature do not carry out operations or move the levers suddenly. Work equipment control will be slower and less responsive than normal therefore always carry out the warming up operation first to ensure safe operation of the machine and help extend the machine life.**

- **Do not suddenly accelerate the engine before the warming-up operation is completed.**
  Do not run the engine at low idling or high idling continuously for more than 20 minutes. This will cause leakage of oil from the turbocharger oil supply piping. If it is necessary to run the engine at idling, apply a load from time to time or run the engine at a mid-range speed.

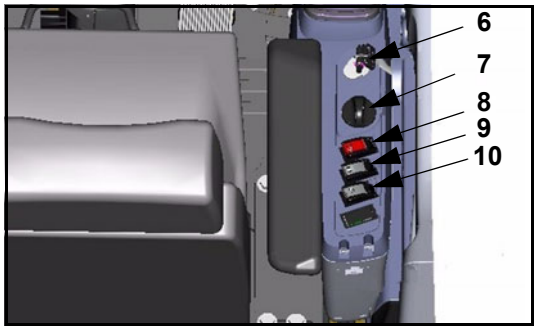

1. Set fuel control dial (7) at the low idling (MIN) position and run the engine for about 5 minutes without load.

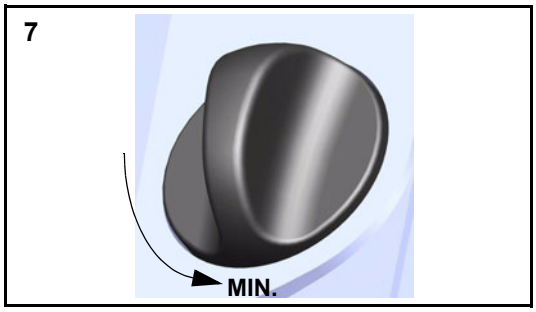

2. When the automatic warming-up operation is completed, press working mode switch on the monitor panel until the heavy-duty operation mode lamp lights up.

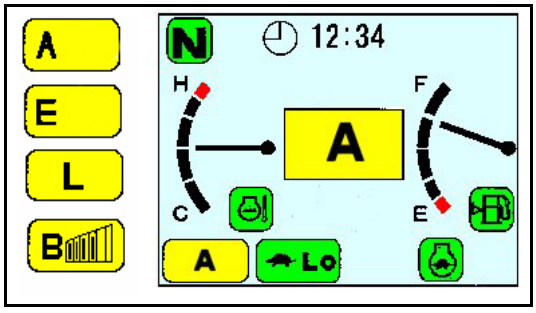

3. Turn fuel control dial to the mid-range speed position and turn swing lock switch ON.

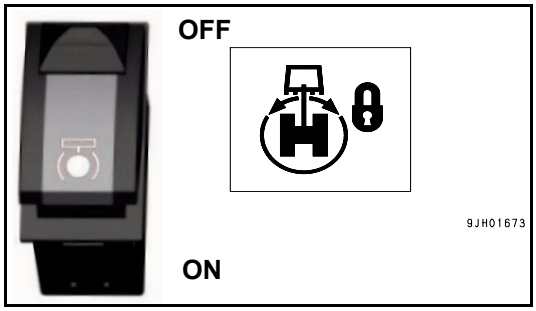

4. Lower safety lock lever to the UNLOCK position, put control lever lock switch to OFF position and raise the bucket from the ground.
5. Operate boom and bucket control lever and arm control lever slowly to operate the boom cylinder, bucket cylinder, and arm cylinder to the end of their stroke.

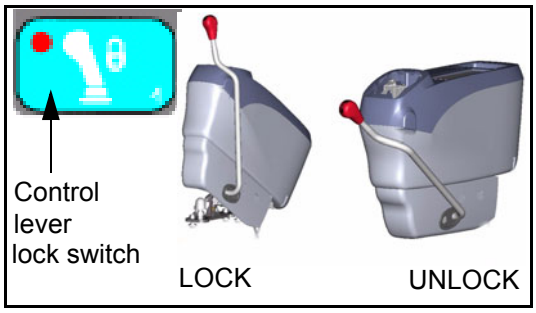

6. Operate the boom and arm slowly at the same time, and repeat this for 30 seconds.
   Next, repeat the same operation with the bucket and swing for 30 seconds. Operate both fully in turn for 5 minutes.

NOTICE

When pulling in the work equipment, be careful not to let it hit the chassis or ground.

7. Turn fuel control dial to the full speed (MAX) position and carry out the operation is Step 6 for 3 -5 minutes.
8. Repeat the following operation 3 - 5 times and operate slowly.

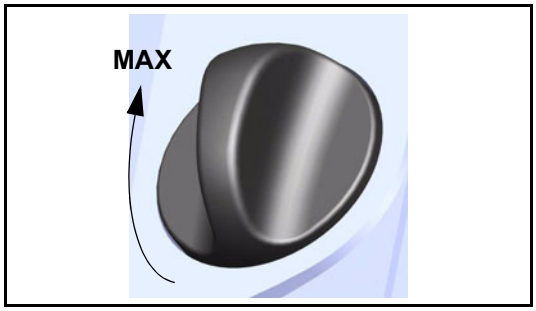

- Boom operation RAISE ↔ LOWER
- Arm operation IN↔ OUT
- Bucket operation CURL↔ DUMP
- Swing operation LEFT↔ RIGHT
- Travel (Lo) operation FORWARD↔ REVERSE

NOTICE

When the hydraulic oil is at a low temperature the machine travel function may have very slow operation. Always carry out the warming up operation before travelling to ensure correct function of the travel system and help extend the life of the machine.

REMARK

If the above operation is not carried out, there may be a delay in response when starting or stopping each actuator, so continue the operation until it becomes normal.

9. Use working mode switch (1) on the monitor panel to switch to the working mode to be used.

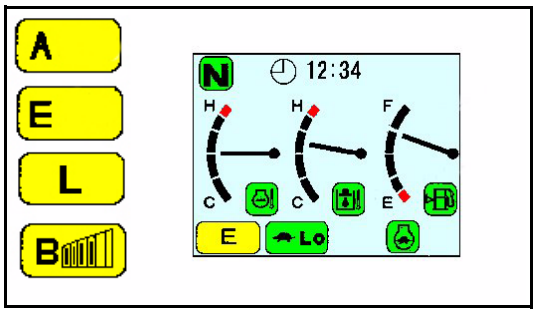

NOTICE

Cancelling automatic warming-up operation

If it becomes necessary in an emergency to lower the engine speed to low idling, cancel the automatic warming-up operation as follows.

1. Turn fuel control dial to the full speed (MAX) position and hold it for 3 seconds.

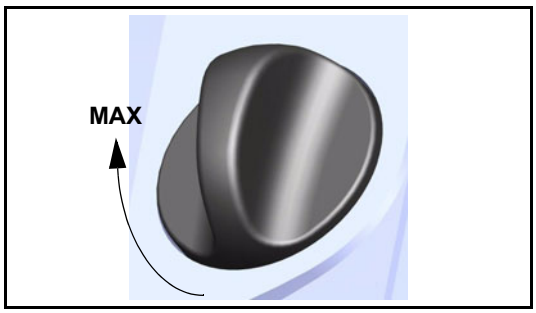

2. When fuel control dial is returned to the low idling (MIN) position, the engine speed will drop.

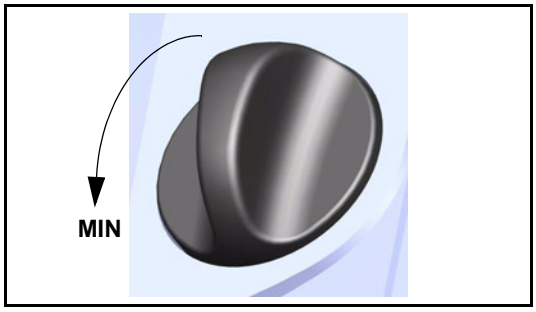

MOVING MACHINE OFF

MOVING MACHINE FORWARD

⚠ WARNING

- **When moving off, check that the area around the machine is safe, and sound the horn before moving.**
- **Clear all personnel from the machine and the area.**
- **Clear all obstacles from the path of the machine.**
- **If installed, ensure outriggers & dozer blade are up.**
- **If the lever is moved inside auto decel speed, engine speed will rise suddenly. Operate the levers carefully.**
- **Note the direction of undercarriage before moving off.**
- **Check that low brake pressure warning lamp is off**
- **Check service brake just after moving off.**
- **Always fasten seat belt**

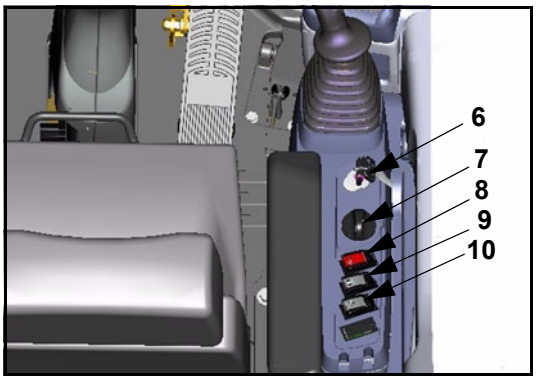

1. Set swing lock switch to the ON (actuated) position and confirm that swing lock monitor lamp lights up.

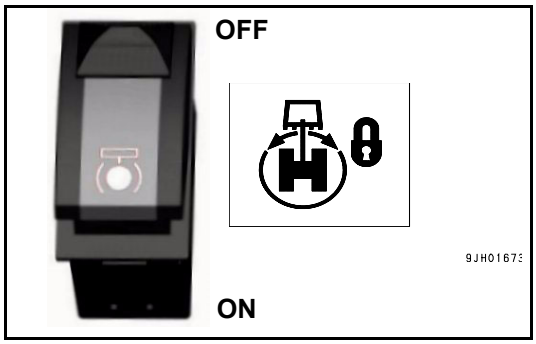

2. Turn fuel control dial to the min. idling position, engine speed is controlled automatically.

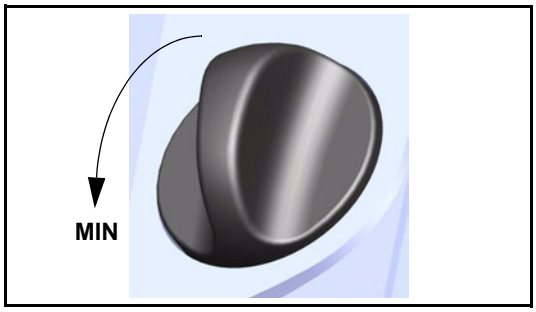

3. Lower the safety lock lever to the UNLOCK position, fold the work equipment, and raise it 40 - 50 cm from the ground.

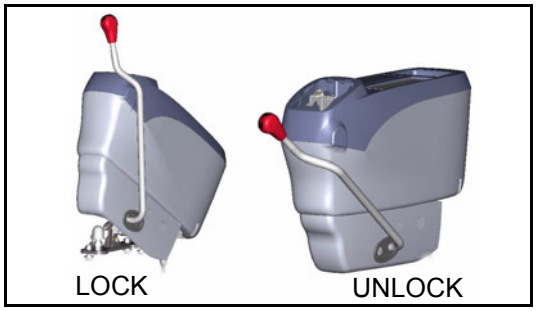

4. Raise the stabilisers/dozer blade (when fitted). See Section on operation of dozer & outriggers.
5. Ensure that the wheel brake is off by depressing service brake pedal (29) to release latch mechanism (29a).
6. Release the front axle suspension lock, using automatic suspension lock switch.

   For details, see "AUTOMATIC SUSPENSION LOCK SWITCH (139)".

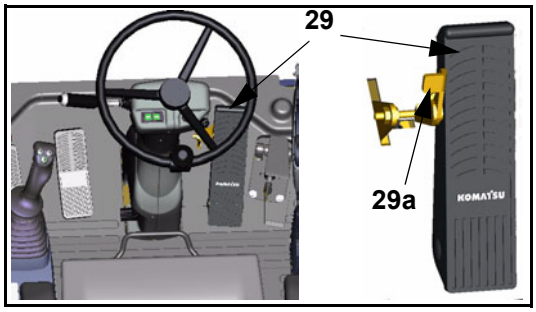

7. Select travel speed using switch. According to the ground conditions and type of operation required, as follows:

   for details, see "CREEP SPEED SELECTOR SWITCH (133)"

Creep mode: see **"CREEP SPEED SELECTOR SWITCH (133)"**: for fine control speed is restricted to 2 km/h.

NOTE: Creep can be engaged from any other mode by pressing the Creep button.Press High / Low speed select switch to dis-engage Creep.
Creep mode will only engage fully when the machine comes to a stop.

Lo mode: for travelling on rough surfaces and on steep slopes (up or down), e.g. work sites. Speed is restricted to 9 km/h

NOTE: Lo mode will only engage when machine speed is below km/h

Hi mode is for high speed travel, on smooth surfaces with slopes up to 5 degrees.

Auto mode: for travelling on roads or job sites with varying terrain.

⚠ WARNING

Do not use auto mode on steep downhill slopes - use Lo mode

8. Select travel direction on right control lever (32)

- If the undercarriage is not facing the normal forward direction - then the travelling direction will be opposite to that which is selected.
- The front (steering) axle has two suspension locking cylinders mounted above the axle. These can be seen clearly from the operators seat, indicating that the undercarriage is facing in the normal forward direction.

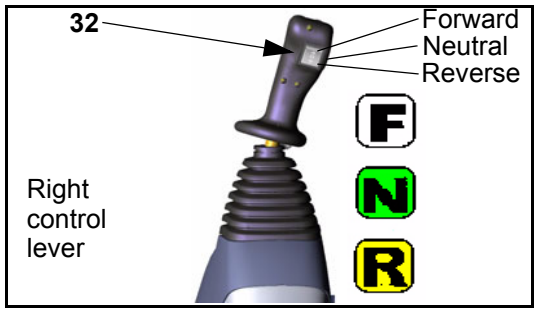

9. Release park brake by using switch (8). If on downhill slope hold machine on foot brake to prevent machine rolling.

NOTE: If starting to travel on a steep uphill slope, first press the travel pedal fully, then release the park brake, this will minimise rolling backwards when staring.

10. Press the travel pedal (30) smoothly. The machine will move off in the selected direction.

REMARK

Engine speed will automatically increase when travel pedal is depressed.

11. When changing direction from forward to reverse or vice versa, always allow the machine to stop before changing the position of the travel switch on right control lever.

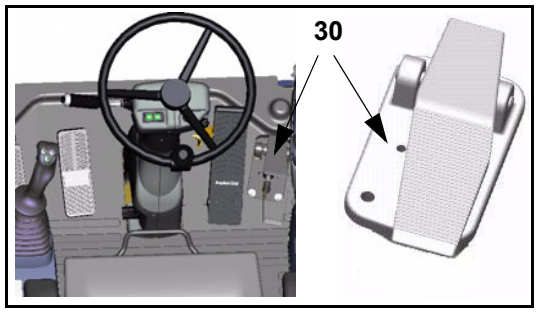

REMARK

When travelling in Auto mode a slight shock may occasionally be heard and/or felt as the automatic transmission clutch operates. This is normal.

STEERING

⚠ WARNING

- **If the upper structure is turned 180 degrees (the under-carriage is reversed) the machine steers in the opposite direction of the steering wheel. Therefore, take care of the direction of the chassis.**
- **When auto-deceleration is selected, if the wrist control lever or travel pedal is operated at the reduced engine speed, the engine speed will rise suddenly.**
- **Before moving off turn steering wheel full lock in both directions and check wheels turn fully.**
- **The travel pedal will not function until the safety lock lever is down fully. (UNLOCKED).**

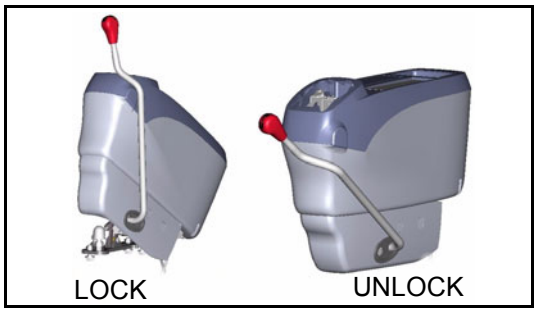

1. The machine can be steered by turning steering wheel in the desired direction.

The position of the steering column can be adjusted fore and aft by depressing pedal (1), moving column to desired position and releasing pedal (1).

TRAVELLING ON PUBLIC HIGHWAY

⚠ WARNING

- **When driving the machine on a road, raise the outriggers and/or dozer blade and insert the lock pins to prevent them from moving.**
- **Position Work Equipment to suit local road travel regulations.**
- **The control lever lock switch (located on the monitor panel) must be engaged when travelling on the Public Highway to prevent accidental use of the work equipment.**
- **Engage the mechanical swing lock when driving on public roads see “MECHANICAL SWING LOCK” on page 158.**
- **It is a legal requirement in some countries to use a mechanical swing lock when driving on public roads.**
- **Switch on warning beacon if applicable to local road travel regulations.**
- **Lock off (A) Bucket cylinder - both sides & (B) Arm Cylinder - rear of boom, with isolation valves provided.**

1. Before travelling on a Public Highway, with the safety lock lever lowered (in the UNLOCK position) engage the control lever lock switch to prevent accidental use of the work equipment, the rear brake lights will now become active.
2. Before travelling on a Public Highway fold the work equipment, and raise to 40 - 50 cm from the ground

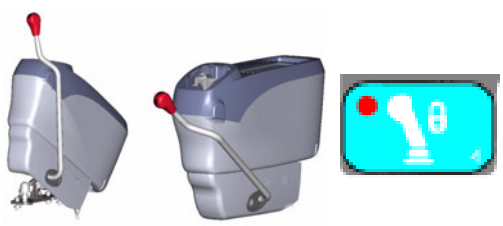

LOCK UNLOCK

3. Ensure machine is free of rocks and mud before travelling on a Public Highway

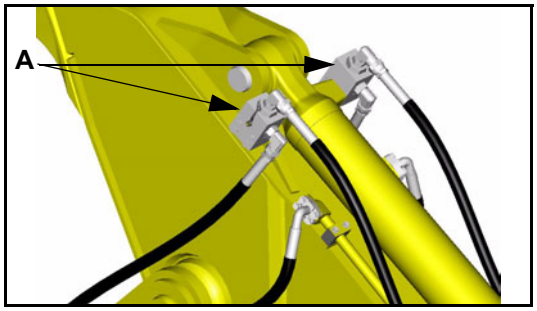

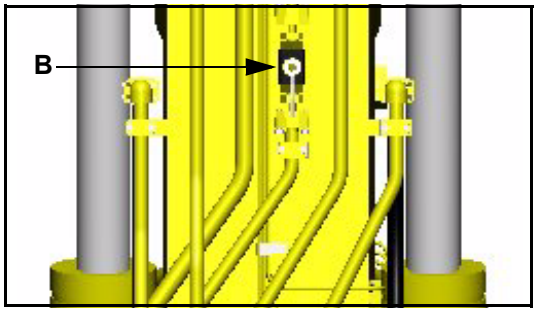

STOPPING & PARKING

⚠ WARNING

- **Avoid stopping suddenly. Give yourself ample room when stopping.**
- **If the control lever is touched by accident, the work equipment or the machine may move suddenly, and this may lead to a serious accident. Before leaving the operator's compartment, always raise the safety lock lever to LOCK the work equipment controls.**
- **When parking the machine, select flat hard ground and avoid dangerous places. If it is unavoidable to park the machine on a slope, insert chocks underneath the wheels. As an additional safety measure, thrust the bucket into the ground.**
- **Before travelling re-apply the swing brake**
- **Do not latch the brake pedal when moving**

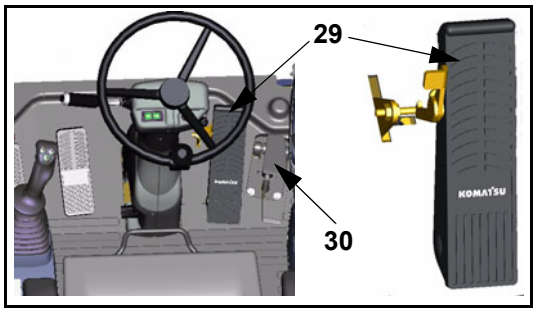

1. Release the travel pedal (30) and depress the service brake pedal (29) to stop the machine. (The service brakes may be locked by fully de-pressing the service brake pedal until it 'latches')

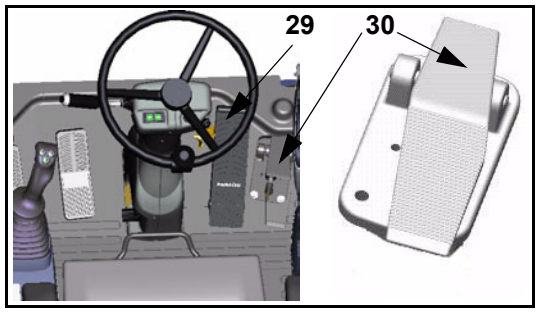

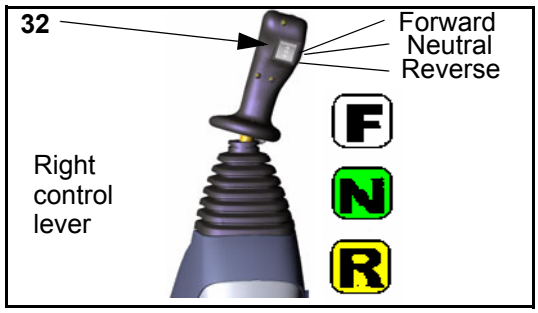

2. Select neutral on right control lever (32)
3. When parking, lower the work equipment until it touches the ground
4. Raise the safety lock lever to LOCK the work equipment, travel and attachment controls.
5. Apply Park brake

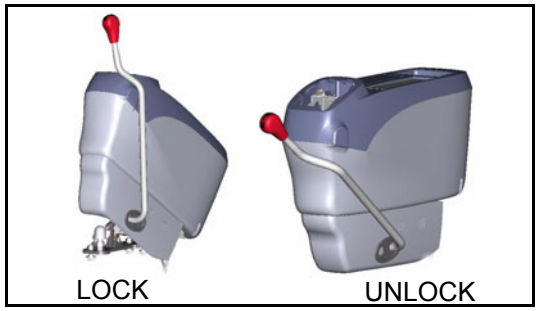

STOPPING MACHINE (EMERGENCY)

NOTE: The park brake on this machine is a hydraulic-mechanical device which can be used to stop the machine if the service brakes do not work. (In an Emergency only)

NOTICE

The park brake internal components may be destroyed during this operation & must be serviced prior to further operation.
ONLY USE IT IN AN EMERGENCY.

NOTE:

In the event of service brake failure:

1. Release travel pedal.
2. Depress service brake pedal. (to confirm no braking)
3. Brace yourself before engaging emergency brake (A seatbelt is fitted for your safety and comfort. Please wear this at all times.)

4. Press park break switch (8) to ‘on’ position, machine will very quickly come to a halt.

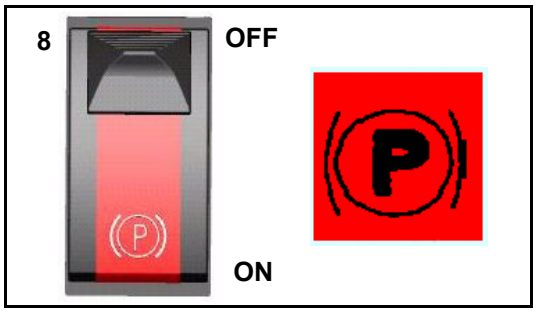

SWINGING (Slewing the upper carriage)

WARNING

Never apply swing brake when machine is swinging as this is a static brake only. (damage may occur otherwise)
Ensure the mechanical swing lock pin is disengaged before swinging. Failure to do so may result in damage to the machine.

When operating the swing, check that the area around the machine is safe.

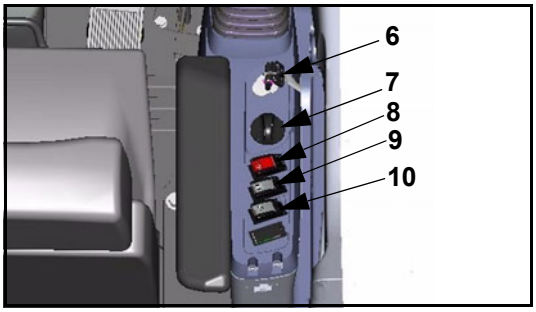

1. Before operating the swing, turn swing lock switch (9) OFF (CANCELLED).

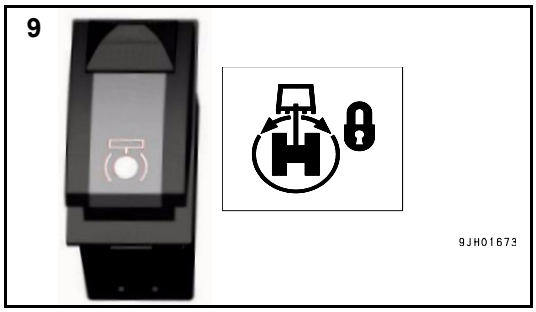

NOTICE

Check that swing lock monitor goes out at the same time.

2. Operate left work equipment control lever to swing the upper structure.
3. When not operating the swing, turn swing lock switch (9) ON (ACTUATED)
4. Before travelling re-apply swing lock brake

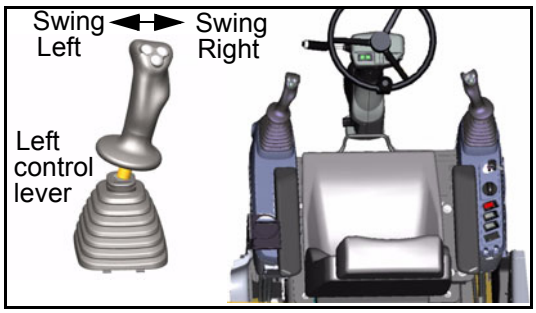

OPERATION OF WORK EQUIPMENT

WARNING

If any lever is operated when the engine is at auto deceleration speed, the engine speed will suddenly increase, so be careful when operating the levers.

The work equipment is operated by the left and right work equipment control levers. The left work equipment control lever operates the arm and swing, and the right work equipment control lever operates the boom and bucket.

The movements of the lever and work equipment are as shown in the diagrams on the right. When the levers are released, they automatically return to the neutral position and the work equipment is held in place.

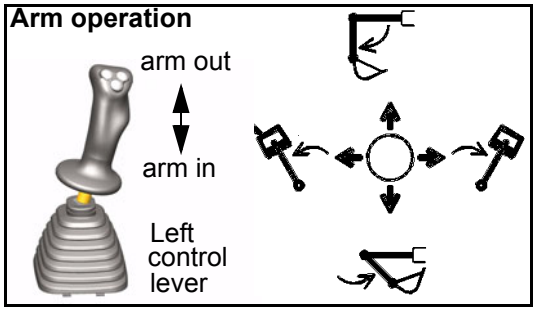

- If the work equipment control lever is returned to the neutral position for 4 seconds, even if the fuel control dial is set to FULL, the auto-deceleration mechanism will act to reduce the engine speed to auto-decel speed.

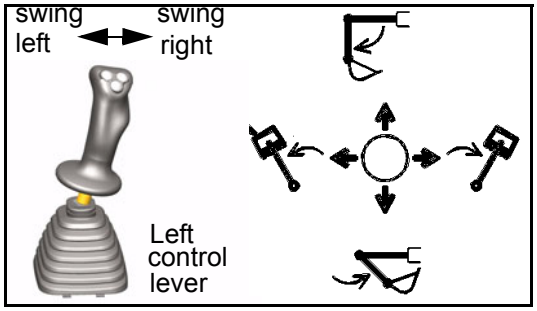

- If the levers are operated within 15 seconds after the engine stops, it's possible to lower the work equipment to the ground. In addition, the levers can also be operated to release any remaining pressure inside the hydraulic cylinder circuit and to lower the boom after loading the machine on a trailer.

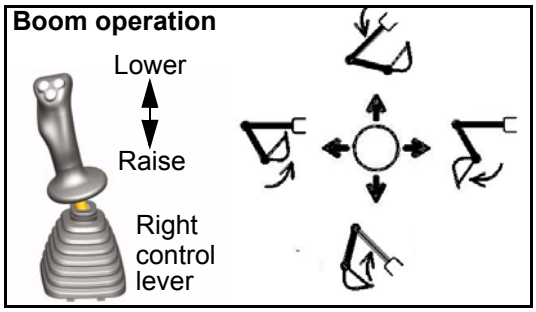

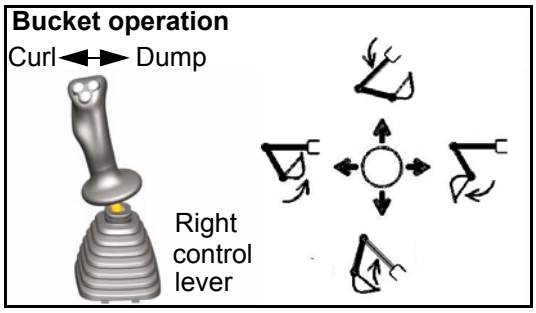

- **Hydraulic adjust boom operation:** Depress front of pedal (23) to extend the boom and the rear of the pedal to retract the boom.

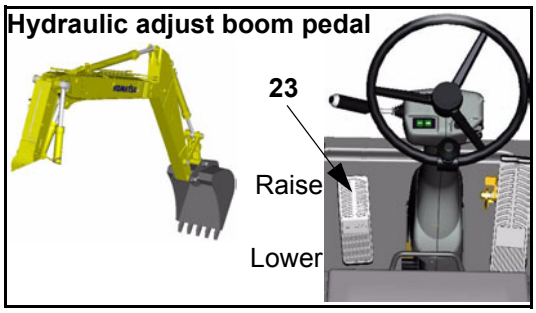

OPERATION OF DOZER + OUTRIGGERS

REMARK

Ensure safety lock lever is lowered (UNLOCKED).

1. Press switch (3) on right control lever to change from boom operation to dozer/outrigger operation (attachment).The monitor will now display symbol (12) indicating the dozer/outrigger option has been selected

2. Using monitor panel switches (16~20) select the desired combination of dozer/outriggers required. A light will illuminate next to the switch to confirm selection

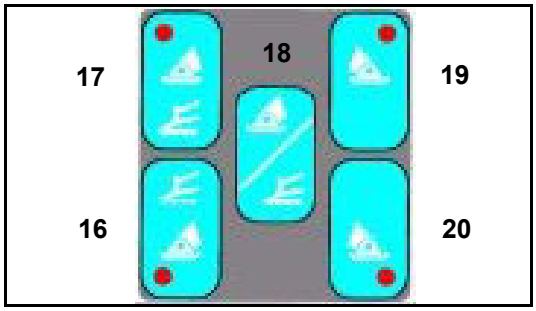

16	Rear Left Outrigger / Blade
17	Front Left Outrigger / Blade
18	All Outriggers/Outrigger & Blade
19	Front Right Outrigger
20	Rear Right Outrigger

3. Right control lever (4) will now operate the dozer/outriggers

1	Lever forward	Attachment down
2	Lever back	Attachment up

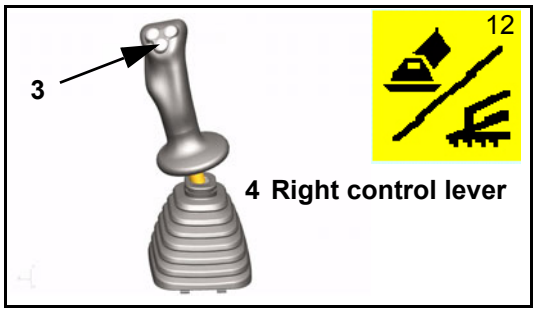

4. To return right control lever to boom operation activate switch (3). Symbol (12) will now disappear from the monitor panel display

⚠ WARNING

When moving the machine, confirm that the chassis attachment is raised.

PRECAUTIONS FOR USING THE DOZER

1. When using the dozer blade as stabiliser.
   Use the dozer blade in the same way as an outrigger. However, use it only on level ground so that uneven loads will not be applied to the blade.

2. When using the dozer blade with the upper structure facing the rear of the undercarriage, the steering wheel acts in the opposite direction to normal travel.

3. Ensure that suspension lock system is fully free when required for dozing operations. see "AUTOMATIC SUSPENSION LOCK SWITCH (139)"

NOTE: Dozer blade is to be used only for stabilizing and light dozing.

WORKING MODE SELECTION

WORKING MODE

By using the working mode selector switch **"WORKING MODE SELECTOR SWITCH (BASIC SWITCH) (132)"** to select a working mode that matches the operating condition, it is possible to carry out operations efficiently.
Use the following procedures to make the most effective use of each mode.

When the starting switch is turned ON, the working mode is set to A mode (digging).

Use the working mode switch on the monitor panel to set the most efficient mode to match the type of work.

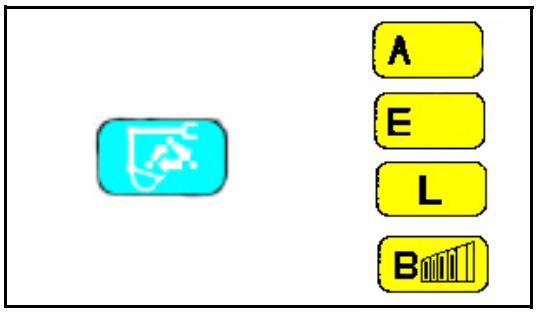

.

Working mode	Applicable operations
A mode	Normal digging, loading operations (Operations with emphasis on productivity)
E mode	Normal digging, loading operations (with emphasis on efficiency)
L mode	Lifting operations
B mode	Breaker operations

NOTICE

If breaker operations are carried out in the heavy digging mode, the hydraulic equipment may be damaged. Operate the breaker only in B mode.

ONE TOUCH POWER MAX.SWITCH

The one-touch power max switch can be used during operations to increase the power.Make effective use of this function whenever necessary in combination with the working mode.

1. Press top right hand switch on the left lever. The power is increased for up to 8.5 seconds. The increased power is automatically canceled after 8.5 seconds. After which the button can be re-pressed
   - This function is not actuated when the working mode is set to L mode or B mode.

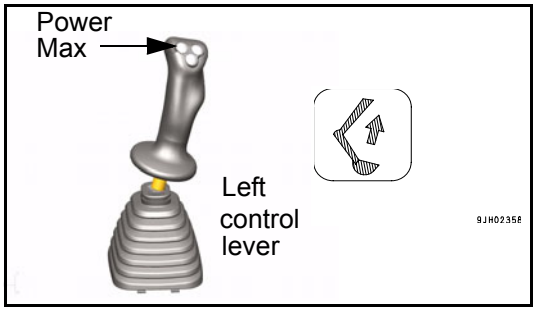

⚠ CAUTION

Continuous use of this facility will raise the hydraulic oil temperature above normal.

PROHIBITIONS FOR OPERATION

⚠ WARNING

- **If it is necessary to operate the work equipment control lever when the machine is traveling, stop the machine before operating the work equipment control lever.**
- **Never operate the machine on a rock bed (hard or soft rock).**

Prohibited operations using swing force

Do not use the swing force to compact soil or break earth mounds or walls.
When swinging, do not dig the bucket teeth into the soil. These operations will damage the work equipment.

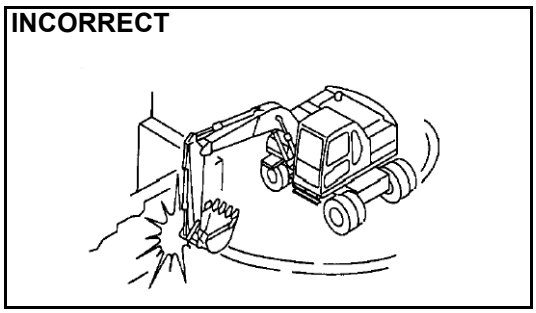

Prohibited operations using travel force

Do not leave the bucket dug into the ground and use the travel force to excavate. This will bring excessive force to bear on the rear of the machine.

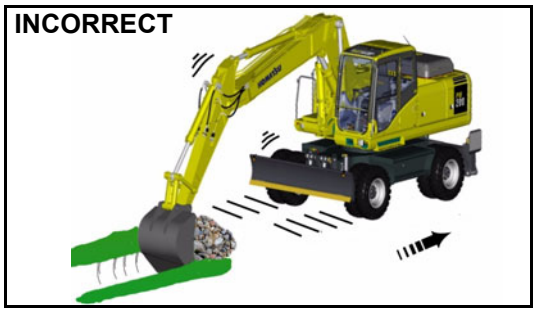

Precautions when operating hydraulic cylinders to end of stroke

If the cylinder is operated to the end of its stroke during operations, force will be brought to bear on the stopper inside the cylinder, and this will reduce the life of the machine. To prevent this, always leave a small safety margin when operating the cylinders.

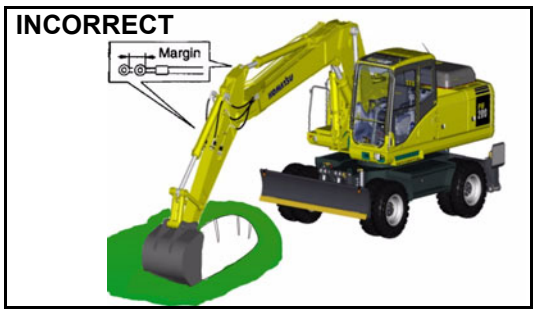

Prohibited operations using dropping force of bucket

Do not use the dropping force of the bucket as a pickaxe, breaker, or pile driver. This will bring excessive force to bear on the rear of

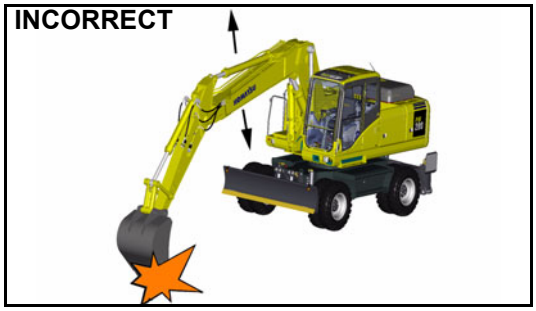

the machine, and will not only damage the machine, but is also dangerous.

Prohibited operations using dropping force of machine

Do not use the dropping force of the machine for digging.

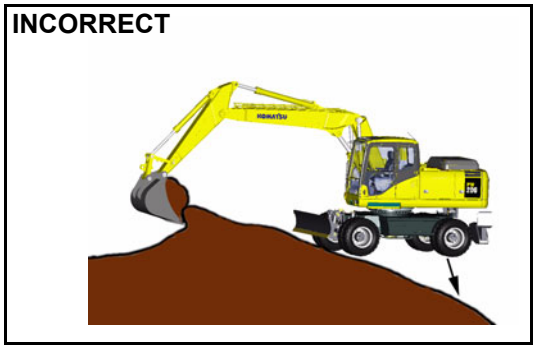

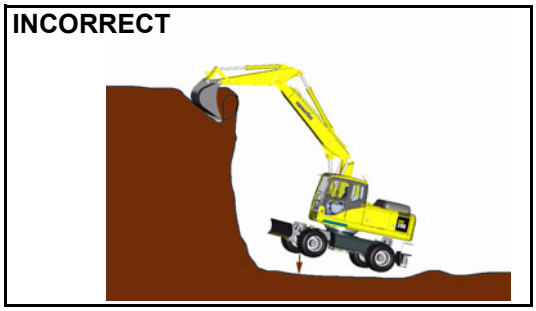

Digging rocky ground

It is better to excavate hard rocky ground after breaking it up by some other means. This will not only reduce damage to the machine but make for better economy.

PRECAUTIONS FOR OPERATION

PRECAUTIONS WHEN TRAVELLING

When travelling over obstacles such as boulders or tree stumps, ensure sufficient clearance to avoid undercarriage damage. As far as possible, remove such obstacles or avoid travelling over them.

Do not operate machine (working or travelling) on 1 tyre (if twin tyres are fitted) after a puncture as this puts excessive load onto the one remaining tyre.

To prevent loss of control refrain from travelling fast over rough ground.

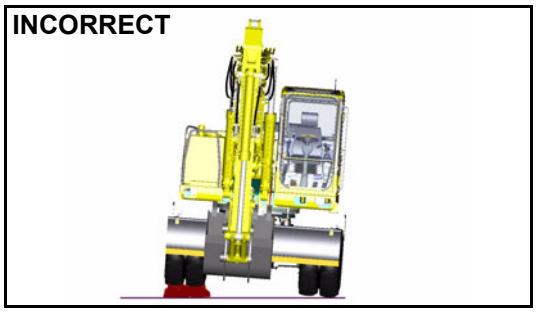

PRECAUTIONS AT Hi-SPEED TRAVEL

On uneven roadbeds such as rock beds or uneven roads with large rocks, travel in Lo speed mode and adjust the speed of the machine to prevent loss of control.

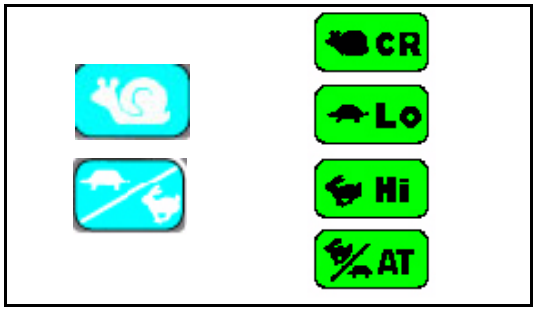

PERMISSIBLE WATER DEPTH

Do not immerse the machine in water by more than the permissible depth (axle centre).
In addition, for parts that have been immersed in water for a long time, pump in grease until the old grease comes out from the bearings. (i.e. the bucket pins).

WHEN LIFTING A LOAD

Front axle of machine must be locked as machine will become unstable.

NOTE: Precautions when using the work equipment.
Do not use the park brake to reduce movement of the machine when using work equipment. This will result in premature failure of the park brake.

PRECAUTIONS WHEN TRAVELLING UP OR DOWN HILLS

⚠ WARNING

- **When travelling, raise the bucket approx. 20 - 30 cm from the ground.**
- **Do not travel downhill with the upper carriage travelling in the reverse direction.**
- **When traveling over ridges or other obstacles, keep the work equipment close to the ground and travel slowly.**
- **It is dangerous to turn on slopes or to travel across slopes. Always go down to a flat place to perform these operations. It may be longer, but it will ensure safety.**
- **If the machine starts to slide or loses stability, lower the bucket immediately to the ground and brake the machine.**

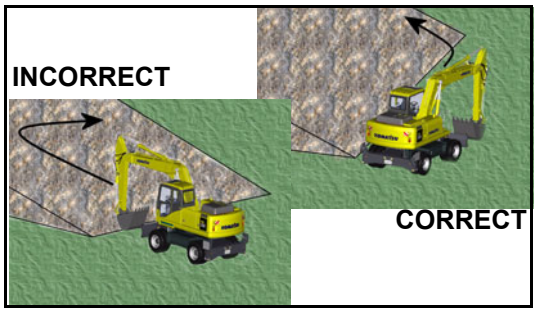

- **Turning or operating the work equipment when working on slopes may cause the machine to lose its balance and turn over, so avoid such operations. It is particularly dangerous to swing downhill when the bucket is loaded.**
  If such operations have to be carried out, pile soil to make platform on the slope so that the machine can be kept horizontal when operating.
- **Do not travel on slopes of over 20° as there is danger that the machine may overturn. (before travelling down steep slopes stop machine & engage low gear.)**

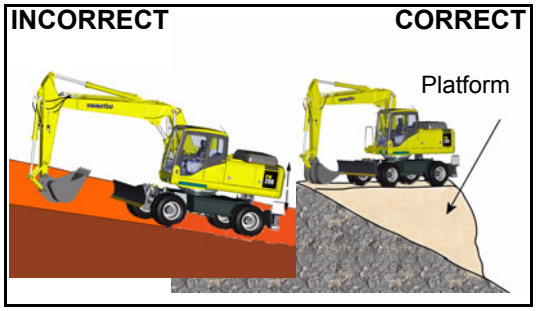

1. When travelling down hills of more than 5° first stop, and select Low travel mode. Release the service brake and proceed (full hydraulic braking will then be available).
2. When travelling down slopes of more than 15°, set the work equipment in the posture shown in the figure on the right, and lower the engine speed.

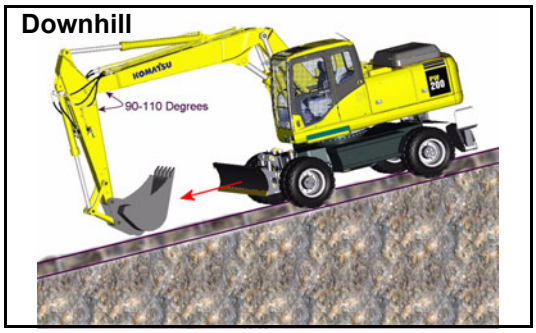

3. When travelling up a steep hill of more than 15°, set the work equipment in the posture shown in the diagram on the right.

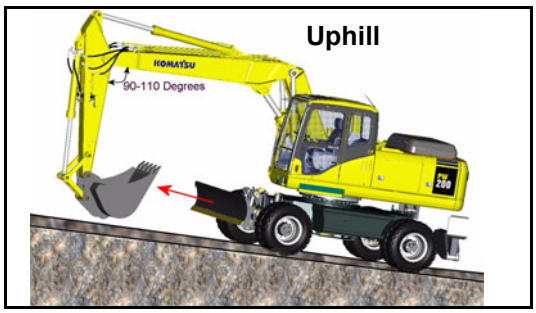

Precautions on slopes

- If the engine stops when the machine is on a slope, never use the left work equipment control lever to carry out swing operations. The upper structure will swing under its own weight.
- Do not open or close the door on the cab if the machine is on a slope. This may cause a sudden change in the door opening / closing force. Always keep the door locked.

HOW TO ESCAPE FROM MUD

Always operate carefully to avoid getting stuck in mud. If the machine does get stuck in mud, use the following procedures to get the machine out.

WHEN ONE SIDE IS STUCK

When only one side is stuck in mud, use the bucket to raise the wheels then lay boards or logs and drive the machine out. If necessary, put a board under the bucket also.

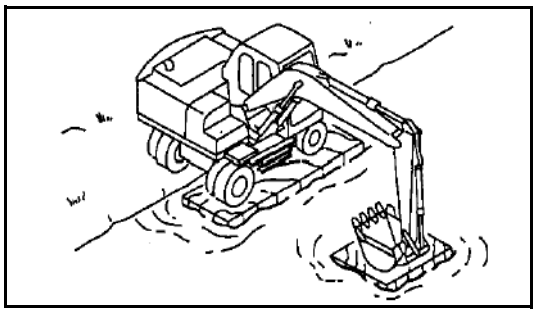

NOTICE

When using the boom or arm to raise the machine, always have the bottom of the bucket in contact with the ground. (Never push with the teeth). The angle between the boom and arm should be 90° to 110°.
The same applies when using the inverting bucket.

WHEN BOTH SIDES ARE STUCK

When all wheels are stuck in mud and the machine will not move, lay boards as explained above, and dig the bucket into the ground in front. Then pull in the arm as in normal digging operations and drive machine in required direction to free it from the mud.

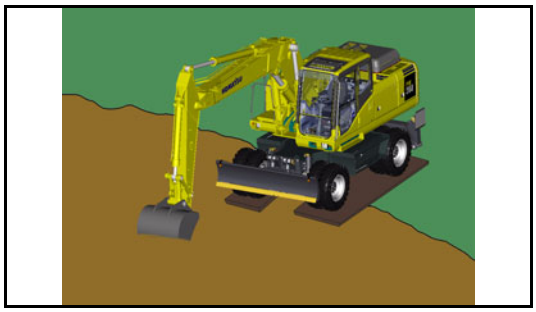

WORK POSSIBLE USING HYDRAULIC EXCAVATOR

In addition to the following, it is possible to further increase the range of applications by using various attachments.

BACKHOE WORK

When condition of the machine is as shown in the diagram at right, each cylinders maximum pushing excavation force is obtained when the bucket cylinder and link, arm cylinder and arm are at 90°.

When excavating, use this angle effectively to optimize your work efficiency.

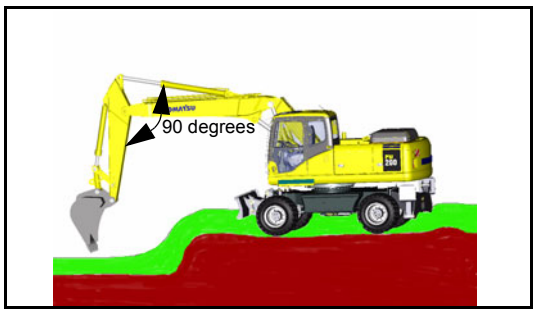

The range for excavating with the arm is from a 45° angle away from the machine to a 30° toward the machine.

There may be some differences depending on the excavation depth, but try to use within the above range rather than going all the way to the extreme end of the cylinder stroke.

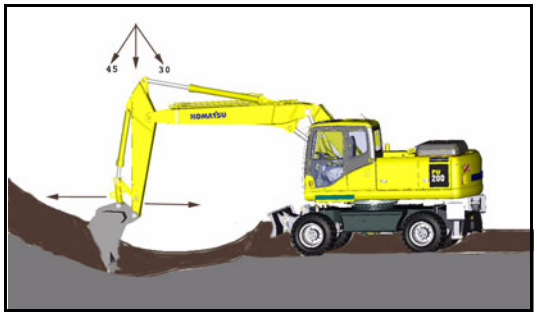

SHOVEL WORK

A shovel is suitable for excavating at a position higher than the machine. Shovel work is performed by attaching the bucket in the reverse direction.

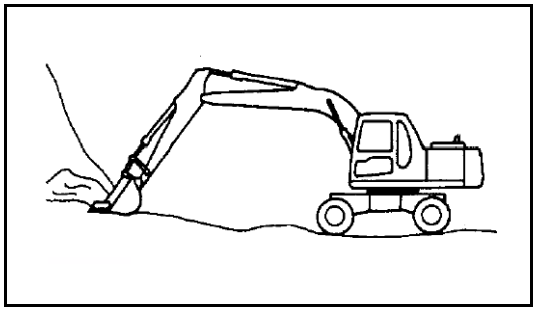

DITCHING WORK

Ditching work can be performed efficiently by attaching a bucket to match the width of the ditch and then setting the wheels parallel to the line of the ditch to be excavated.
To excavate a wide ditch, first dig out both sides and then finally remove the center portion.

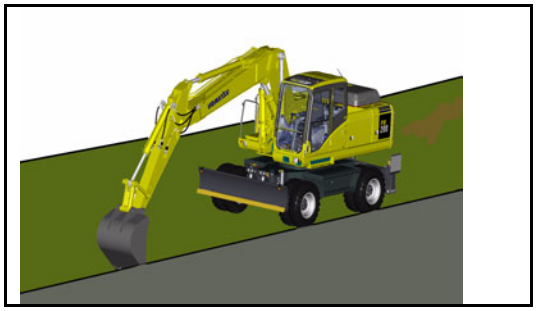

LOADING WORK

In places where the swing angle is small, work efficiency can be enhanced by locating the dump truck in a place easily visible to the operator.
Loading is easier and capacity greater if you begin from the front of the dump truck body than if loading is done from the side.

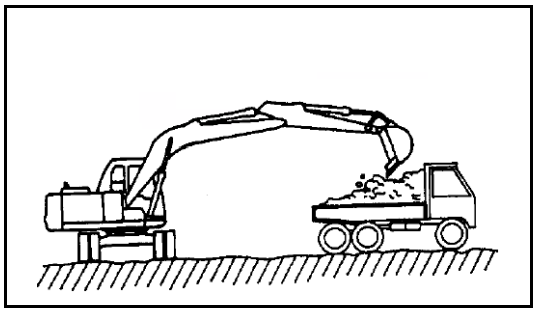

LEVELLING WORK

Can be carried out with work equipment or dozer blade (if fitted).

REPLACEMENT AND INVERSION OF BUCKET

⚠ WARNING

- **When knocking the pin in with a hammer, metal particles may fly and cause serious injury, particularly if they get into your eyes. When carrying out this operation, always wear goggles, helmet, gloves, and other protective equipment.**
- **When the bucket is removed, place it in a stable condition.**

Stop the machine on a firm, flat surface. When performing joint work, make clear signals to each other and work carefully for safety's sake.

REPLACEMENT

1. Place the bucket in contact with a flat surface.

REMARK

When removing the pins, place the bucket so that it is in light contact with the ground.
If the bucket is lowered strongly to the ground, the resistance will be increased and it will be difficult to remove the pins.

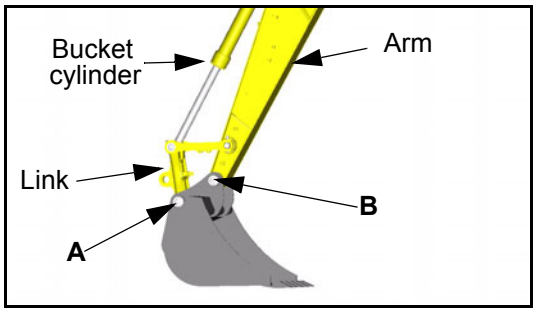

2. Remove the stopper bolts and nuts, then remove pins (A) and (B) and remove the bucket.

NOTICE

After removing the pins, make sure that they do not become contaminated with sand or mud and that the seals of bushing on both sides do not become damaged.

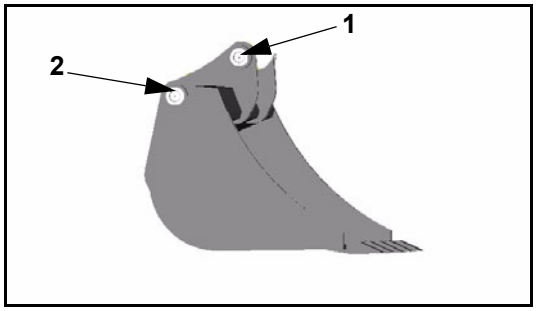

3. Align the arm with holes (1) and the link with holes (2), then install pins (A) and (B).

INVERSION

1. Place the bucket in contact with a flat surface.

REMARK

When removing the pins, place the bucket so that it is in light contact with the ground.
If the bucket is lowered strongly to the ground, the resistance will be increased and it will be difficult to remove the pins.

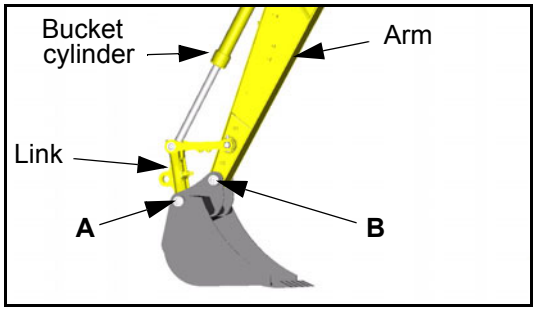

2. Remove the stopper bolts and nuts, then remove pins and, and remove the bucket.

NOTICE

After removing the pins, make sure that they do not become contaminated with sand or mud and that the seals of bushing on both sides do not become damaged.

3. Install the bucket inversely.
   After the bucket is reversed, correct the inclination and direction of the retaining pin holes (1) and (2) and stabilise the bucket securely.

4. Align the arm with holes (1) and the link with holes (2), then install pins (A) and (B).

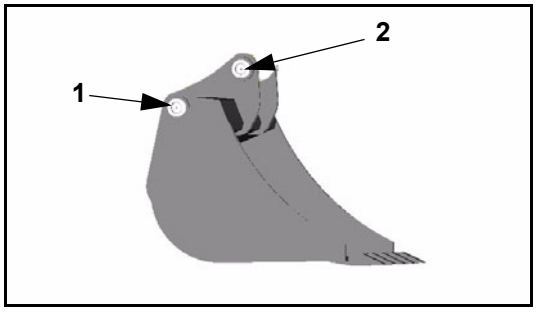

WARNING

If the control lever is touched by accident, the work equipment or the machine may move suddenly, and this may lead to a serious accident. Before leaving the operator's compartment, always raise the safety lock lever to LOCK the work equipment controls.

STOPPING ENGINE

NOTICE

If the engine is abruptly stopped before it has cooled down, engine life may be greatly shortened. Consequently, do not abruptly stop the engine apart from an emergency.
In particular, if the engine has overheated, do not abruptly stop it but run it at medium speed to allow it to cool gradually, then stop it.

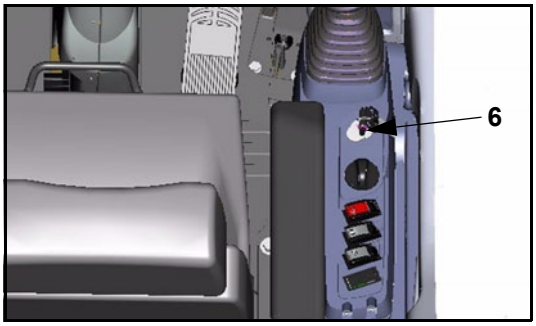

1. Run the engine at low idling speed for about 5 minutes to allow it to gradually cool down.
2. Turn the key in starting switch (6) to the OFF position and stop the engine.
3. Remove the key from starting switch (6).

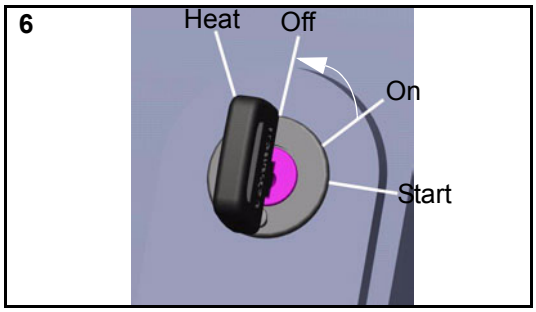

CHECK AFTER FINISHING WORK

1. Check the engine water temperature, engine oil pressure and fuel level on the monitor.
2. Walk around the machine and check the work equipment, and undercarriage, and check also for leakage of oil or water. If any abnormalities are found, repair them.
3. Fill the fuel tank.
4. Check the engine compartment for paper and debris. Clean out any paper and debris to avoid a fire hazard.
5. Remove any mud stuck to the undercarriage.

NOTE: It is normal for water to drip from aircon drain hoses.

CHECK AFTER STOPPING ENGINE

LOCKING

Always lock the following places.

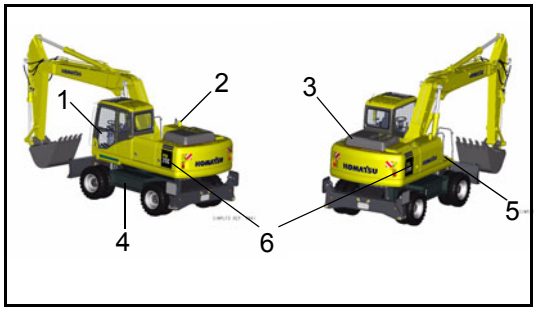

(1)	Door of operator's cab. Always remember to close the window.
(2)	Fuel tank filler port
(3)	Engine hood
(4)	Tool boxes within steps
(5)	Right & Left machine cab doors
(6)	Refuel pump locker cover

REMARK

Use the starting switch key to open and close all these places.

OVERLOAD WARNING DEVICE

Excavators are provided with this device to warn the operator about tipping over while lifting loads. A buzzer will sound when the machine is in L mode and the machine nears its lifting capacity.

NOTE: Only conduct lifting operations in L mode as the overload warning system is only active in this mode.

HANDLING THE WHEELS

⚠ WARNING

Incorrect handling of wheels and tyres can result in serious injury or death.
Particular care is required when working on twin wheel assemblies.
Before any attempt is made to remove the road wheels the tyres must be fully deflated.

1. General information

- Always replace damaged parts with new parts from your Komatsu distributor.
  Never attempt to repair damaged items.
- Use the appropriate tools in a good condition to remove the various pieces of the rim. Never use metallic hammer, use a mallet with a face made from Rubber, Plastic or Copper.

- On machines fitted with twin wheel assemblies a valve extension is fitted to the inner wheel to facilitate deflation. This part should always be refitted following disassembly as it ensures that the inner wheel assembly can be deflated whilst fitted to the hub.

Tyre pressure:	10.00 - 20 16 ply tyres (Twin assy)
Front wheel:	7.25 Bar: Rear wheel: 7.25 Bar
Tyre pressure:	11.00 - 20 16 ply tyres (Twin assy)
Front wheel:	7.00 Bar: Rear wheel: 7.00 Bar

2. Before starting to remove the wheels

1. Depress the brake pedal fully until it locks.
2. Raise the chassis with the boom so that the tyres are raised above the ground. Then, place axle stands below the front and rear axles.
3. Loosen wheel nuts with a wheel wrench. Wheel nuts have right hand threads.
4. Proceed in accordance with the following procedure, paying attention to the information specific to the type of wheel assembly fitted to the machine on which you are working.

⚠ WARNING

Failure to observe the following procedure may result in serious injury or death.

3. Twin wheel assembly - 3 part rim

A	Rim Base
B	Loose flange
C	Lockring
D	Rim Gutter (groove)

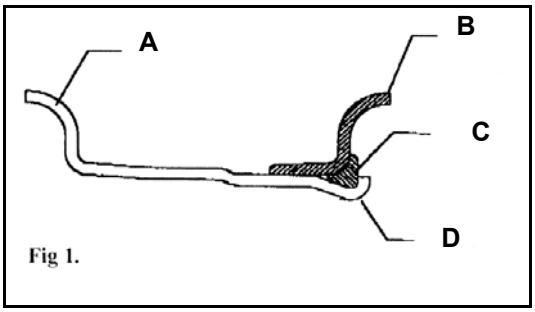

Fig 1.

Deflation and removal:

- Before loosening the wheel retaining nuts, completely deflate the tyres by removing the valve with the appropriate tool. Always stand to the side during the deflating operation.
- Release 8 of the wheel retaining nuts leaving 2 diagonally opposed nuts to hold the assembly in position. Check that there is no remaining pressure being exerted on these remaing nuts by either the internal or external wheel assembly. Once satisfied that the remaining nuts are under no pressure, remove them.
- In order to remove the tyre from the rim first remove the lockring by progressively levering it from the gutter (groove). Do not exert excessive force as this may deform the retaining ring.
- Remove the loose flange and then the tyre/tube.

Re - assembly & inflation

- Check thoroughly the condition of the wheel and rim for signs of wear or damage.
  Discard any defective or doubtful parts and replace with approved replacement parts.
  Clean the rims with a hard brush paying particular attention to the bottom of the rim gutter (groove).
- Fit the tyre to the rim base and fit the tube, ensuring that the valve is correctly located in its through hole.
- Place the loose flange against the tyre bead in the orientation shown in Fig. 1. Push it into place sufficient to clear the rim gutter (groove) to enable the lock-ring to be fitted.
- Insert the lock-ring with the aid of specific tools or with levers and a suitable mallet. Check correct seating of the lock-ring by measuring the dimension of the gap shown in Fig 2.

If it is not possible to achieve the stated gap with the lock-ring seated correctly renew the rim assembly.

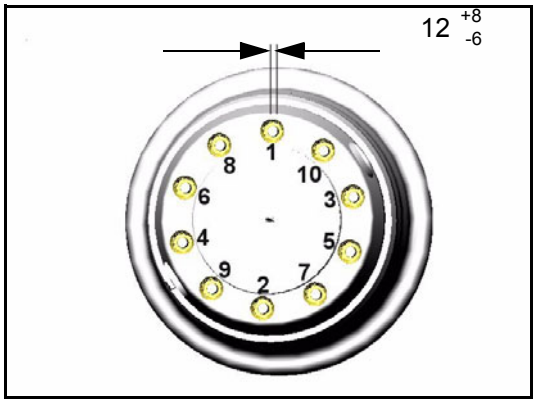

⚠ WARNING

It is essential that the lock-ring is seated correctly.

- Put the wheel assembly into a safety cage and inflate the tyre to a pressure of 1 - 1.5 Bar.
- Visually check the lock-ring is still seated correctly and there is no clearance between it and the loose flange Fig. 3.

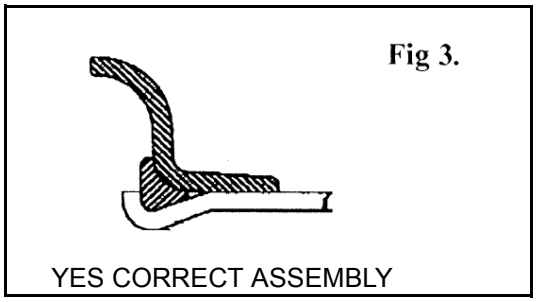

- If the lock-ring is not in the correct position stop the procedure as the lock-ring may be ejected from the groove resulting in possible injury.
  Deflate the tyre and repeat the procedure.
  If the lock-ring is correctly positioned continue to inflate the tyre to the value given in the previous table.
- Before removing the wheel assembly from the safety cage repeat the visual check.
- When refitting the wheel assemblies, tighten at least 2 diagonally opposite wheel nuts and then tighten the tyres to the specified torque in the order shown in Fig. 4.
  Tightening torque: 80 Kg.m
- Retighten to the specified torque after 5 hours operation.

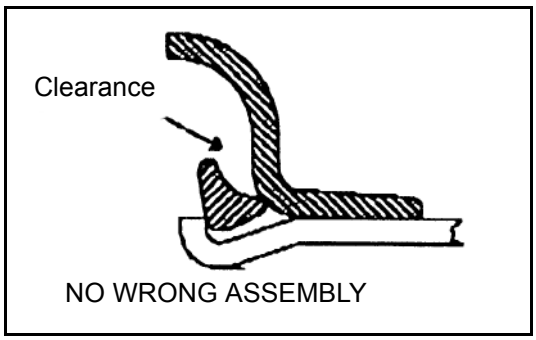

4. Twin wheel assembly - 2 part rim

Some KUK machines are fitted with a 2 piece wheel rim of the type shown in Fig. 5. In this case the loose flange and lock-ring are replaced by a single split flange.

A	Split flange
B	Rim base

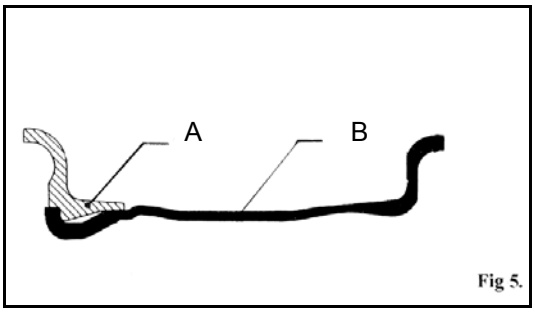

Fig 5.

Similar precautions are required to those for the 3 piece rim when removing and refitting the wheel assemblies. However when judging the condition of the split flange, the dimension in Fig 6.applies.

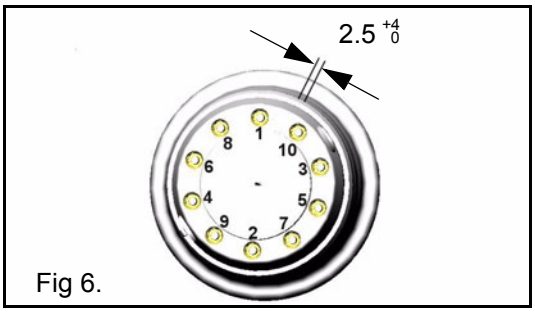

Fig 6.

Maintenance

Periodically remove the road-wheels, following the procedure detailed previously and perform the following checks.

- Remove all dirt especially in the area of the tyre bead seat and check the condition of the rim. If there are any signs of deformation or cracks the wheel must be replaced.
- Check carefully the wheel attachment holes, if you notice signs of ovalization or the presence of cracks the wheel must be replaced.
- If the fixing nuts or hub studs show signs of wear or corrosion they must be replaced.

5. Wheel spacer

⚠ WARNING

Wheel spacers must not be used with radial ply tyres.

6. Rotating tyres

Consult your local Komatsu distributor for advice on rotating tyres.

TRANSPORTATION

When transporting the machine, observe all related laws and regulations, and be careful to assure safety.

LOADING, UNLOADING WORK

⚠ WARNING

- **Loading or unloading the machine can be a dangerous operation, so be particularly careful.**
  When loading or unloading the machine, run the engine at low idling and travel at low speed.
- **Make sure the ramp has sufficient width, length and thickness to enable the machine to be safely loaded and unloaded. If the ramp sags appreciably, reinforce it with blocks, etc.**
- **When loading and unloading the machine, park the trailer on a flat firm road surface. Keep a fairly long distance between the road shoulder and the machine.**
- **Remove the mud from the undercarriage to prevent the machine from slipping to the side on slopes.**
  Be sure the ramp surface is clean and free of grease, oil, ice and loose materials.
- **Never change the direction of travel when on the ramps. If it is necessary to change direction, drive off the ramps and correct the direction, then drive on to the ramps again.**
- **Mechanical swing lock pin should always be engaged during transportation.**
- **When turning the machine on the trailer, the machine's footing is unstable, so carry out the operation slowly.**
- **Always check that the door on the cab is locked, regardless of whether it is open or closed.**
  Do not open or close the door on ramps or on a platform. This may cause a sudden change in the operating force.
- **When loading or unloading the machine with the automatic warming-up operation mode, if the automatic mode is released, the speed may change suddenly. Avoid loading or unloading during automatic warming-up operation.**

When loading or unloading, always use ramps or a platform and carry out the operations as follows.

1. Properly apply the brakes on the trailer and insert blocks(2) beneath the tyres to ensure that it does not move. Then fix the ramps in line with the centers of the trailer and the machine. Be sure that the two sides are at the same level as one another.

Make the angle of the ramps (3) a maximum of 15°.

Set the distance between the ramps (A) to match the center of the wheels.

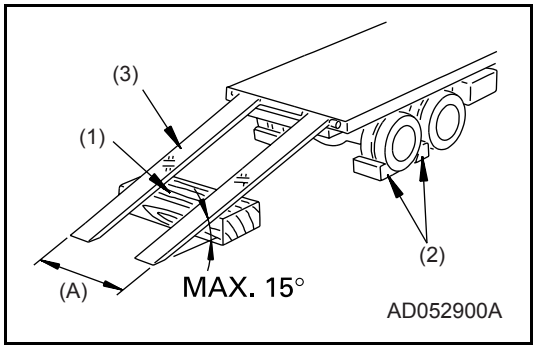

2. Set the travel speed switch to the Lo position.

   For details, see "HIGH/LOW SPEED SELECTOR SWITCH (133)"

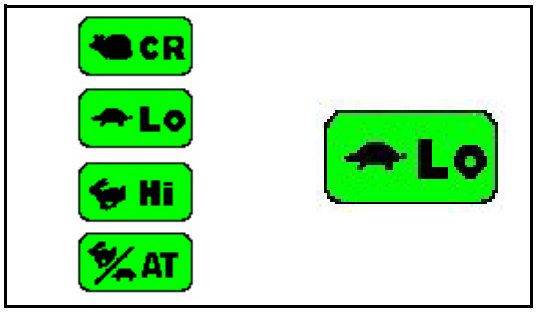

3. Turn the auto-deceleration switch OFF, and return the fuel control dial (7) to reduce the engine speed.

   For details, see "AUTO-DECELERATION SWITCH (140)"

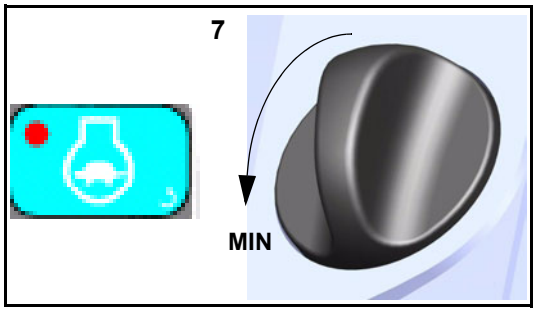

4. Turn the swing lock switch (9) ON to apply the swing lock.
5. Set in the direction of the ramps, lower the work equipment as far as possible without letting it hit the trailer, then travel slowly to load or unload the machine.

When on the ramps, do not operate any lever other than the travel lever.

6. Load the machine correctly in the specified position on the trailer.

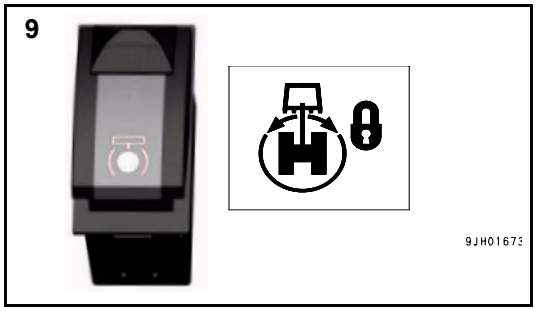

REMARK

When the work equipment is installed, load the machine from the front; when the work equipment is not installed, load the machine from the rear.

PRECAUTIONS FOR LOADING

WARNING

When loading the machine, park the trailer on a flat firm roadbed. Keep a fairly long distance between the road shoulder and the machine.

After loading to the specified position, secure the machine as follows.

1. Fully extend the bucket and arm cylinders, then slowly lower the boom.
2. Stop the engine and remove the key from the starting switch.

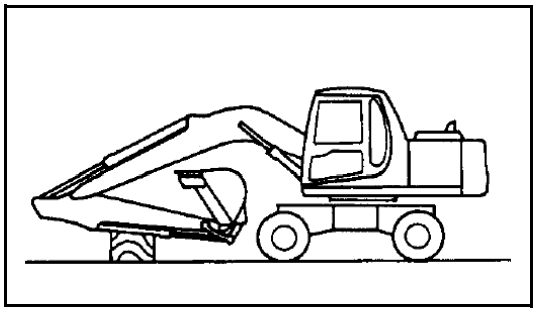

3. Raise safety lock lever to LOCK position.

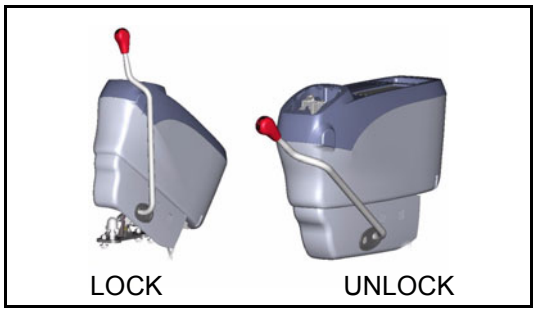

4. When transporting the machine, hold it down with chains or rope. Be particularly careful to ensure that the machine does not slip sideways.

NOTICE

When transporting the machine, place rectangular timber under one end of the bucket cylinder to prevent it touching the ground, thereby saving it from possible damage.

HOW TO LIFT THE MACHINE

⚠ CAUTION

Personnel who perform lifting using a crane must be qualified.

⚠ WARNING

Contact your distributor to get instructions of lifting a machine. Some parts are required and are available as optional parts.

⚠ WARNING

- **Do not lift a vehicle with personnel in it.**
- **The rope used for lifting must have sufficient strength to with stand the weight of this machine.**
- **The machine must not be in a position other than that shown in the following procedure when lifting a vehicle. Otherwise, the machine may be unbalanced.**

Lifting a machine must be performed on a flat place with the following procedure.

1. Start the engine and set the machine in the position shown in the figure at the right (boom at the top stroke end, arm bucket fully retracted). Direct the top revolving super-structure straight forward.
2. Engage mechanical swing lock.
3. Raise the safety lock lever to the LOCK position.
4. Stop the engine. Confirm safety around the operator seat. Get off the machine.
   Be sure to close the cab door, windshield, right and left doors, engine hood, etc.
5. Mount a shackle to boom pins and attach sling underneath counter weight. Hang the wire rope.
6. The length off the wire rope and the lifting angle must be as shown in the figure on the right.
7. When lifting, make sure that there is no change in the position due to possible leakage in the hydraulic circuit on the boom cylinder head side.
8. When the machine leaves the ground, stop the machine and make sure sufficiently that the machine is balanced.
   Then, lift the machine slowly.

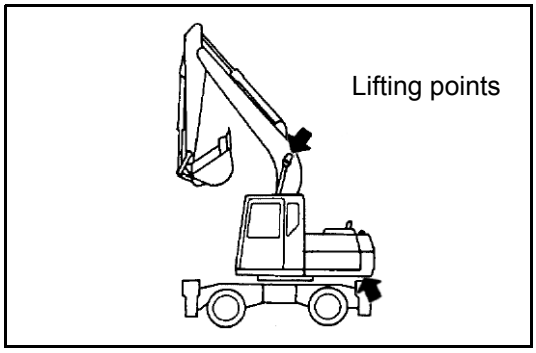

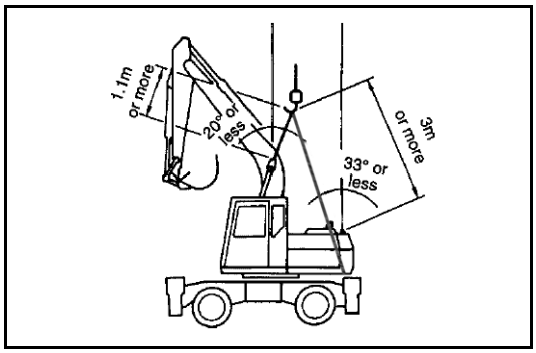

PRECAUTIONS FOR TRANSPORTATION

⚠ WARNING

- **Determine the route for transporting the machine by taking into account the width, height and weight of the machine.**
- **Always ensure mechanical swing lock is engaged**
- **Always check that the door on the cab is closed and locked before transporting the machine.**

NOTICE

Always retract the radio antenna, retract or remove the driving mirrors before transportation.

Obey all state and local laws governing the weight, width and length of a load. Observe all regulations governing wide loads.

Specifications	Overall length (A) (mm) max	Overall width (B) (mm) max	Overall height (C) (mm) max	* Weight Kg	
				PW200	PW220
1 piece boom	9596	2785	3248	21027	22447
Hydraulic adjust boom	9289	2785	3248	21300	22700

(1) Height for transport = (C) Overall height + (3) height of trailer platform

* Weights and dimensions: will vary according to specification.

Consult your Komatsu distributor if in doubt.

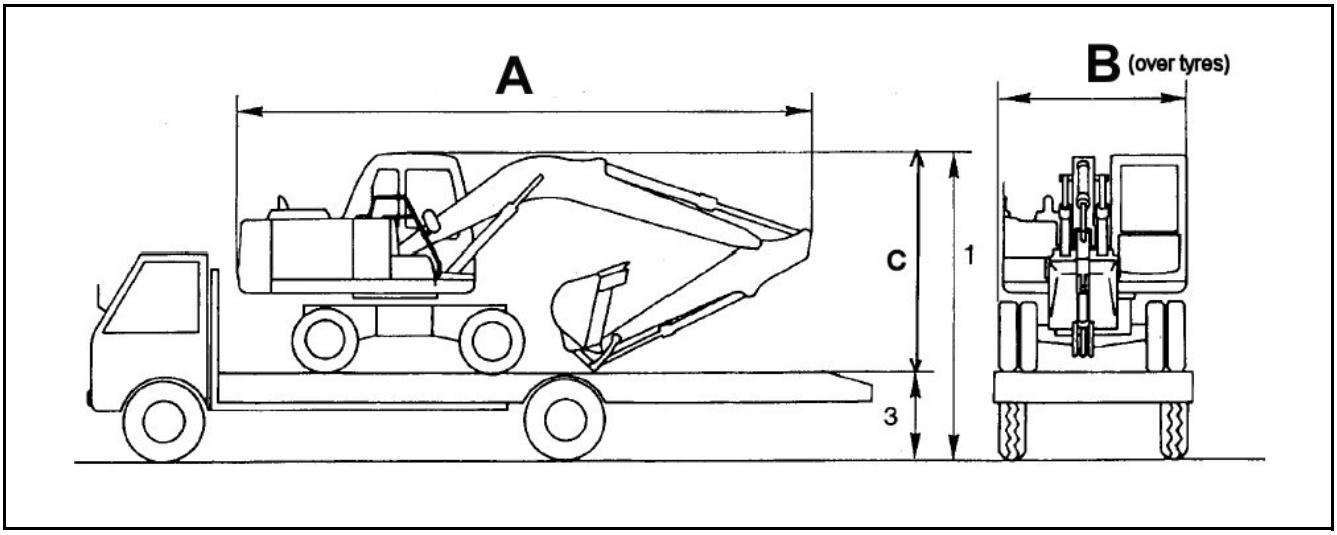

TRAVELLING POSTURE

Before starting to travel, be sure to raise and lock the outriggers, and raise the dozer blade.

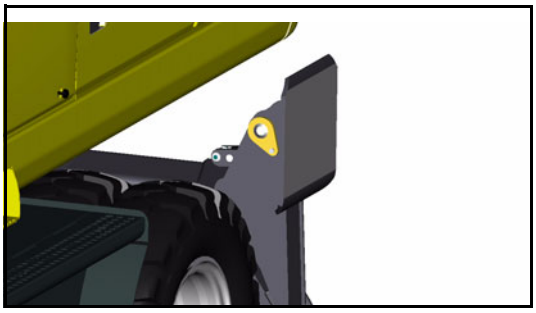

Before travelling on public roads, the work equipment should be positioned as follows.

1. Position the upper structure so that it is facing the front of the undercarriage (the oscillation lock cylinders can be seen) and insert the swing lock pin.
2. Fully extend the bucket cylinder.
3. Fully extend the first boom cylinders.
4. Fully retract the second boom cylinders.
5. Adjust the arm cylinder such that the front of the arm is verticle.
6. Disable the work equipment levers by switching on the control lever lock switch.
7. Close manual lock valves

   1) For the bucket cylinder, located on the arm.

   2) For the arm cylinder, located on the first boom.

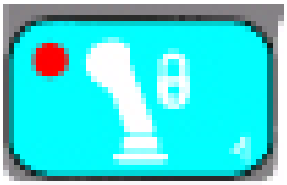

After setting the machine in the travelling posture, confirm that its overall height is below 4 m and that the distance between the centre of the steering wheel and the front of the work equipment is less than 3.5 m.

Before moving off, lock all machine cover and toolbox doors to prevent accidental opening.

COLD WEATHER OPERATION

PRECAUTIONS FOR LOW TEMPERATURE

If the temperature becomes low, it becomes difficult to start the engine, and the coolant may freeze, so do as follows.

FUEL AND LUBRICANTS

Change to fuel and oil with low viscosity for all components. For details of the specified viscosity.

For details, see "USE FUEL, COOLANT AND LUBRICANTS ACCORDING TO AMBIENT TEMPERATURE (269)"

⚠ WARNING

- **Antifreeze is toxic. Be careful not to get it into your eyes or on your skin. If it should get into your eyes or on your skin, wash it off with large quantities of fresh water and see a doctor at once.**
- **Antifreeze is toxic. Be extremely careful when handling it. When replacing coolant containing antifreeze or when handling coolant when repairing the radiator, contact your Komatsu distributor or ask your local antifreeze dealer. Be careful not to let the water flow into drainage ditches or spray on to the ground surface.**
- **Antifreeze is flammable, so do not bring any flame close. Do not smoke when handling antifreeze.**

NOTICE

- **Never use methanol, ethanol or propanol based antifreeze.**
- **Absolutely avoid using any water leak preventing agent, weather it is used independently or mixed with an antifreeze.**
- **Do not mix one antifreeze with a different brand.**

For details of the antifreeze mixture when changing the coolant, see "CLEAN INSIDE OF COOLING SYSTEM (289)".

REMARK

Where no permanent antifreeze is available, an ethylene glycol antifreeze without corrosion inhibitor may be used only for the cold season. In this case, clean the cooling system twice a year (in spring and autumn). When refilling the cooling system, add antifreeze in autumn, but do not add any in spring.

For details of the antifreeze mixture when changing the coolant, see "CLEAN INSIDE OF COOLING SYSTEM (289)".

BATTERY

⚠ WARNING

- **The battery generates flammable gas, so do not bring fire or sparks near the battery.**
- **Battery electrolyte is dangerous. If it gets in your eyes or on your skin, wash it off with large amounts of water, and consult a doctor.**
- **Battery electrolyte dissolves paint. If it gets on to the bodywork, wash it off immediately with water.**
- **If the battery electrolyte is frozen, do not charge the battery or start the engine with a different power source. There is danger that the battery may explode.**

When the ambient temperature drops, the capacity of the battery will also drop. If the battery charge ratio is low, the battery electrolyte may freeze. Maintain the battery charge as close as possible to 100%, and insulate it against cold temperature so that the machine can be started easily the next morning.

REMARK

Measure the specific gravity and calculate the rate of charge from the following conversion table.

	Temperature of fluid			
Rate of charge	20ºC	0ºC	-10ºC	-20ºC
100	1.28	1.29	1.30	1.31
90	1.26	1.27	1.28	1.29
80	1.24	1.25	1.26	1.27
75	1.23	1.24	1.25	1.26

- Because the battery capacity drops markedly in low temperatures, cover the battery or remove it from the machine. Keep it in a warm place overnight, and install it again the next morning.
- If the electrolyte level is low, add distilled water in the morning before beginning work. To prevent fluid in the battery from freezing in the night, do not add the water after the day's work.

PRECAUTIONS AFTER COMPLETION OF WORK

WARNING

After completion of operations, fill the fuel tank to prevent the formation of water caused by condensation of moisture in the empty space in the tank when the temperature goes down.

To prevent mud, water, or the undercarriage from freezing and making it impossible for the machine to move the following morning, always observe the following precautions.

- Mud and water on the machine body should be completely removed. This is to prevent damage to the seal caused by mud or dirt getting inside the seal with frozen drops of water.
- Park the machine on hard, dry ground. If this is impossible, park the machine on wooden boards. The boards help protect the wheels from being frozen in soil and the machine can start next morning.
- Open the drain valve and drain any water collected in the fuel system to prevent it from freezing.
- After operation in water or mud, remove water from undercarriage to extend undercarriage service life.

AFTER COLD WEATHER

When season changes and the weather becomes warmer, do as follows.

- Replace the fuel and oil for all parts with oil of the viscosity specified.

  For details, see "USE FUEL, COOLANT AND LUBRICANTS ACCORDING TO AMBIENT TEMPERATURE (269)"

- If for any reason permanent antifreeze cannot be used, and an ethyl glycol base antifreeze (winter, one season type) is used instead, or if no antifreeze is used, drain the cooling system completely, then clean out the inside of the cooling system thoroughly, and fill with fresh water.

LONG-TERM STORAGE

BEFORE STORAGE

NOTICE

To protect the cylinder rod when the machine is not being used, set the work equipment in the posture shown in the diagram. (This prevents rusting of the cylinder rod)

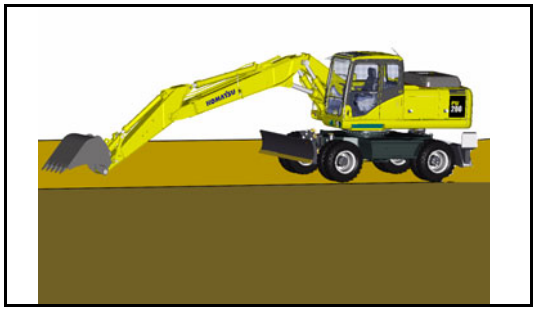

When putting the machine in storage for a long time, do as follows.

- Clean and wash all parts, then store the machine indoors. If the machine has to be stored outdoors, select level ground and cover the machine with a sheet.
- Completely fill the fuel tank, lubricate and change the oil before storage.
- Apply a thin coat of grease to the metal surface of the hydraulic piston rods.
- Disconnect the negative terminals of the battery and cover it or remove it from the machine and store it separately.
- If the ambient temperature is expected to drop below 0ºC, add antifreeze to the cooling water.
- Raise safety lock lever to the LOCK position.
- Set the stop valve to the LOCK position on machines which can install attachments. Install a plug in the elbow.

DURING STORAGE

⚠ WARNING

If it is unavoidably necessary to carry out the rust preventive operation while the machine is indoors, open the doors and windows to improve ventilation and prevent gas poisoning.

Operate the engine and move the machine for a short distance once a month so that a new film of oil will be coated over movable parts and component surfaces. At the same time, also charge the battery.

Also carry out cooler operation in the case of machines equipped with an air conditioner.

AFTER STORAGE

NOTICE

If the machine is stored without carrying out the monthly rust prevention operation, request your Komatsu distributor for service.

Carry out the following procedure when taking the machine out of long-term storage.

- Wipe off the grease from the hydraulic cylinder rods.
- Add oil and grease to all places.
- When the machine has been stored for a long time, the moisture in the atmosphere will get into the oil. Check the oil at all parts before and after starting the engine. If there is water in the oil, change all the oil.

STARTING MACHINE AFTER LONG-TERM STORAGE

When starting the machine after a long-term storage, first cancel the automatic warming-up function as follows.

1. Turn the starting switch key to the ON position.
2. Turn the fuel control dial from the low idling (MIN) position to the full (MAX) position, hold it there for 3 seconds, then return it to the low idling (MIN) position and start the engine.

TROUBLESHOOTING

PHENOMENA THAT ARE NOT FAILURES

Note that the following phenomena are not failures:

1. When the arm is pulled in, the speed of movement will drop momentarily when the arm is more or less vertical.
2. The arm speed will drop momentarily when the bucket teeth are more or less horizontal.

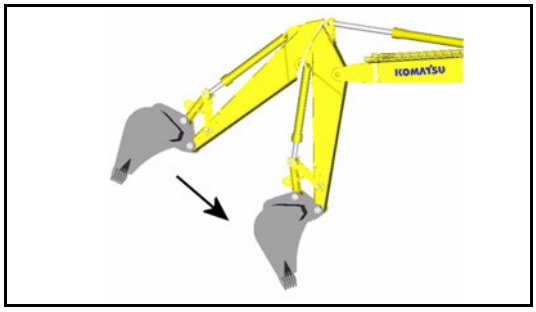

3. When starting or stopping the swing, noise will be emitted from the brake valve.
4. When going down a steep slope at low speed, a noise will be emitted from the travel motor.

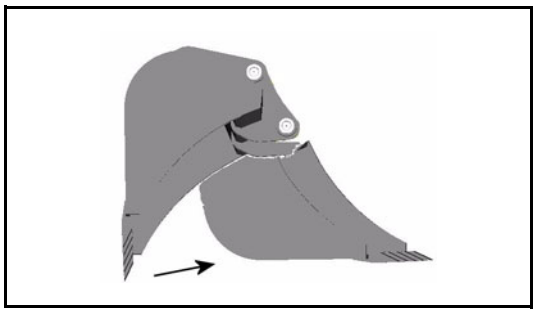

METHOD OF TOWING MACHINE

WARNING

When towing the machine, use a wire rope that has ample strength for the weight of the machine that is being towed.

If the machine sinks in mud and cannot get out under its own power, or if the drawbar pull of the excavator is being used to tow a heavy object, use a wire rope as shown in the diagram.

WHEN USING THE FRONT OF CHASSIS

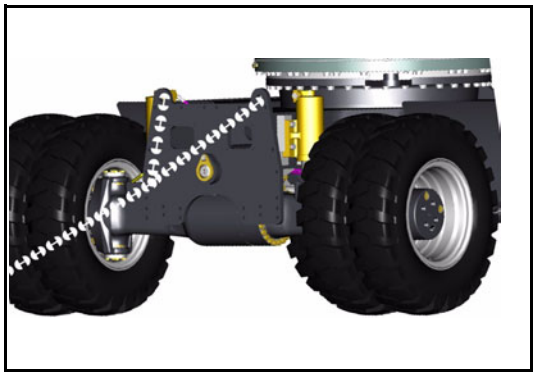

WHEN USING THE REAR OF THE CHASSIS

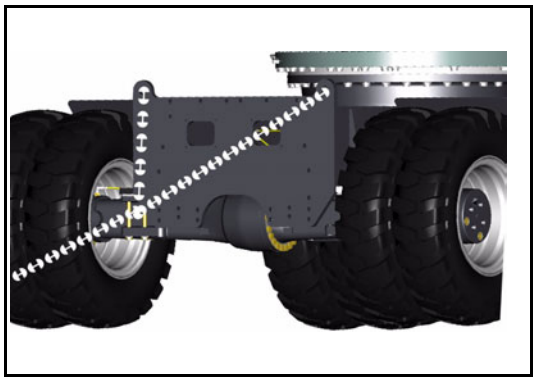

PRECAUTIONS ON PARTICULAR JOBSITES

1. When carrying out digging operations in water, if the work equipment mounting pin goes into the water, carry out greasing every time the operation is carried out.
2. For heavy-duty operations and deep digging, carry out greasing of the work equipment mounting pins every time before operation.
3. After greasing, operate the boom, arm and bucket several times, then grease again.

DISCHARGED BATTERY

⚠ WARNING

- **It is dangerous to charge the battery while it is still mounted on the machine. Always remove the battery before charging it.**
- **When checking or handling the battery, stop the engine and turn the starting switch key to the OFF position.**
- **The battery generates hydrogen gas, so there is danger of explosion.**
  Do not bring lighted cigarettes near the battery, or do anything that will cause sparks.
- **Battery electrolyte is diluted sulfuric acid, and it will attack your clothes and skin. If it gets on your clothes or on your skin, wash it off immediately with large amounts of water. If it gets into your eyes, wash it out with fresh water, and consult a doctor.**
- **When handling batteries, always wear protective goggles and rubber gloves.**
- **When removing the battery, first disconnect the cable from the ground (normally the negative (-) terminal). When installing, install the positive (+) terminal first.**
  If a tool touches the positive terminal and the chassis, there is danger that it will cause a spark, be extremely careful.
- **If the terminals are loose, there is danger that the defective contact may generate sparks that will cause an explosion.**
- **When installing the terminals, install them tightly.**
  When removing or installing the terminals, check which is the positive (+) terminal and which is the negative (-) terminal.
- **Green rust around the terminals is a cause of self-discharge of the battery. Clean the terminals with sandpaper. After removing the rust, coat the terminals thinly with grease before installing.**

When removing, disconnect the cable from the ground terminal first.

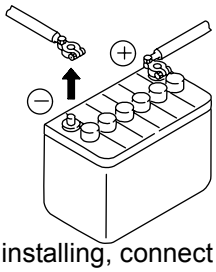

When installing, connect the cable to the positive + terminal first.

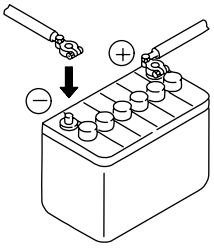

9EA00023

REMOVAL AND INSTALLATION OF BATTERY

NOTICE

After fastening the battery in position, check that it does not move. If it moves, check and retighten it.

- When removing, remove from the ground side terminal first (normally the (-) terminal).
  Be careful not to touch the positive (+) terminal and the machine with any tool. Letting a tool touch is dangerous as it causes sparks.
- When installing, connect the ground side last.

- When replacing the battery, attach the battery securely with the battery mounting clamp.
- Tightening torque of mounting bolts: 9.8 to 14.7 N•m (1 to 1.5 kgf•m)

BATTERY CHARGES

When charging the battery, there is danger that the battery may explode if it is mishandled. Follow the instructions in ""WARMING UP OPERATION (204)" and the instruction manual supplied with the charger, and be sure to observe the following precautions.

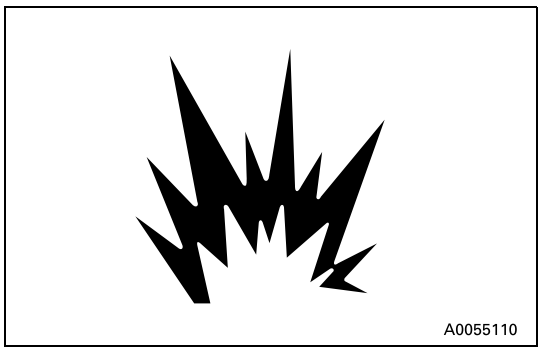

- Set the voltage of the charger to match the voltage of the battery to be charged. If the voltage is not selected correctly, the charger may overheat and cause an explosion.
- Connect the positive (+) charger clip of the charger to the positive (+) terminal of the battery, then connect the negative (-) charger clip of the charger to the negative (-) terminal of the battery. Be sure to connect the clips securely.
- Set the charging current to 1/10 of the value of the rated battery capacity; when doing rapid charging, set it to less than the rated battery capacity.
  If the charger current is too high, the electrolyte will leak or dry up, and this may cause the battery to catch fire and explode.
- If the battery electrolyte is frozen, do not charge the battery or start the engine with a different power source.
  There is a danger that this will ignite the battery electrolyte and cause the battery to explode.
- Do not use or charge the battery if the battery electrolyte level is below the LOWER LEVEL line. This may cause an explosion. Always check the battery electrolyte level periodically and add distilled water to bring the electrolyte level to the UPPER LEVEL

STARTING ENGINE WITH BOOSTER CABLES

When starting the engine with a booster cable, do as follows:

CONNECTING AND DISCONNECTING BOOSTER CABLES

⚠ WARNING

- **When connecting the cables, never contact the positive (+) and negative (-) terminals.**
- **When starting the engine with a booster cable, always wear safety glasses.**
- **Be careful not to let the normal machine and problem machine contact each other. This prevents sparks from generating near the battery which could ignite the hydrogen gas given off by the battery. If hydrogen gas explodes, it could cause serious injury.**
- **Make sure that there is no mistake in the booster cable connections.**
  The final connection is to the upper structure frame, but sparks will be generated when this is done, so connect to a place as far as possible from the battery. (However, avoid connecting the cable to the work equipment, as conduction is poor.)
- **Use care when removing the cables from a machine that has been started. To avoid hydrogen explosion, do not allow the cable ends to contact each other or the machine.**

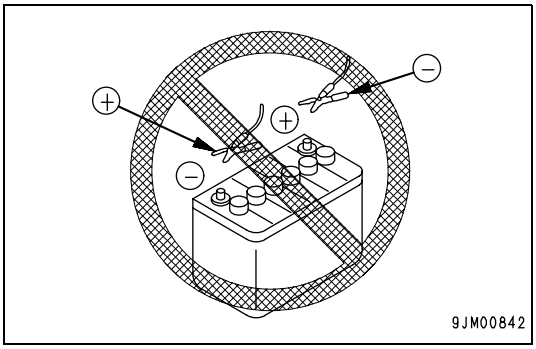

NOTICE

- **The starting system for this machine uses 24 Volts. For the normal machine, use a 24V battery.**
- **The size of the booster cable and clip should be suitable for the battery size.**
- **The battery of the normal machine must be the same capacity as that of the engine to be started.**
- **Check the cables and clips for damage or corrosion.**
- **Make sure that the cables and clips are firmly connected.**
- **Check that the safety lock lever is raised in the LOCK position and parking brake applied.**
- **Check that each lever is in the NEUTRAL position.**

BOOSTER CABLE CONNECTION

Keep the starting switch of the normal machine and problem machine at the OFF position.

Connect the booster cable as follows, in the order of the numbers marked in the diagram.

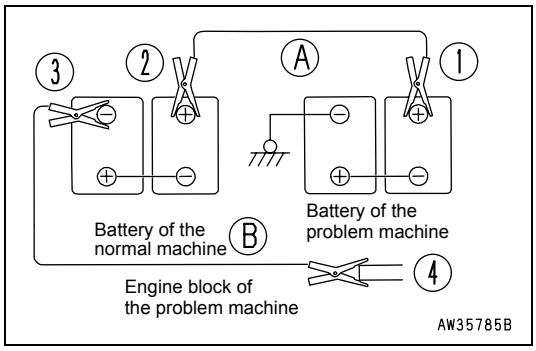

1. Make sure that the starting switches of the normal machine and problem machine are both at the OFF position.
2. Connect one clip of booster cable (A) to the positive (+) terminal of the problem machine.
3. Connect the other clip of booster cable (A) to the positive (+) terminal of the normal machine.
4. Connect one clip of booster cable (B) to the negative (-) terminal of the normal machine.
5. Connect the other clip of booster cable (B) to the upper structure of the problem machine.

STARTING THE ENGINE

⚠ CAUTION

Always check that the safety lock lever is raised in the LOCK position, regardless of whether the machine is working normally or has failed. Also check that all the control levers are at the HOLD or neutral position.

1. Make sure the clips are firmly connected to the battery terminals.
2. Start the engine of the normal machine and keep it to running at high idling speed.
3. Turn the starting switch of the problem machine to the START position and start the engine. If the engine doesn't start at first, try again after 2 minutes or so.

BOOSTER CABLE DISCONNECTION

After the engine has started, disconnect the booster cables in the reverse order in which they were connected.

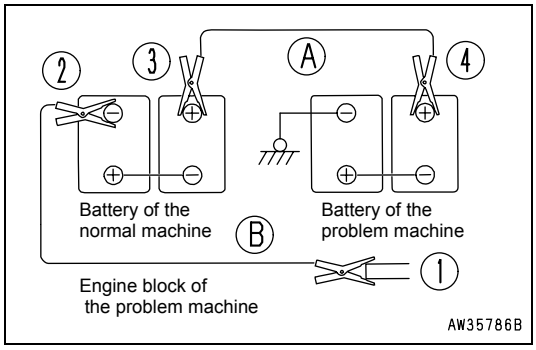

1. Remove one clip of booster cable (B) from the upper structure of the problem machine.
2. Remove the other clip of booster cable (B) from the negative (-) terminal of the normal machine.
3. Remove one clip of booster cable (A) from the positive (+) terminal of the normal machine.
4. Remove the other clip of booster cable (A) from the positive (+) terminal of the problem machine.

OTHER TROUBLE

ELECTRICAL SYSTEM

- ( ) Always contact your Komatsu distributor when dealing with these items.
- In cases of abnormalities or causes which are not listed below, please contact your Komatsu distributor for repairs.

Problem	Main causes	Remedy
Lamp does not glow brightly even when the engine runs at high speed	● Defective wiring, deterioration of battery	● (Check, repair loose terminals, disconnections, replace battery)
Lamp flickers while engine is running	● Loose fan belt	● Check fan belt tension, replace
Charge level monitor does not go out even when engine is running	● Defective alternator ● Defective wiring	● (Replace) ● (Check, repair)
Abnormal noise is generated from alternator	● Defective alternator	● (Replace)
Starting motor does not turn when starting switch is turned to ON	● Defective wiring ● Defective starting motor ● Insufficient battery charge	● (Check, repair) ● (Replace) ● Charge
Pinion of starting motor keeps going and out	● Insufficient battery charge ● Defective safety relay	● Charge ● (Replace)
Starting motor turns engine sluggishly	● Insufficient battery charge ● Defective starting motor	● Charge ● (Replace)
Starting motor disengages before engine starts	● Defective wiring, defective ring gear pinion ● Insufficient battery charge	● (Check, repair) ● Charge
Pre-heating monitor does not light	● Defective wiring ● Defective heater relay ● Defective monitor	● (Check, repair) ● (Replace) ● (Replace)
Oil pressure monitor does not light up when engine is stopped (starting switch at ON position)	● Defective monitor ● Defective caution lamp switch	● (Replace) ● (Replace)
Outside of electrical heater is not warm when touched by hand	● Defective wiring ● Disconnection in electric heater ● Defective operation of heater relay switch	● (Check, repair) ● (Replace) ● (Replace)

CHASSIS

- Always contact your Komatsu distributor when dealing with these items.
- In cases of abnormalities or causes which are not listed below, please contact your Komatsu distributor for repairs.

Problem	Main causes	Remedy
Speed of travel, swing, boom, arm, bucket is slow	● Lack of hydraulic oil	● Add oil to specified level, see CHECK BEFORE STARTING
Pump generates abnormal noise (sucking in air)	● Clogged element in hydraulic tank strainer, lack of oil	● Clean, see EVERY 2000 HOURS SERVICE
Excessive rise in hydraulic oil temperature	● Loose fan belt ● Dirty oil cooler ● Lack of hydraulic oil	● Check fan belt tension, replace ● Clean, see EVERY 500 HOURS SERVICE ● Add oil to specified level, see CHECK BEFORE STARTING
Bucket rises slowly, does not rise	● Lack of hydraulic oil	● Add oil to specified level, CHECK BEFORE STARTING
Does not swing	● Mechanical swing lock engaged ● Control lever lock ON	● Release mechanical swing lock ● Turn OFF control lever lock switch

ENGINE

- ( ) Always contact your Komatsu distributor when dealing with these items.
- In cases of abnormalities or causes which are not listed below, please contact your Komatsu distributor for repairs.

Problem	Main causes	Remedy
Engine oil pressure monitor lights up	● Engine oil pan oil level is low (sucking in air) ● Clogged oil filter cartridge ● Defective tightening of oil pipe, pipe joint, oil leakage from damaged point ● Defective engine oil pressure sensor ● Defective monitor	● Add oil to specified level, see CHECK BEFORE STARTING ● Replace cartridge, see EVERY 500 HOURS SERVICE ● (Check, repair) ● (Replace sensor) ● (Replace)
Steam spurts out from top of radiator (pressure valve)	● Cooling water level low, leakage of water ● Loose fan belt ● Dirt or scale accumulated in cooling system	● Check, add water, repair, see CHECK BEFORE STARTING ● Check fan belt tension, adjust, replace ● Change coolant, flush inside of cooling system, see WHEN REQUIRED
Radiator water level monitor lights up	● Clogged radiator fins or damaged fins ● Defective thermostat ● Loose radiator filler cap (high-altitude operations) ● Defective water level sensor ● Defective monitor	● Clean or repair, see EVERY 500 HOURS SERVICE ● (Replace thermostat) ● Tighten cap or replace packing ● (Replace sensor) ● (Replace sensor)
Engine does not start when starting motor is turned	● Lack of fuel ● Air in fuel system ● Defective fuel injection pump or defective nozzle ● Starting motor cranks engine sluggishly ● Preheating monitor does not light up ● Defective compression ● Defective valve clearance	● Add fuel, see CHECK BEFORE STARTING ● Repair place where air is sucked in, see EVERY 500 HOURS SERVICE ● (Replace pump or nozzle) ● See ELECTRICAL SYSTEM ● See ELECTRICAL SYSTEM ● (Adjust valve clearance)
Exhaust gas is white or blue	● Too much oil in oil pan ● Improper fuel	● Set oil to specified level, see CHECK BEFORE STARTING ● Change to specified fuel

Problem	Main causes	Remedy
Exhaust gas occasionally turns black	● Clogged air cleaner element ● Defective nozzle ● Defective compression ● Defective turbocharger	● Clean or replace, see WHEN REQUIRED ● (Replace nozzle) ● (See defective compression above) ● Clean or replace turbocharger
Combustion noise occasionally make breathing sound	● Defective nozzle	● (Replace nozzle)
Abnormal noise generated (combustion or mechanical)	● Low-grade fuel being used ● Overheating ● Damage inside muffler ● Excessive valve clearance	● Change to specified fuel ● Refer to "Radiator water level monitor lights up" as above ● Replace muffler ● (Adjust clearance)

ELECTRONIC CONTROL SYSTEM

If an error code appears on the machine monitor display (normally displays TIME), follow the countermeasure table as shown below in the self-diagnosis.

Machine monitor trouble display

Monitor display	Error mode	Countermeasure
E01	Suspension lock system error	Place the machine in a safe posture, then have it inspected immediately by your Komatsu distributor
E02	TVC valve system error	If the pump override switch is set to the ON position, operation can be carried out. However, immediately have the PC-EPC valve system inspected by your Komatsu distributor. (*)
E03	Swing brake system error	Turn the swing prolix switch ON to cancel the brake. When applying the swing brake, operate the swing lock manually.Depending on the cause of the failure, it may be impossible to release the brake. In any case, have the system inspected immediately by your Komatsu distributor. (*)
E05	Governor system error	Governor will not execute the control function. Manually operate the governor-lever. To fix the governor lever at the full stroke position, use the retaining bolt holes on bracket. In this case, immediately have the governor system inspected by your Komatsu distributor.
E20	Travel system error	If the travel override switch is set to ON position, operation can be carried out. However, immediately have the TVC valve system inspected by your Komatsu distributor.
CALL	Error indicating that operation cannot be continued	Place the machine in a safe posture, then have it inspected immediately by your Komatsu distributor.
In the case where the monitor will not display error codes and work equipment operation and swing operation cannot be carried out.		Have the machine inspected immediately by your Komatsu distributor.

(*) For detail of operating the pump override switch and the swing override switch, refer to "SWITCHES"

MAINTENANCE.

⚠ WARNING

Please read and make sure that you understand the safety volume before reading this section.

GUIDES TO MAINTENANCE

Do not carry out any inspection and maintenance operation that is not given in this manual.

Perform maintenance work on hard, flat ground.

Check service meter:

Check the service meter reading every day to see if the time has come for any necessary maintenance to be carried out.

Komatsu genuine replacement parts:

Use Komatsu genuine parts specified in the Parts Book as replacement parts.

Komatsu genuine oils:

Use Komatsu genuine oils and grease. Choose oils and grease with proper viscosities specified for ambient temperature.
Always use clean washer fluid:
Use automobile window washer fluid and be careful not to let any dirt get into it.

Always use clean oil and grease:

Use clean oil and grease. Also, keep containers of the oil and grease clean. Keep foreign materials away from oil and grease.

Keeping the machine clean:

Always keep the machine clean. This makes is easier to find parts causing problems. Keep in particular grease fittings, breathers and oil level gauges clean and avoid foreign matter from getting in them.

Be careful of hot water and oil:

Draining hot oil and coolant and removing their filters immediately after the engine stops is hazardous. Allow the engine to cool.

If the oil has to be drained when it is cold, warm up the oil to a suitable temperature (approx. 20 - 40°C) before draining it.

Checking foreign material in drained oil and on filter:

After oil is changed or filters are replaced, check the oil and filters for metallic particles and foreign material. If large quantities of metallic particles or foreign material are found, consult your Komatsu distributor.

Fuel strainer:

If your machine is equipped with a fuel strainer, do not remove it while fueling.

Oil change:

Check or change oils in the places where dust is scarce to keep foreign materials away from oils.

Warning tag:

Attach the warning tag to the starting switch or other appropriate control lever to avoid someone who is not aware of the circumstances from starting the engine.

Obey precautions:

During the operation, always obey the precautions on the safety label attached to the machine.

Welding instructions:

- Turn off the engine starting switch.
- Do not apply more than 200 V continuously.
- Connect grounding the cable within 1 m from the area to be welded.
- Avoid seals or bearings from being between the area to be welded and the position of grounding
- Do not use the area around the work equipment pins or the hydraulic cylinders as the grounding point.

Fire prevention

Use nonflammable cleaner or light oil for cleaning parts. Keep flame or cigarette light away from light oil.

Clamp faces:

When O-rings or gaskets are removed, clean the clamp faces and replace the 0-rings and gaskets with new ones.
Be sure to fit 0-rings and gaskets when assembling.

Objects in your pockets:

Keep your pockets free of loose objects which can fall out and drop into the machinery; especially when you work on the machinery while bending over it.

Checking undercarriage:

When working in rocky areas, check for damage to the undercarriage and for looseness, flaws, wear and damage in bolts and nuts.

Precautions when washing machine:

- Never spray steam or water directly on the connectors and mechatronics parts.
- Do not allow water to get on the monitors and controllers inside the operator’s cab.
- Never spray steam or water directly at the radiator or oil cooler portions.

Pre-and post-work checks:

Before starting work in mud, rain, snow or at seashore, check plugs and valves for tightness. Wash the machine immediately after the work to protect components from rusting. Lubricate components more frequently than usual.
Be sure to lubricate work equipment pins daily if they are submerged in water.

Dusty worksites:

When working at dusty worksites, do as follows:

- Inspect the air cleaner clogging monitor to see whether the air cleaner is blocked. Clean the air cleaner at shorter intervals than specified.
- Clean the radiator core frequently to avoid clogging.
- Clean and replace the fuel filter frequently.
- Clean electrical components, especially the starting motor and alternator, to avoid accumulation of dust.

Avoid mixing oils:

Never mix oils of different brands. If you have only oil which is a different brand from the one that is used in the machine, do not add it but replace all the oil.

OUTLINE OF SERVICE

- Use Komatsu genuine parts for replacement.
- When changing or adding oil, do not use a different type of oil.
- Unless otherwise specified, the oil and coolant used at the time of shipment from the factory are as shown in the table below.

Item	Kind of fluid
Engine oil pan	SAE 15W-40 API classification CE
Swing machinery case PTO gear case	SAE 30 API classification CD
Hydraulic tank	SAE 10 W PI classification CD
Fuel tank	ASTM D975 No.2(However, ASTM D975 No.1 is used for the winter season (October to March)
Radiator	Komatsu Super Coolant (AF-ACL) 50% added to water
Axles, Hubs	Fuchs titan hydra 20W-40
Transmission	BP tractran 8

USE OF BIO-DEGRADEABLE OIL

Special care must be taken when using bio-degradable oil in the hydraulic system of the hydraulic excavator.

When the machine is supplied from the factory with bio-degradable oil, the following change intervals should be used. The oil supplied from the factory is classed as BO46-G3. (If the machine has been filled with any other type of bio-degradable oil, then contact your Komatsu distributor for advice on change intervals).

Filter changes

1. The first filter change should be made 50 hours after first use.
2. The second, and subsequent changes should be made at the standard changing intervals.
3. If an abnormality is found in the characteristics of the oil, change the filter immediately.

Oil changes

1. Change the bio-degradable oil every 2500 hours.

If an abnormality is found in the characteristics of the oil, change the oil immediately.

OUTLINE OF OIL, FUEL, COOLANT

OIL

- Oil is used in the engine and work equipment under extreme severe conditions (high temperature, high pressure), and it deteriorates with use.
  Always use oil that matches the grade and temperature for use given in the Operation and Maintenance Manual. Even if the oil is not dirty, always replace the oil after the specified interval.
- Oil corresponds to blood in the human body, so always be careful when handling it to prevent any impurities (water, metal particles, dirt, etc.) from getting in.
  The majority of problems with machine are caused by the entry of such impurities. Take particular care not to let any impurities get in when storing or adding oil.
- Never mix oils of different grades or brands.
- Always add the specified amount of oil.
  Having too much oil or too little oil are both causes of problems.
- If the oil in the work equipment is not clear, there is probably water or air getting into the circuit. In such cases, please contact your Komatsu distributor.
- When changing the oil, always replace the related filters at the same time.
- We recommend you to have an analysis made of the oil periodically to check the condition of the machine. For those who wish to use this service, please contact your Komatsu distributor.

FUEL

- The fuel pump is a precision instrument, and if fuel containing water or dirt is used, it cannot work properly.
- Be extremely careful not to let impurities get in when storing or adding fuel.
- Always use the fuel specified in the Operation and Maintenance Manual.
- Fuel may congeal depending on the temperature when it is used (particularly in low temperature below-15°C), so it is necessary to change to a fuel that matches the temperature.
- To prevent the moisture in the air from condensing and forming water inside the fuel tank, always fill the fuel tank after completing the day's work.
- Before starting the engine, or when 10 minutes have passed after adding fuel, drain the sediment and water from the fuel tank.
- If the engine runs out of fuel, or if the filters have been replaced, it is necessary to bleed air from the circuit.

COOLANT

- River water contains large amounts of calcium and other impurities, so if it is used, scale will stick to the engine and radiator, and this will cause defective heat exchange and overheating. Do not use water that is not suitable for drinking.
- When using anti-freeze, always observe the precautions given in the Operation and Maintenance Manual.
- Komatsu machines are supplied with Komatsu original anti-freeze in the coolant when the machine is shipped.
  This anti-freeze is effective in preventing corrosion of the cooling system.
  The anti-freeze can be used continuously for two years or 4000 hours. Therefore, it can be used as it is even in hot areas.
- Anti-freeze is inflammable, so be extremely careful not to expose it to flame or fire.
- The proportion of anti-freeze to water differs according to the ambient temperature.

  For details of the mixing proportions, see "CLEAN INSIDE OF COOLING SYSTEM (290)"
- If the engine overheats, wait for the engine to cool before adding coolant.
- If the coolant level is low, it will cause overheating and will also cause problems with corrosion from the air in the coolant.

GREASE

- Grease is used to prevent twisting and noise at the joints.
- The nipples not included in the maintenance section are nipples for overhaul, so they do not need grease.
  If any part becomes stiff after being used for long time, add grease.
- Always wipe off all of the old grease that is pushed out when greasing. Be particularly careful to wipe off the old grease in places where sand or dirt sticking in the grease would cause wear of the rotating parts.

CARRYING OUT KOWA (Komatsu Oil Wear Analysis)

KOWA is a maintenance service that makes it possible to prevent machine failures and down-time. With KOWA, the oil is periodically sampled and analyzed. This enables early detection of wear of the machine drive parts and other abnormalities.

Periodic use of KOWA makes the following possible:

- It enables abnormalities to be detected early, leading to reduction of repair costs and machine downtime.
- It enables repair schedules to be planned, leading to improved machine availability.

KOWA ANALYSIS ITEMS

- Analysis of metal wear particles
  This uses an ICP (Inductively Coupled Plasma) analyzer to measure the density of metal wear particles in the oil.

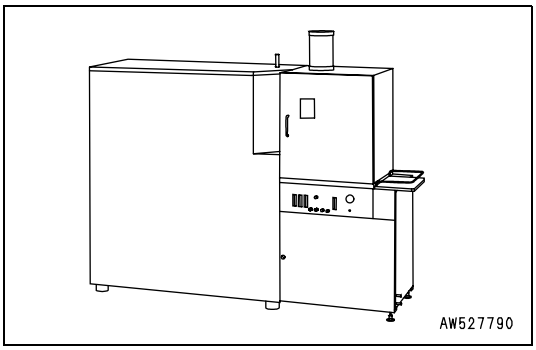

- Measurement of particle quantity
  This uses a PQI (Particle Quantifier Index) measurer to measure the quantity of large iron particles in the oil.
- Others
  Measurements are made of items such as the ratio of water or fuel in the oil, and the dynamic viscosity.

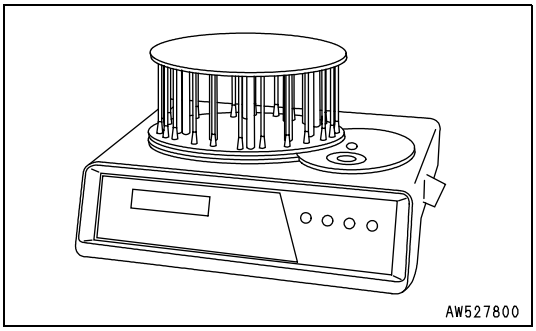

OIL SAMPLING

- Sampling interval
  250 hours: Engine
  500 hours: Other components
- Precautions when sampling
  - ○ Make sure that the oil is well mixed before sampling.
  - ○ Carry out sampling regularly at fixed intervals.
  - ○ Do not carry out sampling on rainy or windy days when water or dust can get into the oil.

For further details of KOWA, please contact your Komatsu distributor.

STORING OIL AND FUEL

- Keep indoors to prevent any water, dirt, or other impurities from getting in.
- When keeping drums for a long period, put the drum on its side so that the filler port of the drum is at the side (to prevent moisture from being sucked in)
  If drums have to be stored outside, cover them with a waterproof sheet or take other measures to protect them.
- To prevent any change in quality during long-term storage, be sure to use in the order of first in first out (use the oldest oil or fuel first).

FILTERS

- Filters are extremely important safety parts. They prevent impurities in the fuel and air circuits from entering important equipment and causing problems.
  Replace all filters periodically. For details, see the Operation and Maintenance Manual.
  However, when working in severe conditions, it is necessary to consider replacing the filters at shorter intervals according to the oil and fuel (sulphur content) being used.
- Never try to clean the filters (cartridge type) and use them again. Always replace with new filters.
- When replacing oil filters, check if any metal particles are stuck to the old filter. If any metal particles are found, please contact your Komatsu distributor.
- Do not open packs of spare filters until just before they are to be used.
- Always use Komatsu genuine filters.

OUTLINE OF ELECTRIC SYSTEM

- If the wiring gets wet or the insulation is damaged, the electric system leaks and this could result in hazardous malfunction of the machine.
- Services relating to the electric system are (1) check of fan belt tension, (2) check of damage or wear in the fan belt and (3) check of battery fluid level.
- Never remove or disassemble any electric components installed in the machine.
- Never install any electric components other than these specified by Komatsu.
- Be careful to keep the electric system free of water when washing the machine or when it rains.
- Since the controller for the control system may cause malfunction due to external wave interference, before installing a radio receiver and a walkie-talkie or citizen band, consult your Komatsu distributor.
- When working on the seashore, carefully clean the electric system to prevent corrosion.
- When installing a car cooler or an other electrical equipment, connect it to an independent power source connector. The optional power source must never be connected to the fuse, starting switch, or battery relay.

OUTLINE OF HYDRAULIC SYSTEM

- During operation and immediately after operation is ended, the temperature of the hydraulic system still re-mains high.
  In addition, high hydraulic pressure is applied to the system. Take care when inspecting and maintaining the hydraulic system.
  - ○ Stop the machine on level ground, lower the bucket to the ground, then set so that there is no pressure applied to the cylinder circuit.
  - ○ Always stop the engine.
  - ○ Immediately after operations, the hydraulic oil and lubricating oil are at high temperature and high pressure, so wait for the oil temperature to go down before starting maintenance. Even when the temperature goes down, the circuit may still be under internal pressure, so when loosening the plug or screw, or the hose joint, do not stand in front of the part. Loosen it slowly to release the internal pressure before removing it.
  - ○ When carrying out inspection or maintenance of the hydraulic circuit, always bleed the air from the hydraulic tank to remove the internal pressure.
- Periodic maintenance includes the inspection of the hydraulic oil level, replacement of the filter and refilling of hydraulic oil.

- When a high pressure hose, etc. is removed, check the O-ring for damage. If necessary, replace it.
- After the hydraulic filter element and strainer are cleaned or replaced, or after the hydraulic system is repaired or replaced or the hydraulic piping is removed, bleed air from the hydraulic circuit.
- The accumulators are charged with high-pressure nitrogen gas. Incorrect handling may be dangerous.

  For the handling procedure, see "HANDLING ACCUMULATORS (186)"

WEAR PARTS LIST

Wear parts such as the filter element, bucket tooth, etc. are to be replaced at the time of periodic maintenance or before their abrasion limits.

The wear parts should be changed correctly in order to use the machine economically. For part change, Komatsu genuine parts of excellent quality should be used.
When ordering parts, please check the part number in the parts book.

The parts in parentheses are to be replaced at the same time.

Item	Part No.	Part Name	Q'ty	Replacement frequency
Hydraulic oil filter	20Y-60-31121 (07000-15195)	Element (O-ring)	1 (1)	Every 1000 hours service
Air cleaner	600-185-3100 600-185-3110	Single element Safety element	1 1	When required
Engine oil filter	6736-51-5141	Cartridge	1	Every 500 hours service
Fuel filter	6732-71-6111	Cartridge	1	Every 500 hours service
Electric heater	6732-11-4811	Cartridge	2	When required
Hydraulic tank filter	20Y-60-21470	Element	1	Every 500 hours service

USE FUEL, COOLANT AND LUBRICANTS ACCORDING TO AMBIENT TEMPERATURE

PROPER SELECTION OF FUEL, COOLANT AND LUBRICANTS

Reservoir			Kind of fluid	AMBIENT TEMPERATURE		Type OF OIL	CAPACITY	
				Min.	Max		Specified	Refill
Engine oil pan			Engine oil (API CE or CF-4)	0°C -20° C -20°C -15° C	30°C 10° C 50° C 50° C	SAE 30 CD SAE 10W SAE 10W-30 SAE 15W-40	26.3 liter	26.3 liter
Swing machinery case			Engine oil	-20° C	40° C	SAE 30	6.6 liter	6.6 liter
PTO gear case							0.75 liter	0.75 liter
Hydraulic system			Bio-oil	-20° C	30° C	SAE 10W	190 liter	133 liter
			Hydr-oil API-CD	-20° C	30° C	SAE 10W-30		
			Engine oil API-CD	-20° C	50° C	SAE 15W-40		
Fuel tank			Diesel fuel	-10° C -30° C	40° C -10° C	ASTM D975 No. 2 ASTM D975 No 1 (for winter use)	370 liter	
Cooling system			Water	Add antifreeze		50% Mix	23 liter	
Axles	Front	Wide	Multi oil	-30° C	40° C	Fuchs titan hydra 20W-40	13.5 liter	
		Narrow					11.5 liter	
	Rear	Wide					14 liter	
		Narrow					12 liter	
Transmission						BP tractran 8	2.9 liter	2.9 liter
Hubs	Front			-20° C	40° C	Fuchs titan hydra 20W-40	2.85 liter	
	Rear						2.0 liter	

REMARK

- We recommend Komatsu genuine oil which has been specifically formulated and approved for use in engine and hydraulic work equipment applications.
- Only use high quality oils which meet internationally recognized specifications.
- When starting the engine in an atmospheric temperature of lower than 0°C, be sure to use engine oil of SAE10W, SAE10W-30 and SAE15W-40, even though an atmospheric temperature goes up to 10° C more or less in the day time.

- Use API classification CE or CF-4 as engine oil. If API classification CD is used reduce the engine oil change interval to half.
- There is no problem if single grade oil is mixed with multi-grade oil (SAE10W-30, 15W-40), but be sure to add single grade oil that matches the temperature in the table.
- We recommend Komatsu genuine oil which has been specifically formulated and approved for use in engine and hydraulic work equipment applications.
- When fuel sulphur content is less than 0.5%, change oil in the oil pan every periodic maintenance hours described in this manual.
  Change oil according to the following table if fuel sulphur content is above 0.5%.

Fuel sulphur content I	Change interval of oil in engine oil pan
0.5 to 1.0%	1/2 of regular interval
1.0% to 1.5%	1/4 of regular interval

Specified capacity: Total amount of oil including oil for components and oil in piping.

Refill capacity: Amount of oil needed to refill system during normal inspection and maintenance.

Abbreviations:

ASTM: American Society of Testing and Material

SAE: Society of Automotive Engineers

API: American Petroleum Institute

SPECTRUM XXX

KOMATSU GENUINE LUBRICANTS

TYPE	CLASS	VISCOSITY	REF.NO
Engine oil	CF - 4	SAE15W - 40	EO - 1540
	CF - 4	SAE10W - 30	EO - 1030
TRANSMISSION OIL	CD	SAE10W	TO - 10
& GEAR BOX OIL	CD	SAE10W	STO - 10
			HEAVY DUTY
	CD	SAE30	TO - 30
	CD	SAE50	TO - 50
HYDRAULIC OIL	CD	SAE10W	HO - 10
BIO HYDRAULIC OIL		SAE10W	BO - 10
GREASE			LG - N2
BIO GREASE			BIO - R2
ANTI FREEZE			AF - 03
BIO ANTI FREEZE			BIO - AF - 0

USE FUEL, COOLANT AND LUBRICANTS ACCORDING TO AMBIENT TEMPERATURE CONT.

No.	Supplier	**Engine Oil [CD or CE]** SAE10W, 30, 40 10W30, 15W40 (The 15W40 oil marked * is CE.)	**Gear Oil [GL-4 or GL-5]** SAE80, 90, 140	**Grease [Lithium-Base]** NLGI No. 2	**Anti-freeze Coolant [Ethylene Glycol Base] Permanent Type**
1	KOMATSU	EO10-CD EO30-CD EO10-30CD EO15-40CD	GO90 GO140	G2-LI G2-LI-S	Komatsu Antifreeze
2	AGIP	Diesel sigma S Super diesel multi-grade *Sigma turbo	Rotra MP	GR MU/EP	-
3	AMOCO	*Amoco 300	Multi-purpose gear oil	RYKON premium grease	-
4	ARCO	*Arcofleet S3 plus	Arco HD gear oil	Litholine HEP 2 Arco EP moly D	-
5	BP	Vanellus C3	Gear oil EP Hypogear EP	Energrease LS-EP2	-
6	CALTEX	*RPM delo 400 RPM delo 450	Universal thuban Universal thuban EP	Marfak all purpose 2 Ultra-duty grease 2	-
7	CASTROL	*Turbomax *RX super CRD	EP EPX Hypoy Hypoy B Hypoy C	MS3 Spheerol EPL2	-
8	CHEVRON	*Delo 400	Universal gear	Ultra-duty grease 2	-
9	CONOCO	*Fleet motor oil	Universal gear lubricant	Super-sta grease	-
10	ELF	Multiperformance 3C Performance 3C	-	Tranself EP Tranself EP type 2	-
11	EXXON (ESSO)	Essolube D3 *Essolube XD-3 *Essolube XD-3 Extra *Esso heavy duty Exxon heavy duty	Gear oil GP Gear oil GX	Beacon EP2	-
12	GULF	Super duty motor oil *Super duty plus	Multi-purpose gear lubricant	Gulfcrown EP2 Gulfcrown EP special	-

No.	Supplier	**Engine Oil [CD or CE]** SAE10W, 30, 40 10W30, 15W40 (The 15W40 oil marked * is CE.)	**Gear Oil [GL-4 or GL-5]** SAE80, 90, 140	**Grease [Lithium-Base]** NLGI No. 2	**Anti-freeze Coolant [Ethylene Glycol Base] Permanent Type**
13	MOBIL	Delvac 1300 *Delvac super 10W-30, 15W-40	Mobilube GX Mobilube HD	Mobilux EP2 Mobilgrease 77 Mobilgrease special	-
14	PENNZOIL	*Supreme duty fleet motor oil	Multi-purpose 4092 Multi-purpose 4140	Multi-purpose white grease 705 707L White - bearing grease	-
15	PETROFINA	FINA kappa TD	FINA potonic N FINA potonic NE	FINA marson EPL2	-
16	SHELL	Rimula X	Spirax EP Spirax heavy duty	Albania EP grease	-
17	SUN	-	Sunoco GL5 gear oil	Sunoco ultra prestige 2EP Sun prestige 742	-
18	TEXACO	*Ursa super plus Ursa premium	Multigear	Multifak EP2 Starplex 2	Texaco Havoline XLC
19	TOTAL	Rubia S *Rubia X	Total EP Total transmission TM	Multis EP2	Total Fina Elf Glacelf CHP Supra
20	UNION	*Guardol	MP gear lube LS	Unoba EP	-
21	VEEDOL	*Turbostar *Diesel star MDC	Multigear Multigear B Multigear C	-	-
22	BP	BP tractran 8	BP tractran 8	-	-
23	Fuchs	Fuchs titan hydra	20W-40	-	-

STANDARD TIGHTENING TORQUES FOR BOLTS AND NUTS

INTRODUCTION OF NECESSARY TOOLS

The following tools are needed when carrying out maintenance.
(These tools are provided in tool box)

No.	Name of tool	Part No.	Remarks
1	Wrench set	09002-00810 09002-01214 09002-01317 09002-01922 09002-02427 09002-03032	Applicable width across flats (S_1-S_2) 8mm - 10mm 12mm - 14mm 13mm - 17mm 19mm - 22mm 24mm - 27mm 30mm - 32mm
2	Screwdriver	09033-00190	Crosshead/flat head interchangeable type
3	Socket wrench set	09020-10282	Applicable width across flats set 10 mm, 13 mm, 14 mm, 17 mm, 19 mm, 22 mm, 24 mm, 27 mm, 30 mm, 32 mm. Extension, Handle, Joint, Ratchet handle bar
4	Wrench	09002-03641	Applicable width across flats 36 mm - 41 mm
5	Pliers	09036-00150	
6	Filter wrench	09019-08035	
7	Grease pump	07950-90403	For greasing work
8	Nozzle	07951-11400	
9	Grease cartridge	07950-90403	(Lithium base grease: 400 g)
10	Hammer	09039-00150	
11	Pinch bar	09055-00520	
12	Gauge	09054-00009	
13	Socket	20E-98-K1110	33 mm drive socket

If any of the above tools are broken, please order them from your Komatsu distributor.

TIGHTENING TORQUE SPECIFICATIONS

TIGHTENING TORQUE LIST

⚠ CAUTION

If nuts, bolts, or other parts are not tightened to the specified torque, it will cause looseness or damage to the tightened parts, and this will cause failure of the machine or problems with operation.
Pay careful attention when tightening parts.

Unless otherwise specified, tighten the metric nuts and bolts to the torque shown in the table below.

The tightening torque is determined by the width across the flats of the nut and bolt.

If it is necessary to replace any nut or bolt, use a Komatsu genuine part of the same size as the part that was replaced

Thread diameter a (mm)	Width across flat b (mm)	Tightening torque			
		Target value		Service limit	
		N•m	kgf•m	N•m	kgf•m
6	10	13.2	1.35	11.8 - 14.7	1.2 - 1.5
8	13	31	3.2	27 - 34	2.8 - 3.5
10	17	66	6.7	59 - 74	6.0 - 7.5
12	19	11	11.5	98 - 123	10.0 - 12.5
14	22	177	18	157 - 196	16.0 - 20.0
16	24	279	28.5	245 - 309	25.0 - 31.5
18	27	382	39	343 - 425	35.0 - 43.5
20	30	549	56	490 - 608	50.0 - 62.0
22	32	745	76	662 - 829	67.5 - 84.5
24	36	927	94.5	824 - 1030	84.0 - 105.0
27	41	1320	135.0	1180 - 1470	120.0 - 150.0
30	46	1720	175.0	1520 - 1910	155.0 - 195.0
33	50	2210	225.0	1960 - 2450	200.0 - 250.0
36	55	2750	280.0	2450 - 3040	250.0 - 310.0
39	60	3280	335.0	2890 - 3630	295.0 - 370.0

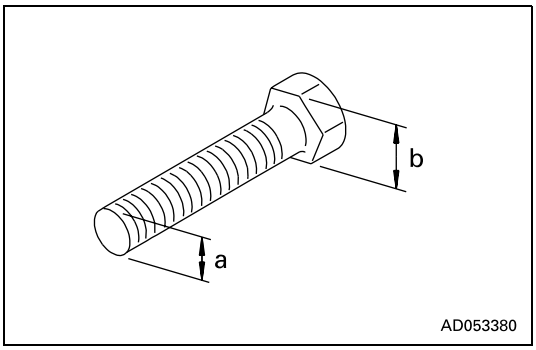

Apply the following table for Hydraulic Hose

.

Thread diameter a (mm)	Width across flat b (mm)	Tightening torque			
		Target value		Service limit	
		N•m	kgf•m	N•m	kgf•m
14	19	29.4	3.0	27.5 - 39.2	2.8 - 4.0
18	24	78.5	8.0	58.8 - 98.1	6.0 - 10.0
22	27	117.7	12.0	88.3 - 137.3	9.0 - 14.0
24	32	147.1	15.0	117.7 - 176.5	12.0 - 18.0
30	36	215.7	22.0	176.5 - 245.2	18.0 - 25.0
33	41	255.0	26.0	215.7 - 284.4	22.0 - 29.0

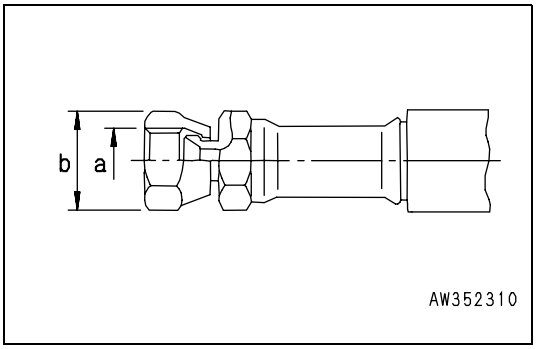

PERIODIC REPLACEMENT OF SAFETY CRITICAL PARTS

To ensure safety at all times when operating or driving the machine, the user of the machine must always carry out periodic maintenance. In addition, to further improve safety, the user should also carry out periodic replacement of the parts given in the table. These parts are particularly closely connected to safety and fire prevention.

With these parts, the material changes as time passed, or they easily wear or deteriorate. However, it is difficult to judge the condition of the parts simply by periodic maintenance, so they should always be replaced after a fixed time has passed, regardless of their condition. This is necessary to ensure that they always maintain their function completely.

However, if these parts show any abnormality before the replacement interval has passed, they should be repaired or replaced immediately.

If the hose clamps show any deterioration, such as deformation or cracking, replace the clamps at the same as the hoses.

When replacing the hoses, always replace the O-rings, gaskets, and other such parts at the same time.

Ask your Komatsu distributor to replace the safety critical parts.

SAFETY CRITICAL PARTS

No.	Safety critical parts for periodic replacement	Q'ty	Replacement interval
1	Fuel hose (fuel tank - water separator)	1	Every 2 years or 4000 hours which ever comes sooner.
2	Fuel hose (water separator - engine lift pump	1	
3	Fuel hose (engine lift pump - fuel filter)	1	
4	Fuel hose (fuel filter - injection pump)	1	
5	Spill hose (engine - fuel tank)	1	
6	Hydraulic hose (main pump delivery))	1	

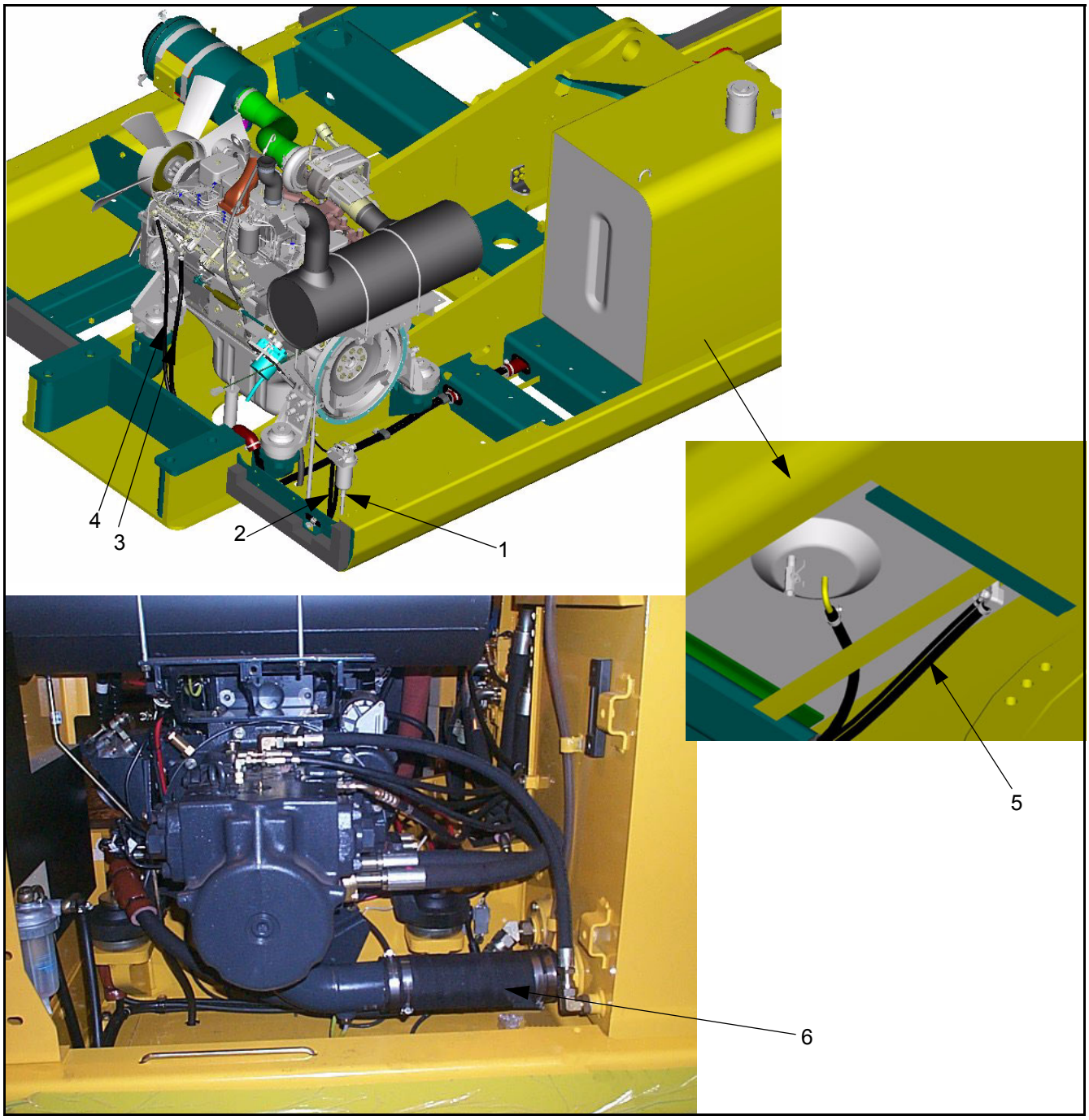

MAINTENANCE SCHEDULE CHART

SERVICE ITEM	PAGE
INITIAL 250 HOURS SERVICE (only after the first 250 hours)	
"REPLACE FUEL FILTER CARTRIDGE"	283
"CHECK ENGINE VALVE CLEARANCE, ADJUST"	283
"CHANGE OIL IN TRANSMISSION, HUBS + AXLES."	283
WHEN REQUIRED	
"CHECK, CLEAN AND REPLACE AIR CLEANER ELEMENT"	284
"CLEAN INSIDE OF COOLING SYSTEM"	289
"CHECKING COOLANT LEVEL"	292
"CHECK AND TIGHTEN WHEEL NUTS"	295
"CHECK ELECTRICAL INTAKE AIR HEATER"	295
"CHECK ALTERNATOR"	295
"CHECK START MOTOR"	296
"REPLACE BUCKET SIDE CUTTERS"	296
"REPLACE BUCKET TEETH"	297
"ADJUST BUCKET CLEARANCE"	301
"CHECK WINDOW WASHER FLUID LEVEL, ADD FLUID"	302
"CHECK AND ADJUST AIR CONDITIONER"	303
"DRAIN ENGINE BREATHER OIL CATCHER"	304
CHECK BEFORE STARTING	
"CHECK COOLANT LEVEL, ADD WATER"	305
"CHECK OIL LEVEL IN ENGINE OIL PAN, ADD OIL"	305
"CHECK FUEL LEVEL, ADD FUEL"	306
"CHECK OIL LEVEL IN HYDRAULIC TANK, ADD OIL"	307
"CHECK AIR CLEANER FOR CLOGGING"	307
"CHECK ELECTRIC WIRING"	308
"CHECK FOR WATER AND SEDIMENT IN SEDIMENTOR. DRAIN WATER AND SEDIMENT"	308
EVERY 50 HOURS SERVICE	
"DRAIN WATER AND SEDIMENT FROM FUEL TANK"	309
EVERY 100 HOURS SERVICE	
"LUBRICATING"	

SERVICE ITEM	PAGE
● "Boom cylinder foot pin (2 points)."	310
● "Boom foot pin (2 points)."	310
● "Boom cylinder rod end (2 points)."	310
● "1st to 2nd boom pin (1 point)."	310
● "1st to 2nd boom pin (2 points)."	310
● "Arm cylinder foot pin (1 point)."	310
● "Boom-Arm coupling pin (1point)."	311
● "Arm cylinder rod end (1 point)."	311
● "Bucket cylinder foot pin (1 point)."	311
● "Arm-Link coupling pin (1 point)."	311
● "Arm-Bucket coupling pin (1 point)."	311
● "Link coupling pin (1 point)."	311
● "Bucket cylinder rod end (1 point)."	311
● "Bucket-Link coupling pin (2 points)."	311
● "Outrigger cylinder foot pin (2 or 4 points)."	311
● "Outrigger cylinder rod end (2 or 4 points)."	311
● "Outrigger leg pivot (2 or 4 points)."	311
● "Outrigger foot pivot (2 or 4 points)."	311
● "Propshaft (3 points)."	311
● "Boom adjust cylinder foot pin (1 point)."	312
● "Boom adjust cylinder rod end (1 point)."	312
● "Axle pivot (2 point) (with outriggers attached)"	312
● "Axle pivot (2 point) (without outriggers)"	312
● "Hub pivot (4 points)"	313
● "Steer links (4 points)"	313
● "Axle pads (If noise heard grease as necessary) (2 points)"	313
● "Cylinder mount (2 points)"	313
● "Top link blade pivot pin (2 points)"	313
● "Lower link blade pivot (2 points)"	313
● "Dozer blade cylinder rod end (2 points)"	313
● "Lower link pivot pin (2 points)"	313
● "Top link pivot pin (2 points)"	313
"CLEANING FRESH AIR FILTER"	314

SERVICE ITEM	PAGE
EVERY 250 HOURS SERVICE	
"CHECK OIL LEVEL IN MACHINERY CASE, ADD OIL"	315
"CHECK OIL LEVEL IN WHEEL HUBS, ADD OIL (Front Axle)"	315
"CHECK OIL LEVEL IN WHEEL HUBS, ADD OIL (Rear Axle)"	316
"CHECK OIL LEVEL IN AXLES, ADD OIL"	316
"CHECK OIL LEVEL IN TRANSMISSION, ADD OIL"	317
"CHECK LEVEL OF BATTERY ELECTROLYTE"	317
"BELTS, GENERAL"	318
"CHECK FAN BELT TENSION, ADJUST TENSION"	318
"CHECK, ADJUST TENSION OF AIR CONDITIONER COMPRESSOR BELT"	319
EVERY 500 HOURS SERVICE	
"LUBRICATE SWING CIRCLE (2 POINTS)"	320
"REPLACE FUEL FILTER CARTRIDGE"	321
"CHECK SWING PINION GREASE LEVEL, ADD GREASE"	322
"CHANGE OIL IN ENGINE OIL PAN, REPLACE ENGINE OIL FILTER CARTRIDGE"	323
"CLEAN AND INSPECT RADIATOR FINS, OIL COOLER FINS AND CONDENSER FINS"	324
"CLEAN INTERNAL AND EXTERNAL AIR FILTERS OF AIR CONDITIONER SYSTEM"	325
"CLEANING RECIRCULATED AIR FILTER"	326
"REPLACE HYDRAULIC TANK BREATHER ELEMENT"	327
EVERY 1000 HOURS SERVICE	
"REPLACE HYDRAULIC FILTER ELEMENT"	328
"CHANGE OIL IN SWING MACHINERY CASE."	329
"CHECK ALL TIGHTENING PARTS OF TURBOCHARGER."	329
"CHECK PLAY OF TURBOCHARGER ROTOR."	330
"CHECK & ADJUST VALVE CLEARANCE"	330
"CHECK FAN BELT TENSIONER BEARING BELT AND FAN HUB"	330
"CHECK FAN BELT TENSION"	330
"CHANGE OIL IN AXLES"	330
"CHANGE OIL IN HUBS"	331
"CHANGE OIL IN TRANSMISSION ASSEMBLY"	333
EVERY 2000 HOURS SERVICE	
"CLEAN HYDRAULIC TANK STRAINER"	334
"CLEAN, CHECK TURBOCHARGER"	334

SERVICE ITEM	PAGE
"CHECK ALTERNATOR, STARTING MOTOR"	334
"CHECK VIBRATION DAMPER"	334
"CHANGE ANTIFREEZE"	334
"CHECK AND ADJUST VALVE CLEARANCE"	335
EVERY 4000 HOURS SERVICE	
"CHECK WATER PUMP"	335
EVERY 5000 HOURS SERVICE	
"CHANGE OIL IN HYDRAULIC TANK"	336

KEY TO LUBRICATION POINTS

1. Engine oil	check level change oil	24. Front propshaft	grease
2. Hydraulic oil	check level change oil	25. Cylinder mount	grease
3. Boom cylinder foot pin	grease	26. Top link blade pivot pin	grease
4. Boom foot pin	grease	26. Top link pivot pin	grease
5. Boom cylinder rod end	grease	27. Dozer blade cylinder rod end	grease
6. Arm cylinder foot pin	grease	27. Lower link pivot pin	grease
7. Boom arm coupling pin	grease	27. Lower link blade pin	grease
8. Arm cylinder rod end	grease	28. Outrigger foot pivot	grease
9. Bucket cylinder foot pin	grease	29. Outrigger cylinder foot pin	grease
10. Bucket cylinder rod end	grease	30. Outrigger cylinder rod end	grease
11. Link coupling pin	grease	31. Outrigger leg pivot	grease
12. Arm-bucket coupling pin	grease	32. Transmission oil	check level change oil
13. Arm-link coupling pin	grease	33. Wheel hubs (front)	check level change oil
14. Bucket-link coupling pin	grease	34. Wheel hubs (rear)	check level change oil
15. Swing machinery oil	grease	35. Front axle	check level change oil
16. Adjust cylinder foot pin	check level change oil	36. Rear axle	check level change oil
17. Adjust cylinder rod end	grease	37. Hydraulic filter element	change filter
18. 1st boom - 2nd boom coupling pin	grease	38. Swing machinery	grease change oil
19. 1st boom - 2nd boom coupling pin	grease	39. Swing pinion	grease
20. Steer links	grease	40. Engine oil filter	change filter
21. Axle pads	grease	41. Fuel filters	change filter
22. Axle pivot	grease	42. Hydraulic oil	change filter
23.Rear propshaft	grease	43. Damper case	check level change oil

	Interval of service		Change filter
	Lubrication by greasing (G)	(LITRES)	Amount of oil required at change (liters)
	Check oil level/change (EO)		

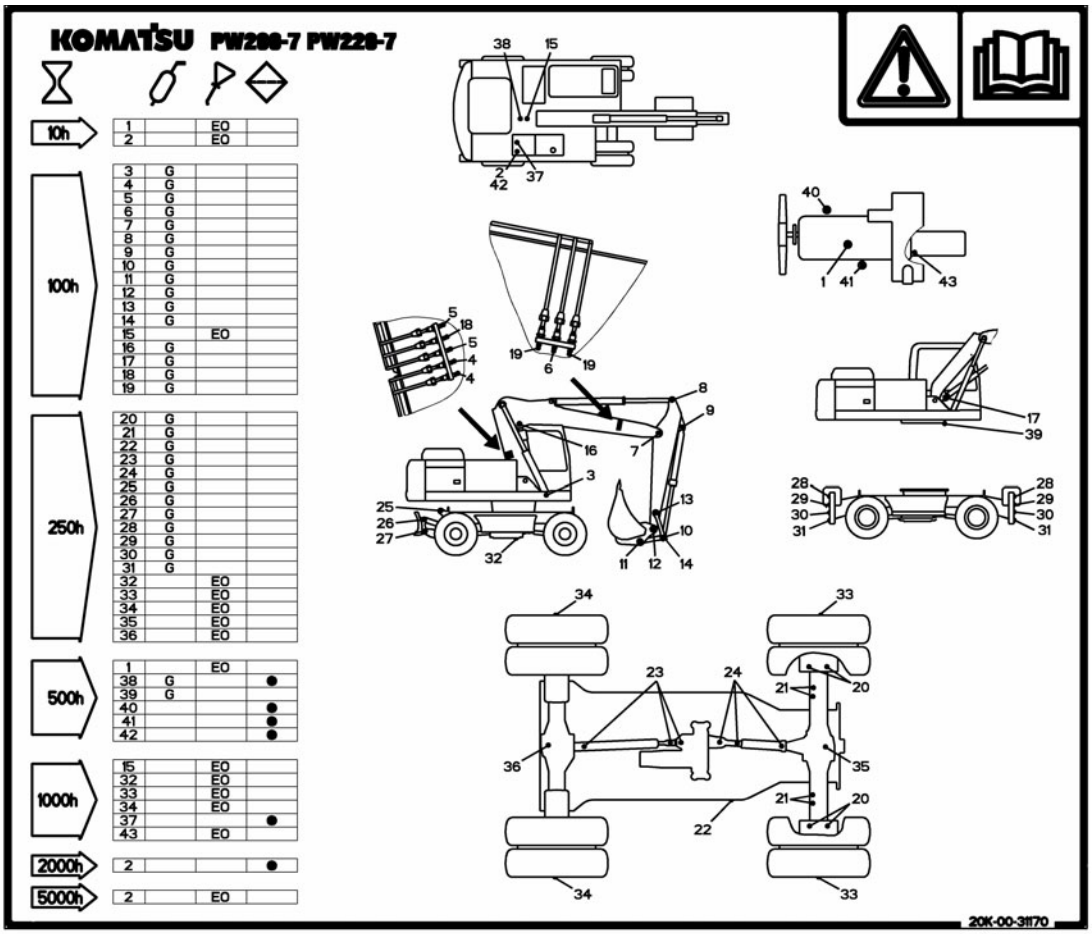

SERVICE PROCEDURE

INITIAL 250 HOURS SERVICE

Carry out the following maintenance only after the first 250 hours.

- REPLACE FUEL FILTER CARTRIDGE

  For details, see "REPLACE FUEL FILTER CARTRIDGE (321)"

- CHECK ENGINE VALVE CLEARANCE, ADJUST

  For details, see "CHECK ENGINE VALVE CLEARANCE, ADJUST (283)"

  For details of the method of replacing or maintaining, see the section on EVERY 500 HOURS and 2000 HOURS SERVICE.

- CHANGE OIL IN TRANSMISSION, HUBS + AXLES.

WHEN REQUIRED

CHECK, CLEAN AND REPLACE AIR CLEANER ELEMENT

⚠ WARNING

- **If inspection, cleaning, or maintenance is carried out with the engine running, dirt will enter the engine and cause damage to the engine. Stop the engine before carrying out these operations.**
- **When using compressed air, there is danger of dirt flying and causing personal injury.**
  Wear protective glasses, dust mask, or other protective equipment.
- **When removing the outer element from the air cleaner body, it is dangerous to pull it out by force. When working at high places or where the foothold is poor, be careful not to fall because of the reaction when pulling out the outer element.**

Checking

If air cleaner clogging monitor (H) on the monitor panel lights up, clean the air cleaner element.

Replacing

- Replacing element, O-ring
  If one year has passed since installing the element or if air cleaner clogging monitor (H) on the monitor panel flashes immediately after the element is cleaned, replace the outer element, inner element, and O-ring.
- Replacing evacuator valve
  Replace it if it is damaged or the rubber is markedly deformed.

NOTICE

Do not clean the air cleaner element until the air cleaner clogging monitor on the monitor panel flashes. If the element is cleaned frequently before the clogging monitor flashes, the air cleaner will not be able to display its performance fully, and the cleaning efficiency will also go down.
In addition, during the cleaning operation, more dirt stuck to the element will fall inside the inner element.

Outer Element - Clean

1. Open the door at the left side of the machine, remove 3 hooks (2), then remove cover (6).

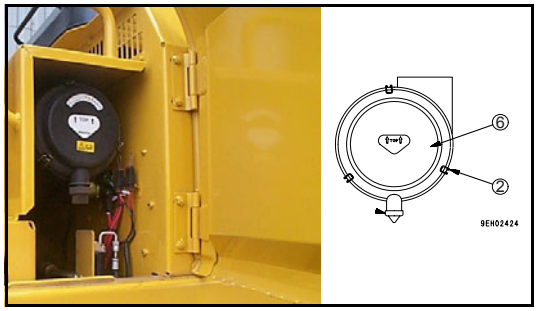

NOTICE

Before and after cleaning the element, do not leave or keep it in direct sunlight.

2. Hold the outer element, rock it lightly up and down and to the left and right, and rotate the element to the left and right to pull it out.

NOTICE

- **Never remove the inner element. It will allow dirt to enter and cause failure of the engine.**
- **Do not use a screwdriver or other tool.**

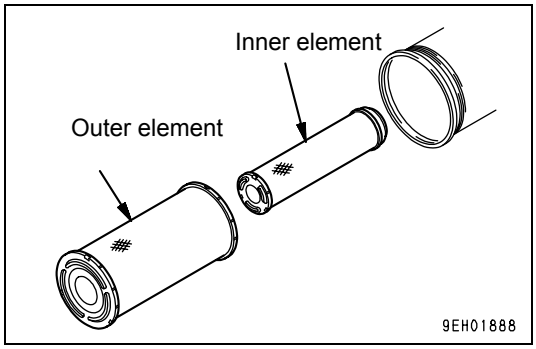

1. After removing the outer element, cover the air connector inside the air cleaner body with a clean cloth or tape to prevent dirt or dust from entering.

2. Wipe off or brush off the dirt stuck to cover (6) and the inside of the air cleaner body.

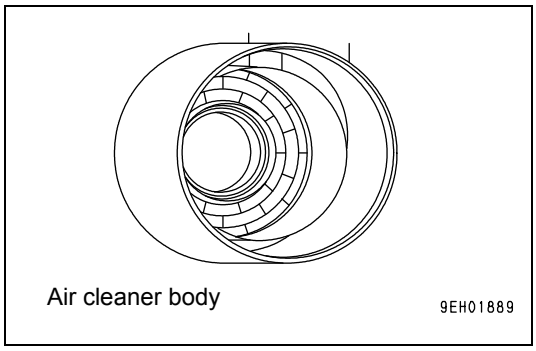

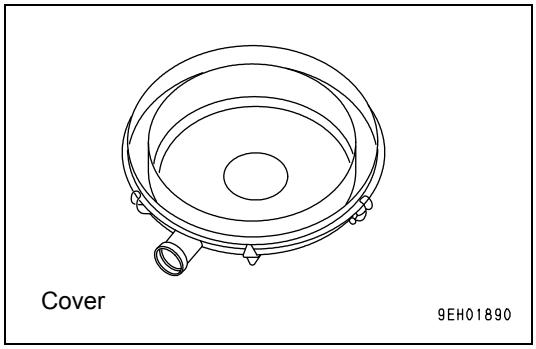

3. Remove any dirt or dust that is accumulated to evacuator valve installed to cover.

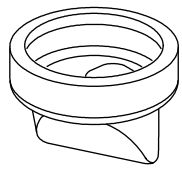

4. Direct dry compressed air (less than 0.69 MPa (7 kgf/cm^2) to the outer element from inside along its folds, then direct it from outside along its folds and again from inside.
   - ○ Remove one seal from the element whenever the element has been cleaned.
   - ○ Replace the outer element which has been cleaned 5 times repeatedly or used throughout a year. Replace the inner element at the same time.
   - ○ Replace both inner and outer elements when the monitor lamp (H) lights up soon after installing the cleaned outer element even though it has not been cleaned 5 times.
   - ○ When replacing the element, stick on seal packed in the same box as the element. Stick the seal in the position shown in the diagram on the right.

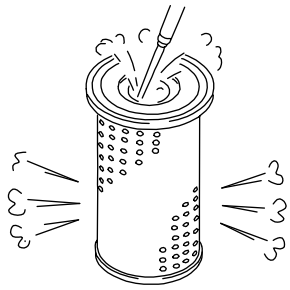

5. Remove the cloth or tape cover installed in Step 3.

6. If small holes or thin cracks are found on the element when it is checked by shining a light through it after cleaning, replace the element.

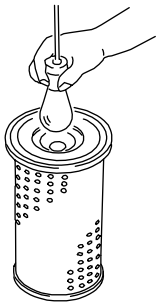

NOTICE

- **When cleaning the element, do not hit or beat it against anything.**
- **Do not use an element whose folds or gasket or seal are damaged.**

Air Cleaner Element - Install

NOTICE

- **Do not use any damaged gasket or seal or element with damaged pleats.**
- **Cleaning the element or O-ring after one year has passed and using them again will cause problems. Replace them with new parts.**
- **The seal portion on imitation parts lacks precision, and allows the entry of dust, which leads to damage of the engine. Do not use such imitation parts.**
- **Do not run the engine with the inner element removed. It will cause damage to the engine.**

1. Check that there is no dirt or oil stuck to the seal portion of the new element or cleaned element. Wipe off any dirt or oil.
2. When the outer element has been removed, check that the inner element has not come out of position and is not at an angle. If at an angle, insert your hand and push it in straight.
3. Push the outer element in straight with your hand when installing it to the air cleaner body.
   If the element is held and rocked lightly up and down and to the left and right while pushing it in, the element can be inserted easily.

NOTICE

When inserting the element, if the rubber at the tip is swollen or the outer element is not pushed in straight, and cover (6) is assembled by force to hook (2), there is danger that the hook and air cleaner body may be damaged, so be careful when assembling.

4. Install cover (6) as follows.
   - ○ Align cover (6) with the element.
   - ○ Hook the tip of hook (2) to the protruding part of the air cleaner body and lock it in position.
   - ○ When locking hooks (2) in position, apply the hooks in turn on opposite sides (top, bottom, left, right) in the same way as when tightening bolts.
   - ○ Install cover (6) so that the evacuator is facing the ground.
   - ○ When cover (6) is installed, check that the clearance between the air cleaner body and cover (6) is not too large.
     If it is too large, install again.

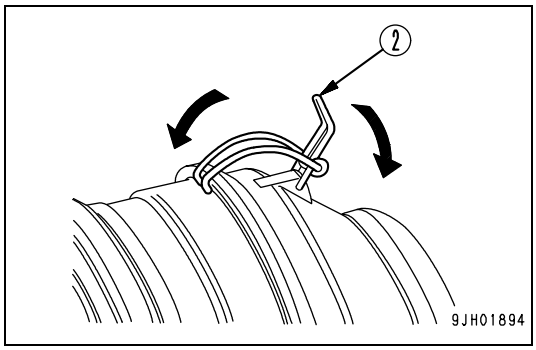

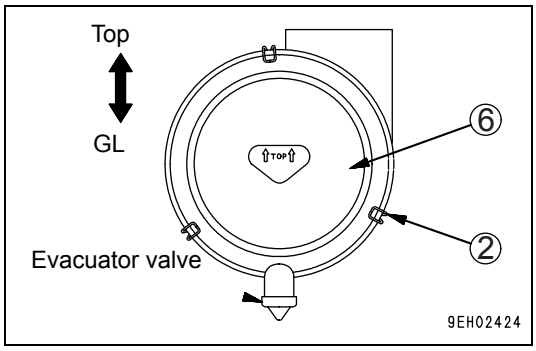

Air Cleaner Inner Element - Replace

1. First remove the outer element, and then remove the inner element.
2. Cover the air connector side (outlet side) with a clean cloth or tape.
3. Clean the air cleaner body interior, then remove the cover from the air intake port in Step 2.
4. Install a new inner element to the connector, then tighten the nut.

NOTICE

The inner element must not be cleaned and used again. When replacing the outer element, replace the inner element at the same time.

5. Set the outer element in position, then lock cover (6) with hooks (2).

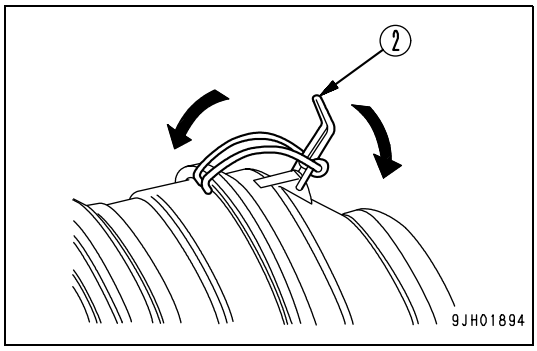

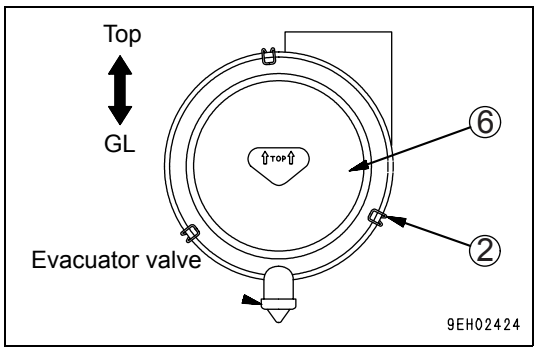

CLEAN INSIDE OF COOLING SYSTEM

⚠ WARNING

- **Immediately after the engine is stopped, the coolant is at a high temperature and the radiator is under high internal pressure.**
  If the cap is removed to drain the coolant in this condition, there is a hazard of burns. Wait for the temperature to go down, then turn the cap slowly to release the pressure before removing it.
- **Cleaning is carried out with the engine running. When standing up or leaving the operator's seat, raise the safety lock lever to the LOCK position.**
- **For details of starting the engine, see "CHECK BEFORE STARTING ENGINE (187)" and "STARTING ENGINE (201)" in the OPERATION section.**
- **There is danger of touching the fan if the undercover is left removed.**
  Never enter behind the machine when the engine is running.

Clean the inside of the cooling system, change the coolant and replace the corrosion resistor agent KI according to the table below.

Kind of coolant	Cleaning inside of cooling system and changing coolant	Adding corrosion resistor agent KI
Permanent type antifreeze (All season type)	Every year (autumn) or every 2000 hours whichever comes first	Every 1000 hours and when cleaning the inside of the cooling system and when changing coolant.
Non permanent type antifreeze containing ethylene glycol (winter, one season type)	Every 6 months (spring, autumn) (Drain antifreeze in spring, add antifreeze in autumn)	
When not using antifreeze	Every 6 months or every 1000 hours whichever comes first	

Stop the machine on level ground when cleaning or changing the coolant.

Use a permanent type of antifreeze.

If, for some reason, it is impossible to use permanent type antifreeze, use an antifreeze containing ethylene glycol.

Super Coolant (AF-ACL) has an anti-corrosion effect as well as an antifreeze effect.

The ratio of antifreeze to water depends on the ambient temperature, but to obtain the corrosion resistance effect, a minimum ratio of 30% by volume is necessary.

In areas where the water is hard, add Komatsu genuine corrosion resistor agent KI. One packet of corrosion resistor agent contains 100g. The standard density of the mixture should be 7 g/liters.

When deciding the ratio of antifreeze to water, check the lowest temperature in the past, and decide from the mixing rate table given below.

It is actually better to estimate a temperature about 10°C lower when deciding the mixing rate.

CLEAN INSIDE OF COOLING SYSTEM

⚠ WARNING

- **Soon after the engine has been stopped, the coolant is hot and can cause personal injury. Allow the engine to cool before draining water.**
- **Since cleaning is performed while the engine is running, it is very dangerous to enter the rear side of the machine as the machine may suddenly start moving. If the under cover is left removed, it may interfere with the fan. While the engine is running, never enter the rearside of the machine.**
- **Never remove the radiator cap when the engine is at operating temperature. At operating temperature, the coolant is under pressure. Steam blowing up from the radiator could cause personal injury. Allow the engine to cool until the radiator filler cap is cool enough to touch with your hand. Remove the filler cap slowly to allow pressure to be relieved.**

GENERAL

The cooling system operates under pressure which is controlled by the pressure relief valve in the radiator cap.

The belt-driven water pump circulates the coolant through the engine block, cylinder heads, radiator and engine oil cooler. Circulation is controlled by the thermostat which by-passes coolant flow around the radiator until the engine reaches operating temperature.

Proper cooling is possible only when the system is sealed, the radiator cap gasket is in good condition, the pressure relief valve and thermostat are operating properly. The system is free of coolant and air flow restrictions and the system is filled to the proper level.

Selection and maintenance of the engine coolant is important to long engine life. The following information provides recommendations for selecting the engine coolant, maintaining the coolant inhibitors and servicing the cooling system.

The system operates successfully with a water/antifreeze mixture or inhibited/conditioned water as the coolant. Water alone allows rust, scale deposits, and corrosion to occur within the system.

Every 2000 hours, the cooling system should be drained, flushed, and refilled as described in this section.

When deciding the ratio of antifreeze to water, check the lowest temperature in the past, and decide from the mixing rate table given below. For details, see "Mixing rate of water and antifreeze (291)"

It is actually better to estimate a temperature about 10°C lower when deciding the mixing rate.

Mixing rate of water and antifreeze

Min. atmospheric temperature	° C	-5	-10	-15	-20	-25	-30
Amount of antifreeze	liters	4.6	6	7.2	8.2	9.2	9.95
Amount of water	liters	15.4	14	12.8	11.8	10.8	10.05

⚠ WARNING

Antifreeze is flammable, so keep it away from any flame.

- Use city water for the cooling water.
  If river water, well water or other such water supply must be used, contact your Komatsu distributor.
- We recommend use of an antifreeze density gauge to control the mixing proportions.

⚠ WARNING

When removing drain plug, avoid pouring coolant on yourself.

REMOVAL

⚠ WARNING

- **Hot, scalding coolant can spray out if the radiator cap is removed suddenly. Relieve system pressure by slowly turning the cap to the first notch or lifting the safety lever (if equipped). Remove the cap only after the pressure is relirved.**
- **Use extreme caution when adding coolant to the radiator to avoid being burned. Wear gloves and goggles and keep face away from the filler neck.**

To remove the cap, turn the cap to the left, or counterclockwise up to the safety stop until the cap is free to be removed.

INSTALLATION

When installing the cap, the gasket and contacting surfaces must be clean. Turn the cap to the right, or clockwise until snug.

CHECKING COOLANT LEVEL

REMARK

Check the coolant level before starting the engine.

1. Check the coolant level in the radiator reserve tank (5). The coolant level should be between the FULL and LOW markings on the tank.
2. If coolant must be added, remove the reserve tank cap (4) and add coolant until level is between the FULL and LOW markings on the tank.

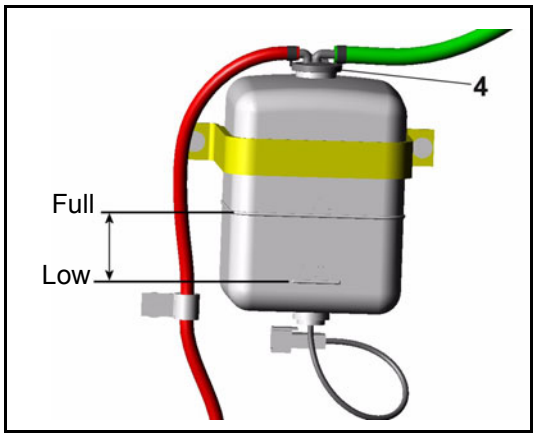

DRAINING THE SYSTEM

WARNING

- **Before working on the engine or electrical system, disconnect the negative (ground) battery cable. Tag the cable and controls to warn against starting.**
- **Wear hand and eye protection when draining hot fluids.**

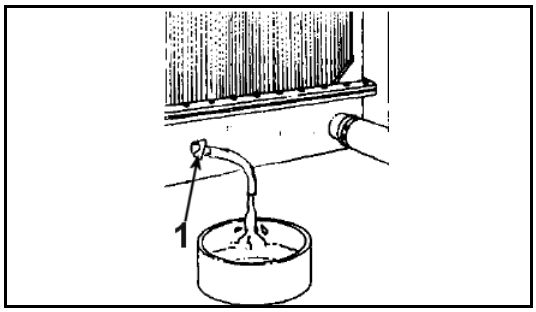

1. Run the engine until it reaches operating temperature then stop the engine.
2. Remove the radiator cap as outlined in this section.
3. Remove the undercover. Place a container below drain plug.
4. Remove the coolant drain plug located on the bottom of the radiator (1).
5. Allow the system to completely drain into the container.
   Do not let drain outlets clog up during draining.
6. Fit the radiator drain Plug (1)
7. Replace undercover.

CLEANING THE SYSTEM

At 2000 hours clean the cooling system as follows:

1. Drain the system into a suitable container. Refer to "DRAINING THE SYSTEM (292)".
2. Drain and clean the reserve tank.
3. Close the radiator plug.
4. Fill the system with clean water, refer to "FILLING THE SYSTEM (293)" and add a flushing compound that is compatible with aluminium. Flush the system in accordance with the instructions furnished with the compound.
5. After flushing, rinsing and completely draining the system. Refill with clean coolant. Refer to "FILLING THE SYSTEM (293)".

FILLING THE SYSTEM

REMARK

Be sure to fill the heater and heater supply lines with fresh coolant, even if the heater is not in use (warm weather). Leaving the heater core empty causes corrosion in the heater.

1. Be sure the radiator drain is closed and tightened.
2. Fill the cooling system to maximum capacity. Fill with anti-freeze. For coolant specifications, see "COOLANT (263)".
3. Start engine and run until normal operating temperature is reached. Add coolant when needed to keep proper level in reserve tank.
4. After all air is removed and level remains fixed, install the radiator cap.
5. Fill the radiator reserve tank with coolant until level is between the FULL and LOW markings on the tank.

REFILLING AN OVERHEATED SYSTEM

Do not add coolant to the radiator of an overheated engine unless absolutely necessary. However, if necessary:

1. Remove the radiator cap. Refer to “RADIATOR CAP” in this section.
2. Be sure the drain plug is closed.

⚠ WARNING

Use extreme caution when adding coolant to a hot radiator to avoid being burned. Wear gloves and goggles and keep away from the filler neck.

3. Add coolant to the radiator slowly until full.
4. Remove the reserve tank cap.

5. Add coolant to the reserve tank until the level is between FULL and LOW marking on the tank.
6. When coolant level remains fixed between the FULL and LOW on the reserve tank, install the reserve tank cap.
7. Run the engine.
8. Stop the engine.
9. Check for leaks and coolant level in the reserve tank.

CLEANING THE RADIATOR

Minor internal sludge accumulations will be removed when flushing the cooling system.

When internal accumulations are found that cannot be removed by normal flushing methods, consult your distributor.

Remove all bugs and dirt from the radiator core, using air or water under pressure. Direct the flow through the core, opposite to the normal direction of air flow.

THERMOSTAT

REMOVAL

1. Drain the cooling system. Refer to "DRAINING THE SYSTEM (292)" in this section.
2. Remove the components and housing to access the thermostat.
3. Remove the thermostat and clean all gasket material from either mating surfaces.

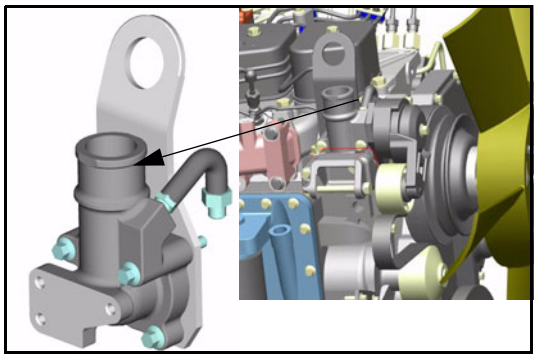

INSTALLATION

1. Install new thermostat with new gasket.
2. Re-install thermostat housing and all component parts.
3. Fill the cooling system. Refer to “COOLING THE SYSTEM” in this section.

FAN

WARNING

Personal injury can result from a fan blade failure. Never pull or pry on the fan. This can damage the fan blade(s) and cause fan failure.

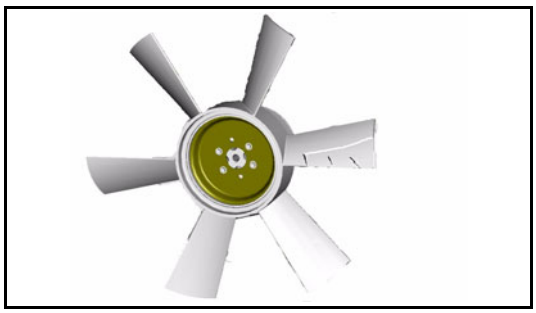

Check the fan for cracks, loose rivets (for metal fans) and bent or loose blades. Make sure it is securely mounted. Tighten the cap screws if loose. Replace damaged fans.

CHECK AND TIGHTEN WHEEL NUTS

Order for tightening

Tighten the bolts in the order shown in the diagram. Torque to 80kgm.

CHECK ELECTRICAL INTAKE AIR HEATER

Before the start of the cold season (once a year), contact your Komatsu distributor to have the electrical intake air heater repaired or checked for dirt or disconnections.

CHECK ALTERNATOR

GENERAL

The alternator requires no lubrication since its bearings are factory lubricated for life and require attention only at the time of major overhaul.

The alternator is equipped with an integral, transistorized voltage regulator. If the alternator fails to operate properly, consult your distributor.

PRECAUTIONS

REMARK

The unit electrical system is negative ground. Be CERTAIN the ground polarity is correct when:

a. Installing a new battery.

b. Connecting a battery charger.

c. Using a booster.

Failure to observe proper polarity will result in damage to the alternator.

NEVER use a fast charger as a booster to start the engine.

NEVER unhook a battery terminal while the engine is running.

NEVER disconnect the alternator cable while the engine is running.

REMARK

Do not short across or ground any terminals of the alternator. Do not connect any cable to the “R” terminal on the alternator. This will result in severe damage to the harness and radiator.

CHECK START MOTOR

Under normal operating conditions, no maintenance is required between engine overhaul periods. At the time of engine overhaul, the motor should be disassembled, inspected, cleaned and tested. Contact your distributor for detailed information.

REPLACE BUCKET SIDE CUTTERS

⚠ WARNING

It is dangerous if the work equipment moves by mistake when the teeth are being replaced. Set the work equipment in a stable condition, then stop the engine and apply the control lever pad safety lock.

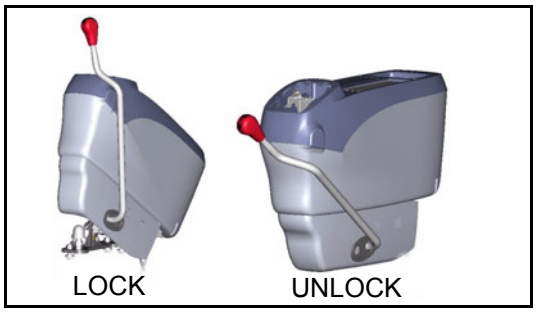

1. loosen nuts (5) and bolts (3) and remove side cutters (1) and (2).
2. Clean cutter mounting face on bucket side plate.
3. Check nuts and bolts and replace if damaged.
4. Fit new side cutters.
5. Tighten bolts to 110 ± 10 kgm.

NOTE: When side cutters are not being used shrouds should be fitted to prevent wear of the bucket side plate.

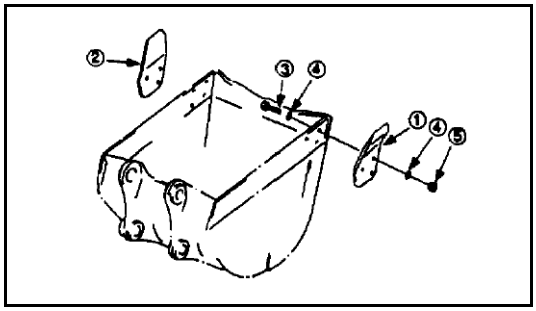

REPLACE BUCKET TEETH

REPLACE BUCKET TEETH (VERTICAL PIN TYPE)

Replace the point before the adapter starts to wear.

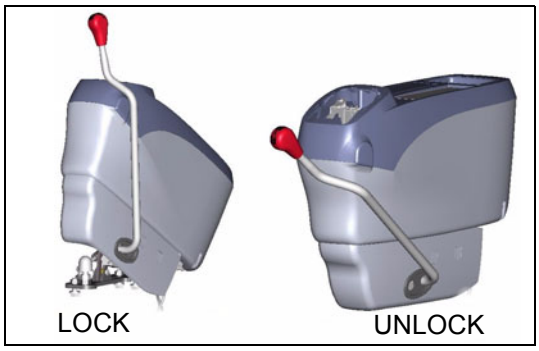

WARNING

- **It is dangerous if the work equipment moves by mistake when the teeth are being replaced. Set the work equipment in a stable position, then stop the engine and apply the locks securely to the levers.**
- **If the locking pin is knocked out with excessive force, there is a hazard that the pin may fly out. Check that there is no one in the surrounding area.**
- **Pieces will often fly during the replacement operation, so wear safety glasses, gloves, and other protective equipment.**

1. To make it possible to knock out the pin of tooth (1), set the bottom surface of the bucket on a block, check that the work equipment is in a stable condition, raise the safety lock lever to the LOCK position.

   Set so that the bottom face of the bucket is horizontal.

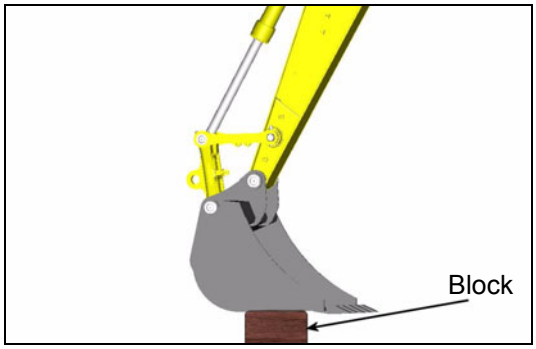

2. Use a hammer and drift to knock out lock pin (2). (If the drift is set against rubber pin lock (3) when it is hit, the rubber pin lock may break. Set it against the back of the pin.)
3. After removing lock pin (2) and rubber pin lock (3), check them.

NOTE: If lock pins and rubber pin locks with the following defects are used, the teeth may come off the bucket. Replace them with new ones.

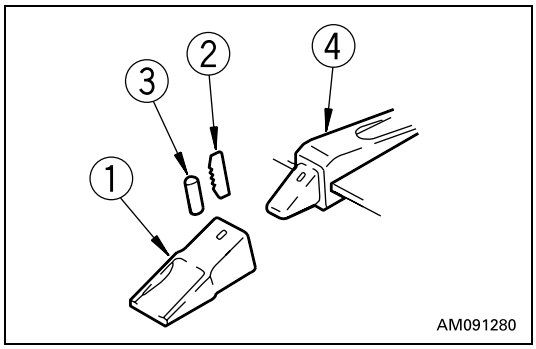

- The lock pin is too short.

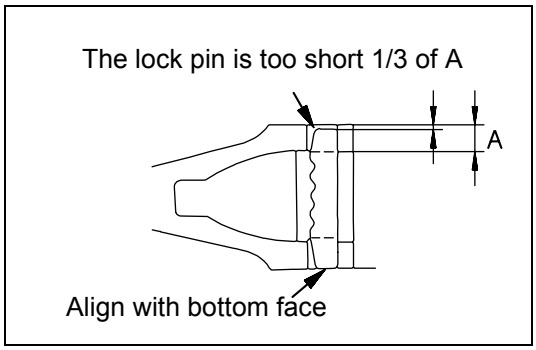

- The rubber of the rubber pin lock is torn, and the steel balls may come out.

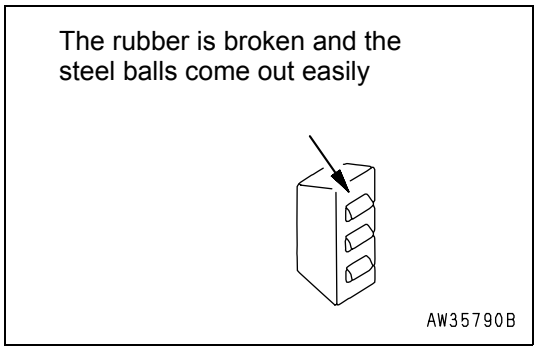

- The steel balls are buried when they are pressed by hand.

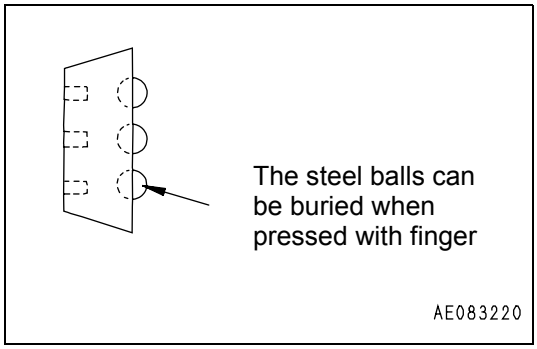

4. Clean the surface of adapter (4) and remove the soil with a knife.
5. Use your hand or a hammer to push rubber pin lock (3) into the hole of the adapter.

   When doing this, be careful that the rubber pin lock does not fly out from the adapter surface.
6. Clean the inside of teeth (1), then install it to adapter (4). If there is mud affixed to it or if there are other protrusions, the teeth will not enter the adapter properly, and there will not be proper contact at the mating portion.

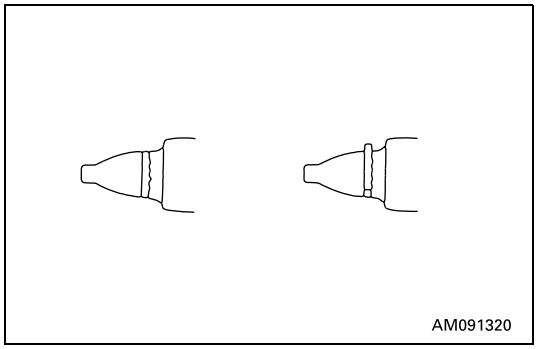

7. Fit tooth (1) to adapter (4), and confirm that when the tooth is pressed strongly, the rear face of the hole for the pin of the tooth (1) is at the same level as the rear face of the hole for the pin of the adapter.

   If the rear face of the hole for the pin of tooth (1) is protruding to the front from the rear face of the pin hole for adapter (4), do not try to knock the pin in.

   There is something preventing tooth (1) from entering adapter (4) fully, so remove the obstruction. When tooth (1) enters adapter (4) fully, knock in lock pin (2).

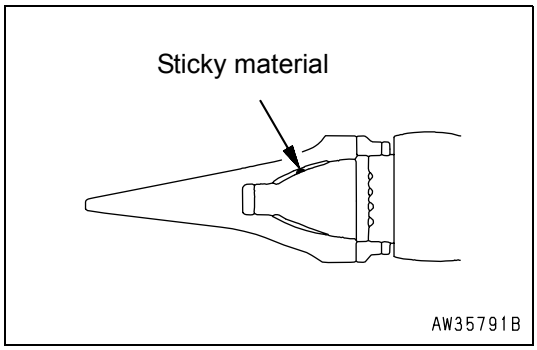

8. Insert lock pin (2) in the hole of the tooth and hit it until its top is the same level as the surface of tooth (1).

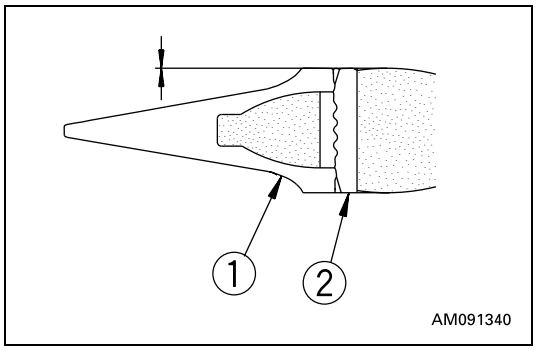

9. After replacing a bucket tooth, check the following.
   - After the lock pin has been knocked in completely, check that it is secured by the point and surface.
   - Lightly hit lock pin (2) in the reverse direction from which it was hit in.
   - Lightly hit the tip of the point from above and below, and hit its sides from right and left.
   - Confirm that rubber pin lock (3) and lock pin (2) are set as shown in the figure.

   The life of the teeth can be lengthened and the frequency of their replacement can be reduced by turning them upside down so that they will wear evenly.

   Replace the rubber pin lock and locking pin at the same time as replacing the teeth. This makes it possible to prevent the teeth from falling out.

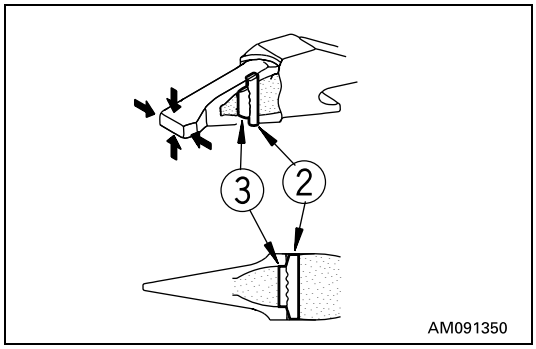

REPLACE BUCKET TEETH (HORIZONTAL PIN TYPE)

Replace the point before the wear reaches the adapter.

⚠ WARNING

- **It is dangerous if the work equipment moves by mistake when the teeth are being replaced. Set the work equipment in a stable position, then stop the engine and raise the safety lock lever to the LOCK position.**
- **If the locking pin is knocked out with excessive force, there is a hazard that the pin may fly out. Check that there is no one in the surrounding area.**
- **Pieces will often fly during the replacement operation, so wear safety glasses, gloves, and other protective equipment.**

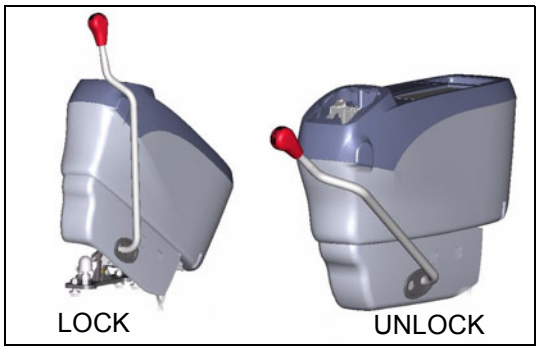

1. Set the bottom of the bucket on a block to make it possible to remove pin (1), check that the work equipment is stable, then raise the safety lock lever to the LOCK position.

   Set so that the bottom of the bucket is horizontal.

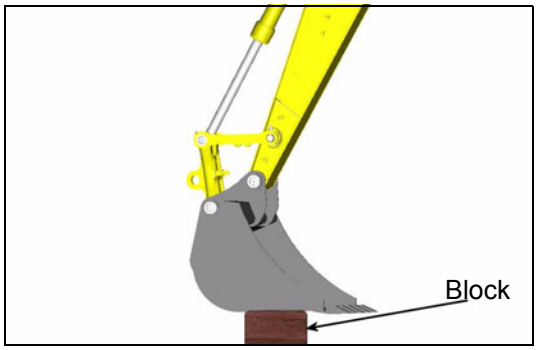

2. Place a bar on the pin head and strike the bar with a hammer to knock out pin (1). Remove tooth (2).

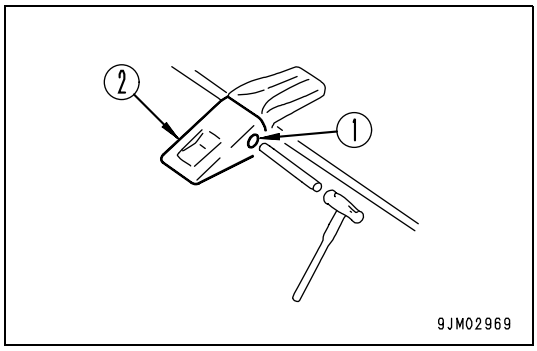

REMARK

Use a round bar with a smaller diameter than that of the pin.

3. Clean the mounting face. Fit a new tooth (2) in the adapter, push in pin (1) partially by hand, then lock it with a hammer to install the tooth to the bucket.

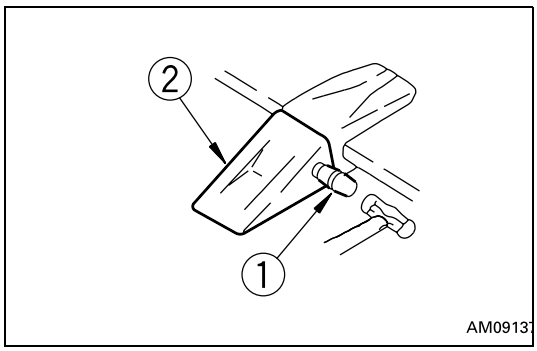

ADJUST BUCKET CLEARANCE

WARNING

- **It is dangerous if the work equipment moves by mistake when the clearance is being adjusted.**
- **Set the work equipment in a stable position, then stop the engine and raise the safety lock lever to the LOCK position.**

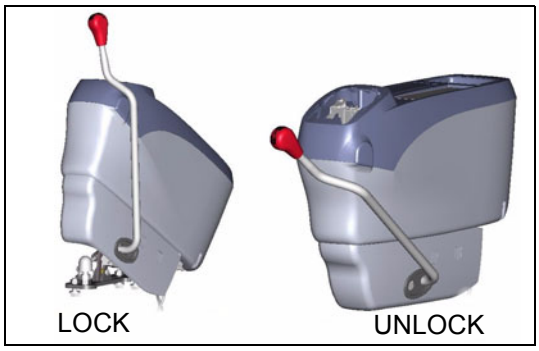

1. Set the work equipment to the position shown in the diagram at right, stop the engine and raise the safety lock lever to the LOCK position.
2. Shift O-ring (1) of the linkage and measure the amount of play "a".

   Measurement is easier if you move the bucket to one side or the other so all the play can be measured in one place. (In the diagram this is on the left-hand side)

   Use a gap (clearance) gauge for easy and accurate measurement.
3. Loosen the four plate fixing bolts (2) and loosen plate (3).

   Because it uses split shims, you can carry out the operation without removing the bolts entirely.
4. Remove shim (4) corresponding to the amount of play "a" measured above.

   [Example]
   In the case of play of 3 mm, remove two 1.0 mm shims and one 0.5 mm shim. Play becomes 0.5 mm. For shim (4), two types of 1.0 mm and 0.5 mm are used.

   When play a is smaller than one shim, do not carry out any maintenance.
5. Tighten the four bolts (2).

   If the bolts (2) are too stiff to tighten, pull out pin stopper bolt (5) for easier tightening.

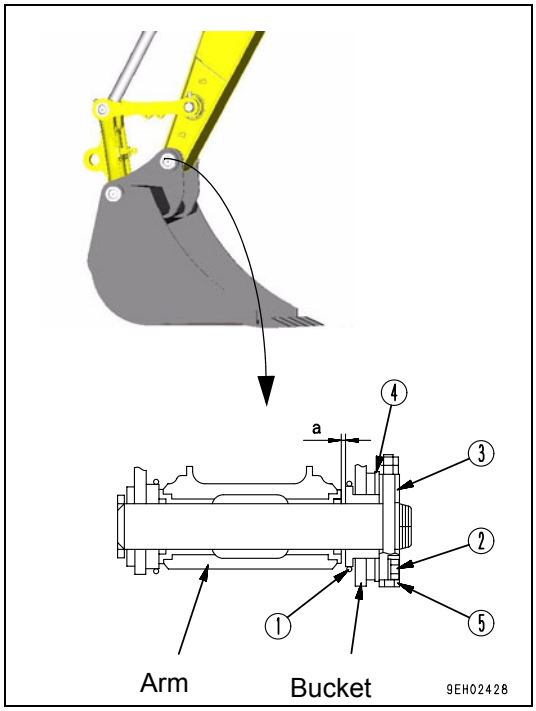

CHECK WINDOW WASHER FLUID LEVEL, ADD FLUID

If there is air in the window washer fluid, check the level of the fluid in window washer tank (1). Add automobile window washer fluid if necessary.

When adding fluid, be careful not to let any dust get in.

Mixture ratio of pure washer fluid and water

Since the ratio should be varied depending on atmospheric temperature, replenish washer fluid at the following mixture ratio, taking temperature into account.

Operation area and season	Mixture ratio	Freezing temperature
Normal	Pure washer fluid 1/3: water 2/3	- 10ºC
Winter in cold region	Pure washer fluid 1/2: water 1/2	- 20ºC
Winter in extremely cold region	Pure washer fluid	- 30ºC

Pure washer fluid comes in two types: for -10ºC (for general use) and for -30ºC (cold regions).

Use pure washer fluid according to operation area and season.

CHECK AND ADJUST AIR CONDITIONER

CHECK LEVEL OF REFRIGERANT (GAS)

⚠ WARNING

If the refrigerant used in the cooler gets into your eyes or on your hands, it may cause loss of sight or frostbite. Do not touch the refrigerant. Never loosen any part of the refrigerant circuit.
Do not bring any flame close to any point where the refrigerant gas is leaking.

If there is a lack of refrigerant (Freon 134a), the cooling performance will be poor.

When operating the cooler at high speed, there should be no bubbles in the sight glass (inspection window) mounted on the condenser unit receiver.

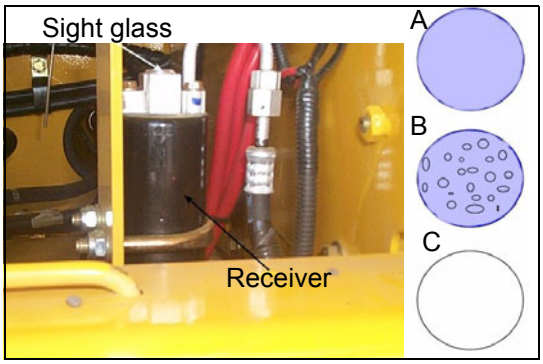

- A: No bubbles in refrigerant flow: Correct
- B: Bubbles in refrigerant flow (bubbles continuously pass through): Refrigerant level low
- C: Colorless, transparent: No refrigerant

REMARK
When there are bubbles, the refrigerant gas level is low, so contact your refrigerant dealer to have refrigerant added. If the air conditioner is run with the refrigerant gas level low, it will cause damage to the compressor.

Check in off-season

When not being used for a long period, operate the cooler for 3 to 5 minutes once a month to supply lubricant to each component of the compressor.

Inspection and maintenance items list for cooler

Inspection and maintenance items	Contents	Maintenance interval
Refrigerant (gas)	Filling quantity	Twice a year; spring and autumn
Condenser	Clogging of fin	Every 500 hours
Compressor	Function	Every 4000 hours
V belt	Damage and tension	Every 250 hours
Blower motor and fan	Function (Check for abnormal sound)	When required
Control mechanism	Function (Check for normal function)	When required
Piping for connection	Installation condition looseness of tightening connection portions gas leakage, damage	When required

DRAIN ENGINE BREATHER OIL CATCHER

Periodically drain oil from the engine breather catcher and whenever it is necessary to remove the engine undercover.

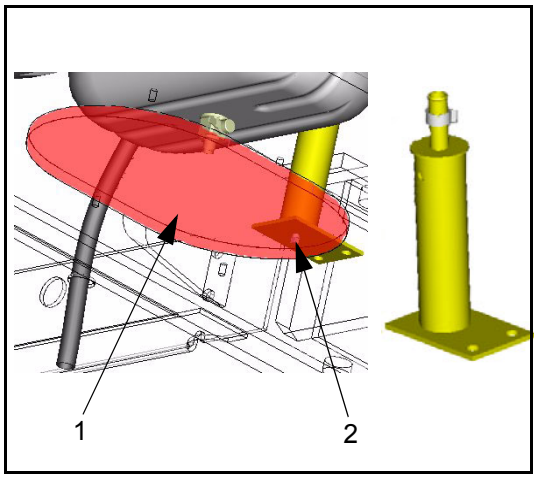

1. Remove undercover (1) and allow oil to drain out.
2. Remove plug (2).

Replace undercover (1).

CHECK BEFORE STARTING

CHECK COOLANT LEVEL, ADD WATER

WARNING

Do not open the radiator cap unless necessary. When checking the coolant, always check the radiator reserve tank when the engine is cold.

1. Open the rear door on the left side of the machine and check that the cooling water level is between the FULL and LOW marks on radiator reserve tank (1) (shown in the diagram on the right).
   If the water level is low, add water through the water filler of reserve tank (1) to the FULL level.
2. After adding water, tighten the cap securely.
3. If the reserve becomes empty, first inspect for water leaks and then fill the radiator and the reserve tank with water.

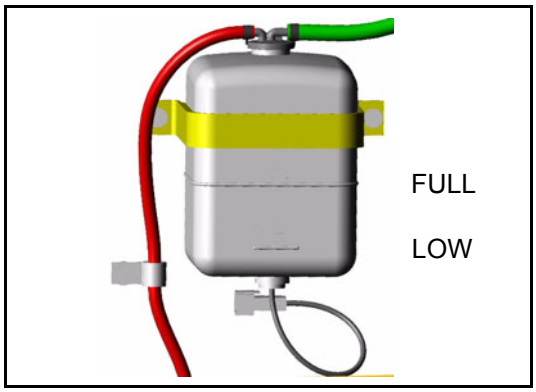

CHECK OIL LEVEL IN ENGINE OIL PAN, ADD OIL

1. Open the engine hood.
2. Remove dipstick (G) and wipe the oil off with a cloth.
3. Insert dipstick (G) fully in the oil gauge pipe, then take it out again.
4. The oil level should be between the H and L marks on dipstick (G). If the oil level is below the L mark, add engine oil through oil filler (F).

   For details of the oil to use, Refer to "USE FUEL, COOLANT AND LUBRICANTS ACCORDING TO AMBIENT TEMPERATURE (269)"
5. If the oil is above the H mark, drain the excess engine oil from drain valve (P), and check the oil level again.
6. If the oil level is correct, tighten the oil filler cap securely and close the engine hood.

REMARK

Ensure that the machine is level when checking oil level.

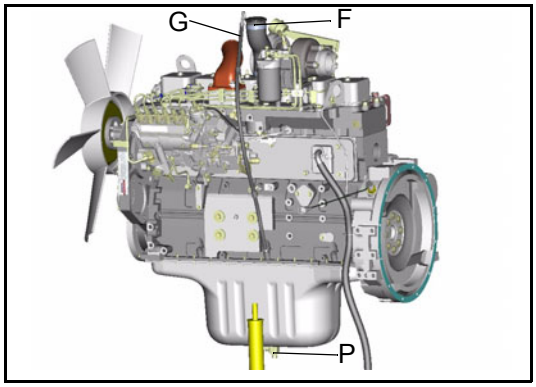

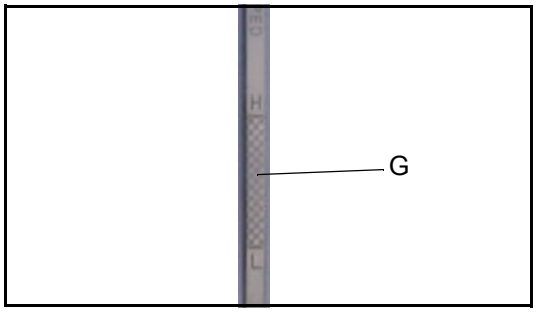

⚠ WARNING

Allow the engine to cool before checking the oil level to avoid burns by touching hot engine parts.

CHECK FUEL LEVEL, ADD FUEL

⚠ WARNING

When adding fuel, never let the fuel overflow. This may cause a fire. If spilling fuel, thoroughly clean up any spillage.

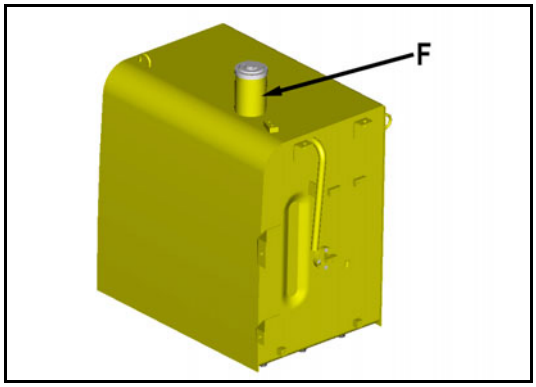

1. Use fuel gauge (G) on the monitor panel to check that the tank is full.
2. If the fuel level is below the E mark on the fuel gauge, add fuel through filler port (F) while watching the float in the filler port.

Fuel capacity: 370 l

For details of the fuel to use, see "USE FUEL, COOLANT AND LUBRICANTS ACCORDING TO AMBIENT TEMPERATURE (269)"

3. After adding fuel, tighten the cap securely.

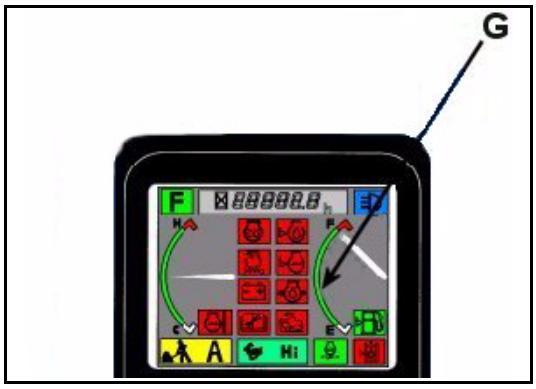

REMARK

If breather hole (1) on the cap is clogged, the pressure in the tank will drop and fuel will not flow.
Clean the hole from time to time.

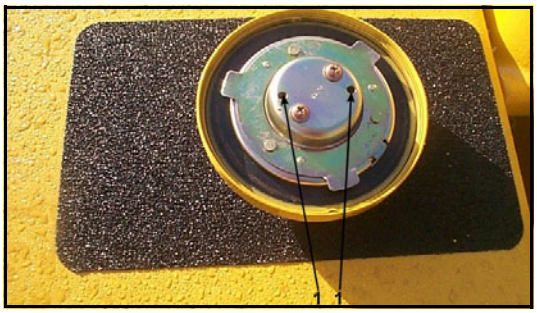

CHECK OIL LEVEL IN HYDRAULIC TANK, ADD OIL

WARNING

- **When removing the oil filler cap, oil may spurt out, so turn the cap slowly to release the internal pressure before removing the cap.**
- **If oil has been added to above the H mark, stop the engine and wait for the hydraulic oil to cool down, then drain the excess oil from drain plug (P).**

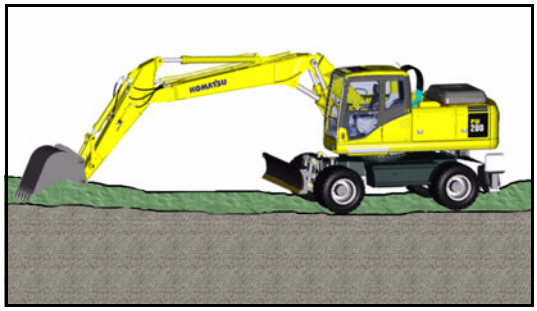

1. If the work equipment is not in the condition shown in the diagram on the right, start the engine run the engine at low speed, retract the arm and bucket cylinders, then lower the boom, set the bucket teeth in contact with the ground, and stop the engine.
2. Check sight gauge (G). The oil level is normal if between the H and L marks.

NOTE: Do not add oil if the level is above the H line. This will damage the hydraulic equipment and cause the oil to spurt out.

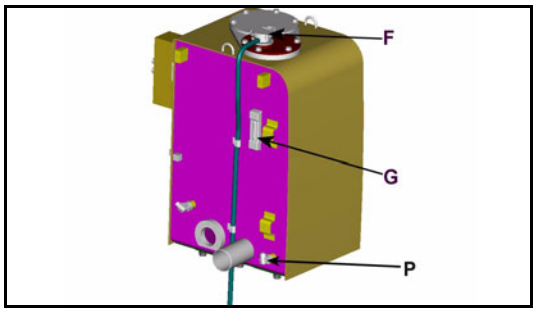

3. If the level is below the L mark, remove cap (F) from the hydraulic tank and add oil.

   For details of the oil to use, see "USE FUEL, COOLANT AND LUBRICANTS ACCORDING TO AMBIENT TEMPERATURE (269)"

REMARK

The oil level will vary depending upon the oil temperature. Accordingly, use the following as a guide:

- Before operation: midway between H & L level
  (Oil temperature 10 to 30°C)
- Normal operation: around H level
  (Oil temperature 50 to 80°C).

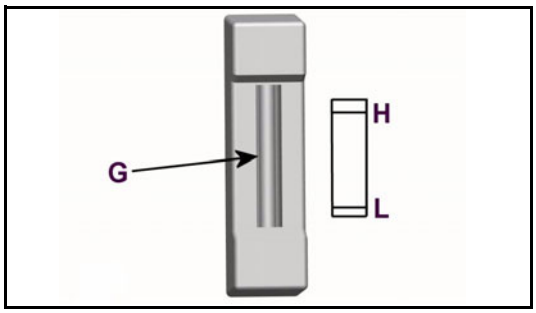

CHECK AIR CLEANER FOR CLOGGING

1. Confirm that the air cleaner clogging monitor does not light up (H).
2. If it lights up, immediately clean or replace the element.

   For details of the method of cleaning the element, see "CLEAN INSIDE OF COOLING SYSTEM (290)"

CHECK ELECTRIC WIRING

WARNING

If the fuse blows frequently, or there are traces of short-circuiting in the electric wiring, always locate and repair the cause.

Check for damage of the fuse and any sign of disconnection or short circuit in the electric wiring. Check also for loose terminals and tighten any loose parts. Check the following points carefully.

- Battery
- Starting motor
- Alternator

Please contact your Komatsu distributor for investigation and correction of the cause.

CHECK FOR WATER AND SEDIMENT IN SEDIMENTOR. DRAIN WATER AND SEDIMENT

1. Open the cover at the rear right of the machine.
2. Inspect the water separator, and check if the ring inside has risen to the marked line.
3. If the ring has risen to the marked line, carry out the procedure from Step 4.
4. Set a container under the water separator to catch the drained fuel.
5. Secure fuel line to prevent leakage.
6. Remove air bleed plug (5) at the top of the water separator.
7. Loosen drain valve (1) at the bottom of the water separator, and drain the water and sediment into the container.
8. Loosen ring nut (2), then remove filter case (3).
9. Remove element (4) from the separator base.
10. Wash element (4) in clean diesel oil.
11. Check element (4), and replace it if it is damaged.
12. When installing element (4), perform Steps 9 and 8 in the opposite order.
    Tightening torque of ring nut (2): 40 ± 3 N•m
    {4.1 ± 0.3 kgf•m}
13. Fill filter case (3) with fuel. When the fuel comes out from air bleed plug (5), tighten air bleed plug (5).

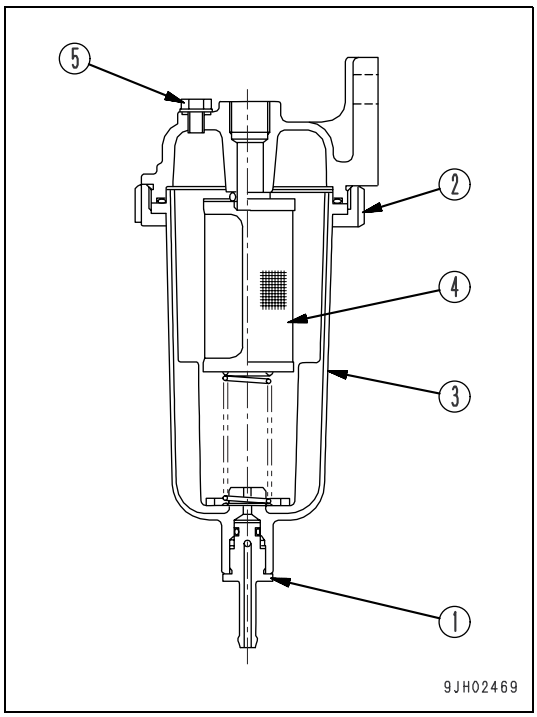

CHECK FOR WATER IN PRIMARY FUEL FILTER, DRAIN WATER

For information on this see "CHECK FOR WATER IN FUEL SEDIMENTOR".

EVERY 50 HOURS

DRAIN WATER AND SEDIMENT FROM FUEL TANK

1. Carry out this procedure before operating the machine.
2. Prepare a container to catch the fuel that is drained.
3. Open valve (1) at the bottom of the tank and drain the sediment and water that has accumulated at the bottom together with fuel. When doing this, be careful not to get fuel on yourself.
4. When only clean fuel comes out, close drain valve (1).

NOTE: Never use trichlene for washing the inside of the tank.

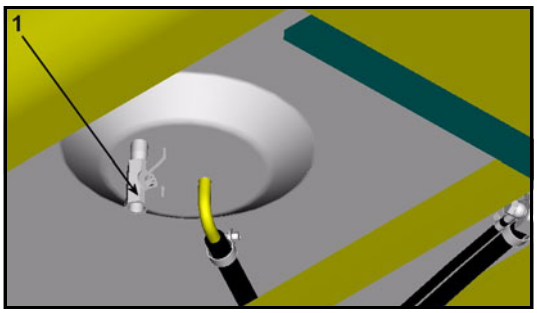

EVERY 100 HOURS SERVICE

Maintenance every 50 hours should be carried out at the same time.

LUBRICATING

The minimum greasing interval is 100 hours, however more frequent greasing will be required depending on conditions/environment.

1. Set the work equipment in the greasing posture below, then lower the work equipment to the ground and stop the engine.
2. Using a grease pump, pump in grease through the grease fittings shown by arrows.

3. After greasing, wipe off any old grease that was pushed out.

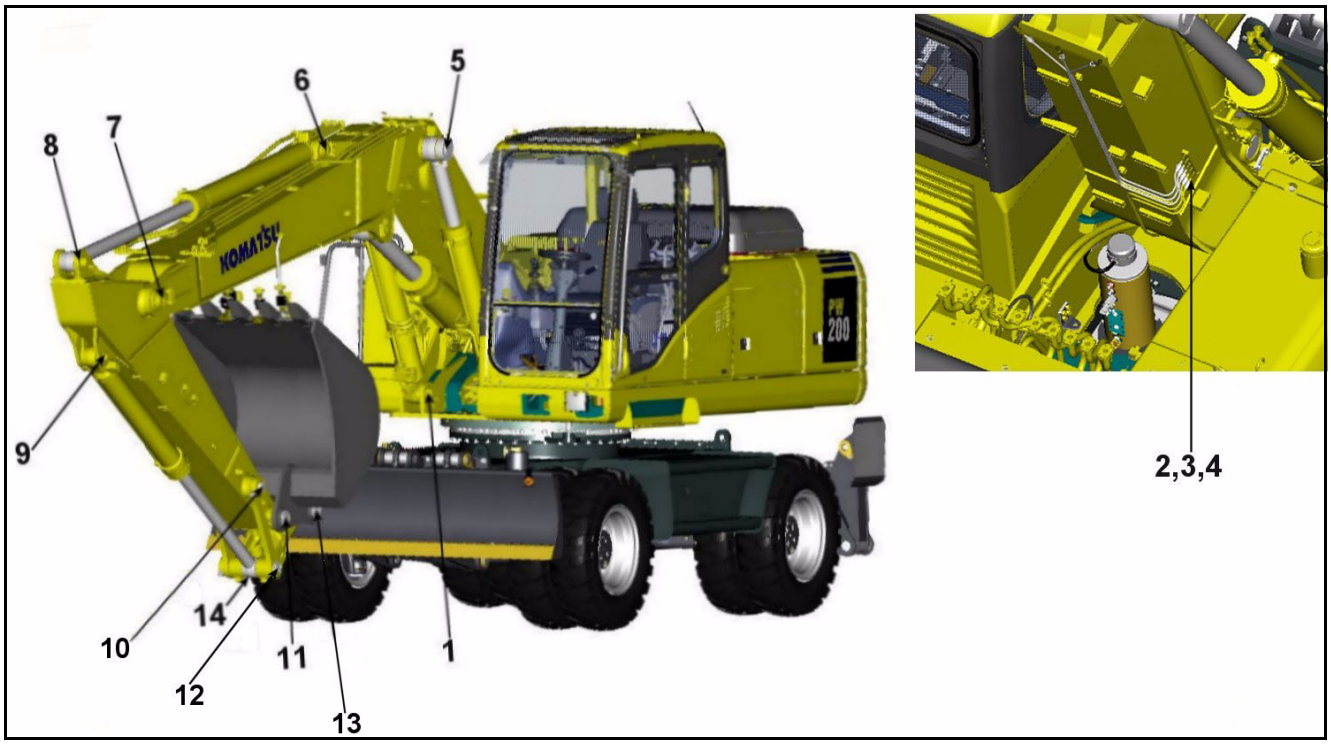

1. Boom cylinder foot pin (2 points).

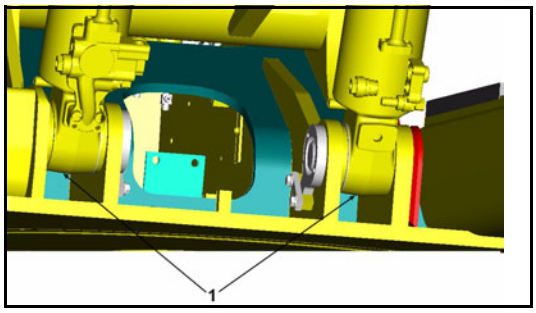

2. Boom foot pin (2 points).
3. Boom cylinder rod end (2 points).
4. 1st to 2nd boom pin (1 point).

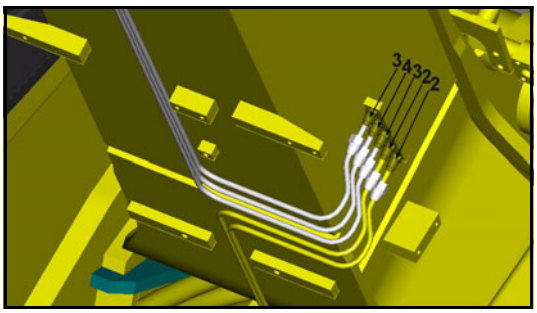

5. 1st to 2nd boom pin (2 points).
6. Arm cylinder foot pin (1 point).

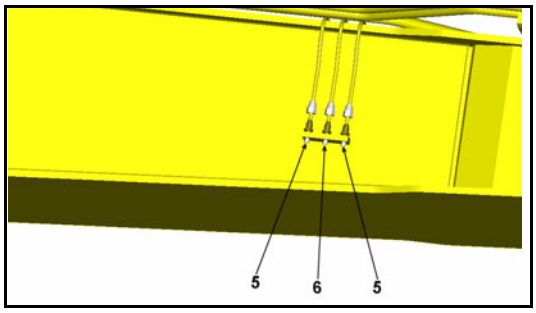

7. Boom-Arm coupling pin (1point).
8. Arm cylinder rod end (1 point).
9. Bucket cylinder foot pin (1 point).

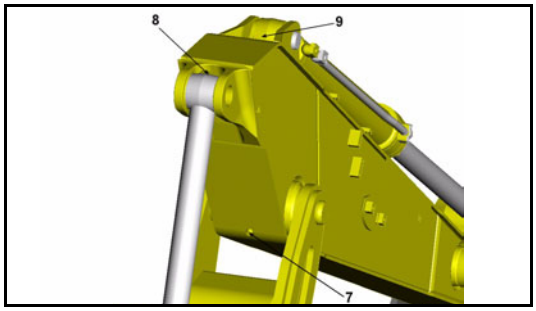

10. Arm-Link coupling pin (1 point).
11. Arm-Bucket coupling pin (1 point).

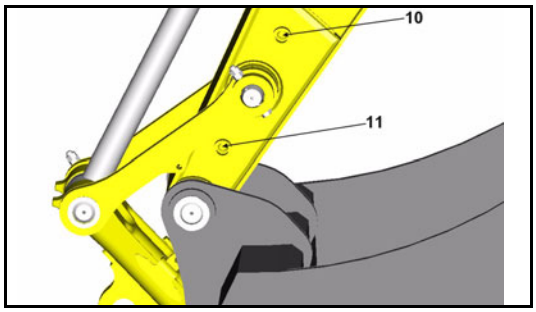

12. Link coupling pin (1 point).
13. Bucket cylinder rod end (1 point).
14. Bucket-Link coupling pin (2 points).

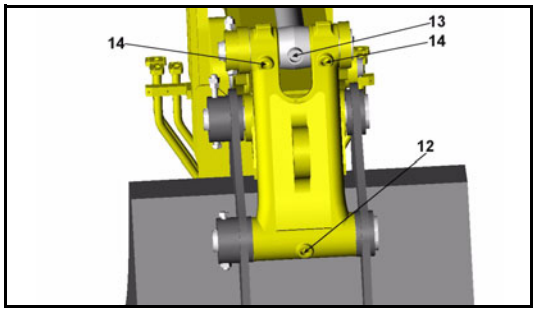

15. Outrigger cylinder foot pin (2 or 4 points).
16. Outrigger cylinder rod end (2 or 4 points).
17. Outrigger leg pivot (2 or 4 points).
18. Outrigger foot pivot (2 or 4 points).

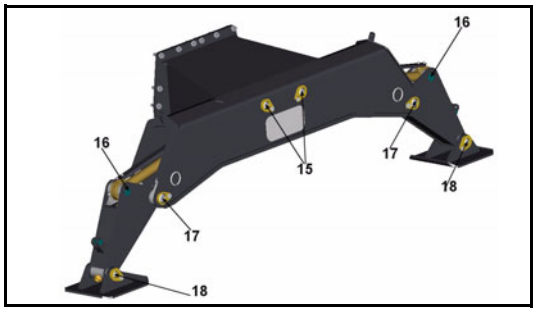

19. Propshaft (3 points).

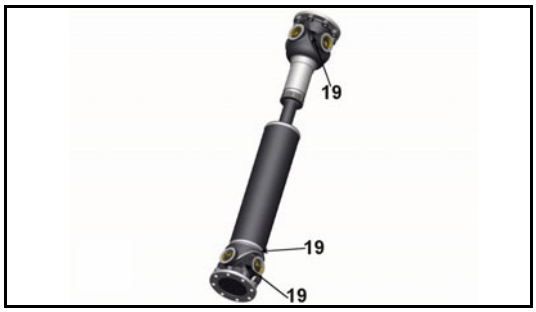

20. Boom adjust cylinder foot pin (1 point).
21. Boom adjust cylinder rod end (1 point).

22. Axle pivot (2 point) (with outriggers attached)

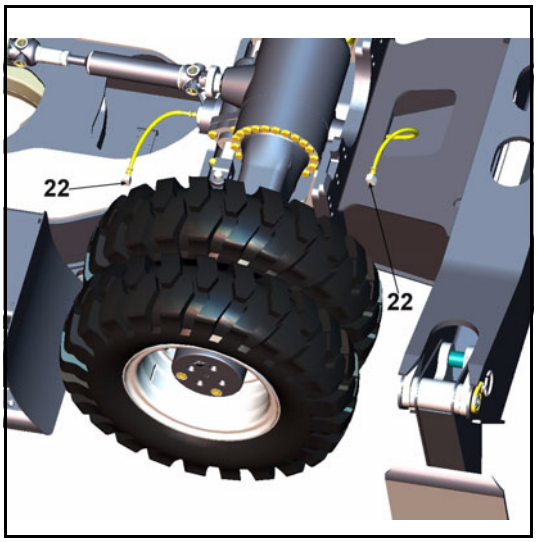

23. Axle pivot (2 point) (without outriggers)

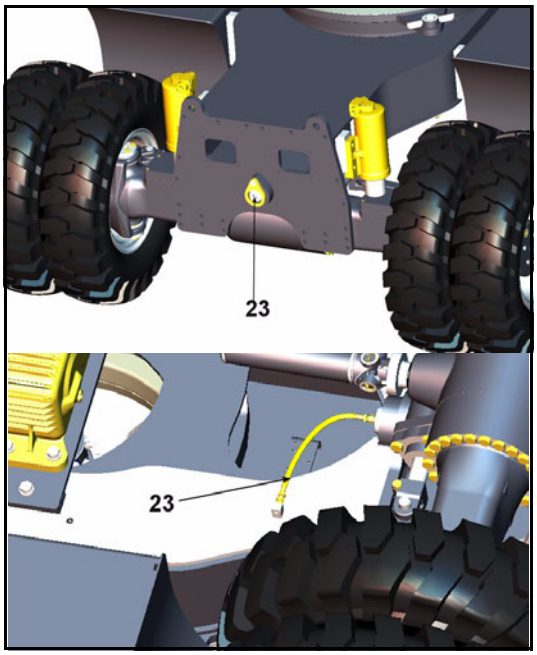

24. Hub pivot (4 points)
25. Steer links (4 points)
26. Axle pads (If noise heard grease as necessary) (2 points)

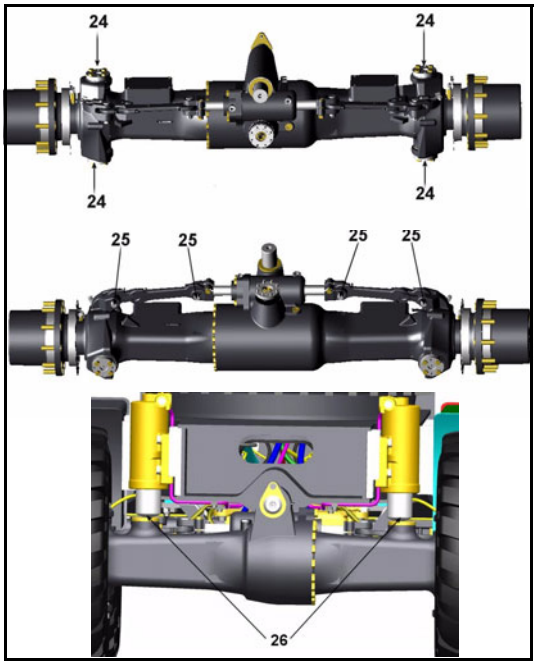

27. Cylinder mount (2 points)
28. Top link blade pivot pin (2 points)
29. Lower link blade pivot (2 points)
30. Dozer blade cylinder rod end (2 points)

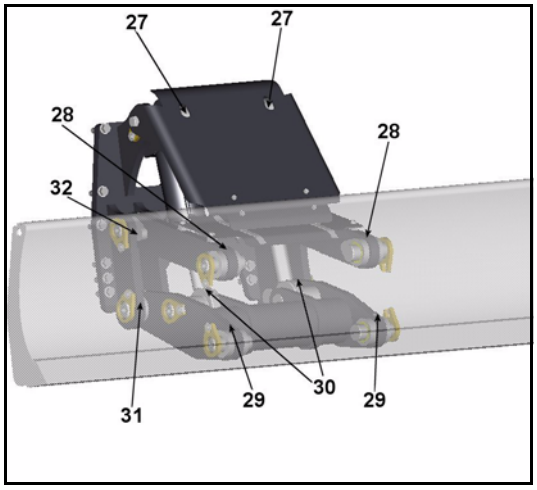

31. Lower link pivot pin (2 points)
32. Top link pivot pin (2 points)

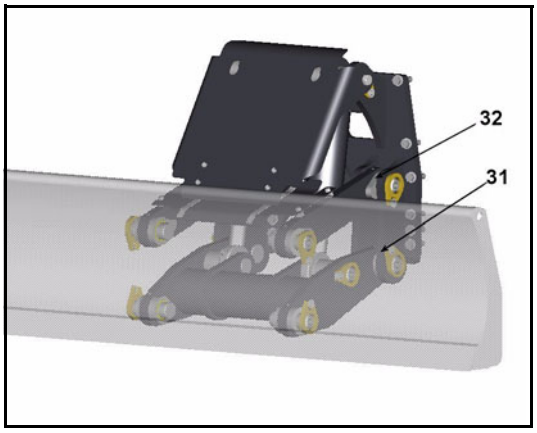

CLEANING FRESH AIR FILTER

1. Pull up the lock release lever under the door release lever to release the lock.

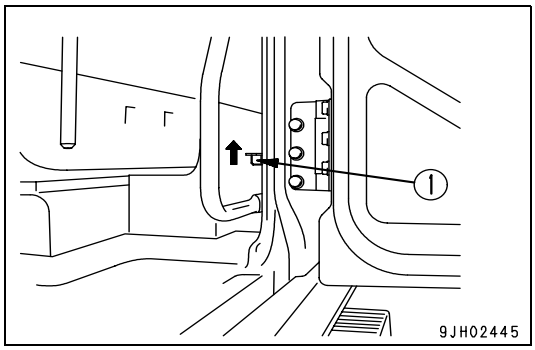

2. Open cover (2) at the bottom left of the operator's cab by hand, pull out filter case (3) from the inside, then remove the filter.
3. Clean the filter with compressed air. If there is oil on the filter, or if the filter is extremely dirty, wash it in a neutral agent. After rinsing it in water, dry it thoroughly before using it again. If the clogging of the filter cannot be removed by blowing with air or washing in water, replace the filter with a new part.
4. After cleaning, insert the filter in filter case (3) again, open the cover at the bottom left of the operator's cab by hand, return the filter case to its original position, then close the cover. When doing this, check that the lock is applied.

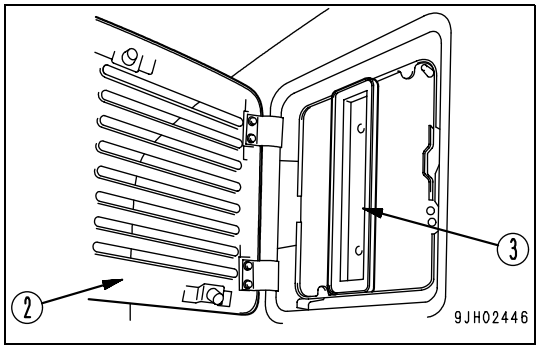

EVERY 250 HOURS MAINTENANCE

CHECK OIL LEVEL IN MACHINERY CASE, ADD OIL

WARNING

The parts and oil are at high temperature after the engine is stopped, and may cause serious burns. Wait for the temperature to go down before starting the operation.

1. Remove dipstick (G) and wipe the oil from the dipstick with a cloth.
2. Insert dipstick (G) fully in the guide.
3. When dipstick (G) is pulled out, if the oil level is between the H and L marks of the gauge, oil level is correct.
4. If the oil does not reach the L mark on dipstick (G), remove oil filler (F), and add engine oil.
5. If the oil level exceeds the H mark on the dipstick, loosen drain plug (P) to drain the excess oil.
6. After checking oil level or adding oil, insert the dipstick into the hole and install oil filler cap.

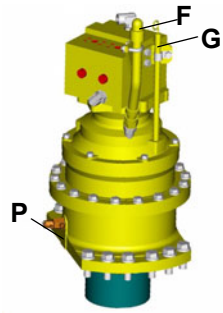

CHECK OIL LEVEL IN WHEEL HUBS, ADD OIL (Front Axle)

- Prepare a hexagonal wrench

1. Rotate hub until the oil level line marked front is horizontal (2).
2. Remove plug (1).
3. If no oil emerges, add oil until there is an excess. Allow excess to drain off and re-install plug (1).

   For details of the oil to use, see "USE FUEL, COOLANT AND LUBRICANTS ACCORDING TO AMBIENT TEMPERATURE (269)"

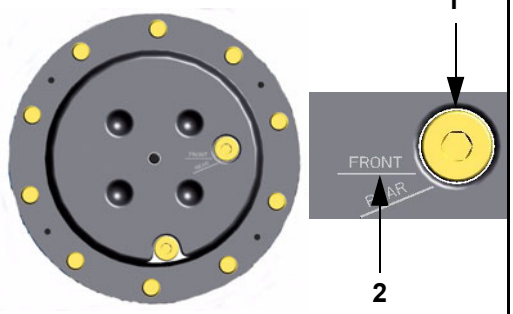

CHECK OIL LEVEL IN WHEEL HUBS, ADD OIL (Rear Axle)

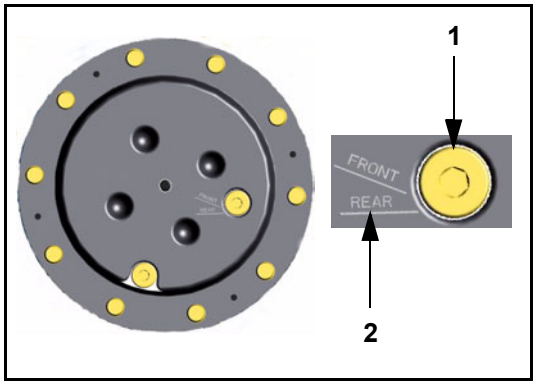

- Prepare a hexagonal wrench

1. Rotate hub until the oil level line marked rear is horizontal (2).
2. Remove plug (1).
3. If no oil emerges, add oil until there is an excess. Allow excess to drain off and re-install plug (1).

   For details of the oil to use, see "USE FUEL, COOLANT AND LUBRICANTS ACCORDING TO AMBIENT TEMPERATURE (269)"

CHECK OIL LEVEL IN AXLES, ADD OIL

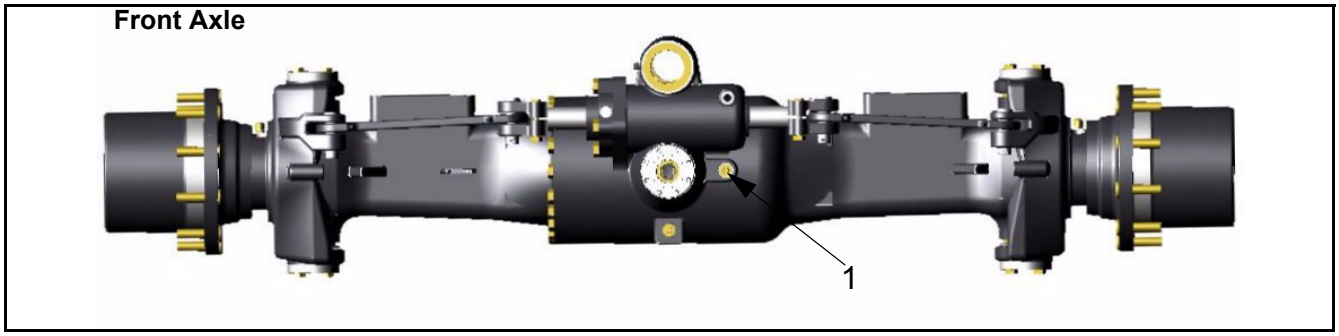

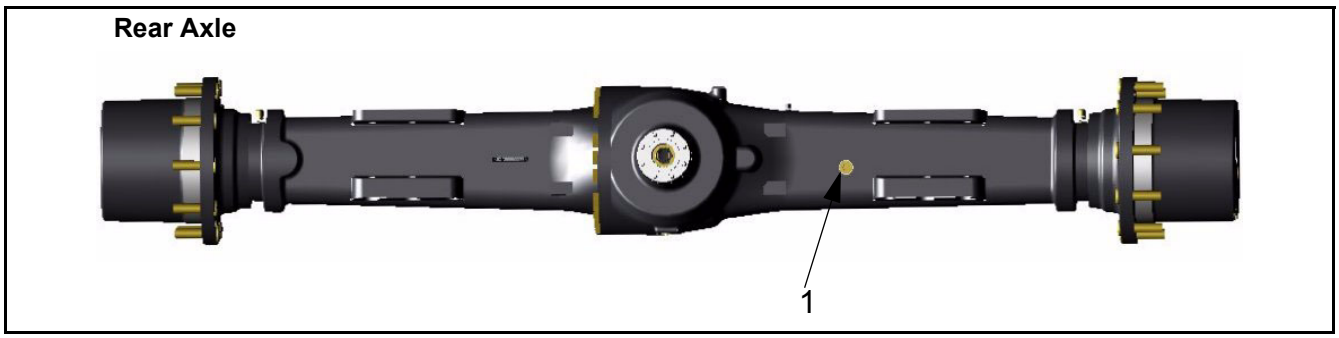

1. Ensure axle is horizontal and remove plug (1).
2. If no oil emerges attach tube and funnel and add oil until oil emerges from the hole after removing tube.
3. Replace plug (1).

   For details of the oil to use, see "USE FUEL, COOLANT AND LUBRICANTS ACCORDING TO AMBIENT TEMPERATURE (269)"

CHECK OIL LEVEL IN TRANSMISSION, ADD OIL

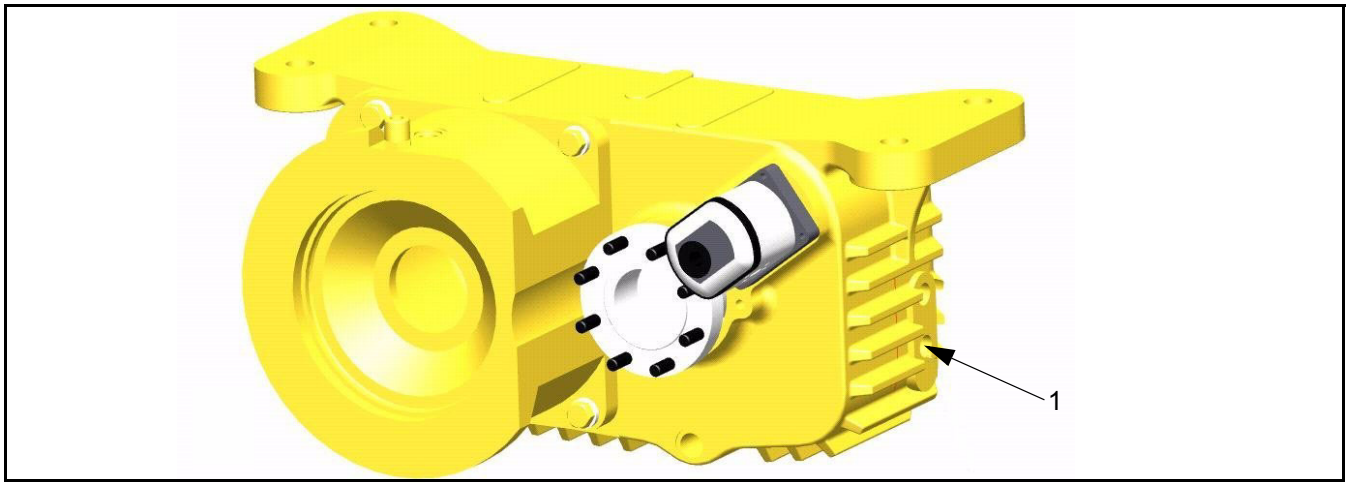

1. Remove level plug (1).
2. If oil emerges replace plug (1)
3. If no oil emerges remove plug (1) and add oil until oil emerges from plug hole (1).
4. Replace plug (1).

   For details of the oil to use, see "USE FUEL, COOLANT AND LUBRICANTS ACCORDING TO AMBIENT TEMPERATURE (269)"

CHECK LEVEL OF BATTERY ELECTROLYTE

WARNING

- **To avoid gas explosions, do not bring fire or sparks near the battery.**
- **Battery electrolyte is dangerous. If it gets in your eyes or on your skin, wash it off with large amounts of water, and consult a doctor.**

Carry out this check before operating the machine.

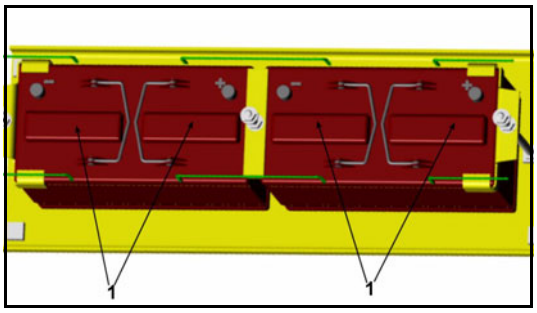

1. Open the battery door on the left side of the machine.
2. Remove cap (1), and check that the electrolyte is at the specified level (10 to 12 mm above the plate). If the electrolyte level is low, add distilled water to the specified level.

If the battery electrolyte is spilled, have dilute sulphuric acid added.

3. Clean the air hole in the battery cap, then tighten the cap securely.

When adding distilled water in cold weather, add it before starting operations in the morning to prevent the electrolyte from freezing.

BELTS, GENERAL

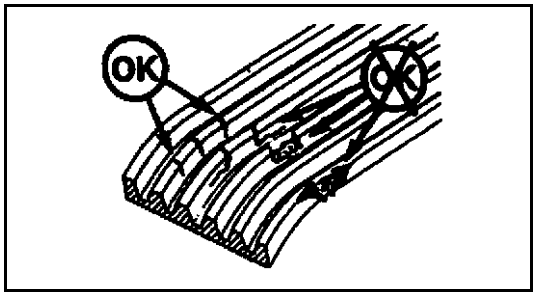

WARNING

Before working on the engine or electrical system, disconnect the negative (ground) battery cable. Tag the cable and controls to warn against starting.

Replace badly worn, greasy or severely cracked belts immediately. These conditions prevent the belt from functioning correctly.

Prior to installing new belts, make sure all pulley grooves are clean and not worn. If a pulley is damaged or if the grooves are worn, it should be replaced.

All pulley support bearings, shafts and brackets must be in working order.

When replacing belts and pulleys, pulley alignment must be checked with belts tensioned and brackets securely clamped. A misalignment that can be detected by the naked eye is detrimental to belt performance.

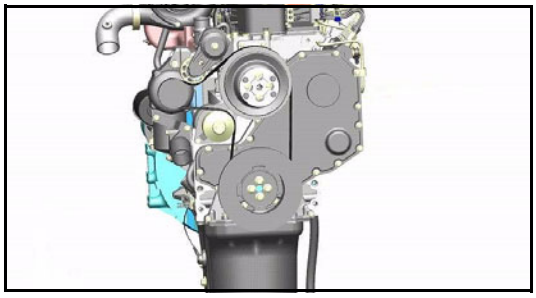

During belt installation, do not force the belts into the pulley grooves by prying with a screwdriver on pry bar. This will damage the belt side cords which will cause the belts to turn and result in complete destruction of the belts in operation.

Belts on new machines and replacement belts lose their tension as they seat into the pulley grooves. Check the tension of new belts at 20 hour intervals until tension is stabilized and thereafter, every 250 hours. If the tension falls below the required minimum, the belt slips, and damages the belts and pulley grooves.

REMARK

When operating in abrasive conditions, check tension every 100 hours.

Visually inspect the belts for intersecting cracks. Transverse (across the belt width) cracks are acceptable. Longitudinal (direction of belt length) cracks that intersect with transverse cracks are not acceptable. Replace the belt if it is frayed or has pieces of material missing.

CHECK FAN BELT TENSION, ADJUST TENSION

The engine is equipped with an automatic belt tensioner that maintains correct tension on the drive belt. To check belt tension a Gates type gauge must be used because of the wide drive belt. Proper tension should be 355 to 455 N.m gauge value.

If a Gates type gauge is not available, tension may be checked by belt deflection. Press the belt with your finger at the longest span and measure the deflection. Maximum deflection 9.5 to 12.7 mm.

ADJUSTING

With the automatic belt tensioner, no adjustment is required.

REPLACEMENT

To replace the drive belt, place a 3/8 in. drive rachet (2) in the 3/8 in. square drive hole in the belt tensioner. Push the rachet “UP” to loosen the tensioner. Remove the old belt (1). Inspect belt tensioner. The tensioner pulley should spin freely with no rough spots detected under hand pressure. Install the new belt.

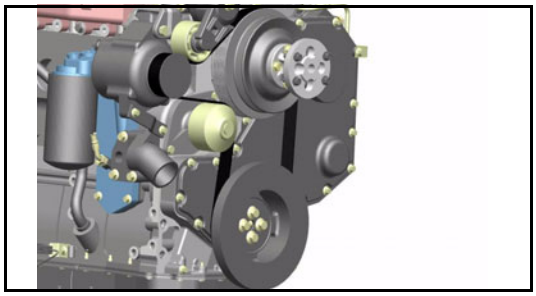

REMARK

The belt tensioner is spring loaded and must be pivoted away from the belt. Pivoting in the wrong direction can result in damage to the belt tensioner.

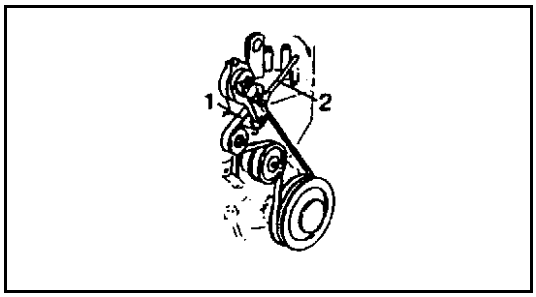

CHECK, ADJUST TENSION OF AIR CONDITIONER COMPRESSOR BELT

Checking

Press the belt at a point midway between the drive pulley and compressor pulley with a finger force of approx. 58.8 N (6 kgf) and check that the deflection is 5 - 8 mm.

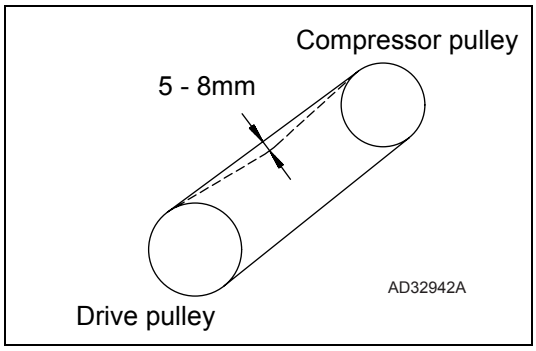

Adjusting

1. Loosen bolts (1) and (2).
   - Bracket (4) holds the compressor in place. When bolts (1) and (2) are loosened, bracket (4) moves with the securing position of bolt (2) as a fulcrum.
2. Loosen nut (5) attached to the fixed bracket (3) and then tighten bolt (6).
   - Tighten bolt (6) so that the deflection of the belt will be 5 - 8 mm (approx. 58.8N (6 kgf)).
3. Tighten bolts (1) and (2) to secure bracket (4).
4. Loosen bolt (6) to remove pressure from bracket (4).
5. Tighten nut (5).
6. Check each pulley for damage, wear of the V-groove, and wear of the V-belt. In particular, be sure to check that the V-belt is not touching the bottom of the V-groove.
7. Replace the belt if it has stretched, leaving no allowance for adjustment, or if there is a cut or crack on V-belt.
8. When the new V-belt is installed, readjust it after one hour of operation.

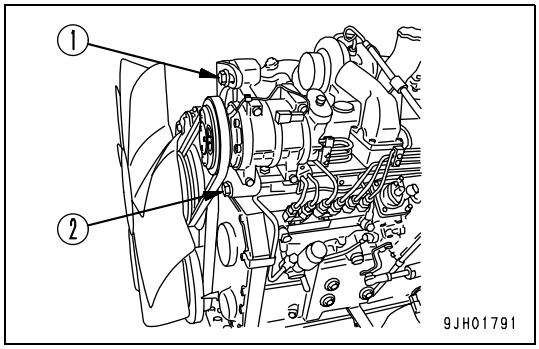

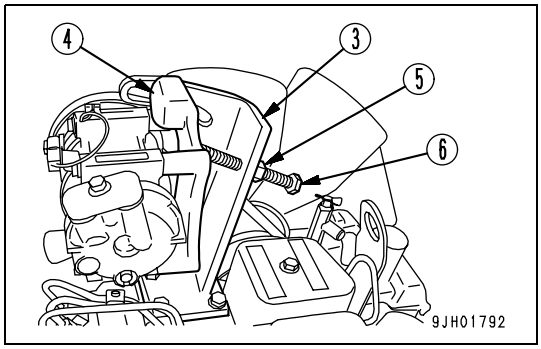

EVERY 500 HOURS SERVICE

Maintenance for every 50, 100 and 250 hours should be carried out at the same time.

⚠ WARNING

- **Engine is at high temperature immediately after the machine has been operated. Wait for engine to cool down before replacing the filter.**
- **Keep naked flames - sparks away from fuel.**
- **When cranking the engine, ensure all safety procedures have been followed, as the engine may start.**

LUBRICATE SWING CIRCLE (2 POINTS)

1. Lower the work equipment to the ground.
2. Use a grease gun to pump grease in through the grease fittings shown by the arrows.
3. After greasing, wipe off all the old grease that was pushed out.

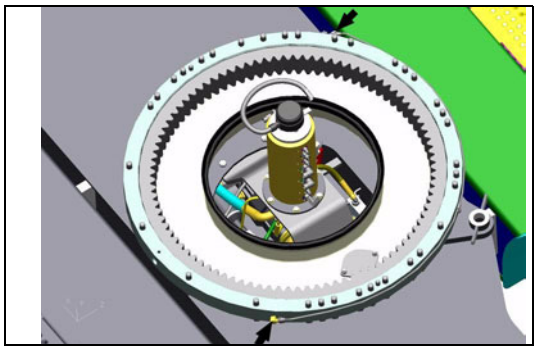

REPLACE FUEL FILTER CARTRIDGE

⚠ WARNING

- **The parts are at high temperature immediately after the engine has been operated. Wait for all parts to cool down before replacing the filter.**
- **Do not bring fire or sparks near the fuel.**

Prepare a filter wrench and a container to catch the fuel.
Use a genuine Komatsu filter cartridge.

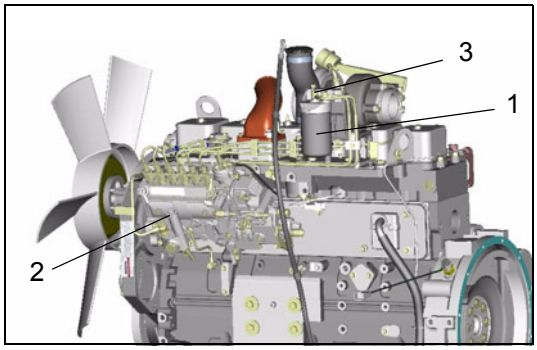

1. Set the container to catch the fuel under the filter cartridge.
2. Using a filter wrench, turn filter cartridge (1) counterclockwise to remove it.
3. Clean the filter holder, fill a new filter cartridge with clean fuel, coat the packing surface with engine oil, then install it to the filter holder.
4. After bringing the packing surface into contact with the seal surface of the filter holder, tighten it a further 1/2 turns.
   If the filter cartridge is tightened too far, the packing will be damaged and this will lead to leakage of fuel. If the filter cartridge is too loose, fuel will leak from the packing, so tighten it carefully.
5. After replacing the fuel filter cartridge, bleed the air from the system. Bleed the air as follows.
6. Fill the fuel tank with fuel (to the position where the float is at the highest position).
7. After replacing filter cartridge (1), loosen air bleed plug (3).
8. Loosen the knob of feed pump (2), pump it up and down, and continue to make the fuel overflow until no more bubbles come out from air bleed plug (3). Then tighten the knob of feed pump.
9. Tighten air bleed plug (3).
   - ○ After replacing the filter cartridge, start the engine and check for any leakage of oil from the filter seal surface.

REMARK

Use the feed pump to bleed air from the fuel system, when the machine has run out of fuel, too.

CHECK SWING PINION GREASE LEVEL, ADD GREASE

Prepare a scale.

1. Remove bolts (1) (2 bolts) on the top of the revolving frame and remove cover (A).
2. Check the colour of the grease. If it is milky white, it is necessary to change the grease. Please contact your Komatsu distributor.

The total amount of grease is 33 L (29.7 kg).

3. Insert a rule into the grease and check that the depth of the grease is at least 25 mm. Add more grease if necessary.
4. Replace cover (A) with bolts (2).

CHANGE OIL IN ENGINE OIL PAN, REPLACE ENGINE OIL FILTER CARTRIDGE

WARNING

The parts and oil are at high temperature after the engine is stopped, and may cause serious burns. Wait for the temperature to go down before starting the operation.

Prepare the following:

- Refill capacity of oil pan: 24 liters
- Filter wrench

1. Remove undercover at the bottom of the machine, then set a container under drain valve (P) to catch the drained oil.
2. To prevent getting oil on yourself, lower the lever of drain valve (P) slowly, drain the oil, then raise the lever to close the valve.

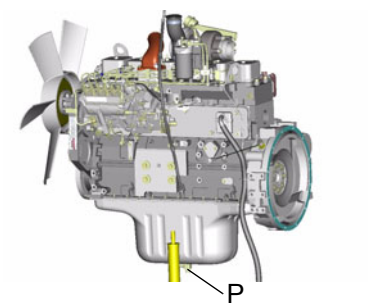

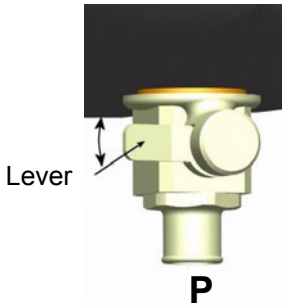

3. Open the cover at the rear right, then use a filter wrench to turn filter cartridge (1) counter clockwise to remove it.
4. Clean the filter holder, fill the new filter cartridge with clean engine oil, coat the packing surface and thread of the filter cartridge with engine oil (or coat it thinly with grease), then install the filter cartridge to the filter holder.
5. Drain breather bottle at same time. For details, see "DRAIN ENGINE BREATHER OIL CATCHER (304)"

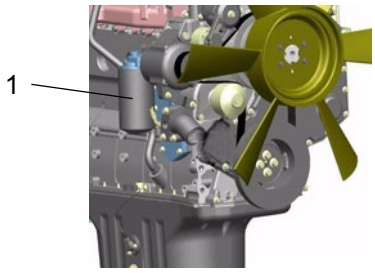

REMARK

Check that there is no old packing stuck to the filter holder. If there is any old packing remaining, it will cause oil leakage.

6. When installing, bring the packing surface into contact with the seal surface of the filter holder, then tighten it further 3/4 - 1 turn.

7. After replacing the filter cartridge, open the engine hood and add engine oil through oil filler (F) to between the H and L marks on dipstick (G).
8. Run the engine at idle for a short time, then stop the engine and check that the oil level is between the H and L marks on dipstick (G).
   For details, see "CHECK OIL LEVEL IN ENGINE OIL PAN, ADD OIL (305)".
9. Install the undercover.

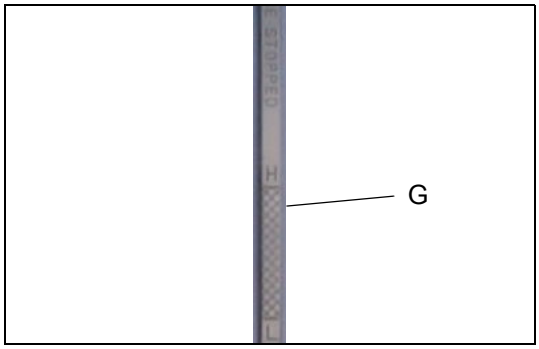

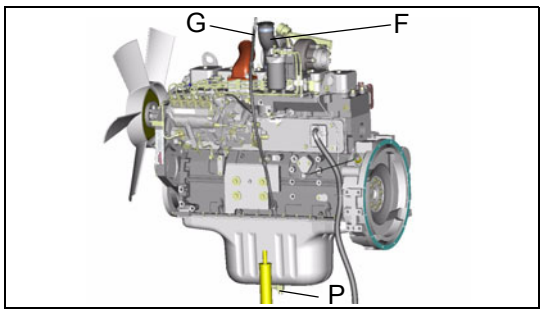

CLEAN AND INSPECT RADIATOR FINS, OIL COOLER FINS AND CONDENSER FINS

WARNING

If compressed air, high-pressure water, or steam hit your body directly, or they cause dirt or dust to be blown up, there is a danger of serious injury. Use safety glasses, dust mask, or other protective equipment.

NOTICE

When using compressed air, if the nozzle is brought too near the fins, the fins may be damaged. Use compressed air from a reasonable distance to prevent damage to the fins.
Do not direct the jet directly at the core. If the fins are damaged, it will cause leakage of water and overheating. On dusty job sites, inspect fins every day, regardless of the maintenance interval.

1. Open engine hood.

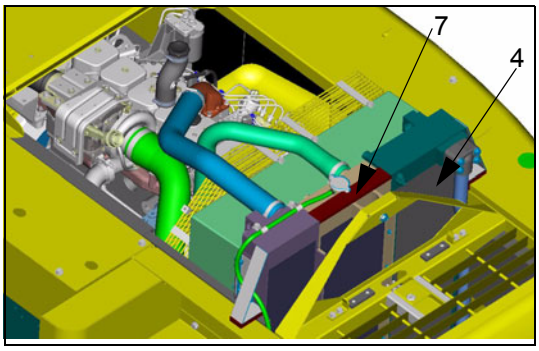

2. Inspect the front and rear of the oil cooler fins (4), radiator fins (7), after-cooler fins (8), and condenser fins (9) for dirt, dust, dry leaves, etc. Blow them away with compressed air. Steam or water may be used instead of compressed air.
3. Check the rubber hose. Replace it with a new one, if the hose is found to have cracks or to be hardened by age. Also check the hose clamps for looseness.

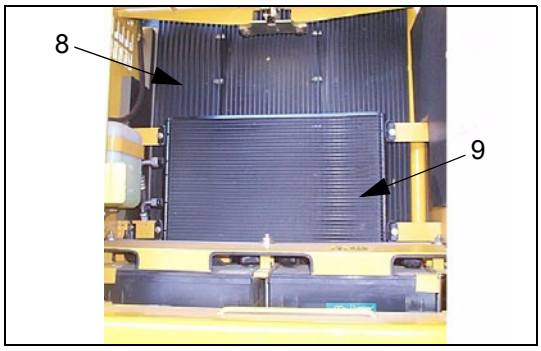

4. Remove cover (10) from underneath and dispose of the dirt, dust, dry leaves, etc., which have fallen on it.

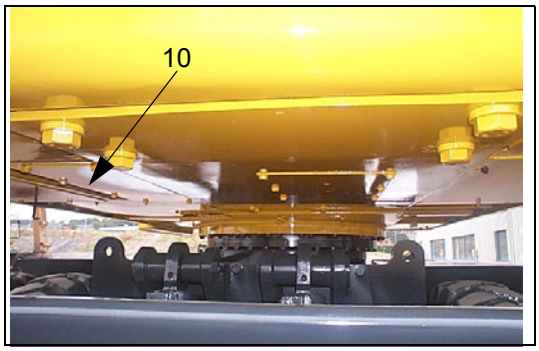

CLEAN INTERNAL AND EXTERNAL AIR FILTERS OF AIR CONDITIONER SYSTEM

⚠ WARNING

If compressed air, high-pressure water, or steam hit your body directly, or they cause dirt or dust to be blown up, there is danger of serious injury. Use safety glasses, dust mask, or other protective equipment.

NOTICE

The interval for cleaning the filter is 500 hours, but if the machine is used on an extremely dusty job site, reduce the maintenance interval and clean the filter more frequently.

REMARK

If the filter is clogged, the air flow is reduced and a muffled sound can be heard from the air conditioner unit.

CLEANING RECIRCULATED AIR FILTER

1. Remove wing bolts (1) from the inspection window at the bottom rear left on the inside of the operator's cab, then take out the recirculated air filter.
2. Clean the filter with compressed air. If there is oil on the filter, or if the filter is extremely dirty, wash and dry it thoroughly before using it again.
   If the clogging of the filter cannot be removed by blowing with air or washing with water, replace with new one.

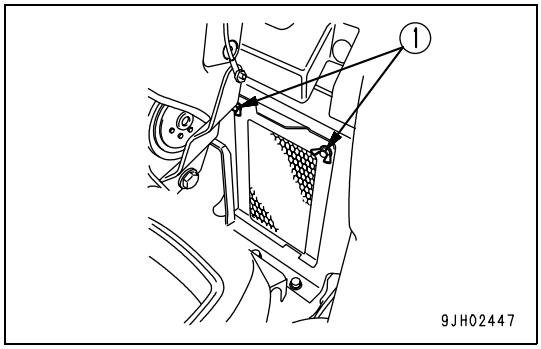

REPLACE HYDRAULIC TANK BREATHER ELEMENT

WARNING

Wait for the oil to cool down before replacing the breather element. When removing the oil filler cap, turn it slowly to release the internal pressure, then remove it carefully.

1. Remove the cap of oil filter (F).

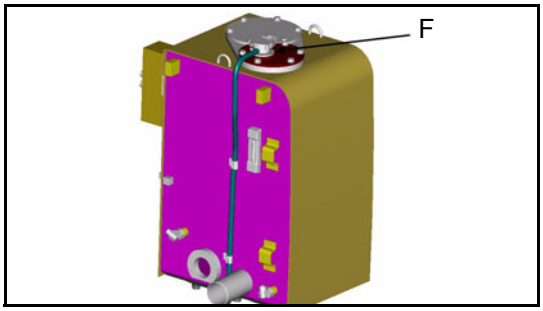

2. Replace element (1) inside the cap with a new one.

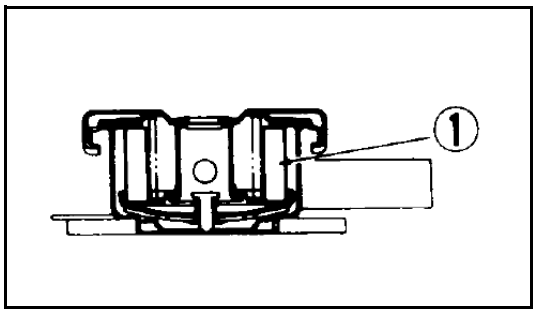

EVERY 1000 HOURS SERVICE

Maintenance for every 100, 250 and 500 hours should be carried out at the same time.

REPLACE HYDRAULIC FILTER ELEMENT

WARNING

- **The parts and oil are at high temperature after the engine is stopped, and may cause serious burns. Wait for the temperature to go down before cleaning the hydraulic tank strainer.**
- **When the oil filler cap is removed, oil may spurt out, so turn the cap slowly to release the internal pressure, then remove it carefully.**

1. Set the work equipment on hard and flat ground in the maintenance posture as shown in the figure. Then lower it to the ground and stop the engine.

2. Remove the cap from oil filler (F), and release the internal pressure.
3. Loosen 6 bolts, then remove cover (1). When doing this, the cover may fly out under the force of spring (2), so hold the cover down when removing the bolts.
4. After removing spring (2), valve (3) and strainer (4), take out element (5).
   - Inspect the bottom of the filter case for dirt, and remove it, if any. Be very careful not to let dirt fall into the hydraulic tank.
5. Clean the removed parts in diesel oil.
6. Install the new element in the place where old element (5) was installed.
7. Set valve (3), strainer (4) and spring (2) on top of the element.
8. Set cover (1) in position, push it down by hand, and install the cover with the mounting bolts.
9. Install the oil filler cap.
10. To bleed the air, start the engine according to "STARTING ENGINE (201)" and run the engine at low idle for 10 minutes.
11. Stop the engine.

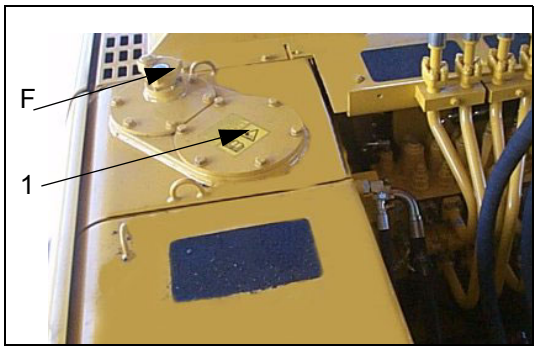

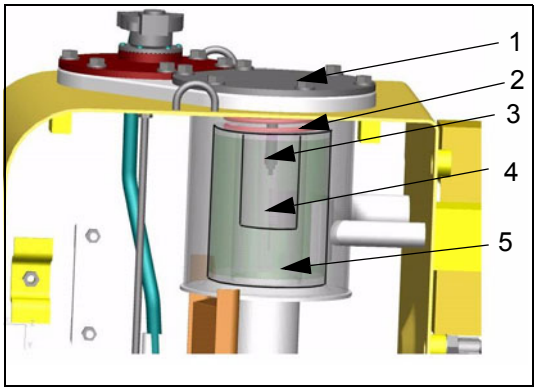

12. Check for oil leakage and wipe off any spilled oil.

When the hydraulic breaker is installed, the hydraulic oil deteriorates earlier than in normal bucket digging work.

The first element replacement should be at 100 to 150 hours for new machines. Thereafter, replace the element, see "WEAR PARTS LIST (268)".

CHANGE OIL IN SWING MACHINERY CASE.

WARNING

The parts and oil are at high temperature after the engine is stopped, and may cause serious burns. Wait for the temperature to go down before starting the operation.

- Refill capacity: 6.6 liters

1. Remove cover (A) of the inspection hole.
2. Set an oil container under drain valve (P) under the machine body.
3. Loosen drain valve (P) and drain the oil. Then tighten the drain valve again.
4. Remove the cap from oil filler (F) and add the specified amount of engine oil through oil filler (F).
5. Pull out dipstick (G) and wipe the off oil from it with a clean cloth.
6. Insert dipstick (G) into the gauge pipe as far as it will go and then pull out it again.
7. If the oil level is between the H and L marks on dipstick (G), it is normal. If the oil does not reach the L mark, add more oil through oil filler (F).

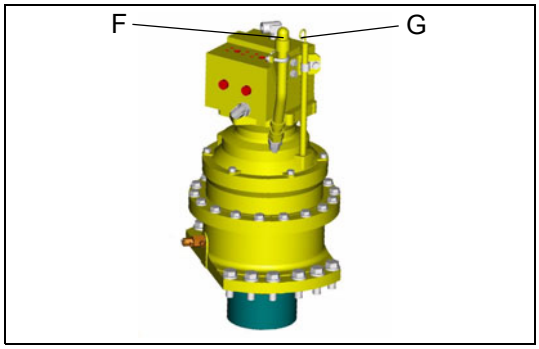

8. If the oil level exceeds the H mark, drain the excess engine oil from drain valve (P), and check the oil level again.
   - When draining the excess engine oil, pull out hose connected to port (1) from the check hole and then open the drain valve.
9. Close the drain valve and reinstall the hose at port (1).

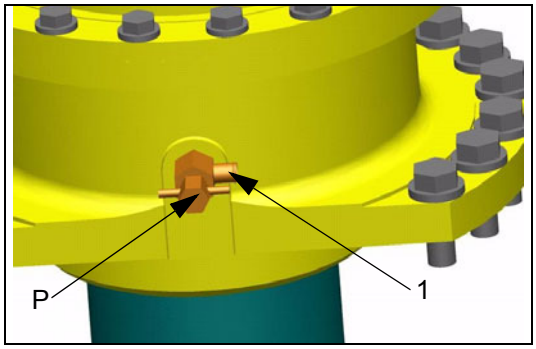

CHECK ALL TIGHTENING PARTS OF TURBOCHARGER.

Contact your Komatsu distributor to have the tightening portions checked.

CHECK PLAY OF TURBOCHARGER ROTOR.

Ask Komatsu distributor to check the play of the turbocharger rotor.

CHECK & ADJUST VALVE CLEARANCE

As a special tool is required for removing and adjusting the parts contact your Komatsu distributor for service.

CHECK FAN BELT TENSIONER BEARING BELT AND FAN HUB

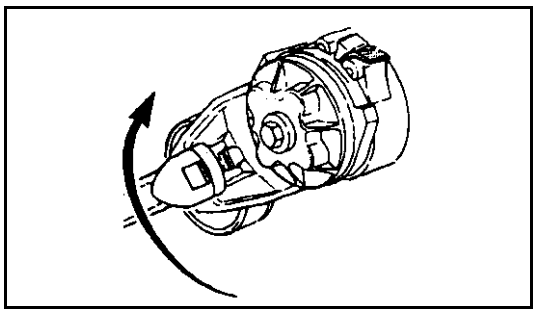

- Check the tensioned bearing
  With the fan belt removed rotate fan hub.
  The tensioned pulley should spin freely with no rough spots defected under hand pressure.
- Check the tensioner bearing.
- Replace bearing if damaged.
- Check fan hub. With the drive belt removed, rotate fan hub.

NOTE: The fan hub should spin freely without excessive end play.

- Check the fan hub bearing.
- Replace bearing if damaged.

CHECK FAN BELT TENSION

- Measure the belt deflection at the longest span of the belt.
- Maximum deflection: 9.5-12,7 mm
  If tension is low (deflection is outside range): (see “Check fan belt tensioned bearing, belt and fan hub.”)
- Check belt & replace if damaged.
- Check tensioner & replace if damaged.

CHANGE OIL IN AXLES

Front Axle

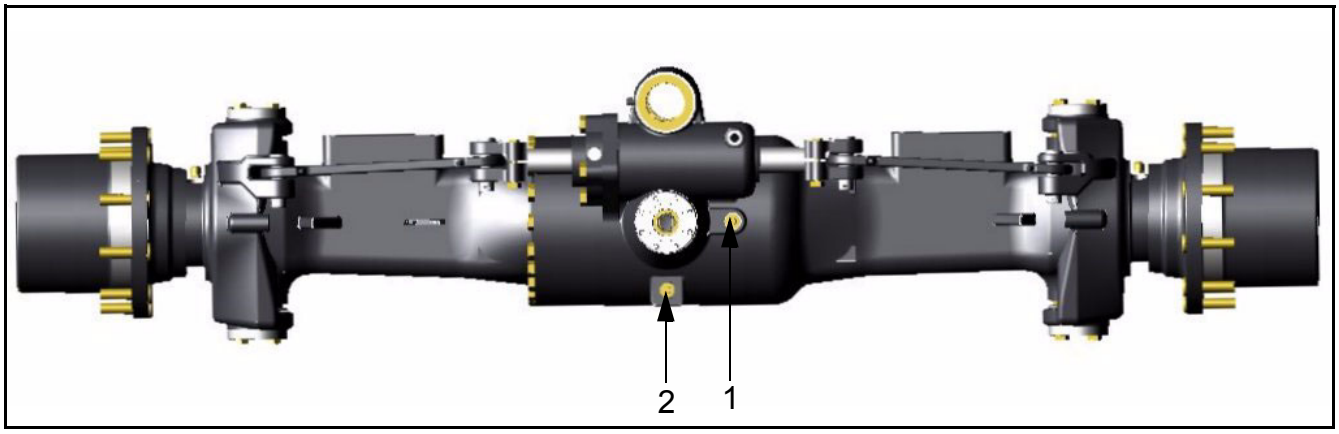

1. Remove plugs (1) and (2) to drain oil.

2. Replace plug (2).
3. Attach tube and funnel to plug (1) hole and add oil until oil emerges when tube is removed.
4. Replace plug (1).

NOTE: The oil must be replaced after first hundred hours then maintenance is thousand hours.

Rear Axle

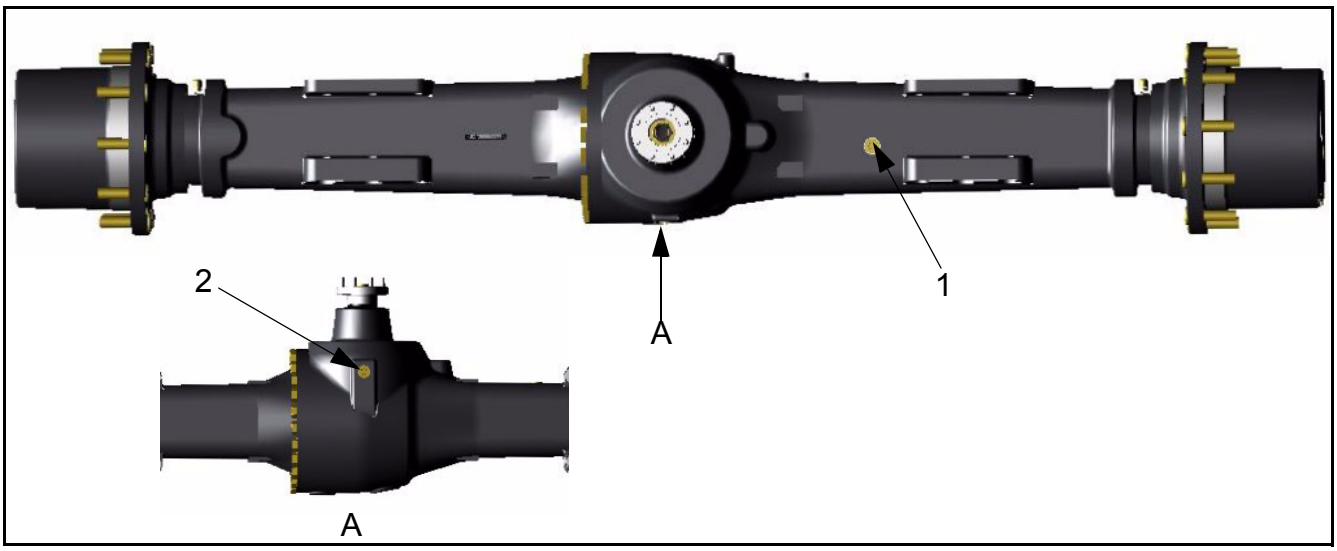

1. Remove plugs (1) and (2) to drain oil.
2. Replace plug (2).
3. Attach tube and funnel to plug (1) hole and add oil until oil emerges when tube is removed.
4. Replace plug (1).

NOTE: The oil must be replaced after first hundred hours then maintenance is thousand hours.

CHANGE OIL IN HUBS

1. Front Axle

1. Position hub with plug (2) at bottom and remove plug (1) and (2).
2. When all oil has drained out, re-install plug (2).
3. Rotate hub until the oil level line marked Front is horizontal
4. Add oil (2.85 l each hub).
5. If oil emerges, allow excess to drain off and re-install plug (1).
6. If no oil emerges, add oil until there is an excess. Allow excess to drain off and re-install plug (1).

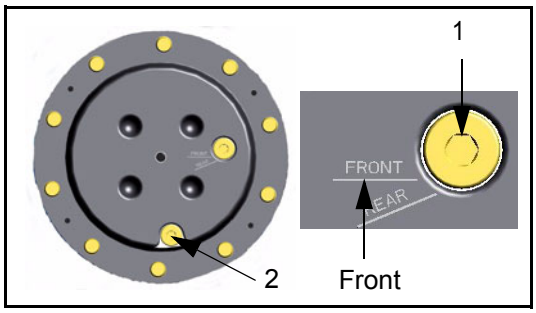

NOTE: The oil must be replaced after first hundred hours then maintenance is thousand hours.

2. Rear Axle

1. Position hub with plug (2) at bottom and remove plug (1) and (2).
2. When all oil has drained out, re-install plug (2).
3. Rotate hub until the oil level line marked Rear is horizontal
4. Add oil (2.0 l each hub).
5. If oil emerges, allow excess to drain off and re-install plug (1).
6. If no oil emerges, add oil until there is an excess. Allow excess to drain off and re-install plug (1).

NOTE: The oil must be replaced after first hundred hours then maintenance is thousand hours.

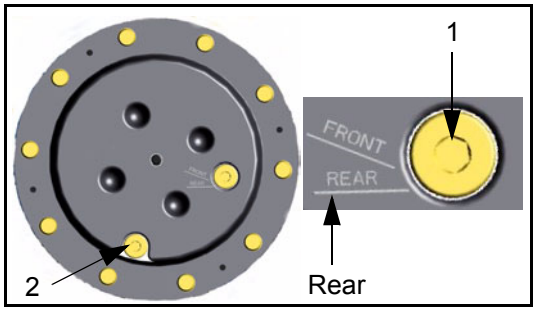

CHANGE OIL IN TRANSMISSION ASSEMBLY

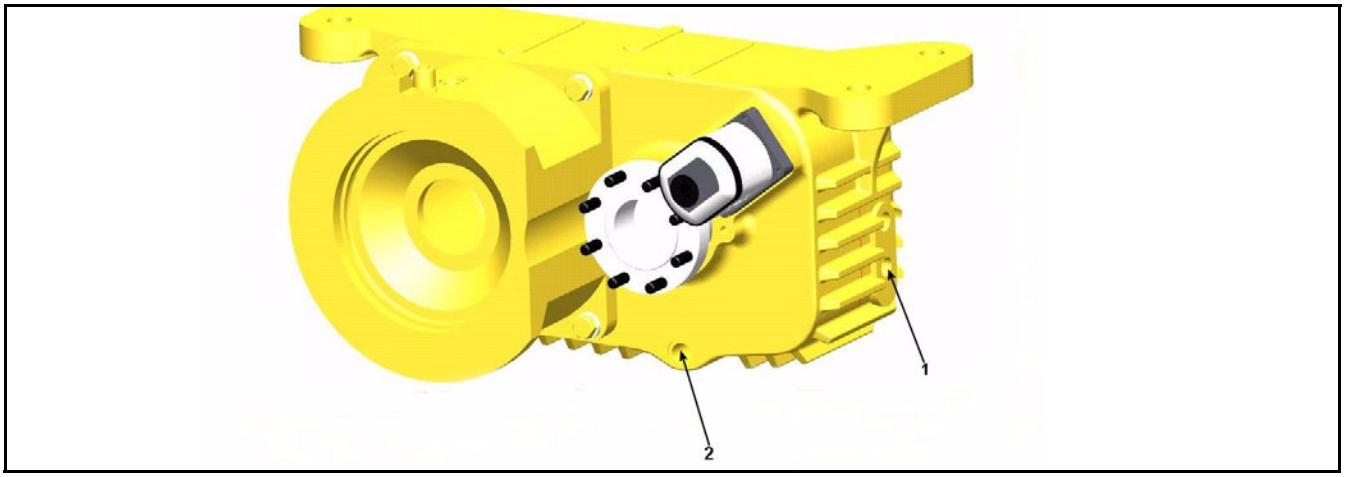

TRANSMISSION

1. Remove plugs (1)+(2) and allow oil to drain out.
2. Replace plug (2).
3. Add oil (approx. 2.9 l) until oil emerges from plug (1) hole.
4. Replace plug (1).

NOTE: The oil must be replaced after first hundred hours then maintenance is thousand hours.

EVERY 2000 HOURS SERVICE

Maintenance for every 100, 250, 500 and 1000 hours should be carried out at the same time.

CLEAN HYDRAULIC TANK STRAINER

⚠ WARNING

- **The parts and oil are at high temperature after the engine is stopped, and may cause serious burns. Wait for the temperature to go down before cleaning the hydraulic tank strainer.**
- **When the oil filler cap is removed, oil may spurt out, turn the cap slowly to release the internal pressure, then remove it carefully.**

1. Loosen 6 bolts, then remove cover (1).
2. When doing this, the cover may fly out under the force of spring (2), so push the cover down when removing the bolts.
3. Pull up the top of rod (3), and remove spring (2) and strainer (4).
4. Remove the dirt stuck to strainer (4), then wash it in clean diesel oil or flushing oil.
5. If strainer (4) is damaged, replace it with a new one.
6. Refit strainer (4) by inserting it into the tank projecting part (5).
7. Assemble it so that the protruding part at the bottom of cover (1) holds spring (2), then tighten the cover with the bolts.

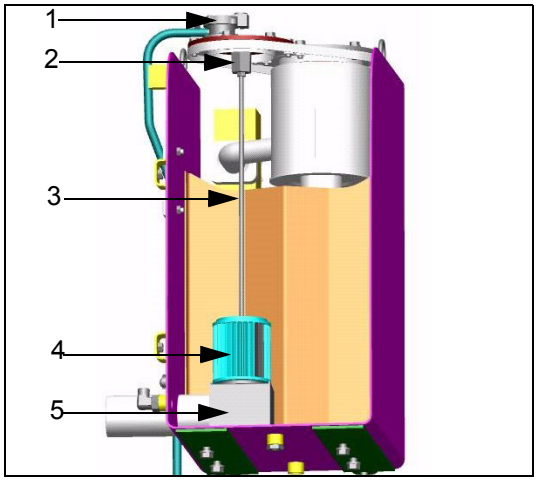

CLEAN, CHECK TURBOCHARGER

Contact your Komatsu distributor for cleaning or inspection.

CHECK ALTERNATOR, STARTING MOTOR

The brush may be worn, or the bearing may have run out of grease, so contact your Komatsu distributor for inspection or repair. If the engine is started frequently, carry out inspection every 1000 hours.

CHECK VIBRATION DAMPER

As a special tool is required for removing and adjusting the parts contact your Komatsu distributor for service.

CHANGE ANTIFREEZE

Follow the procedure of "CLEAN INSIDE OF COOLING SYSTEM (290)" for draining and refilling the cooling system.

CHECK AND ADJUST VALVE CLEARANCE

A special tool is required for removing and adjusting the parts, call your Komatsu distributor for service.

EVERY 4000 HOURS SERVICE

Maintenance for every 100, 250, 500, 1000 and 2000 hours should be carried out at the same time.

CHECK WATER PUMP

Since the pulley may have play, oil may leak, water may leak and the drain hole (A) may be clogged, contact your Komatsu distributor for inspection, overhaul or replacement.

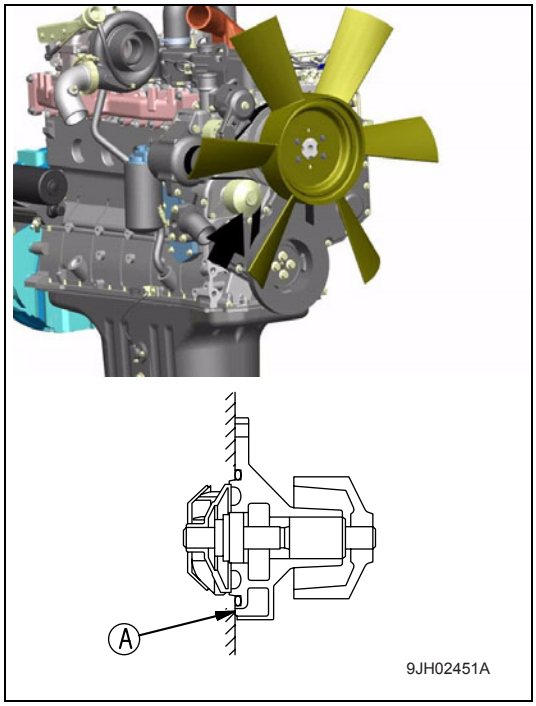

EVERY 5000 HOURS SERVICE

Maintenance for every 100, 250, 500 and 1000 hours should be carried out at the same time.

CHANGE OIL IN HYDRAULIC TANK

⚠ WARNING

- **The parts and oil are still at high temperature after the engine is stopped, and may cause serious burns. Wait for the temperature to go down before servicing the hydraulic tank.**
- **When the oil filler cap is removed, oil may spurt out, so turn the cap slowly to release the internal pressure, then remove it carefully.**

Prepare the following.

- Refill, capacity: 133 liters
- Prepare a handle for the socket wrench set.

1. Retract the arm and bucket cylinders to the stroke end, then lower the boom and put the bucket teeth in contact with the ground.
2. Lock the safety lock lever and stop the engine.

3. After the tank has cooled, remove the cap from oil filler (F) on the hydraulic tank.
4. Set an empty oil container under the drain plug under the machine. Remove drain plug (P) and drain the oil.

   Check the O-ring installed on plug (P). If it is damaged, replace the O-ring. After draining the oil, tighten drain plug (P).
   Tightening torque: 69 ± 10 N•m.

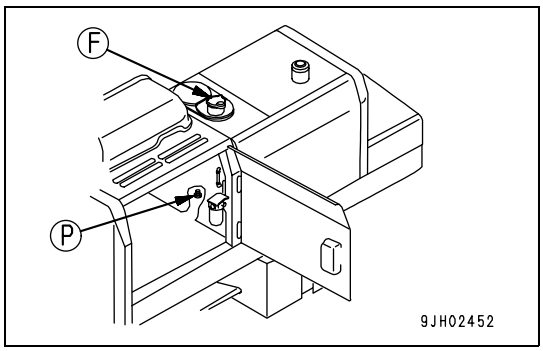

When removing drain plug (P), be careful not to get oil on yourself.

5. Add the specified amount of engine oil through oil filler port (F).

   Check that the oil level is midway between H and L on the sight gauge.

   For details of the method of bleeding the air, see "CHECK OIL LEVEL IN HYDRAULIC TANK, ADD OIL (307)".

Procedure for bleeding air

Follow steps 1 & 2 to bleed the air.

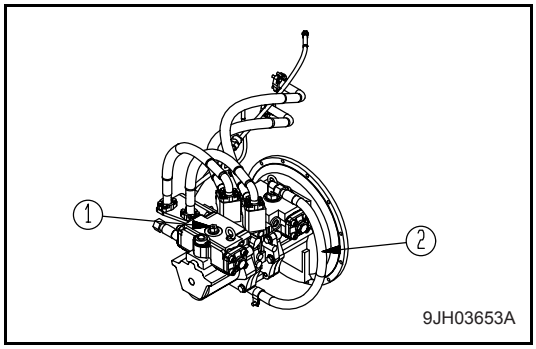

1. Bleeding air from pump

1. Loosen air bleeder (1) installed to the drain port, and check that oil oozes out. (Completion of air bleeding)
2. After completing the air bleeding operation, tighten the air bleeder.

NOTE: If the pump is operated without filling the pump case with hydraulic oil, abnormal heat will be generated and this may lead to premature damage of the pump.

2. Starting engine

Start the engine according to "STARTING ENGINE (201)" keep running the engine at low idling for 10 minutes, and carry out the following procedure.

3. Bleeding air from cylinders

1. Run the engine at low idling, and extend and retract each cylinder 4 - 5 times without operating it to the end of its stroke. (Stop approx. 100 mm before the end of the stroke)
2. Next, operate each cylinder to the end of its stroke 3 - 4 times.
3. After this, operate each cylinder 4 - 5 times to the end of its stroke to completely bleed the air.

NOTICE

If, at first, the engine is run at high speed or the cylinder is operated to the end of its stroke, the air inside the cylinder may cause damage to the piston packing or other parts.

4. Bleeding air from swing motor (bleed the air only when the oil inside the swing motor case has been drained and refilled)
   - ○ When oil has been drained from inside swing motor case and refilled
5. Run the engine at low idle, loosen drain hose (1), and check that oil oozes out from drain hose (1).

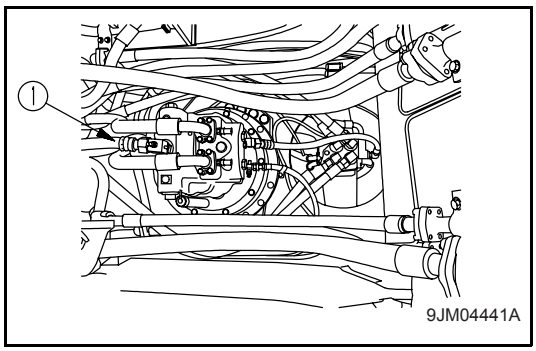

NOTICE

When doing this, do not operate the swing·

6. If oil does not ooze out, stop the engine, remove air bleeding plug (1), fill the motor case with hydraulic oil.
7. After completion of the air bleed operation, tighten air bleeding plug (1).
8. Run the engine at low idling, and swing 2 or more times slowly and uniformly to the left and right.

NOTICE

If the air is not bled from the swing motor, the bearings of the motor may be damaged.

SPECIFICATIONS.

SPECIFICATIONS

WEIGHT			PW200-7K	PW220-7K
● Operation weight (without operator)			* 19900 kg	* 20400 kg
PERFORMANCE				
● Bucket capacity (standard bucket) SAE			0.8 m³	1.0 m³
● Travel speed	Creep speed		1.5 km/h**	
	Low speed		9.5 km/h**	
	High speed	Non german specification	35 km/h**	
		German specification	20 km/h**	
● Swing speed			11.9 rpm	
ENGINE				
● Model			Komatsu SAA6D102E-2 diesel engine	
● Flywheel horsepower (NET)			118 kW (160 PS /1950 rpm)	
● Starting motor			24 V 5.5 kW	
● Alternator			24 V 45 A	
● Battery			12 V 95 Ah x 2 (STD) 12 V 120AH x 2 (OPTION)	

* Weight will vary depending on specification

** 20 km/h specification version.

1 - PIECE BOOM

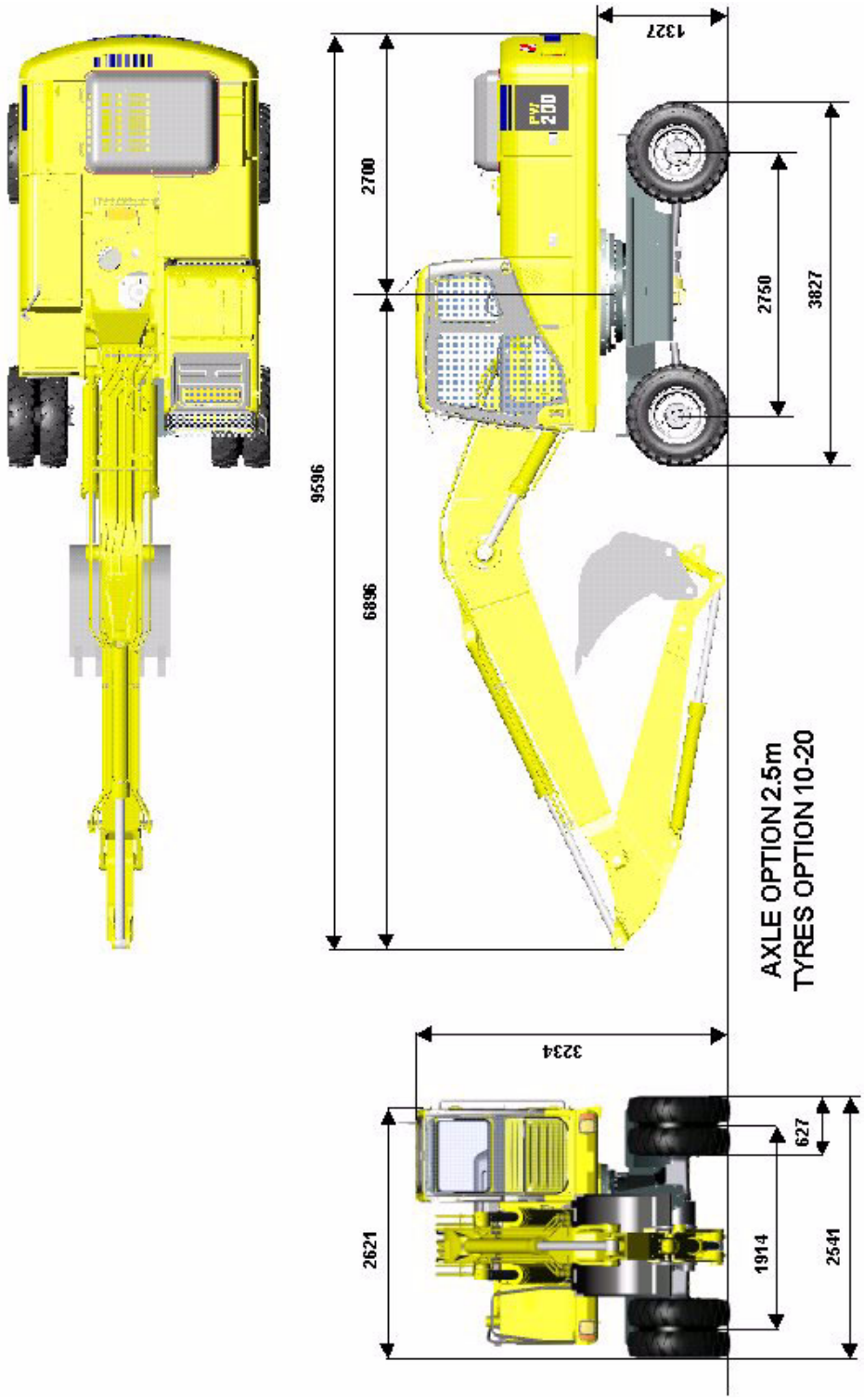
9596
2700
6896
1327
2750
3827
AXLE OPTION 2.5m
TYRES OPTION 10-20
3234
2621
627
1914
2541

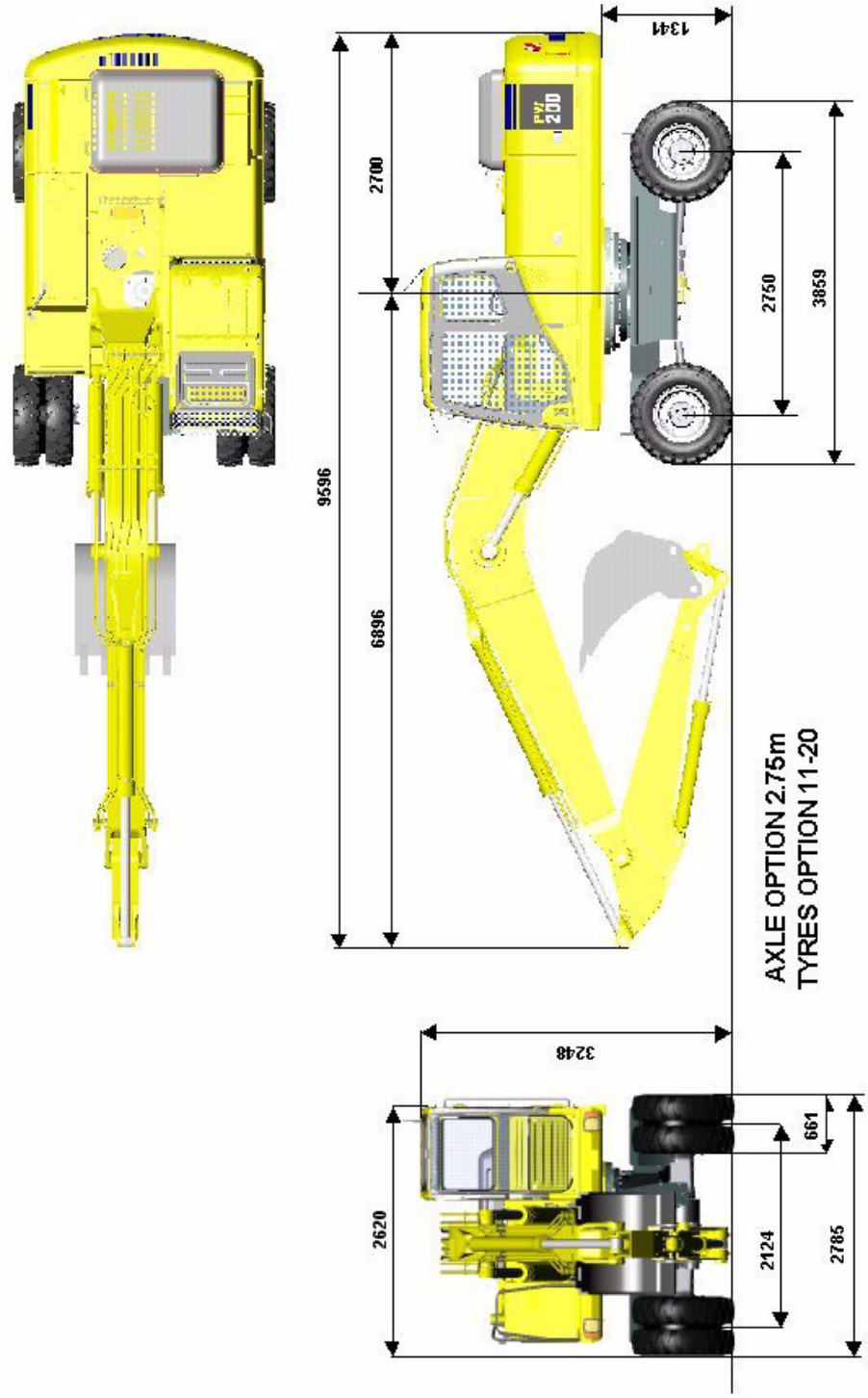
9596
2700
6896
1341
2750
3859
AXLE OPTION 2.75m
TYRES OPTION 11-20
3248
2620
2124
661
2785

2 - PIECE BOOM

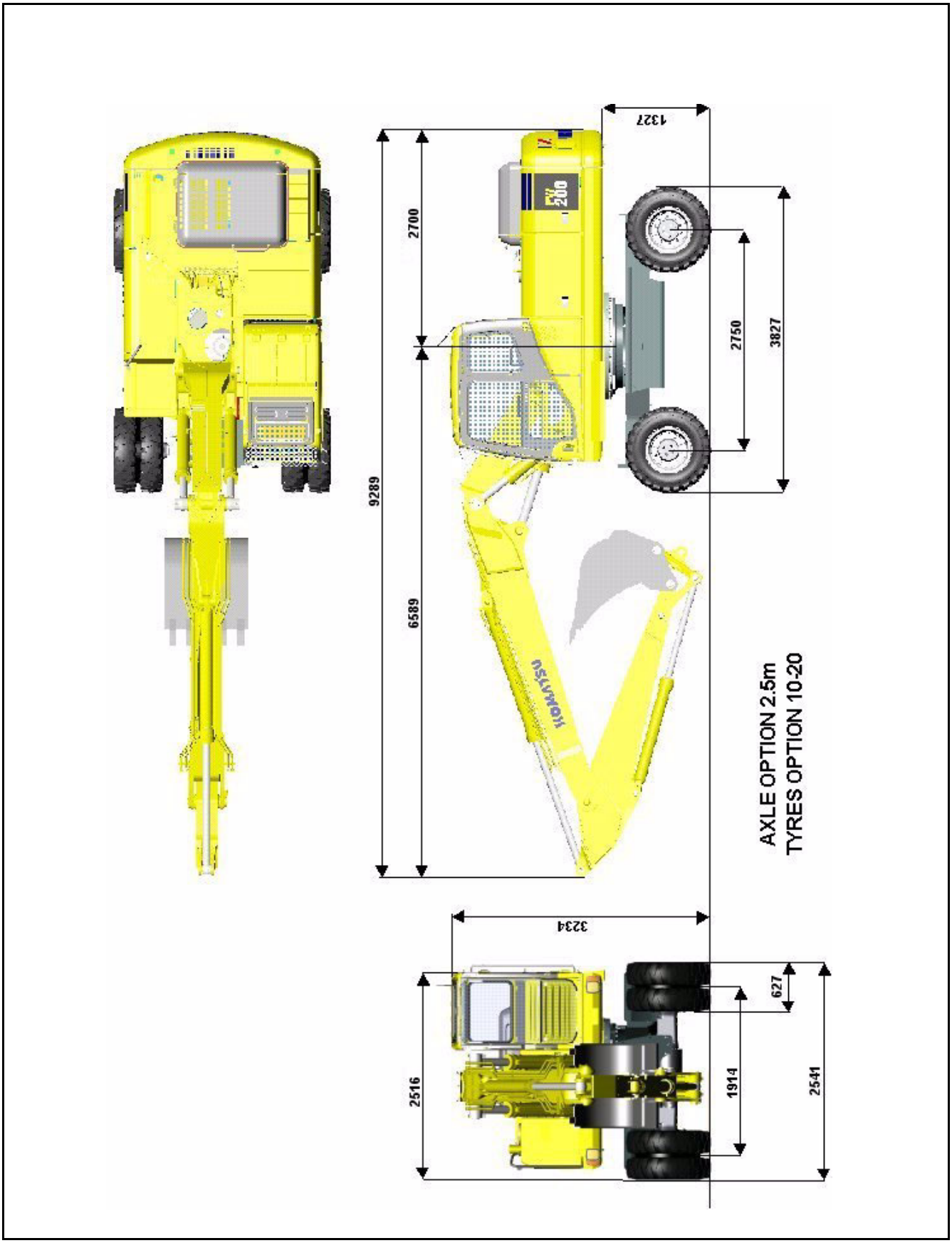
9289
2700
6589
1327
2750
3827
AXLE OPTION 2.5m
TYRES OPTION 10-20
3234
2516
1914
627
2541

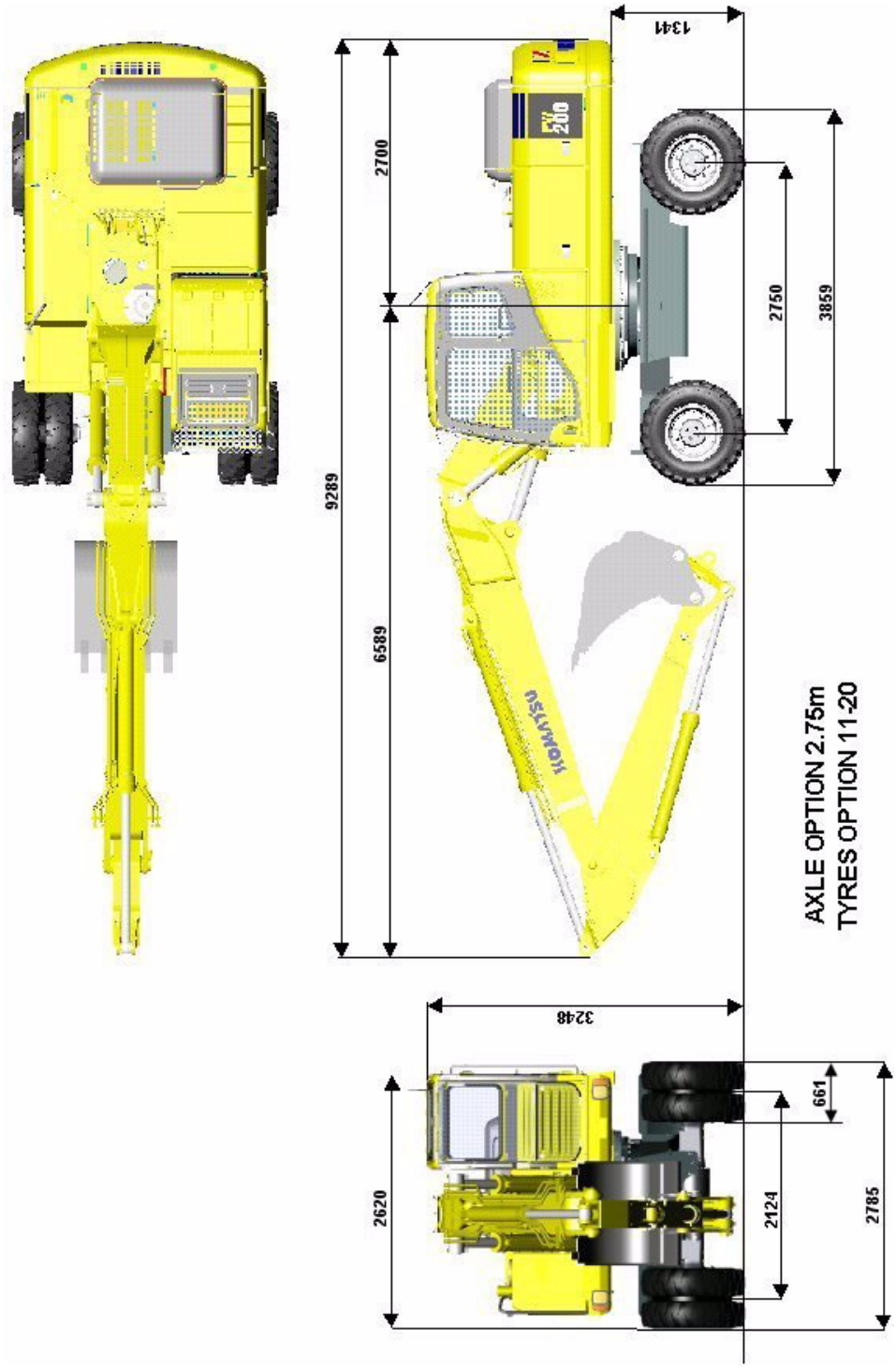
9289
6589
2700
1341
2750
3859
AXLE OPTION 2.75m
TYRES OPTION 11-20
3248
2620
2124
661
2785

WORKING RANGE: ONE PIECE BOOM

Arm length mm (Tt/In)		1800	2400	2900	3500
A	Max. digging height	9467	9883	10003	10438
B	Max. dumping height	6704	7057	7229	7612
C	Max. digging depth	4791	5402	5917	6500
D	Min. swing radius	3906	3201	3143	3184
E’	Max. digging reach GL	8867	9438	9875	10478
E	Max. digging reach	9067	9651	10060	10642

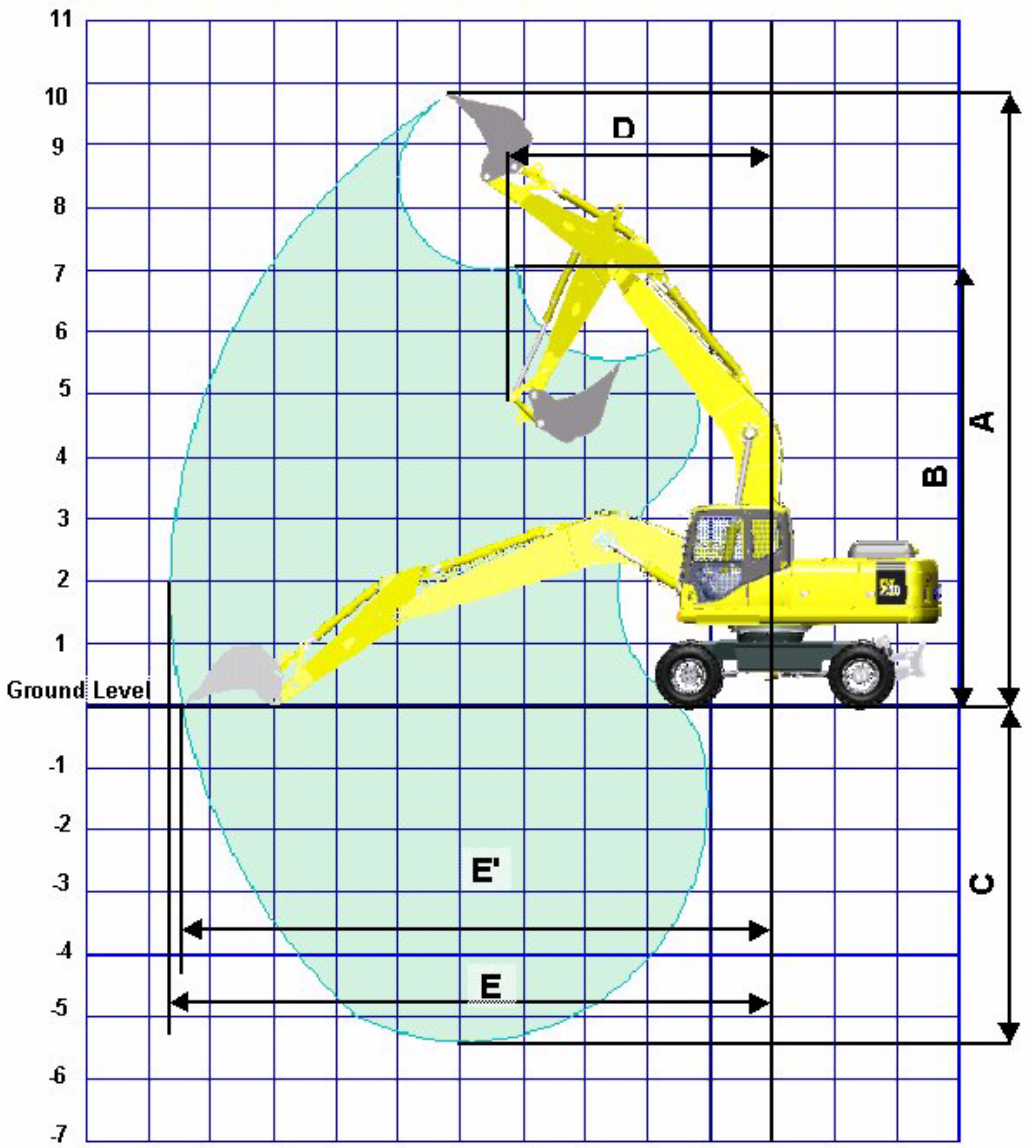

WORKING RANGE: TWO PIECE BOOM

Arm length mm (Tt/In)		1800	2400	2900	3500
A	Max.digging height	9532	9842	10168	10434
B	Max.dumping height	6670	6982	7298	7574
C	Max digging depth	5166	5785	6285	6860
D	Min. swing radius	2594	3121	2745	2866
E’	Max. digging reach GL	8599	9144	9634	10156
E	Max. digging reach	8818	9348	9822	10338

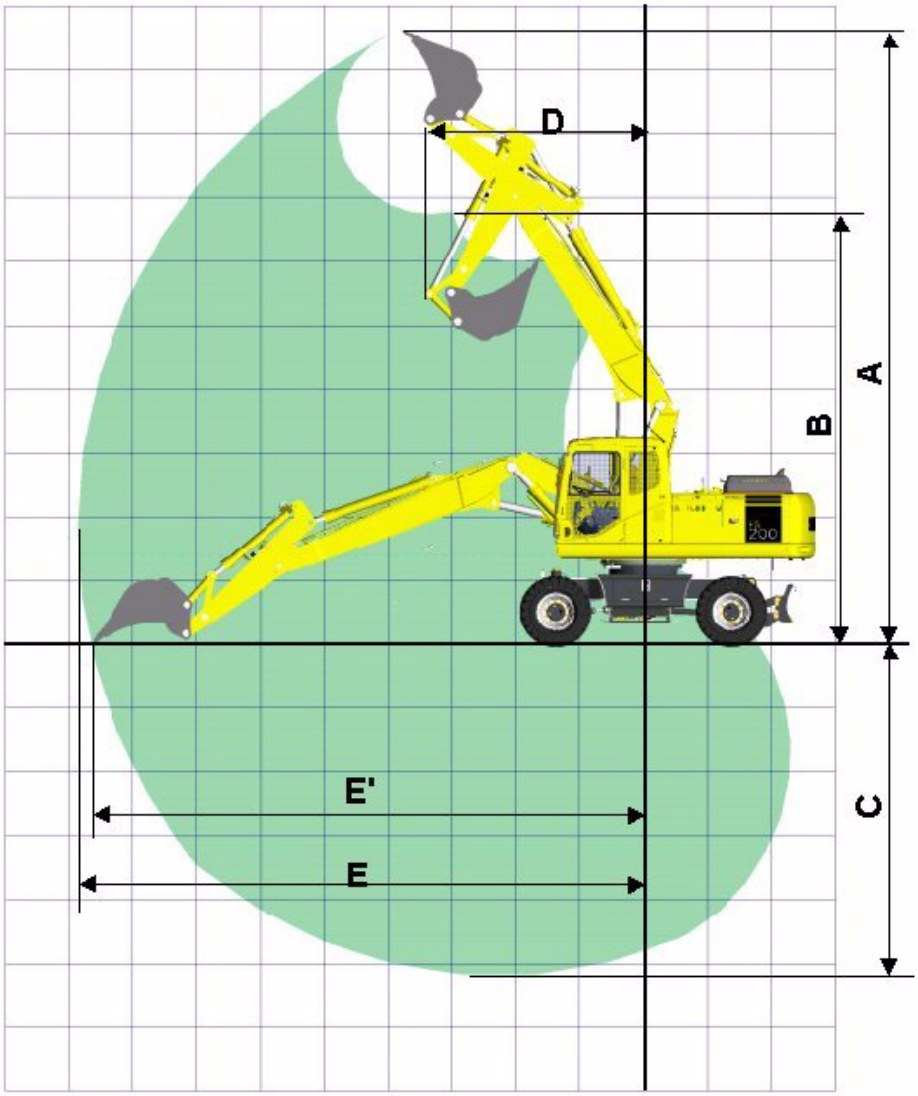

OPTIONS, ATTACHMENTS

WARNING

Please read and make sure that you understand the safety volume before reading this section.

GENERAL PRECAUTIONS

PRECAUTIONS RELATED TO SAFETY

If attachments or options other than those authorized by Komatsu are installed, this will not only affect the life of the machine, but will also cause problems with safety.

When installing attachments not listed in this Operation and Maintenance Manual, please contact your Komatsu distributor first.

If you do not contact Komatsu, we cannot accept any responsibility for any accident or failure.

⚠ WARNING

Precautions for removal and installation operations
When removing or installing attachments, obey the following precautions and take care to ensure safety during the operation.

- **Carry out the removal and installation operations on a flat, firm ground surface.**
- **When the operation is carried out by two or more workers, determine signals and follow these during the operation.**
- **When carrying heavy objects (more than 25 kg), use a crane.**
- **When removing heavy parts, always support the part before removing it.**
  When lifting such heavy parts with a crane, always pay careful attention to the position of the centre of gravity.
- **It is dangerous to carry out operations with the load kept suspended. Always set the load on a stand, and check that it is safe.**
- **When removing or installing attachments, make sure that they are in a stable condition and will not fall over.**
- **Never go under a load suspended from a crane.**
  Always stand in a position that is safe even if the load should fall.

NOTICE

Qualifications are required to operate a crane. Never allow the crane to be operated by unqualified person.
For details of the removal and installation operations, please contact your Komatsu distributor.

PRECAUTIONS WHEN INSTALLING ATTACHMENTS

WARNING

Long work equipment reduces the stability of the chassis, so if the swing is operated on a slope, or when going down a steep hill, the machine may lose its balance and overturn. The following operations are particularly dangerous, so never operate the machine in these ways.

- **Going downhill with the work equipment raised**

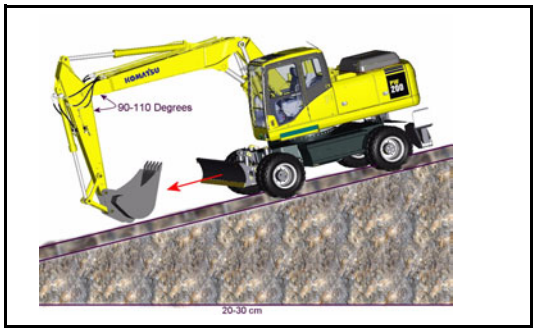

- **Traveling across slopes**

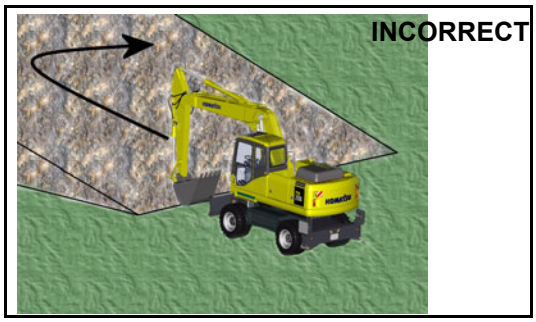

- **Swinging the upper structure on slopes**
- **If heavy work equipment is installed, the overrun of the swing becomes greater (the distance from the point where the operator operates the left control lever to stop the swing to the point where the upper structure stops completely), so there is danger of mistaking the distance and hitting something.**
  Always operate so that there is an ample margin to the stopping point.
  Furthermore, the hydraulic drift also becomes larger when the work equipment is stopped in mid-air, it will gradually move down under its own weight).
- **Always follow the correct procedure when installing the boom and arm. If the correct procedure is not followed, this may lead to serious damage or injury, so please consult your Komatsu distributor before carrying out installation.**
- **If long work equipment is installed, the working range will suddenly become larger, so there is danger of mistaking the distance and hitting something.**
  Always operate the work equipment so that there is ample space from any obstacles in the area

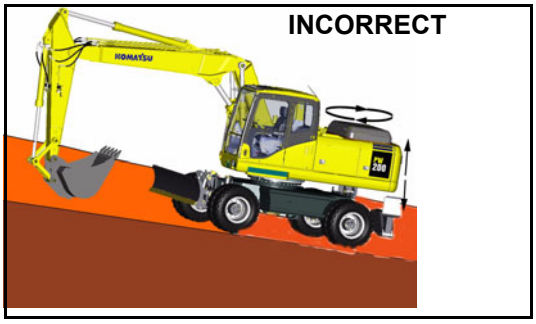

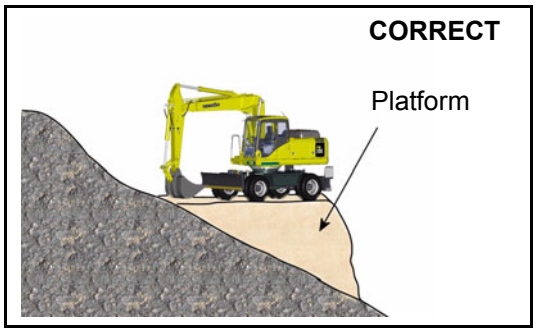

HANDLING BUCKET WITH HOOK

CHECKING FOR DAMAGE TO BUCKET WITH HOOK

Check that there is no damage to the hook, stopper, or hook mount. If any abnormality is found, please contract your Komatsu distributor.

PROHIBITED OPERATIONS

The standard work equipment must not be used for lifting loads. If this machine is to be used for lifting loads, it is necessary to install the special bucket with hook.

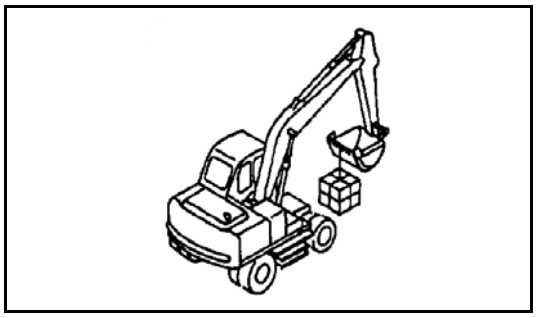

PRECAUTIONS DURING OPERATIONS

- When carrying out lifting operations, reduce the engine speed and use the lifting operation mode.
- Depending on the posture of the work equipment, there is danger that the wire or load may slip off the hook. Always be careful to maintain the correct hook angle to prevent this from happening.
- Never steer the machine while lifting a load.

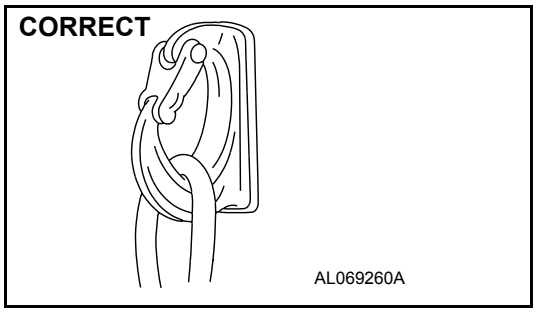

- If the bucket with hook is turned and used for operations, it will hit the arm during dumping operations, so be careful when using it.
- The loads must never exceed those specified in the lifting capacity chart when carrying out lifting operations.
- If you wish to install a hook in the future, please contact your Komatsu distributor.

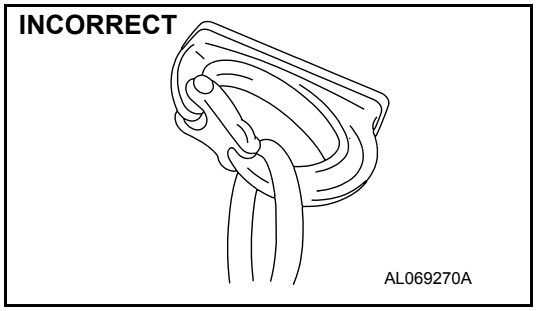

MACHINES READY FOR ATTACHMENTS

GENERAL LOCATIONS

Clamshell Operation

Selector valves to be in position shown for clamshell operation.

Selector valve in normal position to bucket cylinder

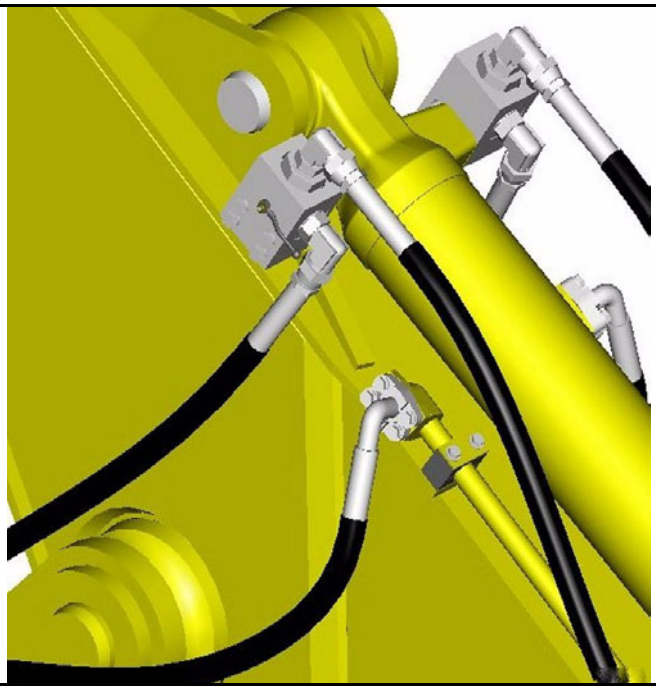

Selector valve turned to clamshell operation. Both valves must be in same position

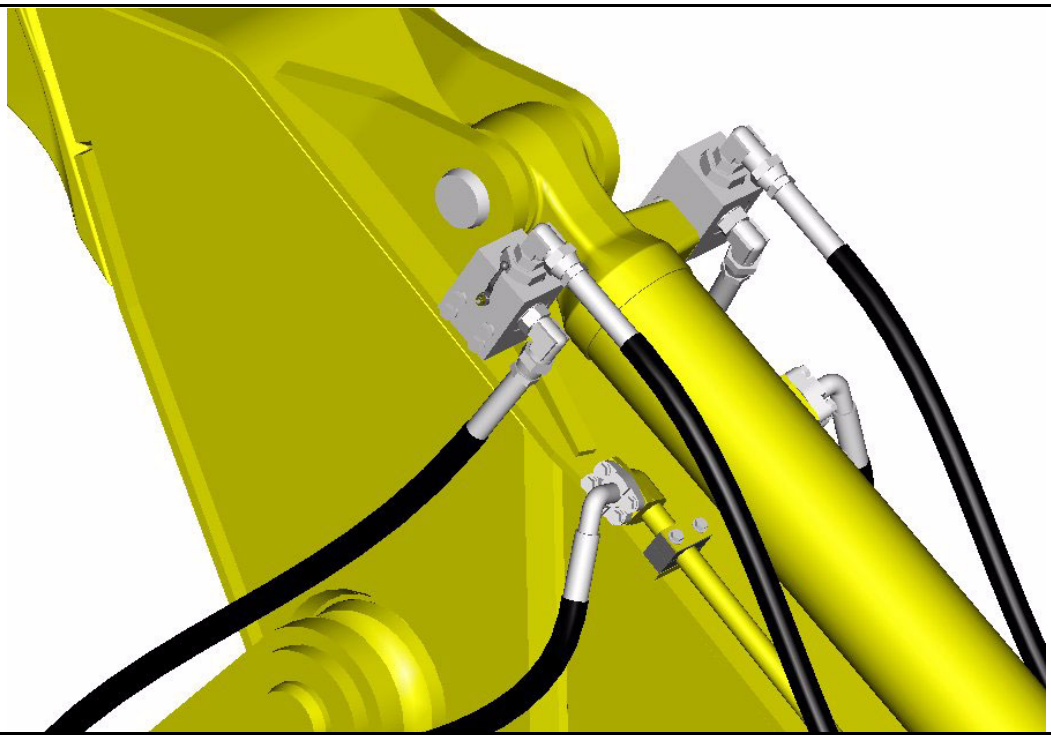

1. STOP VALVE (1)

This valve stops the flow of the hydraulic oil. There is one on both sides of the arm

(1) FREE: Hydraulic oil flows.

(2) LOCK: Hydraulic oil stops.

When removing or installing attachments, set this valve to the LOCK position.

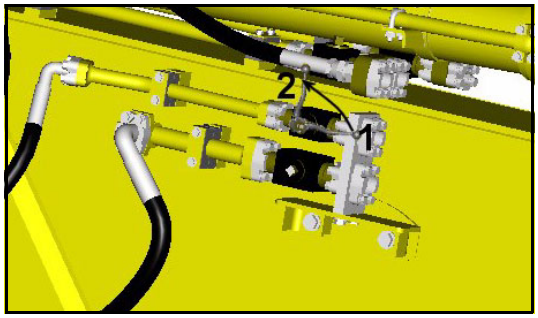

2. SELECTOR VALVE (2)

This switches the flow of the hydraulic oil.

Position (1): When clamshell is used

Position (2): When normal operation to bucket cylinder

A	To/from main valve
B	Clamshell feed

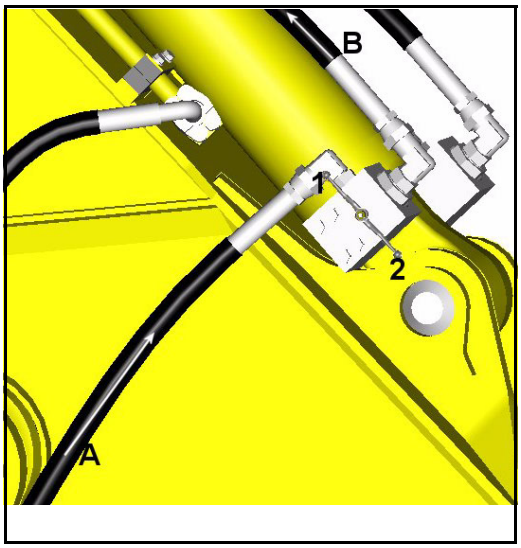

3. CONTROL PEDAL (20)

This is used to operate the attachment.

Pedal for two line attachment (with auto deceleration mechanism)

The breaker is operated by right control lever button (2) and (31).

The breaker is operated with right pedal (1).

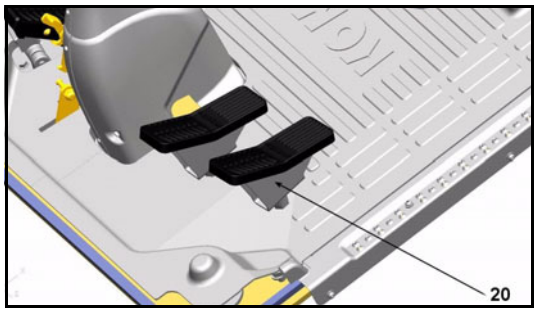

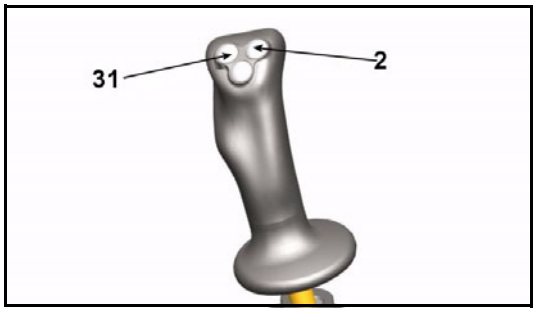

4. ACCUMULATOR (FOR CONTROL CIRCUIT) (4)

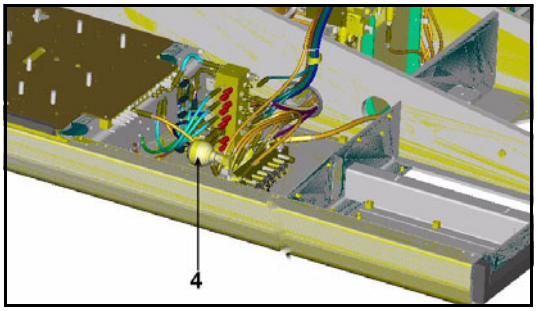

WARNING

The accumulator is charged with high-pressure nitrogen gas, and it is extremely dangerous if it is handled mistakenly.

For details of handling, see "HANDLING ACCUMULATORS (186)"

This is installed to release any remaining pressure in the attachment circuit after the engine is stopped. Normally, do not touch it.

HANDLING THE CLAMSHELL BUCKET

This bucket is used for digging and loading in side-ditches or confined spaces.

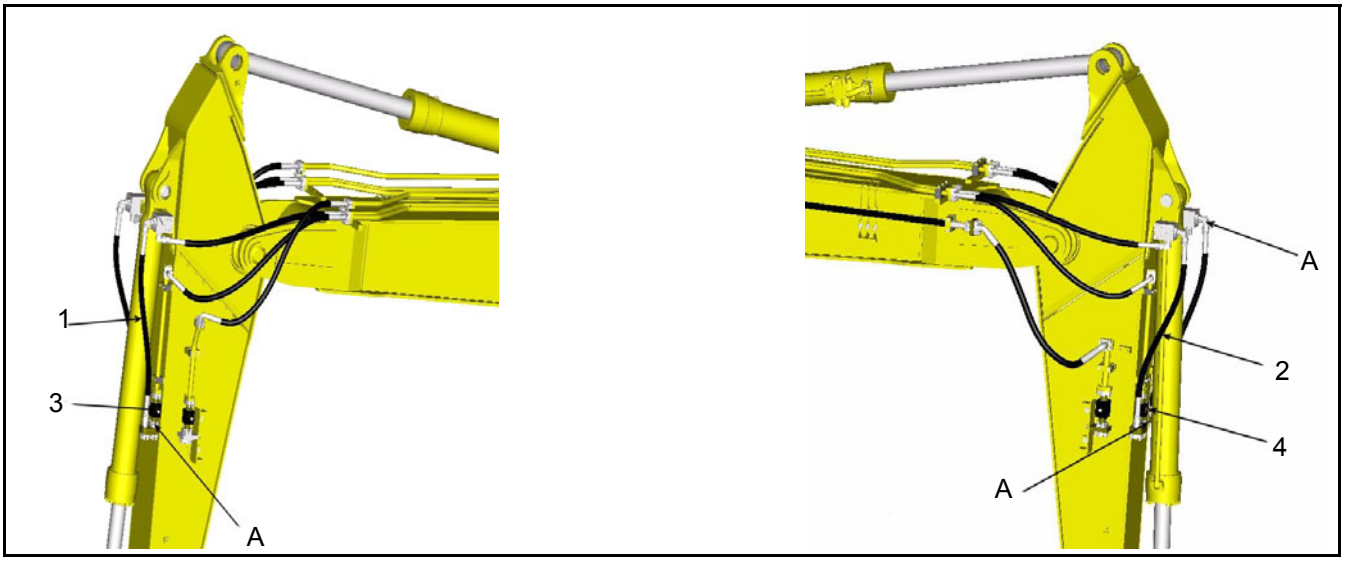

How to install clamshell bucket

1. Clamshell cylinder head (feed)
2. Clamshell cylinder bottom (return)
3. Rotate left
4. Rotate right

Ensure valves (A) are open on both sides. Ensure selector is in correct position.

HOW TO OPERATE

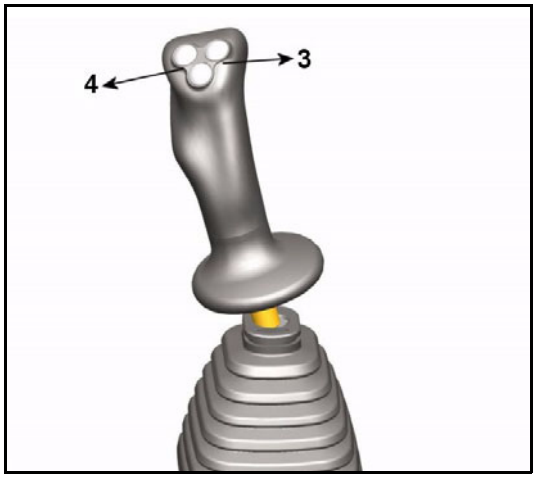

Open and close

Move the right control lever to operate clamshell

3. Open (move to right)

4. Close (move to left)

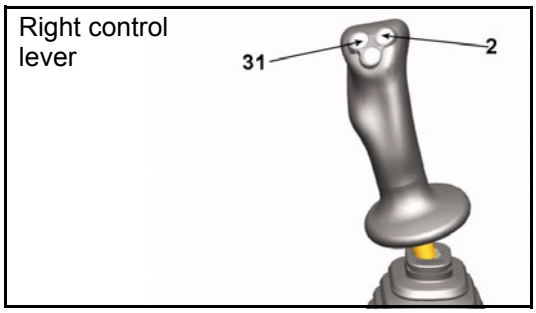

Rotate

Press button on right control lever

2. Clockwise

31. Counter clockwise

- For safety, always avoid abrupt travelling, swing and stopping.
- When mounting a clamshell bucket, the bucket cylinder must be positioned at mid-stroke to allow access to quick release couplers.
  Connect couplers and retract bucket cylinder

NOTE: Isolate cylinder using lock valve and secure bucket links.

- Do not swing the bucket to crush the rock or to cut through soil.
- Do not use the bucket for hammering or pulling out piles, etc.
- Before leaving the machine, open the bucket and lower it to the ground.

OPERATION

⚠ WARNING

- **Be careful when pressing the switch in the deceleration range. The engine speed will rise suddenly.**
- **Do not press the switch except when operating the switch. If the switch is depressed by accident, the attachment may move suddenly and cause serious damage or injury.**

Operate the attachment as follows.

WHEN USING BREAKER

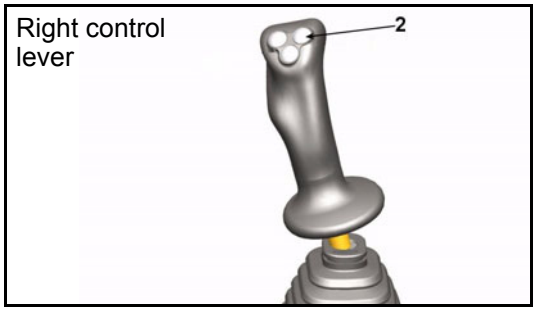

Depress the switch (2) of the right control lever to operate the breaker.
Set the working mode to the B (breaker mode) mode.

NOTICE

Do not use the heavy-duty operation mode for breaker operations. If the breaker is used in the heavy-duty operation mode there is danger that the hydraulic equipment may be damaged.

Precautions when using

- Check that the stopper valve is in the OPEN position.
- Consult with the attachment maker to decide whether it is necessary to install an accumulator for the attachment circuit.
- For details of other precautions when handling the breaker, read and use correctly the instruction manual provided by the breaker manufacturer.

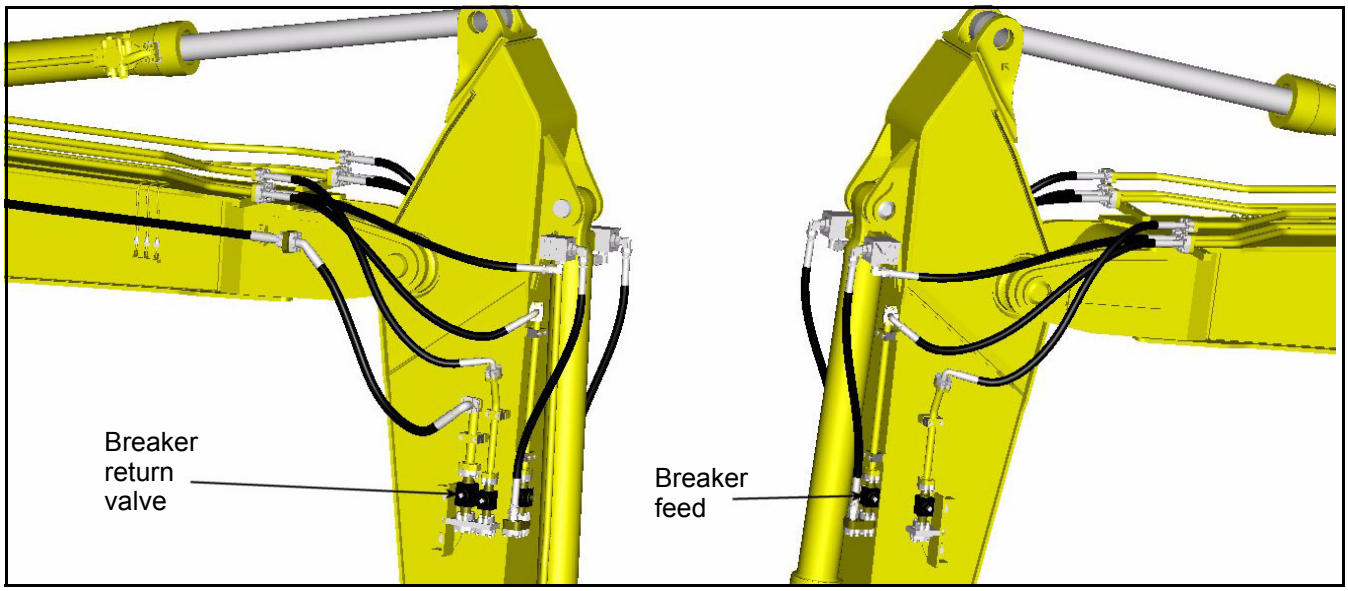

METHOD FOR RELEASING PRESSURE IN CONTROL CIRCUIT OF MACHINES EQUIPPED WITH ACCUMULATOR

1. Lower the work equipment to the ground. Close any attachment such as the crusher.
2. Stop the engine.
3. Set the safety lock lever completely in the FREE position, operate the right control lever and attachment control pedal fully to the front, rear, left, and right, to release the pressure in the control circuit.
4. Set the safety lock lever completely in the LOCK position, then lock the control levers and attachment control pedal. Note that this does not completely release the pressure, so when removing the accumulator in the control circuit, loosen the connections slowly and do not stand in the direction where the oil spurs out.

LONG-TERM STORAGE

If the machine is not to be used for a long time, do as follows.

- Set the stop valve in the LOCK condition.
- Install a blind plug to the valve.
- Set the selector valve to the position for general attachments such as the crusher.

If there is no breaker or general attachment installed, operating the pedal may cause overheating.

SPECIFICATIONS

Hydraulic specifications

- Oil flow - Refer to clamshell and breaker manufacturers recommendations for oil flow for specific attachment.
- Main valve safety valve set pressure
  When using breaker: 24.5+/- 0.5 MPa (250 +/-5 kg/cm²).

INTRODUCTION OF ATTACHMENTS AND EXTENDING MACHINE SERVICE LIFE

This section describes the necessary precautions to be observed when operating a hydraulic excavator equipped with an attachment.

NOTICE

Select the attachment most suited to the machine body.

- **The machine models to which attachments can be mounted vary. For selection of attachment and machine model, consult your Komatsu distributor.**

HYDRAULIC BREAKER

MAIN FIELDS OF APPLICATION

- Crushed rock
- Demolition work
- Road construction

This attachment can be used for a wide range of work including demolition of buildings, breaking up of road surfaces, tunnel work, breaking up slag, rock crushing, and breaking operations in quarries.

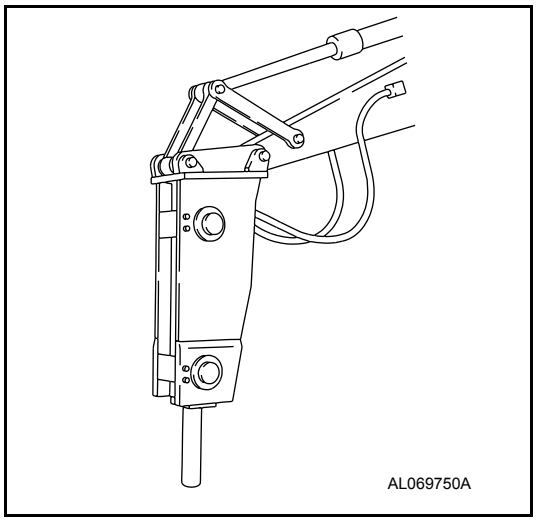

Keep the chisel pushed perpendicularly against the impact surface when carrying out breaking operations.

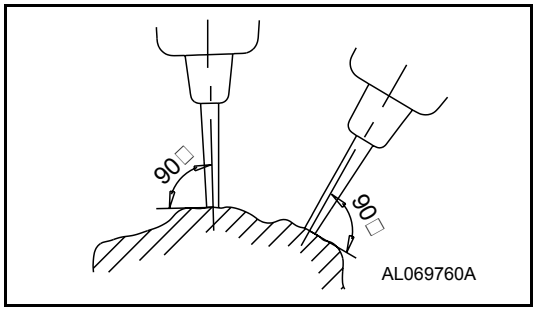

When applying impact, push the chisel against the impact surface and operate so that the chassis rises approx. 5 cm off the ground. Do not let the machine come further off the ground than necessary.

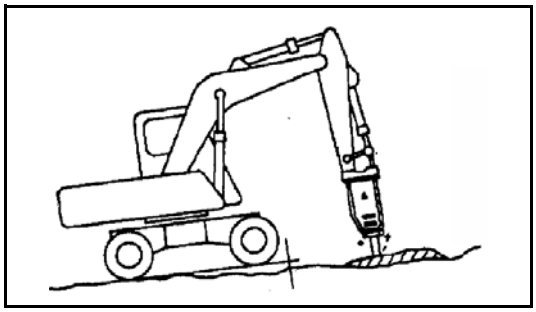

When applying continuous impact to the same impact surface, if the chisel does not penetrate or break the surface within 1 minute, change the point of impact and carry out breaking operations closer to the edge.

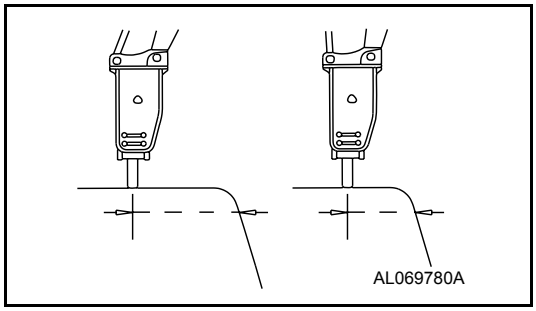

The direction of penetration of the chisel and the direction of the breaker body will gradually move out of line with each other, so always adjust the bucket cylinder to keep them aligned.

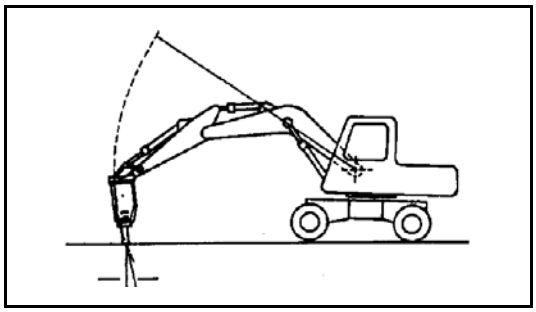

Always keep the chisel pressed against the impact surface properly to prevent using the impact force when there is no resistance.

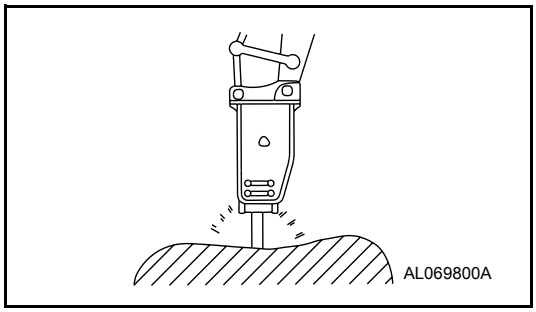

MISTAKEN METHODS OF USE

To ensure that the machine has a long life, and to ensure that operations are carried out in safety, do not operate the machine in any of the following ways.

- Do not operate the cylinder to the end of its stroke.
  Always leave approx. 5 cm to spare.

Using the mount to gather in pieces of rock

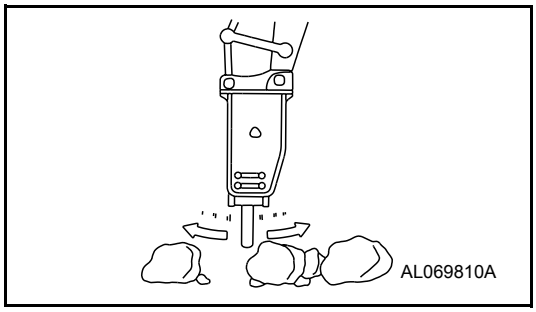

Operations using the swing force

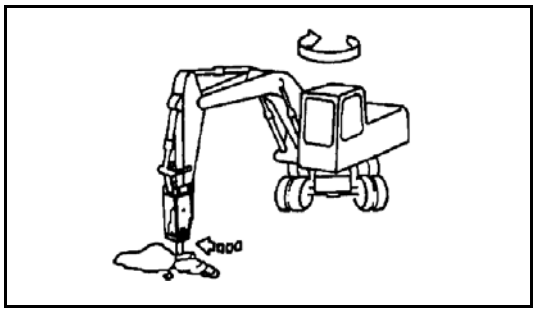

Moving the chisel while carrying out impacting operations

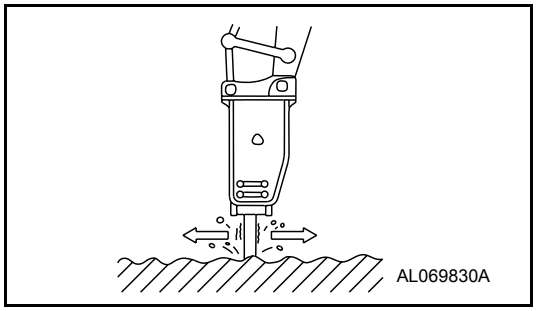

Holding the chisel horizontal or pointed up when carrying out impacting operations

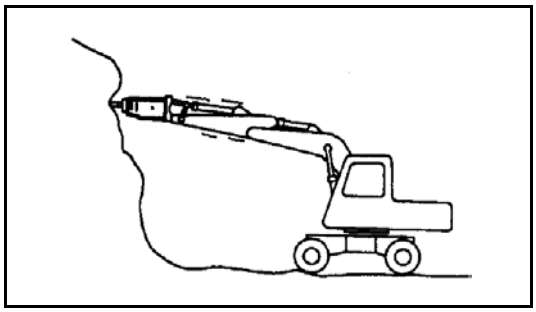

Twisting the chisel when it has penetrated the rock

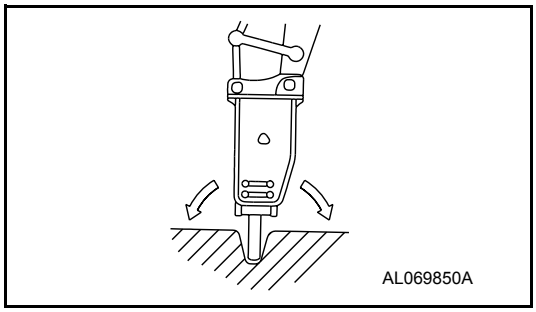

Pecking operations

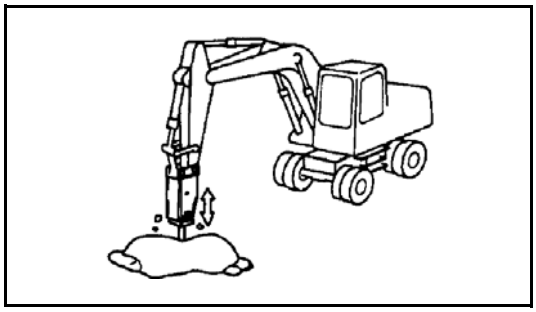

Extending the bucket cylinder fully and thrusting to raise the machine off the ground

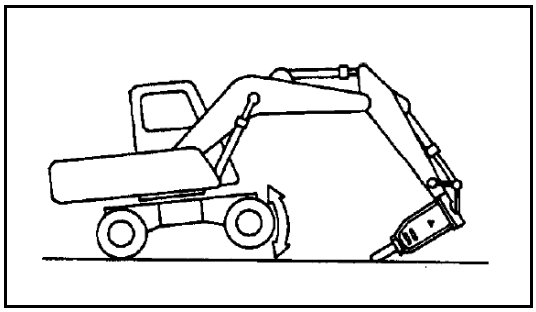

POWER RIPPER

MAIN FIELDS OF APPLICATIONS

- Road repair work
- Demolition work

This attachment can be used for a wide range of work including peeling off and crushing pavement roads, demolishing wooden houses and buildings, and crushing foundation and roadbeds.

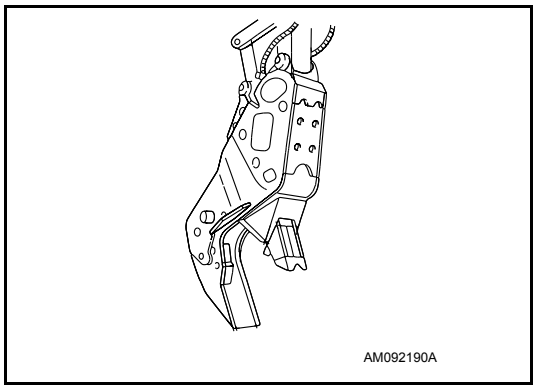

MISTAKEN METHODS OF USE

To ensure that the machine has a long life, and to ensure that operations are carried out in safety, do not operate the machine in any of the following ways.

- Do not operate the cylinder to the end of its stroke.
  Always leave approx. 5 cm to spare.

Impact operations using attachment

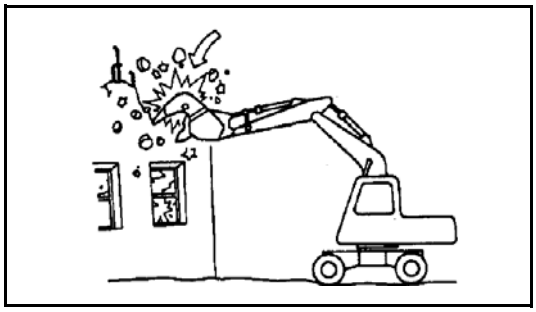

Impact operations using swing force

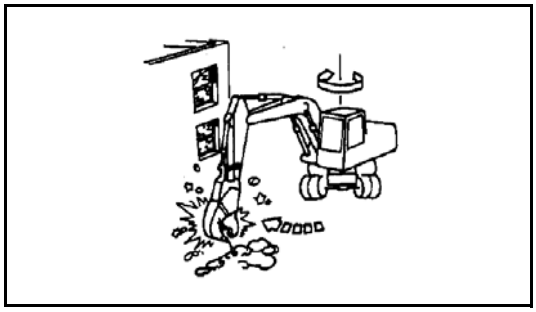

Overloading work equipment during lifting and loading operations

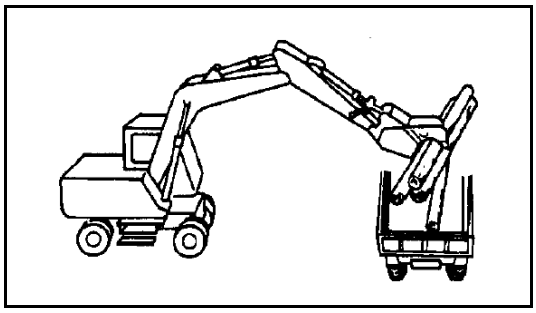

Operations using attachment to grip at an angle.

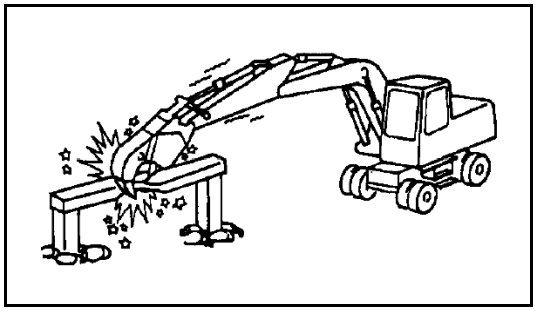

FORK GRAB

MAIN FIELDS OF APPLICATION

- Disposing of industrial waste
- Disposing of demolition waste

This can be used for a wide range of work including collecting or loading demolition waste materials and debris, timber, grass.

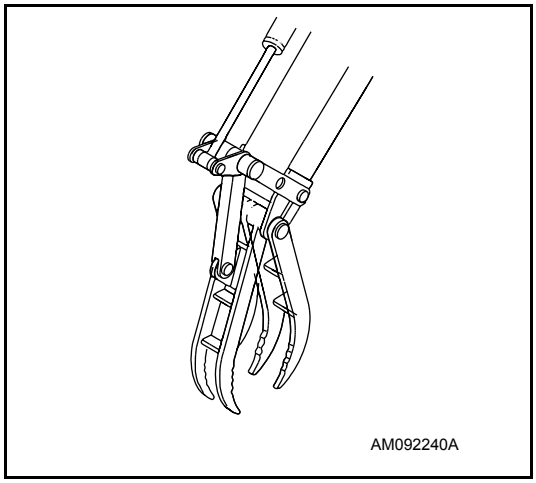

MISTAKEN METHODS OF USE

To ensure that the machine has a long life, and to ensure that operations are carried out in safety, do not operate the machine in any of the following ways.

- Do not operate the cylinder to the end of its stroke.
  Always leave approx. 5 cm to spare.

Operations using the swing force

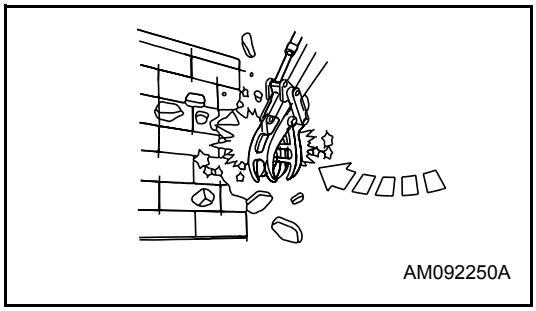

Operations using one side of work equipment

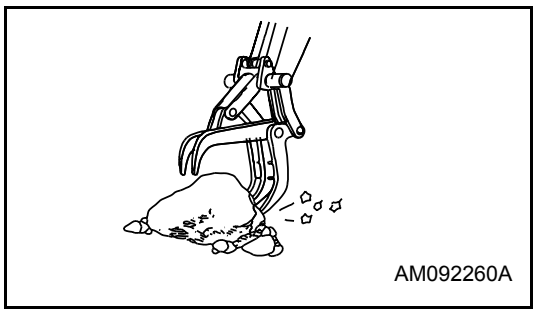

Pushing fork into ground surface to jack up and change direction of machine

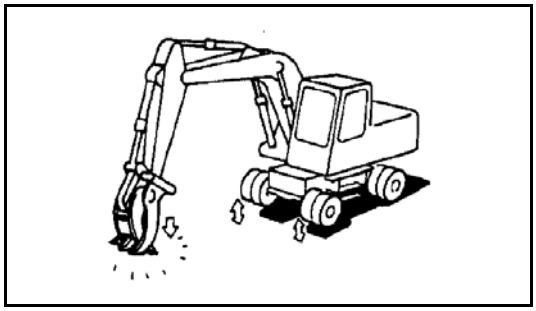

Impact operation with no load.

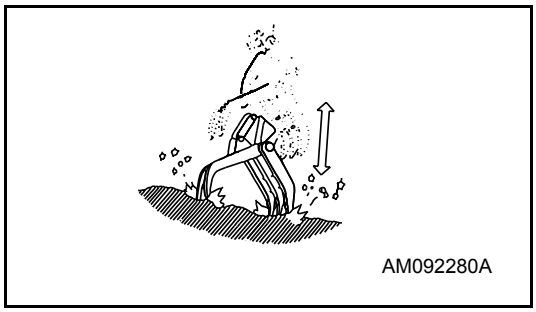

GRAPPLE BUCKET

MAIN FIELDS OF APPLICATION

- Demolition
- Disposing of industrial waste
- Forestry

This bucket is widely used for demolition including breaking-up work, grading and digging, clean-up work after natural disasters, dumping industrial waste, and forestry work, etc.

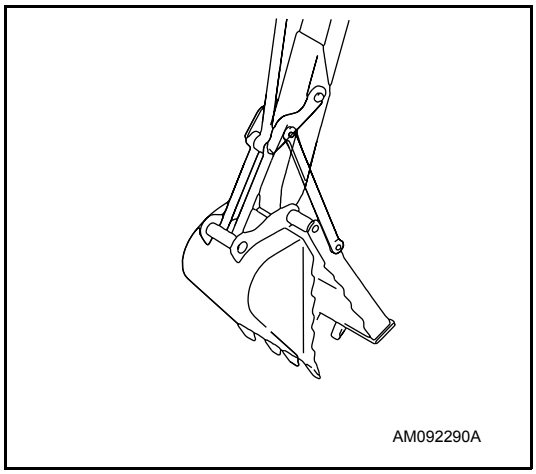

MISTAKEN METHODS OF USE

To ensure that the machine has a long life, and to ensure that operations are carried out in safety, do not operate the machine in any of the following ways.

- Do not operate the cylinder to the end of its stroke.
  Always leave approx. 5 cm to spare.

Operations using the swing force

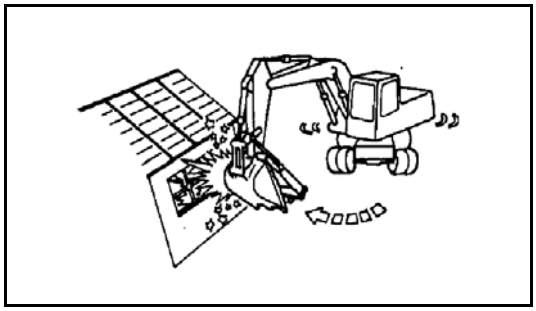

Grabbing a object using buckets on only one side

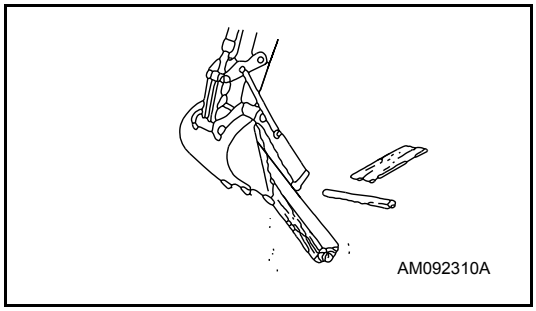

Closing the sub-bucket with the boom and arm fully extended.

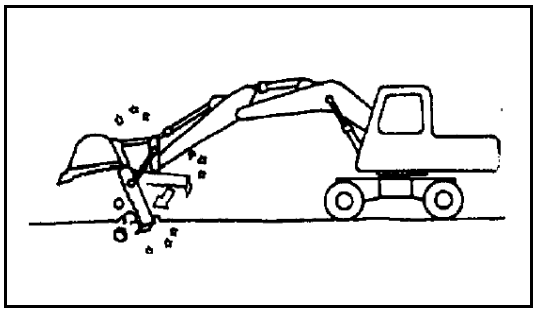

Impact operation with no load.

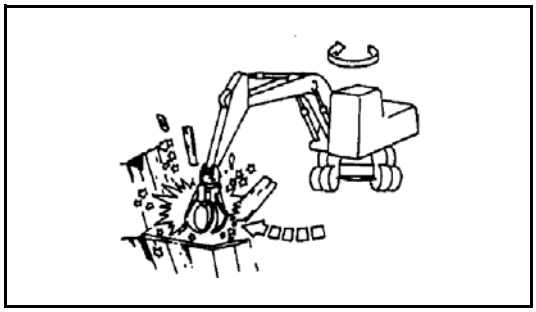

SCRAP GRAPPLE

MAIN FIELDS OF APPLICATION

- Disposal of rock or debris

This attachment is mounted to the arm end and used to grasp rock, debris etc. by opening and closing the claws (3 to 5) corresponding to the extension and retraction of the hydraulic cylinder.

MISTAKEN METHODS OF USE

To ensure that the machine has a long life, and to ensure that operations are carried out in safety, do not operate the machine in any of the following ways.

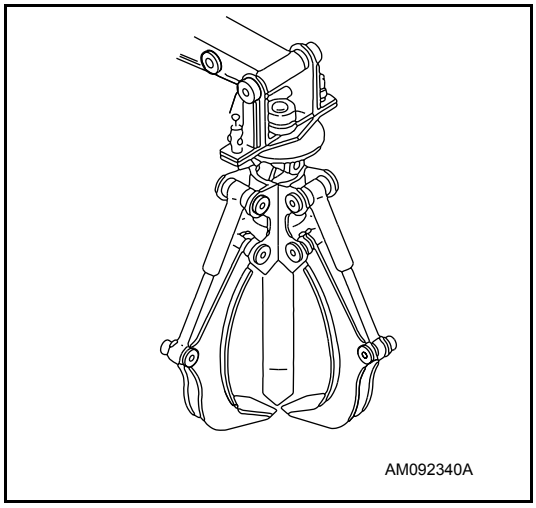

- Do not operate the cylinder to the end of its stroke.
  Always leave approx. 5 cm to spare.

Operations using the swing force

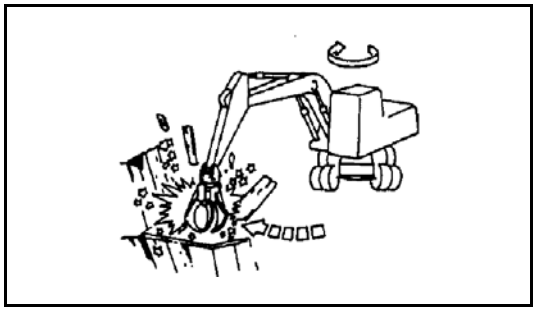

Operations using one side of work equipment

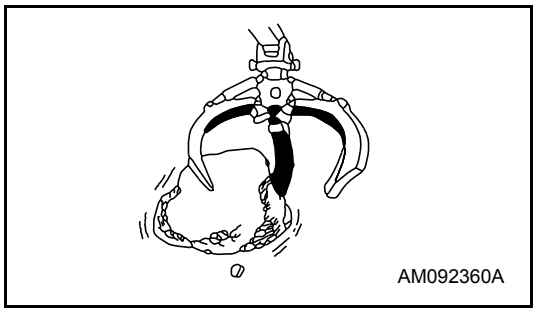

Catching and dragging with claw end

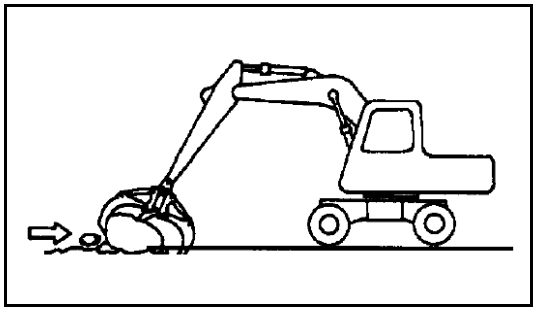

Gouging.

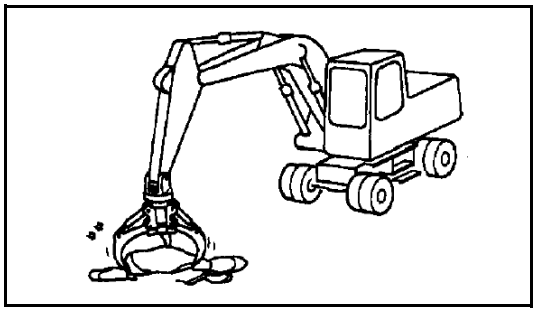

CRUSHER & SMASHER

MAIN FIELDS OF APPLICATION

- Demolition
- Road repair work

This is the optimum attachment for demolition of steel frame reinforced structures, and for crushing of concrete blocks and rock, etc. The unique blade shape provides heavy crushing power.

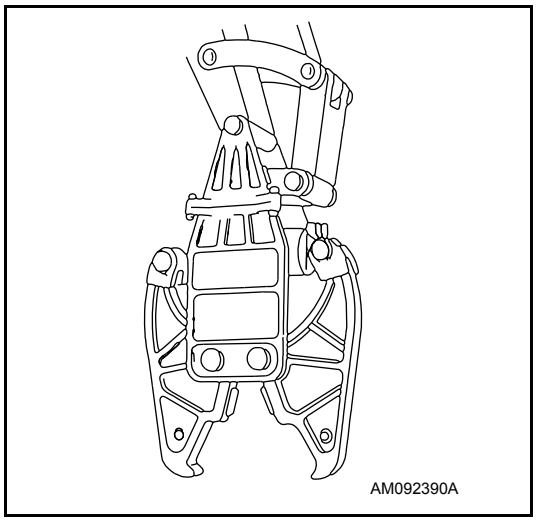

MISTAKEN METHODS OF USE

To ensure that the machine has a long life, and to ensure that operations are carried out in safety, do not operate the machine in any of the following ways.

- Do not operate the cylinder to the end of its stroke.
  Always leave approx. 5 cm to spare.

Operations using cutting tip on one side only

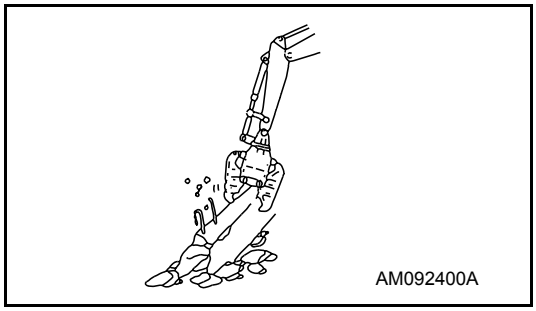

Impact operation with no load

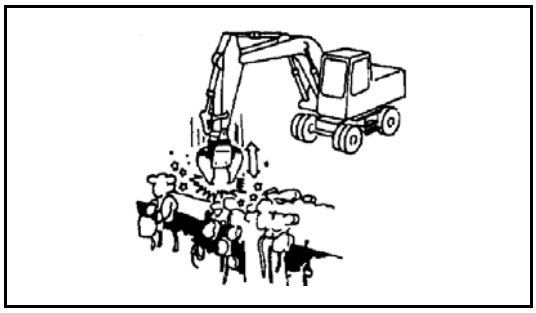

Twisting operations at end of cylinder stroke

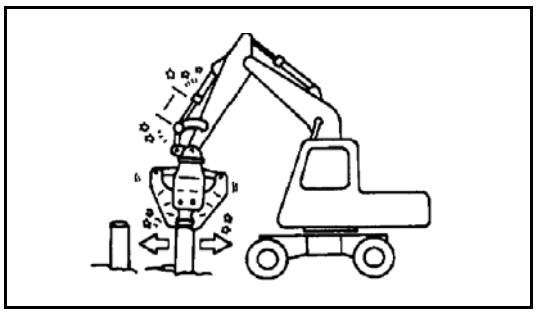

Sudden gripping and breaking operations.

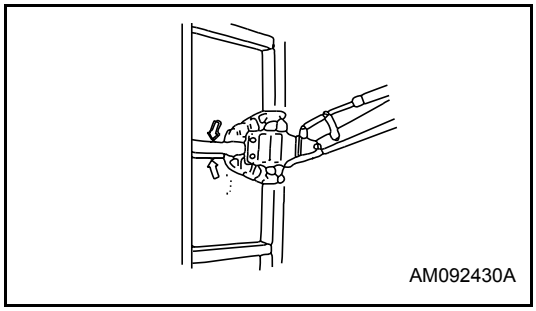

HYDRAULIC PILE DRIVER

MAIN FIELDS OF APPLICATION

- Foundation work
- River work
- Water supply and sewerage

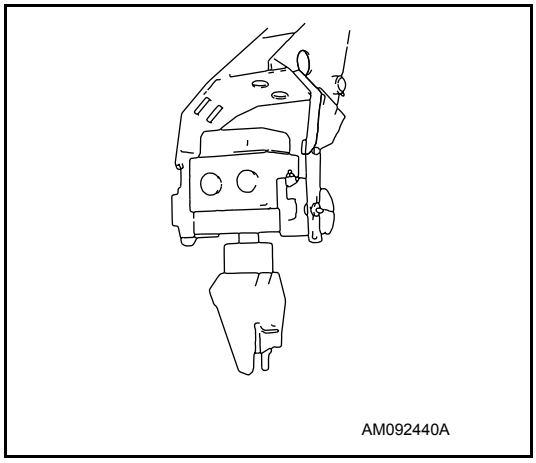

This is a piling machine employing the hydraulic power source of the excavator. The machine features a long arm and a chuck unit This facilitates operations such as driving and movable by 360° orners, vertical driving e removing long piles, driving in piles at corners, vertical driving etc.

MISTAKEN METHODS OF USE

To ensure that the machine has a long life, and to ensure that operations are carried out in safety; do not operate the machine in any of the following ways.

- Do not operate the cylinder to the end of its stroke.
  Always leave approx. 5 cm to spare.

Forward or swing motion while grasping a pile

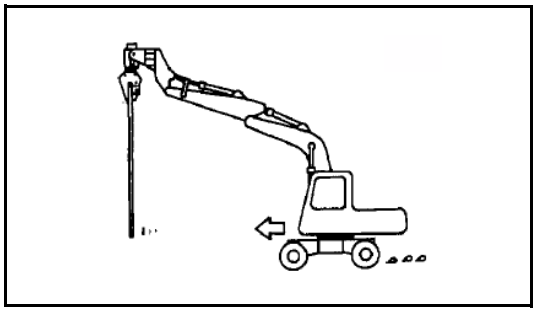

Lifting more than two piles at the same time

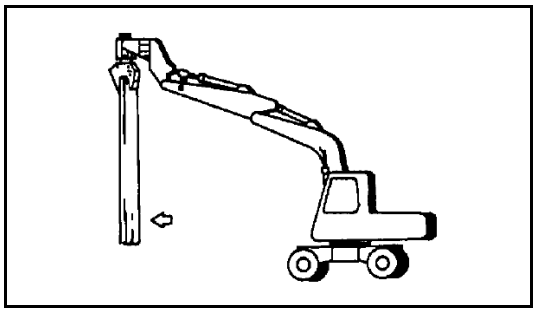

Work other than standard works

Loading or unloading a machine equipped with hydraulic pile driver.

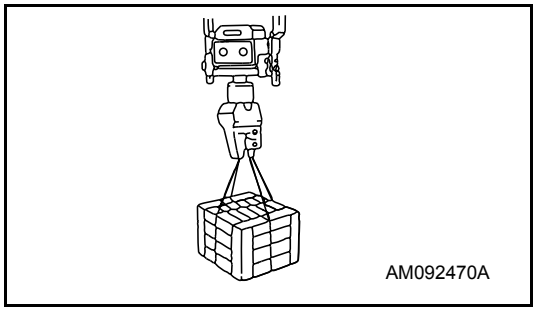

HYDRAULIC EXCAVATOR WITH MULTIPURPOSE CRANE

MAIN FIELDS OF APPLICATION

- Site preparation
- Water supply and sewerage
- River work
- Agricultural, civil engineering work

Crane operation can be carried out without removing the bucket. This machine is used for laying U section gutters and hume pipes for water supply and sewerage as well as river and canal work, agricultural, civil engineering work and site preparation.

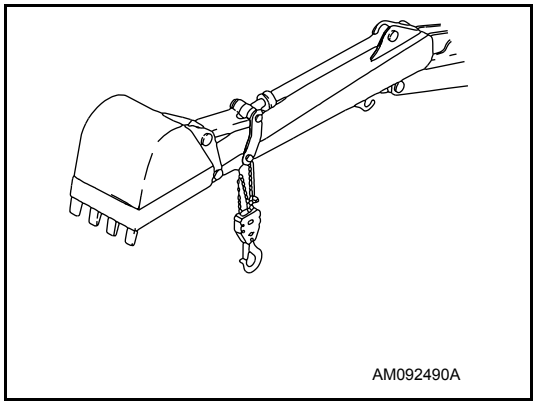

MISTAKEN METHODS OF USE

To ensure that the machine has a long life, and to ensure that operations are carried out in safety, do not operate the machine in any of the following ways.

- Do not operate the cylinder to the end of its stroke.
  Always leave approx. 5 cm to spare.

Abrupt lever operation

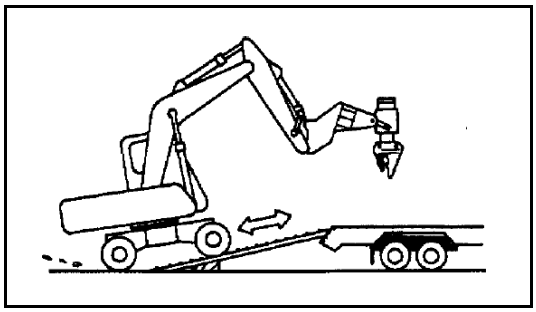

Traveling with a suspended load

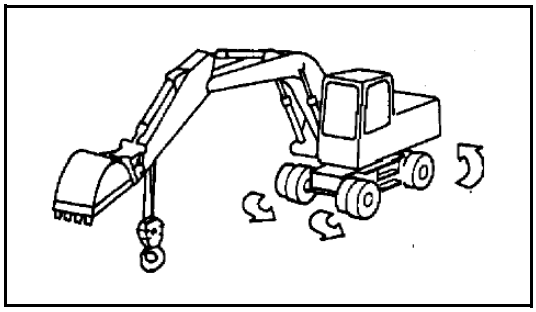

Operating other work equipment during crane operation

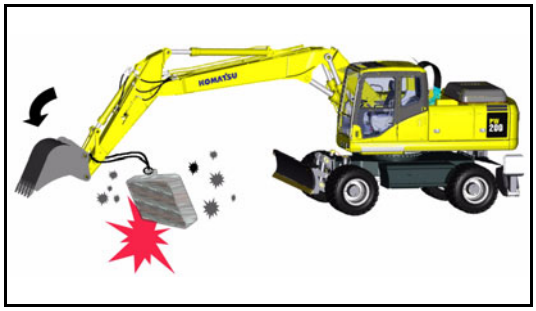

Excessive lengthening of wire rope.

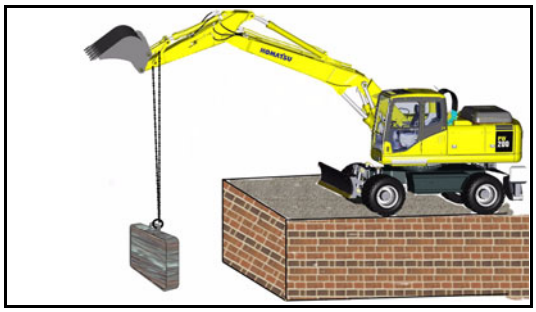

GENERAL VIEW OF CONTROLS

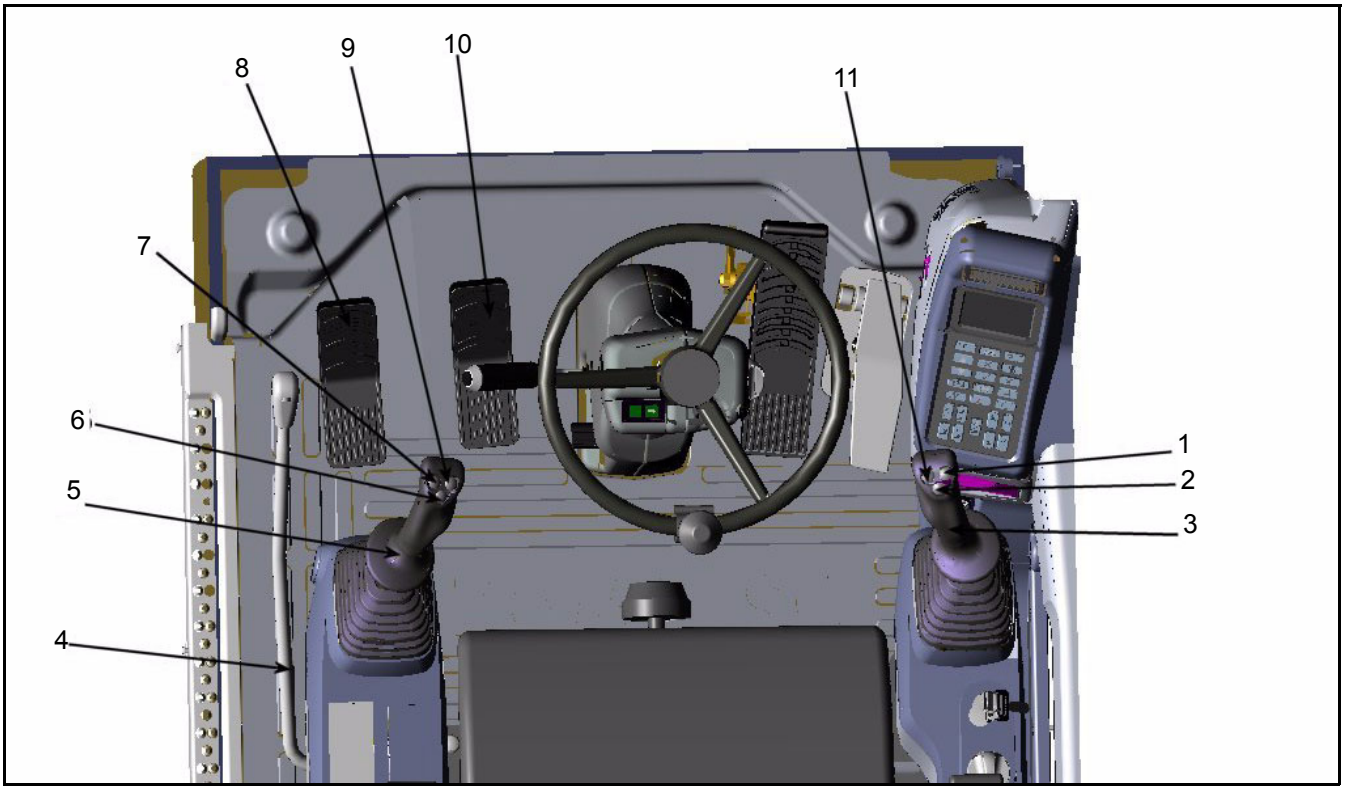

1. Clamshell rotate right	7.Power max button
2. Boom and chassis attachment select	8. HCU pedal (option)
3. Right control lever	9. Spare
4. Safety lock lever	10. Boom pedal
5. Left control lever	11. Clamshell rotate left
6. Horn	

LEFT CONTROL LEVER (with auto-deceleration device)

WARNING

If any lever is operated when in the deceleration range, the engine speed will suddenly increase, so be careful when operating the levers.

This lever is used to operate the arm and upper structure.

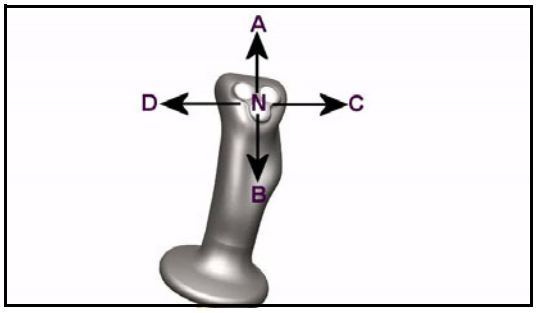

Arm operation	Swing operation
(A) Arm OUT	(C) Swing to right
(B) Arm IN	(D) Swing to left
N (Neutral)	

When the left control lever in this position, the upper structure and the arm will be retained in the position in which they stop.

RIGHT CONTROL LEVER (with auto-deceleration device)

WARNING

If any lever is operated when in the deceleration range, the engine speed will suddenly increase, so be careful when operating the levers.

This lever is used to operate the boom and bucket.

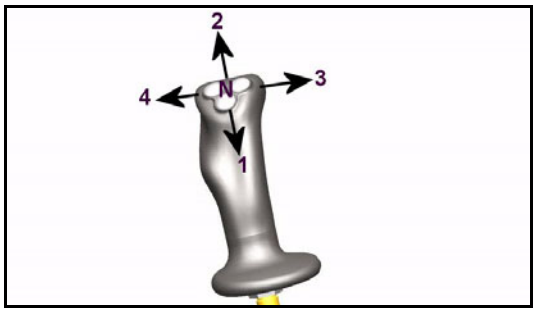

Boom operation	Bucket operation
(1) RAISE	(3) DUMP
(2) LOWER	(4) CURL
N (Neutral)	

When the right control lever in this position, the boom and the bucket will be retained in the position in which they stop.

For levers (3) and (5), the engine speed changes as follows because of the auto-deceleration mechanism.

- When the right control levers are at neutral, even if the fuel control dial is above the mid-range position, the engine speed will drop to a mid-range speed. If any of the levers are operated, the engine speed will rise to the speed set by the fuel control dial.

- If all control levers are set to neutral, the engine speed will drop by approx. 100 rpm, and after approx. 4 seconds, the engine speed will drop to the deceleration speed (approx. 1400 rpm).

UPPER BOOM CONTROL PEDAL

This is used to operate the upper boom.

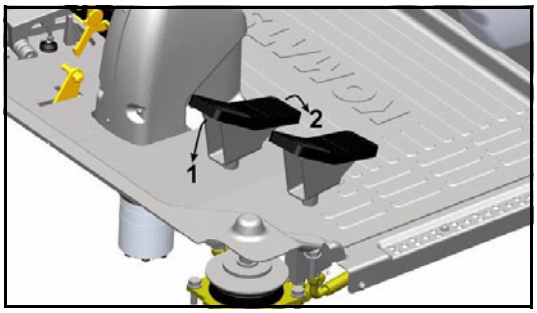

(1)RAISE:	Pedal pushed forward
(2) LOWER:	Pedal pushed back

NEUTRAL: The upper boom is stopped and held in the same position.

⚠ CAUTION

Do not rest your food on the pedal unless using the pedal.

EXCAVATOR'S WORK

In addition to the following, it is possible to further increase the range of applications by using various attachments.

BACK HOE WORK

A back hoe is suitable for excavation at a position lower the machine.It is possible to effectively move the arm through 30° in the direction towards the machine and 45° in the direction away from the machine, making for efficient work.

SHOVEL WORK

A shovel is suitable for excavating at a position higher than the machine.

LOADING WORK

About half of the time spent during excavating and loading work is taken up by swinging. Maximum work efficiency can be attained by carrying out work is such a way that the swinging angle is kept as small as possible in accordance with the terrain.

SPECIAL OPERATIONS

The rotating arm and 2-piece boom facilitate the following special operations.

PIT EXCAVATION FOR FOUNDATIONS OF BUILDINGS

Shafts with vertical walls can be excavated in all directions and soil can be removed from around sheet piles.

SIDE DITCHING

The direction of the bucket teeth can be altered to facilitate the excavation of parallel sided ditches.

OPERATION ON SLOPES

Vertical ditches can be dug on sloping surfaces.

DITCH DIGGING

Combination of rotating arm and upper boom make possible the precise digging of offset ditch.

STATIONARY DIGGING

The excavation of trenches for main and branch water supply and drainage pipes can be done without changing the machines position.

LIFTING SPOIL

The rotating arm enables working from all directions. Even if there is a structure between the excavator and the bucket the work can be done without hitting it.

BOX DIGGING

Perfect corners can be dug without having to change position of excavators.

SCRAPING

With bucket reversed the excavator can scrape faces upward.

REPLACEMENT OF BUCKET

Stop the machine on a firm, flat surface. When performing work with another person, make clear signals to each other and work carefully for safety's sake.

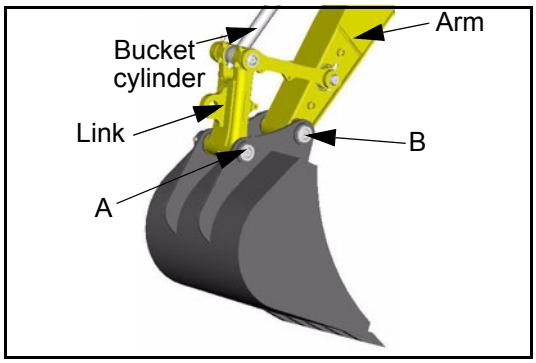

1. Select a flat surface and stabilize the bucket.
2. After removing the stop bolt and nut for each pin, extract pins A and B.

- After removing the pins, make sure that they do not become contaminated with sand or mud and that the seals of bushing on both sides do not become damaged.

⚠ CAUTION

Bucket size & bucket weight
Do not fit a bucket larger than those listed overleaf for combination of undercarriage attachments, material to be excavated. Fitting of lager bucket will cause machine to tip over.

3. Couple the arm to hole (1), then connect the link to hole (2)
4. After mounting the stop bolt and nut for each pin, apply grease to each pin.c.

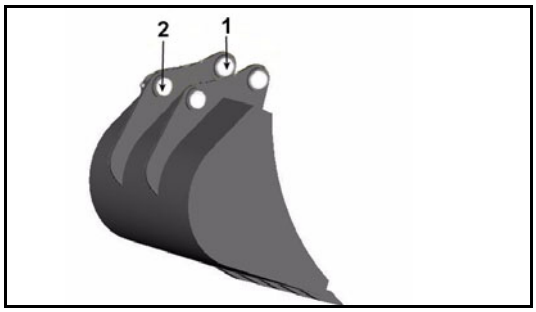

HANDLING THE TRAPEZOIDAL BUCKET (If equipped)

This bucket is used in sloped ditch digging work.

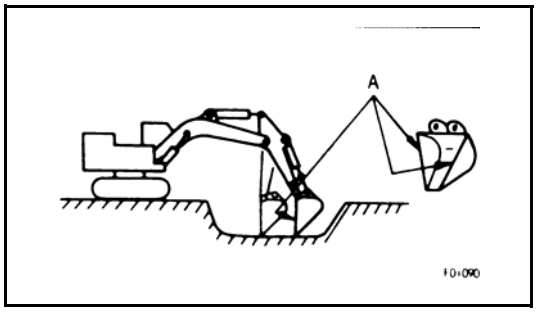

The three different ditch inclination can be obtained by changing the angle of the attached plate.

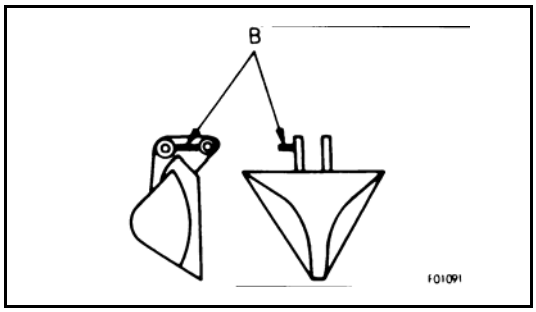

The angles available are 45°, 40° and 38°.

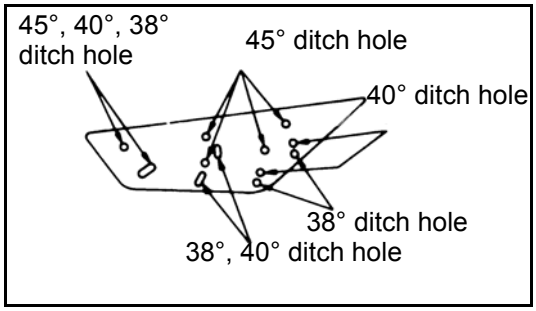

Shape of ditch by 45° bucket

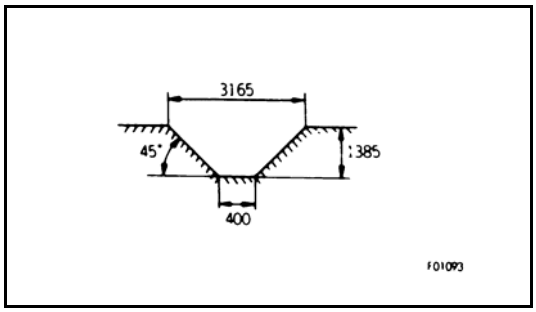

Shape of ditch 40° bucket

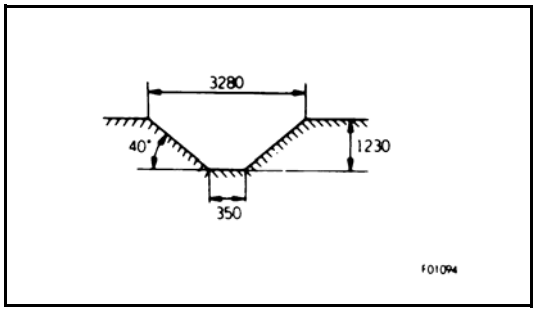

Shape of ditch 38° bucket

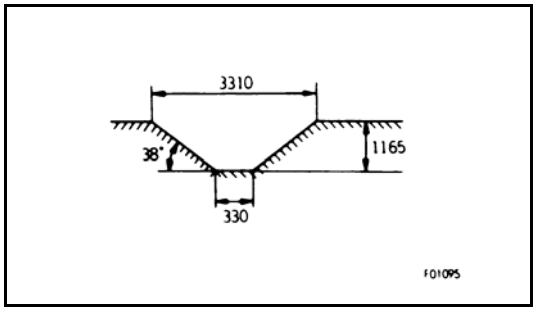

How to perform excavation

Operate the boom, the arm and the bucket to make the line A of the side-plate of the bucket vertical.

To check this position guide plate B is installed beside the bucket pins.

Hold this plate horizontal when digging.

INDEX

Numerics

12V POWER SUPPLY 153
24V power source. 168

<A>

ACCUMULATOR (FOR CONTROL CIRCUIT) 354
ACCUMULATORS 186
AFTER COLD WEATHER 243
AIR CONDITIONER 169
ASBESTOS DUST HAZARD PREVENTION 23
AUTO-DECELERATION SWITCH 140

<B>

BASIC CHECK ITEMS 117
BATTERY 242
BATTERY HAZARD PREVENTION 34
BELTS, GENERAL 318

<C>

CAB RADIO 168
CAR RADIO 182
CAUTION ITEMS 119
CHECK BEFORE STARTING 305
CHECK BEFORE STARTING ENGINE 187
CHECKING COOLANT LEVEL 292
CLEAN INSIDE OF COOLING SYSTEM 290
CLOTHING 20
COLD WEATHER OPERATION 241
CONTROL LEVERS, PEDALS 154
COOLAN 263

<D>

DISCHARGED BATTERY 248
DOOR LOCK 164

<E>

ELECTROMAGNETIC INTERFERENCE 25
EMERGENCY BRAKING 6
EMERGENCY EXIT 25
EMERGENCY EXIT FROM OPERATOR'S CAB . 163
EMERGENCY STEERING 6
EMERGENCY STOP ITEMS 123
ENGINE PRE-HEATING MONITOR 127
ENGINE SERIAL NO. PLATE POSITION 9
EVERY 100 HOURS SERVICE 309
EVERY 1000 HOURS SERVICE 328
EVERY 2000 HOURS SERVICE 334
EVERY 250 HOURS MAINTENANCE 315
EVERY 4000 HOURS SERVICE 335
EVERY 50 HOURS 309
EVERY 500 HOURS SERVICE 320
EVERY 5000 HOURS SERVICE 336
EXPLANATION OF COMPONENTS 114

<F>

FEATURES 7
FILTERS 265
FIRE EXTINGUISHER 23
FIRE PREVENTION 22
FIRST AID KIT 23
FOREWORD 3
FRONT WINDOW 159
FUEL 262
FUEL GAUGE 129
FUSE 166
FUSIBLE LINK 182

<G>

GENERAL VIEW OF CONTROLS AND GAUGES ... 113
GREASE 263

<H>

HANDLING ACCUMULATORS 186
HANDLING THE CLAMSHELL BUCKET 354

<K>

KEY TO LUBRICATION POINTS 281

<L>

LIFTING CAPACITY CHART PW200-7K 53
LIFTING CAPACITY CHART PW220-7K 81
LONG-TERM STORAGE 244

<M>

MACHINE MONITOR 114
MACHINE SERIAL NO. PLATE POSITION 9
MACHINES READY FOR ATTACHMENTS 352
MAINTENANCE SCHEDULE CHART 277
METER DISPLAY PORTION 126
METERS 128
MONITOR SWITCHES 131
MOUNTING AND DISMOUNTING 21
MOVING MACHINE OFF 210

<N>

NOISE 5

<O>

OIL 262
OPERATION OF WORK EQUIPMENT 218
OPERATIONS AND CHECKS BEFORE STARTING ENGINE 199
OPTIONS, ATTACHMENTS 347
OTHER TROUBLE 252

OVERLOAD CAUTION 121
OVERLOAD CAUTION (When lifting) 121

<P>
POSITION FOR ATTACHING SAFETY LABELS .. 45
POWER PICK-UP PORT 168
PRECAUTION DURING OPERATION 26
PRECAUTIONS FOR MAINTENANCE 39
PRECAUTIONS WHEN INSTALLING ATTACHMENTS 349
PRECAUTIONS WHEN TRAVELLING 28
PROHIBITED OPERATIONS 30
PROPER SELECTION OF FUEL, COOLANT AND LUBRICANTS 269

<R>
REFUELLING PUMP 183
REPLACEMENT OF BUCKET 374

<S>
SAFETY CRITICAL PARTS 276
SAFETY LOCK LEVER 155
SAFETY MESSAGES 4
SAFETY RULES 20
SEAT BELT 196
SPECIFICATIONS 340
STARTING ENGINE 201
STARTING IN COLD WEATHER 202
STARTING SWITCH 147
STEERING 213
STOPPING & PARKING 215
STOPPING MACHINE (EMERGENCY) 216
STORING OIL AND FUEL 264
SWITCHES 146

<T>
TIGHTENING TORQUE LIST 274
TIGHTENING TORQUE SPECIFICATIONS 274
TOWING 35
TRANSPORTATION 235
TRAVELLING ON PUBLIC HIGHWAY 214
TRAVELLING POSTURE 240
TROUBLESHOOTING 246

<U>
UNAUTHORISED MODIFICATION 20

<V>
VIBRATION 5

<W>
WARNING LAMPS 185
WEAR PARTS LIST 268
WORKING MODE MONITOR 127
WORKING MODE SELECTION 221
WORKING RANGE
ONE PIECE BOOM 345
TWO PIECE BOOM 346

PW200,220-7K WHEELED EXCAVATOR

Form No. UEAM003700

©2004 KOMATSU
All Rights Reserved
Printed in Belgium 06-04