https://truckmanualshub.com/

STILL

Operating Instructions

STILL
ELECTRONIC
DOCUMENTATION
SYSTEM

LPG forklift truck

R70-40T
R70-45T
R70-50T

CE

7081 7082 7083

Ident no. 171673 - EN

https://truckmanualshub.com/

https://truckmanualshub.com/

1 Foreword

Your industrial truck 2
General 2
EC declaration of conformity, EC mark of conformity 2

Information about documentation 3
Documentation scope 3
Issue date and currentness of manual 4
Copyright and proprietary rights 4
Explanations of the signal terms used: 5
Explanation of the cross-references 5
Definition of directions 6
Sample graphics 6

Environmental considerations 7
Packaging 7
Disposal of units and batteries during repair work 7

2 Introduction

Use of truck 10
Proper use 10
Proper towing usage 10
Impermissible use 10
Place of use 11
Use of working platforms 12

Residual risk 13
Residual dangers, residual risks 13
Special risks when using the forklift truck and attachments 14
Overview of hazards and countermeasures 16
Risk for employees 18

3 Safety

Definition of terms used for responsible persons 20
Operating company 20
Specialist 20
Drivers 20

Essentials for safe operation 23
Insurance coverage on company premises 23
Changes and retrofitting 23
Warning regarding non-original parts 24
Damage, defects and misuse of safety devices 24

https://truckmanualshub.com/

Tyres 25
Medical equipment 25

Safety inspections 26
Regular safety check of the industrial trucks 26
Regular safety check of the fuel gas system 27
Regular checking of harmful substances in the exhaust 27
Insulation testing 28

Safety regulations when handling consumables 29
Permissible consumables 29
Oils 29
LPG 30
Hydraulic fluid 33
Battery acid 34
Coolant 35
Disposal of consumables 36

Emissions 37

4 Overviews

General view 40

Versions of driver's compartment 42
Driver's compartment, single pedal version 42
Driver's compartment, dual-pedal version 44

Operating and display elements 46
Display and operating unit 46
Direction of travel/flasher/fault multi-function display 47
Mini-console 47

Identification points 48
Overview 48
Nameplate 49
C. U. R. data 50
Vehicle identification number 50

Accessories 51
Special equipment and variants 51
Attachments 52
Accessory overview 52

https://truckmanualshub.com/

5 Operation

Checks and operations prior to start-up 54
Visual inspections 54
Opening the bonnet 55
Checking the engine oil level 56
Filling the washer system 57
Checking the condition of the wheels and tyres 57
Opening LPG cylinders 58
Opening the LPG tank shut-off valve 59
Adjusting the MSG 65/MSG 75 driver's seat 60
Adjusting the MSG 20 driver's seat 63
Adjusting the steering column 65

Start-up 66
Turning on the key switch 66
Starting the engine 68
Operating the signal horn 69
Restraining belt 70
Checking function of brake system 73
Checking function of steering system 74
Setting the traction programs 75

Driving 76
Safety regulations when driving 76
Driveways 78
Driving (single-pedal operation with multiple lever version) 80
Driving (single-pedal operation with version including mini-console) 84
Driving (two-pedal operation) 88
Service brake 91
Operating the parking brake 93
Steering 94

Lifting 95
Lifting system variants 95
Lift mast versions 95
Malfunction during a lifting operation 96
Controls, lifting system 98
Lifting system, multi-lever operation 99
Fork extension 100
Operation with reversible forks 100

Working with loads 102
Safety regulations when handling loads 102
Prior to taking up a load 103
Carrying loading units 104

https://truckmanualshub.com/

Hazard area . . . 104
Transporting pallets . . . 105
Transport of swinging loads . . . 106
Taking up loads . . . 107
Transporting loads . . . 110
Depositing and retrieving loading units . . . 113
Driving on ascending and descending slopes . . . 114
Driving on lifts . . . 114
Driving on loading bridges . . . 115

Working with attachments . . . 116
Assembling attachments . . . 116
Depressurising connections for attachments . . . 117
General information on control of attachments . . . 118
Controlling attachments using multi-lever controls . . . 119
Operating attachments using multi-lever controls and the 5th function . . . 120
Taking up a load using attachments . . . 121

Operation of additional equipment . . . 122
Switching lighting on and off (special equipment) . . . 122
Switching flashing light off and on . . . 123
Switching hazard warning system off and on (special equipment) . . . 124
Switching direction indicators off and on . . . 125
Operating the windscreen wiper/washer . . . 125
Cab . . . 126
Heater . . . 127
Driving with cruise control . . . 127

Trailer operation . . . 130
Towed load . . . 130
Coupling the trailer . . . 131
Towing trailers . . . 133

Operation of indicator and operating unit . . . 134
Displays . . . 134
Setting and changing the displays . . . 135
Setting the date or time . . . 135
Resetting the daily kilometres and daily operating hours . . . 136
Setting the language . . . 136
Fleet Manager functions . . . 137
Additional settings . . . 137

Error messages . . . 138
Diagram . . . 138
Fault code table . . . 139
SAFETY BELT message . . . 142

https://truckmanualshub.com/

Message SITZSCHALTER (SEAT SWITCH) . . . 145
AIR FILTER message . . . 147
BREMSE ANZIEHEN (APPLY HANDBRAKE!) message . . . 147
GABELN ABSENKEN (LOWER FORKS) message . . . 148
REFERENCE LIFT message . . . 149
FAHRGEBER (ACCEL. SENSOR) message . . . 149
BREMSGEBER (BRAKE SENSOR) message . . . 150
SURVEILLANCE message . . . 150
MOT/GEN-TEMP (MOT/GEN TEMP) message . . . 151
LENKEN (STEERING) message . . . 151
OELDRUCK (OIL PRESSURE) message . . . 152
KUEHLMITTELSTAND (COOLANT LEVEL) message . . . 152
KUEHLMITTELTEMP (COOLANT TEMP.) message . . . 153
UEBERTEMPERATUR (OVERHEATING) message . . . 153

Operation in special operating situations . . . 154
Transport . . . 154
Towing . . . 156
Crane loading . . . 156
Frequent short-term operation . . . 159
Jump starting . . . 160

Behaviour in emergencies . . . 162
Procedure if truck tips over . . . 162
Emergency lowering . . . 163
Disconnecting the battery . . . 164

Refuelling . . . 165
Changing the LPG cylinder . . . 165
Filling the LPG tank . . . 168

Shut-down . . . 171
Parking the truck securely . . . 171
Measures for prolonged shutdown, storage of truck . . . 173
Returning to service after storage . . . 174

6 Maintenance

General maintenance information . . . 178
Qualifications of personnel . . . 178
Information regarding performing maintenance . . . 178
Overview of areas requiring maintenance . . . 180
Intervals for maintenance and inspection . . . 181
Ordering spare parts and wearing parts . . . 185
Quality and quantity of the required operating materials . . . 185

https://truckmanualshub.com/

Maintenance data table . . . 186

Safety instructions for maintenance . . . 188
General information . . . 188
Carrying out work on the hydraulic equipment . . . 188
Working on electrical equipment . . . 188
Working on the ignition system . . . 189
Working on gas fuel (LPG) system . . . 189
Safety devices . . . 190
Set values . . . 190
Raising and jacking up . . . 191
Working at the front of the forklift truck . . . 192

Preparation for maintenance . . . 194
Installing and removing the floorplate . . . 194
Removing and installing the rear covering . . . 195

Cleaning . . . 196
Cleaning the truck . . . 196
Cleaning the electrical system . . . 197
Clean load chains . . . 197
Cleaning the windscreens . . . 198
After washing . . . 198

Maintenance after first 50 operating hours . . . 199
Maintenance during the break-in period . . . 199

Maintenance as required . . . 200
Cleaning the radiator, checking for leaks . . . 200
Topping up coolant and checking coolant concentration . . . 200
Changing the air filter insert . . . 202
Servicing the battery . . . 204
Maintaining hydraulic equipment . . . 207
Servicing wheels and tyres . . . 208
Checking adjustment of the footbrake . . . 209
Checking the parking brake setting . . . 210
Lubricating joints and controls . . . 211
Checking the door latch . . . 211
Maintaining the steering axle . . . 211
Servicing the mast bearing . . . 214
Load chain maintenance . . . 214
Lubricating the lift mast and roller track . . . 217
Maintaining the restraining belt . . . 217
Maintaining the restraint system . . . 219
Check driver's seat . . . 219
Replacing fuses . . . 219

https://truckmanualshub.com/

Attachment maintenance 221

500-hour maintenance/semi-annual maintenance 222
Checking the evaporator and pressure regulator 222

1000-hour maintenance/annual maintenance 223
Work that must also be carried out 223
Maintainance of drive axle 223
Adjusting the parking brake 224
Lubricating the parking brake lever bearing and ratchet 224
Checking the counterweight attachment 224
Changing the engine oil and filter 224
Checking the ribbed V-belt 226
Replacing the spark plugs 227
Checking the exhaust gas system 227
Changing the LPG filter 227
Overhauling the LPG system 229
Checking the lambda control system 230
Checking the heating system for leaks 230
Check lift cylinders and connections for leaks. 230
Maintain lifting system 231
Checking the clearance between fork carriage stop and run-out stop 233
Checking the fork arms 233
Checking reversible fork arms 234

3000-hour maintenance/two-year maintenance 235
Work that must also be carried out 235
Changing the gear lubricant oil 235
Checking the wheel bearing 236
Checking the engine mountings 236
Replacing hoses in the LPG system 237

6000-hour maintenance 239
Work that must also be carried out 239
Changing the hydraulic oil and filter 239

9000-hour maintenance/five-year maintenance 243
Work that must also be carried out 243
Changing the coolant 243

10-year maintenance 246
Checking the LPG tank 246

https://truckmanualshub.com/

7 Technical data

Dimensions 248
VDI datasheet 249
Wheels and tyres 252
Fuse assignment 253
Fuse assignment in main fuse holder 253
Fuse assignment special equipment 254

8 Circuit diagrams

Hydraulics 256
Hydraulic circuit diagram 256
Electrical equipment 258
Legend for circuit diagrams 258

https://truckmanualshub.com/

1

Foreword

https://truckmanualshub.com/

Your industrial truck

General

The industrial trucks described in this user manual are built to the applicable standards and safety regulations. If your industrial truck is to be driven on public roads it must satisfy the applicable Road Traffic Act provisions for the country concerned. The vehicle excise licence must be obtained from the appropriate office.

The industrial trucks are fitted with the most up-to-date technology Now it's up to you to operate your industrial truck safely and obtain the benefits of its functional capabilities.

This user manual gives you the necessary information for this. Read it and follow these instructions before bringing your industrial trucks into use! This way you will avoid accidents, spare yourself worry and maintain the warranty.

EC declaration of conformity, EC mark of conformity

With the EC declaration of conformity, the manufacturer confirms the compliance of the industrial truck with the standards and regulations valid at the time of marketing. The EC conformity mark is shown on the factory nameplate and indicates compliance with the above regulations.

A structural change or addition to the industrial truck on one's own authority can affect the safety in an unreliable way thus invalidating the EC declaration of conformity.

The EC declaration of conformity must be carefully stored and made available to the responsible authorities.

▷

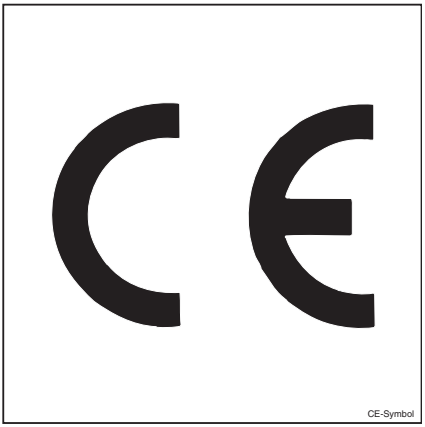

CE-Symbol

https://truckmanualshub.com/

Information about documentation

Documentation scope

- Operating and maintenance manual
- Operating and maintenance manual for attachments (special equipment)
- Maintenance data table
- Spare parts list
- VDMA rules for the proper use of industrial trucks
- Inspection and test log book for power-driven industrial trucks (Germany only)

This operating and maintenance manual describes all necessary measures for safe operation and correct maintenance of your industrial truck. It includes all variants available up to the time of going to press. Special designs to meet customer requirements are documented in a separate operating and maintenance manual. For further information, please contact your service centre.

Please enter the factory no. and year of manufacture from the factory nameplate in the space provided ⇒ Chapter "Nameplate", P. 4-49 below:

Factory no. .....

Year of manufacture
.....

Please provide these numbers for all technical questions.

An operating and maintenance manual is provided with every industrial truck. This manual must be stored carefully and must be available to the driver and operator at any time. The storage location is specified in the Overviews chapter ⇒ Chapter "Overviews", P. 39.

If the operating instructions are lost, the operator must obtain a replacement from the manufacturer immediately.

The operating and maintenance manual is included in the spare parts list and can be reordered as a spare part.

https://truckmanualshub.com/

This operating and maintenance manual must be drawn to the attention of staff responsible for the operation and maintenance of the trucks.

The operator (see ⇒ Chapter "Definition of terms used for responsible persons", P. 20) must ensure that all users have received, read and understood this manual.

Thank you for reading and complying with this manual. For further information or improvement suggestions, or if you have identified errors, please contact our service centre.

Issue date and currentness of manual

May 2007

STILL is constantly engaged in the further development of industrial trucks. Please note that these operating instructions are subject to change and any claims based on the information and figures contained in these operating instructions cannot be asserted.

If you require technical support for your industrial truck, please contact the responsible service centre.

We hope you enjoy your driving

STILL GmbH

Berzeliusstr. 4

22113 Hamburg, Germany

Copyright and proprietary rights

This manual - and any excerpts thereof - may not be reproduced, translated or tansmitted in any form to third parties without the express written permission of the manufacturer.

https://truckmanualshub.com/

Explanations of the signal terms used:

DANGER

In the case of work procedures that must be strictly adhered to in order to prevent a danger to the life or physical condition of persons.

WARNING

In the case of procedures that must be strictly adhered to in order to prevent injury to persons.

CAUTION

In the case of procedures that must be strictly adhered to in order to prevent material damage and/or destruction.

NOTE

For technical requirements that require special attention.

ENVIRONMENT NOTE

To prevent environmental damage.

Explanation of the cross-references

Cross references are used to direct the reader to the appropriate section or chapter.

Examples:

- Cross reference to a section: ⇒ Chapter "Explanation of the cross-references", P. 1-5
- Cross reference to a chapter: ⇒ Chapter "Definition of terms used for responsible persons", P. 20

https://truckmanualshub.com/

Definition of directions

The directions forwards (1), backwards (3), right (2), left (4) give the installation locations of parts as seen from the driving position; the load is at the front.

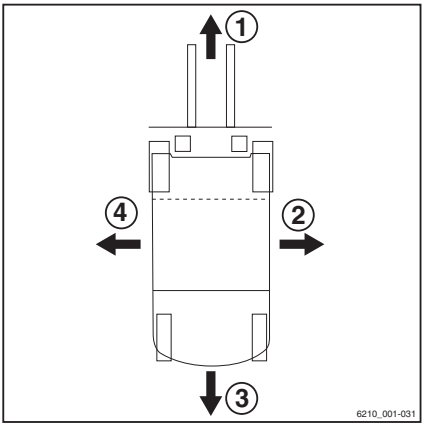

Sample graphics

This documentation explains the (usually sequential) sequence of certain functions or operations. Schematic diagrams of a counterbalance truck are used to illustrate these sequences.

NOTE

These schematic diagrams are not representative of the constructed state of the documented industrial truck. They serve only to illustrate the sequences.

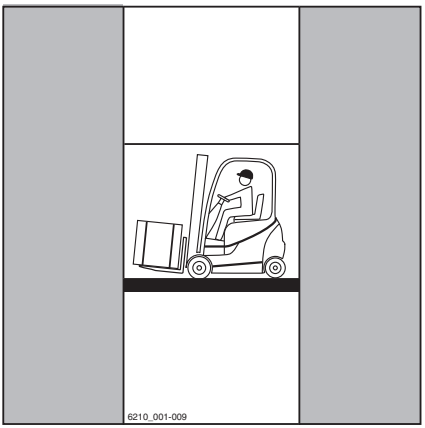

https://truckmanualshub.com/

Environmental considerations

Packaging

During delivery of the industrial truck, certain parts are packaged to provide protection during transport. This packaging must be removed completely prior to initial start-up.

ENVIRONMENT NOTE

The packaging material must be properly disposed of after delivery of the industrial truck.

Disposal of units and batteries during repair work

It may be necessary to replace units as part of maintenance work. Replaced units must then be disposed of.

Your vehicle is comprised of different materials. Each of these materials must be

- disposed of,
- treated or
- recycled in accordance with regional and national regulations.

NOTE

When disposing of batteries, please refer to the battery manufacturer's documentation.

ENVIRONMENT NOTE

We recommend working with a waste management company for disposal purposes.

https://truckmanualshub.com/

https://truckmanualshub.com/

2

Introduction

https://truckmanualshub.com/

Use of truck

Proper use

The forklift truck described in this operating manual is suitable for lifting, transporting and stacking loads.

The truck may only be used for its proper purpose, as set out and described in this operating manual.

If the truck is to be used for other purposes than those specified in the operating manual, the approval of the manufacturer and, if necessary, the responsible regulator authorities, must be obtained beforehand to prevent hazards.

The maximum load to be lifted is specified on the capacity plate (load diagram) and may not be exceeded.

Proper towing usage

This forklift truck is suitable for the occasional towing of trailers and is equipped with a towing device for this purpose. This occasional towing may not exceed 2% of the daily operating time. If you want to use the forklift truck for more frequent towing, the manufacturer must be consulted.

The trailer operation provisions must be followed. See ⇒ Chapter "Trailer operation", P. 130.

Impermissible use

Every hazard caused by impermissible use is the responsibility of the operator or driver and not of the manufacturer (also see in this matter ⇒ Chapter "Definition of terms used for responsible persons", P. 20).

Use for purposes other than those described in these operating instructions is prohibited.

https://truckmanualshub.com/

WARNING

Risk of accident!

Passengers are not allowed.

The forklift truck may not be operated in areas where is a risk of fire, explosion or corrosion, or areas that are particularly dusty.

Stacking or unstacking is not permissible on inclined surfaces or ramps.

Place of use

The truck can be used outside and, with the correct equipment, in buildings.

Use on public roads is only permitted if special equipment in accordance with StVZO (Road Traffic Licensing Regulations) is installed.

The various regulations applicable in different countries for driving the truck on public roads must be observed.

The ground must have sufficient load-bearing capacity (concrete, asphalt). It should have a rough surface. The driveways, work areas and aisle widths must correspond with the specifications in these operating instructions (see ⇒ Chapter "Driveways", P. 5-78).

Driving on ascending and descending slopes is permitted if the indicated data and specifications are observed (see ⇒ Chapter "Driveways", P. 5-78).

The forklift truck is suitable for use in countries ranging from the Topics to Nordic regions (temperature range: -20°C to +40°C).

This forklift truck is not designed for use in cold stores.

The operator (see ⇒ Chapter "Definition of terms used for responsible persons", P. 20) must ensure suitable fire protection in the surroundings of the truck for all applications of the truck. Depending on the application, additional fire protection must be provided on the industrial truck. In cases of doubt, contact the relevant authorities.

https://truckmanualshub.com/

Use of working platforms

WARNING

The use of working platforms is governed by national law. This law must be observed. This allowed only if the law allows the use of working platforms in your country.

Consult your national authorities (in Germany the trade association) before any use.

https://truckmanualshub.com/

Residual risk

Residual dangers, residual risks

Despite careful working and compliance with standards and regulations, the occurrence of other risks when using the industrial truck cannot be entirely excluded.

The industrial truck and all other system components comply with current safety requirements. Nevertheless, even when the truck is used for its proper purpose and all instructions are followed, some residual risk cannot be excluded.

Even beyond the narrow hazard areas of the industrial truck itself, a residual risk cannot be excluded. Persons in this area around the industrial truck must exercise a heightened degree of awareness, so that they can react immediately in the event of any malfunction, incident or breakdown etc.

⚠ WARNING

All persons that are in the vicinity of the industrial truck must be instructed regarding these risks that arise through use of the industrial truck.

In addition, we draw attention to the safety regulations in these operating instructions.

Risks can include:

- Escape of consumables due to leaks, rupture of lines and containers etc.
- Accident risk when driving over difficult ground such as gradients, smooth or irregular surfaces, or poor visibility etc.
- Falling, tripping etc. when moving on the industrial truck, especially in the wet, with leaking consumables or icy surfaces.
- The stability of the industrial truck has been tested to the latest standards. These standards only take into account the static and dynamic tipping forces that can arise during specified use in accordance with the operating rules and intended purpose. Risks that arise from improper use or incorrect operation and result in tipping forces that exceed the stability cannot be excluded in extreme cases.

https://truckmanualshub.com/

- Loss of stability due to the load being unstable or the load slipping etc.
- Fire and explosion risks due to batteries and electrical voltages.
- Human error - disregarding safety regulations.

Special risks when using the forklift truck and attachments

The manufacturer's approval must be obtained for any unconventional use during which the driver cannot ensure proper and safe execution.

In particularly difficult cases such as the simultaneous use of two forklift trucks for transporting heavy or bulky loads, the supervisor must be present at the place of use and accept responsibility and control of this transport.

https://truckmanualshub.com/

https://truckmanualshub.com/

Overview of hazards and counter-measures

NOTE

This flat sheet is intended to help evaluate the hazards in your facility and applies to all drive types.

NOTE

Observe the national regulations for your country!

Hazard	Action	Check note √ actioned - not affected	Notes
Industrial truck equipment does not comply with local regulations.	Testing	O	If in doubt, consult competent factory inspectorate or employers' liability insurance association
Lack of skills and qualification of driver	Driver training (sit-on and stand-on)	O	BGG 925 VDI 3313 driver permit
Usage by unautho-rised persons	Access with key only for authorised persons	O	
Industrial truck not in safe operating condition	Recurrent testing and rectification of defects	O	BetrSichVO (Workplace Safety Ordinance)
Impaired visibility through load	Resource planning	O	BetrSichVO (Workplace Safety Ordinance)
Contamination of respiratory air	Assessment of diesel exhaust gases	O	TRGS 554 and BetrSichVO (Workplace Safety Ordinance)
	Assessment of LPG exhaust gases	O	MAK (Maximum Workplace Concentrations) list and BetrSichVO (Workplace Safety Ordinance)

https://truckmanualshub.com/

Hazard	Action	Check note √ actioned - not affected	Notes
Impermissible usage (improper usage)	Issue of operating instructions	O	BetrSichVO (Workplace Safety Ordinance) and ArbSchG (Health and Safety at Work Act)
	Written notice of instruction to driver	O	BetrSichVO (Workplace Safety Ordinance) and ArbSchG (Health and Safety at Work Act)
	Observe BetrSichVO (Workplace Safety Ordinance), operating instructions and VDMA (German Engineering Federation) rules	O	
When fuelling			
a) Diesel	Observe BetrSichVO (Workplace Safety Ordinance), operating instructions and VDMA (German Engineering Federation) rules	O	
b) LPG	Observe BGV D34, operating instructions and VDMA (German Engineering Federation) rules	O	
When charging traction batteries	Observe BetrSichVO (Workplace Safety Ordinance), operating instructions and VDMA (German Engineering Federation) rules	O	VDE 0510: In particular - Ensure ventilation - Insulation value within permissible range
When using battery chargers	Observe BetrSichVO, BGR 104 and the operating instructions.	O	BetrSichVO and BGR 104
When parking LPG vehicles	Observe BetrSichVO, BGR 104 and the operating instructions.	O	BetrSichVO and BGR 104

https://truckmanualshub.com/

Risk for employees

According to the operating safety ordinance (BetrSichVO) and German Law on Health and Safety at Work (ArbSchG) the operator (see ⇒ Chapter "Definition of terms used for responsible persons", P. 20) must ascertain and assess the hazards present at his plant. He must specify the necessary measures for health and safety for employees (BetrSichVO). The operator must thus draw up operating instructions applicable to his plant (§ 6 ArbSchG) and inform the driver accordingly. A person responsible for health and safety must be appointed.

Construction and equipment of the industrial truck correspond to the Machinery Directive 98/37/EEC and they are therefore identified with the CE symbol. They are therefore not included in the hazard assessment, and the attachments likewise on account of their own CE marking . The operator must however select the type and equipment of the industrial trucks so as to comply with the local provisions for usage.

The result must be documented (Section 6 ArbSchG). In the case of industrial truck usage involving similar hazard situations it is permitted to summarise the results . The overview provided (see ⇒ Chapter "Overview of hazards and countermeasures", P. 2-16)means we are helping you to comply with these regulations. The overview specifies key hazards which are most frequently the cause of accidents in the event of non-compliance. If other major hazards are involved at a specific plant , these must be taken into consideration additionally.

In many plants the conditions of use for industrial trucks are by and large similar so that the hazards can be summarised in one overview. Take note of information of the respective employers' liability insurance association as regards this topic.

https://truckmanualshub.com/

3

Safety

https://truckmanualshub.com/

Definition of terms used for responsible persons

Operating company

The operating company is the natural or legal person that operates the industrial truck or in whose employment the industrial truck is used.

The operating company must ensure that the industrial truck is used only for its proper purposes and in compliance with the safety instructions in these operating and maintenance instructions.

The operating company must ensure that all users read and understand the safety information.

The operating company is responsible for the scheduling and correct performance of regular safety checks.

We recommend that the national performance specifications are adhered to.

Specialist

A specialist is considered to be someone whose technical training and experience have enabled them to develop an appropriate knowledge of industrial trucks and who is sufficiently familiar with the applicable national health and safety regulations, accident prevention regulations, directives and generally recognised technical conventions (standards, VDE regulations, technical regulations of other member states of the European Union or other countries that are signatories to the treaty establishing the European Economic Area) as to be able to assess the condition of industrial trucks in terms of health and safety.

Drivers

This industrial truck may only be driven by suitable persons who are at least 18 years old, who have been trained in driving, have demonstrated their skills in driving and handling loads to the operator or an authorised

https://truckmanualshub.com/

representative and have been specifically instructed to drive the truck. Specific knowledge of the industrial truck to be operated is also required.

The training requirements under §3 of the Health and Safety at Work Act and §9 of the plant safety regulations are satisfied if the driver has been trained in accordance with the BGG (General Employers' Liability Insurance Association Act) 925. Follow the national regulations for your country.

Rights, duties and rules of behaviour for the driver,

The driver must be trained in his rights and duties.

The driver must be granted the required rights.

The driver must wear appropriate protective equipment (protective clothing, safety shoes, safety helmet, protective goggles, gloves) for the conditions, the job and the load to be lifted. Strong footwear should be worn to ensure safe driving and braking.

The driver must be familiarised with the operating manual and it must be accessible to him at all times.

The driver must:

- have read and understood the operating manual,
- have familiarised himself with safe operation of an industrial truck,
- be physically and psychologically able to drive an industrial truck safely.

⚠ DANGER

Taking drugs, alcohol or medications that affect the response of an individual limits the ability of that individual to drive an industrial truck!

Individuals under the influence of the above-mentioned substances are not permitted to perform any work on or with an industrial truck.

https://truckmanualshub.com/

Prohibition on use by unauthorised persons

The driver is responsible for the industrial truck during working hours. He may not allow unauthorised persons to operate the truck.

When leaving the truck, he must secure it against unauthorised use.

https://truckmanualshub.com/

Essentials for safe operation

Insurance coverage on company premises

In many cases, company premises are restricted public traffic areas.

NOTE

We advise checking your public liability insurance to determine whether you have insurance coverage for your industrial truck with respect to third parties in the event of damage in restricted public traffic areas.

Changes and retrofitting

If your forklift truck is used for work not listed in the guidelines or in these instructions and must be consequently converted or retrofitted, be aware that each change to the structural state can affect the handling and the stability of the forklift truck and can result in accidents. Therefore, contact your service centre in advance. Changes that will disadvantageously affect stability among other things may not be made without our approval.

The forklift truck can only be converted with our written approval. Approval from the responsible authority must be obtained if necessary.

We warn against the installation and use of restraint systems not approved by us.

DANGER

Even when using a restraint system there is some residual risk that the driver might be injured if the truck tips over. This risk of injury can be reduced through the combined use of a restraint system and the seat belt. In addition, the belt protects against the consequences of rear-end collisions and falling off a ramp.

Accordingly, we recommend use of the seat belt as well.

https://truckmanualshub.com/

For safety reasons, it is prohibited to drill holes in the driver's overhead guard or to perform welding on it. In the case of welding to other locations of the forklift truck, the battery and all connections to the electronic control cards must be disconnected. Please contact your service centre.

⚠ DANGER

Failure to comply with the above voids the CE conformity!

Operation of the forklift truck without the overhead guard at a lift height of over 1800 mm is prohibited.

Warning regarding non-original parts

Original parts, attachments and accessories are specially designed for this vehicle. We specifically draw your attention to the fact that parts, attachments and accessories supplied by other companies have not been tested and approved by us.

⚠ CAUTION

Installation and/or use of such products may therefore have a negative impact on the design features of your industrial truck and thus impair active and/or passive driving safety.

We recommend that you obtain approval from us and, if necessary, from the responsible regulatory authorities, before installing such parts. The manufacturer accepts no liability for any damage caused by the use of non-original parts and accessories without our approval.

Damage, defects and misuse of safety devices

The driver must report any damage or other defects to the truck or attachment immediately to the supervisory personnel.

Trucks and attachments that are not functional or safe to drive may not be used until they have been properly repaired.

Do not remove or deactivate safety devices and switches.

https://truckmanualshub.com/

Fixed set values may only be changed with the approval of the manufacturer.

Work on the electrical system (e.g. connecting a radio, additional headlights etc.) is only permitted with the manufacturer's written approval. All electrical system interventions must be documented.

Even if they are removable, roof panels may not be removed, as they are designed to protect against small falling objects.

Tyres

Tyre quality affects the stability and handling of the forklift truck. Changes can only be made in consultation with the manufacturer. When changing wheels or tyres, always ensure that no tilting of the forklift truck occurs (e.g. always change right and left wheels at the same time).

Medical equipment

When a driver is wearing medical equipment, e.g. heart pacemaker or hearing aids, the operation of this equipment may be affected. A doctor or the manufacturer of the medical equipment should be asked whether the equipment is sufficiently protected against electromagnetic interference.

https://truckmanualshub.com/

Safety inspections

Regular safety check of the industrial trucks ▷

Safety check based on time and extraordinary incidents

The operator (see ⇒ Chapter "Definition of terms used for responsible persons", P. 20) must make sure that the industrial truck is checked by a specialist at least once per year or after special incidents (audit in line with accident prevention guidelines in Germany; please observe your national guidelines) (see ⇒ Chapter "Definition of terms used for responsible persons", P. 20).

A complete audit of the technical condition of the industrial truck is performed with regard to accident safety. In addition, the industrial truck must also be thoroughly checked for damage, that could have potentially been caused by improper use. An audit log must be created. The results from the audit must be retained until a further two audits have been carried out.

The schedule is indicated by a sticker on the vehicle. Use the "Test log book for power-driven industrial trucks"! Order No. 135745

Observe the guidelines for testing on your vehicles in accordance with accident prevention regulations (GERMAN ACCIDENT PREVENTION REGULATIONS FOR INDUSTRIAL TRUCKS).

The operator must ensure faults are rectified without delay. Please contact the service centre.

NOTE

Observe the national regulations for your country.

https://truckmanualshub.com/

Regular safety check of the fuel gas system

Technical safety check of the fuel gas system

In accordance with § 37 of the Trade Union Ordinance BGV D34 "accident prevention regulations for the use of liquid gas "(please observe your national regulations). the operator (see ⇒ Chapter "Definition of terms used for responsible persons", P. 20) make sure that the fuel gas system is checked by a specialist (see ⇒ Chapter "Definition of terms used for responsible persons", P. 20):

- recurring in regular intervals, but at least once per year,
- after maintenance that can influence the operational safety,
- after changes that can influence operational safety,
- after interruptions in operation of more than one year.

The following is checked: proper composition, sealing, function, adjustment and the functional ability of the safety devices.

The results of the tests must be retained in the test certification in accordance with BGG 936 (please observe your national regulations), that must be kept until the next test. The test certification must be presented for authorities to look at upon request at any time.

Type and scope of the tests can be different based on the country. Observe different legal determinations in the respective operating countries when using fuel gas trucks.

The operator must ensure continuous correction of defects. Please contact the service centre.

Regular checking of harmful substances in the exhaust

In accordance with § 37 of the Trade Union Ordinance BGV D34 "accident prevention regulations for the use of LPG "(please observe your national regulations) the operator

https://truckmanualshub.com/

(see ⇒ Chapter "Definition of terms used for responsible persons", P. 20) must ensure that the harmful substances in the exhaust are checked by a specialist at recurring and regular intervals, at least every six months, (see ⇒ Chapter "Definition of terms used for responsible persons", P. 20).

Type and scope of tests may differ according to the country. Observe different statutory provisions in the respective operating countries when using LPG trucks.

Insulation testing

The industrial truck insulation must have a sufficient insulation resistance. For this reason, an insulation test in accordance with DIN 57117 and DIN 43539, VDE 0117 and VDE 0510 must be conducted at least once every year.

NOTE

Contact your service centre to arrange for an insulation test.

Testing the insulation resistance of the electrical system

NOTE

Nominal battery voltage < test voltage < 500 V.

– Ensure that all voltage sources have been disconnected from the circuit to be tested.
– Measure the insulation resistance with a suitable gauge.

The insulation resistance can be considered sufficient if it measures at least 1000 Ω/V for nominal battery voltage against ground.

https://truckmanualshub.com/

Safety regulations when handling consumables

Permissible consumables

⚠ WARNING

Consumables can be dangerous.

Follow the safety regulations when handling these substances.

Refer to the maintenance data table for the permissible substances necessary for operation. (See ⇒ Chapter "Maintenance data table", P. 6-186).

Oils

⚠ WARNING

Oils are flammable!

- Comply with applicable legal regulations.
- Do not allow oils to come into contact with hot engine parts.

Do not smoke!

⚠ WARNING

Oils are toxic!

- Avoid contact and consumption.
- If oil mist or vapours have been inhaled, seek fresh air.
- If oil comes into contact with the eyes, flush thoroughly (at least 10 minutes) with water and then seek medical assistance (e.g. from an ophthalmologist).
- If oil is swallowed, do not induce vomiting, but rather seek medical assistance immediately.

https://truckmanualshub.com/

WARNING

Prolonged intensive contact with the skin can result in loss of skin oils and irritate the skin!

- Avoid contact and consumption.
- Wear protective gloves.
- After coming into contact with oil, wash the skin with soap and water, and then apply a skin care product.
- Change oil-soaked shoes and clothing immediately.

WARNING

Risk of slipping on spilled oil, particularly when combined with water!

- Immediately treat spilled oil with an oil binding agent, and then dispose of it in accordance with applicable regulations.

ENVIRONMENT NOTE

Oils are water pollutants!

- Always store oil in legally approved containers.
- Avoid spilling oil.
- Immediately treat spilled oil with an oil binding agent, and then dispose of it in accordance with applicable regulations.
- Dispose of used oil in accordance with applicable regulations.

LPG

Always observe the accident prevention regulations, "Use of LPG" (BGV D34) published by the main trade association, or the national guidelines.

Liquid gases are the combustible gases, PROPANE, BUTANE and their mixtures.

They are located in LPG cylinders or LPG tanks, and are kept ready there to drive combustion engines.

https://truckmanualshub.com/

The pressure of these gases in the container depends on the external temperature and may reach up to 25 bar or more.

NOTE

*In these operating instructions, liquid gases are called **LPG**.*

DANGER

Risk of explosion!

LPG immediately becomes gaseous when it escapes; this means that a hazardous explosive atmosphere will occur at once.

DANGER

Risk of fire!

Not permitted: open flames (stoves, storm lanterns, activities producing sparks etc.), smoking in storage rooms and when working on the LPG system!

– With fires involving LPG only, carbon dioxide dry fire extinguishers or carbon dioxide gas extinguishers should be used.

DANGER

Risk of poisoning!

It must be ensured that trucks with LPG systems are only operated in rooms that are entirely or partially enclosed if no hazardous concentrations of exhaust constituents harmful to health can be produced in the room air.

CAUTION

Industrial trucks fuelled by LPG should only be parked in rooms that are above ground level and have adequate ventilation. They must not be parked near openings to rooms below ground level.

Sufficient space must be left around trucks that have been parked; such areas must not include cellar openings or access points, pits or similar cavities, drains without liquid traps, ventilation shafts and light wells or combustible material.

https://truckmanualshub.com/

Safe use of LPG trucks

The LPG system must be checked for damage and leaks at least once per year by a specialist in LPG systems, see ⇒ Chapter "Regular safety check of the fuel gas system", P. 3-27.

The LPG system is subject to prescribed maintenance intervals that must be maintained, see ⇒ Chapter "Intervals for maintenance and inspection", P. 6-181.

A specialist in LPG systems should be hired for testing if you are unsure of the type and condition of the evaporator pressure regulator, or if the LPG system has not been checked in a long time.

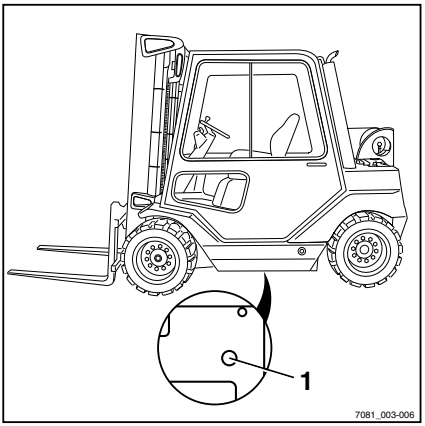

⚠ WARNING

Risk of explosion!

When operating a truck with an LPG system, make sure that the floor opening (1) below the engine compartment is not closed. Make sure there are sufficiently large ventilation openings (at least 200 cm^2 in total) in the engine compartment floor, so that gas cannot accumulate.

Storing pressurised-gas vessels

Cylinder and main shut-off valves should be closed as soon as trucks are parked.

The special regulations governing the storage of pressurised-gas vessels must be observed without fail, as well as specific national regulations where appropriate.

For example, pressurised-gas vessels must not be stored:

- in rooms below ground level
- in stairwells, in hallways/landings, confined yards and passageways/thoroughfares or in their immediate vicinity
- on steps of outdoor installations
- on specially marked escape routes
- in garages
- in workrooms.

https://truckmanualshub.com/

NOTE

Please also take into account the section ""General requirements for pressurised-gas vessels; Using pressurised-gas vessels"" in the technical regulations applicable to pressurised-gas vessels TRG 380 and 404, as well as national regulations where applicable.

Electric hand lamps used in these rooms must be provided with an enclosed sealed cover and a strong basket guard.

Storage rooms and maintenance workshops must be well ventilated. Here it should be borne in mind that LPG is heavier than air. It collects at floor level, in work pits and other depressions in the ground where it may produce hazardous explosive mixtures of gas and air.

Hydraulic fluid

WARNING

These fluids are pressurised during operation of the forklift truck and are hazardous to your health.

- Do not spill the fluids.
- Follow the statutory regulations.
- Do not allow to come into contact with hot motor parts.

https://truckmanualshub.com/

WARNING

These fluids are pressurised during operation of the forklift truck and are hazardous to your health.

– Do not allow to come into contact with the skin.
– Avoid inhaling spray.
– Penetration of pressurised fluids into the skin is particularly dangerous if these fluids escape at high pressure due to leaks in the hydraulic system. In case of such injury, immediate medical assistance is required.
– To avoid injury, use appropriate personal protective equipment (e.g. protective gloves, industrial goggles, skin protection and skin care products).

ENVIRONMENT NOTE

Hydraulic fluid is a substance hazardous to water.

- *Always store hydraulic fluid in containers complying with the regulations.*
- *Avoid spilling.*
- *Spilt hydraulic fluid should be removed with oil-binding agents at once and disposed of according to the regulations.*
- *Dispose of old hydraulic fluid according to the regulations.*

Battery acid

WARNING

Battery acid contains dissolved sulphuric acid. This is toxic.

– Avoid contact and consumption.
– In case of injury, seek medical advice immediately.

https://truckmanualshub.com/

WARNING

Battery acid contains dissolved sulphuric acid. This is corrosive.

- When working with battery acid, always wear protective clothing and eye protection.
- Do not allow any acid to get onto the clothing or skin or into the eyes; if this does happen, rinse immediately with plenty of clean water.
- In case of injury, seek medical advice immediately.
- Immediately rinse away spilt battery acid with plenty of water.
- Follow the statutory regulations.

ENVIRONMENT NOTE

- Dispose of used battery acid in line with the applicable regulations.

Coolant

WARNING

Coolant and coolant additive are hazardous to health.

- Store only in original vessels, do not spill.
- Never use empty food containers, bottles or other vessels for storing coolant.
- The legal regulations must be observed.

ENVIRONMENT NOTE

- Immediately remove escaped coolant with an oil binding agent and dispose of in line with the regulations.
- Dispose of used coolant in line with the regulations.

https://truckmanualshub.com/

Disposal of consumables

ENVIRONMENT NOTE

Materials that have to be disposed of following maintenance, repair, and cleaning must be systematically collected and disposed of in accordance with regulations. Follow the national regulations for your country. Work may only be carried out in areas designated for the purpose. Care must be taken to minimise, as far as possible, any impact on the environment.

- Any spillage of fluids such as hydraulic oil, brake fluid or gear lubricant oil must be immediately soaked up with an oil-binding agent.
- The regulations for disposal of used oil are applicable.
- Any spillage of battery acid must be neutralised immediately.

https://truckmanualshub.com/

Emissions

Noise emissions

The values were determined based on measurement procedures from the standard EN 12053 (noise measurement for industrial trucks based on EN 12001 and EN ISO 3744 and the requirements of EN ISO 4871). This machine emits the following sound-pressure levels:

Continuous sound-pressure level in the driver's compartment	
L_{pAZ}	< 76 dB(A)
Uncertainty K_{pA}	4 dB(A)

The values were determined in the test cycle on an identical machine from the weighted values for operating conditions and idling.

Time percentages:

- Lifting 18%
- Idling 58%
- Driving 24%

However, the indicated noise levels at the truck cannot be used to determine the noise emissions at workplaces according to the most recent version of **Directive 2003/10/EC** (daily personal noise pollution). If necessary, these should be determined directly at the workplace under the actual conditions there (additional noise sources, special operating conditions, sound reflections) by the operating company; (see ⇒ Chapter "Definition of terms used for responsible persons", P. 20).

Vibrations

The vibrations of the machine must be determined on an identical machine in accordance with the standard EN 13059 "Vibration measurements on industrial trucks".

Weighted effective value of the acceleration the body (feet or seat surface) is subjected to	< 0.6 m/s^2
Uncertainty K	0.18 m/s^2

Tests have indicated that the amplitude of the hand and arm vibrations on the steering wheel

https://truckmanualshub.com/

or the operating elements in the truck are less than 2.5 m/s^2. There are therefore no measurement guidelines for these measurements. The personal vibration load on the driver over a working day shall be determined in accordance with the **Directive 2002/44/EC** by the operating company (see ⇒ Chapter "Definition of terms used for responsible persons", P. 20) at the actual place of use, in order to consider all additional influences, such as driving route, intensity of use etc.

Exhaust gases

The engine releases exhaust gases into the environment during operation. The exhaust gases mainly consist of water vapour, carbon dioxide (CO_2), carbon monoxide (CO), hydrocarbons (CH), aldehydes and nitrogen oxide (NO_X). The components CO, CH and NO_X are toxic or harmful to health and must not be inhaled in high concentrations.

For this reason, the engine cannot be operated in closed areas without sufficient ventilation.

Heat

⚠ WARNING

The exhaust gases are very hot and can ignite combustible material.

– Accordingly, keep the exhaust pipe away from combustible materials.

Battery

⚠ WARNING

During charging, the battery releases a mixture of oxygen and hydrogen (detonating gas). This gas mixture is explosive and must not be ignited.

Suitable ventilation and keeping it away from open flames can avoid the danger of explosion.

– Observe the safety regulations for handling the battery.

https://truckmanualshub.com/

4

Overviews

https://truckmanualshub.com/

General view

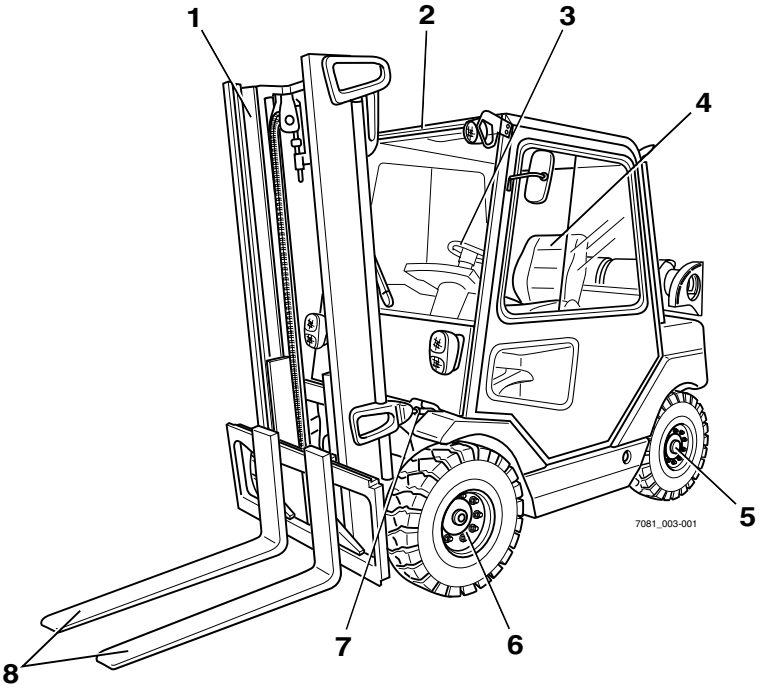

1	Lift mast	5	Steering axle
2	Overhead guard	6	Drive axle
3	Steering wheel	7	Tilt cylinder
4	Driver's seat	8	Fork arms

https://truckmanualshub.com/

https://truckmanualshub.com/

Versions of driver's compartment

Driver's compartment, single pedal version

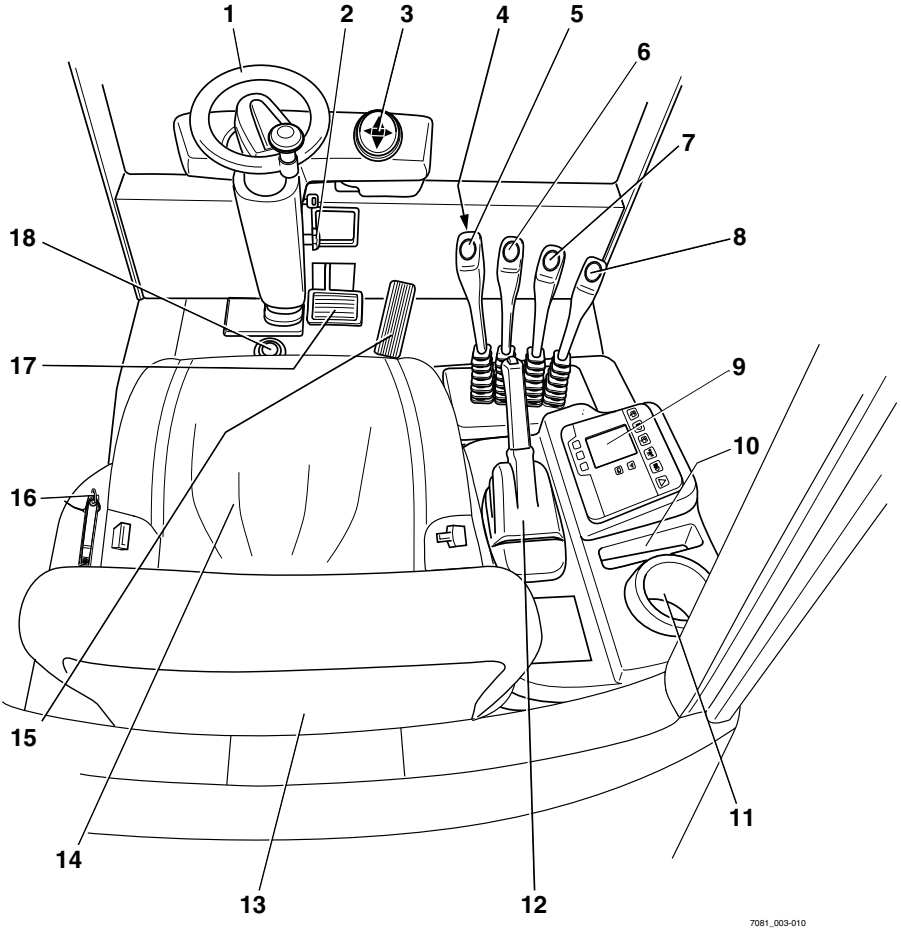

https://truckmanualshub.com/

1	Steering wheel
2	Steering column adjustment lever
3	Direction of travel/flasher/fault multi-function display
4	Travel direction switch
5	"Lift-lower" operating lever
6	"Tilt" operating lever
7	"Attachments" operating lever
8	"Attachments" operating lever
9	Display and operating unit
10	Storage box
11	Bottle holder for 1 l PET bottles
12	Parking brake lever
13	Storage shelf for user and maintenance manual (special equipment)
14	Driver seat
15	Accelerator pedal
16	Bonnet release
17	Brake pedal
18	Alarm horn foot switch

https://truckmanualshub.com/

Driver's compartment, dual-pedal version

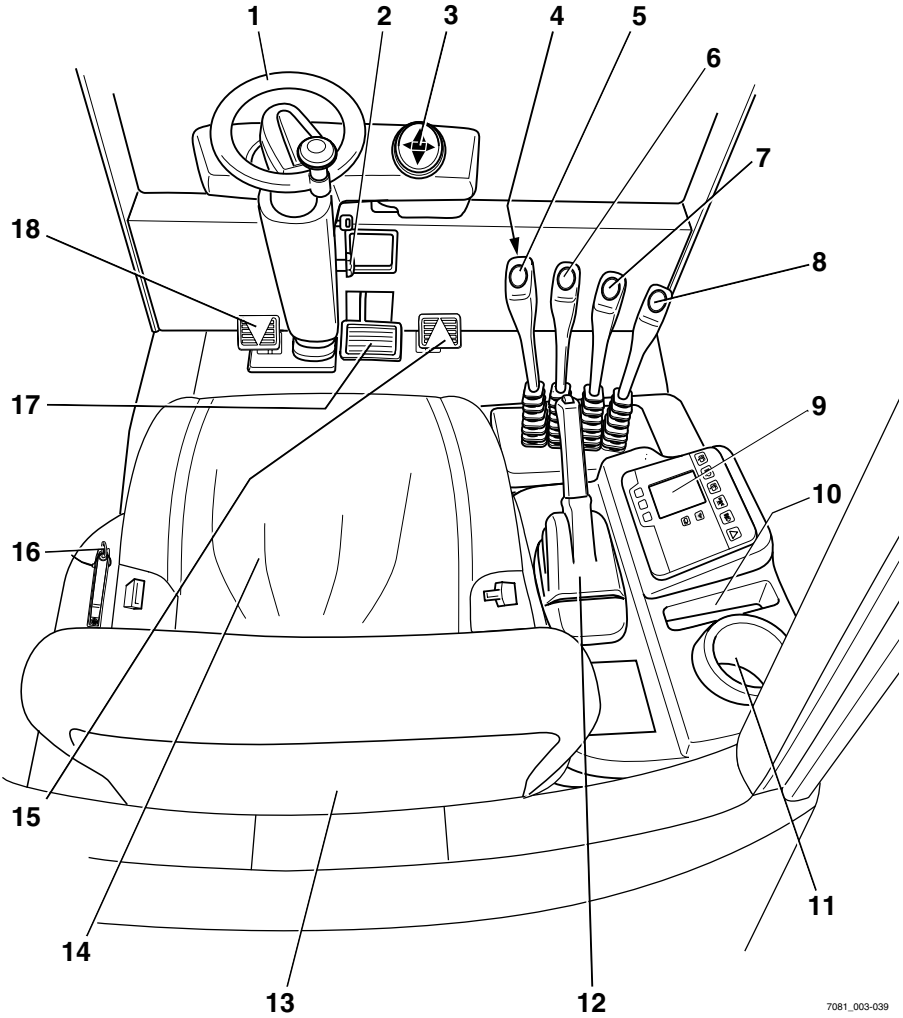

https://truckmanualshub.com/

1	Steering wheel
2	Steering column adjustment lever
3	Direction of travel/flasher/fault multi-function display
4	Alarm horn button
5	"Lift-lower" operating lever
6	"Tilt" operating lever
7	"Attachments" operating lever
8	"Attachments" operating lever
9	Display and operating unit
10	Storage box
11	Bottle holder for 1 l-PET bottles
12	Parking brake lever
13	Storage compartment for operating and maintenance manual
14	Driver's seat
15	Forwards accelerator pedal
16	Bonnet release
17	Brake pedal
18	Reverse accelerator pedal

https://truckmanualshub.com/

Operating and display elements

Display and operating unit

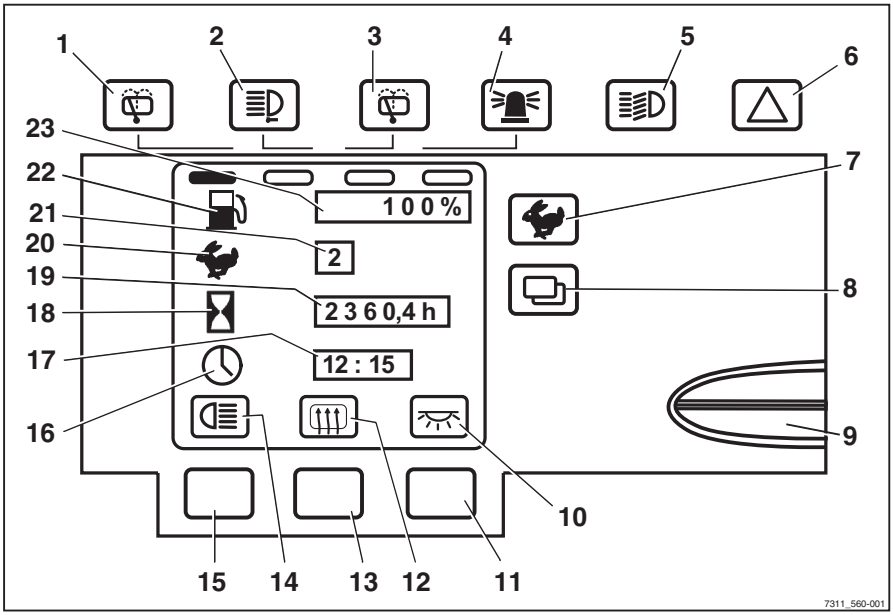

1	Front windscreen wiper switch	13	Rear window heater switch
2	Work light switch	14	Rear searchlight display
3	Rear windscreen wiper switch	15	Rear searchlight switch
4	Flashing light switch	16	Time symbol
5	Lighting switch	17	Time
6	Switch - hazard warning lights	18	Operating hours symbol
7	Traction program switch	19	Operating hours display
8	Menu change key	20	Traction program symbol
9	Fleet Manager smart card reader	21	Current traction program
10	Interior light display	22	Fuel tank symbol
11	Interior light switch	23	Fuel level in % (special equipment)
12	Rear window heater display		

NOTE

The displays (10, 12, 14, 23) and buttons (11, 13, 15) are assigned on the basis of the additional electrical special equipment.

https://truckmanualshub.com/

Direction of travel/flasher/fault multi-function display

The direction of travel/flasher/fault multi-function display is used to display the direction of travel. In addition, the flasher is used to indicate that messages are shown on the display and operating unit.

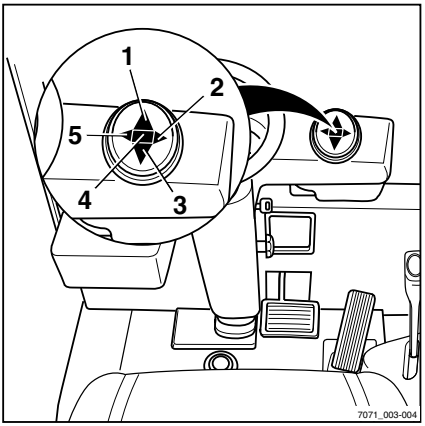

1 Forward travel display
2 Right flasher display
3 Reverse travel display
4 Message display
5 Left flasher display

Mini-console

The mini console is located on the steering column below the steering wheel.

NOTE

Switch (1) is not assigned in trucks with the travel direction switch on the "lift-lower" operating lever.

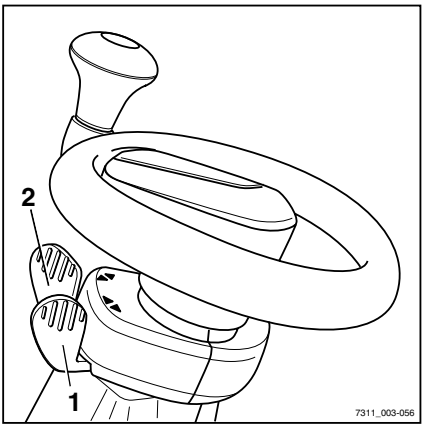

1 Travel direction switch
2 Direction indicator switch

https://truckmanualshub.com/

Identification points

Overview

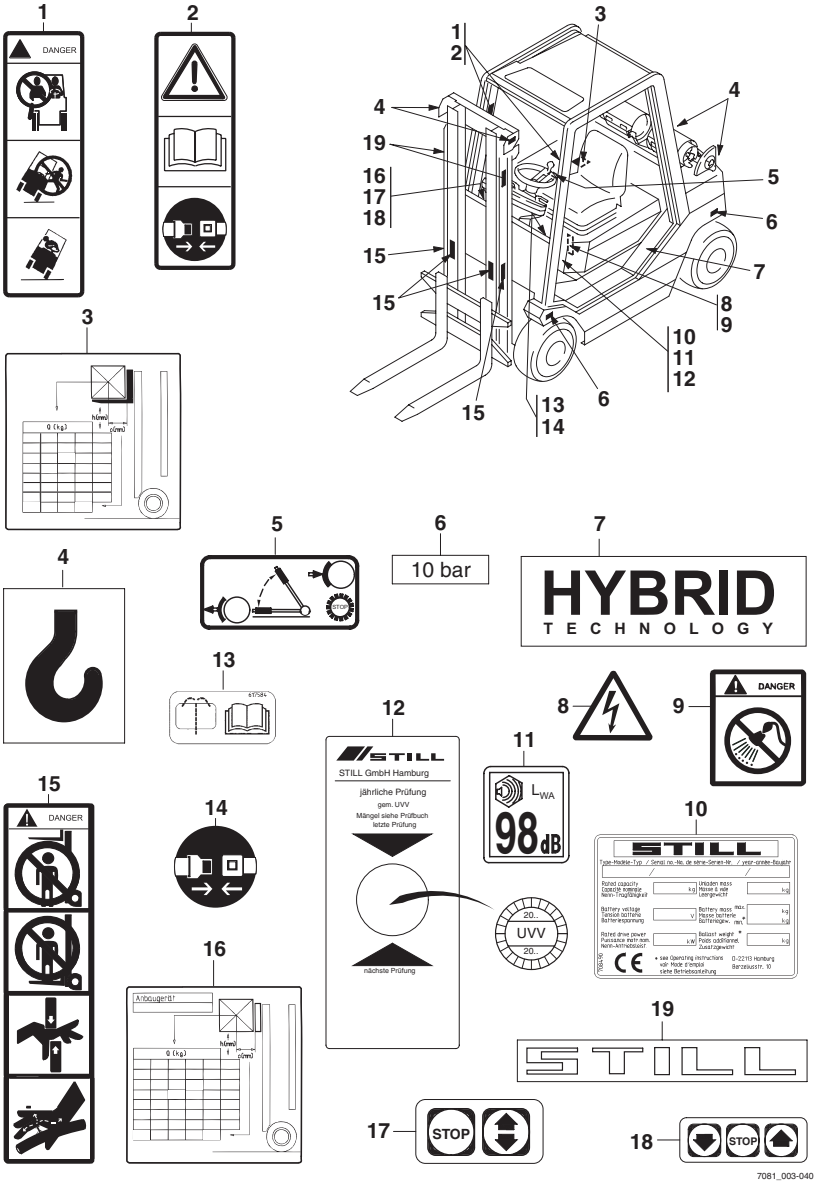

https://truckmanualshub.com/

1	Warning sign
2	Decal information
3	Safe working load diagram
4	Hook symbol
5	Decal information
6	Decal information
7	Label text
8	Warning sign
9	Warning sign
10	Nameplate
11	Decal information
12	Accident prevention audit label
13	Decal information
14	Decal information
15	Warning sign
16	Safe working load diagram for attachment (special equipment)
17	Decal information
18	Decal information (special equipment)
19	Company logo

Nameplate

It is possible to identify your forklift truck from the information on the nameplate.

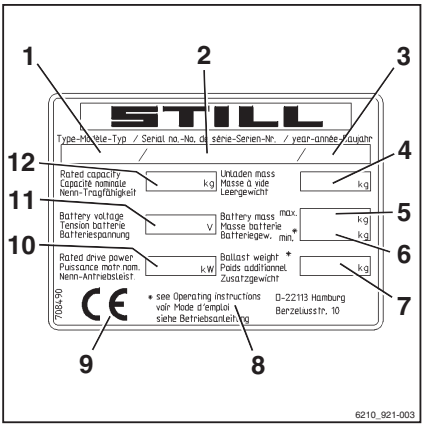

1	Type
2	Factory no. .....
3	Year of construction
4	Tare weight kg
5	Permissible battery weight, max. (only for electric lift trucks)
6	Permissible battery weight, min. (only for electric lift trucks)
7	Ballast weight (only for electric lift trucks)
8	Refer to the technical data listed in these operating instructions for more detailed information
9	CE mark
10	Nominal drive rating
11	Battery voltage V
12	Nominal forklift capacity kg

https://truckmanualshub.com/

C. U. R. data

This label provides information on the weight and the load distribution of your truck.

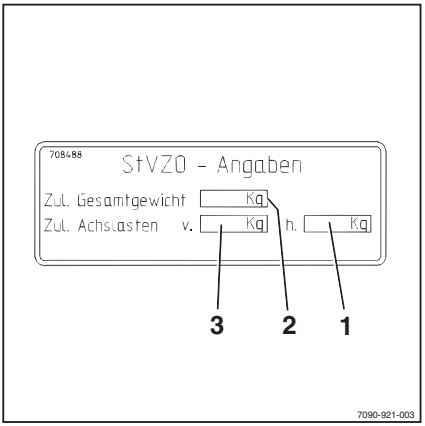

1 Admisssible rear axle load in kg
2 Admissible total weight kg
3 Admissible front axle load in kg

Vehicle identification number

NOTE

Please state this serial number when making technical inquiries.

The serial number contains the following information:

1 Production site

2 Type

3 Variant

4 Serial number

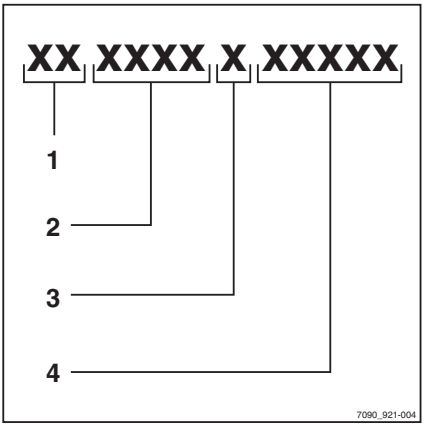

https://truckmanualshub.com/

Accessories

Special equipment and variants

Driver's seat

MSG 20 driver's seat:

- Imitation leather

MSG 65 driver's seat:

- Textile cover, lumbar support
- Imitation leather, lumbar support, heater, backrest extension
- Textile cover, lumbar support, heater, backrest extension

MSG 75 driver's seat:

- Imitation leather, lumbar support, heater, backrest extension
- Textile cover, lumbar support, heater, backrest extension

Overhead guard and cab

- Overhead guard
- Weather protection, levels 1 to 3
- Cab with heater

Lift mast

NOTE

Overall height and lift height; see ⇒ Chapter "Technical data", P. 247.

- Tele
- Triple
- Load backrest

Electrical equipment

- Lighting system (various versions)
- Dual-pedal control travel actuation
- FleetManager
- Accident recorder
- Cruise control

LPG system

- LPG tank

https://truckmanualshub.com/

Attachments

- Fork extension
- Warning beam
- Grille
- Mandril
- Crane arm
- Snow remover
- Shovel
- Sideshift
- Clamp forks without sideshift
- Bale clamp without sideshift
- Clamp forks with sideshift
- Bale clamp with sideshift
- Fork arm adjustment

Accessory overview

- Key for key switch (2 pieces)
- Key for cab (special equipment)
- Emergency lowering key
- Release tool for bonnet

https://truckmanualshub.com/

5

Operation

https://truckmanualshub.com/

Checks and operations prior to start-up

Visual inspections

WARNING

Damage or other defects of the forklift truck or attachment (special equipment) can result in accidents.

If damage or other defects are identified on the forklift truck or attachment (special attachment) during the following inspections, do not use the vehicle until it has be repaired properly. Do not remove or deactivate safety devices and switches. Do not change predefined set values.

WARNING

Risk of falling!

When working on high-level areas of the truck, do not use truck components for access or to stand on.

– Always use suitable equipment for this.

Prior to start-up, a safe operating state must be ensured:

– The retaining devices (1) of the fork arms for preventing lifting and shifting should not show any defects.

– Fork arms or other load-carrying equipment may not have any noticeable damage (e.g. bends, cracks, significant wear).

– The chains must be undamaged and evenly and adequately tensioned.

– Check the area under the forklift truck for leaking consumables.

– The guard grille (special equipment) and overhead guard must be undamaged and secure.

– Attachments (special equipment) must be properly secured and function according to their operating instructions.

– Check whether all information labels/notices are present and legible. Damaged or missing stickers must be replaced according to the overview of sticker locations ⇒ Chapter "Overview", P. 4-48.

▷

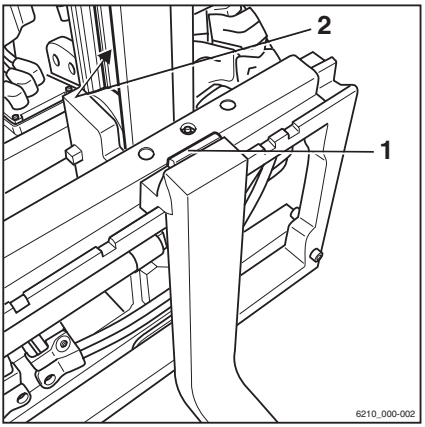

https://truckmanualshub.com/

- The roller tracks (2) must be lubricated with a visible lubricant film.
- Check the hydraulic system and hydraulic oil tank where visible for damage and leaks. Damaged hoses must be replaced.
- Check the fuel system and fuel tank where visible for damage and leaks. Damaged hoses must be replaced.
- The motor hood must be securely closed.
- Steps must be clean and free of ice.
- In the case of versions with a cabin (special equipment) all windows must be clean and free of ice. Switch on the heater (special equipment) and set the air vents so that the windows remain free of ice.
- Report defects to the supervisor.

Opening the bonnet

▷

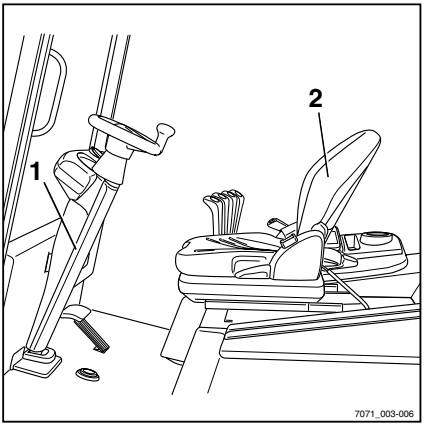

⚠ WARNING

Risk of injury!

- Before opening the bonnet, switch off the engine.

- Lock steering column (1) into the frontmost position.
- Slide the driver's seat completely forward and, in trucks with a rear window, fold the seat backrest (2) forward; see ⇒ Chapter "Adjusting the MSG 65/MSG 75 driver's seat", P. 5-60 or ⇒ Chapter "Adjusting the MSG 20 driver's seat", P. 5-63.

https://truckmanualshub.com/

– Insert the release tool (3) and release the catch. To open it, use the release tool from the accessories.

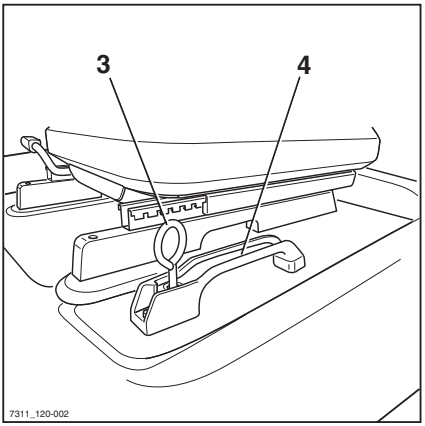

NOTE

The catch can be secured with a lock. If necessary, open the lock beforehand.

– Using the handle (4) next to the driver's seat, open the bonnet towards the rear.

WARNING

Risk of accident!

The release tool must always remain with the truck, so that the bonnet can be opened at any time, even in an emergency!

Checking the engine oil level

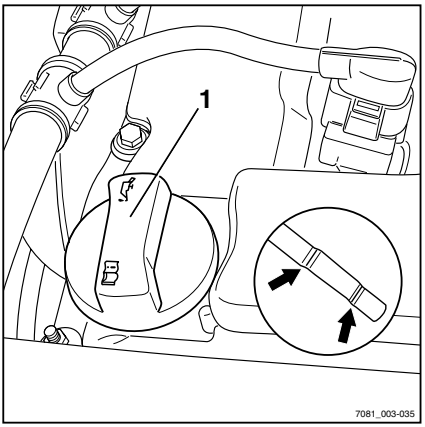

NOTE

The vehicle should be as level as possible when performing this check.

– Remove and wipe off dipstick.

– Insert dipstick to contact and pull out again.

The oil level must be between the markings (arrows).

– If the oil level only reaches the bottom mark, unscrew filler cap and add oil according to maintenance data table(1). ⇒ Chapter "Maintenance data table", P. 6-186.

https://truckmanualshub.com/

Filling the washer system

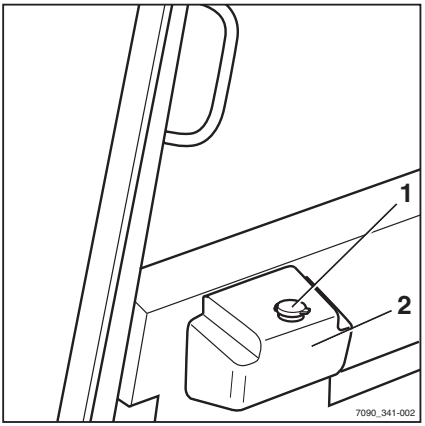

- Open the sealing cap (1).
- Fill the washer reservoir (2) with windscreen washer fluid.

CAUTION

If there is no anti-freeze in the system, the washer system (special equipment) may be damaged.

- Always use windscreen washer fluid with anti-freeze.

- Fill the reservoir completely with clean water.
- Close the sealing cap (1).
- Operate the washer system until washer fluid exits from the spray nozzles.

Checking the condition of the wheels and tyres

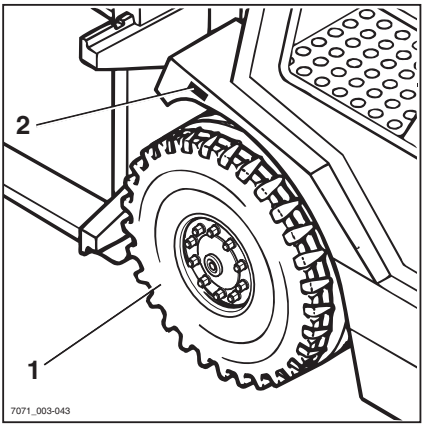

WARNING

Risk of accident! With uneven wear or incorrect air pressure, the stability of the forklift truck decreases and the braking distance increases.

Renew left and right worn or damaged tyres without delay.

NOTE

- *Only permissible tyre types may be used, see ⇒ Chapter "Wheels and tyres", P. 7-252.*

- Check tyres (1) for wear or damage.

Tyres cannot be damaged or worn. They must be worn evenly on both sides.

- Check air pressure. The air pressure given on the stickers (2) must be observed.

NOTE

Note the safety principles for tyres, see ⇒ Chapter "Tyres", P. 3-25.

https://truckmanualshub.com/

Opening LPG cylinders

DANGER

There is a risk of explosion if LPG escapes.

- Do not smoke or use a naked flame / fire.
- LPG cylinders should only be changed in well ventilated rooms and not near openings in the ground.

Note safety regulations for working with LPG ⇒ Chapter "LPG", P. 3-30.

- Check whether smell of gas is discernable.

DANGER

There is a risk of explosion if LPG escapes.

- Do not start engine if there are leaks, the smell of gas, among other things.
- Contact your customer service office.

- Check whether the hose (2) is securely connected to the gas cylinder.

DANGER

Risk of explosion from spark discharge!

Opening and closing may not be aided with striking tools.

WARNING

LPG can cause frostbite on the skin.

- Protective gloves should therefore always be worn.

CAUTION

Opening quickly can lead to the system icing over.

- Open the cylinder valve (1) by slowly turning the star handle to the left.

▷

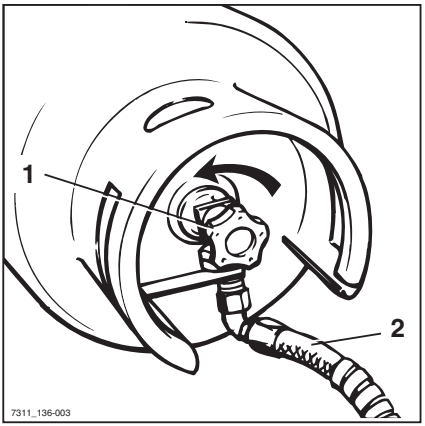

https://truckmanualshub.com/

Opening the LPG tank shut-off valve ▷

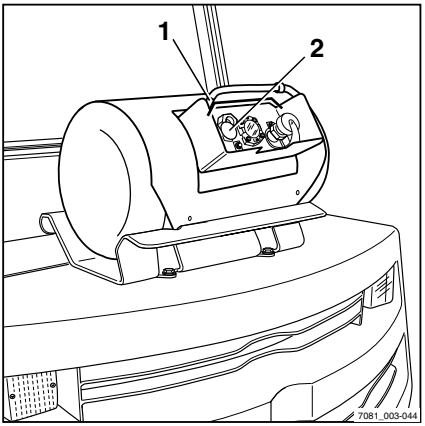

DANGER

There is a risk of explosion if LPG escapes!

Do not smoke or use a naked flame/fire.

- LPG tank shut-off valves (special equipment) should only be opened in well-ventilated rooms and not near openings in the floor.
- Follow the safety regulations when handling LPG, see ⇒ Chapter "LPG", P. 3-30.

– Check whether smell of gas is discernable.

DANGER

There is a risk of explosion if LPG escapes!

Do not start the engine if a leak, the smell of gas or the like is noted!

- Contact your service centre.

– Check whether the hose (1) is firmly connected to the LPG tank.

DANGER

Risk of explosion from spark discharge!

Striking tools should not be used for opening/closing.

WARNING

LPG can cause frostbite on the skin!

- Accordingly, always wear protective gloves.

CAUTION

Opening quickly can lead to the system icing over.

- Open the shut-off valve (2) by slowly turning it to the "OPEN" position.

https://truckmanualshub.com/

The fuel display (3) (special equipment) shows you how much LPG is available. ▷

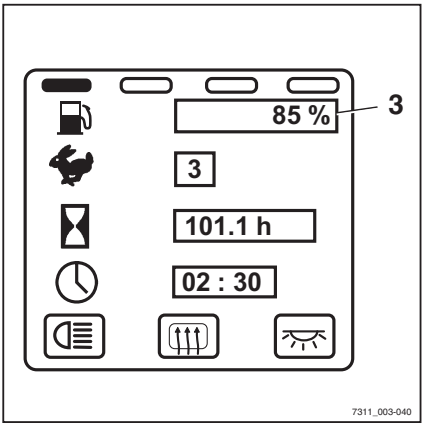

Adjusting the MSG 65/MSG 75 driver's seat

DANGER

Risk of accident!

Do not adjust the seat whilst driving.

– Adjust the seat in such a way that you can safely reach and operate all the controls.

WARNING

On some versions (special equipment), the amount of head clearance on your forklift truck may be restricted.

On these versions, the distance between the head and the lower edge of the roofing sheet must be at least 40 mm.

NOTE

If your truck comes with separate operating instructions for the seat, they must be followed.

https://truckmanualshub.com/

⚠ WARNING

Risk of injury!

To obtain optimum seat cushioning, you must adjust the seat suspension to your own body weight. This helps your back and protects your health.

To prevent injury, make sure that there are no objects in the swivel area of the seat.

Moving the driver's seat

▷

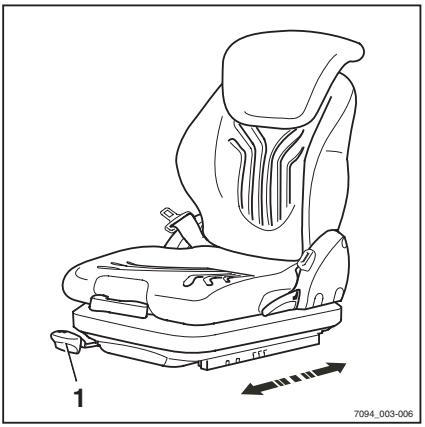

– Pull lever (1) up and move the seat.

– Release the lever.

⚠ WARNING

Risk of injury!

– Make sure that the seat is securely engaged.

Adjusting the backrest

▷

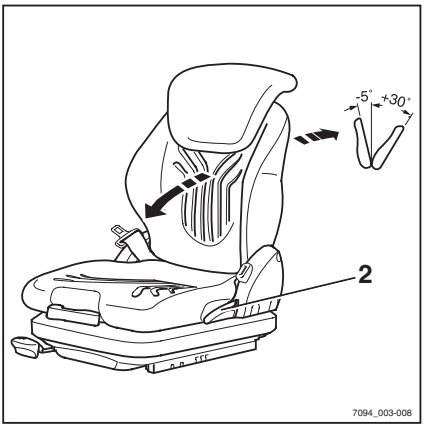

– Pull lever (2) upwards and adjust the incline of the seat backrest using your body weight.

– Release the lever.

⚠ WARNING

Risk of injury!

– Make sure that the backrest is engaged.

https://truckmanualshub.com/

Adjusting the seat suspension to your weight

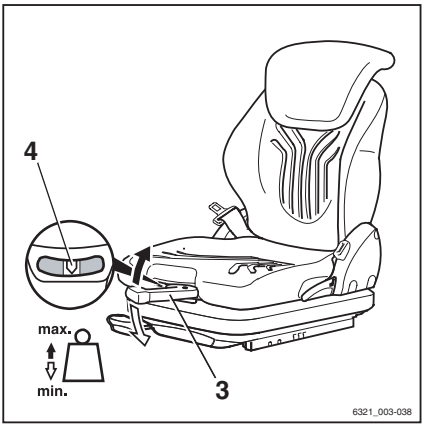

NOTE

This adjustment should only be made while the seat is occupied.

NOTE

The MSG 75 seat is equipped with an electric air suspension activated with an electric switch instead of a lever (3).

– Completely fold open lever (3) and adjust the driver's weight by pumping up or down.

– Return the lever (3) back to the initial central position before each new lift (audible click).

NOTE

A noticeable empty lift on the operating handle shows you have reached the minimum or maximum weight setting.

The correct driver's weight has been selected when the arrow (4) is in the middle of the viewing window.

Adjusting the lumbar support (special equipment)

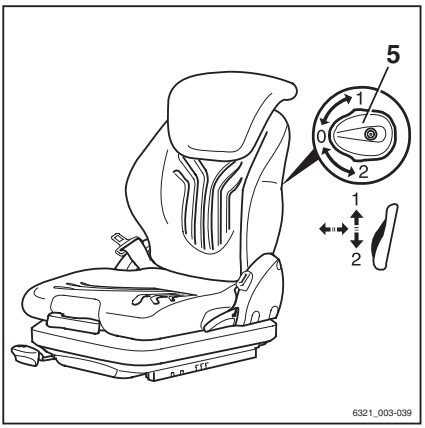

– Adjust the lumbar support by turning the hand wheel (5).

By turning upwards, the convexity moves to the upper region of the lumbar support, and by turning downwards, to the lower region of the lumbar support. This convexity can be adjusted to your individual lumbar vertebrae.

https://truckmanualshub.com/

Adjusting the backrest extension (special equipment) ▷

– Adjust the backrest extension (6) by pulling it out or pushing it in to the desired position.

To remove the backrest extension, move it past the end stop by jolting it upwards.

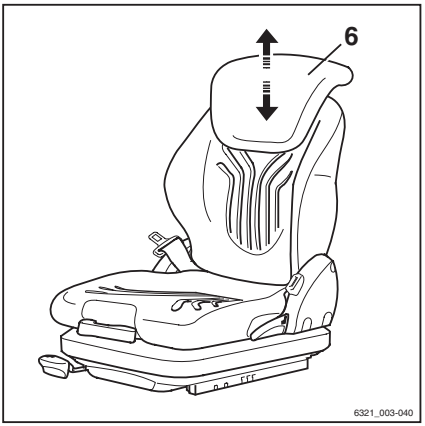

Switching the seat heater (special equipment) on and off ▷

– Switch the seat heater on or off using switch (7).

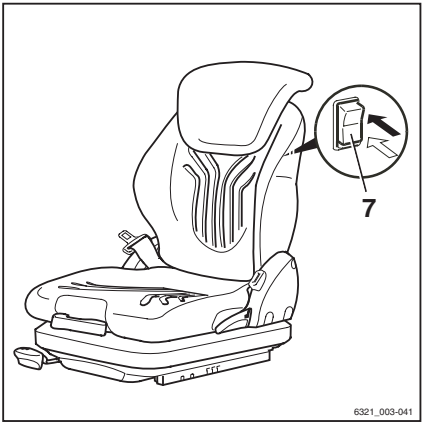

Adjusting the MSG 20 driver's seat

⚠ DANGER

Risk of accident!

Do not adjust the seat whilst driving.

– Adjust the seat in such a way that you can safely reach and operate all the controls.

https://truckmanualshub.com/

WARNING

On some versions (special equipment), the amount of head clearance on your forklift truck may be restricted.

On these versions, the distance between the head and the lower edge of the roofing sheet must be at least 40 mm.

NOTE

If your truck comes with separate operating instructions for the seat, they must be followed.

WARNING

Risk of injury!

To obtain optimum seat cushioning, you must adjust the seat suspension to your own body weight. This helps your back and protects your health.

To prevent injury, make sure that there are no objects in the swivel area of the seat.

Moving the driver's seat

▷

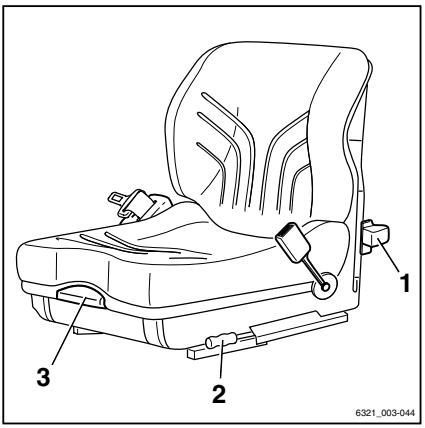

– Pull lever (2) up and move the seat.

– Release the lever.

WARNING

Risk of injury!

– Make sure that the seat is securely engaged.

Adjusting the backrest

– Pull lever (3) upwards and adjust the incline of the seat backrest using your body weight.

The seat backrest has three detent positions with an adjustment range of -5° to +5°.

– Release the lever.

WARNING

Risk of injury!

– Make sure that the backrest is engaged.

https://truckmanualshub.com/

Adjusting the seat suspension to your weight

NOTE

Make this adjust only whilst sitting in the seat.

– Adjust your individual suspension comfort using the adjusting lever (1). ▷

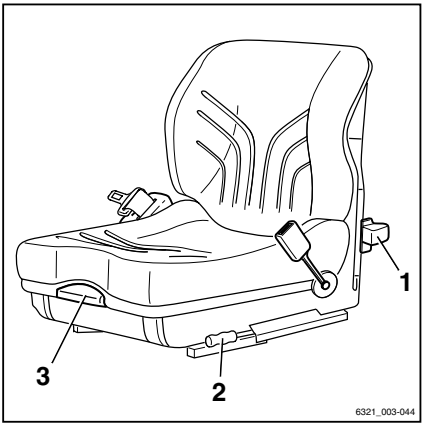

Adjusting the steering column ▷

– Loosen the knob (1) of the steering column locking device.

– Position the steering column (2) and retighten the knob (1).

DANGER

Risk of accident!

– Make sure that the steering column is secured in position.

Never adjust the steering column whilst driving!

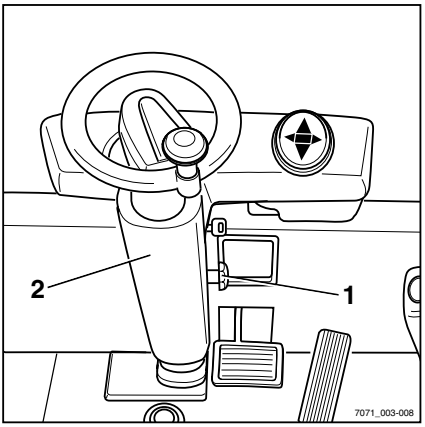

https://truckmanualshub.com/

Start-up

Turning on the key switch

▷

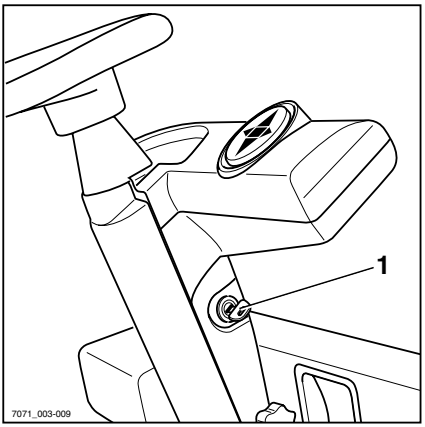

⚠ WARNING

Before switching on the key switch, all tests before commissioning must be performed without detecting any defects.

– First perform all tests before commissioning, see ⇒ Chapter "Checks and operations prior to start-up", P. 54.

If any malfunctions are detected, do not put the truck into operation! Please contact your supervisor or service centre.

⚠ DANGER

Risk of accident!

Drive only with a secured bonnet.

– Insert the ignition key (1) into the key switch and turn it to the right to operating position "I".

This initiates a self-test. All lamps in the multi-function display light up briefly.

▷

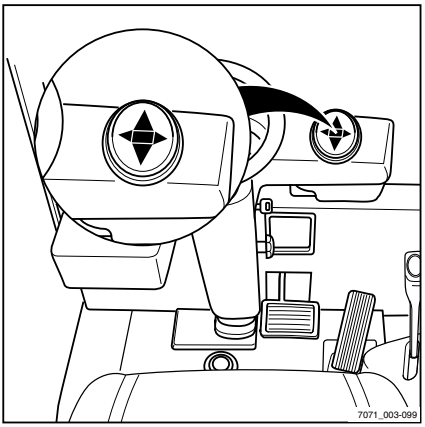

https://truckmanualshub.com/

Upon switching on the key switch, the display shows the welcome screen in the set language until the truck controls have completely started up. ▷

Displays during the switching-on operation ▷

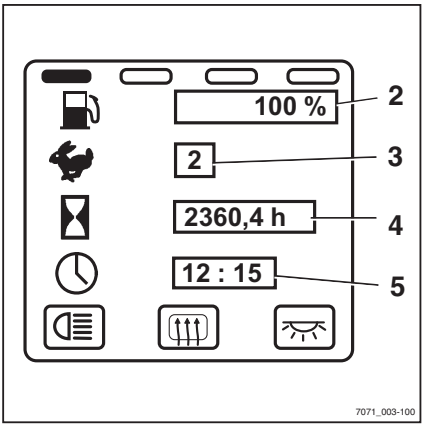

- (2) Fuel level (special equipment)

The fuel level can be displayed as either a percentage or bar display in the display field.

– Top up if necessary, see ⇒ Chapter "Refuelling", P. 165.

- (3) Traction program

The current traction program appears in the display.

- (4) Operating hours

The operating hours appear on the display.

– Inform your service centre when a maintenance interval is reached.

NOTE

Have all repair and maintenance work performed by your responsible service centre. Defects can only be corrected permanently in this manner.

- (5) Time display

The time appears on the display.

https://truckmanualshub.com/

⚠ CAUTION

Additional information can appear on the display.

– If there are fault displays, please consult the instructions in the corresponding chapter, see ⇒ Chapter "Error messages", P. 138.

Starting the engine

– Apply the parking brake.

⚠ WARNING

Toxicity hazard from exhaust gases.

Do not allow the engine to run in unventilated rooms.

– Insert the key (1) into the key switch and turn it to position "I".

– When the display `STARTEN (START)` lights up, turn the key to position "II" and hold in this position until the engine starts.

– As soon as the engine has started, release the key.

– If the engine does not start after 20 seconds, end the starting operation and start again after one minute.

▷

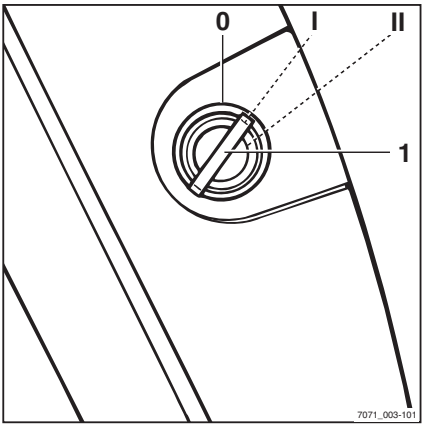

https://truckmanualshub.com/

– If the message `OELDRUCK (OIL PRESSURE)` in the display does not go out or reappears after starting the engine, switch off the engine immediately.

– Refer to the information in the chapter entitled Fault displays; see ⇒ Chapter "Error messages", P. 138.

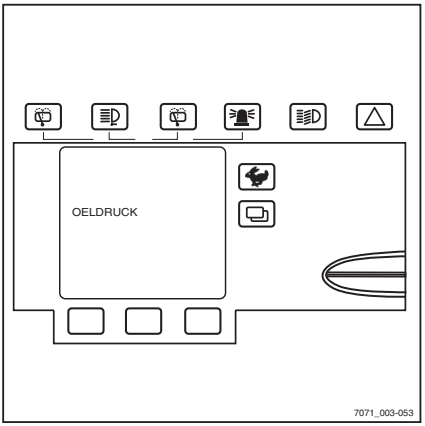

NOTE

If the engine cannot be started due to a discharged battery, it can be jump-started; see ⇒ Chapter "Jump starting", P. 5-160.

Operating the signal horn

– On trucks with single-pedal operation: press foot switch (1).

The signal horn sounds.

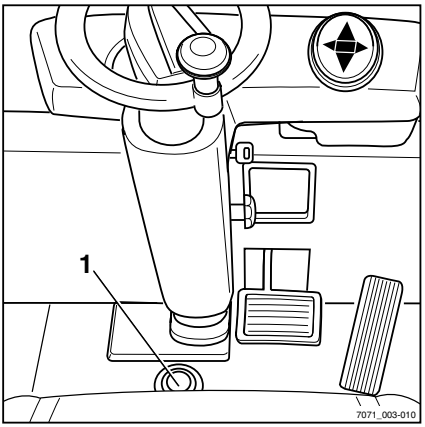

https://truckmanualshub.com/

– On trucks with two-pedal operation: press button (2).

The signal horn sounds.

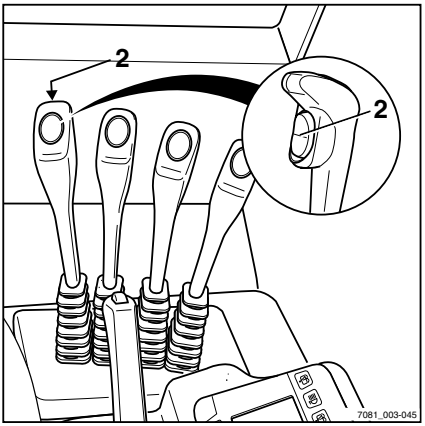

Restraining belt

DANGER

Driving without a seat belt is dangerous and never permitted!

– Always fasten the belt before starting to drive.

DANGER

Only a fully enclosed cab with closed, fixed doors or bracket doors is an operator restraint system. PVC doors are not a restraint system.

If the doors are open or removed, you must use a different, suitable restraint system (e.g. restraining belt).

https://truckmanualshub.com/

Fastening the restraining belt

▷

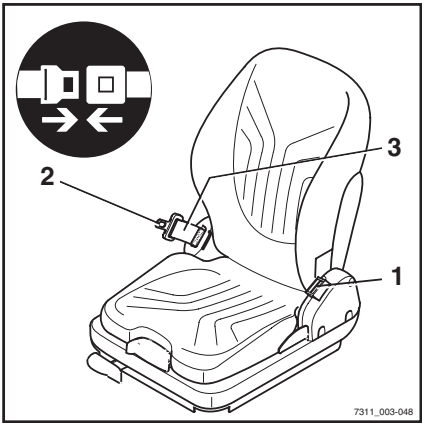

WARNING

Risk of injury!

- Always fasten the belt before moving the truck. Make sure that the belt is not twisted when fastening.
- Use the belt only to secure a person!
- If you notice any malfunction in the belt while fastening, do not put the truck into operation before the belt has been repaired.

NOTE

The buckle has a buckle switch (special equipment). If there is an operating error or malfunction, the message `SICHERHEITSGURT (SAFETY BELT)` *appears in the display and operating unit (see ⇒ Chapter "SAFETY BELT message", P. 5-142).*

- Pull the belt (3) smoothly out of the retractor and fasten belt tightly against the body above the thigh.

NOTE

Sit back as far as possible, so that your back is against the seat backrest. The automatic blocking mechanism permits sufficient freedom of movement.

- Insert the tongue (2) of the belt into the buckle (1) until it latches.
- Check the belt tension. It should be close to the body.

https://truckmanualshub.com/

Fastening on a steep slope

The automatic blocking mechanism prevents the belt from being extended whenever the forklift truck is on a steep gradient. It is not possible to pull the belt any further out of the retractor.

– Drive off the slope carefully.

– Fasten the belt.

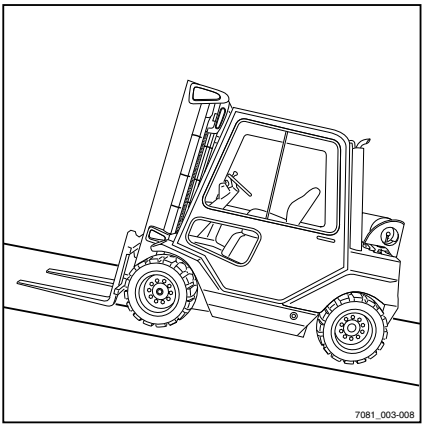

Releasing the restraining belt

– Press the red button (4) on the buckle (1).

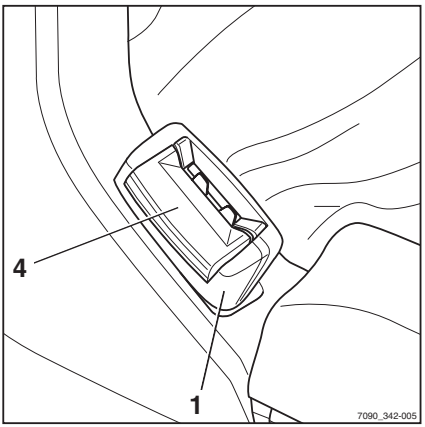

https://truckmanualshub.com/

– Slowly guide the belt tongue (2) back to the retractor (3) by hand. ▷

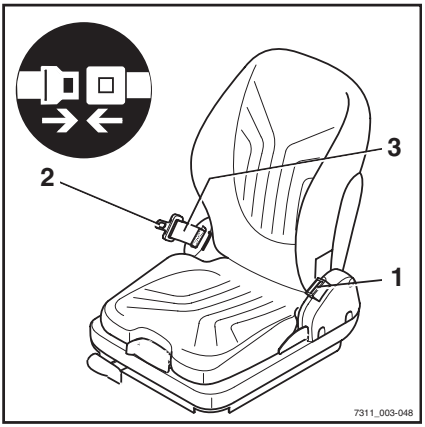

NOTE

Do not allow the belt to retract too quickly. The automatic blocking mechanism may be triggered if the belt tongue strikes the housing. It will then no longer be possible to pull the belt out again with the usual force.

– Using increased force, pull the belt out of the retractor approx. 10-15 mm, thus releasing the blocking mechanism.

– Allow the belt to retract slowly.

– Prevent the belt becoming dirty (for example, by covering).

Malfunctions due to cold

– Thaw a frozen buckle or retractor and dry the parts to prevent repeated freezing.

CAUTION

Risk of damage to components!

When thawing, do not subject the buckle or retractor to excessive heat.

– The temperature of the warm air should not exceed 60°C when thawing.

Checking function of brake system ▷

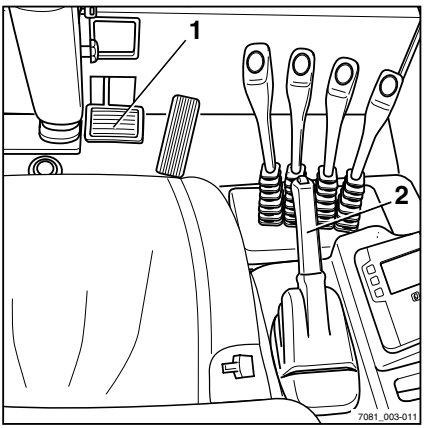

DANGER

Risk of accident!

Do not put forklift trucks with a defective brake system into service.

Checking foot brake

– Check pedal clearance.

The brake must have sufficient distance from the pressure point to the pedal stop.

– Accelerate empty truck in a clear area.

– Press the brake pedal (1) firmly.

Check brake for noticeable delay.

https://truckmanualshub.com/

Checking the parking brake

▷

– Check operation of parking brake (2) at walking speed or on a large gradient.

⚠ DANGER

Risk of accident!

During operation, the forklift truck must never be parked on slopes. In an emergency, secure the forklift truck by inserting chocks on the downhill side.

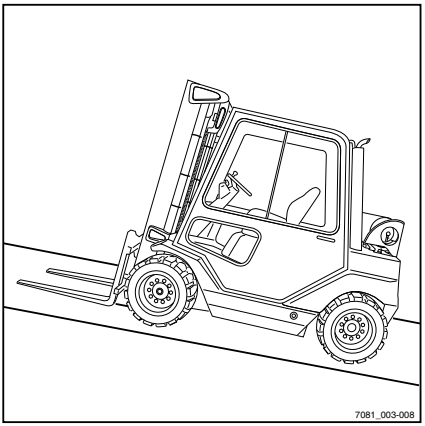

Checking function of steering system

▷

– Operate steering wheel (1). The play of the steering wheel while stationary may not be more than two finger widths.

⚠ DANGER

Risk of accident!

If the hydraulics malfunction, steering is stiff.

The forklift truck may not be operated with a defective steering system.

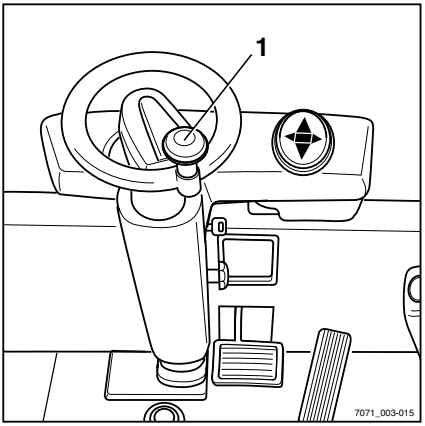

https://truckmanualshub.com/

Setting the traction programs

The driving and braking response of the drive can be set on the display and operating unit.

– Press the traction programme key (1) until the number of the desired traction programme appears on the (2) display.

Traction programs 1-5 are available.

The basic principle is that the higher the traction program number is, the greater the traction dynamics.

The following settings are possible:

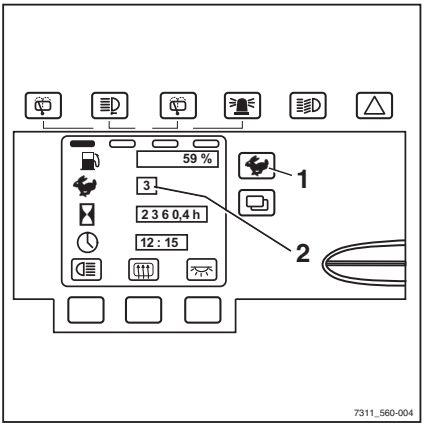

Traction program	1	2	3	4	5
Speed (km/h)	21	21	21	21	21
Acceleration (%) (forward / backward)	50	100	120	140	160
Deceleration (%) (forward / backward)	50	100	120	140	160
Reversing (%) (forward / backward)	50	100	120	140	160
Brake retardation (%) (electric brake booster)	80	90	100	100	100

https://truckmanualshub.com/

Driving

Safety regulations when driving

Driving conduct

The driver must observe public road traffic regulations when driving on company grounds.

Driving speed must be appropriate to the local conditions.

For example, the driver must drive slowly around corners, in tight passage ways, when driving through swing-doors, at blind spots or on uneven surfaces.

The driver must always maintain a safe braking distance from vehicles and persons in front and always have the vehicle under control. Sudden stopping, quick turning and overtaking at dangerous or blind spots must be avoided.

– Initial driving practice must be performed in an empty space or on a clear driving lane.

The following are forbidden during driving:

- Allowing arms and legs to hang out
- Leaning over the outer edge of the forklift truck
- Crossing from one vehicle to another or to fixed components
- Moving the driver seat
- Adjusting the steering column
- Releasing the restraining belt
- Disabling the restraint system
- Driving with the load raised impermissibly high
- Using mobile phones or radios.

⚠ WARNING

Risk of accident!

Use of mobile phones or radios in the vehicle is permitted.

However, these devices must not be used while driving or manipulating loads, since this affects your concentration.

The volume of radios or hands-free systems must be adapted to local conditions and must not affect your concentration.

https://truckmanualshub.com/

⚠ WARNING

In areas where use of mobile phones is prohibited, use of a mobile phones or radio telephones is generally not permitted.

– Turn off the devices.

Visibility when driving

The driver must look in the direction of travel and have a sufficient view of the driving lane.

Particularly when driving backwards, the driver must be sure that the driving lane is clear.

When transporting goods that impair visibility, the driver must drive the vehicle backwards.

If this is not possible, a second person acting as a guide must walk ahead of the vehicle.

Only drive at walking pace and always take extra care in such situations. The forklift truck must be stopped immediately if eye contact with the guide is lost.

Driving with the load raised unnecessarily high is not permitted.

Rear-view mirrors are only to be used for observing the road area behind the vehicle and not for driving backwards. If visual aids (mirror, monitor) are necessary to achieve sufficient visibility, their use most be carefully practised. When driving backwards using visual aids, extra care should be used.

When using attachments, special conditions apply, see ⇒ Chapter "Assembling attachments", P. 5-116.

In models with cabins, the windows must always be clean and free of ice.

https://truckmanualshub.com/

Driveways

Dimensions of the driveways and aisle widths

The following dimensions and aisle width requirements apply under the specified conditions to ensure safe manoeuvring. In each case, it should be checked whether a larger aisle width is necessary, e.g. with deviating load dimensions. Within the EU, there must be compliance with the 89/654/EEC directive (minimum safety and health requirements for the workplace). The respective national guidelines apply for areas outside of the EU.

The required aisle widths (Ast) depend on the dimensions of the load. For pallets, these are:

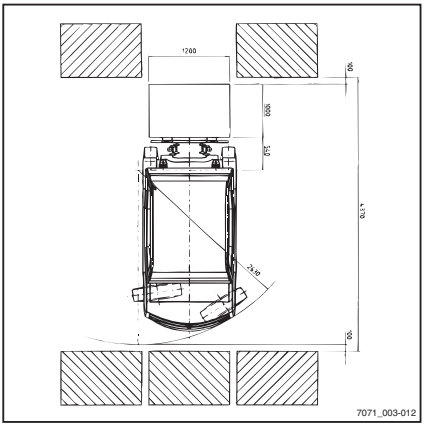

Aisle width (mm)	With pallet 1000x1200 crosswise	With pallet 800x1200 lengthwise
R70-40T	4418	4618
R70-45T	4470	4670
R70-50T	4510	4710

The forklift truck may only be used on driveways with curves that are not too tight, slopes that are not too steep, and thoroughfares that are not too narrow or low.

Driving on slopes

The truck may be driven on the following upwards or downwards slopes:

Max. gradient in %	With load	Without load
R70-40T	23.5	34
R70-45T	21.6	33
R70-50T	20	32

The upwards and downwards slopes may not exceed the gradient listed above and should have a rough surface.

Smooth and gradual transitions should be provided at the top and bottom of the gradient

https://truckmanualshub.com/

to avoid the load from falling on the floor or the forklift truck being damaged.

Condition of the driveways

Driveways must be made sufficiently firm, level and free of dirt and fallen objects. Compensation must be made for drainage channels, railway crossings and similar items; and if necessary, ramps must be provided, so that trucks can drive over them with as few bumps as possible.

Ensure sufficient load-bearing capacity of manhole/drain covers and the like.

There must be sufficient clearance between the highest points of the forklift truck or the load and the fixed points of the surroundings. The height is based on the overall height of the truck's lift mast and the dimensions of the load. Observe the technical data (see ⇒ Chapter "Technical data", P. 247).

Rules for driveways and the working area

Only those routes authorised for traffic by the operator (see ⇒ Chapter "Definition of terms used for responsible persons", P. 20) or his representative may be driven. The traffic routes must be free of obstacles. The load may only be set down and stored in the designated locations. The operator and his representative must ensure that unauthorised third parties keep away from the working area.

Dangerous locations

Dangerous locations on the driveways must be designated by the signs typical for traffic or, if necessary, by additional warning signs.

https://truckmanualshub.com/

Driving (single-pedal operation with multiple lever version)

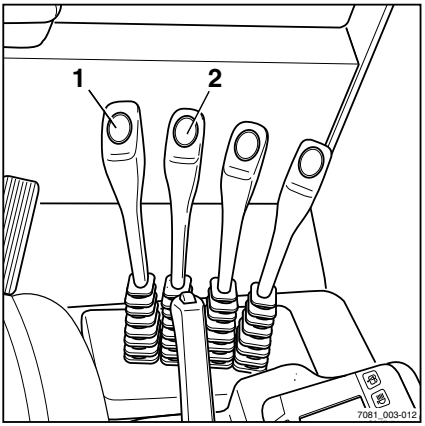

DANGER

Risk of accident!

– Operate the truck only from the driver's seat.

NOTE

Please take note of the safety regulations while driving; see ⇒ Chapter "Safety regulations when driving", P. 5-76.

– Sit on the driver's seat.

The driver's seat is equipped with a seat switch. If there is an operating error or malfunction, the message `SITZSCHALTER (SEAT SWITCH)` appears in the display and operating unit (see ⇒ Chapter "Message SITZSCHALTER (SEAT SWITCH)", P. 5-145.

– Fasten the safety belt.

The buckle has a buckle switch (special equipment). If there is an operating error or malfunction, the message `SICHERHEITSGURT (SAFETY BELT)` appears in the display and operating unit; see ⇒ Chapter "SAFETY BELT message", P. 5-142.

– Pull the "raise–lower"(1) operating lever backward and raise the fork carriage until the necessary ground clearance has been reached.

– Pull the "tilt" operating lever (2) backward, thereby tilting the mast backward.

– Do not accept any load yet!

https://truckmanualshub.com/

Travel direction switch

– Using the direction switch (5), select the desired direction of travel.

The appropriate arrow for the selected direction of travel lights up on the travel direction/flasher/fault multi-function display (4).

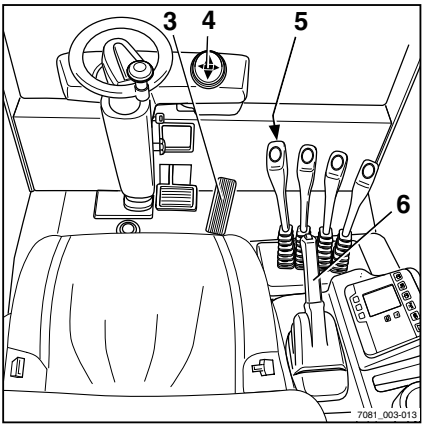

NOTE

When the seat is vacated, the travel direction switch is set to neutral.

Forwards travel

– Release the parking brake (6).

– Toggle the direction switch (5) downward.

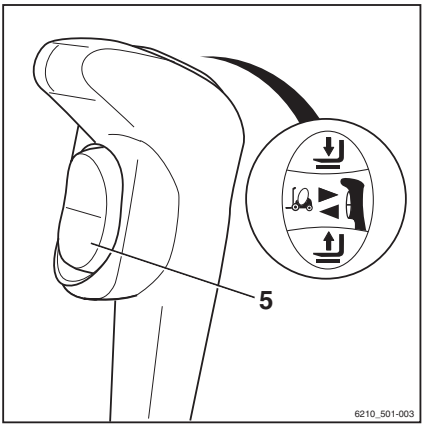

The arrow for forward travel (4) lights up.

– Depress the accelerator pedal (3).

The forklift truck moves forwards. The speed is controlled by the accelerator pedal position. Upon releasing the accelerator pedal, the truck brakes electrically. On a gradient the truck creeps downhill slowly after a stop.

DANGER

Risk of accident! Trucks with zero braking (special equipment) do not have an electrical braking function!

– Use the footbrake to slow the truck.

NOTE

You can stop the truck on ascending and descending slopes briefly without actuating the parking brake (6) (electric brake). The truck begins to creep downhill slowly.

DANGER

Risk of accident!

This electric brake only functions while the key switch is switched on and the parking brake is released. Press the brake pedal!

– Do not leave the truck without applying the parking brake!

https://truckmanualshub.com/

Reverse travel

▷

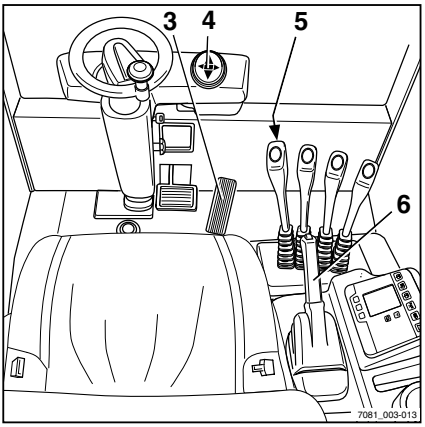

– Release the parking brake (6).

– Toggle the direction switch (5) upward.

The arrow for reverse travel (4) lights up.

NOTE

At the same time, an acoustic signal sounds (special equipment) as a warning or the back-up light and the front headlights light up (only if there is a lighting system (special equipment) in accordance with StVZO — the Road Traffic Licensing Regulations).

– Depress the accelerator pedal (3).

The forklift truck travels backwards. The speed is controlled by the accelerator pedal position. Upon releasing the accelerator pedal, the truck brakes electrically. On a gradient the truck creeps downhill slowly after a stop.

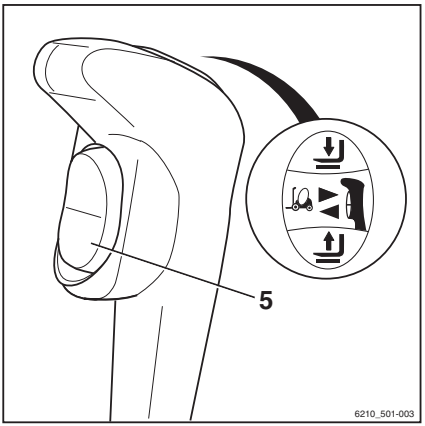

DANGER

Risk of accident! Trucks with zero braking (special equipment) do not have an electrical braking function!

– Use the footbrake to slow the truck.

NOTE

You can stop the truck on ascending and descending slopes briefly without actuating the parking brake (6) (electric brake). The truck begins to creep downhill slowly.

DANGER

Risk of accident!

This electric brake only functions while the key switch is switched on and the parking brake is released. Press the brake pedal!

– Do not leave the truck without applying the parking brake!

https://truckmanualshub.com/

Changing direction of travel

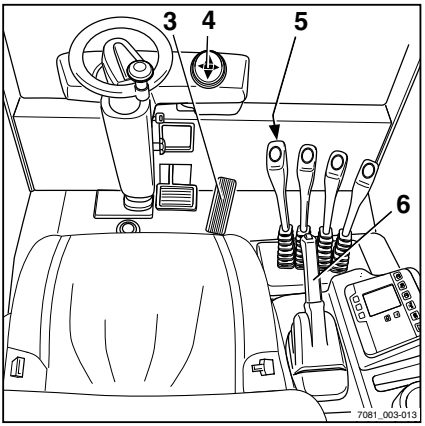

NOTE

You can also change the direction of travel whilst driving. Your foot can remain on the accelerator pedal. The truck is then braked and accelerated again in the opposite direction (reversing).

- Take your foot off the accelerator pedal (3).
- Operate the travel direction switch (5) to select the opposite direction (up for reverse, down for forwards).
- Depress the accelerator pedal (3) again.

Neutral position

- To switch to the neutral position, tap the direction switch (5) briefly for the opposite direction (up for reverse, down for forwards).

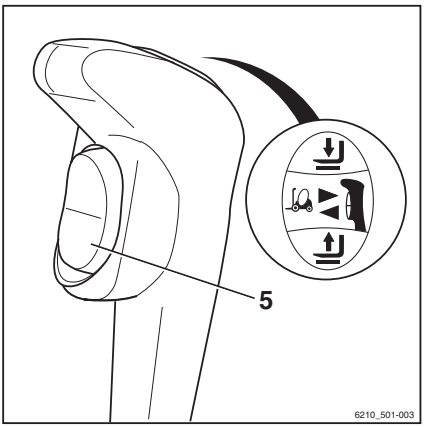

https://truckmanualshub.com/

Driving (single-pedal operation with version including mini-console)

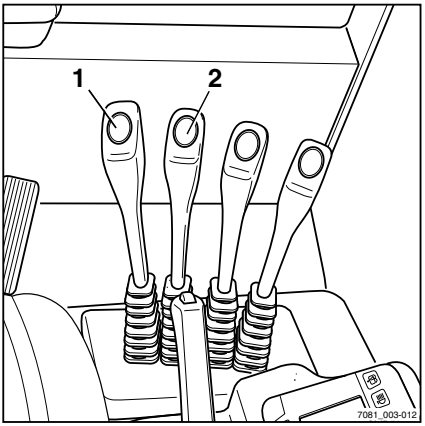

DANGER

Risk of accident!

– Operate the truck only from the driver's seat.

NOTE

Please take note of the safety regulations while driving, see ⇒ Chapter "Safety regulations when driving", P. 5-76.

– Sit on the driver's seat.

The driver's seat is equipped with a seat switch. If there is an operating error or malfunction, the message `SITZSCHALTER (SEAT SWITCH)` appears in the display and operating unit (see ⇒ Chapter "Message SITZSCHALTER (SEAT SWITCH)", P. 5-145.

– Fasten the safety belt.

The buckle has a buckle switch (special equipment). If there is an operating error or malfunction, the message `SICHERHEITSGURT (SAFETY BELT)` appears in the display and operating unit (see ⇒ Chapter "SAFETY BELT message", P. 5-142.

– Pull the "raise–lower" operating lever (1) backward and raise the fork carriage until the necessary ground clearance has been reached.

– Pull the "tilt" operating lever (2) backward, thereby tilting the mast backward.

– Do not accept any load yet!

https://truckmanualshub.com/

Travel direction switch

– Using the direction switch (5), select the desired direction of travel.

The appropriate arrow for the selected direction of travel lights up on the travel direction/flasher/fault multi-function display (4).

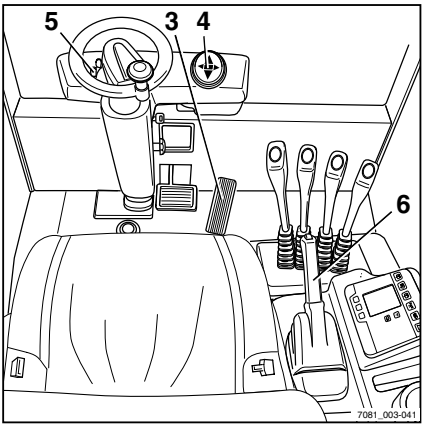

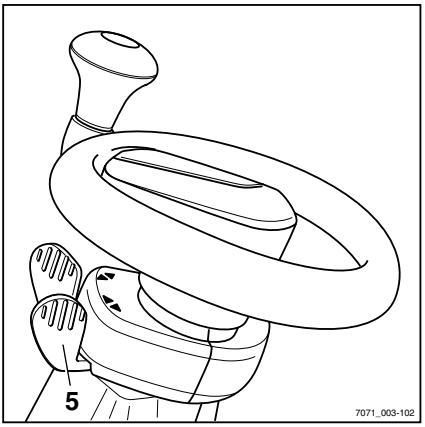

NOTE

When the seat is vacated, the travel direction switch is set to neutral.

Forwards travel

– Release the parking brake (6).

– Press the direction switch (5) forward.

The arrow for forward travel (4) lights up.

– Depress the accelerator pedal (3).

The forklift truck moves forwards. The speed is controlled by the accelerator pedal position. When releasing the accelerator pedal, the forklift truck decelerates. On a gradient the truck creeps downhill slowly after a stop.

DANGER

Risk of accident! Trucks with zero braking (special equipment) do not have an electrical braking function!

– Use the footbrake to slow the truck.

NOTE

You can stop the truck on ascending and descending slopes briefly without actuating the parking brake (6) (electric brake). The truck begins to creep downhill slowly.

DANGER

Risk of accident!

This electric brake only functions while the key switch is switched on and the parking brake is released. Press the brake pedal!

– Do not leave the truck without applying the parking brake!

https://truckmanualshub.com/

Reverse travel

▷

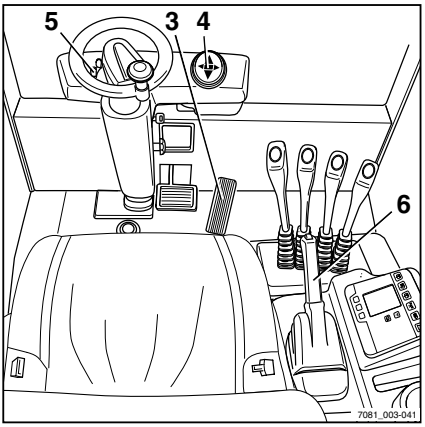

– Release the parking brake (6).

– Press the direction switch (5) backward.

The arrow for reverse travel (4) lights up.

NOTE

At the same time, an acoustic signal sounds (special equipment) as a warning or the back-up light and the front headlights light up (only if there is a lighting system (special equipment) in accordance with StVZO — the Road Traffic Licensing Regulations).

– Depress the accelerator pedal (3).

The forklift truck travels backwards. The speed is controlled by the accelerator pedal position. When releasing the accelerator pedal, the forklift truck decelerates. On a gradient the truck creeps downhill slowly after a stop.

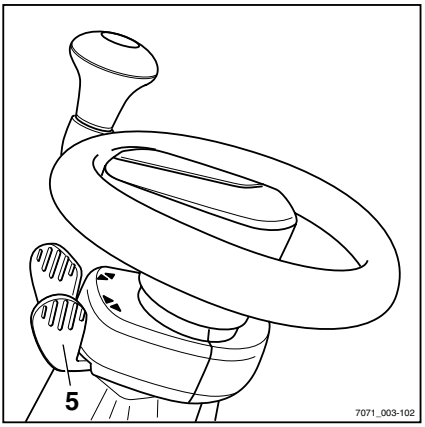

DANGER

Risk of accident! Trucks with zero braking (special equipment) do not have an electrical braking function!

– Use the footbrake to slow the truck.

NOTE

You can stop the truck on ascending and descending slopes briefly without actuating the parking brake (6) (electric brake). The truck begins to creep downhill slowly.

DANGER

Risk of accident!

This electric brake only functions while the key switch is switched on and the parking brake is released. Press the brake pedal!

– Do not leave the truck without applying the parking brake!

https://truckmanualshub.com/

Changing direction of travel

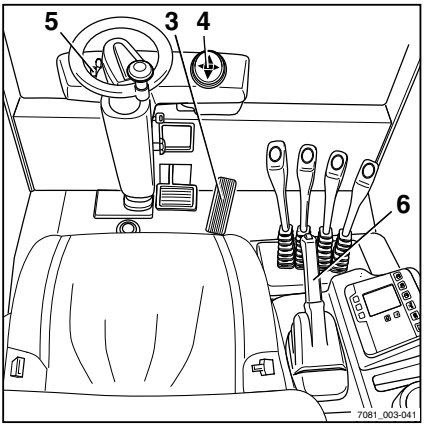

NOTE

You can also change the direction of travel whilst driving. Your foot can remain on the accelerator pedal. The truck is then braked and accelerated again in the opposite direction (reversing).

- Take your foot off the accelerator pedal (3).
- Press the direction switch (5) for the opposite direction of travel (backwards to reverse and forwards to move forwards).
- Depress the accelerator pedal (3) again.

Neutral position

- To switch to the neutral position, tap the direction switch (5) briefly for the opposite direction of travel (backwards to reverse and forwards to move forwards).

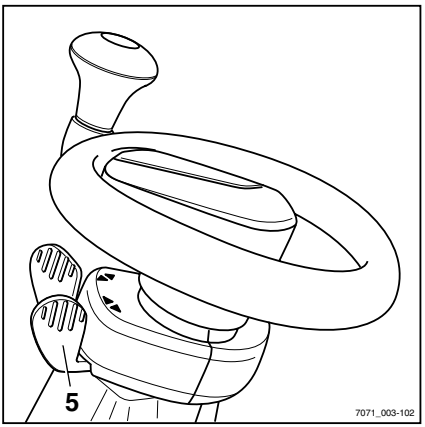

https://truckmanualshub.com/

Driving (two-pedal operation)

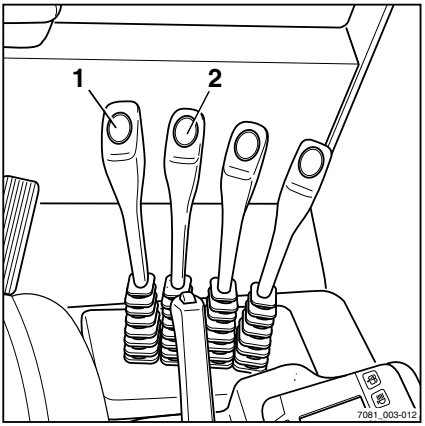

DANGER

Risk of accident!

– Operate the truck only from the driver's seat.

NOTE

Please take note of the safety regulations while driving; see ⇒ Chapter "Safety regulations when driving", P. 5-76.

– Sit on the driver's seat.

The driver's seat is equipped with a seat switch. If there is an operating error or malfunction, the message `SITZSCHALTER (SEAT SWITCH)` appears in the display and operating unit (see ⇒ Chapter "Message SITZSCHALTER (SEAT SWITCH)", P. 5-145.

– Fasten the safety belt.

The buckle has a buckle switch (special equipment). If there is an operating error or malfunction, the message `SICHERHEITSGURT (SAFETY BELT)` appears in the display and operating unit (see ⇒ Chapter "SAFETY BELT message", P. 5-142.

– Pull the "raise–lower"(1) operating lever backward and raise the fork carriage until the necessary ground clearance has been reached.

– Pull the "tilt" operating lever (2) backward, thereby tilting the mast backward.

– Do not accept any load yet!

https://truckmanualshub.com/

Forwards travel

▷ 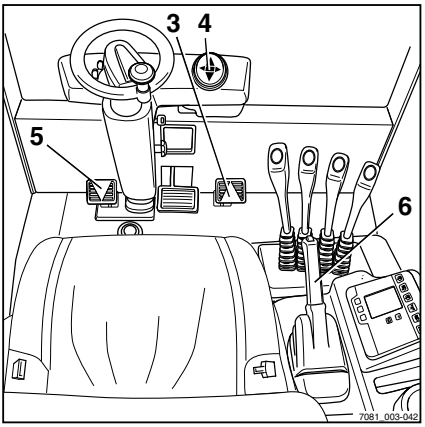

– Release the parking brake (6).

– Depress the accelerator pedal (3).

The arrow for forward travel (4) lights up.

The forklift truck moves forwards. The speed is controlled by the accelerator pedal position. When releasing the accelerator pedal, the forklift truck decelerates. On a gradient the truck creeps downhill slowly after a stop.

⚠ DANGER

Risk of accident! Trucks with zero braking (special equipment) do not have an electrical braking function!

– Use the footbrake to slow the truck.

NOTE

You can stop the truck on ascending and descending slopes briefly without actuating the parking brake (6) (electric brake). The truck begins to creep downhill slowly.

⚠ DANGER

Risk of accident!

This electric brake only functions while the key switch is switched on and the parking brake is released. Press the brake pedal!

– Do not leave the truck without applying the parking brake!

Reverse travel

– Release the parking brake (6).

– Depress the accelerator pedal (5).

The arrow for reverse travel (4) lights up.

NOTE

At the same time, an acoustic signal sounds (special equipment) as a warning or the back-up light and the front headlights light up (only if there is a lighting system (special equipment) in accordance with StVZO — the Road Traffic Licensing Regulations).

The forklift truck travels backwards. The speed is controlled by the accelerator pedal

https://truckmanualshub.com/

position. When releasing the accelerator pedal, the forklift truck decelerates. On a gradient the truck creeps downhill slowly after a stop.

DANGER

Risk of accident! Trucks with zero braking (special equipment) do not have an electrical braking function!

– Use the footbrake to slow the truck.

NOTE

You can stop the truck on ascending and descending slopes briefly without actuating the parking brake (6) (electric brake). The truck begins to creep downhill slowly.

DANGER

Risk of accident!

This electric brake only functions while the key switch is switched on and the parking brake is released. Press the brake pedal!

– Do not leave the truck without applying the parking brake!

Changing direction of travel

▷

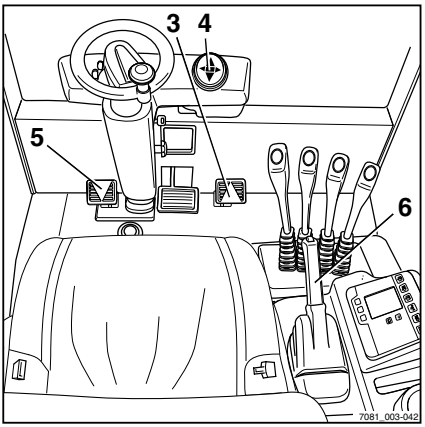

– Take your foot off the accelerator pedal (3) or (5).

– Depress the accelerator pedal for the opposite direction of travel (3) or (5).

The corresponding arrow (4) lights up.

https://truckmanualshub.com/

Service brake

DANGER

Risk of accident!

Always choose a driving speed that will provide a sufficient stopping distance. Note that the pure braking distance increases at the square of the speed, and that sharp braking can cause the drive wheels to skid and the truck to tip over.

The truck's braking distance is influenced by the quality of the floor surface. A wet surface increases the braking distance. The driver must take account of this in his driving and braking style.

Electric brake function

The electric brake converts the acceleration energy of the truck into electrical energy. This causes the truck to slow.

Zero braking

DANGER

Risk of accident! Trucks with zero braking (special equipment) do not have an electrical braking function!

– Use the footbrake to slow the truck.

If your truck features zero braking (special equipment), the electric brake function is disabled.

In this case, the truck can be slowed only by means of the mechanical brake through use of the footbrake. Taking your foot off the accelerator pedal does not slow the truck.

https://truckmanualshub.com/

Operating the service brake

– Slow the truck by taking your foot off the accelerator pedal (2).

– If the resultant braking action is not sufficient, use the footbrake (1) as well.

In the first section of the pedal's travel, only the electric brake takes effect; as the pedal is depressed further, the mechanical brake is activated and acts on the drive wheels.

DANGER

Risk of accident!

If the service brake fails, the truck must be brought to a stop by operating the parking brake.

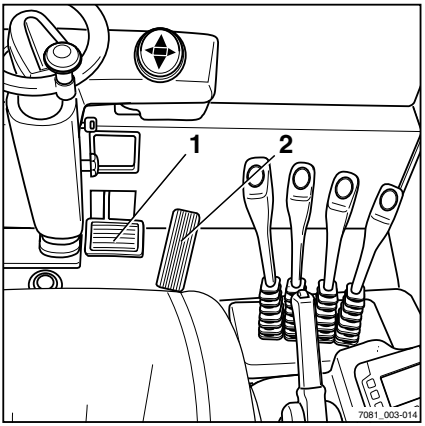

https://truckmanualshub.com/

Operating the parking brake

▷

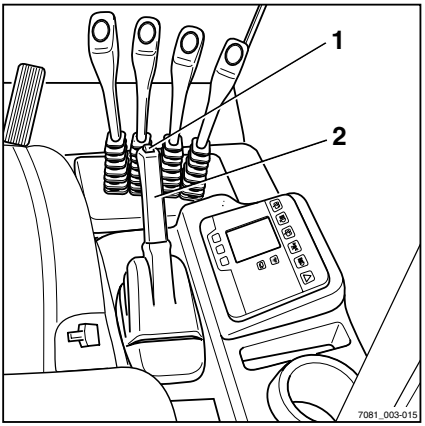

– To park the vehicle, pull the parking brake lever (2) up and let it engage.

⚠ WARNING

Risk of accident!

If the parking brake is not applied, the truck can roll away.

It can no longer be driven. The travel direction/flasher/message multi-function display (3) goes out.

⚠ DANGER

The truck should not be parked on a slope.

– Secure the truck in an emergency by placing chocks on the downhill side.

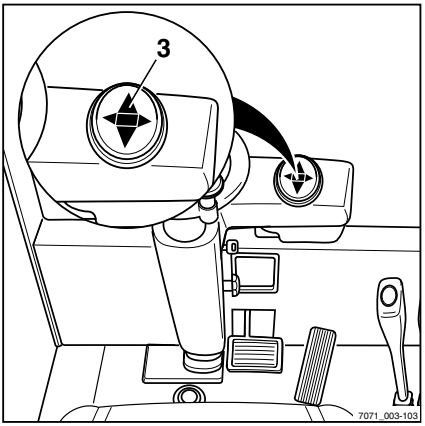

– To release the parking brake, press button (1) and lower the lever completely.

NOTE

Once released, the travel direction previously selected is retained and is shown on the travel direction/flasher/message multi-function display (3).

NOTE

If you operate the accelerator pedal while the parking brake is applied, the message `FESTSTELLBREMSE (PARKING BRAKE)` *appears on the display.*

https://truckmanualshub.com/

Steering

– Steer the vehicle by turning the steering wheel (1) accordingly.

For turning radius information, see ⇒ Chapter "Technical data", P. 247.

WARNING

Risk of accident!

If the hydraulics fail, steering is tight (emergency steering property).

▷

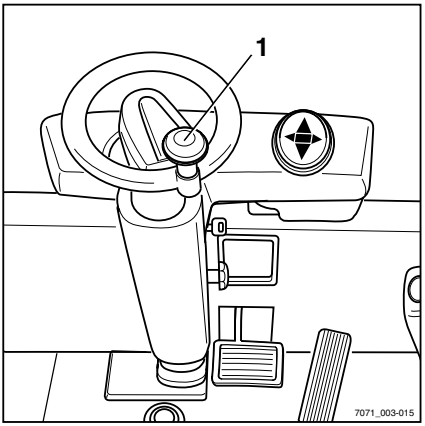

https://truckmanualshub.com/

Lifting

Lifting system variants

Lifting operations are largely dependent on the following factors:

- The mast with which your truck is equipped. See ⇒ Chapter "Lift mast versions", P. 5-95.
- The lifting system with which your truck is equipped. See ⇒ Chapter "Controls, lifting system", P. 5-98.

Regardless of the individual equipment of your forklift truck, the basic specifications and procedures are to be complied with. See ⇒ Chapter "Safety regulations when handling loads", P. 5-102.

Lift mast versions

The following lift masts may be installed in your truck:

Telescopic mast

When moving the "lift-lower" operating lever backwards, the mast rises via two outer cylinders and brings the fork carriage with it via the chains (the fork carriage rises at twice the speed of the inner mast).

⚠ DANGER

Risk of accident!

With low ceilings, be aware that the inner mast lift (1) can be higher than the fork carriage.

▷

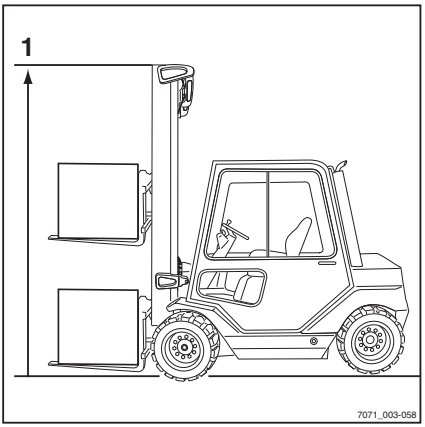

https://truckmanualshub.com/

Triplex mast (special equipment)

When the "lift-lower" operating lever is moved backwards, the inner cylinder moves up to (3)free lift, and then the outer cylinders directly raise the inner mast up to the max. (2)height.

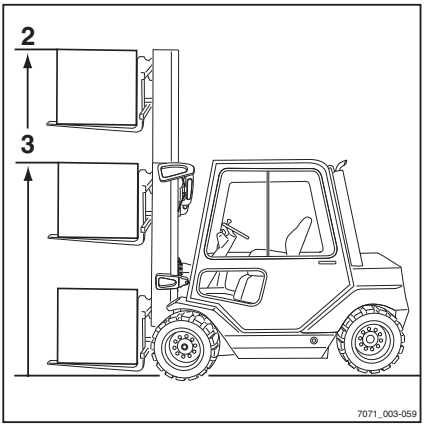

NOTE

When raising above the free lift, the fork carriage always remains at the upper edge of the extending mast tip.

DANGER

Risk of accident!

With low ceilings, be aware that the carried load can project over the fork carriage. The fork carriage can be higher than the load.

Malfunction during a lifting operation

Incorrect extension sequence

DANGER

Risk of accident!

In the case of triple masts (special equipment), an incorrect extension sequence can occur, i.e. the inner mast extends before the free lift is complete. As a result, the overall height is exceeded and damage may occur with passageways or low ceilings.

An incorrect extension sequence may, for instance, result from:

- The hydraulic oil temperature being too low.
- Blocking of the fork carriage in the inner mast.
- Blocking of the free lift cylinder.
- Blocking of the chain roller for the free lift cylinder.

– If the hydraulic oil temperature is too low, slowly actuate the mast functions several times in order to raise the oil temperature.

In the event that the fork carriage in the inner mast, the free lift cylinder or the chain roller for the free lift cylinder is blocked, the cause of the blocking must be eliminated before you can continue with work.

https://truckmanualshub.com/

– Notify the service centre.

Load chains not under tension

DANGER

There is a danger that the load could suddenly fall.

– Make sure that the chain(s) does (do) not become slack when lowering the load.

Slack chains can, for instance, result from:

- Resting the fork carriage or the load on the racking.
- Fork carriage rollers blocking in the lift mast due to dirt.

– If the fork carriage or the load comes to an unexpected stop, raise the fork carriage until the chains are under tension again and lower the load at some other suitable location.

– If the fork carriage rollers in the lift mast become blocked because of dirt, raise the fork carriage until the chains are under tension again. Remove the dirt before proceeding with work.

WARNING

Risk of injury!

– Heed the safety instructions for working on the lift mast, see ⇒ Chapter "Working at the front of the forklift truck", P. 6-192.

https://truckmanualshub.com/

Controls, lifting system

Operation of the lifting system depends on which controls the forklift truck is equipped with.

Possible equipment variations are as follows:

- Multi-lever controls (1) and (2).

– The following information must be observed regardless of the equipment variation:

DANGER

Risk of accident!

The lifting system must only be operated when the driver seat is occupied.

WARNING

Risk of injury!

The safety guidelines ""Before taking up load"" should be observed exactly ⇒ Chapter "Prior to taking up a load", P. 5-103. Reaching or climbing into moving parts of the fork lift truck (e.g. lift mast, sideshifts, working equipment, load bearing systems etc.) is prohibited.

▷

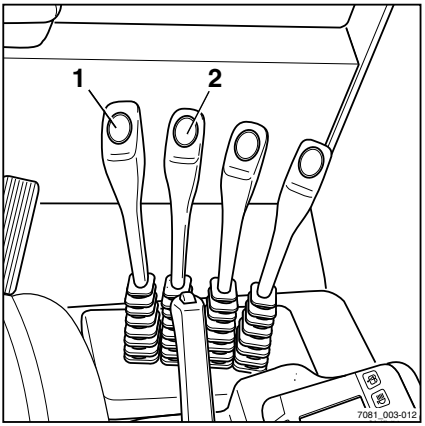

https://truckmanualshub.com/

Lifting system, multi-lever operation ▷

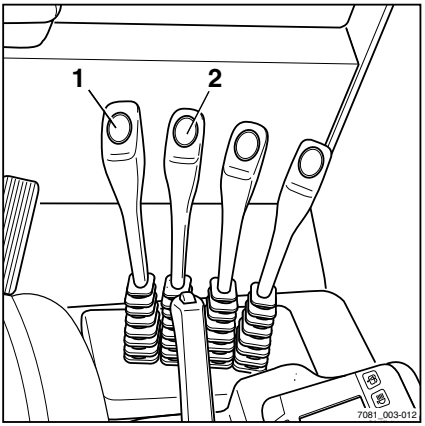

Tilt mast

To tilt mast forward:

– Push "Tilt"(2) operating lever forward.

To tilt mast backwards:

– Pull back "Tilt" operating lever (2).

Lift, lower fork carriage

To raise fork carriage:

– Pull back the "Lift-Lower" operating lever (1).

To lower the fork carriage:

– Push forward the "Lift-Lower" operating lever(1).

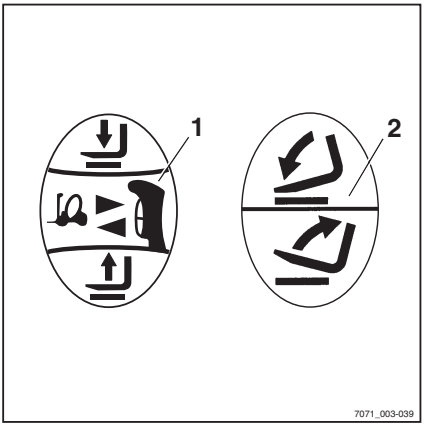

NOTE

The symbols on the levers show the movement direction of the mast when the lever is pulled or pushed.

https://truckmanualshub.com/

Fork extension

– Slide the fork extension (1) (special equipment) onto the fork arms and secure it with the socket pins (2).

⚠ WARNING

The fork extension affects the stability of the forklift truck.

The weights allowed according to the capacity rating plate must thus be reduced in relation to the actual load distance; see ⇒ Chapter "Prior to taking up a load", P. 5-103.

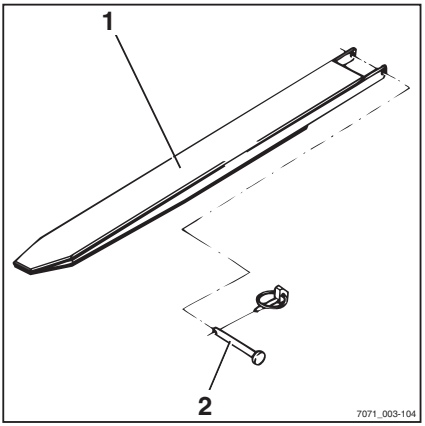

Operation with reversible forks

Normal operation

Like a normal fork, the reversible fork arms (special equipment) can be lifted and tilted with the mast.

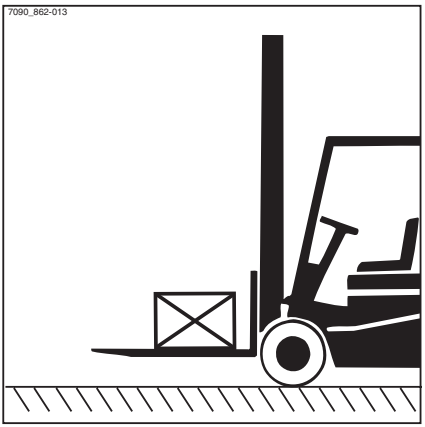

https://truckmanualshub.com/

Reverse operation

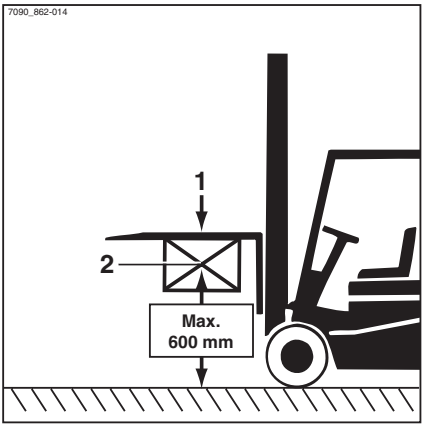

CAUTION

Loads cannot be lifted up on the fork arms due to the missing(1)load support.

When driving, the centre of gravity of the load may not be(2)higher than 600 mm above the ground. The fork extension (special equipment) may not be used.

WARNING

Risk of accident!

Reverse operation is not permitted with the standard fork arms.

NOTE

Conduct annual checks for cracks on the outside of the fork bend; see ⇒ Chapter "Checking reversible fork arms", P. 6-234.

https://truckmanualshub.com/

Working with loads

Safety regulations when handling loads

The safety regulations for handling loads are shown in the following sections.

DANGER

Risk to life!

The operating hydraulics may only be operated from the driver's compartment.

Never walk or stand underneath suspended loads or raised fork arms.

Never exceed the maximum load indicated on the capacity rating plate. Otherwise stability cannot be guaranteed!

DANGER

Risk of accident!

Do not step onto the forks. Do not lift people.

Never grab or climb on moving parts of the forklift truck.

DANGER

Risk of accident!

– When transporting small items, attach a safety guard (special equipment) to prevent the load from falling on the driver.

A closed roof covering (special equipment) should also be used.

7311_001-001

7311_001-002

https://truckmanualshub.com/

Prior to taking up a load

Load capacity

The load capacity specified for the forklift truck may not be exceeded. It is affected by the load centre of gravity and the lift height and possibly the tyres. Observe the capacity plate to the right of the driver's compartment. Including additional weights to increase the load capacity is forbidden.

DANGER

Risk to life

Never exceed the maximum loads indicated there! These apply for compact and homogenous loads. Otherwise the stability and strength of the fork arms and lift mast are not ensured. Improper or false operation or the boarding of persons to increase the load capacity is forbidden.

(1) Distance "C" of load centre from fork back (mm)

(2) Lift height "h" (in mm)

(3) Maximum loads "Q" (in kg)

Example:

Weight of the load to be lifted: 2220 kg (3)

Load distance from the fork back: 600 mm (1)

Permissible lift height: 6030 mm (2)

WARNING

The diagrams show examples. Only the capacity plates in the vehicle are valid!

WARNING

In the case of attachments (special equipment): do not exceed the permissible load of the attachments and the reduced load capacity of the combination of forklift truck and attachment. Observe the special capacity plate information specified on the forklift truck and attachment. Observe the capacity plate for attachments. The data on the plate is explained in the example above.

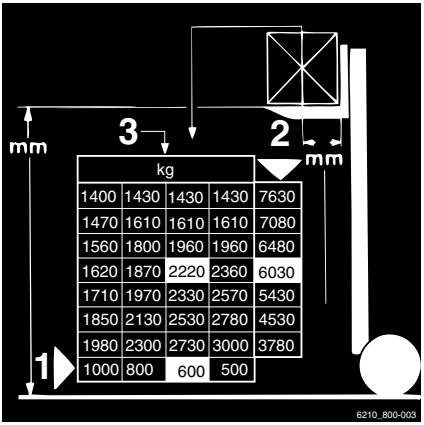

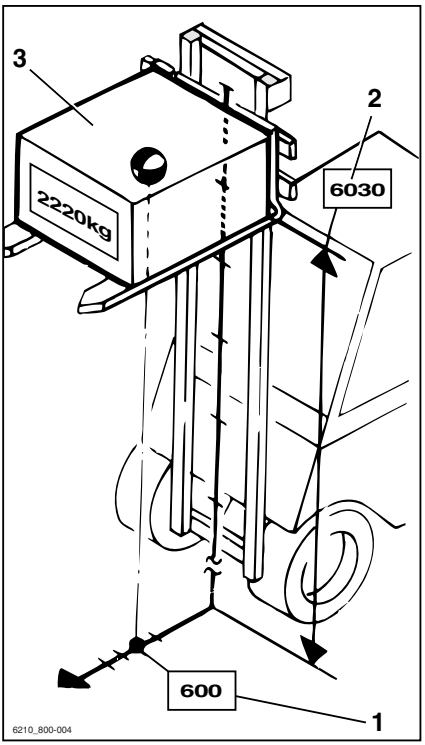

https://truckmanualshub.com/

Carrying loading units

To ensure secure supporting of the load, it must be ensured that the fork arms are sufficiently far apart and are positioned as far as possible under the load.

If possible, the load should rest on the back of the fork.

The load may not protrude significantly beyond the fork tips and vice versa.

Loads are to be carried and transported as close to the middle as possible.

⚠ DANGER

Risk of accident!

When transporting small items, attach a safety guard (special equipment) to prevent the load from falling on the driver.

A closed roof covering (special equipment) should also be used.

Removable roof segments may not be removed.

Setting forks

▷

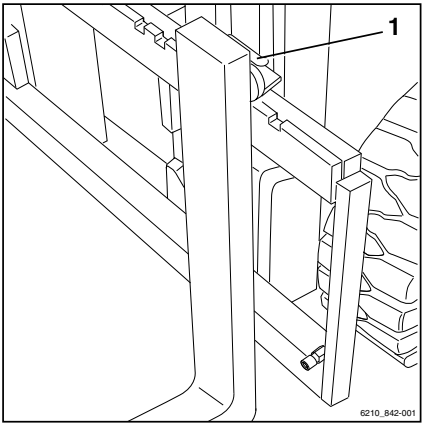

- Lift stopping lever (1) and move the fork arms to the desired position.
- Allow the stopping lever to snap back into place.

The centre of gravity of the load must be positioned between the fork arms in the middle.

- Only operate the fork arm adjustment (special equipment) when the forks are not loaded.

Hazard area

The hazard area is the area where persons are endangered by movements of the forklift truck, its working equipment, its load-carrying equipment (e.g. attachments) or the load. Included in this area is also the area which can be affected by a falling load, or by lowering or falling working equipment.

https://truckmanualshub.com/

WARNING

Risk of injury

The forks must not be stepped on.

WARNING

Risk of injury

Do not step under the raised forks.

WARNING

People can be injured in the hazard area of the forklift truck.

No persons should be in the hazard area of the forklift truck, except the driver in his normal operating position. Stop work with the forklift truck immediately and secure the forklift truck against unintentional use by unauthorised persons if persons do not leave the hazard area despite being warned.

DANGER

Risk to life from falling loads!

Never walk or stand underneath overhead loads.

Transporting pallets

Loading units (e.g. pallets) are generally to be transported individually. Simultaneous transport of several loading units is only allowed

- when instructed by the supervisor and
- when the technical requirements have been met.

The driver must ensure proper condition of the loading unit. Only safely and carefully positioned loading units may be transported.

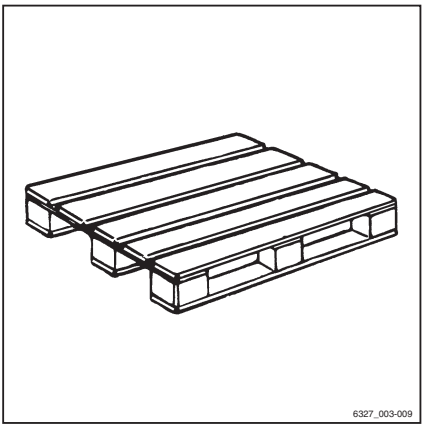

https://truckmanualshub.com/

Transport of swinging loads

Contact your national regulatory authorities (trade associations in Germany) prior to transporting swinging loads.

National regulations may place restrictions on these operations. Please contact the authority responsible.

DANGER

Swinging loads can result in the following risks:

- Reduced braking and steering action,
- Tipping over the wheels or drive wheels,
- Tipping of the truck transverse to the direction of travel,
- Risk of crushing of guide persons,
- Reduced visibility.

DANGER

Loss of stability due to slipped, unstable or, in particular, hanging loads!

The following information should be noted when transporting hanging loads:

- Swinging of the load is to be prevented by using the proper driving speed and driving manner (careful steering, braking).
- Hanging loads can only be coupled to the industrial truck so that the load-securing device cannot shift or release unintentionally and cannot be damaged.
- Ensure that there are no persons in the direction of travel in the driving lane.
- Ensure that swinging loads do not put persons at risk.
- When transporting hanging loads, suitable devices (e.g. guy wires or hand rails) are to be made available and used by guide persons.

https://truckmanualshub.com/

DANGER

Risk of accident!

When transporting hanging loads, never abruptly perform or end driving and load movements during transport.

Never drive on slopes with a hanging load!

Containers with fluids cannot be transported as hanging loads.

Taking up loads

– Only store pallets whose dimensions do not exceed the specified maximum size.

Damaged loading equipment and improperly formed loading units may not be put into storage.

– Place the load on the loading equipment or secure the load on the loading equipment in such a manner that the load cannot shift or drop off.

– The loading units should be stored so that the defined aisle width is not reduced by protruding parts.

– Drive forwards slowly towards the racking, brake gradually and stop just in front of the racking.

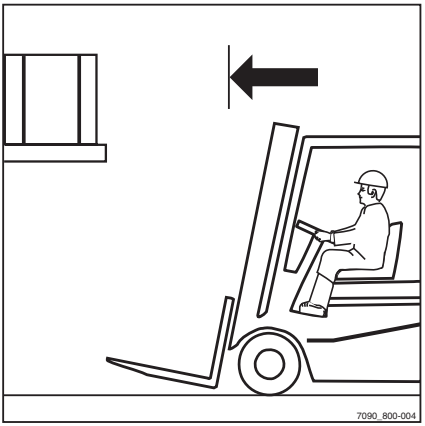

https://truckmanualshub.com/

– Position the fork arms.

– Place the mast in a vertical position.

– Raise the fork carriage to the stack height.

▷

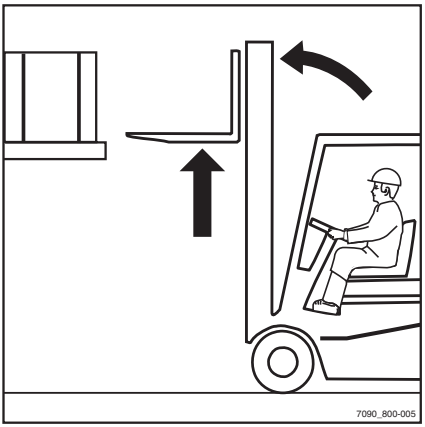

DANGER

Risk of accident!

– When the mast is tilted forward, make sure that the forklift truck does not tilt forward and that the load does not slip.

If a truck with increased forward tilt (special equipment) (greater than 3°) is in use, a greater risk of slipping can be assumed during raising or lowering of the load.

– Drive further forwards slowly.

CAUTION

Risk of component damage!

Do not damage the racking and load when inserting the forks.

– Insert the forks under the load as far as possible. Stop the truck as soon as the fork backs contact the load.

The centre of gravity of the load must be positioned between the fork arms in the middle.

– Raise the fork carriage until the load rests freely on the forks.

▷

https://truckmanualshub.com/

– Back out.

▷ 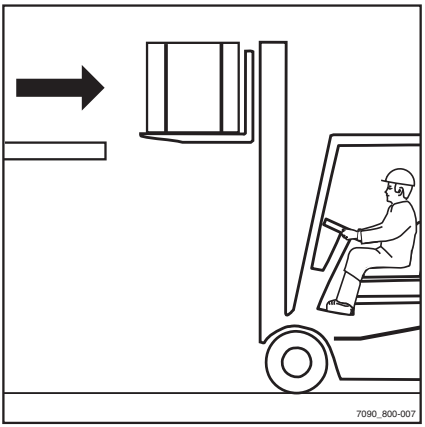

⚠ CAUTION

Risk of component damage!

– Watch behind you for a clear pathway.

– Drive backward carefully and slowly until the load has cleared the racking. Apply the brakes gradually.

– Tilt the mast back.

▷ 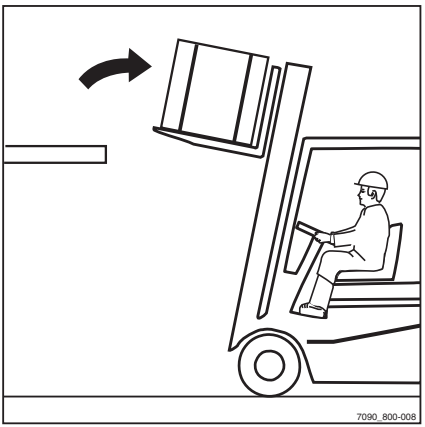

https://truckmanualshub.com/

– Lower the load and maintain appropriate ground clearance.

Now you can drive away.

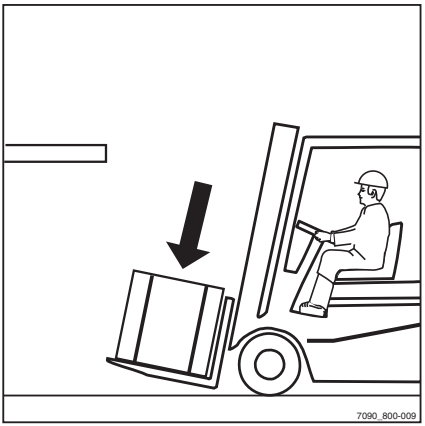

Transporting loads

WARNING

Risk of accident! As the height at which a load is transported increases, the stability decreases.

– Always drive with the load lowered.
– Lower the load until ground clearance is reached (not more than 300 mm).

The load should not be high enough to block the front view. Otherwise, drive backwards. If this is not possible, a second person acting as a guide must walk beside the truck. Only drive at walking speed taking extra care. Stop the truck immediately if contact with the guide is lost.

When using attachments, special conditions apply, see ⇒ Chapter "Assembling attachments", P. 5-116.

DANGER

The truck can tip over or the load can fall.

Driving with the mast tilted forward is not permitted.

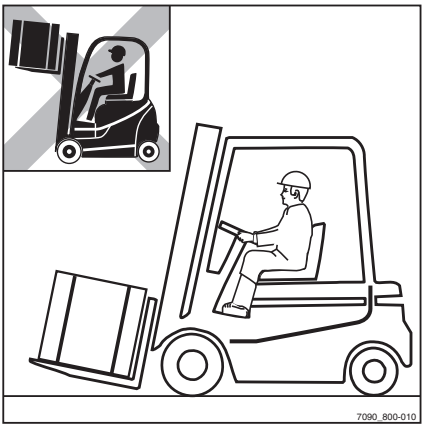

https://truckmanualshub.com/

– Only drive with the mast tilted back.

▷

– Drive slowly and carefully around sharp corners!
– Always accelerate and brake gradually!

▷

⚠ DANGER

Risk of accident!

Do not start quickly, do not apply brake fully!

https://truckmanualshub.com/

– Never drive with a laterally protruding load! ▷
(e.g. with a sideshift or sideshift device)!

https://truckmanualshub.com/

Depositing and retrieving loading units

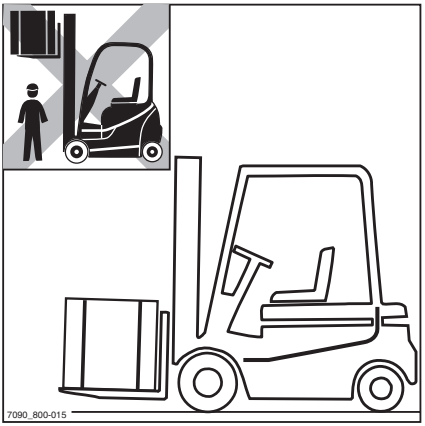

- Drive up to the stack with the load lowered in accordance with operating instructions.
- Place the lift mast in a vertical position.

WARNING

Risk of accident!

If your forklift truck is equipped with greater forward tilt (special equipment) (over 3°), the load can slip or the forklift truck can tip over.

- Lift the load to the stack height.

WARNING

Risk of accident!

Tilt the mast forward with raised load-carrying equipment only when it is directly over the stack.

- Carefully drive the truck forward into the stack.
- Lower the load until it is resting safety on the racking.
- Look behind you!
- Back the truck away until you can lower the fork arms without touching the stack.
- Lower the fork arms to the ground clearance position.
- Tilt the mast backward and drive away.

WARNING

Risk of accident!

- When retrieving a load, back away until you can lower the load and fork arms freely.

https://truckmanualshub.com/

Driving on ascending and descending slopes

DANGER

Risk to life!

On ascending and descending slopes the load must be carried facing uphill.

Only those ascending and descending slopes which are marked as traffic routes may be used and can safely be used in accordance with the technical data for this forklift truck, see ⇒ Chapter "Technical data", P. 247.

The driver must check that the ground is clean with a good grip.

It is not permitted to perform turns on ascending slopes, to approach them diagonally or to park the truck on them.

Drive at a reduced speed on descending slopes.

Putting items into storage and removing them from storage while on an ascending or descending slope is not permitted.

The truck should not be parked on a slope.

– In case of emergency, secure the truck with chocks.

Driving on lifts

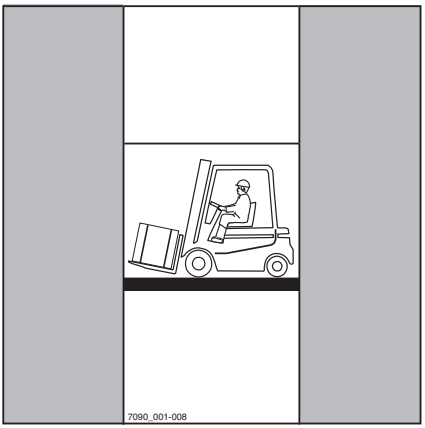

For this truck, the driver may only use lifts with a sufficient lifting capacity and for which the operator (see ⇒ Chapter "Definition of terms used for responsible persons", P. 20) has authorisation for use.

– Drive the forklift truck with the load forwards into the lift without touching the shaft walls.

– Secure the truck in the lift so that no part comes into contact with the shaft wall.

The distance from the shaft wall must be at least 100 mm.

DANGER

Risk of accident!

Personnel accompanying the truck onto the lift are only allowed to occupy the lift once the forklift truck is secure and must exit the lift first after the trip.

The maximum weight of the forklift truck (tare weight with maximum load):

https://truckmanualshub.com/

R70-40T	approx. 10,500 kg
R70-45T	approx. 11,500 kg
R70-50T	approx. 12,100 kg

Driving on loading bridges

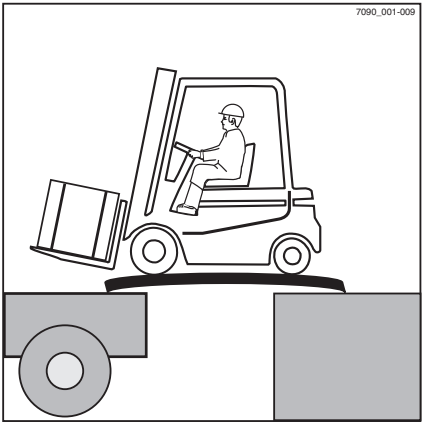

DANGER

Risk of accident!

- Before driving across a loading bridge, ensure that it is properly attached and secured and has adequate load-bearing capacity (lorry, bridge).
- Drive on the loading bridge slowly and cautiously.
- Ensure that the lorry onto which you will be driving is secured to prevent its shifting and can support the load of the forklift truck.

The lorry driver and the forklift truck driver must agree on the departure time.

https://truckmanualshub.com/

Working with attachments

Assembling attachments

If attachments are assembled at the place of use, the specifications in the operating instructions for the attachment must be followed.

Prior to being put into service for the first time, proper operation of the attachment and visibility from the driver's position with and without a load must be checked by a specialist (see ⇒ Chapter "Definition of terms used for responsible persons", P. 20). If the visibility is deemed insufficient, visual aids such as mirrors, a camera/monitor system etc. must be used.

If an attachment is not delivered together with the forklift truck, the specifications and operating instructions of the attachment manufacturer must be followed.

⚠ CAUTION

Attachments must be CE-certified. If there is no attachment-specific residual lifting capacity plate mounted on the forklift truck, the CE conformity is void.

– Order the residual lifting capacity plate (see ⇒ Chapter "Taking up a load using attachments", P. 5-121) promptly from your service centre.

⚠ WARNING

There is a risk of accident from a falling load!

– If attaching a clamp with an integral sideshift, make sure that the clamp does not open when operating the sideshift.
– Contact your service centre prior to installation.

Hydraulic connection

– Prior to assembling attachments, the plug-in couplings must be depressurised.

Fastening attachments

The fastening of an attachment and the connecting of the energy supply for power-driven attachments must be performed only by competent persons according to the specifications of the manufacturer and the supplier of the

https://truckmanualshub.com/

attachment. After each assembly, the attachment must be checked for proper functioning prior to being put into operation for the first time.

Lifting capacity with attachment

The permissible lifting capacity of the attachment and the allowable load (lifting capacity and load moment) of the forklift truck may not be exceeded in the combination of attachment and payload. The specifications of the manufacturer and supplier of the attachment must be complied with.

When determining the lifting capacity, the tare weight of the attachment and the resulting load moment must be taken into consideration.

Depressurising connections for attachments

▷

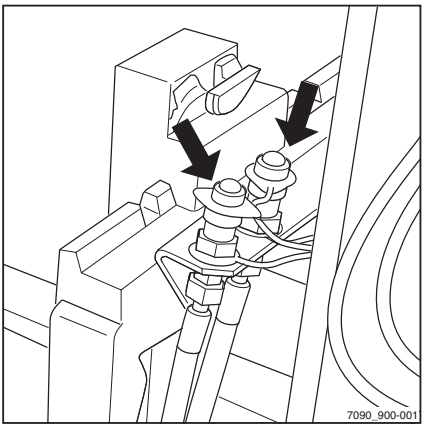

NOTE

Prior to assembling attachments, the plug-in couplings (arrows) must be depressurised.

https://truckmanualshub.com/

Depressurising, multi-lever controls

- Lower fork carriage to the ground, tilt mast as far back as possible.
- Switch off the key switch.
- Operate all hydraulic operating levers (arrows) multiple times up to their end positions.

▷

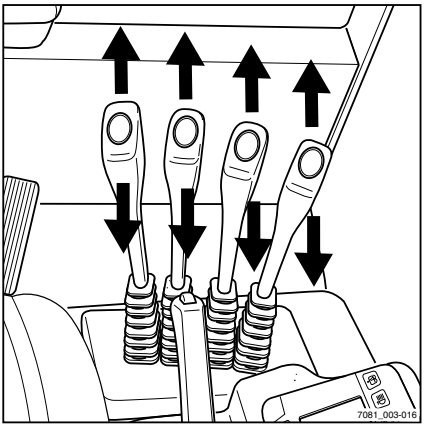

General information on control of attachments

The control of attachments (option) depends on the type of attachment.

⚠ WARNING

The use of attachments can result in additional hazards such as, for example, a change in the centre of gravity, additional danger zones, etc.

Attachments may only be used for their intended purpose as described in the relevant operating instructions. The driver must be instructed in the handling of the attachments.

Loads may only be picked up and transported with attachments if they can be seized and held properly. If necessary, the loads must also be secured against sliding, rolling, falling over, swinging or falling off. Note that the stability of the truck changes if the load centre distance is changed. Please refer to the attachment load capacity plate.

NOTE

Further options and functions are possible in addition to those listed below. The directions of movement are shown on the pictograms on the control levers or on the valve cover.

https://truckmanualshub.com/

Controlling attachments using multi-lever controls

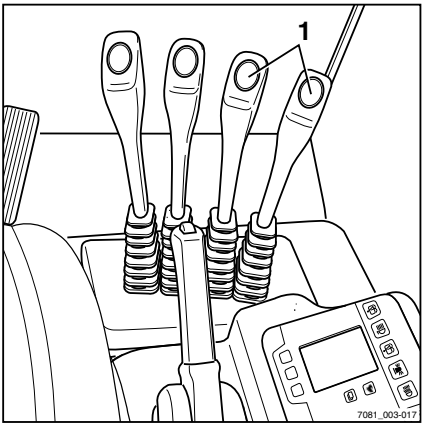

The attachments (special equipment) are controlled in this version using the operating levers (1).

The pictograms on the operating levers always show the function that is activated by that lever.

The meanings are as follows:

– Move operating lever (1) forwards:

The attachment moves in the direction shown in the upper part of the pictogram.

– Move operating lever (1) backwards:

The attachment moves in the direction shown in the lower part of the pictogram.

– Please note symbols 2 to 10!

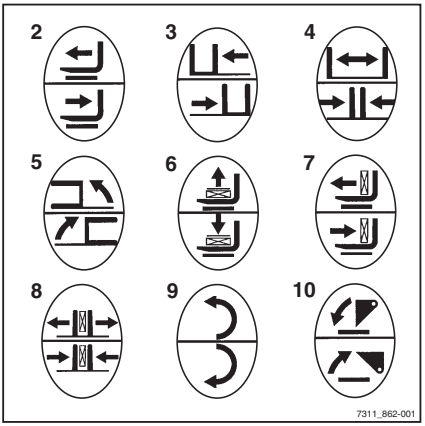

2	Reach frame or forks forwards/backwards
3	Sideshift moves to the left/to the right.
4	Adjust fork arms: open/close
5	Tilt lift mast or forks to the left/to the right.
6	Release/clamp load retainer
7	Raise/lower load
8	Open/close clamps
9	Turn to the left/to the right
10	Tip shovel over/tip shovel back

https://truckmanualshub.com/

Operating attachments using multi-lever controls and the 5th function

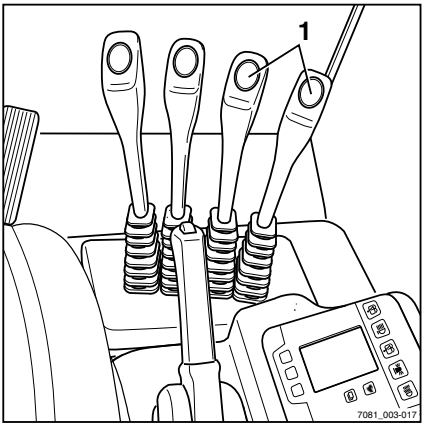

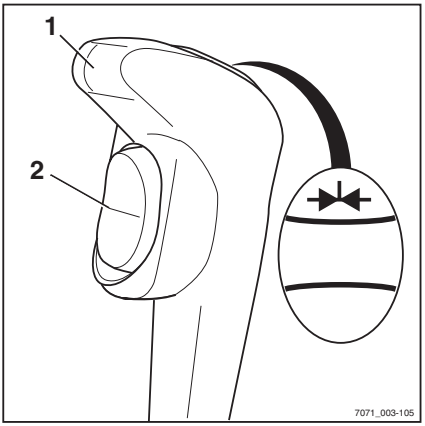

NOTE

The designation "5th function" refers to the four functions that can be controlled using the four operating levers and that the function which can be controlled using the function change-over switch then constitutes the "5th function".

The attachments (special equipment) are controlled in this version using the operating levers (1).

On the operating lever (1) you can, with the aid of switch (2), initiate a function change-over so that this operating lever then controls the "5th function".

The pictograms in the centre and lower parts of the operating levers always show the function controlled by that lever. The pictogram in the upper part shows that the attachment has the "5th function".

The meanings are as follows:

- Move the operating lever forward: the attachment moves in the direction shown in the centre of the pictogram.
- Move the operating lever backward: the attachment moves in the direction shown in the lower part of the pictogram.
- Actuate the switch: the additional function of the attachment is activated and can be controlled as the "5th function" with the operating lever.

NOTE

Please see the operating instructions for the attachment that is fitted for the movements/actions resulting from use of this" 5th function".

https://truckmanualshub.com/

– Please note symbols 3 to 11!

3	Reach frame or forks forwards/backwards
4	Sideshift moves to the left/to the right.
5	Adjust fork arms: open/close
6	Release/clamp load retainer
7	Raise/lower load
8	Turn to the left/to the right
9	Tip shovel over/tip shovel back
10	Tilt lift mast or forks to the left/to the right
11	Open/close clamps

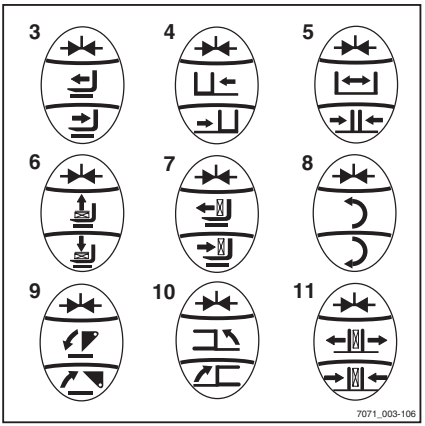

Taking up a load using attachments

WARNING

Risk of accident!

Attachments may only be used for their intended purpose as described in the respective operating instructions.

Drivers must be instructed in the handling of the attachments.

WARNING

Risk of accident!

Loads may only be picked up and transported with attachments if they are secure. If necessary, the load must also be secured against slipping, rolling, falling, wobbling or tilting. Note that any change to the position of the centre of gravity of the load will affect the stability of the forklift truck.

Check the capacity plate for the attachments.

– There you will find the permissible values for:

- Lifting capacity Q (kg) (1)
- Lift height h (mm) (2)
- Load distance C (mm) (3)

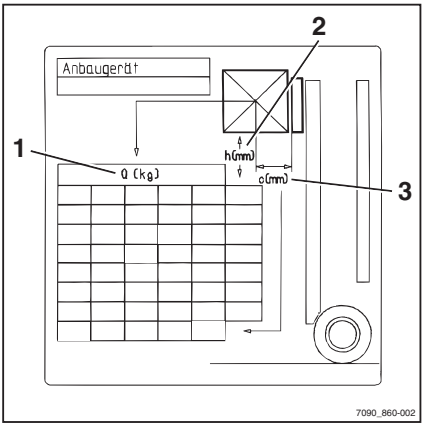

https://truckmanualshub.com/

Operation of additional equipment

Switching lighting on and off (special equipment) ▷

– Press the switch (1) for the work lights.

The work lights are (3) switched on.

– Press the light switch (2).

The parking lights (4) are switched on.

– Press the light switch again (2).

The driving lights (5) are switched on.

NOTE

Pressing the switch again switches each light back off.

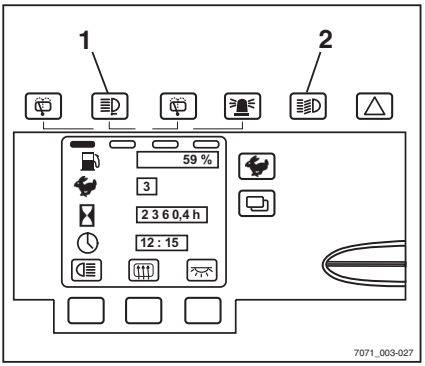

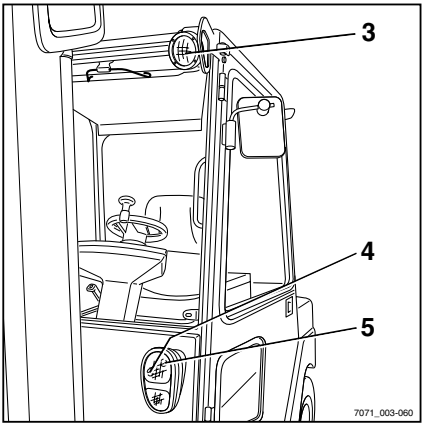

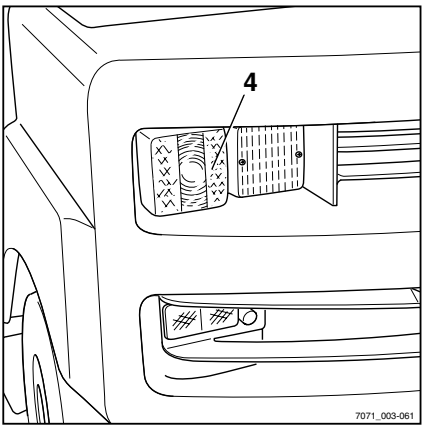

https://truckmanualshub.com/

Switching flashing light off and on

▷

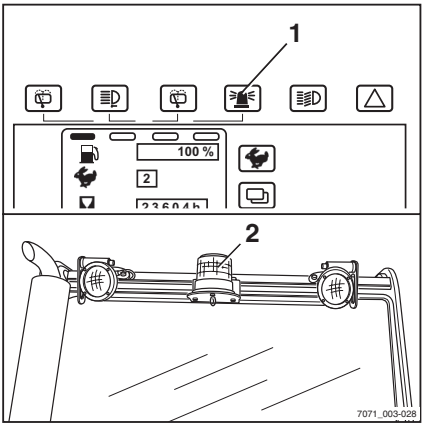

– Press the switch (1) for the flashing light.

The flashing light (2) is switched on.

NOTE

Pressing the switch again switches the flashing light back off.

https://truckmanualshub.com/

Switching hazard warning system off and on (special equipment) ▷

– Press (1) warning light switch.

All flashing lights (3) and the two direction indicator lights (2) in the direction of travel/flasher/fault multi-function display flash.

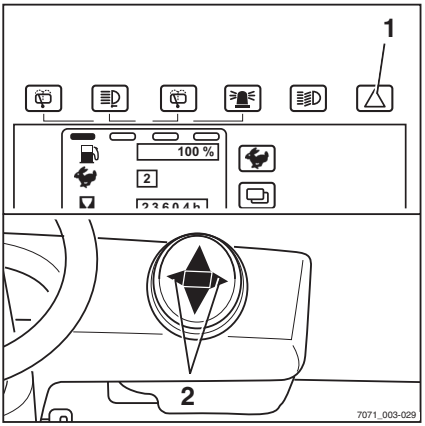

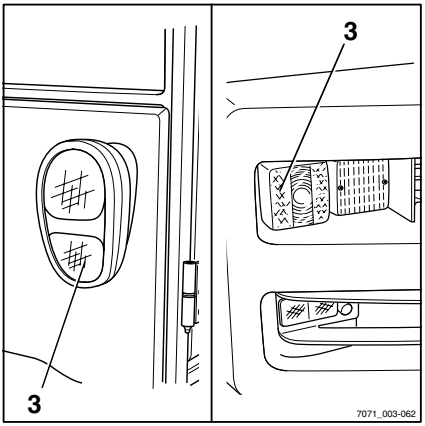

NOTE

Pressing the switch again switches the hazard warning system back off.

NOTE

The hazard warning system can also be switched on without the key switch connected.

https://truckmanualshub.com/

Switching direction indicators off and on

– Activate the right or left direction indicators as required by moving the direction indicator switch (1) to the left or right.

The direction indicators (2) or (3) light up.

NOTE

To reset, move the switch half the actuation distance in the opposite direction.

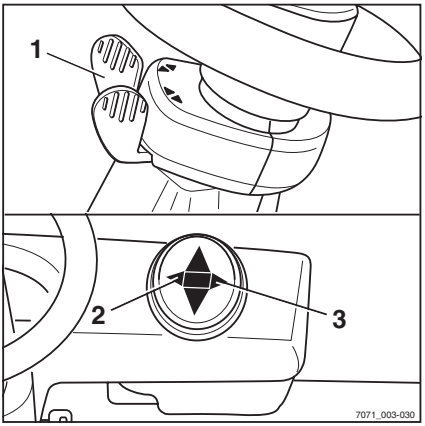

Operating the windscreen wiper/washer

– Press the switch (1) to activate the windscreen wiper/washer (special equipment).

– Press the switch (2) to activate the rear windscreen wiper/washer (special equipment).

The following table shows the different displays (3) for the operating stages of the windscreen wiper/washer.

Every time the relevant button is pressed, you will move forward one stage.

Display	Operating stage
	Wiper/washer is "Off"
	Wiper is "On"
	Wiper in "Interval mode"
	Washer is "On" INFORMATION: To activate the washer function, the button must be kept pressed.

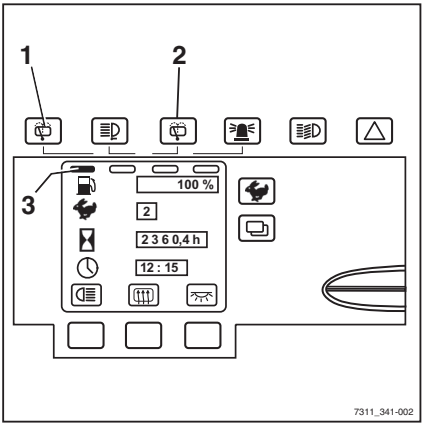

https://truckmanualshub.com/

Cab

Opening the cab doors

▷

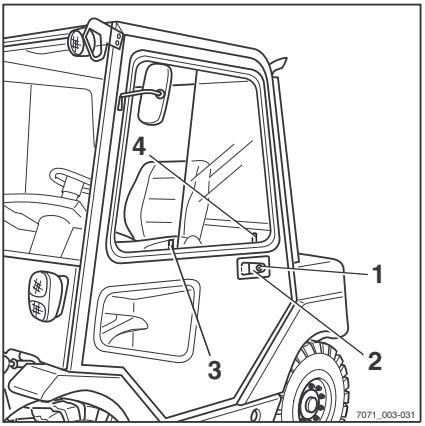

DANGER

Risk of accident!

– Always keep the doors closed when driving.

DANGER

Only a fully enclosed cab with closed, fixed doors or bracket doors is an operator restraint system. PVC doors are not a restraint system.

If the doors are open or removed, you must use a different, suitable restraint system (e.g. restraining belt).

– Insert the key into the door lock (1) and turn it.

– Withdraw the key and pull the door handle (2) until the latch opens.

Opening the side windows

– Pull the handle (3) and slide the front side window towards the rear.

– Pull the handle (4) and slide the rear side window towards the front.

Radio

The radio and loudspeaker are located in the roof lining.

NOTE

Separate operating instructions are provided for the radio.

https://truckmanualshub.com/

Heater

Switch on blower and heater (special equipment)

DANGER

Risk of explosion!

The heater should not be operated near storage rooms or similar facilities where fuel vapours or coal, wood or grain dust could be accumulate.

Spray cans or gas cartridges should not be exposed to the flow of hot air.

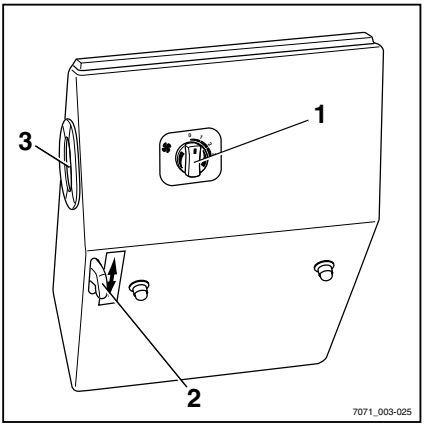

– To switch on heater, turn on blower (1) switch.

The blower runs at the speed level set at the switch.

– Set the desired temperature with the (2) lever.

The heater is in operation. The air is heated up to the heating level set at the(2)switch.

– Adjust the air flow (3) at the vent.

Driving with cruise control

The cruise control function (special equipment) permits the driver, when travelling forwards, to press a button and save any speed of 6.0 km/h or more selected with the accelerator, then to continue driving without using the accelerator pedal.

NOTE

It is not possible to use cruise control when driving in reverse.

https://truckmanualshub.com/

Switching on cruise control

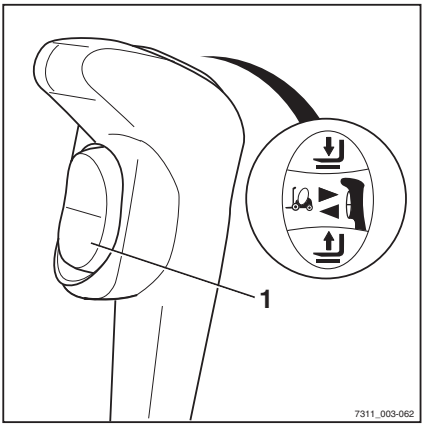

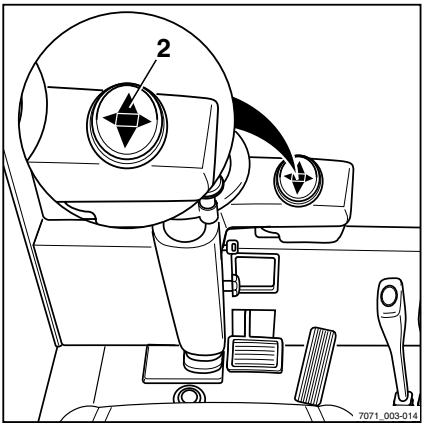

WARNING

Risk of accident!

When using cruise control, the special behaviour of this function and the dangers associated with it must be observed by the driver, in addition to the safety guidelines.

– Press the lower section (1) of the travel direction switch.

The forward travel direction display (2) lights continuously.

– Accelerate vehicle to the desired speed using the accelerator pedal (at least 6.0 km/h).

WARNING

Risk of accident!

The speed must be selected so that it is suitable for the entire distance that you intend to drive with active cruise control. This is especially true when selecting speeds around corners.

– Press the lower section of the travel direction switch again for at least one (1)second.

The selected speed is saved. The forward travel direction(2)display changes from a steady light to a flashing light.

NOTE

The cruise control function cannot be activated when reversing or at a speed below 6.0 km/h.

– Remove foot from accelerator pedal.

The vehicle will now drive at the pre-selected speed until the cruise control function is switched off.

https://truckmanualshub.com/

Switching off cruise control

There are different ways of switching off the cruise control function.

If the cruise control function is switched off, the forward travel direction display will light up again(2)continuously.

The cruise control function can be switched off by operating

- the footbrake,
- the parking brake,
- the travel direction switch in neutral or(1)reverse,
- the accelerator pedal
- or by activating the seat switch (seat not occupied).

There are two different ways of switching it off using the accelerator pedal, depending on the individual vehicle programming:

- Type 1: Even slightly depressing the accelerator pedal switches off the cruise control function.
- Type 2: To switch off the cruise control function, the accelerator pedal must be depressed at least as far as it was when saving the speed.

NOTE

The information label indicates which type of cruise control (type 1 or type 2) is programmed in your vehicle.

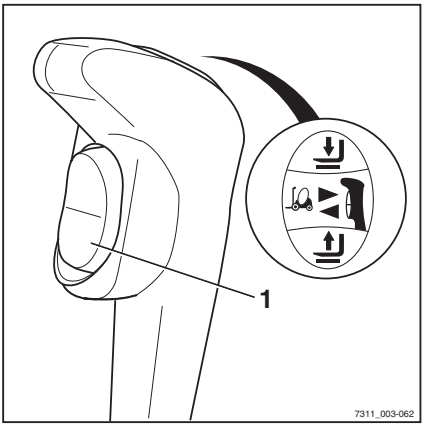

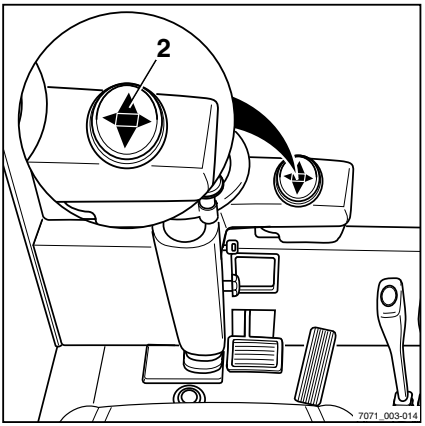

https://truckmanualshub.com/

Trailer operation

Towed load

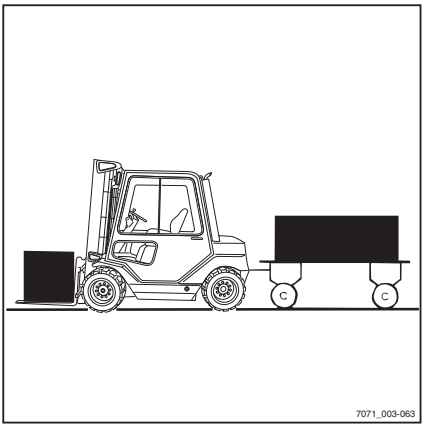

NOTE

This forklift truck is suitable for the occasional towing of trailers and is equipped with a towing device for this purpose. This occasional towing may not exceed 2% of the daily operating time. If you want to use the forklift truck for more frequent towing, the manufacturer must be consulted.

CAUTION

Component damage possible!

A support load is not permitted.

The maximum permissible towed load for occasional towing is the lifting capacity specified on the capacity rating plate (to the right of the driver's seat) on the fork arms. The maximum load may not be exceeded.

CAUTION

Component damage possible!

The permissible towed load only applies to the towing device.

If this maximum load is being towed, no load may be transported on the fork arms.

However, it is possible to transport part of the maximum load on the fork arms and at the same time tow the balance of the maximum load.

CAUTION

The maximum permissible load only applies for towing unbraked trailers on level surfaces (maximum deviation +/- 1%) and on firm ground.

The maximum load must be reduced if towing on slopes. Please inform the manufacturer of your operating conditions. You will then be given the appropriate data.

https://truckmanualshub.com/

CAUTION

The maximum permissible speed when towing is 5 km/h.

Do not exceed the maximum permissible speed.

Do not couple the forklift truck in front of rail vehicles.

Pushing of carriages of any type is prohibited.

WARNING

Towing changes the vehicle handling characteristics!

When towing, operate the truck in such a way as to ensure safe transportation and braking of the towed load in all movements.

Coupling the trailer

WARNING

Risk of accident!

If you briefly leave the forklift truck to couple a trailer:

- Apply the parking brake.
- Turn off the key switch and remove the key.

Manual tow coupling

- Secure the parked trailer against unintended movement (1).
- Do not release the parking brake until coupling is complete.

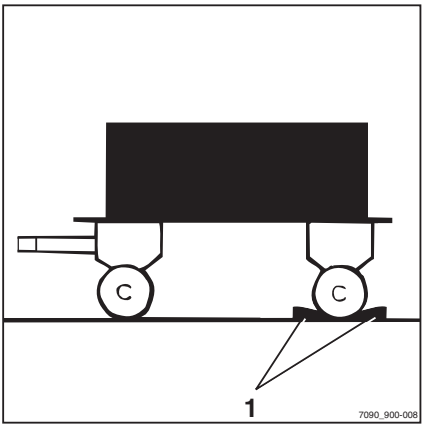

https://truckmanualshub.com/

– Place the wheel chock in position (2) (special equipment), see ⇒ Chapter "Parking the truck securely", P. 5-171). ▷

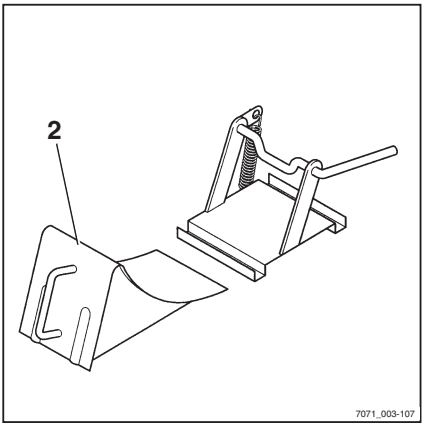

– Press the towing pin (3) down, turn it 90° and pull it out. ▷

– Insert drawbar into the recess in the counterweight.

⚠ DANGER

Risk of accident!

– Use only genuine towing pins!
– Make sure that the towing pin snaps into position.

– Insert the towing pin, press it down against the spring pressure and turn it 90°.

The towing pin is locked in this position.

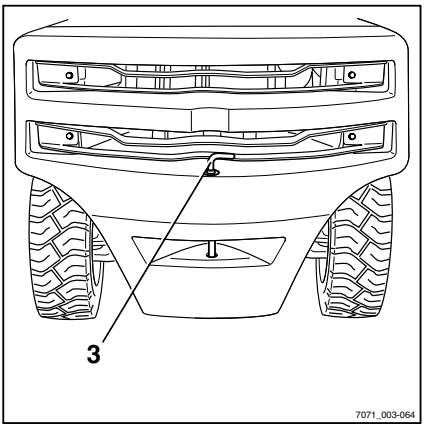

https://truckmanualshub.com/

Towing trailers

- Before you tow a trailer for the first time, practice driving in a suitable area.
- When driving through a narrow section of aisle, take the dimensions of the trailer and load into consideration.
- When towing multiple trailers, ensure a sufficient minimum distance to fixed installations when turning and cornering.

The permissible length of the trailers depends on the routes to be driven and may need to be determined during the test drives.

It is the responsibility of the operating company to instruct the driver regarding the permissible number of trailers and, possibly, the need to reduce speed on individual sections of the route (see ⇒ Chapter "Definition of terms used for responsible persons", P. 20).

▷

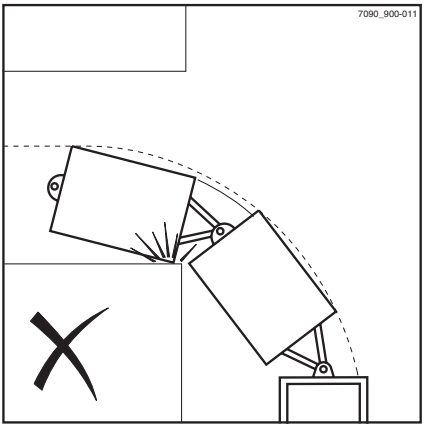

https://truckmanualshub.com/

Operation of indicator and operating unit

Displays

Normal displays

The following displays are normally visible (factory setting):

- (1) Fuel level (special equipment).
- (2) Set traction program with the numbers 1 to 5. The traction program can be changed, see ⇒ Chapter "Setting the traction programs", P. 5-75.
- (3) Hour meter. The hour meter shows the time the truck has been in operation. It runs as soon as the engine starts.
- (4) Time in hours and minutes. The time can be set; see ⇒ Chapter "Setting the date or time", P. 5-135.

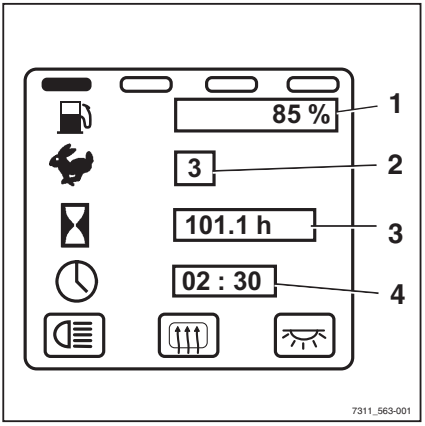

Additional displays

Upon pressing the menu change button (5) the following additional displays appear:

- (6)`SERVICE IN` display. Displays the remaining time (in hours) until the next service visit according to the maintenance schedule in the maintenance manual. Contact your service centre or workshop in sufficient time.
- (7) Displays the total distance driven (in km).
- (8) Displays the distance driven for the day.
- (9) Displays the hours driven for the day (in hours).

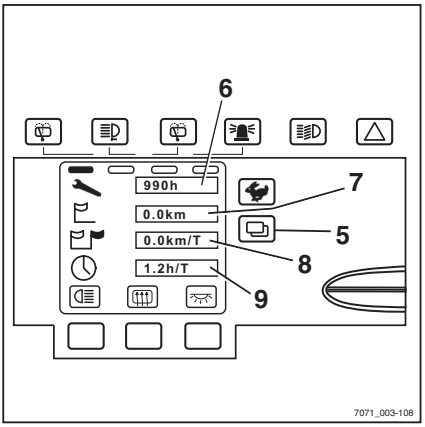

https://truckmanualshub.com/

Setting and changing the displays

To set or change the displays, you must first switch to the "KONFIGURATION (CONFIGURATION)" menu:

– Place the key switch in position "I".

– Simultaneously press the traction program key (1) and the menu selection key (2) to switch to the "PASSWORD" menu.

– Press the Return key (3) to switch to the "KONFIGURATION (CONFIGURATION)" menu.

The following settings are possible:

- Set date and time, see ⇒ Chapter "Setting the date or time", P. 5-135
- Reset daily number of kilometres and daily driving time, see ⇒ Chapter "Resetting the daily kilometres and daily operating hours", P. 5-136
- Select language, see ⇒ Chapter "Setting the language", P. 5-136
- FleetManager functions, see ⇒ Chapter "Fleet Manager functions", P. 5-137
- Other settings, see ⇒ Chapter "Additional settings", P. 5-137

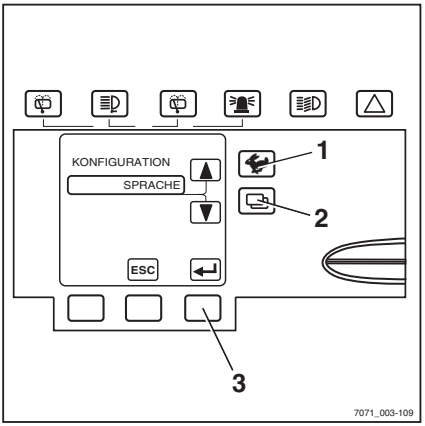

Setting the date or time

– Switch to the "KONFIGURATION (CONFIGURATION)" menu, see ⇒ Chapter "Setting and changing the displays", P. 5-135.

– Press the traction program key (1) or the menu selection key (2) until the option `UHRZEIT (TIME)` appears.

– Confirm your selection by pressing the Return key (3).

The "UHRZEIT (TIME)" menu appears.

– Press the traction program key (1) or the menu selection key (2) until the desired time appears in the display.

As the keys are held down for longer, the scrolling speed increases in three levels.

– Confirm the set time by pressing the Return key (3).

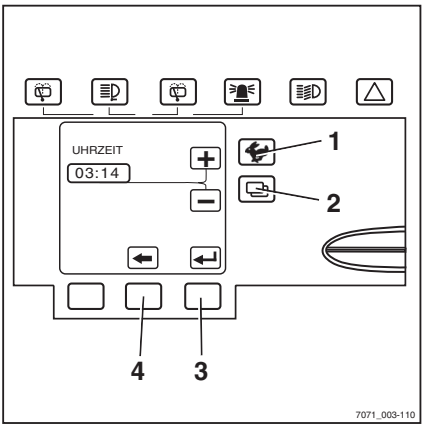

https://truckmanualshub.com/

– Leave the menu and advance to the next higher level by pressing the arrow key (4).

NOTE

The date is set in a similar manner.

Resetting the daily kilometres and daily operating hours

The daily kilometres and daily operating hours displays can be reset to zero:

– Switch to the "KONFIGURATION (CONFIGURATION)" menu; see ⇒ Chapter "Setting and changing the displays", P. 5-135.

– Reset the values by pressing RES (RES).

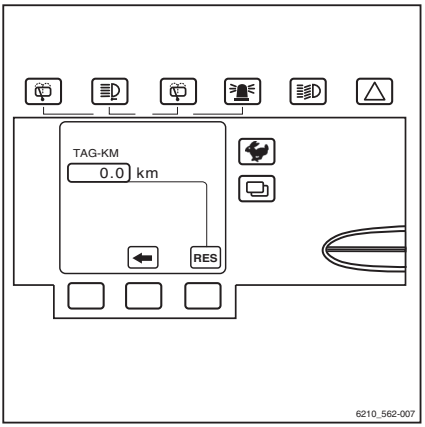

Setting the language

You can select additional languages for the displays:

– Switch to the "KONFIGURATION (CONFIGURATION)" menu; see ⇒ Chapter "Setting and changing the displays", P. 5-135.

– Press the traction program key (1) or the menu selection key (2) until the desired language appears in the display.

– Confirm your selection by pressing the Return key (3).

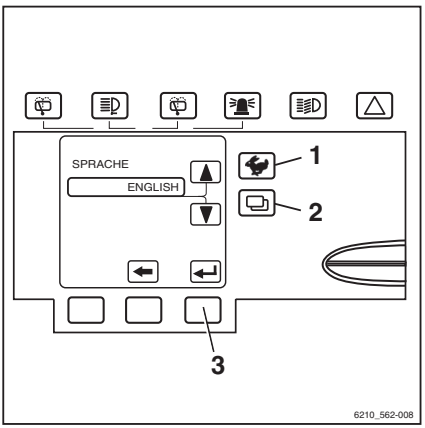

https://truckmanualshub.com/

Fleet Manager functions

Fleet Manager functions (special equipment) can be executed using the smart card (1). Ask your service centre.

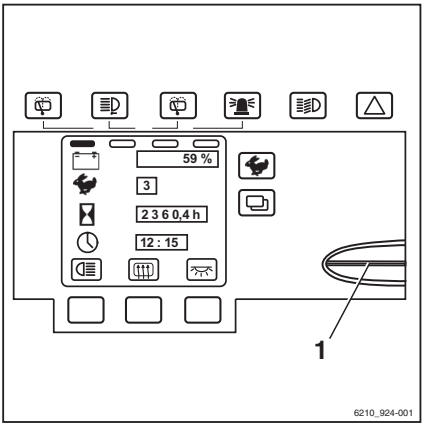

Accident recorder (special equipment)

The accident recorder is an auxiliary device to the Fleet Manager. An acceleration sensor (2) is installed in the truck. The acceleration sensor can record data from an accident. This data can be evaluated. Ask your service centre.

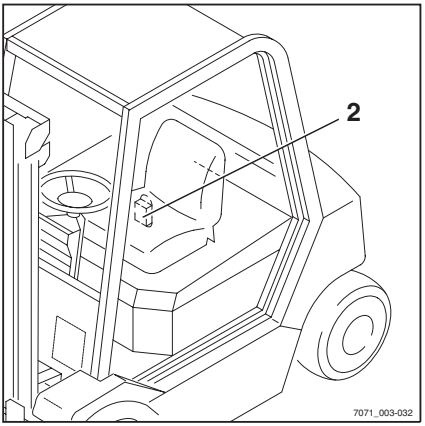

Additional settings

Entering a password makes it possible to set additional values. Contact your customer service office about this.

https://truckmanualshub.com/

Error messages

Diagram

If a malfunction or a message is displayed on the display and control(1)unit, the display lights up on the combination display for direction of travel/flasher/message.

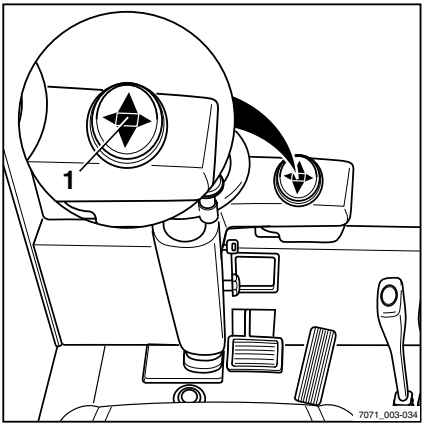

The following malfunction indications and messages can appear on the display:(2)A graphic symbol and a message describing(3)the faulty function and an error code consisting of(4)a letter and a 4-digit number.

Fault displays are always displayed on a cyclic basis for a number of seconds, depending on the fault.

If more than one fault occurs, they are shown one after the other. This is followed by a pause, with its length also depending on the type of fault. During this pause the status display of the truck is shown.

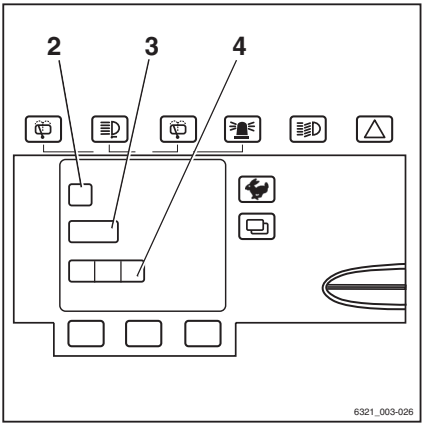

https://truckmanualshub.com/

Fault code table

The table provides you with an overview of the possible displays. The "Comment" column contains information about the procedure to follow when the corresponding messages are displayed.

Message text (German) / Error code	Display animation	Comment
OVERHEATING A5022	Cyclic display every 30 sec	Traction motor(s) is/are too hot. 1. Phase: Regulation of acceleration and speed 2. Phase: Limitation of phase current in converter (emergency driving function is maintained). Fault is automatically cancelled as soon as the temperature drops below the limit. If the fault occurs repeatedly, contact your service centre.
PARAMETERS A1206 A1211	Cyclic display every 30 sec	Traction and hydraulic drives not functioning Contact your service centre.
ACCELERATOR A3002 A3003 A3004 A3005 A3006 A3007	Cyclic display every 30 sec	Sensor fault, vehicle cannot be driven. Contact your service centre.
ACCELERATOR A3811	Cyclic display every 30 sec	Accelerator configuration incorrect. Vehicle cannot be driven. Contact your service centre.
BRAKE A3016 A3017	Cyclic display every 30 sec	Sensor fault, vehicle can only be driven at crawling speed. Contact your service centre.
KONFIGURATION (CONFIGURATION) A2111	Cyclic display every 30 sec	Programming error or defective printed circuit board, traction and hydraulic drive not functioning. Contact your service centre.
KONFIGURATION (CONFIGURATION) A3801	Cyclic display every 30 sec	Programming error, traction and hydraulic drive not functioning. Contact your service centre.

https://truckmanualshub.com/

Message text (German) / Error code	Display animation	Comment
KONFIGURATION (CONFIGURATION) A3812	Cyclic display every 30 sec	Traction program parameters are outside of permissible range. The traction program parameters is limited internally. Contact your service centre.
KONFIGURATION (CONFIGURATION) A3822	Cyclic display every 30 sec	Wrong converter, traction and hydraulic drive not functioning. Contact your service centre.
KONFIGURATION (CONFIGURATION) A9999	Cyclic display every 30 sec	Software error, traction and hydraulic drive not functioning. Contact your service centre.
Voltage A2237	Cyclic display every 30 sec	Short circuit 10 V ext., traction and hydraulic drive not functioning. Contact your service centre.
SITZSCHALTER (SEAT SWITCH) A3027	Cyclic display every 30 sec	Seat switch has not been operated for 8 hours. Truck may still be running at reduced speed and with reduced lifting capacity. Briefly stand up and sit down again. If this does not resolve the problem, contact the service centre.
STEERING A3202 A3215 A3221 A3226	Cyclic display every 30 sec	Sensor fault, vehicle can only be driven at crawling speed. Contact your service centre.
TRAVEL DIRECTION A3020	Cyclic display every 30 sec	Switch fault, no or restricted function of traction drive. Contact your service centre.
LIFT A3102 A3103	Cyclic display every 30 sec	Sensor fault, no or restricted function of hydraulic drive. Contact your service centre.
TILT A3107 A3108	Cyclic display every 30 sec	Sensor fault, no or restricted function of hydraulic drive. Contact your service centre.
ZUSATZ1 (EXT1) A3112 A3113	Cyclic display every 30 sec	Sensor fault, no or restricted function of hydraulic drive. Contact your service centre.
ZUSATZ2 (EXT2) A3117 A3118	Cyclic display every 30 sec	Sensor fault, no or restricted function of hydraulic drive. Contact your service centre.

https://truckmanualshub.com/

Message text (German) / Error code	Display animation	Comment
POWER SUPPLY A2242 A2257	Cyclic display every 30 sec	Short circuit in sensor power supply. Vehicle cannot be driven. Contact your service centre.
UEBERWACHUNG (SURVEILLANCE) A2801 A2802 A2807 A2808 A2809 A2810 A2811 A2812 A2813 A2814 A2815 A2816	Cyclic display every 30 sec	Traction drive not functioning. Release the accelerator pedal. If this fault occurs sporadically, it can be tolerated. If the truck's functionality is impaired, contact your service centre.
SURVEILLANCE A2803 A2806	Cyclic display every 30 sec	Travel direction is set to neutral. Reselect travel direction. If this fault occurs sporadically, it can be tolerated. If the truck's functionality is impaired, contact your service centre.
SURVEILLANCE A2817 A2818	Cyclic display every 30 sec	Truck not ready for operation. Place the key switch in the zero position and restart the truck. If this fault occurs sporadically, it can be tolerated. If the truck's functionality is impaired, contact your service centre.
DRIVE A5041	Cyclic display every 30 sec	Temperature sensor fault Contact your service centre.
OIL PRESSURE A5631	Cyclic display every 10 sec	Engine defective (no oil pressure) or sensor defective. Engine is switched off for protection. Contact your service centre.
COOLANT TEMP A5611	Cyclic display every 10 sec	Coolant temperature too high. Cooling fan is not running. Low coolant level, check coolant level and top up if necessary, see ⇒ Chapter "Topping up coolant and checking coolant concentration", P. 6-200. If this does not resolve the problem, contact the service centre.
AIR FILTER A5651	Cyclic display every 30 sec	Replace/clean air filter, see ⇒ Chapter "Changing the air filter insert", P. 6-202.

https://truckmanualshub.com/

Message text (German) / Error code	Display animation	Comment
ALTERNATOR A5811	Cyclic display every 30 sec	Starter battery does not charge. Contact your service centre.
MOT/GEN-TEMP A5034	Cyclic display every 30 sec	Traction motor or generator overheated. Allow to cool. If this does not resolve the problem, contact the service centre.
CONTROL UNIT A3305	Cyclic display every 30 sec	The CIO does not work. Contact your service centre.
COOLANT LEVEL A5611	Cyclic display every 30 sec	Low coolant level, check coolant level and top up if necessary, see ⇒ Chapter "Topping up coolant and checking coolant concentration", P. 6-200. If this does not resolve the problem, contact the service centre.

SAFETY BELT message

⚠ DANGER

Driving without a seat belt is dangerous and never permitted!

– Always fasten the seat belt before driving.

NOTE

This mechanism (special equipment) ensures that if the seat belt is not being used or is being used incorrectly, the forklift truck will only drive slowly or (optionally) will not drive at all. Depending on the selected version, the operating hydraulic functions (lift/tilt) are either available as normal, slowed down or not available at all. This function is triggered in the following circumstances:

https://truckmanualshub.com/

Seat belt not worn, driver's seat occupied.

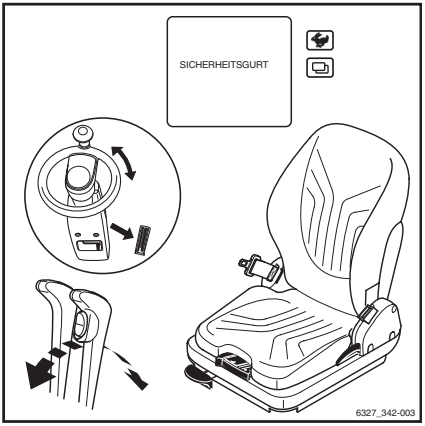

– Switch on key switch.

The message SAFETY BELT appears in the display as long as you operate an operating lever, the steering wheel, or the accelerator pedal. The forklift truck drives slowly or does not drive at all; depending on the selected version, the working functions are either available as normal, slowed down or not available at all.

– Fit the seat belt in line with the instructions and fasten it.

The forklift truck can again be operated without restriction.

The seat belt is constantly fastened and the driver's seat is then occupied.

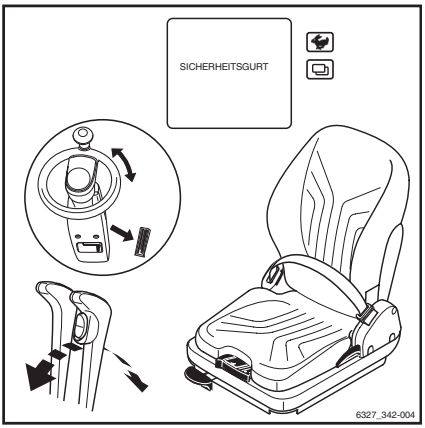

– Switch on key switch.

The message SAFETY BELT appears in the display if you operate an operating lever or the accelerator pedal. The forklift truck drives slowly or does not drive at all; depending on the selected version, the working functions are either available as normal, slowed down or not available at all.

– Remove the seat belt from the buckle, fit the belt in line with the instructions and fasten it again.

The forklift truck can again be operated without restriction.

The seat belt is not fastened until after the key switch has been switched on.

– Switch on key switch.

The message SAFETY BELT appears in the display if you operate an operating lever or the accelerator pedal. The forklift truck drives slowly or does not drive at all; depending on the selected version, the working functions are either available as normal, slowed down or not available at all.

https://truckmanualshub.com/

– Remove the seat belt from the buckle, fit the belt in line with the instructions and fasten it again.

The forklift truck can again be operated without restriction.

The seat belt is unfastened while driving

– If you release the belt while driving, the message SAFETY BELT appears in the display.

The truck maintains or brakes to a slow speed.

DANGER

This function does not release you from your duty of care, to adjust the speed of the forklift truck to the driving situation.

The increased safety provided by this function may not be misused in order to take safety risks.

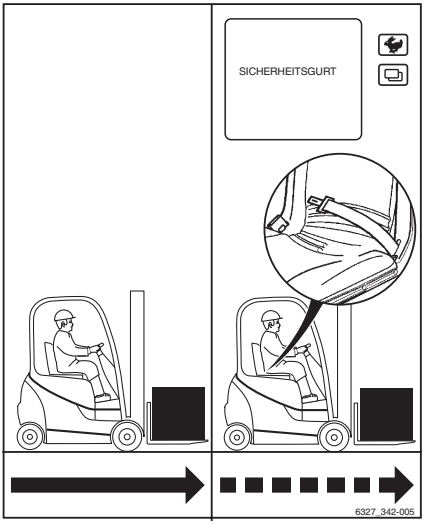

– Fit the seat belt in line with the instructions and fasten it.

The forklift truck can again be operated without restriction.

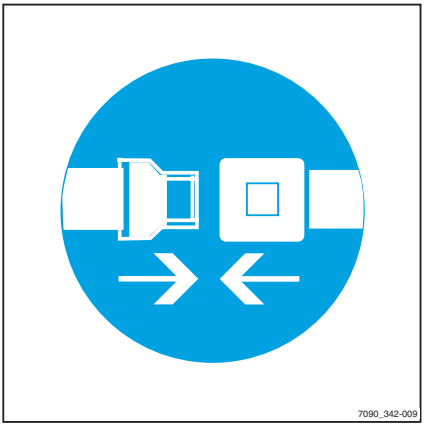

https://truckmanualshub.com/

Message SITZSCHALTER (SEAT SWITCH)

NOTE

The truck is equipped with a seat switch. If the message `SITZSCHALTER (SEAT SWITCH)` *appears on the display, the truck will only move slowly or (optionally) not at all. Depending on the selected version, the operating hydraulic functions (lift/tilt) are either available as normal, slowed down or not available at all. This function is triggered in the following circumstances:*

The seat switch is not actuated, while the accelerator pedal or the steering wheel is actuated. ▷

The key switch is switched on.

The seat is not occupied while the accelerator pedal or the steering wheel is operated. The message `SITZSCHALTER (SEAT SWITCH)` appears in the display. The forklift truck cannot move.

– Sit on the driver seat and fasten the belt.

The forklift truck can be driven again without restriction.

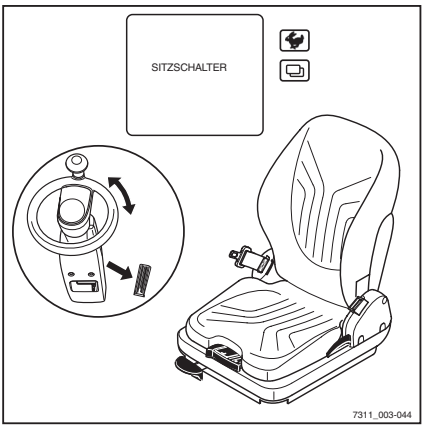

The seat switch is not actuated, while the operating lever is actuated ▷

The key switch is switched on.

You are not sitting on the seat, while actuating an operating lever. The message `SITZSCHALTER (SEAT SWITCH)` appears in the display. The work functions can be executed normally, only slowly, or not at all depending on the version.

– Sit on the driver seat and fasten the belt.

The work functions can be operated without restriction again.

https://truckmanualshub.com/

Exceeding the shift time

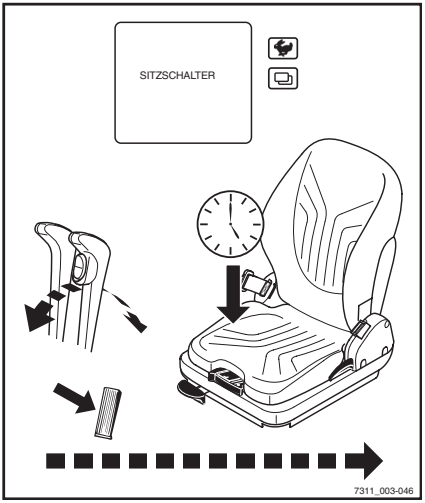

NOTE

The shift time is adjustable.

When the key switch is switched on after sitting steadily for the set time, the message `SITZSCHALTER (SEAT SWITCH)` appears on the display. This also occurs when an operating lever or the accelerator pedal is operated. The forklift truck will only move slowly; the work functions can be executed normally, only slowly, or not at all depending on the selected version.

– Stand up briefly from the seat and then sit back down.

The forklift truck can again be operated without restriction.

Exceeding the operation time

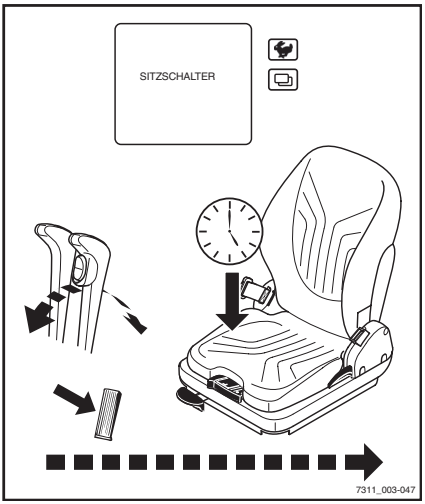

NOTE

The operation time is adjustable.

If, while the key switch is switched on and the parking brake is released, the driver's seat is occupied longer than the set operation time and the accelerator pedal or an operating lever was not operated during this time, the message `SITZSCHALTER (SEAT SWITCH)` appears in the display. The forklift truck can move only slowly; the work functions can be executed normally, only slowly, or not at all depending on the version.

– Stand up briefly from the seat and then sit back down.

The forklift truck can again be operated without restriction.

https://truckmanualshub.com/

AIR FILTER message

If the AIR FILTER message appears on the indicator and operating unit, the air filter insert must be replaced, see ⇒ Chapter "Changing the air filter insert", P. 6-202.

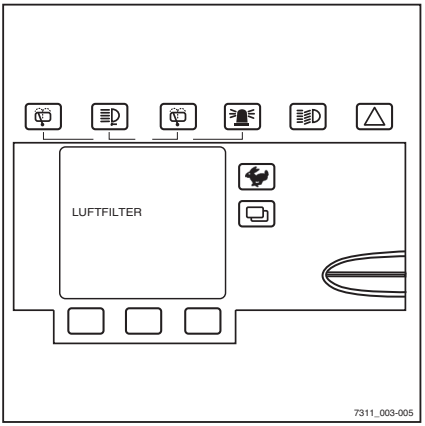

BREMSE ANZIEHEN (APPLY HANDBRAKE!) message

DANGER

Risk of accident!

Parking the forklift truck without the parking brake being securely applied is dangerous and is not permitted. The increased safety provided by this function may not be misused in order to take safety risks.

Parking brake is not applied

If you park the truck without applying the parking brake and leave the driver's seat, the message BREMSE ANZIEHEN (APPLY HAND-BRAKE!) appears in the display. An optional signal tone sounds.

– Apply the parking brake (1).

The display BREMSE ANZIEHEN (APPLY HANDBRAKE!) disappears.

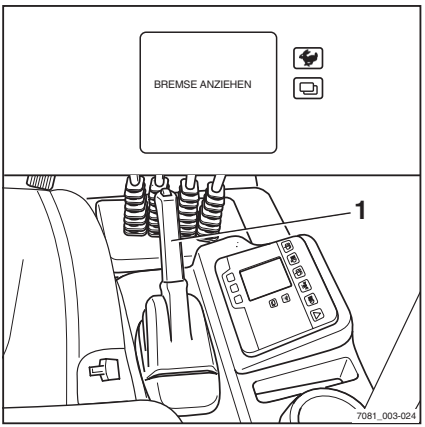

https://truckmanualshub.com/

The truck moves slowly despite the parking brake being applied

If you park the forklift truck without applying the parking brake sufficiently securely, the forklift truck will slowly roll away. The message BREMSE ANZIEHEN (APPLY HANDBRAKE!) appears in the display. An optional signal tone sounds.

– Apply the parking brake (1) securely so that the forklift truck no longer rolls away.

The display BREMSE ANZIEHEN (APPLY HANDBRAKE!) disappears.

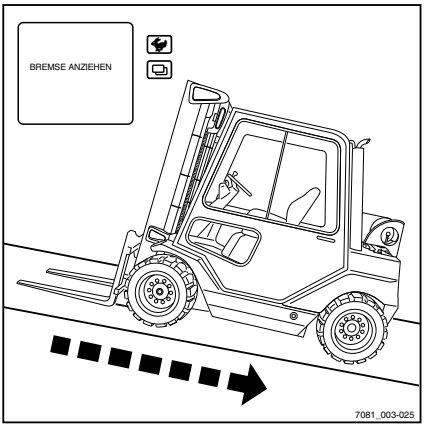

GABELN ABSENKEN (LOWER FORKS) message

DANGER

Risk of accident!

Parking the forklift truck with the load lifted is dangerous and is not permitted under any circumstances. The increased safety provided by this function may not be misused in order to take safety risks.

Forks are not lowered

The forks are above the height sensor. You switch off the key switch and vacate the seat. The message GABELN ABSENKEN (LOWER FORKS) (special equipment) appears in the display. An optional signal tone sounds.

– Lower the forks to the bottom using the "lift - lower" operating lever.

The message GABELN ABSENKEN (LOWER FORKS) disappears.

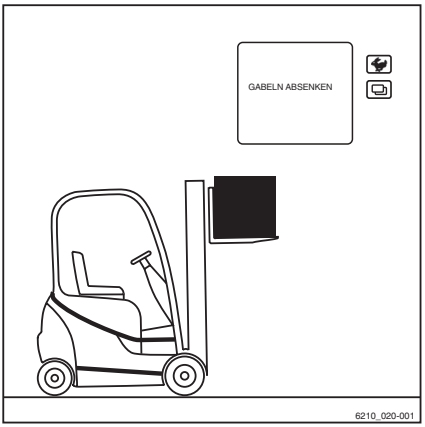

https://truckmanualshub.com/

REFERENCE LIFT message ▷

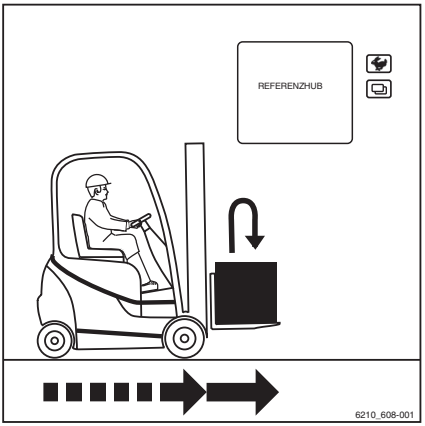

NOTE

If you have shut down the control unit and lower the load with the lift-lower operating lever, the following happens when you restart:

You switch on the key switch. In the display, the message `REFERENCE CYCLE` (special equipment) or no display appears. The forklift truck will now only drive at a reduced speed. You now have to perform a test lift (reference cycle) using the lifting system:

- Lift the forks up until the message disappears or, if it was not previously displayed, until it appears and then disappears again.
- Then lower the forks again.

The truck can now be driven again with no speed limitation.

FAHRGEBER (ACCEL. SENSOR) message ▷

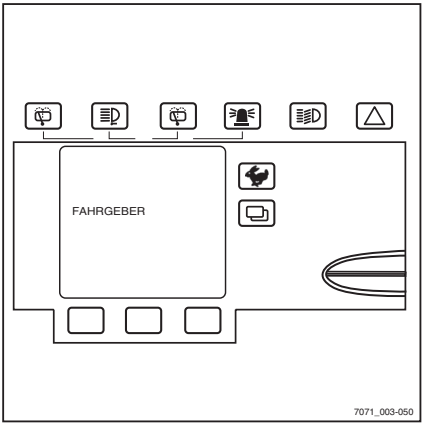

If the `FAHRGEBER (ACCEL. SENSOR)` message appears on the indicator and operating unit, the truck will remain stationary. The accelerator must be checked.

- Contact your service office.

https://truckmanualshub.com/

BREMSGEBER (BRAKE SENSOR) message ▷

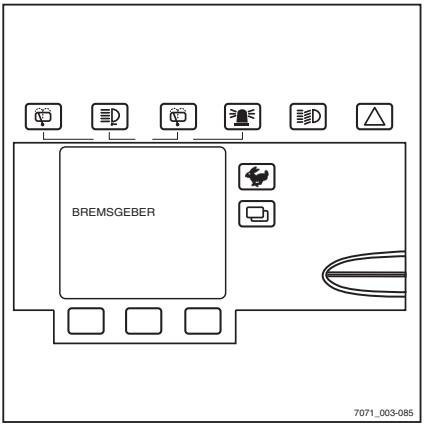

If the `BREMSGEBER (BRAKE SENSOR)` message appears, the maximum driving speed is reduced. The brake sensor in the brake pedal must be checked.

– Contact your service centre.

SURVEILLANCE message ▷

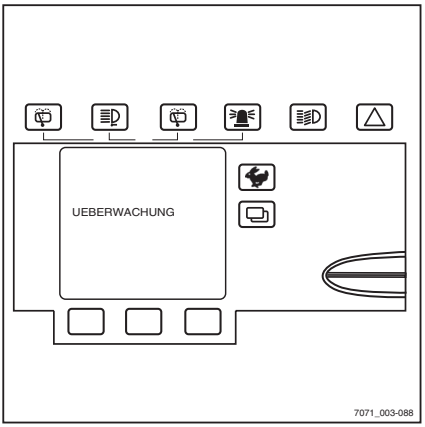

If the `UEBERWACHUNG (SURVEILLANCE)` message appears, a fault has occurred in the process monitoring.

This shuts off the traction drive.

– Place the key switch in the "0" position and then back in the "I" position.

– Start the engine; see ⇒ Chapter "Starting the engine", P. 5-68.

– Take your foot off the accelerator pedal.

– Select the direction of travel again.

NOTE

If this error code appears sporadically, it can be tolerated. If usability is impaired, please contact your service centre.

https://truckmanualshub.com/

MOT/GEN-TEMP (MOT/GEN TEMP) message

If the `MOT/GEN-TEMP (MOT/GEN TEMP)` message appears, the traction motor or the generator is overheated, or a cable is broken.

– Stop working and allow the truck to cool. However, do not turn off the key switch.

NOTE

If usability is impaired, please contact your service centre.

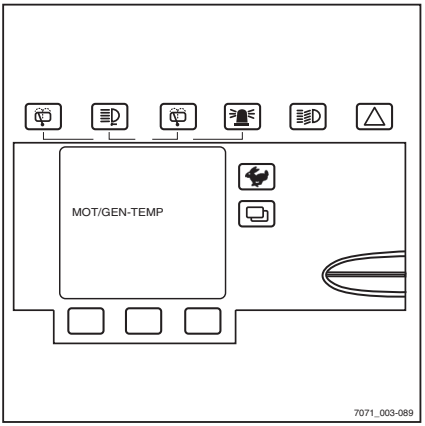

LENKEN (STEERING) message

If the `LENKEN (STEERING)` message appears on the display and operating unit, the truck only moves at emergency mode speed. The accelerator must be checked.

– Contact your service centre.

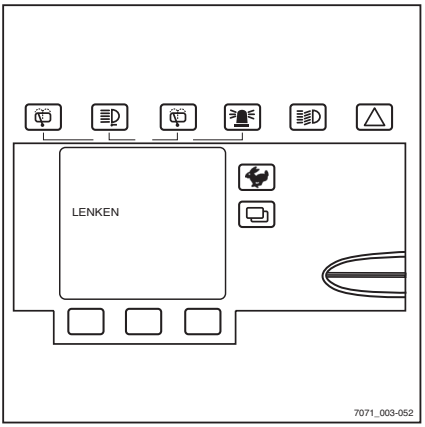

https://truckmanualshub.com/

OELDRUCK (OIL PRESSURE) message

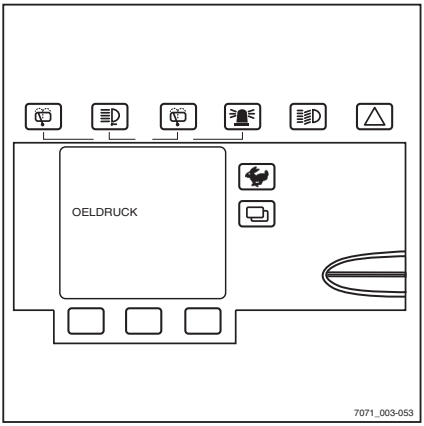

⚠ CAUTION

Risk of engine damage!

If the `OELDRUCK (OIL PRESSURE)` message appears, the oil pressure in the engine is too low.

– Stop the engine immediately.

The message can have different causes:

- The engine has overheated
- Insufficient oil
- The oil is insufficiently viscous
- Engine damage

– Check the engine oil level, see ⇒ Chapter "Checking the engine oil level", P. 5-56.

– Change the engine oil, if necessary.

– Contact your service office.

KUEHLMITTELSTAND (COOLANT LEVEL) message

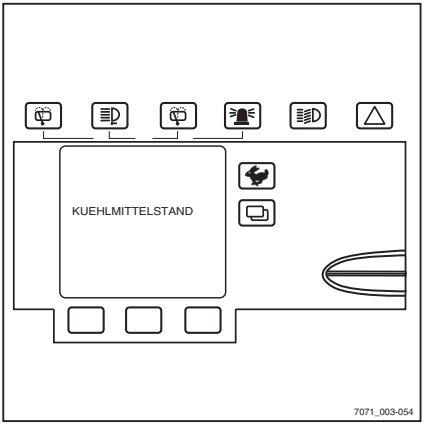

If the `KUEHLMITTELSTAND (COOLANT LEVEL)` message appears, the coolant level is too low.

– Check the coolant level; see ⇒ Chapter "Topping up coolant and checking coolant concentration", P. 6-200.

⚠ CAUTION

Risk of engine damage!

If the coolant level is low, this indicates a leak in the cooling system.

– Check for leaks in the cooling system; see ⇒ Chapter "Cleaning the radiator, checking for leaks", P. 6-200.

https://truckmanualshub.com/

KUEHLMITTELTEMP (COOLANT TEMP.) message

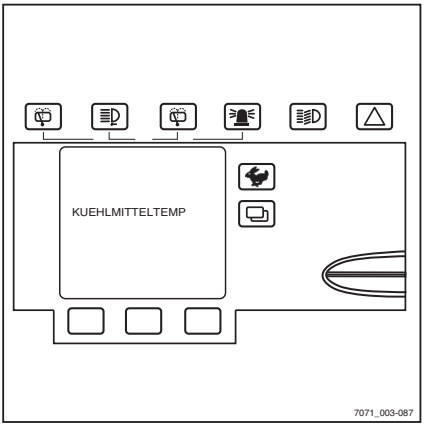

If the `KUEHLMITTELTEMP (COOLANT TEMP.)` message appears, the coolant temperature is too high.

The message can have different causes:

- Insufficient coolant in the cooling system. Check the coolant level; see ⇒ Chapter "Topping up coolant and checking coolant concentration", P. 6-200
- Malfunction in the electrical fan
- Defective thermostat
- Radiator clogged; see ⇒ Chapter "Cleaning the radiator, checking for leaks", P. 6-200

UEBERTEMPERATUR (OVERHEATING) message

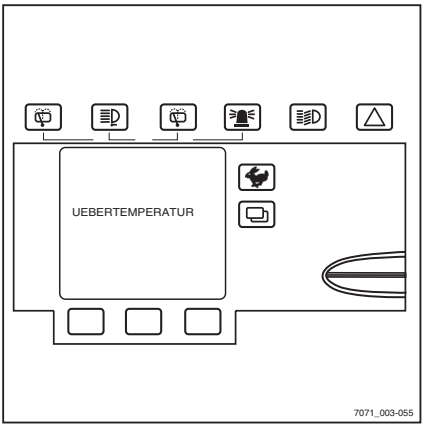

If the `UEBERTEMPERATUR (OVERHEATING)` message appears, the traction motors are overheated. Truck speed and acceleration are reduced.

– Allow the truck to cool down.

– If the error message persists, contact your service centre.

https://truckmanualshub.com/

Operation in special operating situations

Transport

When driving the truck onto the means of transport, pay attention to the following:

- The load/lifting capacity of the means of transport, ramps and loading bridges must be greater than the loading weight of the truck.
- Maintain a safe distance from edges, loading bridges, ramps, working platforms etc.
- Remember that the tail end veers out from the loading bridge in the direction of the edge when turning the steering wheel during forwards travel. This can cause the forklift truck to crash.
- Lower the forks completely.
- Apply the parking brake and remove the key.

Setting chocks

▷

– Use two chocks to block each of the front and rear wheels to prevent rolling and use wooden blocks to keep the sides from shifting.

– Secure the wooden blocks (e.g. by nailing).

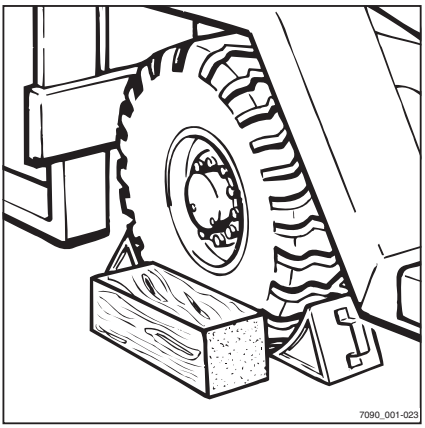

https://truckmanualshub.com/

Lashing

– Attach the cable (1) to both sides of the truck and then secure the cable at the rear. ▷

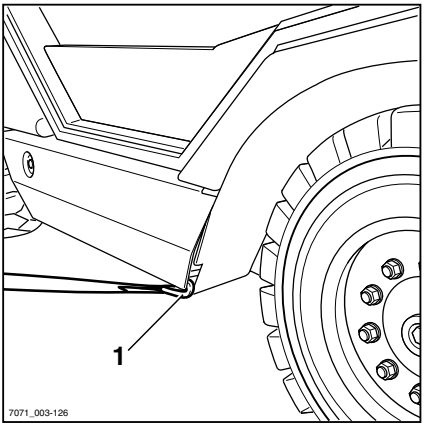

– Attach the cable (1) to the towing pin (2) and secure the truck at the front. ▷

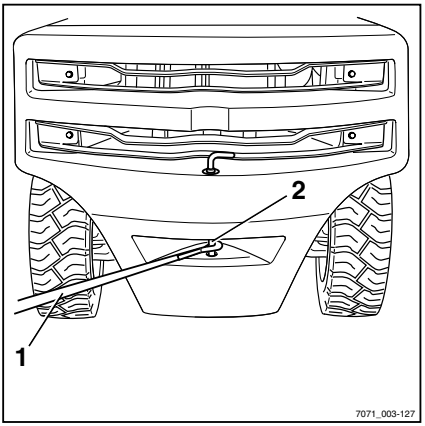

https://truckmanualshub.com/

Towing

If the brake for the towed forklift truck is no longer functional, the forklift truck can only be towed with a fixed connection (towing bar).

To tow the forklift, a towing vehicle with sufficient tractive power and braking force for the unbraked towed load is required.

– Set down load and lower fork arms almost to the floor.

– Switch off the engine.

⚠ CAUTION

As a result of the design of the drive, the engine cannot be started by pushing or towing the truck.

Don't start vehicle by pushing or pulling!

⚠ CAUTION

Steering is heavy! There is no power steering if the hydraulics are not active!

The maximum vehicle towing speed is walking speed.

– After towing, secure truck from rolling away (e.g. by placing chocks).

– Apply the parking brake.

▷

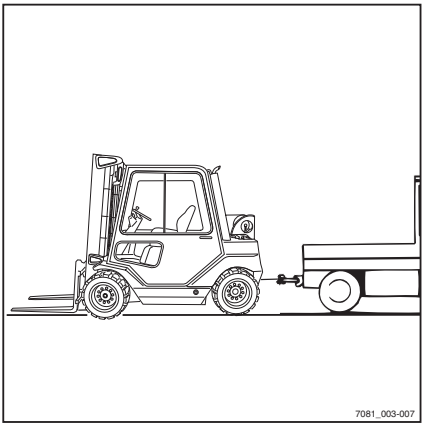

Crane loading

Crane loading is only intended for transporting the complete truck, including the lift mast, for its commissioning. For operating conditions that require frequent loading or that are not presented here, please contact the manufacturer with regard to special equipment variants.

Only those persons with sufficient experience of suitable harnesses and lifting gear may load up forklift trucks.

https://truckmanualshub.com/

Determining the loading weight

- Park the truck so it is secured; see ⇒ Chapter "Parking the truck securely", P. 5-171.
- Determine the loading weight of the truck.
- Read the following weights on the factory nameplate, and if necessary, the factory nameplate of the attachment, and perform the addition:

Tare weight (1) + ballast weight (3) (if present) + tare weight of the attachment (if present) = loading weight.

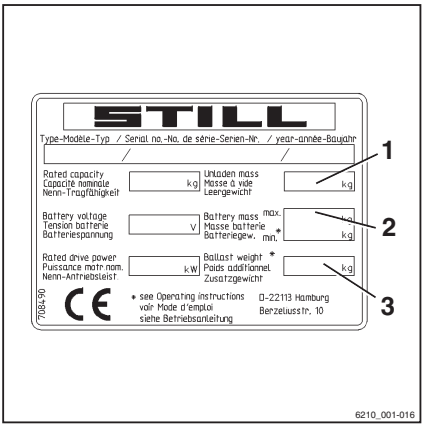

Attaching lifting straps

CAUTION

Failure to follow these instructions could result in damaged components!

- Use textile harnesses and, if necessary, edge protectors or similar protective equipment to prevent damage to the truck.

DANGER

Risk of accident!

- Only use hoists and harnesses with adequate lifting capacity for the determined loading weight.
- Only use the designated attachment points on your truck!
- Make sure that harness parts such as hooks, shackles, belts and similar items are only used in the indicated load direction. The harnesses must not be damaged by truck parts.

- Loop the lifting straps around the main traverse (1) on the outer mast of the lift mast.

NOTE

The attachment points are indicated by a hook symbol.

https://truckmanualshub.com/

– Loop the lifting straps to the right and the left around the main traverse (1) on the outer mast of the lift mast. ▷

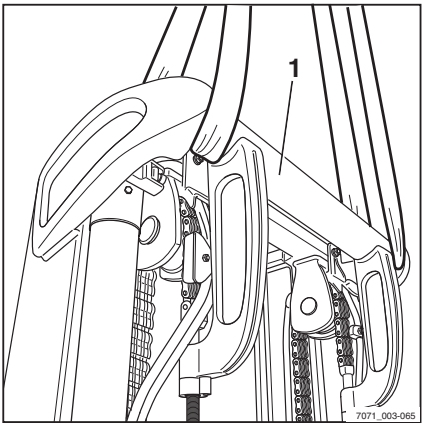

– Loop the lifting straps (2) around the counterweight between the counterweight and the steering axle. ▷

– Determine the centre of gravity for your truck.

The centre of gravity is indicated by the "S" symbol in the operating instructions in the "Technical Data" section; see ⇒ Chapter "Dimensions", P. 7-248.

– Set the length of the harnesses so that the crane eye (3) is vertically above the centre of gravity of the forklift truck.

This ensures that the forklift truck hangs level when lifting it.

– Hang the lifting straps from the crane eye and engage the locking device (4).

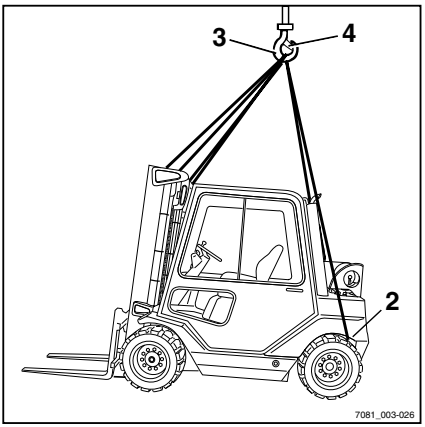

⚠ CAUTION

Failure to follow these instructions could result in damaged components!

– The harnesses must be attached so that the pulling forces do not affect attachments or parts of the overhead guard or the cab. If attachment parts are in the way (e.g. lighting, rear window, trademark emblem etc.), these must be removed before loading.

https://truckmanualshub.com/

Loading the truck

DANGER

Risk to life!

Never walk or stand underneath suspended loads.

Do not allow the forklift truck to bump into anything whilst it is suspended, or allow it to move in an uncontrolled way.

– If necessary, hold the truck using guide ropes.

– Lift the truck carefully and set it down at the intended location.

Frequent short-term operation

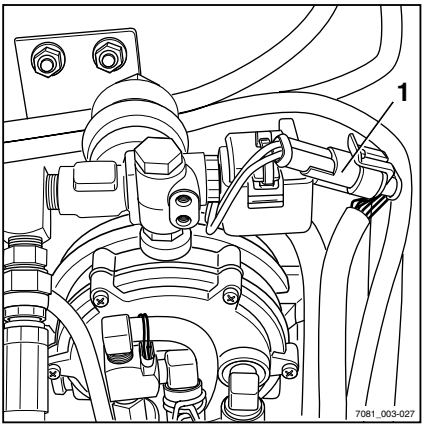

CAUTION

Very occasionally, especially with frequent short-term operation, with high load and low ambient temperature, the evaporator may ice up. The cause is temporary insufficient heat conduction to the evaporator.

– In this case, close the gas shut-off valve before the evaporator by separating(1)the connector and continue to run the engine at increased idling speed until it stalls on its own due to lack of gas.

– If the engine died on its own while the gas shut-off valve was still open, start the engine with closed shut-off valve until it starts up. Afterwards, operate at increased idling speed until it repeatedly stalls.

DANGER

Open flames, red-hot objects etc. may cause explosions.

Frozen-up system parts should only be thawed out with hot water, hot sandbags, or the like.

– Afterwards, determine cause and correct appropriately. Contact the customer service office.

https://truckmanualshub.com/

⚠ CAUTION

Risk of damage to components!

Under no circumstances should the engine be shut off via the ignition when the evaporator is iced up, since very cold residual gas still in the evaporator chamber could thermally expand as it warms to the ambient temperature, leading to impermissible excess pressure in the evaporator chamber.

Jump starting

⚠ DANGER

Risk of explosion from spark discharge!

While connecting, make sure that cables do not come into contact with metallic parts of the vehicle.

⚠ DANGER

Risk of explosion!

If the forklift has been shut away for a long period in a closed room, ventilate the area well before switching on the electrical system.

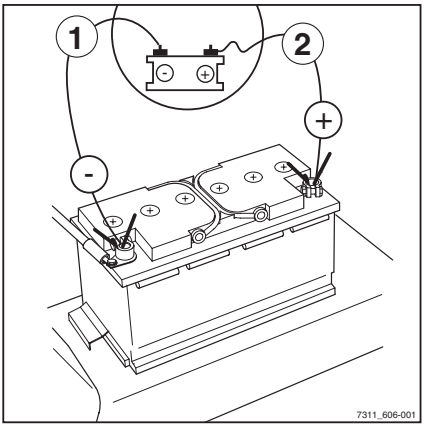

NOTE

A power source with 12 V (e.g. second forklift truck of same type) must be available.

- Open the bonnet; see ⇒ Chapter "Opening the bonnet", P. 5-55.
- Disassemble base plate; see ⇒ Chapter "Installing and removing the floorplate", P. 6-194
- Allow the engine in the vehicle providing the current to run.
- Connect the positive cable (2) to the positive terminal on the dead battery first and then connect it to the positive terminal of the current-providing battery.
- Connect the negative cable (1) to the negative terminal of the current-providing battery first and then connect it to the negative terminal of the dead battery.

https://truckmanualshub.com/

- Start the engine, see ⇒ Chapter "Starting the engine", P. 5-68.
- Once the engine is running, remove the jumper cables in exactly the reverse order.
- Replace the floorplate.
- Close the bonnet.

https://truckmanualshub.com/

Behaviour in emergencies

Procedure if truck tips over

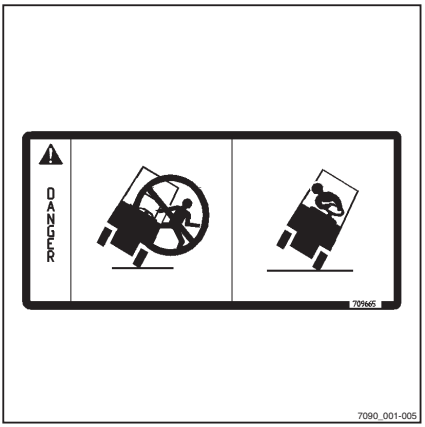

WARNING

Risk of injury!

Failure to comply with the limits specified in these operating instructions, e.g. driving on unacceptably steep inclines or failing to adjust speed when cornering, can cause the truck to tip over.

If the truck is threatening to tip over, you should not under any circumstances attempt to jump clear. Jumping increases the risk of injury. Do not release your seat belt!

The correct behaviour is as follows:

- Bend your upper body over the steering wheel.
- Hold on tight to the steering wheel with both hands and brace yourself with your feet.
- Bend your body against the direction of the fall.
- On trucks with a cab, if the door cannot be opened after tipping over, the emergency hammer (1) can be used to break a window.

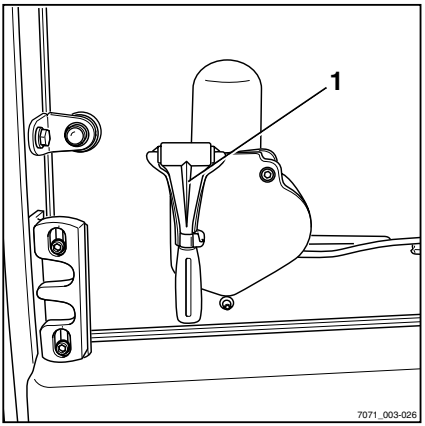

WARNING

Glass splinters may cause injuries!

- Turn your face away when breaking the window.

https://truckmanualshub.com/

Emergency lowering

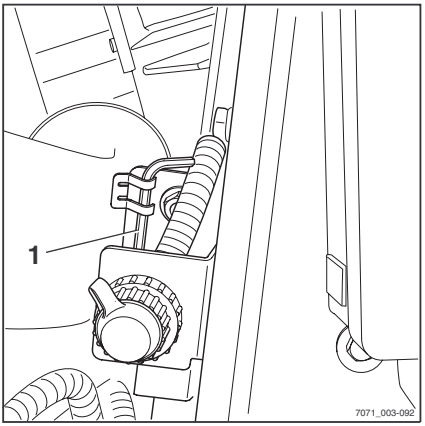

NOTE

If the load cannot be lowered from a raised position due to a control failure, emergency lowering is possible.

DANGER

Risk to life!

Do not walk underneath the raised load!

NOTE

A 4-mm angle screwdriver is located on the right-hand side of the valve block frame for use when performing the following work (1).

NOTE

This angle screwdriver must remain in the truck.

– Open the bonnet; see ⇒ Chapter "Opening the bonnet", P. 5-55.

– Take out the angle screwdriver (1).

– Unscrew the emergency lowering screw (2) in the control block a maximum of 1.5 revolutions using the angle screwdriver.

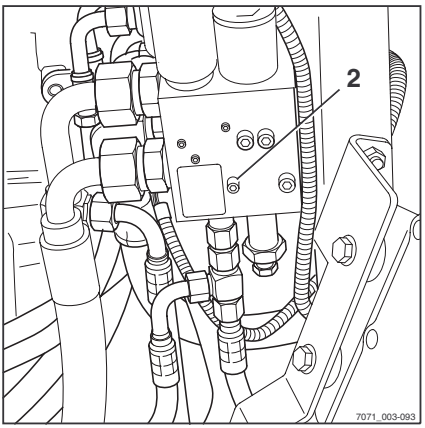

WARNING

The load is lowered!

The speed can be controlled by the degree to which the screw is unscrewed.

Unscrewed minimally: load is lowered slowly.

Unscrewed maximally: load is lowered quickly.

– Screw the emergency lowering screw (2) back in after the load is lowered.

Tightening torque: max. 2.5 Nm

– Return the angle screwdriver (1) to the support mounting provided.

– Close the bonnet.

https://truckmanualshub.com/

Disconnecting the battery

In order to quickly disconnect the battery in the event of a dangerous situation (e.g. a burning cable or electrical malfunction), the negative battery terminal is provided with a quick-disconnect battery-terminal clip.

NOTE

The battery is located on the left side, underneath the floorplate.

Use the following procedure to quickly disconnect the battery:

– Using the handle (1), lift the floorplate. ▷

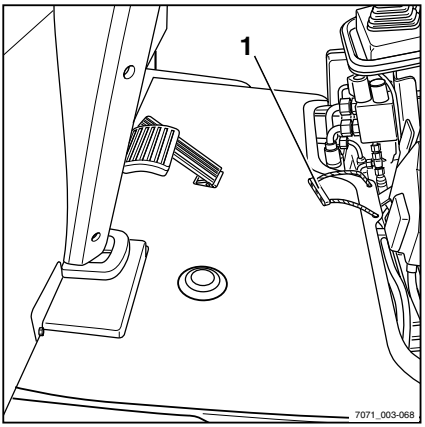

– Pull the negative terminal battery-terminal clip upward. ▷
– Lift the battery-terminal clip off the negative terminal of the battery and place it to the side.

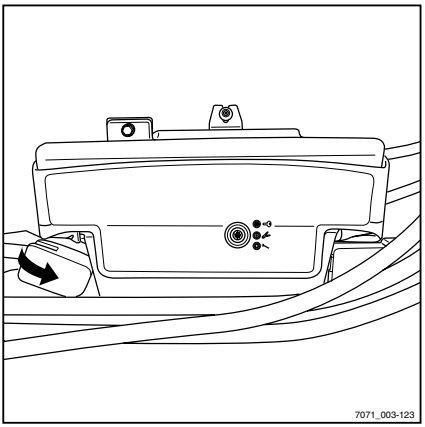

https://truckmanualshub.com/

Refuelling

Changing the LPG cylinder

DANGER

There is a risk of explosion if LPG escapes.

– Check that LPG cylinders have approval.

LPG cylinders with an expired inspection date should not be used.

The inspection intervals laid down in the regulation applicable to pressure vessels must be observed without fail. The last inspection date marked on the LPG cylinder is the applicable date. Observe the national regulations for your country!

– When changing cylinders, do not smoke or use an open flame.

– Only use LPG cylinders in well-ventilated rooms and do not change near openings in the ground.

– Switch off the engine.

Note safety regulations for working with LPG ⇒ Chapter "LPG", P. 3-30.

DANGER

Risk of explosion from spark discharge!

Impact tools should not be used to open/close valves.

DANGER

Open flames, red-hot objects etc. may cause explosions.

Frozen-up system parts should only be thawed out with hot water, hot sandbags or the like.

https://truckmanualshub.com/

CAUTION

Observe the following instructions:

Observe safety guidelines for LPG motor vehicles!

Cylinders should only be changed by persons who have undergone training.

Before releasing pipe or hose connections, the cylinder and main shut-off valves should be closed.

The connecting nuts on cylinders should only be released slowly and only very little at first, as the gas still in the line will squirt out.

Pipework and its accessories for gas in the liquid phase and LPG containers must not be exposed to an impermissible level of heat.

Removable LPG containers (LPG cylinders) must be positioned on the vehicle so that they are horizontal and the collar opening faces downwards.

Upon installation and removal, the gas outlet connection of the cylinder valve must be sealed off by a lock nut securely tightened with a wrench.

Before LPG cylinders are connected, their pipe connections must be checked for perfect condition.

After removal, the cap of the cylinder must be immediately screwed onto cylinders provided with a lock nut.

Valves should be opened slowly!

Leaking gas cylinders should no longer be used. They must be emptied immediately by being released outside, taking all precautions into account, and marked as leaking.

If damaged gas cylinders are supplied, the provider or his representative (service-station attendant etc.) must be immediately notified of the damage present, where possible in writing.

Explosions involving gas cylinders or LPG systems must be immediately reported to the employers' liability insurance association and the industrial inspectorate responsible, even where no accident occurs (applies to Germany). Damaged parts must be kept until conclusion of the investigation. Follow the national regulations for your country.

Removable LPG containers may only be changed in storage rooms when there is no possibility of a hazardous explosive atmosphere being produced.

WARNING

LPG can cause frostbite on the skin.

– Therefore, protective gloves should always be worn.

https://truckmanualshub.com/

– On the protective cover (1) pull the release pin (2) and flip open the protective cover. ▷

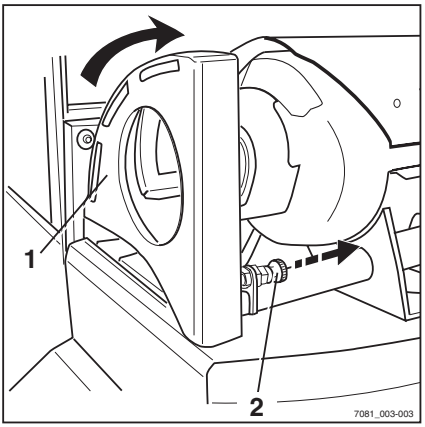

– Close the cylinder valve (3). ▷
– Securely grip the connection nipple with the handhold (5) and carefully release the union nut (4) (left-hand thread).

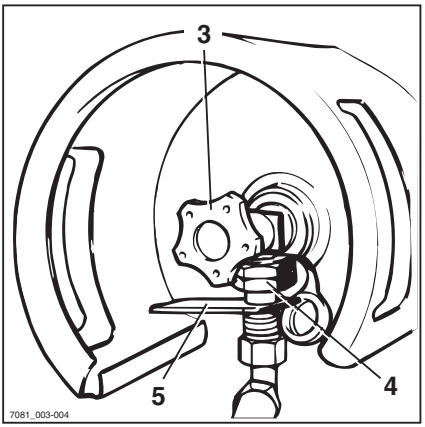

https://truckmanualshub.com/

- Swing the handle of the tensioning device (6) upwards and remove the hook (8) from the mounting support.
- Remove the top of the cylinder holder (7).
- Exchange the empty gas cylinder for a full one.

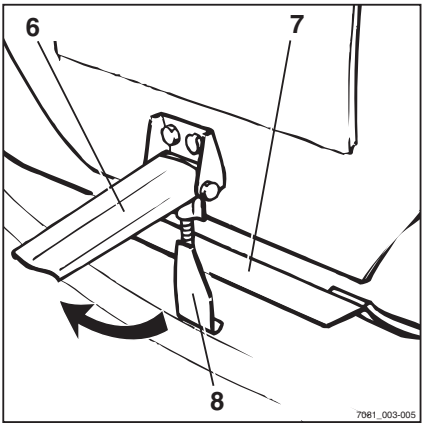

NOTE

When installing the gas cylinder, make sure that the connection screw joint of the cylinder shut-off valve points vertically downwards.

- Secure the gas cylinder in the cylinder holder properly and check the connections for leaks.

Filling the LPG tank

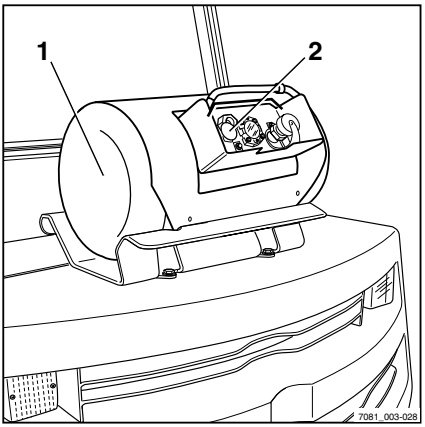

DANGER

There is a risk of explosion if LPG escapes!

Smoking, open flames and fire are forbidden when filling the LPG tank.

- Stop the engine.
- Note safety regulations for working with LPG ⇒ Chapter "LPG", P. 3-30.

DANGER

Risk of explosion from spark discharge!

The shut-off valve or locking cap must not be opened or closed with the aid of a striking tool.

DANGER

Open flames, red-hot objects etc. may cause explosions.

- Thaw frozen system components only with hot water, hot sand bags or the like.

Follow the instructions given below:

https://truckmanualshub.com/

– Observe the safety guidelines for vehicles powered by LPG and the safety instructions posted at the filling station.

The LPG tank may only be filled by trained personnel.

The LPG tank can only be filled at LPG filling stations that do not require authorisation.

– Before connecting the filler nozzle, check whether the LPG tank (1) or fittings (2) show any defects and that the inspection interval given on the container has not expired.

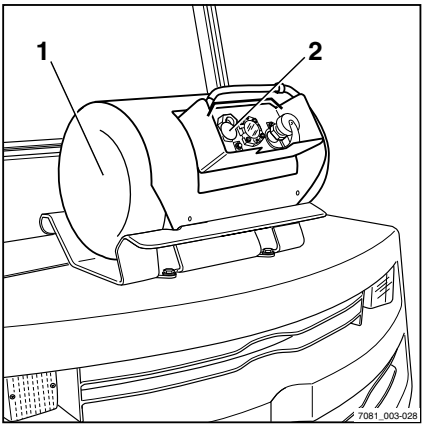

Inspection intervals required in the Pressure Vessels Regulations must be complied with. The most recent inspection date marked on the container is the applicable date. Containers with an expired inspection date should not be used. Follow the national regulations for your country.

Filling may not be carried out if defects are observed or if the inspection interval has been exceeded.

Pipework and its accessories for gas in the liquid phase and LPG containers must not be exposed to an impermissible level of heat.

Explosions involving gas cylinders or LPG systems must be immediately reported to the employers' liability insurance association and the industrial inspectorate responsible, even where no accident occurs (applies to Germany). Damaged parts must be kept until conclusion of the investigation. Follow the national regulations for your country.

Removable LPG containers may only be changed in storage rooms when there is no possibility of a hazardous explosive atmosphere being produced.

NOTE

We recommend that you refuel before starting work if the machine is still cold. If there is a major difference in temperature between the storage tank out in the open and the tank on the truck, the delivery pressure of the pump may no longer be sufficient for proper filling.

– Switch off the engine and heater.

https://truckmanualshub.com/

⚠ WARNING

LPG can cause frostbite on the skin!

– Accordingly, always wear protective gloves.

– Close the shut-off valve (3).

– Unscrew the locking cap (5) from the filling valve.

– Check that the connection thread of the filler nozzle is clean.

– Securely connect the filler nozzle to the filling valve.

– Open and activate the main shut-off valve at the LPG filling station and activate the pump motor or the filler nozzle until the valve installed in the tank stops refilling.

Filling quantity: approx. 70 litres

– Release the actuating lever of the filler nozzle immediately after the tank valve shuts off and you cease filling.

– Cut the pump motor off and close the main shut-off valve at the LPG filling station.

The LPG tank should only be filled up until the tank valve switches off and not as shown on the display of the contents indicator (4).

– Carefully unscrew the filler nozzle from the filling valve.

– Screw the locking cap (5) back onto the filling valve.

⚠ WARNING

Risk of accident!

– If irregularities or noteworthy incidents occur during filling, immediately notify the departments responsible and arrange for the rectification of defects.

▷

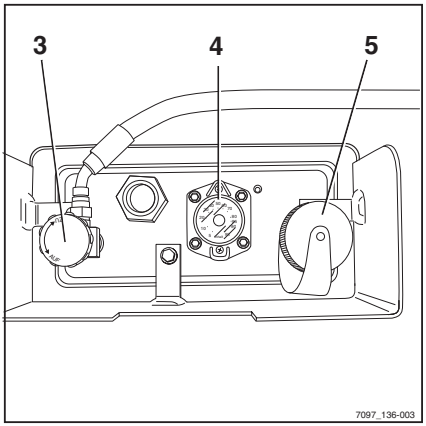

https://truckmanualshub.com/

Shut-down

Parking the truck securely

▷

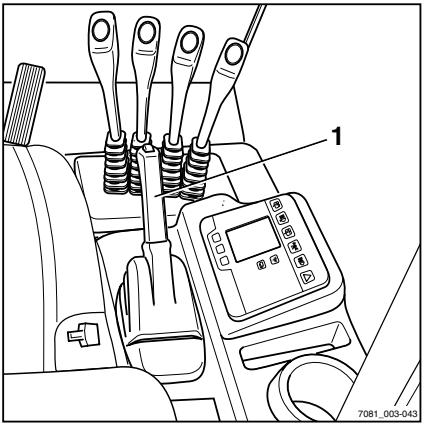

DANGER

The truck should not be parked on a slope.

– Secure the truck in an emergency by placing chocks on the downhill side.

DANGER

Risk of explosion!

Trucks with an LPG drive cannot be parked close to pits, cellars, access points to staircases, heating systems or other heat sources.

LPG is heavier than air. It collects at the floor where it may produce hazardous explosive mixtures of gas and air.

Gas cylinders must be protected from impermissible heating.

– Note safety regulations for working with LPG ⇒ Chapter "LPG", P. 3-30.

– Apply the parking brake (1).

– Lower the forks to the ground and tilt the fork tips sufficiently forward, until they touch the ground.

WARNING

Risk of accident!

– Before leaving truck, fully lower the load.

NOTE

In frosty conditions, the truck should be left in an enclosed room where possible, as LPG only undergoes sufficient evaporation at temperatures above -10°C (propane) up to +5°C (propane/butane) to start the engine.

Switching off the engine

– Take your foot off the accelerator pedal and allow the engine to continue idling for a while under no load.

https://truckmanualshub.com/

⚠ CAUTION

Malfunctioning of the LPG system is possible!

– If outside temperatures are below +10°C, allow the engine to run for at least two minutes before switching it off.

– Turn the ignition key to the left and remove it.

– For trucks with LPG tanks (special equipment), close the shut-off valve (2) (ZU).

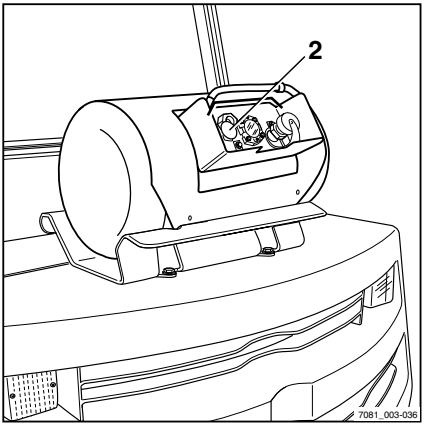

– For trucks with LPG cylinders, close the cylinder valve (3).

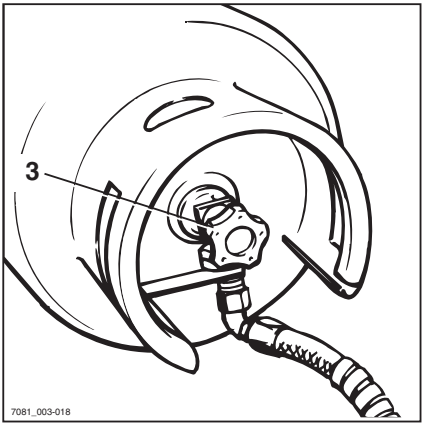

NOTE

Without explicit instructions, the ignition key or FleetManager card (special equipment) should not be made available to other persons.

NOTE

Avoid parking the vehicle for long periods at temperatures lower than 0°C, because the hydraulic fluids will be very viscous and the functions will be tight.

https://truckmanualshub.com/

Inserting a wheel chock

The wheel chock (special equipment) serves, among other things, to prevent the forklift truck from rolling away on a slope.

- Lift the handle (4) on the support mounting.
- Remove the wheel chock (5) from the support mounting.
- Place the wheel chock on the downhill side behind a wheel on the front axle.

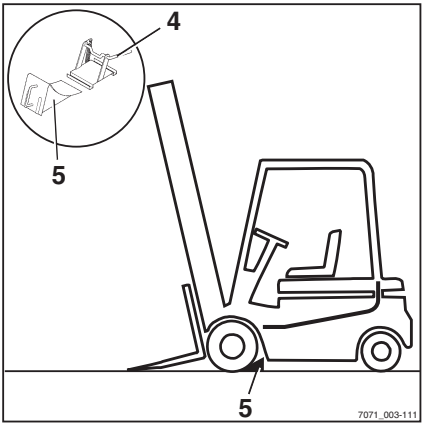

NOTE

After using, return the wheel chock to the support mounting and press the handle (4) down again.

Measures for prolonged shutdown, storage of truck

If the truck is to be stored for a prolonged time, the following measures must be taken to protect against corrosion.

If the truck is to be shut down for more than two months, it must be parked in a clean and dry area. The area should also be well ventilated and frost free. The following additional measures must be taken:

Measures before shutdown

- Clean truck thoroughly; see ⇒ Chapter "Cleaning", P. 196.
- Lift fork carriage to full extent several times.
- Tilt the mast forwards and backwards several times and, if fitted, move attachments repeatedly.
- To relieve the strain on the load chains, lower forks onto a suitable supporting surface e. g. a pallet.
- Check the hydraulic oil level and refill as needed; see ⇒ Chapter "Maintaining hydraulic equipment", P. 6-207.
- Apply oil or grease thinly to all uninsulated moving parts; see ⇒ Chapter "Lubricating joints and controls", P. 6-211.

https://truckmanualshub.com/

- Lubricate the forklift truck.
- Remove LPG cylinder.
- Check the condition and acid density of the battery and maintain the battery as specified by the manufacturer; see ⇒ Chapter "Servicing the battery", P. 6-204. (Follow the instructions provided by the battery manufacturer.) Only store completely charged batteries.
- Apply a suitable contact spray to all exposed electrical contacts .
- Preserve the engine as specified by the manufacturer.

⚠ CAUTION

Prevent permanent deformation of the tyres.

Jack up the truck so that all wheels are off the ground.

⚠ CAUTION

We do not recommend using a plastic sheet as this promotes the formation of condensation.

- Cover the truck with a cotton sheet and protect against dust.

If the truck is to be shut down for even longer periods, contact your service centre for additional recommended measures.

Returning to service after storage

If the truck has been in storage for longer than six months, it must be carefully checked before being put back into service.

As in the UVV (accident prevention) inspection or the annual inspection, this check should also include all safety items for the truck.

- Clean truck thoroughly; see ⇒ Chapter "Cleaning", P. 196.
- Oil joints and controls.
- Check battery condition and acid density; recharge if necessary.
- Restore engine to normal condition according to regulations of engine manufacturer.

https://truckmanualshub.com/

- Check engine oil for condensed water, change if necessary, see
- Check hydraulic oil for condensed water; change if necessary.
- Perform maintenance as before initial start-up.
- Connect LPG cylinder, see ⇒ Chapter "Changing the LPG cylinder", P. 5-165.
- Check the gas fuel system system for leaks with leak spray.
- Check the connections of the gas fuel system system for tightness.

⚠ DANGER

Risk of explosion!

After a truck has been shut down in an enclosed room for a lengthy period, ventilate thoroughly before switching on electrical system.

- Put the truck into service.

Check during start-up in particular:

- tightness and function of gas fuel system
- drive, control, steering
- brakes (service brake, parking brake)
- lifting system (load-carrying equipment, load chains, fastening)

https://truckmanualshub.com/

https://truckmanualshub.com/

6

Maintenance

https://truckmanualshub.com/

General maintenance information

Qualifications of personnel

Only qualified and authorised personnel are allowed to perform maintenance work The annual check must be conducted by a specialist. The specialist's evaluation must be unaffected by operational and economic conditions and be conducted solely from a safety standpoint. The specialist must have sufficient knowledge and experience to be able to assess the condition of a forklift truck and the effectiveness of the protective equipment according to technical conventions and the principles for testing forklift trucks.

Maintenance work for which no special qualifications are necessary

Simple maintenance work, e.g. checking the hydraulic oil level or checking the fluid level in the battery, may be performed by untrained personnel. This does not require training as described above. Refer to this operating manual for further information.

Information regarding performing maintenance

This section contains all information to determine when your truck must be serviced. Be sure to perform maintenance according to the maintenance overview programme; this is essential to obtain the full availability, productivity and working life from your truck, and is a pre-condition for any warranty claims.

https://truckmanualshub.com/

Time of maintenance

Maintenance on the truck must be performed based on the operating hours meter. The maintenance overview programme indicates which maintenance work is due.

The maintenance overview programme includes instructions for performing maintenance.

All lubrication and service intervals must be reduced appropriately for dusty conditions, large temperature fluctuations or intensive use.

CAUTION

If technical values in this manual vary from those listed in the enclosed operating instructions for the engine, the values in this manual have priority.

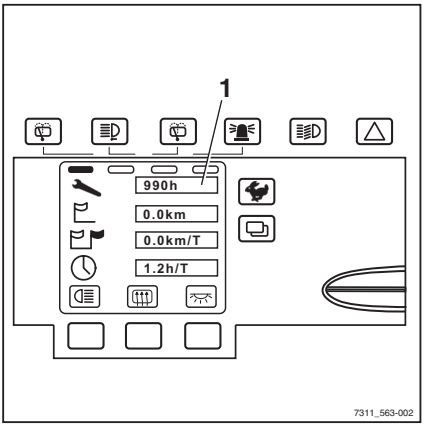

Maintenance and lubrication

1. During the initial operating period (designated by numbers in bold with a star (*))

2. According to the operating hours meter (numbers in bold)

After **3000** operating hours, for example, the following must be performed: maintenance and lubrication "after 500 and 1000 operating hours".

50*								
500	**1000**	**1500**	**2000**	**2500**	**3000**	**3500**	**4000**	**4500**
500	1000 500	500	1000 500	500	3000 1000 500	500	1000 500	500
5000	**5500**	**6000**	**6500**	**7000**	**7500**	**8000**	**8500**	**9000**
1000 500	500	6000 3000 1000 500	500	1000 500	500	2000 1000 500	500	9000 3000 1000 500

After **9000** operating hours, repeat the above – taking 9500 as 500 operating hours.

https://truckmanualshub.com/

Overview of areas requiring maintenance

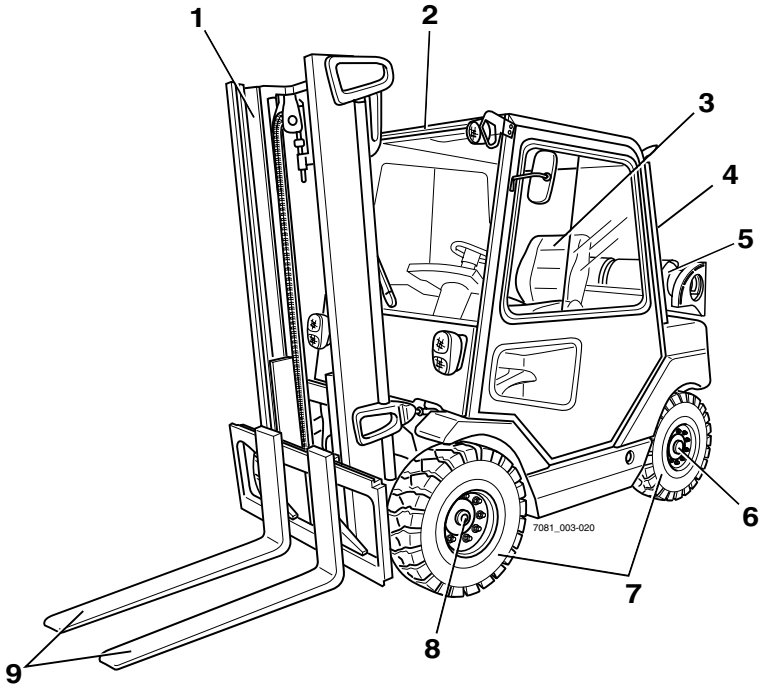

https://truckmanualshub.com/

Intervals for maintenance and inspection

The work shall be performed by your service centre according to the maintenance intervals listed below.

Maintenance after 50 operating hours

Position	Maintenance work
-	Maintenance during the break-in period; see ⇒ Chapter "Maintenance during the break-in period", P. 6-199

Maintenance as required

Position	Maintenance work
-	Clean truck, see ⇒ Chapter "Cleaning", P. 196
-	Clean radiator, checking seal, see ⇒ Chapter "Cleaning the radiator, checking for leaks", P. 6-200
-	Topping up coolant and checking concentration of coolant additive, see ⇒ Chapter "Topping up coolant and checking coolant concentration", P. 6-200
-	Replace air filter insert, see ⇒ Chapter "Changing the air filter insert", P. 6-202
-	Service battery, see ⇒ Chapter "Servicing the battery", P. 6-204
-	Service hydraulic equipment, see ⇒ Chapter "Maintaining hydraulic equipment", P. 6-207
7	Service wheels and tyres, see ⇒ Chapter "Servicing wheels and tyres", P. 6-208
-	Check foot brake setting, see ⇒ Chapter "Checking adjustment of the footbrake", P. 6-209
-	Check parking brake setting, see ⇒ Chapter "Checking the parking brake setting", P. 6-210
-	Joints and controls, see ⇒ Chapter "Lubricating joints and controls", P. 6-211
-	Check door locking, see ⇒ Chapter "Checking the door latch", P. 6-211
6	Service steering axle, see ⇒ Chapter "Maintaining the steering axle", P. 6-211
1	Service mast bearings, see ⇒ Chapter "Servicing the mast bearing", P. 6-214

https://truckmanualshub.com/

Position	Maintenance work
1	Service load chains, see ⇒ Chapter "Load chain maintenance", P. 6-214
1	Lubricate lift mast and roller track, see ⇒ Chapter "Lubricating the lift mast and roller track", P. 6-217
3	Service restraining belt, see ⇒ Chapter "Maintaining the restraining belt", P. 6-217
-	Service restraint system, see ⇒ Chapter "Maintaining the restraint system", P. 6-219
3	Check driver's seat, see ⇒ Chapter "Check driver's seat", P. 6-219
-	Replace fuses, see ⇒ Chapter "Replacing fuses", P. 6-219
-	Service attachments, see ⇒ Chapter "Attachment maintenance", P. 6-221

500-hour maintenance/semi-annual maintenance

Position	Maintenance work
-	Carry out maintenance work as necessary, see ⇒ Chapter "Maintenance as required", P. 200
5	Check evaporator and pressure regulator; see ⇒ Chapter "Checking the evaporator and pressure regulator", P. 6-222

1000 hour maintenance/annual maintenance

Position	Maintenance work
-	Carry out maintenance work as necessary, see ⇒ Chapter "Maintenance as required", P. 200
-	Carry out all work for 500-hour maintenance/semi-annual maintenance, see ⇒ Chapter "500-hour maintenance/semi-annual maintenance", P. 222
8	Check drive axle oil level and check for leaks, see ⇒ Chapter "Maintainance of drive axle", P. 6-223
-	Check the counterweight fastening, see ⇒ Chapter "Checking the counterweight attachment", P. 6-224
-	Replace engine oil and filter, see ⇒ Chapter "Changing the engine oil and filter", P. 6-224
-	Replace spark plugs; see⇒ Chapter "Replacing the spark plugs", P. 6-227
-	Check status and tension of ribbed V-belt; see ⇒ Chapter "Checking the ribbed V-belt", P. 6-226

https://truckmanualshub.com/

Position	Maintenance work
4	Check exhaust system; see ⇒ Chapter "Checking the exhaust gas system", P. 6-227
5	Replace LPG filter; see ⇒ Chapter "Changing the LPG filter", P. 6-227
5	Overhaul gas fuel system; see ⇒ Chapter "Overhauling the LPG system", P. 6-229
-	Check lambda control system; see ⇒ Chapter "Checking the lambda control system", P. 6-230
-	Check the heating system for leaks, see ⇒ Chapter "Checking the heating system for leaks", P. 6-230
1	Check lift cylinders and connections for leaks, see ⇒ Chapter "Check lift cylinders and connections for leaks.", P. 6-230
1	Service lifting system, see ⇒ Chapter "Maintain lifting system", P. 6-231
1	Check play between fork carriage stop and run-out stop, see ⇒ Chapter "Checking the clearance between fork carriage stop and run-out stop", P. 6-233
9	Check fork arms, see ⇒ Chapter "Checking the fork arms", P. 6-233
-	Check reversible fork arms, see ⇒ Chapter "Checking reversible fork arms", P. 6-234

3000-hour maintenance/two-year maintenance

Position	Maintenance work
-	Carry out maintenance work as necessary, see ⇒ Chapter "Maintenance as required", P. 200
-	Carry out all work for 500-hour maintenance/semi-annual maintenance, see ⇒ Chapter "500-hour maintenance/semi-annual maintenance", P. 222
-	Carry out all work for 1000-hour maintenance/annual maintenance, see ⇒ Chapter "1000-hour maintenance/annual maintenance", P. 223
8	Replace gear lubricant oil, see ⇒ Chapter "Changing the gear lubricant oil", P. 6-235
-	Check wheel bearings, see ⇒ Chapter "Checking the wheel bearing ", P. 6-236
-	Check engine bearing, see ⇒ Chapter "Checking the engine mountings", P. 6-236
5	Replace hoses for the gas fuel system; see⇒ Chapter "Replacing hoses in the LPG system", P. 6-237

https://truckmanualshub.com/

6000-hour maintenance

Position	Maintenance work
-	Carry out maintenance work as necessary, see ⇒ Chapter "Maintenance as required", P. 200
-	Carry out all work for 500-hour maintenance/semi-annual maintenance, see ⇒ Chapter "500-hour maintenance/semi-annual maintenance", P. 222
-	Carry out all work for 1000-hour maintenance/annual maintenance, see ⇒ Chapter "1000-hour maintenance/annual maintenance", P. 223
-	Carry out all work for 3000-hour maintenance/two-year maintenance, see ⇒ Chapter "3000-hour maintenance/two-year maintenance", P. 235
-	Replace hydraulic oil and filter, see ⇒ Chapter "Changing the hydraulic oil and filter", P. 6-239

9000 hour maintenance/five-year maintenance

Position	Maintenance work
-	Carry out maintenance work as necessary, see ⇒ Chapter "Maintenance as required", P. 200
-	Carry out all work for 500-hour maintenance/semi-annual maintenance, see ⇒ Chapter "500-hour maintenance/semi-annual maintenance", P. 222
-	Carry out all work for 1000-hour maintenance/annual maintenance, see ⇒ Chapter "1000-hour maintenance/annual maintenance", P. 223
-	Carry out all work for 3000-hour maintenance/two-year maintenance, see ⇒ Chapter "3000-hour maintenance/two-year maintenance", P. 235
-	Replace coolant; see ⇒ Chapter "Changing the coolant", P. 6-243

10 year maintenance

Position	Maintenance work
5	Subject fuel gas tank to TÜV inspection; see ⇒ Chapter "Checking the LPG tank", P. 6-246

https://truckmanualshub.com/

Ordering spare parts and wearing parts

Spare parts are provided by our spare parts service department. The information required for ordering spare parts is shown in the spare parts list.

Only use spare parts as per the manufacturer's instructions. The use of unapproved spare parts can result in an increased risk of accidents due to insufficient quality or incorrect assignment.

Anyone using unapproved spare parts is fully liable without restriction in the event of damage or harm.

Quality and quantity of the required operating materials

Only the operating materials specified in the maintenance data table may be used.

Consult the maintenance data table for the consumables and lubricants needed for maintenance. See ⇒ Chapter "Maintenance data table", P. 6-186.

Different quality oil and grease types may not be mixed. This negatively affects the lubricity. If a change between different manufacturers cannot be avoided: remove the old oil particularly thoroughly.

Before performing greasing, filter changes or any intervention in the hydraulic system, carefully clean the area around the part involved.

When topping up consumables, use clean containers only!

https://truckmanualshub.com/

Maintenance data table

Unit	Operating materials	Specification	Dimension
General lubrication points	Grease	DIN 51825-KPF2 N-20 penetration class 2, lithium-saponified, ID no. 141001 (400g cartridge)	As required
Battery	Distilled water		As required
- Insulation resistance			Min. 1000 Ω against ground
Controls/joints	Grease	DIN 51825-KP2 K-20 penetration class 2, lithium-saponified ID no. 163488 (225 g tube)	As required
	Oil	SAE 80 MIL-L2105 API-GL4	As required
Hydraulic equipment	Hydraulic oil	HVLP68 DIN 51524 Part 3	Approx. 48 l
	Hydraulic oil for the foodstuffs industry (special equipment)	USDA H1 DIN 51524	Approx. 48 l
- Filter cover	Torque wrench		30 Nm
Tyres			
- Pneumatic tyres	-		Air pressure: see information on truck Min. profile height: 1.6 mm
- Superelastic tyres	Wear limit:		To wear mark
Wheel nuts			
- Drive axle	Torque wrench		M20x1.5: 640 Nm
- Steering axle	Torque wrench		M20x1.5: 600 Nm
Carraro drive axle EC50i			
- Gear wheel	Mineral oil	ARAL HGS FLUID 127830	Right-hand side: 1.1 l Left-hand side: 0.65 l
Lift mast	Super-pressure adhesive lubricant	ID no. 147873	As required
- Stop	-		Clearance: min. 2 mm

https://truckmanualshub.com/

Unit	Operating materials	Specification	Dimension
- Mast bearing screws	Torque wrench		M16x80 10.9: 290 Nm
Load chains	Chain spray	ID no. 141001 ID no. 156428	As required
- Setting			Distance from the support roller under the inside mast to the top edge: 15 mm
Steering axle			
- Axle stub nuts	Torque wrench		310 Nm
- Wheel hub fastening	Torque wrench		470 Nm
Cooling system	Coolant/water	G12 plus TL-VW 774 F	Approx. 15.5 l
LPG cylinder	LPG	DIN 51622 EN 589	11 kg
Engine	Engine oil	VW 50700	With filter change approx. 6.4 l
- Ignition system	Spark plugs	NGK IZKR 7B VW no.: 101.905.606.A	Gap between electrodes: 1.0 ± 0.1 mm Tightening torque: 20 Nm
Air filter			
- Dry air filter	Filter rinsing solution	-	As required

https://truckmanualshub.com/

Safety instructions for maintenance

General information

To prevent accidents during maintenance and repair work, all necessary safety measures must be taken, e.g.:

- Ensure that unintentional movement or undesired start-up of the forklift truck is prevented (apply the parking brake, jack up the forklift truck).
- Secure against lowering when working under raised load-carrying equipment.
- Secure the mast against unintentional tilting.

Carrying out work on the hydraulic equipment

Hydraulic equipment must be depressurised prior to all work. See ⇒ Chapter "Depressurising connections for attachments", P. 5-117.

Working on electrical equipment

Work may only be performed on electrical equipment of the forklift truck in a voltage-free state. Only trained and commissioned persons may perform functional tests, checks, and settings on parts under voltage while taking the suitable precautionary measures. Rings, metal bracelets, etc. must be removed prior to working on electrical components.

To prevent damage to e-systems with electronic components, such as an electronic driving regulator or lift control, these components must be removed from the forklift truck prior to the start of electric welding.

Work on the electrical system (e.g. connecting a radio, additional headlights, etc.) must be approved by us.

https://truckmanualshub.com/

Working on the ignition system

To prevent personal injury and/or destruction of the ignition system, please comply with the following:

- Attach/remove leads, including, high-voltage cables and measuring instrument leads, to/from the ignition system only when the ignition system is off.
- If the engine is supposed to crank at starting speed but not actually start (e.g. for a compression pressure test), separate the plug connector from the ignition coil.
- Use of a quick charger to jump start the engine is only permitted up to 1 minute with max. 16.5 volts.
- The engine may only be washed when the ignition is switched off.
- When performing electric or point welding, completely disconnect the battery.
- Trucks in which there is a defect in the ignition system or one is suspected may only be towed if the plug for the ignition coil is unplugged.

Working on gas fuel (LPG) system

DANGER

Risk of explosion!

Note safety regulations for working with LPG ⇒ Chapter "LPG", P. 3-30.

The condition of the entire gas fuel system must be kept under constant surveillance to ensure safety of operation , in particular in terms of leakage. It is not permitted to use vehicles if the gas system has leaks. When checking for leaks, soapy water, a solution of Nekal or other foaming products should be used.

DANGER

Risk of explosion!

It is not permitted to inspect the gas system using a naked flame for illumination.

https://truckmanualshub.com/

It must be ensured that gas fuel systems are adjusted, so that the levels of harmful substances in the exhaust gases are set at the lowest possible value (CO concentration less than 0.1 vol.-% idling when the engine is at operating temperature) .

When replacing individual system parts, the manufacturers' installation instructions must be observed . Cylinder and main shut-off valves should be closed when doing so.

The condition of the electrical system of industrial trucks running on LPG must be kept under constant surveillance . Sparks may cause explosions if system parts containing gas are leaking. After an industrial truck running on LPG has been shut down for a lengthy period, the storage room must be ventilated thoroughly before starting up the vehicle or its electrical system.

When working in maintenance workshops, cylinder and main shut-off valves should be closed and the LPG cylinders protected from heat.

Before pauses in operation and finishing operation it should be checked by a responsible person whether all valves, in particular cylinder valves, are closed .

Work involving fire, specifically welding and cutting, should not be carried out in the vicinity of LPG cylinders .

LPG cylinders, even when empty, must not be stored in workshops.

Safety devices

After maintenance and repairs, all safety devices must be reinstalled and checked for proper functioning.

Set values

The device-dependent set values must be observed when making repairs and replacing hydraulic and electrical components. These are listed in the appropriate sections.

https://truckmanualshub.com/

Raising and jacking up

DANGER

Risk of accident!

To lift the truck, the components and the attachments, the lifting mechanism may only be applied at the designated points. When jacking up the equipment, appropriate measures must be taken (chocks, wooden blocks) to prevent rolling or tipping.

The truck has to be jacked up for various maintenance tasks. Always ensure that:

- that only jacks with sufficient lifting capacity are used,
- that the truck is only jacked up on level ground, and is secured against rolling and sinking.

WARNING

Risk of accident!

Apply the parking brake and turn off engine when jacking up the truck.

WARNING

Risk of injury!

– Jack up the truck sufficiently high that shoes cannot get trapped under a turning wheel.

Jack up at the frame.

– Place jack sideways under the chassis at the designated position.

– Jack up the truck until the rear wheels are no longer in contact with the ground.

– Secure the truck.

NOTE

If the front of the truck must be lifted, the jack must be applied at the lift mast.

▷

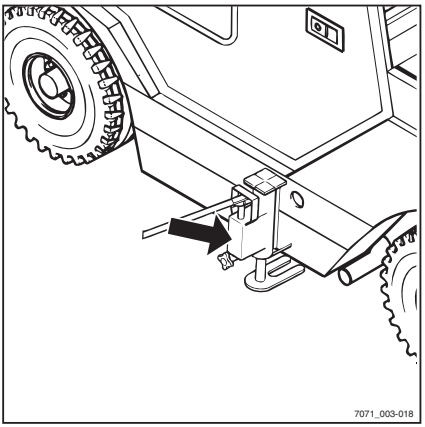

https://truckmanualshub.com/

Jacking up at the lift mast

▷

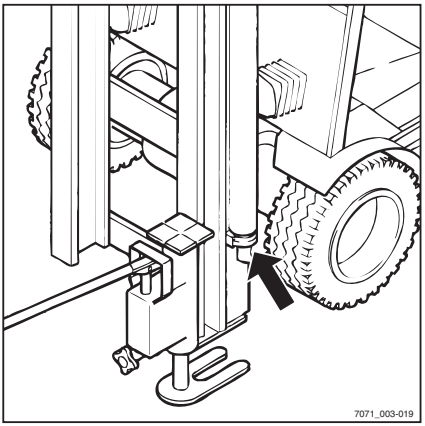

– Lift the fork carriage and secure against accidental lowering.

⚠ WARNING

Risk of injury!

Observe the safety regulations for working on lift masts, see ⇒ Chapter "Working at the front of the forklift truck", P. 6-192.

– Apply the jack at the mast.

– Jack up the truck until the wheels are no longer in contact with the ground.

– Secure the truck.

⚠ WARNING

Risk of injury!

Do not jack up truck by rear weight.

Working at the front of the forklift truck

▷

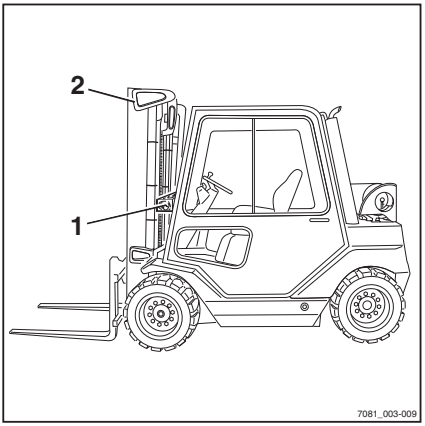

⚠ WARNING

Risk of accident!

If the lift mast or fork carriage is raised, no work must be performed on the lift mast or at the front of the forklift truck without observing the following safety measures!

Removing the lift mast

⚠ CAUTION

This work must only be performed by a service technician.

– Fasten the lifting gear to the upper part of the bridge piece (2) on the outer mast of the lift mast.

Securing against tilting back

– The lift mast must be secured against unintentionally tilting back by clamping in place a suitable hardwood timber, dimensions 120 x 120 x 1100 mm. (1).

https://truckmanualshub.com/

Securing the telescopic lift mast

DANGER

Risk of accident!

- To secure the lift mast, use a chain with sufficient load-bearing capacity for the particular lift mast.
- Note the maximum lift height.

- Extend the lift mast.
- Drape the chain over the cross traverse of the outer mast (3) and connect it underneath the cross traverse of the inner mast (4).
- Lower the inner mast until it strikes the chain.

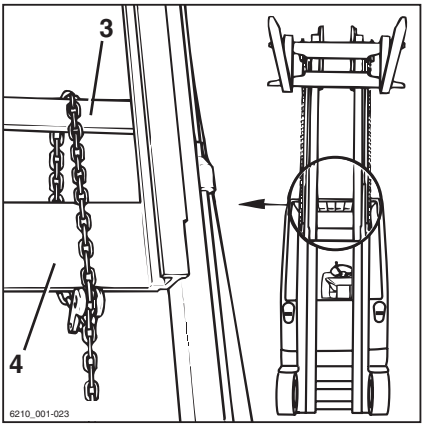

Securing the triple lift mast

DANGER

Risk of accident!

- To secure the lift mast, use a chain with sufficient load-bearing capacity for the particular lift mast.
- Note the maximum lift height.

- Extend the lift mast.
- Drape the chain over the cross traverse of the outer mast (5) and connect it underneath the cross traverse of the middle mast (6).
- Lower the lift mast until it strikes the chain.
- Lower the fork carriage until it strikes the stop.

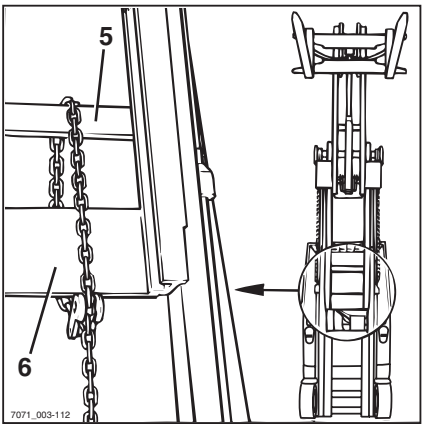

https://truckmanualshub.com/

Preparation for maintenance

Installing and removing the floorplate ▷

– Open the bonnet; see ⇒ Chapter "Opening the bonnet", P. 5-55.

– Lift floorplate by using (1) the handle.

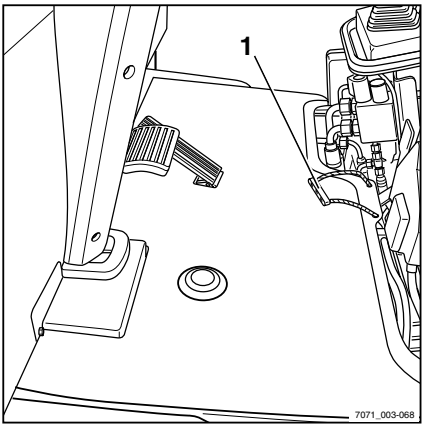

– Separate connector on the accelerator (2) pedal. ▷

– Lift floorplate and place in a safe location.

Installation is carried out in reverse order.

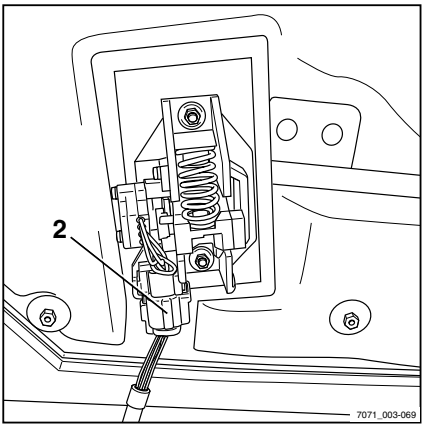

https://truckmanualshub.com/

Removing and installing the rear covering

– Remove the fixing screws (1).

– Remove the covering (2) by lifting it up.

Installation is carried out in reverse order.

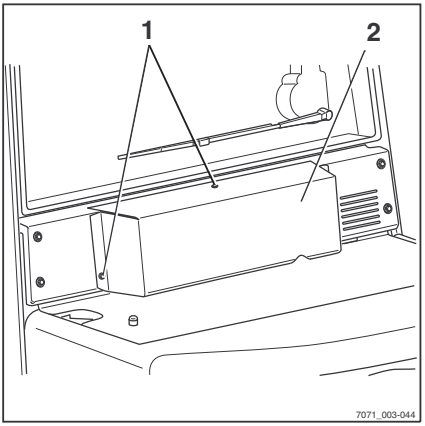

https://truckmanualshub.com/

Cleaning

Cleaning the truck

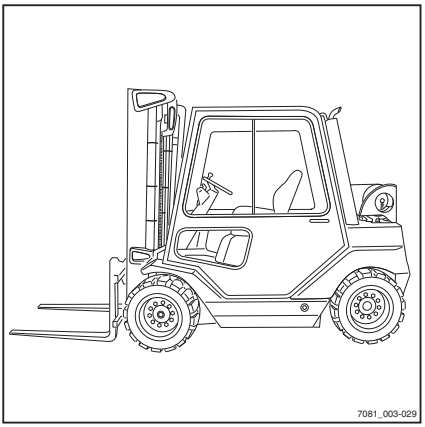

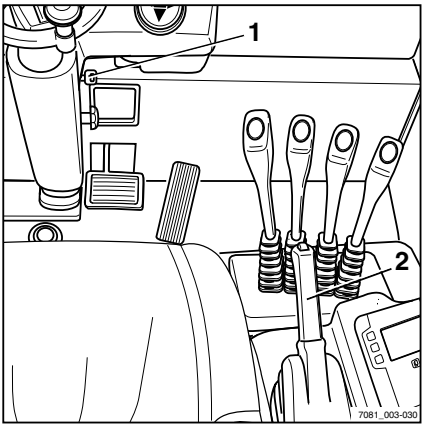

⚠ CAUTION

The engine must be switched off during washing.

– Switch off ignition switch and remove key.

Instructions for washing

– Always park vehicle according to regulations.

– Apply the (2) parking brake.

– Switch off the key switch (1) and remove the key.

Washing outside of truck

⚠ WARNING

Risk of fire!

Do not clean with combustible liquids.

– Deposits/accumulations of combustible materials, especially on or in the vicinity of parts with high temperatures (e.g. exhaust pipes) must be removed regularly.

⚠ WARNING

If the forklift truck is to be cleaned with hot-water devices, all sensitive - particularly electric - components must be carefully covered.

Note the manufacturer's guidelines for working with cleaning agents.

– Clean the vehicle on the outside with water-soluble cleaning agents and water (water jet, sponge, cloth).

– Pay particular attention to all walk-in areas, the oil filling openings and their surroundings, as well as the lubricating nipples before lubricating.

Please note: The more often the truck is cleaned, the more frequently it must be lubricated.

https://truckmanualshub.com/

CAUTION

Failure to follow these instructions could result in damaged components.

Steam jet cleaners may be used with max. 50 bar at 85°C at a distance of at least 20 cm.

Do not directly spray electric motors and other electrical components or their covers.

Do not aim the cleaning jet directly at stickers or notices.

Plastic parts, particularly on the console, may only be cleaned with plastics cleaners (display windows could become cloudy).

Cleaning the electrical system

CAUTION

Cleaning electrical system parts with water can damage the electrical system.

Cleaning electrical system parts with water is forbidden!

Only use a dry cleaning agent according to the manufacturer's specifications.

Do not remove covers etc.

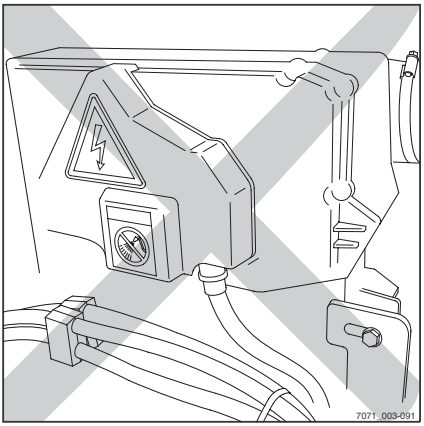

– Clean and dry electrical system parts with weakly compressed air and a metal-free brush.

Clean load chains

WARNING

Risk of accident!

Load chains are safety elements.

The use of cold/chemical cleaners or fluids that are corrosive or contain acid or chlorine can damage the chains and is forbidden!

– Place a collection vessel under the lift mast.

– Use paraffin derivatives such as benzene for cleaning (take note of the manufacturer's safety information.)

– When cleaning with a steam jet, do not use additives.

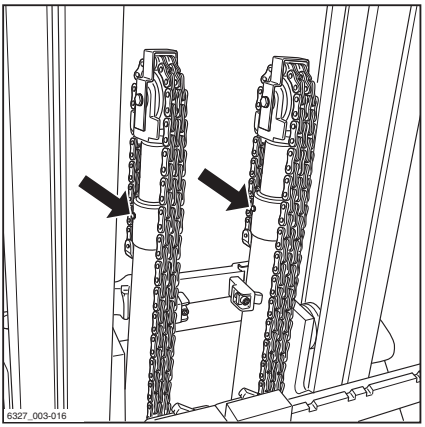

https://truckmanualshub.com/

– After cleaning, immediately apply compressed air to chain to remove any water remaining in the chain joints. Move the chain several times during this process.

– Immediately spray the chain with chain spray according to the maintenance data table (see ⇒ Chapter "Maintenance data table", P. 6-186) while moving the chain.

Cleaning the windscreens

On trucks with cabs (special equipment), the glass windscreens (1) must always be kept free of dirt and ice in order to ensure clear vision.

– Cleaning the windscreens.

NOTE

The windscreens can be cleaned using a conventional glass cleaner.

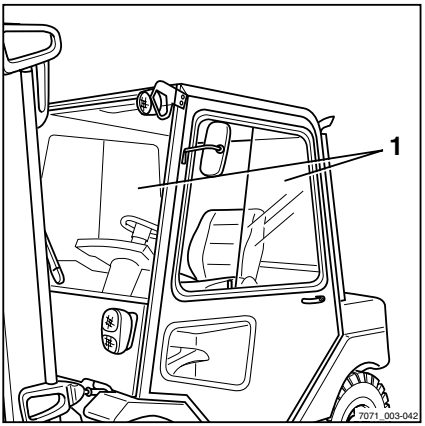

After washing

– Carefully dry truck (e.g. with compressed air).

– Sit on the driver's seat and start up the vehicle in line with the regulations.

CAUTION

Risk of short circuit!

– If any moisture has penetrated into the motors despite the precautionary measures taken, first dry them using compressed air.

– The truck must then be started up to prevent possible corrosion damage.

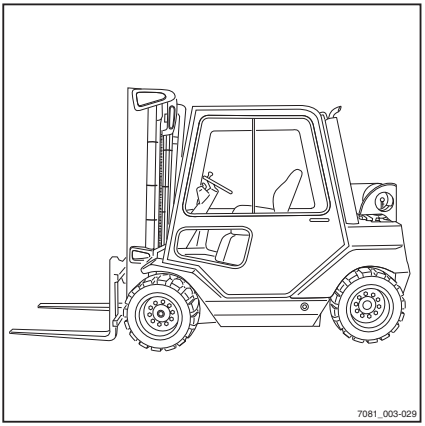

https://truckmanualshub.com/

Maintenance after first 50 operating hours

Maintenance during the break-in period

NOTE

Some of the following tests require special tools. Contact the service centre.

- Check the propellant system for leaks with leak spray.
- Check the connections of the propellant system for secure seating.
- Check status and tension of ribbed V-belt; see ⇒ Chapter "Checking the ribbed V-belt", P. 6-226.
- Check exhaust gas system; see ⇒ Chapter "Checking the exhaust gas system", P. 6-227.

https://truckmanualshub.com/

Maintenance as required

Cleaning the radiator, checking for leaks

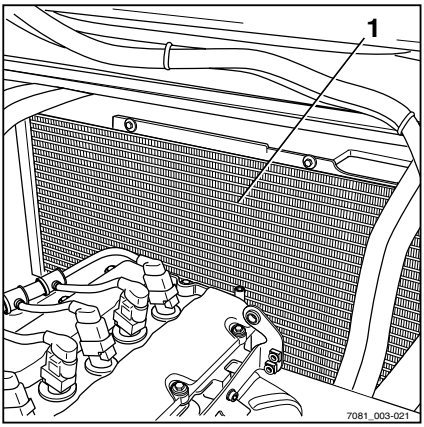

- Switch off the engine and open the bonnet; see ⇒ Chapter "Opening the bonnet", P. 5-55
- Clean the radiator (1).
- Clean the radiator fins with a suitable brush and blow them out using compressed air (not over 2 bar).
- Check the radiator and radiator hoses for leaks and retighten the clips, if necessary.

⚠ CAUTION

Risk of engine damage!

- Check whether the leak has been eliminated. If not, contact your service centre.

Topping up coolant and checking coolant concentration

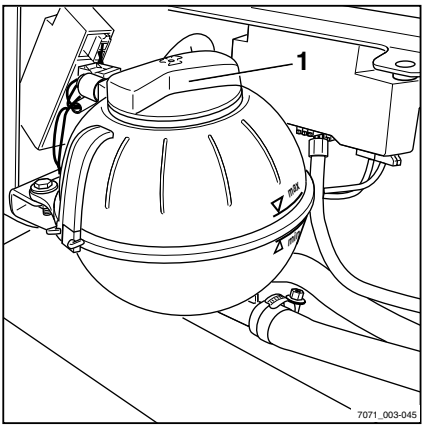

- Remove the rear covering; see ⇒ Chapter "Removing and installing the rear covering", P. 6-195.

⚠ CAUTION

Risk of engine damage!

If the coolant level is low, this indicates a leak in the cooling system.

- Check for leaks in the cooling system; see ⇒ Chapter "Cleaning the radiator, checking for leaks", P. 6-200.

⚠ WARNING

Risk of scalding!

- Open the sealing cap on the coolant reservoir only when the engine is cool.

- Open the sealing cap (1) slowly and allow the excess pressure to escape.
- Open the sealing cap further and remove it.

https://truckmanualshub.com/

WARNING

Coolant and coolant additive are hazardous to your health.

– Please observe safety regulations when working with coolant; see ⇒ Chapter "Coolant", P. 3-35.

– Check the coolant concentration.

Coolant concentration

CAUTION

Risk of corrosion!

The percentage of coolant additive must always be at least 40%, even if the frost protection is not needed in warmer climates.

If greater frost protection is required for climatic reasons, the percentage of the coolant additive can be increased to up to 60%.

The percentage of the coolant additive must not exceed 60%, otherwise the frost protection is reduced. In addition, the cooling effect is also reduced.

Only use clean, softened water for the water component.

Frost protection up to °C	Water percentage %	Coolant additive percentage %
-25	60	40
-30	55	45
-35	50	50
-40	40	60

Filling quantity in the cooling system; see ⇒ Chapter "Maintenance data table", P. 6-186.

CAUTION

Coolant additive with a different specification must not be mixed in!

– For topping up, use coolant as per the maintenance data table; see ⇒ Chapter "Maintenance data table", P. 6-186.

Only use the coolant additive stipulated in the manufacturer's guidelines.

https://truckmanualshub.com/

– Screw the sealing cap (1) back on again tightly.
– Reattach the rear covering.

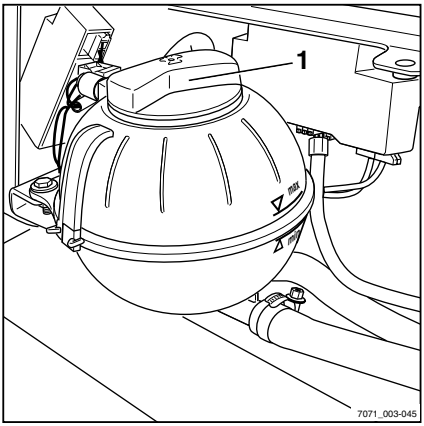

Changing the air filter insert

NOTE

Changing the air filter insert is necessary only when the `LUFTFILTER (AIR FILTER)` *message appears on the display and operating unit, or every two years.*

– Open the bonnet, see ⇒ Chapter "Opening the bonnet", P. 5-55.

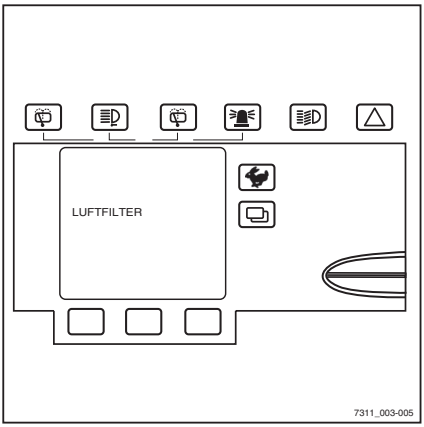

https://truckmanualshub.com/

– Loosen the 2 clamps (1) on the air filter housing.

– Remove the air filter cover (2).

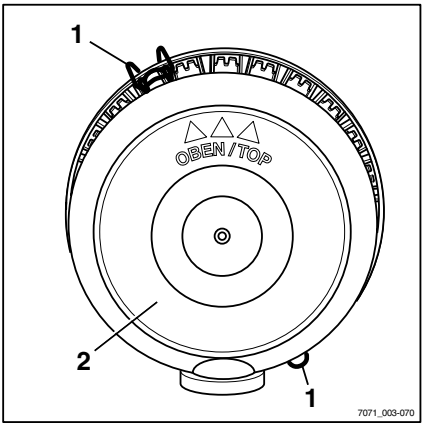

– Remove the main cartridge (3).

CAUTION

Risk of engine damage!

The safety cartridge must remain in the air filter housing until all residual dirt has been removed from the housing so that no dirt enters the induction system!

– Blow out the air filter housing using compressed air.

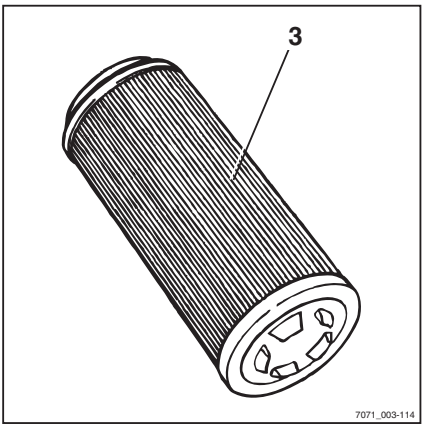

https://truckmanualshub.com/

- Remove the safety cartridge (4), check to see whether it is dirty and change it, if necessary.
- Install the safety cartridge (4).
- Install a new main cartridge (3).

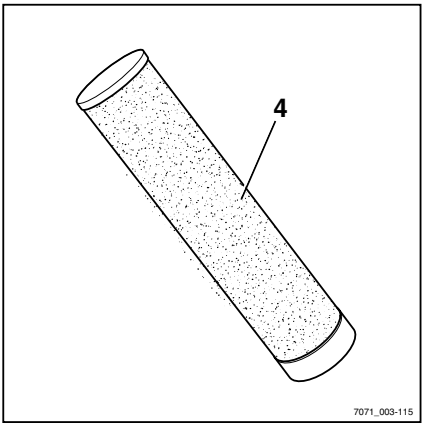

- Fit the air filter cover (2) with the mark (5) pointing upward.
- Snap the two clamps (1) back into place on the air filter.
- Close the bonnet.

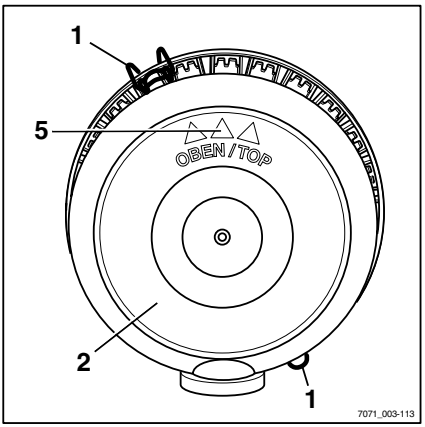

Servicing the battery

NOTE

Battery servicing is carried out in accordance with the battery manufacturer's operating manual!

https://truckmanualshub.com/

WARNING

There is a risk of damage, short circuiting and explosions.

Do not place any metal objects or tools on the battery. Keep open flames and fire away. Do not smoke.

Checking the battery charge state

– Remove the floorplate, see ⇒ Chapter "Installing and removing the floorplate", P. 6-194.

– With maintenance-free batteries, check the charge state at the inspection window:

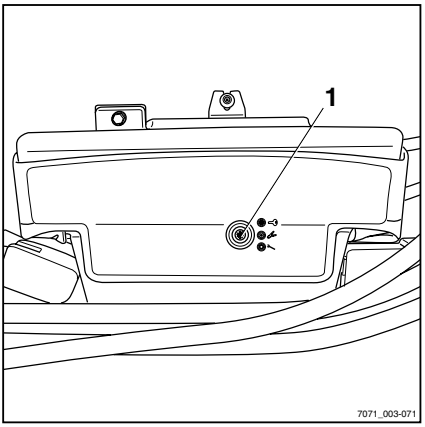

- **Green:** The battery is optimally charged.
- **Black:** The battery charge state is no longer optimal. The battery should be recharged. After recharging, the indicator changes back to green.
- **Transparent-(light-coloured):** The charge state is no longer adequate for reliable starting. It is necessary to change the battery.

Charging the battery

– With batteries that are not maintenance-free, check the level of the battery acid.

WARNING

The electrolyte (dilute sulphuric acid) is poisonous and caustic.

– Follow the safety regulations when handling battery acid ⇒ Chapter "Battery acid", P. 3-34.

The battery acid must be up to the lower edge of the insert in the battery housing or up to 5 mm above the upper edge of the plates. Observe the manufacturer's specifications!

CAUTION

The battery can be damaged!

– Only fill up missing fluid with distilled water.

https://truckmanualshub.com/

– Unscrew the battery cell covers and check the acid density with an acid siphon.

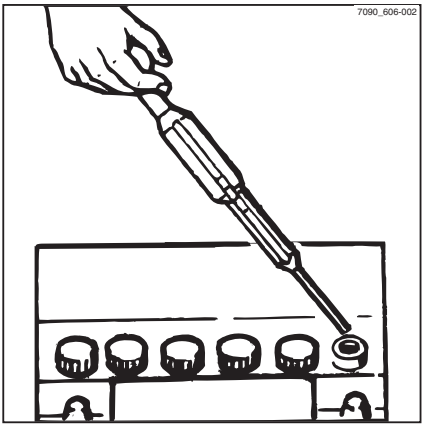

The acid density must achieve the value in the table. The listed density of the acid refers to 27°C acid temperature.

Acid density	Empty	Full
Normal	1.13	1.28
Droplets	1.08	1.23

WARNING

Risk of explosion! Charging releases gases that are explosive.

While charging, the surfaces of the battery cells must be exposed to ensure sufficient air ventilation.

The charging area must be properly ventilated.

Keep the bonnet open during charging; avoid spark formation near the battery.

– Immediately charge empty batteries until they are full again.

The charging current shall not exceed 1/10 of the capacity.

The cell lids of the batteries must be kept dry and clean.

Any spillage of battery acid must be neutralised immediately.

Terminals and lugs must be clean, lightly coated with terminal grease and tightly screwed.

– After charging, screw the battery cell covers back on.

– Reinstall the floorplate.

https://truckmanualshub.com/

Maintaining hydraulic equipment

⚠ WARNING

Hydraulic oils are hazardous to your health and are under pressure during operation.

Note safety regulations for working with hydraulic oils; see ⇒ Chapter "Hydraulic fluid", P. 3-33.

Check hydraulic oil level

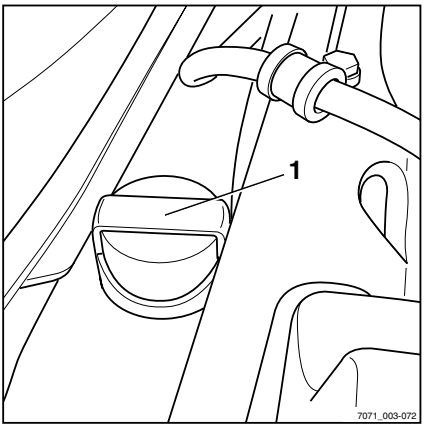

- Position truck horizontally.
- Tilt lift mast forward.
- Lower forks; if there are attachments (special equipment), retract the working cylinder.
- Switch off the engine.
- Open the bonnet; see ⇒ Chapter "Opening the bonnet", P. 5-55.
- Disassemble base plate; see ⇒ Chapter "Installing and removing the floorplate", P. 6-194.
- Unscrew (1) the dipstick and pull it out.
- Check oil level. The oil level must be at least up to the mark (2) on the dipstick.

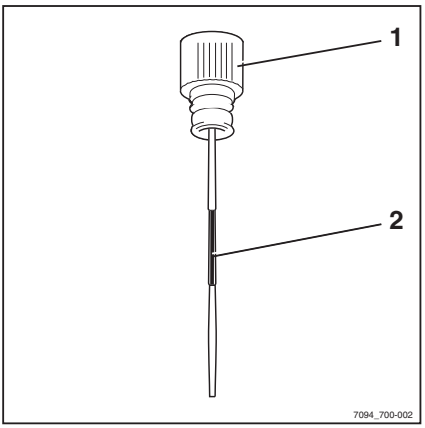

- If the oil level is not up to the required level, the hydraulic oil must be topped up according to the maintenance data table (see ⇒ Chapter "Maintenance data table", P. 6-186) using the filler neck until the mark is reached.
- Reinsert (1) the dipstick and tighten it.

Checking hydraulic equipment for leaks

- Check pipe and hose screw connections for leaks (traces of oil).

Hose lines must replaced if:

- the outer layer is damaged or embrittled with cracks
- they are leaking
- Unnatural deformations (e.g. bubble formation or buckling
- fitting is detached from hose
- heavy damage to or corrosion of the fitting

https://truckmanualshub.com/

Pipes must be replaced in case of:

- Abrasion with loss of material
- unnatural deformations and visible signs of bending stress
- they are leaking

Servicing wheels and tyres

▷

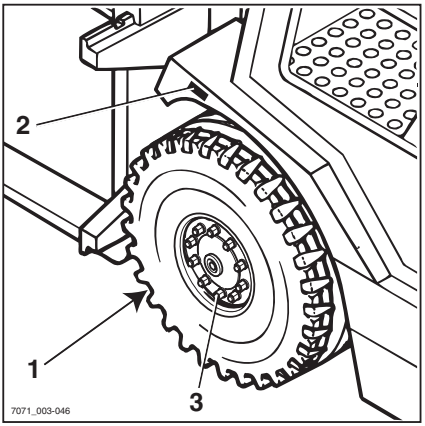

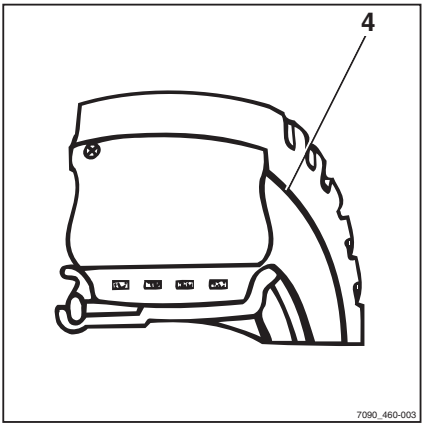

⚠ WARNING

Risk of accident! With uneven wear or incorrect air pressure, the stability of the forklift truck decreases and the braking distance increases.

– Replace worn or damaged tyres on the right and left.

Checking air pressure

– Check and correct the air pressure at all four wheels.

NOTE

The correct air pressure for pneumatic tyres (special equipment) is based on the type of tyres used. Observe the information on the stickers (2) on your vehicle.

Checking condition and wear of the tyres

⚠ WARNING

Tyre quality affects the stability and handling of the forklift truck.

Changes can only be made in consultation with the manufacturer.

When changing wheels or tyres, always ensure that this does not cause the forklift truck to tilt to one side (e.g. always change right and left wheels at the same time).

NOTE

The wear of the tyres on an axle must be approximately the same.

- *The minimum tread depth (1) for pneumatic tyres must be **min. 1.6 mm** in every area of the tread.*
- *Super-Elastic tyres (special equipment) can be worn down to the wear mark (4).*

https://truckmanualshub.com/

– Measure the tread depth at all four wheels.

– Remove any foreign matter that may have become lodged in the tyre tread.

Checking wheel fastenings

– Check the wheel fastening bolts (3) for tightness and re-tighten as necessary, for tightening torque values see ⇒ Chapter "Maintenance data table", P. 6-186. ▷

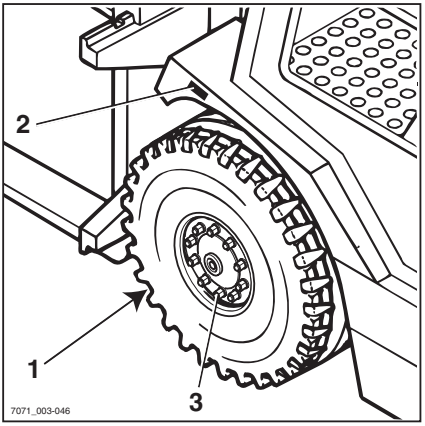

Checking adjustment of the foot-brake ▷

NOTE

Readjust the brake cable only if it has become elongated.

– Remove the floorplate, see ⇒ Chapter "Installing and removing the floorplate", P. 6-194

– Check whether the clearance between the linkage bar (lever) (3) and the adjusting screw (4) is 0 mm.

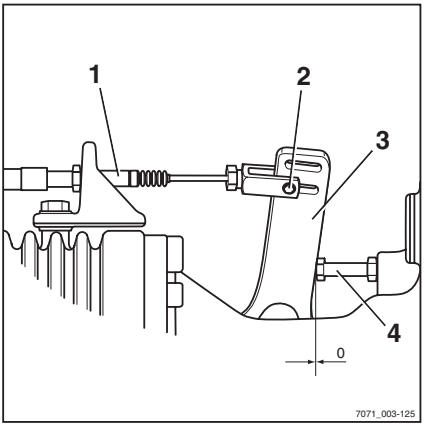

CAUTION

Risk of damage to components.

The adjusting screw (4) is set at the factory and may not be readjusted.

– Check the clearance between the fork clevis (2) and linkage bar (lever) (3).

Set value: 0–1 mm

https://truckmanualshub.com/

– If necessary, adjust the clearance at the threaded adjusting sleeve (1).

Checking the parking brake setting

NOTE

Readjust the brake cable only if it has become elongated.

– Remove the floorplate, see ⇒ Chapter "Installing and removing the floorplate", P. 6-194

NOTE

The bonnet must be closed when checking and adjusting the setting.

– Release the parking brake.

▷

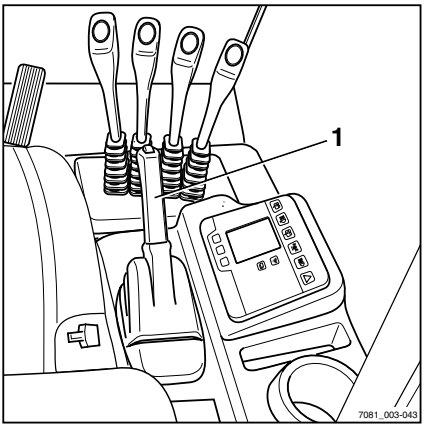

https://truckmanualshub.com/

– Check whether the clearance between the linkage bar (lever) (3) and the adjusting screw (4) is 0 mm.

⚠ CAUTION

Risk of damage to components.

The adjusting screw (4) is set at the factory and may not be readjusted.

– Check the clearance between the fork clevis (2) and linkage bar (lever) (3).

Set value: 0–1 mm

– If necessary, adjust the clearance at the threaded adjusting sleeve (1).

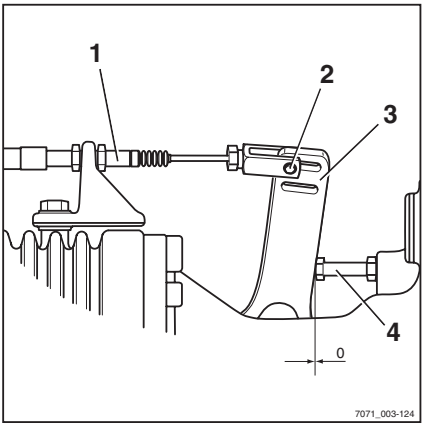

Lubricating joints and controls

– Oil or grease other bearings and joints according to the maintenance data table. See ⇒ Chapter "Maintenance data table", P. 6-186.

- Driver's seat guide
- Cab door hinges (lubricate grease nipples with grease)
- Engine bonnet hinges (lubricate grease nipples with grease)
- Control linkage for valves

Checking the door latch

– Inspect the condition of the catch bolts and check for wear.

– Check the lock mechanism for easy operation.

Maintaining the steering axle

Checking the steering axle

– Check rubber elements of the axle tumbler bearing for condition and wear.

https://truckmanualshub.com/

– Check the stub axle bearing (1) and tie rod joint (2) for play and wear. ▷

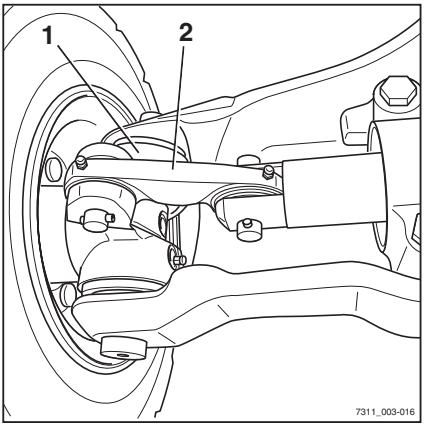

– Check the steering cylinder (4) for leaktightness (traces of oil). ▷

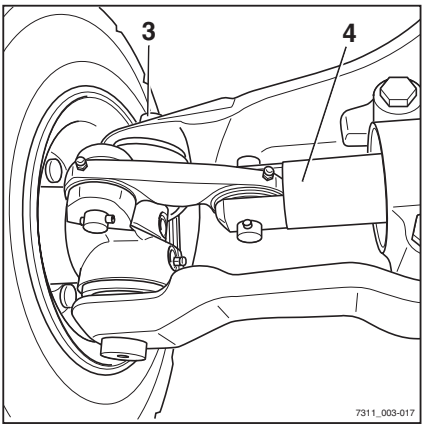

NOTE

In the case of excessive play or of wear, have your service centre replace the appropriate parts.

https://truckmanualshub.com/

Lubricating the steering axle

▷

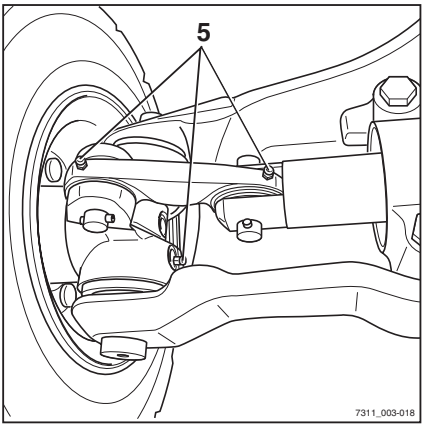

– Use grease to lubricate the lubricating nipples (5) at the stub axle bearing and steering lever bearings (see ⇒ Chapter "Maintenance data table", P. 6-186). Operate steering during the lubrication process.

NOTE

Please note: The more often the truck is cleaned, the more frequently it must be lubricated.

Checking the hoses for leaktightness

– Retighten leaky connections.

NOTE

Have your service centre replace defective lines.

– After repairs, force out trapped air by repeatedly turning the steering wheel from stop to stop.

Checking the tightening torque of the stub axle nuts

– Set steering to end stop.

– Use the torque wrench to check the tightening torque (see ⇒ Chapter "Maintenance data table", P. 6-186) of the stub axle nut (3).

▷

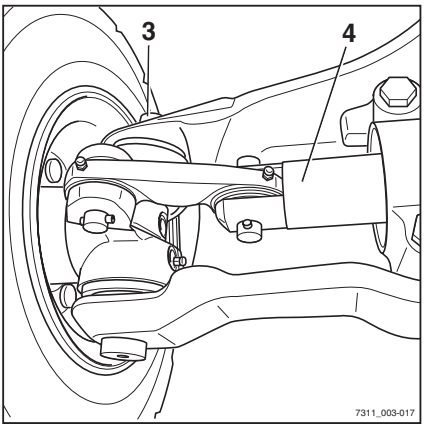

https://truckmanualshub.com/

Servicing the mast bearing

Mast bearing screws: Check the tightening torque ▷

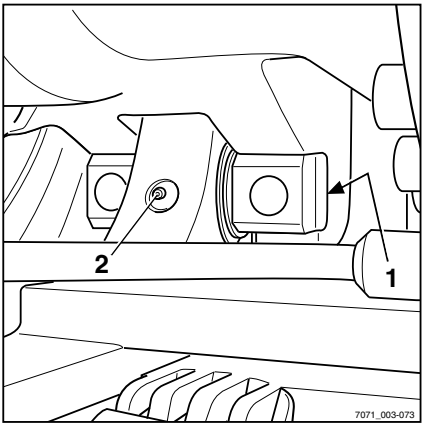

– Lift the fork carriage and secure against accidental lowering.

⚠ WARNING

Risk of injury!

Observe the safety regulations for working on lift masts, see ⇒ Chapter "Working at the front of the forklift truck", P. 6-192.

– Check tightening torque (see ⇒ Chapter "Maintenance data table", P. 6-186) of the mast bearing screws (1) with a wrench torque.

Lubricating the mast bearing

– Lubricate the mast bearings with grease at the lubricating nipples (2) on the left and right (see ⇒ Chapter "Maintenance data table", P. 6-186).

Load chain maintenance

Testing the condition and wear of lift chains, lubricating

– Checking the condition of the load chains and checking for wear.

The load chains must be checked for the following external damage:

- broken fishplates
- broken bolts
- loose, twisted bolts
- surface rust
- stiff joints
- Wear and tear, damage to the clamping screw and end link.

https://truckmanualshub.com/

WARNING

If the chain is damaged before reaching the permissible elongation, the load chain may break.

If any of the above-mentioned damage has occurred, the load chain must be replaced without delay.

- Spray the load chains with chain spray according to the maintenance data table, see ⇒ Chapter "Maintenance data table", P. 6-186.
- Checking the load chain tension.

CAUTION

Never compensate tyre wear by adjusting lift chain tension!

Only retighten the load chains after elongation due to wear. The chains should be replaced once elongation reaches 3%.

CAUTION

If the load chains can no longer be retightened, the chains must be replaced completely, along with all associated connecting parts.

Please contact your service centre.

NOTE

After adjusting the load chains, the clearance between the fork carriage stop and run-out stop must be checked, see ⇒ Chapter "Checking the clearance between fork carriage stop and run-out stop", P. 6-233.

https://truckmanualshub.com/

Setting the load chains Tele mast

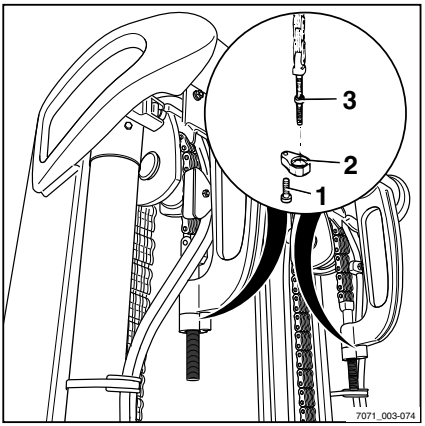

- Unscrew the cap screw (1) and remove the safety (2) cap.
- With the lift cylinders fully extended, retighten the load chains at the tensioning nuts (3) until the centre of the middle fork carriage support roller is 15 mm below the upper edge of the inner mast.

Stop always between lift cylinder and piston.

- Replace the (2) safety cap.
- Apply Loctite to the cap screw (1) and tighten.

Setting the load chains triplex mast

- Fully lower the fork carriage.

Mast uprights must be flush at the top. If not:

- Unscrew the cap screw (1) and remove the safety (2) cap.
- Retighten the load chains at the bail nuts (3) on the outer mast.
- Replace the (2) safety cap.
- Apply Loctite to the cap screw (1) and tighten.
- Unscrew the cap screw (4) and remove the safety (6) cap.
- With the lift cylinders fully extended, retighten the middle load chains at the tensioning nuts (5) until the centre of the middle fork carriage support roller is 15 mm below the upper edge of the inner mast.

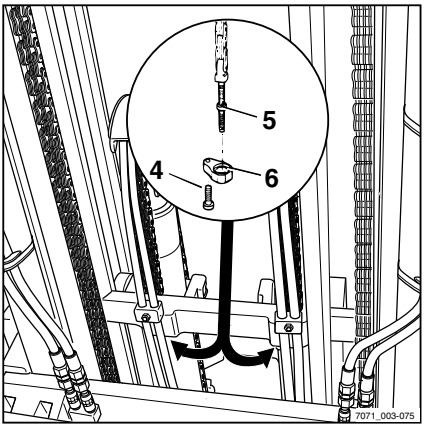

Stop always between lift cylinder and piston.

- Replace the (6) safety cap.
- Apply Loctite to the cap screw (4) and tighten.

https://truckmanualshub.com/

Lubricating the lift mast and roller track

▷

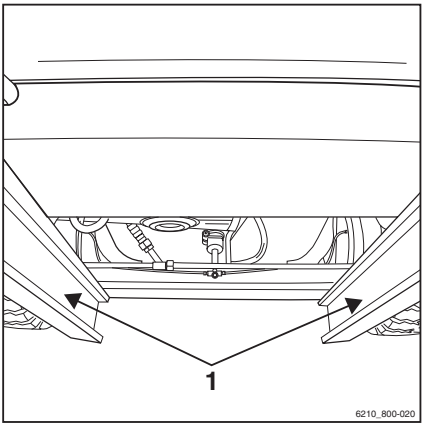

- Remove dirt and lubricant residue from the roller track.
- Lubricate the roller tracks (1) of the outside, middle, and inside mast with a super-pressure adhesion lubricant to reduce wear. See ⇒ Chapter "Maintenance data table", P. 6-186.

NOTE

Spray the roller track evenly from a distance of approx. 15-20 cm. Wait approx. 15 minutes until the equipment is ready to use again.

Maintaining the restraining belt

DANGER

Malfunctions of the retraining belt lead to increased danger.

If the restraining belt is defective, do not put the truck into operation; instead, have the restraining belt changed by your service centre immediately.

Use only genuine spare parts.

Do not make any changes to the belt.

NOTE

Conduct the following checks regularly (monthly). In the case of significant strain, a daily check is necessary.

https://truckmanualshub.com/

Checking the restraining belt

– Pull the belt (3) out fully and inspect it for fraying. ▷

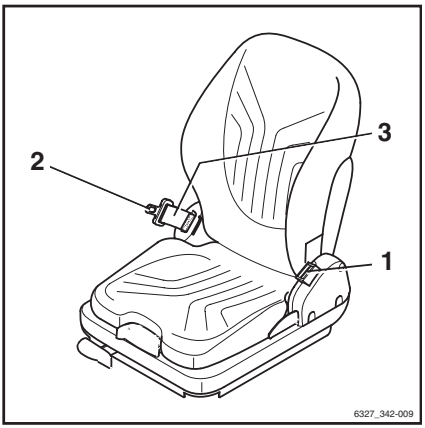

The belt must not be frayed or cut. The stitching may not be loose.

– Check that the belt is not dirty.

– Check whether parts are worn or damaged, including the attachment points.

– Check the buckle (1) for proper locking. ▷

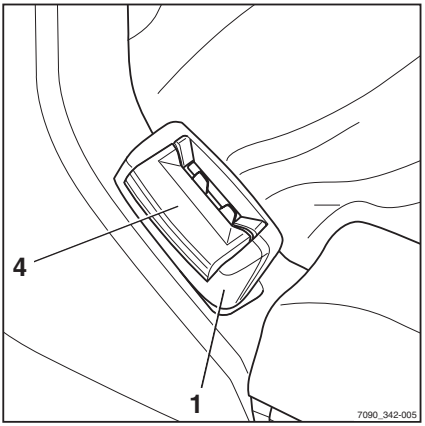

When the belt latch (2) is inserted, the belt must be held securely. The belt latch (2) must release when the red button (4) is pushed.

– Test the automatic blocking mechanism at least once a year:

– Park the truck on a horizontal surface.

– Pull out the belt with a jerk.

The automatic blocking mechanism must block extension of the belt.

– Tilt the seat at least 30° by tilting the bonnet.

– Pull out the belt slowly.

The automatic blocking mechanism must block extension of the belt.

Cleaning the belt

– Clean the belt as necessary but without using chemical cleaning agents (a brush suffices).

Replacement after an accident

As a rule, the restraining belt must be changed after an accident.

https://truckmanualshub.com/

Maintaining the restraint system

▷

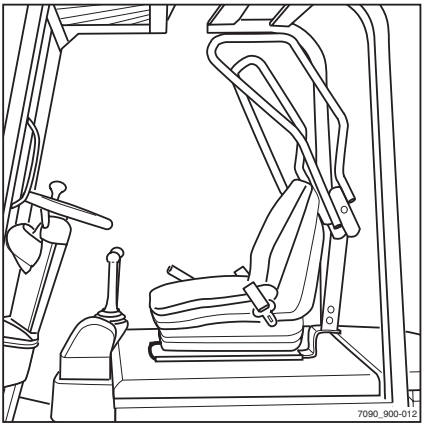

NOTE

Your forklift truck can be equipped with a restraint system (special equipment). Please follow the manufacturer's maintenance instructions.

Check driver's seat

▷

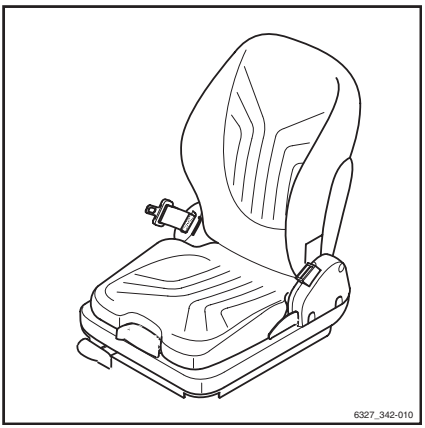

WARNING

Risk of injury!

– After an accident have the driver's seat checked with attached restraining belt and fastening .

– Check controls for proper functioning.

– Check condition of seat (e.g. for wear to upholstery) and reliable fastening to hood.

WARNING

Risk of injury!

– Have the seat repaired by Technical Service if damage is observed during checking.

Replacing fuses

DANGER

Risk of fire! Using the wrong fuses can result in lack of protection against short circuits.

Only use fuses with the prescribed nominal current.

https://truckmanualshub.com/

Main fuse carrier

▷

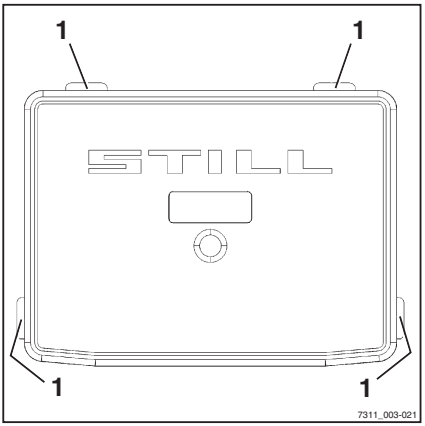

– Open the motor hood, see ⇒ Chapter "Opening the bonnet", P. 5-55.

NOTE

The main fuse carrier is positioned to the right of the valve block.

– Open the cover fastenings (1) and remove the cover.

– Replace the defective fuse, fuse assignment see ⇒ Chapter "Fuse assignment in main fuse holder", P. 7-253.

– Push down the cover until the cover fastenings (1) snap back into place.

– Close the motor hood.

Additional equipment for fuse carrier

▷

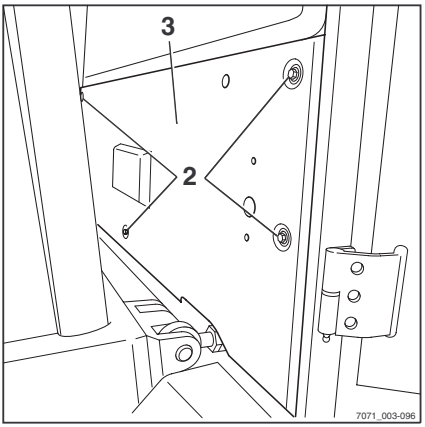

– Undo the fixing screws (2) of the front cover and remove the cover (3).

NOTE

The fuse carrier additional equipment is positioned on the right-hand side on the outside.

https://truckmanualshub.com/

- Open the cover fastenings (4) and remove the cover.
- Replace the defective fuse, fuse assignment see ⇒ Chapter "Fuse assignment special equipment", P. 7-254.
- Push down the cover until the cover fastenings (4) snap back into place.
- Refit the cover (3) and tighten the fixing screws (2).

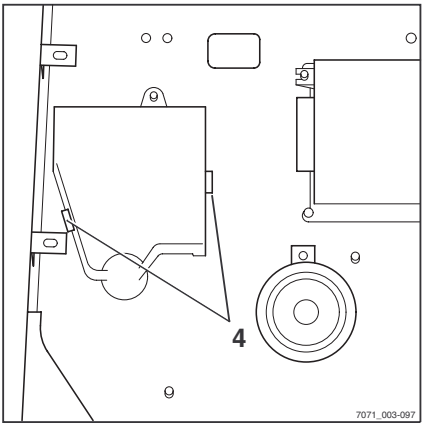

Attachment maintenance

- Lubricate the slide rails of attachments (special equipment), such as a sideshift or clamp according to the maintenance data table. See ⇒ Chapter "Maintenance data table", P. 6-186appears on the display.

The diagram shows a clamp.

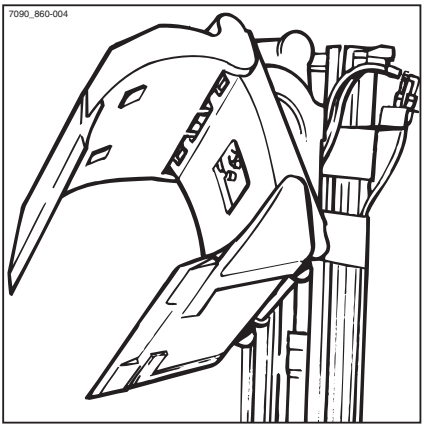

NOTE

Observe the manufacturer's maintenance specifications.

https://truckmanualshub.com/

500-hour maintenance/semi-annual maintenance

Checking the evaporator and pressure regulator ▷

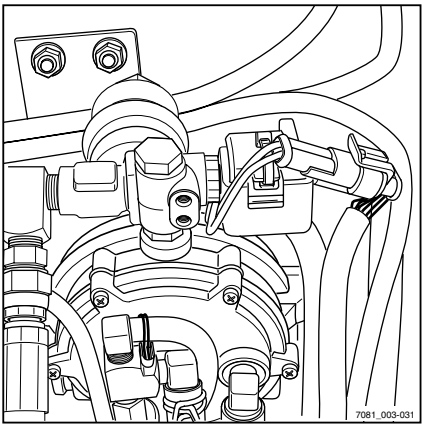

NOTE

Specialized knowledge and special tools are required for the following tests and overhauling. Contact the customer service office.

– Check the evaporator/pressure regulator for:

- proper composition,
- correct function,
- leaks.

https://truckmanualshub.com/

1000-hour maintenance/annual maintenance

Work that must also be carried out

– Carry out maintenance work as necessary, see ⇒ Chapter "Maintenance as required", P. 200.

– Carry out 500-hour maintenance, see ⇒ Chapter "500-hour maintenance/semi-annual maintenance", P. 222.

Maintainance of drive axle

Drive axle, checking oil level

WARNING

Consumables are toxic!

Observe the safety regulations for handling brake fluid,see ⇒ Chapter "Oils", P. 3-29.

– Park the forklift on a level surface.

– Unscrew the checking (1)screw.

The oil level must reach the lower edge of the bore.

– Unscrew the filling plug, if necessary, (2) and fill with oil as per the maintenance data table; see ⇒ Chapter "Maintenance data table", P. 6-186 until it escapes from the hole for the checking screw (1).

– Renew the sealing ring on the oil drain plug (1).

– Tighten the oil checking screw (1) with a torque of 10 Nm.

– Renew the sealing ring on the oil drain plug (2).

– Tighten the oil drain plug (2) with a torque of 24 Nm.

– Check the oil level at both wheel drives.

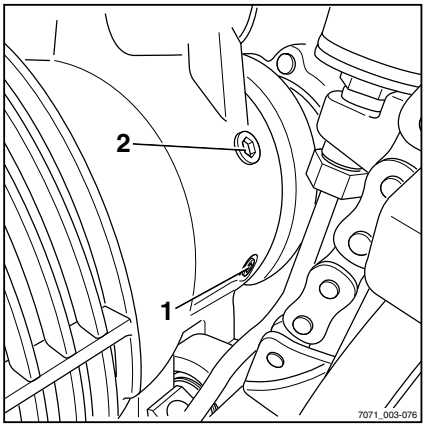

Checking the drive axle for leaks

– Inspect the power unit for leaks (traces of oil).

https://truckmanualshub.com/

Adjusting the parking brake

- Open the bonnet; see ⇒ Chapter "Opening the bonnet", P. 5-55.
- Adjust the parking brake switch (2) so that traction drive is switched off (1) when the parking brake control cable is pulled.
- Close the motor hood.

▷

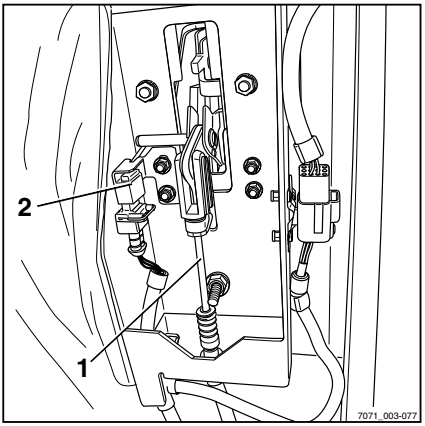

Lubricating the parking brake lever bearing and ratchet

- Lightly lubricate the parking brake lever bearing and ratchet according to the maintenance data table . See ⇒ Chapter "Maintenance data table", P. 6-186appears on the display.

Checking the counterweight attachment

- Check the mounting screws of the counterweight on the frame to make sure they are secure.

Changing the engine oil and filter

- Open the bonnet; see ⇒ Chapter "Opening the bonnet", P. 5-55.

⚠ WARNING

Consumables are toxic!

Observe the safety regulations for handling engine oil,see ⇒ Chapter "Oils", P. 3-29.

https://truckmanualshub.com/

NOTE

Change oil only when engine is at operating temperature.

- Open the floor opening in the chassis.
- Place a suitable collection vessel under the oil drain plug (1).
- Unscrew the oil drain plug (1) and allow the oil to drain out completely.

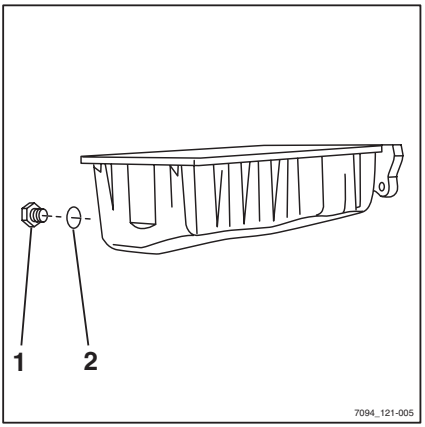

ENVIRONMENT NOTE

Dispose of used oil according to applicable regulations.

- Renew the sealing ring (2).
- Tighten the drain plug with a torque of 30 Nm.

- Place a suitable collection vessel under the oil drain plug (3).
- Unscrew the oil drain plug (3) and allow the oil to drain out completely.
- Renew the sealing ring .
- Tighten the drain plug
- Unscrew the oil filter (4) cover.

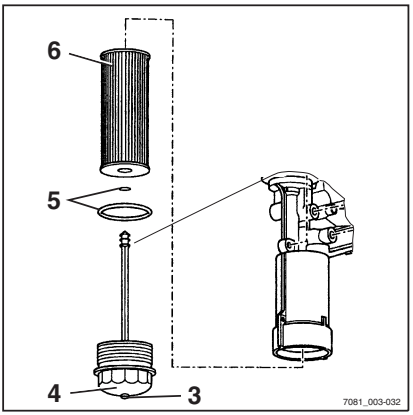

ENVIRONMENT NOTE

Dispose of used oil and oil filter insert according to applicable regulations.

- Renew the oil filter insert(6).
- Renew the O-rings (5).
- Screw the oil filter cover back on (4) hand-tight.

https://truckmanualshub.com/

– Remove the oil filler cap (7) and fill with new engine oil in accordance with the maintenance data table ⇒ Chapter "Maintenance data table", P. 6-186.
– Start the engine, let it run briefly and then shut if down.
– Check the oil level, see ⇒ Chapter "Checking the engine oil level", P. 5-56.
– Close the bonnet.

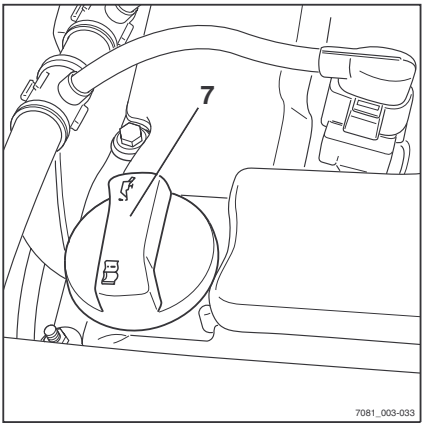

Checking the ribbed V-belt

NOTE

If damage is found, the ribbed V-belt has to be replaced to prevent failures or functional errors.

– Manually turn the motor and check ribbed V-belt (1) for:

- Support tears (tear, core breaks, cross-sectional breaks)
- Layer separation (cover layer, anchor bars)
- Broken support
- Frayed anchor bars
- Flank wear (material wastage, frayed flanks, flank hardening, surface tears)

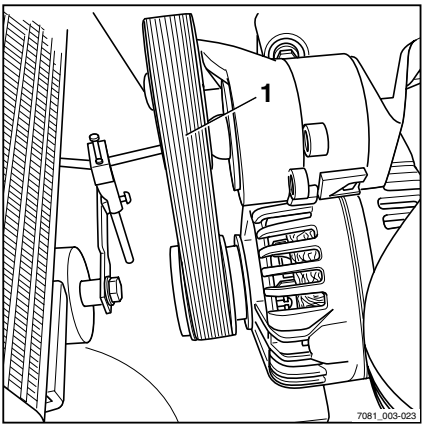

https://truckmanualshub.com/

Replacing the spark plugs

▷

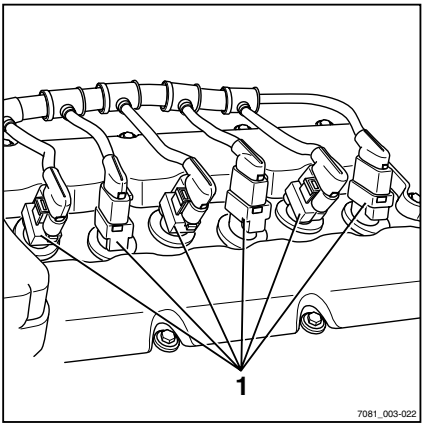

- Open the bonnet; see ⇒ Chapter "Opening the bonnet", P. 5-55.
- Disconnect the spark plug (1) connectors.
- Unscrew the spark plugs.
- Fit new spark plugs according to maintenance data table, see ⇒ Chapter "Maintenance data table", P. 6-186.
- Close the bonnet.

Checking the exhaust gas system

- Inspect the exhaust gas system for external damage, secure fit, and leaks.

Changing the LPG filter

▷

⚠ DANGER

There is a risk of explosion if LPG escapes.

- Note safety regulations for working with LPG ⇒ Chapter "LPG", P. 3-30.

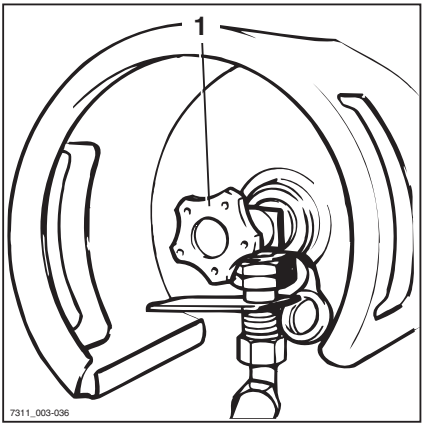

- Stop the engine.
- For trucks with LPG cylinders, close the cylinder valve (1).

https://truckmanualshub.com/

– For trucks with LPG tanks (special equipment), close the shut-off valve (2) (ZU).
– Remove the rear covering, see ⇒ Chapter "Removing and installing the rear covering", P. 6-195.

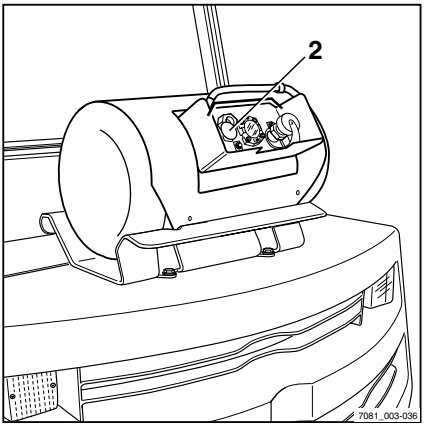

– Unscrew the fixing screw from the (3) filter housing.

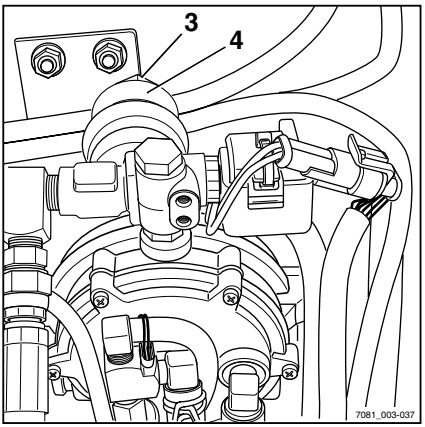

https://truckmanualshub.com/

- Remove the filter housing (4).
- Remove the filter insert (5).
- Carefully remove any dirt inside the housing.
- Install the new filter insert (5) together with a new sealing ring (6).

CAUTION

Malfunctions possible!

- Ensure that the sealing ring is properly seated in the recess of the filter insert and that the filter is correctly installed.

- Inspect the seals (7) for damage and change them, if necessary.
- Screw the filter housing back on.
- Open the cylinder valve (1) or shut-off valve (2).
- Check all connections for leaks using leak spray.
- Reattach the rear covering.

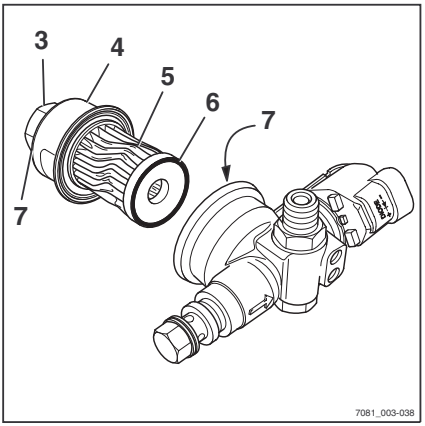

Overhauling the LPG system

NOTE

Spare parts and special tools are required for the following tests and overhauls. Contact the customer service office.

CAUTION

Risk of damage!

Only original spare parts may be used!

- Overhaul/service gas mixer.
- Overhaul/service evaporator/pressure regulator.
- Check function of the gas shut-off valve.
- Check the 30 bar high-pressure relief valve.
- Check the 1.7 bar relief valve on the evaporator.
- Check mixer setting (CO content), if necessary, correct.

https://truckmanualshub.com/

Checking the lambda control system ▷

– Check function and setting of lambda control system (three-way catalytic converter, special equipment).

NOTE

This requires a special tool. Contact the customer service office.

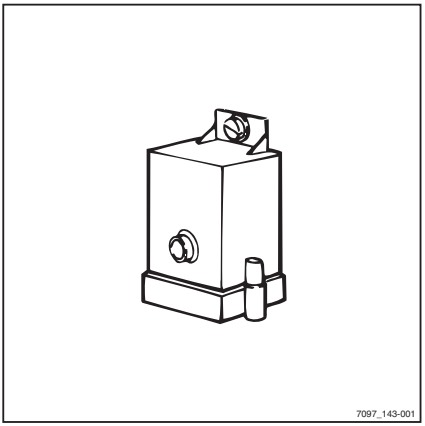

Checking the heating system for leaks

– Use a testing device to check the cooling and heating system (special equipment) for leaks.

NOTE

A special tool is necessary for the test. Contact STILL service personnel.

Check lift cylinders and connections for leaks. ▷

– Lift the fork carriage and secure against accidental lowering.

WARNING

Risk of injury!

Observe the safety regulations for working on lift masts, see ⇒ Chapter "Working at the front of the forklift truck", P. 6-192.

– Check hydraulic connections and lift cylinders for leaks (visual inspection).

– Tighten leaking screw joints, repair leaking hydraulic cylinders.

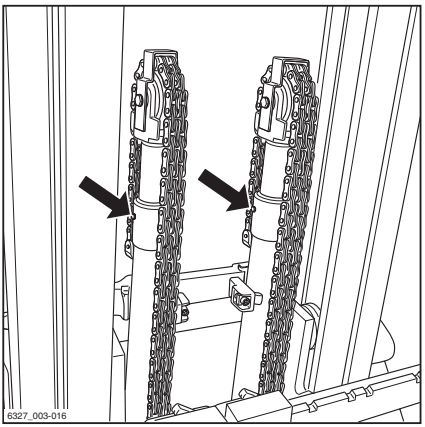

https://truckmanualshub.com/

Maintain lifting system

- Check bearings for wear and clearance.
- Check chain roller bearings, support roller bearings on lift mast and fork carriage for clearance, condition and secure positioning.
- Bearings are lubricated for life, and are maintenance-free. Replace in the event of damage, excessive clearance or stiffness.

WARNING

Risk to stability!

No deliberate change in the tilt angle is permitted.

Readjustment after replacement or repair of tilt cylinders only permitted by your service centre!

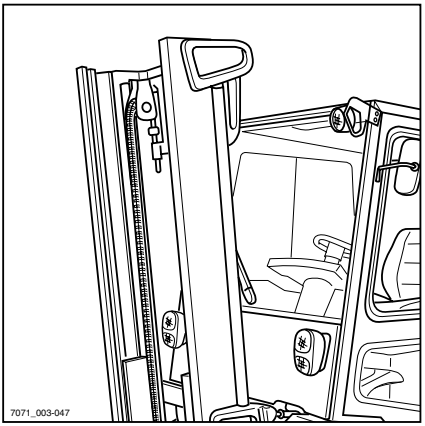

https://truckmanualshub.com/

Check lateral clearance (Y)

▷

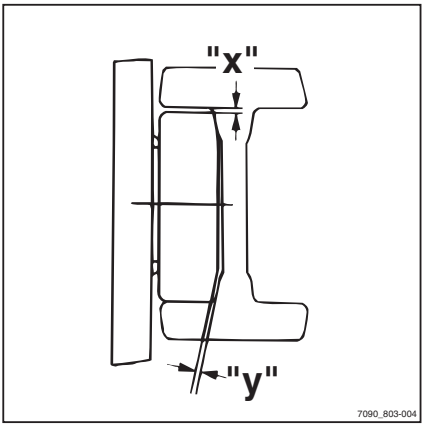

- Cant fork carriage in mast guide.
- Measure clearance between mast cross-piece and support roller with feeler gauge.

Permissible lateral clearance (Y):

min. 0.1 mm

max. 0.3 mm (at narrowest point)

max. 1.1 mm (at any other point)

Check bearing clearance (X)

NOTE

Before this check, make sure that the lateral clearance (Y) complies with the specified tolerances.

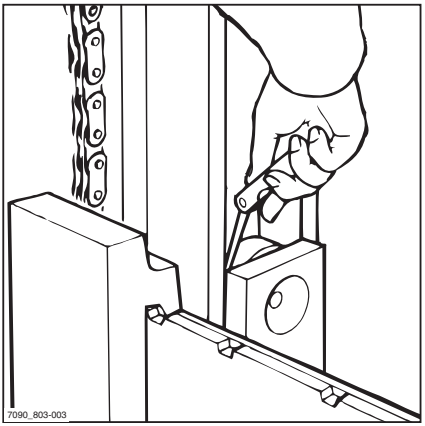

- Park vehicle on a flat surface and lift fork carriage.
- Position parallel base at tips of fork arms.
- Lower fork carriage onto this base.
- Measure clearance between support roller and lift mast bearing surface with feeler gauge.

Bearing clearance (X): max. 0.6 mm

https://truckmanualshub.com/

Checking the clearance between fork carriage stop and run-out stop

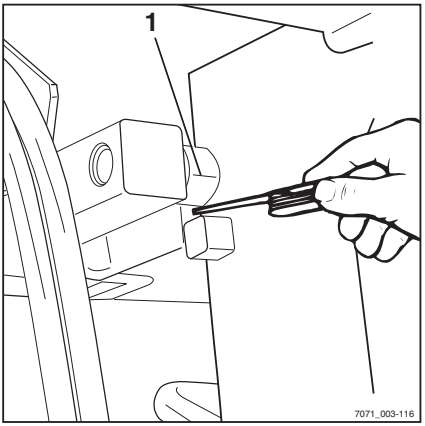

NOTE

Always perform this check after making adjustments to the load chains; see ⇒ Chapter "Load chain maintenance", P. 6-214.

- Extend the fork carriage completely to the stop in the lift cylinder.
- Check the clearance between the fork carriage stop and the roller of the run-out stop (1) with a feeler gauge.

Clearance: at least 2 mm

Checking the fork arms

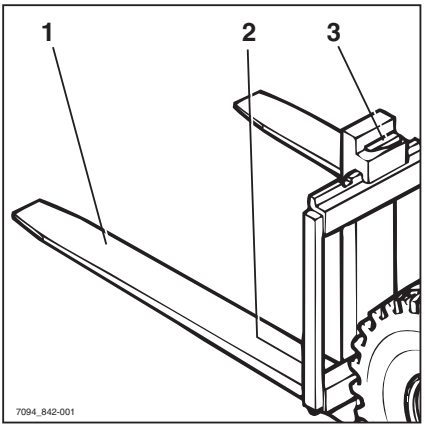

- Check the fork arms (1) for visible deformations. The wear may not exceed 10% of the original strength.

CAUTION

Worn fork arms must always be repaired as a pair.

- Check the fork latch (3) function.
- A locking screw (2) against falling out must be available.

https://truckmanualshub.com/

Checking reversible fork arms

▷

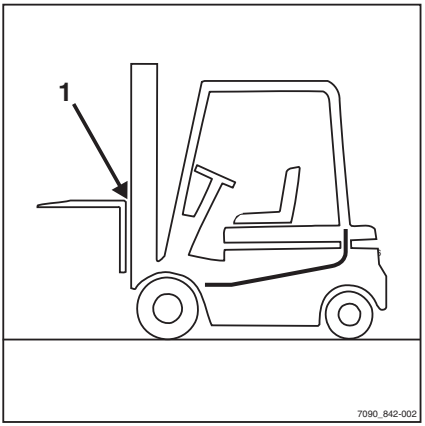

NOTE

This check is only required for reversible fork arms (special equipment).

– Check the outside of the fork bend (1) for cracks. Please contact the service centre.

https://truckmanualshub.com/

3000-hour maintenance/two-year maintenance

Work that must also be carried out

- Carry out maintenance work as necessary, see ⇒ Chapter "Maintenance as required", P. 200.
- Carry out 500-hour maintenance, see ⇒ Chapter "500-hour maintenance/semi-annual maintenance", P. 222.
- Carry out 1000-hour maintenance, see ⇒ Chapter "1000-hour maintenance/annual maintenance", P. 223.

Changing the gear lubricant oil

▷

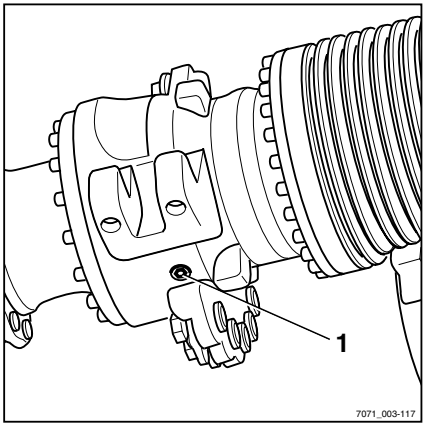

WARNING

Consumables are toxic!

- Observe the safety regulations for handling gear lubricant oil, see ⇒ Chapter "Oils", P. 3-29.

- Park the forklift truck on a level surface.
- Raise the truck on blocks, see ⇒ Chapter "Raising and jacking up", P. 6-191.
- Remove the wheels from the drive axle.
- Place a suitable collection vessel under the oil drain plug (1).
- Unscrew the oil drain plug (1) and allow the oil to drain out completely.

ENVIRONMENT NOTE

Dispose of used oil according to applicable regulations.

- Change the sealing ring on the oil drain plug (1).
- Tighten the oil drain plug (1) to a torque of 24 Nm.

https://truckmanualshub.com/

- Unscrew the checking screw (2).
- Unscrew the filling plug (3) and fill with oil as per the maintenance data table (see ⇒ Chapter "Maintenance data table", P. 6-186) until it escapes from the hole for the checking screw (2).
- Change the sealing ring on the checking screw (2).
- Tighten the checking screw (2) to a torque of 10 Nm.
- Change the sealing ring on the filling plug (3).
- Tighten the filling plug (3) to a torque of 24 Nm.
- Change the gear lubricant oil of both wheel drives.
- Refit the wheels to the drive axle; for tightening values see ⇒ Chapter "Maintenance data table", P. 6-186.

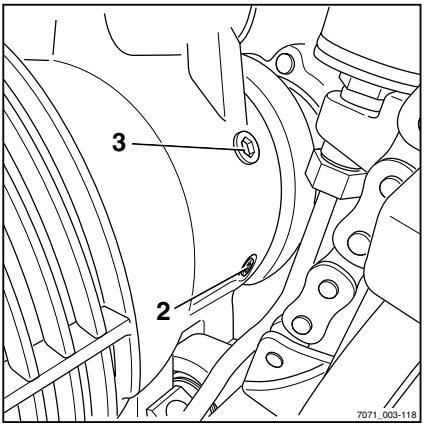

Checking the wheel bearing

- Check the wheel bearing for excessive play, stiffness, damage, and wear.

Have STILL service personnel replace parts in the event of play or wear.

Checking the engine mountings

- Check all engine mountings for security and wear, and replace them if necessary.

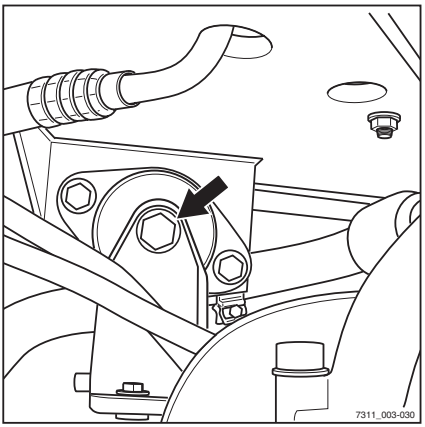

https://truckmanualshub.com/

Replacing hoses in the LPG system ▷

DANGER

There is a risk of explosion if LPG escapes.

– Observe safety regulations for working with LPG ⇒ Chapter "LPG", P. 3-30.

– Replace hoses of gas fuel system.

NOTE

Spare parts and special tools are required for this purpose. Contact the customer service office.

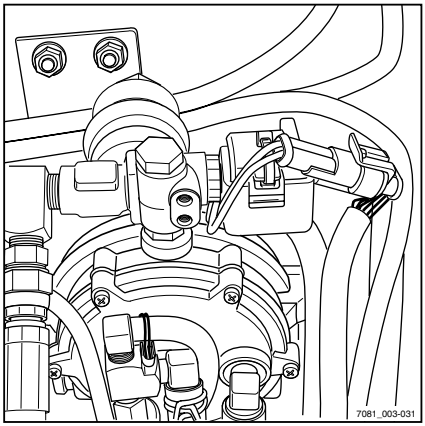

https://truckmanualshub.com/

https://truckmanualshub.com/

6000-hour maintenance

Work that must also be carried out

- Carry out maintenance work as necessary, see ⇒ Chapter "Maintenance as required", P. 200.
- Carry out 500-hour maintenance, see ⇒ Chapter "500-hour maintenance/semi-annual maintenance", P. 222.
- Carry out 1000-hour maintenance, see ⇒ Chapter "1000-hour maintenance/annual maintenance", P. 223.
- Carry out 3000-hour maintenance, see ⇒ Chapter "3000-hour maintenance/two-year maintenance", P. 235.

Changing the hydraulic oil and filter ▷

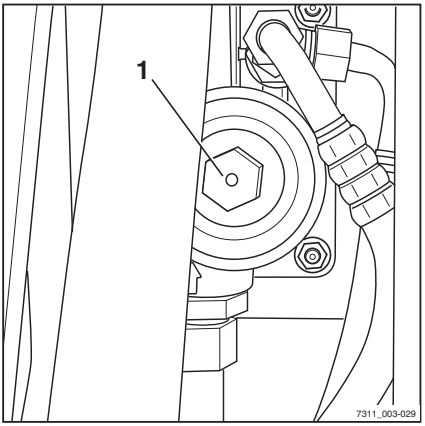

⚠ WARNING

Hydraulic oils are hazardous to your health and are under pressure during operation.

- Observe the safety regulations for handling hydraulic oil; see ⇒ Chapter "Hydraulic fluid", P. 3-33.

- Park the truck on a horizontal surface.
- Tilt the mast back.
- Lower the forks and retract the operating cylinder(s) of attachments.
- Stop the engine.
- Open the bonnet; see ⇒ Chapter "Opening the bonnet", P. 5-55.
- Unscrew the hydraulic oil filter lid (1).

https://truckmanualshub.com/

– Place a suitable collection vessel under the oil drain plug (2). ▷
– Unscrew the hydraulic oil drain plug (2) underneath the hydraulic oil tank and allow the oil to drain out completely.

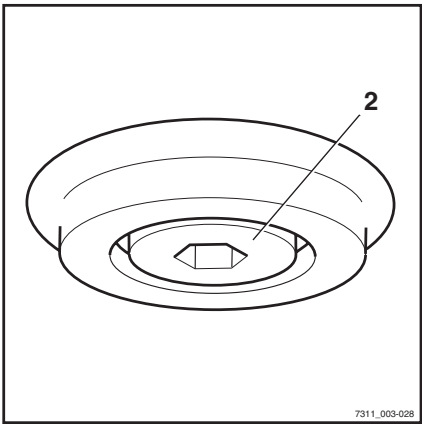

ENVIRONMENT NOTE

Dispose of used oil according to applicable regulations.

– Screw the drain plug (2) back in together with a new seal and tighten it.

– Pull the old filter insert (3) off the filter cover (1) and dispose of it in accordance with applicable regulations. ▷
– Place the new filter insert (3) on the filter cover and screw the filter cover (1) back on.
– Tighten the filter cover; for tightening torque see ⇒ Chapter "Maintenance data table", P. 6-186.

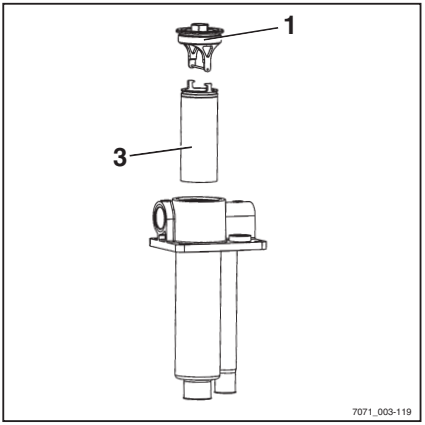

https://truckmanualshub.com/

- Unscrew the dipstick with breather (4).
- Fill with fresh hydraulic oil in accordance with the maintenance data table using the opening for the dipstick; see ⇒ Chapter "Maintenance data table", P. 6-186.
- Change the dipstick with breather (4) and screw in the new one tightly.

▷

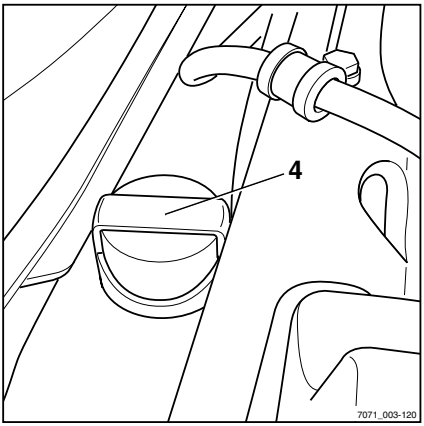

https://truckmanualshub.com/

Bleeding lift cylinders

Telescopic mast version:

– Slacken the hexagon head screws (5) on the lift cylinder heads of the outer cylinders one-half to one turn.

Hi-Lo mast and triple mast version:

– Slacken the hexagon head screw (6) on the cylinder head of the middle cylinder and the hexagon head screws (5) on the lift cylinder heads of the outer cylinders one-half to one turn.

NOTE

Do not unscrew too far!

– Place load on the fork arms and actuate the "lift-lower" operating lever carefully until oil exits from the bleeder screws bubble-free.

– Retighten the bleeder screws.

Bleeding the tilt cylinders

– Tilt the mast forward and backward to the stop position several times.

The tilt cylinders bleed themselves automatically.

Bleeding the steering system

– Turn the steering wheel several times from stop to stop.

The steering system bleeds itself automatically.

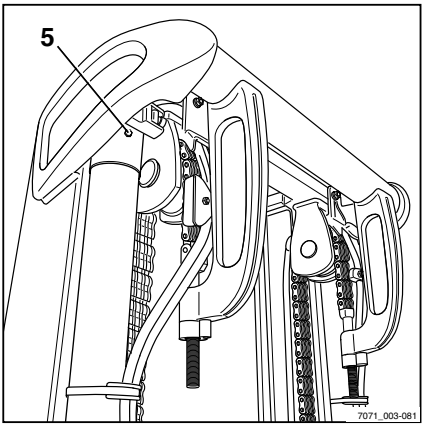

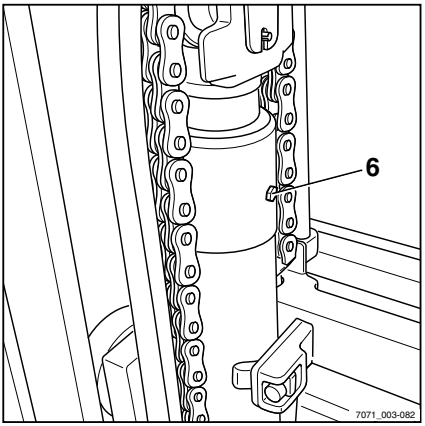

https://truckmanualshub.com/

9000-hour maintenance/five-year maintenance

Work that must also be carried out

- Carry out maintenance work as necessary, see ⇒ Chapter "Maintenance as required", P. 200.
- Carry out 500-hour maintenance, see ⇒ Chapter "500-hour maintenance/semi-annual maintenance", P. 222.
- Carry out 1000-hour maintenance, see ⇒ Chapter "1000-hour maintenance/annual maintenance", P. 223.
- Carry out 3000-hour maintenance, see ⇒ Chapter "3000-hour maintenance/two-year maintenance", P. 235.

Changing the coolant

⚠ WARNING

Coolant and coolant additive are hazardous to your health.

Please observe safety regulations when working with coolant, see ⇒ Chapter "Coolant", P. 3-35.

Draining the coolant

- Remove covering from the back, see ⇒ Chapter "Removing and installing the rear covering", P. 6-195.

⚠ WARNING

Risk of scalding!

Only open the lid of the expansion tank when the engine has cooled down.

https://truckmanualshub.com/

- Open the lid slowly (1) and allow the pressure to drop.
- Open the bonnet; see ⇒ Chapter "Opening the bonnet", P. 5-55.
- Place a sufficiently large collection vessel under the engine.

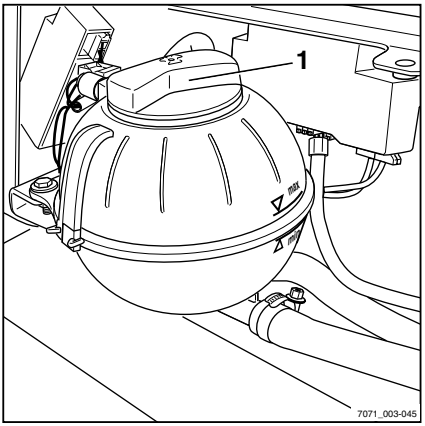

- Open the clip (3) and remove the hose.
- In addition to draining the coolant from the engine, remove the connection spigot together with the coolant regulator (arrowed).

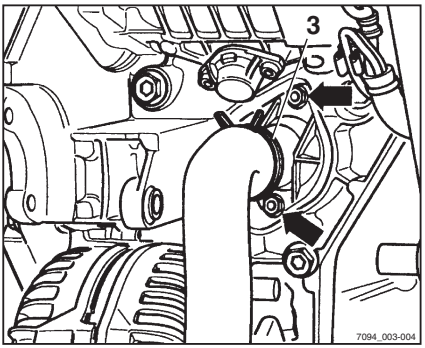

ENVIRONMENT NOTE

Dispose of the coolant properly.

Topping up the coolant

- Rotate the coolant regulator (7) 90° anti-clockwise and remove it from the (5) connection spigot.
- Replace the sealing ring (6) and wet it with coolant.
- Insert the coolant regulator (7) into the connection spigot (5) and rotate it 90° clockwise.
- Re-fit the connection spigot (5) with the coolant regulator (7) into the engine block.
- Tighten the securing bolts (4) with a torque of 15 Nm.

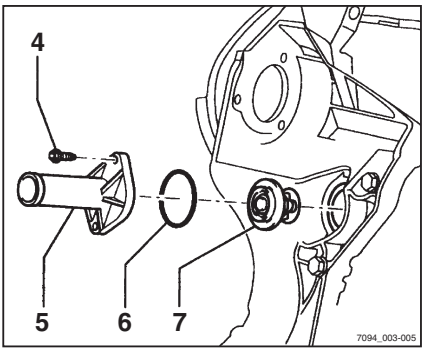

https://truckmanualshub.com/

– Re-attach the coolant hose to the connection spigot (5). Check that the clip is properly seated.

NOTE

Only use coolant additive according to the manufacturer's guidelines.

– Refill with coolant; for mixture ratio see ⇒ Chapter "Topping up coolant and checking coolant concentration", P. 6-200.

CAUTION

Coolant additive with a different specification must not be mixed in!

– Use coolant additive and anti-corrosion agent as shown in the maintenance data table, see ⇒ Chapter "Maintenance data table", P. 6-186.

– Screw the lid back on again (1) tightly.

– Start the engine; see ⇒ Chapter "Starting the engine", P. 5-68.

– Run the engine at approx. 1500 rpmfor a maximum of two minutes.

– Check the coolant level again.

– Close the engine hood.

– Re-attach the rear cover.

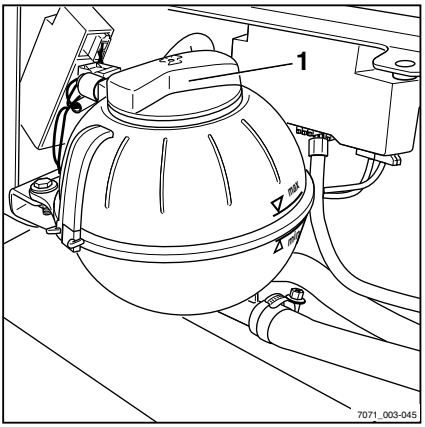

https://truckmanualshub.com/

10-year maintenance

Checking the LPG tank

▷

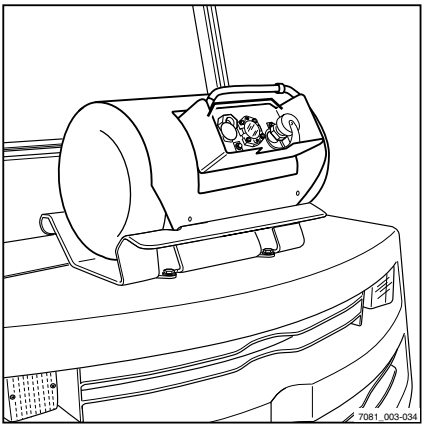

– Subject the LPG tank (special equipment) to TÜV (Technical Inspection Authority) inspection. Follow the national regulations for your country.

https://truckmanualshub.com/

7

Technical data

https://truckmanualshub.com/

Dimensions

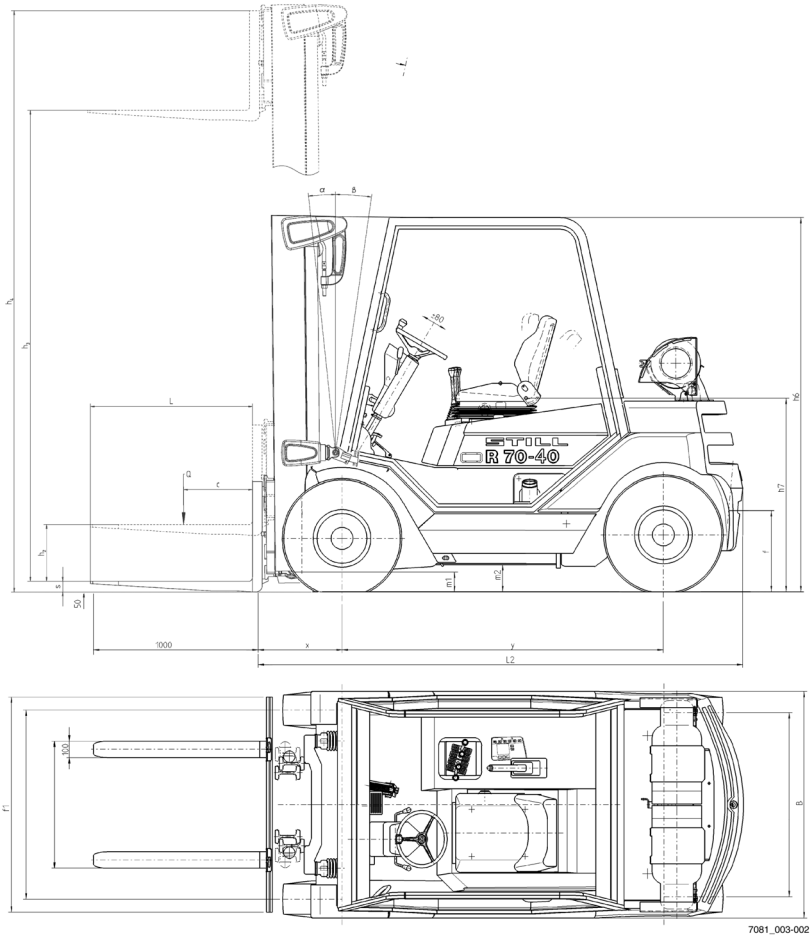

The customer-specific dimensions for dimensions h_1, h_3, h_4, h_6 and b_1 can be found in your order acknowledgement.

Centre of gravity S (distance from front axle)

R70-40T	1123 mm
R70-45T	1139 mm
R70-50T	1159 mm

https://truckmanualshub.com/

VDI datasheet

NOTE

Provisional values valid for the standard device. Variants may deviate from them.

Characteristics

		R70-40T	R70-45T	R70-50T
Manufacturer		STILL	STILL	STILL
Drive: electric, diesel, petrol, LPG, mains electric		LPG	LPG	LPG
Operation: manual, accompanied, stand, seated, order picking		Seated	Seated	Seated
Lifting capacity / Load	Q (kg)	4000	4500	4999
Load centre of gravity	c (mm)	500	500	500
Load distance	x (mm)	540	540	540
Wheelbase	y (mm)	2005	2005	2005

Weight

		R70-40T	R70-45T	R70-50T
Tare weight	kg	5800	6086	6395
Axle weight with front/rear load	kg	8627/1173	9462/1124	10290/1105
Axle weight without front/rear load	kg	2552/3248	2628/3458	2697/3698

Wheels, chassis frame

		R70-40T	R70-45T	R70-50T
Tyres: superelastic (SE), solid rubber (V), pneumatic (L)		SE	SE	SE
Front wheel size		250-15	28x12.5-15	28x12.5-15
Rear wheel size		250-15	250-15	250-15
Wheels, number front/rear (x = driven)		2x/2	2x/2	2x/2
Track width: front	b 10 (mm)	1136	1210	1210
Track width: rear	b 11 (mm)	1120	1120	1120

https://truckmanualshub.com/

Basic dimensions

		R70-40T	R70-45T	R70-50T
Tilt lift mast/fork carriage, forwards/backwards	Degree	6/8	6/8	6/8
Height with lift mast retracted	h1 (mm)	2400	2400	2400
Free lift	h2 (mm)	160	160	160
Lift height	h3 (mm)	3180	3180	3180
Height with lift mast extended	h4 (mm)	4187	4187	4187
Height to top of overhead guard	h6 (mm)	2300	2300	2300
Sitting height	h7 (mm)	1176	1176	1176
Coupling height	h10 (mm)	493	493	493
Total length	l1 (mm)	4027	4085	4130
Length including fork back	l2 (mm)	3027	3085	3130
Total width	b1	1380	1506	1506
Fork arm dimensions	s/e/l (mm	50/120/1000	50/120/1000	50/150/1200
Fork carriage according to ISO 2328 Class/Form A, B		Category III / Form A	Category III / Form A	Category III / Form A
Fork carriage width	b3 (mm)	1310	1310	1410
Ground clearance with load under lift mast	m1 (mm)	140	140	140
Ground clearance at centre of wheelbase	m2 (mm)	165	165	165
Aisle width for pallet 1000 x 1200 crosswise	Ast (mm)	4418	4470	4510
Aisle width for pallet 800 x 1200 longitudinal	Ast (mm)	4618	4670	4710
Turning radius	Wa (mm)	2678	2730	2770
Smallest pivot point distance	b13 (mm)	680	680	680

Performance data

		R70-40T	R70-45T	R70-50T
Driving speed with/without load	km/h	21/21	21/21	21/21
Lifting speed with/without load min. fan speed	m/s	0.51/0.55	0.43/0.46	0.43/0.46

https://truckmanualshub.com/

		R70-40T	R70-45T	R70-50T
Lowering speed with/without load	m/s	0.56/0.55	0.54/0.51	0.54/0.51
Pulling force with/without load	N	22230/18820	22180/19350	22110/19830
Climbing capability with/without load	%	24/34	22/33	20/32
Acceleration time with/without load	s	5.1/4.5	5.3/4.6	5.5/4.7
Service brake	s	Mechanical	Mechanical	Mechanical

Engine

		R70-40T	R70-45T	R70-50T
Engine manufacturer/model		VW/BMF	VW/BMF	VW/BMF
Engine output as per ISO 1585	kW	56	56	56
Nominal speed	rpm	2400	2400	2400
Speed at max torque	rpm	1600	1600	1600
Number of cylinders / Cubic capacity	cm^3	6/3200	6/3200	6/3200
Fuel consumption according to VDI cycle	kg/h	3.8	4.1	4.4

Miscellaneous

		R70-40T	R70-45T	R70-50T
Type of traction control		Stilltronic	Stilltronic	Stilltronic
Working pressure for attachments	Bar	250	230	250
Oil volume for attachments	l/min	30	30	30
Noise level in driver's ear	dB (A)	76	76	76
Tow coupling, type/model		Bolt	Bolt	Bolt

https://truckmanualshub.com/

Wheels and tyres

Permissible types of tyres

Only the tyre types listed can be used. We recommend consulting our customer service office before refitting.

R70-40T tyres

Comment	Tyre pressure (bar)	Tyres		Track (mm)		Mast type (height in mm)	
	front/rear	front	rear	front	rear	Tele	Triplex
Superelastic SIT tyres							
Standard	-	250-15	250-15	1136	1120	up to 3250	up to 3200
Twin.	-	7.00-15	250-15	1364	1120	up to 3250	up to 3200
Continen-tal	-	250-15	250-15	1136	1120	up to 3250	up to 3200
Pneumatic tyres							
		250-15	250-15	1136	1120	up to 3250	up to 3200
Twin XZM	10/10	7.00-15	250-15	1364	1120	up to 3250	up to 3200
Michelin XZM	10/10	250-15	250-15	1136	1120	up to 3000	up to 2300

Tyres R70-45T, R70-50T

Com-ment	Tyre pressure (bar)	Tyres		Track (mm)		Mast type (height in mm)	
	front/rear	front	rear	front	rear	Tele	Triple
Superelastic SIT tyres							
Standard	-	28x12,5-15	250-15	1210	1120	up to 3250	up to 3200
Twin.	-	7.00-15	250-15	1364	1120	up to 3250	up to 3200

https://truckmanualshub.com/

Fuse assignment

Fuse assignment in main fuse holder

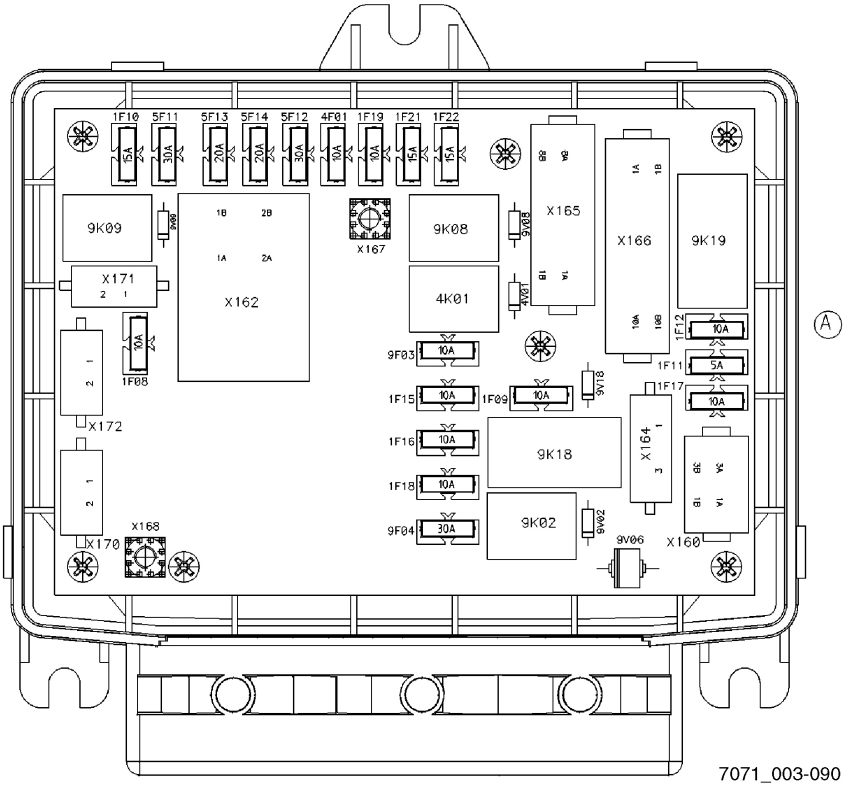

7071_003-090

1F08	Fuse 10 A
1F09	Fuse 10 A
1F10	Fuse 15 A
1F11	Fuse 5 A
1F12	Fuse 10 A
1F15	Fuse 10 A
1F16	Fuse 10 A
1F17	Fuse 10 A
1F18	Fuse 10 A
1F19	Fuse 10 A
1F21	Fuse 15 A
1F22	Fuse 15 A
4F01	Fuse 10 A
5F12	Fuse 30 A
5F11	Fuse 30 A
5F13	Fuse 20 A
5F14	Fuse 20 A
9F03	Fuse 10 A
9F04	Fuse 30 A

https://truckmanualshub.com/

NOTE

Depending on equipment, not all fuses will be present in your truck.

Fuse assignment special equipment ▷

NOTE

Depending on equipment, not all fuses will be present in your truck.

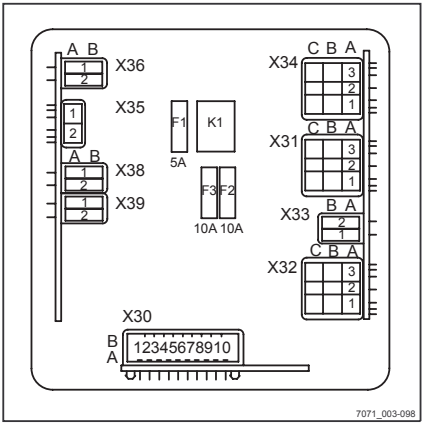

F1	Fuse 5 A
F2	Fuse 10 A
F3	Fuse 10 A

https://truckmanualshub.com/

8

Circuit diagrams

https://truckmanualshub.com/

Hydraulics

Hydraulic circuit diagram

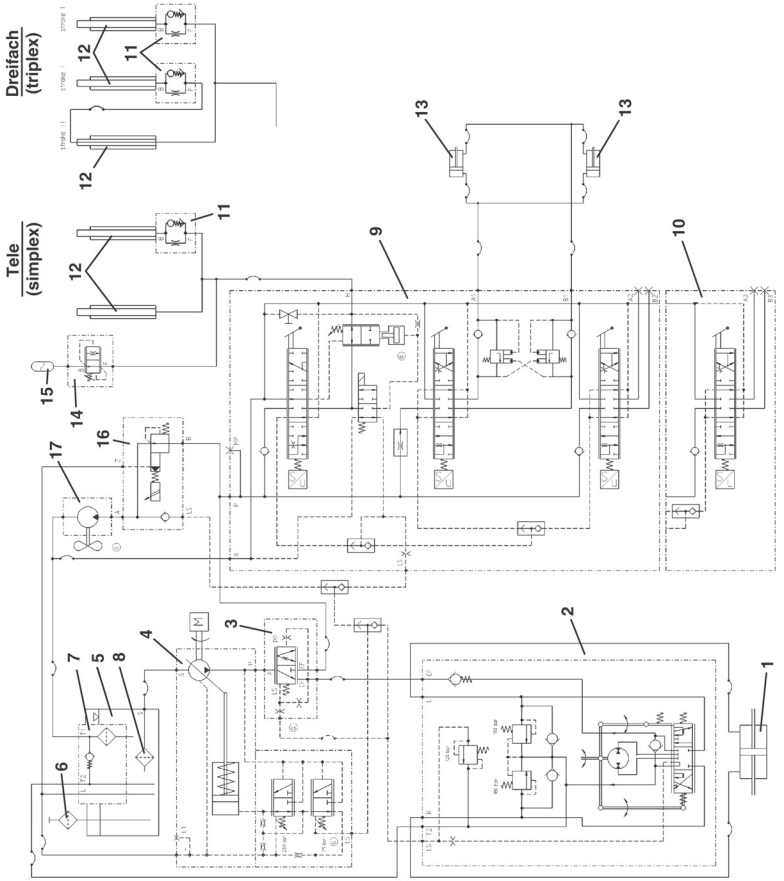

https://truckmanualshub.com/

1	Steering cylinder
2	Steering unit
3	Priority valve
4	Variable pump
5	Hydraulic oil tank
6	Breather plug
7	Return line filter
8	Suction screen
9	3-way directional control valve block
10	4-way directional control valve block
11	Burst pipe protection
12	Lift cylinders
13	Tilt cylinder
14	Lowering brake
15	Accumulator tank
16	Pressure reducing valve with housing
17	Fan motor

https://truckmanualshub.com/

Electrical equipment

Legend for circuit diagrams

NOTE

This legend applies to all possible equipment variants. Not all components/assemblies listed here have to be installed in your industrial truck.

General operating materials

A1	Load balancing printed circuit board
A2	Charge controller
A3	Throttle valve controller printed circuit board
A4	Traction control unit
A5	Contactor stand
A6	Fan motor printed circuit board
A7	Control fuse printed circuit board
A8	Special function printed circuit board
A9	Digital truck central control unit
A10	Steering column printed circuit board
A11	Field regulator
A12	Protective circuit printed circuit board
A13	Fuses/protective circuits printed circuit board
F1	Fuse (main fuse)
F2	Fuse (control fuse)
F3	Fuse (control fuse)
F4	Fuse (control fuse)
F5	Fuse (control fuse)
F6	Fuse (control fuse)
F7	Fuse (control fuse)
F8	Fuse (control fuse)
F9	Fuse (control fuse)
F10	Fuse (control fuse)
F11	Fuse for A2
G1	Battery
G2	Battery
G3	Battery
H1	Indicator light for S1
H2	Engine/generator temperature light
H3	Neutral position indicator light
H4	General temperature indicator light
K1	Relay
K2	Relay
R1	Resistor for A1
R2	Resistor
R3	Temperature sensor
S1	Key switch
S2	Battery - main switch
U1	Voltage transformer
U2	Voltage transformer
U3	Filter part
U4	Impedance converter
U5	not used
U6	AC-AC voltage transformer
U7	Overcurrent protector

https://truckmanualshub.com/

X1	Battery plug female half
X2	Battery plug male half
X3	Connector plug for 1A1
X4	Connector plug for 2A1
X5	Connector plug for 1A2
X6	Connector plug for 1A4
X7	Connector plug for 6A1
X8	Terminal rail for G1
X9	Connector plug for 6A3 - standard discharge indicator
X10	Connector plug for 6A3 - discharge indicator with switch-off
X11	Connector plug for A9
X12	4-way traction motor connector plug
X13	6-way traction motor connector plug
X14	4-way pump motor connector plug
X15	6-way pump motor connector plug
X16	Accelerator connector plug
X17	Field connections for A9
X18	CAN bus plug for A9
X19	CAN bus plug for A9
X99	not used
Z1	Protective circuit

Traction drives

1A1	Traction control printed circuit board
1A2	Output stage
1A3	Biasing current excitation printed circuit board
1A4	Field control printed circuit board
1A5	Retardation printed circuit board
1A6	Current sensor printed circuit board
1A7	Start V-engine printed circuit board
1A10	Impulse control system
1B1	Accelerator
1B2	Brake transmitter
1B3	2-pedal potentiometer
1B4	2-pedal potentiometer
1C1	Quenching capacitor
1F1	Fuse for 1M1
1F2	Fuse for 1M2
1F3	Fuse
1F11	Fuse
1F12	Fuse
1F13	Fuse
1G1	Generator
1K1	Main contactor
1K2	Braking contactor
1K3	not used
1K4	Auxiliary contactor
1K5	Safety relay for 1K1
1K6	Relay for S1
1K7	Relay for ignition
1K8	Safety relay monitoring
1K9	Bridge contactor
1K10	not used
1K11	Forwards motion contactor
1K12	Reverse motion contactor

https://truckmanualshub.com/

1K21	Forwards motion contactor
1K22	Reverse motion contactor
1K23	Relay for forwards motion switch-off
1L1	Charge reversal throttle
1L2	Throttle
1L3	Throttle
1M1	Right traction motor
1M2	Left traction motor (or 1 motor drive)
1R1	Series resistor for 1A1
1R2	Rotational angle detector (accelera-tor)
1R3	Resistor for monitoring
1R4	Resistor for monitoring
1R5	Resistor
1R6	Potentiometer for speed restriction
1R7	not used
1R8	not used
1R9	not used
1R10	Excitation resistor for electric braking
1R11	Resistor for 2nd braking stage
1R12	Brake resistor
1R13	Brake resistor
1R14	Stabilising resistor
1R15	not used
1R16	Resistor
1R17	Temperature sensor
1R18	Excitation resistor for electric braking
1S1	Forwards travel direction switch
1S2	Backwards travel direction switch
1S3	Parking brake switch
1S4	Parking brake switch
1S5	Cornering switch
1S6	Cornering switch
1S7	Cornering switch
1S8	Cornering switch
1S9	Traction safety switch
1S10	Reversing button
1S11	Safety switch for 1S10
1S12	Brake switch
1S13	Switch for 2nd braking stage
1S14	Step switch
1S15	Travel direction zero position switch
1S16	Accelerator switch
1T1	Charging current switch
1U1	Traction current actual-value sensor
1V1	Main thyristor traction control
1V2	Gate turn-off thyristor traction control
1V3	Charge reversal thyristor traction control
1V4	Free-wheeling diode traction control
1V5	Brake diode
1V6	Brake diode
1V7	Brake diode
1V8	Charge reversal diode
1V9	Charging diode
1V10	Diode
1V11	Diode
1V12	Diode
1V13	Diode

https://truckmanualshub.com/

1V14	Diode
1Z1	Protective circuit for 1V1
1Z2	Protective circuit for 1V2
1Z3	Protective circuit for 1V3
1Z4	Protective circuit for 1V4
1Z5	Protective circuit for 1V5
1Z6	Protective circuit for 1V6
1Z7	Protective circuit for 1V7
1Z8	Protective circuit for 1V8
1Z9	Protective circuit for 1V9
1Z11	Protective circuit for 1K11
1Z12	Protective circuit for 1K12
1Z13	Protective circuit for 1K1
1Z14	Protective circuit for 1K2
1Z20	Protective circuit printed circuit board
1Z21	Protective circuit for 1K21
1Z22	Protective circuit for 1K22
1Z23	Protective circuit
1Z24	Protective circuit
1Z25	Protective circuit
1Z26	Protective circuit
1Z27	Protective circuit
1Z28	Protective circuit
1Z29	Protective circuit
1Z30	Protective circuit

Hydraulic drives for moving load

2A1	Pump control printed circuit board
2A6	Current sensor printed circuit board
2A7	Proportional technology control unit
2B1	Lift sensor
2B2	Tilt sensor
2B3	Auxiliary hydraulic sensor 1
2B4	Auxiliary hydraulic sensor 2
2B5	Auxiliary hydraulic sensor 3
2B6	Retarder
2C1	Quenching capacitor
2F1	Fuse for 2M1
2F2	Fuse for 2M2
2F11	Fuse
2F12	Fuse control circuit
2K1	Pump contactor
2L1	Charge reversal throttle
2L2	Throttle
2L3	Throttle
2M1	Pump motor
2M2	Pump motor
2R1	Series resistor for 2A1
2R2	Lift rotational angle detector
2R17	Temperature sensor
2S1	Lift switch
2S2	Tilt switch
2S3	Auxiliary hydraulic switch 1
2S4	Auxiliary hydraulic switch 2
2S5	Lift end limit switch

https://truckmanualshub.com/

2S6	Lift end limit switch
2S7	Lift end limit switch
2S8	Lift end limit switch
2T1	Charging current transformer
2U1	Pump current actual-value sensor
2V1	Main thyristor pump control
2V2	Gate turn-off thyristor pump control
2V3	Charge reversal thyristor pump control
2V4	Free-wheeling diode pump control
2X1	42-way SAAB connector plug
2X2	Hydraulic control unit CAN bus plug
2X3	Hydraulic control unit CAN bus plug
2Y1	Directional control solenoid valve (lift)
2Y2	Directional control solenoid valve (lower)
2Y3	Directional control solenoid valve (tilt)
2Y4	Directional control solenoid valve (tilt)
2Y5	Auxiliary hydr. directional control solenoid valve 1
2Y6	Auxiliary hydr. directional control solenoid valve 1
2Y7	Auxiliary hydr. directional control solenoid valve 2
2Y8	Auxiliary hydr. directional control solenoid valve 2
2Y9	Release valve
2Y10	Valve on fork carriage
2Z1	Protective circuit for 2V1
2Z2	Protective circuit for 2V2
2Z3	Protective circuit for 2V3
2Z4	Protective circuit for 2V4

Auxiliary drives

3A1	Power-assisted steering control unit
3A2	Control motor injection pump printed circuit board
3B1	Steering transmitter
3C1	Quenching capacitor
3F1	Fuse for 3M1
3F2	Fuse for 3M2
3K1	Steering motor contactor
3K2	Compressor contactor
3M1	Power-assisted steering motor
3M2	Compressor motor
3M3	Control motor injection pump
3S1	Air supply switch

Signal devices

4A1	not used
4F1	Fuse
4F2	Fuse
4H1	Alarm horn
4H2	Buzzer

https://truckmanualshub.com/

4K1 Horn relay

4S1 Horn button

4V1 Diode for 9H2

4Z1 Protective circuit for 4H1 (capacitor)

4Z2 Protective circuit for 4H1 (diode)

Lighting

5C1 Capacitor

5E1 Right headlight

5E2 Left headlight

5E3 Right rear light

5E4 Left rear light

5E5 Right side light

5E6 Left side light

5E7 Right stop light

5E8 Left stop light

5E9 not used

5E10 Front left direction indicator

5E11 Front right direction indicator

5E12 Rear left direction indicator

5E13 Rear right direction indicator

5E14 Left licence plate light

5E15 Right licence plate light

5E16 Reverse light

5E17 Right searchlight

5E18 Left searchlight

5E19 Interior lighting

5E20 Left rotating signal beacon

5E21 Right rotating signal beacon

5E22 Middle rotating signal beacon

5E23 Rotating signal beacon

5E24 Left reverse light

5E25 Right reverse light

5E26 Left corner marker light

5E27 Right corner marker light

5E28 Rear searchlight

5E29 Rear searchlight

5E30 Middle front searchlight

5F1 Fuse for right headlight

5F2 Fuse for left headlight

5F3 Fuse for right parking light

5F4 Fuse for left parking light

5F5 Fuse for searchlight

5F6 Fuse for brake light/wiper/rotating signal beacon

5F11 Fuse

5F12 Fuse

5F13 Fuse

5F14 Fuse

5F15 Fuse

5F16 Fuse

5H1 Direction indicator light

5H2 Vehicle direction indicator light

5H3 Trailer direction indicator light

5H4 Trailer direction indicator light

5H5 Right corner marker light

5H6 Left corner marker light

https://truckmanualshub.com/

5H7	Lighting indicator light
5H8	Lighting indicator light
5K1	Direction hazard warning light sensor
5K2	Relay for reverse light
5K3	Relay for trailer socket
5K4	Relay for trailer socket
5K5	Relay for trailer socket
5K6	Pulse generator for reverse light
5K7	Relay for reverse light
5K8	Relay for stop light
5K9	Relay for front searchlight
5L1	Throttle
5R1	Series resistor for 5K2
5S1	Light switch
5S2	Warning light switch
5S3	Direction indicator switch
5S4	Left searchlight switch
5S5	Right searchlight switch
5S6	Rotating signal beacon switch
5S7	Brake light switch
5S8	Reversing light switch
5S9	Rear searchlight switch
5S10	Brake light switch
5V1	Diode
5V2	Diode
5V3	Diode

Measurement and display devices

6A1	Carbon brush monitor printed circuit board
6A2	Carbon brush monitor printed circuit board
6A3	Discharge indicator printed circuit board
6A4	Impulse transmitter printed circuit board
6A5	Start delay printed circuit board
6A6	Carbon brush monitor printed circuit board
6B1	Oil temperature sensor
6B2	Coolant temperature sensor
6B3	Fuel level sensor
6B4	Glow plug indicator sensor
6B5	Jetronik sensor
6B6	Jetronik air-flow sensor
6B7	Tachometer generator
6B8	Lambda sensor
6B9	Speed sensor
6B10	Tachometer generator
6B11	Coolant temperature sensor
6B12	Coolant level sensor
6B13	Lambda sensor
6B14	Coolant temperature sensor (rev. air duct)
6B15	Impulse transmitter for 6P4
6B16	Start volume transmitter
6B17	Speed sensor for 1M1
6B18	Carbon brush monitor for M2
6B19	Carbon brush monitor for G1
6F1	Fuse for indicator lights

https://truckmanualshub.com/

6H1	Coolant temperature light
6H2	Oil pressure warning light
6H3	Fuel level lamp
6H4	Glow filter indicator light
6H5	Air filter indicator light
6H6	Carbon brush indicator light for 1M1
6H7	Carbon brush indicator light for 1M2
6H8	Carbon brush indicator light for 2M1
6H9	Carbon brush indicator light for 3M1
6H10	General carbon brush indicator light
6H11	Brake fluid indicator light
6H12	Start indicator light
6H13	Catalytic converter indicator light
6H14	Motor blower indicator light
6H15	Engine temperature indicator light
6H16	Soot filter indicator light (gn)
6H17	Soot filter indicator light (rd)
6H18	Indicator light at 6 km/h
6H19	Mast vertical position indicator

6K1	Relay for oil pressure
6K2	Relay for oil pressure
6K3	Relay for coolant light
6K4	Relay for coolant light
6K5	Relay for hour meter

6P1	Operating hour meter
6P2	Operating hour meter
6P3	Discharge indicator
6P4	Milometer
6P5	Coolant temperature indicator
6P6	Oil temperature indicator
6P7	Oil pressure indicator
6P8	Fuel level indicator
6P9	Wheel base indicator
6P10	Speed indicator
6P11	Ammeter indicator
6P12	Discharge indicator/hour meter
6P13	Carbon brush wear indicator

6S1	Oil pressure warning switch
6S2	Air filter indicator switch
6S3	Oil pressure switch
6S4	Brake fluid switch
6S5	Motor blower monitoring switch
6S6	Engine temperature switch
6S7	Soot filter indicator switch
6S8	Reset switch for carbon brush wear indicator
6S9	Oil filter switch

Special functions

7A1	Printed circuit board for parking brake signal transmitter
7B1	Lift mast sensor
7F1	Fuse
7F2	Fuse
7H1	Indicator light for 1S3
7H2	Warning signal transmitter
7K1	Relay for warning signal

https://truckmanualshub.com/

7K2	Emergency cut-off contactor
7K5	Dead man relay (lift)
7K6	Dead man relay (traction)
7K7	Relay for seat contact
7S1	Seat contact switch
7S2	Emergency switch
7S3	Battery locking switch
7S4	Temperature switch
7S5	Temperature switch
7S6	Temperature switch
7S7	Temperature switch
7S8	Temperature switch
7S9	Temperature switch
7S10	Temperature time switch
7S11	External start switch
7S12	Warning signal switch
7S13	Dead-man switch
7S14	Emergency start switch
7S15	Switch for solenoid valve
7V8	Diode for solenoid valve
7X1	Pilot contact
7X11	Connector for external start
7Y8	Left solenoid valve (fork carriage)
7Y9	Right solenoid valve (fork carriage)

Automated functions

not assigned

Miscellaneous

9A1	Control unit for ignition
9A2	Shut-down solenoid printed circuit board
9A3	Jetronik control unit
9A4	Generator start/carbon brush monitor printed circuit board
9A5	Lambda control system control unit
9A6	Protective circuit printed circuit board
9A7	2-pedal printed circuit board with shut-down device
9A8	2-pedal printed circuit board with fuse
9A9	Soot burner control
9A10	Control unit heater
9B1	Thermocouple for soot burner
9B2	Temperature switch for heater
9C1	Capacitor
9E1	Spark plug
9E2	Spark plug
9E3	Spark plug
9E4	Spark plug
9E5	Spark plug
9E6	Spark plug
9E7	Spark plug
9E8	Spark plug
9E9	Ignition distributor
9E10	Heater blower
9E11	Defroster blower
9E12	Seat heater
9E13	Sheathed-element heater plug
9E14	Sheathed-element heater plug

https://truckmanualshub.com/

9E15	Sheathed-element heater plug
9E16	Sheathed-element heater plug
9E17	Sheathed-element heater plug
9E18	Auxiliary heater
9E19	Passenger seat heater
9E20	Defroster blower
9E21	Cigar lighter
9E22	Sheathed-element heater plug for soot burner
9F1	Fuse for lambda control system
9F2	Fuse for ignition
9F3	Fuse for charge controller
9F4	Fuse for starter
9F5	Fuse for 9E10
9F6	Fuse for sheathed-element heater plugs
9F7	Fuse for seat heater
9F8	Fuse for radio
9F9	not used
9F10	not used
9F11	not used
9F12	Fuse for 12-volt starter
9F13	Fuse for soot burner
9F14	Fuse for soot burner
9F15	Fuse for soot burner
9F16	Fuse for 9K26
9F17	Fuse for defroster
9G2	Generator
9H1	Indicator light for 9S3
9H2	Generator indicator light
9H4	Indicator light for 9S4
9H5	GREEN soot burner indicator
9H6	RED soot burner alarm
9H7	Soot burner diagnostic LED
9H8	Soot burner signal transmitter
9K1	External start contactor
9K2	Relay for 9M1
9K3	Glow plug relay
9K4	Relay for ignition
9K5	Starter lockout relay
9K6	Starter lockout relay
9K7	Relay for 9E11
9K8	Auxiliary relay for diesel mode
9K9	Auxiliary relay for diesel mode
9K10	Charging contactor
9K11	Auxiliary relay for diesel mode
9K12	Auxiliary relay for diesel mode
9K13	Auxiliary relay for 1A2
9K14	Auxiliary relay for 1S9
9K15	Relay for 9E20
9K16	Relay for 9Y5
9K17	Relay for 9M5/9M6
9K18	Relay for S1
9K19	Relay for 9Y4
9K20	Relay for 9Y4
9K21	Relay for soot burner operating indicator
9K22	Relay for soot burner operating indicator
9K23	Relay for soot burner lock
9K24	Relay for soot burner starter lockout
9K25	Current regulator for sheathed-element heater plug

https://truckmanualshub.com/

9K26	Relay for 9H8
9K27	Relay for 9Y8
9L1	Throttle for charge controller
9M1	Starter
9M2	Wiper motor
9M3	Rear windscreen wiper motor
9M4	Defroster blower motor
9M5	Fan motor
9M6	Fan motor
9M7	Injection pump motor
9M8	Fuel pump
9M9	Control motor for lambda sensor
9M10	Windscreen washer motor
9M11	Rear window washer motor
9M12	Roof wiper motor
9M13	Blower for soot burner
9M14	not used
9M15	not used
9M16	Secondary fan elec. machine
9M17	ASM circulating pump
9R1	Rotational angle detector for control motor
9R2	Series resistor for external start system
9R3	Heater resistor
9R4	Heater resistor
9R5	Series resistor
9R6	Varistor
9R7	Series resistor
9R8	Series resistor for sheathed-element heater plug
9R9	Series resistor for sheathed-element heater plug
9R10	Series resistor for sheathed-element heater plug
9R11	Series resistor
9R12	Series resistor
9R13	Resistor
9R15	Series resistor for sheathed-element heater plug/soot burner
9S1	Wiper switch
9S2	Rear windscreen wiper switch
9S3	Switch for 9E10
9S4	Switch for seat heater
9S5	Switch for automatic charging
9S6	Temperature switch
9S7	Switch for 9E11
9S8	Left door contact switch
9S9	Right door contact switch
9S10	Switch for 9E20
9S11	Switch for soot filter
9S12	Bonnet switch
9S13	Switch for 9M12
9S14	Soot burner starting switch
9S15	Soot burner emergency cut-off
9T1	Ignition coil
9V1	Diode
9V2	Diode
9V3	Diode
9W1	Steering column slip ring

https://truckmanualshub.com/

9Y1	Cold-start valve
9Y2	Idle stop valve
9Y3	Throttle valve solenoid
9Y4	Solenoid valve for gas tank
9Y5	Shut-down solenoid
9Y6	Actuator solenoid for automatic battery charging unit
9Y7	Start valve for catalytic converter
9Y8	Soot burner fuel injector
9Z1	Protective circuit for thermostatic switch
9Z2	Protective circuit for fan 9M5/9M6

https://truckmanualshub.com/

https://truckmanualshub.com/

A

Accessories
Overview 52
Accident recorder 137
Adjusting the steering column 65
After washing 198
Assembling attachments 116
Attachment
maintenance 221
Attachments . . . . . 116 – 117
Control in general 118
Controlling using multi-lever
controls 119
Fastening 116
Operating with multi-lever controls
and the 5th function 120
Overview 52
Special risks 14
Taking up a load 121

B

Battery
Charging 205
Checking the charge state 205
Disposal 7
Servicing 204
Battery acid 34

C

C. U. R. data 50
Cab 126
Cab doors 126
Carrying loading units 104
Carrying out work on the hydraulic
equipment 188
Changes to the forklift truck 23
Changing direction of travel
Single-pedal operation with multiple
lever version 83
Single-pedal operation with version
including mini-console 87
Two-pedal operation 90
Changing the
engine oil 224
engine oil filter 224
Changing the air filter insert 202
Changing the LPG cylinder 165
Changing the LPG filter 227
Check driver's seat 219
Check lift cylinders and connections for
leaks. 230
Checking the clearance between fork
carriage stop and run-out stop . . . 233
Checking the counterweight attach-
ment 224
Checking the door latch 211
Checking the engine mountings 236
Checking the engine oil level 56
Checking the evaporator and pressure
regulator 222
Checking the exhaust gas system 227
Checking the fork arms 233
Checking the heating system for leaks . 230
Checking the lambda control system . . . 230
Checking the ribbed V-belt 226
Checking the wheel bearing 236
Checking wheel fastenings 209
Cleaning the electrical system 197
Cleaning the truck 196
Condition of the driveways 79
Connections for attachments
Depressurising 117
Consumables 29
Battery acid safety instructions 34
Coolant safety instructions 35
Disposal 36
Safety instructions for handling oils . . 29
Coolant 35
changing 243
Checking the concentration 200
Topping up 200
Copyright and proprietary rights 4

https://truckmanualshub.com/

Crane loading 156
Attaching lifting straps 157
Determining the loading weight 157
Loading the truck 159
Cross references 5
Cruise control 127
Currentness of manual 4

D

Damage 24
Dangerous locations 79
Defects 24
Definition of directions 6
Depositing and retrieving loading units . 113
Depressurising
Multi-lever operation 118
Diagram of functional sequences 6
Dimension of driveways 78
Dimensions 248
Direction indicators 125
Direction of travel/flasher/fault multi-function display 47
Display and operating unit 46
additional displays 134
Additional settings 137
Fleet Manager functions 137
normal displays 134
Resetting the daily kilometres and daily operating hours 136
Setting and changing the displays . . 135
Setting the date or time 135
Setting the language 136
Disposal
Battery 7
Units 7
Documentation scope 3
Drive axle
check for leaks 223
Check oil level 223
Maintenance 223
Driver's compartment
Dual-pedal version 44
Single pedal version 42
Drivers 20
Driveways . . . . . 78 – 79
Driving
on ascending and descending slopes 114
Single-pedal operation with multiple lever version 80
Single-pedal operation with version including mini-console 84
Two-pedal operation 88
Driving on lifts 114
Driving on loading bridges 115
Driving on slopes 78
Driving with cruise control 127

E

EC declaration of conformity 2
EC mark of conformity 2
Emergencies
Disconnecting the battery 164
Emergency lowering 163
Procedure if truck tips over 162
Emissions 37
Battery 38
Exhaust gases 38
Heat 38
Noise emissions 37
Vibrations 37
Error messages
Diagram 138

F

Fault code table 139
Filling the washer system 57
Flashing light 123
Fleet Manager functions 137
Floorplate 194
Footbrake
Checking adjustment 209

https://truckmanualshub.com/

Fork extension 100
Forwards travel
Single-pedal operation with multiple lever version 81
Single-pedal operation with version including mini-console 85
Two-pedal operation 89
Functional sequences 6
Fuse assignment
Additional equipment 254
Main fuse holder 253

G

Gear lubricant oil
Changing 235
General 2

H

Hazard area 104
Hazard warning system 124
Hazards and countermeasures 16
Heater 127
Hydraulic circuit diagram 256
Hydraulic equipment
Bleeding lift cylinders 242
Bleeding the tilt cylinders 242
Changing the hydraulic oil 239
Changing the hydraulic oil filter 239
Hydraulic fluid 33
Hydraulic system
Check oil level 207
Checking for leaks 207
Maintenance 207

I

Identification points 48
Impermissible use 10
Information regarding performing maintenance 178
Inserting a wheel chock 173
Instructions for washing 196
Insulation testing 28
Insurance coverage on company premises 23
Intervals for maintenance and inspection 181
Issue date of manual 4

J

Jump starting 160

L

Lashing 155
Lift mast
Lubricating the roller track 217
Lift mast versions 95
Lifting system
Controls 98
Maintenance 231
Multi-lever operation 99
Lifting system variants 95
Lighting 122
Load chains
checking 214
Cleaning 197
Lubrication 214
Maintenance 214
Loads
Taking up 107
transporting 110
LPG 30
LPG system
Replacing hoses 237
LPG tank
Checking 246
Filling 168
Opening the shut-off valve 59
Lubricating joints and controls 211
Lubricating the parking brake lever bearing and ratchet 224

M

Maintaining the restraint system 219
Maintenance and lubrication 179

https://truckmanualshub.com/

Maintenance data table 186
Maintenance during the break-in period 199
Maintenance plan 181
Maintenance work for which no special qualifications are necessary 178
Malfunction during a lifting operation 96
Mast bearings
Checking tightening torque 214
Lubrication 214
Maintenance 214
Measures for prolonged shutdown, storage of truck 173
Medical equipment 25
Message 153
BREMSE ANZIEHEN (APPLY HANDBRAKE!) 147
BREMSGEBER (BRAKE SENSOR) 150
FAHRGEBER (ACCEL. SENSOR) . 149
GABELN ABSENKEN (LOWER FORKS) 148
KUEHLMITTELSTAND (COOLANT LEVEL) 152
KUEHLMITTELTEMP (COOLANT TEMP.) 153
LENKEN (STEERING) 151
LUFTFILTER (AIR FILTER) 147
MOT/GEN-TEMP (MOT/GEN.-TEMP.) 151
OELDRUCK (OIL PRESSURE) 152
REFERENCE LIFT 149
SAFETY BELT 142
SITZSCHALTER (SEAT SWITCH) . 145
UEBERWACHUNG (SURVEILLANCE) 150
Mini-console 47
Misuse of safety devices 24
MSG 20 driver's seat
Adjusting 63
Adjusting the backrest 64
Adjusting the seat suspension to your weight 65
Moving 64
MSG 65/MSG 75 driver's seat
Adjusting 60
Adjusting the backrest 61
Adjusting the backrest extension 63
Adjusting the lumbar support 62
Adjusting the seat suspension to your weight 62
Moving 61
Switching the seat heater on and off . . 63
Multi-lever operation
Lift, lower fork carriage 99
Tilt mast 99

N

Nameplate 49
Neutral position
Single-pedal operation with multiple lever version 83
Single-pedal operation with version including mini-console 87

O

Oils 29
Opening LPG cylinders 58
Opening the bonnet 55
Operating company 20
Operating materials 186
Quality and quantity 185
Operating the signal horn 69
Overhauling the LPG system 229
Overview of areas requiring maintenance 180

P

Packaging 7
Parking brake
Adjusting the switch 224
Checking the setting 210
Operating 93
Parking the truck securely 171
Place of use 11
Prior to taking up a load 103

https://truckmanualshub.com/

Prohibition on use by unauthorised persons 22
Proper use 10

Q

Qualifications of personnel 178

R

Radiator
- Checking for leaks 200
- Cleaning 200

Radio 126
Raising and jacking up 191
Rear covering 195
Removing the lift mast 192
Replacing fuses 219
Replacing the spark plugs 227
Resetting the daily kilometres and daily operating hours 136
Residual dangers, residual risks 13
Restraining belt 70
- checking 218
- cleaning 218
- Fastening 71
- Fastening on a steep slope 72
- maintaining 217
- Malfunctions due to cold 73
- Releasing 72
- Replacement after an accident 218

Retrofitting 23
Returning to service after storage 174
Reverse travel
- Single-pedal operation with multiple lever version 82
- Single-pedal operation with version including mini-console 86
- Two-pedal operation 89

Reversible fork arms
- checking 234

Reversible forks 100
Rights, duties and rules of behaviour for the driver, ... 21
Risk for employees 18
Rules for driveways and the working area 79

S

Safety check 26
Safety devices 190
Safety instructions for maintenance
- Raising and jacking up 191
- Working at the front of the forklift truck 192
- Working on the ignition system 189

Safety instructions for working on the lift mast
- Removing the lift mast 192
- Securing against tilting back 192
- Securing the telescopic lift mast 193
- Securing the triple lift mast 193

Safety regulations for maintenance
- Carrying out work on the hydraulic equipment 188
- General information 188
- Safety devices 190
- Working on electrical equipment . . . 188

Safety regulations for servicing
- Set values 190
- Working on gas fuel (LPG) system . . 189

Safety regulations when driving 76
Safety regulations when handling loads 102
Sample graphics 6
Securing against tilting back 192
Securing the telescopic lift mast 193
Securing the triple lift mast 193
Service brake 91
Service intervals 181
Set values 190
Setting chocks 154
Setting forks 104
Setting the date 135
Setting the language 136
Setting the load chains
- Tele mast 216
- Triplex mast 216

https://truckmanualshub.com/

Setting the time 135
Setting the traction programs 75
Short-term operation 159
Shutdown 173
Side windows 126
Signal terms 5
Spare Parts 185
Special equipment 51
Special risks 14
Specialist 20
Starting the engine 68
Steering 94
Steering axle
  Checking 211
  Checking the hoses for leaktightness 213
  Lubrication 213
  Maintenance 211
Steering system
  Checking function 74
Storage 174
Stub axle nuts
  Checking tightening torque 213

T

Technical data
  Dimensions 248
Testing the insulation resistance of the electrical system 28
Time of maintenance 179
Tow coupling
  manual 131
Towed load 130
Towing 156
  Proper usage 10
Trailer
  coupling 131
Trailers
  Towing 133
Transport 154
Transport of swinging loads 106
Transporting pallets 105
Travel direction switch
  Single-pedal operation with multiple lever version 81
  Single-pedal operation with version including mini-console 85
Turning on the key switch 66
Tyres
  Safety principles 25

U

Use of working platforms 12

V

Variants 51
VDI datasheet 249
Vehicle identification number 50
Visual inspections 54

W

Warning regarding non-original parts . . . 24
Washing outside of truck 196
Wearing parts 185
Wheels and tyres
  Checking air pressure 208
  Checking condition and wear of the tyres 208
  Checking wheel fastenings 209
  Maintenance 208
  Technical data 252
  Testing the condition 57
Windscreen wiper/washer 125
Working at the front of the forklift truck . . 192
Working materials
  Safety precautions for hydraulic fluid . 33
  Safety precautions for LPG 30
Working on electrical equipment 188
Working on gas fuel (LPG) system 189
Working on the ignition system 189

https://truckmanualshub.com/

https://truckmanualshub.com/

Still GmbH
Berzeliusstrasse 10
D-22113 Hamburg

Ident no. 171673 EN