https://truckmanualshub.com
Table of Contents

Plate Mounted Pallet Forks

AP-PFL4548, AP-PFL5548, & AP-PFL5560

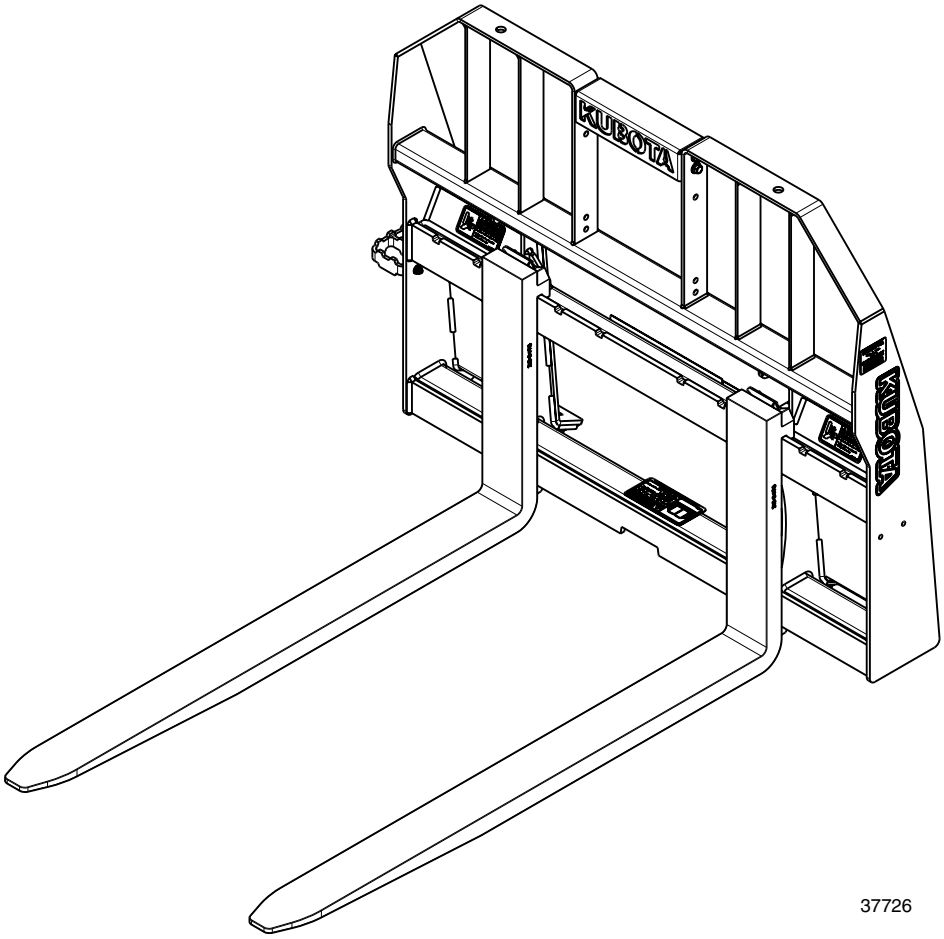

37726

319-038MK
Operator's Manual

Read the Operator's Manual entirely. When you see this symbol, the subsequent instructions and warnings are serious - follow without exception. Your life and the lives of others depend on it!

Cover photo may show optional equipment not supplied with standard unit.

For an Operator's Manual and Decal Kit in French Language, please see your Kubota dealer.

Printed 6/21/19

https://truckmanualshub.com/

Machine Identification

Record your machine details in the log below. If you replace this manual, be sure to transfer this information to the new manual.

If you, or the dealer, have added Options not originally ordered with the machine, or removed Options that were originally ordered, the weights and measurements are no longer accurate for your machine. Update the record by adding the machine weight and measurements provided in the Specifications & Capacities Section of this manual with the Option(s) weight and measurements.

Model Number	
Serial Number	
Machine Height	
Machine Length	
Machine Width	
Machine Weight	
Delivery Date	
First Operation	
Accessories	_____ _____ _____

Dealer Contact Information

Name: _____

Street: _____

City/State: _____

Telephone: _____

Email: _____

California Proposition 65

WARNING: Cancer and reproductive harm - www.P65Warnings.ca.gov

https://truckmanualshub.com/

Important Safety Information 1
Safety at All Times 1
Look for the Safety Alert Symbol 1
Safety Labels 6
Introduction 8
Application 8
Using This Manual 8
Terminology 8
Definitions 8
Owner Assistance 8
Serial Number 8
Section 1: Assembly & Set-Up 9
Fork Installation 9
Step Relocation 9
Skid Steer & Tractor Hook-Up 10
Hook-Up to Skid Steer Hitch Plate 10
Section 2: Adjustments 11
Fork Adjustment 11
Kubota Center Logo Placement 11
Section 3: Operating Procedures 12
Operating Checklist 12
Operating Safety 12
Transport Safety 13
Skid Steer Shutdown Procedure 13
Pallet Fork Operation 14
Picking up a load 14
Traveling with a load 14
Placing a load 14
Unhook Pallet Fork 15
General Operating Instructions 15
Section 4: Maintenance & Lubrication 16
Maintenance 16
Long-Term Storage 16
Lubrication Points 17
Pallet Fork Contact Points 17
Section 5: Specifications & Capacities 18
Section 6: Features & Benefits 19
Section 7: Troubleshooting 20
Section 8: Torque Values Chart 21
Section 9: Legal Disclaimer & Warranty . . . 22

© Copyright 2019 All rights Reserved

Kubota provides this publication “as is” without warranty of any kind, either expressed or implied. While every precaution has been taken in the preparation of this manual, Kubota assumes no responsibility for errors or omissions. Neither is any liability assumed for damages resulting from the use of the information contained herein. Kubota reserves the right to revise and improve its products as it sees fit. This publication describes the state of this product at the time of its publication, and may not reflect the product in the future.

Kubota is a registered trademark.

All other brands and product names are trademarks or registered trademarks of their respective holders.

Printed in the United States of America.

See previous page for Table of contents.

Parts Manual QR Locator

The QR (Quick Reference) code on the cover and to the left will take you to the Parts Manual for this equipment. Download the appropriate App on your smart phone, open the App, point your phone on the QR code and take a picture.

Dealer QR Locator

The QR code on the left will link you to available dealers for Kubota products. Refer to Parts Manual QR Locator on this page for detailed instructions.

https://truckmanualshub.com/

Listed below are common practices that may or may not be applicable to the products described in this manual.

Safety at All Times

Careful operation is your best assurance against an accident.

All operators, no matter how much experience they may have, should carefully read this manual and other related manuals, or have the manuals read to them, before operating the power machine and this attachment.

- ▲ Thoroughly read and understand the “Safety Label” section. Read all instructions noted on them.
- ▲ Do not operate the equipment while under the influence of drugs or alcohol as they impair the ability to safely and properly operate the equipment.
- ▲ Operator should be familiar with all functions of the tractor/skid steer and attachment and be able to handle emergencies quickly.
- ▲ Make sure all guards and shields appropriate for the operation are in place and secured before operating attachment.
- ▲ Keep all bystanders away from equipment and work area.
- ▲ Start tractor/skid steer from the driver’s seat with steering levers and hydraulic controls in neutral.
- ▲ Operate tractor/skid steer and controls from the driver’s seat only.
- ▲ Never dismount from a moving tractor/skid steer or leave machine unattended with engine running.
- ▲ Do not allow anyone to stand between tractor/skid steer and attachment while hooking-up.
- ▲ Keep hands, feet, and clothing away from power-driven parts.
- ▲ While transporting and operating equipment, watch out for objects overhead and along side such as fences, trees, buildings, wires, etc.
- ▲ Store attachment in an area where children normally do not play. When needed, secure attachment against falling with support blocks.

Look for the Safety Alert Symbol

The SAFETY ALERT SYMBOL indicates there is a potential hazard to personal safety involved and extra safety precaution must be taken. When you see this symbol, be alert and carefully read the message that follows it. In addition to design and configuration of equipment, hazard control, and accident prevention are dependent upon the awareness, concern, prudence, and proper training of personnel involved in the operation, transport, maintenance, and storage of equipment.

Be Aware of Signal Words

A signal word designates a degree or level of hazard seriousness. The signal words are:

DANGER

Indicates a hazardous situation that, if not avoided, will result in death or serious injury.

WARNING

Indicates a hazardous situation that, if not avoided, could result in death or serious injury.

CAUTION

Indicates a hazardous situation that, if not avoided, may result in minor or moderate injury.

Safety Precautions for Children

Tragedy can occur if the operator is not alert to the presence of children. Children generally are attracted to attachments and their work.

- ▲ Never assume children will remain where you last saw them.
- ▲ Keep children out of the work area and under the watchful eye of a responsible adult.
- ▲ Be alert and shut the attachment and skid steer/track loader down if children enter the work area.
- ▲ Never carry children on the power machine or attachment. There is not a safe place for them to ride. They may fall off and be run over or interfere with the control of the power machine.
- ▲ Never allow children to operate the power machine, even under adult supervision.
- ▲ Never allow children to play on the power machine or attachment.
- ▲ Use extra caution when backing up. Before the power machine starts to move, look down and behind to make sure the area is clear.

https://truckmanualshub.com/

Listed below are common practices that may or may not be applicable to the products described in this manual.

Dig Safe - Avoid Underground Utilities

- ▲ **USA: Call 811**
  CAN: digsafecanada.ca
  Always contact your local utility companies (electrical, telephone, gas, water, sewer, and others) before digging so that they may mark the location of any underground services in the area.
- ▲ Be sure to ask how close you can work to the marks they positioned.

Transport Safely

- ▲ Comply with federal, state, and local laws.
- ▲ Use towing vehicle and trailer of adequate size and capacity. Secure equipment towed on a trailer with tie downs and chains.
- ▲ Sudden braking can cause a towed trailer to swerve and upset. Reduce speed if towed trailer is not equipped with brakes.
- ▲ Avoid contact with any overhead utility lines or electrically charged conductors.
- ▲ Always drive with load on end of loader arms low to the ground.
- ▲ Always drive straight up and down steep inclines with heavy end of skid steer or tractor with loader attachment on the “uphill” side.
- ▲ Engage park brake when stopped on an incline.
- ▲ Maximum transport speed for an attached equipment is 20 mph. DO NOT EXCEED. Never travel at a speed which does not allow adequate control of steering and stopping. Some rough terrains require a slower speed.
- ▲ As a guideline, use the following maximum speed weight ratios for attached equipment:

  20 mph when weight of attached equipment is less than or equal to the weight of machine towing the equipment.

  10 mph when weight of attached equipment exceeds weight of machine towing equipment but not more than double the weight.
- ▲ **IMPORTANT:** Do not tow a load that is more than double the weight of the vehicle towing the load.

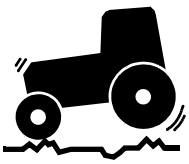

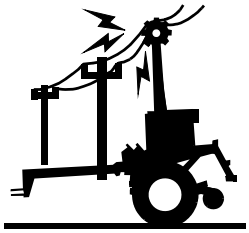

Tire Safety

- ▲ Tire changing can be dangerous and must be performed by trained personnel using the correct tools and equipment.
- ▲ Always maintain correct tire pressure. Do not inflate tires above recommended pressures shown in the Operator’s Manual.
- ▲ When inflating tires, use a clip-on chuck and extension hose long enough to allow you to stand to one side and NOT in front of or over the tire assembly. Use a safety cage if available.
- ▲ Securely support the attachment when changing a wheel.
- ▲ When removing and installing wheels, use wheel handling equipment adequate for the weight involved.
- ▲ Make sure wheel bolts have been tightened to the specified torque.

Practice Safe Maintenance

- ▲ Understand procedure before doing work. Refer to the Operator’s Manual for additional information.
- ▲ Work on a level surface in a clean dry area that is well-lit.
- ▲ Lower attachment to the ground and follow all shutdown procedures before leaving the operator’s seat to perform maintenance.
- ▲ Do not work under any hydraulic supported equipment. It can settle, suddenly leak down, or be lowered accidentally. If it is necessary to work under the equipment, securely support it with stands or suitable blocking beforehand.
- ▲ Use properly grounded electrical outlets and tools.
- ▲ Use correct tools and equipment for the job that are in good condition.
- ▲ Allow equipment to cool before working on it.
- ▲ Disconnect battery ground cable (-) before servicing or adjusting electrical systems or before welding on equipment.
- ▲ Inspect all parts. Make certain parts are in good condition & installed properly.
- ▲ Replace parts on this attachment with genuine Land Pride parts only. Do not alter this attachment in a way which will adversely affect its performance.
- ▲ Do not grease or oil attachment while it is in operation.
- ▲ Remove buildup of grease, oil, or debris.
- ▲ Always make sure any material and waste products from the repair and maintenance of the attachment are properly collected and disposed.
- ▲ Remove all tools and unused parts before operation.

https://truckmanualshub.com/

Listed below are common practices that may or may not be applicable to the products described in this manual.

Prepare for Emergencies

- ▲ Be prepared if a fire starts.
- ▲ Keep a first aid kit and fire extinguisher handy.
- ▲ Keep emergency numbers for doctor, ambulance, hospital, and fire department near phone.

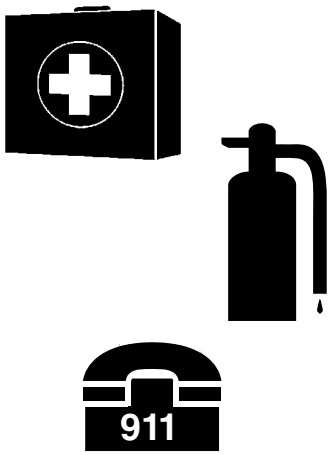

Wear Personal Protective Equipment (PPE)

- ▲ Wear protective clothing and equipment appropriate for the job such as safety shoes, safety glasses, hard hat, and ear plugs.
- ▲ Clothing should fit snug without fringes and pull strings to avoid entanglement with moving parts.
- ▲ Prolonged exposure to loud noise can cause hearing impairment or hearing loss. Wear suitable hearing protection such as earmuffs or earplugs.
- ▲ Operating equipment safely requires the operator's full attention. Avoid wearing headphones while operating equipment.

Avoid High Pressure Fluids Hazard

- ▲ Escaping fluid under pressure can penetrate the skin causing serious injury.
- ▲ Relieve all residual pressure before disconnecting hydraulic lines or performing work on the hydraulic system.
- ▲ Make sure all hydraulic fluid connections are tight and all hydraulic hoses and lines are in good condition before applying pressure to the system.
- ▲ Use a piece of paper or cardboard, NOT BODY PARTS, to check for suspected leaks.
- ▲ Wear protective gloves and safety glasses or goggles when working with hydraulic systems.
- ▲ **DO NOT DELAY.** If an accident occurs, see a doctor familiar with this type of injury immediately. Any fluid injected into the skin or eyes must be treated within a few hours or gangrene may result.

Use Safety Lights and Devices

- ▲ Slow moving tractors, skid steers, and self-propelled machines can create a hazard when driven on public roads. They are difficult to see, especially at night. Use the Slow Moving Vehicle (SMV) sign when on public roads.
- ▲ Flashing warning lights and turn signals are recommended whenever driving on public roads.

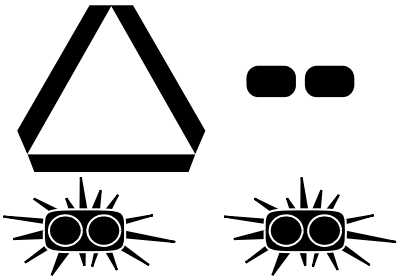

Use Seat Belt and ROPS

- ▲ Land Pride recommends the use of a CAB or roll-over-protective-structures (ROPS) and seat belt in almost all power machines. Combination of a CAB or ROPS and seat belt will reduce the risk of serious injury or death if the power machine should be upset.
- ▲ If ROPS is in the locked-up position, fasten seat belt snugly and securely to help protect against serious injury or death from falling and machine overturn.

Keep Riders Off Machinery

- ▲ Never carry riders on the power machine or attachment.
- ▲ Riders obstruct operator's view and interfere with the control of the power machine.
- ▲ Riders can be struck by objects or thrown from the equipment.
- ▲ Never use power machine or attachment to lift or transport riders.

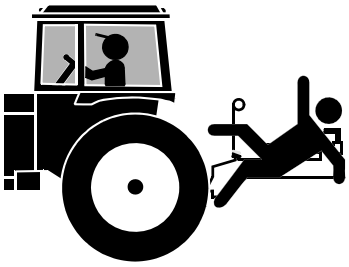

https://truckmanualshub.com/

These are common practices that may or may not be applicable to the products described in this manual.

Avoid crystalline Silica (quartz) Dust

Because crystalline silica is a basic component of sand and granite, many activities at construction sites produce dust containing crystalline silica. Trenching, sawing, and boring of material containing crystalline silica can produce dust containing crystalline silica particles. This dust can cause serious injury to the lungs (silicosis).

There are guidelines which should be followed if crystalline silica (quartz) is present in the dust.

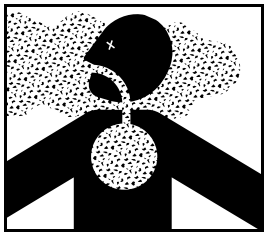

- ▲ Be aware of and follow OSHA (or other local, State, or Federal) guidelines for exposure to airborne crystalline silica.
- ▲ Know the work operations where exposure to crystalline silica may occur.
- ▲ Participate in air monitoring or training programs offered by the employer.
- ▲ Be aware of and use optional equipment controls such as water sprays, local exhaust ventilation, and enclosed cabs with positive pressure air conditioning if the machine has such equipment. Otherwise respirators shall be worn.
- ▲ Where respirators are required, wear a respirator approved for protection against crystalline silica containing dust. Do not alter respirator in any way. Workers who use tight-fitting respirators can not have beards/ mustaches which interfere with the respirator seal to the face.
- ▲ If possible, change into disposable or washable work clothes at the work site; shower and change into clean clothing before leaving the work site.
- ▲ Do not eat, drink, use tobacco products, or apply cosmetics in areas where there is dust containing crystalline silica.
- ▲ Store food, drink, and personal belongings away from the work area.
- ▲ Wash hands and face before eating, drinking, smoking, or applying cosmetics after leaving the exposure area.

Handle Chemicals Properly

- ▲ Protective clothing should be worn.
- ▲ Handle all chemicals with care.
- ▲ Follow instructions on container label.
- ▲ Agricultural chemicals can be dangerous. Improper use can seriously injure persons, animals, plants, soil, and property.
- ▲ Inhaling smoke from any type of chemical fire can be a serious health hazard.
- ▲ Store or dispose of unused chemicals as specified by the chemical manufacturer.

Tractor Shutdown & Storage

- ▲ Reduce engine speed and shut-off all power to the attachment.
- ▲ Park on solid, level ground and lower attachment to ground or onto support blocks.
- ▲ Put tractor in park or set park brake, turn off engine, and remove switch key to prevent unauthorized starting.
- ▲ Relieve all hydraulic pressures.
- ▲ Wait for all components to stop before leaving operator's seat.
- ▲ Use steps, grab-handles and anti-slip surfaces when stepping on and off the tractor.
- ▲ Detach and store implement in an area where children normally do not play. Secure implement using blocks and supports.

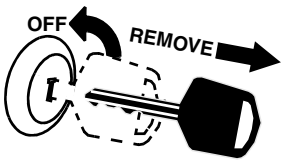

Skid Steer Shutdown And Storage

- ▲ Reduce engine speed and shut-off all power to the attachment.
- ▲ Park on solid, level ground and lower attachment until it is flat on the ground or support blocks.
- ▲ Turn off engine, and remove switch key to prevent unauthorized starting.
- ▲ Relieve all hydraulic pressures.
- ▲ If included, raise seat bar and move controls until both lock.
- ▲ Wait for all components to stop before leaving operator's seat.
- ▲ Use steps, grab-handles and anti-slip surfaces when stepping on and off the skid steer.
- ▲ Detach and store attachment in an area where children normally do not play. Secure attachment by using blocks and supports.

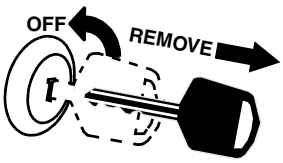

https://truckmanualshub.com/

This page left blank intentionally.

Safety Labels

Your Plate Mounted Pallet Fork comes equipped with all safety labels in place. They are designed to help you safely operate your attachment. Read and follow their directions.

1. *Keep all safety labels clean and legible.*
2. *Refer to this section for proper label placement. Replace all damaged or missing labels. Order new labels from your nearest Kubota dealer. To find your nearest dealer, visit our dealer locator at www.landpride.com.*
3. *Some new equipment installed during repair requires safety labels to be affixed to the replaced component as specified by Kubota. When ordering new components make sure the correct safety labels are included in the request.*
4. *Refer to this section for proper label placement.*
   To install new labels:
   a. *Clean surface area where label is to be placed.*
   b. *Spray soapy water onto the cleaned area.*
   c. *Peel backing from label and press label firmly onto the surface.*
   d. *Squeeze out air bubbles with edge of a credit card or with a similar type of straight edge.*

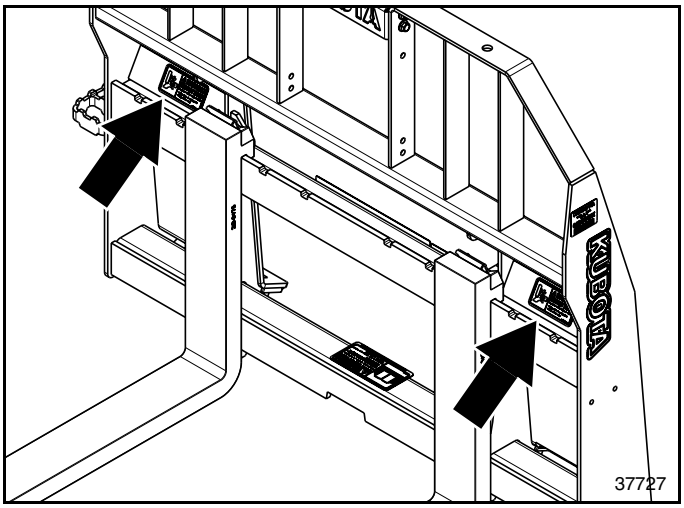

818-798C

Pinch Point Hazard

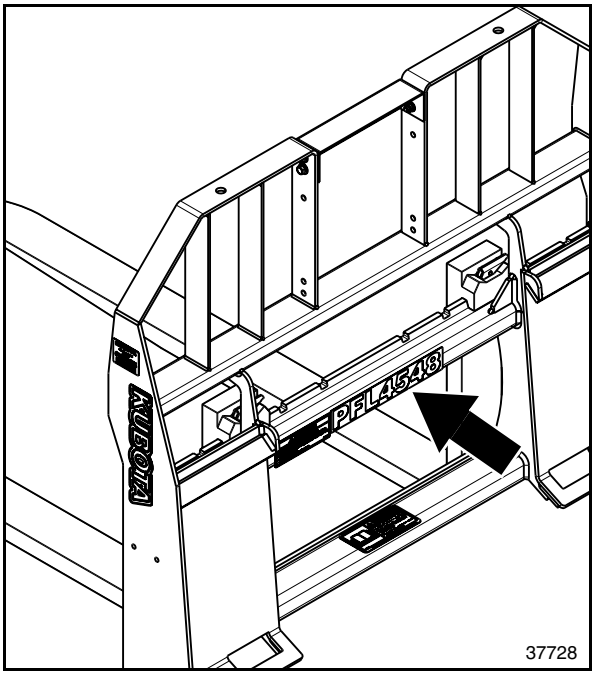

848-368C

4500 lbs. Lift capacity for PFL4548

858-075C

5500 lbs. Lift capacity for PFL5548

858-076C

5500 lbs. Lift capacity for PFL5560

https://truckmanuals.net/

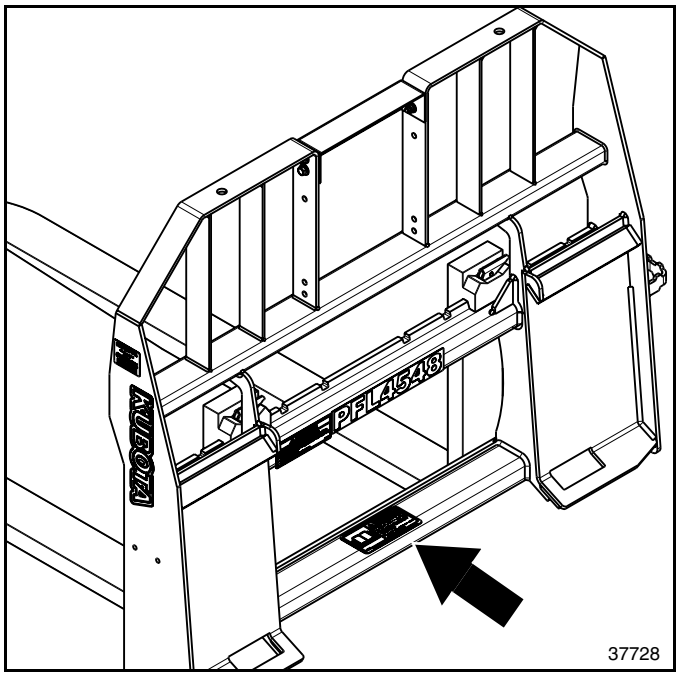

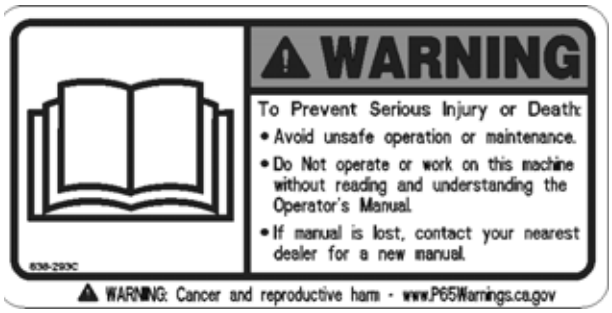

838-293C

Warning: To Prevent Serious Injury or Death

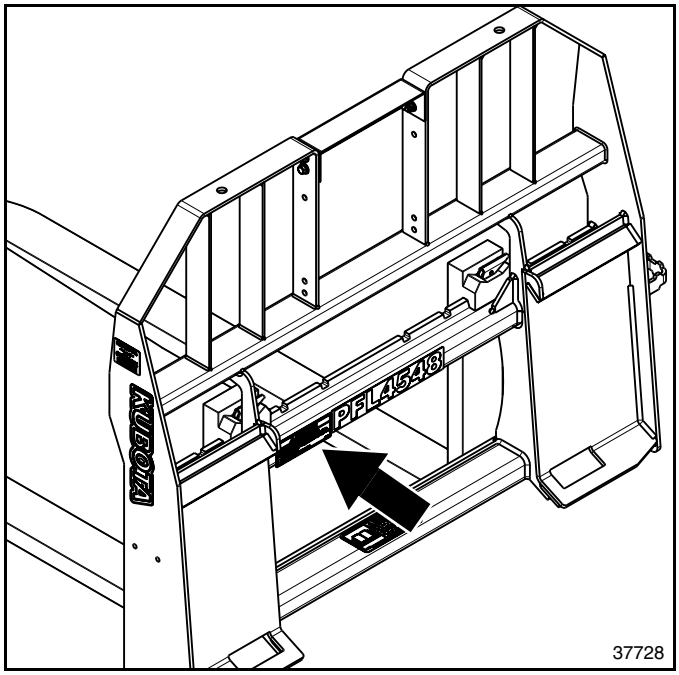

858-971C

Warning: To Avoid Serious Injury or Death

Kubota welcomes you to the growing family of new product owners. This pallet fork has been designed with care and built by skilled workers using quality materials. Proper assembly, maintenance, and safe operating practices will help you get years of satisfactory use from this attachment.

Application

The Kubota PFL4548, PFL5548 and PFL5560 pallet forks have uses and applications in farming, ranching, construction sites, nurseries, campuses, theme parks, salvage operations, warehouses, lumber yards, and large or small retail outlets. They have the capability of quickly and conveniently turning your skid steer loader or tractor loader into a forklift to expand your material handling capability.

They are available in two different weight lifting classes (PFL45 Series at 4,500 lbs. and PFL55 Series at 5,500 lbs.) and two different fork lengths (48" & 60"). Whichever model you select, you'll find that these Kubota attachments will save you time and money and make getting that material handling job done a whole lot easier.

For additional information and performance enhancing options, see "**Specifications & Capacities**" on page 18 and "**Features & Benefits**" on page 19.

Using This Manual

- This Operator's Manual is designed to help familiarize you with safety, assembly, operation, adjustments, troubleshooting, and maintenance. Read this manual and follow the recommendations to help ensure safe and efficient operation.
- The information contained within this manual was current at the time of printing. Some parts may change slightly to assure you of the best performance.
- To order a new Operator's or Parts Manual, contact your authorized dealer. Manuals can also be downloaded, free-of-charge, from our website at www.landpride.com

Terminology

"Right" or "Left" as used in this manual is determined by facing the direction the machine will operate while in use unless otherwise stated.

Definitions

IMPORTANT: A special point of information related to the following topic. Kubota's intention is this information must be read & noted before continuing.

NOTE: A special point of information that the operator should be aware of before continuing.

Owner Assistance

The dealer should complete the Online Warranty Registration at the time of purchase. This information is necessary to provide you with quality customer service.

The parts on your Plate Mounted Pallet Fork have been specially designed by Kubota/Land Pride and should only be replaced with genuine Kubota parts. Contact a Kubota dealer if customer service or repair parts are required. Your Kubota dealer has trained personnel, repair parts, and equipment needed to service the attachment.

Serial Number

For quick reference and prompt service, record model and serial number on the inside cover page and again on the warranty page. Always provide model number and serial number when ordering parts and in all correspondences with your Kubota dealer. For location of your serial number plate, see Figure 1.

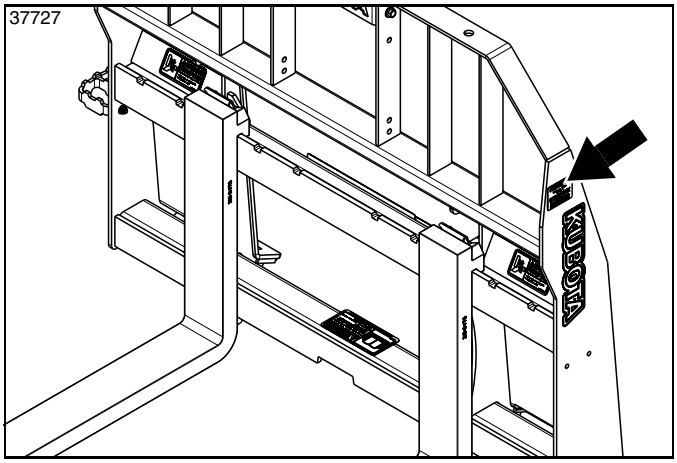

Serial Number Plate Location
Figure 1

Further Assistance

Your Kubota dealer wants you to be satisfied with your new attachment. If for any reason you do not understand any part of this manual or are not satisfied with the service received, the following actions are suggested:

1. Discuss any problems you have with your attachment with your dealership service personnel so they can address the problem
2. If you are still not satisfied, seek out the owner or general manager of the dealership, explain the question/problem, and request assistance.
3. For further assistance write to:

Kubota by Land Pride
Service Department

1525 East North Street
P.O. Box 5060
Salina, Ks. 67402-5060

E-mail address
lpservicedept@landpride.com

https://forklift-manuals.com

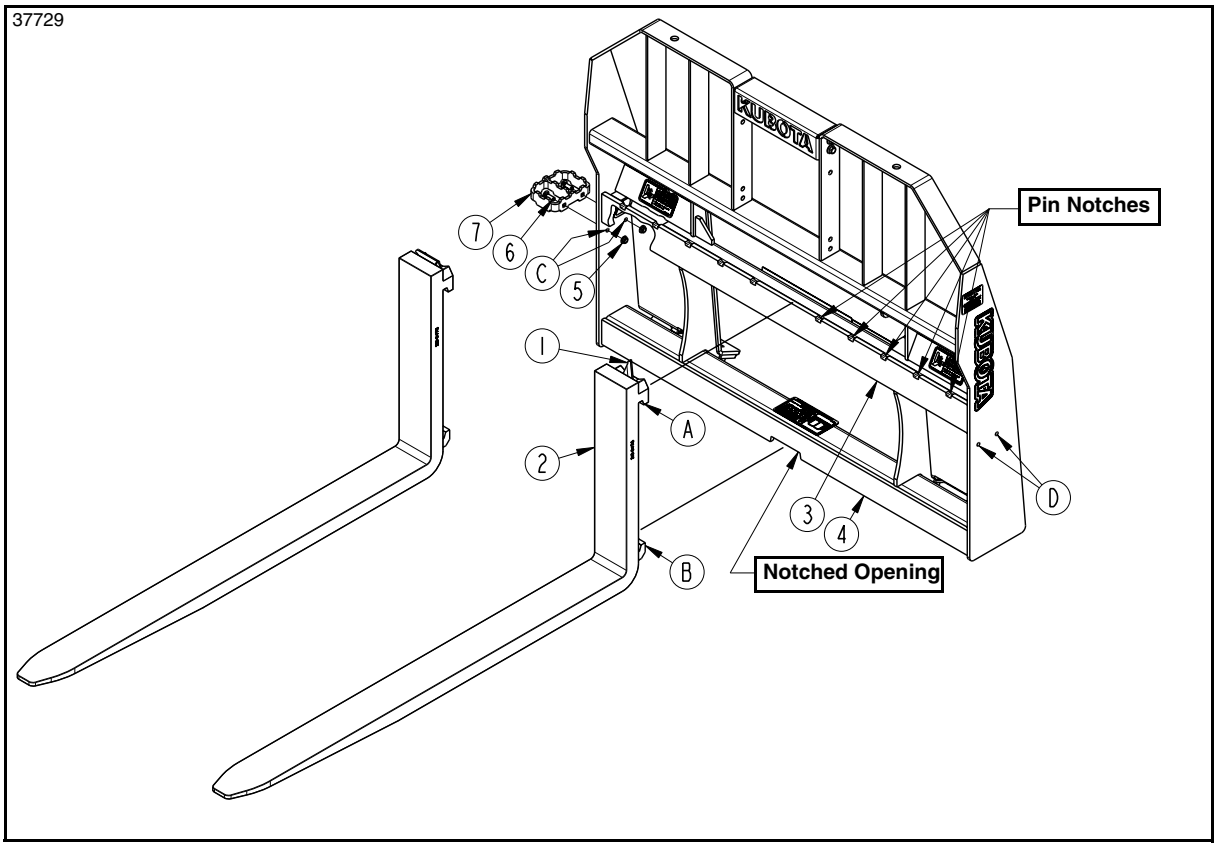

Fork Installation
Figure 1-1

Fork Installation

Refer to Figure 1-1:

CAUTION

To avoid minor or moderate injury:

A pinching hazard exists when installing forks. Do not place hands or fingers between carrying bars and forks.

1. Raise handle of fork locking pin (#1) straight up.
2. Center upper end of fork (#2) on upper carrying bar (#3). Make sure retaining hook (A) is caught behind upper carrying bar (#3) and retaining hook (B) fits in notched opening in lower carrying bar (#4).
3. Slide fork to the right by pushing on the fork near carrying bars (#3 & #4) until locking pin (#1) is positioned over one of the pin notches.
4. Lower locking pin handle (#1) to seat pin in the selected notch. Make sure locking pin is seated and retaining hooks “A” & “B” are secured behind the carrying bars.
5. Repeat steps 1-4 for the second fork, but slide the second fork to the left.

Step Relocation

Refer to Figure 1-1:

The pallet fork is shipped from the factory with step (#7) mounted on the right-hand side of the frame as shown. If preferred, the step can be moved from the right-hand side to the left-hand side.

1. Remove flange lock nuts (#5), carriage bolts (#6) and step (#7) from mounting holes “C”.
2. Attach step (#7) to mounting holes “D” with existing carriage bolts (#6) and flange lock nuts (#5). Make sure the surface with 12 grip points on the step are facing up.
3. Tighten flange lock nuts (#5) to the correct torque for 5/16"-18 GR5 bolts.

Skid Steer & Tractor Hook-Up

DANGER

To avoid serious injury or death:

A Crushing Hazard exists when hooking-up equipment. ***Do not*** *allow anyone to stand between skid steer/tractor and pallet fork while hooking-up.* ***Do not*** *operate hydraulic controls while someone is near the skid steer/tractor or attachment.*

WARNING

To avoid serious injury or death:

To maintain stability with heavy loads, light weight tractors and some skid steer loaders will require rear ballast. Be sure to consult your skid steer/tractor Operator's Manual to determine whether or not to add ballast.

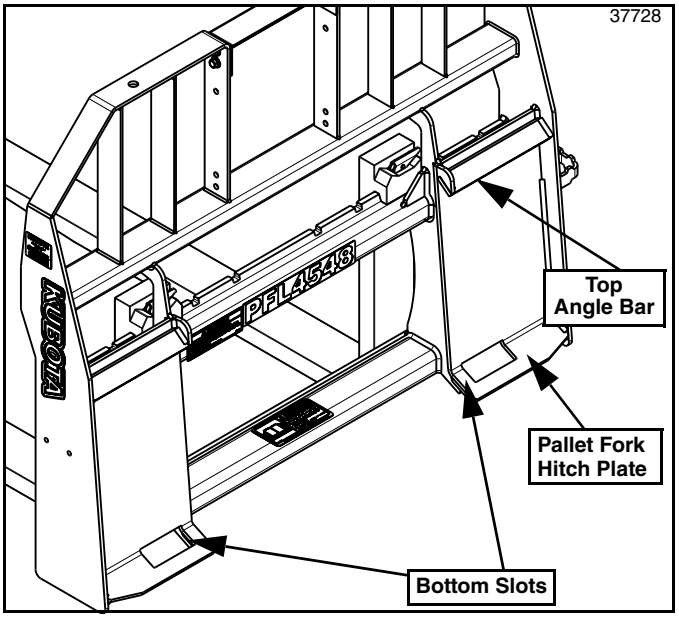

Pallet Fork With Skid Steer Style Hitch Plate
Figure 1-2

Hook-Up to Skid Steer Hitch Plate

Refer to Figure 1-2:

WARNING

To avoid serious injury or death:

- *Check hitch fit-up frequently. An improper fit-up can cause the attachment to come loose from the loader hitch plate and fall.*
- *Always shut power machine down following the "Shutdown Procedure" provided in this manual before leaving the operator's seat. Refer to* **"Skid Steer Shutdown Procedure"** *on page 13*

1. If needed, pull locking handles up on loader hitch until locking pins are fully raised.
2. Carefully drive up to the pallet fork making sure loader hitch is parallel with the pallet fork hitch plate.
3. Rotate top of loader hitch slightly forward.
4. Place top of loader hitch under the top angled bars on the pallet fork hitch plate.
5. Slowly lift loader hitch up until hitch and top angle bars on the pallet fork have come together.
6. Rotate top of loader hitch back to align bottom slots in the pallet fork hitch plate with locking pins on the loader hitch.
7. Push locking handles on loader hitch down until locking pins fully extend through bottom slots in pallet fork hitch plate. Make sure locking handles are locked into position to keep pins from backing out.

Fork Adjustment

Refer to Figure 2-1:

WARNING

To avoid serious injury or death:

Always adjust pallet forks an equal distance away from the center and as far apart as the pallet will allow. This will optimize load stability, protect against load shifting, and make handling the load safer.

CAUTION

To avoid minor or moderate injury:

A pinching hazard exists when repositioning forks. Do not place hands or fingers between carrying bars and forks.

NOTE: Forks will adjust easier if glide surfaces are kept lubricated. See **"Pallet Fork Contact Points"** on page 17 for lubricating instructions.

1. Locate on a flat, level surface. Place transmission in park and set park brake.
2. Rotate dump cylinders to tilt front of forks slightly lower at the front than at the back and lower loader arms until forks are slightly above ground surface.
3. Place transmission in park, set park brake, shut power equipment off and remove switch key.
4. Rotate locking handle (#1A) straight up.
5. Slide pallet fork (#1) to the optimized load carrying width by pushing or pulling on the fork near the carrying bars. Be sure to position locking pin (#1A) directly over one of the five notches in the upper carrying bar.
6. Lower locking handle (#1A) to seat locking pin in the selected notch.
   - Check locking pin to be sure it has seated.
   - Check retaining hooks to be sure they are secured behind upper and lower carrying bars.
7. Repeat steps 1 to 6 for fork (#2). Make sure both forks are an equal number of notches away from the middle of the upper carrying bar.

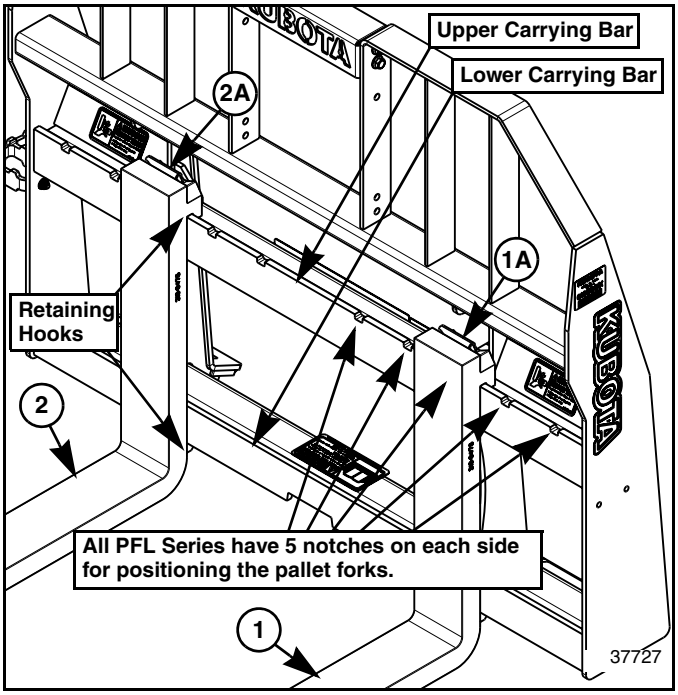

Fork Adjustment
Figure 2-1

Kubota Center Logo Placement

Refer to Figure 2-2:

The Kubota logo can be lowered or removed if an opening is needed for accessing the skid steer cab or if the loader's center hydraulic cylinder interferes with the Kubota logo.

1. Remove whiz nuts (#3) and bolts (#2).
2. Move Kubota Logo (#1) down to the four lower mounting holes and reattach with existing 3/8"-16 x 1" GR5 hex flange bolts (#2) and whiz nuts (#3). Tighten nuts to the correct torque. Remove logo and store for safe keeping if lower location also interferes.

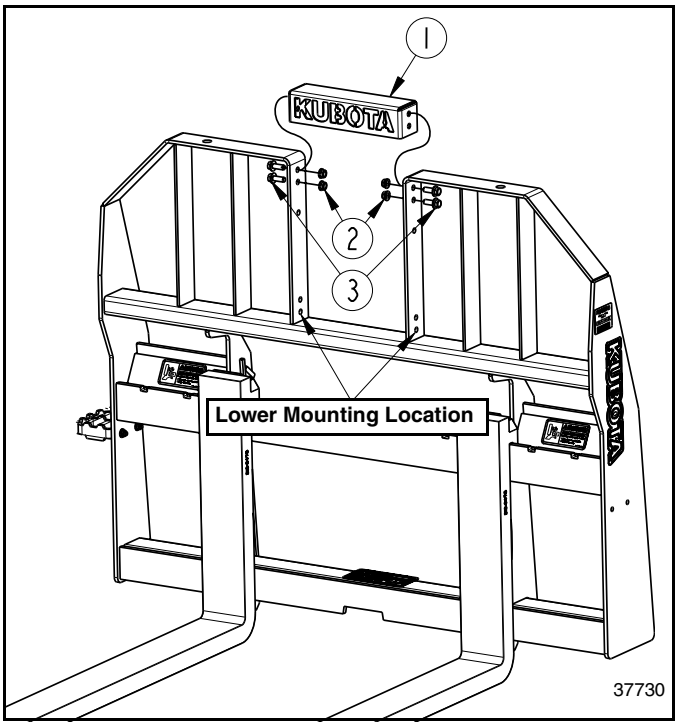

Kubota Logo Placement
Figure 2-2

Operating Checklist

Hazard control and accident prevention are dependent upon the awareness, concern, prudence, and proper training involved in the operation, transport, storage, and maintenance of the pallet fork. Therefore, it is absolutely essential that no one operates this unit unless they are age 16 or older and have read, fully understood, and are totally familiar with the Operator's Manual. Make sure the operator has paid particular attention to:

Perform the following inspections before using your Pallet Forks.

Operating Checklist

✔	Check	Page
	Read and follow all safety rules carefully. Refer to "Important Safety Information" and Safety Alert Symbols throughout this manual.	1
	Read and follow assembly & hook-up instructions. Refer to "Section 1: Assembly & Set-Up".	9
	Read and follow all operating procedures. Refer to "Section 3: Operating Procedures".	12
	Read and follow all maintenance Instructions. Refer to "Section 4: Maintenance & Lubrication".	16
	Make sure there are no hydraulic leaks. Refer to "Avoid High Pressure Fluids Hazard".	3
	Check pallet fork initially and periodically for loose forks, hitch plate, bolts, and pins. Refer to "Torque Values Chart for Common Bolt Sizes".	21

Operating Safety

DANGER

To avoid serious injury or death:

- *A crushing hazard always exists around equipment handling palletized loads. Objects on pallet can shift and fall resulting in death or serious injury.*
- *Keep bystanders, pets, and livestock away from your work area. Never allow anyone to go near or under the attachment or its load. The attachment and/or load can fall.*
- *Do not drive up to anyone or an animal in front of a fixed object such as a wall or bench. Never assume that the power machine will stop in time.*
- *Use a "spotter" when it is hard to see in the direction you are traveling and when placing a load that obstructs your vision. A person or animal could be nearby in a blind spot.*
- *Never lift objects without pallets and make sure all objects are secured before lifting them. Use extreme care when securing round objects to make sure they can't roll off.*
- *Lift only objects that have a stable base resting on the pallet. Uneven, irregular, or round bases can easily tip off or roll off the pallet.*
- *Do not lift a load that exceeds the attachment's load guard height, or has objects smaller than the openings in the load guard.*
- *Keep load slightly tilted back to secure its weight against the vertical face of the forks. Rotating front of forks too high can cause the load to shift and fall onto the operator or others. Rotating front of forks level or lower can cause the load to fall forward.*
- *Optimize load stability and protect against load shifting. Always adjust forks so that they are evenly spaced as far apart as the load will allow and centered on the frame. Keep load centered on the forks, even when stopped.*
- *Never lift a load with one fork or more than two forks. Using one fork will cause the load to be unbalanced. Using more than two forks will not increase the lift capacity and can make the job unsafe.*
- *Always secure equipment with solid, non-concrete supports before working under it. Never go under equipment supported by concrete blocks or hydraulics. Concrete can break, hydraulic lines can burst, and/or hydraulic controls can be actuated even when power to hydraulics is off.*
- *Keep attachment, loader arms, and/or load away from overhead electrical power lines. Place an orange warning sign under overhead lines indicating type of danger above.*

WARNING

To avoid serious injury or death:

- *Never carry riders on the attachment or power machine. Riders can obstruct the operator's view, interfere with control of the equipment, be pinched by moving components, become entangled in rotating components, be struck by objects, be thrown or fall from the equipment, etc.*
- *Allow only persons to operate this implement who have fully read and comprehended this manual, who have been properly trained in the safe operation of this implement, and who are age 16 or older. Serious injury or death can result from the inability to read, understand, and follow instructions provided in this manual.*
- *Backup alarm must be in good working order to warn others. Use a backup camera or rear-view mirror that is in good condition to help see undesirable situations behind the unit. Drive at a slower speed to compensate for blind spots.*
- *Hydraulic fluid under high pressure can penetrate the skin and/or eyes causing a serious injury. Wear protective gloves and safety glasses or goggles when working with hydraulic systems. Use a piece of cardboard or wood rather than hands when searching for leaks. A doctor familiar with this type of injury must treat the injury within a few hours or gangrene may result. DO NOT DELAY.*
- *Check pallet fork frequently to make sure it is properly attached to loader hitch, forks are secured to the upper and lower carrying bars, and fork locking pins are seated in their notches.*
- *Consult your power machine's manual for operating capacity, lifting capacity, and operating specifications. Exceeding rated capacities and specifications can result in a roll-over or other serious hazard.*
- *Do not abuse equipment. Incorrect use of the attachment can damage equipment structurally and cause serious injury or death.*

https://truckmanualsmb.com

- *Do not travel across inclines where equipment could slip or roll-over. Consult your power machine Operator's Manual for acceptable inclines they are capable of crossing.*
- *Do not use forks for digging, pushing, pulling, prying, or lifting objects. Only use forks to lift palletized loads.*
- *Do not use attachment to lift the front or back of the power machine off the ground. Doing so can damage the attachment, power machine, and/or cause serious injury or death.*
- *Do not chain or strap palletized loads to the loader arms, loader hitch, pallet fork hitch plate or forks.*
- *Do not use fork extensions. Fork extensions can damage forks, pallet fork frame, loader hitch, and overload front of machine resulting in loss of steering control and load.*
- *Always know the weight of the load being lifted. Maximum lift capacity should never exceed rated lift capacity of the pallet fork. Also, it should never exceed 83% of the skid steer or tractor rated lift capacity for an attached front loader. Use the smaller number of the two lift capacities to determine maximum lift capacity.*
- *The parts on your pallet fork have been specially designed and should only be replaced with genuine Kubota parts. Altering the equipment can adversely affect its performance and/or reliability.*
- *Always lower forks to ground level before dismounting from the skid steer/tractor. Follow manufacturer's recommendations when dismounting and parking the machine.*
- *Always store attachment in a secure position so that it will not fall over.*
- *Always stack pallets in such a manner that they will not tip or fall.*

Transport Safety

DANGER

To avoid serious injury or death:

Keep attachment, loader arms, and/or load away from overhead electrical power lines. Place an orange warning sign under overhead lines indicating type of danger above.

WARNING

To avoid serious injury or death:

- *Follow all safety precautions when transporting a load. Not using safe transporting methods can damage the equipment and cause serious injury or death.*
- *Lightweight power machines may need weight added to the rear to maintain steering control and prevent forward tipping or side tipping caused by a heavy front load. Consult your power machine Operator's Manual to determine proper weight requirements and maximum weight limitations.*
- *Use tractors with wide front axles only and move all tractor wheels out to their widest position for maximum stability.*
- *Always transport loads low to the ground to maintain stability of the skid steer/tractor.*
- *Transporting loads over ramps, grades, bumpy, soft, or slippery surfaces reduces machine stability and lift capacity. Transporting and lifting loads under these conditions is extremely dangerous.*
- *Always travel straight up and straight down inclines. Never make turns on the incline.*
- *Always transport over ramps and inclines with the heavy end of the power machine on the "uphill" side. This may require one to drive up and back down inclines.*
- *When traveling on public roadways, travel in such a way that faster moving vehicles may pass safely. Use accessory lights, clean reflectors, and a slow moving vehicle sign that is visible from the back to warn operators in other vehicles of your presence. Always comply with all federal, state, and local laws.*

Skid Steer Shutdown Procedure

The following are basic skid steer shutdown procedures. Follow these procedures and any additional shutdown procedures provided in your skid steer Operator's Manual before leaving the operator's seat.

1. Reduce engine speed and shut-off all power to the attachment.
2. Park on solid, level ground and lower attachment until it is flat on the ground or on non-concrete support blocks.
3. Turn off engine, and remove switch key to prevent unauthorized starting.
4. Relieve all hydraulic pressure to auxiliary hydraulic lines.
5. If included, raise seat bar and move controls until both lock.
6. Wait for all components to come to a complete stop before leaving the operator's seat.
7. Use steps, grab-handles and anti-slip surfaces when stepping on and off the skid steer or attachment.

Pallet Fork Operation

Picking up a load

1. Make sure the load does not exceed the smaller of two lift capacities:
   - Rated lift capacity of the pallet forks.
   - 83% of the rated lift capacity of the skid steer/ tractor front loader.

IMPORTANT: Using 83% of the rated lift capacity accounts for increased loader stresses caused by the added extension of the pallet fork. It also ensures that the front tires on your skid steer or tractor are rated properly for the job.

IMPORTANT: On heavy loads, the center of gravity should **not** be positioned farther than 24" away from the vertical face of the forks. Picking up heavy loads positioned farther away can damage the unit and void its warranty.

2. Center forks under the pallet to evenly distribute the weight.
3. Make sure the load is balanced and secure.
4. Check for overhead obstructions.
5. Stop completely before positioning forks at the correct height.
6. Drive into the load as far as possible.
7. Lift load just off the ground and tilt it back slightly.
8. Back out slowly to clear racks or other obstacles.
9. Position load at a safe traveling height before moving. Two to four inches above the floor is recommended traveling height.

Traveling with a load

1. Pedestrians always have the right-of-way.
2. Keep load tilted back slightly.
3. Keep forks low, two to four inches above the floor, when possible.
4. Continually scan all sides for pedestrians or other traffic.
5. If load is large and blocks your view, travel in reverse.
6. Always drive at a safe speed and slow down when going around corners. Avoid sudden braking.
7. Leave enough clearance when turning to keep pallet forks and load from contacting obstacles such as storage racks, buildings, trees, or fences.
8. When traveling over a ramp or incline, keep palletized load on the “uphill” side of the skid steer or tractor.
9. When possible, travel straight up and down grades, ramps, and inclines. Avoid making turns on grades, ramps, and inclines.
10. Raise or lower load only when stopped, never while traveling.
11. Slow down when traveling over rough or hilly terrain.
12. Do not transport loads on public roadways.
13. When traveling on public roadways, transport in such a way that faster moving vehicles may pass you safely.
14. Plan your route to avoid heavy traffic.

Placing a load

1. Stop in front of desired location to place the load.
2. Slowly raise load to required height.
3. Move forward slowly with load raised until load is positioned square and straight above its final destination.
4. Level load to position it for placement.
5. Lower load onto it final resting location.
6. Before backing, check all sides for pedestrians or other traffic.
7. Once load has settled, back up slowly.
8. Make sure forks clear pallet before turning or changing fork height.
9. Lower forks before moving again.

https://truck-manuals.net/

Unhook Pallet Fork

Refer to Figure 3-1:

1. Shut skid steer/tractor down before dismounting. Follow **"Skid Steer Shutdown Procedure"** on page 13. Unhook pallet fork as follows:
2. Unhook pallet fork as follows:
3. Pull lock handles up to remove pins from bottom slots in hitch plate.
4. Return to skid steer/tractor and tilt top of hitch plate slightly forward toward the pallet fork.
5. Slowly lower pallet fork until its top angle bar and loader hitch have separated.
6. Back skid steer/tractor slowly away from the pallet fork while making sure the loader hitch does not interfere with the pallet fork.

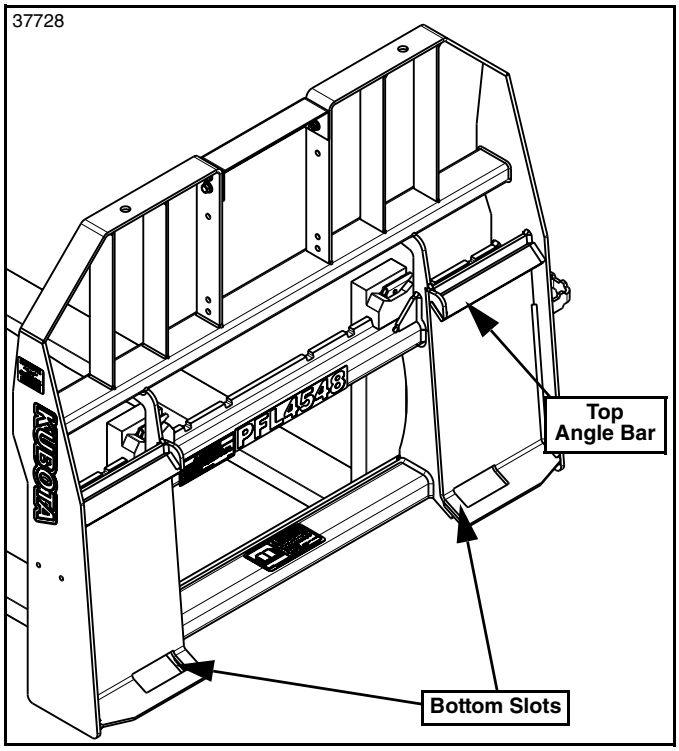

Pallet Fork With Skid Steer Hitch Plate
Figure 3-1

General Operating Instructions

By now you should have familiarized yourself with the Operator's Manual for your Plate Mounted Pallet Fork. If you haven't, please do so now. We cannot overstress the importance of following the safety operating procedures that are spelled out in this Manual.

If attachment is to be operated in reverse, make sure visibility to the rear of the power unit is appropriate for the attachment. Backup camera or mirror is recommended. Maintain cleanliness of lens or mirror.Proceed by getting onto the seat of your skid steer or tractor and starting it up. It isn't going to take you long to learn how to use your new Kubota Plate Mounted Pallet Fork.

We recommend that you take a little time to practice securely attaching and detaching your pallet fork to and from your skid steer hitch. It is also important to practice lifting, lowering, maneuvering, and placing an empty pallet on a level site until you gain the confidence and skill needed to have a good feel in what you are doing.

If attachment is to be operated in reverse, make sure visibility to the rear of the power unit is appropriate for the attachment. Backup camera or mirror is recommended. Maintain cleanliness of lens or mirror.

As you quickly become more skilled and adept in using your Plate Mounted Pallet Fork, you will soon learn that it is always more important to focus on the don'ts than it is to focus on the dos. For example, don't exceed the lift capacity of your forks, tractor, or skid steer. Don't lift your load too high creating an unstable load and unsafe situation. Don't tilt your load too far backwards, setting up a situation that could cause your load to roll or spill backwards onto you, the skid steer/tractor, and the operator's platform. Don't drive too fast for your ground and load conditions. Don't work on or around slippery or sloped areas that could cause you to lose control of the skid steer/tractor or skid steer. Don't allow pedestrians, pets, or livestock to approach the danger zone of your working area. Don't leave your tractor or skid steer with forks or load raised off of the ground.

If you just follow these few safety reminders, you will find that you will quickly become very adept, handy, and skillful at using your Kubota pallet fork.

See **"Specifications & Capacities"** on page 18 and **"Features & Benefits"** on page 19 of your Operator's Manual for additional information.

Maintenance

DANGER

To avoid serious injury or death:

Always secure equipment with solid, non-concrete supports before working under it. Never go under equipment supported by concrete blocks or hydraulics. Concrete can break, hydraulic lines can burst, and/or hydraulic controls can be actuated even when power to hydraulics is off.

WARNING

To avoid serious injury or death:

- *Perform scheduled maintenance. Check for loose hardware, missing parts, broken parts, structural cracks, and excessive wear. Make repairs before putting implement back into service.*
- *Backup alarm must be in good working order to warn others. Use a backup camera or rear-view mirror that is in good condition to help see undesirable situations behind the unit. Drive at a slower speed to compensate for blind spots.*
- *Do not alter implement or replace parts on the implement with other brands. Other brands may not fit properly or meet OEM (Original Equipment Manufacturer) specifications. They can weaken the integrity and impair the safety, function, performance, and life of the implement. Replace parts only with genuine OEM parts.*

Proper servicing and adjustments are key to the long life of any implement. With careful inspection and routine maintenance, you can avoid costly downtime and repair.

1. After using your pallet fork for a few lifts, check forks to make sure they are still secured and check pallet fork to make sure it is still properly attached to the loader hitch.
2. Check forks to make sure they are not damaged, broken, or worn excessively. Repair or replace as needed.
3. Always remove any material that has become entangled in the forks before continuing to use them.
4. Replace any worn, damaged, or illegible safety labels by obtaining new labels from your Land Pride dealer.

Long-Term Storage

Clean, inspect, service, and make necessary repairs to the attachment when storing it for long periods and at the end of the season. This will help ensure the unit is ready for field use the next time you hook-up to it.

1. Remove any dirt and grease that may have accumulated on the pallet fork. Scrape off compacted dirt and then wash its surface thoroughly with a garden hose.
2. Inspect pallet fork for loose, damaged, or worn parts and adjust or replace when needed.
3. Repaint parts where paint is worn or scratched to prevent rust. Ask your Kubota dealer for touch-up paint. Paint is available in aerosol can, quarts, and gallon sizes. See chart below.

Kubota Touch-up Paint

Part No.	Part Description
77700-06430	GLOSS BLACK ENAMEL SPRAY CAN
77700-06431	GLOSS BLACK ENAMEL QUART
700 00-00017	GLOSS BLACK ENAMEL GALLON

4. Replace all damaged or missing decals.
5. A coating of oil may also be applied to areas where paint is worn off to minimize oxidation.
6. Store pallet fork inside a building and away from human activity if possible. Inside storage will reduce maintenance and make for a longer life.
7. Follow all unhooking instructions on page 15 when disconnecting skid steer or tractor from the Plate Mounted Pallet Fork.
8. Do not allow children to play on or around the stored pallet fork.

https://forklift-manuals.com

Lubrication Points

Lubrication Legend	Multi-purpose spray lube	Multi-purpose grease lube	Multi-purpose oil lube	50 Hrs	Intervals in hours at which lubrication is required

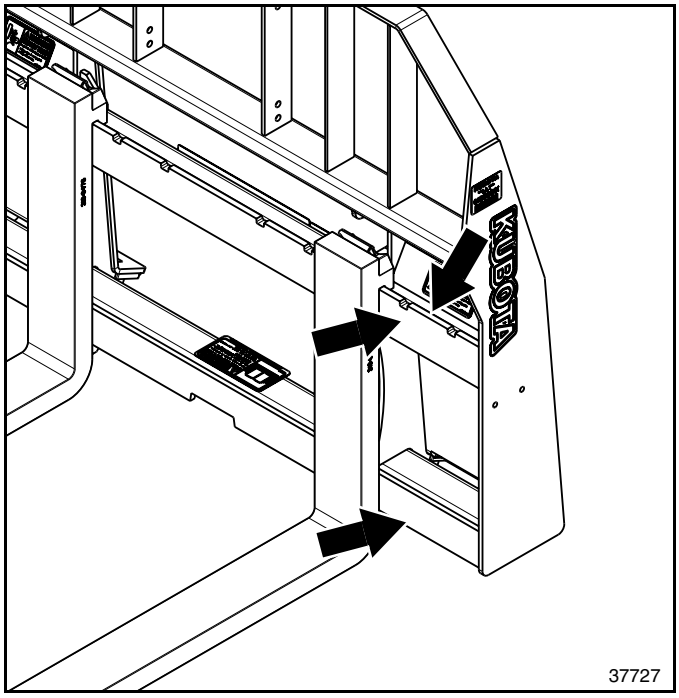

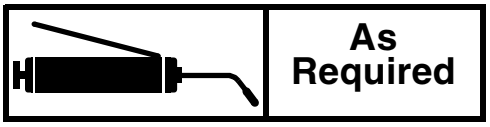

Pallet Fork Contact Points

Top & face of upper carrying bar
Face of lower carrying bar

Type of Lubrication: Multi-purpose Grease

Quantity = As needed

PFL45 & PFL55 Series

Specifications & Capacities				
		PFL4548	PFL5548	PFL5560
Side Step		Yes	Yes	Yes
Weight	lbs (kg)	412 (186.9)	436 (197.8)	482 (218.6)
Lift Capacity	lbs (kg)	4500 (2041.2)	5500 (2494.8)	
	in (cm)	Lift capacity is based on load being 24 (61) from face of frame (Cross bar). Load must be palletized and supported by two forks.		
Class		II		
Frame Width	in (m)	45 7/8 (1.17)		
Frame Height	in (m)	40 (1.02)		
Tine Thickness	in (cm)	1 1/2 (3.8)	1 3/4 (4.4)	
Tine Width	in (cm)	4 (10.2)		
Tine Length	in (m)	48 (1.22)		60 (1.52)
Fork Positioning Lock		Spring Loaded Toggle		

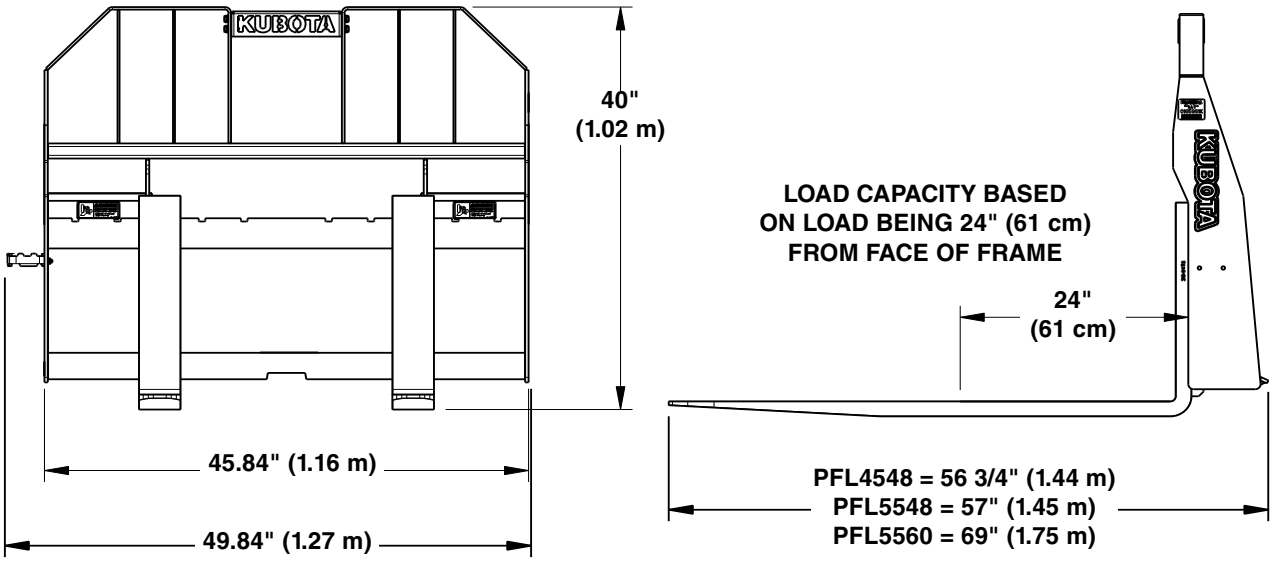

PFL4548, PFL5548, & PFL5560 Series

https://truckmanualshub.com

PFL45 &PFL55 Series

Features	Benefits
Skid steer style hitch plates.	The Plate Mounted Pallet Fork can be attached to a wide variety of machines. Note: All PFL series are offered with skid steer style hitch plates.
Tall rear guard	Keep loads from slipping backwards.
Attaches to power equipment easily	Uses skid steer style hitch design for quick and easy attachment.
Easy adjustable Forks	Forks slide easily on carrying bars from one position to another. Simply rotate locking handles up and slide forks to their new positions. Rotate locking handles down to secure forks in their new position.
Two capacities & two fork lengths 4,500 lbs. with 48" forks 5,500 lbs. with 48" & 60" forks	Meets most needs for low cost fork lift handling on customer owned skid steer loader with skid steer style loader hitch or front tractor loaders.

Troubleshooting Chart

Problem	Cause	Solution
Cannot lift pallet	Pallet load is too heavy.	Reduce load on pallet.
	Insufficient power to lift load.	Switch to a skid steer or tractor that is rated for more lift capacity.
Forks are shifting sideways on carrying bars	Locking pin handle is not engaged in locking groove.	Position locking pins over locking grooves on carrying bar and rotate locking handle down to engage locking pin.
Forks are bending or breaking	The load's center of gravity is more than 24" away from vertical face of forks.	Reposition load on pallet so that center of gravity is closer to the vertical faces.
	Pallet load is too heavy.	Reduce load on Pallet.
	Prying objects out of the ground.	Never use forks to pry objects.
Pallet load is shifting	Load is not properly secured on pallet.	Secure load to pallet.
	Load is not properly centered on pallet.	Center load on pallet.
	Load is being carried too high.	Recommended carrying height is 2" to 4" above the floor.
	Forks are too close to each other.	Adjust forks an equal distance away from the center and as far apart as the pallets will allow.
	Traveling with forks level or tilted down at the front.	Rotate forks back so that the ends at the front are slightly higher than at the back.
	Traveling too fast.	Reduce speed to a safe non-bouncing speed.
	Traveling sideways to an incline.	Travel straight up and down inclines.
	Traveling forward while going down an incline with a slop in excess of 10 percent.	Back down steep inclines.
	One fork is bent.	Replace bent fork.
	Pallet fork hitch plate is not properly attached to loader hitch.	Reattach pallet fork hitch plate to loader hitch. Always make certain hitch is properly attached before lifting a load.

https://forklift-manuals.com

Torque Values Chart for Common Bolt Sizes

Bolt Size (inches)	Bolt Head Identification: Grade 2		Grade 5		Grade 8	
in-tpi [1]	N · m [2]	ft-lb [3]	N · m	ft-lb	N · m	ft-lb
1/4" - 20	7.4	5.6	11	8	16	12
1/4" - 28	8.5	6	13	10	18	14
5/16" - 18	15	11	24	17	33	25
5/16" - 24	17	13	26	19	37	27
3/8" - 16	27	20	42	31	59	44
3/8" - 24	31	22	47	35	67	49
7/16" - 14	43	32	67	49	95	70
7/16" - 20	49	36	75	55	105	78
1/2" - 13	66	49	105	76	145	105
1/2" - 20	75	55	115	85	165	120
9/16" - 12	95	70	150	110	210	155
9/16" - 18	105	79	165	120	235	170
5/8" - 11	130	97	205	150	285	210
5/8" - 18	150	110	230	170	325	240
3/4" - 10	235	170	360	265	510	375
3/4" - 16	260	190	405	295	570	420
7/8" - 9	225	165	585	430	820	605
7/8" - 14	250	185	640	475	905	670
1" - 8	340	250	875	645	1230	910
1" - 12	370	275	955	705	1350	995
1-1/8" - 7	480	355	1080	795	1750	1290
1-1/8" - 12	540	395	1210	890	1960	1440
1-1/4" - 7	680	500	1520	1120	2460	1820
1-1/4" - 12	750	555	1680	1240	2730	2010
1-3/8" - 6	890	655	1990	1470	3230	2380
1-3/8" - 12	1010	745	2270	1670	3680	2710
1-1/2" - 6	1180	870	2640	1950	4290	3160
1-1/2" - 12	1330	980	2970	2190	4820	3560

Bolt Size (Metric)	Bolt Head Identification: Class 5.8		Class 8.8		Class 10.9	
mm x pitch [4]	N · m	ft-lb	N · m	ft-lb	N · m	ft-lb
M 5 X 0.8	4	3	6	5	9	7
M 6 X 1	7	5	11	8	15	11
M 8 X 1.25	17	12	26	19	36	27
M 8 X 1	18	13	28	21	39	29
M10 X 1.5	33	24	52	39	72	53
M10 X 0.75	39	29	61	45	85	62
M12 X 1.75	58	42	91	67	125	93
M12 X 1.5	60	44	95	70	130	97
M12 X 1	90	66	105	77	145	105
M14 X 2	92	68	145	105	200	150
M14 X 1.5	99	73	155	115	215	160
M16 X 2	145	105	225	165	315	230
M16 X 1.5	155	115	240	180	335	245
M18 X 2.5	195	145	310	230	405	300
M18 X 1.5	220	165	350	260	485	355
M20 X 2.5	280	205	440	325	610	450
M20 X 1.5	310	230	650	480	900	665
M24 X 3	480	355	760	560	1050	780
M24 X 2	525	390	830	610	1150	845
M30 X 3.5	960	705	1510	1120	2100	1550
M30 X 2	1060	785	1680	1240	2320	1710
M36 X 3.5	1730	1270	2650	1950	3660	2700
M36 X 2	1880	1380	2960	2190	4100	3220

[1] in-tpi = nominal thread diameter in inches-threads per inch

[2] N· m = newton-meters

[3] ft-lb= foot pounds

[4] mm x pitch = nominal thread diameter in millimeters x thread pitch

Torque tolerance + 0%, -15% of torquing values. Unless otherwise specified use torque values listed above.

Warranty

Land Pride warrants to the original purchaser that this Land Pride product will be free from defects in material and workmanship beginning on the date of purchase by the end user according to the following schedule when used as intended and under normal service and conditions for personal use.

Overall Unit: One year Parts and Labor

This Warranty is limited to the repair or replacement of any defective part by Land Pride and the installation by the dealer of any such replacement part, and does not cover common wear items. Land Pride reserves the right to inspect any equipment or parts which are claimed to have been defective in material or workmanship.

This Warranty does not apply to any part or product which in Land Pride's judgment shall have been misused or damaged by accident or lack of normal maintenance or care, or which has been repaired or altered in a way which adversely affects its performance or reliability, or which has been used for a purpose for which the product is not designed. Misuse also specifically includes failure to properly maintain oil levels, grease points, and driveline shafts.

Claims under this Warranty should be made to the dealer which originally sold the product and all warranty adjustments must be made through an authorized Land Pride dealer. Land Pride reserves the right to make changes in materials or design of the product at any time without notice.

This Warranty shall not be interpreted to render Land Pride liable for damages of any kind, direct, consequential, or contingent to property. Furthermore, Land Pride shall not be liable for damages resulting from any cause beyond its reasonable control. This Warranty does not extend to loss of crops, any expense or loss for labor, supplies, rental machinery or for any other reason.

No other warranty of any kind whatsoever, express or implied, is made with respect to this sale; and all implied warranties of merchantability and fitness for a particular purpose which exceed the obligations set forth in this written warranty are hereby disclaimed and excluded from this sale.

This Warranty is not valid unless registered with Land Pride within 30 days from the date of original purchase.

IMPORTANT: The Online Warranty Registration should be completed by the dealer at the time of purchase. This information is necessary to provide you with quality customer service.

Model Number _____ **Serial Number** _____

https://forklift-manuals.com

Legal Disclaimer

Kubota Corporation notes that specifications and technical information are subject to change without notice and Kubota does not represent or warrant that the information in this publication is completely accurate or current; however, Kubota used reasonable efforts to set forth and include accurate and up to date information in this publication. Kubota disclaims all representations and warranties, whether express or implied, including, but not limited to, warranties of merchantability and fitness for a particular purpose and Kubota shall not be liable for any damages, whether compensatory, direct, indirect, incidental, special, or consequential, arising out of or in connection with the use of this publication, or in the information therein.

The Product(s) described in this Publication are designed and manufactured only for the country in which they are initially wholesaled by Kubota. Kubota does not provide parts, warranty or service for any Product which is re-sold or retailed in any country other than the country for which the Product(s) were designed or manufactured.

https://truckmanualshub.com/

KUBOTA TRACTOR CORPORATION
1000 Kubota Drive, Grapevine, TX 76051
Telephone: (817) 756-1171

Western Division: 1175 S. Guild Ave., Lodi, CA 95240
Telephone: (209) 334-9910

Central Division: 14855 FAA Blvd., Fort Worth, TX 76155
Telephone: (817) 571-0900

Northern Division: 6300 at One Kubota Way, Groveport, OH 43125
Telephone: (614) 835-1100

Southeast Division: 1025 Northbrook Parkway, Suwanee, GA 30024
Telephone: (770) 995-8855