TECHNICAL SPECIFICATIONS

MOFFETT M8 55.3P NX SERIES

TIER 4 FINAL Compliant

BUILT TO PERFORM

MOFFETT

https://truckmanualshub.com/

MOFFETT M8 55.3P NX SERIES

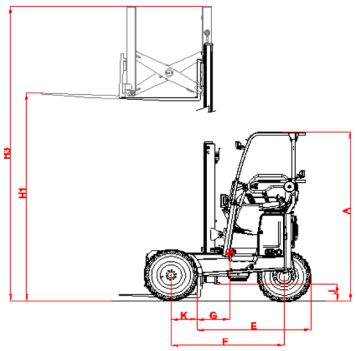

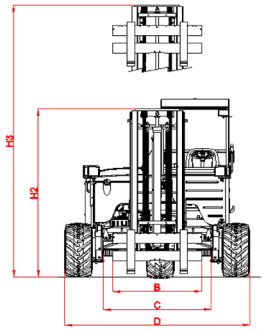

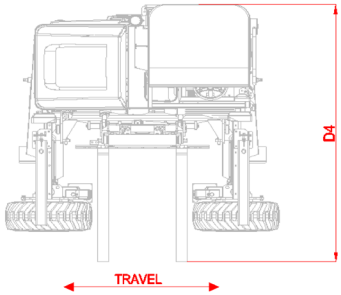

1	Capacity @ 24” load center [extended] (lbs)	5 500 [5 500]
2	Kohler diesel engine (hp)	56
2a	Engine emission compliance	EPA Tier 4 Final
3	Maximum engine RPM	2 700
4	Electrical System (V)	12
5	Drive wheels	3
6	Steering	Hydrostatic
7	Front tire type (tread)	31 x 15.5 - 15, 8-ply (TG)
	Rear tire type (tread)	31 x 15.5 - 15, 8-ply (TG)
8	Tire, outside diameter (in)	31
9	Tire, width (in)	15.5
10	Maximum speed (mph)	7
11	Maximum gradability (%)	30
12	Turning radius (in)	84
13	Unladen weight (lbs)	7 080
13a	Unladen weight [optional] (lbs)	7 240
14	Working pressure for attachments (psi)	2 500
15	Tilt of mast [forward/backward] (°)	10 / 8
16	Sideshift (in)	5
17	Fork section (in)	48 x 6 x 2 or 48 x 2.4 x 2
18	Mast carriage travel [reach] (in)	38 [48]
19	Counterweights	n/a
19a	Counterweights [optional]	Standard
A	Height to top of overhead guard (in)	103
B	Fork carriage width [class] (in)	47.25 [CL III]
C	Frame opening (in)	57.75
D	Overall width (in)	101
E	Overhang [rear wheel turned 180°] (in)	70
F	Wheelbase (in)	73.5
G	Center of gravity from fork face (in)	22
H1	Lift height (in)	120
H2	Mast height - collapsed (in)	98
H3	Mast height - raised (in)	185.5
H1a	Lift height [optional] (in)	144
H2a	Mast height - collapsed [optional] (in)	110
H3a	Mast height - raised [optional] (in)	211.5
J	Ground clearance (in)	12
K	Face of fork to center of front tire (in)	15
L	ANSI standard	B56.14

NOTES: SF= Super Float, SS=Skid Steer, TG=Tractor Grip, RT=Rough Terrain.
Diagrams shown are for measurement reference and may not reflect actual model.
Weights may vary depending on tire and/or fork option and are exclusive of (do not include) forks.
The above specifications are not binding upon the manufacturer and may be changed without prior notice.

Hiab is the world’s leading provider of on-road load handling equipment. Customer satisfaction is the first priority for us. Hiab’s product range includes HIAB loader cranes, JONSERED recycling and forestry cranes, LOGLIFT forestry cranes, MOFFETT truck mounted forklifts, and MULTILIFT demountables, as well as DEL, WALTCO, and ZEPRO tail lifts.

www.hiab.us.com
Hiab is part of Cargotec.
www.cargotec.com

In less than a minute, the Moffett can mount or dismount a truck or trailer and be ready for work.

hiab.us.com

Hiab USA Inc
12233 Williams Road
Perrysburg, OH 43551 USA
tel. 419 482 6000
fax. 419 482 6001

hiab.us.com

HIAB

V2016.11.09