https://truckmanualshub.com/

Operator's manual

Dual View Truck

DV60
DV90
DV100

Machine models	**D24-01/D24-02/D24-03**
Edition	**1.0**
Document order no.	**1000409070**
Language	**en/us**
Series number	**DV60: WNCD2401CPAL00160**
	DV90: WNCD2402CPAL00160
	DV100: WNCD2403EPAL00160

WACKER NEUSON

https://truckmanualshub.com/

Documentation	Language	Order no.	Documentation	Language	Order no.
Operator's manual	en/us	1000409070			
Spare parts list	DV 60 [de en fr]	1000411616	Spare parts list	DV 100 [de en fr]	1000411661
	DV 60 [it es en]	1000411617		DV 100 [it es en]	1000411662
	DV 90 [de en fr]	1000411618			
	DV 90 [it es en]	1000411619			

Legend	
Original Operator's Manual	**x**
Translation of original Operator's Manual	–
Issue	1.0
Date	10/2018
Document	BA D24 en/us*

Copyright © 2018 Wacker Neuson Linz GmbH, Hörsching

Printed in Austria

All rights reserved, in particular the copyright, the right of reproduction and the right of distribution applicable worldwide.

This document may be used by the receiver only for the designated purpose. It may in no way be duplicated or translated in any other language, in whole or in part, without prior permission in writing from the manufacturer.

No reproduction or translation of this publication, in whole or in part, without the written consent from Wacker Neuson Linz GmbH.

Violations of legal regulations, in particular of the copyright protection, will be subject to civil and criminal prosecution.

Wacker Neuson Linz GmbH keep abreast of the latest technical developments and constantly improve their products. For this reason, we may from time to time need to make changes to figures and descriptions in this documentation that do not reflect products that have already been delivered and that will not be implemented on these vehicles.

Technical data, dimensions and weights are only given as an indication. Non-metric values are rounded off. Responsibility for errors or omissions not accepted.

The cover features the vehicle with possible optional equipment.

Photographs and graphics are symbolic representations and may differ from the actual products.

The Operator's Manual and any amendments to it must always be available at the location where the vehicle is operated. Possible amendments are included at the end of the Operator's Manual.

Wacker Neuson Linz GmbH
Flughafenstr. 7
A-4063 Hörsching
Phone: +43 (0) 7221 63000
Fax: +43 (0) 7221 63000-2200
E-mail: office.linz@wackerneuson.com
www.wackerneuson.com

https://truckmanualshub.com/

Table of Contents

1 Foreword
1.1 Operator's manual 1-1
1.2 Warranty and liability 1-2

2 Safety
2.1 Safety symbols and signal words 2-1
2.2 Qualification of operating personnel 2-2
2.3 Conduct 2-3
2.4 Operation 2-4
2.5 Lifting gear applications 2-8
2.6 Trailer operation 2-11
2.7 Attachment operation 2-11
2.8 Towing, loading and transporting 2-13
2.9 Maintenance 2-15
2.10 Measures for avoiding risks 2-18

3 Introduction
3.1 Machine overview 3-1
3.2 Brief description of the vehicle 3-3
3.3 Labels 3-4

4 Putting into operation
4.1 Cab/control console 4-1
4.2 Overview of control elements 4-19
4.3 Control and warning lights overview 4-24
4.4 Preparatory work 4-33
4.5 Starting and stopping the engine 4-35

5 Operation
5.1 Steering system 5-1
5.2 Accelerator actuation 5-2
5.3 Brakes 5-3
5.4 Machine travel 5-6
5.5 Differential lock 5-11
5.6 Lighting/signaling system 5-12
5.7 Wiper/wash system (option) 5-17
5.8 Heating, ventilation and air conditioning system 5-18
5.9 Operating hydraulics 5-19
5.10 Attachments 5-21
5.11 Work operation 5-21
5.12 Emergency lowering 5-26
5.13 Options 5-26
5.14 Putting out of operation/back into operation 5-29
5.15 Permanently putting out of operation 5-31

6 Transportation
6.1 Towing the vehicle 6-1
6.2 Loading the vehicle 6-5
6.3 Transporting the vehicle 6-9

https://truckmanualshub.com/

7 Maintenance
7.1 Information on maintenance 7-1
7.2 Maintenance overview 7-2
7.3 Fluids and lubricants 7-8
7.4 Maintenance accesses 7-11
7.5 Cleaning and maintenance 7-14
7.6 Lubrication work 7-17
7.7 Fuel system 7-17
7.8 Engine lubrication system 7-22
7.9 Cooling system 7-24
7.10 Air filter 7-27
7.11 V-belt 7-28
7.12 Hydraulic system 7-28
7.13 Electrical system 7-31
7.14 Heating, ventilation and air conditioning system 7-33
7.15 Washer system 7-33
7.16 Axles 7-33
7.17 Braking system 7-33
7.18 Tyres 7-34
7.19 Maintenance of attachments 7-35
7.20 Maintenance of options 7-35

8 Malfunctions
8.1 Engine warning lights 8-1
8.2 Engine and engine oil indicator lights 8-1
8.3 General malfunctions 8-1

9 Technical data
9.1 Model designations and trade names 9-1
9.2 Engine 9-1
9.3 Drive/axles 9-2
9.4 Brakes 9-3
9.5 Tires 9-4
9.6 Steering system 9-4
9.7 Operating hydraulics 9-4
9.8 Electrical system 9-6
9.9 Tightening torques 9-10
9.10 Coolant 9-11
9.11 Noise emissions 9-11
9.12 Vibrations 9-12
9.13 Weight 9-15
9.14 Payload 9-16
9.15 Dimensions 9-17

Index

https://truckmanualshub.com/

EC Compliance Statement

Manufacturer

Wacker Neuson Linz GmbH, Flughafenstr. 7, 4063 Hörsching, Austria

Product

Machine designation	**Compact Dumper**
Machine model	**D24-01**
Trade name	**DV60**
Serial number	**--**
Engine/output kW	**TD 2.9 L4 DOC/55.4**
Measured sound power level dB (A)	**101**
Guaranteed sound power level dB (A)	**101**

Declaration of conformity

Notified body according to Directive 2006/42/EC, appendix XI:
DGUV Test-, Prüf- und Zertifizierungsstelle
Fachbereich Bauwesen, Landsberger Str. 309, 80687 Munich, Germany
Distinguishing EU number 0515

For 2000/14/EG notified body involved in procedure

TÜV SÜD Industrie Service GmbH
Westendstr. 199
D-80686 Munich

Directives and standards

We hereby declare that this product corresponds to the relevant regulations of the following Directives and standards:
2006/42/EG, 2005/88/EG, 2000/14/EG, 2014/30/EU, 2014/53/EU (if telematics option is installed) Appendix VIII;
DIN EN ISO 12100:2010, DIN EN 474-1:2006+A1:2009, DIN EN 474-6:2010 (except 5.2.3 and 5.2.5), DIN EN ISO 3471:2010

Authorized representative for the compilation of technical documentation

Annette Ortmayr, Team Leader Technical Documentation
Flughafenstr. 7
4063 Hörsching
Austria

Robert Finzel,
Member of management

The indications specified above correspond to the existing information at time of going to press. They have possibly changed in the meantime (refer to the original declaration of conformity supplied with the vehicle). Applies to EU countries, and countries with legislation similar to that of the EU. Applies to all vehicles with CE marks that have not been modified without authorization since the product was placed on the market.

https://truckmanualshub.com/

EC Compliance Statement

Manufacturer

Wacker Neuson Linz GmbH, Flughafenstr. 7, 4063 Hörsching, Austria

Product

Machine designation	**Compact Dumper**
Machine model	**D24-02**
Trade name	**DV90**
Serial number	**--**
Engine/output kW	**TD 2.9 L4 DOC/55.4**
Measured sound power level dB (A)	**101**
Guaranteed sound power level dB (A)	**101**

Declaration of conformity

Notified body according to Directive 2006/42/EC, appendix XI:
DGUV Test-, Prüf- und Zertifizierungsstelle
Fachbereich Bauwesen, Landsberger Str. 309, 80687 Munich, Germany
Distinguishing EU number 0515

For 2000/14/EG notified body involved in procedure

TÜV SÜD Industrie Service GmbH
Westendstr. 199
D-80686 Munich

Directives and standards

We hereby declare that this product corresponds to the relevant regulations of the following Directives and standards:
2006/42/EG, 2005/88/EG, 2000/14/EG, 2014/30/EU, 2014/53/EU (if telematics option is installed) Appendix VIII;
DIN EN ISO 12100:2010, DIN EN 474-1:2006+A1:2009, DIN EN 474-6:2010 (except 5.2.3 and 5.2.5), DIN EN ISO 3471:2010

Authorized representative for the compilation of technical documentation

Annette Ortmayr, Team Leader Technical Documentation
Flughafenstr. 7
4063 Hörsching
Austria

Robert Finzel,
Member of management

The indications specified above correspond to the existing information at time of going to press. They have possibly changed in the meantime (refer to the original declaration of conformity supplied with the vehicle). Applies to EU countries, and countries with legislation similar to that of the EU. Applies to all vehicles with CE marks that have not been modified without authorization since the product was placed on the market.

https://truckmanualshub.com/

EC Compliance Statement

Manufacturer

Wacker Neuson Linz GmbH, Flughafenstr. 7, 4063 Hörsching, Austria

Product

Machine designation	**Compact Dumper**
Machine model	**D24-03**
Trade name	**DV100**
Serial number	**--**
Engine/output kW	**TD 2.9 L4 DOC/55.4**
Measured sound power level dB (A)	**101**
Guaranteed sound power level dB (A)	**101**

Declaration of conformity

Notified body according to Directive 2006/42/EC, appendix XI:
DGUV Test-, Prüf- und Zertifizierungsstelle
Fachbereich Bauwesen, Landsberger Str. 309, 80687 Munich, Germany
Distinguishing EU number 0515

For 2000/14/EG notified body involved in procedure

TÜV SÜD Industrie Service GmbH
Westendstr. 199
D-80686 Munich

Directives and standards

We hereby declare that this product corresponds to the relevant regulations of the following Directives and standards:
2006/42/EG, 2005/88/EG, 2000/14/EG, 2014/30/EU, 2014/53/EU (if telematics option is installed) Appendix VIII;
DIN EN ISO 12100:2010, DIN EN 474-1:2006+A1:2009, DIN EN 474-6:2010 (except 5.2.3 and 5.2.5), DIN EN ISO 3471:2010

Authorized representative for the compilation of technical documentation

Annette Ortmayr, Team Leader Technical Documentation
Flughafenstr. 7
4063 Hörsching
Austria

Robert Finzel,
Member of management

The indications specified above correspond to the existing information at time of going to press. They have possibly changed in the meantime (refer to the original declaration of conformity supplied with the vehicle). Applies to EU countries, and countries with legislation similar to that of the EU. Applies to all vehicles with CE marks that have not been modified without authorization since the product was placed on the market.

https://truckmanualshub.com/

https://truckmanualshub.com/

1 Foreword

1.1 Operator’s manual

Information on this operator’s manual

Keep the operator's manual in the document box to the left of the seat and always keep it with you.

Fully read and understand the operator’s manual before starting up, servicing or repairing the vehicle. This will help avoid personal injury and physical damage and the vehicle can be safely and economically operated.

Wacker Neuson recommends distributors or vehicle lessors to instruct operators accordingly.

Please contact your dealer if you require more information on the vehicle or the Operator’s Manual.

Target-group definition

This operator's manual is aimed at new professional operating personnel or those yet to be trained.

Operator qualification and requirements for safe operation

Among other things, safe reliable vehicle operation and a longer service life depend on the following criteria:

- Machine model and its outfitting
- Machine maintenance
- Work and driving speed
- Nature of ground and work environment
- Operator's qualification and ability to make decisions

With a qualified training, the operator is capable of the following:

- Concrete assessment of the work situations
- Feeling for the vehicle
- Identifying potential hazard situations
- Safe working by making the correct decisions for man, vehicle and the environment

Access to the vehicle or vehicle operation is prohibited for children and persons under the influence of alcohol, drugs, or medicine.

https://truckmanualshub.com/

Designated use

- The vehicle is used for moving earth, gravel, coarse gravel and rubble.
- Designated use also includes observing the instructions set forth in the Operator's Manual and observing the maintenance and service conditions.
- Follow the relevant national and regional regulations.

Machine travel on public roads

The vehicle can only be driven on public roads when it conforms to the respective national traffic laws and the operator has a valid driving license.

1.2 Warranty and liability

Warranty

Warranty claims can only be made if:

- The warranty conditions are observed. They are included in the General Conditions of Sales and Delivery for new vehicles and spare parts sold by the dealers of Wacker Neuson Linz GmbH.
- The daily and weekly maintenance work is carried out according to the maintenance plan.
- The maintenance work and the handover inspection are carried out by an authorized service center and entered in the service log.

Exemption from liability

The warranty and product liability are void in the event of personal injury and property damage in the following cases:

- Failure to observe the safety and warning information on the vehicle and all supplied documents.
- Failure to properly use the vehicle.
- Violation of due diligence in maintenance, repair and handling and operation of the vehicle.
- Performing vehicle modifications without proper authority and using spare parts, accessories, attachments and optional equipment that have not been checked and released by Wacker Neuson Linz GmbH. The vehicle does not meet the requirements for conformity and registration.
- Changes and modifications to the vehicle that lead to restricted visibility. The vehicle does not meet the requirements for conformity and registration.

https://truckmanualshub.com/

Symbol

- Identifies a list
  - Identifies a subdivision of a list
  - ➥ Description of a result

1. Identifies an activity
   Follow the order of the activity!
2. Continuation of an activity
   Follow the order of the activity!

A Identifies an alphabetical list

B Continuation of an alphabetical list

Cross references: see page *1-1* (page)

Cross references: **7** (pos. no. or table no.)

Cross-references: *Fig. 3* (Fig. no. 1)

Cross references: *– see chapter “5 Operation” on page 5-1* (see chapter)

Cross references: *– see “Operation” on page 5-1* (– see text)

Information

Identifies an information that, when followed, provides for a more efficient and economical use of the vehicle.

Environment

Failure to observe the instructions identified by this symbol can cause damage to the environment.

https://truckmanualshub.com/

Abbreviations

Fig.	Figure
B	Width
o/h	Operating hours
approx.	approximately
DPF	Diesel particulate filter
etc.	et cetera
FGPS	Front Guard Protective Structure
FOPS	Falling Objects Protective Structure
if nec.	if necessary
max.	maximum
min.	minimum
Item	Position
ROPS	Roll Over Protective Structure (without losing contact with the ground)
TOPS	Tip Over Protective Structure
e. g.	for example

https://truckmanualshub.com/

Glossary

Towing	The Dual View Truck tows another vehicle on public roads, or is towed itself
Trailer operation	Pulling a trailer on public roads
Base vehicle	Vehicle without Options
Operator	Person performing vehicle travel or operation
Operating personnel	People who are responsible for the installation, operation, installation, maintenance, cleaning, repair or transport of machines
Towing	The Dual View Truck is towed out of an immediate danger area (for example a railroad crossing or job site)
Bystanders	People who provide support during lifting device operations or instruction
Canopy	Open safety component for the operator
Swivel Seat	The seat console can be rotated by 180°
DPF	Diesel particulate filter; burns soot particles in the exhaust gas
Operating company/person	A company (or person) operating the vehicle. This can be a construction company, for example
vehicle	Unless otherwise specified, the term vehicle refers to the Dual View Trucks described in this operator's manual
Machine operation	All work (for example vehicle travel, moving material, daily maintenance work) an operator is allowed to do or has to perform in connection with the vehicle. The term 'vehicle operation' does not include maintenance work that only an authorized service center is allowed to perform
Cab	Closed safety component for the operator. The term cab is used in this operator's manual for canopy and cab. If there are differences, these two safety components are described separately.
Creep gear	Perform vehicle travel as slowly as possible and jerk free
Maneuvering operation	Pulling a trailer in a construction site area
Hose rupture	Hydraulic oil under pressure escapes from a hydraulic hose
Check the threaded fittings for tightness	• Operator: visually check the screw connections and corresponding components/sub-assemblies visually or manually (without using tools) for tightness • Authorized service center: if an attachment has to be used in the event of abnormalities for the control procedures, restore the screwed connection with new materials (screws, nuts)
Visual aids	Visual aids are, for example, rearview mirrors, cameras, but also persons assisting the operator during vehicle operation
Tier III/Tier IV	The machine can be equipped with an Tier III or Tier IV engine, depending on the destination country. Both engine variants are described separately if there are engine-specific differences (for example regarding operation)
Loading weight	The actual weight of the vehicle at the beginning of transportation. This weight refers to vehicles which are equipped exclusively with options approved by Wacker Neuson

https://truckmanualshub.com/

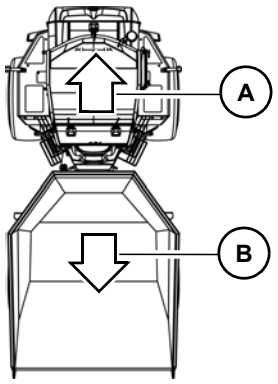	• **Main travel direction:** seat position facing the drive unit **(A)**. • **Side travel direction:** seat position facing the loader unit **(B)**.

Right/left/front/rear

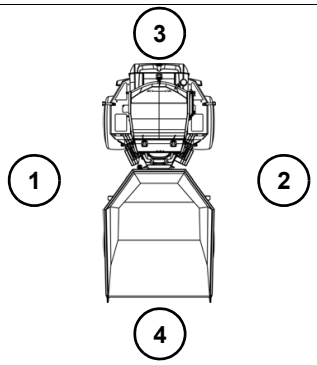

Fig. 1 Direction definition

The terms refer to the main travel direction.

- **1**: Left
- **2**: Right
- **3**: Front
- **4**: Rear

https://truckmanualshub.com/

Conversion table

The rounded imperial values are indicated in brackets, for example 1060 cm³ (64.7 in³).

Volume unit	
1 cm³	(0.061 in³)
1 m³	(35.31 ft³)
1 ml	(0.034 US fl.oz.)
1 l	(0.26 gal)
1 l/min	(0.26 gal/min)
Unit of length	
1 mm	(0.039 in)
1 m	(3.28 ft)
Weight	
1 kg	(2.2 lbs)
1 g	(0.035 oz)
Pressure	
1 bar	(14.5 psi)
1 kg/cm²	(14.22 lbs/in²)
Force/output	
1 kN	(224.81 lbf)
1 kW	(1.34 hp)
1 PS	(0.986 hp)
Torque	
1 Nm	(0.74 ft.lbs.)
Speed	
1 kph	(0.62 mph)
Acceleration	
1 m/s²	(3.28 ft/s²)

https://truckmanualshub.com/

https://truckmanualshub.com/

2 Safety

2.1 Safety symbols and signal words

Explanation

The following symbol identifies safety instructions. It is used for warning against potential personal risk or danger.

DANGER

DANGER identifies a situation causing death or serious injury if it is not avoided.

Consequences in case of non-observance.

► Avoidance of injury or death.

WARNING

WARNING identifies a situation that can cause death or serious injury if it is not avoided.

Consequences in case of non-observance.

► Avoidance of injury or death.

CAUTION

CAUTION identifies a situation that can cause injury if it is not avoided.

Consequences in case of non-observance.

► Avoidance of injury.

NOTICE

NOTICE identifies a situation that causes damage to the vehicle if it is not observed.

► Avoidance of damage to property.

https://truckmanualshub.com/

2.2 Qualification of operating personnel

Owner's duties

- Only allow specifically authorized, trained and experienced persons to operate, drive and perform maintenance on the vehicle.
- Do not allow persons to be trained or instructed by anyone other than an authorized and experienced person.
- Have persons to be trained or instructed practice under supervision until they are familiar with the machine and its behavior (for example with the steering and braking behavior).
- Access to the vehicle or vehicle operation is prohibited for children and persons under the influence of alcohol, drugs or medicine.
- Clearly and unequivocally define the responsibilities of the operating and maintenance personnel.
- Clearly and unequivocally define the responsibilities on the job site, also in view of traffic regulations.
- Give the operator the authority to refuse safety instructions from third parties.
- Have the vehicle serviced and repaired only by an authorized service center.

Required knowledge of the operator

- The operator is responsible for third parties.
- Avoid any operational mode that might be prejudicial to safety.
- The specific national driving license is required.
- The vehicle may only be operated by authorized and safety-conscious operators who are fully aware of the risks involved in operating the vehicle.
- The operator and owner are obligated to operate the vehicle only in a safe and working condition.
- All persons working on or with the vehicle must have read and understood the safety instructions in this Operator's Manual before starting work.
- Follow, and instruct the operator in, legal and other mandatory regulations relevant to accident prevention.
- Observe and instruct the operator in regulations regarding road traffic and environmental protection.
- Use only the defined accesses for getting on and off the vehicle.
- Be familiar with the emergency exit of the vehicle.

https://truckmanualshub.com/

Preparatory measures for the operator

- Before starting, check the vehicle whether it can be driven and operated safely.
- Tie back long hair and remove all jewelry.
- Wear close-fitting work clothes that do not hinder movement.

2.3 Conduct

Prerequisites for operation

- The vehicle has been designed and built in accordance with state-of-the-art standards and the recognized safety regulations.
  Nevertheless its use can cause danger to the operator or third parties, or damage to the vehicle.
- Store this Operator's Manual in the place provided for this in or on the vehicle. Immediately replace a damaged or illegible Operator's Manual and any supplements to it.
- The vehicle must only be operated in accordance with its designated use and the instructions set forth in this Operator's Manual.
- The operator and owner are obligated not to put a damaged or malfunctioning vehicle into operation or operate it.
  - If a damage or malfunction occurs during operation, put the vehicle out of operation immediately and secure it against restart.
  - Have all malfunctions jeopardizing the safety of the operator or third parties immediately repaired by an authorized service center.
- Do not put the vehicle into operation or operate it after an accident; have it inspected for damage by an authorized service center.
  - Have the seat belt replaced by an authorized service center after an accident, even if there is no visible damage.
  - Cabin and protective structures
- Remove all dirt, snow and ice from climbing aids (for example from the handholds, footholds, handrails).
- The owner is responsible for requiring the operating and maintenance personnel to wear protective clothing and equipment as required by the circumstances.

https://truckmanualshub.com/

2.4 Operation

Preparatory measures

- Operation is only allowed with correctly installed and intact protective structures.
- Keep the vehicle clean. This reduces injury, accident and fire hazards.
- Safely store objects you carry with you in the places provided for this (for example in the storage compartment, drinks holder).
- Do not carry objects with you that protrude into the user's work space. They can create another danger in case of an accident.
- Observe all safety, warning and information labels.
- Start and operate the vehicle only with the seat belt fastened and only from the place provided for this.
- Check the condition and the fastening of the seat belt. Have malfunctioning seat belts and mounting hardware replaced by an authorized service center.
- Before starting work, adjust the seating position so that all control elements can be reached and fully operated.
- Only make personal settings when the vehicle is at a standstill (e.g. seat, steering column).
- Ensure that all safety devices are properly installed and functional before starting work.
- Before starting work or after interrupting work, ensure that the brake, steering, signaling and light systems are functional.
- Before putting the vehicle into operation, ensure that nobody is in the danger zone.

https://truckmanualshub.com/

Job site

- The operator is responsible for third parties.
- Before starting work, familiarize yourself with the job site. This applies to, for example:
  - Obstacles in the job site and vehicle travel area
  - Any barriers separating the job site from public roads
  - Soil weight-bearing capacity
  - Existing overhead and underground lines
  - Special operating conditions (for example dust, steam, smoke, asbestos)
- The operator must know the maximum dimensions of the vehicle and the attachment – see “Technical data”.
- Maintain a safe distance (for example from buildings, edges of building pits).
- During work in buildings or in enclosed areas, look out for:
  - Height of the ceiling/clearances
  - Width of entries/passages
  - Maximum load of ceilings and floors
  - Sufficient room ventilation (for example risk of carbon monoxide poisoning)
- Use existing visual aids to stay aware of the danger zone.
- In conditions of darkness and poor visibility, switch on existing work lights and ensure that motorists are not blinded by these lights.
- If the existing lights of the vehicle are not sufficient for performing work safely, ensure additional lighting of the job site.
- Due to hot vehicle parts, maintain a safe distance from easily flammable material (for example from hay, dry leaves).

Danger zone

- The danger zone is the area in which persons are in danger due to the movements of the vehicle, attachment and/or load.
- The danger zone also includes the area that can be affected by falling material, equipment or by parts that are thrown out.
- Extend the danger zone sufficiently in the immediate vicinity of buildings, scaffolds or other elements of construction.
- Seal off the danger zone should it not be possible to keep a sufficient safety distance.
- Stop vehicle operation immediately if persons do not stay clear of the danger zone.

https://truckmanualshub.com/

Carrying passengers

- Carrying passengers with the vehicle is PROHIBITED.
- Carrying passengers on/in attachments/tools is PROHIBITED.
- Carrying passengers on/in trailers is PROHIBITED.

Mechanical integrity

- The operator and owner are obligated to operate the vehicle only in a safe and working condition.
- Operate the machine only if all protective and safety-oriented equipment (for example protective structures such as a cabin or rollbar, removable safety devices) is installed and functional.
- Check the vehicle for visible damage and defects.
- In case of damage and/or unusual behavior, put the vehicle out of operation immediately and secure it against restart.
- Have all malfunctions jeopardizing the safety of the operator or third parties immediately repaired by an authorized service center.

Starting the engine of the vehicle

- Start the engine only according to the Operator’s Manual.
- Observe all warning and indicator lights.
- Do not use any liquid or gaseous starting aids (for example ether or starting fuel).

https://truckmanualshub.com/

Machine operation

- Start and operate the vehicle only with the seat belt fastened and only from the place provided for this.
- Put the vehicle into operation only if visibility is sufficient (have another person guide you if necessary).
- Operation on slopes:
  - Travel/work only uphill or downhill.
  - Avoid vehicle travel across a slope, observe the vehicle's permissible inclination (and of the trailer if necessary).
  - Keep loads on the uphill side of the vehicle and as close as possible to it.
  - Keep attachments/work equipment close to the ground.
- Adapt the travel speed to the circumstances (for example the ground conditions, weather conditions).
- There is increased danger during backward vehicle travel. Persons in the blind spot of the vehicle cannot be seen by the operator.
  - Ensure that nobody is in the danger zone when you change the travel direction.
- Never get on a moving vehicle and never jump off the vehicle.

Machine travel on public roads/sites

- The specific national driving license is required.
- Observe the national regulations (for example the road traffic regulations) during machine travel on public roads/sites.
- Ensure that the vehicle is in compliance with the national regulations.
- In order not to blind other motorists, using the existing work lights during vehicle travel on public roads/site is prohibited.
- When crossing underpasses, bridges, tunnels, for example, ensure that the clearance height and width is sufficient.
- The attachment fitted onto the machine must be certified for travel on public roads/sites (see for example the registration documents).
- The attachment fitted onto the vehicle must be empty and in transport position.
- The attachment fitted onto the vehicle must be equipped with the mandatory lights and protective equipment.
- Take measures against unintentional operation of the operating hydraulics.
- If the vehicle has different steering modes, ensure that the mandatory steering mode is selected.

https://truckmanualshub.com/

Stopping the engine of the vehicle

- Stop the engine only according to the Operator's Manual.
- Before stopping the engine, lower the work equipment/attachment to the ground.

Stopping and securing the vehicle

- Unbuckle the seat belt only after stopping the engine.
- Before leaving the machine, secure it to prevent it from rolling away (for example with the parking brake, suitable wheel chocks).
- Remove the starting key and secure the vehicle against unauthorized operation.

2.5 Lifting gear applications

Requirements

- Have loads fastened and the operator guided by a qualified person who has specific knowledge of lifting gear applications and the usual hand signals.
- The person giving instructions to the operator must stay in visual contact with the operator when fastening, guiding or removing the load (maintain visual contact).
- If this not be possible, ask one more person with the same qualifications to guide.
- The operator may not leave his seat as long as the load is raised.

https://truckmanualshub.com/

Fastening, guiding and removing loads

- Follow the applicable specific regulations for fastening, guiding and removing a load.
- Wear protective clothing and equipment when fastening, guiding and removing loads (for example a hard hat, safety glasses, protective gloves, safety boots).
- Do not place lifting and fastening gear over sharp edges or rotating parts. Loads must be fastened so as to prevent them from slipping or falling.
- Move loads only on horizontal, level and firm ground.
- Move loads close to the ground.
- In order to avoid oscillating movements of loads:
  - Perform smooth, slow movements with the vehicle.
  - Use cables to guide the load (do not use hands to guide).
  - Bear in mind the weather conditions (for example the wind force).
  - Keep a minimum safety distance from objects.
- The operator may allow the load to be fastened and removed only if the vehicle and its work equipment are not being moved.
- Danger zones must not overlap with the work zones of other vehicles.

https://truckmanualshub.com/

Lifting gear applications

- The vehicle must be certified for lifting gear applications.
- Observe the national regulations for lifting gear applications.
- Lifting gear applications are procedures involving raising, transporting and lowering loads with the help of lifting and fastening gear.
- The help of an accompanying person is necessary for fastening, guiding and removing the load.
- There must be nobody under the load.
- Stop the vehicle immediately and stop the engine if persons enter the danger zone.
- Use the machine for lifting gear applications ONLY if the mandatory lifting gear (for example a joint rod and load hook) and safety equipment (for example optical and acoustic warning devices, hose burst valve, stability table) is installed and functional.
- Use only lifting and fastening gear certified by a test/certification body, observe the inspection intervals (Use only chains and shackles. No belts, slings or cables).
- Do not use any lifting and fastening gear that is dirty, damaged or not of sufficient size.
- Do not interrupt the work process with a load attached.

https://truckmanualshub.com/

2.6 Trailer operation

Trailer operation

- The vehicle must be certified for trailer operation.
- Observe the national regulations for trailer operation.
- The specific national driving license is required.
- Carrying passengers on/in trailers is PROHIBITED.
- Observe the maximum permissible vertical and trailer load.
- Do not exceed the permissible trailer speed.
- Trailer operation with the towing gear of the vehicle is prohibited.
- Trailer operation changes the vehicle's operating behavior; the operator must be familiar with this and act accordingly.
- Bear in mind the vehicle's steering mode and the trailer's turning circle.
- Before hitching/unhitching the trailer, secure it to prevent it from rolling away (for example with the parking brake, suitable wheel chocks).
- There must be nobody between the vehicle and the trailer when hitching a trailer.
- Hitch the trailer onto the vehicle correctly.
- Ensure that all equipment works correctly (for example the brakes, lights).
- Before starting vehicle travel, ensure that nobody is between the vehicle and the trailer.

2.7 Attachment operation

Attachments

- Use only attachments that are certified for the machine or its protective equipment (for example a shatter protection).
- All other attachments require the vehicle manufacturer's release.
- The danger zone and the work zone depend on the attachment used – see the Operator's Manual of the attachment.
- Secure the load.
- Do not overload attachments.
- Check the correct position of the lock.

https://truckmanualshub.com/

Operation

- Carrying persons on/in an attachment is prohibited.
- Installing a work platform is prohibited.
  - Exception: The vehicle is certified and equipped with the necessary safety equipment.
- Attachments and counterweights modify handling, as well as the steering and brake capability of the vehicle.
- The operator must be familiar with these modifications and act accordingly.
- Before starting work, operate the attachment to check that it works correctly.
- Before putting the attachment into operation, ensure that nobody is in danger.
- Lower the attachment to the ground before leaving the seat.

Removing and fitting attachments

- Before uncoupling or coupling hydraulic connections:
  - Stop the engine.
  - Release the pressure in the operating hydraulics
- Picking up and lowering attachments to the ground requires special care:
  - Pick up and safely lock the attachment in accordance with the Operator’s Manual.
  - Lower the attachment only to firm, level ground and secure it to prevent it from tipping over or rolling away.
- Put the vehicle and the attachment into operation only if:
  - The protective equipment has been installed and is functional.
  - The connections for the lights and the hydraulic system have been established and are functional.
- Perform a visual check of the lock after locking the attachment.
- There must be nobody between the vehicle and the equipment when picking up or lowering an attachment to the ground.

https://truckmanualshub.com/

2.8 Towing, loading and transporting

Towing

- Seal off the danger zone.
- Ensure that no one is near the towing bar or cable. The safety distance is equal to 1.5 times the length of the towing equipment.
  Use a towing cable for vehicles with a total weight of up to 4.0 tons.
  Use a towing bar for vehicles with a total weight of over 4.0 tons.
- Observe the mandatory transport position, permissible speed and itinerary.
- A tractor vehicle of the same weight category must be used as a minimum. Furthermore, the tractor vehicle must be equipped with a safe braking system and sufficient tractive power.
- Use only towing bars or cables certified by a test/certification body, observe the inspection intervals.
- Do not use any towing bars or cables that are dirty, damaged or not of sufficient size.
- Fasten towing bars or cables only at the defined points.
- Tow away only in accordance with this Operator’s Manual to avoid damage to the vehicle.
- Observe the national regulations (for example the light regulations) when towing on public roads/sites.

https://truckmanualshub.com/

Crane-lifting

- Seal off the danger zone.
- The crane and the lifting gear must have suitable dimensions.
- Observe the vehicle's overall weight – see "Technical data".
- Wear protective clothing and equipment when fastening, guiding and removing the machine (for example a hard hat, safety glasses, safety boots).
- Use only lifting and fastening gear certified by a test/certification body (for example cables, belts, hooks, shackles), observe the inspection intervals.
- Do not use any lifting and fastening gear that is dirty, damaged or not of sufficient size.
- Perform a visual check to ensure that all slinging points are neither damaged nor worn (no widening, no sharp edges, no cracks).
- Have loads fastened and crane operators only guided by experienced persons.
- The person guiding the crane operator must be within sight or sound of him.
- Observe all movements of the vehicle and lifting gear.
- Secure the vehicle against unintentional movement.
- Raise the vehicle only after it is safely attached and the person attaching the vehicle has given his approval.
- Use only the slinging points provided for fastening the lifting gear (for example cables, belts).
- Do not attach the machine by twining the lifting gear (for example cables, belts) around it.
- Ensure an even load distribution (center of gravity!) when fastening the lifting gear.
- Ensure that no one is in, on or under the vehicle when loading the vehicle.
- Observe the national regulations (for example "Merkheft Erdbau-maschinen", leaflet on earth moving machines of the German employers' liability insurance association for construction engineering).
- Load the vehicle only in accordance with this Operator's Manual to avoid damage to the vehicle.
- Do not raise a machine that is stuck or frozen onto the ground, for example.
- Bear in mind the weather conditions (for example the wind force, visibility conditions).

https://truckmanualshub.com/

Transportation

- For the safe transportation of the vehicle:
  - The transport vehicle must have a sufficient load capacity and platform – see “Technical data”
  - The maximum weight rating of the transport vehicle must not be exceeded.
- Use only lifting and fastening gear certified by a test/certification body, observe the inspection intervals.
- Do not use any lifting and fastening gear that is dirty, damaged or not of sufficient size.
- In order to secure the vehicle on the platform, use only the fastening points provided for this purpose.
- Ensure that nobody is in or on the vehicle during transportation.
- Observe the national regulations (for example “Merkheft Erdbau-maschinen”, leaflet on earth moving machines of the German employers’ liability insurance association for construction engineering).
- Bear in mind the weather conditions (for example ice, snow).
- Ensure the minimum load on the steering axle(s) of the transport vehicle, and ensure an even load distribution.

2.9 Maintenance

Maintenance

- Observe the intervals prescribed by law and those specified in this Operator’s Manual for routine checks/inspections and maintenance.
- For inspection and maintenance, ensure that all tools and service center equipment are adapted to the performance of the task described in this Operator’s Manual.
- Do not use any damaged or malfunctioning tools.
- Have hydraulic hoses replaced within stipulated intervals even if no visual defects can be detected.
- The vehicle and the engine must be stopped during maintenance.
- Once maintenance is over, correctly install safety equipment again that has been removed.
- Wait for the vehicle to cool down before touching components.

https://truckmanualshub.com/

Personal safety measures

- Avoid any operational mode that might be prejudicial to safety.
- Wear protective clothing and equipment (for example a hard hat, protective gloves, safety boots).
- Tie back long hair and remove all jewelry.
- If maintenance on a running engine cannot be avoided:
  - Only work in groups of two.
  - Both persons must be authorized and trained for the operation of the vehicle.
  - One person must be seated on the seat and stay in contact with the second person.
  - Keep a safe distance from rotating parts (for example from fan blades, belts).
  - Keep a safe distance from hot parts (for example from the exhaust system).
  - Perform maintenance only in well-ventilated rooms or rooms with an exhaust-gas suction system.
- Safely lock/support vehicle components before starting work.
- Apply special care when working on the fuel system due to the increased fire hazard.

https://truckmanualshub.com/

Preparatory measures

- Attach a warning label to the control elements (for example “Machine being serviced, do not start”).
- Before performing assembly work on the vehicle, support the areas to be serviced and use suitable lifting and supporting equipment for the replacement of parts over 9 kg (20 lbs.).
- Perform maintenance only if:
  - the vehicle is positioned on firm and level ground
  - the machine is secured to prevent it from rolling away (for example with the parking brake, wheel chocks), and if all attachments/the work equipment is lowered to the ground
  - the engine is stopped
  - the starting key has been removed
  - the pressure in the operating hydraulics has been released
- If maintenance has to be performed under a raised machine/ attachment, support the machine/attachment (for example with a lift platform, trestles) ensuring safety and stability.
- Hydraulic cylinders or jacks alone do not sufficiently secure a raised vehicle/attachment.

Measures for performing maintenance

- Perform only the maintenance described in this Operator’s Manual.
- All work that is not described in this Operator’s Manual must be performed by qualified and authorized technical personnel.
- Follow the maintenance plan – see “Maintenance plan”.
- Always use specially designed or otherwise safety-oriented ladders and working platforms to perform overhead maintenance. Do not use vehicle parts or attachments as a climbing aid.
- Do not use attachments/work equipment as a lift platform for persons.
- Remove all dirt, snow and ice from climbing aids (for example from the handholds, footholds, handrails).
- Disconnect the negative terminal of the battery before working on the electrical system.

https://truckmanualshub.com/

Modifications and spare parts

- Do not modify the machine and the work equipment/attachment (for example the safety equipment, lights, tires, straightening and welding work).
- Modifications must be approved by the manufacturer and performed by an authorized service center.
- Use only original spare parts.

Protective structures

- The cab, rollbar and protective grate are tested protective structures and may not be changed (e.g. no drilling, bending, welding).
- Perform a visual check according to the maintenance plan (for example check fastenings for damage).
- If damage or defects are detected, have them immediately checked and repaired by an authorized service center.
- Have retrofitting work only performed by an authorized service center.
- Replace self-locking fasteners (for example self-locking nuts) by new ones after removing them.

2.10 Measures for avoiding risks

Tires

- Have repair work on the tires only performed by trained technical personnel.
- Check the tires for correct pressure and visible damage (for example cracks, cuts).
- Tighten the wheel nuts to the specified tightening torque. (See chapter 7.18 Tires/tracks).
- Use only approved tires.
- The machine must have identical tires (for example profile, revolutions per mile).

Tracks

- Repair work on tracks may be performed only by trained technicians.
- Check the tracks for correct tension and visible damage (for example cracks, cuts).
- Proceed with extreme care on slippery ground (for example on steel plates, ice), increased slipping hazard.
- Use only approved tracks.

https://truckmanualshub.com/

Hydraulic and compressed-air system

- Check all lines, hoses and screw connections regularly for leaks and visible damage.
- Splashed oil can cause injury and fire.
- Leaking hydraulic and compressed-air lines can cause the full loss of the brake effect.
- Have damage and leaks immediately repaired by an authorized service center.
- Have hydraulic hoses replaced by an authorized service center within stipulated intervals even if no visual defects can be detected.

Electrical system

- Use only fuses with the specified current rating.
- In case of damage or malfunction in the electrical system:
  - Put the vehicle out of operation immediately and secure it against restart
  - Disconnect the battery or operate the battery master switch
  - Have the malfunction repaired
- Ensure that work on the electrical system is only performed by trained technical personnel.
- Have the electrical system checked regularly and malfunctions repaired immediately (for example loose connections, scorched cables).
- The operating voltage of machine, the attachment and the trailer must be the same (for example 12 V).

https://truckmanualshub.com/

Battery

California proposal 65

WARNING

Batteries, battery poles, terminals and corresponding accessory parts contain lead and its compounds and other chemicals that, according to the state of knowledge of the state of California, cause cancer, birth defects or reproductive harm. Wash your hands after use.

WARNING

Cancer and Reproductive Harm - www.P65Warnings.ca.gov.

- Batteries contain caustic substances (for example sulfuric acid). When handling the battery observe the specific safety instructions and regulations relevant to accident prevention.
- A volatile oxyhydrogen mixture forms in batteries during normal operation and especially during charging. Always wear gloves and eye protection when working with batteries.
- Do not perform battery maintenance near open flames.
- Perform battery maintenance only in well-ventilated areas (for example due to vapors harmful to health, explosion hazard).
- Starting the vehicle with battery jumper cables is dangerous if performed improperly. Observe the safety instructions regarding the battery.

https://truckmanualshub.com/

Safety instructions regarding internal combustion engines

California proposal 65

WARNING

The engine exhaust fumes of this product contain chemicals that, according to the state of knowledge of the state of California, cause cancer, birth defects or reproductive harm.

WARNING

Diesel engine exhaust fumes and some of its components cause, according to the state of knowledge of the state of California, cancer, birth defects or reproductive harm.

WARNING

Cancer and Reproductive Harm - www.P65Warnings.ca.gov.

- Internal combustion engines present special hazards during operation and fueling.
- Failure to follow the warnings and safety instructions can cause serious injury or death.
- Keep the area around the exhaust system free of flammable materials.
- Check the engine and fuel system for leaks (for example loose fuel lines). Don't start or let the engine run in case of leaks.
- Breathing the exhaust fumes causes death very quickly.
- Engine exhaust contains gases you cannot see or smell (for example carbon monoxide and dioxide).
  - Never operate the machine in enclosed premises or areas (for example in pits), if there is no suitable ventilation (for example exhaust-gas filters, suction systems).
- Do not operate the vehicle in potentially explosive areas.
- Do not touch the engine, exhaust system and cooling system as long as the engine is still running or has not cooled down yet.
- Do not remove the radiator cap when the engine is running or hot.
- The coolant is hot, under pressure and can cause serious burns.

Bleeding the fuel system and refueling

- Do not bleed the fuel system or refuel near open flames.
- Bleed the fuel system and refuel only in well-ventilated areas (for example due to vapors harmful to health, explosion hazard).
- Wipe away fuel spills immediately (for example due to fire hazard, slipping hazard).
- Firmly close the fuel tank cap; replace a malfunctioning fuel tank cap.

https://truckmanualshub.com/

Handling oil, grease and other substances

- When handling oil, grease and other chemical substances (for example the battery acid, coolant), observe the safety data sheets.
- Wear appropriate protective equipment (for example protective gloves, safety glasses).
- Be careful when handling hot consumables – burn hazard.
- In polluted environment (dust, vapors, smoke, asbestos), work only with appropriate personal protective equipment (for example with a breathing mask).
- Do not operate the vehicle in radioactively, biologically or chemically contaminated areas.

Fire hazard

- Fuel, lubricants and coolants are flammable.
- Do not put the vehicle into operation if there is a fire hazard.
- Do not use flammable detergents.
- Keep the area around the exhaust system free of flammable materials.
- Due to hot vehicle parts, maintain a safe distance from easily flammable material (for example from hay, dry leaves).
  - Stop and park the vehicle only in fire-protected areas.
- If the vehicle is equipped with a fire extinguisher, have it installed in its specific location.
- Keep the vehicle clean to reduce the fire hazard.

https://truckmanualshub.com/

Working near electric supply lines

- Before performing any work, the operator must check whether there are any electrical supply lines in the designated working area.
- If there are electrical supply lines, only a vehicle with cab may be used (Faraday cage).
- Keep a safe distance from existing electric supply lines.
- If this is not possible, the operator must initiate other safety measures in agreement with the owner or operator of the supply lines (e.g. shutdown the power).
- If supply lines are exposed, they must be fastened, supported and secured accordingly.
- If live supply lines are touched nevertheless:
  - Do not leave/touch the cab (Faraday cage)
  - If possible, drive the vehicle out of the danger zone
  - Warn others against approaching and touching the vehicle
  - Have the live wire de-energized
  - Do not leave the vehicle until the supply lines that have been touched or damaged have been safely de-energized.

Working near non-electric supply lines

- Before performing any work, the operator must check whether there are any non-electrical supply lines in the designated working area.
- If non-electrical supply lines exist, the operator must initiate safety measures in agreement with the owner or operator of the supply lines (e.g. shutdown the supply line).
- If supply lines are exposed, they must be fastened, supported and secured accordingly.

https://truckmanualshub.com/

Behavior during thunderstorm

- Stop machine operation if a thunderstorm is gathering, stop the machine, secure and leave it, and avoid being near it.

Noise

- Observe the noise regulations (for example, during applications in enclosed premises).
- Bear in mind external sources of noise (compressed-air hammer, concrete saw).
- Do not remove the sound baffles of the machine/attachment.
- Have damaged sound baffles immediately replaced (for example, an insulating mat, muffler).
- Before starting work, get informed on the noise level of the machine/ attachment (for example on the adhesive label) – wear ear protectors.
- Do not wear ear protectors during machine travel on public roads/sites.

Cleaning

- Risk of injury from compressed air and high-pressure cleaners.
  - Wear appropriate protective clothes.
- Do not use any dangerous and aggressive detergents.
  - Wear appropriate protective clothes.
- Operate the machine only in a clean condition.
  - Remove all dirt, snow and ice from climbing aids (for example from the handholds, footholds, handrails).
  - Keep the cabin glazing and visual aids clean.
  - Keep the light system and reflectors clean.
  - Keep the control elements and indicators clean.
  - Keep the safety, warning and information labels clean, and replace damaged and missing labels by new ones.
- Perform cleaning work only if the engine is stopped and cooled down.
- Bear in mind sensitive components and protect them accordingly (for example electronic control units, relays).

https://truckmanualshub.com/

3 Introduction

3.1 Machine overview

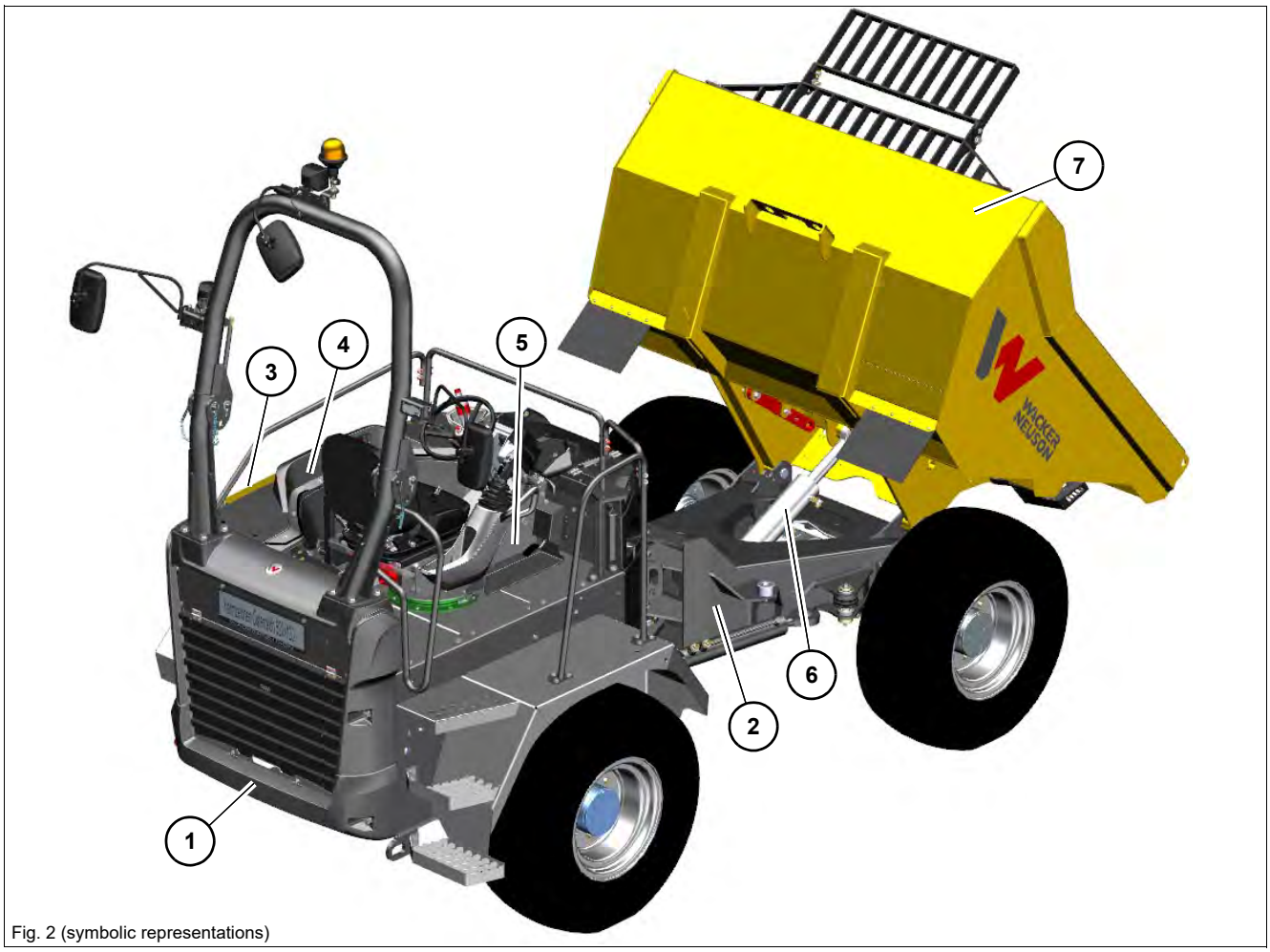

Fig. 2 (symbolic representations)

nr.	Designation	nr.	Designation
1	Drive unit	5	Seat console
2	Loader unit	6	Tilt cylinder
3	Engine cover/maintenance access	7	Skip
4	Control stand	--	--

https://truckmanualshub.com/

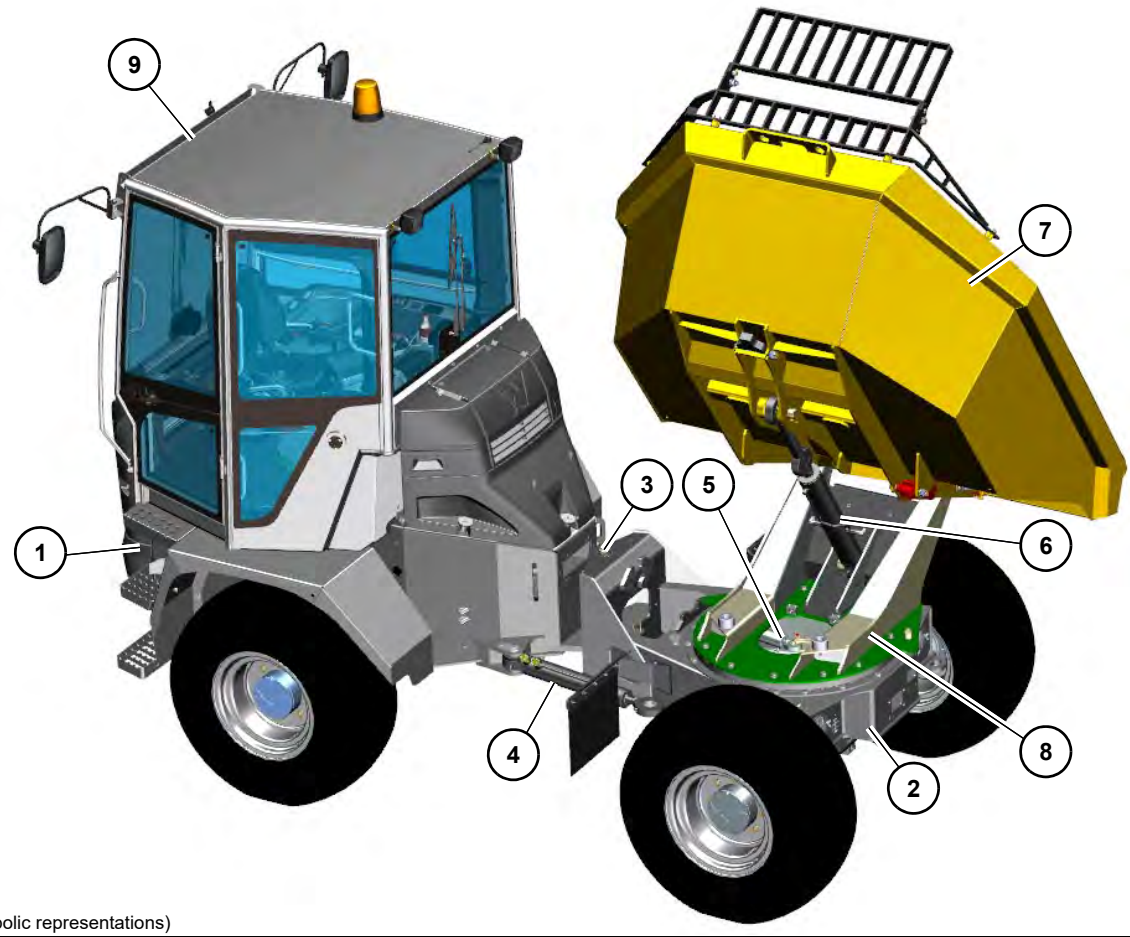

Fig. 3 (symbolic representations)

nr.	Designation	nr.	Designation
1	Drive unit	6	Tilt cylinder
2	Loader unit	7	Skip
3	Articulation	8	Swiveling console
4	Steering cylinder	9	Cab
5	Swiveling cylinder	--	--

https://truckmanualshub.com/

3.2 Brief description of the vehicle

Wacker Neuson Dual View Trucks are powerful, highly flexible and efficient construction machines with minimum environmental impact. The application area is mainly moving soil, gravel and debris.

Overview of models and trade names

Machine model	Trade name	Engine
D24-01 DOC	DV60	Deutz TD 2.9 DOC
D24-02 DOC	DV90	Deutz TD 2.9 DOC
D24-03 DOC	DV100	Deutz TD 2.9 DOC

Information

The machine can be equipped with the **Telematic** option (for transmitting operating data, location, etc. via satellite).

https://truckmanualshub.com/

3.3 Labels

WARNING

Injury hazard due to missing or damaged labels!

An insufficient warning of dangers can cause serious injury or death.

► Do not remove warning and information labels.

► Immediately replace damaged warning and information labels.

Information

Type, quantity, and position of the labels depend on options, country and vehicle.

https://truckmanualshub.com/

Type labels

Fig. 4 Machine type label

Serial number

The serial number is stamped on the machine chassis. It is also located on the type label.

Fig. 5 (symbolic representation)

Type label

The type label is located at the front on the vehicle chassis.

Designation	Designation
Vehicle serial no. /serial no.	Machine serial number
Fahrzeug Modell/model/modèle:	Machine designation
Leistung/performance:	Engine power
Typ/version:	Machine model
Betriebsgewicht/operating weight/poids en charge:	Operating weight
Transportgewicht/transport weight/poids en transport:	Transport weight
G. weight/GWR/PTAC:	Permissible maximum weight
Max. Nutzlast/max. payload/max. charge utile:	Maximum payload
Zul. Achslast vorne/front GAWR/PNBE AV:	Front gross axle weight rating
Zul. Achslast hinten/rear GAWR/PNBE AR:	Rear gross axle weight rating
EWG Nr./CEE no.:	EEC check number
Baujahr/model year/année fabr.:	Year of construction

https://truckmanualshub.com/

WNC	ASDE	1301	A	PAL	00400
1	2	3	4	5	6

Fig. 6

17-digit serial number

For easier vehicle identification, Wacker Neuson introduced a 17-digit serial number for compact equipment (for example for excavators). This serial number includes additional data, for example the manufacturer code and the production site.

Position	Description
1	Manufacturer code
2	Machine model
A	Unit
S	Skid Steer Loader
D	Dual View Truck
E	Excavator
3	Internal model designation
4	Check letter
5	Production site
6	Serial number

Information

Wacker Neuson components (for example Easy Lock, tilt bucket, rollbar) have numeric serial numbers only.

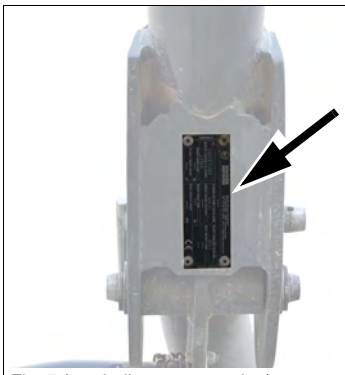

Fig. 7 (symbolic representation)

Rollbar type label

The type label is located on the right on the rollbar.

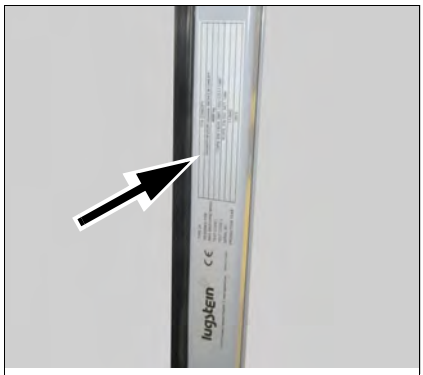

Fig. 8 (symbolic representation)

Cabin type label (option)

The type label is located on the B pillar on the left.

https://truckmanualshub.com/

Warning labels

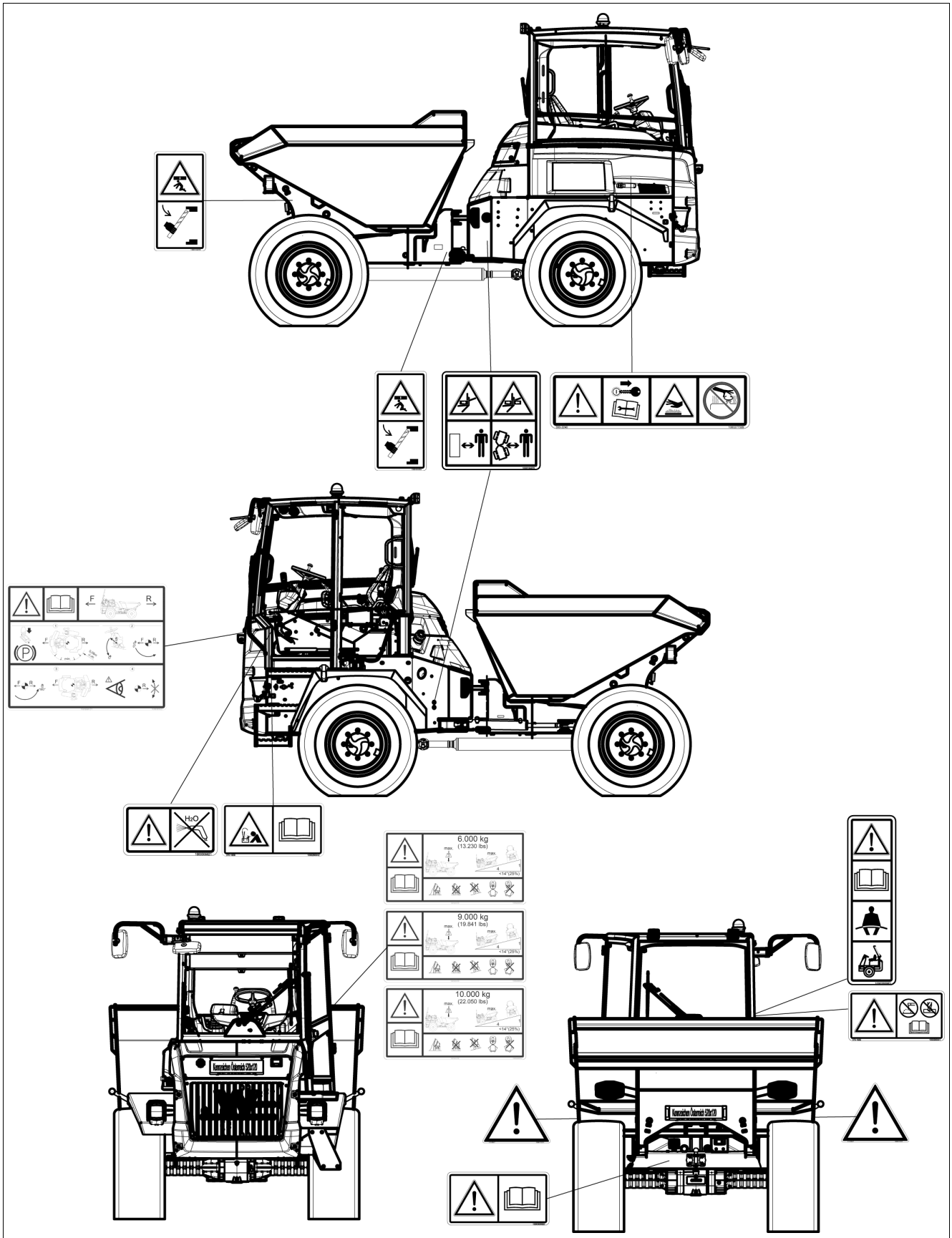

Fig. 9

https://truckmanualshub.com/

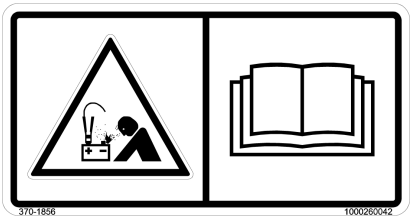

Fig. 10

Meaning

Explosion hazard due to wrong connection of battery jumper cables.

Battery acid is caustic.

Position

Next to the battery.

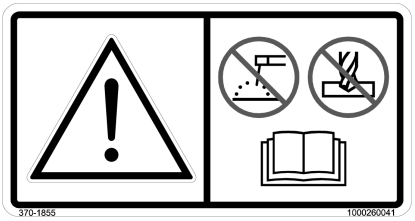

Fig. 11

Meaning

Modifications to the structure (for example welding, driling), retrofitting and incorrect repairs affect the protective effect of the cabin or ROPS bar, and can cause serious injury and even death.

Position

On the B pillar (cabin) or on the ROPS bar on the left.

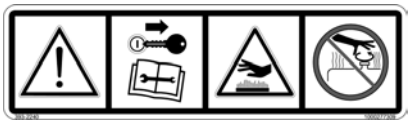

Fig. 12

Meaning

Read the Operator's Manual before starting the vehicle.

Remove the starting key and carry it with you.

Injury hazard due to rotating parts.

- Open the maintenance flap only at engine standstill.

Burn hazard due to hot parts.

- Let the engine cool down.

Burn hazard due to hot fluid.

Injury hazard due to fluid escaping under pressure.

- Let the engine cool down.
- Release the pressure in the hydraulic system and open the covers carefully.

Position

On the engine cover.

Fig. 13

Meaning

Injury hazard due to swiveling or tilting movement of skip.

Position

On the skip on the left and right.

https://truckmanualshub.com/

Fig. 14

Meaning

Maintenance prop/center-pivot prop

Secure the skip before performing maintenance/install the center-pivot prop before crane-lifting the machine.

Position

Near the center-pivot prop and the maintenance prop of the skip.

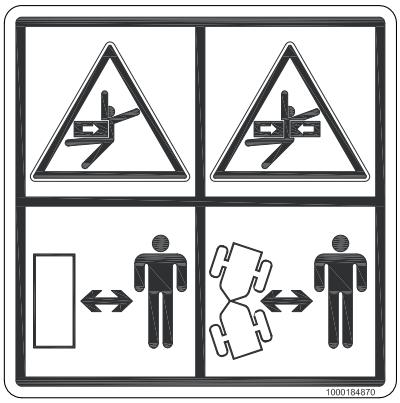

Fig. 15

Meaning

Distance/articulation range

Keep a safe distance from the machine during operation.

Position

On either side of the loader unit.

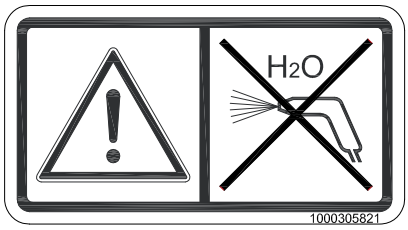

Fig. 16

Meaning

Do not point water jets directly at the cover.

Position

On the fuse box.

https://truckmanualshub.com/

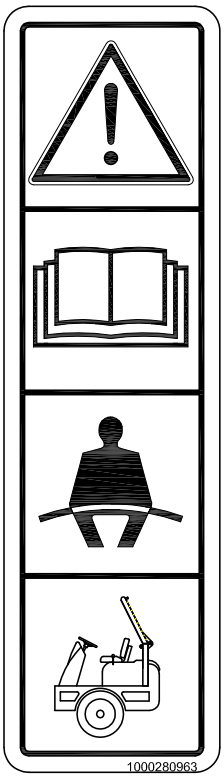

Fig. 17

Meaning

Vehicle operation is only allowed if the rollbar is raised and locked, and if the seat belt is fastened.

Position

On the B pillar (cabin) or on the ROPS bar on the right.

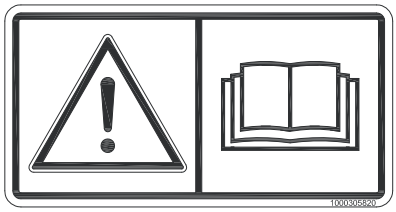

Fig. 18

Meaning

Trailer coupling

Position

On the vehicle rear on the left.

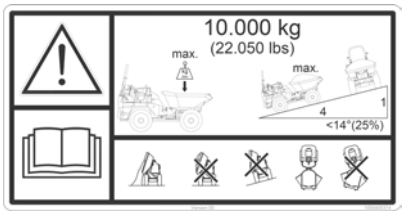

Fig. 19 Symbolic representation

Meaning

This label shows the following information/regulations:

- Maximum payload of machine.
- Tilt out only in straight machine position.
- Maximum permissible angle of inclination during machine travel across a slope.
- Do not tilt out the skip if material is stuck in the skip.

Position

At the rear of the skip.

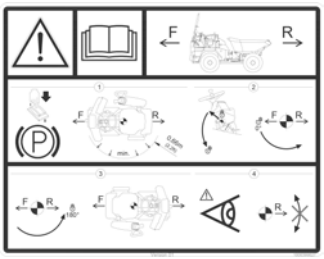

Fig. 20 Symbolic representation

Meaning

This label displays the seat console operation.

Position

Near the seat.

https://truckmanualshub.com/

Information labels

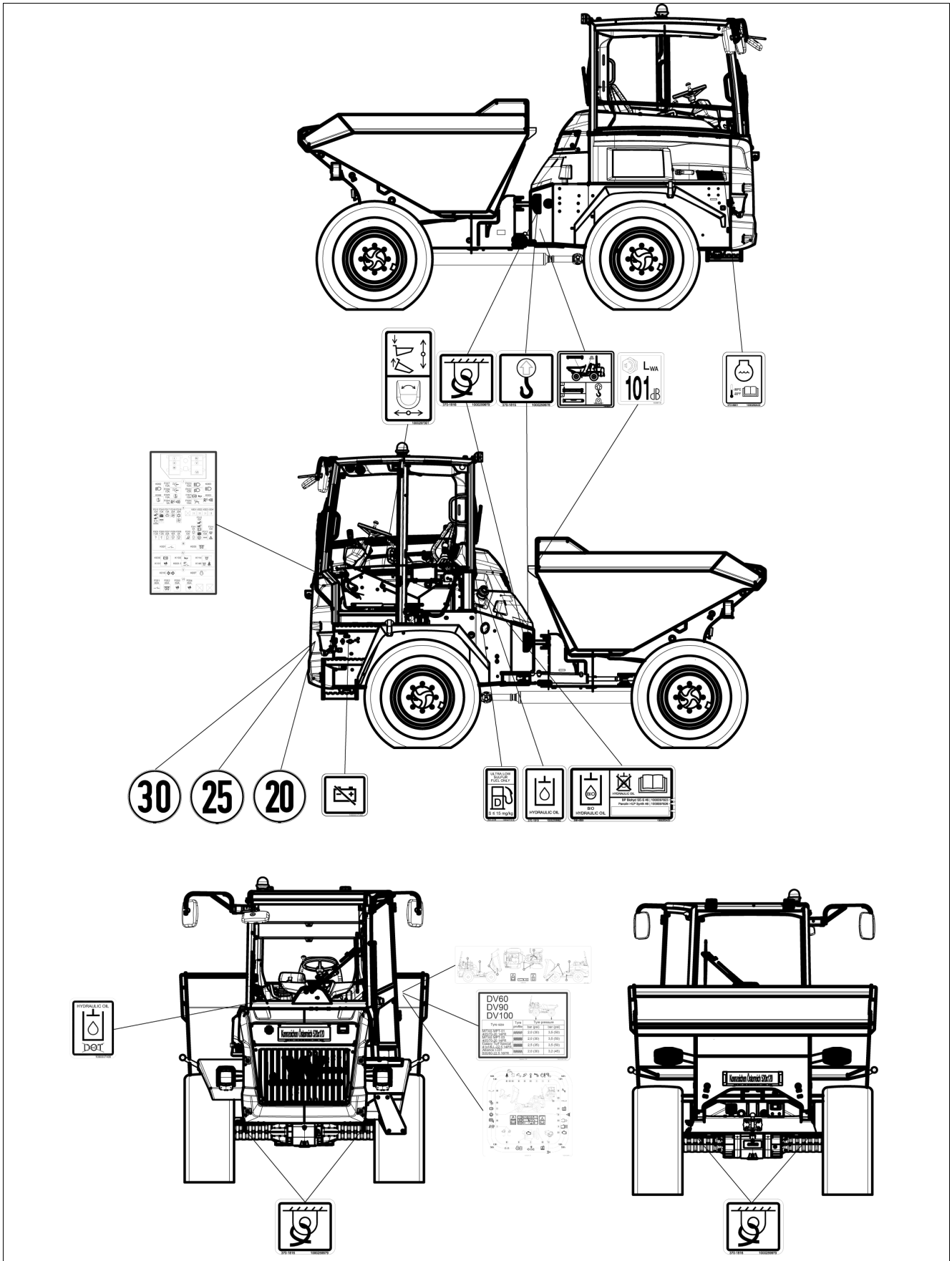

Fig. 21

https://truckmanualshub.com/

Fig. 22

Meaning

Fuses and relays

Position

On the exterior of the fuse cover

Fig. 23

Meaning

Machine lifting points

Position

At the lifting eyes

Fig. 24

Meaning

Machine tie-down points

Position

At the tie-down points

Fig. 25

Meaning

Only refuel with diesel fuel with a sulfur content of less than 15 mg/kg (=0.0015%)

Position

Next to the fuel tank filler inlet

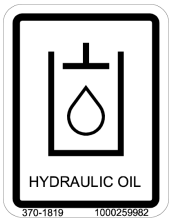

Fig. 26

Meaning

The reservoir contains hydraulic oil

Position

Next to the filler neck of the hydraulic oil tank

https://truckmanualshub.com/

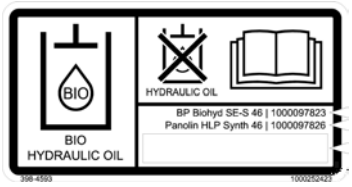

Fig. 27

Meaning (option)

The reservoir contains biodegradable hydraulic oil

Depending on the biodegradable hydraulic oil used, the triangle is cut out at the side

Position

Next to the filler neck of the hydraulic oil tank

Fig. 28 (symbolic representation)

Meaning

Indication of sound power level produced by the vehicle

L_{WA} = sound power level

The sound power level depends on the vehicle

Position

At the drive unit on the left

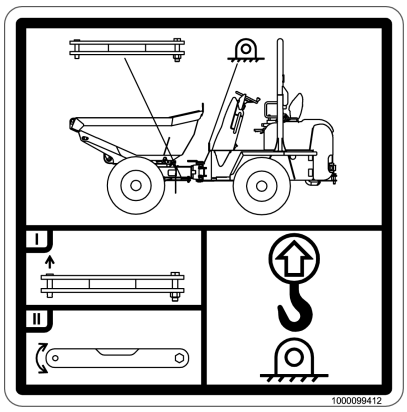

Fig. 29

Meaning

This label explains the raising process of the vehicle

Position

At the rear of the skip

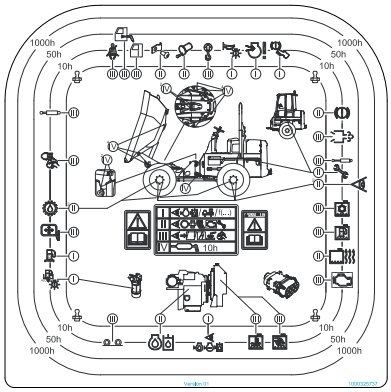

Fig. 30 (symbolic representation)

Meaning

Indication of maintenance intervals

Position

On the seat console on the right

Information

The maintenance labels depend on machine equipment and destination country.

Fig. 31 (symbolic representation)

Meaning

Identifies the design-specific vehicle speed

Position

At the rear left of the vehicle and on the vehicle frame on the left and the right

https://truckmanualshub.com/

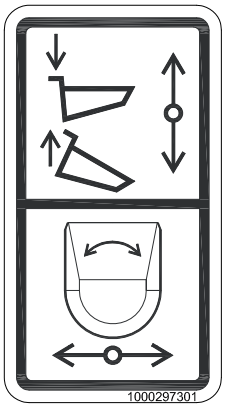

Fig. 32

Meaning

Raising/lowering and turning the skip (swivel skip option)

Position

On the right beside the seat

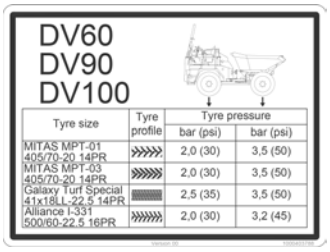

Fig. 33

Meaning

Tire pressure

Position

At the rear of the skip

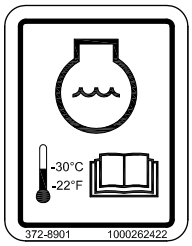

Fig. 34

Meaning

Thermal stability of coolant

Position

On the radiator in the engine compartment

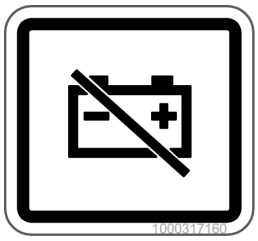

Fig. 35

Meaning

Battery master switch

Position

At battery master switch

Fig. 36

Meaning

The reservoir contains hydraulic oil. Do not insert brake fluid

Position

At the expansion reservoir

https://truckmanualshub.com/

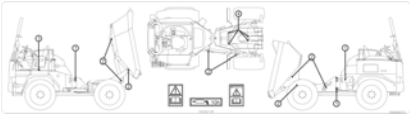

Fig. 37

Meaning

Indication of lubrication intervals

Position

At the rear of the skip

Information

Type, quantity, and position of the labels depend on options, country and vehicle.

https://truckmanualshub.com/

ANSI label (option)

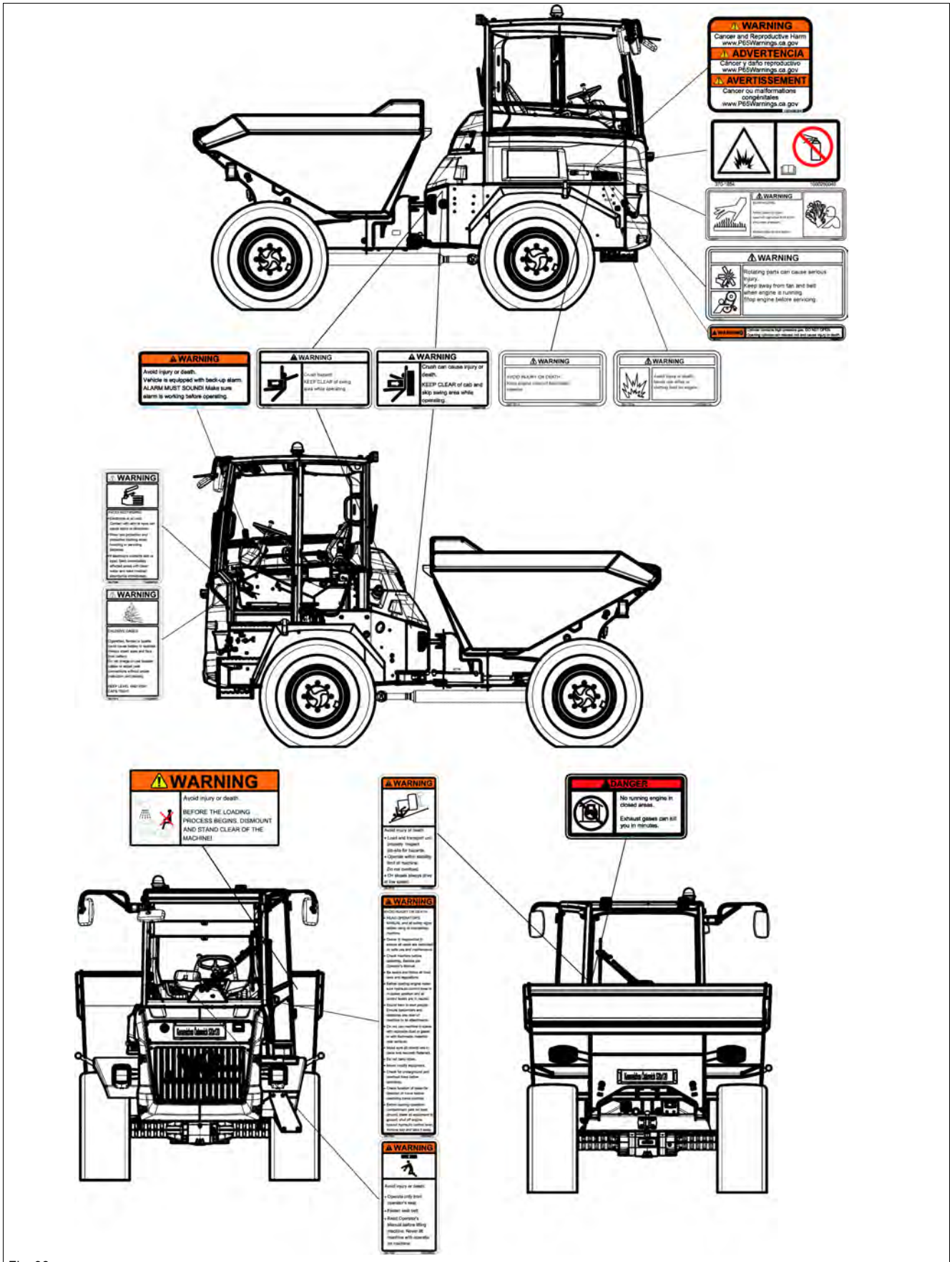

Fig. 38

https://truckmanualshub.com/

Fig. 39

Position

On the air filter in the engine compartment

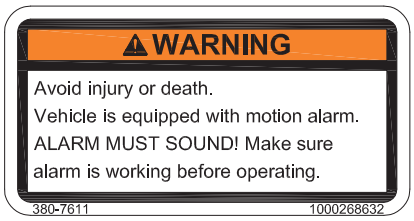

Fig. 40

Position

On the B pillar (cab) or on the ROPS bar on the right

Fig. 41

Position

On the air filter in the engine compartment

Fig. 42

Position

At the rear of the skip

https://truckmanualshub.com/

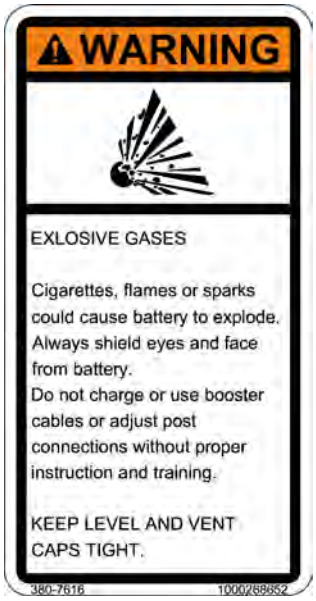

Fig. 43

Position

On the battery cover

Fig. 44

Position

On the battery cover

Fig. 45

Position

On the skip on the left and right

https://truckmanualshub.com/

Fig. 46

Position

On the B pillar on the left

Fig. 47

Position

On the B pillar on the left

https://truckmanualshub.com/

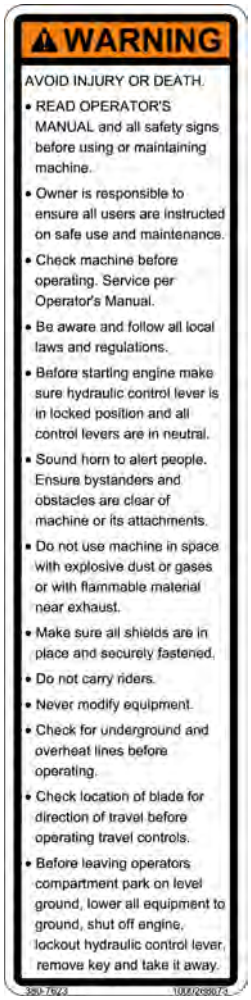

Fig. 48

Position

On the B pillar on the left

Fig. 49

Position

On the inside of the engine cover

Fig. 50

Position

On the maintenance flap on the left and right

https://truckmanualshub.com/

Fig. 51

Position

On the maintenance flap on the left

Fig. 52

Position

On the B pillar (cab) or on the ROPS bar on the right

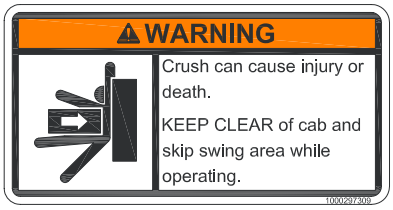

Fig. 53

Position

On the vehicle frame on the left and right

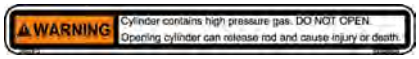

Fig. 54

Position

On the ROPS bar

Fig. 55

Position

At the parking brake switch

Fig. 56

Position

On the engine cover

https://truckmanualshub.com/

https://truckmanualshub.com/

4 Putting into operation

4.1 Cab/control console

CAUTION

Risk of injury when getting on and off!

Entering or exiting incorrectly can cause injury.

- ► Keep the mandatory stages and handhold clean and only use them for entering and exiting.
- ► Two hands and one foot must be always in contact with the vehicle when getting on and off.
- ► Face the vehicle as you enter and leave it.
- ► Immediately have damaged stages and handholds replaced. Do not operate the vehicle.

CAUTION

Risk of injury due to incorrectly locked door!

Unlocked cabin doors can cause crushing.

- ► When entering or leaving the cabin, the door must be locked in the arrester.
- ► Use the handholds for closing.

Getting on and off

Use footholds **A** and handles **B**. Do support yourself on the control elements.

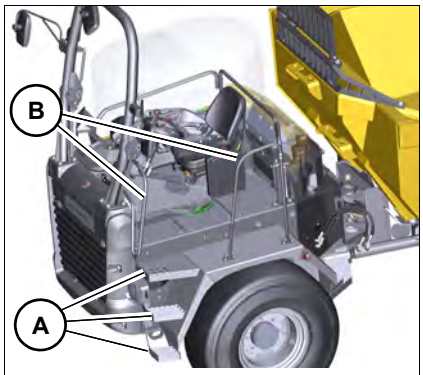

Fig. 57 Getting on and off

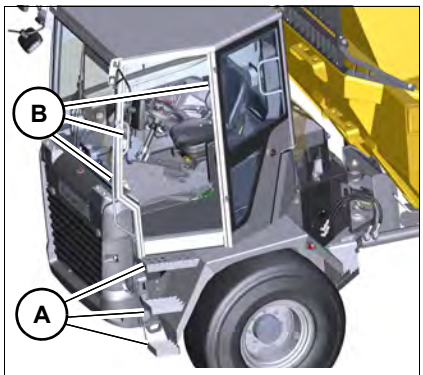

Fig. 58 Entry to and exit from the cabin

https://truckmanualshub.com/

Unlocking and locking the door

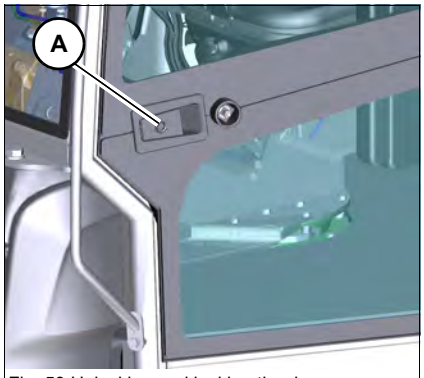

Fig. 59 Unlocking and locking the door

Unlocking

Turn the starting key in door lock **A** anticlockwise.

Lock

Turn the starting key in door lock **A** clockwise.

Opening and closing the door

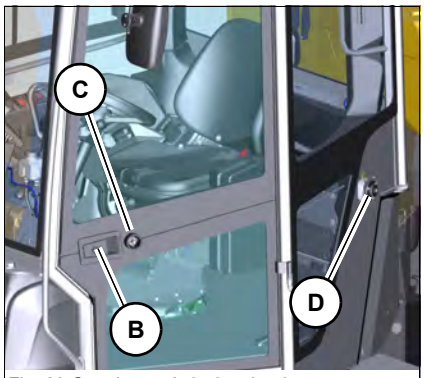

Fig. 60 Opening and closing the door

Open

Pull on door handle **B**.

Close

Close the door applying firm pressure.

Securing an open door

Press bracket **C** firmly against arrester **D**.

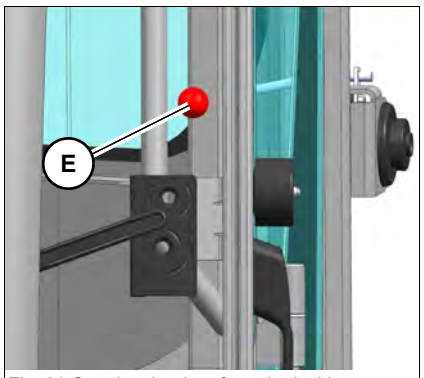

Fig. 61 Opening the door from the inside

Releasing the door arrester

Pull button **E**.

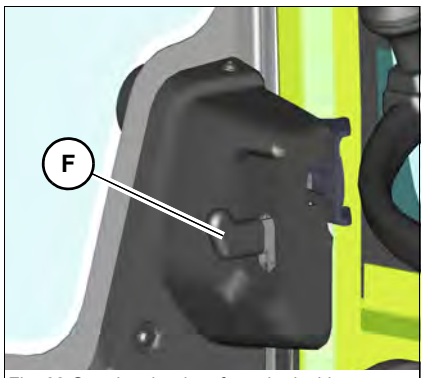

Fig. 62 Opening the door from the inside

Opening the door from the inside

Press lever **F** on the door lock downward.

https://truckmanualshub.com/

Emergency exit

Emergency exit is only possible on one side:

- Main travel direction: emergency exit left
- Side travel direction: emergency exit right

WARNING

Injury hazard when leaving the cabin in an emergency!

An emergency exit can cause serious injury or death.

► The vehicle has steps and handholds on just one side for a safe entry.

https://truckmanualshub.com/

Seat adjustment

WARNING

Danger of accident due to seat adjustment during vehicle operation!

Adjusting the seat during vehicle operation can cause serious injury or death.

- ► Adjust the seat before putting the machine into operation.
- ► Ensure that the levers are locked into place.

WARNING

Spinal cord injury due to incorrect seat adjustment!

An incorrect weight adjustment can cause injury to the spinal cord.

- ► Ensure that the seat is correctly adjusted to the operator's weight before vehicle travel or operation.
- ► Machine operation is prohibited for operators weighing less than 50 kg (110 lbs) or more than 140 kg (309 lbs).

Information

The seat can be fitted with an optional operator presence switch. The traveling drive shifts to neutral as soon as the operator is not seated for more than 5 seconds.

Functional check of operator presence switch (option)

Fig. 63

Perform a functional check once a day.

1. Sit down on the seat.
2. Start the vehicle.
3. Press the service brake.
4. Put forward-reverse control **A** in position **1** and check whether vehicle drives.
5. Set the forward-reverse control **A** to position **N**.
6. Remove the weight off the seat for at least five seconds.
7. Carefully bring forward-reverse control **A** to position **1**.
   ➥ The machine must not start moving.

Contact a Wacker Neuson service center immediately if the machine starts.

https://truckmanualshub.com/

The seat can be adjusted as follows:

Fig. 64 Symbolic representation

A Backrest
B Adjusting the weight
C Horizontal seat adjustment

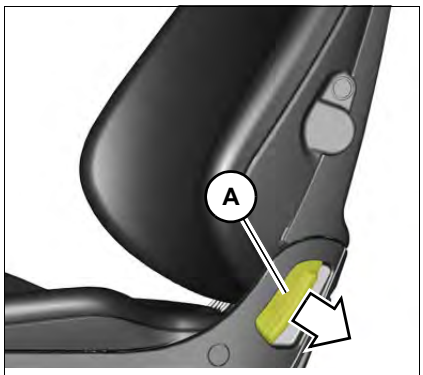

Fig. 65 Adjusting the backrest

Adjusting the backrest

1. Sit down on the operator seat.
2. Actuate handle **A** and move the backrest to the required position at the same time.
3. Release handle **A**.

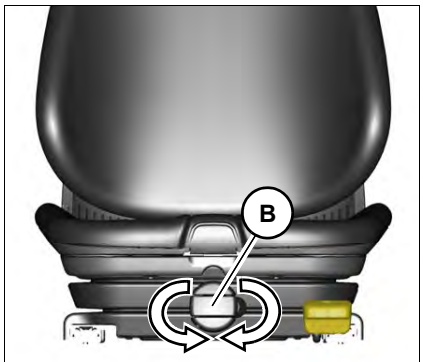

Fig. 66 Adjusting the weight

Adjusting the weight

1. Sit down on the operator seat.
2. Fold out the crank **B**.
3. Turn the crank **B**.

https://truckmanualshub.com/

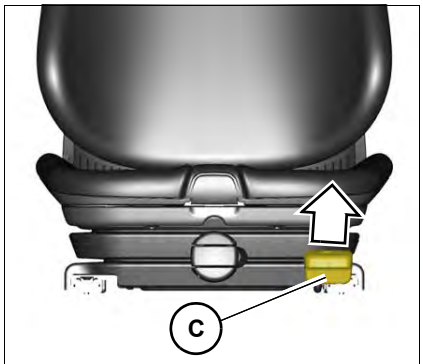

Fig. 67 Set in lengthwise direction

Set in lengthwise direction

1. Sit down on the operator seat.
2. Pull lever **C** upward and at the same time lock the seat in the required position.
3. Release the lever **C**.

https://truckmanualshub.com/

Seat belt

Fasten seat belt

WARNING

Injury hazard if the seat belt is not fastened correctly or not at all!

Fastening the seat belt incorrectly, or not at all, can cause serious injury or death.

- ► Firmly fasten your seat belt over your hips before starting vehicle operation.
- ► Do not fasten a twisted seat belt, and do not place it over hard, edged or fragile items in your clothes.
- ► Ensure that the buckle is inserted (pull test).
- ► Do not use seat belt extensions.

WARNING

Injury hazard due to damaged or dirty seat belt!

A damaged or dirty seat belt can cause serious injury or death.

- ► Keep the seat belt and buckle clean, and check them for damage.
- ► Have a damaged seat belt and buckle immediately replaced by an authorized service center.
- ► Have the seat belt immediately replaced after every accident and the load-bearing capacity of the fastening points and seat fixtures checked by a Wacker Neuson service center.

https://truckmanualshub.com/

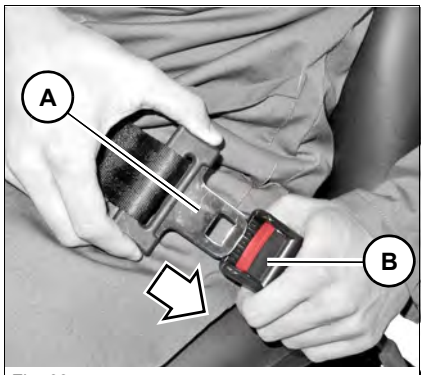

Fig. 68

Insert buckle latch **A** into seat belt buckle **B** until it engages.

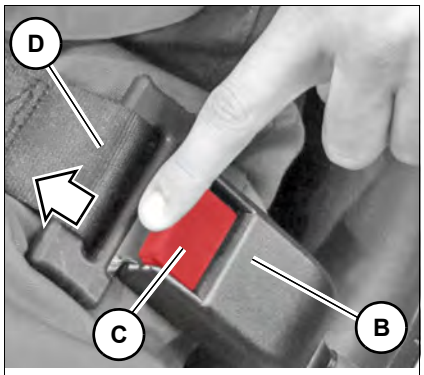

Fig. 69

Release seat belt

Press the red push button switch **C** on seat belt buckle **B** until the buckle latch comes out.

➥ Seat belt **D** is automatically retracted.

https://truckmanualshub.com/

Seat console

WARNING

Danger of crushing when rotating the seat console!

Foot injuries may occur when rotating the seat console.

- ► Place your feet on the seat console.
- ► Rotate the seat console according to the instructions.

Information

If the forward-reverse control **A** is in position **1** or **2**, the seat console will pivot a maximum of 7°. The vehicle brakes slowly and the drive is switched to **N** (neutral).

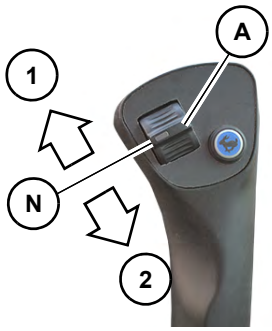

Fig. 70 Symbolic photo

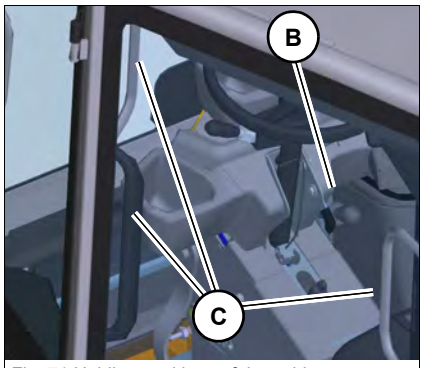

Fig. 71 Holding positions of the cabin

Rotate the seat console

1. Sit down on the operator seat.
2. Place your feet on the seat console.
3. Apply the parking brake.
4. Set the forward-reverse control **A** to position **N**.
5. Ensure that no objects are in the radius of 0.66 m (2.2 ft) of the seat console.
6. Release lever **B** to lock the seat console.
7. Rotate the seat console by 180°.

Mode	Position
Main travel direction	Turn counterclockwise at the next provided holding positions **C**.
Side travel direction	Turn clockwise at the next provided holding positions **C**.

8. Lever **B** automatically locks into place.
9. Ensure that the seat console is locked.

https://truckmanualshub.com/

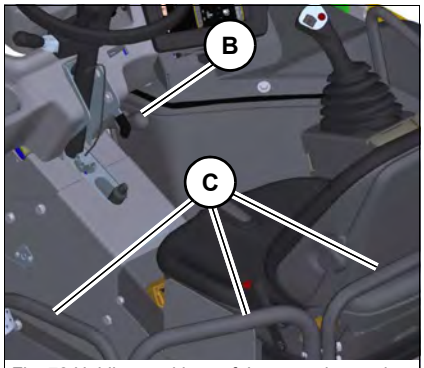

Fig. 72 Holding positions of the control console

https://truckmanualshub.com/

Visual aids

WARNING

Risk of injury to persons in the danger zone!

Persons in the danger area are possibly not seen when reversing the vehicle and this can cause accidents with serious injuries or death.

► Adjust the existing visual aids (for example the rearview mirrors) correctly.

► Interrupt work immediately if persons enter the danger zone.

► Pay attention to the movements and changing positions of persons.

WARNING

Accident hazard due to restricted field of vision on the job site!

Accidents resulting in serious injury or death can be caused by a restricted field of vision.

► Do not allow anyone to stay in the danger zone.

► Use suitable visual aids if necessary (for example a camera, mirrors, bystander).

► Additional equipment must not be installed if it impairs visibility.

WARNING

Accident hazard due to incorrect adjustment of visual aids!

Incorrectly adjusted visual aids can cause serious injury or death.

► Before starting work, ensure that all visual aids are clean, functional and adjusted in accordance with the instructions in this Operator's Manual.

► If no image appears on the camera monitor, stop vehicle operation. Only put the vehicle back into operation once the damage has been repaired.

► Immediately replace damaged or broken visual aids.

► Convex mirrors enlarge, reduce or distort the field of view.

► The operator must follow the national and regional regulations.

- Use safety-oriented ladders and work platforms for adjustment work on the vehicle.
- Do not use machine components as a climbing aid.
- Set the skip to travel position before adjusting the mirrors.

https://truckmanualshub.com/

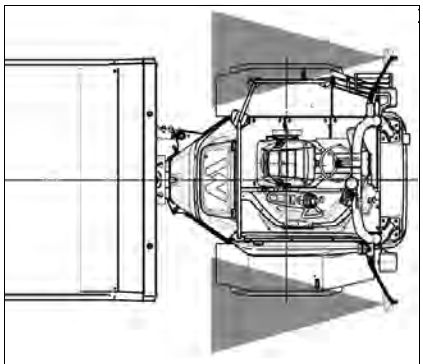

Fig. 73

Adjusting the outside rearview mirrors on left and right

- Ensure sufficient visibility from the seat of the work areasite.
- Ensure maximum visibility to the loader unit.
- Ensure visibility of the rear left edge of the vehicle in the mirror on the left.
- Ensure visibility of the rear right edge of the machine in the mirror on the right.

https://truckmanualshub.com/

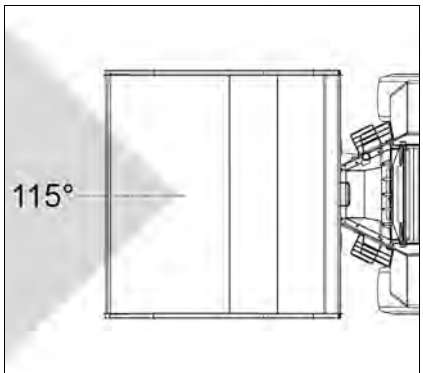

Fig. 74

Visual range

The camera has a horizontal visual range of 115°.

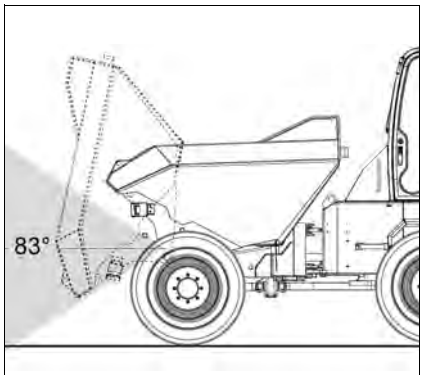

Fig. 75

The camera has a vertical visual range of 83°.

Information

The camera's field of vision is restricted if the skip is tilted.

Fire extinguisher

A fire extinguisher is not available from Wacker Neuson.

Contact a Wacker Neuson service center for the installation of a fire extinguisher (DIN-EN 3).

Information

Ensure that the fire extinguisher is firmly fastened during machine operation. Inspect the holder and the fire extinguisher regularly. Observe the manufacturer's indications.

https://truckmanualshub.com/

Protective structures

Protective structures are additional elements that protect the operator against dangers. These elements can be installed later on or as standard equipment.

Rollbar

- The rollbar has been specially designed for protection in case of an accident.
- TOPS/ROPS tested rollbar.

Canopy/cab (option)

The cabin has been specially designed for protection in case of an accident.

- ROPS/TOPS tested cabin.

The cabin complies with the FOPS level II requirements according to EN ISO 3449:2008.

DANGER

Accident hazard due to modified cabin or protective structures!

Modifications (for example drilling) weaken the structure and causes serious injury or death.

► No drilling, cutting or grinding.

► Do not install any brackets.

► No welding, straightening or bending.

► Replace the complete protective structure if it is damaged, deformed or cracked.

► Contact a Wacker Neuson service center in case of doubt.

► Retrofit, assembly and repair work may only be performed by a Wacker Neuson service center.

► Replace self-locking fasteners.

► Screws to which an adhesive has been applied must be cleaned with a suitable cleanser before they are re-used.

Information

Machine operation is only allowed with a correctly installed and intact rollbar or correctly installed and intact cabin.

For additional protection, only use correctly installed and intact Wacker Neuson protective structures that have been released for the vehicle.

https://truckmanualshub.com/

Responsibility for vehicle equipped with protective structures

The decision regarding the necessary protective structures (type and category I or II) must be made by the company/person operating the machine and depends on the specific work situation.

The vehicle operator must observe the national regulations and must inform the operator on the protective structure to be used in a specific work situation.

Cabin FOPS category II

Information

The cabin complies with the FOPS category level II requirements according to EN ISO 3449:2008

- ► The machine owner must ensure that the hazard situation is evaluated and that the national regulations are observed.
- ► The machine owner must ensure that only work is performed that does not require any higher protection.
- ► Accidents cannot be fully avoided despite equipping a vehicle with protective structures.

https://truckmanualshub.com/

Rollbar

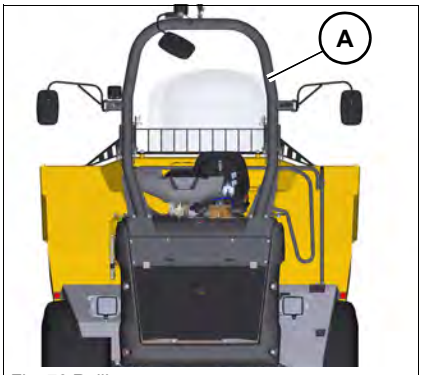

Fig. 76 Rollbar

Rollbar **A** is included in the machine's standard equipment.

DANGER

Accident hazard due to falling objects!

Causes serious injury or death.

- ► Vehicle operation is only allowed if the rollbar is raised and locked, and if the seat belt is fastened.
- ► Wear protective equipment (for example protective clothing, safety glasses).
- ► Operation in areas involving a risk of falling objects is prohibited.
- ► Operation in areas with fragments flying around is prohibited.

Drive with a folded down rollbar

In case of a low clearance height, the rollbar can be lowered for a short distance through a passage.

DANGER

Accident hazard during machine operation with a lowered rollbar!

Can cause serious injury or death.

- ► Only drive on flat and load-bearing subsurfaces.
- ► Do not fasten the seat belt in order to be able to leave the machine immediately in an emergency.
- ► Wear protective equipment (for example protective clothing, safety glasses).

However, the following conditions must be fulfilled:

- Obtain the approval of the appropriate national authority.
- Working with a lowered rollbar is prohibited under all circumstances.
- The machine must make no tipping movement.

Information

The rollbar weight is about 100 kg (220 lb) depending on the model. A gas strut is installed to support raising and lowering. However, inspite of the rollbar being equipped with a gas strut, only lower it with two qualified persons from the side of the machine.

https://truckmanualshub.com/

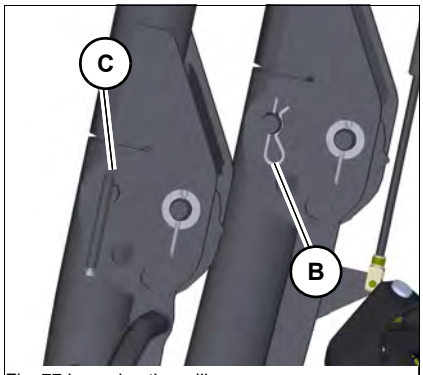

Fig. 77 Lowering the rollbar

Lowering the rollbar

1. Park the machine on level ground.
2. Remove safety pin **B**.
3. Remove lock pin **C**.
4. Slowly fold down the rollbar **A**.
5. Affix the safety bolt **C** in the desired position.
6. Secure with safety pin **B**.

Raising the rollbar

1. Park the machine on level ground.
2. Remove safety pin **B**.
3. Remove safety bolt **C**.
4. Raise the rollbar **A**.
5. Affix the lock pin **C** in the desired position.
6. Secure with safety pin **B**.

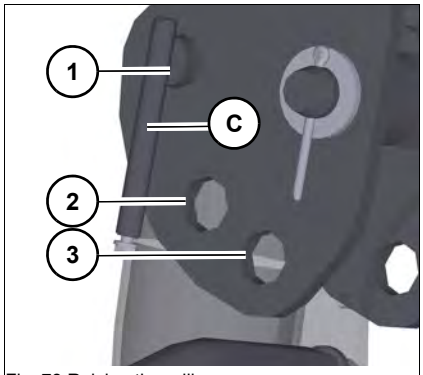

Fig. 78 Raising the rollbar

Position the rollbar

ROPS bar	Position
Raise	Affix the safety bolt **C** in position (**1**).
Folded (49°)	Affix the safety bolt **C** in position (**2**).
fold down (78°)	Affix the safety bolt **C** in position (**3**).

https://truckmanualshub.com/

Skip grid (option)

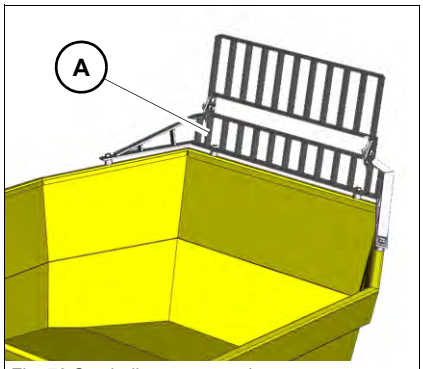

Fig. 79 Symbolic representation

Skip grid **A** protects the cabin and the operator's compartment against falling material or against an excavator bucket penetrating the cabin during loading.

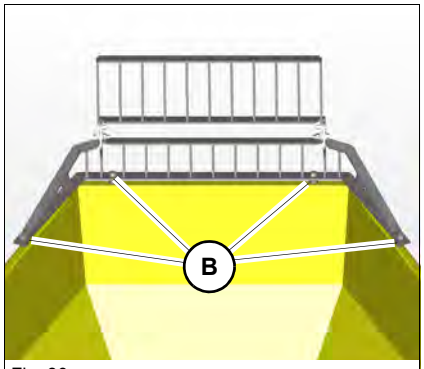

Fig. 80

Assembly:

1. Stop and park the vehicle. Stop the engine – *see "Preparing lubrication" on page 7-6*.
2. Put the skip grid on the assembly points with at least two persons. Use suitable external climbing aids.
3. Tighten the four screws **B** to 410 Nm (302 ft.lbs).

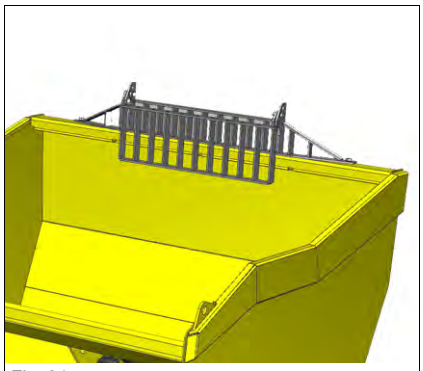

Fig. 81

Lowering/raising the skip grid

The skip grid must be lowered during machine travel on public roads.

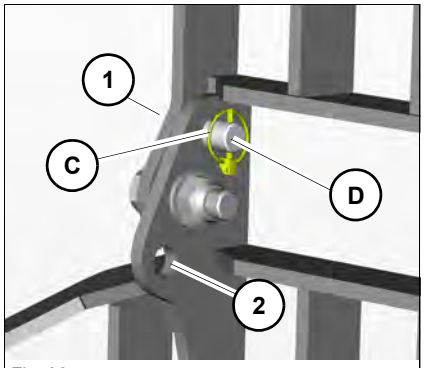

Fig. 82

Function	Position
Fold-up	Insert and secure the pin in hole 1
Fold-down	Insert and secure the pin in hole 2

https://truckmanualshub.com/

Document box

The operator’s manual is stored in the document box to the left next to the seat.

12 V connection (option)

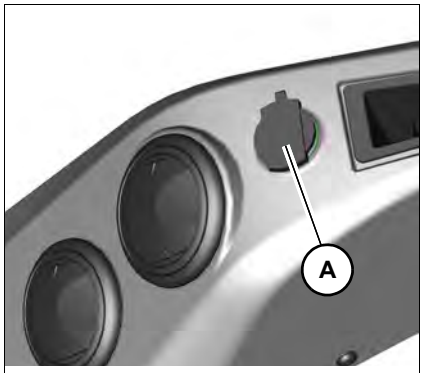

Fig. 83

A 12 V connection **A** is located beside the storage compartment of the cab.

4.2 Overview of control elements

This chapter describes the controls, and contains information on the function and handling of the indicator lights and controls.

The pages stated in the table refer to the description of the controls.

https://truckmanualshub.com/

Control stand

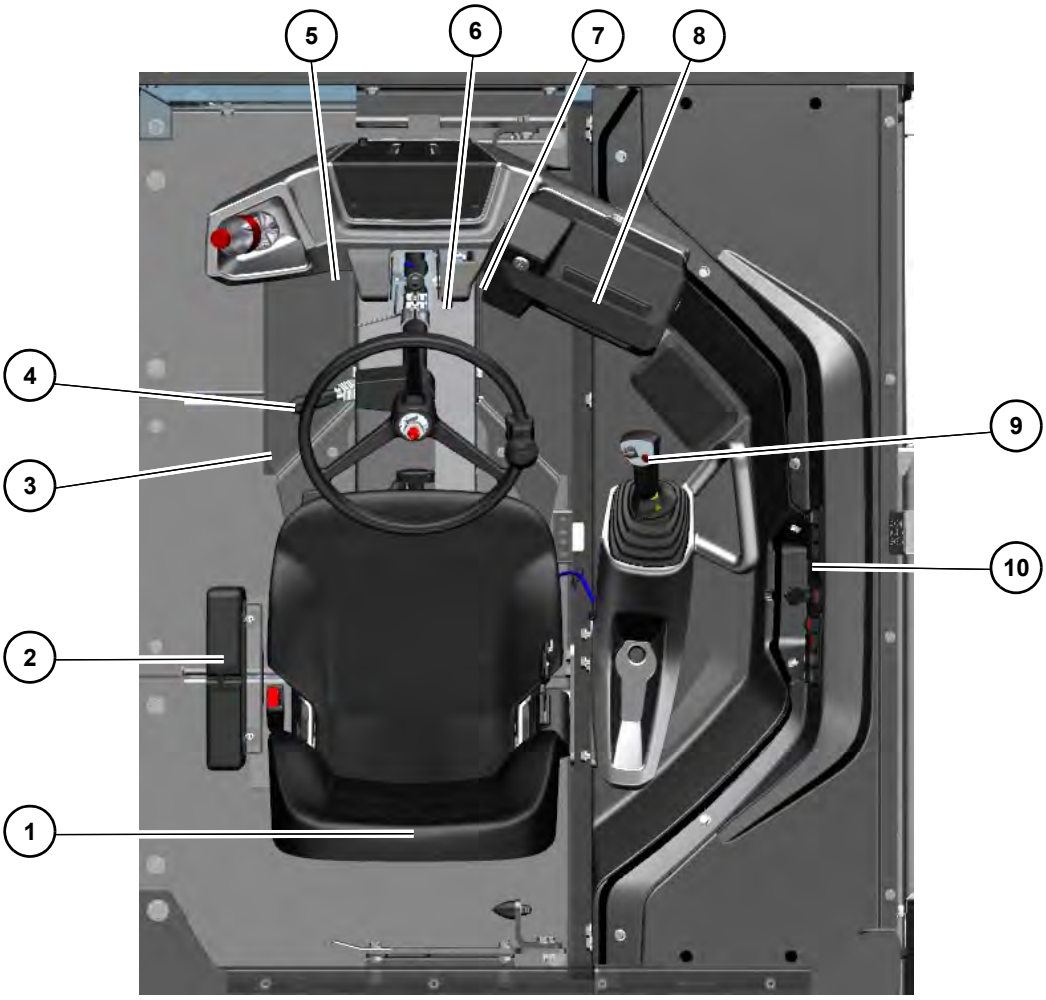

Fig. 84 Overview of control elements

Designation	See page
1 Seat with seat belt	4-4
2 Document box	4-19
3 Seat console	4-9
4 Steering-column lever	5-13
5 Service brake	5-3
6 Seat console lever	4-9
7 Accelerator pedal	5-2
8 Display	4-24
9 Joystick	4-22
10 Switch panel	4-22

https://truckmanualshub.com/

Cabin (option)

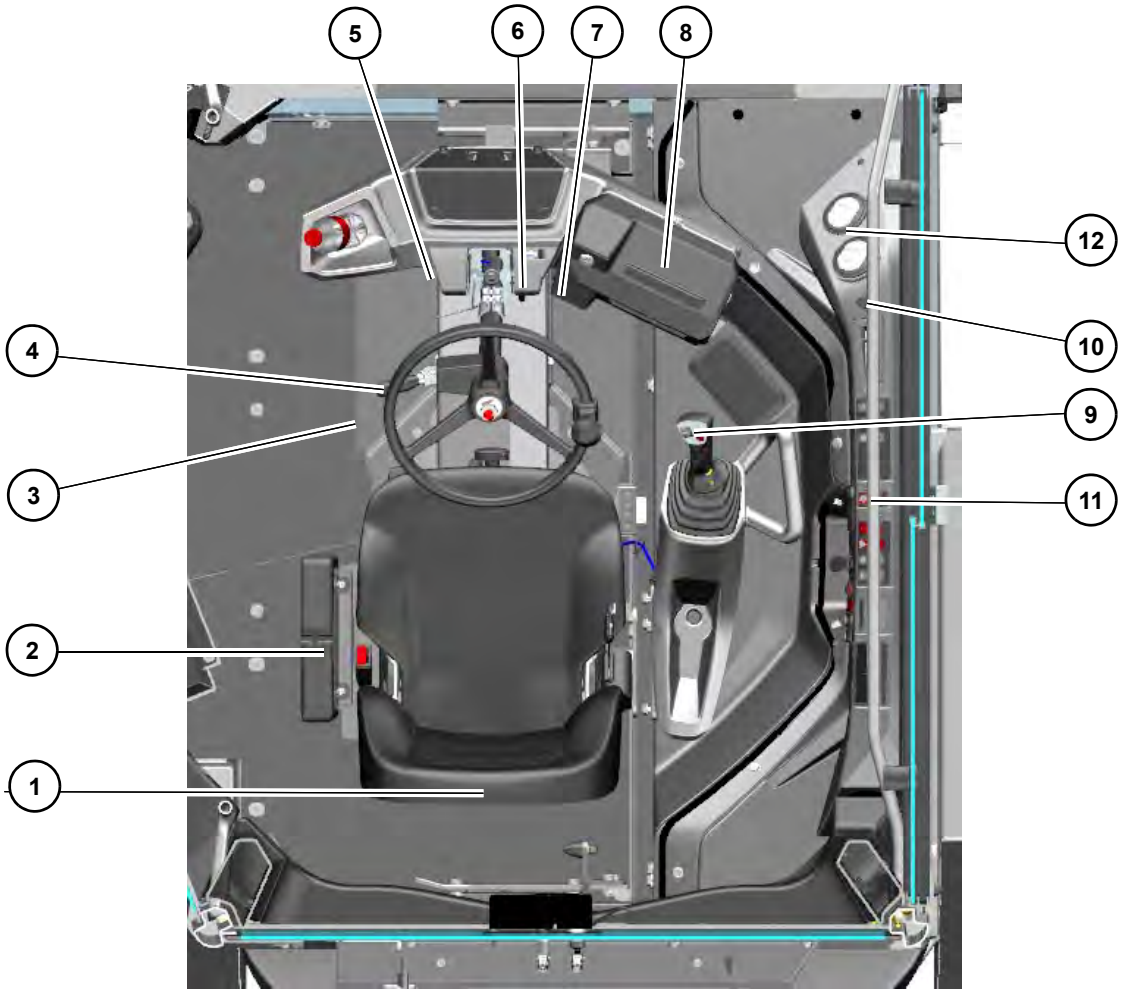

Designation	See page
1 Seat with seat belt	4-4
2 Document box	4-19
3 Seat console	4-9
4 Steering-column lever	5-13
5 Service brake	5-3
6 Seat console lever	4-9
7 Accelerator pedal	5-2
8 Display	4-24
9 Joystick	4-22
10 12 V connection	4-19
11 Switch panel	4-22
12 Ventilation	5-18

https://truckmanualshub.com/

Control elements and switches

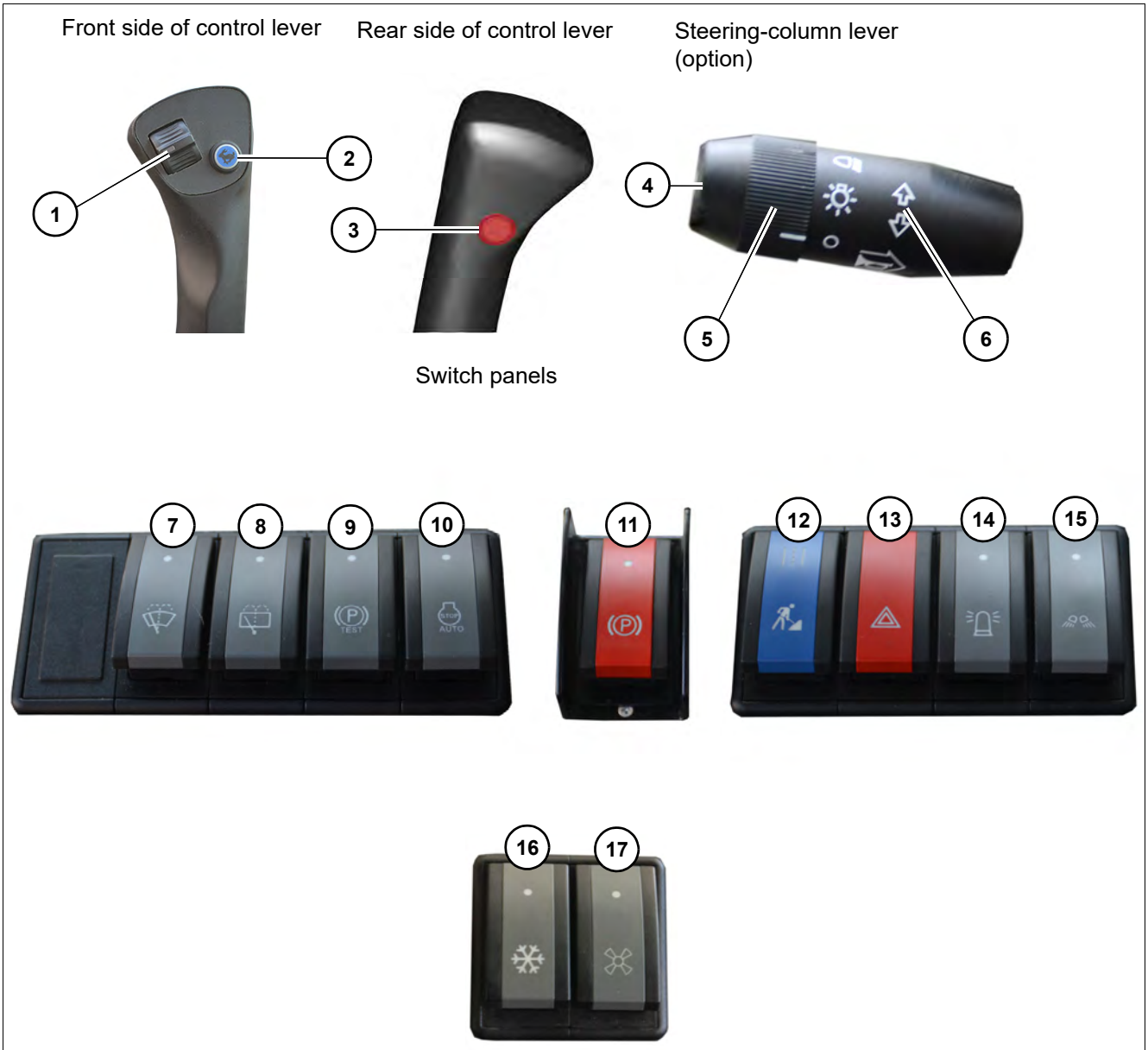

Fig. 86

Designation		See page
1	Selection of travel direction	
2	Speed changeover	
3	Horn	
4	Horn (option)	
5	Road travel lights (option)	
6	Turn indicators (option)	
7	Front window wiper/wash system (option)	
8	Rear window wiper/wash system (option)	
9	Test parking brake	
10	Auto stop (option)	

https://truckmanualshub.com/

11 Parking brake
12 Road/working mode
13 Hazard warning system (option)
14 Rotating beacon (option)
15 Working lights (option)
16 Air conditioning (option)
17 Ventilation (option)

https://truckmanualshub.com/

4.3 Control and warning lights overview

Display element/multifunctional display

The display element and the multifunctional display informs the operator of the operating states, required maintenance, or possible machine malfunctions.

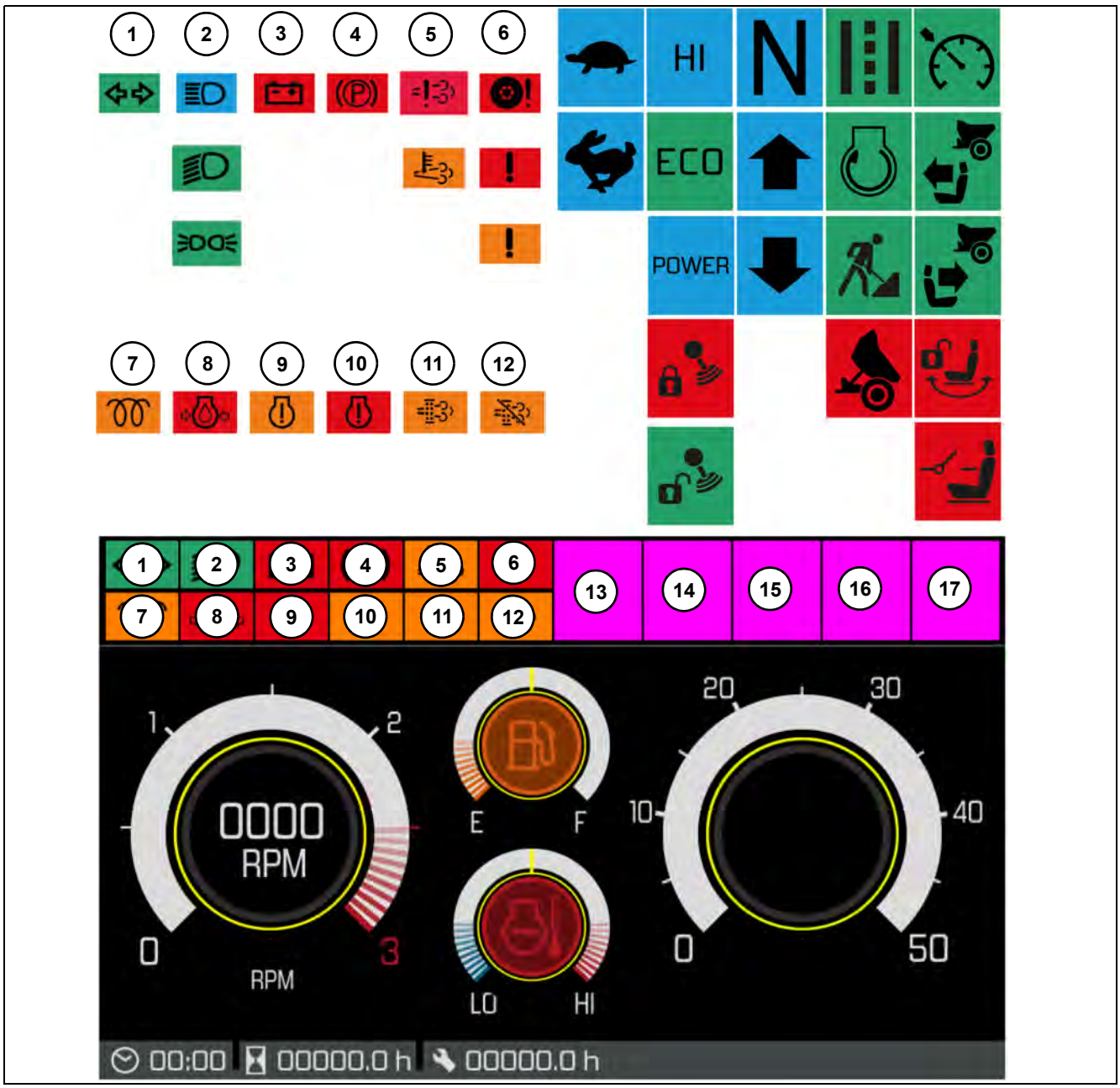

https://truckmanualshub.com/

Information

The indicator lights are tested when the starter is engaged and are illuminated for a few seconds.

Information

The indicator lights shown are only selected examples. All possible display variants are shown on the following pages.

https://truckmanualshub.com/

nr.	Symbol	Color	Designation	See
1		Green	Turn indicators	5-15
2		Blue	High beam	5-13
		Green	Low beam	
		Green	Parking light	
3		Red	Charge indicator light	--
4		Red	Parking brake	5-3
5		Red	Fault at exhaust after-treatment	--
		Yellow	High exhaust-gas temperatures	--
6		Red	Drive combined fault	--
		Red	ECU error indicator light	--
		Yellow	ECU warning light	--
7		Yellow	Preheating	4-36
		Red	Water in fuel tank	
8		Red	Engine oil pressure high	--
9		Yellow	Engine warning	--
10		Red	Engine stop	--
11		Yellow	Regeneration required	--
12		Yellow	Regeneration disabled/interrupted	--

https://truckmanualshub.com/

nr.	Symbol	Color	Designation	See
13	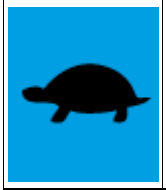	Blue	Speed range 1	5-2
		Blue	Speed range 2	
14	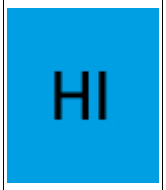	Blue	Engine operating mode	--
		Green		
	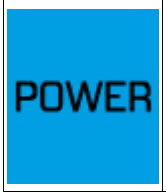	Blue		
		Red	Work hydraulics deactivated	5-7
		Green	Work hydraulics activated	

https://truckmanualshub.com/

nr.	Symbol	Color	Designation	See
15	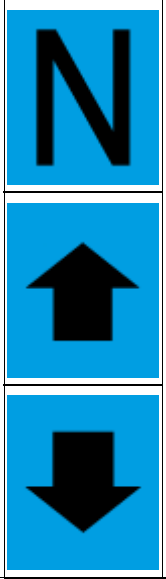	Blue	Travel direction	5-6
16		Green	Road-travel mode	5-7
		Green	Operating mode	5-7
		Red	Skip tipped	--

https://truckmanualshub.com/

nr.	Symbol	Color	Designation	See
17		Green	Main travel direction	1-5
		Green	Side travel direction	
		Red	Seat not engaged	4-9
		Red	Seat not occupied	4-4

https://truckmanualshub.com/

Error symbols

If an error occurs, the following symbols are displayed for a few seconds in the multi-functional display.

Error symbols are listed according to priority.

Symbol	Designation	Symbol	Designation
	Air filter		**Overspeed**
	Hydraulic pump / Traveling drive		**Oil pressure**
	Hydraulic oil temperature		**Charge indicator light**
	CAN-Bus	--	--

https://truckmanualshub.com/

Symbol	Designation	Symbol	Designation
	Main travel direction		
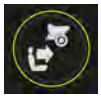	Side travel direction		Charge condition
	Forward travel direction		Parking brake
	Neutral driving direction		Seat not engaged
	Reverse travel direction		Seat not occupied
	Speed range 1		Overspeed
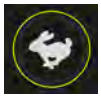	Speed range 2		Cold drive lockout
	Engine start interruption		Speed increase
	Overspeed		Engine auto stop
	Work hydraulics deactivated		Engine auto stop deactivated
	Work hydraulics activated		Engine start interruption
	Operating mode		HI operation mode
	Road-travel mode		Eco operation mode
	Maintenance		POWER operation mode

https://truckmanualshub.com/

Status indicators

Symbol	
	Starter/engine start starting key in position **1**
	Engine operating mode
	Coolant temperature If the coolant temperature is too high the symbol shown on the left appears and the buzzer sounds. • Let the engine run at high idling speed without any load. • Wait until the temperature drops and the indicator light goes out. • Stop the engine. • Check the coolant level.
	Fuel tank capacity Refuel if the symbol shown on the left appears.
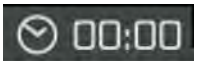	**Time**
	Operating hours
	Maintenance meter Counts the remaining engine operating hours down to the next maintenance work due.

https://truckmanualshub.com/

Machine status multifunctional display

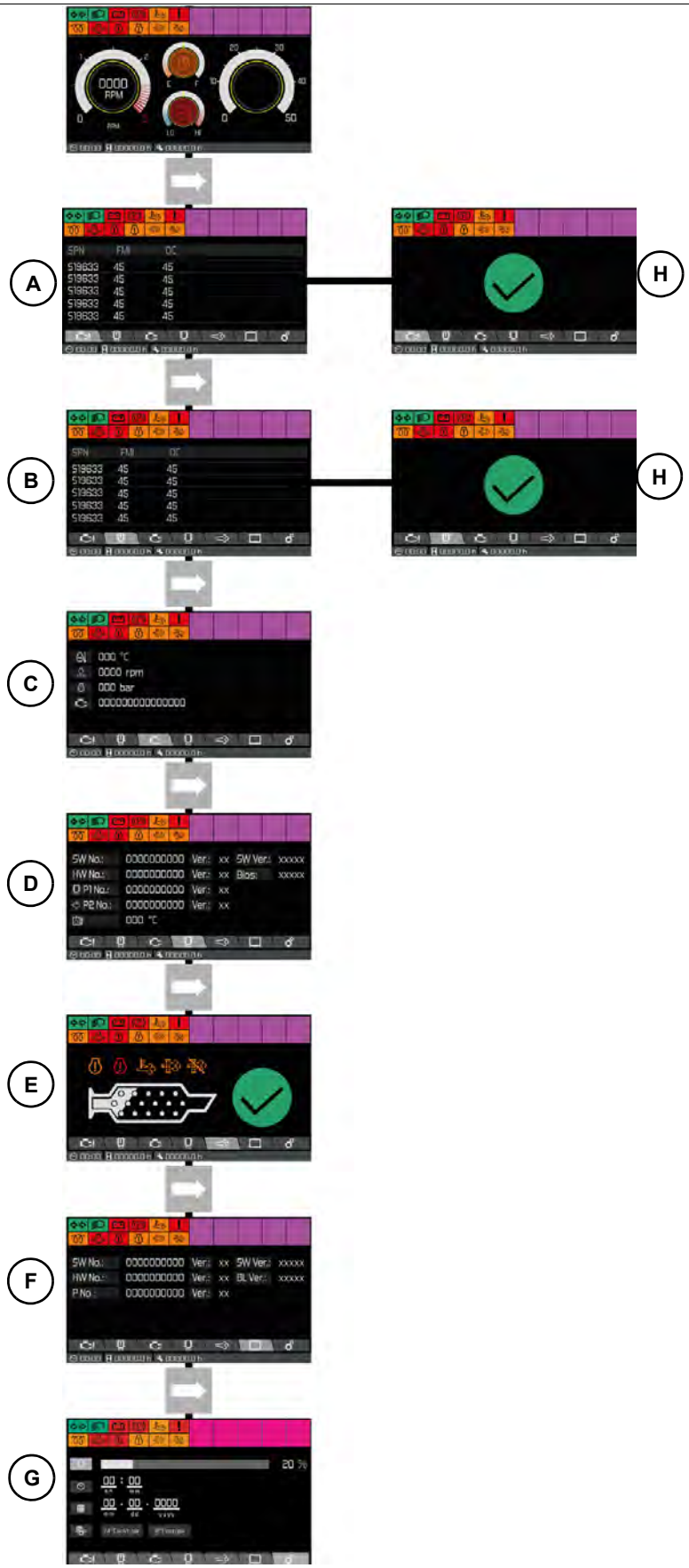

Abb. 87

https://truckmanualshub.com/

A: Engine error
B: Controlling error
C: Engine data
D: Machine data
E: Diesel particulate filter data (Option)
F: Dispaly data
G: Adjustment of multi-functional display
H: No error

Adjusting the multi-functional display

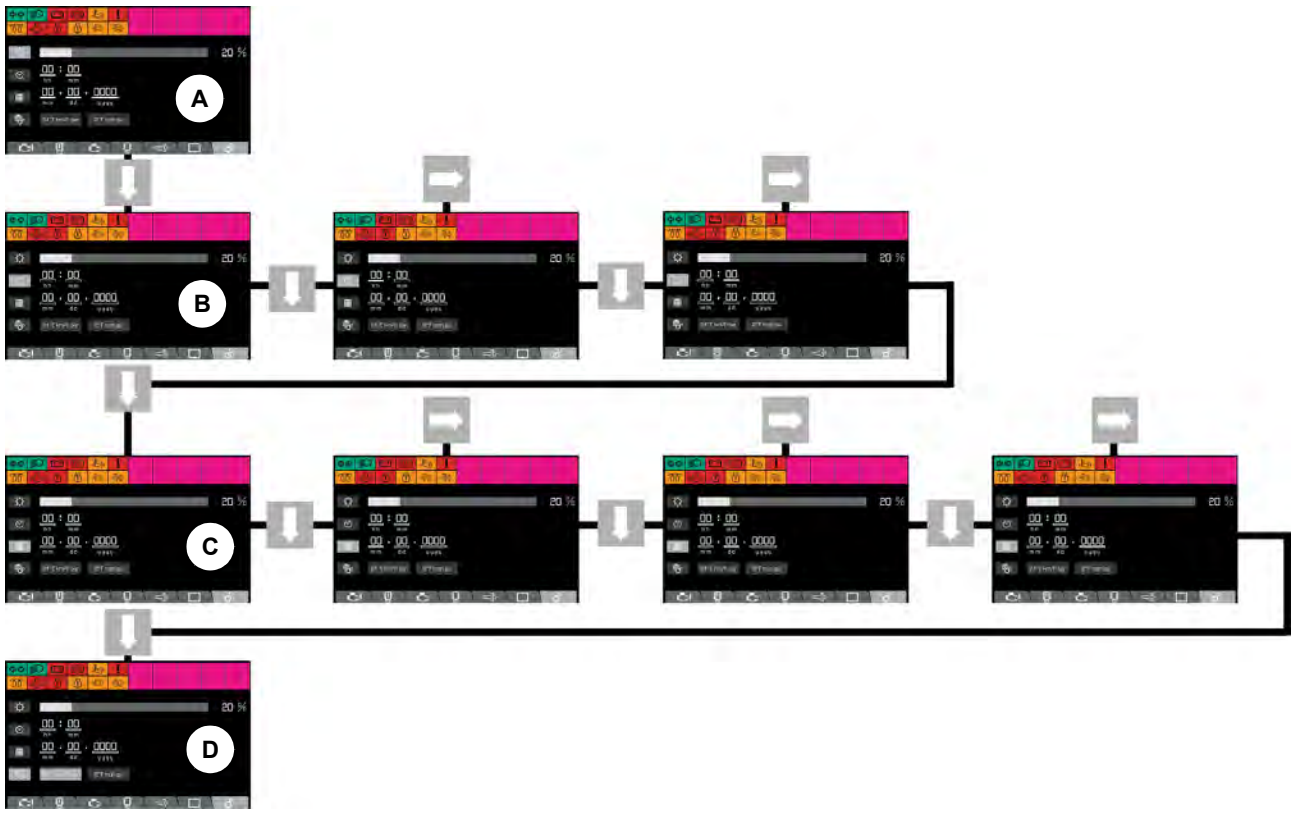

Abb. 88

A: Brightness
B: Time
C: Date
D: 12h/24h

https://truckmanualshub.com/

Enlarge camera image

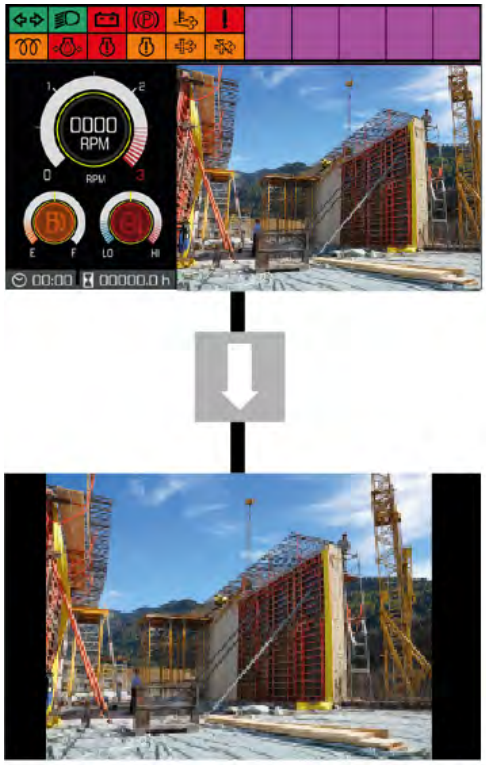

Abb. 89

https://truckmanualshub.com/

4.4 Preparatory work

Important information before putting the vehicle into operation

Perform a visual check before starting work:

- There must be no leaks.
- There must be no damaged or loose parts.
- Do not allow anyone to stay in the danger zone.

Only operate the vehicle from the seat with the seat belt fastened.

Before using the vehicle in work operation for the first time, Wacker Neuson recommends trying out the vehicle on open ground without any obstacles.

When using the vehicle, check the surroundings constantly in order to identify potential hazards in time.

Before starting work or when changing operators, ensure that all visual aids are clean, functional and adjusted in accordance with the instructions in this operator's manual.

The operator must follow the national and regional regulations.

Follow the safety instructions in the safety chapter *– see chapter " Operation" on page 2-12*

Requirements and information for the operating personnel

The vehicle may only be put into operation by authorized personnel who have been instructed *– see chapter "2.3 Conduct" on page 2-3*.

The operator must know and adhere to the requirements and risks at the workplace.

Perform daily maintenance according to the lubrication and maintenance plan *– see chapter "7.2 Maintenance overview" on page 7-2*.

Do not operate the machine if the standard protective equipment (for example the ROPS cab) has been removed.

Material stuck in the skip can cause a tipping hazard. Remove stuck or frozen material from the skip with a suitable tool.

No parts of the body or clothes may protrude outside the machine during operation.

https://truckmanualshub.com/

Putting into operation for the first time and running-in period

Before putting the vehicle into operation for the first time, check whether the equipment supplied with the vehicle is complete.

- Check the fluid levels according to chapter “**Maintenance**”.

Each vehicle is correctly adjusted and checked before it is delivered.

Handle the vehicle carefully during its first 50 operating hours.

- Do not load a cold engine.
- Warm up the vehicle at low engine speed and little load, do not warm it up at a standstill.
- Do not change engine speed abruptly.
- Avoid using the vehicle under heavy loads or at high speeds.
- Avoid abrupt acceleration, braking and changing travel direction.
- Do not run the engine at high speed for extended periods.
- Observe the maintenance plans *– see chapter “7.2 Maintenance overview” on page 7-2*.

Road traffic regulation accessories

Information

Observe the national and regional regulations during machine travel on public roads.

Scope of delivery of option **Equipment for Austrian road traffic regulations StVZO**:

- Headlights and rear lights
- Turn indicators and clearance lights
- Rotating beacon
- Horn on steering-column lever
- Outside rearview mirrors on left and right
- Numberplate bracket and lights
- Wheel chock

Vehicle travel on public roads

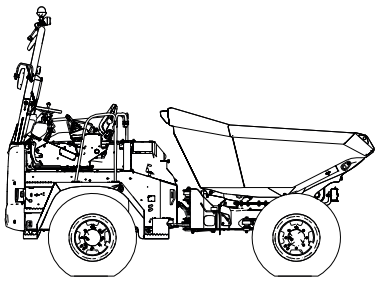

Fig. 90

1. Ensure that all legal requirements for machine travel on public roads are fulfilled. This applies both to the machine and to the operator (for example a corresponding driving license).
2. Lower the skip completely. If the machine is equipped with a swivel skip, ensure in addition that the skip is in the middle position.
3. Activate road mode *– see "Activate road mode" on page 5-7*.

https://truckmanualshub.com/

4.5 Starting and stopping the engine

Preparations for starting the engine

WARNING

Accident hazard due to unintentional operation of the vehicle!

Unintentional operation can cause serious injury or death.

► Only operate the vehicle from the seat with the seat belt fastened.

The starter cannot be actuated if the engine is already running (start repeat interlock).

Do not run the starter for more than 30 seconds.

Wait two minutes so the battery can recover and the starter does not overheat before trying again.

Information

Ensure sufficient ventilation during operation in enclosed premises.

Information

All controls must be within easy reach.

Ignition

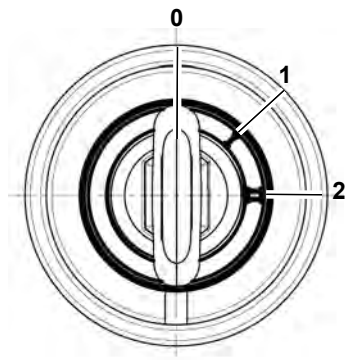

Fig. 91

Position	Function	
0	Stop position	Insert or remove the starting key
1	Ignition	All electric functions are enabled
2	Starts the engine	Starter is actuated

https://truckmanualshub.com/

Starting the engine

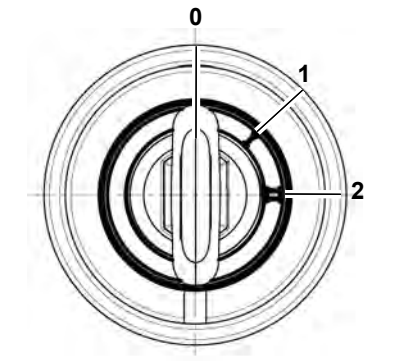

Fig. 92

1. Sit down on the seat.
2. Switch off all electric consumers.
3. Lock the seat console into place.
4. Press the service brake.
5. Apply the parking brake.
6. Insert the starting key.
7. Turn the starting key to position **1**.
8. All indicator lights illuminate for two seconds.
9. Turn the starting key in position **1** until indicator light **A** (pre-heating) goes out.
   - ➥ Indicator light **B** (alternator charge) illuminates.
   - ➥ Indicator light **C** (engine oil pressure) illuminates.
10. Turn and hold the starting key in position **2** until the engine starts.
    - ➥ Release the starting key.
    - ➥ All indicator lights go out.

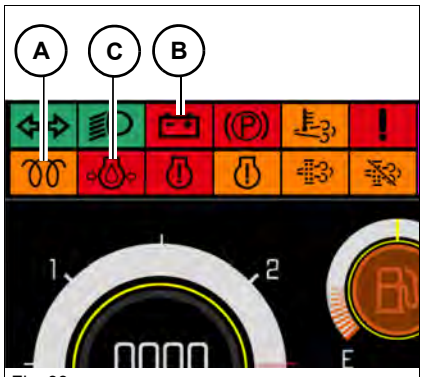

Fig. 93

If the engine does not start after 30 seconds:

Interrupt the start procedure and repeat it after two minutes.

If the engine still does not start after a few tries, contact a Wacker Neuson service center.

Warm-up phase

After starting the engine, let it warm up at slightly increased idling speed until it reaches its operating temperature.

Check for unusual noise, exhaust color, leaks, malfunctions or damage.

In case of malfunctions, damage, or leaks:

Secure the vehicle, park it and find out the cause for the damage and have it repaired.

https://truckmanualshub.com/

Starting the engine at low ambient temperatures

Start the engine as described in chapter **Starting the engine**.

Warm-up phase at low ambient temperatures

- Let the engine run below 1800 rpm until the coolant reaches its operating temperature.
- Avoid fast movements of the operating hydraulics.
- Check for unusual noise, exhaust color, leaks, malfunctions or damage.

In case of malfunctions, damage, or leaks:

Secure the vehicle, park it and find out the cause for the damage and have it repaired.

Notices on the warm-up phase

- After reaching the operating temperature, the engine can be operated under full load.
- The engine reaches its operating temperature more quickly at low engine speed and under load. This is more efficient than operation at low engine speed without any load.
- Avoid excess idling. This causes carbon deposits or an increased soot load of the diesel particulate filter, for example.

WARNING

Crushing hazard during operation with cold hydraulic oil!

Cold hydraulic oil can cause uncontrolled machine movements. This can cause serious injury or death.

► The hydraulic oil is still cold even if the engine has reached its operating temperature.

► If possible, run the machine warm on wide and open terrain.

► Operate the control lever especially carefully if the hydraulic oil is cold.

https://truckmanualshub.com/

Starting aid

WARNING

Explosion hazard in case of incorrect handling of battery!

Incorrect battery handling can cause serious injury or death.

- ► Wear protective equipment.
- ► Fire, open flames and smoking is prohibited.
- ► Do not jump start the engine if the battery is malfunctioning or frozen, or if the acid level is too low.

WARNING

Burn hazard due to hot surfaces!

Can cause serious burns or death.

- ► Stop the engine and let it cool down.
- ► Wear protective equipment.

WARNING

Injury hazard due to rotating parts!

Rotating parts can cause serious injury or death.

- ► Open the maintenance flap only at engine standstill.

NOTICE

Damage to machine due to electrical short-circuit or overvoltage.

- ► Do not bring the positive terminal of the starting battery into contact with electrically conductive vehicle parts.
- ► The vehicles must not touch each other during the starting aid.
- ► If the engine still does not start despite a starting aid, contact a Wacker Neuson service center.

NOTICE

Possible damage due to wrong battery voltage.

- ► Only use batteries with the same voltage (12 V).

NOTICE

Possible damage to machine with empty battery due to voltage peaks.

https://truckmanualshub.com/

NOTICE

Damage to battery jumper cables when placing them near rotating parts.

► Do not place the battery jumper cables near rotating parts.

Information

Use only authorized battery jumper cables which conform to national and regional safety requirements.

Designations/symbols	Meaning
X	Machine with empty battery
Y	Vehicle with full battery
A	Positive/vehicle **X**
B	Positive/vehicle **Y**
C	Negative/vehicle **Y**
D	Negative/vehicle **X**
	Full battery

https://truckmanualshub.com/

Connections

1. Move vehicle **Y** close to machine **X** so that the length of the battery jumper cables is sufficient.
2. Let the engine of vehicle **Y** run.
3. Unlock cover **E** and open.
4. Remove cover from positive terminal **A**.

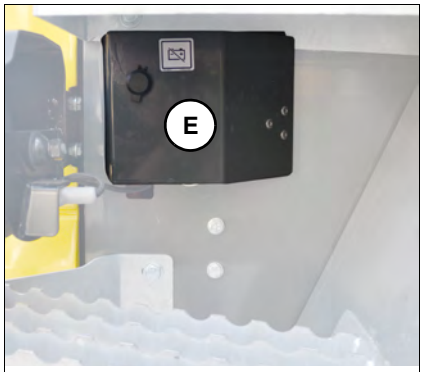

Fig. 94

5. Connect the battery jumper cables in the following order: **A – B – C – D**.
6. Wait five minutes for the empty battery to be charged a little.
7. Start the engine of machine **X**.
8. Disconnect the battery jump cables in the following sequence: **D-C-B-A.**

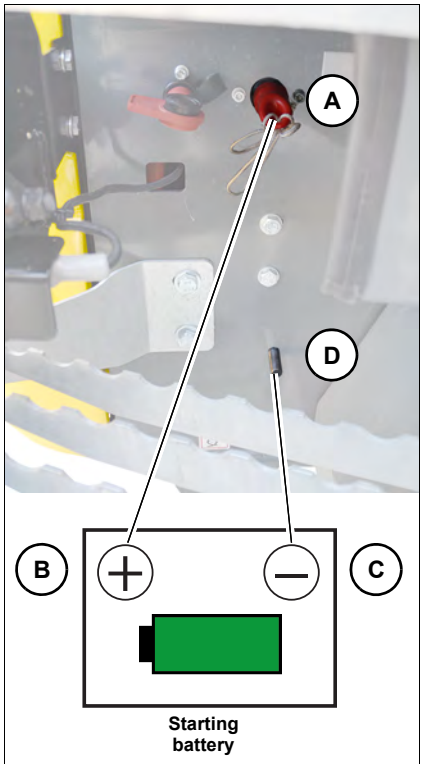

Fig. 95 (symbolic representation)

https://truckmanualshub.com/

Low-load operation

NOTICE

Possible damage to the engine due to low-load operation.

► Run the engine at idling speed or at high engine speed at over 20% engine load.

Possible consequences of low-load operation are:

- Increased engine oil consumption
- Engine contamination due to engine oil in exhaust system
- Blue smoke in exhaust gas
- Shorter diesel particulate filter regeneration cycles (only in case of Tier IV)
- Reduced engine-oil replacement intervals

Stopping the engine

NOTICE

Possible damage to the engine when it is stopped after running under high load.

► Letting the engine run at idling speed before stopping it avoids engine damage and increases the engine's service life.

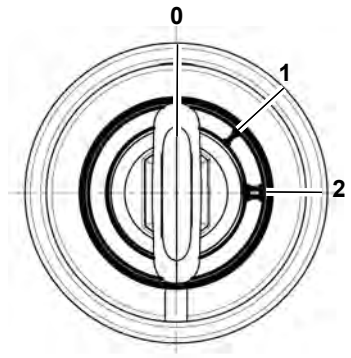

Fig. 96

1. Let the engine run at idling speed for five minutes without any load.
2. Turn the starting key to "**0**" and remove it.

Information

After stopping the engine, wait three minutes before disconnecting the battery or actuating the battery master switch to avoid damage to the control electronics.

https://truckmanualshub.com/

Battery circuit breaker

NOTICE

Possible damage to the electronics due to improper actuation of the battery master switch!

► Do not operate the battery master switch with a running engine.

► Operate the battery master switch no sooner than two minutes after shutting down the engine.

Actuate the battery isolator switch:

- If the vehicle is parked for longer periods of time (e.g. over the weekend).
- If the vehicle is to be protected against unintentional taking into service.
- If required by national and regional provisions.

Battery master switch is located behind the cover **A** on the left.

Power supply	Key position
Established	**1**
Interrupted	**2** (key removed)

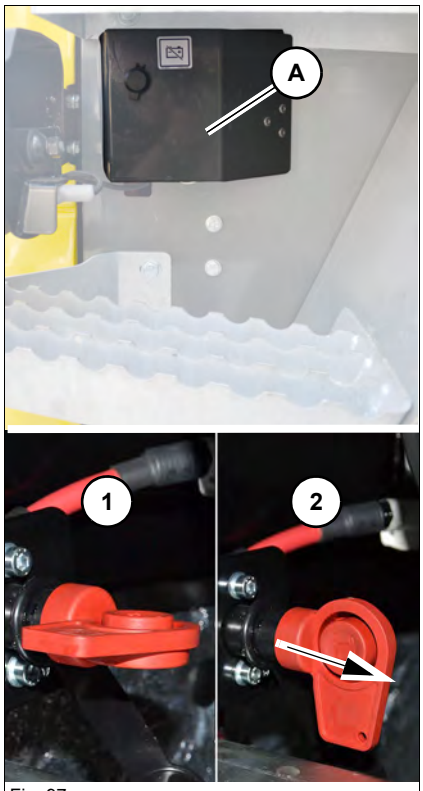

Fig. 97

https://truckmanualshub.com/

https://truckmanualshub.com/

5 Operation

Screen protector

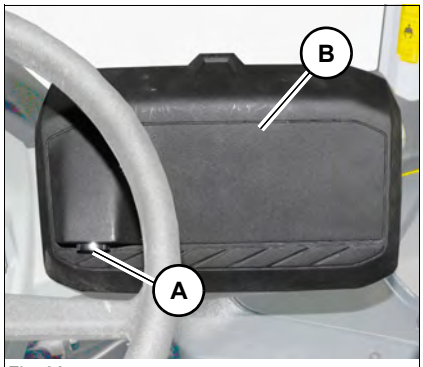

Fig. 96

Before putting the machine into operation, open lock **A** with the starting key and slide back instrument panel cover **B** until it locks into place.

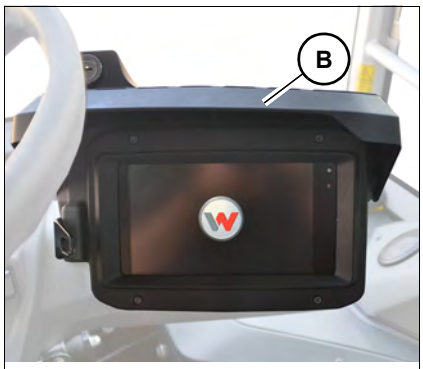

Fig. 97

Leave instrument panel cover **B** open during operation.

5.1 Steering system

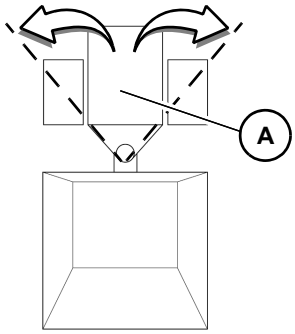

Fig. 98

The vehicle is equipped with articulated steering. The steering wheel actuates a hydraulic cylinder, which pivots the drive unit **A**.

Steering wheel	Movement
Anticlockwise	Drive unit is slews to the left
Clockwise	Drive unit is slews to the right

Emergency steering features

If the engine or the hydraulic pump fails, the vehicle is more difficult to steer. Take this into account especially when towing the machine.

https://truckmanualshub.com/

5.2 Accelerator actuation

Speed changeover

Fig. 99

The vehicle has two speeds that are selected with the button **A** on the joystick.

Speed range selection	Indication
Speed range 1	
Speed range 2	

Keep the service brake pressed to change over. The machine must be at a standstill.

Accelerator pedal

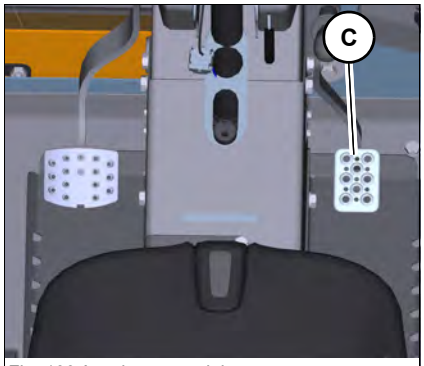

Fig. 100 Accelerator pedal

Accelerator pedal **C** is located on the right in the leg room. Speed is controlled continuously with accelerator pedal **C**.

https://truckmanualshub.com/

5.3 Brakes

Service brake

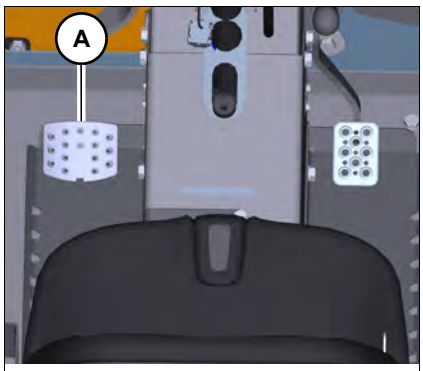

Fig. 101 Service brake

The service brake is located on the left in the leg room of the seat console. The travel speed is progressively reduced with the service brake **A**.

The machine slows down when the accelerator pedal is released.

Information

Reduce the travel speed with service brake **A**.

Parking brake

The parking brake **A** is located in the switch panel to the right on the control stand.

WARNING

Accident hazard! Do not operate the unlocking device during machine travel!

Can cause serious injury or death.

► Use the parking brake only at machine standstill.

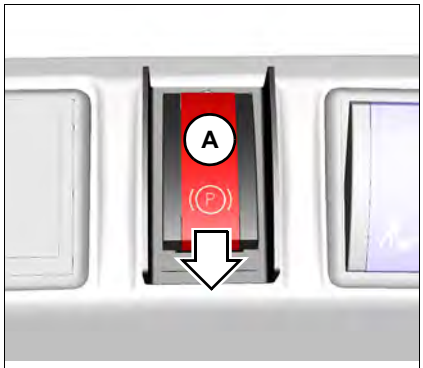

Fig. 102

Enable:

1. Press switch **A** down.

The parking brake is automatically activated when the vehicle stands still in the neutral position of the forward-reverse control for 2 seconds. (option)

https://truckmanualshub.com/

Brake test

The following tests help check the brake function.

WARNING

Danger of accident due to incorrect brake test!

Can cause serious injury or death.

- ► Persons or obstacles are not permitted on the test track.
- ► Ensure sufficient outlet distance.
- ► Perform the brake test every day before starting work.
- ► First test the service brake followed by the parking brake.

Information

Do not put the machine into operation if a brake test gives a negative result or if there are doubts as to the correct brake function.
Contact a Wacker Neuson service center and have the malfunction rectified.

Requirements

- The test track must be horizontal, even, and have a high load-bearing capacity.
- The subsurface must consist of dry asphalt.
- The skip must be empty.
- The skip must be lowered.

Service brake test

1. Start the vehicle.
2. Release the parking brake.
3. Press the service brake with a foot strength of more than 40 kg and hold it with this strength.
4. Set the forward-reverse control **A** to position **1** (forward).
5. Increase the engine speed to 1400 rpm while holding down on the gas pedal for 5–10 s.
   - The brake pedal must not give way.
   - The machine must not move.

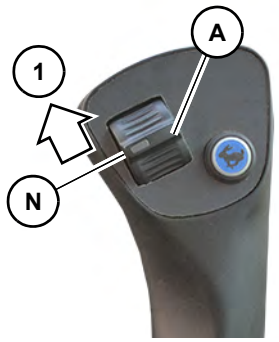

Fig. 103

https://truckmanualshub.com/

Parking brake test

Information

If the parking brake is activated, the vehicle automatically deactivates the drive system.

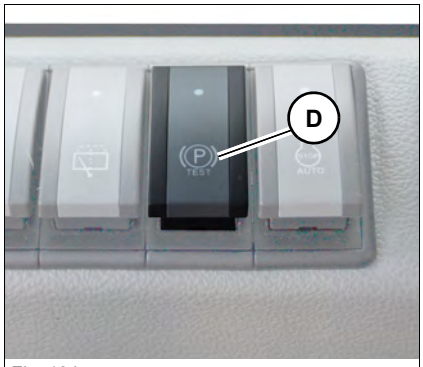

Fig. 104

1. Start the vehicle.
2. Apply the parking brake.
3. Set the forward-reverse control **A** to position **1**.
4. Press and hold down the button **D**.
   - The selected travel direction appears in the display.
5. Press the accelerator pedal and increase the engine speed to 1400 rpm.
   - The machine must not move.
6. Release accelerator pedal.
7. Release button **D**.
8. Set the forward-reverse control **A** to position **N**.

Information

The test must be carried out within 30 seconds after starting the vehicle. To avoid damage to the vehicle, the drive is switched to the neutral travel direction after 5 seconds. The travel direction **N** appears in the display.

https://truckmanualshub.com/

5.4 Machine travel

There are two different operating modes:

- **Work mode**
  Includes all work, such as for moving earth, gravel, coarse gravel and rubble.
- **Road-travel mode**
  Designates machine travel on public roads. No work may be performed in road-travel mode. In road-travel mode, specific measures must be taken for preparing machine travel on public roads – *see chapter " Vehicle travel on public roads" on page 4-37*.

WARNING

Accident hazard due to incorrect adjustment of travel direction!

Can cause serious injury and death.

► Ensure that the surrounding area is clear.

► Set the forward-reverse control to the required position before starting machine travel.

WARNING

Accident hazard due to machine rolling away under its own weight!

Can cause serious injury and death.

► Change over the travel direction only if the machine is at a standstill and if the service brake is actuated.

WARNING

Accident hazard due to travel direction changeover during machine travel!

Can cause serious injury and death.

► Change over the travel direction only if the machine is at a standstill and if the service brake is actuated.

The forward-reverse control is located on the joystick on the right.

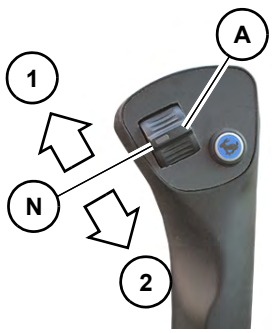

Fig. 105 Symbolic photo

Travel direction	Position
Forward	**1**
Neutral position	**N**
Reverse	**2**

https://truckmanualshub.com/

Activate road mode

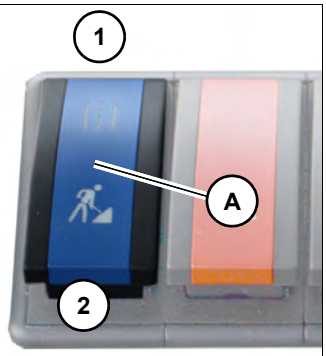

Fig. 106 Symbolic photo

Switch **A** is located on the switch panel on the right.

Function	Position
Activate road mode	Set switch **A** to position **1**
Enable work mode	Press switch **A** into position **2**

Starting machine travel

Starting machine travel (work mode)

1. Start the engine – *see chapter " Starting the engine" on page 4-39*
2. Press the service brake.
3. Move the forward-reverse control into the neutral position.
4. Release the parking brake.
5. Activate work mode
   ➥ The operating mode symbol appears.
   ➥ The work hydraulics are enabled.
6. Move the forward-reverse control to the required position.
7. Release the service brake.
8. Press accelerator pedal slowly.
   ➥ Machine travel starts.

Starting machine travel (road travel mode)

1. Start the engine – *see chapter " Starting the engine" on page 4-39*
2. Lower the skip.
3. If the machine is equipped with a swivel skip, ensure that it is in the middle position.
4. Press the service brake.
5. Move the forward-reverse control into the neutral position.
6. Release the parking brake.
7. Activate road mode.
   ➥ The road-travel mode symbol appears.
   ➥ The work hydraulics are disabled.
8. Move the forward-reverse control to the required position.
9. Release the service brake.
10. Press accelerator pedal slowly.
    ➥ Machine travel starts.

Stopping

1. Do not actuate the accelerator pedal any more.
   ➥ The travel speed decreases very slowly until standstill.
2. Press the service brake.
   ➥ The machine stops.

https://truckmanualshub.com/

Operating temperature range

Operate the machine only at ambient temperatures between −15°C (5°F) and +45°C (+113°F).

Vehicle travel on slopes

WARNING

Crushing hazard due to tipping over of vehicle!

A tipping vehicle can cause serious injury or death.

- ► Set the machine to travel position.
- ► Perform machine travel on slopes only on firm ground.
- ► Adapt the travel speed to the prevailing conditions.
- ► Avoid sudden travel movements.
- ► Pay attention to persons and obstacles.
- ► Pay attention to the stability limits of the vehicle (maximum gradient angle 14° (25%), maximum lateral angle of inclination 14° (25%)).
- ► Perform uphill and downhill machine travel only in speed range 1.
- ► Ensure that no parts of the body protrude outside the vehicle.
- ► Do not exceed the permissible payloads.
- ► Do not turn or dump out a full skip during uphill or downhill machine travel.
- ► Dump out the skip on slopes only on the uphill side of the machine.
- ► Diagonal machine travel is prohibited.

Stones and the humidity in the upper layer of the ground can affect vehicle traction and stability.

The vehicle can slip sideways on gravel or loose, rocky soil. The stability of the vehicle can be reduced on rough terrain.

On soft ground, the machine sinks into it or the wheels dig into it. This increases the machine angle (maximum gradient angle and maximum lateral angle of inclination), and the machine can tip over.

If the engine dies during uphill or downhill machine travel, immediately put the forward-reverse control in neutral position and start the engine again.

The machine can slip even on gentle slopes if it travels across for example grass, leaves, humid metal surfaces, frozen ground or ice.

https://truckmanualshub.com/

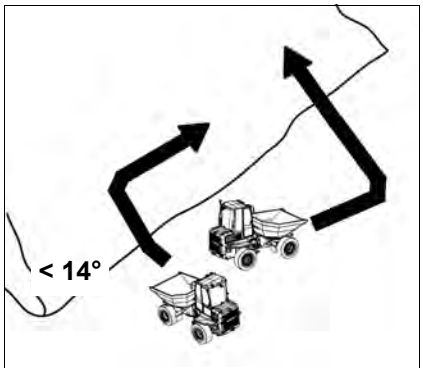

Fig. 107 Symbolic photo

Preparations for performing vehicle travel on slopes

Always perform uphill or downhill vehicle travel in a straight line.

When changing position, do not exceed a maximum gradient angle of 14° (25%) and a maximum lateral angle of inclination of 14° (25%).

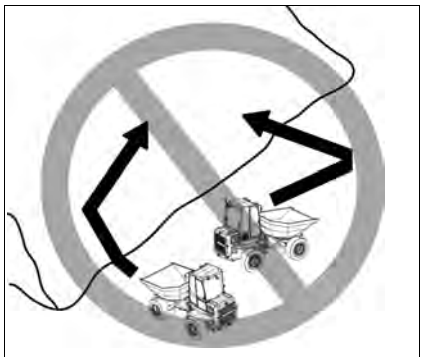

Fig. 108 Symbolic photo

Change position on level ground and then perform straight-ahead vehicle travel onto the slope.

https://truckmanualshub.com/

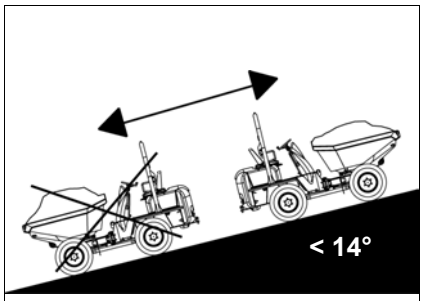

Fig. 109 Symbolic photo

Machine travel on slopes with a loaded skip

When using the machine to travel on slopes with a loaded skip, the loader unit of the machine must always face the uphill side of the slope, whichever the direction of travel. Do not perform vehicle travel on slopes steeper than 14° (25%).

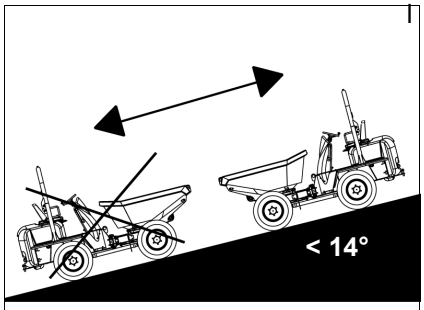

Fig. 110 Symbolic photo

Machine travel on slopes with an unloaded skip

When using the machine to travel on slopes with an unloaded skip, the loader unit of the machine must always face the downhill side of the slope, whichever the direction of travel. Do not perform vehicle travel on slopes steeper than 14° (25%).

Information

The engine brake does not have enough effect at a certain engine speed during downhill travel. Reduce engine speed.

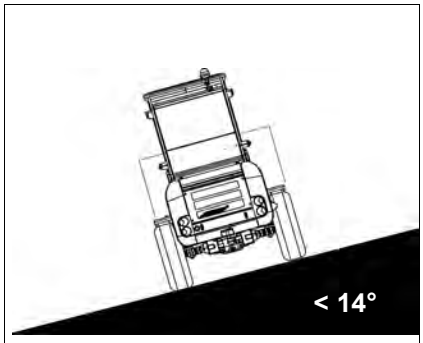

Fig. 111 Symbolic photo

Machine travel across slopes

Do not perform machine travel on slopes with a lateral angle of inclination over 14° (25%).

https://truckmanualshub.com/

Parking the machine

WARNING

Crushing hazard due to vehicle rolling away under its own weight after parking it!

Serious injury or death can be caused by not securing the vehicle.

► Lower the skip. At near-freezing temperatures, park the machine with the skip tilted to prevent material from freezing or ice from forming in the skip. Secure the skip with the maintenance prop.

► Secure the machine accordingly (for example with chocks).

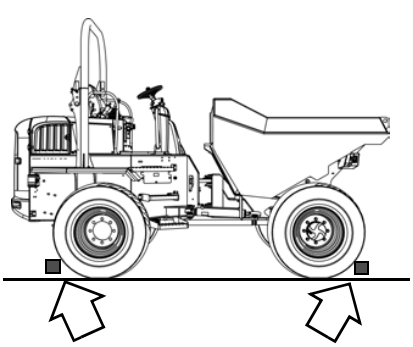

Fig. 112

1. Park the vehicle on firm, level, and horizontal ground. The machine may be parked on a slope only if it cannot be avoided. Park the machine only transversely to the slope as you do so.
2. Lower the skip.
3. Stop the engine.
4. Apply the parking brake.
5. Remove the starting key and carry it with you.
6. Close and lock all covers and the door (option).
7. Secure the wheels accordingly (for example with chocks, blocks).

Information

In order to prevent the formation of condensation water, fully fill up the fuel tank at the end of each working day.

5.5 Differential lock

Not available.

https://truckmanualshub.com/

5.6 Lighting/signaling system

Working lights (option)

The switch is located on the switch panel on the right.

WARNING

Accident hazard due to blinded motorists!

Working lights can blind motorists. This can cause serious injury or death.

- ► Stop vehicle operation if motorists are blinded.
- ► Only take up work again if sufficient illumination of the job site can be ensured without blinding other motorists.

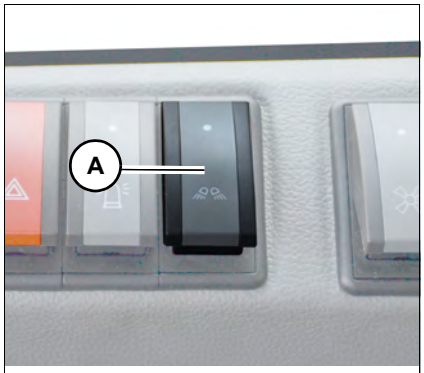

Fig. 113

Function	Position
Switch off the working lights	Press switch **A** all the way up
Switch on the working lights **D**	Press switch **A** to the first position
Switch on the front **B** and rear **C** working lights	Press switch **A** to the second position

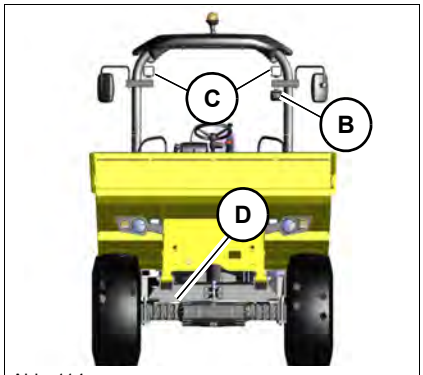

Abb. 114

Information

Switch on the working lights in conditions of poor visibility. If illumination still is not sufficient, use external lights. If this still does not illuminate the job site sufficiently, stop machine operation and take it up again only when sufficient illumination is ensured.

https://truckmanualshub.com/

Road travel lights

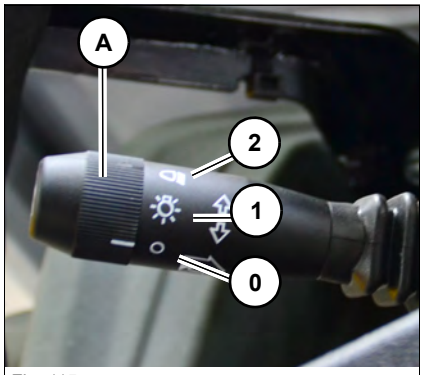

Fig. 115

Ring **A** is located on the steering column lever.

Function	Position
Switch off the lights	Turn ring **A** to position **0**
Switch on the side marker lights	Turn ring **A** to position **1**
Switch on low beam	Turn ring **A** to position **2**
Switch on the high beam	Pull the steering-column control lever forward.
Switch off the high beam	

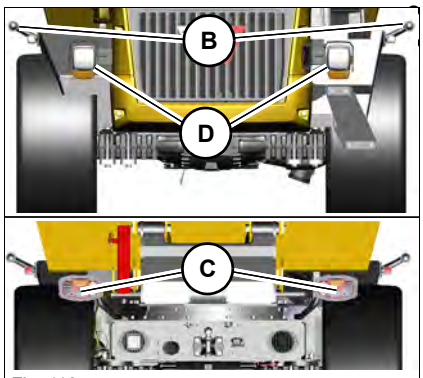

Fig. 116

Clearance lights **B** and rear lights **C**.

Interior light (option)

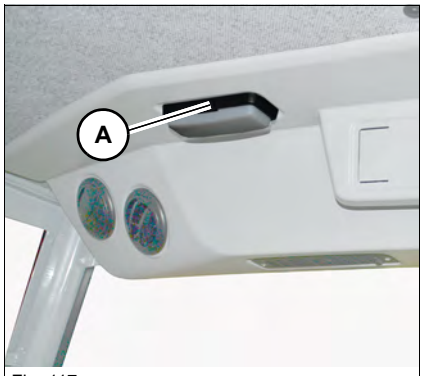

Fig. 117

Switch **A** is located on the interior light.

Function	Position
Switch off the interior light	Press switch **A** to the middle position or to the right
Switch on the interior light	Press switch **A** to the left

https://truckmanualshub.com/

Horn

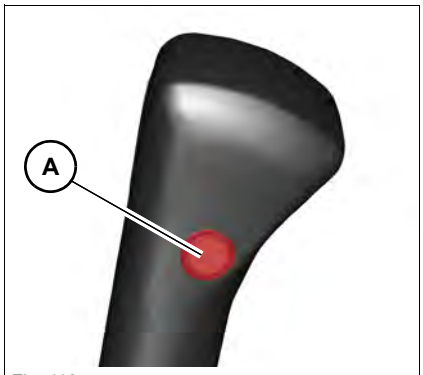

Fig. 118

Press push button **A** on the rear side of the control lever.

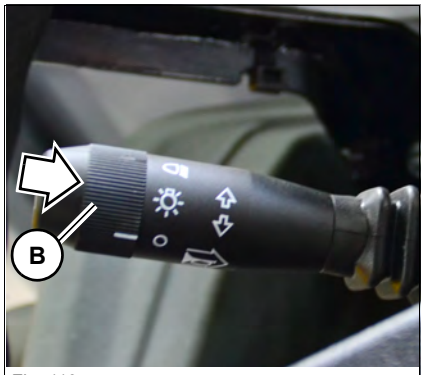

Fig. 119

Press push button **B** on the steering column lever (option for Austrian road traffic regulations StVZO).

Rotating beacon (option)

Fig. 120

Switch **A** is located on the switch panel on the right.

Function	Position
Switch off rotating beacon **B**	Press switch **A** upward
Switch on rotating beacon **B**	Press switch **A** down

https://truckmanualshub.com/

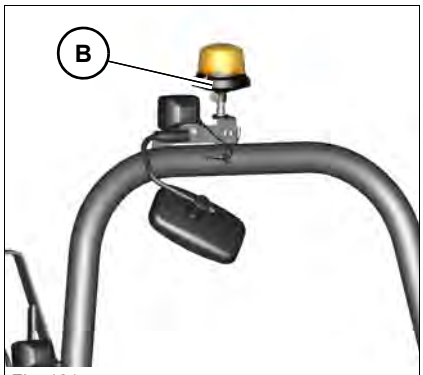

Fig. 121

Information

Follow the national and regional regulations concerning rotating beacon operation.

Rotating beacon, green (option)

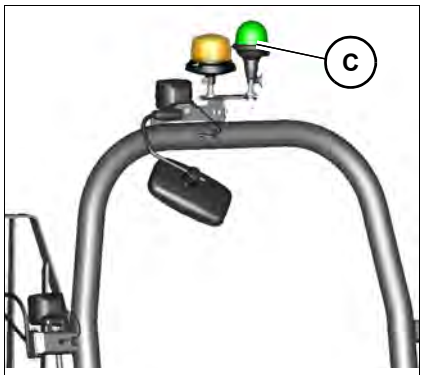

Fig. 122

The green rotating beacon **C** lights up when the operator's seat belt is fastened.

Turn indicators

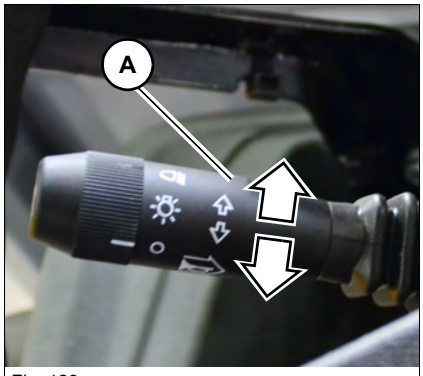

Fig. 123

The steering-column lever is located on left of the steering wheel. Operating the turn indicators on the steering column lever.

Function	Position
Turn indicators on the left flash	Press steering column lever **A** down
Turn indicators on the right flash	Press steering column lever **A** up

https://truckmanualshub.com/

Hazard warning system

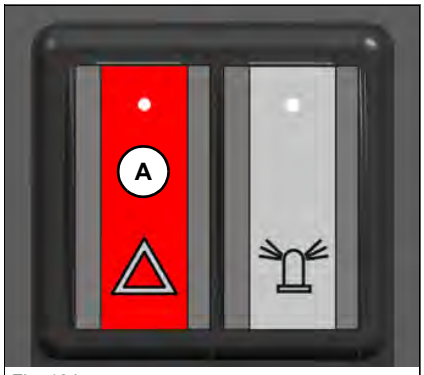

Fig. 124

The switch is located on the switch panel on the right.

Function	Position
Switch off the hazard warning system	Press switch **A** upward
Switch on the hazard warning system	Press switch **A** down

https://truckmanualshub.com/

Reversing signal (option)

The reversing signal sounds during backward machine travel.

DANGER

Accident hazard during forward/backward vehicle operation!

Danger of crushing that may lead to serious injuries or death.

- ► Do not allow anyone to stay in the danger zone.
- ► Do not rely on the reversing signal under any circumstances.
- ► If the reversing signal does not sound, stop machine operation immediately and contact a Wacker Neuson service center. Follow the national and regional regulations.

5.7 Wiper/wash system (option)

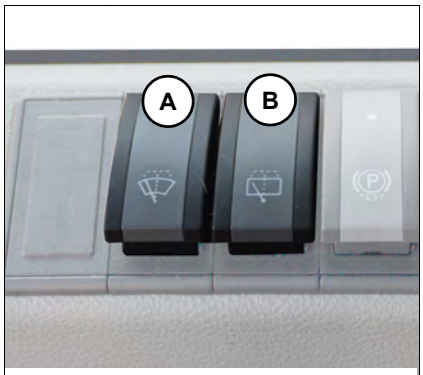

Fig. 125

The switch is located on the switch panel on the right.

Switch **A**: front window wiper

Switch **B**: rear window wiper

Function	Position
Switch off the wiper	Press switch backward
Wiper function	Press switch to the first position
Wiper and spraying function	Press and hold switch in the second position

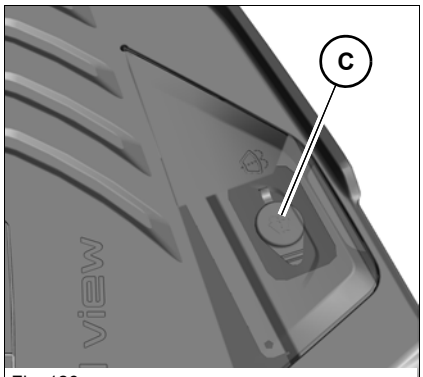

Fig. 126

Reservoir **C** for the cleaning solution of the washer system is located on the left under the floor mat.

NOTICE

Damage to pump if the reservoir is empty.

- ► Do not actuate the washer system if the reservoir is empty.
- ► Check the level in the reservoir and add a cleaning solution (glass cleaner) if necessary.

https://truckmanualshub.com/

5.8 Heating, ventilation and air conditioning system

Heating/ventilation (option)

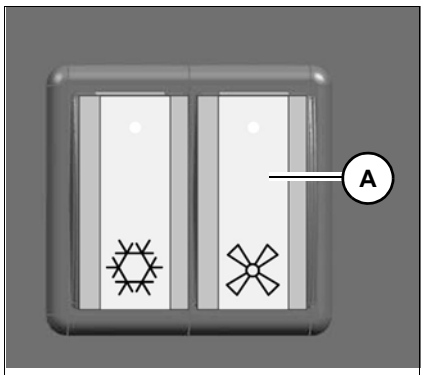

Abb. 127

Switch **A** is located on the switch panel on the right.

Function	Position
Switch off the fan	Press switch **A** all the way up
Fan in 1st speed	Press switch **A** to the first position
Blower in 2nd stage	Press switch **A** to the second position

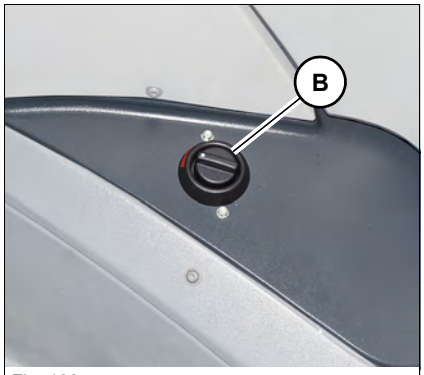

Fig. 128

Temperature setting

The governor **B** is located on the right in the rear of the cab.

Function	Position
Heating	Turn regulator **B** anticlockwise
Ventilation	Turn regulator **B** clockwise

Air conditioning (option)

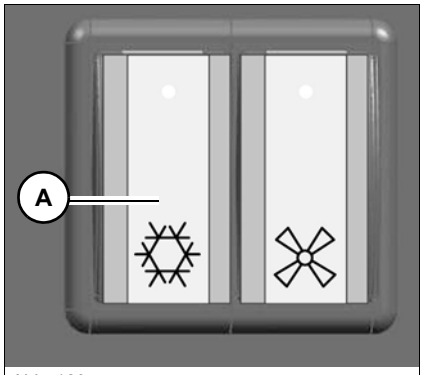

Abb. 129

The switch **A** is located on the switch panel on the right

Function	Position
Switch off the air conditioning	Press switch **A** to the front
Switch on the air conditioning	Press switch **A** backward

Information

Switch on the air conditioning system once a month for at least 10 – 15 minutes to ensure its full function and efficiency.

https://truckmanualshub.com/

5.9 Operating hydraulics

Skip operation

Operate the skip with the control lever.

WARNING

Accident hazard during machine travel with a tilted-out skip!

Can cause serious injury or death.

- ► Driving with a tipped skip is prohibited on public roads.
- ► Driving with a tipped skip is only allowed at walking speed in the construction site area if the operator is supported by a bystander.
- ► Do not tilt out the skip if material is stuck in the skip. Remove the material from the skip with a suitable tool.
- ► Keep a safe distance (for example from buildings, edges of building pits) as you tilt out the skip.
- ► Perform machine travel only on firm ground.

WARNING

Crushing hazard due to machine tipping over!

Tilting out the skip very quickly can cause the machine to tip over. Serious injury or death can be caused by a tipped-over machine.

- ► Slowly activate the skip.

NOTICE

Lowering the skip very quickly onto the chassis can cause damage to the machine.

https://truckmanualshub.com/

Front skip operation

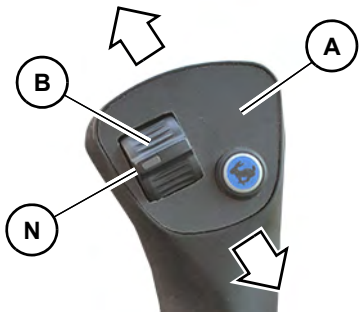

Fig. 130

Bring slide switch **B** into neutral position **N**.

Function	Operation
Tilt out the skip	Press control lever **A** forward
Lower the skip	Pull control lever **A** backward

Swivel skip operation

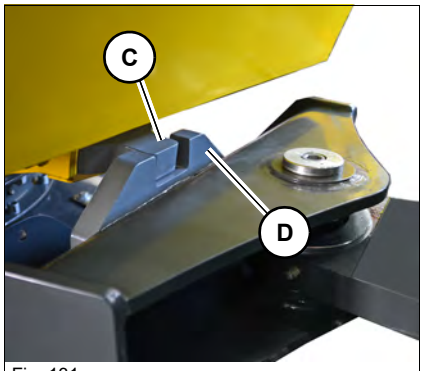

Fig. 131

In order to turn the skip, raise it with control lever **A** until lock **C** is raised from guide **D**.

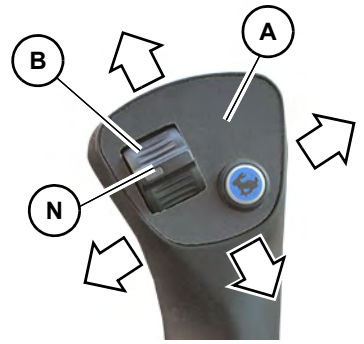

Fig. 132

Bring slide switch **B** into neutral position **N**. Lower the skip only in the straight position to avoid damage to the lock.

Function	Operation
Tilt out the skip	Press control lever **A** forward
Lower the skip	Pull control lever **A** backward
Skip is turned to the left	Push control lever **A** to the left
Skip is turned to the right	Push control lever **A** to the right

https://truckmanualshub.com/

5.10 Attachments

Not available.

5.11 Work operation

Danger zone

- The danger zone is the area in which persons are in danger due to the movements of the machine or load.
- The danger zone also includes the area that is affected by falling material, equipment or by debris that is thrown out.
- The danger zone on a slope is different from the one on a level surface (secure the load). Stop vehicle operation immediately as soon as someone enters the danger area *– see chapter " Vehicle travel on slopes" on page 5-8*.
- Seal off the danger zone should it not be possible to keep a sufficient safety distance.
- Extend the danger zone sufficiently in the immediate vicinity of buildings, scaffolds or other elements of construction.

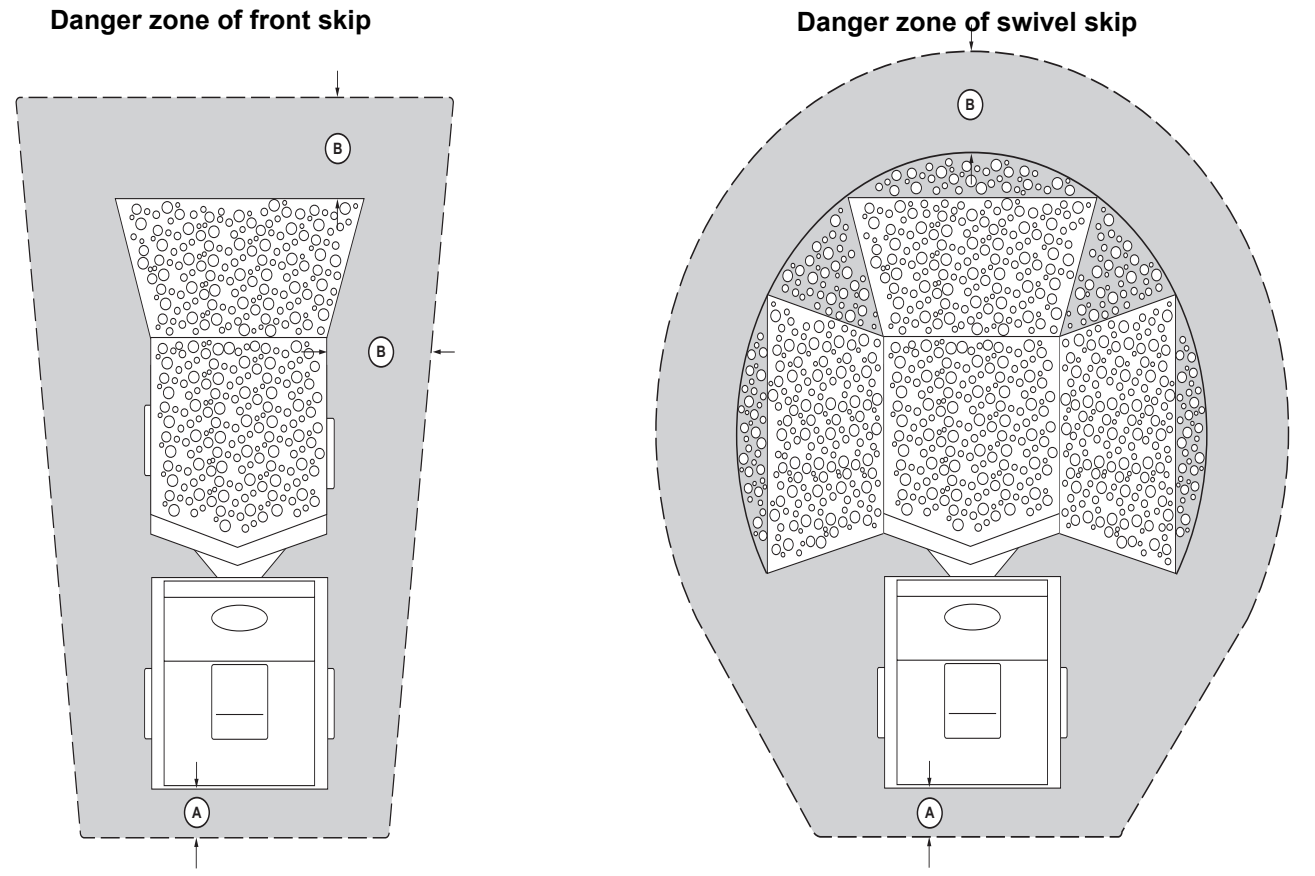

Fig. 133

Symbol	Description
-----	Danger zone
(A)	Safety distance of 1.5 m (59 in)
(B)	Safety distance of 2.5 m (98 in)

https://truckmanualshub.com/

- Do not drive up to the edge of an unsecured pit – danger of cave-in.
- Do not perform machine travel and operation under projecting earth. Stones or the projecting earth can fall onto the machine.
- Before working on roofs or similar structures, check the resistance and the structure itself before starting work. The building can collapse, causing serious injury and damage.
- The hydraulic system of the machine is still pressurized even when the engine is not running. Release the pressure in the hydraulic system before starting repair work.
- Before tilting out the skip next to an excavation, secure the machine with suitable wheel chocks or other auxiliary means.
- Watch the material as you tilt out the skip. Material stuck in the skip can cause a tipping hazard. Do not tilt out the skip if material is stuck in the skip. Remove the material from the skip with a suitable tool.
- Do not unload the load on sloping ground.
- Do not transport any persons or animals in the skip.

https://truckmanualshub.com/

Load (ROPS bar)

The operator must leave the Dual View Truck and the danger area before loading.

Observe the national and regional regulations.

Load (cab)

If the Dual View Truck is equipped with cab and skip grid, the operator can conduct a risk assessment and decide whether the operator must leave the cab while loading the Dual View Truck.

Information

The risk assessment must consider the following in particular:

Are the safety features of the Dual View Truck sufficiently dimensioned for the excavator that is loading the Dual View Truck?

Observe the national and regional regulations.

Vehicle equipment	Measures during loading procedure
Cab	The operator must leave the Dual View Truck and the danger area
Cab and skip grid	Risk analysis can be conducted

Preparations

1. Lower the skip.
2. Move the control lever to neutral.
3. Activate parking brake.
4. Stop the engine.

Information

Incorrect loading causes serious damage to the machine.

► Do not exceed the payload.

► Ensure that the operator’s visibility is not impaired.

Once loading is over

1. Remove dirt, debris, dust, etc. from the control elements.
2. Remove loose material.

https://truckmanualshub.com/

Transporting with a full skip

WARNING

Accident hazard when transporting with a full skip!

Can cause serious injury or death.

- ► Put a full skip to transport position before performing machine travel.
- ► Observe the national and regional regulations when transporting with a full skip.

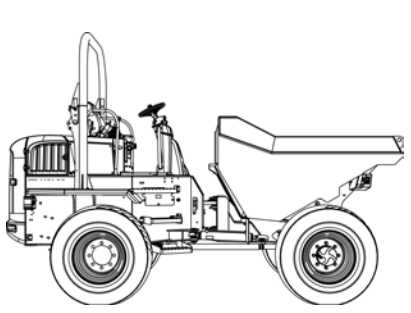

Fig. 134

Transport position

Lower the skip completely. If the machine is equipped with a swivel skip, ensure in addition that the skip is in the middle position.

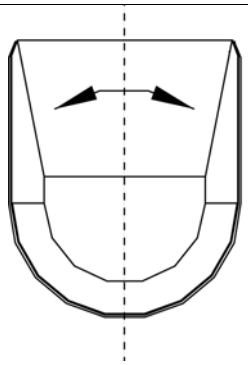

Fig. 135

Middle position of swivel skip.

General information regarding work operation

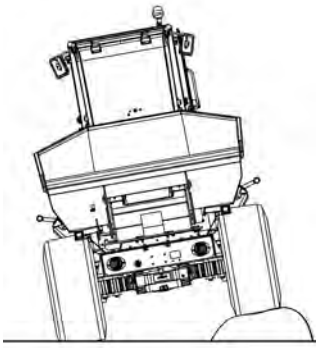

Fig. 136

Perform machine travel slowly on rough terrain and avoid starting machine travel and stopping abruptly as well as changing direction suddenly. Avoid machine travel over obstacles if possible, otherwise go over them at low speed.

Information

Follow the applicable national and regional regulations.

https://truckmanualshub.com/

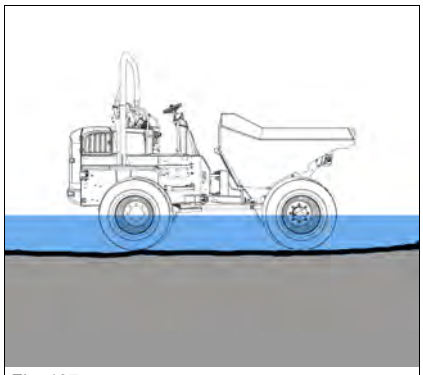

Fig. 137

Fig. 138

Operation in water

Do not immerse the machine in water any further than to the middle of the axles.

Information

Operation in salt water is prohibited.

When leaving the water, take special care not to immerse the rear end of the machine in the water, in particular the exhaust system.

After using the machine in water, have the axles checked by a Wacker Neuson service center.

https://truckmanualshub.com/

5.12 Emergency lowering

Fig. 139

DANGER

Crushing hazard when lowering the skip!

Causes serious crushing or injury resulting in death.

- ► Do not allow anyone to stay in the danger zone.
- ► Stop all work movements immediately if someone enters the danger zone.

Information

Lower the skip immediately after stopping the engine.

Lower the skip in case of an engine or hydraulic system malfunction.

1. Switch on the ignition
2. Enable work mode
3. Pull control lever **A** backward.

5.13 Options

Immobilizer (option)

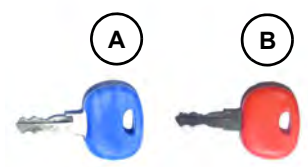

Fig. 140

A = starting key (blue)

For starting the vehicle. Scope of delivery includes 2 keys.

B = master key (red)

Information

Store the master key in a safe place. It can only be used for coding new starting keys.
A new immobilizer must be installed if the master key is lost.

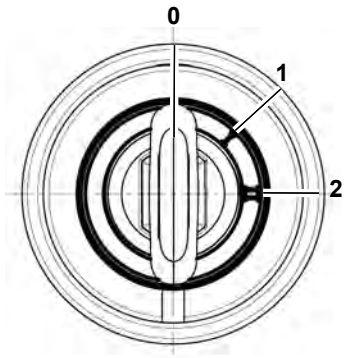

Fig. 141

The machine can be started without performing any further settings.

Coding new starting keys

1. Insert master key **B** in the starter and turn it to position **1** for a maximum five seconds.
2. Remove master key **B**.
3. Keep master key **B** at least 50 cm (19.68 in) away from the starter.
4. Within 15 seconds, turn starting key requiring coding to position **1** for at least one second.
5. Repeat step 4 if more starting keys require coding.

➥ The keys are coded now.

Coding can be performed for a maximum of 10 starting keys.

https://truckmanualshub.com/

Information

The procedure is automatically cancelled if no key requiring coding is detected by the system within 15 seconds.

Deleting coded keys

Deleting all coded keys is necessary whenever a coded key is lost.

The master key code is not deleted during deletion.

1. Insert master key **B** in the ignition lock and turn it to position **1** for at least 20 seconds.
2. Code the starting keys.

https://truckmanualshub.com/

Maneuvering operation (option)

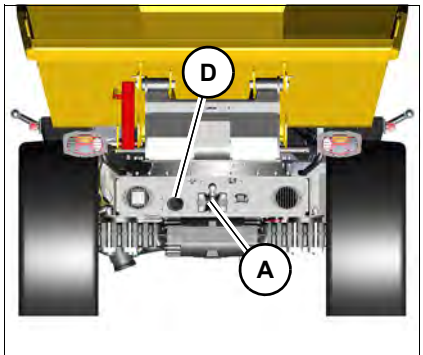

Fig. 142

For pulling trailers in the construction site area, the vehicle has a maneuvering coupling **A.**

Pulling trailers is prohibited on public roads.

- The vehicle skip must be 25% filled in maneuvering operation. The gross weight rating of the trailer and the contents of the skip may not exceed the vehicle's payload.

Payload kg (lbs)	Skip contents kg (lbs)	Gross weight rating trailer kg (lbs) braked with DIN towing eye (F)	Gross weight rating trailer kg (lbs) braked with ball coupling (E)	Gross weight rating trailer kg (lbs) unbraked with DIN towing eye (F) or ball coupling (E)
6000 (13,230)	1500 (3310)	3500 (7720)	1500 (3310)	750 (1650)
9000 (19,850)	2250 (4970)	3500 (7720)	1500 (3310)	750 (1650)
10,000 (22,050)	2500 (5520)	3500 (7720)	1500 (3310)	750 (1650)

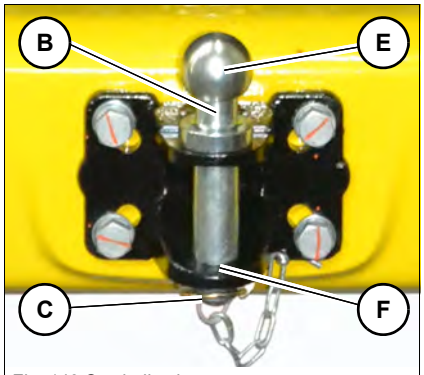

Fig. 143 Symbolic photo

- Secure the pin **B** of the maneuvering coupling with a splint pin **C**.
- Secure the trailer to prevent it from rolling away (for example with wheel chocks, blocks).
- Ensure that all lights and associated indicator lights are functional. The plug receptacle **D** for the power supply of auxiliary units is located at the rear of the vehicle.

NOTICE

Only attach the hitch to the maneuvering coupling.

Information

Observe the national and regional regulations.

https://truckmanualshub.com/

5.14 Putting out of operation/back into operation

The specified measures refer to putting the vehicle out of operation and back into operation after more than 30 days.

Putting out of operation temporarily

Store the machine indoors if possible.

Park the machine only on firm ground (for example concrete) outdoors. Tilt the skip to prevent material from freezing or ice from forming in the skip.

1. Park the vehicle – *see "Parking the machine" on page 5-11*.
2. Clean the engine with a high-pressure cleaner in a suitable place – *see chapter “7.5 Cleaning and maintenance” on page 7-14*.
3. Check the machine for leaks and loose nuts, screws and connections.
4. Carefully clean and dry the entire vehicle.
5. Spray an anticorrosion agent onto bare metal parts of the machine (piston rods of hydraulic cylinders, for example).
6. Apply grease to all lubrication points.
7. Fill the fuel tank completely.
8. Check the hydraulic oil, antifreeze and coolant levels, and add hydraulic oil, antifreeze and coolant if necessary.
9. Change engine oil.
10. Actuate the battery master switch.
11. Remove the battery and store it in a safe place. Charge the battery and perform battery maintenance at regular intervals.
12. Close the air-intake openings of the air filter system and exhaust pipe.

https://truckmanualshub.com/

Putting back into operation

Information

If the vehicle was out of operation over a longer period of time without performing the specified steps, contact a Wacker Neuson service center before putting back into operation.

1. Perform a general visual check of the damage on the electric cables, connectors, fuel lines, corrosion, etc. on the engine and diesel particulate filter.
2. Start the engine once a month to ensure optimal lubrication.
3. Remove anticorrosion agents from bare metal parts.
4. Charge, install and connect the battery.
5. Open the air-intake openings of the air filter system and exhaust pipe.
6. Check the condition of the air filter elements and have them replaced by a Wacker Neuson service center if necessary.
7. Bleed the fuel system *– see chapter " Bleeding the fuel system" on page 7-20*.
8. Check the vehicle for leaks.
9. Lubricate the vehicle according to the lubrication plan.
10. Check all engine/machine fluids in the units or reservoirs, and add fluids if necessary.
11. If the machine was out of service for over six months, change the oil in the gearbox, engine, hydraulic oil reservoir and other units.
12. Have the hydraulic oil filters (return and breather filters) replaced by a Wacker Neuson service center if the machine was out of operation for over six months.
13. Switch on the ignition and check whether there are any malfunctions . In case of malfunctions, contact a Wacker Neuson service center and have the malfunction rectified.
14. Start the engine.
15. Let the engine run at idling speed at least 15 minutes without load.
16. Stop the engine.
17. Check the oil levels in all units and add oil if necessary.
18. Check the vehicle for leaks.
19. Start the machine and ensure that all functions and warning systems work correctly.

Avoid operation at maximum engine speed or load for an hour.

https://truckmanualshub.com/

5.15 Permanently putting out of operation

Disposal

All fluids, lubricants, material, etc., used on the machine are subject to specific regulations. Dispose of different materials and consumables separately and in an environmentally friendly manner.

Have only a Wacker Neuson service center ensure machine disposal. Observe the national guidelines regarding disposal.

Environment

Do not allow environmentally damaging wastes to get into the ground or stretches of water and dispose of them in an environmentally friendly manner.

If the vehicle is no longer used according to its designated use, ensure that it is put out of operation and disposed of according to national and regional regulations.

- Machine disposal must be performed in accordance with state-of-the-art standards that apply at the time of disposal.

https://truckmanualshub.com/

Notes:

https://truckmanualshub.com/

6 Transportation

6.1 Towing the vehicle

WARNING

Accident hazard due to incorrect towing!

Incorrect towing can cause accidents and serious injury or death.

- ► Tow the machine away only from the immediate danger zone until it can be loaded.
- ► Never tow downhill.
- ► Only tow the vehicle using suitable towing equipment in connection with suitable towing facilities, such as towing hooks, eyes, etc.
- ► There must be nobody between the vehicles during towing. The lateral safety distance is equal to 1.5 times the length of the towing equipment.
- ► Do not tow the vehicle if it is stuck or on a slope. Load the vehicle.
- ► The machine cannot be steered when the hydraulic oil reservoir is empty.
- ► Allow the traveling drive to cool down.
- ► Wear protective equipment.
- ► Start vehicle travel and tow away slowly.

WARNING

Burn hazard due to hot surfaces!

Higher towing speeds and longer towing distances cause significant heat to develop. This can cause serious injury or death.

- ► Only tow the machine out of the immediate danger zone until it can be loaded. Do not tow the machine farther than 20 meters (66 ft).
- ► Tow the machine as slowly as possible – under no circumstances faster than walking speed.
- ► Wear protective equipment.

https://truckmanualshub.com/

WARNING

Crushing hazard due to vehicle rolling away under its own weight after parking it!

Serious injury or death can be caused by not securing the vehicle.

- ► The machine may only be towed on level ground or uphill.
- ► Secure the machine at the tie-down points with slings of sufficient dimensions.
- ► Secure the machine with chocks to prevent it from rolling.

NOTICE

The vehicle can be damaged during towing.

- ► Tow the machine away only from the immediate danger zone until it can be loaded.
- ► Do not tow the vehicle if it is stuck or on a slope. Load the vehicle.
- ► Only tow the machine using suitable towing equipment in connection with suitable towing facilities, such as a towing hooks, eyes, etc.
- ► A tractor vehicle of the same weight category must be used as a minimum.
  In addition, the tractor vehicle must be equipped with a safe braking system and sufficient tractive power.

Information

The manufacturer's warranty shall not apply to accidents or damage caused by towing.

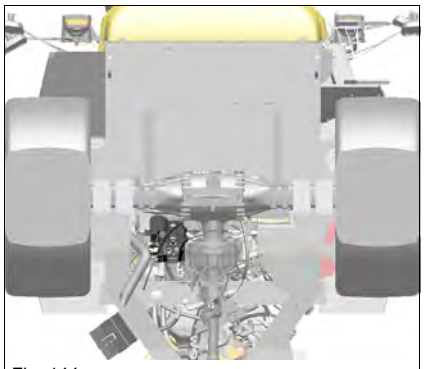

Fig. 144

1. Apply the parking brake.
2. Secure the machine with chocks to prevent it from rolling.

https://truckmanualshub.com/

Disabling the pressure limiting valves

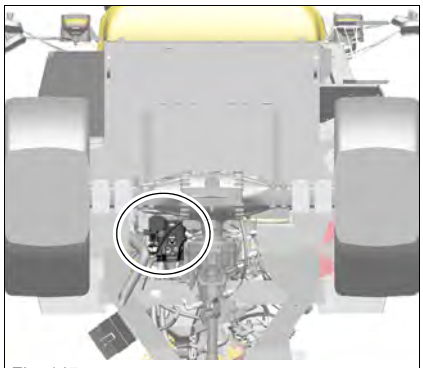

Fig. 145

Clean the area around the pressure limiting valves.

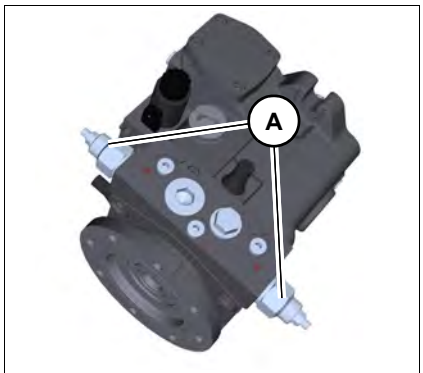

Fig. 146

Loosen screws **A** with exactly 3 revolutions.

https://truckmanualshub.com/

Disabling the electronic parking brake

WARNING

Burn hazard due to hot surfaces!

Can cause serious burns or death.

- ► Stop the engine and let it cool down.
- ► Wear protective equipment.

NOTICE

Higher towing speeds and longer towing distances may cause severe damage to the machine.

- ► Tow the machine away only from the immediate danger zone.
- ► Do not tow the machine farther than 20 meters (66 ft).
- ► Wear protective equipment.

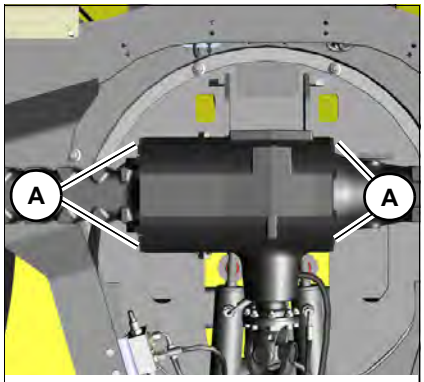

Fig. 147

1. Secure the machine with chocks to prevent it from rolling.
2. Secure the machine at the tie-down points with slings of sufficient dimensions.

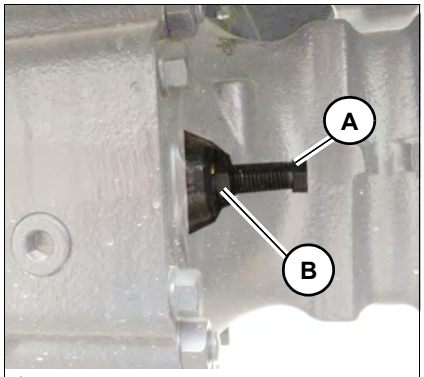

Fig. 148:

3. Loosen the lock nut M14 **B**.
4. Screw in the screws **A** alternately all the way to the stopper.
   ➥ The electronic parking brake is disabled.
5. Perform towing.

Once towing is over, have repair work performed by an authorized service center.

Towing the machine on public roads

Do not tow other vehicles with the Dual View Truck, nor must the Dual View Truck be towed with another vehicle.

https://truckmanualshub.com/

6.2 Loading the vehicle

WARNING

Accident hazard due to incorrect loading!

Incorrect loading can cause accidents and serious injury or death.

- ► Do not allow anyone to stay in the danger zone.
- ► Read the transport weight off the type label. Add the weight of subsequently installed equipment to the weight of the machine.
- ► Get off a transport vehicle only with the help of a bystander.

Tie-down points

Fig. 149

Position	Tie-down points	Quantity
A	Front left and right of drive unit	2
B	Rear left and right of loader unit	2

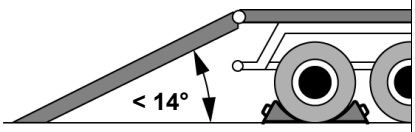

Fig. 150

Preparations

1. *– see chapter " Transportation" on page 2-15*
2. Position the ramps at the smallest possible angle. Ensure that the grade does not exceed 14° (25%).
3. Use access ramps and transport surfaces with an anti-skid surface only.

https://truckmanualshub.com/

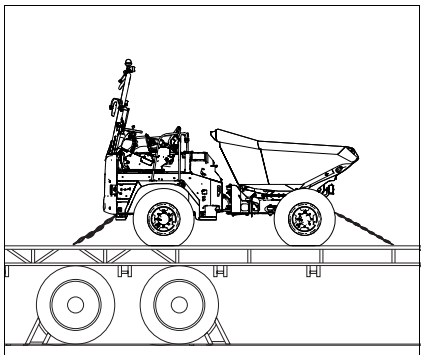

Fig. 151

4. Start the engine.
5. Lower the skip.
6. Carefully drive the machine backward onto the middle of the transport vehicle.
7. Move the machine to transport position.
8. Apply the parking brake.
9. Stop the engine.
10. Remove the starting key and carry it with you.
11. Place the rollbar in the middle position – *see chapter " Rollbar" on page 4-16*
12. Leave the control stand. If the machine is equipped with a cabin (option), close and lock the door, windows and all covers.

Center-pivot prop

WARNING

Crushing hazard due to machine steered via the articulation!

Can cause serious injury or death.

► Install the center-pivot prop before crane-lifting the machine.

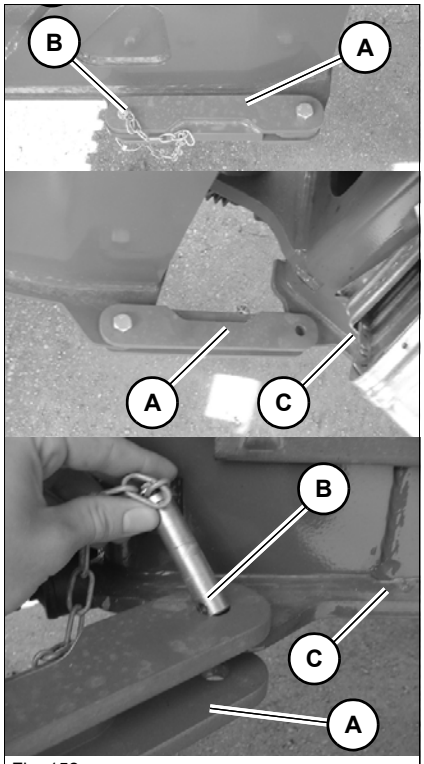

Fig. 152

The center-pivot prop prevents the machine from being steered.

1. Remove pin **B**.
2. Rotate center-pivot prop **A** toward the drive unit **C**.
3. Insert pin **B**.

Information

Assemble the center-pivot prop back onto loader unit before the machine is put into operation again.

https://truckmanualshub.com/

Crane-lifting

WARNING

Accident hazard due to incorrect loading!

Incorrect loading can cause accidents and serious injury or death.

- ► Do not allow anyone to stay in the danger zone.
- ► Read the transport weight off the type label. Add the weight of subsequently installed equipment to the weight of the machine.
- ► The vehicle may only be raised with suitable lifting gear.

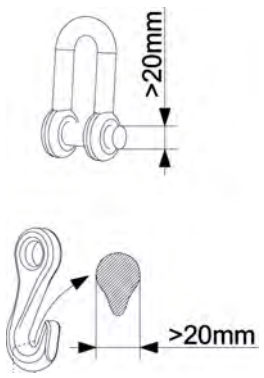

Fig. 153

NOTICE

Possible damage to lifting eyes due to wrong lifting gear.

- ► For lifting the machine, use only hooks or shackles with a minimum diameter of 20 mm (0.79 in).

https://truckmanualshub.com/

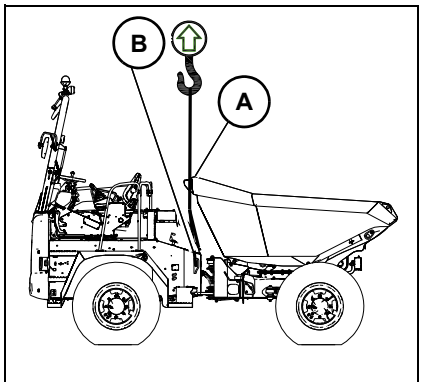

Fig. 154

1. Empty the skip and lower it to middle position.
2. Remove all dirt from the vehicle.
3. Park the vehicle on firm, level, and horizontal ground.
4. Activate road mode.
5. Stop the engine.
6. Remove the starting key and carry it with you.
7. Machine with optional cabin:
   - Safely store all loose objects.
   - Close and lock all covers and the door.
8. The rollbar can be lowered to reduce the transport height *– see chapter “ Rollbar” on page 4-16*
9. Put the center-pivot prop in place *– see "Center-pivot prop" on page 6-6*.
10. Use suitable lifting gear (chain, etc.).
11. Put the lifting gear through bracket **A** on the edge of the skip and fasten it on lifting eyes **B** on the left and right on the chassis with suitable slings.
12. Slowly raise the vehicle until there is no more contact with the ground.
13. Wait until the machine does not swing any more.
14. Slowly raise the vehicle to the required height and load.
15. If the machine balance, and the condition and position of the slings is correct, slowly raise the machine to the required height and load it.

Information

The manufacturer’s warranty shall not apply to accidents or damage caused by loading or transporting.

https://truckmanualshub.com/

6.3 Transporting the vehicle

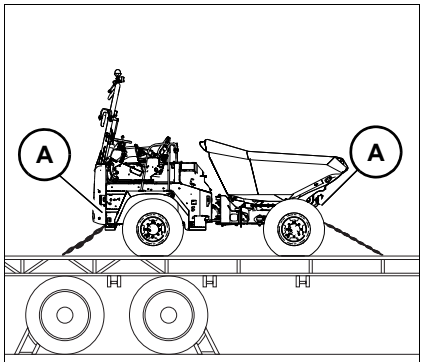

Fig. 155

1. Install the center-pivot prop.
2. Firmly fasten the vehicle on the loading area with tie-down points **A** with slings of appropriate size. Observe the legal regulations.
3. Before transporting the machine through wet weather:
   Close the exhaust pipe.
4. The driver of the transport vehicle must observe the following before departure:
   - Permitted overall height, width and weight of the transport vehicle including the Dual View Truck.
   - The legal regulations of the countries where transport is to take place.

Information

The manufacturer's warranty shall not apply to accidents or damage caused by loading or transporting.

https://truckmanualshub.com/

Notes:

https://truckmanualshub.com/

7 Maintenance

7.1 Information on maintenance

Responsibilities and prerequisites

The working order and the service life of machines are heavily dependent on maintenance.

Daily and weekly servicing and maintenance must be performed by specifically trained personnel.

Have the maintenance, delivery inspection and the entries in the service booklet performed by a Wacker Neuson service center, otherwise warranty claims will not be acknowledged. It is therefore in the interest of the machine owner to perform the mandatory maintenance. This ensures optimal machine operation.

Immediately repair or replace parts that are already damaged or not working correctly before they are due for replacement.

Have repair or replacement of safety-relevant parts performed only by a Wacker Neuson service center.

Use only original spare parts for repairs.

The manufacturer shall not be liable for damage to the machine or personal injury caused by failure to observe the specific information and descriptions.

Important safety instructions on maintenance

- Follow all safety instructions given in this Operator's Manual.
- Follow the instructions given in chapter **Safety, safety instructions on maintenance** and **qualification of the operating and maintenance personnel** in this Operator's Manual.
- Wear protective equipment (for example hard hat, safety glasses, protective gloves, safety boots).
- Observe the danger indications and safety instructions during maintenance.
- In order to avoid injury hazard, do not perform work on a hot and running engine.
- Use a suitable container to collect fluids and lubricants as they flow out and dispose of them in an environmentally friendly manner.
- Attach a warning label to the control elements (for example **"Machine being serviced, do not start"**).
- Stop and park the vehicle. Stop the engine *– see "Preparing lubrication" on page 7-6*.
- In order to avoid damage to electronic components, do not perform welding work on the machine. Contact a Wacker Neuson service center.
- Increased engine load can cause shorter engine oil maintenance intervals. Output is reduced if the machine is used beyond the maintenance interval. If the machine is operated less than 500 hours per year the engine oil must be changed once a year.

https://truckmanualshub.com/

7.2 Maintenance overview

Maintenance label

Maintenance that has to be performed by the operator is indicated on the maintenance label.

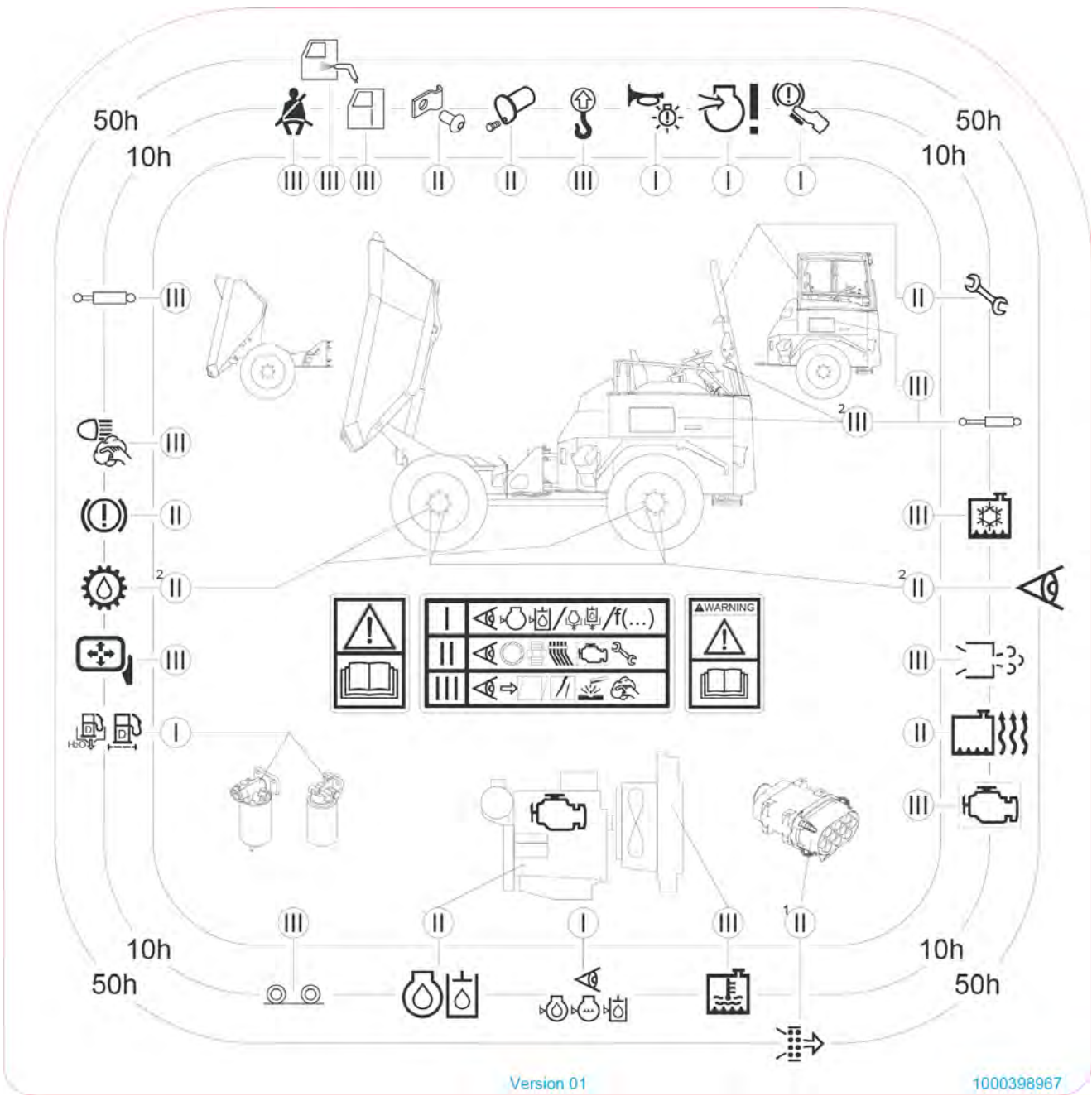

Fig. 156 Maintenance label (symbolic representation)

I Checking functions and levels, filling up and draining

II Checking wear parts, seals, hoses and screw connections

III Checking for damage, corrosion and dirt

Superscript numbers, for example ^{2}: number of lubrication points

https://truckmanualshub.com/

Maintenance plan

Daily maintenance (operator)		
Symbol	**Inspection work** (Check the following engine/machine fluids. Check the oil levels after a test run and add oil if necessary.)	Page
	Check the engine/machine fluids (engine oil, engine coolant, hydraulic oil, brake fluid)	*7-23*, *7-25*, *7-29*, *7-33*
	Check the radiator for dirt, clean it if necessary	*7-26*
	Drain water separator (prefilter) and fuel filter[1]	*7-21*
	Check the tires (damage, inflation pressure, tread depth)	*7-34*
	Check the engine air intake	*7-27*
	Check the pin locks	--
	Check line fixtures	--
	Check the indicator lights and acoustic warning devices	*4-24*
	Check the service and parking brake function	*5-4*
	Check the screw connections of the protective structures (for example the cab, rollbar) for tightness[2]	*7-16*
	Clean the lights/light system, signaling systems	--
Option		
	Adjust the mirrors and camera system correctly, clean and check them for damage, check the fastening screws and tighten them if necessary	*4-11*
	Check the condenser for dirt, clean it if necessary	*7-26*

Leakage check	
Check for tightness, leaks and chafing: pipes, flexible lines and screw connections of the following assemblies and components. Have them repaired if necessary.	

https://truckmanualshub.com/

Daily maintenance (operator)		
	Engine and hydraulic system	--
	Traveling drive, axles and transfer gearbox	--
	Braking system	--
	Cooling systems, heating, and hoses (visual check)	--
Visual check		
Check for correct function, deformations, damage, surface cracks, wear and corrosion.		Page
	Check the exhaust system for damage	--
	Check the insulating mats in the engine compartment for damage	--
	Check the cabin and protective structures for damage (for example the rollbar)	--
	Check the piston rods of the cylinders for damage	--
	Check the seat belt for damage	*7-16*
	Check function of engine cover gas strut	--
	Check the lifting eyes	--

1. Interval according to indicating instrument
2. Check the threaded fittings and corresponding components/assemblies visually or manually (without using tools) for tightness. Replace the threaded fitting in case of irregularities. Pay attention to adhesion as you do so.

https://truckmanualshub.com/

Weekly maintenance (every 50 operating hours) (operator)		Page
All steps for previous maintenance intervals		--
	Check the axle mounting for tightness (visual check)	--
	Check the wheel nuts for tightness (visual check)	--
	Check accesses and exits for dirt	--
	Replace the air filter[1]	7-27

1. Air filter replacement according to the indicator light, every 1000 o/h or once a year at the latest. (Replace after 50 o/h when in extensive use in environments with acidic air, such as acid production facilities, steel and aluminum mills, chemical plants and other nonferrous-metal plants, independently of the indicator light; contact an authorized service center.)

Only once after the first 50 operating hours (Wacker Neuson service center)	Page
Replace the oil filter of the machine-travel hydraulics	--
Replace the oil filter of the operating hydraulics	--
Replace the gearbox oil in the traveling drive, axles and transfer gearbox	--
Check V-belt condition and tension	--
Check the threaded fittings for tightness	--
Check labels and Operator's Manual for completeness and condition	--
Check the pressure of the primary pressure limiting valves	--
Retighten the wheel nuts	--
Reset the maintenance meter	--
All steps for maintenance once a day and once a week	--

Other maintenance intervals (Wacker Neuson service center):

- Every 500 operating hours or annually
- Every 1000 operating hours
- Every 1500 operating hours
- Every 2000 operating hours
- Every 3000 operating hours

Information

Maintenance work with the note **authorized service center** must only be performed by the trained and qualified personnel of an authorized service center.

https://truckmanualshub.com/

Preparing lubrication

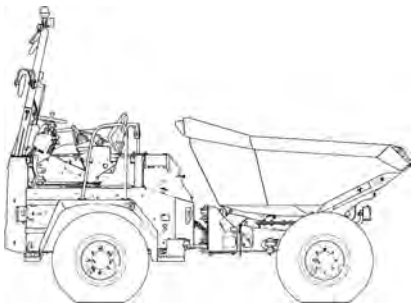

Fig. 157

1. Stop the vehicle on firm, level, and horizontal ground.
2. Lower the skip. Check the middle position if the machine is equipped with a swivel skip.
3. Stop the engine.
4. Remove the starting key and carry it with you.
5. Safely store all loose objects.
6. Close the windows and doors (cab option).
7. Close and lock all covers.
8. Attach a warning label to the control elements (for example **“Machine being serviced, do not start”**).

Wait at least 10 minutes after stopping the engine.

Information

Keep all lubrication points clean and remove any escaping grease.

https://truckmanualshub.com/

Lubrication plan

Lubricate the specified lubrication points once a day. Before starting maintenance, lower the red maintenance prop when the skip is raised and secure the skip with it.

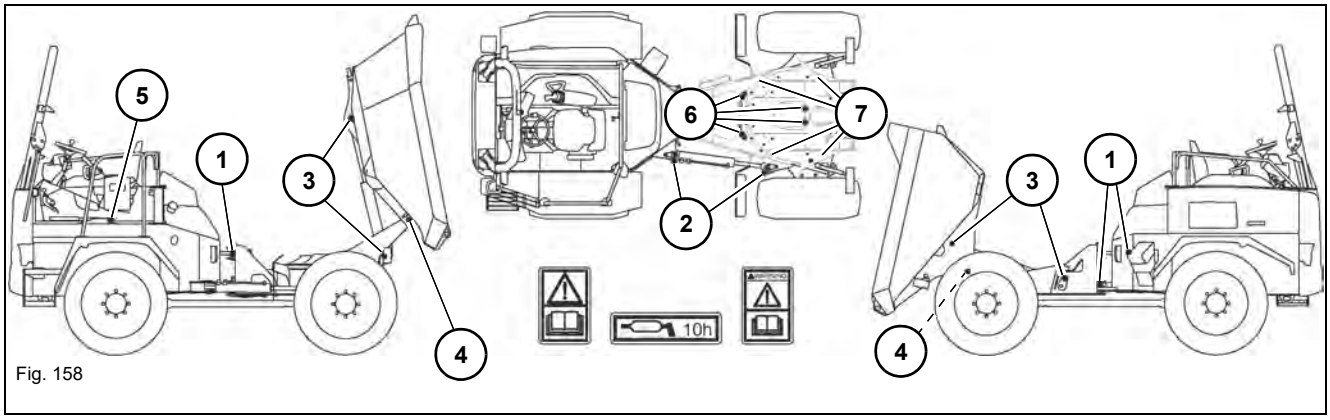

Fig. 158

Position	Lubrication point	Quantity
1	Articulation	3
2	Steering cylinder	2
3	Tilt cylinder	2
4	Skip	2
5	Seat console	1
6	Swiveling cylinder[1]	4
7	Live ring[1]	4

1. Option for swivel skip

https://truckmanualshub.com/

7.3 Fluids and lubricants

Application	Fluid/lubricant	Specification	Season/temperature	Capacities[1]
Engine[2]	Diesel fuel	ASTM D975 grade 2D S15 (USA)[3]	Summer or winter diesel depending on outside temperatures	80 liters (21.13 gal)
		EN 590 (EU)[3]		
		BS 2869 class A2 (GB)[3]		
	Coolant	Distilled water and anti-freeze ASTM D3306, ASTM D4985, Deutz DQC CA-14	Year-round	12 liters (3.17 gal)
Engine	Engine oil	API CJ-4	-15°C to +40°C (5°F to 104°F)	8.9 liters (2.35 gal)
		ACEA E9		
		ECF-3		
Hydraulic oil reservoir	Hydraulic oil	Eurolub HVLP 46[4]	Year-round[5]	60 liters (15.9 gal)
	Biodegradable hydraulic oil[6]	Panolin HLP Synth 46 Fina Biohydran SE 4& BP Biohyd SE - S 46 Fuchs Plantosyn 3268		
Brake fluid	Hydraulic oil	Eurolub HVLP 46[4]	Year-round[5]	200 ml (12.2 in^3)
	Biodegradable hydraulic oil[6]	Panolin HLP Synth 46		
Grease nipples	Grease	KPF 2 K-20[7] ISO-L-X-BCEB 2[8]	Year-round	According to the maintenance plan
Battery terminals	Acid-proof grease[9]	FINA Marson L2	Year-round	As required
Washer system	Cleaning agent	Glass cleaner and anti-freeze	Year-round	1.2 l (73 in^3)

1. The capacities indicated are approximate values; the oil level check alone is relevant for the correct oil level.
   Capacities indicated are no system fills
2. Using biodegradable diesel fuel is prohibited
3. Sulfur content up to 15 ppm (0.0015%)
4. According to DIN 51524 section 3, ISO-VG 46
5. Depending on local conditions – *see "Engine oil types" on page 7-9*
6. Biodegradable hydraulic oil based on saturated synthetic esters with an iodine value of < 10, according to DIN 51524, section 3, HVLP, HEES
7. According to DIN 51502, lithium-saponified grease
8. According to DIN ISO 6743-9, lithium-saponified grease
9. Standard acid-proof grease NGLI category 2

https://truckmanualshub.com/

Engine oil types

Tier IV engine				
Viscosity grade	Ambient temperature			
	min. °C	min. °F	max. °C	max. °F
SAE 0W30	-35	-31	30	86
SAE 0W40	-35	-31	40	104
SAE 5W30	-30	-22	30	86
SAE 5W40	-30	-22	40	104
SAE 10W30	-15	5	30	86
SAE 10W40	-15	5	40	104
SAE 15W40	-15	5	40	104
SAE 20W50	-5	23	>40	>104

Hydraulic oil types

Hydraulic oil types				
Viscosity grade	Ambient temperature			
HVLP 46[1]	min. °C	min. °F	max. °C	max. °F
ISO VG32	-20	-4	30	86
ISO VG46	-5	23	40	104
ISO VG68	5	41	50	122

1. According to DIN 51524 section 3, ISO-VG 46.

https://truckmanualshub.com/

Important information regarding operation with biodegradable hydraulic oil

- Use only the biodegradable oils that have been tested and released by Wacker Neuson.
- Add only biodegradable oil of the same type. In order to avoid misunderstandings, attach a label on the hydraulic oil filler inlet providing clear information regarding the type of oil currently used.
  The joint use of two different biodegradable oils can affect the quality of one of the oil types. Therefore ensure that the remaining amount of biodegradable oil complies with the national and regional regulations as you replace it. Observe the manufacturer's indications.
- Do not add mineral oil – the content of mineral oil should not exceed 2% of the system fill in order to avoid foaming problems and to ensure biological degradability.
- When running the vehicle with biodegradable oil, the same oil and filter replacement intervals are valid as for mineral oil.
- Always have the condensation water in the hydraulic oil reservoir drained by a Wacker Neuson service center before the cold season. The water content may not exceed 0.1% by weight.
- The instructions in this Operator's Manual concerning environmental protection are also valid for the use of biodegradable oil.
- Subsequent change from mineral oil to biodegradable oil may only be performed by a Wacker Neuson service center.

https://truckmanualshub.com/

7.4 Maintenance accesses

WARNING

Burn hazard due to hot surfaces!

Can cause serious burns or death.

► Stop the engine and let hot surfaces cool down.

► Wear protective equipment.

WARNING

Injury hazard due to rotating parts!

Rotating parts can cause serious injury or death.

► Open the maintenance flap only at engine standstill.

CAUTION

Injury hazard due to open maintenance access!

Can cause injury.

► Take care to avoid injuries when the maintenance access door is open.

https://truckmanualshub.com/

Maintenance accesses

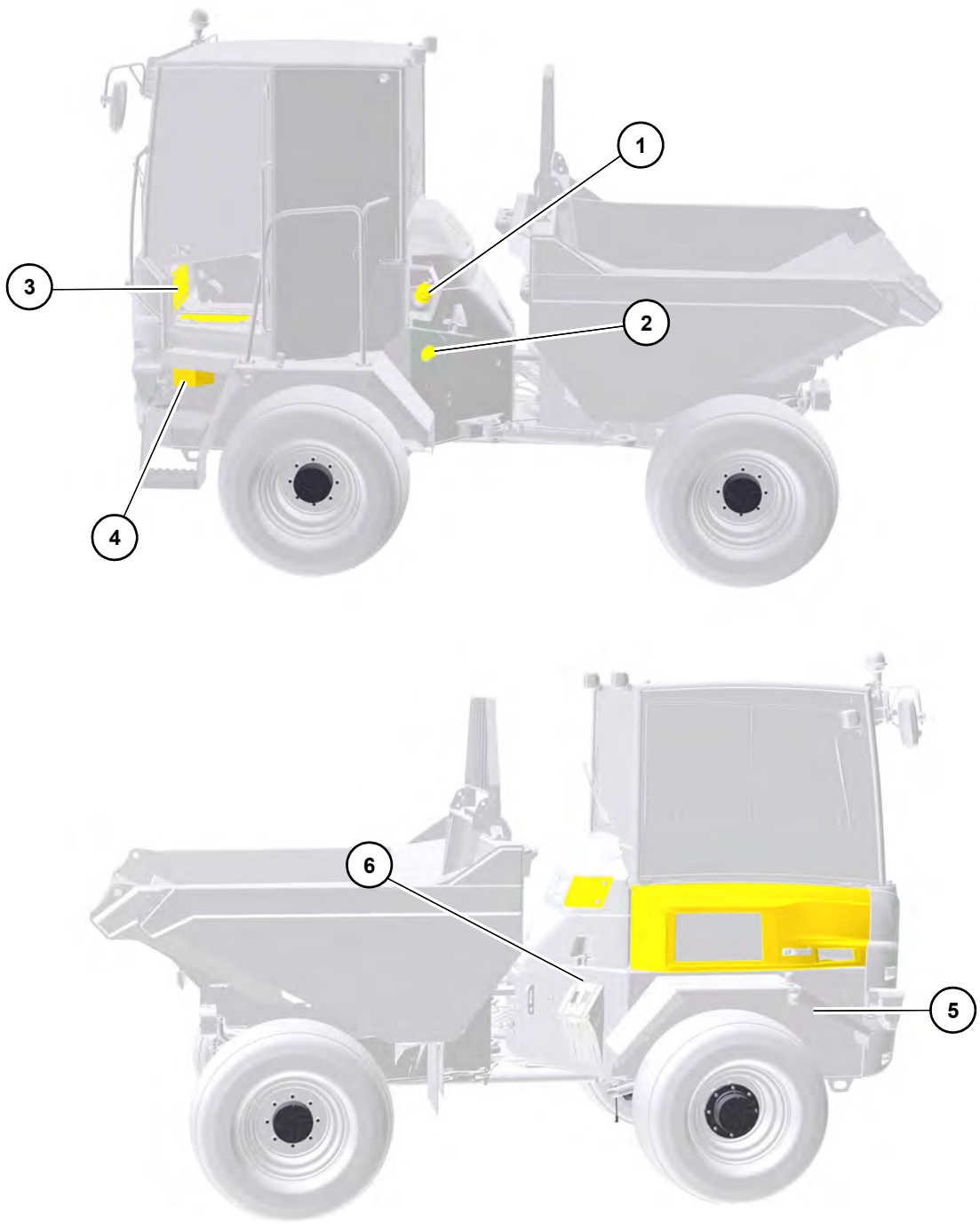

Fig. 159: Maintenance accesses

Item	Designation	Item	Designation
1	Reservoir filler inlet	4	Battery circuit breaker/jump-start equipment
2	Hydraulic oil filler inlet	5	Engine cover
3	Fuse box	6	Air conditioning - relays/filter

https://truckmanualshub.com/

Opening the engine cover

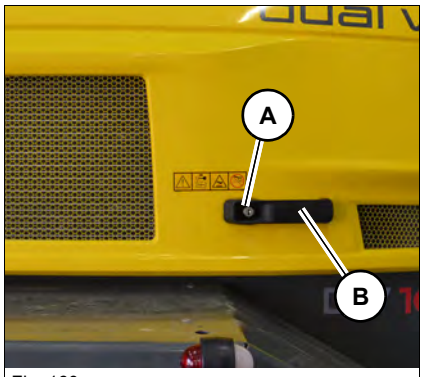

Fig. 160

1. Stop and park the vehicle. Stop the engine.
2. Turn the starting key in lock **A** anticlockwise.
3. Press lock **A** and pull handle **B**.

The engine cover is supported by a gas strut.

Closing the engine cover

1. Firmly pull engine cover downwards by handle **B** until the engine cover locks into place.
2. Turn the starting key in lock **A** clockwise.

Fan grid

Fig. 161

The water/hydraulic oil radiator is located behind the fan grid. In order to avoid overheating, check the fan grid regularly for dirt and clean it if necessary – *see "Cleaning the radiator" on page 7-26*.

https://truckmanualshub.com/

7.5 Cleaning and maintenance

WARNING

Injury hazard due to rotating parts!

Rotating parts can cause serious injury or death.

► Open the maintenance flap only at engine standstill.

WARNING

Burn hazard due to hot surfaces!

Hot surfaces can cause serious burns or death.

► Stop the engine and let it cool down.

► Wear protective equipment.

CAUTION

Health hazard due to cleaning agents!

Cleaning agents can be harmful to health

► Use only suitable cleaning agents.

► Ensure sufficient ventilation.

NOTICE

Damage to rubber and electrical parts when cleaning with solvents.

► Do not use solvents, benzine, or other aggressive chemicals.

NOTICE

Damage to electronics due to water jet.

► Do not point the water jet directly at electric components, and protect the electric components against humidity.

► If water contacts electrical components, dry them with compressed air and apply contact spray to them.

Environment

In order to avoid damage to the environment, clean the machine only in wash bays and places provided to this effect.

https://truckmanualshub.com/

Cleaning the vehicle is divided into three separate areas:

- Inside the cabin
- Exterior of the vehicle
- Engine compartment

Washing solvents

- Ensure sufficient room ventilation.
- Wear suitable protective clothing.
- Do not use flammable liquids, such as gasoline or diesel.

Compressed air

- Work carefully.
- Wear safety glasses and protective clothing.
- Do not aim the compressed air at the skin or at other people.
- Do not use compressed air for cleaning your clothing.

High-pressure cleaner

- Cover electric parts.
- Do not point the water jet directly at electric parts and damping material.
- Cover the breather filter on the hydraulic oil reservoir and the covers of the fuel tank and the hydraulic oil reservoir, etc.
- Protect the following components from moisture:
  - Electrical components (for example the alternator)
  - Control devices and seals
  - Air intake filters, etc.

Volatile and easily flammable anti-corrosion agents and sprays:

- Ensure sufficient ventilation of the premises.
- Fire, open flames and smoking is prohibited.

Inside the cabin

Recommended aids:

- Broom
- Vacuum cleaner
- Moist cloths
- Brush
- Water with mild soap solution

On the outside of the vehicle

Recommended aids:

- High-pressure cleaner
- Steam jet

https://truckmanualshub.com/

Engine compartment

1. Park the vehicle in a wash bay or place suitable for washing.
2. Stop the engine – *see "Preparing lubrication" on page 7-6*.
3. Clean the vehicle.

Seat belt

Always keep the seat belt clean as coarse dirt can impair the proper functioning of the seat belt buckle.

Clean the seat belt (while it remains fitted in the vehicle) with a mild soap solution only. Do not use chemical agents as they can destroy the fabric.

Cleaning in a saline environment

1. Park the vehicle in a wash bay or place – *see "Preparing lubrication" on page 7-6*.
2. Check the vehicle for salt deposits or corrosion. Have corrosion removed by a Wacker Neuson service center.
3. Clean the vehicle with a high-pressure cleaner. Clean the vehicle ensuring that there are no salt deposits in places that are difficult to access.
   Bear in mind the information on cleaning and maintenance.
4. Lubricate the vehicle according to the lubrication schedule
5. Allow the vehicle to dry and check it again for salt deposits.

Loose threaded fittings and attachments

Contact a Wacker Neuson service center.

https://truckmanualshub.com/

7.6 Lubrication work

– see chapter " Preparing lubrication" on page 7-6.

7.7 Fuel system

Important information regarding the fuel system

NOTICE

Damage to injection pump due to air in the fuel system.

► Do not run the fuel tank completely dry.

Information

In order to prevent the formation of condensation water, fully fill up the fuel tank at the end of each working day.

Diesel fuel specification

NOTICE

Engine damage due to incorrect or dirty diesel fuel.

► Only use clean diesel fuel according to the **fluids and lubricants** list.

► Do not use any diesel fuel with additives.

– see chapter "7.3 Fluids and lubricants" on page 7-8

https://truckmanualshub.com/

Refueling

WARNING

Explosion hazard due to flammable fuel/air mixtures!

Fuels develop explosive and flammable mixtures with air that can cause serious burns or death.

- ► Fire, open flames and smoking is prohibited.
- ► Open tank lock carefully to release the pressure in the fuel tank.
- ► Keep the maintenance area clean.
- ► Do not refuel in closed rooms.
- ► Do not add gasoline to diesel fuel.
- ► Let the engine cool down.

CAUTION

Health hazard due to diesel fuel!

Diesel fuel and fuel vapors are harmful to health!

- ► Avoid contact with the skin, eyes and mouth.
- ► Seek medical attention immediately in case of accidents with diesel fuel.
- ► Wear protective equipment.

CAUTION

Fire hazard due to diesel fuel!

Diesel fuel gives off flammable vapors. This can cause injury.

- ► Fire, open flames and smoking is prohibited.
- ► Adding gasoline is prohibited.

NOTICE

Do not refuel with cans in order to avoid dirt in the fuel.

https://truckmanualshub.com/

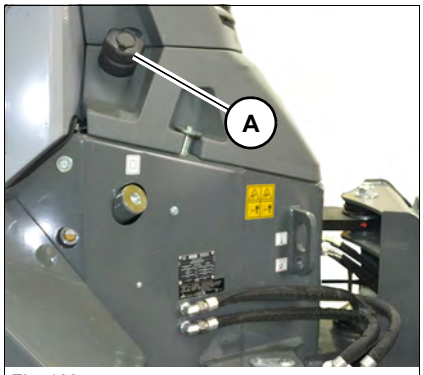

Fig. 162

Filler inlet **A** for the fuel tank is located in the drive unit, on the rear left.

1. Stop and park the vehicle. Stop the engine – *see "Preparing lubrication" on page 7-6*.
2. Unlock tank lock **A** with the starting key.
3. Open tank lock **A** carefully to release the pressure in the fuel tank.
4. Refuel.
5. Close and lock filler cap **A**.

Stationary fuel pumps

Even the smallest particles of dirt can cause increased engine wear, malfunctions in the fuel system and reduced effectiveness of the fuel filters.

Refueling from barrels

If refueling from barrels cannot be avoided, note the following points:

- Barrels must neither be rolled nor tilted before refueling.
- Protect the suction pipe opening of the barrel pump with a fine-mesh screen.
- Immerse the suction pipe opening down to a max. 15 cm (6 in) above the bottom of the barrel.
- Only fill the tank using refueling aids (funnels or filler pipes) with an integral microfilmer.
- Keep all refueling containers clean.

https://truckmanualshub.com/

Bleeding the fuel system

WARNING

Burn hazard due to hot surfaces!

Can cause serious burns and death.

► Stop the engine and let hot surfaces cool down.

► Wear protective equipment.

Bleed the fuel system in the following cases:

- After removing and fitting the fuel filter, prefilter or the fuel lines back on again.
- If the machine is put into operation after having been decommissioned for more than 30 days.

Bleeding

1. Stop and park the vehicle. Stop the engine – *see "Preparing lubrication" on page 7-6*.
2. Fill up and close the fuel tank.
3. Turn the starting key to the first position.
4. Wait about five minutes while the fuel system bleeds itself automatically.
5. Start the engine.

If the engine runs smoothly for a while and then stops, or if it does not run smoothly:

1. Stop the engine.
2. Remove the starting key and carry it with you.
3. Bleed the fuel system again as described above.
4. Check for leaks after starting the engine.
5. Have a Wacker Neuson service center perform a check if necessary.

https://truckmanualshub.com/

Emptying the water separator

Information

Empty the water separator, if error message **SPN 97** appears in the multifunctional display.

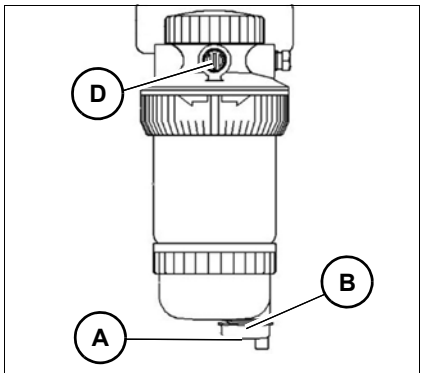

Fig. 163

1. Stop the vehicle, stop the engine – *see "Preparing lubrication" on page 7-6*.
2. Place a suitable container under the water separator.
3. Open the engine cover.
4. Connect a suitable hose to the drain device **A**.
5. Disconnect electrical connection **C**.
6. Remove the vent screw **D**.
7. Open drain valve **B**.

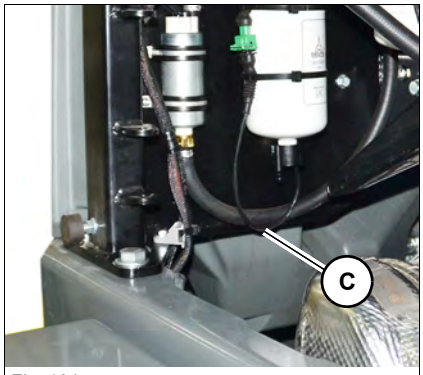

Fig. 164

8. Drain the fuel/water mixture into a receptacle.
9. Close drain valve **B** if nothing but fuel is flowing into the receptacle.
10. Tighten the vent screw **D**.
11. Connect electrical connection **C**.
12. Remove the hose.
13. Close and lock the engine cover.

Environment

Use a suitable container to collect fluids and lubricants as they flow out and dispose of them in an environmentally friendly manner.

https://truckmanualshub.com/

7.8 Engine lubrication system

Important information regarding the engine lubrication system

NOTICE

Possible engine damage from improper handling of engine oil.

- ► Use engine oil according to the **Fluids and lubricants** list.
- ► Have the oil changed only by a Wacker Neuson service center.
- ► Add the engine oil slowly so it can go down without entering the intake system.
- ► The oil level must be between the MIN and MAX marks.

Information

Check the oil level once a day. Wacker Neuson recommends checking before starting the engine. Check the oil level not less than five minutes after stopping the engine.

https://truckmanualshub.com/

Checking the engine oil level

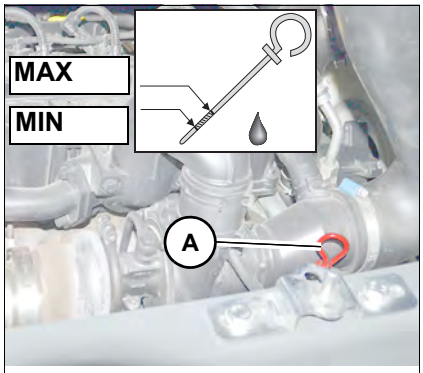

Fig. 165

1. Stop and park the vehicle. Stop the engine – *see "Preparing lubrication" on page 7-6*.
2. Open the engine cover.
3. Wipe the area around oil-level dipstick with a lint-free cloth.
4. Pull out oil-level dipstick **A** and wipe it with a lint-free cloth.
5. Slide in oil dipstick **A** completely.
6. Withdraw it and read off the oil level.
   ➥ The oil level must be between the MIN and MAX marks.
   ➥ Add engine oil if necessary.
7. Slide in oil dipstick **A** completely.
8. Close and lock the engine cover.

Adding engine oil

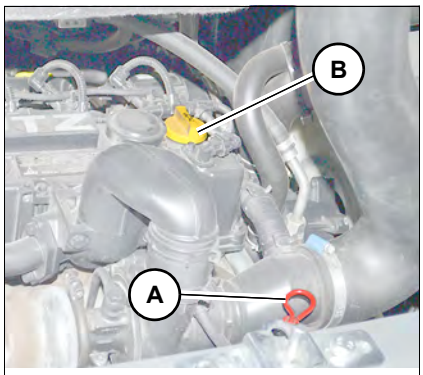

Fig. 166

1. Stop and park the vehicle. Stop the engine – *see "Preparing lubrication" on page 7-6*.
2. Open the engine cover.
3. Wipe the area around the sealing push-in cap with a lint-free cloth.
4. Open filler cap **B**.
5. Raise oil dipstick **A** slightly to allow any trapped air to escape.
6. Add engine oil.
7. Wait at least five minutes until all the oil has run into the oil sump.
8. Check the oil level.
9. Add oil if necessary and check the oil level again.
10. Close filler cap **B**.
11. Slide in oil dipstick **A** completely.
12. Close and lock the engine cover.

Environment

Use a suitable container to collect fluids and lubricants as they flow out and dispose of them in an environmentally friendly manner.

https://truckmanualshub.com/

7.9 Cooling system

Important information regarding the cooling system

WARNING

Poisoning hazard due to hazardous substances!

Contact with hazardous substances can cause serious injury or death.

- ► Wear protective equipment.
- ► Do not inhale or swallow coolant.
- ► Avoid contact of the coolant or antifreeze with the skin and eyes.

WARNING

Burn hazard due to coolant or antifreeze!

The coolant and antifreeze are easily flammable fluids that can cause serious burns or death if they are brought into contact with fire or open flames.

- ► Wear protective equipment.
- ► Only perform maintenance on an engine that has cooled down.
- ► Fire, open flames and smoking is prohibited.

WARNING

Burn hazard due to hot coolant!

At high temperatures, the cooling system is under pressure and can cause burning of the skin.

- ► Wear protective equipment.
- ► Let the engine cool down.
- ► Carefully open the radiator cap.

NOTICE

Possible engine damage due to wrong coolant.

- ► Observe the engine/vehicle fluid table or coolant compound table.

NOTICE

Possible engine damage due to low coolant level.

- ► Check the coolant level once a day.

https://truckmanualshub.com/

Information

Check the coolant level once a day before starting the engine.
Observe the coolant compound table

Checking the coolant level

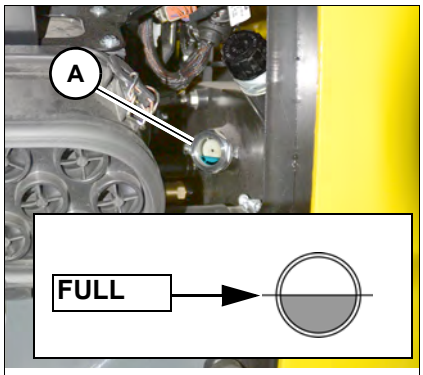

Fig. 167

1. Stop and park the vehicle. Stop the engine – *see "Preparing lubrication" on page 7-6*.
2. Open the engine cover.
3. Check the coolant level on sight glass **A**.
4. If the coolant level is below the **FULL** mark:
   ➥ Add coolant.
5. Close and lock the engine cover.

Adding coolant

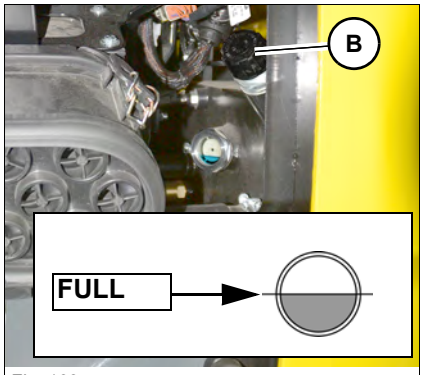

Fig. 168

1. Stop and park the vehicle. Stop the engine – *see "Preparing lubrication" on page 7-6*.
2. Open the engine cover.
3. Carefully unscrew filler cap **B** and release the pressure.
4. Open filler cap **B**.
5. Top off coolant up to the **FULL** mark.
6. Close filler cap **B**.
7. Start the engine and let it warm up for about 5 – 10 minutes.
8. Stop the engine.
9. Remove the starting key and carry it with you.
10. Let the engine cool down.
11. Check the coolant level again.
12. If necessary, add coolant and repeat the procedure until the coolant level remains constant.
13. Close and lock the engine cover.

https://truckmanualshub.com/

Cleaning the radiator

WARNING

Burn hazard due to hot surfaces!

Hot radiators can cause burns.

- ► Stop the engine and let it cool down.
- ► Wear protective equipment.

NOTICE

Possible engine damage or damage to the hydraulic system from dirty radiator fins.

- ► Check and if necessary clean the radiator once a day.
- ► In dusty or dirty work conditions, clean more frequently than indicated in the maintenance plans.

NOTICE

Damage to radiator fins during cleaning.

- ► Keep a safe distance from the radiator during cleaning.
- ► Use oil-free compressed air (2 bar/29 psi max.) to clean.

Fig. 169

Water/hydraulic oil radiator

The water/hydraulic oil radiators are located behind the fan grid **A**.

1. Stop and park the vehicle. Stop the engine – *see "Preparing lubrication" on page 7-6*.
2. Remove dust and other foreign bodies from the fan grid with compressed air.
3. Carefully clean the radiator with unlubricated compressed air with a max. 2 bar (29 psi).

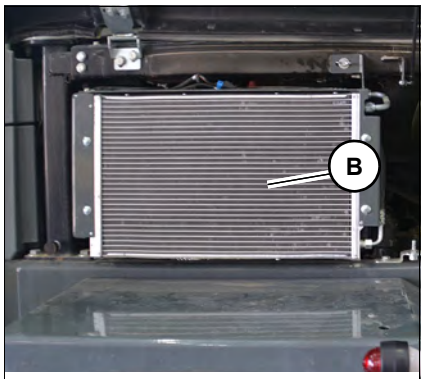

Fig. 170

Condenser (option)

The condenser **B** is located behind the engine cover.

4. Open the engine cover.
5. Remove dust and other foreign bodies from the fins with compressed air.
6. Close and lock the maintenance flap on the right.
7. Close and lock the engine cover.

https://truckmanualshub.com/

7.10 Air filter

Have maintenance performed only by a Wacker Neuson service center.

Checking the air intake

NOTICE

Possible engine damage due to intake of dirty air.

► Check once a day before putting the vehicle into operation.

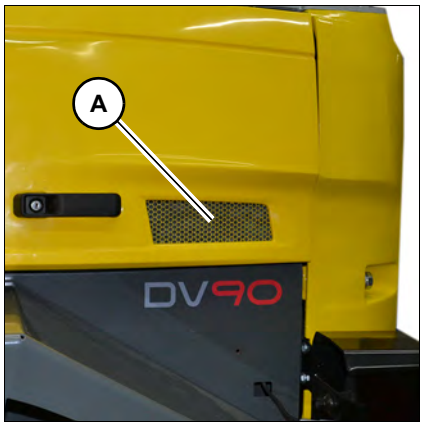

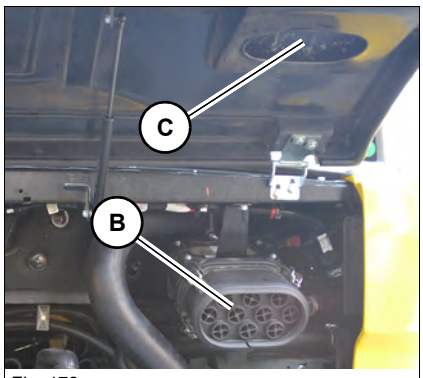

Fig. 172

1. Stop and park the vehicle. Stop the engine – *see "Preparing lubrication" on page 7-6*.
2. Remove the starting key and carry it with you.
3. Check and if necessary clean ventilation grill **A**.
4. Open the engine cover.
5. Check and if necessary clean air intake **B** at the air filter.
6. Check and if necessary clean air duct **C**.
7. Close and lock the engine cover.

https://truckmanualshub.com/

7.11 V-belt

Have the V-belt tension checked and the V-belt re-tensioned only by a Wacker Neuson service center.

7.12 Hydraulic system

Important information on the hydraulic system

WARNING

Burn hazard due to hot hydraulic oil!

Hot hydraulic oil can cause burning to the skin, serious injury or death.

- ► Release the pressure in the hydraulic system.
- ► Let the engine cool down.
- ► Wear protective equipment.

WARNING

Injury hazard due to fluid escaping under pressure!

Hydraulic oil escaping under pressure can penetrate the skin and cause serious injury or death.

- ► Do not operate the vehicle with leaking or damaged hydraulic system components.
- ► Open the breather filter carefully to slowly release the pressure inside the reservoir.
- ► Wear protective equipment. If hydraulic oil contacts the eye flush immediately with clean water and seek medical treatment.
- ► Have damaged or leaky screw connections, hoses and pressure lines immediately repaired or replaced by a Wacker Neuson service center. Search for hydraulic leaks with a piece of cardboard.

NOTICE

Damage due to wrong hydraulic oil.

- ► Only use hydraulic oil according to **Fluids and lubricants**.
- ► Have the hydraulic oil only changed by an authorized service center.

NOTICE

Damage to hydraulic system due to incorrect hydraulic oil level.

- ► With a warm engine, the hydraulic oil must be about at the middle of the sight glass.
- ► Check the hydraulic oil level once a day.

https://truckmanualshub.com/

NOTICE

Possible damage to hydraulic system due to dirty hydraulic oil.

- ► Always add hydraulic oil using the filling screen.
- ► Cloudy hydraulic oil in the sight glass is a sign of water or air in the hydraulic system. Contact a Wacker Neuson service center.
- ► Contact an authorized service center if the filter of the hydraulic system is dirty.

Release the pressure in the hydraulic system

Operate the control lever repeatedly to release the pressure in the hydraulic system.

Checking the hydraulic oil level

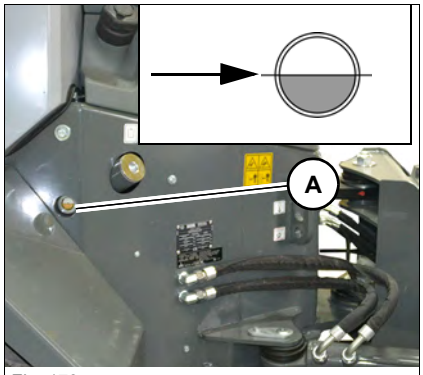

Fig. 173

1. Stop and park the vehicle. Stop the engine – *see "Preparing lubrication" on page 7-6*.
2. Lower the skip.
3. Release the pressure in the hydraulic system.
4. Remove the starting key and carry it with you.
5. Sight glass **A** is located at the rear left.
6. Check the oil level on sight glass **A**.
   ➥ If the engine is warm, the oil level must be approximately at the middle of sight glass **A**.

Add hydraulic oil if the oil level is below this mark.

Adding hydraulic oil

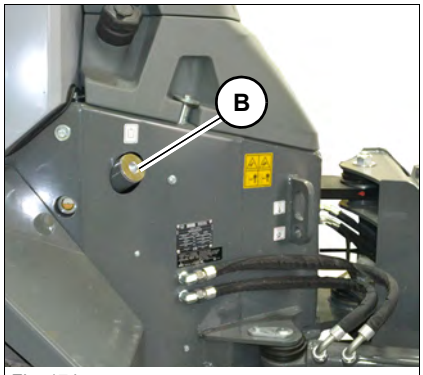

Fig. 174

The filler opening of the hydraulic oil reservoir is located behind the maintenance flap on the left.

1. Stop and park the vehicle. Stop the engine – *see "Preparing lubrication" on page 7-6*.
2. Release the pressure in the hydraulic system.
3. Clean the area around the filler opening of the hydraulic oil with a lint-free cloth.
4. Open the cover **B** of the fill opening for the hydraulic oil slowly to release the pressure inside the hydraulic oil tank.
5. Add hydraulic oil until the oil level is approximately in the middle of the sight glass.
6. Put cover **B** into place and screw it on tightly.

Environment

Use a suitable container to collect fluids and lubricants as they flow out and dispose of them in an environmentally friendly manner.

https://truckmanualshub.com/

Checking the hydraulic system and hoses

Check the hydraulic system and hoses daily for leaks and general condition.

NOTICE

Leaks and damaged pressure lines must immediately be repaired or replaced by a Wacker Neuson service center. This not only increases the operating safety of the vehicle but also helps to protect the environment.

► Have damaged or leaky pressure lines immediately repaired or replaced by a Wacker Neuson service center.

► Have hydraulic hoses replaced every 6 years from the date of manufacture, even if they do not seem to be damaged.

- Do not operate the vehicle with leaking or damaged hydraulic system components.
- Retighten leaking screw connections and hose connections only when the system is not under pressure. Release the pressure before working on pressure lines.
- Do not weld or solder damaged or leaking pressure lines and screw connections, but have them replaced.
- Wear protective equipment.

In this respect, Wacker Neuson recommends that you observe all the relevant safety regulations for hydraulic lines, as well as the safety regulations regarding accident prevention and occupational medicine in your country. Also observe DIN 20 066, TI. 5.

The article number is marked on the clamping section, and the date of manufacture is indicated on the hose of each hose connection.

Have a line immediately replaced if one of the following problems is detected:

- Damaged or leaky hydraulic seals
- Worn or torn shells or uncovered reinforcement branches
- Expanded shells in several positions.
- Entangled or crushed movable parts.
- Foreign bodies jammed or stuck in protective layers.

https://truckmanualshub.com/

7.13 Electrical system

Important information regarding the electrical system

Maintenance and repair work on the electrical system may only be performed by a Wacker Neuson service center.

- Have malfunctioning components of the electrical system replaced by a Wacker Neuson service center.
- Light bulbs and fuses may be replaced by the operator.

Alternator

WARNING

Injury hazard due to malfunctioning batteries!

Batteries give off explosive gases that can cause deflagrations if ignited.

► Fire, open flames and smoking is prohibited.

► Wear protective equipment.

► Do not jump start the engine if the battery is malfunctioning or frozen, or if the acid level is too low.

► Disconnect the grounding strap of the battery before starting repair work on the electrical system.

► Do not place conductive articles on the battery – risk of short circuit.

NOTICE

Possible damage to electrical components or engine electronics.

► When connecting the battery leads, ensure that the poles are not inverted.

► Do not place conductive articles on the battery – risk of short circuit.

► Do not interrupt voltage-carrying circuits at the battery terminals because of the sparking hazard.

► Do not disconnect the battery while the engine is running. Wait at least three minutes between removing the starting key and disconnecting the battery in order to avoid damage to the engine control unit.

► After removing the starting key, wait at least three minutes before actuating the battery master switch in order to avoid damage to the engine control unit.

Environment

Dispose of old batteries in an environmentally friendly manner.

https://truckmanualshub.com/

Fuses and relays

- Blown fuses indicate overloading or short circuits. Have the electrical system checked by a Wacker Neuson service center.
- Only use fuses with the specified amperage.

Battery state of charge

Have this checked only by a Wacker Neuson service center.

Charging the battery

Have this performed only by a Wacker Neuson service center.

Replacing the battery

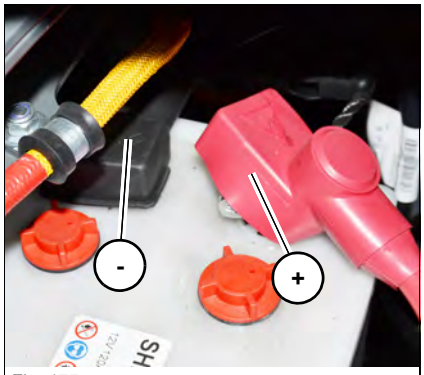

Fig. 175

The battery is maintenance-free. However have the battery checked at regular intervals to ensure that the electrolyte level is between the MIN and MAX marks.

Checking the battery requires it to be removed and must be performed by a Wacker Neuson service center.

Follow the specific battery safety instructions.

NOTICE

In order to avoid damage to the engine electronics, do not disconnect the battery while the engine is running.

https://truckmanualshub.com/

7.14 Heating, ventilation and air conditioning system

Checking/changing the cabin air filter

Have this performed only by a Wacker Neuson service center.

7.15 Washer system

Only use glass cleaner (with antifreeze if necessary) for refilling.

Checking the fluid level and adding fluid

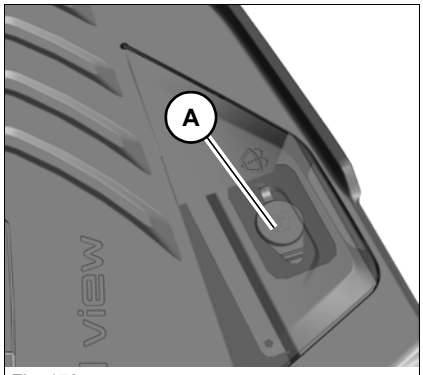

Fig. 176

Reservoir **A** for the cleaning solution of the washer system is located on the left under the floor mat.

1. Stop and park the vehicle. Stop the engine *– see "Preparing lubrication" on page 7-6*.
2. Check the fill level in the reservoir **A** and add a cleaning solution (glass cleaner) if necessary.

7.16 Axles

Have maintenance performed only by a Wacker Neuson service center.

7.17 Braking system

Have maintenance performed only by a Wacker Neuson service center.

Checking the brake-fluid level

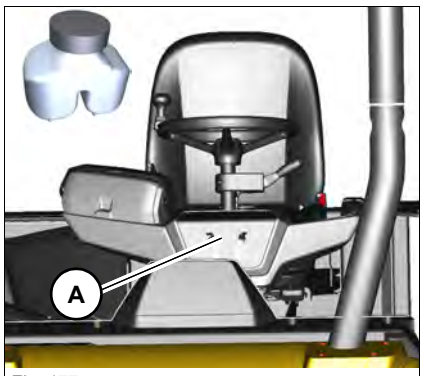

Fig. 177

Reservoir **A** for the brake fluid is located in front of the steering wheel. The fluid level must reach the mark indicated. Check the fluid level once a day, add fluid if necessary *– see chapter “7.3 Fluids and lubricants” on page 7-8*.

https://truckmanualshub.com/

7.18 Tyres

Fig. 178

WARNING

Accident hazard due to incorrect maintenance!

Can cause serious injury or death.

► Have repair work on wheels, tires, etc. performed only by a Wacker Neuson service center.

► Use suitable assembly tools, for example covering sleeves for the studs, a jack.

Information

Depending on load, work and ground conditions, the extent of wear of the tires can be different. Therefore interchange the tires regularly to ensure identical rolling properties.

Information

If a damaged tire has to be replaced, then also replace the other one on the same axle.

Inspection work

Daily checks on the wheels increases the operational safety of the vehicle and reduces unscheduled standstill times.

- Check the wheels for damage and wear.
- Check the tire pressure.
- Keep wheels and their tread radii clean.

https://truckmanualshub.com/

Wheel change

NOTICE

Support the vehicle and raise it so that it is not damaged.

Information

Note the direction of travel of the tires.

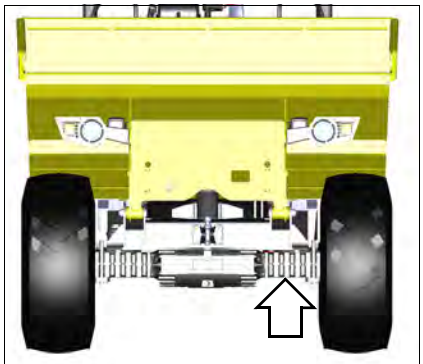

Fig. 179

1. Park the vehicle on firm, level, and horizontal ground.
2. Apply the parking brake.
3. Use wheel chocks to prevent the machine from rolling away.
4. Loosen the wheel nuts of the wheel you want to remove.
5. Place a jack with a lift capacity of 5000 kg (11,023 lbs) under the axle mounting ensuring stability.
6. Raise the machine on the side where you want to change a wheel.
7. Check the machine is standing firmly.
8. Secure the machine with trestles in appropriate places.
9. Loosen and remove the wheel nuts.
10. Remove the wheel.
11. Place the new wheel onto the wheel bolts.
12. Tighten opposite wheel nuts alternately.
13. Remove the trestles.
14. Lower the raised side of the machine.
15. Tighten opposite wheel nuts alternately to 450 Nm (332 ft.lbs).

7.19 Maintenance of attachments

Not available.

7.20 Maintenance of options

– see chapter “7.2 Maintenance overview” on page 7-2

https://truckmanualshub.com/

https://truckmanualshub.com/

8 Malfunctions

NOTICE

Contact a Wacker Neuson service center in case of malfunctions or signs that are not listed in the following tables or that persist after maintenance has been performed correctly.

8.1 Engine warning lights

Engine warning	Engine stop	Description
Yellow	Red	
Off	Off	No malfunction.
On	Off	The engine runs correctly, but there is an error in the electronic engine management. Contact a Wacker Neuson service center.
Flashes	Off	The engine runs correctly, but a diagnosis or error code is issued causing a reduction of engine power. Contact a Wacker Neuson service center.
Flashes	On	Engine is about to be shut down, or is already shut down. Stop the engine immediately and contact a Wacker Neuson service center.

8.2 Engine and engine oil indicator lights

Engine warn-ing	Engine stop	Oil pressure	Description
Yellow	Red	Red	
On	On	On	All warning and indicator lights illuminate for a few seconds if the starting key is turned to position 1. If the engine stop or oil pressure light does not illuminate, stop vehicle operation immediately and contact a Wacker Neuson service center.
Off	Off	Off	No malfunction.
On	On	On	Low oil pressure (if the oil pressure indicator light illuminates during operation). Check the oil level and add oil if necessary *– see chapter " Adding engine oil" on page 7-23*. If the malfunction is still indicated, stop the engine and contact a Wacker Neuson service center.

https://truckmanualshub.com/

8.3 General malfunctions

Malfunction	Possible cause	Remedy	See
Engine does not start or is not easy to start	Empty fuel tank	Refueling	7-18
	Malfunctioning or empty battery	Replace the battery	7-32
	Malfunctioning fuse	Check the fuse	9-7
	Electric feed pump is not running	Contact a Wacker Neuson service center	--
	Travel direction selected	Do not select a travel direction	
	Service brake not actuated	Service brake actuated	
	Swivel console not locked into place	Lock swivel console into place	
Machine travel cannot be started	Parking brake applied	Release the parking brake	5-3
	No travel direction selected	Select a travel direction	5-6
	Engine speed too low	Press the accelerator pedal	5-2
	Operator is not sitting on the seat and operator presence switch is enabled	Sit down on the seat	4-4
	Malfunctioning operator presence switch (option)	Contact a Wacker Neuson service center	--
	Temperature of traveling drive is too low	Let the machine run warm	
	Swivel console not locked into place	Lock swivel console into place	
Reduced drive output	Technical defect	Contact a Wacker Neuson service center	--
	Oil temperature too low	Let the engine run warm	
	Operating temperature too high	Let the engine cool down at idling speed and then contact an authorized service center	--
	Maintenance not performed	Perform maintenance	--

https://truckmanualshub.com/

Malfunction	Possible cause	Remedy	See
Maximum travel speed is not reached	Speed range 1 selected	Select speed range 2	5-2
Engine starts, but does not run smoothly or dies	Air in fuel system	Bleeding the fuel system	7-20
Black engine smoke or Output loss	Dirty air filter	Contact a Wacker Neuson service center	--
Blue engine smoke	Oil level too high	Contact a Wacker Neuson service center	--
Machine pulls to the right or left	Damaged steering cylinder	Contact a Wacker Neuson service center	--
	Uneven wear of the tires	Contact a Wacker Neuson service center	--
	Uneven tire pressure	Check the tire pressure	
None of the hydraulic functions can be operated	Work mode not enabled	Enable work mode	5-7
	Control valve error	Contact a Wacker Neuson service center	--
Electrical components do not work	Malfunctioning fuse	Check the fuse	9-7
Loss of refrigerant	Loose hose connection	Contact a Wacker Neuson service center	--
	Leak in system		
	Malfunctioning radiator filler cap		

https://truckmanualshub.com/

Engine error messages

Information

The traveling drive is throttled at low oil temperatures. Warm up the machine to operating temperature.

Observe the following if an error is displayed in the multifunctional display:

Machine travel or operation is prohibited in case of major errors

- Engine power is reduced.
- The traveling drive is disabled.
- Stop and park the vehicle.
- Contact a Wacker Neuson service center and have the malfunction rectified.

Machine travel and operation is possible in case of minor errors.

- Engine power is not reduced.
- The traveling drive is throttled.
- Contact a Wacker Neuson service center and have the malfunction rectified.

Information

Possible errors are displayed in the multifunctional display for a few seconds when the machine is started.

https://truckmanualshub.com/

9 Technical data

9.1 Model designations and trade names

Machine model	Trade name
D24-01	DV60
D24-02	DV90
D24-03	DV100

9.2 Engine

Engine[1]	DV60/DV90/DV100
Manufacturer	Deutz
Type	TD 2.9 L4 DOC
Design	Water-cooled 4-cylinder diesel engine
Intake system	Turbo-charging
Fuel injection system	Direct injection
Engine management	Electronic
Displacement	2925 cm^3 (178 in^3)
Nominal bore and stroke	92 x 110 mm (3.6 x 4.3 in)
Rated output at rated speed	55.4 kW at 2200 rpm (74.3 hp at 2200 rpm)
Engine power at preset maximum engine speed	55.4 kW at 2300 rpm (74.3 hp at 2300 rpm)
Max. torque	260 Nm at 1800 rpm (192 ft.lbs. at 1800 rpm)
Max. engine speed without load	2300 +/- 25 rpm
Lower idling speed	1200 +/− 25 rpm
Preheating system	Glow plugs[2]
Exhaust Aftertreatment	Exhaust gas recirculation + diesel oxidation catalytic converter
Exhaust values according to	EU NRMM 97/68/EC Level 3B US EPA 40 CFR Part 89 Tier IV final UN/ECE-R120

1. Output values can vary by +/− 5%. Indicated values valid at ambient temperature of 25° C and at 500 m sea level
2. Preheating time controlled by engine control unit.

https://truckmanualshub.com/

9.3 Drive/axles

Travel drive		DV60/DV90/DV100
Design		Infinitely variable axial piston pump with electric control
Flow rate		123.2 l/min (32.55 gal/min)
Max. operating pressure		260 bar (3771 psi)
Starting speed		1300 rpm +/- 50
Oscillation angle		11°
Boost pump		**DV60/DV90/DV100**
Design		Gear pump
Flow rate		11.6 cm^3/rev (0.71 in^3/rev)
Min. charging/boost pressure		25 bar (363 psi)
Max. charging/boost pressure		29 bar (421 psi)
Hydraulic motor		**DV60/DV90/DV100**
Design		Window wiper motor with variable displacement, electrically controlled
Max. capacity		125 cm^3 (7.63 in^3/red)
Flushed with flush valve		3.5 l/min at 27 bar (0.92 gal/min at 392 psi)
Transmission ratio	Speed range 1	2.13
	Speed range 2	2.13

https://truckmanualshub.com/

9.4 Brakes

Service brake		DV60	DV90/DV100
Design		Dual-circuit brake	
		Wet multidisk brake on loader unit axle	
Location		loader unit axle	
Effect	Wheels of drive unit	Indirectly via cardan shaft	Direct
	Wheels of drive unit	Direct	
Parking brake		**DV60/DV90/DV100**	
Design		Wet multidisk brake on loader unit axle	
Location		loader unit axle	
Effect	Wheels of drive unit	Indirectly via cardan shaft	
	Wheels of drive unit	Direct	

https://truckmanualshub.com/

9.5 Tires

Tire type/size		DV60			DV90	DV100
Tire size		405/70-20 (16/70-20)		41x18LL-22.5	500/60-22.5	
Model		MPT01	MPT03	Lawn	500	
Tire pressure	Drive unit	2 bar (29 psi)		2.5 bar (36 psi)	2.8 bar (41 psi)	
	Loader unit	3.5 bar (51 psi)			4 bar (58 psi)	
Load-bearing capacity	Drive unit	3625 kg (7992 lbs)		2100 kg (4630 lbs)	3000 kg (6614 lbs)	
	Loader unit			3700 kg (8157 lbs)	5050 kg (11133 lbs)	

9.6 Steering system

		DV60	DV90	DV100
Design		Chassis articulation steering, hydraulic		
Steering mode		Hydraulic		
Power supply		Priority valve		
Steering angle - design		29°	28.3°	
Turning radius		**DV60**	**DV90**	**DV100**
Front skip	Drive unit	5894 mm (19'-4")	6585 mm (21'-7")	
	Loader unit	5911 mm (19'-5")	6547 mm (21'-6")	
Swivel skip	Drive unit	5894 mm (19'-4")	6450 mm (21'-2")	--
	Loader unit	5911 mm (19'-5")	6412 mm (21'-0")	--

9.7 Operating hydraulics

Work hydraulics	DV60/DV90/DV100
Gear pump	31.9 cm^3 (1.95 in^3)
Flow rate	60.6 l/min at 1900 rpm (16.1 gal/min at 1900 rpm)
Max. operating pressure (Work hydraulics)	240 bar (3481 psi)
Hydraulic oil radiator	Yes
Hydraulic reservoir capacity (Middle of sight glass)	48 l (12.7 gal)
Hydraulic reservoir capacity	60 l (15.9 gal)
Regulation method	Throttle control
Filter	Pressure filter

Braking system	DV60/DV90/DV100
Service brake	Mechanically actuated brake, no hydraulic support
Parking brake	Hydro-mechanically actuated brake

https://truckmanualshub.com/

Steering system	DV60/DV90/DV100
Flow rate at 1900 rpm	60,6 l/min (16.1 gal/min)
Max. operating pressure	185 bar +/-5 bar (2683 psi +/-73 psi)
Secondary pressure protection	250 bar +/-10 bar (3625 psi +/-145 psi)

Maximum speed

Information
Follow the national and regional legal regulations regarding maximum speed.

DV60		Main travel direction	Side travel direction
Speed range 1	Forward	15 km/h (9.3 mph)	
	Reverse[1]	15 km/h (9.3 mph)	
Speed range 2	Forward	28 km/h (17.4 mph) AT and DE: 25 km/h (15.5 mph)	20 kph (12.4 mph) GB: 15 km/h (9.3 mph)
	Reverse[1]	15 km/h (9.3 mph)	
DV90/DV100		**Main travel direction**	**Side travel direction**
Speed range 1	Forward	15 km/h (9.3 mph)	
	Reverse[1]	15 km/h (9.3 mph)	
Speed range 2	Forward	30 km/h (18.6 mph) AT and DE: 25 km/h (15.5 mph)	20 kph (12.4 mph) GB: 15 km/h (9.3 mph)
	Reverse[1]	15 km/h (9.3 mph)	

1. In GB the maximum reverse speed is limited to 10 km/h (6.2 mph).

Information
In work mode the maximum speed is limited to 20 km/h (12.4 mph).

Information
The specified speeds are the maximum high speeds. The actual achievable speed may be lower, depending on the vehicle load, the driving mode and environmental conditions.

https://truckmanualshub.com/

9.8 Electrical system

Electrical components	DV60/DV90/DV100
Alternator	12 V/120 A
Starter	12 V/3.2 kW
Battery[1]	12 V/100 Ah
12 V power outlet	15 A max.

1. According to DIN EN 50342, DIN IEC 60095-2

https://truckmanualshub.com/

Fuse box

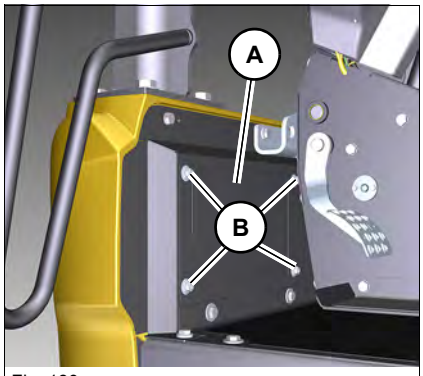

Fig. 180

Fuse box **A** is located at the front left in the control console.
Loosen screws **B**.

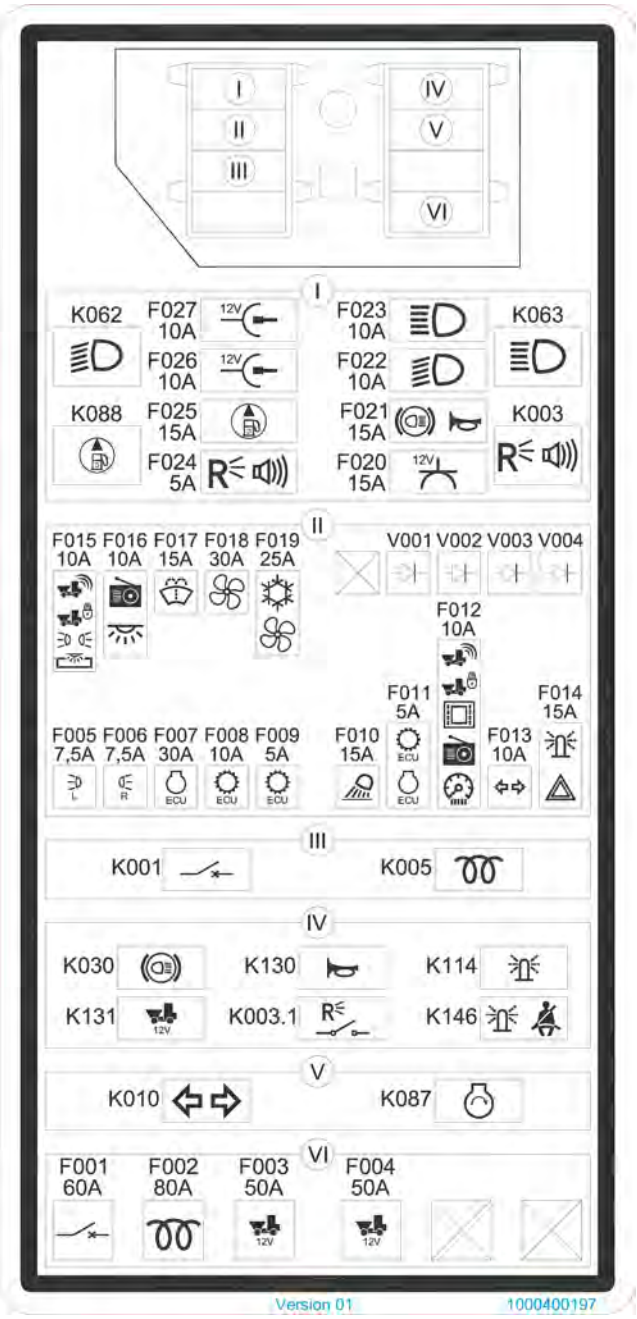

Fig. 181

https://truckmanualshub.com/

Fuses/ relays	Rated current	Protected circuits
F001	60A	Switched power consumers
F002	80A	Preheating
F003	50A	12 V 30
F004	50A	12V15, 12V15_1, 12V30
F005	7.5A	Clearance light (left)
F006	7.5A	Clearance light (right)
F007	30A	Engine ECU 12 V 30
F008	10A	Drive ECU 12 V 30
F009	5A	CPU drive ECU 12 V 30
F010	15A	Working light for drive unit, working light for loader unit
F011	5A	Drive ECU 12 V 15, engine ECU 12 V 15
F012	10A	Display element + camera, switch lighting, relay coils, telematics 12 V 15, drive interlock 12 V 15, radio 12 V 15
F013	10A	Turn indicators
F014	15A	Rotating beacon, hazard warning light
F015	10A	Telematics, drive interlock, position light, rear lights, license plate lighting, trailer
F016	10A	Radio, interior lighting
F017	15A	Window wiper, washer pump
F018	30A	Heating fan
F019	25A	Air condition coupling, fan condenser
F020	15A	12 V socket
F021	15A	Horn, brake lights
F022	10A	Low beam
F023	10A	High beam
F024	5A	Reversing light, backup warning system
F025	15A	Fuel pump
F026	10A	Optional plug 12 V 15
F027	10A	Optional plug 12 V 30
V001	DIODE 1A	Blocking diode
V002	DIODE 1A	Blocking diode
V003	DIODE 1A	Blocking diode
V004	DIODE 1A	Blocking diode
K001	Relay 70A	Switched power consumers
K003	Relay 20/35A	Reversing light, backup warning system
K003.1	Relay 20/35A	Shutdown of the reversing light
K005	Relay 70A	Preheating
K010	Turn indicator relay 180 W	Turn indicators

https://truckmanualshub.com/

Fuses/ relays	Rated current	Protected circuits
K030	Relay 20/35A	Brake lights
K062	Relay 20/35A	Low beam
K063	Relay 20/35A	High beam
K087	Time lag relay 0.75s	Start time lag relay
K088	Relay 20/35A	Fuel pump
K114	Relay 20/35A	Rotating beacon
K130	Relay 20/35A	Horn
K131	Relay 20/35A	12 V 15
K146	Relay 20/35A	Green rotating beacon

Bulbs

	DV 60/90/100
Working lights/roof lights	H3 12 V/55 W
Interior light	Festoon lamp 12 V/5 W
Rotating beacon	LED 9W
Turn indicators	P21W
Clearance light	LED/P21W
Parking light	T4W 12 V/4 W
Low beam	H3 12 V/55 W
Rear lights	R10W
Reversing light	P21W
Brake lights	P21W

https://truckmanualshub.com/

9.9 Tightening torques

General tightening torques

Property class	8.8	10.9	12.9	8.8	10.9
Screw dimen-sions	Screws according to DIN 912, DIN 931, DIN 933, etc.			Screws according to DIN 7984	
	Nm (ft.lbs.)	Nm (ft.lbs.)	Nm (ft.lbs.)	Nm (ft.lbs.)	Nm (ft.lbs.)
M5	5.5 (4)	8 (6)	10 (7)	5 (4)	7 (5)
M6	10 (7)	14 (10)	17 (13)	8.5 (6)	12 (9)
M8	25 (18)	35 (26)	42 (31)	20 (15)	30 (22)
M10	45 (33)	65 (48)	80 (59)	40 (30)	59 (44)
M12	87 (64)	110 (81)	147 (108)	69 (51)	100 (74)
M14	135 (100)	180 (133)	230 (170)	110 (81)	160 (118)
M16	210 (155)	275 (203)	350 (258)	170 (125)	250 (184)
M18	280 (207)	410 (302)	480 (354)	245 (181)	345 (254)
M20	410 (302)	570 (420)	690 (509)	340 (251)	490 (361)
M22	550 (406)	780 (575)	930 (686)	460 (339)	660 (487)
M24	710 (524)	1000 (738)	1190 (878)	590 (435)	840 (620)
M27	1040 (767)	1480 (1092)	1770 (1305)	870 (642)	1250 (922)
M30	1420 (1047)	2010 (1482)	2400 (1770)	1200 (885)	1700 (1254)

Tightening torques/fine-pitch thread					
Property class	8.8	10.9	12.9	8.8	10.9
Screw dimen-sions	Screws according to DIN 912, DIN 931, DIN 933, etc.			Screws according to DIN 7984	
	Nm (ft.lbs.)	Nm (ft.lbs.)	Nm (ft.lbs.)	Nm (ft.lbs.)	Nm (ft.lbs.)
M8X1.0	25 (18)	37 (28)	43 (32)	22 (16)	32 (24)
M10X1.0	50 (37)	75 (55)	88 (65)	43 (32)	65 (48)
M10X1.25	49 (36)	71 (52)	83 (61)	42 (31)	62 (46)
M12X1.25	87 (64)	130 (96)	150 (111)	75 (55)	110 (81)
M12X1.5	83 (61)	125 (92)	145 (107)	72 (53)	105 (77)
M14X1.5	135 (100)	200 (148)	235 (173)	120 (89)	175 (129)
M16X1.5	210 (155)	310 (229)	360 (266)	180 (133)	265 (195)
M18X1.5	315 (232)	450 (332)	530 (391)	270 (199)	385 (284)
M20X1.5	440 (325)	630 (465)	730 (538)	375 (277)	530 (391)
M22X1.5	590 (435)	840 (620)	980 (723)	500 (369)	710 (524)
M24X2.0	740 (546)	1070 (789)	1250 (922)	630 (465)	900 (664)
M27X2.0	1100 (811)	1550 (1143)	1800 (1328)	920 (679)	1300 (959)
M30X2.0	1500 (1106)	2150 (1586)	2500 (1844)	1300 (959)	1850 (1364)

https://truckmanualshub.com/

9.10 Coolant

Compound table

Outside temperature[1]	Distilled water	Coolant[2]
up to -37°C (-34.6°F)	50% by volume	50% by volume

1. Use the 1:1 concentration for warm outside temperatures, too, to ensure protection against corrosion, cavitation, and deposits.
2. Do not mix the coolant with other coolants.

9.11 Noise emissions

	DV60/DV90/DV100
Measured sound power level LwA[1]	101 dB(A)
Guaranteed sound power level LwA[1]	101 dB(A)

1. According to ISO 6395 (EC Directives 2000/14/EC and 2005/88/EC)

Information

Measurements performed on asphalted surface.

https://truckmanualshub.com/

9.12 Vibrations

Vibration	
Effective acceleration value for the upper extremities of the body (hand-arm vibration)	< Trigger value < 2.5 m/s^2
Effective acceleration value for the body (whole-body vibration)	< 0.5 m/s^2

Vibration values indicated in m/s².

Directive 2002/44/EC of European Parliament and Council on minimum health and safety requirements regarding exposure of workers to risks arising from physical agents (vibration).

Indications on hand-arm vibration

Hand-arm vibration is less than 2.5 m/s² during correct vehicle operation.

Indications on whole-body vibration

Whole-body vibration is less than 0.5 m/s² during correct vehicle operation.

Uncertainty of measurement K has been taken into account for the specified values.

The degree of vibration is influenced by various parameters.

Some of them are listed below:

- Operator: training, behavior, working method, and load.
- Job site: organization, preparation, surroundings, weather conditions, and material.
- Machine: version, seat quality, quality of suspension system, attachments, and condition of attachments.

Precise indications on the vibration degrees cannot be made for the vehicle.

Determination of vibration level for the three vibration axes.

- Under typical operating conditions, use the average vibration values measured.
- In order to obtain the estimated vibration value for an experienced operator on level ground, subtract the factors from the average vibration value.
- In case of an aggressive working method or difficult terrain, add the environmental factors to the average vibration level in order to obtain the estimated vibration level.

https://truckmanualshub.com/

Note:

For further vibration indications, refer to the indications in ISO/TR 25398 Mechanical Vibrations – Directive on Estimation of whole-body vibration during operation of earth moving vehicles. This publication uses measuring values of international institutes, organizations and manufacturers. It contains information on whole-body vibration for operators in earth-moving machines. For more information on the vibration values of the vehicle, refer to Directive 2002/44/EC of European Parliament and Council on minimum health and safety requirements regarding exposure of workers to risks arising from physical agents (vibration).

It explains the values for vertical vibration under heavy operating conditions.

Directives on reduction of vibration values in earth moving vehicles:

- Perform correct adjustments and maintenance on the vehicle.
- Avoid jerky movements during vehicle operation.
- Keep slopes in a perfect condition.

Whole-body vibration can be reduced with the following guidelines:

- Use a vehicle and equipment of correct type and size.
- Follow the manufacturer’s recommendations for maintenance:
  - Tire pressure
  - Brake and steering systems
  - Control elements, hydraulic system and linkage
- Keep the job site in good condition:
  - Remove large rocks or obstacles.
  - Fill up ditches and holes.
  - Provide a vehicle and enough time to keep the job site in good condition.
- Use a seat according to the ISO 7096 requirements. Keep the operator seat in good condition and adjust it correctly:
  - Adjust the seat and suspension to the operator’s weight and size.
  - Check and maintain the seat adjustment and suspension.
- Perform the following activities smoothly without any jerks.
  - Steering
  - Brakes
  - Acceleration
  - Shifting gears
- Move working devices without any jerks.

https://truckmanualshub.com/

- Adapt your speed and the itinerary to minimize vibration:
  - Travel around obstacles and uneven ground.
  - Reduce your speed during vehicle travel across rough terrain.
- Reduce vibration to a minimum during long work cycles or during vehicle operation over long distances:
  - Use a machine with a suspension system (for example seat).
  - Enable the hydraulic oscillation damping if the vehicle is equipped with tracks.
  - If the vehicle is not equipped with hydraulic oscillation damping, reduce your speed to avoid bumps and jolts.
  - Load the vehicle on a truck or trailer to move between job sites.
- Other risk factors can affect drive comfort negatively. The following measures can improve drive comfort:
  - Adjust the operator seat and the control elements to a relaxed body posture.
  - Adjust the rearview mirrors to ensure optimal visibility so you can adopt an upright seating position.
  - Provide breaks to avoid sitting for long periods.
  - Do not jump off the cabin.
  - Picking up and raising loads repeatedly must be limited to a minimum.

Reference:

The vibration values and calculations are based on the indications made in ISO/TR 25398 Mechanical Vibrations – Guidelines for assessment of exposure to whole-body vibration during operation of earth moving vehicles.

The harmonized data comply with measurements made by international institutes, organizations and manufacturers. This publication offers information on the calculation of whole-body vibrations for operators of earth-moving machines. This method is based on vibration measurements under real operating conditions for all vehicles. Read the original guidelines. This chapter summarizes part of the legal regulations. However, its aim is not to replace the original references. Other parts of this document are based on information of the United Kingdom Health and Safety Executive.

For more information on vibration, refer to Directive 2002/44/EC of European Parliament and Council on minimum health and safety requirements regarding exposure of workers to risks arising from physical agents (vibration).

Your Wacker Neuson dealer provides information on other machine functions reducing vibration and on safe operation.

https://truckmanualshub.com/

9.13 Weight

Machine weights

Front skip ROPS	DV60 kg/lbs	DV90 kg/lbs	DV100 kg/lbs
Transport weight[1]	4114 (9070)	4614 (10,172)	4644 (10,238)
Operating weight[2]	4232 (9330)	4733 (10,434)	4763 (10,501)
Front skip canopy	**DV60 kg/lbs**	**DV90 kg/lbs**	**DV100 kg/lbs**
Transport weight[1]	4225 (9315)	4725 (10,417)	4755 (10,483)
Operating weight[2]	4343 (9575)	4844 (10,679)	4874 (10,745)
Front skip cabin	**DV60 kg/lbs**	**DV90 kg/lbs**	**DV100 kg/lbs**
Transport weight[1]	4434 (9775)	4935 (10,880)	4965 (10,946)
Operating weight[2]	4552 (10,035)	5053 (11,140)	5083 (11,206)
Swivel skip ROPS	**DV60 kg/lbs**	**DV90 kg/lbs**	**DV100 kg/lbs**
Transport weight[1]	4320 (9524)	4944 (10,900)	--
Operating weight[2]	4438 (9784)	5063 (11,162)	--
Swivel skip canopy	**DV60 kg/lbs**	**DV90 kg/lbs**	**DV100 kg/lbs**
Transport weight[1]	4431 (9769)	5055 (11,144)	--
Operating weight[2]	4549 (10,029)	5174 (11,407)	--
Swivel skip cabin	**DV60 kg/lbs**	**DV90 kg/lbs**	**DV100 kg/lbs**
Transport weight[1]	4640 (10,229)	5265 (11,607)	--
Operating weight[2]	4758 (10,490)	5383 (11,867)	--

1. Transport weight: machine + 10% fuel capacity.
2. Operating weight: machine + full fuel tank + operator (75 kg/165 lbs).

Information

The weight specified here corresponds to the maximum configuration. The actual machine weight depends on the selected options and can be read off the type label.
Weight indications can vary by +/- 2%.

Ground clearance

	DV60	DV90/DV100
Ground clearance	370 mm (15 in)	358 mm (14 in)

https://truckmanualshub.com/

9.14 Payload

Front skip	DV60	DV90	DV100
Liquid capacity	1900 liters (502 gal)	2400 liters (634 gal)	2550 liters (674 gal)
Skip capacity (struck)	2700 liters (713 gal)	3750 liters (991 gal)	4150 liters (1096 gal)
Skip capacity (heaped)	3600 liters (951 gal)	4600 liters (1215 gal)	5000 liters (1321 gal)
Swivel skip	**DV60**	**DV90**	**DV100**
Liquid capacity	1600 liters (423 gal)	2050 liters (542 gal)	--
Skip capacity (struck)	2350 liters (621 gal)	3300 liters (872 gal)	--
Skip capacity (heaped)	3150 liters (832 gal)	4350 liters (1149 gal)	--
	DV60	**DV90**	**DV100**
Payload	6000 kg (13,228 lb)	9000 kg (19,842 lb)	10,000 kg (22,046 lb)

NOTICE

Possible damage to property due to tipping over of machine. Do not exceed the weights indicated in the table.

Maneuvering coupling (optional)

DV60/90/100	DIN towing eye	Ball coupling
Drawbar load	200 kg (441 lb)	150 kg (331 lb)

NOTICE

The total tractor weight must not exceed the maximum permissible weight of the tractor.

https://truckmanualshub.com/

9.15 Dimensions

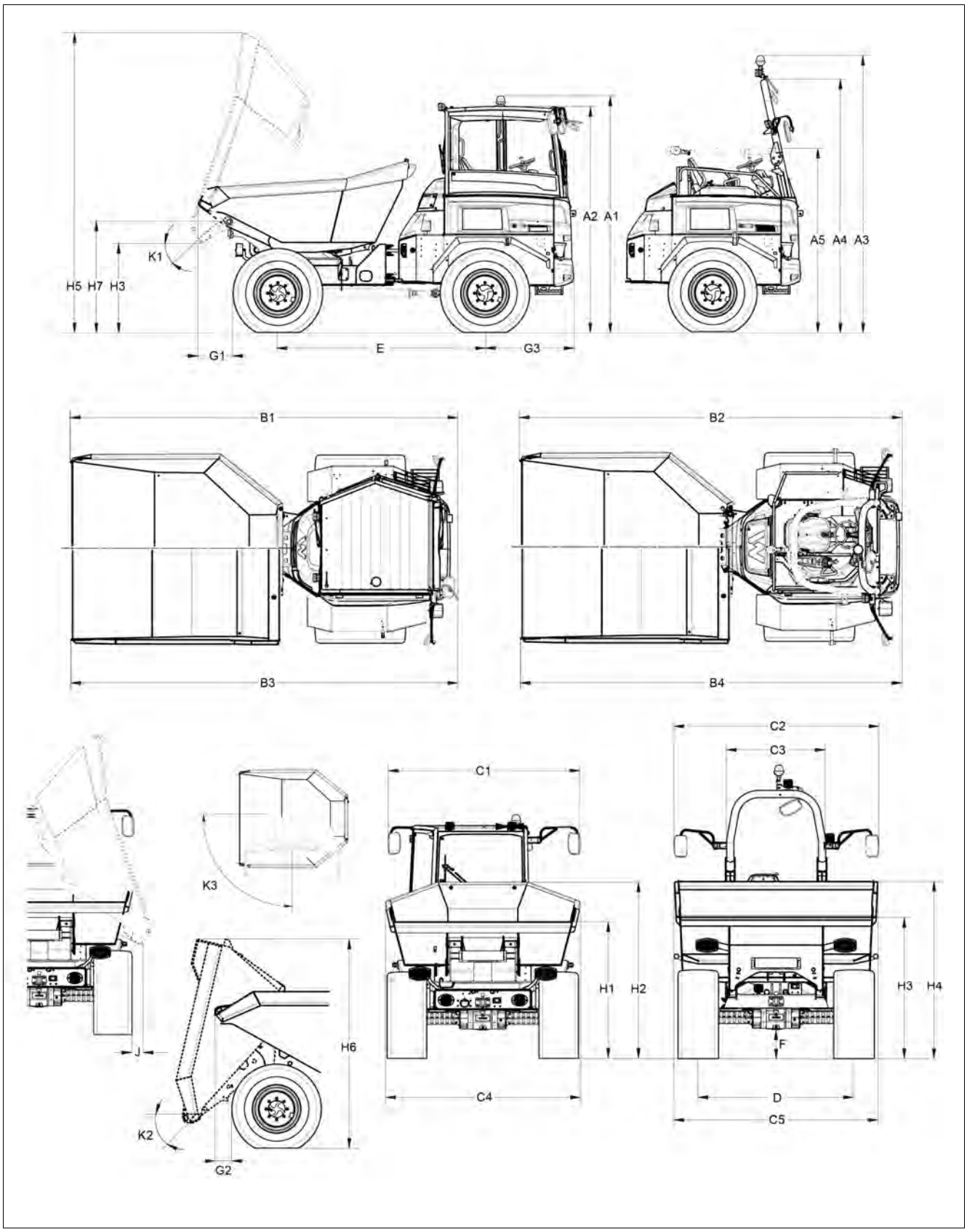

https://truckmanualshub.com/

	DV60 mm (in)	DV90 mm (in)	DV100 mm (in)
A1	3078 (10'-1")	3083 (10'-1")	3083 (10'-1")
A2	2938 (9'-8")	2944 (9'-8")	2945 (9'-8")
A3	3617 (11'-10")	3620 (11'-11")	3620 (11'-1")
A4	3302 (10'-10")	3307 (10'-10")	3307 (10'-10")
A5	2400 (95)	2405 (95)	2405 (95)
B1	4799 (15'-9")	4991 (16'-5")	--
B2	4727 (15'-6")	4919 (16'-2")	--
B3	4548 (14'-11")	4722 (15'-6")	4760 (15'-7")
B4	4476 (14'-8")	4650 (15'-3")	4688 (15'-5")
C1	2440 (96)	2440 (96)	2420 (95)
C2	2533 (100)	2533 (100)	2533 (100)
C3	1221 (48)	1221 (48)	1221 (48)
C4	2218 (87)	2453 (97)	--
C5	2328 (92)	2524 (99)	2524 (99)
D	1790 (70)	1920 (76)	1920 (76)
E	2485 (97)	2700 (8'-10")	2700 (8'-10")
F	370 (15)	358 (14)	358 (14)
G1	456 (18)	457 (18)	--
G2	565 (22)	520 (21)	549 (22)
G3	1157 (46)	1157 (46)	1157 (46)
H1	1689 (67)	1728 (68)	--
H2	1981 (78)	2230 (88)	--
H3	1673 (66)	1724 (68)	1745 (69)
H4	2028 (80)	2104 (83)	2184 (86)
H5	3639 (11'-11")	3980 (13'-1")	--
H6	2463 (97)	2723 (8'-11")	2718 (8'-11")
H7	1422 (56)	1444 (57)	--
Y	69 (3)	152 (6)	--
K1	48°	40.1°	--
K2	50°	48°	48°
K3	90°	90°	--

https://truckmanualshub.com/

Index

A

Abbreviations 1-4
Adding coolant 7-25
Air filter
  Checking the air intake 7-27

B

Battery 7-32

C

Cabin number 3-6
Capacities 7-8
Check lists
  Operating 4-34
Check the coolant level 7-25
Circuit breaker 4-42
Control elements 4-19
Conversion table 1-7
Coolant
  Adding coolant 7-25
  Check the coolant level 7-25
Crane-lifting 6-7

D

Danger zone 5-21
Displaying coolant temperature 4-32
Displaying fuel level indicator 4-32

E

Emergency stop of power supply 4-42
Error symbols 4-30

F

Fire extinguisher 4-13
Fluids and lubricants 7-8
Foreword 1-1
Functional checks
  Brake test 5-4
  Operator presence switch 4-4

G

Getting on and off 4-1
Glossary 1-5
Ground clearance 9-15

I

Ignition lock 4-35
Information before putting into operation 4-33
Information on this Operator’s Manual 1-1

L

Label
  Warning labels 3-7
Lateral angle of inclination 5-10
Letting the engine warm up 4-36, 4-37
Loading the vehicle 6-5
Low-load operation 4-41
Lubrication 7-6

M

Machine travel on slopes 5-8
Maintenance flaps 7-12
Maneuvering coupling 9-16
Maneuvering operation 5-28
Model designations and trade names 3-3

O

Operating temperature range 5-8

P

Parking the vehicle on slopes 5-11
Preheating 4-35
Preparations for starting the engine 4-35
Preparing lubrication 7-6
Putting into operation for the first time and running-in period 4-34

R

Release the pressure in the hydraulic system 7-29
Requirements for the operating personnel 4-33
Reversing signal 5-17
Rollbar 4-16

S

Seat adjustment 4-4
Skip grid 4-18
Skip operation 5-19
Starting aid 4-38
Starts the engine 4-36
Stop the engine 4-41
Symbol 1-3

https://truckmanualshub.com/

T

Tarp (option) 5-1
Technical data
  Brakes 9-3
  Bulbs 9-9
  Coolant compound table 9-11
  Dimensions 9-17
  Electrical system 9-6
  Engine 9-1
  Fuses/relays 9-7
  Ground clearance/ground pressure 9-15
  Machine weights 9-15
  Maximum speed 9-5
  Noise emissions 9-11
  Tightening torques 9-10
  Traveling drive/axles 9-2
  Work hydraulics 9-4
Tires 9-4
Towing
  Towing the machine 6-4
Towing the vehicle 6-1

V

Visual aids 4-11

W

Wading depth 5-25
Warranty and liability 1-7
Wheel change 7-35
Wiper 5-17

https://truckmanualshub.com/

Wacker Neuson Linz GmbH keep abreast of the latest technical developments and constantly improve their products. For this reason, we may from time to time need to make changes to figures and descriptions in this documentation that do not reflect products that have already been delivered and that will not be implemented on these vehicles.

Technical data, dimensions and weights are only given as an indication. Responsibility for errors or omissions not accepted.

No reproduction or translation of this publication, in whole or in part, without the written consent from Wacker Neuson Linz GmbH.

All rights under the provision of the Copyright Act are reserved.

Wacker Neuson Linz GmbH

Flughafenstr. 7

A-4063 Hörsching

Austria

https://truckmanualshub.com/

Wacker Neuson Linz GmbH
Flughafenstr. 7
A-4063 Hörsching

Phone: +43 (0) 7221 63000
Fax: +43 (0) 7221 63000-2200
E-mail: office.linz@wackerneuson.com
www.wackerneuson.com

Order no.1000409070
Language en/us