English

https://truckmanualshub.com/

AVANT®

860i STAGE V Engine

Operator's Manual
2020-

Read this Operator's Manual, safety decals, and other safety related instructions before operating the loader. If you do not obey these instructions, there is a risk of serious injury. Keep all manuals for reference.

A432324EN 2021 I 2020-

www.avanttecno.com

https://truckmanualshub.com/

TABLE OF CONTENTS

INTRODUCTION **3**
Foreword 3
Make sure all relevant manuals are available 4
Intended use 5
Avant warranty 7
SAFETY FIRST **8**
General safety instructions 8
Handling of heavy loads 12
Operation on uneven surfaces, gradients, and near excavations 14
Personal safety and protective equipment 16
Electric system and handling of the battery 19
DESCRIPTION OF THE LOADER **21**
Identification of the loader 21
Main parts of the loader 23
Signs and decals 24
Technical specifications 32
Engine oil requirements 35
Fuel requirements 35
Tyres 36
Auxiliary hydraulics oil flow 37
LIFT CAPACITY **39**
Load indicator 41
Rated operating capacity 42
Tipping load - Load diagram 44
CONTROLS AND OPTIONS OF THE LOADER **46**
Overview of controls 47
Dashboard 49
Multi-function display 50
Control of loader boom, auxiliary hydraulics, and other functions 55
Engine compartment and storage spaces on the loader 60
Boom self-levelling 61
Boom floating 61
Smooth drive (option) 62
Counterweights 63
Extra auxiliary hydraulics outlets, front and rear 65
Seat - Seat belt and seat adjustments 67
Lights 69
Cabs (optional extra) 71
OPERATING INSTRUCTIONS **74**
Starting the loader 75
Ignition key 76
Stopping the engine (Safe stopping procedure) 77
Drive control 79
Steering of the loader 84
In case the loader tips over 85
Material handling 86
WORKING WITH ATTACHMENTS **87**
Requirements for attachments 87
Coupling the attachments 89
Coupling the hydraulic hoses of the attachment 91
Using the auxiliary hydraulics 92
Releasing the residual pressure of hydraulic system 93
Coupling adapters 94
STORAGE, TRANSPORT, TIE DOWN POINTS AND LIFTING **96**
Storage 99
Lifting of the loader 99
SERVICE AND MAINTENANCE **101**
Installing of service support and frame lock 104
Daily inspections and periodic service schedule 105
Daily maintenance and inspections 106
Engine Diesel Particulate Filter (DPF) 109
Daily and routine maintenance procedures 111
Inspections after starting the loader 123
If you add or remove counterweights 124
Periodic service 125
Electric system & fuses 133
Jump start and auxiliary power 135
TROUBLESHOOT **138**
SERVICES MADE **140**
INDEX **144**

Introduction

Foreword

AVANT TECNO OY wants to thank you for purchasing this AVANT loader. It is the result of Avant's long experience in design and manufacturing of compact loaders. We ask you that you read and understand the contents of this manual completely before operating the loader. This operator's manual is intended to help you to:

- operate this machine safely and efficiently
- observe and prevent situations that may cause a risk of physical injury or danger
- keep the machine in good condition and its life span as long as possible

The following warning symbols and signal words are used throughout this manual to indicate factors that must be taken into account to reduce the risk of personal injury or damage to property:

	WARNING: **SAFETY ALERT SYMBOL**
	This symbol means: **"Warning, be alert! Your safety is involved!"** This safety symbol refers to important safety information in this manual. It warns of an immediate hazard that could cause serious personal injury to yourself or others near the equipment. The safety alert symbol by itself and with related safety statement indicates important safety messages throughout this Manual. It is used to draw attention to instructions involving your personal safety or the safety of others. When you see this symbol, be alert, your own safety is involved, carefully read the message that follows, and inform other operators.

DANGER This signal word indicates a hazardous situation which, if not avoided, will cause death or serious injury.

WARNING This signal word indicates a potentially hazardous situation which, if not avoided, could cause serious injury or death.

CAUTION This signal word is used when minor injury could result if the instructions are not followed properly.

NOTICE This signal word indicates information about the correct operation and maintenance of the equipment.

Failure to observe the instructions accompanying the symbol can lead to equipment breakdown or other property damage.

https://truckmanualshub.com/

Make sure all relevant manuals are available

DANGER

Wrong use of the equipment can cause death or severe injuries - Make sure to read all relevant manuals and instructions thoroughly and keep them available for all operators.

Using each attachment requires specific information about correct use, mounting procedure, safety, and how to avoid hazardous situations. An attachment may introduce risks that are not present when operating the loader with other kinds of attachments. Always read the operator's manual of each attachment carefully.

Contact your local AVANT dealer for any questions, service, spare parts or about any problems that may occur with the operation of your loader or its attachments.

Always keep this Operator's manual with the loader. If this Manual gets lost, ask for a new copy from your Avant dealer. Remember also to give this Manual to the new owner when the loader changes ownership.

Manuals of attachments

DANGER

Attachments can create significant risks that are not covered by this Operator's manual of the loader.

Make sure you have all attachments manual available. Wrong use of an attachment can cause serious injuries or death.

Each attachment is accompanied by its own respective Operator's Manual. The manual will show important information related to safety, and how to attach, use, and maintain each attachment correctly.

Engine manual

In addition to this Operator's manual of the loader, ensure that you have received and also read the original Engine owner's manual.

The instructions concerning the engine must be followed. In case of conflicting information follow the instructions shown in the Operator's Manual of the loader.

Spare parts list

All spare parts of the loader are listed in a separate spare parts list. Engine related parts are listed in the spare parts list of the engine.

Intended use

Avant 860i is an articulated compact loader that is designed and manufactured for both private and professional use. The loader can be equipped with attachments offered by Avant Tecno Oy, which enables performing several different jobs. Because of this multi-purpose nature of the machine and the various attachments and tasks, read always not only this Manual but also the Operator's Manual of the attachment, and follow all instructions. Every person who has to do with this machine must follow work safety regulations, all other generally accepted rules related to work health and safety, and all road traffic regulations.

Remember that safety consists of several factors. A loader by itself, or equipped with an attachment, is very powerful and can cause serious personal injuries or property damages if it is operated in a wrong or careless way. Do not operate an attachment unless you have familiarised yourself with the use of it and the eventual dangers related to it. The loader is not intended to lift or transport people or be used as a work platform. Different jobs require different attachments, and it is not allowed to handle any loads or materials without any attachment fitted. The loader must not be used in underground or tunneling work. Loads must not be suspended onto the loader boom.

This loader has been designed to require as little maintenance as possible. The operator can perform the routine maintenance operations. There are however more demanding service operations that can be done by professional service personnel only. Any service operation is permitted only when wearing appropriate protective equipment. Original spare parts must be used. Familiarise yourself with the service and maintenance instructions in this Manual.

NOTICE

This Avant loader is equipped with a Diesel Particulate Filter (DPF) in its exhaust system. During regeneration of the filter the exhaust gas is very hot. If operating the loader at areas where there are combustible materials at the work site, this must be taken into account as shown in this manual.

For more information see page 109

Contact your local AVANT dealer, if you are uncertain of anything concerning the operation and maintenance of this loader, or for any questions, service or spare parts.

In addition to the safety instructions included in this manual, you must observe all occupational safety regulations, local laws, and other regulations concerning the use of the equipment. Particularly the regulations concerning the use of the equipment on public road areas must be observed. Contact your Avant dealer for more information about local requirements before you operate the loader on road areas.

https://truckmanualshub.com/

Operator qualification

Only operators who have studied this manual, and all relevant attachment manuals, are allowed to use this loader. Regardless of your possible earlier experience with lawn-mowers, loaders, ATVs, or other equipment, it is important that you learn the driving principle of this loader. Practice how to operate the loader and its attachments safely at an open area before you use the loader near other persons.

You must be in good physical and mental condition with the ability to stay alert and to observe the surrounding areas. Never use the equipment while under influence of medication which could impair your abilities to operate the equipment safely. Do not operate the loader if you are under the influence of alcohol or any other intoxicant.

Depending on operating area, you may also be required to read, understand, and comply with all applicable Employer, Industry, and Governmental rules, standards, and regulations.

Availability of options

Some equipment or options that are shown in this manual may not be available. Pictures in this manual may show optional equipment. Availability of optional equipment is subject to change. Some options may preclude the installation and use of some other option or options. Check with your Avant dealer for more information.

Versions of this manual

Avant has a policy on continuous product development. Updated versions of the manual replace the previous versions of this manual as long as the year on the cover page matches with the original manual. You can ask for the latest manual from your dealer. Some of the features or technical details presented in this manual may change without notice. The pictures in this manual may show optional equipment or features that are not currently available in your market area. We reserve the right to change the contents of the manual without notification.

Keep this manual with the loader

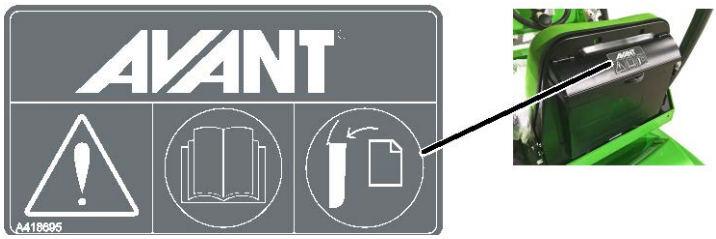

Read this manual before use. Put this manual, as well as manuals of attachments, into the storage box behind driver's seat when you have read those. Always keep this Operator's Manual with the loader. If this Manual gets lost or damaged, ask for a new copy from your Avant dealer. Also remember to give this Manual to the new owner when the machine changes ownership. Ask for the electronic copy of this manual from your dealer.

Storage in Cab GT:

On loader equipped with cab GT the manuals can be stored in the cab. There is a net to hold manuals in place.

Avant warranty

This warranty specifically applies to the AVANT 860i loader only and not to any attachments used with this product. Any repairs or modifications performed without the prior authorisation of Avant Tecno Oy will cancel this warranty. During the first two years of operation or first 1000 hours (whichever is the soonest) Avant Tecno Oy warrants to replace any part or repair any defect which may occur, subject to the terms detailed below:

1. The product has received regular maintenance in accordance with schedules given by the manufacturer.
2. Any damage caused by operation in a negligent manner or exceeding the approved specifications detailed in this manual is excluded.
3. Avant Tecno Oy accepts no responsibility for interruption to working or any other consequential losses resulting from any failure of the product.
4. Only Avant Tecno Oy approved replacement or original quality parts shall be used during routine maintenance.
5. Any damage caused by the use of incorrect fuel, lubricants, cooling liquid or cleaning solvents is excluded.
6. The Avant Warranty excludes any consumable parts (e.g. tyres, batteries, filters, belts etc.) except where it can be clearly shown that these parts were defective on original supply.
7. Any damage caused resulting from the use of attachments not approved for use with this product is excluded.
8. In the event a fault occurs which is attributable to manufacturing or assembly defect you should arrange to return your AVANT to your authorised dealer for repair. Travel and freight costs are excluded.

https://truckmanualshub.com/

Safety First

DANGER

Incorrect or careless use of the loader can cause a serious accident. Before you operate the loader, familiarise yourself with the correct use of the loader. Read and understand this Operator's Manual, as well as all relevant safety instructions, local regulations, and safe working practices.

Understand the limitations of speed, braking, steering, and stability, as well as load capacity of the loader before starting use. Make sure that everyone who operates or works with this equipment is familiar with these safety precautions.

If you have no previous experience of the loader, make sure to do all testing at a safe and open place, where there are no persons in the area of operation.

General safety instructions

1. Remember the correct working position. When driving, be comfortably seated on the driver´s seat, keep your feet in their proper place in the footwell and at least one hand on the steering wheel.
2. When seated, always keep the seat belt fastened and keep hands and feet inside the operator's area.
3. Before leaving driver's seat, always:
   - Lower the loader boom and place attachment flat on ground
   - Engage the parking brake
   - Stop the engine, remove the ignition key
4. Switch off the battery disconnect switch after operation or whenever leaving the loader unattended.
5. Start the operation slowly and carefully. Practise driving of the machine at a safe and open place before connecting any attachment, and follow the instructions in this Manual and also the operator's manual of the attachment.
6. Operate the control levers with careful and deliberate movements. Avoid abrupt movements when handling the load, in order to prevent the load from falling and to keep the machine stable.
7. Keep away from the danger zone of the lifted boom and don't let anyone go there.
8. Always read the operator's manuals of relevant attachments and always keep the manuals available for all users. Read the attachment manuals and follow given instructions.
9. Always stay alert when operating the loader or its attachments. Observe surrounding areas, other people, and ground surface and slopes. Stay alert for abnormal operation of the loader, such as changes in noise or vibration, or other signs of malfunctions.
10. Keep your hands, feet and clothing away from all moving parts, hydraulic components, and hot surfaces.
11. Make sure that there is enough open space around the loader and its attachment for safe driving and operation of the attachment.
12. Do not transport loads with the boom lifted. Always carry all attachments as low as possible. Lower the load or attachment down on the ground before you leave the driver's seat.
13. It is not allowed to transport persons with this machine. Do not transport or lift persons in the bucket or in any other attachment. Lifting of persons is only allowed with the attachment designed for this purpose: the Avant Leguan 50 access platform, following the instructions in the Operator's Manual of Leguan 50 attachment.
14. Do not exceed the tipping load. Familiarise yourself with and follow the load diagrams and other information in this Manual.
15. When turning with the machine, remember that the driver´s seat extends beyond the turning radius of the wheels (collision risk).
16. Do not operate the loader in an explosive environment or in a place where dust or gasses can create a fire or explosion hazard.

17. Keep the engine area clean of combustible materials. Materials such as dirt, hay, or dust cause a risk of fire.
18. Read the lifting, towing, and transportation instructions on page 96.
19. Follow all inspection, service and maintenance instructions. If you notice any faults or damages on the machine, these must be repaired before starting operation.
20. Before any maintenance or repair operation always stop the engine, lower the boom down and release pressure from hydraulic system. Allow the loader to cool. Read safety instructions for maintenance on page 101.
21. Do not let anyone who has not read and understood all safety instructions, and who is not familiar with the safe and correct use of this loader, to operate this loader or its attachments.
22. Never operate the loader or attachments while under the influence of alcohol, drugs, medication that may impair judgment or cause drowsiness, or if not otherwise medically fit to operate the equipment.

Risk of crushing under boom or attachment - Stay away from lifted boom and attachment. Always remember that load can fall and the boom can lower unexpectedly due to loss of stability, mechanical fault, or if another person operates the controls of the loader, leading to crushing hazard. Lower the boom or any attachment or load on the ground before leaving the driver's seat. The attachment or the loader are not intended to be left to keep a load elevated for longer periods The stability of the loader can change when leaving the driver's seat, leading to tipping over of the machine. Do not allow anyone to get under or near a lifted boom or attachment.

Risk of falling from height and getting overrun by loader - Never lift or transport other people. Never use the loader or its attachments to lift or carry persons, or as any kind of work platform even temporarily. Never climb on the loader or on the attachment. Seating capacity of the loader: one person only, regardless of attachments.

https://truckmanualshub.com/

WARNING

Risk of serious injury or death from falling objects. Never tilt the attachment back when it is lifted high. Operate only with machines equipped with ROPS and FOPS structures. Secure loads on attachments if loads can fall. Use correct type of attachments for different loads and follow operator's manuals of attachments.

DANGER

Hydraulic pressure - Risk of serious injury. Hydraulic hoses and other hydraulic components may have trapped pressure to cause leaking hydraulic oil to penetrate skin. Never use hands to search for possible leaks in hydraulic systems - use a piece of cardboard instead. Release residual hydraulic pressure before searching for leaks, before disconnecting any fitting, and before any service operation. Seek medical attention immediately if hydraulic fluid penetrates skin, serious injury can develop quickly even with mild initial symptoms.

WARNING

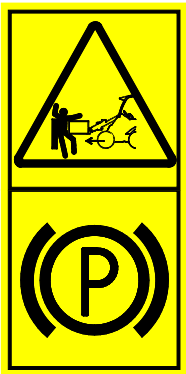

Risk of being crushed by moving loader - Engage parking brake before leaving the driver's seat. Follow safe stopping procedure to prevent all movements of the loader. Avoid leaving the loader parked on hill. If it is necessary to park on a hill, use chocks or other additional means to prevent the loader from moving.

DANGER

Safety devices are installed for your safety - Never modify or bypass any safety function. Safety functions are installed for your safety. Never modify or block any of the safety systems of the loader. If you notice that a system is not in good condition, stop the use of the loader and make sure the loader is serviced.

WARNING

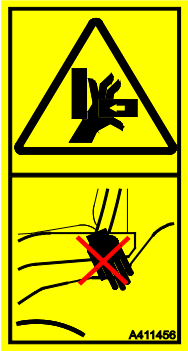

Pinching points - Avoid getting hands or feet crushed between the front and rear frames of the loader, or between loader and walls - Keep all body parts within the safety frame. Movements of the articulated frame creates pinching hazards. Keep your head, hands, and feet inside the loader. Be especially careful while you drive near walls and trees. Keep your hands on steering wheel and joystick.

CAUTION

Risk of crushing between tyres - Do not turn the steering wheel while standing near the loader. Turning the articulated frame creates a pinching hazard to a person standing near the tyres of the loader. Never grab the steering wheel while entering or leaving the driver's seat to avoid turning of the frame. Stop the loader if other persons get close to the machine. Check that tyres that are larger than standard tyres leave enough space between the tyres for safe use.

Seat belt

WARNING

Always wear seat belt when using the loader. The seat belt will keep you inside the ROPS area in case the loader tips over. If you don't wear the seat belt, there is risk of getting crushed between the ROPS and ground in case the loader tips over. See more information about seat adjustments and seat belt on page 67.

Suffocation hazard - Ensure ventilation

DANGER

Suffocation hazard - Ensure ventilation. Engine exhaust contains, among other pollutants, carbon monoxide (CO), a poison gas you cannot see or smell. Using a loader in enclosed space or poorly ventilated areas will cause loss of consciousness or death within minutes.

Never operate the loader indoors or in partly enclosed areas unless you've made sure there is special ventilation system installed. Loaders with a combustion engine produce, among other pollutants, carbon dioxide (CO2) and can also emit carbon monoxide (CO) under some conditions that can concentrate quickly to a dangerous level. **Never leave the engine running in garages or sheds.** Operate the loader only outdoors and far from windows, doors, and vents.

Elevated level of carbon dioxide or carbon monoxide in breathing air cannot be noticed without dedicated measuring equipment. Signs of carbon monoxide poisoning include nausea, headache, dizziness, drowsiness, and lack of consciousness.

Get fresh air if anyone shows signs of carbon monoxide poisoning and see a doctor.

Diesel exhaust also contains chemicals that are harmful and prolonged exposure should be avoided. Ventilate indoor spaces well e.g. after starting a loader. The odour or colour of diesel exhaust does not tell if there are dangerous levels of carbon dioxide or carbon monoxide in the breathing air.

DANGER

Risk of fire and explosion - Never operate the loader in explosive atmospheres. The loader is not certified to be used in places where there is dust, gasses, chemicals, or other substances, which can get ignited by sparks or hot surfaces.

https://truckmanualshub.com/

Hot exhaust gas

Extremely hot exhaust gas and exhaust pipe - Never park next to a wall during particle filter regeneration. Exhaust outlet at the rear of the engine can get extremely hot during use of the loader. Especially when the warning symbol on the display notifies about hot exhaust, never park the loader next to combustible materials in a way that the exhaust gas is directed towards combustible materials, or so that the exhaust outlet is close to walls, hay, or other materials. Wait until DPF regeneration is completed, and allow the loader to cool first. For more information about DPF regeneration see page 110.

Handling of heavy loads

Handle heavy loads and attachments with care - Risk of tipping over.

- Follow all instructions and warning labels to avoid tipping over of the loader.
- Always lower the load or attachment down on the ground before you leave the driver's seat.
- Keep loads as low and as close to the loader as possible.
- Never take a heavy load on the loader from high level – e.g. from truck, shelf etc.
- When loading, always keep the loader frame as straight as possible. If you turn the loader during load handling, the stability of the loader will decrease, and it may overturn the machine.
- The use of extra rear weights or ballasted tyres is recommended. See pages 63 and 37 for different options.
- Make sure to follow the recommended tyre pressures and pay attention to the condition of tyres.
- When you estimate the lifting capacity of the loader, remember to take the weight of the attachment into account.

Whenever you handle heavy loads or heavy attachments:

- Always handle heavy loads only on firm, level ground while you drive slowly with the loader.
  - Uneven or inclined terrain significantly reduces the Rated operating capacity (see also page 42).
  - Use the maximum loads indicated in the load chart on the loader and in this manual as a guideline.
  - All rated operating capacities are based on the criteria that the loader is level on firm ground. When the loader is operated in conditions that deviate from these criteria (e.g. on soft or uneven ground, on a slope, or when subject to slide loads), you must take these conditions into account.
  - Remember that the actual load carrying capacity varies greatly according to operating conditions and control manner. Be especially careful when the load sensor indicator is activated.
- Keep in mind that a heavy load or long distance between the loader and the centre of gravity of the load will affect the balance and handling of the loader.

WARNING

Risk of overturning - Articulated frame. Turning articulated frame can lead to overturning of the loader on inclined terrain or when driving at high speed. Never turn frame towards the slope while operating on inclined ground.

Always drive slowly when carrying load or when turning with the loader.

WARNING

Risk of overturning - Sudden movements can tip the machine over. Movements, such as stopping, turning, or lowering the boom abruptly, can cause loss of stability. Always drive slowly and operate the controls of the loader very carefully, especially when handling heavy loads.

Load sensor system:

The loader is equipped with a load sensor system. It gives an audible warning signal and at the same time an indicator lamp lights up in the dashboard when there is a risk that the loader tips over its front axle. When the system gives a warning signal, the load that is being lifted may be too heavy in relation with the lift capacity of the loader.

WARNING

If the load warning is activated:

- Lower the load slowly on the ground.
- Retract the telescopic boom. Never extend the telescopic boom any further when the warning is triggered.
- Avoid abrupt movements. Sudden movements of the boom, or abrupt starting or stopping of travel movement, or turning of the loader, can decrease the stability of the loader, causing tipping over.
- Reduce load, or add enough counterweights to the loader to complete the task.
- Keep in mind that the load sensor warns only about the possibility of tipping forward on level ground.

https://truckmanualshub.com/

Operation on uneven surfaces, gradients, and near excavations

Uneven ground can cause the loader to overturn - Risk of serious injury or death. The stability and the load handling capacity of the loader are significantly reduced on inclined terrains and maximum lifting capacity can be achieved only on firm, level ground. On horizontally tilted terrain the load must be kept close to the ground and must never be lifted high.

Handle heavy loads only on even surfaces.

On uneven ground:

Extra caution is needed when using the equipment on inclined terrains and slopes. Drive slowly especially on inclined, uneven, or slippery surfaces, and avoid sudden changes in speed or direction. Operate the controls of the loader with careful and smooth movements. Watch out for ditches, holes on the ground, and other obstacles, as hitting an obstacle may cause the loader to tip over.

All rated operating capacities are based on the criteria that the loader is level on firm ground. When the loader is operated in conditions that deviate from these criteria (e.g. on soft or uneven ground, on a slope, or when subject to slide loads), you must take these conditions into account.

Risk of tipping over on uneven ground - Drive slow on inclined surfaces. Always keep loads close to the ground. Keep the seat belt fastened to stay within the Roll over protective structure. Always handle heavy loads or only on firm, level ground while you drive slowly with the loader.

- Uneven or inclined terrain significantly reduces the Rated operating capacity (see also page 39). Remember that the actual load carrying capacity varies greatly according to operating conditions and control manner.
- Use the maximum loads indicated in the load chart on the loader and in this manual as a guideline.
- Keep the articulated frame of the loader in straight position when driving on inclined surfaces. If you turn the loader on an inclined surface, the stability of the loader will decrease in both forward and sideways directions, and may cause the loader to tip over.
- The use of extra side weights or ballasted tyres is recommended. See pages 63 and 37 for different options.

Whenever you operate the loader on uneven ground keep the following in mind:

WARNING

- Handle heavy loads only on even surfaces. Lifting a load or turning on uneven surfaces can cause the loader to tip over.
- Do not drive on a too steep gradient - watch out for ditches, manholes and steep slopes, which may cause the loader to tip over.
- On steep slopes drive straight up or down, not across the slope. Keep the heavier end of the loader towards downhill - When driving with a load or heavy attachment, keep the load downhill and close to the ground, and reverse the hill up.
- Never drive along an excavation. Note that the excavation or trench may suddenly cave in. Exercise extreme caution when driving near ditches or embankments, and avoid driving along a ditch or trench, as the machine could suddenly tip over if an edge caves in. Avoid driving along trenches and keep at least a distance equal to width of a trench.
- Do not park the loader on a slope. If this can't be avoided, engage the parking brake, preferably park the loader across the slope and lower the load or attachment onto the ground. If needed, use wheel blocks. Always engage the parking brake.

https://truckmanualshub.com/

Personal safety and protective equipment

Wear safe clothing and personal protective equipment.

- Protect yourself against work hazards like noise, ejecting debris or dust for example.
- Follow regulations regarding protective equipment. Wear eye protection and hard hat or other protective equipment as needed.
- Read Operator's Manual of the attachment for more information about protective equipment needed in the work.

- The noise level at the driver's seat may exceed 85 dB(A), depending on the attachment and type of work. Wear hearing protection while working with the loader.

- Wear protective gloves.

- Wear safety boots whenever working with the loader.

- Wear safety glasses when handling hydraulic components and during maintenance or service work.

  Depending on the installed attachment and type of work, safety glasses may be needed while using the loader.

- Always fasten seat belt while operating the machine.

- When working at construction sites, a safety helmet is recommended and may be mandatory in addition to the falling objects protective structure (FOPS) on the loader.

- Depending on work and working area, also a respirator mask or other breathing air filtering apparatus may be required. Find out about other necessary safety equipment at your specific work site.

WARNING

Stay within the space protected by the ROPS safety frame. Always keep seat belt on to stay on driver's seat and to avoid getting crushed between ground and a loader that tips over.

DANGER

Silica dust warning. Prolonged or repeated exposure to crystalline silica can cause serious or fatal respiratory disease. Occupational health and safety officials recommend limiting exposure to dust that is present at most earth-moving and many other work sites. Avoid spreading of dust where possible, keep loader cabin clean from dust, and use respiration mask when necessary.

Safety frame (ROPS) and safety canopy (FOPS)

The loader is equipped with a Rolling Over Protective Structure (ROPS) and a Falling Object Protective structure (FOPS). These safety structures are important parts of operator safety, and they must be fitted on the machine.

Safety frame (ROPS) protects the operator in case the machine tips over. Fasten seat belt while operating a machine with a ROPS. All cab versions are ROPS & FOPS tested and certified.

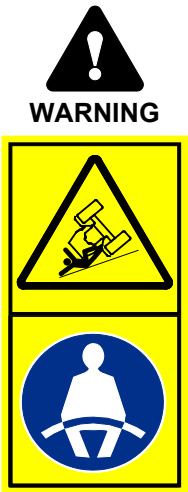

Crushing hazard - Always keep safety structures installed. Never remove the safety structures, modify them, or attempt to repair. If damaged, contact service.

Always fasten the seat belt in order to stay inside the protected area of the safety frame. If you do not wear seat belt you may become crushed under the ROPS or other structure of the loader in case the loader tips over.

Falling objects protection system (FOPS)

Understand the limitations of the Falling Object Protective structure (FOPS). The loader is equipped with a Level 1 FOPS, which gives protection against moderate impacts. Your work environment may have specific risks related to falling objects and the level of protection that is needed to reduce the risk. Use of the loader with FOPS level 1 may be prohibited in the work area.

Modifications

Never modify the loader or the attachments. Never drill holes or weld any components onto the ROPS or FOPS, the boom of the loader, or the frame of the loader. Repairs by welding can cause weakening of the structures of the loader and therefore must be left for qualified service technicians. Any modification to this machine must be approved beforehand by an authorised Avant representative. If you modify the loader or attachment, it can become dangerous and cause serious injuries or even death. Unauthorised modifications can increase the risk of accidents and damage or shorten the service life of the machine. Modifications to engine can make it no longer compliant with emission regulations. Use only original spare parts to make sure that the product is kept in safe operating condition.

https://truckmanualshub.com/

Working near powerlines

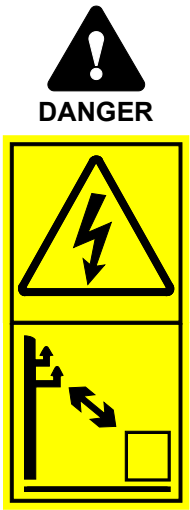

Electrocution hazard - Stay away from electric cables. Contact with or working too close to electric wires can cause a lethal electric shock. Keep the loader and any attachment at a sufficient distance from all electric cables, see the table below. Never assume a cable is disconnected.

Table 1 - Safety distance from powerlines

Use this table for minimum safety distances for electric cables, if other information is not available.

Voltage level	Safety distance, minimum
0 - 1000 V	2 m
1 - 45 kV	3 m
110 kV	4 m
220 kV -	5 m
Unknown voltage	5 m

In case of inadvertent contact or proximity with live electric source, or if electric cables are exposed during digging:

- Do not leave the loader until the electricity has been disconnected by qualified technicians, usually by the local electric company.
- If absolutely necessary, jump out from the loader, keeping feet next to each other, and continue jumping away from the loader until at a safe distance.
- Warn others not to approach the loader until safe to do so.

Safety of digging

Digging may expose buried electric cables, and some attachments may make it possible to reach overhead powerlines with the loader, creating hazard of electric shock and electrocution.

Plan work ahead and take necessary safety precautions.

Deeper excavations may cave in. Depending on various factors, such as the type of the soil, moisture content, rainwater, steepness of the excavation, the excavation can collapse and bury in people. Contact local authorities or surveying companies for information about how to reduce the risk of caving in of excavations.

Keep in mind that all pipes might not be marked correctly. Contact local surveying companies for searching of potential hazards in ground whenever in doubt.

Contact local authorities before digging

At some areas you may be obligated to contact relevant authorities before digging ground. Some areas have a direct telephone line or information on a website where you can find more information about possible hazards in the ground. Find out about your local regulations before digging.

Damaging any electric or communications cables, gas or water pipes, or similar structures buried in the ground can put you in risk of serious injury or even death. Damages while digging can cause also significant property damages. As the operator of the equipment you are responsible for the safety of any digging work and you may be responsible for any damages caused by digging.

Electric system and handling of the battery

Always handle the battery with care. Follow the safety instructions given below. The battery of the 12 V electric system of the loader is located at the rear frame on the right side of the engine. See page 127 for more information about battery and maintenance instructions.

Lead acid batteries can produce flammable and explosive gasses if handled in a wrong way. Make sure that the ventilation is sufficient when charging the battery. Keep arcs, sparks, flames, and lighted tobacco away from battery.

WARNING

Short-circuit of the battery can create sparks, fire, or explosion. Disconnect the battery with the battery disconnect switch before working on the engine or equipment. Never lay metal objects on the battery. Keep the top surface of the battery and the area surrounding the battery clean.

WARNING

Battery acid can cause severe skin burns. Handle damaged battery with extreme care and wear appropriate safety gloves, safety goggles, and protective clothing. Battery is a sealed type battery, meaning that you should never attempt to open the battery.

WARNING

Lead acid batteries produce flammable and explosive gases during charging. Make sure that ventilation is sufficient when charging the battery. Keep arcs, sparks, flames, and lighted tobacco away from battery. Never charge a frozen battery. A frozen battery can explode during charging.

WARNING

Lead warning - Wear protective gloves. Battery and its terminals contain lead, a harmful substance which should not be handled more than what is necessary. Wear protective gloves when handling battery. Wash hands with soap and water after handling the battery. Dispose of and recycle a used battery correctly.

Whenever you handle the battery, keep the following in mind:

- Battery contains corrosive sulphuric acid which causes serious burns upon skin contact. Avoid contact with skin or clothes. If electrolyte gets on your skin or clothes, flush with a lot of water. In case of contact with eyes, flush with a lot of water for at least 15 minutes and see a doctor immediately.
- To avoid sparks, always disconnect the negative (-) cable first and connect it last.
- Before connecting the battery cables make sure that the polarity is correct: Faulty connection will seriously damage the electric system of the loader, and may cause sparks, fire, or explosion of the battery.
- If fuse is blown repeatedly, find out the cause. Always use fuses with correct rating.
- Read the instructions for jump start, see page 135.

If the battery needs to be replaced, make sure that it meets the size, installation, and electrical specifications of the original battery. The battery must be installed correctly and it must not be able to move. If the battery is not fitted correctly, it can get damaged during use, and can cause a risk of sparks, fire, leaking of battery electrolyte, and electric shock.

Always take used batteries to a recycling facility.

https://truckmanualshub.com/

Fire prevention

Clean the loader to avoid build-up of flammable debris, such as dust, leaves, hay, straw, etc.

- There are many parts of the diesel engine that operate at high temperatures in normal use. To avoid fire, and to ensure proper cooling, keep the engine and engine bay clean. Overheating of the engine or the hydraulic oil of the loader can shorten their service life.
- Do not smoke during refueling, or during any inspection or maintenance work.
- Add fuel and oils only at a well ventilated place.
- Oil and fuel leaks can ignite on hot components. Repair any damaged or leaking components before using the loader. Refuel and add oil only after the loader has been allowed to cool.
- The battery of the loader can produce hydrogen gas during recharge. This gas can cause fire or even an explosion, if charging of the battery is not made correctly. Charge battery in a well ventilated place, and keep sources of ignition away from battery during recharge. Static electricity can produce sparks when removing plastic covers, avoid handling or cleaning of plastic covers when battery is connected to a charger.

Know where fire extinguishing equipment is located near your working site. At some areas a fire extinguisher may be mandatory. Keep a multi-purpose, approved type fire extinguisher available near the place where you store the loader.

Fuses

There are several fuses located in different fuse boxes on the loader. Always replace a blown fuse only with a fuse with the same rating. For more information about fuses see page 133.

Battery disconnect switch

The loader is equipped with a battery disconnect switch. The switch is located at the rear of the loader, on the right side.

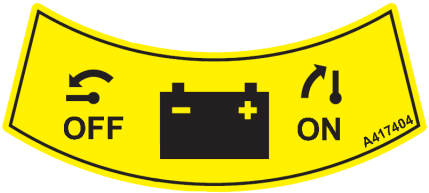

Always switch off the main current before you leave the loader unattended, and before you do any maintenance or inspections. Remove the key to prevent unauthorized use.

Switching the battery disconnect switch to position OFF (horizontal position of the switch key) will isolate the battery from the electric system of loader, and will prevent hazards related to damaged electric wires, short-circuit, and overheat of electric components. Some lights or devices of the loader may remain powered after the engine has been switched off. The small electric current will slowly discharge the battery. Switching the main battery switch to position OFF will also prevent this.

WARNING

Risk of fire - Always disconnect battery when the loader is not used. Turn the battery disconnect switch to position OFF whenever leaving the loader unattended or before servicing the machine. If the switch is left to position on, there is a risk of sparks and short-circuit during maintenance, and if any electric insulator is damaged.

Always keep the loader clean and follow maintenance instructions to minimize risk of overheat and fire.

Description of the loader

Identification of the loader

Write down the identification information of your loader in the following fields, it facilitates ordering of spare parts etc.

1. Loader model _____
2. Loader serial no. _____
3. Manufacturing week and year _____
4. Engine serial no. _____

Serial number of the loader is printed on the type plate, which also indicates the loader model. Location of engine serial number is described on the following page.

Dealer: _____

Contact information _____

_____

NOTICE Write down the serial number and the manufacturing week of your loader and have them ready when you communicate with your dealer or Avant dealer or service partner. The serial number together with the manufacturing week make it possible to identify the correct spare parts for your loader.

https://truckmanualshub.com/

Loader identification plate:

Loader identification plate is located near the steering wheel on machines with ROPS canopy and cab L.

On loaders that are equipped with a cab the ID plate is located near the drive pedals.

Contents of the identification plate:

1. Manufacturer's name and address
2. CE mark
3. Designation of machinery
4. Type code of your loader*
5. Serial number*
6. Model year*
7. Manufacturing week / year*
8. Net installed power*
9. Operating mass*

* The labels shown in this manual are examples of the labels on loaders. See the identification plates on your loader for detailed information about your specific loader unit. Some loaders that are intended to be used outside of the European Union may not bear the CE mark.

Engine identification plate:

Avant 860i

The Kohler Stage V engines have an EU type approval label. Label shows information about the engine model and serial number, the production month and year of the engine, and type approval information.

EU label: A visible, supplemental label is located near the ECU in the engine bay, on the left side of the loader. Original label is located on the side of the engine block.

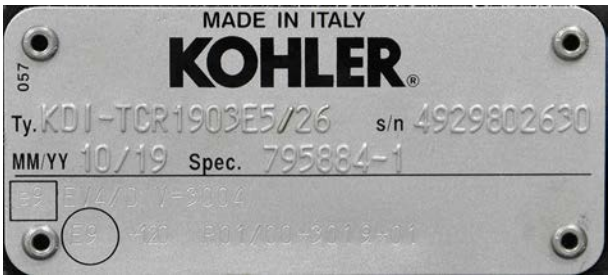

Main parts of the loader

The following picture shows the main parts of the loader. These general parts are the same regardless of the cab type.

1. Front frame

On the front frame are mounted: driver's seat, operating controls, hydraulic control valves, hydraulic oil tank, auxiliary hydraulics outlet, front wheels, hydraulic motors and the loader boom with attachment coupling plate.

2. Back frame

On the back frame are mounted: engine with accessories, battery, parking brake, fuel tank, hydraulic pumps, rear wheels, hydraulic motors, and counterweights.

3. Articulation joint

Articulation joint connects the front and back frame. The loader is steered hydraulically by the steering cylinder which is mounted between the front and back frames. Hydraulic hoses and electric wires are conducted through the articulation joint.

4. Loader boom

Loader boom is mounted on the front frame with a pivot pin. The attachment coupling plate is mounted on the lower end of the boom. The boom is telescopic, extending 700 mm hydraulically.

5. Attachment coupling plate

Attachments are mounted on the attachment coupling plate. The locking pins on the plate can be operated manually (standard) or hydraulically (option). For more information see page 89.

6. Auxiliary hydraulics outlet

The hydraulic hoses of hydraulically operated attachments are coupled on this outlet using its multi connector quick coupling system. The standard hydraulic outlet of the loader is double acting: it has two pressure lines and one tank line, see page 92. If the loader is equipped with the optional Attachment control switch pack, its electric socket is also integrated in the multi connector. In addition, as an option, it is also possible to install a single or double acting auxiliary hydraulics outlet in the rear of the loader, or a second double acting outlet in the front, under the multi connector.

7. ROPS safety frame

ROPS frame (Roll-over protective structure) complies with the standard ISO 3471:1994 with Amendment 1:1997 and Technical Corrigendum 1:2000.

8. FOPS canopy

FOPS canopy (Falling objects protective structure) mounts on the ROPS. It meets the ISO 3449:2005 FOPS level 1 (1365 J) criteria.

https://truckmanualshub.com/

Signs and decals

Shown in the figure below and listed on the following page are the labels and markings, which must be visible on the equipment. Replace any warning label which has become unclear, or has detached completely. New labels are available via your retailer or contact information provided on the cover of this manual.

Other than safety or warning labels are listed in the separate spare parts catalogue.

To apply a new decal

Before applying a new decal, clean the surface from dirt, dust, grease, or other material. Peel small portion of the decal backing paper and apply exposed adhesive to cleaned surface, aligning the decal properly. Peel rest of backing paper and press firmly with hands or decal application tool to smooth out the decal and to activate the glue of the label.

WARNING

The warning labels contain important safety information and they help to identify and remember the hazards related to the equipment.

Make sure that the following signs and decals are clean, undamaged and readable. If any of these decals is missing or is unreadable it should be replaced without delay. Ask for new decals from your local Avant dealer.

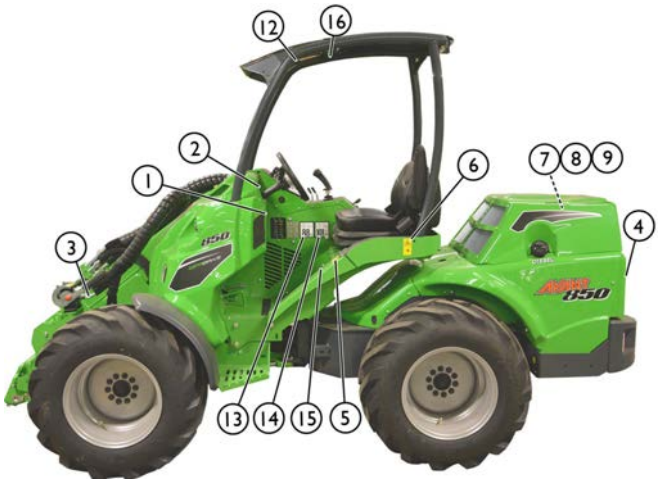

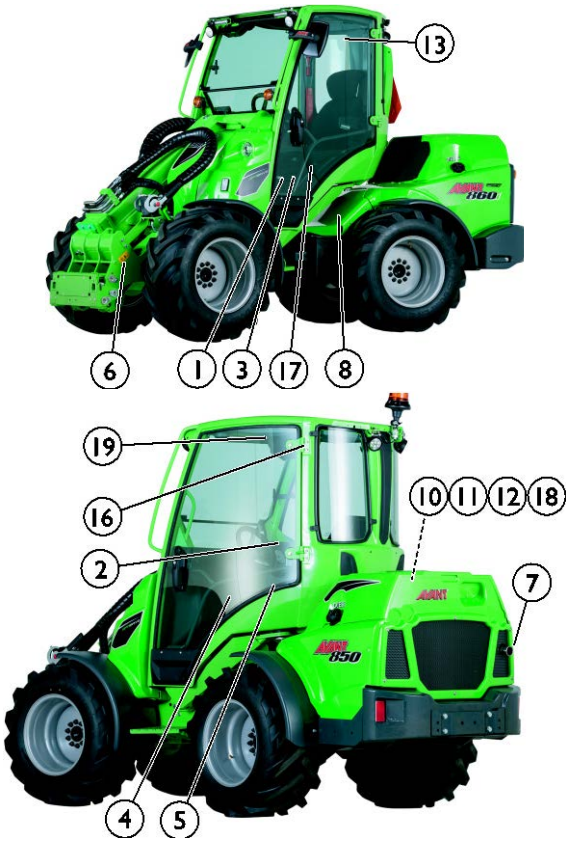

Table 2 - List of safety labels and markings on the loader

Label		
1	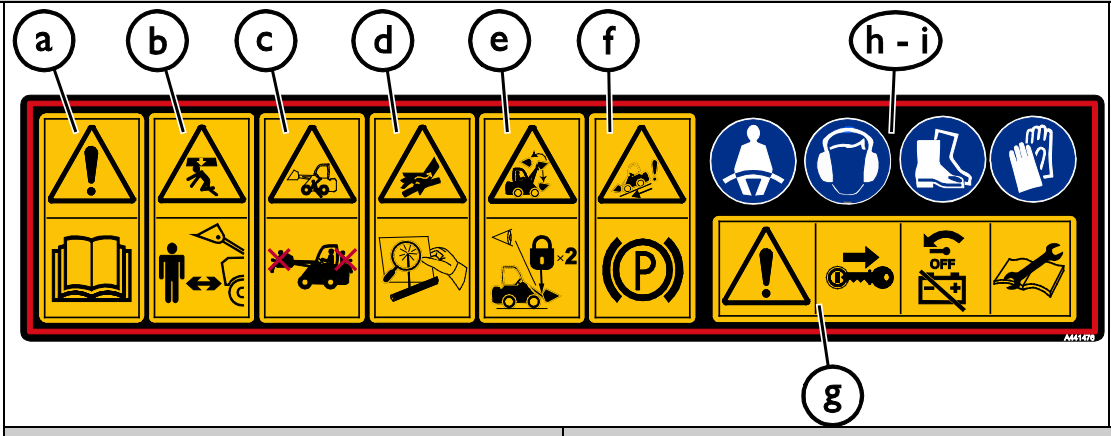	***Location*** Panel in front of driver's seat ***Product code*** A441476

Symbol		Safety message
a		**WARNING** **a** Wrong use, misuse, or careless use can cause hazards that could be prevented with following the instructions properly. Read all instructions carefully before operating the loader.
b		**b** Lowering of loader boom can crush, causing death or serious injury. Keep out from the danger zone of the machine.
c		**c** Risks of falling from height and getting run over. Never lift people or carry passengers with the loader or its attachments.
d		**d** High pressure fluid injection hazard. Never use hands to search for leaks. Use a piece of cardboard and a magnifying glass when searching for leaks.
e		**e** Risk of dropping of attachment. Make sure both locking pins are locked. Check both locking pins before moving the attachment.
f		**f** Risk of getting crushed by moving loader. Apply parking brake and lower attachment on the ground. Make sure loader will not move when leaving the driver's seat.

https://truckmanualshub.com/

Label			
	g 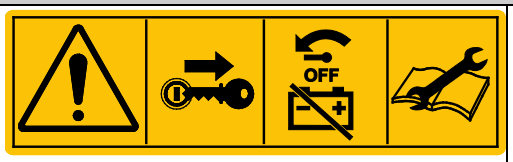	**g**	Follow safe stopping procedure and information regarding maintenance and service. Always remove the ignition key from the loader, and turn the battery disconnect switch to position off when leaving the loader unattended.
	h	***h***	Always wear seat belt.
	i	***i***	Wear hearing protection. Noise level at the driver's seat and at the operating area of the loader will reach 88 dB(A), or higher, depending on use, and type of attachment. Exposure to noise can damage hearing.
	j	***j***	Wear protective gloves which have good grip.
	k	***k***	Wear safety boots with good grip and feet protection.

Label			Message
2	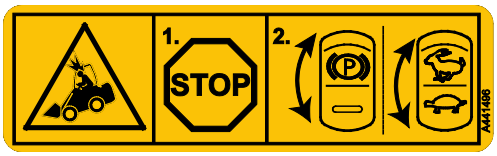	***Product code*** A441496 ***Location*** ROPS Canopy: Near steering wheel On cab GT: Above screen panel on cab frame	**CAUTION** **Stop before using the parking brake and before changing the drive speed range.** Changing the drive speed range or engaging the parking brake while the machine is moving may cause locking of wheels and sudden stop. Repeated use while driving will damage the hydraulic motors. Always engage the parking brake after stopping the machine first. The parking brake should be used to stop the machine only in emergency.

Label			Message
3		***Location*** Panel in front of driver's seat ***Product code*** A441492	**WARNING** **Risk of fire and burns - When DPF regeneration is active, do not park near combustible materials.** For more information about DPF see page 110

Label			Message
4		***Location*** Panel below steering wheel ***Product code*** A441497	**WARNING** Risk of tipping over to the side when driving on uneven ground and when driving at high speed, or with heavy load. *1.* Keep loads close to the ground *2.* Drive slowly on uneven ground, and when transporting heavy loads. *3.* Always use seat belt **WARNING** Risk of tipping over - Keep loads close to the ground. Avoid overload. Read this manual for information about how to avoid tipping over.
5	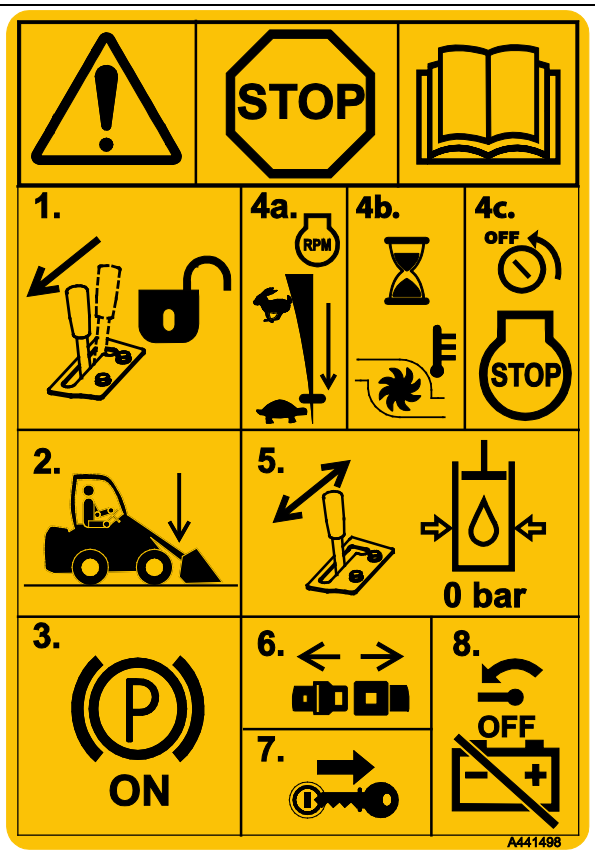	***Location*** Panel below steering wheel ***Product code*** A441498	**WARNING** Always follow this safe stopping procedure. *1.* Release the auxiliary hydraulics control lever to its neutral position. *2.* Lower the attachment on the ground. *3.* Engage parking brake. *4.* Stop the engine: a) Set engine RPM to idle b) Allow the engine to run at idle to allow the turbocharger to cool. c) Turn the ignition key to stop the engine. *5.* Release residual pressure of hydraulic circuits. Move control levers to their extreme positions a couple of times. *6.* Unfasten seat belt *7.* Remove ignition key *8.* Turn the battery disconnect switch to position off.

https://truckmanualshub.com/

Label			Message
6		***Location*** Boom, on both sides ***Product code*** A417273 (2 pcs)	**DANGER** Lowering of loader boom can crush, causing death or serious injury. Keep out from the danger zone of the loader and its attachments.
7		***Location*** At rear of the loader, next to exhaust outlet ***Product code*** A414244	**WARNING** Hot exhaust outlet - Risk of burns. Stay away from the exhaust outlet at the rear of the loader.
8		***Location*** At loader entry point ***Product code*** A411455	**WARNING** Risk of crushing - Small gap between tyres of articulated loader. Do not grip the steering wheel from outside the machine or when getting into the driver’s seat to prevent moving of the wheels.
9		***Location*** Only on loaders ROPS canopy or CAB L At loader entry point ***Product code*** A411456	**WARNING** Risk of crushing - Keep hands and feet within the driver's area.

Table 3 - Safety labels in engine bay

Label			Message
10		***Location*** Engine compartment, on engine coolant reservoir ***Product code*** A417272	**DANGER** **Risk of burns from eruption of hot steam and boiling water - Never open coolant reservoir when engine is hot.** Coolant system is pressurised. Opening of coolant reservoir cap when the system is hot will cause the water to boil immediately, causing burns from hot steam and boiling water. Always allow the engine to cool before opening the cap. It is not necessary to open the cap to check the coolant level, the level can be seen through the transparent reservoir. Check the water level in reservoir when engine is cool. See page 119 for more information.
11	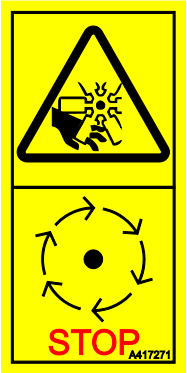	***Location*** Engine bay, left side of engine ***Product code*** A417271	**WARNING** **Risk of contact with moving parts - Always shut down the engine before accessing the engine compartment.** Engine cooling fan, alternator belt, and belt pulleys will move at high speed when engine is running. Never open the engine cover when engine is running.
12		***Location*** Engine compartment, at the right side, near exhaust muffler ***Product code*** A417270	**WARNING** **Risk of burns - Extremely hot surfaces. Keep clear.** Allow loader to cool completely before maintenance.

https://truckmanualshub.com/

Table 4 - Additional decals on loaders equipped with a cab

Label			Message
13		***Location*** On cab GT: Right window On cab L: Front window (windshield) ***Product code*** A420044	**EMERGENCY EXIT** Use the window hammer to break glass. Make sure the safety hammer is available for emergency use.
14	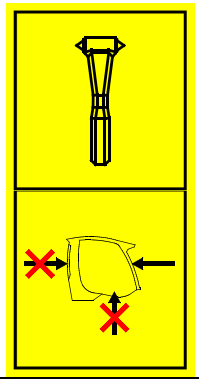	***Location*** Only on CAB L: Near right window ***Product code*** A411021	**EMERGENCY HAMMER** Use the hammer to break a glass window pane. On loaders equipped with CAB L the front window (windshield) can be used as an emergency exit when broken with the hammer. Keep in mind that if the side and rear panels are made from polycarbonate, they can't be broken with the hammer.

Table 5 - Information labels

Label		Message	
15	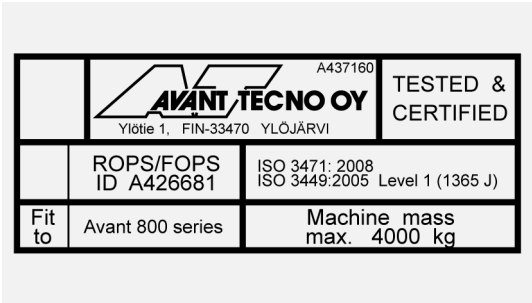	ROPS/FOPS Approval, on loaders with ROPS frame or CAB L.	***Location*** ROPS frame, inside ***Product code*** A437160
16	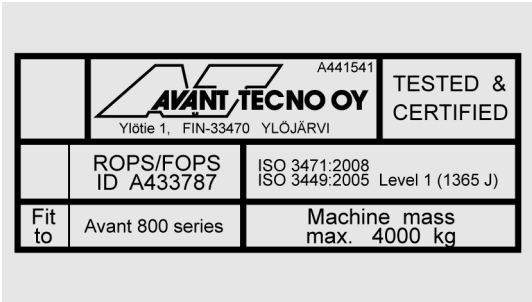	CAB GT ROPS/FOPS approval label, on loaders with cab GT.	***Location*** Cab GT, inside ***Product code*** A441541
17	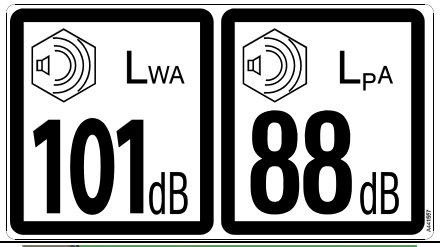	Sound power level 101 dB(A) 2000/14/EC Sound pressure level 88 dB(A) at driver's seat	***Location*** Right panel near driver's seat ***Product code*** A441557
18		Correct type of hydraulic oil and engine oil See pages 125 and 35	***Location*** Front panel below driver's seat ***Product code*** A415780
19	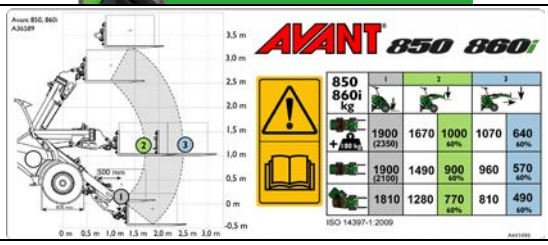	Information about Rated operating capacity. For more information see page 42	***Location*** Roof panel ***Product code*** A441493

https://truckmanualshub.com/

Technical specifications

Dimensions

General dimensions	With standard wheels
Length	3395 mm
Width	1490 mm (with standard tyres)
Height	2200 mm (with standard tyres)
Operating mass*	860i ROPS: 2760 kg 860i GT: 2910 kg
Standard counterweight	275 kg
Standard tyres	See page 36
Lifting height	3500 mm
Max vertical reach	1492 mm (distance from standard front wheels to quick coupling plate)
Turning radius, inside/outside	1376 mm / 2995 mm
Ground clearance	373 mm

* Operating mass, ISO 6016. This mass represents the weight of a loader with standard counterweight, typical options, standard tyres, with no attachment fitted, and 75 kg driver on the driver's seat. Additional options or counterweights can increase the mass of the loader. The mass of your specific loader may also be lower.

Height and width

Tyre	Width	Height
380/55-17” TR	1490 mm	2200 mm
380/55-17” GR	1490 mm	2200 mm

Height with cab

Height with Cab GT	Height
380/55-17” TR	2230 mm
380/55-17” GR	2230 mm

Tyre types:

TR Tractor type tyre tread pattern, with aggressive grooves for best possible traction

GR Grass type tyre tread pattern, with smoother surface and larger contact area

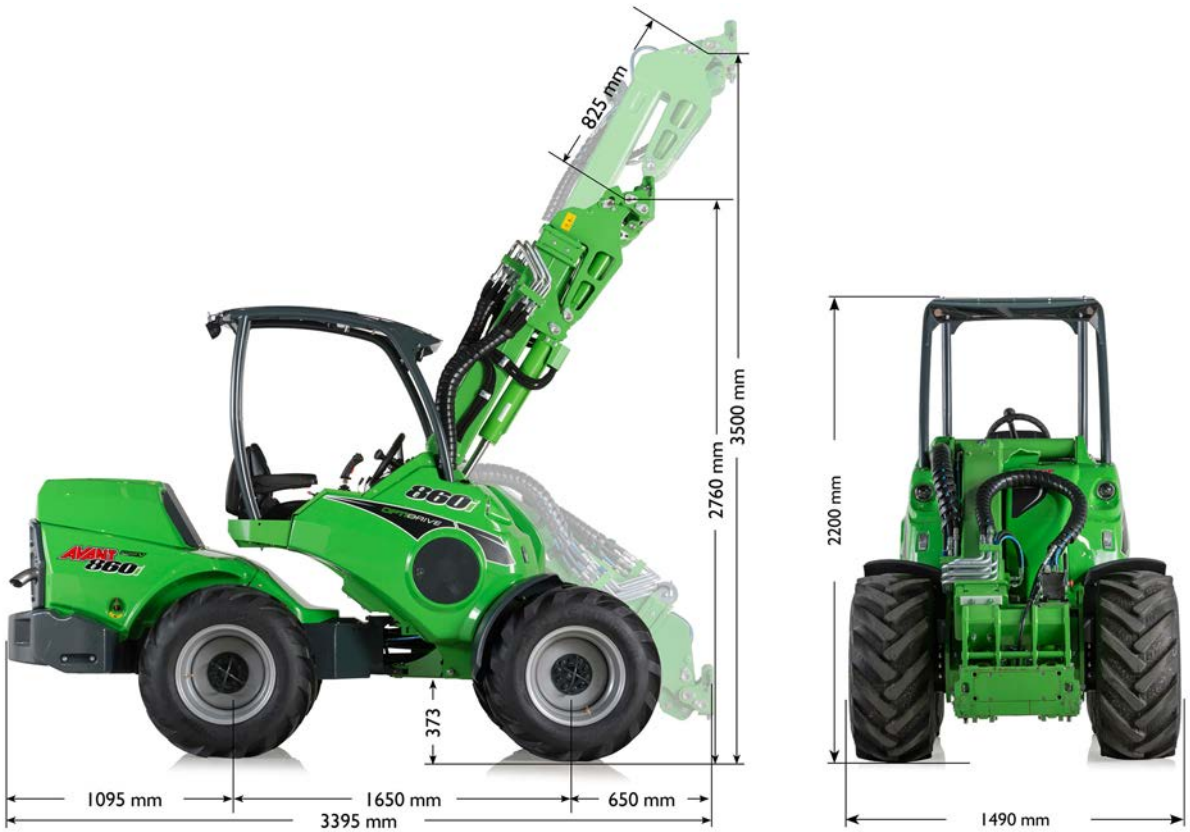

General information

Model	***AVANT 860i*** **Stage V**
Category	Earth-moving machinery / Loader / Compact loader EN ISO 6165
Product code	A436009
Drive system	hydrostatic, 2 speed ranges
Tipping load ISO 14397-1 Load on a pallet, lifted from the ground	1900 kg
Rated operating capacity	See page 42
Max. breakout force / 50 cm	1700 kg
Pulling force, static min	1880 kp
Auxiliary hydraulics See also page 37	Max 225 bar Max flow: 80 l/min
Hydraulic pumps	2 auxiliary hydraulic pumps
Auxiliary hydraulics	Standard: Faster multiconnector system on front. Optional: Extra auxiliary hydraulics coupling on front or rear.
Attachment coupling	Avant quick coupling attachment plate
Hydraulic oil tank capacity	48 l
Hydraulic oil type	ISO VG 46, mineral oil only See page 125
Battery type	65197 12 V lead acid battery See page 127
Sound pressure level 2000/14/EC L_{pA}, ISO 6396	86 dB(A)
Sound power level 2000/14/EC L_{wA}, ISO 6395	101 dB(A)
Hand-arm vibration, total	< 2,5 m/s²
Whole-body vibration, max.	< 0,5 m/s²
Technically permissible maximum masses	Front axle: 4000 kg Rear axle: 4000 kg Total: 4700 kg
Maximum mass of the trailer	1500 kg

*) Load is measured at 500 mm from the attachment coupling plate, including attachment weight (70 kg) and with counterweights.

https://truckmanualshub.com/

Engine specifications - 860i

Engine specifications	***AVANT 860i*** **Stage V**
Engine make and type	Kohler KDI-TCR 1903E5/26
Emissions level	EU: 2016/1628 Stage V
Operating principle	4-stroke, OHV, four valves/cylinder, turbocharged, intercooler Common rail direct injection
Number of cylinders	3
Engine RPM	1000 rpm - 2800 rpm
Fuel	Diesel: Ultra low sulphur Diesel fuel only, max S=15 ppm. See page 35
Fuel tank capacity	63 l
Coolant	50% Water / 50% antifreeze. Freezing point <-37 °C, total volume 11,6 l
Number of cylinders	3
Starter	electric
Bore x stroke	88 x 102 mm
Displacement	1861 cm³
Output (ECE R120)	42 kW / 56 hp @ 2600 rpm
Max torque	225 Nm @ 1500 rpm
Emissions, CO_2	NRSC: 771,4 g/kWh CO_2 NRTC: 788,4 g/kWh CO_2
Engine oil type	API CJ-4 / Low SAPS Euro 6, e.g. Mobil Delvac 1 LE 5W-30 See page 35
Engine oil viscosity	5W-30 (0W-30 below -25 C)
Engine oil capacity	Min 5 l max 8,7 l, including oil filter
Exhaust system	Diesel oxidation catalyst (DOC), Diesel Particulate filter (DPF), exhaust gas recirculation (EGR)
Max inclination	Max intermittent 30°, Continuous operation max 25° any direction

Emission control information

The engine of the loader is certified by the manufacturer of the engine to comply with the emissions standards listed below, and the labels on the engine. Modification of any setting or control system of the engine, fuel injection system, exhaust or intake, can cause the engine to no longer comply with the emissions standards. Only specified fuel and oil must be used. The engine must be serviced according to the service schedule.

Emissions level, Avant 860i Stage V

This version of Avant 860i complies with the EU 1628/2016 Stage V emission standard. For loaders that comply with different emissions standards please contact your local Avant dealer.

Engine oil requirements

Use only engine oil recommended by the engine manufacturer. Choose the viscosity grade according to ambient temperature.

Kohler KDI Engines (Avant 860i)

The Kohler diesel engine with common rail high pressure fuel injection requires high quality engine oil in order to work properly. The oil must meet the API CJ-4 / Low S.A.P.S. class, and the viscosity recommendations that depend on ambient temperature. See also Kohler Operator's Manual. Wrong type of engine oil can cause engine damage and wear, clogging of exhaust catalyst, and non-compliance with emissions regulations.

Fuel requirements

Use only Ultra low sulphur diesel fuel with Avant 860i.

NOTICE

Use only correct type of fuel. Use of other types of fuel could damage the engine. Do not use dirty diesel fuel or fuel that has water in it as it will cause severe engine damage.

To ensure correct operation of the engine, and to comply with emissions standards, use only Diesel fuel that meets requirements of Ultra low sulfur diesel fuel requirements. The sulphur content of the diesel fuel must be less than 15 ppm / 0,0015 %.

Never add petroleum or any additive that does not comply with the fuel standards listed below.

In cold ambient temperatures (below 0 °C) ensure that the fuel is intended for cold temperatures. If fuel is not intended for cold temperatures, it will form paraffin, which will block the fuel filter and interrupts the flow of fuel.

Avant 860i - Kohler KDI

Fuel must meet the following requirements:

- Ultra low sulfur diesel fuel only (sulfur content less than 15 ppm / 0,0015%)
- Minimum cetane number: ≤ 45
- Use only fuel that complies with any of the following standard:
  - EN 590, DIN 51628 - Military NATO fuel F-54 (S = 10 ppm)
  - No 1 Diesel - ASTM D 975-09 B-Grade 1-D S 15
  - No 2 Diesel - ASTM D 975-09 B-Grade 2-D S 15
  - ARCTIC Diesel (EN 590/ASTM D 975-09 B Grade 1 or 2) for ambient temperatures below -10°C (14°F)

Biodiesel with max 10 % bio content that complies with the standards above can be used. Alternatively, the 10 % biodiesel content of the fuel may comply with EN 14214 or ASTM D6751-09a(B100). DO NOT USE vegetable oil as a biofuel for this engine.

Operation and compliance of emission control systems depend on using correct type of ultra low sulphur fuel. Compliance with emissions requirements and durability of the engine and its exhaust system are not guaranteed with other types of fuel.

https://truckmanualshub.com/

Tyres

The loader can be equipped with different type of tyres for different operating conditions. Grass pattern (GR) tyres will damage the ground surface less than tractor (TR) tyres, but provide less traction.

The overall diameter of the tyre affects the maximum drive speed pulling force of the loader. Larger tyres increase tyre speed but decrease available pulling force.

All tyres have maximum rating for load capacity and drive speed, or their combination. Inflation pressure of the tyre has an effect on maximum allowed speed of the tyre, or the load carrying capacity. Keep tyre pressures within near recommended pressures.

Use tyre and rim models that are recommended by Avant to ensure that the tyres meet the dimension, load, and speed requirements for this loader model. Replace tyres if there are visible damages on the tyre or rim, or if the wear surface of the tyre has worn, or if there are visible differences between the tyres. Always use the same size of tyres on all wheels.

Tyre options for Avant 860i

Tyre	Tread Pattern	Code	Fill pressure Recommended / Maximum	Snow chains	Fits with fenders	Remarks
380/55-17"	TR	66505	2,8 bar / 2,8 bar	-	x	Standard on 860i
380/55-17"	GR	A442475	4,0 bar / 4,0 bar	-	x	

Use the widest possible tyres

For the best stability and controllability, always use the widest tyres possible. Tyres that are narrower than the standard tyres are intended for special purposes only with width restriction on the machine.

Use only tyres and rims that meet the original specifications and dimensions to avoid potential issues with load capacity, tyre size, or bearing load on drive motors. Special tyres, such as studded wheels may also be available. Consult your dealer for further information.

WARNING

Risk of tipping over - Make sure tyres are not damaged. Loss of tyre pressure can cause loader to tip over. Make sure there are no visible damages on tyres. Keep tyre pressure within recommendations.

Drive speed and pulling force

Model	Tyre	Drive speed	Pulling force
860i	380/55-17" GR/TR	30 km/h	1800 kp

Ballasted tyres

Some tyres can be filled with special type of heavy foam that creates additional counterweight. The filled tyres are also useful in area where frequent tyre puncture with normal tyres would be expected.

When driving with a loader that has ballasted tyres, the acceleration and stopping distances may be increased.

Ballasted tyres do not have air pressure inside them and do not require air pressure checks.

CAUTION

Ballasted tyres are heavy - Handle ballasted tyres with care. Filling of tyres should be left to professional tyre service.

When the loader is equipped with ballasted tyres, the following symbol must be applied to a visible location on the loader frame near tyres. If you replace the tyres and install normal tyres, make sure to also remove this label.

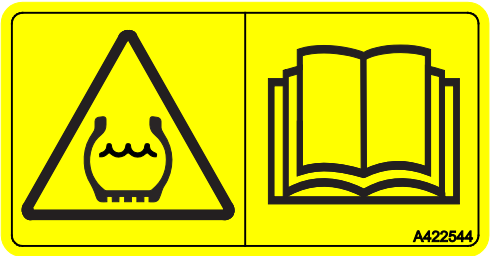

Auxiliary hydraulics oil flow

The following graphs show auxiliary hydraulics output flow at different engine rpm levels. The 1-pump setting is illustrated with dashed line and 2-pump setting with uniform line.

Some attachment may work optimally at certain flow level, use the graph to estimate correct engine rpm setting.

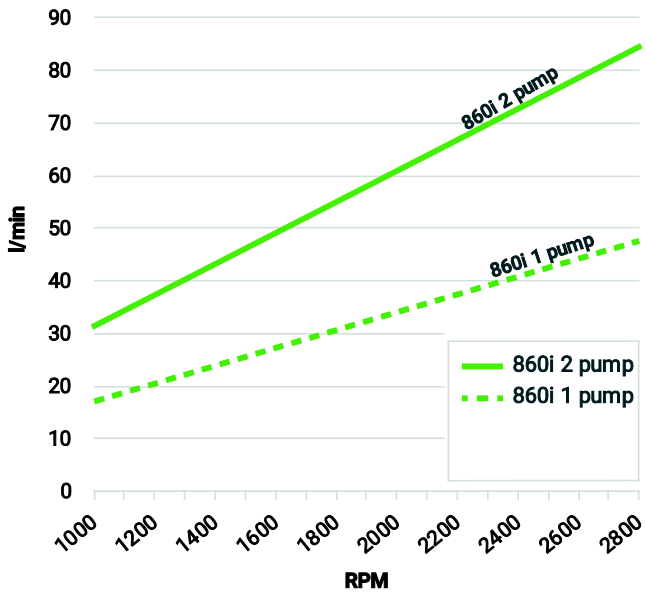

NOTICE

Maximum auxiliary hydraulics oil flow cannot be used with all attachments. Check correct engine rpm for the attachment with the help of this graph and the Operator's Manual of the attachment. Attachment may get damaged, run too fast, or it may be difficult to control precisely when oil flow is too high.

https://truckmanualshub.com/

1 and 2 pump selection switch

Some attachments require high flow of hydraulic or the attachment to work in the most effective way. The loader is equipped with two auxiliary hydraulic pumps. Both pumps are always running. With this switch in the dashboard the output of both pumps can be directed to the attachment, and to the boom telescope function at the same time. If high flow is needed, select the 2-pump setting.

Switch position:

1 PUMP

2 PUMP

1. 1 pump selected: one pump coupled for auxiliary hydraulics (lower oil flow). Use this setting unless higher hydraulic flow to the attachment is required.
2. 2 pumps selected (higher oil flow). Use this setting only when the attachment requires high flow of hydraulic oil.

See the operator's manual of each attachment for recommended and maximum oil flow levels.

If the attachment requires only low power to operate, in some cases it can be useful to use the two-pump setting while using low engine rpm. This reduces the noise of the loader. If the attachment or loader stalls, switch to 1-pump setting and increase engine rpm.

NOTICE In normal use, keep the pump selection switch at the 1-pump setting to avoid overspeed of the attachment and stalling of the loader. Keeping the switch at the 2-pump setting unnecessarily will decrease the efficiency of the hydraulic system of the loader.

NOTICE This switch will also affect the speed of the telescopic function of the boom.

WARNING

Risk of thrown objects, increased noise and vibration, and equipment damage - Check the maximum oil flow of each attachment. Some attachments may eject material at high speed when operated too fast. Damaged machine parts may also be ejected. Too fast operation will cause increased noise, vibration, and wear. Check the operator's manual of each attachment and adjust the auxiliary hydraulics oil flow accordingly. See page 37.

Lift capacity

Tipping load is the load at which the rear tyres lose contact with the ground and the loader begins to tip forward. Tipping over can happen also on even ground. If the movement that causes the loss of stability is not prevented or corrected in time, the loader can tip over causing potentially serious personal injuries or even death. Read the instructions in this manual regarding safe handling of loads to avoid the situation where the loader will tip over.

Tipping over can be caused by a single reason, or as the combined effect of the operating conditions, movements of the loader, and the work situation. Avoid the following basic situations to prevent the loader from tipping over:

- too heavy load is being lifted
- when the loader boom is moved to another position, the load moves away from the loader, reducing the stability of the loader
- driving or other movements of the loader affect the balance of the loader

More information about how to take these factors influencing the tipping load into account are shown on page 45.

There are many influencing factors that affect the stability of the loader. Use the load chart and ROC table to estimate the load handling capacity of the loader. Observe the instructions and information given in this manual.

The lifting capacity and the stability of the loader are at the best, when:

- the ground is level
- the loader frame is kept in straight position
- the centre of gravity of the load is as close to the loader as possible
- counterweights are fitted to the loader
- swinging of the load is prevented and all controls are used in a calm and careful manner - sudden movements of the loader or the load can cause the loader to tip over

See also page 86 for more information about safe handling of heavy loads and for a list of typical factors that influence the stability of the loader.

Risk of tipping over - Follow safety instructions. The lifting capacity of the loader is limited by the possibility of tipping around the front axle.

Pay attention to safe operating conditions whenever handling loads or heavy attachments. The indicated values apply only in favorable conditions. Read the instructions in this manual.

https://truckmanualshub.com/

To estimate the load carrying capacity of the loader

There are two representations of the tipping load in this manual:

- Load chart with pallet forks, including the table of Rated Operating Capacity (ROC)
  - This information is also presented as a label on the loader
- Load diagram

Both of these show the same information about the tipping load of the loader, but in a different way, and with different details. The information in the load diagram is more general, and can be applied to other attachments as well to help you to avoid exceeding the tipping load with any attachment.

Any illustration, chart, table, or value of tipping load and the ROC table are valid only, when the following conditions are met:

- The ground is firm and level
- Loader is stationary or driven slowly, max 2 km/h, with smooth and slow control movements
- Driver 75 kg is seated on the driver's seat
- Load is distributed evenly on pallet forks, with the load centre of gravity at 500 mm from the vertical part of pallet fork arms. The weight of the fork attachment is taken into account in the indicated load values

WARNING

All counterweights affect stability - Also the driver. Always lower the load on the ground before leaving the driver's seat. If the load is close to the tipping load in the position and in the current situation of the loader, the loader could tip over as a result of leaving the driver's seat.

Load charts of other attachments

In this manual there is only a load chart for the pallet forks A36589. All Avant attachments have their own operator's manual which include more information about their rated operating capacities when used with different loader models.

Always keep the manuals of all attachments available for all operators of the loader. If you don't have all manuals available, contact your Avant dealer.

DANGER

Risk of getting crushed under falling load - Never exceed maximum load of the attachment. The lifting force of the loader and the tipping load may exceed the maximum allowed load of an attachment. The Rated Operating Capacity in this manual shows information for pallet forks and it does not apply to other attachments. Check the operator's manual of the attachment and the identification plate of the attachment for information about their maximum loads. Overloading an attachment can cause damage that becomes visible only later.

Load indicator

The loader is equipped with a load sensor system. When tipping load is being approached, the system gives an audible warning signal and a red indicator lights up in the dashboard. This means that the rear wheels of the loader are about to lose contact with the ground on level ground.

When the warning is given, the loader could easily tip forward because of movements of the loader boom, acceleration or deceleration, steering of the loader, or uneven ground surface.

Read the safety instructions regarding handling of heavier loads, see page 86.

The load sensor must be calibrated if counterweights are added or removed. The sensor must also be calibrated at least annually. Calibration instructions for the load sensor system can be found on page 124.

WARNING

Risk of tipping over - Observe the load indicator warning. When the load indicator warning is triggered, there is high risk that the loader will start tipping forward. Lower the load in a calm manner and avoid abrupt movements. Keep loads as close to the ground as possible during driving and lift after stopping the loader first. Keep telescopic boom retracted. Never lift the boom or extend telescopic boom if warning is triggered.

The load indicator is an additional device that does not remove the responsibility of the operator to operate the loader in a safe manner.

https://truckmanualshub.com/

Rated operating capacity

To easily determine how much load the loader can handle safely, a table of the tipping load and a calculated Rated Operating Capacity (ROC) is shown in the adjacent label. The label is also visible from the driver's seat.

Rated operating capacity depends on type of use of the loader:

- In bucket and general application the rated operating capacity is 50% of tipping load
- In pallet fork application the rated operating capacity is 60% of tipping load

The information shown in the table is the worst case minimum load, with the conditions listed below. Actual lifting capacity could be significantly higher, or it may be lower, depending on terrain conditions, available lifting force, and load distribution. Adding or removing counterweights will affect the indicated ROC.

The load charts help you to estimate the weight of the load that can be lifted with the loader without tipping over on firm, stable ground. They describe the loads that can be handled at different positions of the loader boom.

The ROC label below shows the lifting capacity with pallet forks in different positions of the loader boom. The lifting capacity of the loader depends on the horizontal distance between the center of gravity of the load and the front axle of the loader.

When the load is lifted off from the ground, the loader boom moves further away from the loader, decreasing the stability of the loader. At the horizontal position of the loader boom the load will be the furthest away from the loader, and the tipping load is the lowest. When the telescopic boom is extended the tipping load is further reduced.

The ROC table is valid, when:

- The ground is firm and level
- Loader is stationary or driven max 2 km/h, with smooth and slow control movements
- Driver weighing 75 kg is seated on the driver’s seat
- Load is distributed evenly on pallet forks, with the load centre of gravity at 500 mm from the vertical part of pallet fork arms. The weight of the fork attachment is taken into account in the indicated load value

Rated operating capacity label A441493, in kilograms

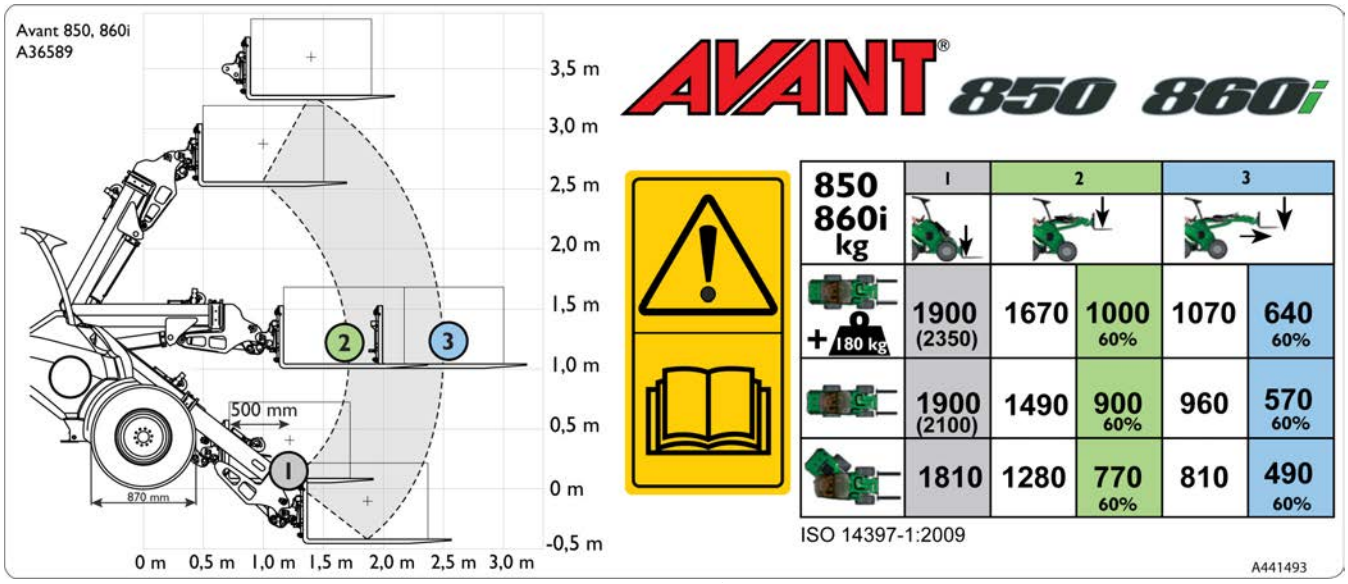

Load chart on the left side of the label:

The graphic on the left side of the label shows the distance of the load in different positions of the loader boom. In this graphic, and in the Rated operating capacity table, the load is placed so that its center of gravity is at 500 mm forward from the vertical part pallet fork arms.

The numbered points are the positions of the rated operating capacity table.

Different positions of the loader boom, columns in the table:

1. Maximum tipping load, stability when lifting load just off the ground with pallet forks

   NOTE: The tipping load exceeds the maximum lift capacity of the loader. Values in brackets show theoretical tipping load.

2. Boom lifted to horizontal position:

   a) Tipping load in this position
   b) Rated operating capacity, 60 % of tipping load with pallet forks

3. Boom lifted to horizontal position, telescopic boom fully extended (least stable position)

   a) Tipping load in this position
   b) Rated operating capacity, 60 % of tipping load with pallet forks

Different loader configurations, rows in the table:

a Loader frame in straight position, with additional 180 kg counterweights fitted to the loader

b Loader frame in straight position, standard counterweight fitted

c Loader frame in fully articulated position, standard counterweight fitted

https://truckmanualshub.com

Tipping load - Load diagram

Load diagram

With the diagram the load handling capability of the loader can be evaluated, according to the distance between the centre of gravity of the load and the front axle of the loader. The diagram represents the forward stability only, *it does not refer to maximum available lift force.*

The load diagram below shows the tipping loads on a level surface:

a) Tipping load with the loader frame in straight position.
b) Tipping load with the loader frame in maximum articulation.

- ROC (Rate operating capacity), defined as 60 % of tipping load for pallet forks.

WARNING

Avoid overloading the loader - Know the load and the lifting capacity of the loader. Heavy load can cause the loader to tip over. The diagram is valid only on firm and level ground, with the conditions listed on page 39. The load can exceed tipping load and loader can tip over when you move the loader boom to another position.

Load diagram 860i

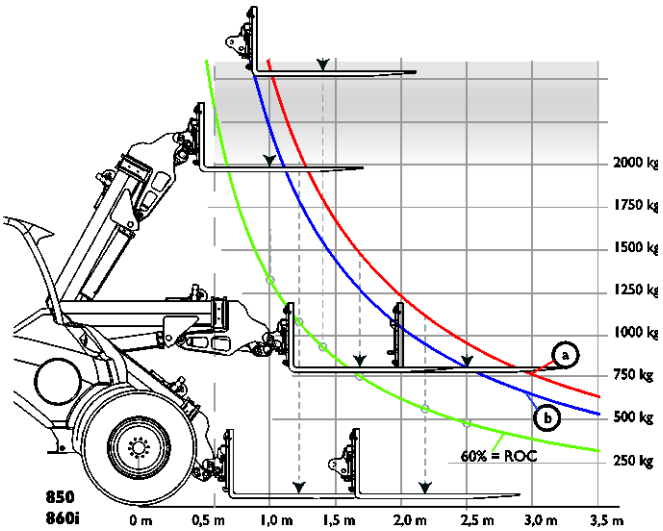

How to read the load diagram

a Tipping load with the loader frame in straight position.

b Tipping load with the loader frame in maximum articulation.

- ROC (Rated operating capacity), defined as 60 % of tipping load for pallet forks.

  The tipping load chart describes only the stability of the loader to forward direction - it does not refer to maximum available lift force.

The tipping load lines in the chart extend beyond the hydraulic lift capacity of the loader.

Example: If the centre of gravity of the load is 970 mm in front of the front axle (500 mm from the pallet forks, forks at ground level)

- Tipping load would be about 2000 kg when lifting from ground surface level, with a driver weighing 75 kg, and with the articulated frame in straight position (line **a** in load diagram).
- This means that in terms of tipping load, a pallet with a total weight of up to about 2000 kg can be lifted just off the ground, but it can't be lifted higher, as the loader would tip over. However, the hydraulic lifting capacity of the loader is less than the tipping load when lifting loads just off the ground.
- When the boom is lifted to horizontal position, the tipping load is reduced to about 1490 kg (line **a** in load diagram, the horizontal distance of the center of the load on forks increases to about 1670 mm).

How to estimate actual lifting capacity

The actual tipping load and stability of the loader depends on many factors that you must consider when you handle heavy loads or attachments. Listed in the table below are many factors that influence the stability of the loader.

Always keep in mind the conditions listed in the following table.

Influencing factor	How you should take it into account
Position of the loader boom and telescope	Keep load as close to the ground as possible while you drive. Lift only when ready to unload the bucket or attachment ■ See load chart and ROC table to estimate the lift capacity of the loader on level ground. Reduce the indicated maximum load by always taking the local operating conditions into account
The total load on the loader boom	Estimate the combined weight of an empty attachment and load ■ Load chart is based on weight of pallet forks (90 kg) ■ If the attachment you use is heavier, subtract its weight from the listed tipping load accordingly ■ See the operator's manual of each attachment for attachment weight and possible information about permitted loads.
The distance of the load from the front tyres	The further away the load is from the loader, the less stable the loader is ■ Keep the load as close to the ground and the loader as possible ■ Never drive while load is lifted more than just off the ground
Straight or articulated position of the loader frame	If you turn the articulated frame, the loader will tip over more easily ■ Keep the loader in straight position when lifting heavy loads
Levelness of the ground	All listed values are applicable only on level, even ground ■ Drive slowly on uneven ground ■ Keep load close to ground and as close to the loader as possible
Installed counterweights	Additional counterweights improve the stability of the loader ■ Keep standard counterweights fitted ■ Consider the use of additional counterweights or ballasted tyres for additional stability
Presence of driver	Driver acts as additional counterweight ■ Load chart is calculated with a 75 kg driver present on driver's seat ■ If you leave the driver's seat, loader can tip forward.
Movements of the loader and the load	Lifting of the maximum load is possible only when loader is not moving ■ Operate the controls of the loader slowly and in a smooth manner. Dynamic loads can cause loader to tip over ■ Secure load on the attachment. If load moves or swings, the loader can tip over ■ Use correct type of attachment for each type of load ■ Never lift swinging loads

https://truckmanualshub.com/

Controls and options of the Loader

This chapter describes the location and function of the controls of the loader. The location and function of controls may be slightly different in different models and cab versions. See the following pages for information about the controls and the options of the loader.

In This Chapter

Overview of controls 47
Dashboard 49
Control of loader boom, auxiliary hydraulics, and other functions 55
Control lever of auxiliary hydraulics (hydraulically operated attachments) 55
Telescopic boom control lever 56
Joystick - 8 function 56
Hand throttle lever 57
Parking brake switch 57
Opticontrol® (option) 57
PTO switch 59
Control lever of extra hydraulics outlet (option) 59
Attachment control switch pack for rear mounted attachments (option) 59
Electric 12 V outlet 59
Engine compartment and storage spaces on the loader 60
Boom self-levelling 61
Boom floating 61
Smooth drive (option) 62
Trailer coupling (option) 65
Extra auxiliary hydraulics outlets, front and rear 65
Rear lift device 66
Counterweight mounting plate for rear lift device 66
Reverse buzzer (option) 66
Seat - Seat belt and seat adjustments 67
Suspension seat 67
Air suspension seat (optional extra for cab GT) 68
Lights 69
Cabs (optional extra) 71

Overview of controls

860i ROPS

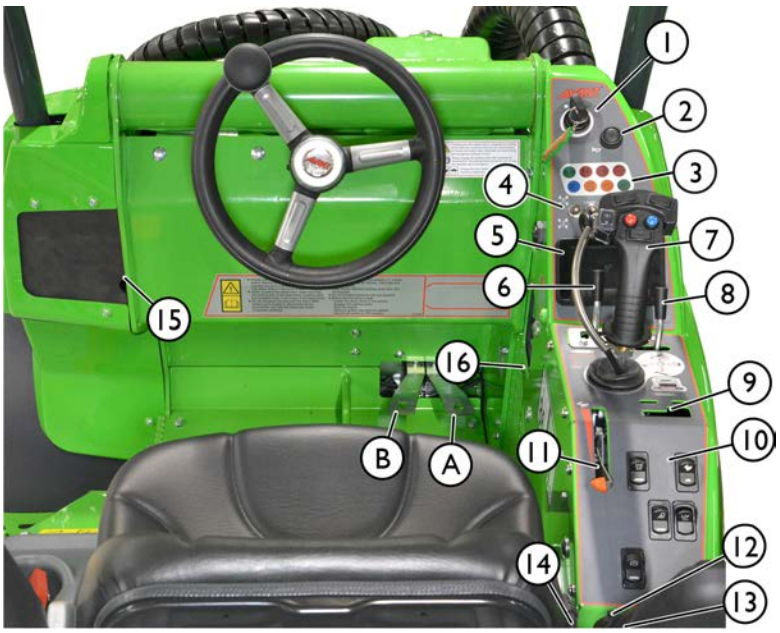

860i GT

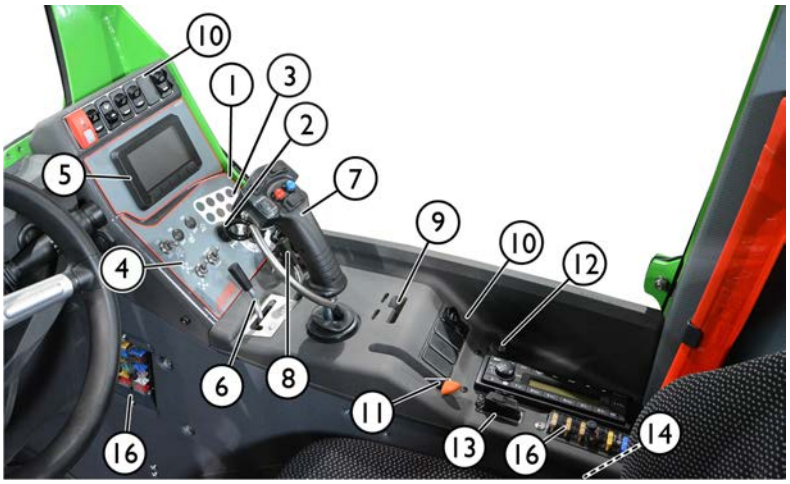

Reference		*Page*
1.	Dashboard Ignition switch	49
2.	Signal horn switch	
3.	Indicator lights	50
4.	Switches on the dashboard	49
5.	Multi-function display	50
6.	Auxiliary hydraulics control lever	55
7.	Control lever of boom and bucket	55
8.	Boom telescope control lever	
9.	Extra auxiliary hydraulics control lever	
10.	Control switches on the panel	48
11.	Hand throttle lever	57
12.	12 V outlet (max 15 A)	
13.	CAN Diagnostics port	
14.	Seat belt buckle	67
15.	Storage compartment	60
16.	Fuse box	133

Controls in footwell

A	Drive pedal, right: drive forward	79
B	Drive pedal, left: drive backward	79

https://truckmanualshub.com/

Switches on the panel

The number of the additional control switches depends on which options have been installed on the loader.

The position and order of switches may be different than shown in this chapter.

On loaders with ROPS frame or CAB L:

All switches are located near the hand throttle lever

On loaders equipped with CAB GT:

On loaders that that are equipped with the GT Cab there are switches in separate groups:

- Some switches are located near the hand throttle lever
- Some switches are located above the instrument panel
- Controls related to the heating of the cab are located on the left of the seat base. For more information see page 72.

	Extra work lights 2 at front, 1 rear Optional equipment		Drive speed range selection switch. See page 79		Emergency blinker Included in road traffic light kit Optional equipment
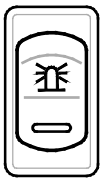	Warning beacon Optional equipment See page 70		Smooth drive Optional equipment See page 62		Hydraulic locking pins, attachment coupling Optional equipment See page 90
	Parking brake See page 57		Opticontrol® Switch for choosing the operating mode of the Opticontrol® system. Optional equipment. See page 57		

NOTE: Some of the switches presented here are for optional equipment and might not be installed on the loader.

Dashboard

On the dashboard on the right side of the driver's seat are mounted the display, indicator lights and switches which help you to control the loader.

ROPS

Cab GT

Switches and indicator lights

Switches on the dashboard:

	Symbol	Switch
1		**Ignition switch** See page 76
2		**Signal horn**
3		**Cross lock valve switch** See page 81
4	**1 PUMP** **2 PUMP**	**Auxiliary hydraulics pump output selection switch** See page 38
5		**PTO override switch** See page 50
6		**Seat heater switch** See page 67
7		**Work light switch** Standard front work lights of the loader.
8		**Multi-function display** See page 50
9		**CAB GT: Switches above dashboard** On cab GT some switches are located above the dashboard. See page 48

https://truckmanualshub.com/

Indicator lights

	Symbol	Colour	Remarks
A		Green	**Turn signal indicator** Road traffic light kit only
B		Red	**Electric malfunction** The vehicle ECU has detected an electric error with potential safety or fire hazards requiring service. If this light remains lit, turn battery disconnect switch to OFF and contact Avant service.
C		Red	**Load sensor indicator** Warning: Too heavy load is being lifted. See page 39.
D	STOP	Red	**Stop signal** The engine or vehicle ECU has detected an error that makes it necessary to stop the loader as soon as possible. Turn the battery disconnect switch to position OFF.
E		Blue	**High beam headlights on** Road traffic light kit only
F		Amber	*Not in use in this loader model*
G	PTO	Amber	**PTO engaged** PTO switch is activated: Drive pedals are disabled for using a stationary attachment.
H		Green	**Seat heater on** See page 67

Multi-function display

The multi-function display shows basic information whenever the loader is running. The display also has other information available, which can be selected with the buttons of the display.

Shown in the basic display view

This view is automatically shown when the loader is started.

1. Ambient temperature can be displayed in Celsius of Fahrenheit.
2. Current fuel consumption in litres per hour
3. Total operating hours
4. Current time
5. Message area: Instead of information listed above, this area can display a message needing user action. For information about different messages see page 53
6. Selected speed range
7. Load sensor information
8. Engine RPM
9. Fuel tank level
10. Information about selected display page and DPF controls
11. Auxiliary hydraulics pump switch position
12. Current output of auxiliary hydraulics in litres or gallons per minute. In some cases also a warning triangle can be shown here.

    Hydraulic oil temperature: The background color of the center of display represents the temperature of the hydraulic oil. Red background signals that the hydraulic oil is hot. If possible, reduce load on the hydraulic oil, or stop to allow the hydraulic oil to cool.

Buttons of the display

A	Control buttons for display	
1		Push this button to return to the basic view. Push again to cycle through available display information modes.
2		Push this button to show information about the loader ECU and the engine ECU. Push to cycle the following views: Vehicle ECU data - Engine ECU data - Engine DPF data Push and hold this button to show service information.
3		Push this button to enter the settings menu to view and edit settings of the display.
B	**DPF Control buttons**	
4		**Inhibit DPF regeneration** This button postpones DPF regeneration process. Pushing this button changes the symbol above the button to green, or back to gray. Use this to prevent hot exhaust when operating in enclosed spaces, near flammable material, and when you wish to inhibit the DPF regeneration until next use. For more information about DPF regeneration see page 110.
5		**Forced DPF regeneration** Use this button to activate parked DPF regeneration, when the soot level is above 90 %. Forced regeneration works only with high soot level, between 90 - 110 %. Pushing this button changes the symbol above the button to green, or back to gray. For more information about forced regeneration see page 110.

https://truckmanualshub.com/

Warnings and symbols on the display

The display also shows information and warnings related to loader and its engine.

Warning messages

In addition to the symbols on the display some alerts also display a text on top edge of the display.

Warning symbols, Engine and DPF

Symbol	Colour	Remarks
	Amber	**Check engine** Engine fault requiring service. Check info pages of the display for engine trouble codes. Contact Avant service.
	Red	**Engine malfunction indicator light (MIL light)** Engine fault requiring immediate user action.
	Amber	**Hot exhaust temperature** This symbol appears during normal passive regeneration process of the DPF. Exhaust gas is hotter than normally.
	Red	**Alternator trouble** 12 V voltage of the loader is lower or higher than set limits.
	Red	**Low engine oil pressure** Stop the loader immediately to avoid severe damage. Check engine oil level. Contact service.
	Red	**Engine coolant temperature high** Reduce engine load, or stop and allow the engine to cool.
	Red	**Engine air filter clogged** Clean or replace engine air filter.

Warning and information symbols, loader

Symbol	Colour	Remarks
	Red	**Safety alert symbol** When this symbol appears, there is a safety related situation that needs action from operator. This symbol may appear by itself or with other warning symbols.
	Red	**Hydraulic attachment locking: switch in open position** When this symbol is shown, the switch controlling the hydraulic attachment coupling is in position that unlocks the locking pins.
	Red	**High hydraulic oil temperature** This symbol is shown when the temperature of the hydraulic oil is above recommended maximum for continuous use. Reduce hydraulic load or drive speed to allow the hydraulic oil to cool.
	Amber	**Low fuel warning** This symbol reminds of low remaining fuel.
	Amber	**Water in fuel** A sensor in the water separator of the fuel filter has detected water in fuel. Drain water from water separator. See page 120
	Green	**Drive speed range: Fast** Fast drive speed mode is selected. See page 79
	Green	**Drive speed range: Slow** Low drive speed mode is selected. See page 79
	Red	**Parking brake engaged** This symbol reminds that the parking brake is on.
	Amber	**Cross-lock ON** Cross-lock switch is in position ON and the cross lock is active. For more information see page 81
4WD LOCK	Amber	**Anti-slip ON** Switch at the back of the joystick is pressed and the anti-slip valve is on.

Warning and information messages on display in English

Text on display in English:	***Explanation:***
ENGINE OIL PRESSURE LOW	Engine warns user from low oil pressure
AIR FILTER IS CLOGGED	Engine air filter is clogged and needs cleaning
VOLTAGE LOW	Battery voltage is below low battery limit
VOLTAGE HIGH	Battery voltage is higher than normal
COOLANT TEMPERATURE HIGH	Engine coolant is too hot and operator is notified
ENGINE POWER REDUCED TO 80%	Engine coolant is so hot that engine power is reduced to protect from damage
ENGINE POWER REDUCED TO 40%	Engine coolant is so hot that engine power is reduced significantly to protect from damage
CHECK ENGINE	Check engine alarm is active also light on display
WATER IN FUEL	Engine has noticed excessive amount of water in fuel, system should be checked
ENGINE SERVICE NEEDED IN	Operator is informed from upcoming service time
ENGINE MALFUNCTION	Engine has major problem and MIL light is active
Reset successful!	Reset of message or value has been done successfully (for example service hours)
Password incorrect!	User typed in wrong password
DPF: BEWARE OF HOT EXHAUST	Exhaust is hotter than normally due to DPF regeneration, this is normal during active regeneration
DPF: FORCED REGENERATION NEEDED	Engine is requesting operator to activate forced regeneration process
DPF: SERVICE NEEDED, STOP	Soot level in DPF is so high that DPF regeneration can be done only with service tool
NO MESSAGES	No messages active
CAN CONNECTION ERROR ENGINE ECU	CAN (control area network) connection is not working between display and Engine ECU (Electronic control unit)
CAN CONNECTION ERROR VEHICLE ECU	CAN (control area network) connection is not working between display and Vehicle ECU (Electronic control unit)
ENGAGE P-BRAKE TO START FORCED REGEN	During forced regeneration parking brake must be activated, operator is notified to engage parking brake when forced regeneration button is pressed
DPF: POWER INCREASE REQUESTED	During active regeneration (machine is used normally) some extra power is needed to have regeneration working. Power can be increased by adding load to hydraulic system (drive, boom or auxiliary hydraulics)
DPF: FORCED REGEN ON, DO NOT DISTURB	DPF is being regenerated and process should not be disturbed. Message goes away when process is finished
DPF: ENGINEPOWER REDUCED TO 50%	Soot level is over 100% of allowed, only half of the engine power will be available
Service information	Title for service info page
Total engine hours	Engine hours read from diesel engine
Service due	Time to next service
Next service engine hours	Engine hours when machine should be serviced next time
Service menu	Title for service menu
Parameter setting	Title for parameter settings menu
System information	Title for system information menu
Error information	Title for error information menu
System time	Parameter name for system time
Temperature unit	Parameter name for setting temperature unit (C/F)
Volume unit	Parameter name for setting volume unit (l/gal)

https://truckmanualshub.com/

Text on display in English:	*Explanation:*
Reset service information	Info text when service time is being reset
Insert passcode to reset service information	Info text when service time is being reset
Language	Parameter name for setting language
Screen brightness (Lights OFF)	Parameter name for adjusting screen brightness when drive/work lights are off
Screen brightness (Lights ON)	Parameter name for adjusting screen brightness when drive/work lights are on
Log saved succesfully, remove USB	Information to user that hydraulic oil temperature log is saved on USB stick and USB stick may be removed
Log reset successfully	Old log for exceeding times for hydraulic oil temperature limit is reset successfully
USB-Error	Problem in reading or writing USB stick. Check that USB stick is connected properly
Log empty - log file not written	Log is empty so nothing is saved to USB stick
System Date	Parameter name for system date
FASTEN SEATBELT TO ACTIVATE DRIVE	Machine settings are set to disable drive when seatbelt is not connected, drive functions will work after seat belt is fastened
RECONNECT SEATBELT TO ACTIVATE DRIVE	Machine is set to disable drive if seat switch and seatbelt switch are not activated in proper sequence. User is asked to unfasten and refasten seatbelt to activate drive functions
WRONG START SEQUENCE	Machine is not in correct state for engine to start. Operator is not seated, drive pedal is pressed or PTO mode is active.
RELEASE DRIVE PEDAL	Drive pedal was pressed before driving was allowed or during engine start. Release drive pedal and try again.
OPERATOR NOT SEATED	Seat switch is not active, this message may activate when engine is started or drive pedal is pressed while operator is not seated
DRIVE DISABLED / CHECK PTO SWITCH	Interlock switch that disables drive functions but allows to use auxiliary hydraulics is active while operator try to start the engine or use drive pedals. Operator is notified to disengage switch before machine can be started or driven.
RELEASE AUX. HYDRAULICS LEVER	Auxiliary hydraulics control lever is in wrong position (locked on). Starting the engine is not possible if this function is set active in system. (currently disabled)
HYDRAULIC OIL HOT, ENGINE RPM LIMITED	Hydraulic oil is hotter than set limit and engine speed is limited to reduce excessive heating of hydraulic oil
ENGINE RPM LIMIT CLEARED	Notification to the user that the RPM limit is not active anymore and user may set the RPM to the desired value again (throttle lever must be set to idle position first)
MOVE THROTTLE TO IDLE TO RESET RPM	Notification for the user to set the throttle to idle properly before attempting to adjust the RPM, after the RPM limit is cleared
DPF: NORMAL OPERATION CAN BE CONTINUED	This may appear during active DPF regeneration when machine is driven and exhaust gets hot. Message is to inform user that even though exhaust is hot the machine can still be operated normally. Same time there is another message warning from hot exhaust.
PARTICULATE FILTER IS BEING REGENERATED. DO NOT TOUCH CONTROLS. KEEP PARKING BRAKE ACTIVATED. REGENERATION PROCESS DURATION UP TO 90 MIN. BEWARE OF HOT EXHAUST DURING THE PROCESS. MAKE SURE EXHAUST IS NOT POINTED TO FLAMMABLE MATERIAL.	When forced regeneration process is activated by user display will show this information text to advice user about DPF regeneration process status.

Control of loader boom, auxiliary hydraulics, and other functions

Most of the functions of the loader are controlled with the controls at the right side of the operator: Boom and bucket movements, auxiliary hydraulics (attachments), engine rpm, and additional options or functions that may have been installed on the loader.

1. Control lever of boom and bucket

The loader boom and bucket are controlled with the multi-function lever (joystick) sideways (tilt) and back & forward (boom up & down). In addition, the boom floating is controlled with the joystick

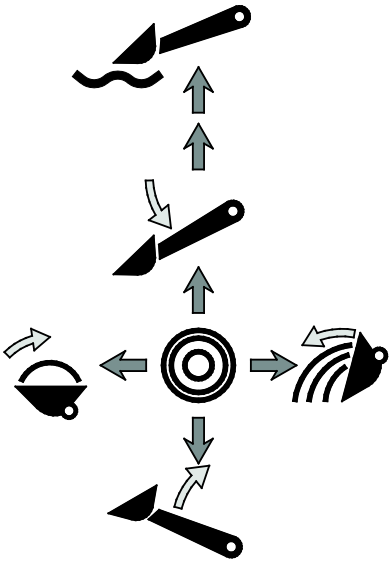

- Pull backward to lift the boom
- Push forward to lower the boom
  - Pushing the lever further front will activate the boom floating function. The lever will stay in this position until pulled back. For more information see page 61
- Push left to raise the tip of the bucket (filling)
- Push right to lower the tip of the bucket (emptying)

2. Control lever of auxiliary hydraulics (hydraulically operated attachments)

Hydraulically operated attachments are connected to the loader using the multi connector system, for more information see page 92.

- Operation directions depend on the attachment used.
  - When using an attachment for the first time, carefully move the lever to test and check the operating direction of the attachment.
- For continuous operation of rotating attachments, turn the lever to direction 1 set it to its locking position.
- If operating the buttons of the electric joystick, this lever will not move. Either the lever or the buttons can be used to control the attachment as needed.

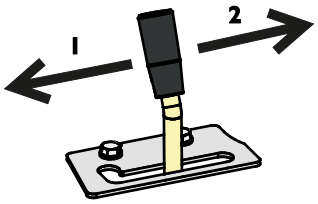

NOTICE

When you operate attachments that require continuous flow, such as attachments with hydraulic motors, it is important to have the control lever in fully engaged position. If the control valve is not fully open, restricting the flow of hydraulic oil, hydraulic system may overheat quickly.

If necessary, adjust the locking plate so that the lever is locked to fully open position.

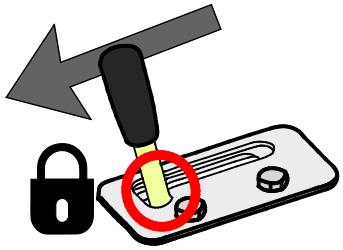

https://truckmanualshub.com/

3. Telescopic boom control lever

The telescopic boom makes many tasks easier, also those that do not involve lifting. You can, for example, push material further with a bucket, reach into difficult areas, and improve visibility to the work area with some attachments.

Turn the control lever of the telescopic boom to the right to extend the boom, and turn to the left to retract it.

Length of the telescope is 825 mm and additional lifting height is 700 mm.

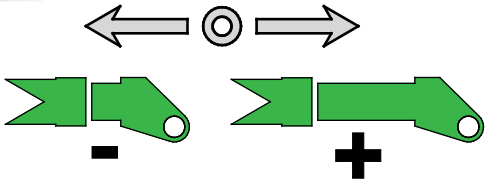

WARNING

Risk of tipping over - Extended boom can cause the loader to tip over. Use telescopic boom with caution. The stability of the loader depends on the distance of the load from the front of the loader. When you extend the boom, you increase the effect of the weight and reduce safe handling capacity. See pages 39 and 86 for further instructions about tipping load and safe material handling.

4. Joystick - 8 function

The 800 series loaders are equipped as standard with an 8-function joystick. You can use either manual control lever or the electric pushbuttons to control the auxiliary hydraulics and the telescopic boom.

1. Electric control of auxiliary hydraulics

If the loader is equipped with the optional 8 function joystick, the auxiliary hydraulics can be controlled with electric buttons on the joystick:

Push and hold either button to control the direction of auxiliary hydraulics flow.

- The operation of the buttons depends on the attachment, see the Operator's Manual of each attachment.
- Release buttons to stop.
- Make sure the manual control lever is not locked when operating electric joystick.

- When using the electric switches, the manual control lever will also move. Either way can be used to control the attachment as needed.
- Keep the hydraulic pump setting at 1-pump setting, unless higher hydraulic flow to the attachment is required. Lower flow of hydraulic oil will help to control the attachment more accurately.

CAUTION

Avoid abrupt movements of an attachment - Use electric buttons with caution. When you use certain attachments with the electric joystick buttons, the attachments can move abruptly. This can cause falling of material from the attachment, loss of stability, or damage to attachment. Use the manual control lever for work or attachments requiring smooth movements.

2. Electric control of telescopic boom

You can operate the telescopic boom with the rocker switch.

Speed of the telescoping function depends on the engine rpm and also the position of the pump selection lever.

Control switch at the back of joystick handle

If there is an additional switch on the backside of the joystick, the switch is the control switch for the anti-slip valve.

See page 81 for more information.

5. Hand throttle lever

The engine running speed is controlled with the hand throttle lever.

- Push forward to increase engine rpm
- Pull backward to reduce engine rpm

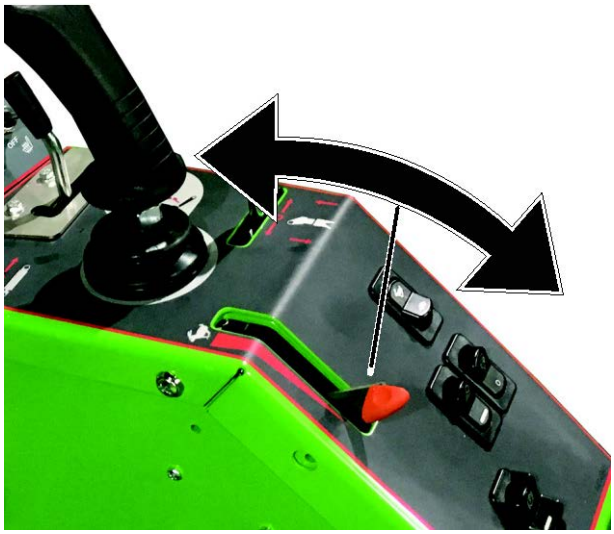

The engine rpm affects the driving speed and can be used to control driving speed in combination with the drive pedals.

Engine speed also influences the speed of a hydraulically driven attachment; the more throttle the faster the attachment operates. Make sure not to exceed max. allowed oil flow of the attachment. For more information see page 37.

Position of hand throttle lever

On Avant loaders equipped with the Kohler engine the throttle lever should be kept at its minimum setting when starting the engine. The lever must be set to idle during or after starting the engine, otherwise the engine rpm will not increase when moving the lever.

6. Parking brake switch

The parking brake is activated when loader is switched off or when hydraulic pressure is otherwise lost due to a failure. Parking brake can be released only when the loader is running and the charge pump of the drive pump creates enough pressure for the brakes to release.

Switch on the parking brake whenever leaving the driver's seat.

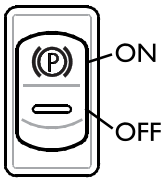

The loader is equipped with a brake system that locks the rear wheels. The parking brake is operated with the switch on the control panel right.

- A red indicator on the switch lights up when parking brake is engaged.
- The green backlight under the “P” is lit whenever the ignition of the loader is in position "ON".

CAUTION

Risk of sudden stop - Do not engage the parking brake when the loader is moving unless in emergency. Using the parking brake while machine is moving may cause locking of wheels and sudden stop.

NOTICE

If the parking brake is engaged repeatedly when the machine is moving the brake plates in the drive motors will get worn quickly. Always stop the loader before engaging the brake.

https://truckmanualshub.com/

7. Opticontrol® (option)

Opticontrol® is an option that makes it easy to use attachments that have multiple controlled functions. Opticontrol® replaces the previously available Attachment control switch pack option for Avant loaders.

If your loader is equipped with the Opticontrol®, the electric functions or additional hydraulic functions of an attachment can be controlled with the extra buttons fitted on the joystick.

When the Opticontrol® is installed to the loader, there are the following additional features on the loader:

1. Additional control buttons on the joystick. Check the operator's manual of each attachment to see how to control the attachment.

2. An electric socket in the Multi connector connects the electric harness of the attachment at the same time as the hydraulic hoses of the loader.

NOTICE

Check the operator's manual of the attachment to see how to control each attachment. Function of the Opticontrol® and the Attachment control switch pack depend on the attachment.

Operating modes of Opticontrol®

Check the operator's manual of the attachment to see how to control each attachment.

There are two operating modes of the Opticontrol®. Choose the mode depending on the attachment.

Keep the switch in OFF position, unless using an attachment that is intended to be used with the combined control mode.

Switch ON (combined control mode)

The combined mode of hydraulic and electric control enables more simple and flexible operation of certain attachments. In this mode Opticontrol combines the auxiliary hydraulic control of the loader and electric control of the attachment. Auxiliary hydraulic outlet is switched on automatically only when a control button is activated, making control of attachments with multiple functions easier and more efficient. With Opticontrol®, only one auxiliary hydraulics outlet is needed on the loader, when using an attachment that is compatible with the Opticontrol system.

The attachment must be compatible with this operating mode. In this mode the auxiliary hydraulics control lever must be left to its middle position.

Switch OFF (normal mode)

Use only the electric controls of attachment. Auxiliary hydraulics control lever can be left to its locking position.

Keep the Opticontrol® switch OFF whenever there is no compatible attachment coupled to the loader.

NOTICE

Opticontrol® system in the integrated hydraulic control mode will benefit only specific attachments that are intended to be used with it. The attachment must be originally fitted with its own control valve that is designed to be used with the Opticontrol® option. Some types of attachments may need an extra hydraulics outlet on the loader.

PTO switch

The PTO switch on the dashboard is intended for applications where the loader must remain stationary during the use of a stationary attachment. The PTO switch will disable the drive pedals of the loader. Always also engage the parking brake when using stationary attachments.

Control lever of extra hydraulics outlet (option)

In addition to the standard auxiliary hydraulics outlet, as an option, the loader can be equipped with a double acting extra outlet.

This lever will control the extra auxiliary hydraulics outlet, or the rear lift device, if fitted. The extra hydraulic outlet can be fitted either to the front of the loader or to the rear. The control valve of the loader includes a block for the extra auxiliary hydraulics, even though the extra outlet is not fitted.

- Operates in similar way as the lever no 2.
- See page 65 for further information about the extra auxiliary hydraulics coupling.

Attachment control switch pack for rear mounted attachments (option)

The functions of the attachment control switch pack are also available for rear mounted attachments. The control switch pack for rear mounted attachments is a separate option that is intended only when using rear mounted attachments together with the hydraulic rear lift device.

For example, when using rear mounted sand spreaders with the rear lift device the attachment control switch pack is necessary. The socket for the rear mounted attachment is located near the rear hydraulic quick couplers.

The switch pack is equipped with a strong magnet. This makes it possible to fasten the switch pack to a suitable location near the driver's seat.

Electric 12 V outlet

A 12 V electric power socket is located near the driver's seat. When operating attachments with electric features, but the loader is not equipped with the attachment control switch pack, the electric harness of the attachment can be connected to this socket. This standard type outlet is powered when ignition is switched on. Socket is powered when the ignition switch of the loader is in position ON. Maximum current: 15 A.

Electric socket on the multiconnector

There is an electric socket for the attachment on the multiconnector if the loader is equipped with the optional attachment control switch pack.

In this case the electric plug of the attachment will be connected simultaneously with its hydraulic hoses. In case there is no electric plug on the multiconnector of the attachment, use the separate electric adapter to connect to the regular 12 V outlet of the loader. You can also contact your Avant dealer to fit an electric plug to the attachment multiconnector.

https://truckmanualshub.com/

Engine compartment and storage spaces on the loader

Access to engine compartment

Before accessing the engine compartment, shut down the loader and allow the loader to cool.

To open the engine cover, open the quick locks on the engine cover and lift it aside.

There is no storage space in the engine compartment.

WARNING

Risk of fire and burns - Never store flammable liquids or materials in the engine compartment. Heat from the engine can warm up surfaces in the engine compartment, keep clear of engine and especially its exhaust system. Some objects, such as soft coated gloves, may get damaged due to heat in the engine bay. Always check objects that are placed in storage to avoid burns when removing them.

Storage near driver's seat (ROPS and CAB L)

A storage space is located at the left side of the steering wheel. Note that this storage space is not designed to be watertight. This storage space can also be used to store a fire extinguisher.

Storage at front

On Avant 800 series loaders there is a storage space at the front, next the boom.

To remove the front panel and to access the storage space, it may be necessary to lift the boom just slightly.

The boom service support is located in this storage. Always use the service support before going under a lifted boom. For more information see page .

Boom self-levelling

Self-levelling is a system that keeps the attachment tilted in same position when lifting or lowering the boom.

Self-levelling is an automatic hydraulic system. There is a levelling cylinder on the left side of the boom which follows the movements of the loader boom and keeps the attachment level.

NOTE: Self-levelling is disabled when the boom floating is switched on.

NOTICE

When the attachment tilt is turned to either extreme position, the boom lift cylinder will have to work against the pressure of the self levelling cylinder.
To prevent extreme stresses to the loader boom, operate the bucket tilt control to move out from extreme tilt before lifting or lowering the boom.

NOTICE

Self levelling is disabled when the boom floating is switched on. Boom can't be pushed down with hydraulic force, when floating is on. Use boom floating only when necessary.

Boom floating

800 series loaders are equipped with boom floating as standard. Boom floating is integrated to the joystick control lever of boom and bucket.

Boom floating is a system that allows an attachment to follow the surface of the ground. The floating system releases the lift cylinder and allows it to float up and down as the attachment is on the ground.

To activate the boom floating:

1. Lower the attachment on the ground to the operating position described in the operator's manual of the attachment.
2. Push the boom control lever towards front (lowering of the boom). Push the lever further towards front so that it locks to its front position.

NOTICE

Activating the boom floating also deactivates the Smooth drive system. The Smooth drive should be switched off whenever not actively using it.

NOTICE

Some attachments have a floating linkage built in the attachment coupling, making use of the floating on the loader unnecessary. Refer to the operator’s manual of the attachment for more information.

After using the boom floating

During boom floating, some air may become trapped into the lift and tilt cylinders. To avoid unexpected or inaccurate movements of the boom, the air in cylinders must be removed by moving the boom to extreme lift positions after switching off the floating system.

https://truckmanualshub.com/

WARNING

Risk of unexpected movements - Move the loader boom after you have switched off the boom floating to remove air from cylinders. During the use of boom floating air can get trapped in the hydraulic system. This can cause inaccurate movements of loader boom and the boom can even move down.

Therefore the boom and attachment coupling plate should always be moved to extreme end positions after switching off boom floating.

Smooth drive (option)

Avant 860i can be equipped, as an option, with the smooth drive which is a shock absorber system for the boom.

Smooth drive is switched on with a separate switch on the dashboard.

When driving at high speed, or with a heavy load or heavy attachment, the front of the loader may start to swing, making driving unpleasant.

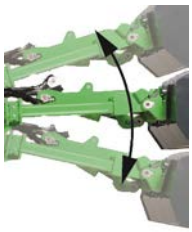

The smooth drive system includes a pressure accumulator, which absorbs and dampens boom movements. It makes driving considerably smoother and more stable.

WARNING

Risk of lowering of the boom when switching on boom suspension - Lower boom before switching on boom suspension.

Switch the smooth drive on only when stationary and when the load is close to the ground to avoid change in stability caused by possible movement of the boom when switching on. Keep the smooth drive off when loading or lifting with the loader.

WARNING

Risk of release of pressurised hydraulic oil - Deactivate pressure accumulator before servicing a loader that is equipped with Smooth drive system. Careless service of hydraulics of a loader that is equipped with a Smooth drive system can cause uncontrolled discharge of hot hydraulic oil because of a pressure accumulator fitted to the hydraulic circuit. See page 103 for more information before service.

NOTICE

Switch off the Smooth drive system when doing loading work or when handling heavy loads. Smooth drive is intended to be used only when driving with the loader.

Counterweights

The standard counterweight on Avant 800 series loaders is a 275 kg cast block mounted on the rear of the loader. In all technical information concerning the mass and lift capacity of the loader this counterweight is installed on the loader.

If necessary to remove it, i.e. for installation of a rear lift device, see the picture below for mounting points. Special lifting equipment is necessary when adding or removing this counterweight.

Check tightness of all four bolts shown in the illustration below following the maintenance schedule.

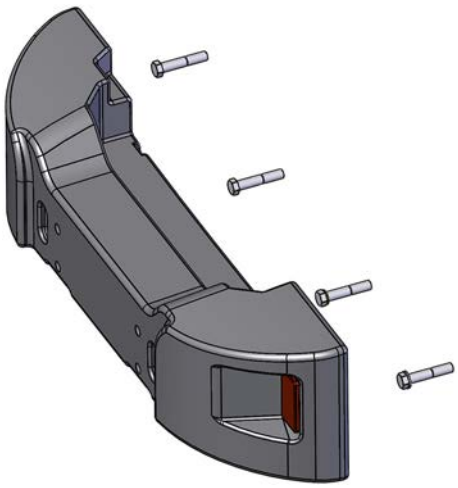

WARNING

Risk of crushing and impact - Heavy counterweights increase risk of tipping over and loss of control if driving without attachments. Added counterweights can shift the balance of the loader further back, even causing the front wheels to lose contact from the ground. When additional counterweights are fitted, an attachment should be coupled to the loader.

https://truckmanualshub.com/

Additional counterweights

Additional counterweights can be installed to increase the stability of loader when handling heavy loads or attachments.

1. 29 kg individual weights A35957

   Max **3** pcs.

   If you install a trailer coupling, only one extra weight can be used.

2. 80 kg side weight kit A36401

   One 40 kg weight to both sides of the loader.

3. 180 kg side weight kit A49063

   One 90 kg weight installed to both sides of the loader.

The side weight kits will not increase the total width of the loader. See page 64 for installation instructions of side weights.

NOTICE

After adding or removing counterweights the load sensor must be calibrated. You can add or remove only one 29 kg counterweight without calibrating. See page 124 for more information.

WARNING

Risk of loss of control of loader - Too much counterweight can make the front of the loader too light. If you install too much counterweights to the loader, the front wheels of the loader will be easily lifted from the ground. This will make steering of the loader difficult. If counterweights are fitted to handle a certain attachment, remove counterweights if driving without an attachment.

CAUTION

Risk of sudden loss of stability - Always install any counterweight firmly. Counterweight can fall from the loader on uneven ground or after hitting a wall or other structure. Tighten all fastening screws. After installing the 180 kg side weight kit, remove their lifting slings from the weights to prevent their use as tie down points.

Adding or removing counterweights

When installing or removing counterweights appropriate lifting equipment must be used.

To install or remove side counterweights (180 kg kit, A49063):

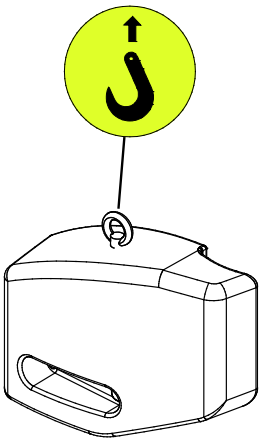

1. Install a lifting eyelet on the threaded hole on top of the counterweight. See picture below.

2. Attach a hook that is equipped with a safety latch to the eyelet.

3. The left and right counterweight are different. Check that the bolt holes of the counterweight are more towards the front of the loader.

a) When installing counterweights, place bolts with washers through the holes of the counterweight. Lift and align the counterweight with the holes on the rear frame of the loader. Tighten the bolts firmly.

b) When removing the counterweights, make sure to attach the hook onto it before loosening of bolts to avoid dropping of the counterweight.

DANGER

Risk of moving or falling of the loader - Never lift or tie down loader from side counterweights. Eyelets on extra side counterweights are for installing or removing the side counterweight only. Never attempt to lift the loader from the counterweights or use them as tie-down points. **Always remove the eyelets from the counterweights immediately after installation work.**

Trailer coupling (option)

The loader can be equipped with a trailer coupling for towing of trailers. There are two types available:

1. 50 mm ball hitch A417323

2. 50 mm ball hitch with towing pin A417337

Trailer coupling can be mounted either directly on the rear bumper or on the extra back weight.

- Max. allowed vertical load 500 kg
- Maximum towing load is 1000 kg

Make sure that the weight on the trailer is distributed correctly so that the trailer cannot cause an upward lifting force on the trailer coupling. It is recommended that you keep an attachment fitted at the front of the loader to add weight to the front of the loader.

Extra auxiliary hydraulics outlets, front and rear

In addition to the standard auxiliary hydraulics outlet, the loader can be equipped with a double acting extra outlet. This extra hydraulic outlet can be fitted either to the front of the loader or to the rear. The couplers are conventional type quick couplers.

If installed to the front, the extra quick couplers are located under the multi-connector.

If fitted to the rear, the quick couplers are located at the left side of the rear grille.

https://truckmanualshub.com/

For instructions about use and how to connect or disconnect the extra hydraulic couplings, see page 59.

- The extra outlet is controlled with its own, 2 direction control lever on the right from the driver's seat.
- Release the lever to neutral position to stop the attachment.
- Test the operation of the attachment after each time it is coupled to the loader. The quick couplings can be coupled in a way that reverses the function of the control lever.
- Both the front and rear hydraulics can be operated simultaneously.
- Keep the couplings clean and use their protective covers.

Rear lift device

A rear lift device makes it possible to mount and use some attachments at the back of the loader. The rear lift device is designed to be used when another attachment is mounted on the loader boom to maintain the balance of the loader. For example, a sand spreader may be mounted to the rear lift device when a snow plow or a snow blower is mounted to the loader boom.

WARNING

Risk of loss of control - Heavy attachment at the rear lift device may cause the loader to tip rearwards. Keep an attachment mounted on the boom to balance the weight at the rear lift device. Remove attachment from the rear lift device before uncoupling the attachment from the loader boom. Follow the manual of the rear lift device, and the operator's manuals of attachments.

The rear lift device includes hydraulic quick couplings for rear mounted attachment. Also, if the attachment control switch pack for rear mounted attachments is installed, a socket for it is included.

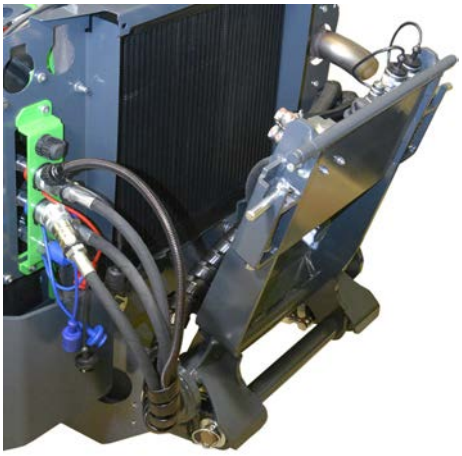

Counterweight mounting plate for rear lift device

When using the rear lift device, the counterweight can be installed to the mounting plate. With the mounting plate it is easy to attach the counterweight to the rear lift device. Mounting plate also makes the removal of the counterweight easy.

Reverse buzzer (option)

A reverse buzzer gives an audible signal whenever reversing with the loader. This alarms others of an approaching machine. Always ensure good visibility from the driver's seat and look before you reverse with the loader - the buzzer itself does not prevent accidents.

Seat - Seat belt and seat adjustments

WARNING

Risk of falling from the loader and getting run over by loader - Never carry passengers. The seating capacity of the loader is strictly one person only. Never carry passengers on any part of the loader or with any attachment.

Always use seat belt while driving. Clean the seat belt regularly with a sponge, warm water, and soap. Use compressed air to clean the buckle.

Replace the seat belt if any damage is seen, or if the seat belt is exposed to high load or chemicals.

Seat adjustments

Make sure that the seat is properly adjusted for easy reach to the operating controls and to keep vibrations transmitted by the seat at minimum. Long term exposure to vibrations may cause health effects. Also, as far as possible, keep the operating terrain in good condition to minimise vibrations.

Seat heater

The suspension seat is equipped with an electric seat heater. Seat heater switch is located by the steering column and indicator light is on the dashboard.

NOTICE

If the loader is equipped with the air suspension seat, the seat heater switch on the dashboard is removed and its corresponding indicator light on the dashboard is disabled.

The seat heater of the air suspension seat is controlled with an additional switch on the backrest of the seat.

Suspension seat

The suspension seat has the following adjustments:

1. Seat position
   - The distance of the seat from the steering wheel can be adjusted with the lever which is located under the front edge of the seat.
2. Suspension adjustment
   - By turning the knob counter clockwise suspension gets harder, by turning it clockwise the suspension gets softer.
3. Angle of the back rest
   - The angle of the back rest can be adjusted by turning the lever.
4. Arm rest angle adjustment
   - The angle of the arm rest can be adjusted by turning the roller under the arm rest.

CAUTION

Risk of injury - Make sure that the adjustments of the seat are locked in place before using the loader. Unlocked adjustment of the seat can cause the seat to move, or even slide off from its rails, causing risk of loss of control and injury.

https://truckmanualshub.com/

Air suspension seat (optional extra for cab GT)

An air suspension seat is available as an option for the cab GT.

A seat backrest extension is available for the air suspension seat. The extension A437711 can be retrofitted.

Air suspension seat with seat back extension:

Seat heater of air suspension seat

Also the air suspension seat is equipped with heater as standard.

The switch for the heater is located on the left side of the backrest of the seat.

To adjust the air suspension seat:

1. Seat position
   - The distance of the seat from the steering wheel can be adjusted with the lever which is located under the front edge of the seat.
   - Always make sure that the adjustment is locked after adjusting the seat.
2. Suspension adjustment or Air suspension seat
   1. Sit on the seat and switch the ignition switch to “ON”.
   2. Check the indicator on front of the seat.
   3. Pull the handle up or push it down, so that the indicator points the marker in the middle.
3. Angle of the backrest
   - The angle of the back rest can be adjusted by lifting the lever on the left side of seat.
4. Arm rest angle adjustment
   - The angle of the arm rest can be adjusted by turning the roller under the arm rest.
5. On the left side of the backrest there is an adjustment knob for the lumbar support adjustment.

Lights

Work lights

The loader is equipped with standard work lights at the front of the loader, which are controlled with a switch near the ignition switch.

Extra work light kit (option)

The loader can be equipped with extra work lights, making it easier to work in low light. The Extra work light kit includes two extra lights on the front and one at the rear. The lights are operated with the switch on the control panel.

Avant work lights are LED modules. There are different brightness options, check your Avant dealer.

CAUTION

Risk of burns - Never touch the lamp units. The front surface and the housing of the LED lamps can get extremely hot during use. Never touch or adjust the lights during or immediately after their use.

CAUTION

Risk of dazzling - Check that lights are directed correctly. Bright and powerful work lights may dazzle yourself or other persons nearby. Direct the lights so that they do not disrupt the visibility from the cab.

Headlight, beacon, blinker & reflector kit (option)

This optional kit makes it possible to register the loader for road traffic use in certain countries.

Requirements vary in different countries, please consult your local AVANT dealer.

Always use lights and reflectors which comply with local regulations.

NOTICE

The road traffic light kit itself does not guarantee that the loader can be used on road traffic area. Check your local regulations concerning the use of the loader on road areas, need for registration, and need for insurance.

Light control switch (road traffic light kit)

Loaders that are fitted with the road traffic light kit have a multi-function control switch fitted to the steering column.

The switch has the following controls:

- Headlights
- High beam lights
- Signal horn (duplicate switch, both the switch on near the ignition key and switch on multi-function control are connected)
- Turn signals

https://truckmanualshub.com/

Warning beacon (option)

A warning beacon is available as an option. The warning beacon warns others about the moving loader. The control switch for the beacon is located in the control panel, see page 49.

If necessary, for example when driving through low doorways, the beacon can be removed quickly by loosening its retaining screw and then by pulling the beacon out. Place the protective seal on the beacon stand to prevent water entering and damaging the connectors.

Handle the beacon with care. The beacon is sealed and its inner components cannot be replaced or repaired by user.

NOTICE Beacon includes high-voltage components. Do not use or repair damaged beacon, replace with new one.

Warning lights on CAB GT

On Avant 800 loaders with Cab GT flashing warning lights are integrated to the cab. There are two lights at the front and two at the back.

Cabs (optional extra)

The Avant 860i can be equipped with an enclosed operator's cabin. The Cab GT can only be ordered to new loaders, it can't be retrofitted. The ROPS canopy and all cab versions are ROPS and FOPS certified.

Cab GT

Standard and optional equipment on different cab models

	ROPS canopy	***Cab GT***
ROPS & FOPS Certified	●	●
Mounts on standard ROPS frame	●	-
Windscreen, wiper and washer, right side window and rear window	-	●
Door and heater	-	●
Air Conditioning (A/C)	-	■
Front/rear mudguards	-/●	●/●
Front lights	●	●
Road traffic light kit	■	■
Work light kit	■	■
Warning beacon	■	■
Integrated flashing warning lights	-	■
Panel interior, fabric seat	-	●
Radio and speakers	-	■
Air suspension seat	-	■
Seat heater	●	●
Seat belt	2-point	3-point

- ● Standard equipment
- ■ Available as an option
- - Not available

https://truckmanualshub.com/

Cab Safety

Make sure visibility from the cab is adequate. Keep all window panels clean and clear of snow, ice, etc.

Familiarise yourself with the special drive features and space needs of this articulated loader, equipped with cab, on a flat, even and open place.

Remember that, when turning, the cab extends beyond the turning radius of the wheels. This should be taken into consideration especially when driving in confined spaces, in order that the rear of the cab will not get damaged.

Place objects, clothing, and other items in the cab so that they will not hamper with visibility from the loader, and that they do not interfere with the controls of the loader.

In case the normal opening on the left side of the loader is blocked, the windscreen can be used as an emergency exit.

If necessary, the windscreen can be broken with the emergency hammer located in the cab.

Always make sure that the following equipment are functional and present in the cab:

- Emergency window hammer
- Removable safety pin on the right side window
- Windscreen wiper and washer
- Functional heater and its blower for de-misting the windscreen
- Side mirrors
- Cab air filter must be in place

CAUTION

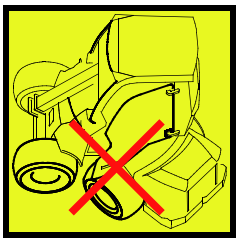

Risk of breaking glass - Do not drive with an open cabin door. The door may break upon contact with wheels. Also, turn the articulated frame to straight position before opening the door.

Windscreen washer and wiper

The windscreen washer is operated with multi-function control switch fitted to the right side of steering column.

The switch has the following controls:

1. Spray washer fluid
2. Intermittent operation
3. Continuous operation, slow
4. Continuous operation, fast

Windscreen washer tank and filler cap are located in the front storage compartment.

If ambient temperatures may drop below freezing point, add freeze resistant washer fluid beforehand and use the washer until it runs though the spray nozzle. Freezing water can damage the pump, tank, hoses and their connectors, and the nozzle.

Ventilation and heating

The cab GT is equipped with heater as standard. In addition, it can be equipped also with air conditioning.

The controls for ventilation, heating, and air conditioning are located on the left side of the driver's seat:

1. Fan speed switch, 4 speed settings
2. Air flow temperature can be adjusted with the rotary knob
3. Air conditioning, ON/OFF

4. Air recirculation system

Air recirculation

For faster warm up of the loader, the cab is equipped with an air recirculation system. When the hatch is opened the heating system pulls air from the cab and circulates it back into the cab through the nozzles. This way the cab warms up quicker in cold weather. The system can also be used for cooling.

NOTICE

If used for heating, switch off the air circulation as soon as the temperature in the cab is sufficient, otherwise the cab keeps warming up and moisture starts to condense on the windows.

WARNING

Risk of serious illness from prolonged exposure to crystalline silica - Do not operate the loader without a cab air filter cartridge in place. To reduce exposure from silica dust always keep the cab air filter in good condition. Keep the cab door and windows closed when operating at area where dust is present. Use a breathing mask when at risk of being exposed to silica or other types of dust. Using the ventilation system without the filter in place increases the level of dust inside the cab.

Defrosting/De-misting:

- Turn heater fan to position 4 (high speed)
- Set temperature to warmest possible
- Switch on A/C (if fitted). The air conditioning will dry air
- Direct front vents towards the windows. Close other vents
- Keep air recirculation hatch closed. Using the air recirculation will increase moisture in the cabin

CAUTION

Risk of collision - Never drive the loader when the visibility is poor. Do not drive unless basic visibility in all directions is achieved. Allow the loader to warm up properly.

Air conditioning (Option for cab GT)

Cab GT can be equipped, as an option, with air conditioning (cooling). The switch for A/C is located on the left side of the driver's seat.

When the A/C system is installed, its condenser is located rear of the cab. The condenser must be kept clean and clear of debris. The installation location of the condenser can't be changed.

During winter, switch on the air conditioning for a few minutes weekly in order to lubricate A/C circuit and to maintain the compressor in good condition.

NOTICE

The A/C will work only while the fan is switched on.

https://truckmanualshub.com/

Operating instructions

DANGER

Always remember – safety first. Test all the functions of the loader at an open and safe place. Make sure that there are no persons in the operating area of the machine and the danger zone of the attachment.

DANGER

Careless operation can injure you or bystanders - Keep the loader under control at all times. Operating a powerful loader and its attachments requires the full attention of the operator. Do not perform distractive actions while operating, such as using mobile devices.

WARNING

Risk of collision - Pay attention to other machines and persons that are moving in the area. Make sure that there are no persons in the danger zone of the loader and the attachment. The danger zone of the loader covers the reach area of the loader boom, the turning area on the side and in the front and rear of the loader. Always lower down the load or the attachment before leaving the driver's seat – the loader is not designed to stay with the loader boom and load lifted. Learn and practice how to operate the loader at a safe area.

Starting the loader

Before start

Before starting the engine do the daily checks, see page 106.

Adjust the seat and mirrors (if fitted) so that you have a good working position and unrestricted field of vision from the driver's seat. Check that all controls function correctly. Make sure that the operating area is safe.

Check that the attachment is locked and connected correctly, if an attachment is fitted.

Always make sure you have all operator's manuals available. Read and follow all operating and safety instructions.

Check the operating area is safe. If necessary:

- Remove or mark obstacles at the operating area.
- Some tasks may require a safety distance to other persons. Plan work ahead to ensure a safe distance to people and to detect and to avoid potential fragile surfaces at the work area. See the operator's manual of each attachment for more information.
- If working at an area where there is other traffic, ensure that proper workplace safety procedures are in place. Use the warning beacon of the loader, consider using a reverse buzzer, and switch on lights of the loader. Everyone should wear high visibility clothing.
- Exhaust emissions can kill within minutes. Do not operate the loader in enclosed spaces or insufficiently ventilated spaces, i.e. open garage door first before starting the loader.

WARNING

Collision hazard - Prevent unintended movements of the loader. Keep hands and feet away from other controls of the loader while starting.

WARNING

Risk of suffocation - Do not start the loader in enclosed space - Exhaust emissions can kill within minutes. Exhaust emissions are toxic in concentrated amounts. Do not operate the loader in enclosed spaces or insufficiently ventilated spaces, i.e. open garage door first.

WARNING

Risk of fire, explosion, and severe engine damage - Do not use starting aid fluids. Use of starting aid fluids, such as ether, can cause fire, explosive noise, and severe engine damage. Do not use starting aids. Only additives that comply with fuel standards listed on page 35 can be mixed in fuel. Never mix diesel with gasoline or other fuels.

WARNING

Risk of injury and uncontrolled motion - Never bypass the normal controls of the starter. Always use only the ignition key to start the loader. Bypass of the ignition key can cause sparks, burns, fire, damage to the engine, and contact with moving parts of the engine.

https://truckmanualshub.com/

Ignition key

The ignition key can be switched into the following positions:

1. • **(OFF)** Shut down the loader engine
   - Ignition key can be removed

   Most electric systems of the loader are switched off. However, some lights may not be connected through the ignition switch. To switch all systems off, turn off the battery main switch whenever leaving the loader unattended.

2. **ON** Engine run
   - The electric systems of the loader can be used.

3. Engine pre-heat
   - See starting procedure for more information.
   - When released from this position, the key switch will return to ON.

4. Starter run
   - Start the engine
   - When released from this position, the switch will return to ON.

To start the engine

1. Perform daily checks (see page 106)
2. Turn the battery disconnect switch to ON.

3. Sit on the driver's seat, adjust seat, and fasten seat belt.

   The loader will not start unless driver is seated.
4. Leave hand throttle lever to minimum position. See page 57.

5. Make sure that auxiliary hydraulics is switched off (lever is released to its neutral position), see page 55

   Do not press on the drive pedals.
6. Turn the ignition key to the right, to ON position.

   The multi-function display will switch on. Signal lamps on the dashboard will light up briefly for self-check. You don't need to wait until the display has switched fully on.
7. Turn the ignition key further to the right until the engine starts. Return the key to position ON immediately when the engine runs.

   The ECU will control the intake air heater automatically depending on ambient temperature.

   The display may reset and start again during the start.

NOTICE

Do not actuate the starter for more than 10 seconds at a time. If the engine does not start, wait for one minute before repeating attempt. If the engine does not start after a few attempts, or runs poorly, see troubleshoot on page 138 and the engine owner's manual.

WARNING

Risk of injury to bystanders - Avoid unintended movements of the attachment:

- If the auxiliary hydraulics is switched on during starting and there is a hydraulically operated attachment on the machine, the attachment can move suddenly and cause a dangerous situation.
- Make sure that the auxiliary hydraulics control lever is in neutral position during starting.
- Do not actuate the auxiliary hydraulics control buttons on the joystick (if fitted) when starting.

NOTICE

Make sure that all the warning lights on the control panel are off when the engine is running. If the engine does not start after a few attempts, or runs poorly, See troubleshoot 138.

After starting:

NOTICE

Allow the engine to warm up and engine oil to circulate in the engine for a moment before loading the engine or increasing the engine rpm.

Position of hand throttle lever

On Avant loaders equipped with the Kohler engine the throttle lever should be kept at its minimum setting when starting the engine. The lever must be set to idle during or after starting the engine, otherwise the engine rpm will not increase when moving the lever.

Stopping the engine (Safe stopping procedure)

1. Lower the boom completely down. Place attachment firmly on the ground, engage parking brake, stop the attachment (move auxiliary hydraulics control lever to neutral position, see page 55), set engine rpm to idle.

   NOTE: Allow the loader to idle for a moment before stopping the engine, especially after heavy load on the engine.

2. Stop the engine by turning the ignition key to the OFF position (to the left)
3. Release auxiliary hydraulics pressure (see page 93)
4. Prevent unauthorised use of the loader. Take off the ignition switch and turn the power off with the battery disconnect switch.

NOTICE

Avant 860i:
To avoid engine wear end damage, allow engine to idle before you turn the engine off.
The turbocharger spins at high speed and runs at extreme temperatures during the use of the loader. To allow the turbocharger to cool down, allow the engine to idle for a minute or more after using the loader. Allow longer time if engine has been under heavy load. Idle speed allows engine oil to circulate and to cool the turbocharger.
Avant 850 is less susceptible to damage as it does not have a turbocharger, but it is recommended to allow it to idle and cool after heavy load.

https://truckmanualshub.com/

NOTICE

Avoid unnecessary idling of the engine. Idling the loader causes internal wear of the engine, emissions, and clogging of the exhaust and emission control systems. The diesel engines are not intended to be left running at idle speed over long periods of time. Shut down the engine whenever leaving the driver's seat.

Stop if you notice any of the following:

NOTICE

Stop the engine as soon as possible, if any of the following symptoms is observed. Find out the cause before restarting.

- The oil pressure warning light, or malfunction indication light turns on during operation.
- Engine rpm increases and/or decreases suddenly by itself, without touching the throttle lever.
- A sudden and unusual noise is heard.
- Sudden increase in engine vibration.
- The colour of the exhaust fumes suddenly darkens or turns white.

Drive control

Principle of operation

AVANT 860i loader is equipped with a hydrostatic drive system. This is based on a variable displacement hydraulic pump in the drive circuit that is proportionally controlled with the two drive pedals. Driving of the machine is controlled with the drive pedals and hand throttle.

- Suitable engine speed is selected with the hand throttle lever on the control panel, and desired driving direction and speed are controlled with the drive pedals.
- To get maximum pushing power push the pedals lightly – for higher travel speed push the pedal harder.

WARNING

Risk of collision or tip over - Use low speed when you practise the use of the loader. Familiarise yourself with the driving of the machine on low speed and on a flat, even and open place. Make sure that there are no persons in the operating area of the machine to avoid injuries that could result from unintended movements. When you have learned how to drive with slow speed operating mode, increase speed gradually and learn how to drive and steer the loader with higher drive speeds.

Drive pedals

Using the drive pedals:

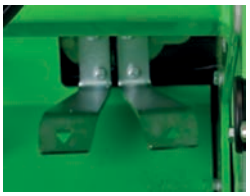

- Driving forward: press gently on the right drive pedal until the machine starts to move slowly.
- To drive backward: press gently on the left drive pedal.
- When you wish to stop: gently release the pedal by lifting your foot, and the loader will slow down and stop.

If you need stop more quickly, press the drive pedal of the opposite drive direction. Release both pedals as soon as the loader has stopped, otherwise the loader will immediately start to move to the direction of the drive pedal that is pressed.

The hand throttle lever can be used to control engine speed also while driving. The basic rule is to use lower engine rpm for lighter work and higher rpm for hard work or for high travel speed.

The pedals will not work if the PTO mode for stationary attachments is switched on.

WARNING

Risk of tipping over - Avoid high speed turns. The loader can tip over, if you turn the steering wheel sharply while driving. Slow down before making sharp turns. Always control and steer the loader with smooth movements.

https://truckmanualshub.com/

Drive speed range selection switch

Avant 860i is equipped with two-speed hydraulic drive motors. Drive speed range can be selected with the switch on the control panel right (see page 48).

Higher speed range is intended for traveling over longer distances.

Speed range switch		
Speed range with standard tyres	0-15 km/h	0-30 km/h
Pulling force, forward	100 %	50 %
Pulling force, reverse	100 %	50 %

Higher speed range is intended for longer travels where high pulling force is not necessary.

CAUTION

Risk of abrupt movement - Do not change the drive speed range while driving with a higher speed. Always stop the machine first or slow down the speed before switching on higher or lower speed.

CAUTION

Risk of loss of control - Be careful when driving at higher speed range. Abrupt control movements can cause the loader to roll over. Do not turn the steering wheel quickly when you drive at high travel speed. Drive slowly whenever carrying loads, driving on inclined or rough terrain, or on slippery surfaces. Always reduce speed before sharp turns.

OptiDrive®

The 860i loaders are equipped with the efficient Avant OptiDrive® hydraulic drive system as standard.

The system is designed for optimal hydraulic oil flow, which helps to conserve energy by minimising losses. This is achieved with the use of integrated high efficiency Avant valve blocks and EO3 type hose fittings.

When you want to have a high pulling force:

1. Choose low speed range
2. Use high engine rpm
3. Press the drive pedal only lightly to select slow drive speed. This way the full output of the hydraulic system and the engine can be used for high pulling force.

If the engine is overloaded while pushing, the pedal shouldn't be pressed further. Instead, use higher engine revs and push the pedal only a little.

X-lock (Cross lock) and anti slip

X-lock (Cross lock)

The hydraulic drive circuit has a system that allows the wheels on the left and right side of the loader to roll at different speeds. This will help to leave less tyre marks on soft surfaces, and reduces tyre wear on hard surfaces. The cross lock system limits the flow of hydraulic oil between the hydraulic motors on each side, functioning in similar way as a limited parallel differential lock, increasing pushing force of the loader.

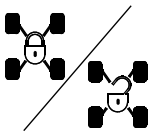

The X-lock system can be switched on from the switch in the dashboard.

The position of the X-lock switch does not affect the function Anti slip valve (optional equipment) on 860i model.

X-lock OFF: In this mode, the hydraulic oil can flow from the hydraulic motors one side of the loader to another. The wheels will roll more freely and the loader leaves less tyre marks on soft surfaces.

X-lock ON: In this mode the hydraulic oil flow from side to side is restricted. The effect is similar to a limited differential lock in operation. This improves the pushing capability of the loader. With the X-lock is switched on, the hydraulic motors on one side of the loader may receive larger portion of the total hydraulic flow, leading to spinning of the wheels on one side of the loader.

In general, the X-lock should be switched off during general use, where high pushing force is not needed. Also, when operating on hard surfaces, the X-lock should be switched off to reduce tyre wear. When driving on slippery surfaces the X-lock should be switched on.

Anti-slip valve (option)

If the loader is equipped with the optional anti-slip valve, there is an additional switch on the back of the joystick. The valve equalizes the oil flow between the left and right side hydraulic motors, improving traction on slippery and uneven surfaces.

The anti-slip valve is engaged by pressing continuously on the switch on the joystick.

As soon as the switch is released, anti-slip valve is released.

The function of the anti-slip valve does not depend on the position of the X-lock switch. Whenever the anti-slip is activated, also the X-lock is switched on automatically.

https://truckmanualshub.com/

Allow the loader to warm up properly

Hydraulic oil temperature has an effect on the hydrostatic drive system of the loader. When the ambient temperature is below 5 ºC, make sure the general response to drive pedals is normal. If the drive feels sluggish, allow the hydraulic system to warm up by letting the loader to run at idle until the drive system works normally. Drive carefully until the loader has reached its normal operating temperature.

WARNING

Risk of decreased braking power - Make sure hydraulic oil is not overheated. When hydraulic oil gets hot, driving characteristics of the drive system change. When the oil is hot and the hydraulic oil cooler has switched on, stopping distance of the machine can be longer than when the machine is cold. If the loader is used constantly in high ambient temperatures, hydraulic oil type and viscosity must be suitable for these conditions. Contact Avant service.

NOTICE

In case the braking power of the hydrostatic drive system has decreased, engage the parking brake. The rear wheels may lock immediately. Parking brake acts as an emergency brake, and will also engage in case of loss of oil pressure. Parking brake is intended to keep the loader stationary and not for repeated braking. Engage while loader moves only when necessary.

Engine block heater (option)

The loader can be equipped, as an option, with an engine block heater. The block heater warms up the engine coolant to help starting of the loader in cold conditions. Using the block heater also helps to reduce cold start emissions.

The engine block heater must be connected to a grounded mains socket that is also protected with a residual current switch. A grounded socket does not prevent the risk of electric shock when a live cable is left on e.g. wet ground. Always disconnect both ends of the cable. Use only correct type of cable that is intended to be used with the block heater model that is installed on the loader.

The socket for the block heater (if installed) is located on the left side of the loader:

WARNING

Risk of fire and electric shock - Check the voltage rating of the block heater. Always use approved type of cable. Check that the design voltage of the block heater matches the mains voltage of your area. The standard block heater is intended to be connected 220-240 V AC mains socket. Always plug the block heater to a grounded socket that is equipped with a residual current switch. Use only original type of cable to connect the block heater. Protect electric sockets from rain.

WARNING

Risk of fire - Use correct type of cable. When the optional block heater is installed on the loader, a green electric mains cable is provided with the loader. Do not use other types of cables. The cable must be approved for outdoor use. The engine block heater A410648 is intended to operate with electric supply of 220 - 240 V, 50-60 Hz AC power. Do not modify the cable or use transformers. Contact your Avant dealer or service point for information about other types of block heaters.

CAUTION

Risk of electric shock and damage to loader - Disconnect the block heater before operating the loader. Make sure to disconnect and store away the cable of the block heater before moving the loader, in order to prevent damaging the cable, or its connectors. Always disconnect the cable also from the electric mains socket. Never leave the cable hanging on the ground to avoid potential electric shock.

https://truckmanualshub.com/

Steering of the loader

Steering of the loader is controlled with the steering wheel. The steering system is hydraulically powered. A practical way of steering is to steer with your left hand on the knob of the steering wheel. This way your right hand is free to operate other functions of the loader.

You can steer the loader with the steering wheel even in case hydraulic power is lost. There is an integrated emergency steering system, but more force is needed to turn the steering wheel in case there is a problem with the steering system of the loader.

WARNING

Risk of tipping over - Keep loads close to ground while driving. When driving, always keep the loader boom as low and close to the loader as possible. Risk of tipping over increases considerably when there is a heavy load on the loader (a heavy attachment or a big load in the bucket) and the boom is up when driving.

WARNING

Risk of tipping over - Avoid high speed turns. The loader can tip over, if you turn the steering wheel sharply while driving. Slow down before making sharp turns. Always control and steer the loader with smooth movements.

WARNING

Risk of tipping over - Never use a high drive speed when turning. In particular: when the loader boom is up the stability of the machine is much weaker when turning. Keep loads close to ground while driving.

WARNING

Risk of collision and crushing - Stay and keep hands and feet inside the safety frame. Always remember that when turning the driver´s seat extends beyond the turning radius of the wheels.

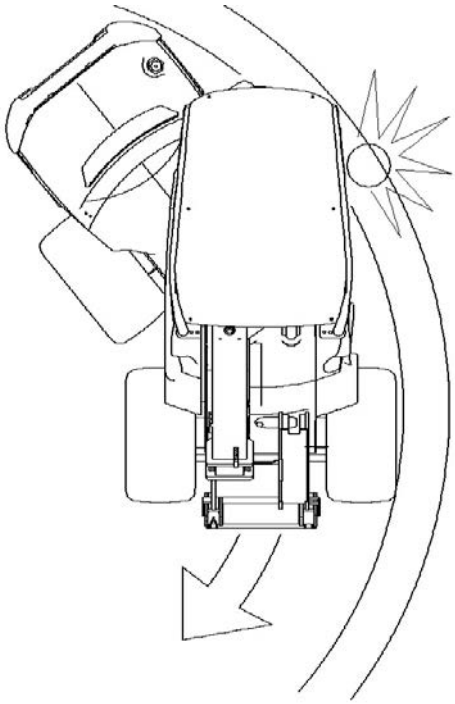

In case the loader tips over

Avoid tipping over of the loader with careful operation and with the instructions given throughout this manual. However, it is important to know what to do in case the loader tips over.

The loader can tip over either to the side, or towards the front.

In case the loader tips over:

Avoid tipping over of the loader with careful operation and the instructions given throughout this manual. However, it is important to know what to do in case the machine tips over.

WARNING

Risk of being crushed by the ROPS structure in case the loader tips over - Always use the seat belt and stay within the space protected by the ROPS safety frame.

Always keep seatbelt on to stay on driver's seat and to avoid getting crushed between ground and a loader that tips over.

NOTICE

In case the loader tips over: Switch off the engine of the loader immediately. Running the engine and pumps of an overturned loader will damage them quickly and will spill hydraulic oil and fuel. As soon as possible, lift the loader back on its wheels to prevent spilling of fuel and oils. The loader can in many cases be lifted back on its wheels by having a few persons to lift it from the ROPS frame. Engine oil can leak inside the engine, causing major engine damage if the engine is attempted to be restarted after the loader has been overturned. Contact service before you attempt to restart the engine.

https://truckmanualshub.com/

Material handling

Make sure to use correct type of attachment for each handled material. Use correct size and type of bucket for general loose material handling, and pallet forks for handling pallet loads. Read the manual of the attachment, e.g. manual of the bucket, for further information for safe and correct use. Observe the lift capacity rating of the loader when planning material handling operations.

The loader is not intended for lifting operations for hanging loads; never put slings, chains, or ropes on the loader boom. Never tie or connect ropes, chains, slings, or similar to attachments, unless told to do so in the operator's manual of an Avant attachment.

WARNING

Risk of tipping over - Loader can tip over when you leave the driver's seat. Always put the load down on the ground before you leave the driver's seat. Follow safe stopping procedure shown on page 77.

Handling of heavy loads

WARNING

Risk of tipping over - always carry heavy loads as close to the ground as possible, and only on level ground. Carrying heavy loads can shift the centre of gravity of the loader and lead to tipping over of the loader. Always transport the load as low and close to the machine as possible to keep the centre of gravity low and for the best stability.

DANGER

Risk of rolling over - Keep loads close to ground, and drive slowly when carrying load. Always use seat belt.

On uneven ground the loader can roll over to its side more easily. Always drive slow and keep loads close to the ground. Avoid sharp turns also on level ground. Use seat belt to stay inside the protective ROPS. If you don't use seat belt, there is a risk of getting thrown off from the driver's seat and being pinned under the ROPS in case the loader tips over.

DANGER

Risk of tipping over towards forward - Keep load close to ground, drive slowly.

Read operator's manual carefully. Never drive with heavy loads lifted. Keep loads, including attachments, as low and as close to the loader as possible. See information in this manual about how to avoid tipping over.

Working with attachments

Requirements for attachments

Any attachment mounted on the loader must meet applicable safety and technical standards and requirements. An attachment that is not specifically designed for the loader may cause unnecessary safety risks. Make sure that 860i is specifically listed as compatible loader in the operator's manual of the attachment. Some attachments may require the use of additional special protective guards or personal safety equipment. See the operator's manual of the attachment.

WARNING

Risk of serious injury - Always make sure that the attachment is intended to be used with this loader model.

- Read the Operator's Manual of the attachment before you begin to install or use any attachment. Always follow the instructions in the operator's manual of the attachment.
- Make sure that the attachment is compatible with the loader: Avant 860i must be specifically listed in the operator's manual of the attachment. Contact your Avant dealer if necessary. Incompatible attachments can cause risks of injuries resulting from eg. the stability of the loader, contact with moving parts, reduced visibility, or ejected debris.
- Use all attachments only for their intended purpose that is described in the Operator's Manual of the attachment.
- Make sure that the attachment is connected properly on the quick coupling plate of the loader, and as described in the Operator's Manual of the attachment.
- Follow all instructions regarding personal protective equipment, safety distances, and possible additional guards that are needed when operating certain attachments.
- Familiarise yourself with the operation and stopping of the attachment at a safe place. Put the attachment down on the ground and switch off the loader before leaving driver’s seat, and follow possible additional steps for safe shutdown of the attachment.
- Keep attachments in good and safe operating condition. Follow the inspection, maintenance, and service instructions of the attachment.

https://truckmanualshub.com/

Manuals of attachments

DANGER

Attachments can create significant risks that are not covered by this Operator's manual of the loader.

Make sure you have all attachments manual available. Wrong use of an attachment can cause serious injuries or death.

Each attachment is accompanied by its own respective Operator's Manual. The manual will show important information related to safety, and how to attach, use, and maintain each attachment correctly.

WARNING

Risk of injuries from incompatible attachments - Make sure attachment is intended to be used with this loader model. Wrong type of attachment, poor locking of the attachment, or wrong technical characteristics of coupling brackets can cause hazards that are not taken into account by design of the loader or the individual attachment. Never use other than original Avant attachments and brackets.

Third party manufacturers of attachment must carry out detailed engineering and risk assessment to ensure safety, performance, and reliability of the combination of the loader and the attachment. Consult your Avant dealer if you are unsure about the compatibility of the equipment with your Avant loader.

Compatibility of attachments

Use only Avant attachments that have been designed for your loader model. Any attachment that is fitted to the loader must be designed to be used specifically with Avant 860i, and this must be stated in the operator's manual of the attachment. The manufacturer of the attachment is responsible for evaluating the risks related to coupling the attachment and using it with this loader model. Do not operate any attachment if the manufacturer of the attachment has not declared its compatibility with this loader model in writing.

NOTICE

Check max. allowed hydraulic oil flow for the attachment. Adjust the speed of the hydraulic pump so that the output flow is suitable for the work and the attachment. See page 37.

NOTICE

Notice that some third party attachments may have hydraulic oil that is not intended to mixed with the oil in the hydraulic oil of the loader. Flushing of the hydraulic oil circuit of the attachment may be necessary before coupling to the loader. Incompatible oils can cause wearing of hydraulic pumps and motors.

Coupling the attachments

The attachment is mounted to the loader boom by using the quick coupling plate on the loader boom and the counterpart on the attachment. As standard, the attachment is coupled with two manually operated locking pins of the coupling plate. As an option, hydraulic coupling pins are available, which are controlled with an electric switch. The following steps show the coupling procedure regardless of the type of coupling.

Attaching the attachment to the loader is quick and easy, but it must be done carefully. If the attachment is not locked to the loader, it may fall from the loader and cause a hazardous situation. The loader must not be driven and the boom must never be lifted when the attachment has not been locked. To prevent hazardous situations, always follow the coupling procedure shown below. Also remember the safety instructions shown in this manual.

DANGER

Risk of crushing - Make sure that an unlocked attachment will not move or fall over. Do not go to the area between the attachment and the loader. Mount the attachment only on level surface. Never move or lift an attachment that has not been locked.

Always read also the additional instructions for coupling and using of the attachment in the Operator's Manual of the attachment. The coupling procedure of an attachment may require additional steps in addition to the basic steps described below. Always follow instructions in the Operator's manual of the attachment.

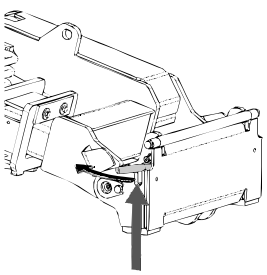

Step 1:

- Lift the locking pins of the quick coupling plate up and turn them backwards into the slot so that they are locked in the upper position.

  If your loader is equipped with a hydraulic attachment locking system, see how to operate the hydraulic locking on the following page.
- Ensure that the hydraulic hoses (and the electric harness, if applicable) are not in the way during installation.

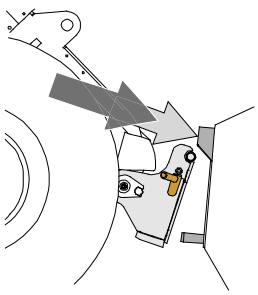

Step 2:

- Enter the driver's seat, fasten the seat belt, start the loader, and tilt the quick coupling plate forward.
- Drive the loader onto the attachment. If your loader is equipped with a telescopic boom, you can use it to reach the coupling brackets of the attachment.
- Align the upper pins of the loader’s quick coupling plate so that they are under the corresponding brackets of the attachment.

https://truckmanualshub.com/

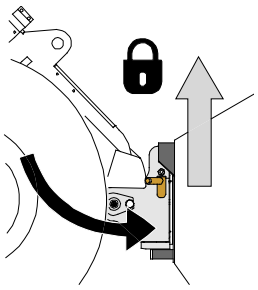

Step 3:

- Lift the boom slightly – pull the boom control lever backward to raise the attachment off the ground.
- Turn the boom control lever left to turn the bottom section of the quick attach plate onto the attachment.
- Lock the locking pins manually or lock the hydraulic locking.
- **Always check the locking of both locking pins.**

DANGER

Risk of getting crushed under or hit by a falling attachment, risk of loss of control of loader due to dropped attachment - Always ensure that the attachment is fully locked.

- Before moving or lifting the attachment, make sure that the locking pins are in the lower position and come through the fasteners on the attachment on both sides.
- An attachment that has not been completely locked to the loader may fall on the boom or towards the operator, or fall under the loader during driving, causing injuries or loss of control of the loader. Never move or lift an attachment that has not been fully locked with both locking pins.

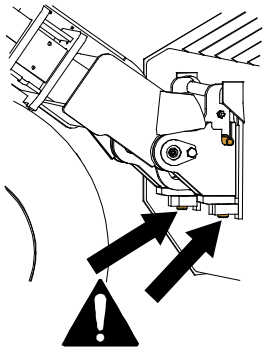

Hydraulic attachment coupling

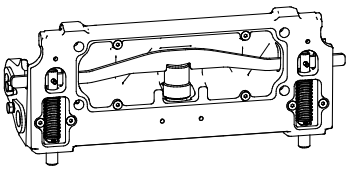

The optional hydraulic attachment coupling plate enables locking and unlocking of an attachment from driver's seat.

A control switch is located at the control panel on the right (see page 48). The switch is equipped with a sliding lock to deter accidental unlocking of an attachment.

There is a hydraulic cylinder inside the attachment coupling plate which moves the locking pins up and down. To operate the locking system the loader engine must be running.

DANGER

Risk of falling of attachment - Familiarize yourself with the controls of the loader. Avoid dropping of the attachment. Operate the hydraulic coupling only when the attachment is close to the ground.

Always make sure that the locking pins lock properly down in the holes of the attachments also when using the hydraulic locking. Both pins must be locked.

Coupling the hydraulic hoses of the attachment

Hydraulic hoses of the attachment are equipped with the multiconnector system, which connects all hoses at the same time.

WARNING

Risk of movement of the attachment and ejection of hydraulic oil - Never connect or disconnect quick couplings or other hydraulic components while the control lever of the auxiliary hydraulics control lever is locked on or if the system is pressurized. Connecting or disconnecting the hydraulic couplings while the system is pressurized may lead to unintended movements of the attachment, or ejection of high-pressure fluid, which can cause serious injuries or burns. Follow safe stopping procedure before disconnecting hydraulics.

Connecting the multiconnector system:

1. Align the pins of the attachment connector with corresponding holes of the loader connector. The multiconnector will not connect if the attachment connector is upside down.
2. Connect and lock the multiconnector by turning the lever towards the loader.

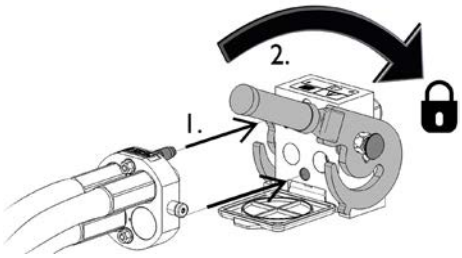

The lever should move easily all the way to its locking position. If the lever does not slide smoothly, check the alignment and position of the connector and clean the connectors. Also shut down the loader and release the residual hydraulic pressure.

To disconnect the multiconnector system:

Before disconnecting put the attachment down on a solid and even surface.

1. Switch off the auxiliary hydraulics of the loader.
2. While pushing unlock button, turn the lever to disconnect the connector.
3. After ending operation put the multiconnector on its holder on the attachment.

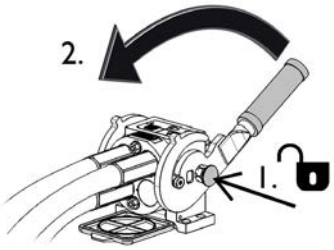

NOTICE

Keep all fittings as clean as possible; use the protective caps on both the attachment and the loader. Dirt, ice, etc. may make using the fittings significantly more difficult. Never leave the hoses hanging on the ground; place the couplings onto the holder on the attachment.

NOTICE

When fitting an attachment, make sure that the hydraulic hoses are not overstretched and are not in a position where they can be trapped during the operation of the machine and attachment.

https://truckmanualshub.com/

Using the auxiliary hydraulics

Auxiliary hydraulics (hydraulically operated attachments) are controlled with the lever on the control panel, or with the buttons on the 8 function joystick (see page 55).

The locking position of the lever facilitates operation of the attachments that require constant oil flow (rotary broom, backhoe etc.). Make sure to release the lever when not operating an attachment to avoid loading the engine unnecessarily.

DANGER

Crushing and entanglement hazard, risk of injuries from contact with moving parts - Going near an attachment that is in operation can cause a serious risk of injury. Switch off auxiliary hydraulics before leaving driver's seat or stopping the engine. Operate the controls only when sitting in the driver's seat. Follow the safe stopping procedure.

The control lever of the auxiliary hydraulics and electric buttons of the joystick (see page 55) directs hydraulic oil as follows:

1. Moving the control lever towards the locking position will direct hydraulic flow to port 1.

   This is normally the normal or positive movement of the attachment.
2. Moving the lever away from the locking position will direct flow in reverse direction, pressure in port 2.
3. The third port is a free return line to tank. This is required by some attachments.
4. The 4th port is for the integrated electric socket of the optional Attachment control switch pack.

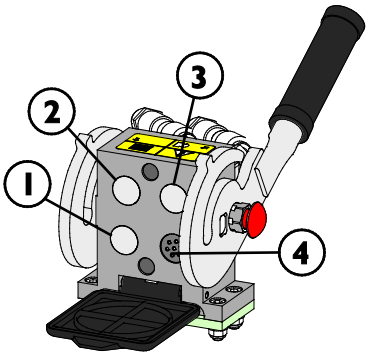

WARNING

Risk of ejection of machine parts, stones, soil, and other debris - Overspeed of the attachment can cause injuries or dangerous movements of the attachment. The attachment can break down in a dangerous way, throw objects, or produce excessive noise and vibrations if operated at too high speed. Never exceed maximum allowed hydraulic flow of the attachment. Check correct operating flow from the operator's manuals of the attachment, and use the chart on page 37 of this manual.

Releasing the residual pressure of hydraulic system

Make sure that there isn't pressure in the hydraulic system that could cause danger during service operations.

To release the pressure in hydraulic system:

1. Lower the boom down completely and place attachment firmly on the ground
2. Switch off the loader
3. Move all control levers, including the control lever of the telescopic boom and auxiliary hydraulics, to extreme end positions a couple of times

   Remember that the boom or attachment can move when releasing the pressure. Move the levers until all movements have stopped.

Extra auxiliary hydraulics coupling

The extra hydraulics coupling is a double-acting hydraulic with two fittings. A pair of standard type hydraulic quick couplings are located at the front of the loader, just below the multiconnector.

- Before you connect or disconnect standard couplings, relieve hydraulic pressure as described on page 93.
- To connect and disconnect the standard couplings, move the collar at the end of the female fitting
- Note that the protective caps on the loader and the attachment can be fastened to each other during operation to reduce the accumulation of dirt.
- When disconnecting the standard quick couplings a small amount of oil may drip from the couplings. Wear protective gloves and have some cloth at hand to keep the equipment clean.

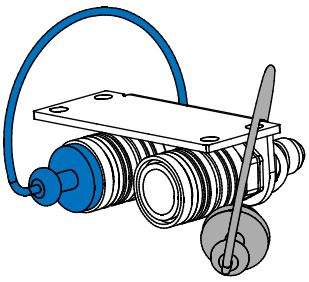

To use the extra hydraulics coupling:

The extra outlet is controlled with its own, 2 direction control lever on the right from the driver's seat. Both the front and rear hydraulics can be operated simultaneously. Release the lever to neutral position to stop the attachment.

The quick couplings can be coupled in a way that reverses the function of the control lever. Test the operation of the attachment after each time it is coupled to the loader. Keep the couplings clean and use their protective covers.

https://truckmanualshub.com/

Coupling adapters

Avant offers coupling adapters to help the use of some specific attachments. See the operator's manual of each attachment if an adapter can be used.

Both adapter types are locked to the quick coupling plate of the loader. The adapters have similar quick coupling system to lock the attachment onto the adapter and loader.

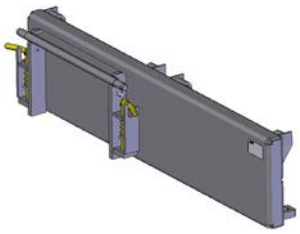

Side shift adapters A37097 and A37166

Side shift adapter is a rigid adapter plate which moves the attachment 60 cm to the right or to the left side depending on the model. It is intended for better side reach with attachment that are used on the ground, such as flail mowers on the side of a road.

Hydraulic side shift adapter A37235

The hydraulic side shift adapter offers easy, stepless side shift of attachment, operated from the driver’s seat. The design features strong sliding guides which can also be lubricated.

If a hydraulic attachment is mounted on the hydraulic side shift adapter, the loader must be equipped with the optional second auxiliary hydraulics outlet in the front. The attachment hoses are mounted on the multi connector and the side shift adapter hoses on the optional outlet.

Contact your Avant dealer for more information about the availability of the side shift adapter.

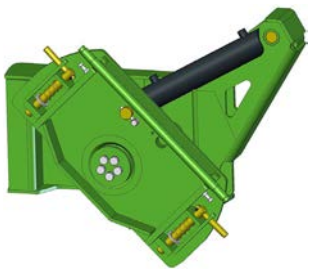

Tilt adapter A34148 or A36505

With a tilt adapter the attachment can be tilted sideways, which makes it possible to:

- Make different forms to the ground with a bucket or leveller
- Keep pallet fork level when you are driving on surfaces with gradient
- Load pallets that are on uneven ground
- Level ground on uneven surfaces

The tilt adapter is intended mainly for non-hydraulically operated attachments. With the optional second auxiliary hydraulics outlet in the front, it is possible to use hydraulically driven attachments, such as 4 in 1 bucket, pallet fork with hydraulic side shift, grabbing tool, and artificial turf attachment at the same time.

Rotating adapter A424406

The rotating adapter is intended for same kind of work as the tilting adapter. The fully rotating adapter makes it possible to turn the attachment fully upside down. This can be helpful in levelling work.

WARNING

Risk of tipping over - A side shift adapter decreases the sideways stability of the loader significantly. Use all adapters only for specific tasks, as instructed in the operator's manuals of each attachment. Remove all adapters for general use of the loader. Adapters decrease stability of the loader and must be used only on level ground.

CAUTION

Adapter plates reduce lifting capacity - Do not use adapters with heavy loads or attachments. The adapter plates move the centre of gravity of the attachment further away from the loader. This increases the risk of tipping over and can limit the use of heavy attachments.

NOTICE

All coupling adapters are intended only for specific attachments that can be safely and efficiently used with an adapter. The adapters are not intended for general use. Any adapter should be removed from the loader when no longer using an attachment requiring it.

NOTICE

Avoid the use of bracket adapters that are intended for mounting of 200 series 1 attachments on other loaders. The 200 series 1 attachments are not designed to be used with other loader models than the 200 series.

https://truckmanualshub.com/

Storage, Transport, Tie down points and Lifting

Before transporting or lifting:

- Mount the articulation frame lock, see page 104
- Lower the boom down

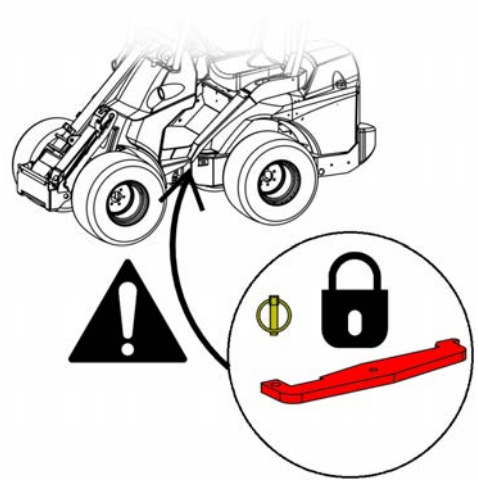

Always lock the frame lock before transporting or lifting the loader. Also remember to remove the frame lock and test the steering of the loader after transport.

Tie down points

The loader must be tied down securely if transporting it on a trailer, for example. All four tie down points must be used. If an attachment is fitted, also it must be tied down.

As standard, there are 4 tie down points:

- Two on the front frame, close to the boom
- Two on the rear frame, near rear counterweight

Tie down points at the front of the loader:

Tie down points at the rear of the loader:

To prepare the loader for transport, do the following:

1. Always secure the load. Make sure all equipment is secured also before just a short transport.
   - It may be necessary to tie down attachments separately.
2. Lower the boom completely down.
3. Lock the articulated frame lock.
4. Always use straps or chains that are in good condition and rated for use as load securing device. Check all hooks and locks.
5. Consider weight distribution on a trailer. Sometimes it might be appropriate to load the loader on trailer rear end first.
6. Always make sure the trailer is balanced when loaded in sideways and front/rear directions. Trailer must never cause an upward, lifting force on the trailer coupling of the towing vehicle.
7. Make sure that all panels are locked in place. Remove ignition key and any loose material that could come off while transport.
8. Consider using a transport cover to protect the loader from dirt during transport. See picture below.

Transport on trailer

If you transport the loader on a trailer make sure that the center of gravity of the load is forward from the axle of the trailer. To load the trailer correctly, it may be necessary to load the loader on the trailer backwards.

The center of gravity of a loader without an attachment is located slightly forward from the rear axle. Take into account the size and weight of the attachment, and any additional counterweights on the loader. Always secure the loader and its attachment onto the trailer.

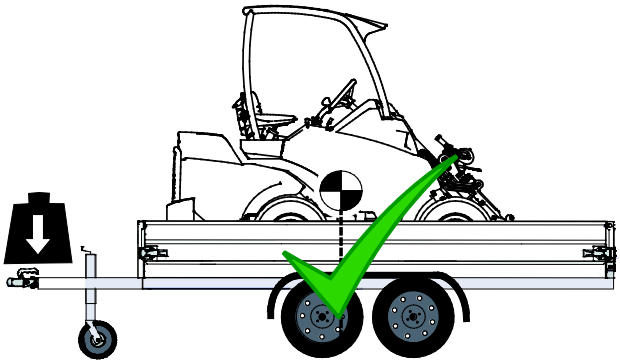

DANGER

Risk of loss of control of towing vehicle - Never load trailer so that there is lifting force on the tow bar. Trailer must never be loaded so that the center of gravity is behind the axle of the trailer. If trailer is loaded in this way, the trailer can cause loss of control of the towing vehicle.

Load on the trailer coupling of the towing vehicle must never be negative. When uncoupling the trailer coupling the tow bar can swing up.

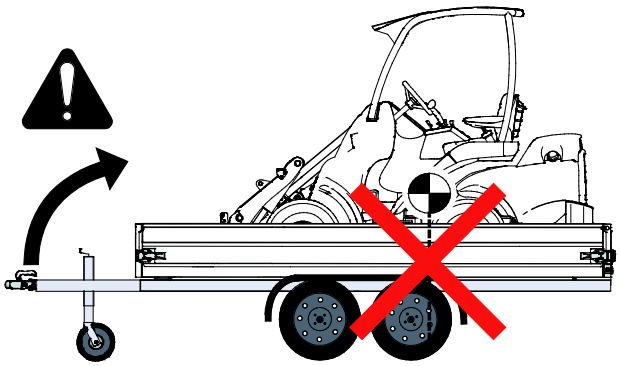

Take into account all additional counterweights, attachments, and other equipment when estimating the load on the trailer. Additional counterweights, among other options and equipment, may make the loader heavier than indicated in the identification plate. Never exceed the maximum allowed masses of the trailer, the towing vehicle, etc.

Always check the maximum allowed tow bar weight of the towing vehicle. It is recommended to measure the tow bar load with a scale. Small variation of the location of the loader on the trailer may make the load on tow bar excessive or negative, making the trailer and towing vehicle unstable. Always make sure that there is moderate load on the tow bar within the limits shown in instructions of the towing vehicle.

https://truckmanualshub.com/

Tie down options

Optional equipment for frequent trailer transport

If transporting the loader frequently on a trailer, optional tie down brackets are available for easier securing of load.

Tie down bracket A418623 installed at the rear bumper or counterweight

Tie down bracket A418623 installed at the side of rear frame

For side installation, two brackets are needed.

Tie down bracket on wheel hub A423091

Installed to a wheel hub with 5 bolts:

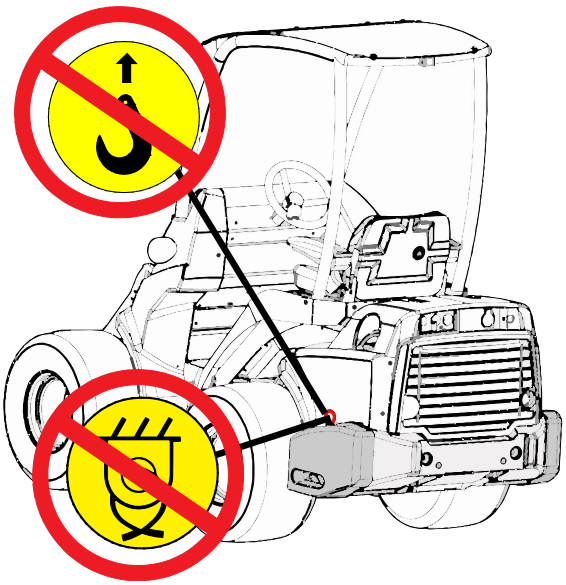

DANGER

Risk of moving or falling of the loader - Never lift or tie down loader from side counterweights. Eyelets on extra side counterweights are for installing or removing the side counterweight only. Never attempt to lift the loader from the counterweights or use them as tie-down points. **Always remove the eyelets from the counterweights immediately after installation work.**

Storage

If outdoors storage is necessary, protect the machine with the designated weather cover (part no. 65436).

NOTICE Do not use the full, closed transport and weather cover over long periods of time as it promotes corrosion due to moisture that will condense inside it. The light weather cover can be used.

Before long term storage (more than 2 months), prepare the loader to ensure long service life and trouble-free use of the loader.

- It is recommended to have the periodic service made before storage. Contact Avant service.
- Clean the loader carefully.
- Check and touch-up painted surfaces, if necessary, in order to avoid rust damages.
- Grease the greasing points and lubricate the piston rods of the cylinders with oil.
- Remove the battery from the loader and store it in a cool, well-ventilated place. Charge the battery monthly.
- Store the loader indoors if possible. Do not store the loader in direct sunlight.
- See the engine owner's manual to prepare the engine for long term storage.
- Inflate the tyres to the recommended tyre pressure.
- Fill the fuel tank and the hydraulic oil tank to the maximum marks.
- Cover the engine exhaust pipe outlet.

Lifting of the loader

Lifting a loader with ROPS: When lifting a loader equipped with the ROPS frame, use four lifting slings that are approved for lifting purpose, and which are minimum 2000 mm (79 inches) long. Loop the slings around the four ROPS posts. Lifting kit A418706 includes all necessary parts and detailed instructions to lift a loader with ROPS frame.

Make sure that the lifting slings cannot move and that the loader doesn't swing during lifting. Loop the lifting straps around all four ROPS posts and make sure they are not tied or get damaged by e.g. sharp corners.

WARNING

Risk of dropping of the loader - Use appropriate equipment and follow safety instructions and safe practices when lifting the loader.

- Remove heavy attachment and possible extra weights from the loader.
- Lower the boom down.
- Mount the frame articulation lock to the frame of the loader.
- Follow the instructions given in the operator's manual of the lifting kits for each cab type.
- Never lift a loader with persons riding the machine.

Lift the loader as smoothly as possible, and do not allow it to drop or wobble.

https://truckmanualshub.com/

The following picture shows the principle of lifting a loader with the ROPS frame using four lifting straps:

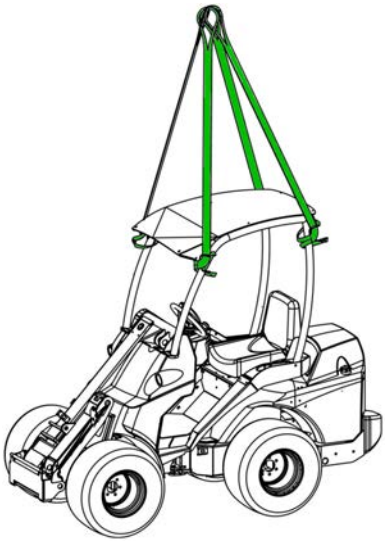

CAB L: When lifting a loader that is equipped with the Cab L, remove the window panels (front, side and rear window panel) before lifting.

CAB GT: Special lifting equipment, such as lifting beam and chains, is needed for lifting the loader equipped with the cap GT. Loader can be lifted from the tie down points in the front frame and rear frame.

WARNING

Risk of dropping of loader - Never attempt to lift the loader from the counterweights or use them as tie-down points. Eyelets on extra side counterweights are for installing or removing the sideweight only. Remove eyelets from counterweights to prevent their use.

Towing (retrieval of the machine)

The loader cannot be towed. It is equipped with a hydrostatic transmission and a hydraulic parking brake, which can be released only when the engine is running and there is enough pressure in the hydraulic system. In case there is a technical failure and the engine cannot be started or doesn't start, the loader must be pulled aside with another machine or lifted e.g. with a forklift truck and transported to service.

Service and maintenance

DANGER

Risk of personal injuries - If the loader is damaged or poorly maintained it can cause or increase risks of unsafe operation.

To ensure long service life it is important to maintain the loader in good condition. The maintenance procedures listed in this chapter can be performed by trained or otherwise experienced operators. If you are not sure about how to do any service operation, ask for additional information before you start any service or maintenance work.

If the maintenance schedule is not followed, and services made are not marked in the table in this manual, the warranty may not cover for damages of the loader.

Service parts are available through your Avant dealer or authorised service. Contact your local Avant service or dealer for any questions or information.

Safety instructions

WARNING

Always follow the basic safety procedures and keep the following instructions in mind when doing any maintenance or service:

1. Switch off the loader and let it cool down before starting any service operation.
2. Switch on the parking brake.
3. Turn the battery disconnect switch to position OFF.
4. Keep boom lowered. Install and secure the service support on the boom cylinder when working under the boom is necessary.
5. Install the frame lock when lifting the machine, and, for instance, when changing tyres.
6. Before working on the electric system or battery, disconnect the battery.

- Contact your Avant dealer or Avant service for spare parts or more information about any service procedure.

WARNING

Risk of burns, cuts, and sprayed oil or dirt - Use Safety goggles and gloves during all maintenance operations. Always wear protective gloves, safety goggles and protective clothing. Hot surfaces and sharp edges can cause injuries. Also general skin contact with oil and grease can be harmful, wash hands thoroughly after contact with oil.

https://truckmanualshub.com/

DANGER

High-pressure ejection of fluid may penetrate skin and cause serious injuries - Never handle pressurised components.

Before handling hydraulic components, make sure that the hydraulic system of the attachment and the loader are completely de-pressurised. Do not hold your hand near a fitting when tightening or opening it, and never use hands to search for leaks. If a leak is suspected, set a piece of cardboard to detect a leak.

See a physician immediately in case hydraulic fluid is injected through skin, or if it is suspected. Immediate specialized medical care is important to limit the possible serious injuries caused by injected oil. Initial injury might be barely visible, but serious injury can develop within just hours.

WARNING

Risk of injuries and burns caused by leaking hydraulic oil - Never operate loader or attachments if there are hydraulic leaks. Check hydraulic hoses and components only when the loader is safely stopped and hydraulic pressure is released. Repair all leaks as soon as you have noticed them, because a small leak can quickly change into a big one. Leaking hydraulic fluid can cause serious personal injuries and is also harmful to the environment. Hot hydraulic oil can cause severe burns.

Check hydraulic hoses for cracks and wear. Follow the wear of the hoses and stop using the loader if the outer layer of any hose has worn out. If you find a fault, the hose or the component must be replaced.

Also repeated or prolonged skin contact with hydraulic oil can be harmful, wash hands thoroughly after contact with oil.

Falling of load - Risk of crushing. Always secure the loader boom with the provided service support, before going under the loader boom. Remove any load and attachments from the loader before service or maintenance.

Risk of burns - Allow loader to cool before opening covers. Electric and hydraulic parts may be extremely hot after use.

The adjacent warning label is located visibly below the rear cover. Hot areas include the hydraulic components and hoses, and surfaces of electric motors and inverters.

Risk of burns due to hot coolant - Never open hot radiator or reservoir. Never open the pressurized coolant reservoir while engine is warm. Hot coolant may burst out causing serious burns. Allow engine to cool completely before opening.

Risk of contact with moving parts - Always shut down the engine before accessing the engine compartment. Engine cooling fan, alternator belt, and belt pulleys will move at high speed when engine is running. Never open the engine cover when engine is running.

Consider the environment

The fluids in the machine are harmful to the environment. Never allow fluids to leak in the environment.

Take waste oil and fluids to recycling station. Find out about your local requirements concerning the recycling or disposal of other components.

Loaders that are equipped with Smooth drive system:

Risk of burst of hydraulic oil - Isolate hydraulic accumulator before service. If the loader is equipped with the smooth drive option, a pressure accumulator is fitted to the hydraulic circuit of the boom. Do not disconnect any hydraulic component before the accumulator has been isolated from the circuit and the residual pressure has been released.

https://truckmanualshub.com

Installing of service support and frame lock

Installing boom service support:

Whenever access to area below near a lifted boom is needed, install the service support to the hydraulic cylinder of the boom.

A red service support is stored on the boom, near the quick coupling plate.

1. Loosen the manual nuts (2) holding the service support (1). Remove the service support, its securing bolt (3), and one of the manual nuts
2. Lift the loader boom up. Shut down the loader
3. Place the service support on the piston rod of the levelling cylinder, as shown in the picture below
4. Secure the service support in its place with its securing bolt and manual nut
5. While seated on the driver's seat, keep the engine off, and lower the boom until it rests on the service support

Service support is stored at the front storage compartment

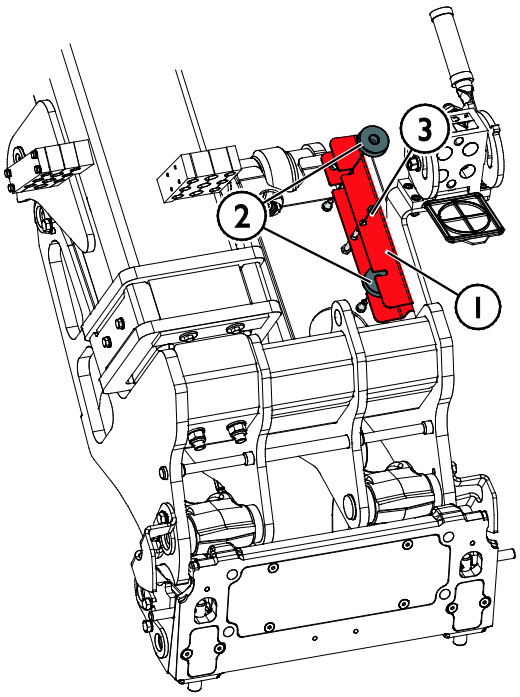

Service support in place

Frame lock:

A red frame lock bar is stored under the operator's cab.

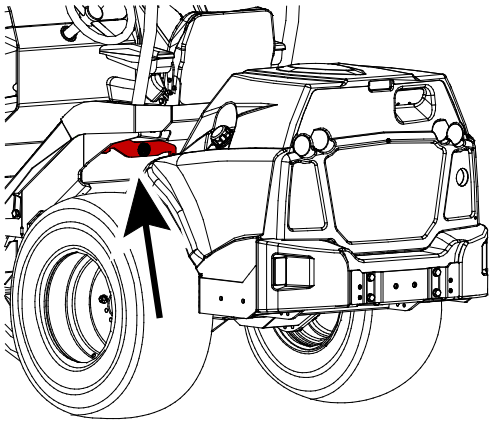

This lock bar is intended to lock the articulated frame to make the loader frame stay straight during e.g. lifting or transportation.

The holes for the frame lock bar are on the left side of the loader, below the access step.

1. Slide the hook type end of the bar through a hole on the rear frame of the loader.
2. Turn the bar towards the front hole. The other end should remain locked in the hole on the rear frame.
3. Align the holed end of the bar and the frames by turning the steering wheel. This can be done without starting the loader.
4. Once aligned, slide the bar and lock with its cotter pin.

Daily inspections and periodic service schedule

The loader must be serviced and maintained in order to keep it in good and safe condition. This part of the manual shows the maintenance and service points and intervals of the loader and its engine. There are more detailed instructions about each service operation, in numerical order, on the following pages.

In this manual the needed service is divided into parts:

1. Daily maintenance, which all users of the loader can do without special equipment or training. As part of your daily routine, check the condition of the loader and its equipment before starting it. Remedy any issues found.
2. Periodic maintenance of the loader and its engine, where special equipment and training may be needed. The service schedule establishes a more thorough examination of the loader in addition to the daily maintenance.

   Some periodic service procedures are intended to be made by qualified service technicians. These service operations are marked in the service schedule table, and in the instructions of each service operation. Authorized Avant service points have the special tools and equipment that are needed.

All maintenance and service operations are intended to be made when the loader engine is off, except those checks that are specifically intended to be made with the engine running.

Follow the recommended service schedule. Keep records of services made. Contact Avant service if you are unsure about any of the service procedures, or if you need spare parts.

NOTICE Keep the loader in good condition. Always do the daily inspections and follow the maintenance schedule. Lack of maintenance can significantly and quickly shorten the useful life of the loader, and cause safety risks.

First service after 50 hours of use

NOTICE **Remember to perform the first service after 50 hours of use.** The first service is vital for the performance and endurance of the hydraulic systems. All hydraulic components break-in during the first 50 hours of use, causing the hydraulic oil and filters to collect these initial wear products. If the first service is not made on time, the hydraulic pumps, motors, and valves may wear beyond repair. The warranty will not cover for damages that are caused by neglected service. The first service includes also tasks that are otherwise important for the safety and reliability of the loader.

NOTICE Record of periodic service is on page 140 of this manual. All periodic services must be filled and signed to the table by the service technician who has made the service. Damages or wear that are caused by lack of service are not covered by warranty.

https://truckmanualshub.com/

Daily maintenance and inspections

- Do a walk-around check of the loader before each working shift. Complete the tasks listed below daily before starting to use the loader and after each 10 working hours.
- Check at least the following listed points. Do not use the loader if you notice problems with any of the listed items, or in other parts of the loader. See the following pages for detailed description of each inspection listed below.
- Adjust the seat and mirrors (if fitted) so that you have a good working position and unrestricted field of vision from the driver's seat. Check that windows and mirrors are clean.
- Check that all controls of the loader function correctly.

	Daily and weekly inspections	Check before each work shift	Check weekly
1	Add fuel	■	■
2	Check the general condition of the loader, its equipment, and safety labels	●	●
3	Clean the loader	■	●
4	Add grease to the lubricating points	■	●
5	Check the boom and other metal structures visually	●	●
6	Check tightness of bolts, nuts and fittings	●	●
7	Check wheels	●	●
8	Check the attachment and the quick coupling plate	●	●
9	Check hydraulic oil level	■	●
10	Check engine oil level	■	●
11	Check engine coolant level	■	●
12	Check water separator	■	●
13	Check engine air filter element	■	●
14	Check battery and electric cables	●	●
15	Check air filter of cab	■	●
16	Test the movements of boom	●	●
17	Test drive control and steering	●	●
18	Test parking brake	■	●
19	Calibrate load sensor if counterweights are added or removed	■	■

● Maintenance operation

■ When necessary

Periodic service and maintenance

In addition to the items listed in the daily and weekly inspections, the following service procedures must be completed periodically.

	Service schedule for periodic service	After the first 50 hours of use	After every 400 hours of use or annually (whichever comes first)
1	Change engine air filter	■	●
2	Change engine oil	-	●
3	Change engine oil filter	-	●
4	Change hydraulic oil	●	●
5	Change hydraulic oil filters	●	●
6	Clean or replace hydraulic oil tank breather	●	●
7	Change fuel filters	-	●
8	Check fuel lines	●	●
9	Clean the fuel tank	-	●
10	Check the battery and its cables, installation, condition, and charge capacity	●	●
11	Check electric cables, relays, and other electric components*	●	●
12	Check hydraulic hoses, fittings, and other hydraulic components	●	●
13	Measure hydraulic pressures of auxiliary and boom hydraulics, adjust if necessary*	●	●
14	Measure the charge pressure of the variable displacement pump*	●	●
15	Measure the power control valve, adjust if necessary*	●	●
16	Check and adjust slide pads of telescopic boom, replace if necessary*	●	●
17	Check mounting and operation of drive motors*	●	●
18	Test and check engine for vibrations, noise, and general performance*	■	●
19	Check ECU diagnostics codes from the multi-function display Perform the full diagnostics of the engine ECU*	■	●
20	Check the safety frame, seat, seat belt, reverse beeper, and all installed lamps and reflectors	■	●
21	Test function of optional equipment (cab, boom floating, cross lock, anti-slip valve, and other equipment installed on the loader	●	●
22	Service the hydraulic attachment locking system*	●	●
23	Check articulation joint	●	●
24	Replace Cab air filter	■	■

https://truckmanualshub.com/

	Service schedule for periodic service	After the first 50 hours of use	After every 400 hours of use or annually (whichever comes first)
25	Test the air condition system, service if necessary*	●	●
26	Reset the service reminder from the display unit after the periodic service has been made completely	●	●

*Service operations that are marked with an asterisk are intended for professional service technicians.

NOTICE There is additional information about maintenance and service of the engine in the Operator's manual of the engine. Use only spare parts and oils that comply with recommended specifications. If conflicting information is found, the information shown in the Operator's Manual of the loader must be followed.

Reset the service reminder

Reset the service reminder from the multi-function display. Make sure that all periodic maintenance and service tasks have been completed before resetting.

Engine Diesel Particulate Filter (DPF)

General information about DPF

The loader is equipped with a Diesel Particulate Filter (DPF). This filter removes fine particles that are produced during burning of Diesel fuel. The filter is not visible, it is located inside the exhaust system of the loader.

As the DPF collects the particles, they will remain in the filter and slowly they will disturb the flow of exhaust gas. To overcome this the soot collected in the DPF is cleaned by burning the soot. This burn process (regeneration) is automatic and does not normally require action from the operator of the loader.

In normal use of the loader the control systems of the loader automatically take care of the DPF and there is no need to use manual controls of the DPF.

To ensure that the automatic DPF regeneration is possible, operate the loader so that the engine reaches its normal operating temperature, and ensure the engine is loaded. Avoid idling with the loader as it promotes accumulation of soot and ash.

WARNING

Risk of fire and burns - Hot exhaust gas. Pay attention to the hot exhaust gas symbol on the display. When it is lit, the exhaust gas is especially hot. Wait until DPF regeneration is completed. Do not drive or park near combustible materials. The automatic and manually activated DPF regeneration process produce hot exhaust gas.

DPF Regeneration

Regeneration method of the DPF depends on accumulated soot load. In normal use the regeneration process starts automatically. Some users may never need to do any of the manual processes.

Do not drive near combustible materials or dust, and do not park the rear of the loader near any structure or other vehicle. The exhaust temperature is hot during active regeneration.

Inside the DPF there is a coating that makes it possible to burn the soot during normal use, when the exhaust temperature is hot enough.

Ash load

After each regeneration process a small amount of ash accumulates in the filter. Eventually the ash load becomes too high and the DPF must be serviced. This will typically require thousands of operating hours. However, frequent idling of the engine, poor or wrong quality of engine oil, or operating the loader so that the engine will rarely reach its operating temperature, can cause ash to accumulate into the DPF. Ash load can be seen from the display. If ash load is high, contact Avant service.

https://truckmanualshub.com/

Stages of regeneration process:

DPF Soot level	Symbols on the display	User action needed	Regeneration method
0-30 %	-	-	-
30 - 80 %	-	**None.** Passive regeneration is made automatically and is not visible to the operator. It is recommended to operate the loader with varying load.	**Automatic** **Assisted passive regeneration** The ECU will assist the continuous, passive regeneration by increasing the exhaust temperature. Allow the engine to reach its normal operating temperature during normal use to facilitate the automatic, passive regeneration.
80 - 90 %		**None.** Continue to operate the loader with varying load. Avoid idling of the engine. Symbol warning of high exhaust temperature may appear, avoid driving near combustible materials. If you want to abort or postpone the regeneration process press button on the display.	**Automatic, with possibility to inhibit** **Active regeneration** The engine ECU will actively increase the exhaust temperature to regenerate the DPF. With this soot load it is advisable to continue to use the loader with load. It is not recommended to stop the loader or to leave it idling during regeneration.
90 - 100 %		**A request for parked regeneration is shown on the display.** When request appears: Operate the loader until the engine reaches its normal operating temperature (at least 60°C). To speed up the engine warming you can run the engine with auxiliary hydraulics ON without any attachment, and the hydraulic pump in selection 1. Avoid idling. 1. Park the loader outside 2. Engage the parking brake 3. Press the Forced regeneration button on the display 4. Allow the regeneration process to finish. It takes typically about 45-60 minutes. But notice that in some circumstances it may take up to 90 minutes to complete the regeneration. Engine power is limited if the soot level is above 100 %.	**Must be started manually** **Automatic process after starting.** **Active, parked regeneration** Once the conditions for the parked regeneration are met, the engine ECU will increase the engine RPM and regenerate the DPF by actively increasing the exhaust temperature.
100 - 110%	 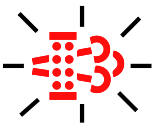 (BLINKING)		
> 110 %	 	**Contact service.** Engine power is limited.	**Regeneration at authorized service is necessary.** If the active parked regeneration is not made, and the soot load reaches above 110 % level, it is no longer possible to regenerate the DPF without visit to authorized Avant service.

Daily and routine maintenance procedures

1. Refueling

Check fuel level and fill the tank if necessary. It is recommended to add fuel before the fuel tank gets empty and keep the tank full to prevent condensation of water into the fuel tank.

Add diesel fuel that complies with standards shown on page 35. Use only clean fuel and take care when refueling the loader to avoid dirt and water from entering the fuel tank.

Kohler KDI

Use only high quality, ultra low sulfur diesel fuel. Use of other fuels is not allowed, as the operation of emission control systems and the engine injection system are dependent on clean and high quality fuel. Use of other type of fuel will cause the engine to not be compliant with emissions standards. Excessive sulfur can damage the injectors and exhaust system.

ULTRA LOW SULFUR DIESEL FUEL ONLY
A417275

Use only clean fuel

Do not use dirty diesel fuel or mixtures of diesel fuel and water since this will cause severe engine damage. Clean fuel helps to prevent the fuel injectors from clogging.

Immediately clean up any spilled fuel. Prevent spilling of fuel by using appropriate equipment.

Never store fuel in galvanized containers (i.e. coated with zinc). Diesel fuel and the galvanized coating react chemically to each other, producing flaking that quickly clogs filters, or causes fuel pump and/or injector failure.

Risk of fire or explosion - Handle fuel with care

DANGER

- Always stop the engine and allow it to cool before refuelling.
- Refuel only in a well ventilated area.
- Use only diesel fuel that is described on page 35.
- Do not overfill the fuel tank. Leave at least 50 mm below the neck of the fuel tank to avoid spilling of fuel.
- Avoid spilling fuel when refuelling. Should this happen, wipe the fuel away immediately in order to avoid risk of fire.
- Keep fuel away from sources of ignition. Do not smoke during refuelling.

NOTICE

Use only clean fuel and take care when refueling the loader to avoid dirt and water from entering the fuel tank. Clean fuel cap and surroundings before opening the cap. Always store fuel properly in an approved container. Water in fuel can cause severe damage to engine injection system.

https://truckmanualshub.com/

If you run out of fuel:

If you are running low on fuel and operate the loader on tilted ground, the loader may stall as fuel flow to the engine may be temporarily interrupted. Add fuel to prevent stall on uneven surfaces.

After running out of fuel, the fuel system need to primed:

- There is a manual priming pump on the fuel filter, which is accessible through a hole in the rear cover. See picture below.
- Press the manual priming pump repeatedly, until it becomes stiff.

2. Check the general condition of the loader

- Check that all safety decals are in place and legible.
  - Never operate loader if safety decals are damaged or missing. Replace missing or damaged safety decals before using the loader.
- Check the underside of the loader and ground for leakages. Also check ground/floor surface for signs of leakage.
  - Never operate the loader or its attachments, if you have noticed a leak. Repair all leaks before use.
- Check the condition of the safety frame, seat belt, lamps, and other safety equipment:
  - Safety frame (ROPS) and protective roof (FOPS) must be fitted. Safety structures must not have visible damage or deformations. They must be replaced with new ones after any incident.
  - Make sure all lighting devices and reflectors are functional and clean
  - Check operation of reverse beeper (if installed).
- Check if the loader must be cleaned before continuing with other daily maintenance procedures in this chapter. Damaged parts or other faults may not be visible if the loader is dirty.
- Check the metal parts for damages or rust.
  - Do not use the loader if you see damaged, bent, corroded, or deformed metal parts. Contact Avant service for service, if necessary.
  - Check the condition of the loader after cleaning of the loader. For more instructions about inspecting the metal structures, bolts, and fittings, see sections starting from page 116.

3. Clean the loader

Cleanliness of the loader is not only a question of outer appearance. A dirty machine will run hotter and will collect more dirt into the air cleaner and radiators, which may shorten the service life of the engine or hydraulic components. Keep engine area clean to prevent engine from overheating.

All surfaces, painted and others, will stay in better condition when they are cleaned regularly. Dirty surfaces can promote fast corrosion.

Make sure all lamps are clean and functional.

Keep the access steps clean

Always keep the access steps, the floor of the loader, and the pedals clean. If there are worn grip surfaces on the steps or the floor, replace them with new ones.

A. Clean the exterior of the loader

Clean the outer surfaces of the loader with water hose and mild detergent.

You can also use a pressure washer to clean the outer surfaces of the loader. Use low pressure and only wash outer surfaces with a pressure washer. To avoid damage, do not spray at hydraulic components, controls of the loader, electric parts, operator's area, decals, or radiators. Never use pressure washer to clean the inner parts of the loader.

Also, wash the hydraulic components (hoses, cylinders), any electric component, decals, and the radiators carefully, never with high pressure washer.

Wipe the hydraulic quick couplings, and the oil tank cover with a rag.

Clean also the space between the front hydraulic motors periodically by removing the cover panel at the front of the loader.

After cleaning the exterior of the loader grease all greasing points.

B. Clean the interior of the loader

Clean cab and interior with appropriate mild detergent and cleaning supplies. Keep the cab and the driver's seat clean to reduce exposure to dust.

C. Clean the engine compartment

Check and clean engine cooling areas, air intake areas, and the external surfaces of engine. Dust, hay, and other combustible materials on and around the engine will cause a fire hazard.

Clean the engine compartment with compressed air and water. Always avoid spraying on the air intake or air filter. Wipe engine and hydraulic pumps carefully with cloth.

Never spray in the engine compartment with a pressure washer. Do not pour water on the engine.

If necessary, use a brush or sponge to clean larger surfaces at the rear frame. Rinse radiators gently with a water hose. Do not scrub or brush radiators to avoid damage.

Service hatch at the bottom of the loader

There is a service hatch under the loader to help with the cleaning of the rear frame. Remove the service hatch, fastened with two bolts, before cleaning the engine bay to remove dirt from the rear frame. Reinstall the cover plate after cleaning to protect the internal components of the loader.

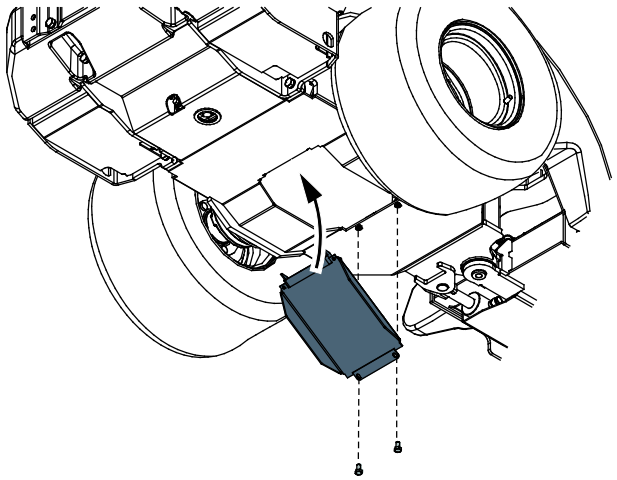

D. Clean cooling systems

NOTICE

Proper cooling is essential. To prevent overheating, clean screens, cooling fins, and other external surfaces of engine. Avoid spraying water at wiring harness or any electrical components.

https://truckmanualshub.com/

NOTICE

The loader is equipped with a hydraulic oil cooler, which is located at the right side of the loader, near the controls of the loader. Make sure to clean the oil cooler cell with compressed air every time you are servicing the loader - and even more frequently if the loader is being used in dusty conditions.

Depending on loader model and installed options, there are two to four cooling fans on the loader: Keep all coolers clean to ensure reliable operation and long service life of the loader. If you operate the loader in dusty conditions, clean the cooling fans and surfaces daily:

1. Hydraulic oil cooler is located on the right side of front frame.
2. Engine cooler in the engine compartment.
3. On 860i, there is also an intercooler system on the engine. Keep the intake area on top of the engine and the fan clean. Do not place any objects on the cooler assembly on top of the engine.
4. If the optional air conditioning system is installed, there is a cooling fan at the rear of the cab.

NOTICE

If the loader is equipped with air conditioning: A condenser of the air condition unit is installed behind the rear window of the Cab. Clean the condenser carefully. The condenser can get damaged easily if handled carelessly. Never use a high pressure washer. You may use compressed air gun carefully.

Avant 860i: Check / clean engine intake cooling fan

The engine intercooler fan and its surrounding area on top of the engine must be kept clean to avoid engine damage, and for the best performance of the engine. Check the fan and the surrounding area on top the engine visually. If there is visible dust or other dirt on them, clean with a wet cloth. Make sure that dirt does not enter the engine air filter intake that is connected to the intercooler assembly.

In demanding operating conditions the cooling fan must be checked before each working shift.

4. Add grease to the lubricating points

NOTICE

Greasing of the pivot points is essential to avoid wear of joints. Lack of greasing can cause significant damage to the articulation joint and boom pivots in short period of time.

The following table and pictures show the location of grease nipples. Check the lubrication points before each work shift.

Make sure all joints are lubricated and clean. Suitable lubrication interval depends heavily on operating conditions. The need for lubrication must be checked at least after every 10 hours of use. Add grease if the joints have become dirty. Adequate lubrication of the joints must be ensured. Lack of lubrication will cause the joints to wear quickly.

Use general purpose machine grease. A grease gun is needed to apply grease to grease nipples. All lubrication nipples are standard R1/8" nipples. Replace any damaged nipples.

Clean the end of the nipple before greasing and add only a small amount of grease at a time. New lubricant will push out dirt from joints. Wipe excess grease with a cloth.

Greasing points on the loader:

Reference			Number of points
A	1.	Articulation joint Left side of loader	2
	2.	Steering cylinder Both ends of steering cylinder, near articulation joint	2
B	3.	Boom pivot pin Both ends of boom pivot	2
	4.	Lift cylinder	2
	5.	Levelling cylinder	2
C	6.	Telescopic boom Grease when boom is completely retracted	2
D	7.	Tilt cylinders	4
	8.	Attachment coupling plate Pivot pins and tilting mechanism	8

A. Articulation joint and steering cylinder

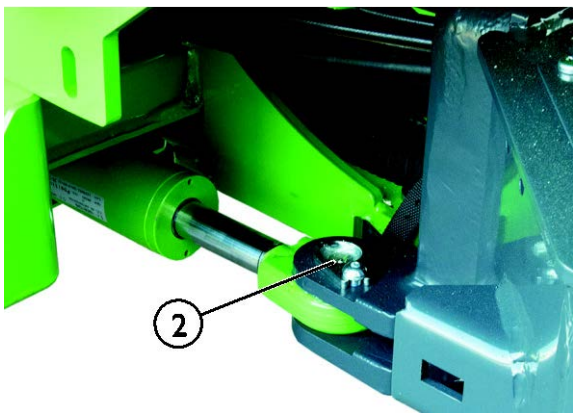

B. Front frame

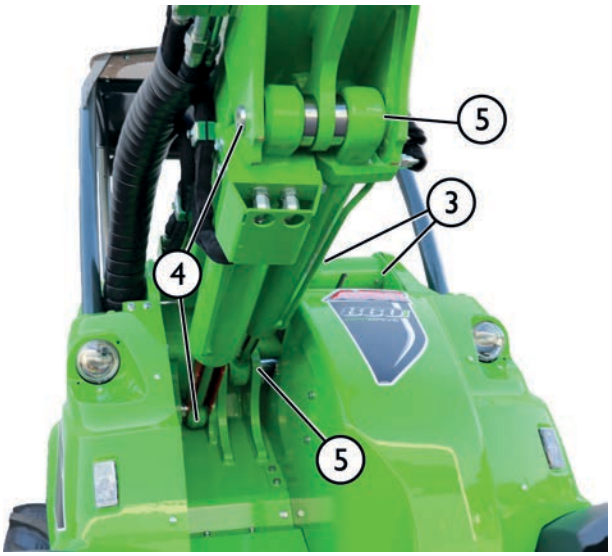

C. Telescopic boom

D. Coupling plate and tilt cylinders

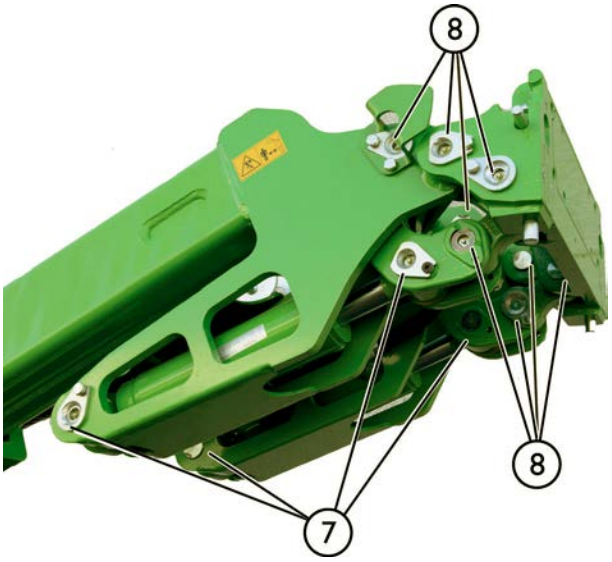

https://truckmanualshub.com/

5. Check the boom, pivot pins, and other metal structures visually

Check the loader structures visually. Do not use the loader if there is visible damage, signs of bending, ruptures, cracks, or buckling. Also check if there is heavy rust.

- All pivot pins must be in good condition and secured in place.

  Make sure that the pivot pins are not worn and there is no excessive slack in the joints. Worn pins lead to wear and failure of the joints, only small slack is acceptable.
- The telescopic boom has slide pads that wear during use. The telescopic inner part of the boom must not move significantly when manually handling it. If it is necessary to adjust or to replace the slide pads, see page 129.
- Check the steering cylinder, its pivot pins, hydraulic fittings, and brackets connecting the cylinder to the front and rear frames.

WARNING

Risk of dropping of load - Check all pivot pins. Check the tightness of the locking screws of all pivot pins. Also check the pivot pin connecting the boom to the front frame. If any of them is loose, use thread locking compound and tighten.

WARNING

Risk of serious injuries - Discontinue the use of the loader and contact Avant service in case the steel structure of the loader gets damaged. A faulty reparation, or wrong methods and materials used for reparation, can cause hazardous failures or further damage the loader.

WARNING

Damaged or modified safety structures do not protect in same way as original ones. In case the ROPS safety frame or the FOPS canopy of the machine gets damaged, the machine must be taken to Avant service for checking. It is not allowed to repair the ROPS and FOPS.

6. Check tightness of bolts, nuts, and fittings

Check tightness of bolts, nuts, and hydraulic fittings regularly. Check visible bolts and hydraulic fittings visually daily. Check bolts and fittings more thoroughly as part of periodic maintenance. Do not start the loader if any bolt, pivot pin, or hydraulic fitting is loose, damaged, or missing.

Check pivot pins

Check the pivot pins and the tightness of the locking screws that lock the pivot pins:

- pins connecting the articulated frames
- pins connecting the steering cylinder
- pin connecting the boom to the front frame
- all pins of the boom and its cylinders

If any pivot pin locking bolt is loose, apply thread locker compound and tighten the bolt.

WARNING

Risk of dropping of load - Check all pivot pins. Check the tightness of the locking screws of all pivot pins. Also check the pivot pin connecting the boom to the front frame. If any of them is loose, use thread locking compound and tighten.

Check wheel nuts

Check tightening of the wheel nuts with a torque wrench. Wheel nuts must be tightened to 225 - 275 Nm. The wheels and nuts settle in after first few hours of use, check the tightness after 5 hours of use.

NOTICE Tighten wheel nuts after first 5 operating hours. Check tightness of wheel nuts regularly.

Other bolts and nuts

Bolts and nuts on the loader are standard metric system type. If replacement of bolt or nut is necessary, replace both at the same time with ones that are identical in size and grade.

Most bolts and nuts on the loader are metric grade 8.8. See the spare parts catalog for information about bolts, nuts, and washers. Contact Avant service if you are unsure of suitable fasteners.

- Check the bolts connecting the rear frame extension to the rear frame. These bolts must be tightened to 227 Nm. These bolts must be grade 10.9.
- Check the fastening of the drive motors. For more information see page 130.

These bolts must be checked after the first 50 hours of service, and then after every 400 hours or 1 year of use, whichever comes first.

Check hydraulic fittings

Check hoses and fittings visible on the loader boom. Push and pull the hoses manually and look if any fitting is loose.

Do not overtighten hydraulic fittings. Tighten any hydraulic fitting only if there are signs of leakage or loose connection. Tightening of a hydraulic fitting unnecessarily can damage it.

Make sure that replacement hoses and fittings are compatible with the fittings on the loader. Contact Avant service when hoses or fittings need to be replaced.

Hydraulic fittings of drive motors and hoses of drive system

Hydraulic fittings of the drive system are equipped with a visible marker where a yellow marker is fully visible, when the fitting is tightened correctly. If a hose or fitting needs to be replaced, use only hoses which are equipped with compatible fittings.

Reuse of hydraulic hoses or fittings

Never reuse pressed fittings that are part of hydraulic hoses. If a hose must be replaced, it must always be equipped with new fittings. Use only high quality hoses and fittings. Hoses must be made with professionally made pressed fittings. Do not use reusable hose fittings.

Tapered JIC-type hydraulic fittings may get damaged when removed and re-tightened. Note that JIC type fittings are not tightened with torque and fitting will break when tightened too much.

7. Check wheels

Check the condition of tyres and rims visually daily. Do not use if there is visible damage on tyres or rims. If a tyre is punctured take the tyre to a professional tyre shop. It may not be possible to repair all punctures safely. Do not repair tyres yourself.

Check tyre pressure with a pressure gauge whenever you suspect wrong pressure. Check the tyre pressures at least monthly. Check tyre pressure when heavy attachments and extra counterweights are not attached.

Check that the tyre models are appropriate for the loader model and listed on page 36. The load and speed rating of the tyre and rim must be appropriate for the loader model.

The correct tyre pressure depends on tyre model and intended load. Refer to Chapter Technical Specifications.

WARNING **Risk of loss of stability due to tyre failure - Never attempt to repair a tyre by yourself.** The loader is equipped with heavy duty tyres that must only be repaired by a qualified tyre technician.

https://truckmanualshub.com/

8. Check the attachment and the quick coupling plate

Check the locking of attachment and locking pins on attachment coupling plate. Check both locking pins:

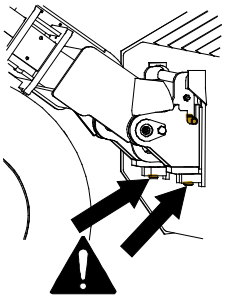

- Both pins must move easily and come through the lower brackets of the attachment.
- To check the attachment and any additional coupling instructions for individual attachments, see the Operator's manual of the corresponding attachment.

The locking pins must return easily to their locking position. Do not operate the loader if the coupling pins do not lock down.

Clean the locking pins when cleaning the loader. Move the locking pins regularly, even if you do not change attachments regularly.

The quick coupling plate and its pin on top of it must not be bent, cracked, or otherwise damaged.

Make sure that the attachment is locked, if an attachment is mounted on the quick coupling plate. Check the operation of the attachment, and position of the hydraulic hoses of the attachment. Hoses must not rub against sharp surfaces, or get stretched or pinned when moving the loader boom and the attachment. See also the operator's manual of the attachment, see page 4.

Hydraulic attachment locking:

If your loader is equipped with hydraulic attachment locking, check that both locking pins move up and lower down completely by using the switch on the dashboard. Do not operate the loader if the attachment locking system pins do not lower down completely.

Use the hydraulic locking periodically even if you don't change attachments.

9. Check hydraulic oil level

Check the level of hydraulic oil with the dipstick of the filler cap. Remove the front panel to access the filler. Keep the loader boom completely lowered.

Check level of hydraulic oil especially after using a new attachment that drains hydraulic oil from the loader as the hydraulic system of the attachment fills up. Check also if you have noticed a leak of hydraulic oil.

Oil level should be near the lower marker on the dipstick (1) when the hydraulic oil is cold.

Tighten the dipstick on its threads for measurement. Refill when necessary, but never exceed the upper limit mark (2). Doing so can cause oil to overflow when lowering the boom.

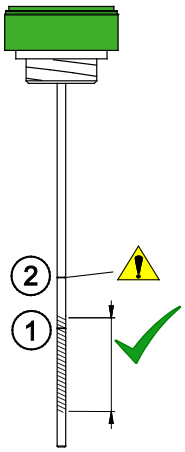

1. Target marker. Fill to this mark when hydraulic system is **cold**.

   The area highlighted in the adjacent figure shows approximately the acceptable level.

2. The second mark on the dipstick indicates max level of hydraulic oil. Oil can reach this level when hydraulic system is **hot**.

Never overfill the hydraulic oil tank. Oil can flow over, or foam inside tank.

There is a breather filter inside the dipstick cap which must be cleaned or changed once a year.

10. Check engine oil level

Check the engine oil level with the dipstick. To get correct result with the dipstick:

1. Park the loader on level surface
2. Allow the engine to cool down and the oil level settle before you check the oil level
3. Push the dipstick all the way in to get the correct reading.

If the engine oil level is not in between the markers on the dipstick, add a small amount of correct type of motor oil to the engine. Use only high quality engine oil that is approved for your loader model. For more information about oil see page 35.

Allow oil level to settle for a moment after adding oil, and check level again. Do not add too much oil to the engine, as it can damage the engine.

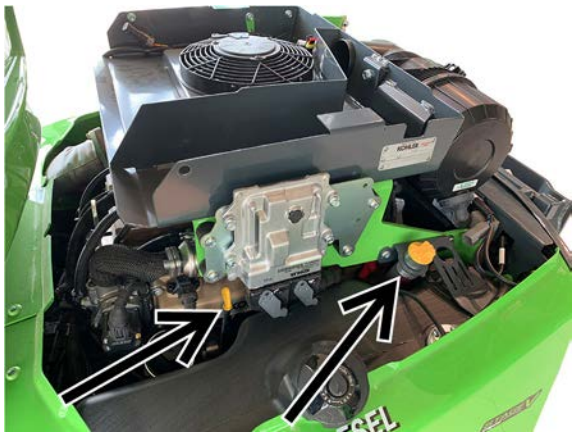

NOTICE

Never add too much oil in the engine - severe engine damage may result. Excessive oil may also cause heavy emissions and thick exhaust smoke. In case of overfill, drain some oil from the engine.

11. Check engine coolant level

Never open the reservoir tank if the engine is hot. Always check the coolant level when the engine is cool.

Risk of burns due to hot coolant - Never open hot radiator or reservoir. Never open the pressurized coolant reservoir while engine is warm. Hot coolant may burst out causing serious burns. Allow engine to cool completely before opening.

The cooling system of the engine uses a pressurized reservoir tank. Coolant level should be above the minimum marker on the reservoir, and at least 3 cm below filler cap.

It is not necessary to open the cap to check the coolant level, the level can be seen through the transparent reservoir.

The coolant reservoir is located in the engine compartment, on the right side of the engine. There is no cap on the radiator itself.

If necessary, add only 50% mixture of glycol antifreeze and clean water to prevent internal corrosion of the engine. Do not mix different type of coolants as they might react chemically. If there is frequent need to add coolant, there may be a leak or other damage in the engine. Contact Avant service.

Check the antifreeze properties of the coolant annually. Change engine coolant after every two years as the anti-corrosion properties of the coolant diminish over time.

https://truckmanualshub.com/

12. Check water separator

Water in fuel can cause significant damage to the injection system of the engine. Always use only clean fuel that is stored in containers that are approved for storing of diesel fuel. The water separator itself may not be able to remove all water from contaminated fuel.

Avant 860i:

On Avant 860i there is a water sensor in the water separator. A light in the dashboard will indicate when the water separator must be drained.

The main fuel filter assembly and water separator is under the panel on left side of the engine.

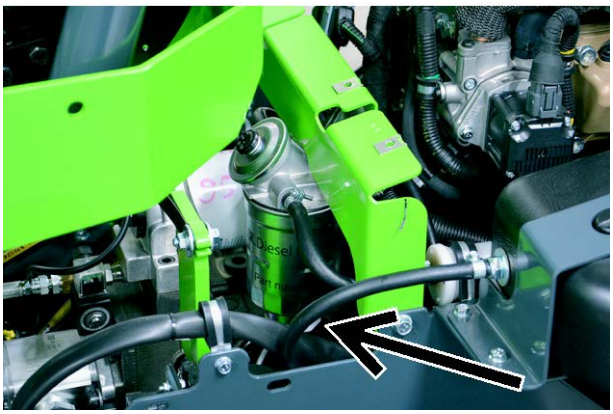

If water sensor indicator light is lit, drain it by turning a small plug on the bottom of the water separator. Collect the water and dispose as used oil. Close the plug tightly.

13. Check engine air filter element

Check, and when necessary clean or replace the air filter element. Replace filter after 400 hours of use or annually.

The engine air filter prevents dust and dirt from entering the engine. In dusty operating conditions it may be necessary to clean the air filter element between its scheduled replacement.

Avant 860i only: A light on the dashboard signals that the air filter element is clogged. Clean or replace the air filter element when the lamp is lit.

1. Squeeze the rubber vent on the filter housing cover to drain water and dirt from the filter.
2. Wipe the outer surface of the air filter housing clean before opening the filter.
3. Carefully remove the filter cartridge by pulling it out.
4. To clean the filter, tap the closed end of the filter gently against a flat, clean surface. **Never use compressed air to clean the filter!**
5. Do not remove the inner element.
6. Clean the inner components of the filter housing with a damp cloth
7. Clean the sealing edges of the air filter.
8. Reinstall the filter cartridge and sealing. Ensure the proper tightness between the filter and housing cover.
9. Replace worn or damaged air filter. If the air filter must be cleaned frequently, it must also be replaced more frequently than listed in the normal maintenance schedule.

NOTICE Never attempt to clean the air filter element with compressed air. The air filter gets damaged easily, allowing dust particles to enter the engine and cause wear.

NOTICE Avoid engine wear and damage - Never operate the loader without a correct air filter cartridge fitted and correctly installed.

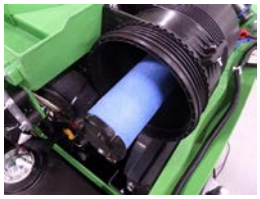

Do not remove the internal air filter element. It is intended to prevent debris from entering the engine during the replacement of the air filter element.

Replace the internal air filter element if you notice dirt or damage on it, or if its colour has changed from its original blue hue. Also, replace both air filter elements if the main air filter has been damaged.

14. Check battery and electric cables

Remove the engine cover and check the cleanness, fastening, and condition of the battery and electric cables.

The battery is located at the rear of the loader, on the right side of the engine. You can do the routine battery related checks by removing only the top panel of the rear frame (engine cover). To fully access the battery, remove the rear right panel of the loader.

WARNING

Risks of short-circuit and exposure to battery acid and lead - Before handling the battery, see safety instructions about handling the battery on page 19.

Check the condition and fastening of the battery, the battery disconnect switch, and its cables

1. Inspect and clean the battery terminals regularly. If the terminals appear to be corroded, clean them.
2. Make sure that the battery is correctly fastened and secured against movement. A battery that moves can damage the electric cables and cause short-circuit.
3. Ensure that you use a battery that is correct size and form so that it can be fastened correctly. Use only a battery that meets the specifications of the original battery.
4. Clean the battery and its surroundings carefully. Also remove the dirt from under and around the battery periodically.

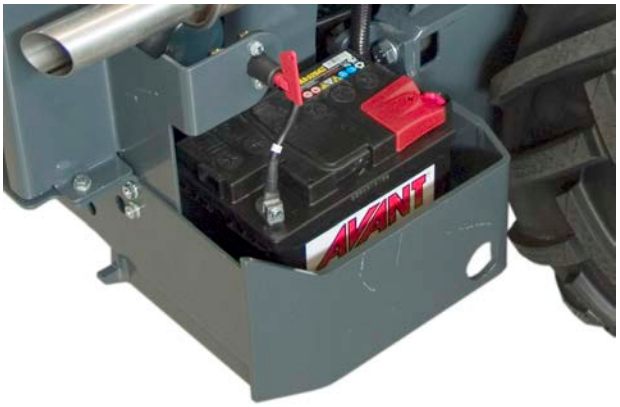

NOTICE

Disconnect (isolate) the battery first by using the battery disconnect switch.

NOTICE

Battery and its terminals contain lead. Before handling the battery, see safety instructions regarding handling of the battery on page 19.

The battery is sealed and maintenance free, meaning that it doesn't need and can't be refilled with water during its lifetime. Do not attempt to open the cover of the battery.

WARNING

Risk of fire - Make sure the battery is secured against movement. The insulators of cables of a moving battery may get damaged, causing risk of fire, short-circuit, and sparks. A moving battery can also short-circuit due to contact between battery pole and the frame of the loader. Battery can get damaged due to movements. Always ensure that the battery is securely fastened from its base flange. Keep the battery and its surrounding area clean so that dirt or other material does not damage the battery.

Check electric cables of the loader

Check other electric cables and their routing and fastening. If you see signs of damage on electric cables or components, stop using the loader and disconnect the battery. Replace the cables and insulators before you continue to use the loader.

1. Make sure that the cables in the engine compartment cannot chafe against any sharp edges. Correct the routing and fastening of cables, if necessary. Replace damaged cables.
2. Check how the cables are routed through the articulation joint of the loader. The cables should not be pinned in between hydraulic hoses, and the cables should not chafe against other parts of the loader.
3. Check cables for signs of aging and wear. If a cable or its insulation has damaged, worn, or become brittle, there is an increased risk of short-circuit and fire.
4. Check the condition and fastening of the battery disconnect switch and its cables. When the battery disconnect switch is in position OFF, turn the ignition key to test the disconnect switch. If the disconnect switch is damaged, disconnect battery cables immediately and replace the switch.

https://truckmanualshub.com/

15. Check cab air filter

If the loader is equipped with an enclosed cab

A replaceable cab air filter can be changed from inside the cab, through the air recirculation system next to the driver seat. The cartridge should be checked and changed more often when operating the loader in dusty conditions.

Clean the housing of the filter and make sure dust and dirt will not enter the air ducts.

Check that the air filter fits tightly and makes a good seal with its casing. If there are signs of dust entering the ducts after the filter, the air ducts must be cleaned, and a new filter must be installed making sure that its seal makes good contact with its casing.

1. Loosen and remove the screws (2 pcs) from the air recirculation system frame.

2. Pull the frame and filter housing away from its slot. Notice that it might be tight.

3. Now you can see the filter element inside the slot.

4. Move the filter element slightly outwards from its place and then pull it away.
5. Clean or replace the filter element.

DANGER

Risk of severe illness from exposure to dust - Never use the loader if the cab air filter is removed. Make sure that a cab air filter is correctly installed to reduce exposure to dust. Consider using a breathing mask in dusty conditions.

Inspections after starting the loader

16. Test the movements of boom

- The boom should move smoothly to all extreme positions, when using it without an attachment.
- If the telescopic function of the boom starts to stick under load, add grease to the lubrication points on top of the boom. Do not apply grease directly on the inner boom as it will collect dirt and cause wear. Extend the boom fully and spray PTFE lubricant onto the inner boom.
- If the wear pads are worn, there may be too much play between the boom sections. If there is noticeable play, adjust or replace the slide pads of the boom.
- If an attachment is fitted, check that the boom moves smoothly within its normal operating range.

  Hydraulic hoses or electric cables must not get pinched or stretched in any position of the boom

CAUTION

Risk of collision - Avoid moving the attachment to a position where it can contact the loader. Some attachments may reach the front tyres, boom, or structures of the loader when moving the boom or tilting to the extreme positions. Use any attachment only for its intended use.

17. Test drive control and steering

- Check operation of pedals and steering. Pedals must move freely and not get stuck or feel stiff.
- Check that loader stops when not pressing the drive pedals. Do not use the loader if the braking performance is decreased, or if the loader creeps.
- Allow the loader to warm up and check steering. When the engine is running, turning the steering wheel should be easy. When the engine is off the steering will work but it will need more effort. There is a built-in backup steering that makes it possible to turn the loader in case the hydraulic flow to steering is interrupted.

If you notice any trouble with pedals, stopping of the loader, creeping, or trouble with normal or back-up steering, switch on the parking brake, shut down the loader, and service the loader before continuing use.

18. Test parking brake

Test the parking brake periodically.

1. When the loader is running, switch on the parking brake.
2. Switch drive speed mode to slow.
3. Press drive pedals. The loader must not move when parking brake is on.
4. Increase engine RPM and test the parking brake to both front and rear directions.

If the loader moves when drive pedals are pressed, stop using the loader. Service the brakes before using the loader.

https://truckmanualshub.com/

If you add or remove counterweights

19. Calibrate load sensor

The load sensor must be calibrated in case you add or remove rear weights on the machine. Check and calibrate load sensor if you add or remove more than two 29 kg individual weights.

WARNING

Risk of tipping over - The load sensor may not give correct information if it is not calibrated after adding or removing counterweights. The load sensor must be calibrated if you add or remove two or more AVANT rear weights (+/- 58 kg).

WARNING

Risk of tipping of the loader and crushing under lowering load - Do the calibration on flat, solid ground, and do not go near the boom of the loader. During the calibration procedure of the load sensor it is necessary to lift a heavy load, deliberately causing the loader to tip forward.

NOTICE

It is not possible to calibrate the load sensor by lifting the rear of the loader with a jack or lifting equipment. For correct adjustment the rear wheels must be lifted off the ground using the loader boom

To calibrate the load sensor:

1. Add or remove the counterweights from the loader.
2. Remove the engine cover plate and the lower left side rear cover plate.
3. Lift something so heavy with the loader that the rear wheels lift off the ground.

   Use the loader boom to lift the rear wheels slightly off the ground.

   Lift only solid objects when doing the calibration. If you lift soft materials e.g. sand with bucket, the loader can move if sand starts to drain from the bucket.
4. Loosen the bolt of one end of the load sensor shown in the picture below using two 13 mm keys. As the two steel strips come in contact and trigger the switch, tighten the screw.

   Keep your hands and feet away from the rear wheels while doing the calibration.

   Do not allow anyone to stay at the driver's seat of the loader while adjusting the load sensor - Accidental movements of the loader can injure!

   Keep away from the hot parts of the engine while doing the calibration.
5. Use the loader boom to lower the rear wheels back to the ground.
6. Check function of the load sensor. Check that the load sensor is triggered before the rear wheels lose contact with ground. Re-adjust the sensor if necessary.
7. Mount the cover plates. Check that the bolts that secure the counterweights to the loader are tightened.

Periodic service

These maintenance and service procedures may require special equipment, tools, or skills. They are recommended only for experienced and knowledgeable individuals.

1. Change engine air filter

Change engine air filter at least annually. Change the filter more frequently if operating the loader in dusty conditions where the filter needs to be cleaned often. To change the filter follow the instructions on page 120.

2. Change engine oil

Change oil while engine is warm. Engine oil can be removed with a suction pump or drained to a suitable container by opening the drain plug on the bottom of the engine.

Add only correct type of oil. See the information in this manual about type and volume of engine oil. Do not start the engine if too much oil is added, remove excessive oil before start.

3. Change engine oil filter

Kohler KDI

Engine oil filter is located on the left hand side of the machine, and can be easily seen in the engine compartment.

To change the filter:

1. Loosen the filter housing cover by two turns.
2. Wait for at least two minutes to allow oil to drain from the filter housing
3. Remove the housing cover

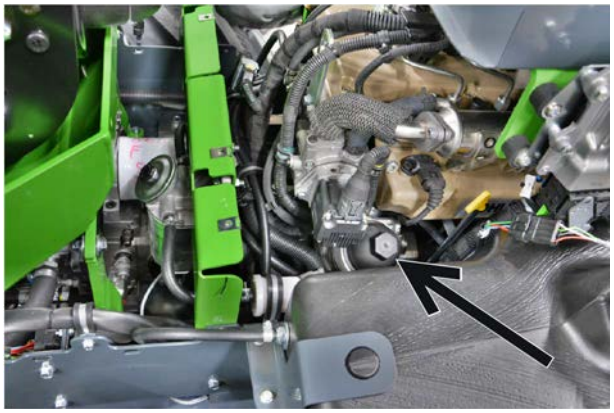

4. Change hydraulic oil

When changing hydraulic oil, you can remove the oil with a suction pump or by opening the drain plug on the right side of the front frame, next to the articulation joint. In both cases it is important to clean the magnetic drain plug. Hydraulic oil tank capacity is 50 litres.

Hydraulic oil type

Always use correct type of clean, high-quality hydraulic oil with extra lubrication additives. Recommended oil types are:

- ISO VG-46 certified mineral oil
- Mobil SHC™ Hydraulic EAL biodegradable mineral oil based hydraulic oil

If ambient temperature is hot, higher viscosity oil may be required. Contact your Avant dealer or authorized service.

In freezing temperatures use high quality oil which has wide viscosity index, and which is also intended to be used in cold temperatures. Correct type of oil makes cold starting easier, and improves the performance of the loader in cold temperatures.

NOTICE

Never use plant based bio oils. Only the bio oil type shown above is approved for use. It ensures wear resistance and performance of the hydraulic system. Only this oil can be added without flushing the hydraulic oil circuits. Handle waste bio oil as normal waste oil. Never leave any oils into environment. Always dispose of hydraulic oil following local regulations.

https://truckmanualshub.com/

5. Change hydraulic oil filters

Hydraulic oil return filter:

- Located on top of the hydraulic tank, under the cover front cover. Take off the cover and replace the oil filter cartridge.

Hydraulic pressure filter:

- Hydraulic oil pressure filter is located on top the hydraulic pump assembly. Use general filter replacement tool to unscrew the filter. Collect all waste oil.

  When installing a new filter, rub its seal with oil.

6. Clean or replace hydraulic oil tank breather

There is a breather filter inside the dipstick cap which must be cleaned or changed once a year.

7. Change fuel filters

In demanding operating environment, or when frequently adding fuel from fuel canisters, the fuel filters must be changed more frequently than the recommended service interval.

The fuel lines are connected to the main filter through a pre filter. The fuel pre filter is located on the left hand side of the engine, near the fuel tank.

Replace fuel filters carefully to avoid fuel spill. Make sure to keep all parts clean during service. Wipe all spilled fuel thoroughly. Service only when engine is cold. Check the condition of the fuel hoses and replace any damaged or loose hose clamps.

Avant 860i fuel filters

The main fuel filter and water separator assembly is located on the left side of the loader, and its top is accessible when all covers are installed on the loader.

After replacing the fuel filter, prime the fuel system by pressing the manual pump on the filter repeatedly, until it becomes stiff. Shown in the following picture:

1. Main fuel filter and water separator housing assembly
2. Manual fuel pump button
3. Fuel pre filter

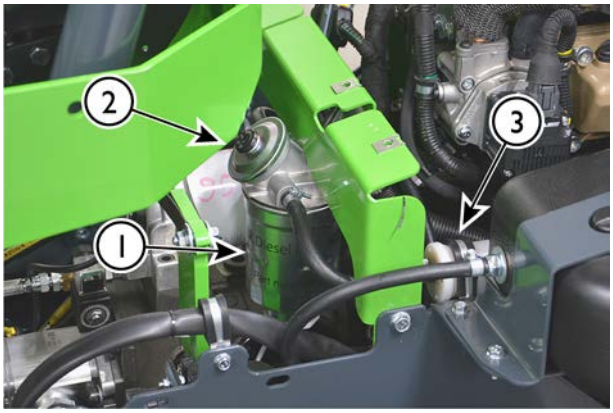

8. Check fuel lines

- Check all fuel lines and hose clamps for signs of wear or damage. Check that the fuel lines are routed so that they do not get damaged due to abrasion. In case a fuel hose needs to be replaced, replace all hoses and clamps at the same time. Use fuel line that meets original specifications. Make sure that fuel lines are not tied to electric cables.
- Check the fuel tank externally. Check for abrasions, signs of deformation, and other wear. Damaged fuel tank must be replaced.
- Check the fuel cap and its threads. Clean the cap if necessary. Check that the fuel cap tightens on threads of the fuel tank and that the ratchet system of the cap works. Use only original type of fuel cap.

9. Clean fuel tank

Drain and clean the fuel tank annually. If you refuel the loader frequently with fuel containers the fuel tank may need to be cleaned more frequently.

To minimise waste operate the loader until the fuel tank is near empty before cleaning the fuel tank or taking the loader to annual service. To clean the fuel tank remove the fuel tank from the loader, flush the fuel tank by adding a small amount of fresh fuel, then shake the tank, and finally drain fuel from the tank to a waste fuel container. Repeat this a few times.

Take waste fuel to appropriate recycling and disposal station which can dispose of used fuel properly. Never drain fuel or oil into the environment or to sewage drains.

10. Check the battery and its cables, installation, condition, and charge capacity

Check the cleanliness, fastening, and condition of the battery and its electric cables as shown on page 120.

Performance of the battery

If the performance of the battery has degraded, test the performance of the battery with dedicated service tool. A voltage reading of a battery does not give good indication of its condition. Checking the performance of the battery requires a suitable testing tool, contact your Avant service.

If necessary, replace the battery with a battery that is identical type and size as the original one. Make sure the battery is fastened correctly, and that battery cables are in good condition. Also check that the cables are routed and fastened so that they will not get damaged in use.

The battery is sealed and maintenance free, meaning that it doesn't need and can’t be refilled with water during its lifetime. Do not attempt to open the cover of the battery.

Battery type:

If the battery needs to be replaced, replace it only with a correct type of battery. Wrong type of battery can cause risks of fire, explosion, and release of battery acid. The battery must meet the specifications of the original battery.

Part number: 65197

Type: 12 V, DIN 575-12 >730A 75 Ah

Size: L=282 mm H=175 mm W=185 mm

Always handle batteries with care. Always recycle used batteries.

11. Check electric cables, relays, and other electric components

Check other electric cables and their routing and fastening as shown on page 120. If you see signs of damage on electric cables or components, stop using the loader and disconnect the battery. Replace the cables and insulators before you continue to use the loader.

Check the relays, cables, and fuse boxes near the hydraulic oil cooler on the right side of front frame. Make sure all connectors are fully in place. Check all cables and individual conductors for signs of damage.

12. Check hydraulic hoses and fittings

Check the positioning and routing of the hydraulic hoses. The outer layer of any hydraulic hose must not be damaged so that any inner layer is visible. Replace hoses that show signs of damage.

Move the hoses manually and see if the fittings of the hoses are loose. Check if hydraulic fittings show signs of leakage.

https://truckmanualshub.com/

Hydraulic hoses age over time. Exposure to sunlight can accelerate aging of the hoses. Replace any hose that has cracks on its surface when you bend the hose.

13. Measure pressures of hydraulic circuits

It is recommended to leave the measurement and adjustment of hydraulic pressures to qualified service technicians. At minimum, a hydraulic pressure gauge with appropriate measurement scale and fittings are required to complete the measurement.

Adjustment should be left for qualified service technicians. The specified pressures for each hydraulic circuit must not be exceeded. Wrongly made adjustment can cause significant damage to the hydraulic components of the loader, and to the metal structures of the loader. Also attachments may get damaged.

WARNING

Risk of injection of hydraulic oil - Wrong handling of the hydraulic system or wrong tools can cause ejection of hydraulic oil. It is recommended that pressures should only be checked or adjusted by a competent and experienced technician. Contact your AVANT dealer if you need assistance.

Pressure measurement from multiconnector

To measure the pressure of the auxiliary hydraulics, it recommended to use the pressure gauge adapter A422475.

Boom control valve pressure

There are two pressure relief valves at the main control valve of the boom and auxiliary hydraulics. The auxiliary hydraulics pressure can be measured from the multiconnector, but the boom pressure must be measured from the valve assembly with a pressure gauge that has a measurement fitting. Contact Avant service for measurement and adjustment.

1. Auxiliary hydraulics pressure relief valve
2. Boom hydraulics pressure relief valve
3. Boom pressure measurement fitting

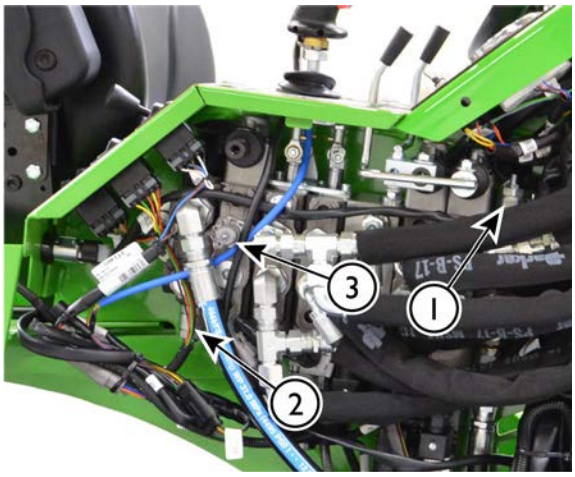

NOTICE

Never adjust pressure to higher level than recommended setting. The electric drive system is designed to operate at the intended pressure level. Other settings can damage electric drive, modify the response of the controls, and decrease battery life. Warranty will not cover for damages caused by wrong pressure setting. Never remove tamper resistant seals from pressure relief valves.

Drive pressure check

Drive pressure should be checked only by qualified service technicians. If you suspect that the pulling force of the loader has decreased contact your nearest Avant service. There are two pressure relief cartridges which have fixed pressure setting. Also the power control valve, the hydraulic drive motors, drive pump feed pressure, and brake release pressure should be checked when investigating drive system related troubles.

The drive pressure can be checked only with a pressure gauge connected to the drive pump valve block. A pressure gauge with a minimum range of up to 400 bar is needed. The setting of the fixed pressure relief cartridges can not be adjusted.

NOTICE Drive pressure check is recommended only for experienced service professionals. Special instruments are required.

Adjusting hydraulic pressures

Adjustment of hydraulic pressures should be left for qualified service technicians. If you have the equipment and skills to do the adjustment yourself, keep the following in mind.

1. Turn adjustment screw of a pressure relief valve only with small increments, max 1/8 rounds at a time.
2. Check pressure after each adjustment.
3. Check pressure once again after tightening the securing cap nut back.
4. Make sure the pressure does not exceed specified values.

DANGER Never exceed the recommended hydraulic pressure settings. Excessive hydraulic pressure may lead to hydraulic oil ejection by hose burst or component failure. Wrong adjustment will damage or wear the hydraulic pumps, cylinders, and hydraulic motors. Warranty does not cover damages caused by excessive hydraulic pressure.

14. Measure and adjust charge pressure of variable displacement pump

A hydraulic pump that is integrated in the housing of the drive pump circulates oil through the closed loop hydrostatic drive system. This flushing is important as it cools the drive hydraulics and drive motors. The pressure and output of the charge pump also keeps the parking brake open. Special measurement tools and training is required for testing the charge pump. Contact your nearest Avant service.

15. Measure and adjust power control valve

The power control valve of the hydraulic drive pump optimizes driving performance of the loader by reducing stalling of the loader when load increases quickly, and by making starting and stopping of the loader smoother. The valve is installed to the variable displacement pump of the hydrostatic drive. If the loader stalls easily when pressing the drive pedals, or when starting and stopping of the loader is not smooth, contact your nearest Avant service partner for check and adjustment of the power control valve. The initial system settings may change as parts of the hydraulic system settle after taking the loader into use. Special tools, measurement devices, and training are required to complete this operation safely and correctly.

16. Adjust and replace slide pads of telescopic boom

The telescopic boom is equipped with replaceable slide pads. The slide pads are wear parts that wear during normal use of the telescopic function. All slide pads can be replaced, and the nylon slide pads on the outer boom can also be adjusted. Adjustment or replacement of the slide pads is necessary to compensate for wear and to adjust the play between the outer and inner telescopic boom.

- At the lower end of the outer boom there are pairs of nylon slide pads 1 and 2, accessible from around the boom.
- In addition, there are pairs of aluminium-bronze alloy slide pads 3 and 4, at the upper end of the inner boom. To access pads 3 and 4, the inner boom must be separated from the outer boom. Lifting equipment is needed to complete this. It is recommended to leave the check and replacement of slide pads of the inner boom to professional service.

https://truckmanualshub.com/

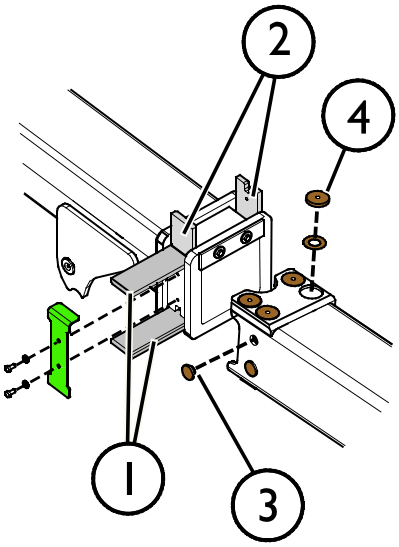

Slide pads 1 and 2

Slide pads 1 and 2 can be adjusted by mounting thin adjustment sheets between the boom and the slide pad.

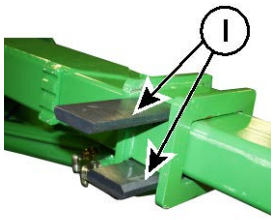

Fully extend the telescope and press the boom gently against the ground. This way it is the easiest to mount an adjustment sheet under lower slide pad 1.

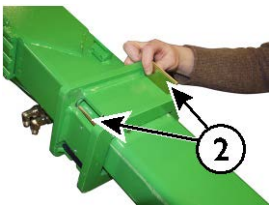

However, if there is substantial wear in the slide pads it is advisable to replace both pads 1.

Slide pads 3 and 4

Slide pads 3 and 4 at the upper end of the inner boom last long in normal use. They should be checked after every 400 operating hours and replaced at least after 800 hours of use.

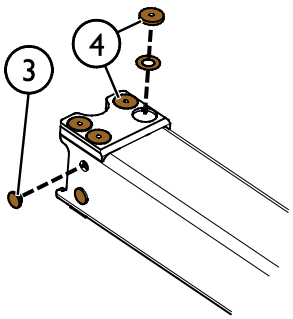

To check these slide pads, take the inner boom completely out of the outer boom. If the pads have worn so much that they are in level with the boom, or excessive boom play can't be removed by adjusting slide pads 1 and 2, replace all slide pads.

NOTICE

To replace slide pads 3 and 4 the boom must be partially disassembled. Lifting equipment is required in order to do the service safely. It is recommended to leave this service operation to your nearest Avant service partner.

Slide pad part numbers		
Slide pad 1		A430928
	Adjustment sheet, long:	A430931
Slide pad 2		A430929
	Adjustment sheet, short:	A430932
Slide pad 3		A48343
Slide pad 4		A47922
	Spacer under slide pad 4	A47941

17. Check mounting and operation of drive motors

Check the tightness of the drive motor fastening bolts. The bolts should be tightened to 200 Nm.

Test the functionality of the drive motors by pushing against a fixed structure, or a pile of sand, for example. All four wheels should spin.

18. Test and check engine for vibrations, noise, and general performance

Abnormal noise and vibration of the engine should be checked as soon as it has been noticed. Noise or vibration can be signs of developing engine damage that should be repaired as soon as possible. Contact your Avant service if you suspect abnormal vibration or noise. The turbocharger of the Kohler engine may have a whistling sound which is normal and can be typically heard also at idle rpm.

The cooling fan and parts related to the cooling system have a significant effect on the engine noise. Check that the cooling fan, air ducts, and any dampening materials are in good condition.

Check the vibration damping mounting pads of the engine. Replace damaged dampers.

A correctly operating engine keeps its rpm steady at all rpm levels when there is no load or only small load. If the engine stalls, or the rpm level changes unusually, the engine should be checked and serviced. Check that the engine reaches its normal operating temperature and holds it steady. If you suspect or if you have noticed changes in the performance of the engine, if the oil consumption has increased, or if you notice a change in the colour of the exhaust gas, contact your Avant service point.

19. Check ECU diagnostics (Avant 860i only)

If the Check engine indicator light is lit the loader should be serviced at the earliest opportunity. The performance of the engine may be reduced, or the emissions of the engine may have increased due to a fault in the engine.

Some engine related error codes can be checked from the Error information page of the multi-function display. If error messages or codes are active, contact Avant service to solve the detected faults.

Some diagnostics error codes are only stored in the ECU memory and may not show the Check engine or Engine malfunction symbols on the multi-function display. Full diagnostics of the engine ECU require Kohler service tools. Contact your Avant service for information. A diagnostics CAN port near the dashboard is intended for use by service technicians.

20. Check the safety frame, seat, seat belt, lamps, and other safety related equipment

Check, test, and, if necessary, clean all safety related equipment of the loader.

- Check the ROPS and FOPS structures for visible damages. If ROPS or FOPS is damaged they must be replaced with new ones.
- Check the installation, condition, and adjustments of the seat. Make sure the suspension system works and that it can be adjusted. Test all adjustments. Clean the surface of the seat with appropriate cleaning supplies.
- Check and test the seat belt. Make sure the buckle locks firmly and can be released easily. Test the reeling of the seat belt, the belt must reel in completely, and it must lock instantly when pulling the belt quickly. Clean the seat belt with damp cloth and mild soap.
- Test all lamps and lighting devices. If the loader is equipped with road traffic light kit, check the alignment of the headlights. Check and clean all reflecting parts.
- Check the grip surfaces on the floor of the loader and on the access steps. Clean the surfaces and replace if necessary.
- Check that the boom service support and the frame lock are stored in their place and that they have the necessary locking parts.
- Test the function of the reverse beeper, if installed on the loader.

If the loader is equipped with a cab:

- Check the condition of the windscreen. Cracked or worn windscreen must be replaced.
- Check the opening of the side window and door. Test the side window hatch pin so that the window can be opened completely.
- Check the emergency window hammer and its markings. Make sure a hammer is available and usable for emergency situations.
- Check that the door and windows close firmly and that their gaskets are in good condition.
- Check the operation of the ventilation fan. The fan must be in working order.
- Check that the interior panels are not damaged and that they are installed tightly. Loose or damaged panels may cause contact with sharp edges, and may in some cases cause difficulties to operate the controls of the loader.

21. Test function of all controls and equipment

Check the condition and test the function of additional control switches and equipment installed on the loader. Depending on which options are installed, check, for example, the electric connector and switching of the attachment control switch pack, anti-slip valve, drive speed selection switch, boom floating, work lights, and other functions annually.

https://truckmanualshub.com/

22. Service the hydraulic attachment locking

Check the correct locking of the attachment daily before starting to use the loader and its attachments. Both locking pins must lower easily completely down, through the holes of the brackets of an attachment.

If the locking pins do not lower completely down stop using the loader and service the quick coupling plate.

Remove the cover panels on front of the quick coupling plate. Clean the cavities around the locking pins and the hydraulic cylinder and its linkage.

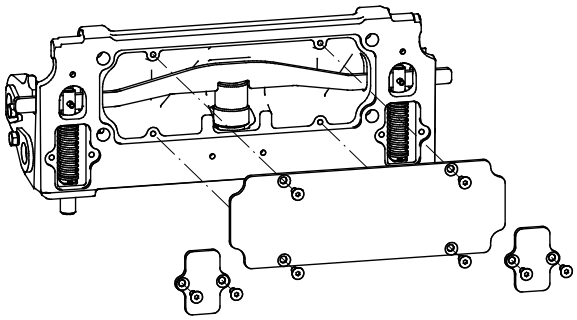

23. Check articulation joint

Check for excessive play and ensure proper lubrication

Check the articulation joint at the first 50 hour service, and then at least after every 400 hours of use or annually. If there is play in the joint, the joint must be serviced to prevent severe damage of the joint.

If there is play in the joint and it is not repaired in due time, the play will increase rapidly, causing severe damage to the front and rear frames. Wear can be slowed with proper lubrication and by removing play, if these actions are made in early stages. Contact Avant service if there is play in the articulation joint.

Wear of the articulation joint is usually caused by lack of lubrication. Keep the loader clean and ensure adequate lubrication of the articulation joint.

Check tightness of bolts

The articulation joint is fastened to the rear frame with a series of M12 Allen bolts. Check the tightness of the bolts after the first 50 hours of use and then after every 400 hours, or annually.

The bolts of the articulation joint must be tightened to 136 Nm.

If loader is equipped with enclosed cab

24. Change cab air filter

Change the cab air filter at least once a year. If you operate the loader frequently in dusty conditions change the filter more often. For example, if you use the loader for seasonal street cleaning with a brush, check the filter before and change the filter after the seasonal work is completed.

Check that the air filter fits tightly and makes a good seal with its casing. If there are signs of dust entering the ducts after the filter, the air ducts must be cleaned, and a new filter must be installed making sure that its seal makes good contact with its casing.

25. Service cab air conditioning

To keep the air conditioning system functioning efficiently, the system should be serviced after every 2 years. Service of A/C systems is only allowed for licensed professionals.

Refrigerant type: R134a

Amount: ca. 760 g

Oil type: PAG

Filters - list of filters

In order to receive regular service parts easily, you can order the following service packages from your dealer. To order parts please contact your Avant dealer or authorized service.

Filters	860i
Filter kit	A418900
Air filter	66060
Fuel filter	66062
Fuel filter, pre filter	64657
Engine oil filter	66063
Hydraulic oil pressure filter	64807
Hydraulic oil return filter	65227
Cab air filter cartridge, cab GT	65118
Air filter, inner screen element (replace only when necessary)	66061

Electric system & fuses

Fuses

Locations of the fuse boxes are shown in this chapter. In the event of electric malfunction, always check the fuses first. If a fuse is blown repeatedly, search for cause of burning fuse. Electric cables may be damaged. Contact Avant service, if necessary.

If any of fuse or relay needs to be replaced, make sure to always use correct type of spare parts. Always use fuses and relays with correct rating. Wrong types of fuses or relays can cause risk of fire or damage to wiring or other electric components.

Fuse box for options and controls

An easily accessible fuse box is located on the right side panel near drivers seat.

12 V Fuse box 1

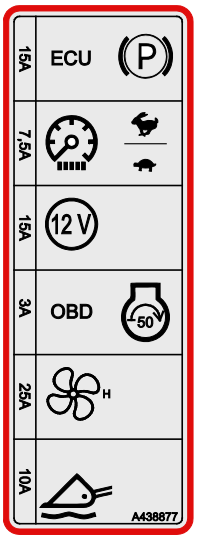

1 ECU
Parking brake (release)

2 Dashboard
Drive speed range selection switch

3 12 V outlet

4 ECU diagnostics
ECU start control

5 Hydraulic oil cooler fan fuse

6 Smooth drive

12 V Fuse box 2

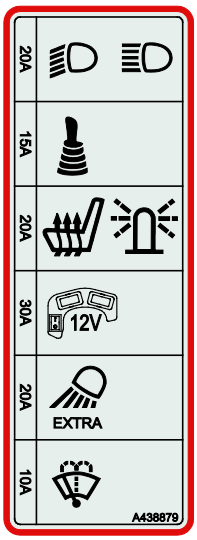

1 Lights
Road traffic lights

2 Joystick

3 Seat heater
Warning beacon

4 Opticontrol

5 Extra work lights

6 Windscreen washer and wiper

Fuses in Cab GT

There is an additional fuse box in cab GT, near the seat belt buckle.

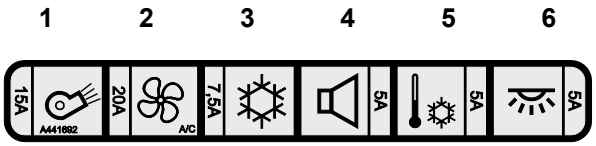

1. Heater fan
2. Condenser fan
3. Compressor
4. Radio
5. Air conditioner thermostat
6. Indoor lights

Hydraulic oil cooler fan fuse

The red indicator on the dashboard indicates blown hydraulic oil cooler fan fuse. If the indicator is lit, check the 25 A fuse of the oil cooler fan. Check that the cooler fan is clean, can rotate freely, and is not blocked. Contact Avant service if necessary.

https://truckmanualshub.com/

Relays

Depending on installed options, there are relays installed to the frame of the hydraulic oil cooler at the front right side of the loader. The number and function of installed relays depends on installed options and equipment on the loader. In case of trouble related to a electric function, and the fuse is not blown, check the relays.

Relays on the frame of hydraulic oil cooler:

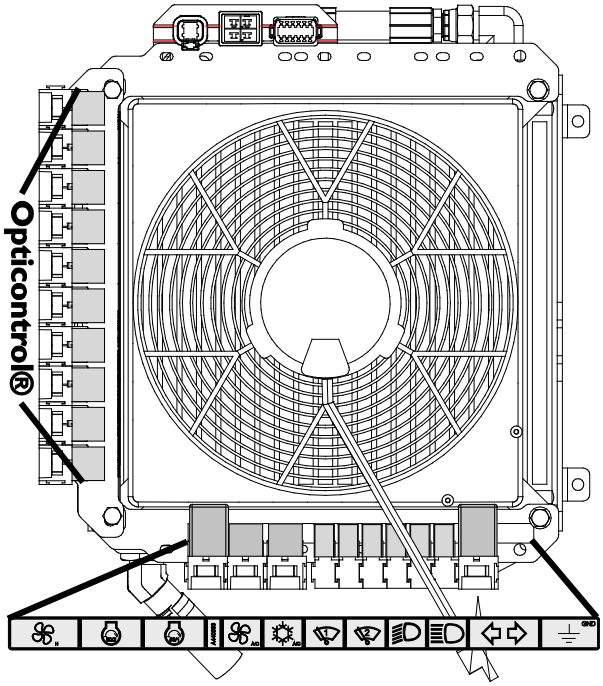

Vehicle Power Distribution Unit

Instead of separate relays, a vehicle ECU with electric power distribution unit (PDU) at the rear right of the loader controls the electric functions of the loader.

There are additional fuses within the unit. In case of trouble related to a electric function, and the fuses in the regular fuse boxes are not blown, check the PDU. Always disconnect the battery before opening the PDU housing. Also, wipe the cover and its surrounding clean from dust and moisture before opening it. Make sure the seal is clean and fits perfectly when closing the cover.

Jump start and auxiliary power

The engine can be started with auxiliary power if necessary, by using appropriate jump start cables that have large conductor cross section. Alternatively, a separate start booster with its internal battery can be used, refer to its instructions about correct use.

Jump start and auxiliary power

The engine can be started with auxiliary power if necessary, by using appropriate (strong enough) jump start cables.

1. Connect first one end of the positive cable to the positive (+) post of the dead battery.
2. Connect the other end of the positive jumper cable to the positive (+) post of the charged battery.
3. Connect one end of the negative jumper cable to the negative (-) post of the charged battery.
4. Connect the other end of the negative jumper cable to a solid, non-paint coated metal part of the engine of the dead loader, as far from the dead battery as possible.

WARNING

Risk of battery acid spill and other injuries - Use jump start procedure only when other means for start are not available. A battery can explode and spill battery acid during jump start procedure, especially if it is damaged, worn out, or frozen. Jump start must be used only when other means are not available. Replace a worn battery, do not jump start repeatedly. Charge the battery with an external charger whenever it is possible.

WARNING

Risk of uncontrolled movement and contact with moving or hot parts, sparks and fire, and engine damage - Never bypass battery or connect cables directly to starter motor. There is a risk of serious injuries caused by moving parts of the engine, and moving of the loader. Also, the engine or its electric components or control unit may get damaged. Always follow the recommended jump start procedure, or use a separate auxiliary starter battery, if the loader can't be started with its own battery.

CAUTION

Read Operator's Manual of the vehicle that is giving auxiliary power, in order to make sure that the vehicle suited for the purpose. The vehicle can get damaged when giving auxiliary starting power.

NOTICE

Always read the Operator’s manual of the vehicle that is giving or receiving auxiliary power. The manufacturer of the other vehicle may have prohibited giving or receiving auxiliary power by jump cables, and there may be special provisions related to the connection of jump start cables. Not all vehicles are designed to give or receive power for jump start. The vehicle can get severely damaged when giving or receiving auxiliary starting power. Avant takes no responsibility of damages caused by giving or receiving auxiliary power.

https://truckmanualshub.com/

CAUTION

Risk of electric shock, sparks, fire, and burns - Always use good quality jump start cables that have good clamps and insulators. Make sure the cross section of the conducting wire is large enough for diesel engines. Always follow the recommended connecting and disconnecting procedure. Also check the manual of the other vehicle giving or receiving power for possible additional instructions. Contact service if unsure how to connect the cables correctly.

Cables that are damaged, not clamped correctly, or cables which have small cross section of the conducting cable, may become extremely hot or even burn. See the instructions that are provided by the manufacturer of the jump start cables. The current through the cables is high during start of the diesel engine of the loader.

End of life disposal

When the loader is at the end of its useful life recycle and dispose of the loader properly. Drain and collect all fluids and handle following the current local regulations. Dismantle the loader and separate the different materials, such as plastic, steel, and rubber, and recycle each material. Never leave fluids or material in the environment.

https://truckmanualshub.com/

Troubleshoot

Listed below are possible causes for typical problems. Further engine related causes can be found in the operator's manual of the engine. In case there is trouble with the operation of the machine, check both troubleshoot lists and if problem is not solved, contact your nearest service point.

Problem	Possible cause	Remedy
Engine does not crank	Driver presence detection	Driver must be seated on the driver's seat before engine can be started. PTO switch must be in position OFF.
	Drive pedal is pressed	Release drive pedal. Engine does not start if drive pedal is pressed.
	Main switch off	Turn on the main switch.
	Battery discharged, battery voltage too low	Check and charge the battery.
	Blown fuse	Check fuses. If fuse blows again, find out the cause. Contact service.
		Also check the main fuse that is installed in the battery cables.
	Battery cables poorly connected	Check battery cables and posts. Clean and re-tighten, if necessary.
	Engine related trouble	Check engine ECU trouble codes from the info pages of the multi-function display.
Engine cranks but does not start, or starts and stops immediately	Auxiliary hydraulics control lever is in locking position.	Turn the lever in center (neutral) position.
	Low fuel level, no fuel, or wrong type of fuel	Fill the tank with correct type of fuel. Drain water from the fuel filter. Prime the fuel system, see page 112.
	Engine does not get fuel, clogged fuel filter or fuel line	Drain water from the fuel filter. Prime the fuel system, see page 112.
		Make sure that the fuel hoses and fuel filter are clean and not frozen. Replace fuel filter, clean fuel lines. If using fuel that has not been designed for low temperatures has been used, and temperature has dropped below design temperature of the fuel, fuel filters must be changed. Fuel in too low temperature forms paraffin residue into the filters and fuel lines blocking fuel flow.
		Drain and clean the fuel tank. Make sure fuel tank outlet is not blocked.
	Cold ambient temperature	Use correct type of engine and hydraulic oil. Oils designed for low temperature performance help cold starts significantly. See recommendations in this manual.
	Grid heater is faulty	Check fuses and relay.
	Battery discharged or damaged	Jump start with another battery (See page 135), then charge the battery or replace if damaged.
DPF regeneration does not start	DPF regeneration is inhibited manually	Check DPF settings on display
	Engine coolant temperature is low	Engine load might not be high enough to keep engine coolant temperature above required minimum for DPF. Increase engine load. Switch on the auxiliary hydraulics to increase engine load, remove any attachment first.
		Engine coolant may be too low for DPF regeneration due to faulty thermostat. Check operation of thermostat, contact service.

Problem	Possible cause	Remedy
Engine overheats	Clogged radiator	Clean radiator and fan from engine side.
	Dirt around engine	Clean engine and its surroundings carefully
	Coolant level low	Add coolant.
	Leaking cooling system	Check coolant pressure reservoir cap for tightness. Check cooling system and all hoses and connections.
Hydraulic attachment does not work when the auxiliary hydraulics control lever is moved	Attachment hoses are not coupled or the multi connector is not fully locked.	Make sure that the multi connector is properly connected.
	Faulty or damaged quick couplers (will restrict or stop oil flow)	Replace quick couplers in multi connector.
	Wrong operating mode	See Opticontrol® modes on page 59
	Fault in attachment	Check with another attachment, if possible.
Attachment hoses will not go into the extra front or rear quick couplers of the loader	There is back pressure in the auxiliary hydraulics line.	Release the pressure by moving the extra auxiliary hydraulics control lever in both directions.
Hydraulic system overheats	Hydraulic oil level low	Check and refill, see page 118.
	Clogged oil cooler	Clean cooler and fan
	Fan faulty	Check and clean, repair if necessary
	Hydraulic oil flow restricted	Make sure auxiliary hydraulics valve is completely opened when using high flow attachments. Adjust lever locking plate if necessary.
	Hydraulic system overloaded	Use attachment at lower engine rpm, use with 1-pump setting, check attachment for faults.
The loader does not move even after the parking brake has been released.	PTO switch is in position ON	Return PTO switch to position OFF to activate drive pedals
	Seat belt is unfastened	If loader is equipped with mandatory seat belt monitoring, seat belt must be fastened. Unfasten the seat belt, and fasten it again.
	Bad connection on the wiring of the parking brake switch, blown fuse, or faulty switch	Check wires, fuse, and switch, repair if necessary. Contact service.
	Low hydraulic charge pressure	Contact service for pressure check.
	Faulty solenoid valve	Check and replace if possible. Contact service

https://truckmanualshub.com/

Services made

1. Customer _____
2. Loader model _____ Serial number _____
3. Date of delivery _____

Date of service dd / mm / yyyy	Operating hours	Remarks	Serviced by: Stamp/signature
___/___/_____	_____/ 50 h		
___/___/_____	_____/ 450 h		
___/___/_____	_____/ 850 h		
___/___/_____	_____/ 1250 h		
___/___/_____	_____/ 1650 h		
___/___/_____	_____/ 2050 h		
___/___/_____	_____/ 2450 h		
___/___/_____	_____/ 2850 h		
___/___/_____	_____/ 3250 h		
___/___/_____	_____/ 3650 h		
___/___/_____	_____/ 4050 h		

Notes

.

https://truckmanualshub.com/

Notes

.

https://truckmanualshub.com/

https://truckmanualshub.com/

Index

1

1 and 2 pump selection switch • 38, 49

A

Add grease to the lubricating points • 114

Adding or removing counterweights • 64

Adjust and replace slide pads of telescopic boom • 116, 129

Air suspension seat (optional extra for cab GT) • 68

Allow the loader to warm up properly • 82

Attachment control switch pack for rear mounted attachments (option) • 59, 139

Auxiliary hydraulics oil flow • 33, 37, 38, 57, 88, 92

Availability of options • 6

Avant warranty • 7

B

Ballasted tyres • 12, 14, 37

Battery disconnect switch • 20

Before start • 75

Boom floating • 55, 61

Boom self-levelling • 61

C

Cab Safety • 72

Cabs (optional extra) • 71

Calibrate load sensor • 41, 124

Change cab air filter • 132

Change engine air filter • 125

Change engine oil • 125

Change engine oil filter • 125

Change fuel filters • 126

Change hydraulic oil • 125

Change hydraulic oil filters • 126

Check articulation joint • 132

Check battery and electric cables • 120, 127

Check cab air filter • 122

Check ECU diagnostics (Avant 860i only) • 131

Check electric cables, relays, and other electric components • 127

Check engine air filter element • 120, 125

Check engine coolant level • 29, 119

Check engine oil level • 119

Check fuel lines • 127

Check hydraulic hoses and fittings • 127

Check hydraulic oil level • 118, 139

Check mounting and operation of drive motors • 117, 130

Check the attachment and the quick coupling plate • 118

Check the battery and its cables, installation, condition, and charge capacity • 19, 127

Check the boom, pivot pins, and other metal structures visually • 112, 116

Check the general condition of the loader • 112

Check the safety frame, seat, seat belt, lamps, and other safety related equipment • 131

Check tightness of bolts, nuts, and fittings • 116

Check water separator • 52, 120

Check wheels • 117

Clean fuel tank • 127

Clean or replace hydraulic oil tank breather • 126

Clean the loader • 113

Control lever of auxiliary hydraulics (hydraulically operated attachments) • 47, 55, 92

Control lever of boom and bucket • 47, 55

Control lever of extra hydraulics outlet (option) • 59, 66

Control of loader boom, auxiliary hydraulics, and other functions • 55, 76

Controls and options of the Loader • 46

Counterweight mounting plate for rear lift device • 66

Counterweights • 12, 14, 63

Coupling adapters • 94

Coupling the attachments • 23, 89

Coupling the hydraulic hoses of the attachment • 91

D

Daily and routine maintenance procedures • 111

Daily inspections and periodic service schedule • 105

Daily maintenance and inspections • 75, 76, 106

Dashboard • 49

Description of the loader • 21

Dimensions • 32

Drive control • 79

Drive pedals • 47, 79

Drive speed and pulling force • 36

Drive speed range selection switch • 48, 52, 80

E

Electric 12 V outlet • 59

Electric system & fuses • 20, 47, 133

Electric system and handling of the battery • 19, 121

Emission control information • 34

End of life disposal • 136

Engine block heater (option) • 82

Engine compartment and storage spaces on the loader • 47, 60

Engine Diesel Particulate Filter (DPF) • 5, 109

Engine oil requirements • 34, 35, 119

Engine specifications - 860i • 34

Extra auxiliary hydraulics coupling • 93

Extra auxiliary hydraulics outlets, front and rear • 59, 65

Extra work light kit (option) • 69

F

Falling objects protection system (FOPS) • 17

Filters - list of filters • 132

Fire prevention • 20
Foreword • 3
Fuel requirements • 34, 35, 75, 111
Fuses • 20, 133

G

General information • 33
General safety instructions • 8

H

Hand throttle lever • 47, 57
Handling of heavy loads • 12, 86
Headlight, beacon, blinker & reflector kit (option) • 69
Height and width • 32
Hot exhaust gas • 12
How to estimate actual lifting capacity • 45
Hydraulic attachment coupling • 48, 90
Hydraulic oil type • 125

I

If loader is equipped with enclosed cab • 132
If you add or remove counterweights • 64, 124
Ignition key • 76
In case the loader tips over • 85
Inspections after starting the loader • 123
Installing of service support and frame lock • 104
Intended use • 5
Introduction • 3

J

Joystick - 8 function • 56
Jump start and auxiliary power • 19, 135, 138

K

Keep this manual with the loader • 6

L

Lift capacity • 14, 39, 44, 50, 56
Lifting of the loader • 99
Light control switch (road traffic light kit) • 69
Lights • 69
Load charts of other attachments • 40
Load diagram • 44
Load indicator • 41

M

Main parts of the loader • 23
Make sure all relevant manuals are available • 4, 118
Material handling • 39, 41, 56, 86
Measure and adjust charge pressure of variable displacement pump • 129
Measure and adjust power control valve • 129
Measure pressures of hydraulic circuits • 128
Modifications • 17
Multi-function display • 47, 49, 50

N

Notes • 141, 142

O

Operating instructions • 74
Operation on uneven surfaces, gradients, and near excavations • 14
Operator qualification • 6
Opticontrol® (option) • 48, 58
OptiDrive® • 80
Overview of controls • 47

P

Parking brake switch • 57
Periodic service • 125
Personal safety and protective equipment • 16
PTO switch • 59

R

Rated operating capacity • 31, 33, 42
Rear lift device • 66
Refueling • 111
Relays • 134
Releasing the residual pressure of hydraulic system • 77, 93
Requirements for attachments • 87
Reverse buzzer (option) • 66

S

Safe stopping procedure • 77
Safety First • 8
Safety frame (ROPS) and safety canopy (FOPS) • 17
Safety instructions • 101
Safety of digging • 18
Seat - Seat belt and seat adjustments • 67
Seat adjustments • 67
Seat belt • 11
Seat heater • 47, 49, 50, 67
Service and maintenance • 9, 101
Service cab air conditioning • 132
Service the hydraulic attachment locking • 132
Services made • 105, 140
Signs and decals • 24
Smooth drive (option) • 48, 62
Starting the loader • 75
Steering of the loader • 84
Stopping the engine (Safe stopping procedure) • 77, 86
Storage • 99
Storage, Transport, Tie down points and Lifting • 9, 96
Suffocation hazard - Ensure ventilation • 11
Suspension seat • 67
Switches and indicator lights • 49
Switches on the panel • 48, 90

T

Technical specifications • 32
Telescopic boom control lever • 56
Test and check engine for vibrations, noise, and general performance • 130
Test drive control and steering • 123
Test function of all controls and equipment • 131
Test parking brake • 123
Test the movements of boom • 123
Tie down options • 98
Tie down points • 96

https://truckmanualshub.com/

Tipping load - Load diagram • 44

To start the engine • 76

Towing (retrieval of the machine) • 100

Trailer coupling (option) • 65

Transport on trailer • 97

Troubleshoot • 76, 77, 138

Tyres • 36

U

Use only clean fuel • 111

Using the auxiliary hydraulics • 92

V

Vehicle Power Distribution Unit • 134

Ventilation and heating • 48, 72

W

Warning beacon (option) • 48, 70

Warnings and symbols on the display • 52

Windscreen washer and wiper • 72

Work lights • 69

Working near powerlines • 18

Working with attachments • 87

X

X-lock (Cross lock) and anti slip • 49, 52, 81

EC DECLARATION OF CONFORMITY	DÉCLARATION DE CONFORMITÉ CE	EG-KONFORMITÄTS-ERKLÄRUNG
Manufacturer: Avant Tecno Oy Ylötie 1 33470 Ylöjärvi, Finland	Fabricant : Avant Tecno Oy Ylötie 1 33470 Ylöjärvi, Finlande	Hersteller: Avant Tecno Oy: Ylötie 1 33470 Ylöjärvi, Finnland
Technical Construction File Location: Same as Manufacturer	Emplacement du fichier technique de fabrication : Le même que celui du fabricant	Ort der technischen Bauunterlagen: Identisch mit Hersteller
We hereby declare that the machine listed below conforms to EC Directives: 2006/42/EC (Machinery), 2014/30/EC (EMC) and 2000/14/EC (Noise Emission).	Nous déclarons par la présente que la machine mentionnée ci-aprés est conforme aur directives CE: 2006/42/CE (machines), 2014/30/CE (CEM) et 2000/14/CE (émission de bruit)	Wir erklären hiermit, dass die nachestehend aufgeführte Maschine mit folgenden EG-Richtlinien in Übereinstimmung steht: 2006/42/EG (Maschinenbau), 2014/30/EG (EMV) und 2000/14/EG (Lärmemssionen).
Category: EARTH-MOVING MACHINERY / LOADERS / COMPACT LOADERS	Catégorie : ENGINS DE TERRASSEMENT/ CHARGEURS/ CHARGEURS COMPACTS	Kategorie: ERDBEWEGUNGSGERÄT/ LADER/KOMPAKTLADER
Original language	*Langue d'origine*	*Originalsprache* Original language version

Model / Modèle / Modell:

Cabin / Cabine / Kabine:

Serial Number/ Numero de serie / Seriennummer:

Year of Manufacture/ Annee de fabrication/ Baujahr:

Week of Manufacture/ Semaine de fabrication/ Woche der Herstellung:

Country/ Etat / Staat:

Directive Directive Richtlinie	Conformity Assessment Procedure Procédure d'évaluation de conformité Konformitätsbewertungsvergahren	Notified body Organisme notifié Zugelassene Stelle
2006/42/EC	Self-certification	----
2006/42/CE	Autocertification	
2006/42/EG	Selbstzertifizierung	
2014/30/EC	Self-certification	----
2014/30/CE	Autocertification	
2014/30/EG	Selbstzertifizierung	
2000/14/EC	Notified Body	Eurofins Expert Services Oy
2000/14/CE	Organisme notifié	PL 47, 02151 Espoo, Finland
2000/14/EG	Zugelassene Stelle	

Sound Power Level (guaranteed) / Niveau de puissance acoustique (garanti) / Schallleistungspegel (garantiert): 101 dB(A)

Sound Power Levels (measured) / Niveau de puissance acoustique (mesuré) / Schallleistungspegel (gemessen): 101 dB(A)

_____ ___.___._____ Ylöjärvi, Finland

Risto Käkelä,
Managing Director / Président Directeur Général / Geschäftsführer

https://truckmanualshub.com/

Avant Tecno Oy
Ylötie 1
FIN-33470 YLÖJÄRVI, FINLAND
Tel. +358 3 347 8800
e-mail: sales@avanttecno.com

AVANT has a policy of continuous development, and retains the right to change specifications without notice. © 2020 Avant Tecno Oy. All rights reserved.

www.avanttecno.com