https://truckmanualshub.com/

CONDOR MAINTENANCE MANUAL

4/06

Published by
American LaFrance, LLC
1090 Newton Way
Summerville, SC 29483
Printed in U.S.A.

https://truckmanualshub.com/

https://truckmanualshub.com/

FOREWORD

Scheduled maintenance provides a key element for the safe operation of your American LaFrance vehicle. A proper maintenance program also helps to minimize downtime and to safeguard warranties. This maintenance manual provides information necessary for years of safe, reliable, and cost-efficient vehicle operation.

Perform the operations in this maintenance manual at scheduled intervals based upon hours of operation. Perform daily or weekly inspection and maintenance as outlined in the vehicle operator's manual. Your American LaFrance Dealership has the qualified technicians and equipment to perform this maintenance for you. Your dealership can also set up a scheduled maintenance program tailored specifically to your needs. Optionally, your American LaFrance Dealership can assist you in learning how to perform the maintenance procedures in this manual.

IMPORTANT: Descriptions and specifications in this manual were in effect at the time of printing. American LaFrance, LLC reserves the right to discontinue models at any time, or change specifications and design without notice and without incurring obligation.

For additional information, please contact American LaFrance, LLC, Customer Support, 1090 Newton Way, Summerville, SC 29483, U.S.A. or refer to http://www.American LaFrance.com.

ENVIRONMENTAL CONCERNS AND RECOMMENDATIONS

Whenever you see instructions in this manual to discard materials, you should attempt to reclaim and recycle them. To preserve our environment, follow appropriate environmental rules and regulations when disposing of materials.

NOTICE: PARTS REPLACEMENT CONSIDERATIONS

Do not replace suspension, axle, or steering parts (such as springs, wheels, hubs, and steering gears) with used parts. Used parts may have been subjected to collisions or improper use and have undetected structural damage.

© 2006 American LaFrance, LLC

All rights reserved. No part of this publication, in whole or in part, may be translated, reproduced, stored in a retrieval system, or transmitted in any form by any means, electronic, mechanical, photocopying, recording, or otherwise, without the prior written permission of American LaFrance, LLC.

American LaFrance, LLC
Customer Support
1090 Newton Way
Summerville, SC 29483

https://truckmanualshub.com/

https://truckmanualshub.com/

Descriptions of Service Publications

American LaFrance, LLC distributes the following major service publications.

Workshop/Service Manual

Workshop/service manuals contain service and repair information for all vehicle systems and components, except for major components such as engines, transmissions, and rear axles. Each workshop/service manual section is divided into subjects that can include general information, principles of operation, removal, disassembly, assembly, installation, specifications, and troubleshooting.

Maintenance Manual

Maintenance manuals contain routine maintenance procedures and intervals for vehicle components and systems. They have information such as lubrication procedures and tables, fluid replacement procedures, fluid capacities, specifications, procedures for adjustments and for checking the tightness of fasteners. Maintenance manuals do not contain detailed repair or service information.

Driver's/Operator's Manual

Driver's/operator's manuals contain information needed to enhance the driver's understanding of how to operate and care for the vehicle and its components. Each manual contains a chapter that covers scheduled inspection and maintenance of vehicle components. Driver's/operator's manuals do not contain detailed repair or service information.

Parts Technical Manual

American LaFrance, LLC publishes this manual to aid in the identification of serviceable replacement vehicle parts. This manual is used in conjunction with the parts book and the service parts catalog microfiche.

Service Bulletins

Service bulletins provide the latest service tips, field repairs, product improvements, and related information. Some service bulletins are updates to information in the workshop/service manual. These bulletins take precedence over workshop/service manual information, until the latter is updated; at that time, the bulletin is usually canceled. The service bulletins manual is available only to dealers. When doing service work on a vehicle system or part, check for a valid service bulletin for the latest information on the subject.

IMPORTANT: Before using a particular service bulletin, check the current service bulletin validity list to be sure the bulletin is valid.

Recall Bulletins

These bulletins pertain to special situations that involve service work or replacement of parts in connection with a recall notice. Recall bulletins pertain to matters of vehicle safety. All bulletins are distributed to dealers; customers receive notices that apply to their vehicles.

Field Service Modifications

This publication is concerned with non-safety-related service work or replacement of parts. All field service modifications are distributed to dealers; customers receive notices that apply to their vehicles.

https://truckmanualshub.com/

Maintenance Manual Contents

Group No.	Group Title
00	General Information
01	Engine
09	Air Intake
15	Alternators and Starters
20	Engine Cooling/Radiator
26	Transmission
31	Frame and Frame Components
32	Suspension
33	Front Axle
35	Rear Axle
40	Wheels and Tires
41	Driveline
42	Brakes
46	Steering
47	Fuel
49	Exhaust
60	Cab
72	Door
83	Heater and Air Conditioner

https://truckmanualshub.com/

Index, Alphabetical

Title of Maintenance Operation (MOP)	MOP Number
Cab Tilting	00–04
Chassis Lubrication	00–06
Initial Maintenance Inspection Operations	00–08
List of Abbreviations	00–17
Lubrication and Fluid Level Check	00–05
Lubrication and Fluid Level Check Locations	00–07
M1 Maintenance Interval Operations	00–09
M2 Maintenance Interval Operations	00–10
M3 Maintenance Interval Operations	00–11
Maintenance Operation Sets Table	00–12
Metric/U.S. Customary Conversion Tables	00–15
Noise Emission Controls Maintenance	00–13
Scheduled Maintenance Intervals	00–01
Service Schedule Table	00–02
Torque Specifications Tables	00–16
Vehicle Maintenance Schedule Table	00–03
Verification of Inspections Log	00–14

https://truckmanualshub.com/

https://truckmanualshub.com/

Scheduled Maintenance Intervals

Performing regular maintenance on your American LaFrance vehicle will help ensure that it delivers safe, reliable service and optimum performance for years to come.Failure to follow a regular maintenance program can result in inefficient operation and unscheduled down time.

When the vehicle reaches the period given for a maintenance interval, see the Maintenance Interval Operation Table for a list of the maintenance operations to be performed at that maintenance interval. Use the maintenance operation reference numbers to find detailed instructions in the manual on each operation.

NOTE: Maintenance instructions in this manual are based on average vehicle use and normal operating conditions. Unusual vehicle operating conditions may require service at more frequent intervals.

https://truckmanualshub.com/

Service Schedule Table: 00–02

Service Schedule Table

Maintenance Interval Operation	Maintenance Interval				
	Frequency	Miles	km	Hours	Months
Initial Maintenance (IM)	first	5,000	8 045	250	—
Maintenance 1 (M1)	every	5,000	8 045	250	6
Maintenance 2 (M2)	every	10,000	16 090	500	12
Maintenance 3 (M3)	every	20,000	32,180	1000	24

https://truckmanualshub.com/

Vehicle Maintenance Schedule

Vehicle Maintenance Schedule						
Maint. No.	**Maintenance Interval**	**Service Date**	**Miles**	**km**	**Hours**	**Months**
1st	IM and M1		5,000	8 045	250	6
2nd	M1 and M2		10,000	16 090	500	12
3rd	M1		15,000	24 135	750	18
4th	M1, M2 and M3		20,000	32 180	1000	24
5th	M1		25,000	40 225	1250	30
6th	M1 and M2		30,000	48 270	1500	36
7th	M1		35,000	56 315	1750	42
8th	M1, M2 and M3		40,000	64 360	2000	48
9th	M1		45,000	72 405	2250	54
10th	M1 and M2		50,000	80 450	2500	60
11th	M1		55,000	88 495	2750	66
12th	M1, M2, and M3		60,000	96 540	3000	72
13th	M1		65,000	104 585	3250	78
14th	M1 and M2		70,000	112 630	3500	84
15th	M1		75,000	120 675	3750	90
16th	M1, M2, and M3		80,000	128 720	4000	96
17th	M1		85,000	136 765	4250	102
18th	M1 and M2		90,000	144 810	4500	108
19th	M1		95,000	152 855	4750	114
20th	M1, M2, and M3		100,000	160 900	5000	120

https://truckmanualshub.com/

Cab Tilting

A hydraulic pump is used to raise and lower the cab. The tilt system consists of four major parts.

A. The hydraulic pump which consists of the pump-body, reservoir, and manual pump.

B. A tilt cylinder.

C. A tilt strut on the right-side tilt cylinder.

Hydraulic Lockup

Hydraulic lockup can occur for the following reasons:

- Very cold weather
- Use of the wrong hydraulic fluid
- Air in the system
- Sudden cab movement
- A ruptured hydraulic line

Any of the above situations will cause the velocity fuse to function as safety check valves and lock up the tilt cylinders. To unlock the cylinders, the cab must be moved in the opposite direction of travel.

IMPORTANT: If the tilt cylinder locks up, check for a major problem, such as a ruptured line or leaking fitting, before trying to unlock the tilt cylinders. If such a problem is found, make any necessary repairs before unlocking the cylinder.

If the cab is moving toward the fully open position when the lockup occurs, move the pump control lever to the RETURN position and raise and lower the pump handle for a few strokes. This will unlock the cylinder. Move the pump control lever to TILT and allow the cab to raise to a fully open position.

If the cab is moving toward the lowered position when the lockup occurs, move the pump control lever to the TILT position and raise and lower the pump handle for a few strokes. This will unlock the cylinder. Move the pump control lever to RETURN and allow the cab to lower to the operating position.

To Tilt the Cab

WARNING

Before tilting the cab, make sure there is adequate clearance in front of the vehicle and that the area is free of people and all objects.

Do not tilt the cab with the engine running. Tilting the cab could engage the transmission. If the engine is running, the vehicle could move causing an accident that could result in personal injury or property damage.

IMPORTANT: Before raising or lowering the cab, read the warning label on the hydraulic pump.

1. With the vehicle parked on a level surface, shut down the engine, place the transmission in neutral, and apply the brakes.
2. Secure all loose items in the cab and make sure the doors are securely latched.

WARNING

Objects falling in the cab or a door flying open could damage the vehicle or cause personal injury.

3. Make sure there are no people or objects in the path the cab will be traveling.
4. Move the pump control lever to the TILT position.
5. Remove the pump handle from behind the primary driver's seat and attach it to the pump.
6. Raise and lower the pump handle several times to unlock the cab mounts.

IMPORTANT: Check the indicator pin on each cab mount. The cab mounts are unlocked if the pins are out. See **Fig. 1**.

NOTE: If air is present in the hydraulic tilt system, the pump operation may seem spongy or ineffective. If this happens, bleed the air from the system. For instructions, refer to **Group 60** of the Condor® Workshop Manual.

7. Continue to operate the pump handle until the cab is tilted open about 30 degrees.

IMPORTANT: If the cab stops moving while it is being raised, don't force it to move with the tilt pump. The velocity fuses have locked up the tilt cylinders. To

https://truckmanualshub.com/

unlock the tilt cylinders, see "Hydraulic Lockup of Cab Tilt System."

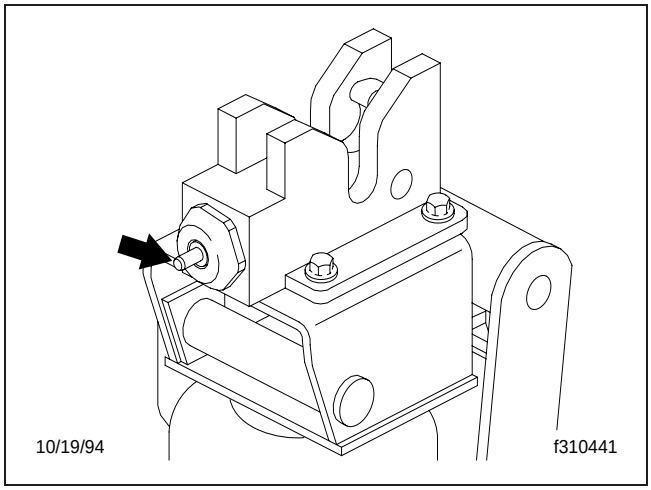

Fig. 1, Cab Mount Indicator Pin

8. Put the safety stop on the right tilt cylinder in place. See **Fig. 2**. The safety stop prevents the cab from dropping below a specific angle.

DANGER

Make sure the safety stop on the right tilt cylinder is in place. If the safety stop isn't in place and the cab should drop, the result could be serious injury or death.

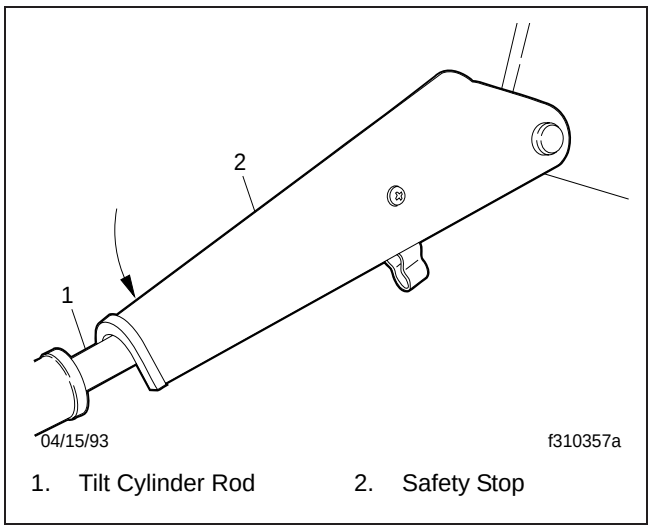

Fig. 2, Safety Stop In Place

9. Continue to operate the pump handle until the cab has reached the 42-degree, fully open position.

To Return the Cab

DANGER

Stay completely clear of the travel path of the cab at all times. Once the safety stop has been released, don't lean over the frame rails, the engine, or the transmission for any reason. To do so could result in serious injury or death.

1. Secure all loose items in the cab and make sure the doors are securely latched.
2. Make sure the parking brakes are applied and there are no obstructions in the cab travel path.
3. Lift the safety stop up until it no longer rests on the tilt cylinder rod. See **Fig. 3**. The cab may need to be raised if the safety stop is resting against the tilt cylinder rod.
4. Move the pump control lever to the RETURN position. The cab will automatically begin to return to the operating position.

NOTE: To slow the descent of the cab, reverse the tilt pump lever.

5. After the cab is completely lowered, check the indicator pin on each cab mount. The cab mounts are locked when the pins have moved back into the piston and cylinder spring assembly. If the pins are out, the cab mounts are not locked. See **Fig. 1**. Raise and lower the pump handle until the cab is completely lowered and the cab mounts are locked.

https://truckmanualshub.com/

Cab Tilting: 00–04

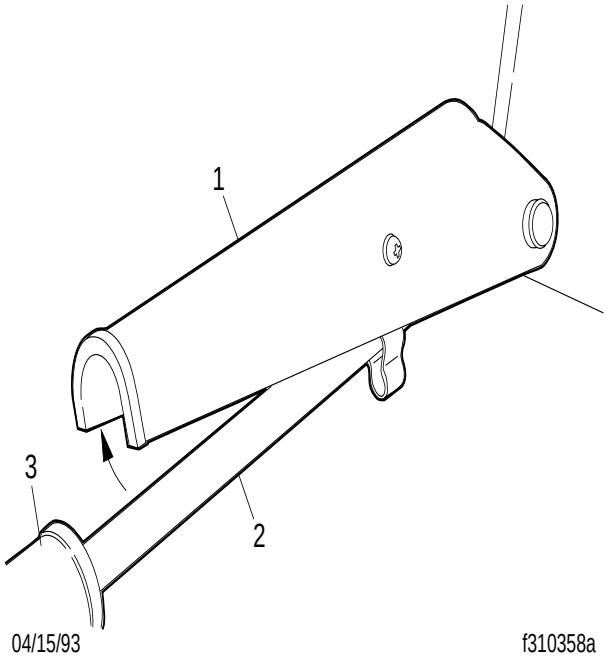

1. Safety Stop
2. Tilt Cylinder Rod
3. Tilt Cylinder

Fig. 3, Safety Stop Released

IMPORTANT: If the cab stops moving while it is being lowered, don’t force it to move with the tilt pump. The velocity fuses have locked up the tilt cylinders. To unlock the tilt cylinders, see "Hydraulic Lockup of Cab Tilt System."

6. Make sure the pump control lever is in the RETURN position.
7. Remove the pump handle and return it to its stored location.

https://truckmanualshub.com/

Lubrication and Fluid Level Check: 00–05

Maintenance Operation 00–05, Lubrication and Fluid Level Check Operation **Table 1** summarizes all operations that must be performed to complete the Lubrication and Fluid Level Check operation 00–05 called for as an M1 maintenance interval.

Maintenance operation numbers given in the table are reference numbers used to help you find detailed instructions in the manual on the lubrication or fluid check. **Lubrication and Fluid Level Check Locations 00–07** can be used as a guide by those who do not need to consult the detailed lubrication and fluid check instructions given elsewhere in the manual.

Maintenance Operation 00–05, Lubrication and Fluid Level Checks at M1		
Maint. Operation Number	**Operation Description**	**Check**
26–02	Transmission Fluid Level Inspection	
31–05	Chassis Lubrication System Inspection	
31–06	Chassis Lubrication System Reservoir Checking and Refilling	
35–01	Drive Axle Lubricant Level and Breather Check	
46–01	Power Steering Reservoir Fluid Level Check	
60–01	Cab Tilt Pump Reservoir Fluid Level and System Check	
72–01	Door Seal, Door Latch, and Door Hinge Lubrication	

Table 1, Maintenance Operation 00-05, Lubrication and Fluid Level Checks at M1

https://truckmanualshub.com/

Chassis Lubrication: 00–06

Maintenance Operation 00–06, Chassis Lubrication **Table 2** summarizes all operations that must be performed to complete the Chassis Lubrication operation 00–06 called for as an M2 maintenance interval.

Maintenance operation numbers given in the table are reference numbers used to help you find detailed instructions in this manual on chassis lubrication.

Lubrication and Fluid Level Check Locations 00–07 can be used as a guide by those who do not need to consult the detailed lubrication and fluid check instructions given elsewhere in the manual. See **Fig. 4** and **Fig. 5** for lubrication and fluid level check locations.

Maintenance Operation 00–06, Chassis Lubrication at M2		
Maint. Operation Number	**Operation Description**	**Check**
32–01	Suspension Inspection	
32–02	Suspension Lubrication	
33–01	Knuckle Pin Lubrication	
33–03	Tie Rod Lubrication	
41–01	Driveline Inspection	
41–02	Driveline Lubrication	
42–05	Camshaft Bracket Lubrication	
42–06	Automatic Slack Adjuster Inspection and Lubrication	
42–07	Disc Brake Caliper Lubrication	
46–02	Drag Link Lubrication	
46–03	Power Steering Gear Lubrication	

Table 2, Maintenance Operation 00-06, Chassis Lubrication at M2

https://truckmanualshub.com/

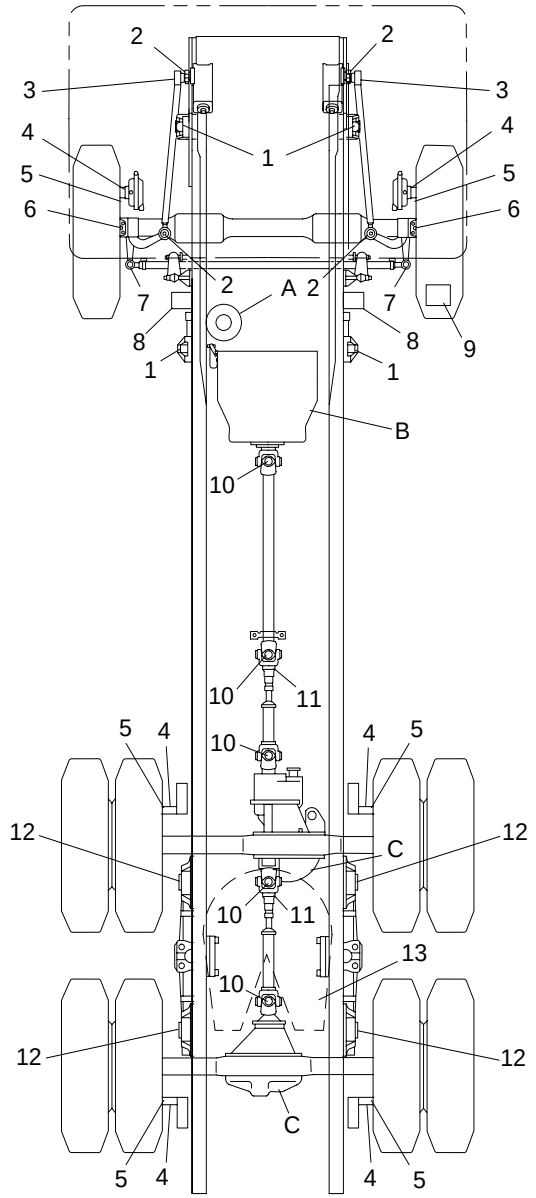

Fig. 4, Lubrication and Fluid Level Check Locations

https://truckmanualshub.com/

Lubrication and Fluid Level Check Locations: 00–07

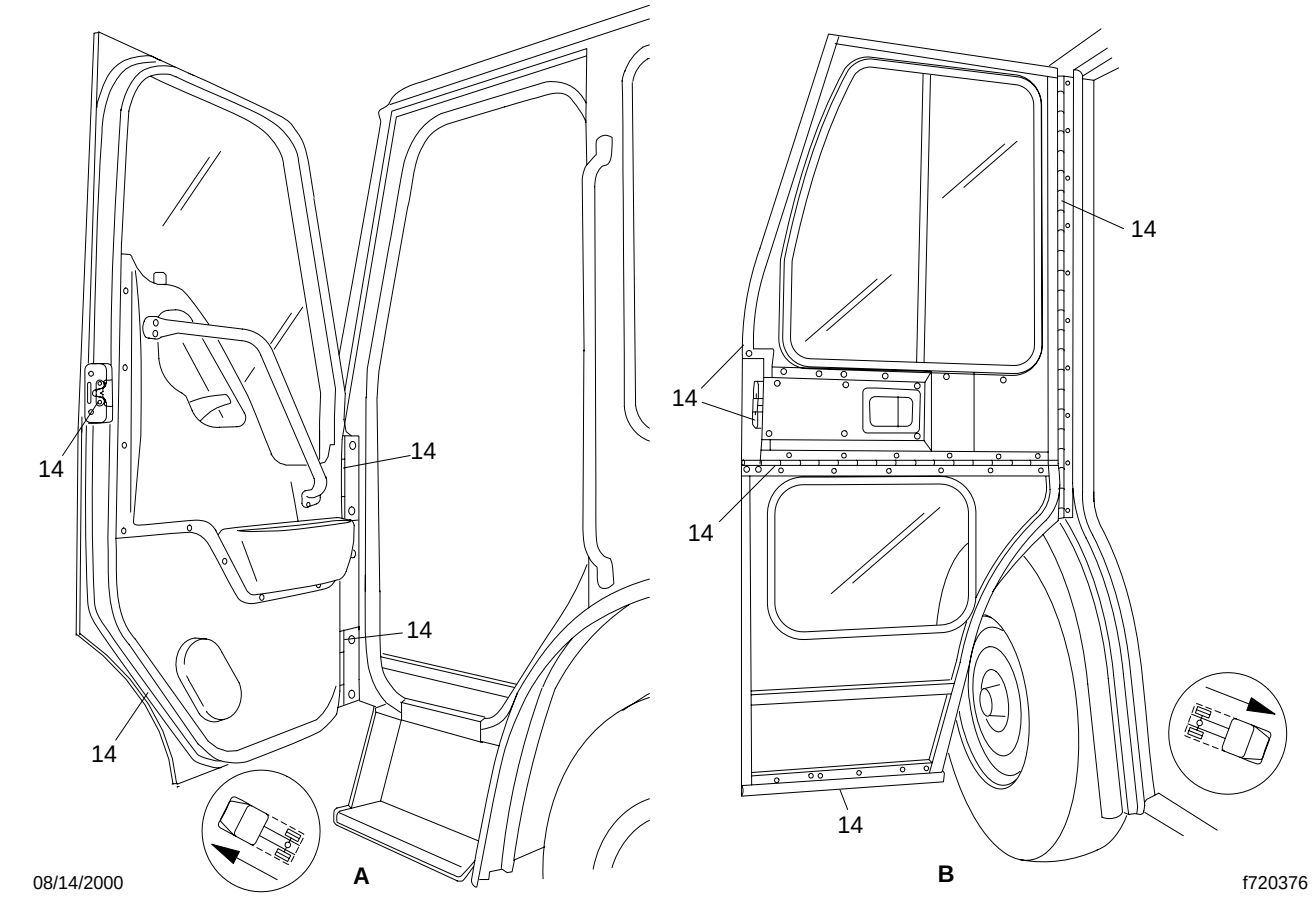

1. Standard Door
2. Stand-Up Right-Hand Drive Fold-Up Door

Fig. 5, Lubrication and Fluid Level Check Locations

https://truckmanualshub.com/

Lubrication and Fluid Level Check Locations: 00–07

No.	MOP No.*	Component	Remarks
A	**46–01**	Power Steering Reservoir	Check that the power steering fluid is at the full mark and add fluid as needed.
B	**26–02**	Transmission	Check that the transmission oil level is correct. Add the proper fluid as needed.
C	**35–01**	Axle Lubricant	Check that the axle lubricant is at the proper level. Add lubricant as needed.
1	**32–02**	Front Suspension	Refer to the maintenance operation for detailed procedures.
2	**46–02**	Drag Link	Lubricate the grease fittings at the pitman arm and the axle steering arm.
3	**46–03**	Power Steering Gear	Lubricate the grease fitting at the output shaft trunnion.
4	**42–05**	Camshaft Bracket	Lubricate the grease fitting.
4	**42–07**	Caliper Bushing	Lubricate grease fitting.
5	**42–06**	Automatic Slack Adjuster	Lubricate the grease fitting.
6	**33–01**	Knuckle Pin	Lubricate the 2 grease fittings (top and bottom) at both ends of the axle.
7	**33–03**	Tie Rod	Lubricate the two grease fittings; one at each tie rod end.
8	**60–04**	Cab Latch	Lubricate the cab latches and the cab latch piston pin.
9	**60–02**	Cab Tilt Pump Reservoir	Check that the pump fluid is at the proper level. Add the proper fluid as needed.
10	**41–02**	Driveline U-Joint	Lubricate each U-joint grease fitting, if equipped.
11	**41–02**	Driveline Slip Joint	Lubricate the grease fittings if equipped.

*Maintenance Operation Number

No.	MOP No.*	Component	Remarks
12	**32–02**	Rear Suspension	Refer to the maintenance operation for detailed procedures.
13	**31–02**	Fifth Wheel Inspection	Refer to the maintenance operation for detailed procedures.
14	**72–01**	Door Seal, Door Latch, and Door Hinge	Lubricate all door seals, door latches and door hinges on the cab.

*Maintenance Operation Number

https://truckmanualshub.com/

Initial Maintenance Inspection Operations: 00–08

The Initial Maintenance Inspection Operations tables list all maintenance operations that are to be performed at the IM maintenance inspection. Maintenance operation numbers are reference numbers used to help you find detailed instructions in this manual on the maintenance operations to be performed.

Initial Maintenance Inspection Operations

Initial Maintenance Inspection Operations		
Maintenance Operation Number	**Operation Description**	**Check**
26–01	Allison Transmission Flfluid and Filter Changing	
31–01	Frame Fastener Torque Checking	
32–03	Suspension U-Bolt Torque Check	
33–04	All-Axle Alignment Checking	
35–02	Axle Lubricant and Filter Changing, and Magnetic Strainer Cleaning	

https://truckmanualshub.com/

M1 Maintenance Interval Operations: 00–09

The M1 Maintenance Interval Operations tables list all maintenance operations that are to be performed at the M1 maintenance interval. Maintenance operation numbers are reference numbers used to help you find detailed instructions in this manual on the maintenance operations to be performed.

M1 Maintenance Interval Operations

M1 Maintenance Interval Operations		
Maintenance Operation Number	**Operation Description**	**Check**
00–05	Bulk Flfluid and Lubrication Checks	
01–02	Engine Drive Belt Inspection	
15–01	Alternator, Battery, and Starter Checking	
20–01	Fan Drive and Clutch Inspecting	
20–02	Pressure Relief Cap Checking	
26–03	Transmission Cooler Inspection	
40–01	Wheel Nut and Rim Nut Checking	
42–04	Telma® Axle Retarder Brake Inspection	
49–01	Exhaust System Inspection	
83–01	Air Conditioner Inspection	

https://truckmanualshub.com/

M2 Maintenance Interval Operations: 00–10

The M2 Maintenance Interval Operations tables list all maintenance operations that are to be performed at the M2 maintenance interval. Maintenance operation numbers are reference numbers used to help you find detailed instructions in this manual on the maintenance operations to be performed. Perform all M1 maintenance interval operations at the M2 maintenance interval.

M2 Maintenance Interval Operations

M2 Maintenance Interval Operations		
Maintenance Operation Number	**Operation Description**	**Check**
00–06	Chassis Lubrication at M2	
00–09	M1 Maintenance Interval Operations	
01–01	Engine Noise Panel Inspection (Noise Emission Control)	
09–01	Air Cleaner Element Inspecting and Replacing	
33–02	Tie Rod Inspection	
42–03	Bendix AD-9 Air Dryer Inspection	
46–04	Drag Link Inspection	
46–06	Power Steering Cooler Inspection	
47–01	Fuel Filter Replacement	
47–02	Fuel/Water Separator Sight Bowl Cleaning and Element Replacement	

https://truckmanualshub.com/

M3 Maintenance Interval Operations: 00–11

The M3 Maintenance Interval Operations table lists all maintenance operations that are to be performed at the M3 maintenance interval. Maintenance operation numbers are reference numbers used to help you find detailed instructions in this manual on the maintenance operations to be performed. Perform all maintenance interval operations in M1 and M2 when performing M3 maintenance interval operations.

M3 Maintenance Interval Operations

M3 Maintenance Interval Operations		
Maintenance Operation Number	**Operation Description**	**Check**
00–09	M1 Maintenance Interval Operations	
00–10	M2 Maintenance Interval Operations	
20–03	Radiator Pressure Flushing and Coolant Changing	
26–01	Allison Transmission Flfluid and Filter Changing*	
32–03	Suspension U-Bolt Torque Check	
35–02	Axle Lubricant and Filter Changing, and Magnetic Strainer Cleaning	
42–01	Air Brake System Valve Inspection	
42–02	Bendix AD-9 Air Dryer Desiccant Replacement	
46–05	Power Steering Flfluid and Filter Changing	

* For synthetic lubricant change intervals, see 26-01.

https://truckmanualshub.com/

Maintenance Operation Sets Table: 00–12

Maintenance Operation Sets

Maint. No	Operation Description	Service Schedule			
		Initial	M1	M2	M3
00–05	Bulk Flfluid and Lubrication Checks	•	•	•	•
00–06	Chassis Lubrication			•	•
01–01	Engine Noise Panel Inspection (Noise Emission Control)			•	•
01–02	Engine Drive Belt Inspection	•	•	•	•
09–01	Air Cleaner Element Inspecting and Replacing			•	•
15–01	Alternator, Battery, and Starter Checking	•	•	•	•
20–01	Fan Drive and Clutch Inspecting (Noise Emission Control)	•	•	•	•
20–02	Pressure Relief Cap Checking	•	•	•	•
20–03	Radiator Pressure Flushing and Coolant Changing				•
26–01	Allison Transmission Flfluid and Filter Changing*	•		•	•
26–02	Transmission Flfluid Level Inspection		•	•	•
26–03	Transmission Cooler Inspection	•	•	•	•
31–01	Frame Fastener Torque Checking	•			
31–05	Vogel Chassis Lubrication System Inspection		•		
31–06	Vogel Chassis Lubrication System Reservoir Checking and Refilling		•		
32–01	Suspension Inspection			•	•
32–02	Suspension Lubrication			•	•
32–03	Suspension U-Bolt Torque Check	•			•
33–01	Knuckle Pin Lubrication			•	•
33–02	Tie Rod Inspection			•	•
33–03	Tie Rod Lubrication			•	•
33–04	All-Axle Alignment Checking	•			
35–01	Drive Axle Lubricant Level and Breather Check		•	•	•
35–02	Axle Lubricant and Filter Changing, and Magnetic Strainer Cleaning	•			•
40–01	Wheel Nut and Rim Nut Checking	•	•	•	•
41–01	Driveline Inspection			•	•
41–02	Driveline Lubrication			•	•
42–01	Air Brake System Valve Inspection				•
42–02	Bendix AD-9 Air Dryer Desiccant Replacement				•
42–03	Bendix AD-9 Air Dryer Inspection			•	•
42–04	Telma® Axle Retarder Brake Inspection	•	•	•	•
42–05	Camshaft Bracket Lubrication			•	•
42–06	Automatic Slack Adjuster Inspection and Lubrication			•	•
42–07	Disc Brake Caliper Lubrication			•	•
46–01	Power Steering Reservoir Flfluid Level Check	•	•	•	
46–02	Drag Link Lubrication			•	•
46–03	Power Steering Gear Lubrication			•	•

https://truckmanualshub.com/

Maintenance Operation Sets Table: 00–12

Maintenance Operation Sets

Maint. No	Operation Description	Service Schedule			
		Initial	M1	M2	M3
46–04	Drag Link Inspection			•	•
46–05	Power Steering Flfluid and Filter Changing				•
46–06	Power Steering Cooler Inspection			•	•
46–07	Right-Hand Steering Ram Lubrication	•		•	•
47–01	Fuel Filter Replacement			•	•
47–02	Fuel/Water Separator Sight Bowl Cleaning and Element Replacement			•	•
47–03	Fuel Tank Band Nut Tightening	•			
49–01	Exhaust System Inspection (Noise Emission Control)		•	•	•
60–01	Cab Tilt Pump Reservoir Flfluid Level and System Check		•	•	•
72–01	Door Seal, Door Latch, and Door Hinge Lubrication	•	•	•	•
83–01	Air Conditioner Inspection		•	•	•

* For synthetic lubricant change intervals, see 26-01.

https://truckmanualshub.com/

Noise Emission Controls Maintenance

Federal Law, Part 205: Transportation Equipment Noise Emission Controls

Part 205, Transportation Equipment Noise Emission Controls, requires the vehicle manufacturer to furnish, with each new vehicle, such written instructions for the proper maintenance, use, and repair of the vehicle by the ultimate purchaser to provide reasonable assurance of the elimination or minimization of noise-emission-control degradation throughout the life of the vehicle. In compliance with the law, the noise emission controls maintenance information in each applicable group of this manual, in conjunction with the vehicle workshop manual, provides these instructions to owners.

IMPORTANT: Fire and emergency vehicles equipped with beacons and sirens are exempt from compliance with Part 205. Local regulations, however, may apply.

Recommendations for Replacement Parts

Replacement parts used for maintenance or repair of noise emission controls should be genuine American LaFrance parts. If other than genuine American LaFrance parts are used for replacement or repair of components affecting noise emission control, the owner should be sure that such parts are warranted by their manufacturer to be equivalent to genuine American LaFrance parts in performance and durability.

American LaFrance Noise Emission Controls Warranty

Refer to the vehicle owner's warranty information book for warranty information concerning noise emission controls.

Tampering With Noise Controls is Prohibited

Federal law prohibits the following acts or the causing thereof:

1. The removal or rendering inoperative by any person (other than for purposes of maintenance, repair, or replacement) of any device or element of design incorporated into any new vehicle for the purpose of noise control, prior to its sale or delivery to the ultimate purchaser, or while it is in use.
2. The use of the vehicle after such device or element of design has been removed or rendered inoperative by any person.

   Among those acts presumed to constitute tampering are the acts listed below:

A. Removal of engine noise-deadening panels.
B. Removal of cab-tunnel noise-deadening panels.
C. Removal of, or rendering inoperative, the engine speed governor so as to allow engine speed to exceed manufacturer's specifications.
D. Removal of, or rendering inoperative, the fan clutch, including bypassing the control on any thermostatic fan drive to cause it to operate continuously.
E. Removal of the fan shroud.
F. Removal of, or rendering inoperative, exhaust components, including exhaust pipe clamping.
G. Removal of air intake components.

Maintenance Instructions

Scheduled intervals are in the maintenance tables in this group. A "Verification of Inspections Log (Groups01, 20, and 49)" follows, and should be filled in each time noise emission controls on the vehicle are maintained or repaired.

https://truckmanualshub.com/

Verification of Inspections Log

		Verification of Inspections Log, Groups 01, 20, and 49		
Date	**Mileage**	**Item**	**Cost**	**Maintenance Facility**
Group 01 — Engine Noise Panels				
Group 20 — Fan Clutch				
Group 49 — Exhaust System Components				

https://truckmanualshub.com/

Metric/U.S. Customary Conversion Tables: 00–15

When You Know U.S. Customary	Multiply By	To Get Metric	When You Know Metric	Multiply By	To Get U.S. Customary
Length					
inches (in)	25.4	millimeters (mm)		0.03937	inches (in)
inches (in)	2.54	centimeters (cm)		0.3937	inches (in)
feet (ft)	0.3048	meters (m)		3.281	feet (ft)
yards (yd)	0.9144	meters (m)		1.094	yards (yd)
miles (mi)	1.609	kilometers (km)		0.6215	miles (mi)
Area					
square inches (in^2)	645.16	square millimeters (mm^2)		0.00155	square inches (in^2)
square inches (in^2)	6.452	square centimeters (cm^2)		0.155	square inches (in^2)
square feet (ft^2)	0.0929	square meters (m^2)		10.764	square feet (ft^2)
Volume					
cubic inches (in^3)	16387.0	cubic millimeter (mm^3)		0.000061	cubic inches (in^3)
cubic inches (in^3)	16.387	cubic centimeters (cm^3)		0.06102	cubic inches (in^3)
cubic inches (in^3)	0.01639	liters (L)		61.024	cubic inches (in^3)
fluid ounces (oz)	29.54	milliliters (mL)		0.03381	fluid ounces (oz)
pints (pt)	0.47318	liters (L)		2.1134	pints (pt)
quarts (qt)	0.94635	liters (L)		1.0567	quarts (qt)
gallons (gal)	3.7854	liters (L)		0.2642	gallons (gal)
cubic feet (ft^3)	28.317	liters (L)		0.03531	cubic feet (ft^3)
cubic feet (ft^3)	0.02832	cubic meters (m^3)		35.315	cubic feet (ft^3)
Weight/Force					
ounces (av) (oz)	28.35	grams (g)		0.03527	ounces (av) (oz)
pounds (av) (lb)	0.454	kilograms (kg)		2.205	pounds (av) (lb)
U.S. tons (t)	907.18	kilograms (kg)		0.001102	U.S. tons (t)
U.S. tons (t)	0.90718	metric tons (t)		1.1023	U.S. tons (t)
Torque/Work Force					
inch–pounds (lbf1 in)	11.298	Newton–centimeters (N1 cm)		0.08851	inch–pounds (lbf1 in)
foot–pounds (lbf1 ft)	1.3558	Newton–meters (N1 m)		0.7376	foot–pounds (lbf1 ft)
Pressure/Vacuum					
inches of mercury (inHg)	3.37685	kilo Pascals (kPa)		0.29613	inches of mercury (inHg)
pounds per square inch (psi)	6.895	kilo Pascals (kPa)		0.14503	pounds per square inch (psi)

Table 3, Metric/U.S. Customary Conversion

When You Know	Subtract	Then Divide By	To Get	When You Know	Multiply By	Then Add	To Get
degrees Fahrenheit (_F)	32	1.8	degrees Celsius (_C)		1.8	32	degrees Fahrenheit (_F)

Table 4, Metric/U.S. Customary Conversion

https://truckmanualshub.com/

Torque Specifications Tables: 00–16

Torque Values for U.S. Customary Thread Fasteners With Lubricated* or Plated Threads†								
Thread Diameter Pitch	Regular Hex				Flanged			
	Grade 5 Bolt	Grade 5 or B Nut	Grade 8 or 8.2 Bolt	Grade 8 or C Nut	Grade 5 Bolt	Grade B Nut	Grade 8 or 8.2 Bolt	Grade G Nut
	Torque: lbf·ft (N·m)		Torque: lbf·ft (N·m)		Torque: lbf·ft (N·m)		Torque: lbf·ft (N·m)	
	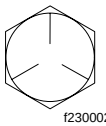 f230002	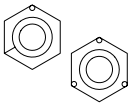 f230003	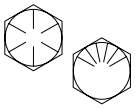 f230004	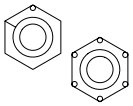 f230005	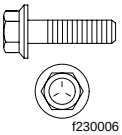 f230006	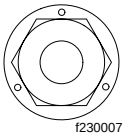 f230007	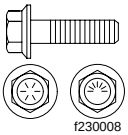 f230008	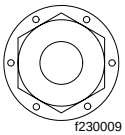 f230009
1/4–20	7 (9)		8 (11)		6 (8)		10 (14)	
1/4–28	8 (11)		9 (12)		7 (9)		12 (16)	
5/16–18	15 (20)		16 (22)		13 (18)		21 (28)	
5/16–24	16 (22)		17 (23)		14 (19)		23 (31)	
3/8–16	26 (35)		28 (38)		23 (31)		37 (50)	
3/8–24	30 (41)		32 (43)		25 (34)		42 (57)	
7/16–14	42 (57)		45 (61)		35 (47)		60 (81)	
7/16–20	47 (64)		50 (68)		40 (54)		66 (89)	
1/2–13	64 (87)		68 (92)		55 (75)		91 (123)	
1/2–20	72 (98)		77 (104)		65 (88)		102 (138)	
9/16–12	92 (125)		98 (133)		80 (108)		130 (176)	
9/16–18	103 (140)		110 (149)		90 (122)		146 (198)	
5/8–11	128 (173)		136 (184)		110 (149)		180 (244)	
5/8–18	145 (197)		154 (209)		130 (176)		204 (277)	
3/4–10	226 (306)		241 (327)		200 (271)		320 (434)	
3/4–16	253 (343)		269 (365)		220 (298)		357 (484)	
7/8–9	365 (495)		388 (526)		320 (434)		515 (698)	
7/8–14	402 (545)		427 (579)		350 (475)		568 (770)	
1-8	—		582 (789)		—		—	
1-12	—		637 (863)		—		—	
1-14	—		652 (884)		—		—	

* American LaFrance recommends that all plated and unplated fasteners be coated with oil before installation.

† Use these torque values if either the bolt or nut is lubricated or plated (zinc-phosphate conversion-coated, cadmium-plated, or waxed).

Table 5, Torque Values for U.S. Customary Thread Fasteners With Lubricated or Plated Threads

https://truckmanualshub.com/

Torque Specifications Tables: 00–16

Torque Values for U.S. Customary Thread Fasteners With Dry (Unlubricated)* Plain (Unplated) Threads†						
Thread Diameter Pitch	Regular Hex				Flanged	
	Grade 5 Bolt	Grade 5 or B Nut	Grade 8 or 8.2 Bolt	Grade 8 or C Nut	Grade 8 or 8.2 Bolt	Grade G Nut
	Torque: lbf·ft (N·m)		Torque: lbf·ft (N·m)		Torque: lbf·ft (N·m)	
	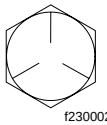 f230002	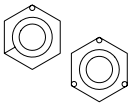 f230003	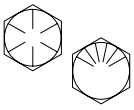 f230004	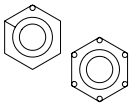 f230005	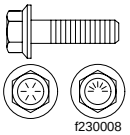 f230008	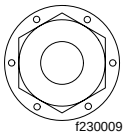 f230009
1/4–20	8 (11)		10 (14)		—	
1/4–28	9 (12)		12 (16)		—	
5/16–18	15 (20)		22 (30)		22 (30)	
5/16–24	17 (23)		25 (34)		—	
3/8–16	28 (38)		40 (54)		40 (54)	
3/8–24	31 (42)		45 (61)		—	
7/16–14	45 (61)		65 (88)		65 (88)	
7/16–20	50 (68)		70 (95)		—	
1/2–13	70 (95)		95 (129)		95 (129)	
1/2–20	75 (102)		110 (149)		—	
9/16–12	100 (136)		140 (190)		140 (190)	
9/16–18	110 (149)		155 (210)		—	
5/8–11	135 (183)		190 (258)		190 (258)	
5/8–18	155 (210)		215 (292)		—	
3/4–10	240 (325)		340 (461)		340 (461)	
3/4–16	270 (366)		380 (515)		—	
7/8–9	385 (522)		540 (732)		—	
7/8–14	425 (576)		600 (813)		—	
1-8	580 (786)		820 (1112)		—	
1-12	635 (861)		900 (1220)		—	
1-14	650 (881)		915 (1241)		—	

* Threads may have residual oil, but will be dry to the touch.

† Male and female threads (bolt and nut) must both be unlubricated and unplated; if either is plated or lubricated, use **Table 5**. American LaFrance recommends that all plated and unplated fasteners be coated with oil before installation.

Table 6, Torque Values for U.S. Customary Thread Fasteners With Dry (Unlubricated) Plain (Unplated) Threads

https://truckmanualshub.com/

Torque Values for Metric Thread Fasteners With Lubricated* or Plated Threads†				
Thread Diameter–Pitch	Class 8.8 Bolt	Class 8 Nut	Class 10.9 Bolt	Class 10 Nut
	Torque: lbf·ft (N·m)		Torque: lbf·ft (N·m)	
	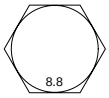 f230010	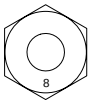 f230011	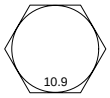 f230012	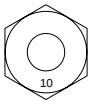 f230013
M6	5 (7)		7 (9)	
M8	12 (16)		17 (23)	
M8 x 1	13 (18)		18 (24)	
M10	24 (33)		34 (46)	
M10 x 1.25	27 (37)		38 (52)	
M12	42 (57)		60 (81)	
M12 x 1.5	43 (58)		62 (84)	
M14	66 (89)		95 (129)	
M14 x 1.5	72 (98)		103 (140)	
M16	103 (140)		148 (201)	
M16 x 1.5	110 (149)		157 (213)	
M18	147 (199)		203 (275)	
M18 x 1.5	165 (224)		229 (310)	
M20	208 (282)		288 (390)	
M20 x 1.5	213 (313)		320 (434)	
M22	283 (384)		392 (531)	
M22 x 1.5	315 (427)		431 (584)	
M24	360 (488)		498 (675)	
M24 x 2	392 (531)		542 (735)	
M27	527 (715)		729 (988)	
M27 x 2	569 (771)		788 (1068)	
M30	715 (969)		990 (1342)	
M30 x 2	792 (1074)		1096 (1486)	

* American LaFrance recommends that all plated and unplated fasteners be coated with oil before installation.

† Use these torque values if either the bolt or nut is lubricated or plated (zinc-phosphate conversion-coated, cadmium-plated, or waxed).

Table 7, Torque Values for Metric Thread Fasteners With Lubricated or Plated Threads

https://truckmanualshub.com/

List of Abbreviations: 00–17

The following is a list of definitions for abbreviations and symbols used in American LaFrance publications.

A.....amperes
ABS.....antilock braking system
ABS.....acrylonitrile-butadiene-styrene
A/C.....air conditioner
AC.....alternating current
ACPU.....air conditioning protection unit
ADLO.....auto-disengagement lockout
a.m. .....ante meridiem (midnight to noon)
AM.....amplitude modulation
amp(s) .....ampere(s)
AMU.....air management unit
ANSI.....American National Standards Institute
API.....American Petroleum Institute
ARI.....Air Conditioning and Refrigeration Institute
ASA.....American Standards Association
ASF.....American Steel Foundries
ASR.....automatic spin regulator
assy.....assembly
ASTM.....American Society for Testing and Materials
ATC.....automatic temperature control
ATC.....automatic traction control
ATC.....automatic transmission control
ATF.....automatic transmission fluid
attn.....attention
aux.....auxiliary
av.....avoirdupois (British weight system)
AWG.....American wire gauge
AWS.....American Welding Society
BAT.....battery
BBC.....bumper-to-back-of-cab
BOM.....bill of material
BTDC.....before top dead center
Btu(s).....British thermal unit(s)
C.....common (terminal)
CAC.....charge air cooler
CAN.....controller area network
CARB.....California Air Resources Board
CAT.....Caterpillar
CB.....circuit breaker
CB.....citizens' band
CCA.....cold cranking amperes
CD-ROM.....compact-disc/read-only memory
CDTC.....constant discharge temperature control
CEL.....check-engine light
CFC.....chlorouorocarbons (refrigerant-12)
cfm.....cubic feet per minute
CFR.....Code of Federal Regulations
CLS.....coolant level sensor
cm.....centimeters
cm³.....cubic centimeters
CMVSS.....Canadian Motor Vehicle Safety Standard
Co......company
COE.....cab over engine
Corp.....corporation
CPU.....central processing unit
cSt.....centistokes (unit of measurement for describing the viscosity of general liquids)
cuft.....cubic feet
cuin.....cubic inches
CUM.....Cummins
CWS.....collision warning system
DC.....direct current
DDA.....Detroit Diesel Allison
DDC.....Detroit Diesel Corporation
DDE.....Detroit Diesel Engines
DDEC.....Detroit Diesel Electronic (engine) control
DDR.....diagnostic data reader
DDU.....driver display unit
DGPS.....differential global positioning system
dia......diameter
DIP.....dual inline package (switch)
DLA.....data link adaptor
DLU.....data logging unit
DMM.....digital multimeter
DOT.....Department of Transportation
DRL.....daytime running lights
DRM.....dryer reservoir module
DSM.....district service manager
DTC.....discharge temperature control
DVOM.....digital volt/ohm meter
ea.....each
EBS.....electronic braking system
ECAP.....electronic control analyzer programmer
ECAS.....electronically controlled air suspension
ECI.....electronically controlled injection
ECM.....electronic control module
ECU.....electronic control unit
EDM.....electronic data monitor
EEPROM.....electrically erasable programmable read-only memory
EMI.....electromagnetic interference
EOA.....electric over air
EP.....extreme pressure (describes an antiwear agent added to some lubricants)
EPA.....Environmental Protection Agency
EPS.....engine position sensor
etc......et cetera (and so forth)
ETEC.....electronic truck engine control
EUI.....electronic unit (fuel) injectors
FAS.....Freightliner air suspension
Fig......figure
fl oz.....fluid ounces
FLA.....post-1984 advancements Freightliner COE
FLB.....enhanced Freightliner FLA COE
FLC.....steel-cab Freightliner 112 Conventional
FLD.....post-1984 advancements Freightliner 112/120 aluminum-cab Conventional
FM.....frequency modulation
FMCSA.....Federal Motor Carrier Safety Administration
FMI.....failure mode identifier
FMSI.....Friction Materials Standards Institute
FMVSS.....Federal Motor Vehicle Safety Standard
FRP.....fiberglass reinforced plastic
FSA.....field service authorization
ft.....feet
ft³.....cubic feet
ft³/min.....cubic feet per minute
FTL.....Freightliner

https://truckmanualshub.com/

List of Abbreviations: 00–17

F.U.E.L. ..... fuel usage efficiency level
g ..... grams
gal ..... gallons
GAWR ..... gross axle weight rating
GL ..... gear lubricant
GND ..... ground
gpm..... gallons per minute
GPS..... global positioning system
GVWR ..... gross vehicle weight rating
HCU..... hydraulic control unit
HD ..... heavy-duty
HEPA..... high-efficiency particulate air (filter)
HFC ..... hydrogenated fluorocarbons (refrigerant-134a)
hp ..... horsepower
hp ..... high pressure
HRC..... Rockwell "C" hardness
hr(s) ..... hour(s)
htr..... heater
HVAC ..... heating, ventilating and air conditioning
H/W ..... hardware
ICU ..... instrumentation control unit
i.d ..... inside diameter
ID..... identification
IFI ..... Industrial Fasteners Institute
IGN..... ignition
ILO ..... in lieu of (in the place of)
in ..... inches
in³ ..... cubic inches
Inc. ..... incorporated
inH₂O ..... inches of water
inHg ..... inches of mercury
IP ..... instrument panel
ISO ..... International Organization for Standardization
k ..... kilo (1000)
kg ..... kilograms
km ..... kilometers
km/h ..... kilometers per hour
kPa ..... kilo Pascals
kW ..... kilowatts
L ..... liters
lb ..... pounds
lbf•ft..... pounds force feet
lbf•in..... pounds force inches
LCD ..... liquid crystal display
LED ..... light-emitting diode
LH .....left-hand
LHDR .....left-hand drive
LHK.....liters per hundred kilometers
LHS.....low hydrogen steel
LLC .....limited liability company
L/min .....liters per minute
LPG.....liquefied petroleum gas
m.....meters
max.....maximum
MESA.....Mining Enforcement Safety Act
mfr .....manufacturer
mi.....miles
MID .....message identifier
MIL.....military specification
min.....minutes
min.....minimum
misc.....miscellaneous
mL.....milliliters
mm.....millimeters
mod .....module
mpg .....miles per gallon
mph .....miles per hour
MSHA .....Mining Safety and Health Administration
MVDA .....Motor Vehicle Dealers Association
n..... .....negative (front axle wheel alignment specification)
N/A.....not applicable
N•cm .....Newton-centimeters
NC.....normally closed (terminal or switch)
NHTSA.....National Highway Traffic Safety Administration
NIOSH.....National Institute for Occupational Safety and Health
NLGI .....National Lubricating Grease Institute
N•m .....Newton-meters
NO.....normally open (terminal or switch)
no.....number
NPT.....national pipe thread
NPTF.....national pipe thread fitting
NSBU.....neutral start/backup
NT .....nylon tube or nylon tubing
OCV .....open circuit voltage
o.d......outside diameter
O.D.....overdrive
OEM.....original equipment manufacturer
OSHA .....Occupational Safety and Health Administration
oz.....ounces
ozf•in .....ounces force inches
p.....positive (front axle wheel alignment specification)
parm .....parameter
PC.....personal computer
PCB .....printed circuit board
PDC .....parts distribution center
PDM.....power distribution module
PEEC.....programmable electronic engine control
PID.....parameter identifier
PLC.....power line carrier
PLD.....Pumpe-Linie-Düse (pumpline-nozzle)
p.m. .....post meridiem (noon to midnight)
p/n .....part number
PSA .....pressure sensitive adhesive
psi.....pounds per square inch
psia.....pounds per square inch, atmosphere
psig .....pounds per square inch, gauge
pt .....pints
pt .....points
PTCM.....pressure time control module
PTO .....power take-off
pvc.....polyvinyl chloride
PWM.....pulse width modulation
qt .....quarts
qty......quantity
R&O.....rust inhibitors and oxidants
R–12 .....refrigerant-12 (CFC)
R–134a .....refrigerant-134a (HFC)
RAM.....random access memory
recirc .....recirculation
Ref(s).....reference(s)
RFI .....radio frequency interference
RH.....right-hand
RHDR .....right-hand drive
R/I .....removal and installation
RMA.....return material authorization
ROM .....read-only memory
rpm .....revolutions per minute
R/R.....removal and replacement

https://truckmanualshub.com/

List of Abbreviations: 00–17

RSG .....road speed governor
RTV .....room temperature vulcanizing
RV .....recreational vehicle
SAE.....Society of Automotive Engineers
SB .....service bulletin
SD .....severe duty
SDU.....step deployment unit
SEL .....shutdown engine light
SI.....service information
SI.....Système International
SID .....subsystem identifier
SMC .....sheet molded compound
S/N .....serial number
SPACE .....seat pretensioner activation for crash survival enhancement
SRT .....standard repair time
SSD.....side sensor display
SST .....stainless steel
std. .....standard
S/W .....software
SW .....switch
TAM.....thermocouple amplifier module
TBS .....turbo boost sensor
TCU.....transmission control unit
TDC.....top dead center
TDR.....technician diagnostic routine
temp.....temperature
TIG .....tungsten inert gas
TPS .....thermal protection switch
TPS .....throttle position sensor
TRS .....timing reference sensor
TSO.....ruck sales order
U.D .....underdrive
UNC .....unified national coarse
UNF.....unified national fine
U.S. .....United States
U.S.A......United States of America
USC.....United States customary (measures)
V.....volts
VDC.....vehicle data computer
Vdc.....volts, direct current
VIN .....vehicle identification number
VIP .....vehicle instrumentation and protection (Kysor)
VOC .....volatile organic compounds
VOM .....volt-ohmmeter
VSG.....variable speed governor
VSS.....vehicle speed sensor
WB.....wire braid
WI .....work instructions
WOT .....wide open throttle
-.....minus or negative
+.....plus or positive
±.....plus-or-minus
> .....greater than
<.....less than
x.....by (used in fastener size descriptions)
" .....inches
.....degrees (of an angle)
C .....degrees Celsius (centigrade)
F .....degrees Fahrenheit
#.....number
%.....percent
& .....and
© .....copyright
™ trademark
® registered trademark

https://truckmanualshub.com/

Index, Alphabetical

Title of Maintenance Operation (MOP)	MOP Number
Engine Drive Belt Inspection	01–02
Engine Noise Panel Inspection (Noise Emission Control)	01–01

https://truckmanualshub.com/

https://truckmanualshub.com/

01–01 Engine Noise Panel Inspection (Noise Emission Control)

If equipped, inspect for torn engine noise panels. See **Fig. 1** for Caterpillar noise panel locations. If panels are torn, replace them with new panels; see **Group 01** of the *Condor® Workshop Manual* for procedures.Cummins engines do not have engine noise panels.

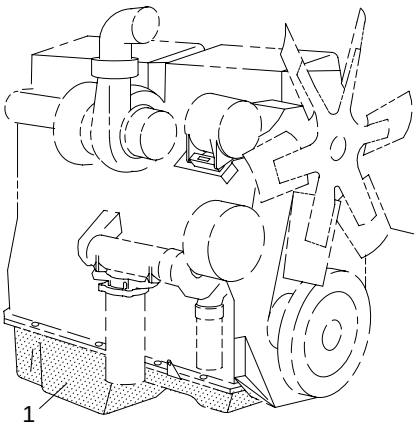

08/15/2000 f011834

1. Oil Pan Noise Panel (C10 engine only)

Fig 1, Caterpillar Engine Noise Panels

01–02 Engine Drive Belt Inspection

Worn or loose drive belts may cause premature bearing failure or engine overheating. Excessive tension or too little tension on the belt may result in excessive and premature belt wear. Poly-V belts, or serpentine belts are retained by a belt tensioner that requires no tension adjustment. Replace the engine drive belt if any conditions described in the visual inspection are found. V-belts are installed as individual belts, and as matched sets. When replacing a matched set of belts, always replace both belts at the same time. Matched belts must be from the same manufacturer. To inspect a belt, gently twist the belt to view the belt sidewalls and bottom. Visually inspect all drive belts for the following conditions, then perform the belt tension inspection:

Visual Inspection

1. Inspect the belt for glazing. See **Fig. 2**, Ref. A. Glazing is represented by shiny sidewalls, and is caused by friction created when a loose belt slips in the pulleys. It can also be caused by oil or grease contamination on the pulleys.
2. Check the belt for ply separation. See **Fig. 2**, Ref. B. Oil, grease, or belt dressing can cause the belt to fall apart in layers. Repair any oil or coolant leaks that are affecting the belts before replacing the drive belts. Do not use belt dressing on any belt.
3. Check the belt for a jagged or streaked sidewall. See **Fig. 2**, Ref. C. Jagged or streaked sidewalls are the result of foreign objects, such as sand or gravel in the pulley, or a rough pulley surface.
4. Check for tensile breaks; breaks in the cord body. See **Fig. 2**, Ref. D. Cuts in a belt are usually caused by foreign objects in the pulley, or by prying or forcing the belt during removal or installation.
5. Check for uneven ribs on serpentine (poly-V) belts. See **Fig. 2**, Ref. E. Foreign objects in the pulley will erode the undercord ribs, causing the belt to lose its gripping power.
6. Check the drive belts for cracks. See **Fig. 2**, Ref. F. Small irregular cracks are usually the signs of an old belt.
7. Visually inspect the pulleys for excessive play or wobble. Excessive play or wobble indicates a failure of the pulley bearing. Check for belt squealing or squeaking. Replace the bearings as necessary.

NOTE: If it is difficult to distinguish the location of a supposed bearing noise, place a stethoscope on the component being checked, not the pulley, to isolate the area from outside interference.

8. Inspect all pulleys for foreign objects, oil, or grease in the grooves.

https://truckmanualshub.com/

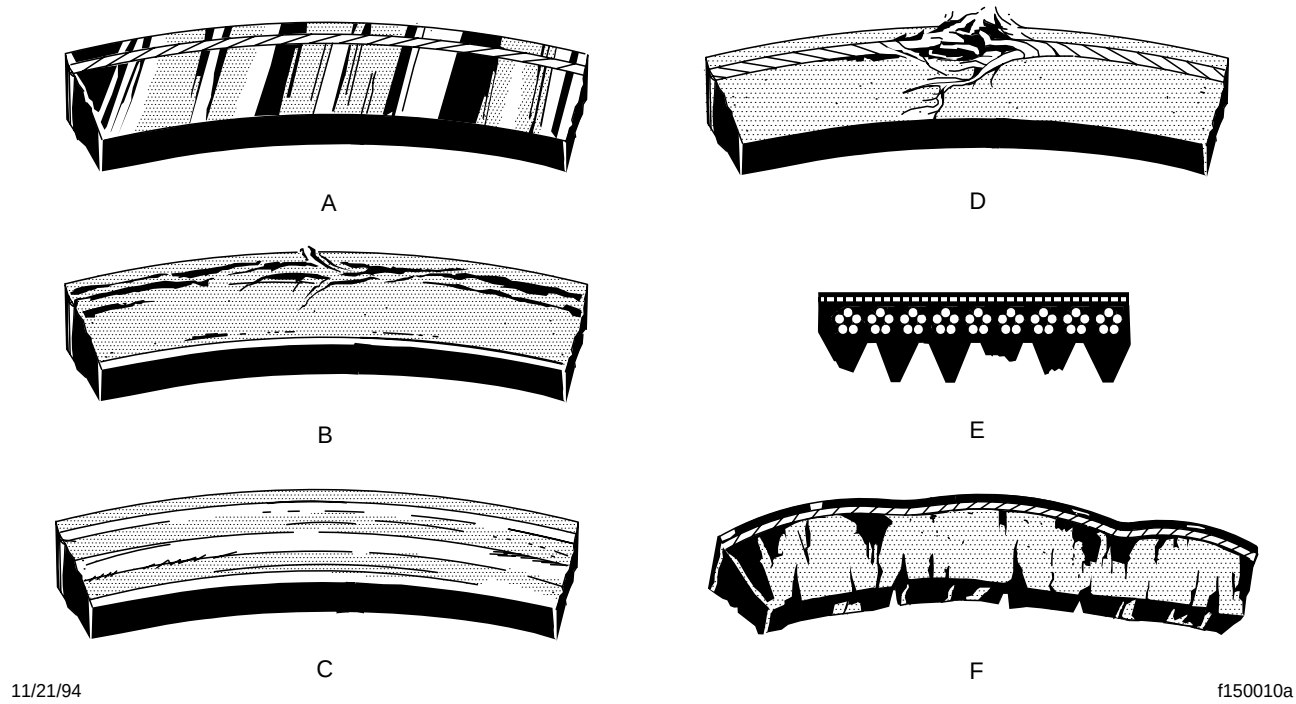

A. Glazing
B. Separating Layers
C. Side Streaked walls
D. Tensile Break
E. Uneven Ribs
F. Cracks

Fig 2, Drive Belt Replacement Conditions, V-Belts

Belt Tension Inspection

Spring-Tension Type

On belts equipped with a spring tensioner, the belt tension is automatically adjusted. Check that the tensioner is holding tension on the belt by inserting the end of a breaker bar in the 1/2-inch square hole on the forward face of the tensioner, and rotating the tensioner down, away from the belt. When the breaker bar is slowly released, the tensioner should return to its original position. If not, see **Group 01** of the *Condor® Workshop Manual* for replacement instructions.

https://truckmanualshub.com/

Index, Alphabetical

Title of Maintenance Operation (MOP) **MOP Number**

Air Cleaner Element Inspecting and Replacing 09–01

https://truckmanualshub.com/

https://truckmanualshub.com/

09–01 Air Cleaner Element Inspecting and Replacing

Inspect the air cleaner element for holes or tears at the recommended interval. If the air cleaner element is damaged, replace it. See **Group 09** of the *Condor® Workshop Manual* for removal and installation instructions.

Replace the air cleaner element when filter restriction reaches the maximum allowable restriction. See **Table 1** for specific restriction values for your engine. See **Group 09** of the *Condor® Workshop Manual* for removal and installation procedures.

Intake-Air Restriction Indicator Values		
Engine Type	**Initial inH_2O**	**Service inH_2O***
Caterpillar	15	25
Cummins	10	25

* maximum allowable restriction

Table 1, Intake-Air Restriction Indicator Values

https://truckmanualshub.com/

https://truckmanualshub.com/

Index, Alphabetical

Title of Maintenance Operation (MOP) **MOP Number**

Alternator, Battery, and Starter Checking 15–01

https://truckmanualshub.com/

https://truckmanualshub.com/

15–01 Alternator, Battery, and Starter Checking

WARNING

Batteries release a gas mixture that is explosive. Do not smoke when working around batteries. Put out all flames, and remove any source of sparks or intense heat. Make sure the battery compartment has been completely vented before disconnecting or connecting battery cables.

Battery acid is extremely harmful if splashed in eyes or on skin. Always wear a face shield and protective clothing when working around batteries.

1. Check the tightness of the alternator bracket fasteners; tighten the fasteners as needed. For torque values, see **Group 15** of the *Condor® Workshop Manual*.
2. Check that all electrical connections at the alternator and starter are clean. Clean and tighten all charging system electrical connections as needed.
3. Inspect the battery cables for wear, and replace as needed. Clean the cable connector terminals with a wire brush. See **Group 54** of the *Condor® Workshop Manual* for troubleshooting instructions, and for adjustment, repair, or replacement instructions.
   - 3.1. Clean and tighten the battery ground cable, terminal, and clamps.
   - 3.2. Inspect the retainer assembly (or battery-hold-downs) and the battery box. Replace worn or damaged parts. Remove any corrosion with a wire brush, and wash with a weak solution of baking soda and water. Rinse with clean water, and dry. Paint the retainer assembly, if needed, to prevent rusting.
   - 3.3. Check that foreign objects, such as stones, bolts, and nuts are removed from the battery box.
   - 3.4. After cleaning, connect the cables to the batteries, and tighten them to the torque specifications listed on the battery, generally 10 to 15 lbf•ft (14 to 20 N•m).
   - 3.5. Spray each connection with dielectric red enamel and coat the battery terminals with dielectric grease; see **Table 1**.

Protectant Material	Approved Brand
Dielectric Grease	Lubriplate FLP DS–ES
Dielectric Red Enamel Spray	3M 1602 IVI-Spray Sealer
	Spray-On B–6–665

Table 1, Approved Dielectric Protectants

4. Check the alternator wiring for missing insulation, kinks, and heat damage. Replace or repair as needed.
5. Check the terminals on the battery shut-off switch and the magnetic switch. Make sure the terminal connections are clean and tight. Coat the terminal connections with dielectric red enamel after cleaning; see **Table 1**.

https://truckmanualshub.com/

https://truckmanualshub.com/

Index, Alphabetical

Title of Maintenance Operation (MOP)	MOP Number
Fan Drive and Clutch Inspecting (noise emission control)	20–01
Pressure Relief Cap Checking	20–02
Radiator Pressure Flushing and Coolant Changing	20–03

https://truckmanualshub.com/

https://truckmanualshub.com/

20–01 Fan Drive and Clutch Inspecting (noise emission control)

Kysor K22RA Fan Clutch

1. Raise the cab. Disconnect the electrical cables from the battery. Drain all air from the air system.If equipped with an air starter, drain the air starter reservoir.

WARNING

If the engine starts during this procedure, the fan could cause personal injury. If the vehicle is equipped with an air starter, be sure that the air starter reservoir is drained.

2. Measure the distance from the back surface of the fan clutch retaining plate to the forward-most edge of the fan belt pulley. See **Fig. 1**, Ref. A.
3. Disconnect the line from the air inlet of the air cylinder. Connect a shop air hose to the inlet.

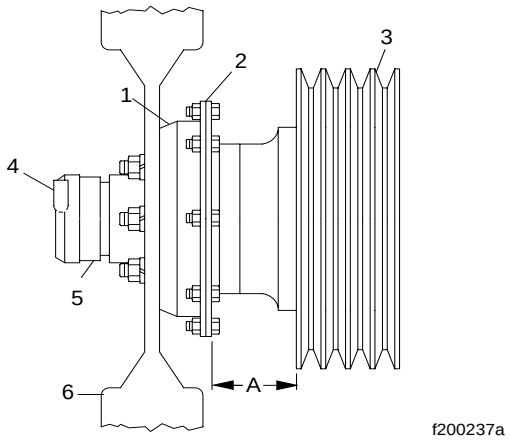

With the fan clutch engaged, measure the distance at A; measure it again with the fan clutch disengaged.

1. Bearing Housing
2. Retaining Plate
3. Fan Pulley
4. Air Inlet (from solenoid valve)
5. Air Cylinder
6. Fan

Fig 1, Kysor K22RA Fan Clutch Lining Wear Checking

4. Apply a minimum of 100 psi (690 kPa) air pressure to the air cylinder—the bearing housing will move backwards, disengaging the clutch. Again, measure the distance from the back surface of the retaining plate to the forward-most edge of the fan belt pulley.
5. Compare the two measurements; if the difference between the two measurements exceeds 0.150 inches (3.8 mm), the clutch lining is worn and must be replaced. See **Group 20** of the *Condor® Workshop Manual* for clutch lining replacement instructions.
6. Release the air pressure, then disconnect the shop hose from the air inlet of the air cylinder. Connect the vehicle air hose to the inlet.
7. Connect the electrical cables to the battery.
8. Lower the cab and start the engine. Then, shut down the engine.

Horton HT/S Fan Clutch

NOTE: If any part of the fan clutch needs to be repaired or replaced, after performing the checks below, see **Group 20** of the *Condor® Workshop Manual*.

1. Raise the cab. Disconnect the electrical cables from the battery. Drain all air from the air system.If equipped with an air starter, drain the air starter reservoir.

WARNING

If the engine starts during this procedure, the fan could cause personal injury. If the vehicle is equipped with an air starter, be sure that the air starter reservoir is drained.

2. Inspect the electrical connections and wires to the fan clutch solenoid. Secure the connection if loose; replace wires and connectors if damaged.
3. Clean the fan clutch air solenoid valve FIlter, if equipped.
   - 3.1. Unscrew the fan clutch solenoid valve air filter assembly and remove the filter element.
   - 3.2. Clean the filter element with cleaning solvent.
   - 3.3. Reassemble the clutch valve solenoid air filter assembly and install on the vehicle.

https://truckmanualshub.com/

4. Visually check the fan for bent, cracked, or damaged blades. Replace if damaged. Check for adequate clearance between the fan and other components.
5. Check the fan belt for wear, tension, and alignment. Correct if necessary.
6. Check for wear on the friction facing. See **Fig. 2**. Replace the friction facing if it is worn to a 1/16-inch (1.6-mm) thickness or less. Also check the facing for signs of oil contamination or burn marks. If evidence of oil or burn marks are found, replace the friction facing.
7. Connect the battery cables. Lower the cab and start the engine, and charge the air system to 120psi (827 kPa). Shut down the engine. Separate the halves of the fan solenoid connector. The fan clutch should engage.

   If the fan does not operate correctly, see **Group 20** of the *Condor® Workshop Manual* for troubleshooting and repair procedures.
8. With the air system charged to 120 psi (827 kPa), and with the fan solenoid connector halves separated, check the fan clutch for audible air leaks, using a suitable listening device.

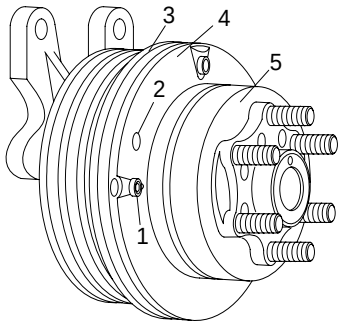

1. System Sentry® Fuse
2. Safeguard Hole
3. Friction Facing
4. Piston Friction Disc
5. Air Chamber

Fig 2, Horton Advantage Fan Clutch

9. If a leak is detected, remove the fan blade. Using a soapy water solution, check the fan clutch at the following locations to locate the source of the leak. Install a new seal kit. See **Group 20** of the *Condor® Workshop Manual* for repair procedures.
   - 9.1. Check for a leak at the bleed hole on the fan pilot. Air leakage means that the cartridge assembly (**Fig. 3**, Ref. 16) or face seal (Ref. 17) is damaged.
   - 9.2. Check for air leaks between the air chamber and the piston friction disc. Air leakage means that the large O-ring (Ref. 14) is damaged.
   - 9.3. Check for air leaks around the safeguard hole on the piston friction disc. Air leakage means the small O-ring (Ref. 18) is damaged.
   - 9.4. Check for air leaking from the System Sentry® fuse. Leaking air means the clutch has gotten so hot the lead alloy in the fuse melted. This released the clutch before the heat could damage the clutch bearings.Before replacing the fuse, nd and repair the source of the heat.

20–02 Pressure Relief Cap Checking

WARNING

Do not remove or loosen the surge tank cap until the engine and cooling system have completely cooled. Use extreme care when removing the cap. A sudden release of pressure from removing the cap prior to the system cooling can result in a surge of scalding coolant that could cause serious personal injury.

CAUTION

The radiator cap currently installed may not be the same one installed when the vehicle was built. If the radiator cap must be replaced, make sure that it is the correct cap for the cooling system of the vehicle. Because the radiator cap pressure rating affects the operating temperature of the engine, installing an improperly rated radiator cap may have adverse effects on the cooling system, and

https://truckmanualshub.com/

engine operating temperatures. This could cause premature engine wear or damage.

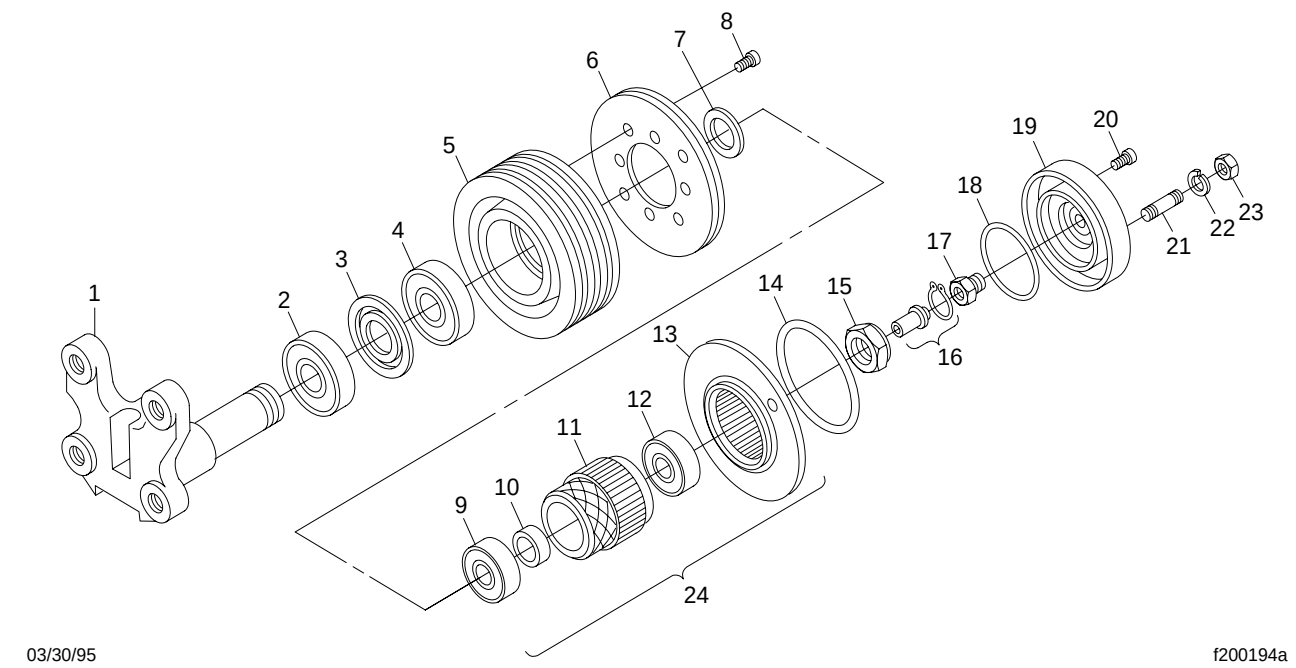

1. Mounting Bracket
2. Rear Sheave Bearing
3. Inner and Outer Bearing Spacers
4. Forward Sheave Bearing
5. Sheave
6. Friction Facing
7. Journal Spacer
8. Socket-Head Capscrew
9. Rear Hub Bearing
10. Bearing Spacer
11. Splined Hub
12. Forward Hub Bearing
13. Piston Friction Disc
14. Large O-Ring
15. Locknut
16. Cartridge Assembly
17. Face Seal
18. Small O-Ring
19. Air Chamber
20. Socket-Head Capscrew
21. Stud Bolt
22. Lockwasher
23. Hexnut
24. Piston Assembly

Fig 3, Horton Advantage Fan Clutch Components

1. Remove the surge tank cap.
2. Using a radiator-cap tester, check the pressure cap to see if it maintains pressure to within 10% of the pressure rating marked on the cap. If it doesn't, replace the cap. See **Fig. 4**. Make sure that the replacement radiator cap is correctly rated for the cooling system of the vehicle.
3. There is a second valve in the radiator cap that opens under vacuum. This prevents the collapse of hoses and other parts that are not internally supported when the system cools. Inspect the vacuum-relief valve to be sure it is not stuck.
4. Make sure that the cap seals properly on the coolant filler neck seat, and that the radiator cap gasket is not damaged. On vehicles with screw on caps with O-rings, make sure that the O-ring is not cracked or deteriorated. Replace the cap if the gasket shows deterioration or damage.

20–03 Radiator Pressure Flushing and Coolant Changing

NOTE: For additional instructions on cleaning and flushing the engine's cooling system, see the applica-

https://truckmanualshub.com/

ble engine manufacturer's maintenance and operation manual.

1. Park the vehicle, apply the parking brakes, chock the tires and tilt the cab.
2. Place a suitable container under the elbow of the heat exchanger for the automatic transmission. The container should hold at least 60 quarts (56.8 liters) of fluid.

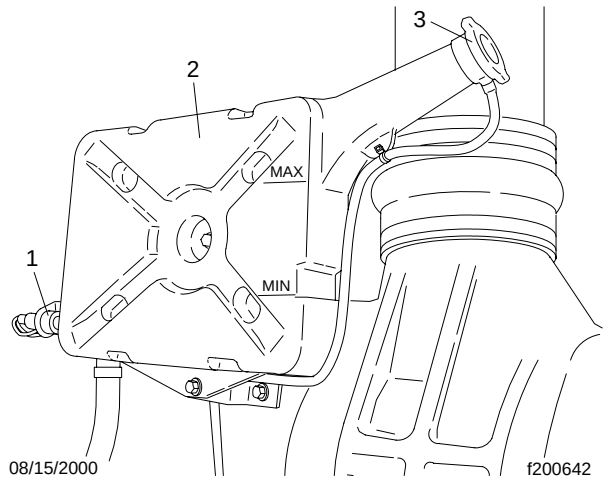

1. Low-Coolant-Level Sensor
2. Surge Tank
3. Surge Tank Cap

Fig 4, Surge Tank, External Coolant Level Sensor

WARNING

Do not remove or loosen the surge tank cap until the engine and cooling system have completely cooled. Use extreme care when removing the cap. A sudden release of pressure from removing the cap prior to the system cooling can result in a surge of scalding coolant that could cause serious personal injury.

3. Remove the surge tank cap.

WARNING

Do not attempt to drain the cooling system until the coolant and engine are cool. Draining the cooling system prior to the system cooling could cause severe personal injury due to scalding.

4. Open the draincock located at the heat exchanger. See **Fig. 5**. Allow the coolant to drain.
5. Close the draincock. Tighten the draincock, but do not overtighten.
6. Disconnect the radiator upper and lower hoses, and install the surge tank cap. Attach the flushing gun nozzle to the radiator at the lower radiator hose opening. Run the water until the radiator is full.

CAUTION

When flushing the radiator, do not apply more than 15 psi (103 kPa) air pressure. Excessive pressure can damage the radiator.

7. Gradually, apply air pressure to help dislodge sediment built up in the radiator core. Do not apply more than 15 psi (103 kPa) air pressure to the radiator. Pressures exceeding 15 psi (103 kPa) could damage the radiator core.
8. Shut off the air at the pressure gun nozzle and allow the radiator to refill with water.
9. Repeat the previous two steps until clean water flows from the radiator.
10. Open the draincock at the heat exchanger and allow the radiator to drain. Close and tighten the draincock after the radiator has been drained. Do not overtighten the draincock.
11. Connect the hoses. The hose clamps can be either T-bolt clamps (**Fig. 6**) or Breeze Constant-Torque clamps (**Fig. 7**).

    When working with T-bolt type hose clamps, tighten the clamps 55 lbf1 in (620 N1 cm). These clamps are now standard on hoses with an inside diameter greater than 2 inches (51 mm).

https://truckmanualshub.com/

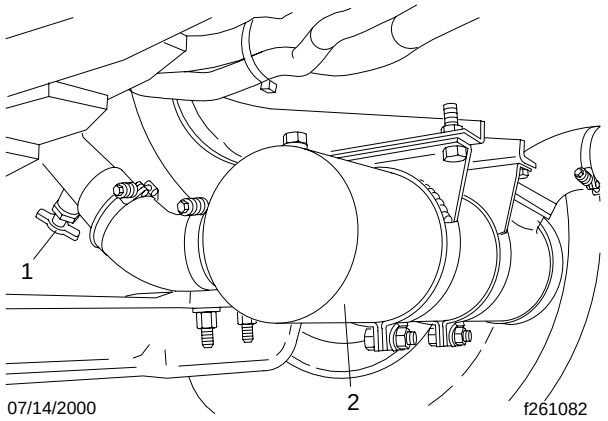

1. Coolant Draincock
2. Transmission Cooler

Fig 5, Coolant Draincock

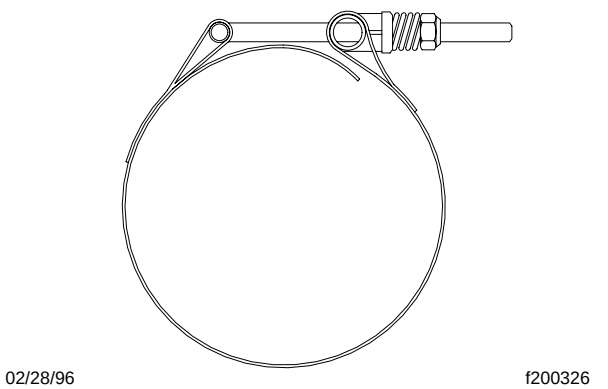

Fig 6, T-Bolt Type Hose Clamp

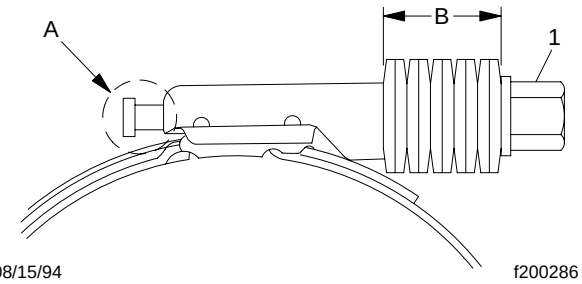

A. The screw tip must extend about 1/4 inch (6 mm).
B. The belleville washer stacks must be collapsed almost flat.
1. Tightening Screw Hex

Fig 7, Breeze Constant-Torque Hose Clamp Installation

When installing the Breeze Constant-Torque hose clamps, the clamps must be tightened to the correct torque. The screw tip of the clamp must extend about 1/4 inch (6 mm) from the clamp housing, and the belleville washer stacks must be collapsed almost at. Use a torque wrench to install these hose clamps correctly. The correct installation torque for Breeze Constant-Torque hose clamps is as follows:

For Breeze Constant-Torque hose clamps with a 5/16-inch tightening screw hex: 55 lbf•in (620 N•cm).

For Breeze Constant-Torque hose clamps with a 3/8-inch tightening screw hex: 90 lbf•in (1020 N•cm).

NOTE: All hose clamps will lose torque after installation due to "compression set." However, when correctly installed, Breeze Constant-Torque clamps will hold enough torque to automatically adjust and keep consistent sealing pressure. During vehicle operation and shutdown, the screw tip may adjust according to temperature and pressure changes. The torque may need to be adjusted for individual applications.

12. Place a pan under the coolant filter, if equipped, to catch engine coolant.
13. Remove the coolant filter with a strap or chain wrench. Install a new coolant filter and tighten.
14. Fill the cooling system with new coolant. See **Table 1** for the vehicle's coolant capacity. Certain equipment such as fuel heaters, water filters and

https://truckmanualshub.com/

auxiliary heaters may increase the coolant capacity and require additional coolant. The cooling system is filled when the coolant level reaches the MAX line on the surge tank. American LaFrance recommends the use of a precharged and premixed antifreeze when refilling the cooling system. See **Table 2** for a list of some of the precharged antifreeze available. Use of an equivalent antifreeze to those listed in the table is also acceptable. Always check that the antifreeze used meets American LaFrance's specifications and is at the proper concentration for protection in the vehicle operating area. See **Table 3** for antifreeze protection information. American LaFrance species that the antifreeze must be an ethylene glycol solution that meets GM 6038 M Engineering Standards or aethylene glycol solution that has less than 0.1% anhydrous sodium metasilicate, and meets either GM 1825 M or GM 1899 M Engineering Standards. If supplemental coolant additives are being used, add the supplements to the coolant as necessary. See the coolant additive manufacturer's instructions for the correct amount of additive required. Don't forget to consider the volume of the supplemental coolant additive being added to the system when determining the amount of coolant required to refill the system.

15. Replace the surge tank cap.
16. Lower the cab, start the engine, and turn on the cab heater. Allow the engine to warm up to normal operating temperature. Check the radiator and hoses for leaks. Repair if necessary.

NOTE: Mixing the factory-installed purple-pink coolant (pre-charged with a borate/nitrate-based additive) with the common green coolant will cause a color change.

17. Shut off the engine, then check the coolant level in the surge tank. Add coolant if the level is not between the MIN and MAX lines on the surge tank.

Engine Coolant Capacity	
Engine	**Capacity with 1100 sq. inch Radiator quarts (liters)**
Caterpillar CFE	34.4 (32.6)
Caterpillar C-10	31.5 (29.8)
Caterpillar C-12	31.5 (29.8)
Cummins ISC	31.2 (29.5)
Cummins ISL	31.2 (29.5)
Cummins ISM	30.5 (28.8)

Table 1, Engine Coolant Capacity

	Approved Antifreeze	
Manufacturer	**Antifreeze**	**Type**
Caterpillar	Caterpillar Diesel Engine Antifreeze/Coolant	Contains supplemental additives and available as a premixed solution
Cummins	Fleetguard® Compleat Premix	Premixed solution with supplement additives
Old World Industries	Fleet Charge™	With supplemental additives

Table 2, Approved Antifreeze

https://truckmanualshub.com/

Maximum Coolant Protection in F(C) at Various Antifreeze Concentrations														
COOLING SYSTEM CAPACITY* gal (L)	**ETHYLENE-GLYCOL BASE ANTIFREEZE REQUIRED gallons (liters)**													
	2 (8)	**3 (11)**	**4 (15)**	**5 (19)**	**6 (23)**	**7 (26)**	**8 (30)**	**9 (34)**	**10 (38)**	**11 (42)**	**12 (45)**	**13 (49)**	**14 (53)**	**15 (57)**
9 (34)	14 (–10)	0 (–18)	–21 (–29)	–12 (–24)	–62 (–52)†									
10 (38)	16 (–9)	4 (–16)	–12 (–24)	–34 (–37)	–62 (–52)†									
11 (42)	18 (–8)	8 (–13)	–6 (–21)	–23 (–31)	–47 (–44)	–62 (–52)†								
12 (45)	19 (–7)	10 (–12)	0 (–18)	–15 (–26)	–34 (–37)	–57 (–49)								
13 (49)	21 (–6)	13 (–11)	3 (–16)	–9 (–23)	–25 (–31)	–45 (–43)	–62 (–52)†							
14 (53)		15 (–9)	6 (–14)	–5 (–19)	–18 (–28)	–34 (–37)	–54 (–48)							
15 (57)		16 (–9)	8 (–13)	0 (–18)	–12 (–24)	–26 (–32)	–43 (–42)	–62 (–52)†						
16 (61)		17 (–8)	10 (–12)	2 (–17)	–8 (–22)	–19 (–28)	–34 (–37)	–52 (–47)	–62 (–52)†					
17 (64)		18 (–8)	12 (–11)	5 (–15)	–4 (–20)	–14 (–26)	–27 (–33)	–42 (–41)	–58 (–50)					
18 (68)		19 (–7)	14 (–10)	7 (–14)	0 (–18)	–10 (–23)	–21 (–29)	–34 (–37)	–50 (–46)	–62 (–52)†				
19 (72)		20 (–7)	15 (–9)	9 (–13)	2 (–17)	–7 (–22)	–16 (–27)	–28 (–33)	–42 (–41)	–56 (–49)				
20 (76)			16 (–9)	10 (–12)	4 (–16)	–3 (–19)	–12 (–24)	–22 (–30)	–34 (–37)	–48 (–44)	–62 (–52)†			
21 (79)			17 (–8)	12 (–11)	6 (–14)	0 (–18)	–9 (–23)	–17 (–27)	–28 (–33)	–41 (–41)	–54 (–48)	–62 (–52)†		

For cooling system capacities not shown, the required amount of antifreeze can be calculated, using the following: Ethylene-glycol base antifreeze in a 25% solution protects to 10°F (12°C), 33% to 0°F (–18°C), 40% to –12°F (–24°C), 50% to –34°F (–37°C), and 60% to –62°F (–52°C).

† 60% ethylene-glycol base antifreeze and 40% water by volume gives maximum coolant protection (–62°F [–52°C]). Exceeding 60% antifreeze diminishes coolant protection; concentrated ethylene-glycol base antifreeze will freeze at approximately 0°F (–18°C).

Table 3, Maximum Coolant Protection in °F (°C) at Various Antifreeze Concentrations

https://truckmanualshub.com/

Maximum Coolant Protection in F(C) at Various Antifreeze Concentrations														
COOLING SYSTEM CAPACITY* gal (L)	**ETHYLENE-GLYCOL BASE ANTIFREEZE REQUIRED gallons (liters)**													
	2 (8)	**3 (11)**	**4 (15)**	**5 (19)**	**6 (23)**	**7 (26)**	**8 (30)**	**9 (34)**	**10 (38)**	**11 (42)**	**12 (45)**	**13 (49)**	**14 (53)**	**15 (57)**
22 (83)			18 (–8)	13 (–11)	8 (–13)	2 (–17)	–6 (–21)	–14 (–26)	–23 (–31)	–34 (–37)	–47 (–44)	–59 (–51)		
23 (87)			19 (–7)	14 (–10)	9 (–13)	4 (–16)	–3 (–19)	–10 (–23)	–19 (–28)	–29 (–34)	–40 (–40)	–52 (–47)	–62 (–52)†	
24 (91)			19 (–7)	15 (–9)	10 (–12)	5 (–15)	0 (–18)	–8 (–22)	–15 (–26)	–24 (–31)	–34 (–37)	–46 (–43)	–58 (–50)	
25 (95)			20 (–7)	16 (–9)	12 (–11)	7 (–14)	1 (–17)	–5 (–21)	–12 (–24)	–20 (–29)	–29 (–34)	–40 (–40)	–52 (–47)	–62 (–52)†

For cooling system capacities not shown, the required amount of antifreeze can be calculated, using the following: Ethylene-glycol base antifreeze in a 25% solution protects to 10°F (12°C), 33% to 0°F (–18°C), 40% to –12°F (–24°C), 50% to –34°F (–37°C), and 60% to –62°F (–52°C).

† 60% ethylene-glycol base antifreeze and 40% water by volume gives maximum coolant protection (–62°F [–52°C]). Exceeding 60% antifreeze diminishes coolant protection; concentrated ethylene-glycol base antifreeze will freeze at approximately 0°F (–18°C).

Table 3, Maximum Coolant Protection in °F (°C) at Various Antifreeze Concentrations

https://truckmanualshub.com/

Index, Alphabetical

Title of Maintenance Operation (MOP)	MOP Number
Allison Transmission Fluid and Filter Changing	26–01
Transmission Cooler Inspection	26–03
Transmission Fluid Level Inspection	26–02

https://truckmanualshub.com/

https://truckmanualshub.com/

26–01 Allison Transmission Fluid and Filter Changing

CAUTION

Transmission fluid and filters must be changed whenever there is evidence of dirt or a high temperature condition. A high temperature condition is indicated when the transmission fluid is discolored, has a strong odor or has exceeded oil analysis limits shown in Table 1.

When draining transmission fluid, check for evidence of dirt or water contamination. A small amount of condensation will accumulate in the fluid during operation.

Water contamination is normally characterized as a milky discoloration of the transmission fluid. Obvious contamination of the transmission fluid indicates a leak between the water and fluid areas of the transmission cooler. Inspect and pressure-test the cooler to confirm the leak; replace leaking transmission coolers.

Transmission protection and fluid change intervals can be optimized by monitoring fluid oxidation according to the tests and limits shown in **Table 1**. Consult your local telephone directory for fluid analysis firms. To ensure consistent and accurate fluid analysis, use only one fluid analysis firm. Refer to the Allison Technician's Guide for Automatic Transmission Fluid, GN2055EN, for additional information.

Test	Limit
Viscosity	±25 percent change from new fluid
Total Acid Number	An increase of 3.0mg of KOH to neutralize a g of fluid change from new fluid
Solids	2 percent by volume maximum

Table 1, Fluid Oxidation Measurement Limits

IMPORTANT: For transmissions that are filled with TranSynd™, the lubricant must be changed every 50,000 miles (80 400 km) or 24 months or 2,000 hours, whichever comes first. Transmissions with petroleum-based lubricants must have the lubricant changed at each Maintenance 2 (M2) interval.

NOTE: TranSynd™ is a full synthetic transmission fluid developed by Allison Transmission and Castrol Ltd. This fluid meets Allison specifications for Severe Duty and Extended Drain Intervals. TranSynd™ is fully qualified to the Dexron ®-III specification.

1. Park the vehicle on a level surface. Apply the parking brakes, and chock the tires.
2. Operate the vehicle until the transmission reaches normal operating temperature: 160 to 200F (71 to 93C).

CAUTION

To prevent burns from hot transmission fluid, wear protective gloves when removing the fluid drain plug.

3. Clean the area around the drain plug and the transmission fluid pan. Place a drain pan under the transmission and remove the drain plug. Examine the fluid as it drains. If only the filter is being changed, do not drain the fluid.
4. Remove the 12 mounting bolts (six each) from the two filter covers.
5. Remove the filter covers, O-rings, and two square-cut seals from the transmission. See **Fig. 1**.
6. Remove the filters from the bottom of the control module.
7. Lubricate the new O-rings with transmission fluid, and install them on the cover assemblies.
8. Install a new square-cut seal on each cover assembly, and install the fluid filter elements on the cover assemblies.
9. Install the filter and cover assemblies into the filter compartment.
10. Align each cover assembly with the holes in the channel plate sump, and push the cover assemblies in by hand to seat the seals.

CAUTION

Do not use the bolts to draw the filter covers to the sump. This can damage the covers, seals, or sump.

11. Install six bolts in each cover, and torque the bolts38to 44lbf1ft (51 to 61 N•m).
12. Replace the drain plug O-ring, and install the drain plug. See **Fig. 1**. Tighten the drain plug 18 to 24 lbf•ft (25to 32N•m).

https://truckmanualshub.com/

13. Refill the transmission with fresh Dexron® III transmission fluid and check the fluid level.

    See **Table 2** for transmission lubricant capacities.

Transmission Lubricant Capacities	
Transmission Make and Model	**Capacity Quarts (Liters)**
Allison	
MD3060/3066 Initial ll w/Standard Sump	29 (27)
MD3060/3066 Rell w/Standard Sump	19 (18)
HD4060/4560 Initial ll w/Standard Sump	51 (48)
HD4060/4560 Rell w/Standard Sump	39 (37)

Table 2, Transmission Lubricant Capacities

NOTE: Do not overfill the transmission. Follow instructions in this manual to check fluid.

26–02 Transmission Fluid Level Inspection

Allison Transmission—Dipstick Method

CAUTION

Operating a transmission with the fluid level higher or lower than recommended can result in transmission damage. Do not overfill the transmission.

Do not mix types and brands of fluid, because of possible incompatibility. Do not use fluid additives, friction modifiers, extreme-pressure gear fluids, or multi-viscosity lubricants.

Cold Check

Clean all dirt from around the end of the fluid fill tube before removing the dipstick. Do not allow foreign matter to enter the transmission. Dirt or foreign matter in the hydraulic system may cause undue wear of transmission parts, make valves stick, and clog passages.

It is important to check the fluid level cold to determine if the transmission has a sufficient amount of fluid to be safely operated until a hot check can be performed.

1. Park the vehicle on a at, level surface.
2. Apply the parking brake and chock the tires.
3. Run the engine for at least 1 minute.

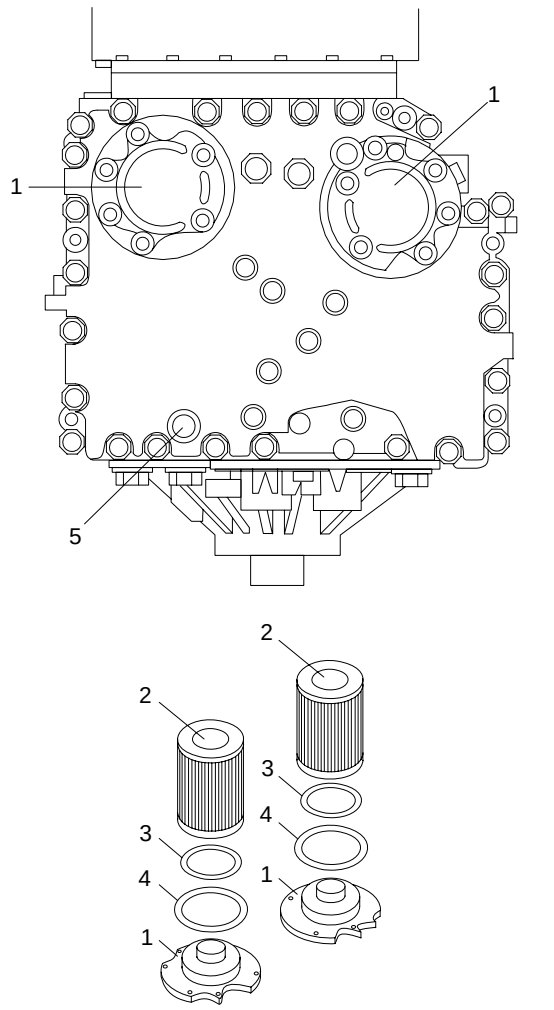

1. Filter Cover
2. Filter Element
3. Filter Element O-Ring
4. Square-Cut Seal
5. Drain Plug

Fig 1, Allison Transmission Filter Location and Components

4. Shift from DRIVE to NEUTRAL, and then shift to REVERSE to ll the hydraulic system.
5. Shift to NEUTRAL and allow the engine to idle at 500 to 800 rpm.

https://truckmanualshub.com/

6. With the engine running at idle, remove the dipstick from the tube and wipe it clean.
7. Insert the dipstick into the tube and remove thedipstick.
8. Check the fluid level reading and repeat the check procedure to verify the reading.

   If the fluid level is within the COLD RUN band, the transmission may be operated until the fluid is hot enough to perform a hot check.

   If the fluid level is not within the COLD RUN band, add or drain fluid as needed to adjust the fluid level to the middle of the COLD RUN band. See **Fig. 2**.

CAUTION

As the fluid temperature increases, so does the fluid level. Do not ll above the COLD RUN band if the transmission fluid is below normal operating temperature.

NOTE: Perform a hot check at the first opportunity after the normal operating temperature, 160 to 200°F (71 to 93°C), has been reached.

Hot Check

1. Park the vehicle on a at, level surface. Apply the parking brake and chock the tires.
2. Shift the transmission to NEUTRAL.

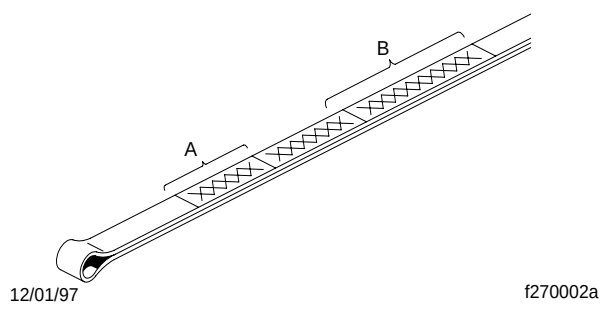

A. Cold Run Band B. Hot Run Band

Fig 2, Dipstick Markings

3. Operate the engine at idle (500 to 800 rpm) until normal operating temperature is reached. Check that the sump temperature is 160 to 200F (71 to 93C). Check that the converter-out temperature is 180 to 220°F (82 to 104°C).
4. With the engine idling, remove the dipstick from the tube and wipe it clean.
5. Insert the dipstick into the tube and remove the dipstick.
6. Check the fluid level reading and repeat the check procedure to verify the reading. Safe operating level is within the HOT RUN band on the dipstick. The HOT RUN band is between the HOT FULL and HOT ADD marks.

   If the fluid level is not within the HOT RUN band, add or drain fluid as needed to bring the fluid level within the HOT RUN band. See **Fig. 2**.

Visually inspect the breather valve on the transmission.

Allison Transmission—Electronic Method

Before checking the transmission oil level, the following conditions must be met:

- The engine must be at idle.
- The transmission must be in neutral.
- The transmission output shaft must be stopped.
- The transmission fluid must be within normal operating temperatures of 140°F (60°C) to 220°F (104°C).

1. Start the engine, allow the transmission fluid to reach operating temperature, and place the transmission in neutral.
2. On push-button shift selectors, press both the up and down arrow buttons once at the same time and release. On lever shift selectors, press the DIAGNOSTICS (the button with the Allison Logo) button once.
3. The ECU performs a system check. If a problem is found during the system check, an oil level sensor diagnostic code will be displayed. Oil level sensor diagnostic codes are listed in **Table 3**.

https://truckmanualshub.com/

Oil Level Sensor Diagnostic Codes	
Code	**Description**
O-L-5-0	Engine speed too low
O-L-5-9	Engine speed too high
O-L-6-5	Transmission not in neutral
O-L-7-0	Sump Temperature too low
O-L-7-9	Sump Temperature too high
O-L-8-9	Output shaft rotating
O-L-9-5	Sensor failure

Table 3, Oil Level Sensor Diagnostic Codes

4. If the system check revels any problems, as indicated by an oil level sensor diagnostic code, correct the problem. The system check will automatically perform a recheck.
5. After a 2-minute waiting period has passed, to allow fluid to drain, the digital display will ash a oil level indicator code one digit/letter at a time. Oil level indicator codes are listed in **Table 4**

Oil Level Indicator Codes	
Code	**Description**
O-L-O-K	Fluid level is within proper limits
L-O-0-1	Fluid level is 1 quart low
L-O-0-2	Fluid level is 2 quarts low
H-I-0-1	Fluid level is 1 quart high
H-I-0-2	Fluid level is 2 quarts high

Table 4, Oil Level Indicator Codes

CAUTION

On lever shift selectors be prepared for the vehicle to shift into gear.

6. On push-button shift selectors, press the neutral button to exit the oil level mode. On lever shift selectors, shift the selector to either drive or reverse to exit the oil level mode.
7. Check for historical or active fault codes. If the codes are displayed, contact an authorized transmission service center for repairs.

26–03 Transmission Cooler Inspection

Visually check the transmission cooler (or heat exchanger), which is mounted below the radiator at the front of the vehicle. Check for loose fittings, cracks, and loose fasteners. Tighten loose fasteners and fittings, as needed. Replace any part of the cooler that is worn, dented, cracked or otherwise damaged.

https://truckmanualshub.com/

Index, Alphabetical

Title of Maintenance Operation (MOP)	MOP Number
Fifth Wheel Inspection	31–02
Fifth Wheel Lubrication	31–03
Frame Fastener Torque Checking	31–01
Vogel Chassis Lubrication System Check	31–04
Vogel Chassis Lubrication System Inspection	31–05
Vogel Chassis Lubrication System Reservoir Checking and Refilling	31–06

https://truckmanualshub.com/

https://truckmanualshub.com/

31–01 Frame Fastener Torque Checking

Frame brackets and components secured with Huck-bolt® fasteners do not require a torque check, however, they should be inspected for damage. Frame brackets and components secured with threaded bolts and nuts are to be checked at the Initial Maintenance Inspection. Check the torque of frame fasteners to offset the effects of "bedding in" (or seating). When checking torque, torque the nut, not the bolt head whenever possible. This will give a true torque reading by eliminating bolt body friction. When checking the torque of frame fasteners, inspect the frame for cracks and other damage. Set a click-type torque wrench to the maximum torque of the fastener you are checking. Apply pressure until the torque wrench clicks. Do not loosen the bolt to check the torque. See the applicable torque table in **Group 00** for torque specifications.

CAUTION

Continued vehicle operation with loose fasteners could result in bracket or frame damage.

Inspect and check the fasteners at the following locations:

- Axle Stops
- Engine Trunnion Supports
- Equalizer Brackets
- Exhaust Brackets
- Frame Crossmembers and Gussets
- Frame Brackets
- Front Suspension Brackets
- Radius Rods
- Rear Engine Supports
- Rear Suspension Brackets
- Shock Absorbers
- All Other Frame Fasteners

Any component that shows signs of cracking, or other damage must be repaired or replaced. See the vehicle workshop manual for repair or replacement information in the respective section for the component in question.

31–02 Fifth Wheel Inspection

WARNING

All fifth wheel maintenance, adjustment, and rebuilding must be done only by a qualified mechanic. Improper or incomplete procedures could result in a possible disengagement of the trailer from the tractor, which could result in personal injury or property damage.

Parts are under spring compression. Wear safety goggles while servicing the fifth wheel. Failure to do so can result in personal injury, due to parts ejecting with force.

Fontaine

1. Disconnect the tractor from the trailer. For instructions, see the vehicle operator's manual.
2. Thoroughly steam-clean the fifth wheel.
3. Look for cracks in the fifth wheel assembly, mounting brackets, and mounting parts.
4. Check the jaw and stationary jaw for mushrooming, and check that the serrations at the jaw and wedge are in good condition.
5. Test the safety lock latch for free operation.

NOTE: The safety lock latch is located at the front of the fifth wheel on the top plate.

6. Visually check for loose nuts or bolts (see **Fig. 1**)on the fifth wheel and on the mounting. Set a torque wrench to the maximum torque value for the bolt being checked, and confirm that the torque is to specification. Do not loosen the bolt to check the torque value. See **Group 00** for bolt torque specifications.
7. Visually check all springs to see if they are securely fastened, and are not deformed.

WARNING

Do not disassemble the fifth wheel to inspect the springs. The springs are under extreme pressure, and could cause serious injury.

https://truckmanualshub.com/

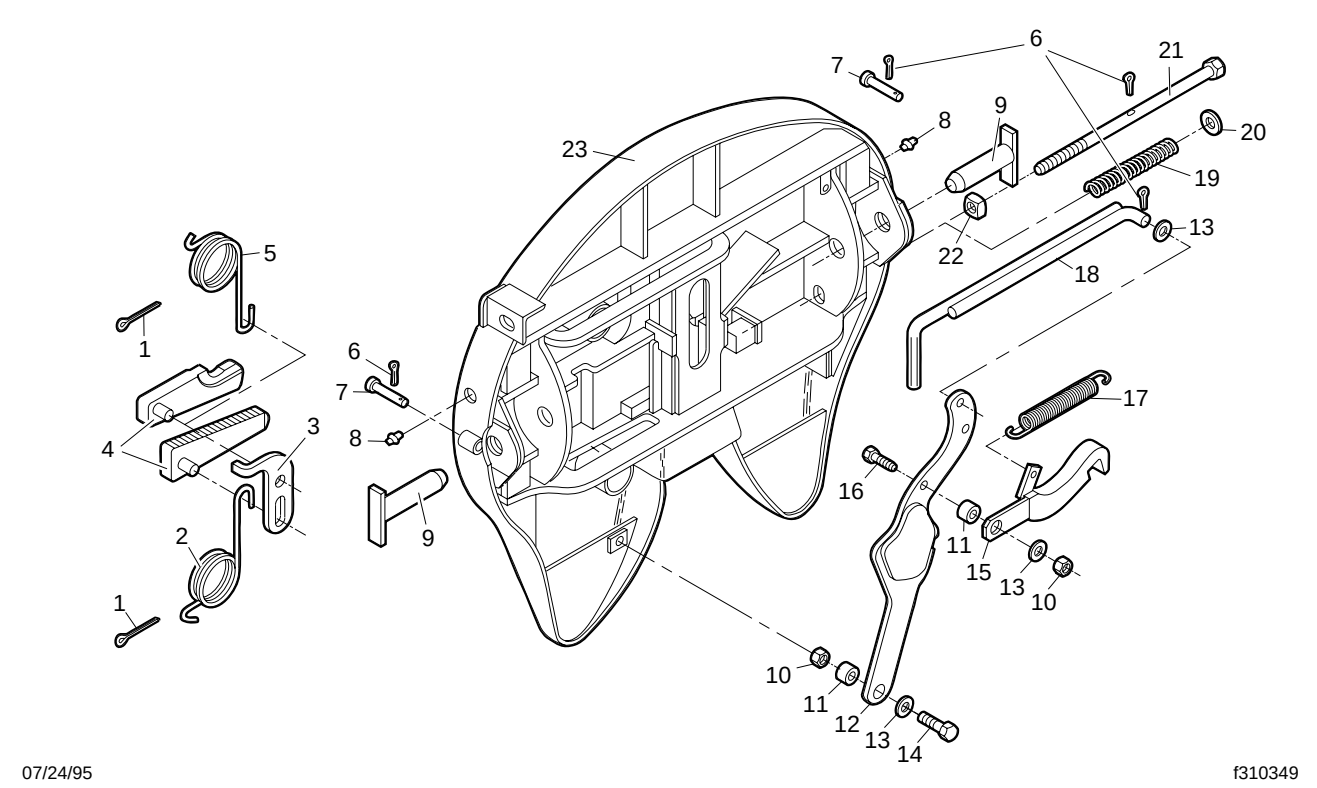

1. Cotter Pin, 3 inch
2. Wedge Spring
3. Timer
4. Jaw and Wedge
5. Jaw Spring
6. Cotter Pin, 1 inch
7. Retaining Pin
8. Grease Fitting
9. Bushing Pin
10. Locknut, 1/2–13
11. Pivot Bushing
12. Operating Handle
13. Flatwasher, 1/2 inch
14. Bolt, 1/2–13 x 2
15. Bumper
16. Bolt, 1/2–13 x 1-1/2
17. Bumper Spring
18. Release Handle
19. Wedge Stoprod Spring
20. Flatwasher, 5/8 inch
21. Wedge Stoprod
22. Nut, Square, 5/8–11
23. Fifth Wheel Top Plate

Fig 1, Fontaine 5000/6000 Series Fifth Wheel (right-side release shown)

8. Check wedge adjustment.
   - 8.1. Open the kingpin lock, and vertically insert a two-inch-diameter shaft.
   - 8.2. Release the lock by tripping the release latch at the bottom of the throat.
   - 8.3. Adjust the wedge stop at the end of the wedge to approximately 1/4-inch (6-mm) clearance by turning the wedge stop rod located on the right side of the top plate.
9. Replace cracked, worn, or damaged parts with new parts. Replace all loose mounting bolts with 5/8–11 SAE grade 8 bolts, grade C locknuts, and hardened washers. Do not re-use bolts, nuts, and washers on fifth wheel mountings.
10. After inspecting the fifth wheel, lubricate all moving parts with a chassis or multipurpose grease.Apply a generous coating of grease to the top plate to fill the grooves, or depressions, on the top plate. See **Maintenance Operation 31–03** for lubrication instructions.

https://truckmanualshub.com/

Holland

1. Disconnect the tractor from the trailer. For instructions, see the vehicle driver's manual.
2. Thoroughly steam-clean the fifth wheel.
3. Check for loose nuts or broken bolts on the fifth wheel assembly.
4. Inspect for cracks or wear on the mounting bolts.
5. Visually inspect for improper locking action and for cracks or wear on the jaw locking mechanism.
6. Check the depth of the grease grooves. If the depth of the grooves is 1/8 inch or less, replace the fifth wheel top plate. See **Group 31** of the *Condor® Workshop Manual*.
7. Check the condition of the X-pattern cast into the underside of the fifth wheel top plate. See **Fig. 2**. The fifth wheel top plate must be removed to check the X-pattern.
   - 7.1. Remove the roll pins from the bushing pins. Remove the bushing pins from the slide mount. Using a hoist, lift the fifth wheel top plate off of the vehicle.
   - 7.2. Turn the fifth wheel top plate over with the locks open. Check the condition of the X-pattern in the pockets. If the X-pattern is worn away, replace the fifth wheel top plate.
   - 7.3. Install the fifth wheel top plate, bushing pins, and roll pins.
8. Inspect for fatigue or cracked welds.
9. Replace cracked, worn, or damaged parts with new parts. Replace all loose mounting bolts with 5/8–11 SAE grade 8 bolts, grade C locknuts, and hardened washers. Do not re-use bolts, nuts, and washers on fifth wheel mountings.
10. After inspecting the fifth wheel, lubricate all moving parts with a chassis or multipurpose grease. See **Maintenance Operation 31–03** for lubrication instructions.

31–03 Fifth Wheel Lubrication

To maintain proper fifth wheel operation, always lubricate the fifth wheel after an inspection has been performed.

IMPORTANT: Lubricate the fifth wheel:

- After power washing, or steam cleaning.
- If the vehicle operates in harsh conditions such as salt spray from road surfaces, or in extremely dusty environments.
- After any service that requires the removal of lubrication from the fifth wheel head or components.

⚠ WARNING

Failure to properly lubricate the fifth wheel could result in a possible disengagement of the trailer from the tractor, which could result in personal injury or property damage.

Fontaine

Use a multipurpose extreme pressure (EP) chassis grease, and lubricate all moving parts on the fifth wheel. When lubricating the top plate at the two grease fittings for the bracket bearing area, tilt the top plate forward and backward to evenly distribute the grease. Separate the jaw and wedge with a pry tool, and lubricate the serrations using a brush to distribute the grease. On slide-mount applications, lubricate the slide rail and tapered wedges for smooth operation.

Once the fifth wheel's moving parts are lubricated, apply a liberal coating of grease to the top plate and the trailer kingpin plate.

Holland

Lubricate all moving parts with a multipurpose chassis grease. Lubricate the two grease fittings located on either side of the top plate with a multipurpose chassis grease.

Once the fifth wheel's moving parts are lubricated, apply a heavy coat of grease to the top plate by direct application. On slide-mount applications, lubricate the baseplate rails and the plungers for smooth operation.

31–04 Vogel Chassis Lubrication System Check

The following system check will verify that the electrical system of the Vogel system is functioning correctly. This check should be performed during routine maintenance checks.

https://truckmanualshub.com/

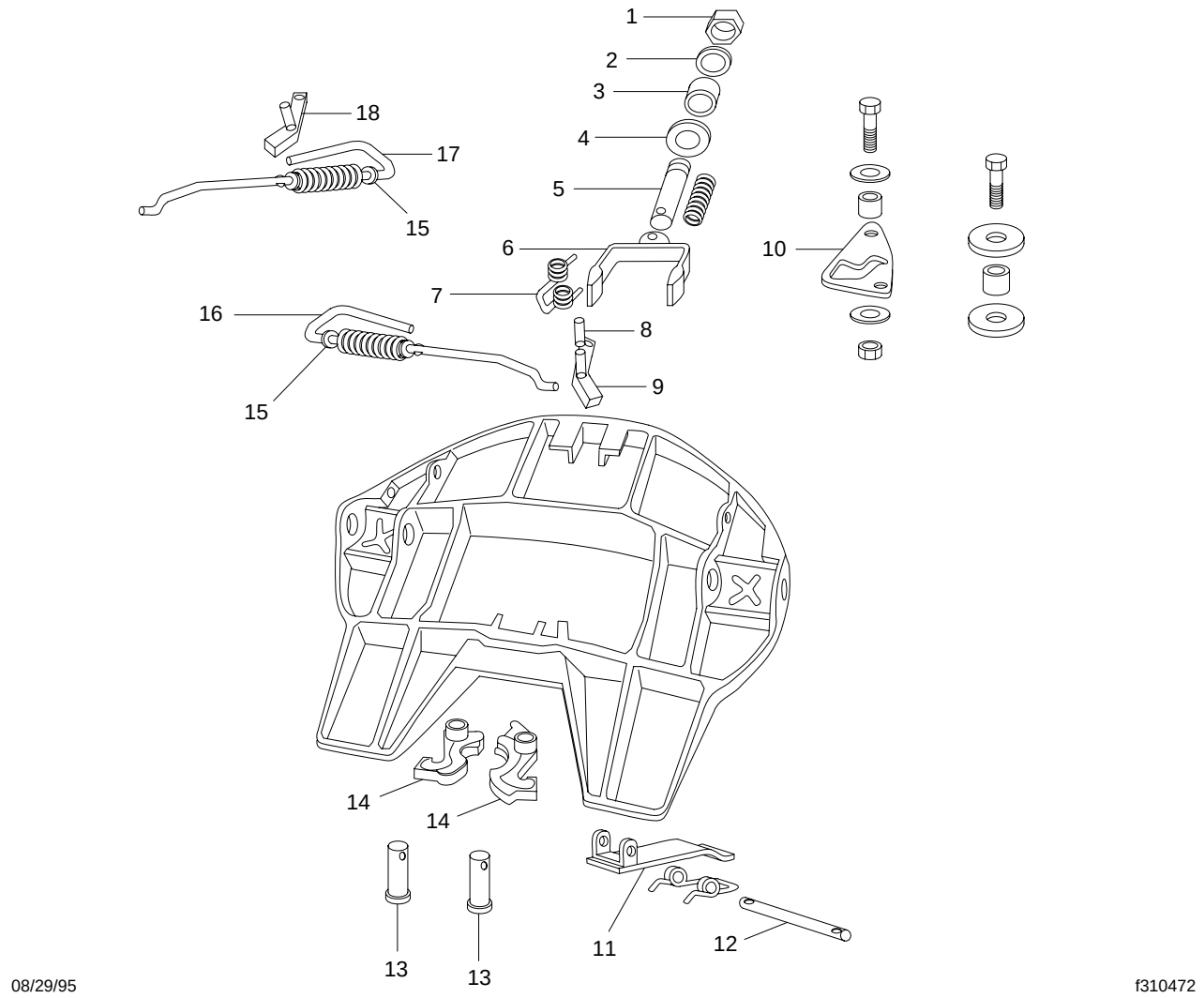

1. Locknut, 3/4–16
2. Washer
3. Rubber Washer
4. Lock Adjustment Tag
5. Yoke Shaft
6. Yoke Sub-Assembly
7. Torsion Spring
8. Roll Pin
9. Secondary Lock, Right-Hand
10. Cam Plate
11. Lock Guard
12. Pin
13. Lock Pin
14. Lock Jaw
15. Washer
16. Right-Hand Release Handle
17. Left-Hand Release Handle
18. Secondary Lock, Left-Hand

Fig 2, Holland Fifth Wheel

Turn on the vehicle ignition while observing the dash mounted indicator lamp. The indicator lamp on the dash and at least one LED (PAUSE or CONTACT) on the control unit should all come on following ignition activation. The indicator lamp on the dash will go out after 3 seconds. The control unit performs a self diagnostic check during this 3 second interval. The Initiate a manual override lube cycle by depressing PAUSE or the CONTACT LED on the control unit and releasing the DK button on the control unit. will remain lit during the entire ignition on-time. If The PAUSE LED will go off and the CONTACT LED the system is in PAUSE mode

https://truckmanualshub.com/

(waiting for the next on the control unit will activate for the preset pump lubrication cycle) the PS LED remains lit to show that running time (factory preset for 2.6 minutes) while monitoring with the pressure switch is activated. the power is applied to the pump. The PS LED will go off and will light up again once sufficient system pressure has been attained to prefill all lubrication lines. The CONTACT and PS LEDs will remain lit for the remainder of the pump running period. Following completion of the pump running period, the CONTACT LED will go off and the PAUSE LED will light up again as the control unit counts time until the next lubrication cycle starts. The PS LED stays lit to show that monitoring by the pressure switch is preset.

The LED sequence provides visual confirmation of system performance and failure. The CS LED is not used in fluid grease applications and will not light up with the systems described in the Vogel Chassis Lubrication System. **Table 1** summarizes the control unit LED light sequence.

Pos.	Description	Duration	LEDs
1	Vehicle ignition is off, no power to the lubrication system	As long as the ignition is off	N/A
2	The ignition is switched on, lubrication system gets power	3 seconds	PAUSE, PS, Cab Lamp
3	System pause time, system counts down time to the next lubrication cycle	Remainder of preset pump pause time or until manual override occurs	PAUSE, PS
4	Countdown complete, contact time starts, pump motor activates	Preset contact (pump running) time (factory preset for 2.6 minutes)	CONTACT
5	System pressure of 360 psi (2482 kPa)	Contact time minus the time the pump needs to build up pressure	CONTACT, PS
6	The pump turns off, counts down pause time to the next lubrication cycle or until manual override occurs	Duration of preset pause time	PAUSE, PS
7	A fault has occurred and the system could not build up pressure during contact (pump running) time	Until manual override (press the DK button) occurs and the fault is remedied	FAULT, Cab Lamp

Table 1, LED Light Sequence

31–05 Vogel Chassis Lubrication System Inspection

Inspect the vehicle before it is washed or pressure cleaned, as areas of under-or over-lubrication are best observed at this time.

CAUTION

Vogel lubrication lines cannot be attached to the grease fittings of disc brake calipers. The Vogel lubrication system is not compatible with grease used in the disc brake calipers. Attaching Vogel lube lines to the grease fittings of disc brake calipers could cause premature wear and/or damage to the disc brakes.

If a garage with a pit is available, drive the vehicle over the pit as visual inspection is easier from beneath the vehicle. Verify that all originally attached lubrication lines are still connected. If necessary, reattach or replace damaged line(s). Pay particular attention to those points closest to the road surface. See the manufacturer's service literature for instructions.

Inspect the points being lubricated. A seal of lubricant around the outside of the bushings should be visible. This assures that the point is being flushed of contaminants.

If all the lubrication points are under-or over-lubricated, adjust the control/unit timer. If an individual lubrication point is over-or under-lubricated, trace the line back to the distribution block. Replace the metering cap with a larger one if under-lubricated or a smaller one if over-

https://truckmanualshub.com/

lubricated. See the manufacturer's service literature for instructions.

31–06 Vogel Chassis Lubrication System Reservoir Checking and Refilling

Gain access to the chassis lubrication system reservoir and observe the lubricant level in the reservoir. The reservoir is marked with a minimum fill line. If the grease level drops below the minimum level, air will be pumped through the main line distribution network. If this occurs a fault LED will be displayed on the dash for the duration of the ignition ON time and the system will have to be bled. See the manufacturer's service literature for instructions.

IMPORTANT: Use only fluid grease of NLGI grades00 or 000. See **Table 2** for lubricants that have been approved for use to maintain the system warranty of the Vogel lubrication system.

1. Refill the reservoir. See **Fig. 3**.
   1.1. Remove the cap on the unit by pressing both hands at the side of the cap and lift it off.
   1.2. Connect the quick disconnect adaptor to the filling hose of the hand crank pump and connect it to the refilling connector.
   1.3. Refill the reservoir.

   NOTE: There is not a maximum fill line on the reservoir. However, you can see the fluid in the reservoir as it is being filled. Add fluid until it appears to be at the top of the reservoir.
2. Manually test the lubrication system using instructions found in the manufacturer's service literature.

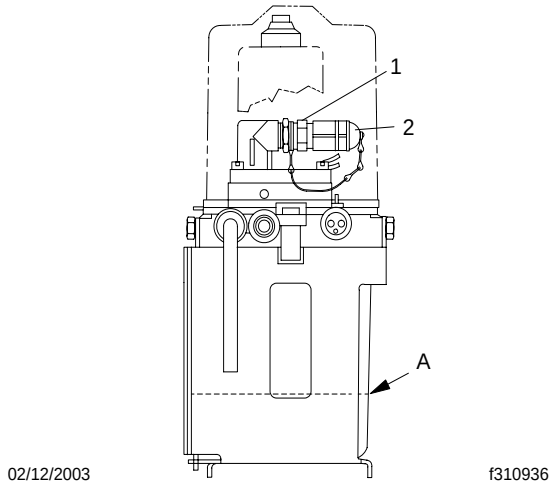

A. Minimum Fill Line
1. Refill Connector
2. Cap

Fig 3, Vogel Chassis Lubrication Pump Assembly

Fluid Grease of NLGI Grades 00 and 000		
Grade	**Type**	**Supplier**
NLGI 00	Alvania EP R00	Shell
	Chevron Dura-Lith 00	Chevron
	EP Conolith 00	Conoco
	Drydene Lithium EP 00	Dryden
	Mobilith SHC 007	Mobil
	Unocal MM Grease Lithium 00	76 Unocal
NLGI 000	EP Conolith 000	Conoco
	Lidok 000	Exxon
	Mobilux EP 023	Mobil
	Novatex Grease EP 000	Texaco
	Drydene Lithium EP 000	Dryden
	Unocal MM Grease Lithium 000	76 Unocal
Biodegradable Grease	SL WR AA1 00	Sentinel
	SL WR AA1 000	Sentinel

Table 2, Fluid Grease of NLGI Grades 00 and 000

https://truckmanualshub.com/

Index, Alphabetical

Title of Maintenance Operation (MOP)	MOP Number
Suspension Inspection	32–01
Suspension Lubrication	32–02
Suspension U-Bolt Torque Check	32–03

https://truckmanualshub.com/

https://truckmanualshub.com/

32–01 Suspension Inspection

Front Suspension Check

WARNING

Do not replace individual leaves of a damaged leaf spring assembly; replace the complete spring assembly. Visible damage (cracks or breaks) to one leaf causes hidden damage to other leaves. Replacement of only visibly damaged parts is no assurance that the spring is safe. On front spring assemblies, if cracks or breaks exist in the two top leaves, loss of vehicle control could occur. Failure to replace a damaged spring assembly could cause an accident, resulting in serious personal injury or property damage.

Inspect the front spring assemblies for cracked, broken, or abnormally bent leaves. If any of these conditions exist, replace the spring assembly. See **Group 32** of the *Condor® Workshop Manual* for instructions.

Front and Rear Suspension Shock Absorber Check

Make sure the shock absorber brackets are tight, and the shock absorber is not striking or rubbing the frame or some other part of the chassis. Striking or rubbing the frame is characterized by chafe marks on the shock absorber body and the frame rail. Check the rubber mounting bushings for cracks, cuts, swelling, and dry rot. Also, check the bushings for missing pieces. Replace the bushings as needed. See **Fig. 1**.

Inspect the shock absorber for oil leakage. If the shock absorber is damaged or leaking, replace it with a new one. See **Group 32** of the *Condor® Workshop Manual* for replacement instructions.

Rear Suspension Check

American LaFrance Spring Suspension

WARNING

Do not replace individual leaves of a damaged leaf spring assembly; replace the complete spring assembly. Visible damage (cracks or breaks) to one leaf causes hidden damage to other leaves. Replacement of only visibly damaged parts is no assurance that the spring is safe. Failure to replace a damaged spring assembly could cause an accident, resulting in serious personal injury or property damage.

Replace worn, cracked, or damaged spring brackets. Failure to do so could result in bracket breakage, possibly leading to loss of vehicle control and resulting in personal injury or property damage.

1. Inspect the forward and rear spring brackets and equalizer brackets for wear, cracks, and other damage. If any of these conditions exist, replace the damaged bracket(s). See **Group 32** of the *Condor® Workshop Manual* for instructions.
2. Inspect the drive axle(s) frame crossmember and gussets for wear, cracks, and other damage. If any of these conditions exist, replace the damaged parts. See **Group 32** of the *Condor® Workshop Manual* for instructions.

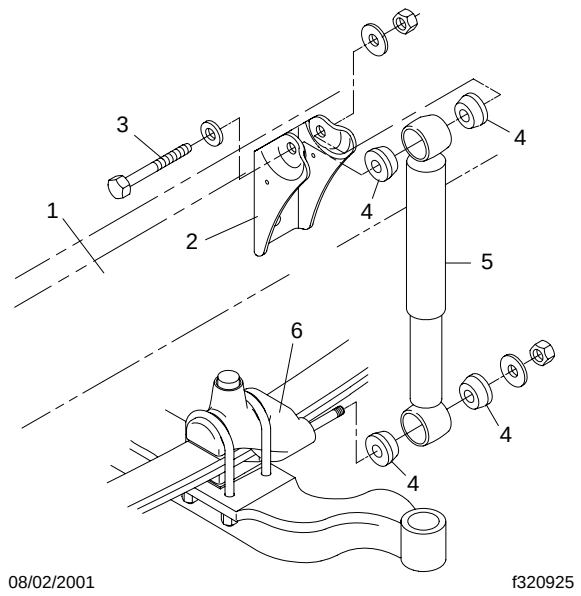

1. Frame Rail
2. Upper Mounting Bracket
3. Upper Mounting Bolt
4. Bushing
5. Shock Absorber
6. Axle Stop/Lower Shock Absorber Bracket

Fig. 1, Shock Absorber Mounting (front suspension shown)

https://truckmanualshub.com/

CAUTION

Failure to replace suspension crossmembers or gussets if cracked, worn, or otherwise damaged could result in damage to the vehicle chassis.

3. Without detaching the torque arms, attempt to move (by hand) each radius-rod end up, down, in, and out. If there is any movement, replace the torque arm. If a torque arm needs to be replaced, See **Group 32** of the *Condor® Workshop Manual* for instructions.
4. Inspect the weld seams between the torque arm tube and the shorter bushing tubes. If there are cracks, replace the torque arm. Do not weld the torque arm for any reason.
5. Inspect the rubber bushing ends. See **Fig. 2**. Replace the torque arm for any of the following reasons:
   - If there are gaps between the rubber bushing and the pin or outer steel sleeve.
   - If either bushing end contacts a torque arm pin mounting bolt.
   - If there are cracks in the bushing.
   - If part of the rubber bushing extends beyond the outer circumference of the outer bushing sleeve.

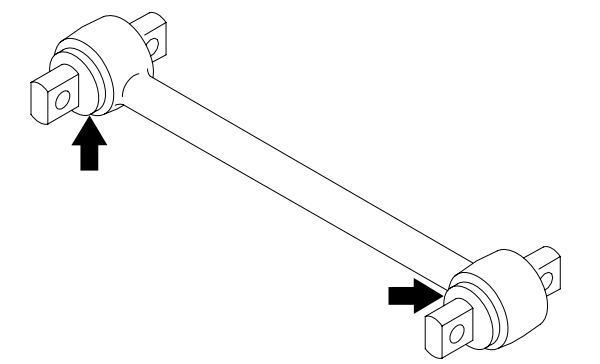

Fig. 2, Torque Arm Bushings

6. Block up the frame enough to take chassis weight off the springs. Attempt to move the equalizer up and down, using a pry bar between the top of the equalizer and top of the equalizer bracket; apply hand pressure only. See **Fig. 3**. If movement at the center of the equalizer exceeds 1/8 inch (3 mm), replace the equalizer bushings. See **Group 32** of the *Condor® Workshop Manual* for instructions.

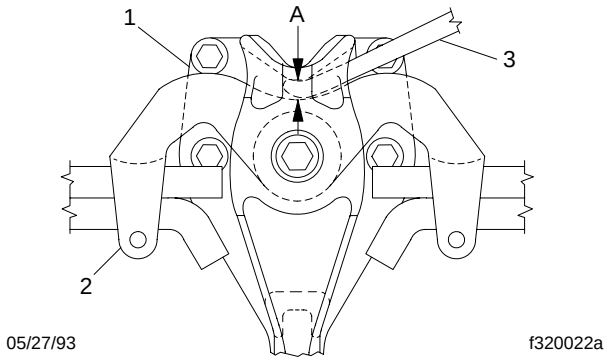

Measure the change in gap at this point.

1. Equalizer Bracket
2. Equalizer
3. Pry Bar

Fig. 3, Side View of the Equalizer

7. With the vehicle unloaded, attempt to move the equalizer side to side, using a pry bar between the equalizer and frame rail. Apply hand pressure only. See **Fig. 4**. If clearance between the equalizer assembly and any frame component or fastener is less than 1/8 inch (3 mm), replace the equalizer bushings. See **Group 32** of the *Condor® Workshop Manual* for instructions.

https://truckmanualshub.com/

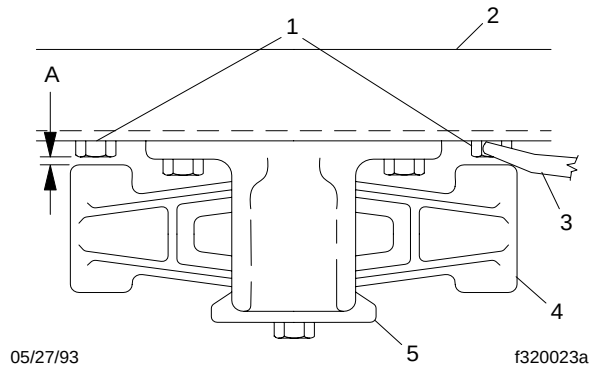

A. 1/8" (3 mm) Clearance
1. Frame Fasteners
2. Frame Rail
3. Pry Bar
4. Equalizer
5. Equalizer Bracket

Fig. 4, Side View of the Equalizer

American LaFrance AirLiner Suspension

WARNING

Do not replace individual leaves of a damaged leaf spring assembly; replace the complete spring assembly. Visible damage (cracks or breaks) to one leaf causes hidden damage to other leaves. Replacement of only visibly damaged parts is no assurance that the spring is safe. Failure to replace a damaged spring assembly could cause an accident, resulting in serious personal injury or property damage.

Inspect the forward and rear spring brackets for wear, cracks, and other damage. If any of these conditions exist, replace the damaged bracket(s). See **Group 32** of the *Condor® Workshop Manual* for instructions.

WARNING

Replace worn, cracked, or damaged spring brackets. Failure to do so could result in bracket breakage, possibly leading to loss of vehicle control and resulting in personal injury or property damage.

Inspect the crossmember(s) and gussets for wear, cracks, and other damage. If any of these conditions exist, replace the damaged parts. See **Group 32** of the *Condor® Workshop Manual* for instructions.

IMPORTANT: Before checking the AirLiner suspension height, make sure there is no load on the chassis, and the trailer is unhitched.

1. Park the vehicle on a level surface, using a light application of the brakes. Do not apply the parking brakes. Shift the transmission into neutral, and build the secondary air pressure to at least 100psi (690 kPa). Shut down the engine.
2. Mark the location of the front and rear tires on the floor, and chock the tires on one axle only.
3. Check the length of the overtravel lever between its pivot points. See **Fig. 5**, Ref. A. If the vehicle is equipped with an adjustable leveling valve, the length should be 8 inches (203 mm). If the length is incorrect, See **Group 32** of the *Condor® Workshop Manual* for adjustment procedures.

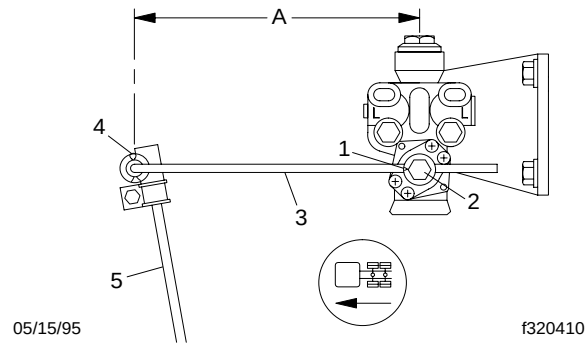

A. Measure the length of the overtravel lever between these two points.
1. V-Shaped Mark
2. Adjustment Locknut
3. Overtravel Lever
4. Cotter Pin
5. Linkage Rod

Fig. 5, AirLiner Overtravel Lever and Linkage Rod Measurement

4. On single-drive rear axle configurations, measure the distance from the bottom of the left axle stop to the top of the U-bolt pad. On tandem (dual-drive) rear axle configurations, measure the distance from the bottom of the forward most left axle stop

https://truckmanualshub.com/

to the top of the axle U-bolt pad. See **Fig. 6**, Ref. A.
See **Table 1** for the correct distances.

Suspension Height Adjustment Distances			
Suspension Type	**Distance in Inches (mm)**		
	Minimum	**Target**	**Maximum**
20/40K AirLiner	2-3/8 (60)	2-5/8 (67)	2-7/8 (73)
23/46K AirLiner	2-3/4 (70)	3 (76)	3-1/4 (83)
Low/Mid-Ride Height AirLiner	2-1/4 (57)	2-1/2 (64)	2-3/4 (70)

Table 1, Suspension Height Adjustment Distances

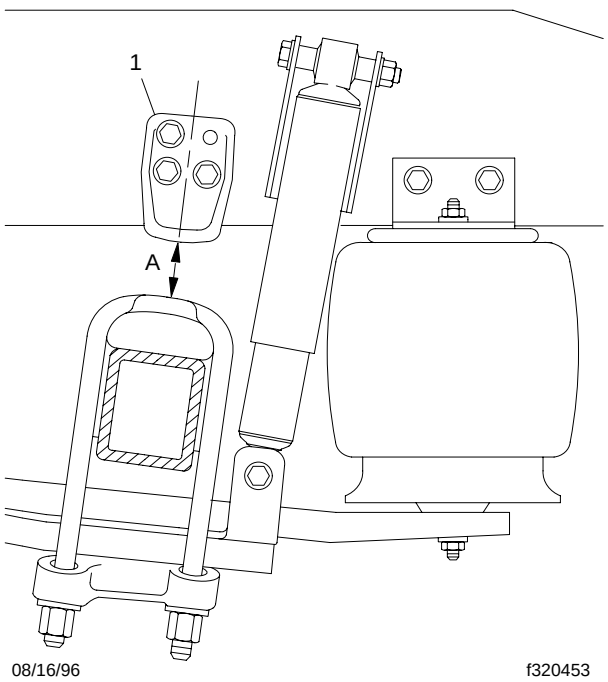

A. Measure height here.
1. Left Forward most Axle Stop

Fig. 6, AirLiner Axle Stop Measurement

5. If the axle stop measurement is not correct, See **Group 32** of the *Condor® Workshop Manual* for adjustment procedures.
6. Apply the parking brakes, and remove the chocks.

American LaFrance TufTrac

Inspect all suspension fasteners for the proper torque values. See **Group 00** of this manual for proper bolt torque specifications. Visually inspect the frame for elongated holes or abnormal wear at the suspension mounting points, and have the frame repaired as needed. If elongated holes are found on the frame, check the suspension alignment. Check brackets and torque rods for damage or loose fasteners

Chalmers Tandem Axle Suspension

Chock the front tires to prevent the vehicle from moving. Place the transmission in neutral, and release the parking brakes before inspecting the Chalmers rear suspension.

Power-wash the Chalmers rear suspension, or clean it with a hard-bristle brush before performing a visual inspection.

1. Visually inspect the rubber bushings for cracks or other damage.

   Try to move the torque rod ends using your hands only, and check for any free-play. If free-play is felt, replace the torque rod end bushing. Do not use a pry bar to check for free-play. Use of a pry bar may lead to premature bushing replacement.

2. Lift the rear of the vehicle and support the frame on jack stands to unload the suspension components. The vehicle is lifted high enough when the beam ends are off of the saddles. All jack stands must be of sufficient strength and rigidity to safely support the vehicle. Do not perform any work on or around a vehicle that is supported solely by a lifting device.

   Visually inspect the walking beam for cracks or other damage. If damage is found, replace the walking beam.

   Keep the vehicle supported by the jack stands for the next operation.

https://truckmanualshub.com/

3. Manipulate the walking beam so that a micrometer, vernier, or dial caliper may be used to determine the wear area thickness on the bottom face. See **Fig. 7**. Measurements should be taken a minimum of 1/2 inch from the beam flange edges to eliminate any edge wear that may have occurred. Subtract the wear area thickness (see **Fig. 7**, Ref. B) from the thickness at the non-wear area (see **Fig. 7**, Ref. A) to determine the amount of wear.

   If the beams show any wear greater than 0.062 inch (1.5 mm), a Chalmers wear plate must be installed, or the walking beam must be replaced.

4. Rotate the restrictor cans 360 degrees and visually inspect the cans for cracks, severe corrosion, and distortion. If any of these conditions are present, or the restrictor can is missing, replace the restrictor can.

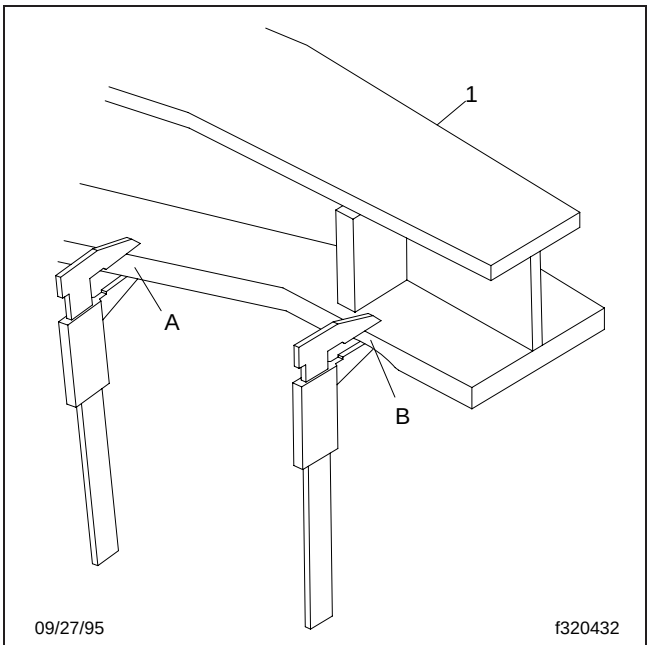

A. Non-Wear Area
B. Wear Area
1. Walking Beam

Fig. 7, Walking Beam End Wear Thickness

WARNING

Replace all cracked or missing restrictor cans. Failure to do so could lead to loss of vehicle control, which could result in personal injury. Vehicles with cracked or missing restrictor cans may be driven slowly to the nearest workshop for restrictor can replacement.

Chalmers Single Axle Suspension

1. Chock the front tires to prevent the vehicle from moving. Place the transmission in neutral, and release the parking brakes before inspecting the Chalmers rear suspension.
2. Power-wash the Chalmers rear suspension, or clean it with a hard-bristle brush before performing a visual inspection.
3. Visually inspect the rubber bushings for cracks or other damage.

   Try to move the torque rod ends using your hands only, and check for any free-play. If free-play is felt, replace the torque rod end bushing. Do not use a pry bar to check for free-play. Use of a pry bar may lead to premature bushing replacement.

4. Rotate the restrictor cans 360 degrees and visually inspect the cans for cracks, severe corrosion, and distortion. If any of these conditions are present, or the restrictor can is missing, replace the restrictor can.

WARNING

Replace all cracked or missing restrictor cans. Failure to do so could lead to loss of vehicle control, which could result in personal injury. Vehicles with cracked or missing restrictor cans may be driven slowly to the nearest workshop for restrictor can replacement.

Hendrickson HN Series

1. Park the vehicle on a level surface, apply the parking brakes, and chock the front tires.
2. Visually inspect the end beam connection for distorted or frayed rubber. Also look for the equalizing beam being lower in the beam hanger. If either of these conditions are found replace the rubber end bushings and all connecting parts.

   The gap at each side of the visible rubber on the lower part of the end bushing is normal. See **Fig. 8**.

https://truckmanualshub.com/

Place a jack stand under each beam end (see **Fig. 8**) and check for movement of the rubber end bushing inner casting. If movement is noted replace the rubber end bushing and all connecting parts.

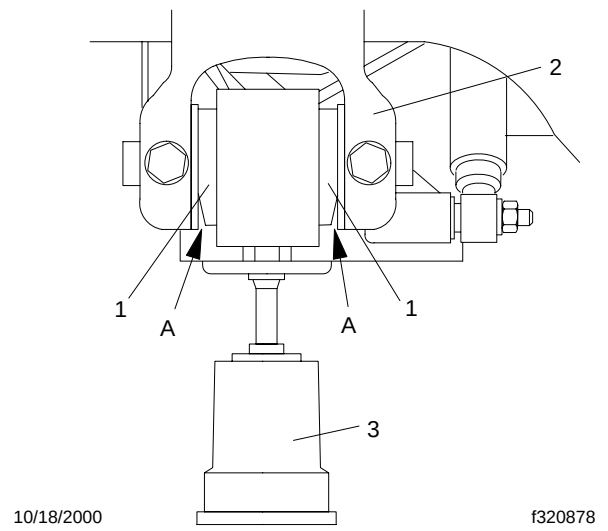

A. Gap in Rubber End Bushing
1. Rubber End Bushing
2. Bar Pin Axle Bracket
3. Jack

Fig. 8, Beam End Connection

WARNING

If movement is noted, do not operate the vehicle. Replace the rubber end bushings and all connecting parts. The above condition can result in costly repair, downtime, possible separation of components, loss of vehicle control, property damage, or personal injury.

3. Inspect all torque rods and transverse rods for looseness, or shredded rubber. With the brakes applied, slowly rock an empty vehicle while an assistant visually checks the action at both ends of the rod. Or with the vehicle shut down, a lever check can be made with a long pry bar placed under each rod end and pressure applied.

   Whether the rod ends are straddle mount or tapered stud, they can be renewed by pressing out the worn end, and installing a cartridge type replacement. A two-piece rod is also available to cut and weld to the desired length.

4. Visually inspect the rebound strap to make sure it is intact and not torn. If the rebound strap is not intact, or is torn replace it.

5. Visually inspect the auxiliary spring. The normal height of an unloaded auxiliary spring is 4 inches(10 cm). Replacement is recommended when the height of the auxiliary spring decreases to 3-1/2 inches (9 cm) or below. See **Fig. 9**.

NOTE: When bolster springs are replaced, it is recommended that both bolster springs on a beam be replaced even if only one shows wear.

6. Visually inspect all four bolster springs. Make sure that there is no rubber trapped or in contact with sharp metal edges from overhanging metal plates.

   Replace the bolster spring if swelling due to contamination of oil or grease, increases the rubber diameter to 1/4 inch (6.4 mm) beyond it's normal position.

   Replace the bolster spring if separation of the rubber from the bonded metal surface to a depth greater than 1-1/2 inches (3.8 cm) is found. See **Fig. 10**.

NOTE: Creases formed by folding of the rubber surface under load should be ignored. These appear as strips on the surface, polished by wear or covered with tacky rubber.

It is also recommended that all tightening torques on the Hendrickson HN Series suspension be checked once a year. See **Table 2** for torque specifications.

https://truckmanualshub.com/

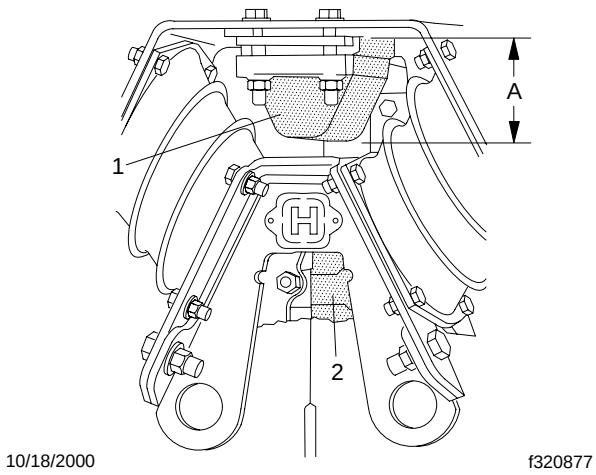

A. 3–1/2" (9 cm) Minimum Height Unloaded
1. Auxiliary Spring
2. Rebound Strap

Fig. 9, Auxiliary Spring Assembly

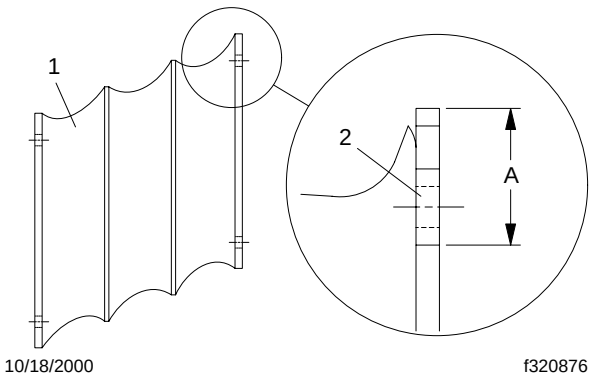

A. Acceptable 1–1/2" (3.8 cm) Separation of Rubber
1. Bolster Spring
2. Damaged Area of Rubber

Fig. 10, Bolster Spring

Hendrickson RTE Series

1. Park the vehicle on a level surface, apply the parking brakes, and chock the front tires.

   Raise the rear of the vehicle until the rear wheels are suspended in the air, then support the vehicle with safety stands.

2. Check the torque of the number-one spring hangar (double-lock-bolt design) lock bolt nuts. If a loose connection has caused pin hole wear, replace the hangar. See **Table 3** for torque specifications.
3. Inspect the pin hole in the outboard leg of the number one spring hangar (draw-key design) for wear or elongation.

WARNING

Wear at this point requires hangar replacement, or premature fracture of the spring hangar pin may occur, with possible separation of components and loss of vehicle control. This could result in serious personal injury.

4. Visually inspect the cam surface of the number-two spring hangar for wear due to operating mileage. Also, inspect the outside legs for wear which can be caused by worn spring eye bushings.

NOTE: RTE (extended-leaf-spring) suspensions require a minimum gap of 3/8 inch (9.5 mm) between the cam surface of the number-two spring hangar and the top of the main leaf in the unloaded condition. See **Fig. 11**. If this gap is less than 3/8 inch (9.5 mm), the extended-leaf portion of the spring will not perform satisfactorily for an empty ride.

5. Inspect the cam surface on the number-three spring hangar (extended-leaf-springs only) for wear. Excessive wear will reduce the gap available at the number-two spring hangar. See the previous note.
6. Place a block of wood on the leaf spring. See **Fig. 12**. Place a pry bar on the block of wood and insert the end of the pry bar under the frame hangar. Attempt to lift the frame hangar, as shown in **Fig. 12**. Also, with an empty chassis and the brakes applied, attempt to rock the chassis back and forth while observing the spring eye.In either case, if 1/8 inch or more of movement is observed, the bushing and pin should be replaced. This also could indicate that a broken spring eye and spring are connected to the spring hangar through the wrapper eye of the second leaf. In this case, the main leaf or the complete spring should be replaced immediately.

https://truckmanualshub.com/

Hendrickson HN Series Suspension Torque Values		
Description	**Hendrickson Thread/Grade**	**Torque: lbf•ft (N•m)**
Shock Absorber Locknut	5/8–18 UNF–2B Grade C	70–90 (95–122)
Bolster Spring Bolt Locknut	7/16–20 UNF–2B Grade C	33–45 (45–61)
Auxiliary Spring Locknut	1/2–13 UNC–2B Grade C	75–105 (101–142)
Transverse Rod Locknut (tapered stud)	1 -1/18–12 UNC–2B Grade 5	175–225 (237–305)
Bar Pin Bushing Locknut	1–8 UNC–2A Grade 8	450–600 (610–813)
Bar Pin Bushing Bolt Head	1–8 UNC–2A Grade 8	500–650 (677–881)
Vee Bracket Locknut	3/4–10 UNC–2B Grade C	220–300 (298–407)

Table 2, Hendrickson HN Series Suspension Torque Values

RTE Series Suspension Torque Values		
Description	**Size**	**Torque: lbf1 ft (N1 m)**
Top Pad to Spring Aligning Setscrew	—	100–150 (135–200)
Top Pad Nut	—	275–400 (375–542)
Spring Hanger Pin Double Locknut	1/2–13	45–63 (61–85)
Spring Hanger Pin Draw-Key Nut	1/2–13	75–100 (101–135)
Torque Rod Straddle Mount Nut	5/8–11	190 (260)
Saddle Cap Stud	7/8–14	55–65 (75–90)
Saddle Cap Locknut	7/8–14	225–275 (305–373)
Bar Pin Locknut	1–8	450–600 (610–813)
Spring Center Bolt	7/16–20	50–60 (70–80)
	1/2–20	65–75 (90–100)
Rebound Spacer Locknut	1/2–13	38–45 (51–61)

Table 3, RTE Series Suspension Torque Values

https://truckmanualshub.com/

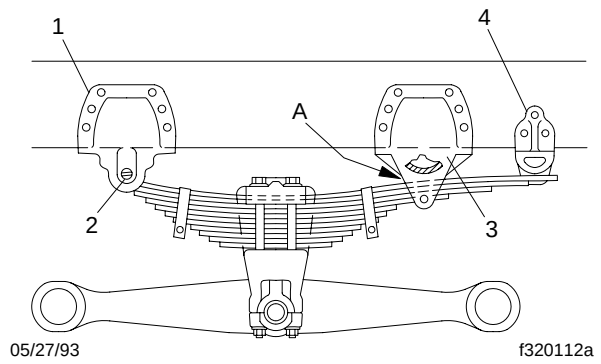

A. Minimum gap of 3/8" (9.5 mm).
1. Forward (no. 1) Spring Hanger
2. Spring Eye Pin
3. Rear (no. 2) Spring Hanger
4. Rear (no. 3) Extension

Fig. 11, RTE Suspension (unloaded)

Neway Suspension

WARNING

Inspect the components and check their operation. Failure to perform these inspections and checks could result in separation of worn suspension components and loss of vehicle control, possibly causing personal injury and property damage.

1. Park the vehicle on a level surface. Apply the parking brakes and chock the tires to prevent the vehicle from moving.
2. Inspect the rear suspension for any signs of damage, loose components, wear, or cracks. Replace any damaged components to prevent failure or equipment breakdown.

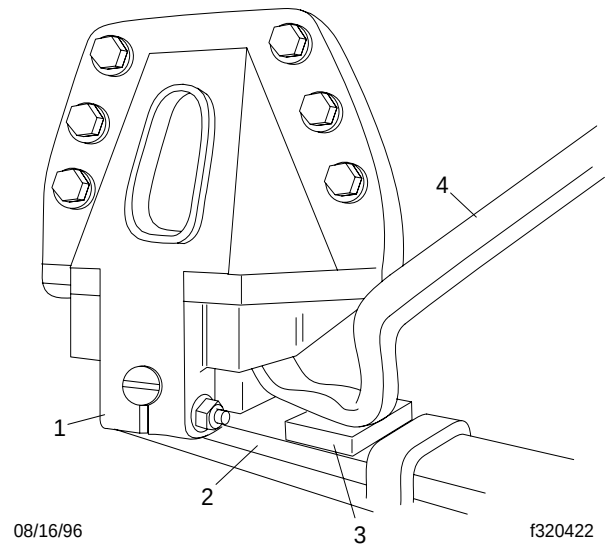

1. Frame Bracket
2. Leaf Spring
3. Wood Block
4. Pry Bar

Fig. 12, Hendrickson RTE Series Frame Bracket Inspection

3. Inspect all bolts and nuts at the pivot and axle connections to assure they are properly torqued. Check all other nuts and bolts for proper torque. See **Group 00** of this manual for proper torque specifications.
4. Check the air pressure gauge to confirm that there is in excess of 65 psi (448 kPa) in the air system, and inspect the air springs for sufficient and equal firmness.

NOTE: Height control valves control all air springs.Check for air leaks by applying a soapy solution, then checking for bubbles, at all air connections and fittings.

5. Check the riding height of the air suspension by measuring the distance from the centerline of the rear axle (see **Fig. 13**) to the bottom of the frame rail. If the riding height is incorrect, adjust the air-suspension.

Teyco 79 KB

Inspect all suspension fasteners for the proper torque values. See **Group 00** of this manual for proper bolt torque specifications. Visually inspect the frame for elongated holes at the suspension mounting points,

https://truckmanualshub.com/

and have the frame repaired as needed. If elongated holes are found on the frame, check the suspension alignment. Check brackets and torque rods for damage or loose fasteners

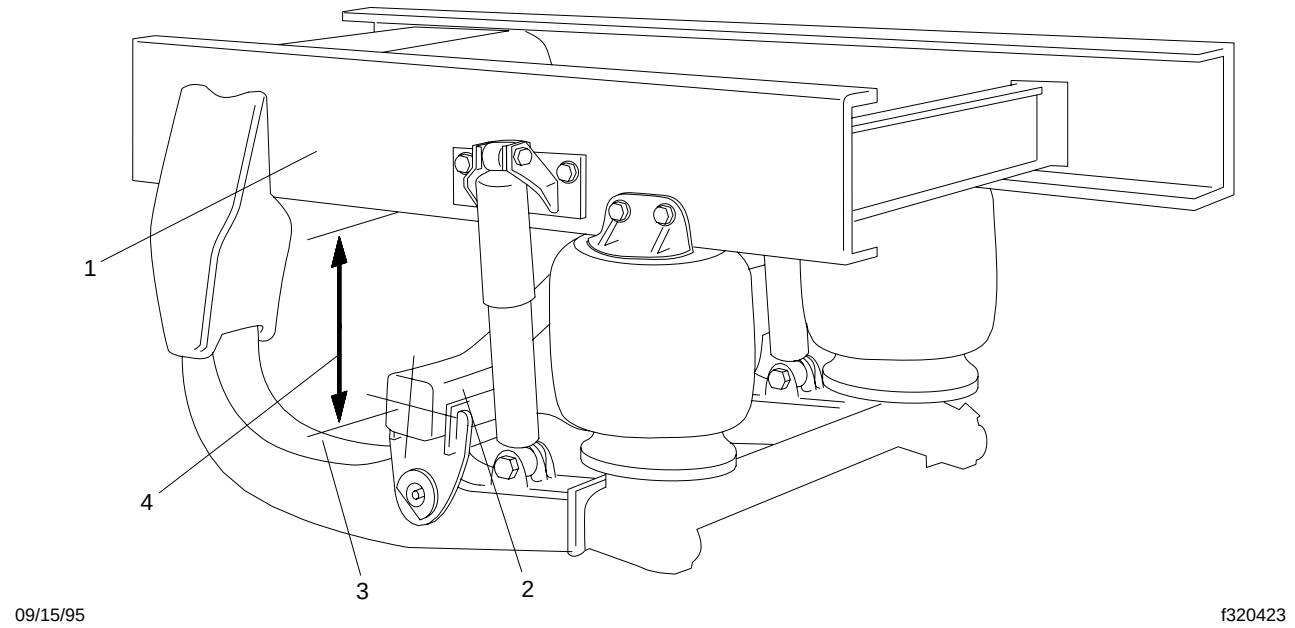

1. Frame Rail
2. Axle Housing
3. Axle Centerline
4. Suspension Ride Height

Fig. 13, Neway Ride Height Inspection

32–02 Suspension Lubrication

Front Suspension

Wipe all dirt away from the grease fittings (if equipped) on the spring-eye bushings. Apply multipurpose chassis grease with a pressurized grease gun until the old grease is forced out.

NOTE: Service Schedule IV vehicles equipped with a 12,000 lb (5452 kg) front axle are fitted with maintenance-free rubber bushings, and do not require lubrication.

Rear Suspension

American LaFrance TufTrac

No lubrication is required on the TufTrac rear suspension.

Chalmers

No lubrication is required on the Chalmers rear suspension.

American LaFrance Spring

Single Axle

No lubrication is required on American LaFrance single axle rear suspensions.

Tandem Axle

Lubricate the equalizer cap-and-tube assembly bushings by applying multi-purpose chassis grease at the grease fitting until the old grease is forced out from the cap-and-tube assembly. See **Fig. 14**.

Hendrickson HN Series

No lubrication is required on Hendrickson HN Series rear suspensions.

https://truckmanualshub.com/

Hendrickson RTE Series

For Hendrickson RTE Series, lubricate the bronze, ball-indented bushings in the spring eye, as follows:

1. Park the vehicle on a level surface, apply the parking brakes, and chock the front tires.

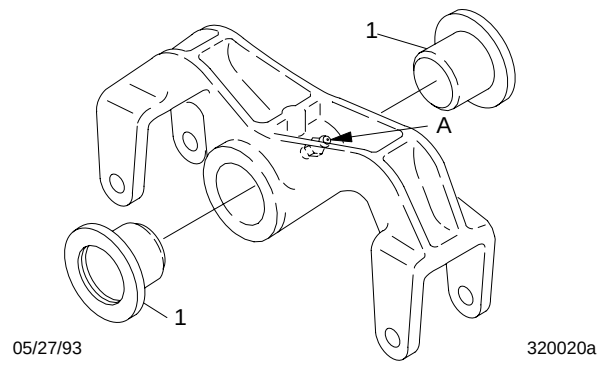

A. Minimum gap of 3/8" (9.5 mm).
1. Forward (no. 1) Spring Hanger

Fig. 14, Equalizer Assembly Lubrication

2. Raise the rear of the vehicle until the rear wheels are suspended in the air, then support the vehicle with safety stands. This relieves the load on the bushings and pins to allow the proper ow of lubricant around them.
3. Use a multi-purpose chassis grease and lubricate the bronze, ball-indented bushings in the spring eyes at the grease fitting. See **Fig. 15**. Continue to lubricate until grease exits both ends of the bushing. If the pin will not accept lubricant, remove the pin and clean the lubrication channels where lubricant may have hardened. Remove the safety stands and lower the vehicle after lubrication is complete.

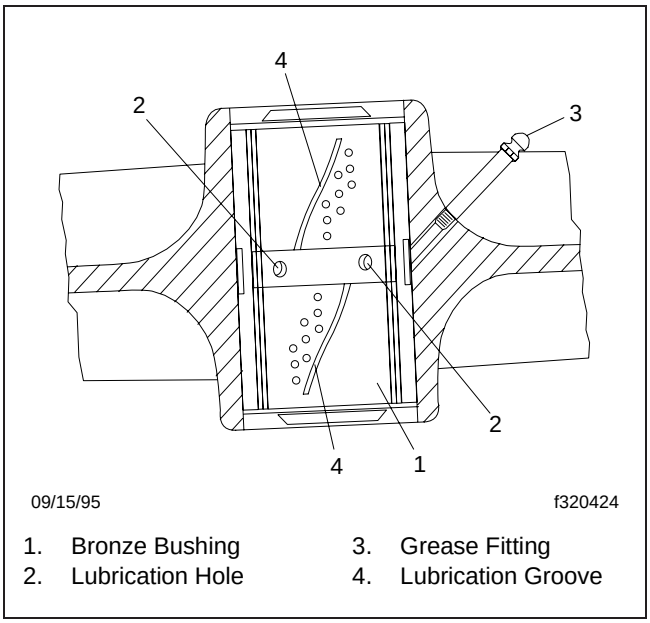

1. Bronze Bushing
2. Lubrication Hole
3. Grease Fitting
4. Lubrication Groove

Fig. 15, Hendrickson RTE Series Bushing Lubrication

Neway

No lubrication is required on Neway rear suspensions.

Reyco

No lubrication is required on Reyco rear suspensions.

32–03 Suspension U-Bolt Torque Check

CAUTION

Failure to retorque U-bolt nuts could result in spring breakage and abnormal tire wear.

1. Park the vehicle on a flat surface and apply the parking brakes. Chock the tires to prevent the vehicle from moving.
2. Check the U-bolt torque in a diagonal pattern. Set a click-type torque wrench to the highest torque value for the fastener being checked. See **Table 4** for U-bolt torque specifications. Turn the wrench in a clockwise motion (looking up) until the torque wrench clicks.

https://truckmanualshub.com/

3. Remove the chocks.

U-Bolt Torque Values		
Description	**Size**	**Torque: lbf1 ft (N1 m)**
Spring Assembly U-Bolt High Nuts*	5/8–18	Stage 1: Hand Tighten Stage 2: 60 (81) Stage 3: 200 (271) Stage 4: 180 to 230 (245 to 313)
	3/4–16	Stage 1: Hand Tighten Stage 2: 60 (81) Stage 3: 200 (271) Stage 4: 270 to 330 (367 to 449)
	7/8–14	Stage 1: Hand Tighten Stage 2: 60 (81) Stage 3: 200 (271) Stage 4: 420 to 500 (571 to 680)
	1–14	Stage 1: Hand tighten Stage 2: 60 (81) Stage 3: 200 (271) Stage 4: 520 to 600 (707 to 816)

* Tighten in a diagonal pattern as shown in **Fig. 16**.

Table 4, U-Bolt Torque Values

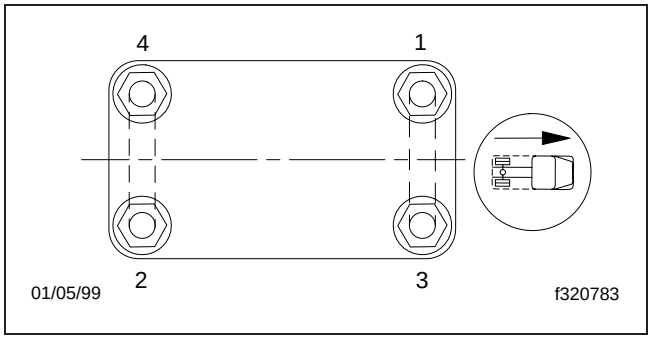

Fig. 16, Tightening Pattern for U-bolt High Nuts

https://truckmanualshub.com/

Index, Alphabetical

Title of Maintenance Operation (MOP)	MOP Number
All-Axle Alignment Checking	33–04
Knuckle Pin Lubrication	33–01
Tie Rod Inspection	33–02
Tie Rod Lubrication	33–03

https://truckmanualshub.com/

https://truckmanualshub.com/

33–01 Knuckle Pin Lubrication

When lubricating knuckle pin bushings, do not raise the front axle. Wipe the lube fittings clean, and apply multipurpose chassis grease, NLGI Grade 1 (6% 12hydroxy lithium stearate grease) or NLGI Grade 2 (8% 12-hydroxy lithium stearate grease) until new grease is seen at the bushing grease seal opposite the fittings. The grease seal will accept grease pressure without damage, and is designed to have grease pumped out through it during lubrication. Even if grease leaks out around the top, or bottom-plate gasket, continue pumping until new grease is seen at the bushing seal opposite the grease fitting. See **Fig. 1**.

33–02 Tie Rod Inspection

Inspect the tie-rod ends as follows:

1. Shake the cross-tube. A loose t, or movement between the tapered shaft of the ball and the cross-tube socket members indicates that the tie-rod end assembly must be replaced.
2. The threaded portion of the tie-rod end assembly must be inserted all the way into the cross-tube split for adequate clamping. See **Fig. 2**. Replace the components if this cannot be done. For instructions, see **Group 33** of the *Condor® Workshop Manual*.

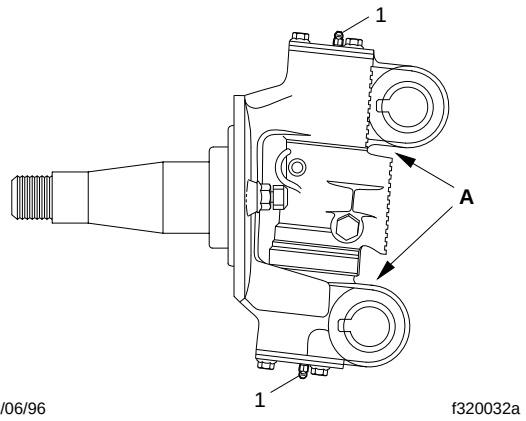

A. Grease Exit
1. Grease Fitting

Fig. 1, Meritor Knuckle Pin Lubrication

33–03 Tie Rod Lubrication

Before lubricating the tie-rod ends, wipe the grease fittings clean. Then, pump multipurpose chassis grease, NLGI Grade 1 (6% 12-hydroxy lithium stearate grease) or NLGI Grade 2 (8% 12-hydroxy lithium stearate grease), into the tie-rod ends until all used grease is forced out and fresh grease is seen at the ball stud neck.

33–04 All-Axle Alignment Checking

Drive Axle Alignment Checking

Check the axle alignment, parallelism, and thrust angle measurements for the rear drive axles. Use the applicable procedure and specifications in **Group 35** of the Condor® Workshop Manual.

Toe-In Checking, Front Axle

See **Group 33** in the *Condor® Workshop Manual* for wheel alignment procedures.

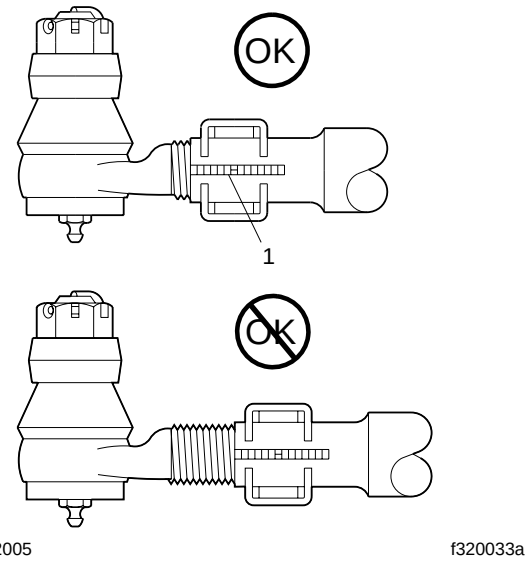

NOTE: Shown without pinch bolt to provide clarity.

1. Cross-Tube Split

Fig. 2, Tie-Rod End Adjustment

https://truckmanualshub.com/

https://truckmanualshub.com/

Index, Alphabetical

Title of Maintenance Operation (MOP)	MOP Number
Axle Lubricant and Filter Changing, and Magnetic Strainer Cleaning	35–02
Drive Axle Lubricant Level and Breather Check	35–01

https://truckmanualshub.com/

https://truckmanualshub.com/

35–01 Drive Axle Lubricant Level and Breather Check

Meritor Axle

CAUTION

Failure to keep the rear axle filled to the proper level with the correct lubricant can result in rear axle damage.

1. Park the vehicle on level ground, apply the parking brakes, and chock the tires.
2. Clean the fill plug and the area surrounding the fill plug on the side of the axle carrier. See **Fig. 1**. Remove the plug.

NOTE: Some Meritor axles have a small tapped and plugged hole near and below the housing oil fill hole. This smaller hole is for a lubricant temperature indicator only, and should not be used as a fill or level hole.

3. Check that the lubricant is level with the bottom of the fill hole. See **Fig. 2**. If low, check for oil leaks, and correct as needed. Add the specified lubricant. See **Table 1** for recommended drive axle lubricants.

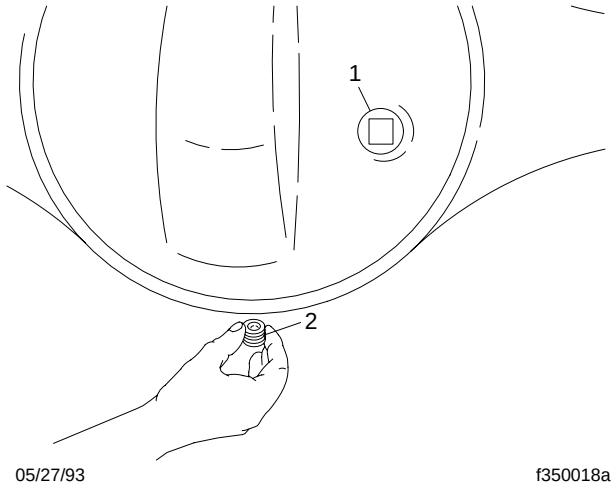

1. Oil Fill Plug 2. Drain Plug

Fig. 1, Axle Housing Drain and Fill Plugs

Meritor Drive Axle Recommended Lubricants			
Type	**Ambient Temp.**	**SAE Viscosity Grade**	**Meritor Specif.**
Synthetic Gear Oil	–40F (–40C) and up*	75W–90	0–76–N
	–40F (–40C) and up*	75W–140	0–76–M
Hypoid Gear Oil API Service Classification GL–5	–12.2C (+10F) and up†	85W–140	0–76–A
	–26.1C (–15F) and up*	80W–140	0–76–B
	–26.1C (–15F) and up*	75W–90	0–76–D
	–40C (–40F) and up*	75W–140	0–76–E
	–40C (–40F) to +2C (+35F)	75W	0–76–J
	–40C (–40F) and up*	75W–140	0–76–L

* There is no upper limit on these outside temperatures, but axle sump temperature must never exceed 250F (121C).

† There is no upper limit on these ambient temperatures, but axle sump temperature must never exceed 121C (250F).

Table 1, Meritor Drive Axle Recommended Lubricants

4. Install and tighten the fill plug 35 lbf1ft (47 N1m).
5. For a two-speed axle with a shift unit, check the lubricant level of the shift unit; refer elsewhere in this maintenance operation to the shift unit lubricant level inspection procedure.
6. On non-drive axles using oil-lubricated wheel bearings, check oil level at the wheels, and add oil if low. Use the same lubricant as specified for the drive axle.

NOTE: When adding to or checking the oil level, make certain the hub cap and plug are clean before removing the plug; this will minimize the possibility of dirt and road grime entering the assembly.

https://truckmanualshub.com/

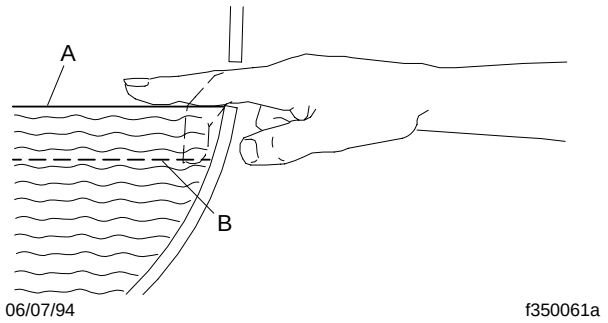

A. Correct (lube level at bottom of fill hole)
B. Incorrect (lube level below fill hole)

Fig. 2, Axle Lubricant Level Inspection

Two-Speed-Axle Shift Unit Lubricant Level Inspection

Meritor Axles

If equipped with a two-speed-axle shift unit, use the following directions.

CAUTION

Failure to keep lubricant at the specified level could cause damage to the axle shift unit.

1. Clean the shift unit oil fill plug, and the area surrounding the plug. See **Fig. 3**. Turn the fill plug in a counterclockwise motion and remove the plug.
2. Insert a finger or pipe cleaner into the fill plughole and check the fluid level. The lubricant level should be maintained at the bottom of the fill hole. If low, add the specified lubricant.

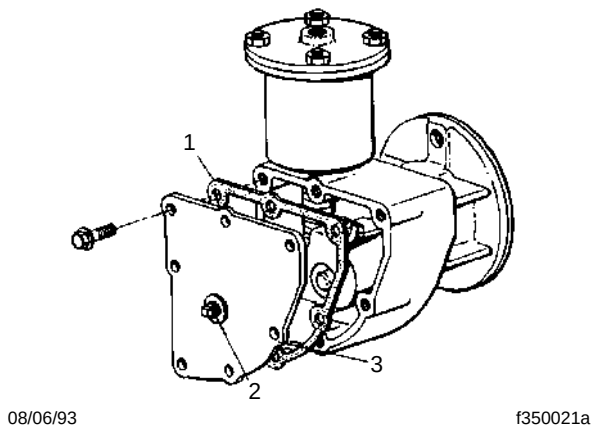

1. Housing Cover Gasket
2. Oil Fill Plug
3. Shift Unit Housing Cover

Fig. 3, Two-Speed-Axle Shift Unit

CAUTION

Before adding additional lubricant, make sure of the type currently in the shift unit. To prevent component damage, do not mix engine oil with automatic transmission fluid.

IMPORTANT: When the ambient temperature is above 0° F (–18° C), use SAE 10 heavy-duty engine oil, API service classication SD (sulfated ash content must not exceed 1.85%). When the ambient temperature is below 0° F (–18° C), use one part kerosene to three parts SAE 10 heavy-duty engine oil, API service classication SD (sulfated ash content must not exceed1.85%). This cold-weather mixture can be safely used up to 32° F(0° C).

Commercially available automatic transmission fluid may be used in place of SAE 10 engine oil. Automatic transmission fluid can be used for all temperatures; do not mix it with kerosene.

3. Apply a small amount of Loctite® 242, or equivalent sealant, to the threads of the fill plug. Install the fill plug finger-tight; then, using a wrench, tighten it 1-1/2 turns past finger-tight.

https://truckmanualshub.com/

Axle Breather Check

Axle housing breathers must remain clean and unclogged. Whenever the axle lubricant level is inspected, check the axle breather to be sure that it is open. Check more often under adverse operating conditions. If the breather is plugged, clean or replace it as needed. See **Fig. 4**.

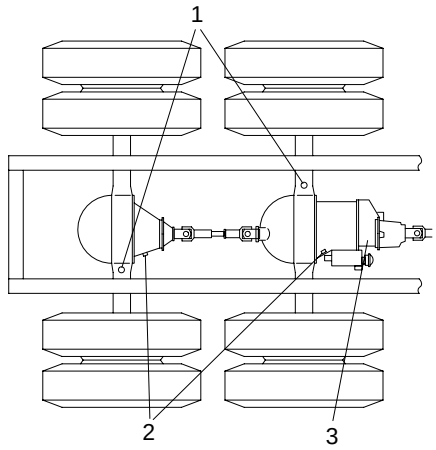

1. Axle Housing Breathers
2. Carrier Oil Fill Plugs
3. Interaxle Differential

Fig. 4, Fill Plug and Axle Housing Breather Locations

35–02 Axle Lubricant and Filter Changing, and Magnetic Strainer Cleaning

CAUTION

Failure to change lubricant as recommended could result in axle damage.

Meritor

Single drive axles equipped with traction equalizers may require a "limited-slip friction modifier" to correct a slip-stick condition, as described in the vehicle driver's manual. Meritor's experience shows that the following additives (friction modifiers) perform adequately:

A. For all synthetic gear oils other than Mobil, add 1.6 ounces (35 mL) of additive for each pint (0.5 L) of lube capacity:
   - Elco No. 2 Friction Modifier (Elco Corporation).
   - Lubrizol No. 6178 (Lubrizol Corporation).
   - Hi-Tec E-336 (Edwin Cooper, Inc.).
   - Equa-Torque No. 2411 (Sta-Lube Corporation).
   - Equa-Torque No. 2414 (Sta-Lube Corporation).

B. For Mobilube SHC (synthetic) use Mobil No. 204 (Mobil Oil Corporation). Add 1.1 ounces (23 mL) of additive for each pint (0.5 L) of lube capacity.

IMPORTANT: These friction modifiers generally deteriorate faster than conventional extreme-pressure additives, so the lubricant change schedule must be shortened when using these additives. The traction equalizer additive (and recommended drive axle lubricant) must be changed at the Maintenance 2 (M2) interval, instead of the Maintenance 3 (M3) interval recommended in the Maintenance Operation Chart for axles that require only those lubricants recommended in **Table 1**.

1. Park the vehicle on level ground, apply the parking brakes, and chock the tires.
2. Remove the axle carrier fill plug (see **Fig. 1**), then remove the drain plug from the bottom of the housing and completely drain the lubricant while the unit is warm. Allow sufficient time for all old lubricant to drain. On dual drive axles, it is also necessary to remove the plug at the bottom of the interaxle differential housing to drain the lubricant.
3. If so equipped, replace the axle oil filter. Remove the oil filter, using a suitable filter strap wrench. See **Fig. 5**. Discard the filter.

NOTE: There may be about one pint (0.5 L) of lubricant remaining in the filter. Be careful not to spill it when removing the filter.

4. Using the specified drive axle lubricant, coat the face of the gasket on a new oil filter. Install the filter over the adapter, and tighten the filter one full turn after the gasket contacts the base; do not overtighten the filter.

https://truckmanualshub.com/

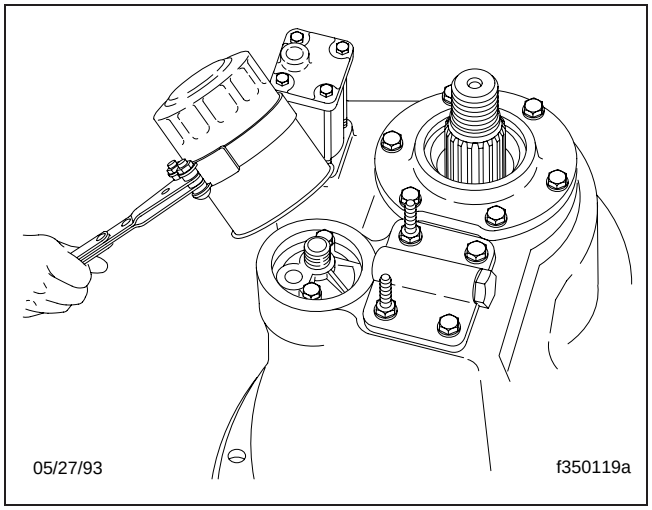

Fig. 5, Axle Oil Filter Removal

5. For a new or reconditioned axle, flush the axle with clean flushing oil, then drain it thoroughly. It is necessary to flush the axle the first time (only) that the axle lubricant is changed.

IMPORTANT: Axles should not be flushed with any solvent, such as kerosene.

6. Clean the fill and drain plugs. For magnetic plugs, a piece of key stock or any other convenient steel slug may be used to short the two magnetic poles and divert the magnetic field.

NOTE: Meritor recommends plugs with elements having a minimum pickup capacity of 1-1/2 pounds (0.7 kg) of low-carbon steel, in plate or bar form. Magnets will rapidly lose effectiveness as collected material bridges the gap between the two poles. Clean or change the plugs before this occurs. It may be necessary to clean or change the plugs one or more times between lubrication change intervals.

7. After cleaning the drain plug(s), install and tighten to 35 lbf•ft (47 N•m).
8. With the vehicle on a level surface, fill the axle housings to the bottom of the fill hole, using specified lubricant. See **Table 1** for recommended axle lubricants, and **Table 2** for drive axle lubricant capacities.

Meritor Drive Axle Lubricant Capacities		
Axle Model		**Capacity* pints (liters)**
Single-Drive†		
RS–23–160		39.5 (18.7)
RS–23–161		37.2 (17.6)
RS–23–186		47.3 (22.4)
RS–26–185		46.6 (22)
RS–30–185		46.6 (22)
RS–30–380		46.6 (22)
Tandem-Drive		
RT–40–145, RT–40–145P	Forward	30.2 (14.3)
	Rear	25.8 (12.2)
RT–44–145P	Forward	25.2 (12)
	Rear	22.9 (11)
RT–46–160, RT–46–164	Forward	39.1 (18.5)
	Rear	34.4 (16.3)
RT–46–160P	Forward	39.3 (18.6)
	Rear	34.7 (16.4)
RT–50–160	Forward	38.1 (18)
	Rear	33.2 (15.7)
RT–52–185, RT–58–185, RT–58–380	Forward	56.1 (26.5)
	Rear	36.1 (17.1)
RT–52–380	Forward	56.1 (26.5)
	Rear	58.2 (27.5)
RT–70–380	Forward	54.4 (25.7)
	Rear	53.1 (25.1)

* Quantities listed are approximate. Fill axle until lubricant is level with bottom of fill hole with vehicle on level ground.

† Refer to "Traction Equalizer Additives" in the text.

Table 2, Meritor Drive Axle Lubricant Capacities

NOTE: Some Meritor axles have a small tapped and plugged hole near and below the housing lubricant fill hole. This smaller hole is for a lubricant temperature indicator only, and should not be used as a fill or level hole.

9. Install and tighten the fill plug 35 lbf 1 ft (47 N1 m).
10. Whenever the interaxle differential housing has been drained, add an additional 2 pints (1 L) of

https://truckmanualshub.com/

specified lubricant directly into the interaxle differential housing.

11. For a two-speed axle with a shift unit, change the shift unit lubricant; refer elsewhere in this maintenance operation to the shift unit lubricant changing procedure.
12. Remove the chocks, then drive the vehicle, unloaded, for 1 or 2 miles (2 or 3 km) at speeds not to exceed 25 mph (40 km/h), to thoroughly circulate lubricant throughout the carrier and housing assemblies.

Two-Speed-Axle Shift Unit Lubricant Changing

1. Remove the shift unit housing cover. See **Fig. 3**. Drain and discard the old lubricant. Discard the housing cover gasket.
2. Thoroughly wash the axle shift parts and housing cover, and allow them to air dry.
3. Install the housing cover and a new cover gasket. Tighten the housing cover capscrews 7.5 to 9.2 lbf1 ft (10.2 to 12.5 N1 m), then remove the oil fill plug from the cover.

IMPORTANT: When the ambient temperature is above 0°F (–18°C), use SAE 10 heavy-duty engine oil, API service classication SD (sulfated ash content must not exceed 1.85%). When the ambient temperature is below 0°F (–18°C), use one part kerosene to three parts SAE 10 heavy-duty engine oil, API service classication SD (sulfated ash content must not exceed 1.85%). This cold-weather mixture can be safely used up to 32°F(0°C).

Commercially available automatic transmission fluid may be used in place of SAE 10 engine oil. Automatic transmission fluid can be used for all temperatures; do not mix it with kerosene. To prevent component damage, do not mix engine oil and automatic transmission fluid.

4. Fill the shift unit housing through the oil fill hole until specified lubricant is level with the bottom of the opening.
5. Apply a small amount of Loctite® 242, or equivalent sealant, to the threads of the fill plug. Install the plug finger-tight on the rear axle housing. Use a wrench and tighten it an additional 1-1/2 turns.

https://truckmanualshub.com/

https://truckmanualshub.com/

Index, Alphabetical

Title of Maintenance Operation (MOP)	MOP Number
Toe-In Inspection	40–02
Wheel Nut and Rim Nut Checking	40–01

https://truckmanualshub.com/

https://truckmanualshub.com/

40–01 Wheel Nut and Rim Nut Checking

IMPORTANT: After a wheel has been installed, the wheel or rim nut torque must be rechecked after 50 to 100 miles (80 to 160 km) of operation.

See **Table 1** for wheel nut torque specifications, and **Fig. 1** for the wheel nut tightening sequence.

CAUTION

Insufficient wheel nut (rim nut) torque can cause wheel shimmy, resulting in wheel damage, stud breakage, and extreme tire tread wear. Excessive wheel nut torque can break studs, damage threads, and crack discs in the stud hole area. Use the recommended torque values, and follow the tightening sequence shown in Fig. 1.

When checking wheel nuts on a dual disc assembly, remove one outer nut at a time, tighten the inner nut, then reinstall the outer nut. Repeat this procedure for all wheel nuts, using the tightening sequence shown in **Fig. 1**.

Wheel Fastener Torques			
Description	**Nut Size**	**Wheel Manufacturer**	**Torque (dry threads) lbf·ft (N1 m)**
10-Stud Disc Wheel With Two-Piece Flanged Locknuts			
Front and Rear Wheel Nut	—	Alcoa	450–500 (610–680)*
10-Stud Disc Wheel With Ball-Seat Nuts			
Front and Rear Wheel Nut	M22 x 1.5	Budd (Uni–Mount 10)	390–440 (530–600)*
10-Stud Disc Wheel With Inner and Outer Locknuts			
Front Wheel Nut	1-1/8–16	Alcoa	400–500 (540–680)
		All Others	450–500 (610–680)
Rear Wheel Inner Nut	3/4–16	Alcoa	400–500 (540–680)
		All Others	450–500 (610–680)
Rear Wheel Outer Nut	1-1/8–16	Alcoa	400–500 (540–680)
		All Others	450–500 (610–680)
Wheel Stud Retainer Nut	3/4–16	All	175–200 (235–270)
Spoke Wheel Rim Nuts			
Front Wheel Nut, 6-Spoke	3/4–10	Gunite	200–225 (271–305)†
Rear Wheel Nut, 5-and 6-Spoke With Non-Corrugated Channel Spacer	3/4–10	Gunite	200–225 (271–305)
Rear Wheel Nut, 5-and 6-Spoke With Corrugated Channel Spacer	3/4–10	Gunite	240–260 (325–350)

* Torque values given are for lubricated threads.

† On front axles with over 12,000 lbs (5448 kg) capacity, tighten the wheel nuts 240 to 265 lbf1 ft (325 to 359 N1 m). Gunite part number W–854 nut with a phosphate-and-oil coating must be used.

Table 1, Wheel Fastener Torques

https://truckmanualshub.com/

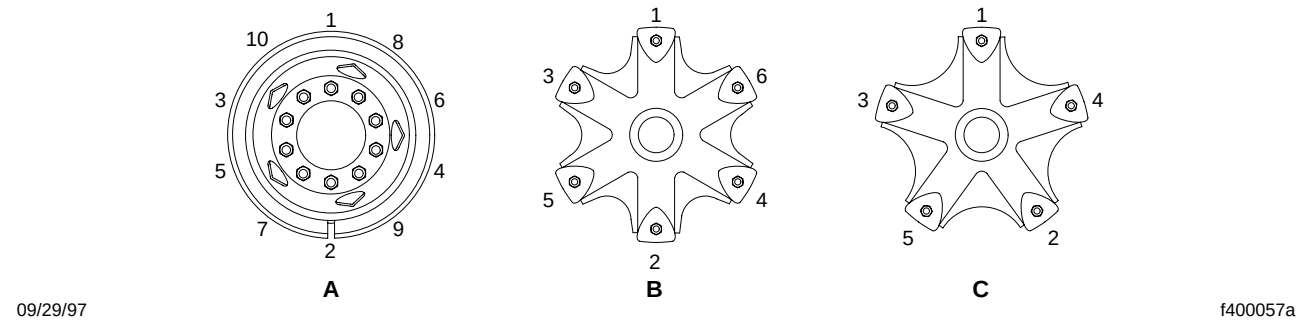

A. 10-Stud Disc Wheel B. 6-Spoke Wheel C. 5-Spoke Wheel

Fig. 1, Wheel Nut and Rim Nut Tightening Sequence

40–02 Toe-In Inspection

For vehicle alignment to be accurate, the shop floor must be level in every direction. The turn plates for the front wheels must rotate freely without friction, and the alignment equipment must be calibrated every three months by a qualified technician from the equipment-manufacturer. American LaFrance dealers must have proof of this calibration history.

1. Apply the parking brakes, and chock the rear tires.If the vehicle is equipped with an all-wheel-drive brake, only the drive axle brake should be applied.
2. Raise the front of the vehicle until the tires clear the ground. Check that the safety stands will support the combined weight of the cab, axle, and frame. Place safety stands under the axle.
3. Using spray paint or a piece of chalk, mark the entire center rib of each front tire.
4. Place a scribe or pointed instrument against the marked center rib of each tire, and turn the tires. The scribe must be held firmly in place so that a single straight line is scribed all the way around each front tire.
5. Place a turn-plate or turntable under both front tires. Remove the safety stands from under the axle, then lower the vehicle. Remove the lock-pins from the gauges; make sure the tires are exactly straight ahead.

NOTE: If turn-plates or turntables are not available, lower the vehicle. Remove the chocks from the rear tires and release the parking brakes. Move the vehicle backward and then forward about six feet (two meters).

6. Place a trammel bar at the rear of the front tires; locate the trammel pointers at spindle height, and adjust the pointers to line up with the scribe lines on the center ribs of the front tires. See **Fig. 2**. Lock in place. Check that the scale is set on zero.
7. Place the trammel bar at the front of the tires, see **Fig. 3**, and adjust the scale end so that the pointers line up with the scribe lines. See **Fig. 4**.
8. Read the toe-in from the scale, and compare it to the toe-in specification in **Group 33** of the *Condor® Workshop Manual*. If corrections are needed, see **Group 33** of the *Condor® Workshop Manual* for instructions on adjusting the toe-in.

https://truckmanualshub.com/

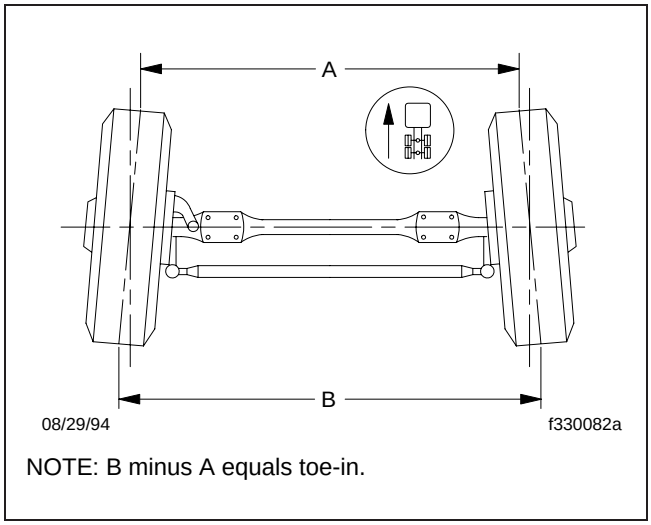

Fig. 2, Wheel Toe-In (overhead view)

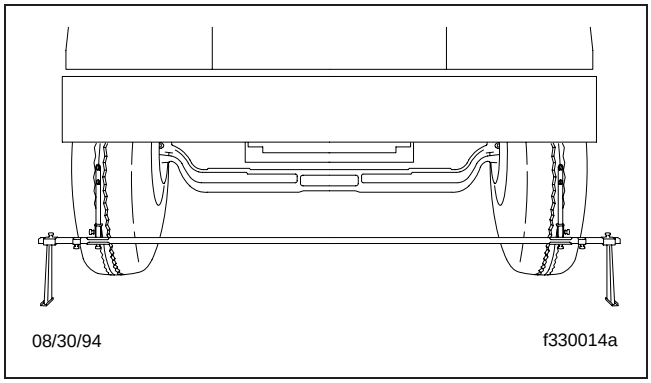

Fig. 3, Trammel Bar Positioning

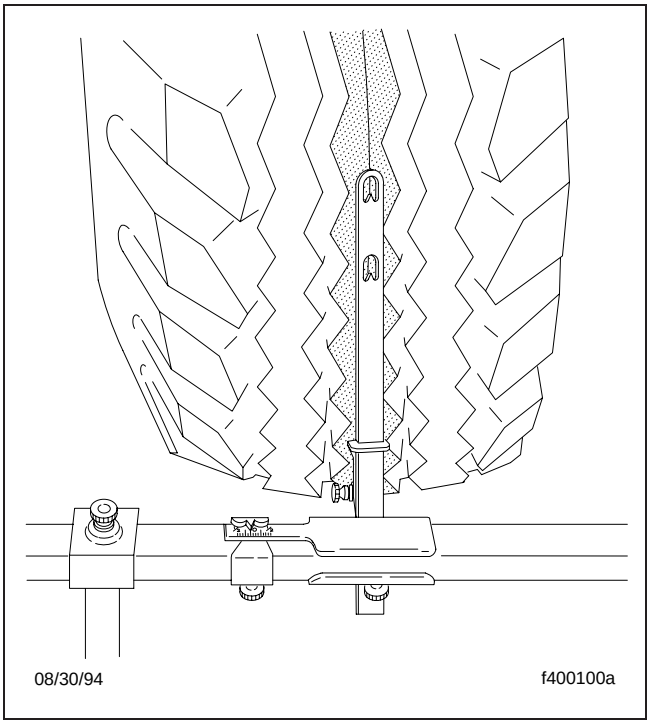

Fig. 4, Setting Trammel Bar Pointers

https://truckmanualshub.com/

https://truckmanualshub.com/

Index, Alphabetical

Title of Maintenance Operation (MOP)	MOP Number
Driveline Inspection	41–01
Driveline Lubrication	41–02

https://truckmanualshub.com/

https://truckmanualshub.com/

41–01 Driveline Inspection

1. Park the vehicle on a at, level surface, apply the parking brakes, and chock the tires.

CAUTION

Due to the extreme load occurring at high-speed rotation, a loose or broken capscrew at any point in the driveline will weaken the driveline connection, which could eventually result in serious vehicle damage. Do not over-tighten bearing-cap capscrews or yoke-strap capscrews.

2. *For driveline universal joints with bearing caps*, tighten bearing-cap capscrews 43 lbf•ft (49 N•m). See **Fig. 1**, Ref. 1.

   For RPL series universal joints, tighten bearing-cap capscrews 125 lbf•ft (169 N•m). See **Fig. 2**.

   For driveline universal joints with yoke straps, tighten yoke-strap capscrews 125 lbf•ft (169 N•m).See **Fig. 3**.

3. Check the driveline yokes for cracks, and check end-yokes for looseness. See **Fig. 3**.

   Replace cracked yokes.

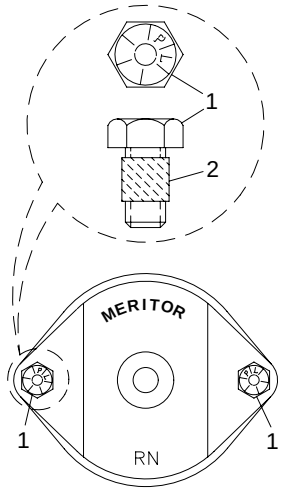

1. Self-Locking Capscrew
2. Adhesive Band

Fig. 1, Meritor U-Joint Fasteners for Bearing Caps

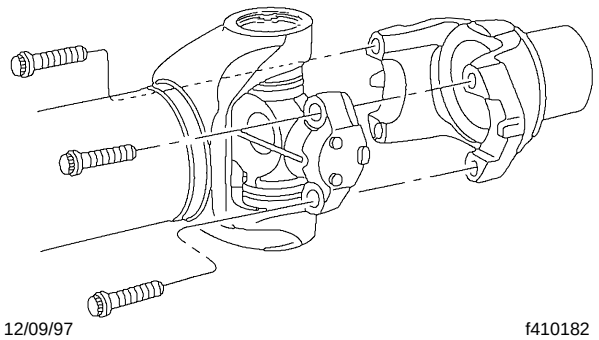

Fig. 2, Meritor RPL Series U-Joint

If any end-yoke can be moved in or out on its shaft, or can be rocked on its shaft, disconnect the driveshaft and U-joint from the yoke, then check the drive component's shaft seal for leakage or other visible damage that may have been caused by the loose yoke. Replace the seal if needed, then tighten the yoke nut. See **Group 41** of the *Condor® Workshop Manual* for torque specifications. If the yoke is still loose after tightening the yoke nut, replace the end-yoke and yoke nut.

Replace the prevailing torque locknut (end-yoke nut) if it was removed for yoke replacement, seal replacement, or any other reason.

4. Check U-joint assemblies for wear by moving the driveshaft up and down, and from side to side. If any movement of the U-joint cross in the bearings can be felt or seen, replace the U-joint assembly.
5. Check if the midship bearing and mounting are loose or have deteriorated, by attempting to move the driveshaft up and down, and from side to side. If the bearing is loose on its shaft, or rattles, replace it. If the bearing mount is loose on the frame, tighten the mounting fasteners to the proper torque value. See **Group 41** of the *Condor® Workshop Manual* for torque specifications.Replace the midship bearing assembly if the rubber cushion is deteriorated or oil-soaked.
6. Check slip joints for spline wear by moving the sleeve-yoke and splined shaft back and forth. See **Fig. 4**. If the slip joint can be twisted in a clockwise, or counterclockwise movement greater than 0.007

https://truckmanualshub.com/

inch (0.18 mm), replace both the sleeve-yoke and the splined shaft.

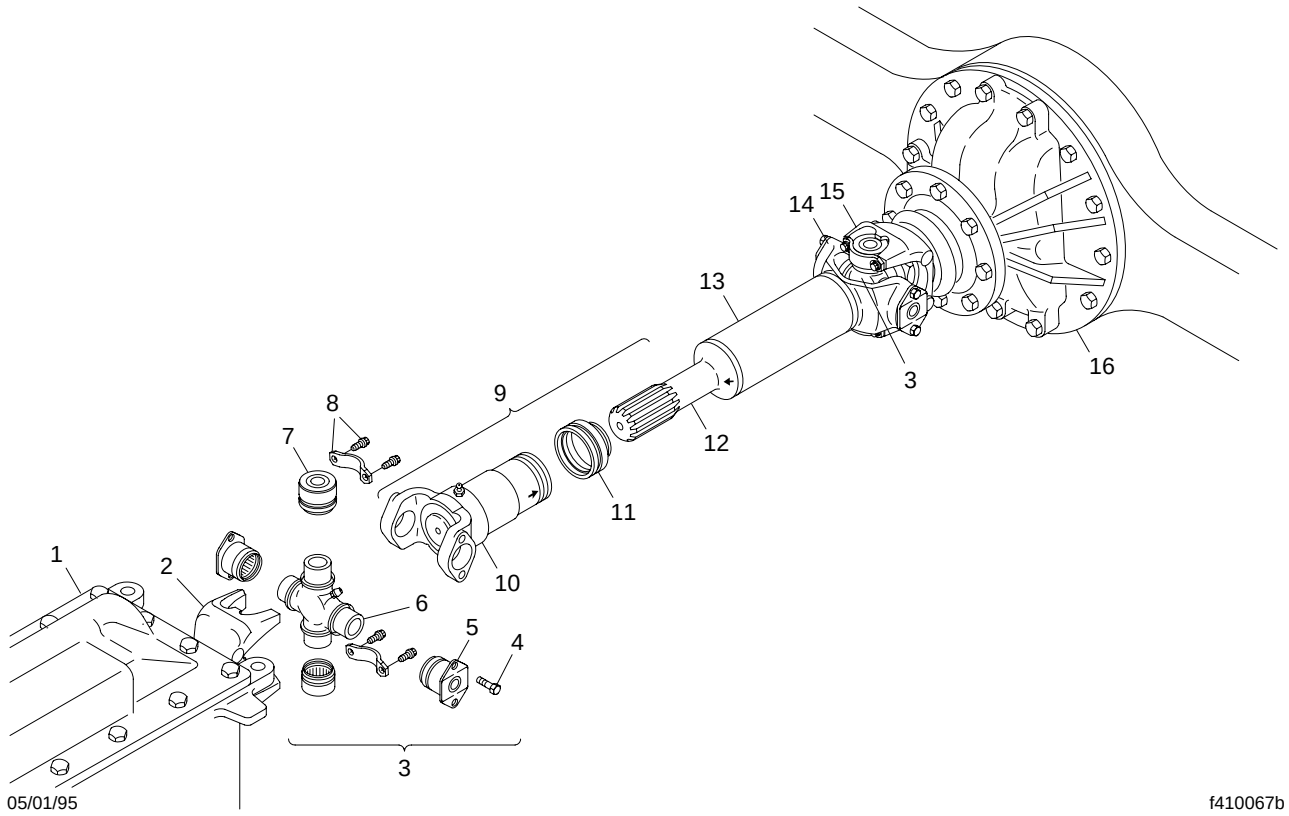

NOTE: Not all fasteners are shown.

1. Transmission
2. Transmission Output-Shaft End-Yoke (yoke-strap type)
3. U-Joint Assembly
4. Bearing Cap Self-Locking Capscrew
5. Bearing Cap
6. U-Joint Cross
7. Bearing Cup (for yoke strap)
8. Yoke Strap and Capscrew
9. Slip-Joint Assembly
10. Sleeve-Yoke (bearing-cap type)
11. Dust Cap
12. Splined Stub Shaft
13. Driveshaft Tube
14. Tube-Yoke (bearing-cap type)
15. Axle Input-Shaft End-Yoke (yoke-strap type)
16. Rear Axle

Fig. 3, Components of a Basic Driveline

7. Visually examine the driveshaft tubes for dents, bends, twists, or other damage. If any tube appears to be damaged, see **Group 41** of the *Condor® Workshop Manual* for repair and replacement instructions.
8. Examine the driveshaft for evidence of missing balance weights, and for build-up of foreign material. Remove any foreign material. If there is any evidence that balance weights are missing, remove the driveshaft and have it balanced.
9. For driveshafts with slip joints, check to be sure the yoke plug is not loose or missing. See **Fig. 5**, Ref. 2. Repair or replace the yoke plug as needed. If the yoke plug is missing, the splined shaft may be hitting the plug and knocking it out; contact your

https://truckmanualshub.com/

Regional Service Office for assistance in determining the correct driveshaft length.

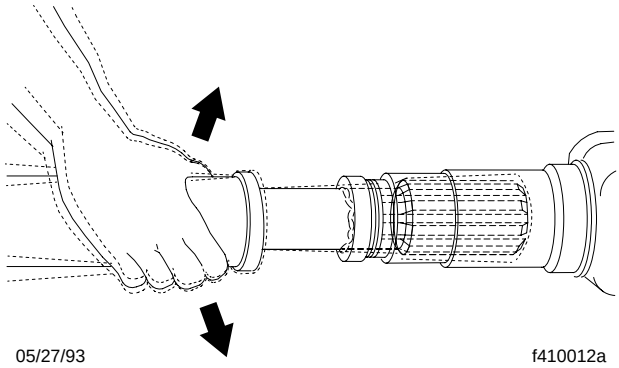

Attempt to move the sleeve-yoke and splined shaft back and forth.

Fig. 4, Slip Joint Spline Wear Checking

41–02 Driveline Lubrication

Universal Joint Lubrication

NOTE: Vehicles equipped with Meritor RPL Series drivelines do not require periodic lubrication.

1. Park the vehicle on a at surface, apply the parking brakes, and chock the tires.
2. Wipe all old grease and dirt from each U-joint grease fitting. See **Fig. 5**, Ref. 8.
3. Use a hand-type grease gun, or a high-pressure gun with a low-pressure adapter, to lubricate U-joints. If a low-pressure adapter is not used, U-joints may not receive enough grease.

   Using lithium 12-Hydroxy stearate grease (NLGI Grade 1 or Grade 2, with EP additives), lubricate until new grease can be seen at all four U-joint-seals. Fresh grease must be seen escaping from all four bearing-cap seals of each U-joint. On yokes equipped with a yoke-bearing cap, if most of the grease being added to a U-joint can be seen escaping from just one of the U-joint seals, check the torque on the capscrews at that seal.
4. Tighten the bearing-cap capscrews 43 lbf•ft (49 N•m). If the capscrews were already tight, or all of the U-joint seals still do not purge, remove the bearing cap at that seal, and examine the seal for damage. If the seal is damaged, replace the complete U-joint.
5. If grease does not appear at one seal, use a prying tool to pry the U-joint trunnion away from the non-purging seal, or tap the driveshaft or yoke with a plastic or rawhide mallet on the side opposite the dry seal, while continuing to lubricate. If grease still does not appear, loosen the capscrews at the bearing with the dry seal, to relieve seal tension. Lubricate the U-joint until new grease is seen at the seal, then tighten the capscrews to the correct torque specifications. If the bearing will not take grease, replace the U-joint. See **Group 41** of the Condor® Workshop Manual for replacement instructions.
6. Check the purged grease. If it appears rusty, gritty, or burned, replace the U-joint.
7. Wipe the purged grease from the seals, and any excess grease from the grease fitting.

Slip Joint Spline Lubrication

NOTE: Vehicles equipped with Meritor RPL Series drivelines do not require periodic lubrication.

1. If equipped with a grease fitting, wipe all old grease and dirt from the slip joint grease fitting. See **Fig. 5**, Ref. 1.
2. Use a hand-type grease gun or a high-pressure gun with a low-pressure adapter, to lubricate the slip joint. Add multipurpose chassis grease (lithium 12-hydroxy stearate, NLGI Grade 1 or Grade 2, with EP additives) until it appears at the pressure-relief hole in the yoke plug. Then cover the relief hole with your finger, while continuing to apply gun pressure until new grease appears at the slip joint seal. See **Fig. 5**. This ensures complete lubrication of the splines.
3. Wipe the purged grease from the pressure-relief hole and slip joint seal, and any excess grease from the grease fitting.

https://truckmanualshub.com/

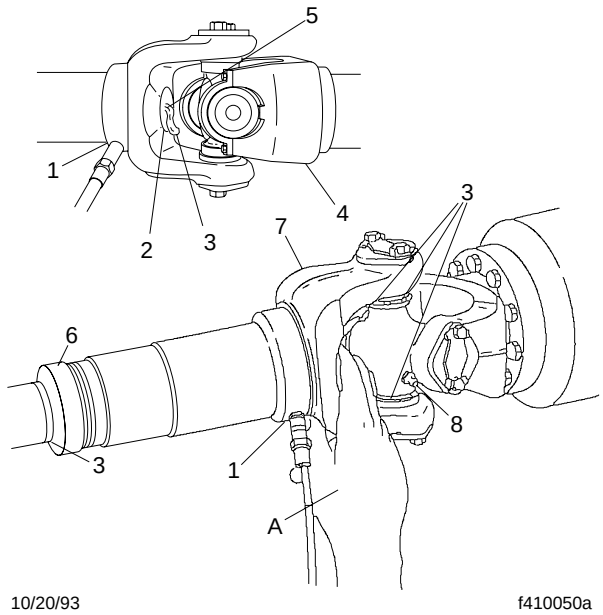

A. After grease appears, cover the pressure-relief hole while continuing to lubricate.
1. Slip Joint Grease Fitting (with grease gun attached)
2. Yoke Plug
3. Grease
4. Half-Round Yoke
5. Yoke Plug Pressure-Relief Hole
6. Slip Joint Seal
7. Full-Round Yoke
8. U-Joint Grease Fitting

Fig. 5, Slip Joint and U-Joint Lubrication

https://truckmanualshub.com/

Index, Alphabetical

Title of Maintenance Operation (MOP)	MOP Number
Air Brake System Valve Inspection	42–01
Automatic Slack Adjuster Inspection and Lubrication	42–06
Bendix AD-9 Air Dryer Desiccant Replacement	42–02
Bendix AD-9 Air Dryer Inspection	42–03
Camshaft Bracket Lubrication	42–05
Disc Brake Caliper Lubrication	42–07
Telma® Axle Retarder Brake Inspection	42–04

https://truckmanualshub.com/

https://truckmanualshub.com/

42–01 Air Brake System Valve Inspection

NOTE: There is no scheduled air valve maintenance on vehicles equipped with Bendix air valves and a Bendix air dryer if the air dryer desiccant is replaced as scheduled every 18 months. If the desiccant is not changed, maintenance will have to be performed to the air brake valves. See **Group 42** of the *Condor® Workshop Manual* for procedures.

42–02 Bendix AD-9 Air Dryer Desiccant Replacement

1. Park the vehicle on a level surface. Apply the parking brakes and chock the tires.
2. Completely drain all air reservoirs. Air pressure gauges should read 0 psi (0 kPa).

WARNING

Drain all air from air reservoirs and air lines. Disconnecting an air line that contains compressed air may result in the line whipping as air escapes, which could result in personal injury or property damage.

3. Identify, tag, and disconnect the three air lines from the dryer end cover.
4. Disconnect the harness connector from the heater and thermostat assembly.
5. Loosen the capscrew securing the upper mounting bracket strap.
6. Remove the two capscrews securing the air dryer to the lower mounting bracket. Mark the position of the mounting bracket to the end cover, and mark the capscrews to ease installation.
7. Remove the upper mounting bracket strap capscrew, and remove the air dryer from the vehicle.
8. Place the air dryer on a bench and remove the remaining six capscrews, 12 washers, six Nylok® nuts, and the air dryer housing. See **Fig. 1**. Discard the Nylok nuts. Remove the end-cover-to-housing O-ring.
9. Clamp the desiccant cartridge in a vise.

CAUTION

Clamping the end cover or housing in a vise could seriously compromise the air dryer's ability to hold air pressure, which could cause a failure in the brake system.

10. Twist the end cover counterclockwise to release the cartridge from the end cover. Rotate the end cover until it completely separates from the desiccant cartridge.

NOTE: A substantial torque, up to 50 lbf•ft (68 N•m), may be necessary to remove the desiccant cartridge.

11. Inspect the condition of the O-ring seals. If they are cracked, crimped, or otherwise damaged, replace them to ensure an airtight seal. Clean the O-ring grooves of any dirt or obstruction.

CAUTION

Dirt or obstructions in the O-ring grooves can cause an O-ring failure that will result in an air leak.

12. Lubricate the O-rings with silicone or lithium grease and install them in the end cover.
13. Install the desiccant cartridge on the end cover.Turn the cartridge clockwise until the desiccant cartridge makes contact with the end cover.
14. Place the desiccant cartridge in a vise, and turn the end cover clockwise an additional 180 to 225 degrees to fully tighten the desiccant cartridge to the end cover.

NOTE: Desiccant cartridge torque should not exceed 50 lbf•ft (68 N•m).

15. Place the housing over the desiccant cartridge and align the mounting holes with the end cover.

IMPORTANT: Replace, do not reuse the Nylok nuts on the air dryer cover.

16. Install the six capscrews, 12 washers, and six new Nylok nuts. Torque the capscrews in a star pattern (see **Fig. 2**) 270 to 385 lbf•in (3060 to 4340 N•cm)
17. Install the air dryer on the lower mounting bracket.Install the two previously marked capscrews, four washers, and two new Nylok nuts. Torque the two remaining capscrews 270 to 385 lbf•in (3060 to 4340 N•cm). Install the capscrew,

https://truckmanualshub.com/

two washers, and a new Nylok nut in the upper mounting bracket strap. Torque the upper mounting bracket strap capscrew 80 to 120 lbf•in (904 to 1356 N•cm).

18. Connect and tighten the three air lines. Connect the harness connector to the heater and thermostat assembly until the lock tab snaps in place.

19. Start the engine, build the air pressure, and check the air brake system for leaks. If any air leaks are present, see **Group 42** of the *Condor® Workshop Manual* for diagnosis and repair information.

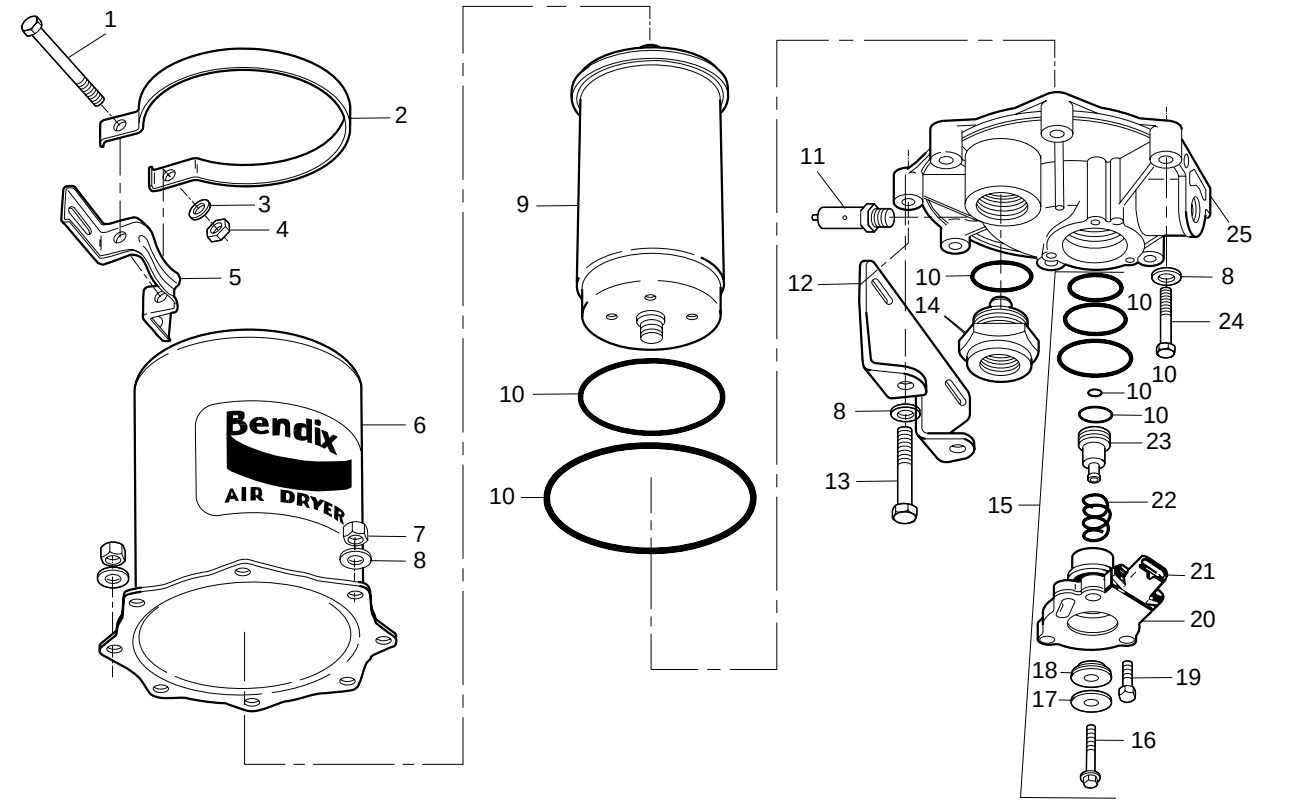

1. 5/16" x 4-1/2" Upper Mounting Bracket Capscrew
2. Upper Mounting Bracket Strap
3. 5/16" Lockwasher
4. 5/16" Nylok® Nut
5. Upper Mounting Bracket
6. Housing
7. Nylok® Nut
8. 3/8" Special Washer
9. Desiccant Cartridge
10. O-Ring
11. Safety Valve
12. Lower Mounting Bracket
13. 3/8" Capscrew (long)
14. Check Valve Assembly
15. Purge Valve Assembly
16. Purge Valve Bolt
17. Exhaust Diaphragm
18. Purge Valve
19. 1/4" Tapping Screw
20. Purge Valve Housing
21. Heater and Thermostat Housing
22. Return Spring
23. Purge Piston
24. 3/8" Capscrew
25. End Cover

Fig. 1, Air Dryer (exploded view of Bendix AD-9 shown)

https://truckmanualshub.com/

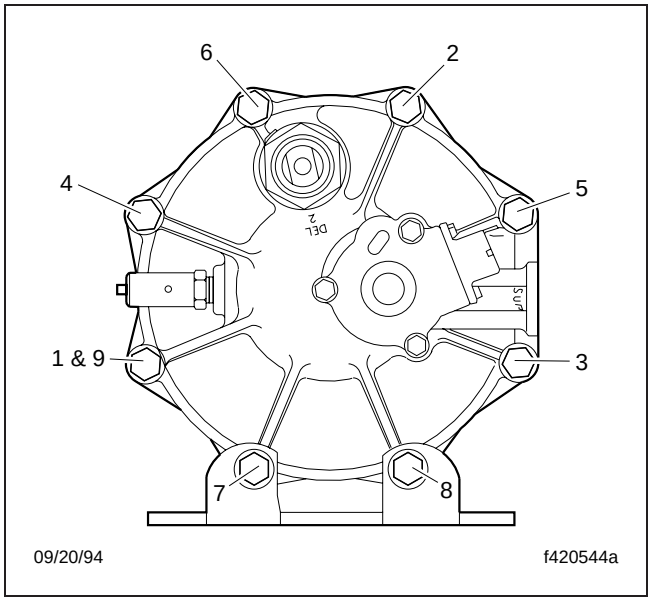

Fig. 2, Bendix AD-9 End Cover to Housing Torque Pattern

42–03 Bendix AD-9 Air Dryer Inspection

1. Check for moisture in the air brake system by opening the reservoir drain cocks. Examine the discharge. Some trace of water in the discharge is normal. A discharge of a milky gray liquid indicates excessive moisture is present in the air system and the desiccant cartridge needs to be replaced. See **Group 42** in the vehicle workshop manual for troubleshooting procedures. The following conditions could cause small amounts of moisture to be found in the air system:
   - An outside air source has been used to charge the air brake system. This air did not pass through the drying bed.
   - Air usage is unusually high and not normal.This may be due to accessory air demands or some unusual air requirement that does not allow the compressor to load and unload in a normal fashion. Check for air system leaks.
   - The air dryer has been installed on a system that had previously been operated without an air dryer. This type of system will be saturated with moisture, and several weeks of operation may be needed to fully dry the system.
   - The temperature range in your area fluctuates more than 30 degrees in one day.Small amounts of water can accumulate in the air brake system due to condensation. Under these conditions, the presence of moisture is normal and should not be considered an indication of poor air dryer performance.
2. Visually inspect the air dryer for external damage, and check that the unit is mounted tightly on the frame. If the air dryer mounting is loose, see **Group 42** of the *Condor® Workshop Manual* for mounting instructions.
3. Turn on the ignition switch, but don't start the engine.
4. Disconnect the harness connector from the air dryer.
5. Connect a voltmeter to circuit 94 on the air dryer's harness connector and to a body ground point. Check for battery voltage. If voltage is not found, check and repair the open or short to ground in wire 94.
6. Connect a voltmeter between the two terminals on the air dryer's harness connector. If voltage is not found, repair the open in the ground circuit wiring.
7. Use an ohmmeter to check resistance between the terminals on the end cover. See **Fig. 3**. The end cover contains the heater/thermostat. If the heater/thermostat is between 40º and 90º F (5º to 32º C), the heater/thermostat measured resistance will be infinite ohms. If the measured resistance is less than infinity, replace the heater/ thermostat.
8. Remove the heater/thermostat assembly and place it in a freezer for about five minutes to cool it below 40° F (5° C). Remove the cold heater/thermostat assembly and check resistance between the heater/thermostat terminals. Resistance should be 1.5 to 3.0 ohms. As the temperature of the heater/thermostat assembly increases, the ohm reading will increase. When the temperature goes above 45° F (7° C) measured resistance should be infinite ohms. If the heater/thermostat does not operate as outlined, replace it.

https://truckmanualshub.com/

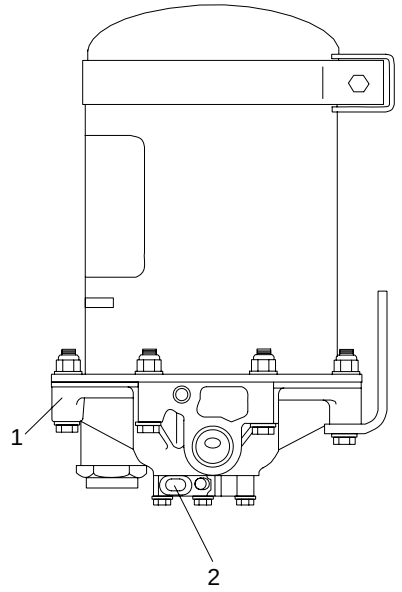

06/04/96 f421384

1. End Cover Assembly
2. Heater/Thermostat Terminals

Fig. 3, Bendix AD-9 Air Dryer Heater and Thermostat Check Location

42–04 Telma® Axle Retarder Brake Inspection

Visually inspect the condition of the Telma axle retarder. See **Fig. 4**. Check fasteners for tightness. Using a steam cleaner, wash the axle retarder every six months.

The Telma axle retarder brake, which is mounted to the front of the axle, does not need lubrication. However, the Telma driveline retarder, which may be used on tandem-axle vehicles, does need routine lubrication. This type of retarder is equipped with a standard grease fitting and needs to be lubricated with Supertelmaco 3, a lithium soap grease specifically designed for such applications.

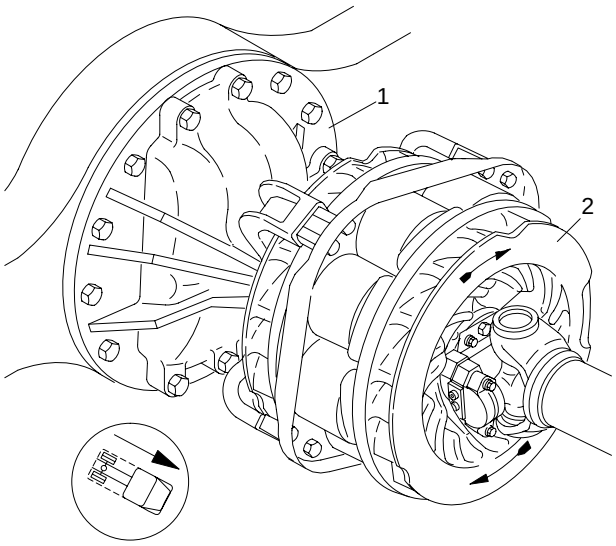

10/02/97 f410173

1. Differential
2. Axle Retarder Brake

Fig. 4, Telma Axle Retarder Brake

42–05 Camshaft Bracket Lubrication

Pump grease into the camshaft bracket until it appears at the slack adjuster end of the bracket. See **Fig. 5**.

Use an NLGI Grade 1 or Grade 2 multipurpose chassis grease. If grease leaks out under the cam head, the camshaft bracket grease seal is worn or damaged. See **Group 32** of the *Condor® Workshop Manual* for grease seal replacement instructions.

Camshaft brackets without grease fittings are fitted with special seals and packed with extended-lubrication-interval chassis grease. Grease them only when the camshaft is disassembled for servicing.

https://truckmanualshub.com/

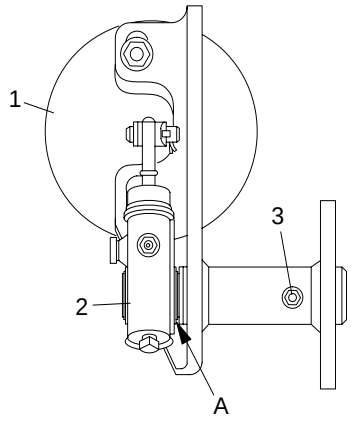

A. Grease Exit
1. Brake Chamber
2. Slack Adjuster
3. Non-Pressure Relief Grease Fitting

Fig. 5, Camshaft Bracket Lubrication

42–06 Automatic Slack Adjuster Inspection and Lubrication

Automatic slack adjusters must be lubricated periodically to ensure proper brake operation.

WARNING

Failure to lubricate slack adjusters could lead to dragging brakes, or a brake failure, resulting in personal injury or property damage.

Gunite

Lubricate a Gunite automatic slack adjuster at the grease fitting until grease flows from the grease-relief opening.

For operating temperatures of –20°F (–29°C) and higher use Texaco Multifak EP-2 or Mobil Grease No. 77.

For operating temperatures between –20°F (–29°C) and –40°F (–40°C), use Lubriplate Aero grease.

Haldex/Eaton

Lubricate a Haldex/Eaton automatic slack adjuster at the grease fitting with any extreme-pressure NLGI Grade 1 or Grade 2 grease if the operating temperature is –20°F (–29°C) and above. If the operating temperature is below –20°F (–29°C), use a low-temperature extreme-pressure grease.

Meritor

Lubricate the slack adjuster at the grease fitting (see **Fig. 6**, Ref. 7) until grease is forced past the pressure-relief capscrew (Ref. 5) or past the gear splines around the inboard snap ring. Use high-temperature, NLGI Grade 1 waterproof grease.

Some Meritor slack adjusters may be permanently lubricated.

42–07 Disc Brake Caliper Lubrication

Lubricate the two grease fittings on each disc brake caliper, if the vehicle is fitted with disc brakes.

Lubricate the disc brake slides when replacing the calipers.

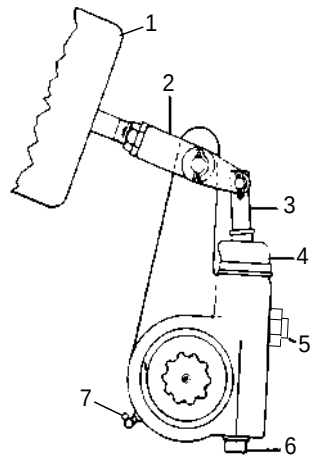

1. Brake Chamber
2. Clevis
3. Actuator Rod
4. Boot
5. Pressure-Relief Capscrew, Gasket, Pawl Spring, and Pawl
6. Manual Adjusting Nut
7. Grease Fitting (or lube plug)

Fig. 6, Meritor Automatic Slack Adjuster

https://truckmanualshub.com/

https://truckmanualshub.com/

Index, Alphabetical

Title of Maintenance Operation (MOP)	MOP Number
Drag Link Inspection	46–04
Drag Link Lubrication	46–02
Power Steering Cooler Inspection	46–06
Power Steering Fluid and Filter Changing	46–05
Power Steering Gear Lubrication	46–03
Power Steering Reservoir Fluid Level Check	46–01
Right-Hand Steering Ram Lubrication	46–07

https://truckmanualshub.com/

https://truckmanualshub.com/

46–01 Power Steering Reservoir Fluid Level Check

1. Apply the parking brakes and chock the tires to prevent the vehicle from moving.
2. With the engine cool. use a shop towel or a clean rag to clean the area around the power steering reservoir fill cap. See **Fig. 1**. Twist the cap counter-clockwise to remove the cap and dipstick assembly. Check the cold power steering fluid level. The level should be at FULL COLD with the engine off.

   Start the engine and run it at idle until it reaches operating temperature. Remove the dipstick, and check that power steering fluid reaches the FULL-HOT line. If the fluid level is low, add enough fluid to bring the level up to the FULL HOT mark on the dipstick. See **Table 1** for recommended power steering fluids.

   Install the dipstick and remove the chocks from the tires.

Recommended Power Steering Fluids		
Fluid Type*	**Approved Fluid***	
Automatic Transmission Fluid	Dexron®II Type "E" Type "F" Mobil 210	
Heavy-Duty Engine Oil	Shell Rotella T	30W
	Shell Rotella T	SAE 30
	Chevron Chevron Custom Mobil Super Texaco Union	10W-40
	Union Unocal Guardol	15W-40
Hydraulic Fluid	Chevron	Torque 5
	Exxon Nuto	H32
Power Steering Fluid	Fleetrite	PSF
	Texaco	TL-1833

* Do not mix oil types. Refer to the text in this group for a detailed warning statement.

Table 1, Recommended Power Steering Fluids

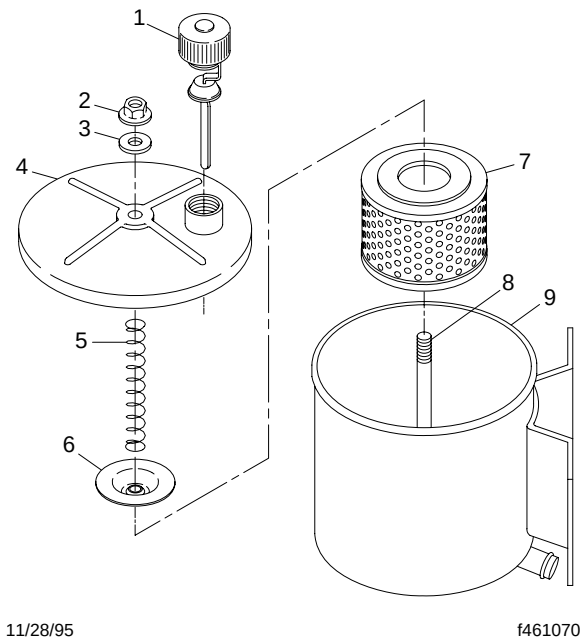

1. Vented Fill Cap and Dipstick
2. Flanged Nut
3. Rubber Washer
4. Reservoir Cover
5. Filter Spring
6. Filter Top Plate
7. Reservoir Filter
8. Threaded Shaft
9. Power Steering Reservoir

Fig. 1, Power Steering Reservoir (exploded view)

46–02 Drag Link Lubrication

1. Using a clean rag, wipe all dirt from both drag link grease fittings. See **Fig. 2**.
2. Using a pressure gun, apply clean grease at the grease fittings until old grease is forced out of the socket. Use multipurpose chassis grease NLGI Grade 2 (8% 12-hydroxy lithium stearate grease) or NLGI Grade 1 (6% 12-hydroxy lithium stearate grease); Grade 2 is preferred.

https://truckmanualshub.com/

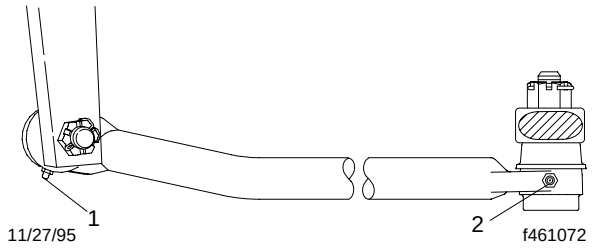

NOTE: The grease fitting is on inboard side of ball stud.

1. Grease Fitting at Pitman Arm
2. Grease Fitting at Axle Steering Arm

Fig. 2, Drag Link

46–03 Power Steering Gear Lubrication

CAUTION

Apply grease to the sector shaft only with a hand-type grease gun. See Fig. 3. Use of a high-pressure power grease gun will supply grease too quickly and could affect the high pressure seal, contaminating the hydraulic fluid.

Using a hand-type grease gun, apply NLGI Grade 2 or 3 multipurpose chassis grease until it starts to come out past the sector shaft seal.

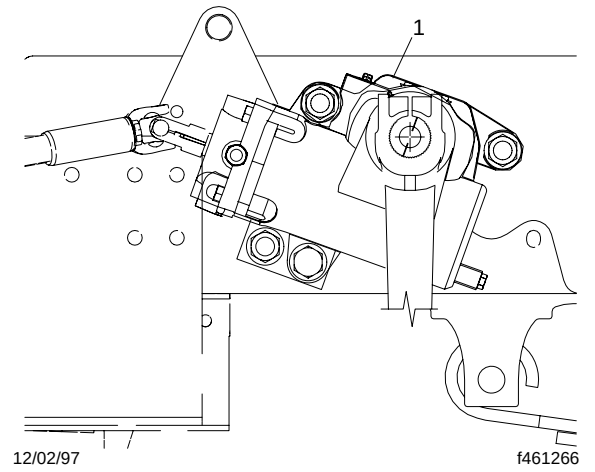

1. Sector Shaft Grease Fitting

Fig. 3, TRW TAS Series Sector Shaft Lubrication

46–04 Drag Link Inspection

WARNING

All steering system components are critical for safe operation of the vehicle. Failure to maintain the steering system as specified may result in loss of steering control, which could lead to personal injury and property damage.

Have someone turn the steering wheel from left to right. Check for movement between the ball stud end at both the pitman arm and the steering arm. Also check if the ball stud nut is loose.

If the ball stud end is loose, replace the drag link. If the ball stud nut is loose, replace the nut and cotter key. See **Group 00** for proper torque specifications.

Visually inspect the boot of the drag link at both the pitman arm and the steering arm end for cracks, splits, or other damage. Replace the boot as needed. See **Group 46** of the *Condor® Workshop Manual* for drag link removal and installation instructions.

Grasp the drag link near the pitman arm end, then push and pull laterally to check for axial movement in the ball stud end. If it is loose, replace the drag link. See **Group 46** of the *Condor® Workshop Manual* for replacement instructions. If there is 1/8-inch (3-mm) movement or more, do not drive the vehicle until the drag link is replaced.

46–05 Power Steering Fluid and Filter Changing

WARNING

Fill only with approved clean fluid. Do not mix fluid types. Failure to use the proper fluid could cause seal deterioration and leaks. Fluid leaks could eventually cause loss of power steering assist. This could lead to an accident resulting in personal injury or property damage.

1. Apply the parking brakes and chock the rear tires.
2. Place a drain pan under the power steering reservoir, and remove the steering gear-to-reservoir return hose at the reservoir. Drain the power steering fluid into the drain pan and dispose of the fluid-

https://truckmanualshub.com/

properly. Plug the return line fitting on the reservoir.

3. Use one hand to apply downward pressure to the power steering reservoir cover. Remove the flanged nut and rubber washer. See **Fig. 1**. Remove the cover.

NOTE: Always replace the power steering reservoir filter when changing the fluid.

4. Lift out the filter spring and the filter top plate, then remove the filter. It may be necessary to wiggle the filter to remove it from its base. Do not use pliers to aid in removal of the filter; pliers could cause metal chips to enter the steering system. Clean the inside of the reservoir using a lint-free cloth.
5. Place the disconnected end of the steering gear-to-reservoir hose in a drain pan. Do not start the engine while draining the system. Raise the front of the vehicle with a floor jack and support it with jack stands. Have someone turn the steering wheel to full lock left and right. Capture the fluid flowing from the hose in a drain pan. Add fluid to the reservoir, as needed. When clean power steering fluid flows from the hose into the drain pan, remove the plug from the reservoir and reconnect the steering gear-to-reservoir hose to the reservoir. Remove the jack stands and lower the vehicle.
6. With the larger opening at the top, install a new filter into the reservoir. Install the filter top plate so its center fits into the opening at the top of the filter. Install the filter spring.
7. Clean the reservoir cover and O-ring seal. Inspect the O-ring and the cover for cracks, deformities, or damage. Replace the O-ring seal or cover as needed.
8. Install the reservoir cover over the threaded shaft. Apply a slight downward pressure while installing the rubber washer and the flanged nut. Tighten the nut until it is snug.
9. Fill the power steering reservoir with approved power steering fluid (see **Table 1**) to the FULL COLD mark on the dipstick.
10. Start the engine and operate it at idle. Turn the steering wheel to full lock left and right to adjust the fluid level and remove any existing air from the power steering pump and gear. Recheck the fluid level. Add fluid as needed. The system is properly bled when the steering pump does not labor when turning the wheel.
11. Check for leaks in the power steering system, and repair as needed. Top off the power steering fluid level as needed.

46–06 Power Steering Cooler Inspection

Inspect the power steering cooler, if equipped. Check for a build-up of insects, leaves, and other debris on the cooling fins. Use a water spray to wash away the-debris. Replace the cooler, as necessary.

46–07 Right-Hand Steering Ram Lubrication

WARNING

All steering system components are critical for safe operation of the vehicle. Failure to maintain the steering system as specified may result in loss of steering control, which could lead to personal injury and property damage.

Visually inspect the steering ram for cracks, splits, or other damage. Lubricate as necessary, and replace the ram as needed.

https://truckmanualshub.com/

https://truckmanualshub.com/

Index, Alphabetical

Title of Maintenance Operation (MOP)	MOP Number
Fuel Filter Replacement	47–01
Fuel Tank Band-Nut Tightening	47–03
Fuel/Water Separator Sight Bowl Cleaning and Element Replacement	47–02

https://truckmanualshub.com/

https://truckmanualshub.com/

47–01 Fuel Filter Replacement

Refer to the engine manufacturer's service manual for removal and installation procedures.

47–02 Fuel/Water Separator Sight Bowl Cleaning and Element Replacement

Alliance or Racor Fuel/Water Separator Element Replacement

The only service necessary on Alliance or Racor fuel separators is to replace the filter element.

Alliance or Racor

WARNING

Diesel fuel is flammable and can ignite if exposed to open flame, intense heat, or other ignition source. Do not drain fuel near, or expose fuel vapor to open flame or intense heat. Exposure to open flame or intense heat could start a re, possibly resulting in personal injury or property damage. When working on a fuel system, have a re extinguisher within arm's reach.

1. Drain off some fuel by loosening the vent plug and opening the drain valve.
2. Disconnect the water sensor and heater connections, if equipped.
3. Remove the element and bowl, together, by turning counterclockwise.
4. Remove the bowl from the element, and clean the O-ring.
5. Apply a coating of clean fuel or motor oil to the new O-ring and element seal.
6. Spin the bowl onto the new element, then spin them both onto the filter head snugly, by hand only.

IMPORTANT: Do not use tools to tighten.

7. Connect the water sensor and heater connectors, if equipped.
8. Prime the fuel separator.
   - 8.1. Loosen the vent plug. Then operate the primer pump until the fuel purges at the vent plug. See **Fig. 1**.
   - 8.2. Close the vent plug.
   - 8.3. Start the engine and check for fuel leaks.
   - 8.4. Correct any fuel leaks with the engine shutdown.
9. Start the engine and check for fuel leaks.
10. Shut down the engine and correct any fuel leaks.

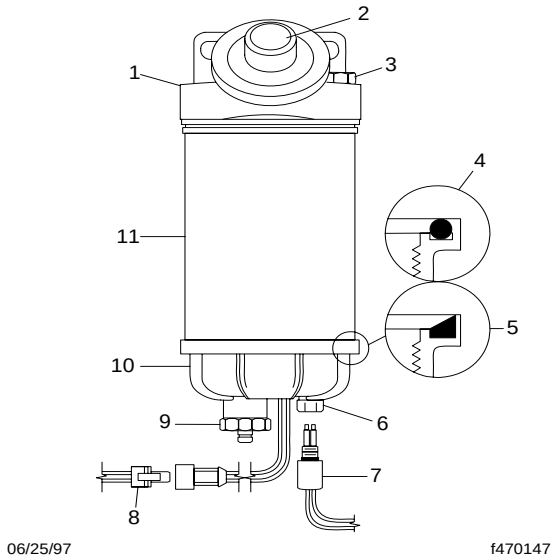

1. Beige Mounting Head
2. Fuel Primer Pump
3. Metal Vent Plug
4. Bowl O-Ring
5. Bowl Bevel-Cut Gasket
6. Bowl Probe Plug
7. Water Sensor Probe, 9/16" SAE
8. Heater Connector
9. Drain Plug
10. Sight Bowl

Fig. 1, Alliance or Racor Fuel/Water Separator

47–03 Fuel Tank Band-Nut Tightening

Hold each fuel tank band retention nut with a wrench while backing off its jam nut. Then tighten the retention nuts 30 to 35 lbf•ft (41 to 46 N•m). After the retention nuts have been tightened, hold each retention nut with a wrench while tightening its jam nut 30 lbf•ft (41 N•m).

IMPORTANT: Do not overtighten.

https://truckmanualshub.com/

https://truckmanualshub.com/

Index, Alphabetical

Title of Maintenance Operation (MOP) **MOP Number**

Exhaust System Inspection (Noise Emission Control) 49–01

https://truckmanualshub.com/

https://truckmanualshub.com/

49–01 Exhaust System Inspection (Noise Emission Control)

1. On all vehicles, check the condition of the muffler body, the top stack, and the heat shield (**Fig. 1**). Check the inlet/outlet tubes for leakage, dents, and corrosion, and check for holes in the muffler. Replace parts as required. Use new parts, equivalent to parts originally installed on the vehicle. See **Group 49** of the *Condor® Workshop Manual* for replacement procedures.
2. Inspect the exhaust ex hose (**Fig. 2**) for leakage, wear, or damage. Replace with new parts if replacement is needed.
3. Check for leakage at the V-band coupling, which attaches the exhaust pipe to the turbocharger exhaust outlet. See **Fig. 2**.

   If leakage exists, tighten the nut on the V-band coupling 10 lbf•ft (14 N•m). If leakage persists, install a new V-band coupling.
4. Inspect the turbo outlet pipe, and replace it as needed.
5. Check the U-bolt clamps for tightness, and tighten as needed.
6. Check for leakage at all wide-band exhaust clamps. See **Fig. 3**, **Fig. 4**,or **Fig. 5**.

   If leakage exists, tighten the nuts 40 to 60 lbf•ft (54 to 81N•m). If leakage persists, install a new wide-band exhaust clamp. Do not re-use Sealclamps.

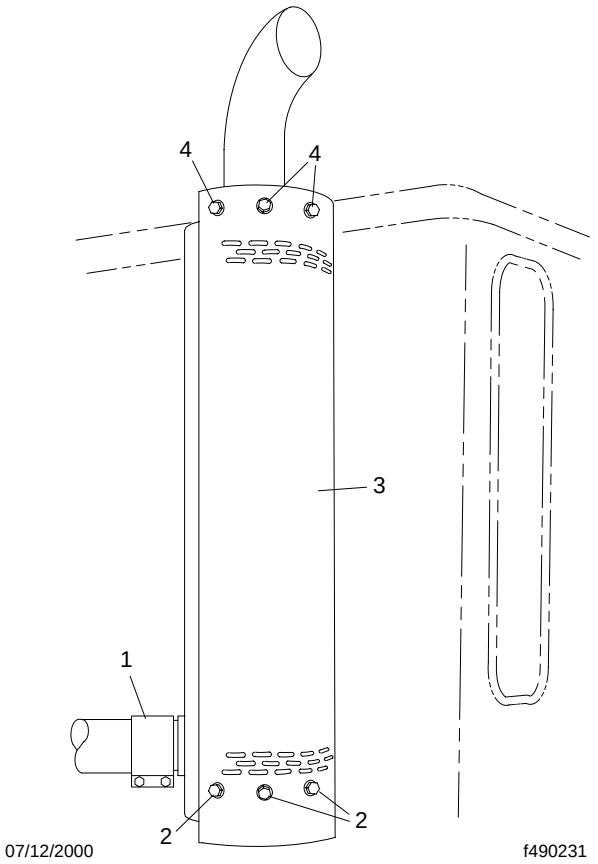

1. Exhaust Clamp
2. Lower Heat Shield Fastener
3. Heat Shield
4. Upper Heat Shield Fastener

Fig. 1, Vertical Exhaust Stack and Heat Shield

https://truckmanualshub.com/

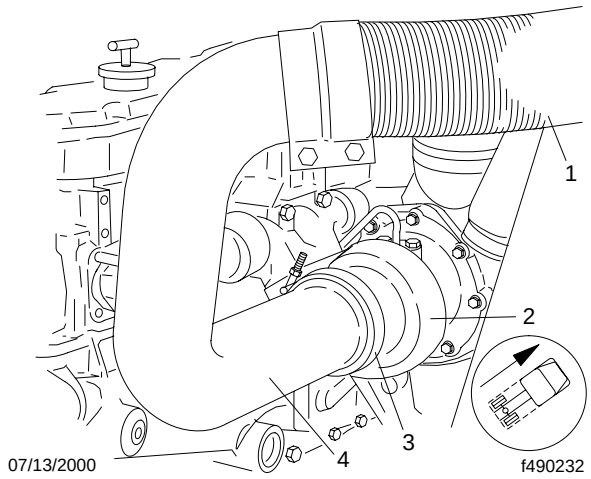

1. Flex Hose
2. Turbocharger Exhaust Outlet
3. V-Band Coupling
4. Exhaust Pipe

Fig. 2, V-Band Coupling and Flex Hose

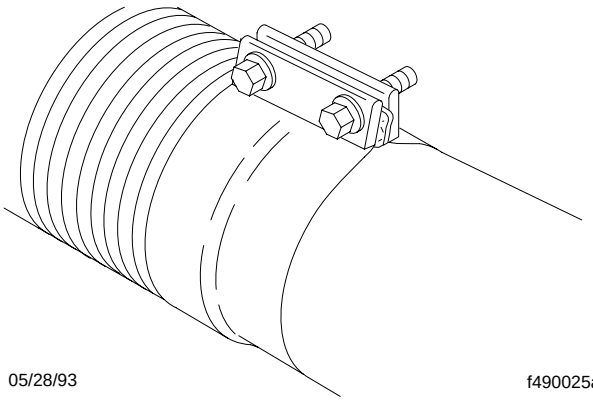

Fig. 3, Donaldson Sealclamp Wide-Band Exhaust Clamp

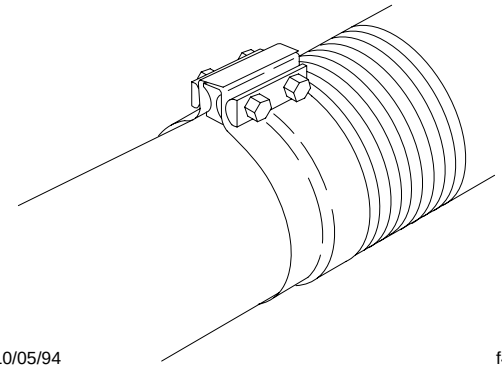

Fig. 4, Torca Torctite Wide-Band Exhaust Clamp

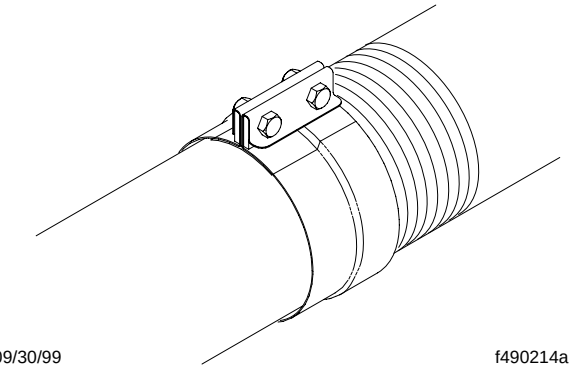

Fig. 5, Gemi Wide-Band Exhaust Clamp

https://truckmanualshub.com/

Index, Alphabetical

Title of Maintenance Operation (MOP) **MOP Number**

Cab Tilt Pump Reservoir Fluid Level and System Check 60–01

https://truckmanualshub.com/

https://truckmanualshub.com/

60–01 Cab Tilt Pump Reservoir Fluid Level and System Check

Before checking the hydraulic fluid level in the tilt pump reservoir, the cab must be in the operating position, with the cab latches locked and the valve lever in the "down" position. Let it remain in this position for at least five minutes before checking the reservoir. The reservoir is full when the fluid level reaches the threaded area of the fill plug location.

If the hydraulic fluid level is low, check all fittings and lines for leaks. If any fittings are loose, tighten them finger-tight, then tighten with a wrench until there is firm resistance; tighten one-sixth turn more. Replace any damaged or worn fittings or lines before adding fluid. Then bleed any air from the system; see **Group 60** of the *Condor® Workshop Manual* for instructions. Add MIL–5606 fluid or an equivalent oil to bring the level up to the bottom of the fill tube elbow.

A "spongy" feel in the operation of the pump indicates that air is present in the hydraulic cab-tilt system. Bleed the air from the system; see **Group 60** of the *Condor® Workshop Manual* for instructions.

Check for wear of the mounting pin on both tilt cylinders when the cab is in the raised position. Check that the pins are securely fastened by visually inspecting the two retaining Torx®-head screws at the top of each assembly. Check the tilt pump mounting bolts for tightness; see **Group 00** in this manual for torque values for lubricated or plated-thread fasteners.

https://truckmanualshub.com/

https://truckmanualshub.com/

Index, Alphabetical

Title of Maintenance Operation (MOP) **MOP Number**

Door Seal, Door Latch, and Door Hinge Lubrication 72–01

https://truckmanualshub.com/

https://truckmanualshub.com/

72–01 Door Seal, Door Latch, and Door Hinge Lubrication

Lightly coat door seals with a lubricant that is safe for rubber.

Apply a few drops of light engine oil to the door latch mechanism, to reduce noise and wear. Wipe off excess oil.

Lubricate door hinges every six months. In addition, lubricate replacement door hinges at installation. Lubricate the hinges by spraying them with a light coating of silicone lubricant.

https://truckmanualshub.com/

https://truckmanualshub.com/

Index, Alphabetical

Title of Maintenance Operation (MOP) **MOP Number**

Air Conditioner Inspection 83–01

https://truckmanualshub.com/

https://truckmanualshub.com/

83–01 Air Conditioner Inspection

WARNING

Wear eye protection, gloves, and protective clothing when working on the air conditioning system. Leaking refrigerant from a damaged hose or line could cause blindness or serious skin burns.

Preliminary Checks

1. Park the vehicle on a level surface, apply the parking brakes, and chock the tires.
2. Check the appearance of the air conditioner compressor pulley assembly. If the friction surface of the pulley shows signs of excessive grooving due to belt slippage, replace both the pulley and the drive plate. Visually inspect the refrigerant compressor drive belt for damage, and check that the belt is set at the proper tension. Also, check the tightness of the compressor mounting fasteners. For instructions and torque values, see **Group 01** of the *Condor® Workshop Manual*.
3. Inspect the drive plate. If the friction surface of the drive plate shows visible signs of damage due to excessive heat, replace the drive plate and pulley assembly. See **Group 83** of the *Condor® Workshop Manual* for removal and installation procedures.
4. On a Sanden A/C compressor, use a feeler gauge to check that the drive plate clutch clearance is 0.016 to 0.030 inch (0.4 to 0.8 mm). See **Fig. 1**. If the drive plate clutch requires adjustment, see **Group 83** of the *Condor® Workshop Manual*.
5. Inspect the compressor clutch coil wire. Check that the connector is not damaged or loose. Replace the wire if it is damaged.
6. Check the overall condition of the air conditioning-hoses. Look for cracks, cuts, and abrasions on the hoses. Replace damaged hoses. See **Group 83** of the *Condor® Workshop Manual* for replacement instructions. Also, check for loose fittings on all of the air conditioning components.
7. Check for a build-up of road debris on the condenser fins. See **Group 83** of the *Condor® Workshop Manual* for cleaning instructions.

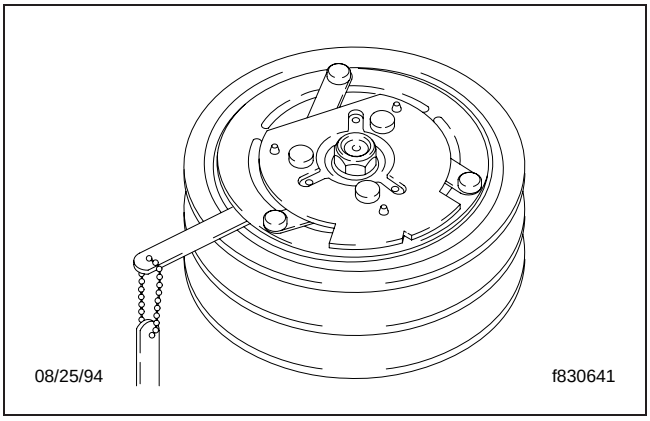

Fig. 1, Drive Plate Clearance Inspection

Refrigerant Checking

Find the moisture indicator sight glass on the receiver drier and check the color of the moisture indicator. See **Fig. 2**.

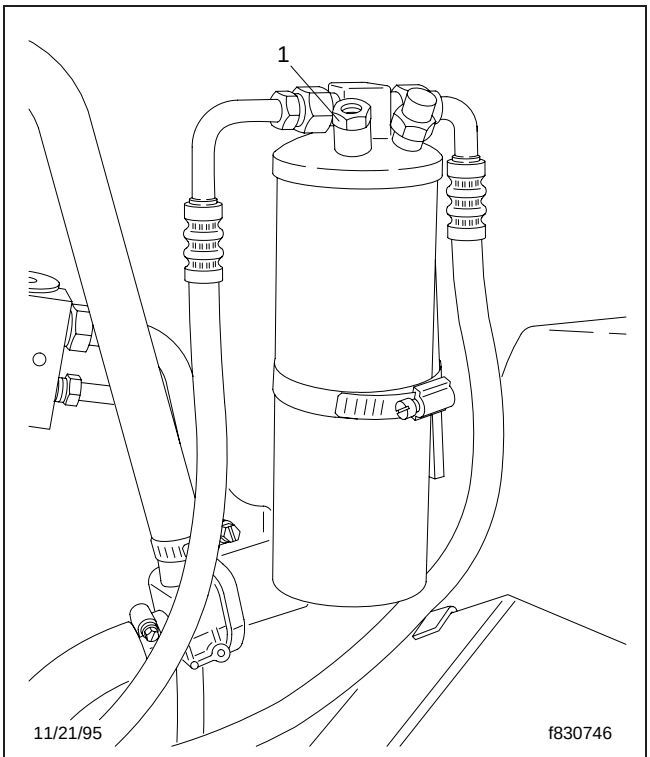

1. Moisture Indicator

Fig. 2, Receiver-Drier

https://truckmanualshub.com/

If the indicator is a deep cobalt blue, the refrigerant charge is dry.

If the indicator is not blue, the system is contaminated with water. If the system is contaminated, the refrigerant must be recovered and the receiver drier must be replaced. See **Group 83** of the *Condor® Workshop Manual* for instructions.

Cab Air Filter Cleaning or Replacement

The cab HVAC (heating, ventilation, and air conditioning) air filter must be cleaned or replaced once a year to permit proper operation of the HVAC system. The filter can be cleaned a maximum of three times before replacement is needed.

IMPORTANT: When replacing the air filter, use only American LaFrance, LLC approved air filters. Use of unapproved air filters could decrease the ow of air into the cab.

1. Park the vehicle on a level surface, apply the parking brake, shut down the engine, and chock the rear tires.
2. Remove the cab front grille. See **Group 88** of the *Condor® Workshop Manual* for instructions.
3. From under the front of the cab, access the heater/air-conditioner housing.
4. Remove the two mounting screws that secure the HVAC air filter grille plate to the HVAC housing.
5. Slide the filter out of the housing. See **Fig. 3**.
6. Clean the air filter.
   - 6.1. Wash the filter with soapy water, and rinse with clear water.
   - 6.2. Allow the filter to air dry. Then, using a spray bottle, apply a light coating of filter wetting agent (Elixaire P/N 6201) to the inlet side of the filter.

NOTE: Applying the wetting agent to the filters will enhance filter performance.

NOTE: If the air filter has already reached a maximum three cleanings, or if there is any visible damage to the air filter, a replacement should be installed.

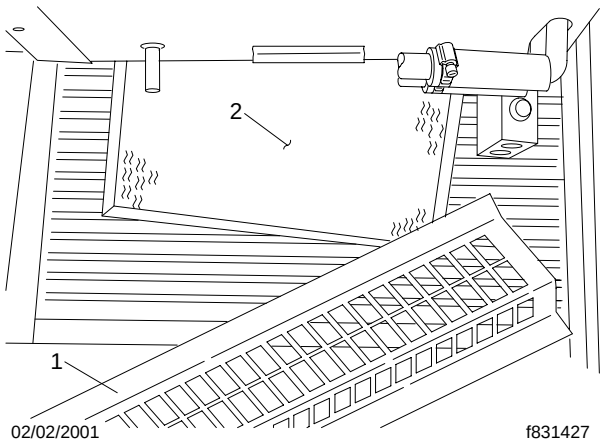

1. Grille Plate
2. Air Filter

Fig. 3, Air Filter Removal

7. Install the air filter.
   - 7.1. Slide the air filter into the HVAC housing.
   - 7.2. Install the grille plate on the HVAC housing with the two mounting screws. Tighten securely.
8. Install the cab front grille. See **Group 88** of the *Condor® Workshop Manual* for instructions.
9. Remove the chocks from the tires.