https://truckmanualshub.com/

SM-615
ECG 20-32
Genesis Series Truck

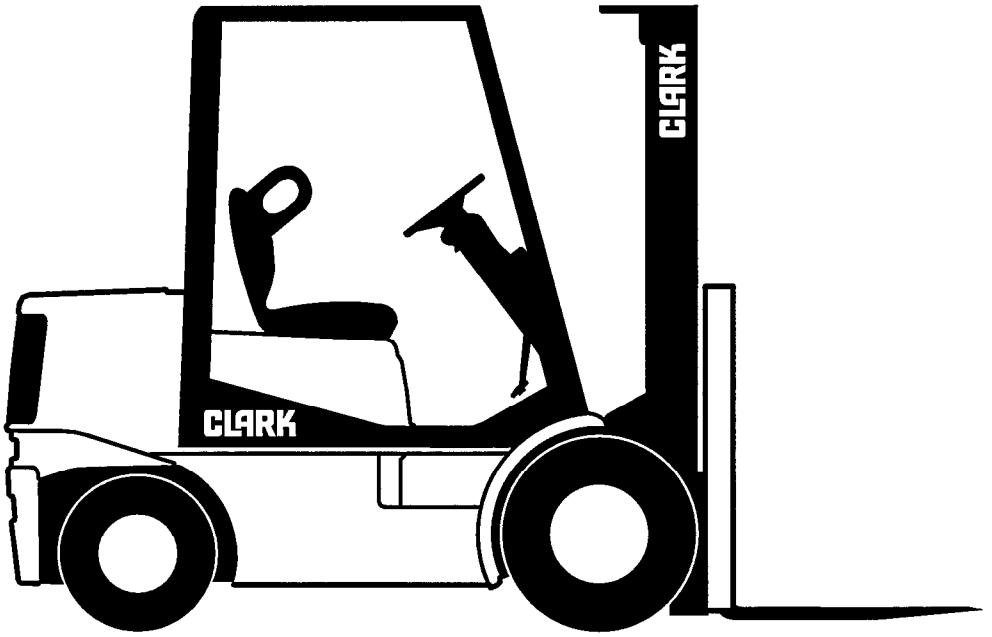

CLARK Technical Publications
Lexington, KY
40508

Copyrighted Material
Intended for CLARK dealers only
Do not sell or distribute

https://truckmanualshub.com/

Truck Models Covered by This Manual

This manual consists of a "base" module that pertains to ECG 20-30 models and other modules that pertain only to specific models. Manuals shipped with the truck contain the base module and the module specific to the purchased truck.

You may, however, purchase specific modules and expand your manual to fully cover multiple models. To do so, order the desired modules as you would any other Clark part.

Arrangement and Use of This Manual

Clark arranges parts and service procedures by standardized *Groups*. In this manual, Groups are similar to "chapters." Groups are listed in the indexes on the next page.

Each Group begins with a table of contents that shows the *Sections* contained within the Group. Lengthy Sections also begin with a table of contents.

Each Group and Section has an identifying name and number, or "ID."

Each page also has a unique ID. The page ID consists of three numbers separated by hyphens. The three numbers represent the Group number, the Section number, and the page number. For Example, "00-1-2" on the lower corner of the page indicates Group 00, Section 1, Page 2.

The Group number sometimes has a letter or letters added to it in parentheses if one or more variations of the Group exist. For example, if the truck has a standard transaxle, Group 06 is expressed as "06(S);" if the truck has a hydrostatic transmission, Group 06 is expressed as "06(H)."

You can quickly locate a specific point in the manual by using the headers and footers that appear on every Section page. The following illustration points out these areas.

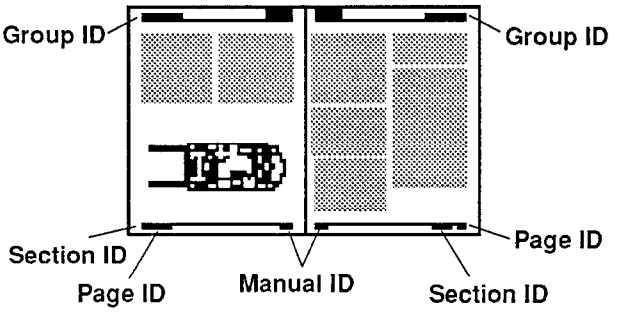

IMPORTANT

This manual is intended for the use of trained service personnel. Please read Group SA, "Safe Maintenance" and the *Operator's Manual* before working on or operating the truck.

Copyright Clark Material Handling 1996

Copyrighted Material
Intended for CLARK dealers only
Do not sell or distribute

https://truckmanualshub.com/

Foreword

This service publication provides information covering normal service, maintenance and repair of the Clark industrial lift trucks noted on the cover. It has been specifically prepared to help owners and service personnel maintain these trucks in efficient and safe operating condition.

This manual is intended for use by persons who are trained and authorized to do lift truck maintenance. It is designed to provide essential information about the correct and safe service maintenance and repair of the truck by *trained mechanics or service technicians.*

The Pictorial Contents lists components or systems by Basic Group Number of Major Parts. Additional content listings are placed at the beginning of each Section in the manual.

General and detailed service and repair procedures are outlined (as required) for each component or subsystem. Some procedures include explanations that are common to several components or subsystems. **Not every configuration can be pictured. Only "base" module and original designs are shown.**

Procedures have been made easier to use by providing specific steps only when necessary and general instructions required to explain the activity, component, assembly, or process being worked on. The technician is expected to include obvious additional steps of standard procedure for removal, disassembly, cleaning, inspection, reassembly, installation, etc., as needed.

To be better prepared to do the necessary service work, take time to completely read the entire procedure, including any special instructions, before starting any work.

Before beginning to work, the technician is cautioned and expected to:

- Do all necessary service work.
- Take time to read entire procedures, including any special instructions.
- Contact Clark dealer or, Clark with any questions or procedures not addressed in this manual.

NOTICE

The descriptions and specifications included in this manual were in effect at the time of printing. Clark reserves the right to discontinue models at any time, or make improvements and changes in specifications or design without notice and without incurring obligation. Specifications, torques, pressures, measurements, adjustments, illustrations and other items may change at any time. Contact your authorized CLARK dealer for information on possible updates or revisions.

Copyrighted Material
Intended for CLARK dealers only
Do not sell or distribute

https://truckmanualshub.com/

CONTENTS

Group SA – Safe Maintenance

Group PS – Periodic Service

Group 12 – Battery

Group 13 – Electrical Switches

Group 16 – Electrical Motors

Group 17 – Electrical Schematics

Group 19 – Electrical Controls

Group 20 – Drive Axle

Group 22 – Wheels and Tires

Group 23 – Brake System

Group 25 – Steering Gear

Group 26 – Steering Axle

Group 29 – Hydraulic Pump, Sump and Filters

Group 30 – Hydraulic Control Valves

Group 31 – Hydraulic Supply System

Group 32 – Cylinders

Group 33 – Selector Solenoid Valve

Group 34 – Upright

Group 40 – Specifications

Copyrighted Material
Intended for CLARK dealers only
Do not sell or distribute

https://truckmanualshub.com/

GROUP SA

SAFE MAINTENANCE

Safety ..... Section 1

Lifting, Jacking, and Blocking ..... Section 2

Towing ..... Section 3

Copyrighted Material
Intended for CLARK dealers only
Do not sell or distribute

https://truckmanualshub.com/

Section 1

Safety

Safety Signs and Messages 2

Safe Maintenance Practices 2

General Shop Precautions 4

Copyrighted Material
Intended for CLARK dealers only
Do not sell or distribute

https://truckmanualshub.com/

Safety Signs and Messages

Safety signs and messages in this manual and on the lift truck provide instructions and identify specific areas where potential hazards exist and special precautions should be taken. Be sure you know and understand the meaning of these instructions, signs, and messages. Damage to the truck and death or serious injury to you or other persons may result if these messages are not followed.

NOTE

This message is used when special information is required relating to procedures, equipment, tools, pressures, capacities, and other special data.

IMPORTANT

This message is used when special precautions should be taken to ensure a correct action or to avoid damage to, or malfunction of, the truck or a component.

⚠ CAUTION

This message is used as a reminder of safety hazards that can result in personal injury if proper precautions are not taken.

⚠ WARNING

This message is used when a hazard exists that can result in injury or death if proper precautions are not taken.

⚠ DANGER

This message is used when an extreme hazard exists that can result in injury or death or serious injury if proper precautions are not taken.

The above terms have been adopted by Clark Material Handling Company. The same terms may be used in different context in service literature supplied directly or indirectly by vendors or truck components.

Safe Maintenance Practices

The following instructions have been prepared from current industry and government safety standards applicable to industry truck operation and maintenance. These recommended procedures specify conditions, methods, and accepted practices that aid in the safe maintenance of industrial trucks. They are listed here for the reference and safety of all workers during maintenance operations. **Carefully read and understand these instructions and the specific maintenance procedure before attempting to do any repair work.**

When in doubt of any maintenance procedure, please contact your local Clark dealer.

1. Powered industrial trucks can become hazardous if maintenance is neglected. Therefore, suitable maintenance facilities, trained personnel, and procedures must be provided.
2. Maintenance and inspection of all powered industrial trucks shall be done in conformance with the manufacturer's recommendations.
3. A scheduled planned maintenance, lubrication, and inspection program shall be followed.
4. Only trained and authorized personnel shall be permitted to maintain, repair, adjust, and inspect industrial trucks. Work should be performed in accordance with the manufacturer's specifications.
5. Properly ventilate work area, vent exhaust fumes, and keep shop clean and floor dry.
6. Avoid fire hazards and have fire protection equipment present in the work area. Do not use an open flame to check for level or leakage of fuel, electrolyte, or coolant. Do not use open pans of fuel or flammable cleaning fluids for cleaning parts.
7. Before starting work on truck:
   a. Wear eye protection and remove all jewelry.
   b. Raise drive wheels off of floor or disconnect power source. Use blocks or other positive truck positioning devices.
   c. Disconnect battery before working on the electrical system.
8. Before working on engine fuel system of gasoline or diesel-powered trucks, be sure the fuel shut-off valve is closed.
9. Operation of the truck to check performance must be conducted in an authorized, safe, clear area.

Copyrighted Material
Intended for CLARK dealers only
Do not sell or distribute

https://truckmanualshub.com/

10. Before starting to drive truck:
    a. Be in operating position in the operator's compartment
    b. Put direction control in neutral.
    c. Turn key switch ON.
    d. Be sure parking brake is engaged.
    e. Check functioning of direction and speed controls, steering, brakes, warning devices, and any load handling attachments.
11. Before leaving truck:
    a. Stop truck.
    b. Put directional control in neutral.
    c. Apply the parking brake.
    d. Turn key switch OFF.
    e. Put blocks at the wheels if truck is on an incline.
12. Brakes, steering mechanisms, control mechanisms, warning devices, lights, governors, guards, safety devices, and frame members must be carefully and regularly inspected and maintained in a safe operating condition.
13. Special trucks or devices designed and approved for hazardous area operation must receive special attention to ensure that maintenance preserves the original, approved, safe-operating features.
14. Fuel systems must be checked for leaks and condition of parts. Extra special consideration must be given in the case of a leak in the fuel system. Action must be taken to prevent the use of the truck until the leak has been corrected.
15. The truck manufacturer's capacity, operation, and maintenance instruction plates, tags, or decals must be maintained in legible condition.
16. Batteries, motors, controllers, limit switches, protective devices, electrical conductors, and connections must be inspected and maintained in conformance with good practices. Special attention must be paid to the condition of electrical insulation.
17. To avoid injury to personnel or damage to the equipment, consult the manufacturer's procedures in replacing contacts on any battery connection.
18. Industrial trucks must be kept in a clean condition to minimize fire hazards and help in the detection of loose or defective parts.
19. Modifications and additions that affect capacity and safe truck operation must not be done without the manufacturer's prior written approval. Capacity, operation and maintenance instruction plates, tags, or decals must be changed accordingly. This is an OSHA requirement.
20. Care must be taken to assure that all replacement parts, including tires, are interchangeable with the original parts and of a quality at least equal to that provided in the original equipment. Parts, including tires, are to be installed per the manufacture's procedures. Always use genuine CLARK or CLARK approved parts.
21. Use special care when removing heavy components from the truck, such as counterweight, seat deck, upright, etc. Be sure that lifting and handling equipment is of the correct capacity and in good condition. Also, this removal may upset stability of the truck. The frame must always be safely blocked for major component removal.

NOTE

Become familiar with additional operating and maintenance safety instructions contained in the following publications:

ANSI ASME B56.1 – Safety Standard for Low Lift and High Lift Trucks. Published by: American Society of Mechanical Engineers, United Engineering Center, 345 E. 47th Street, New York, NY 10017.

NFPA 505- Powered Industrial Trucks. Including Type, Areas of Use, Maintenance and Operation. Available from: National Fire Protection Assoc., Inc., Batterymarch Park, Quincy, MA 02269.

General Industrial Standards, OSHA 2206: OSHA Safety and Health Standards (29 CFR 1910), Subpart N-Materials Handling and Storage, Section 1910.178 Powered Industrial Trucks. For sale by: Superintendent of Documents, U.S. Government Printing Office, Washington, DC 20402.

Copyrighted Material
Intended for CLARK dealers only
Do not sell or distribute

https://truckmanualshub.com/

General Shop Precautions

The following list contains general precautions that should be followed when working on a lift truck.

- Always wear safety glasses for eye protection.
- Remove rings, watches, loose jewelry and open clothing before working on a vehicle to avoid serious injury.
- Do not smoke while working on a vehicle.
- Put power key switch in the OFF position, unless otherwise required by the procedure.
- Set the parking brake. Place chocks to the front and rear surfaces of the tires to provide further restraint from inadvertent vehicle movement.
- Use safety stands or blocks whenever a procedure requires you to be under the vehicle.
- Service electric truck batteries in a well-ventilated area to avoid the danger of lighting explosive gases.
- Follow the Safety Instructions outlined in Group 12, Battery Handling.
- Always discharge the capacitors prior to working on or around electrical components.
- Avoid contact with battery acid. The battery contains corrosive acid which can cause injury. Follow the instructions outlined in Group 12 and those instructions received with your battery and charger.

Cautions

The following is a list of "CAUTIONS" connected with the operation and maintenance of trucks equipped with solid state control panels.

⚠ CAUTION
WELDING ON TRUCKS

1. **Make sure the truck has no grounds.**
2. **Disconnect truck battery.**
3. **Protect electrical wiring and components from weld spatter with a shield.**
4. **Ventilate battery or remove battery from truck.**

If the above is not followed, damage can result to wiring and electrical components on a solid state control truck.

⚠ CAUTION
DO NOT STEAM-CLEAN

Do not steam-clean a solid state controlled truck. Excessive moisture will interfere with proper operation of the solid state components.

Solid state controls should be cleaned at regular intervals. Blowing dirt off with an air (207 kPa [30 psi] max.) hose periodically will, for the most part, eliminate any serious cleaning problems. For a more thorough cleaning, water may be hosed over the control. A mild detergent may be applied, such as that used for washing dishes. The detergent should be rinsed off, and the controls must be thoroughly air-dried before putting truck into service.

Periodic cleaning should preclude the need for using a degreaser. However, if a degreaser is used, we recommend Clark #1801146 Degreaser, or the equivalent to MS-180 Freon TF Degreaser and Cleaner. Only approved solvents should be used to clean solid state control components.

⚠ CAUTION
CHECK POLARITY

Battery polarity must be correct or the truck will not operate.

⚠ CAUTION
USE TRUCK BATTERY ONLY

Do not use a motor generator unit such as "ready power" or a battery charger to move and/or check this truck as serious damage may occur.

IMPORTANT
SAFETY NOTICE

Read and understand all Safety Precautions and Warnings before performing repairs on lift trucks.

Appropriate service methods and proper repair procedures are essential to the safe, reliable operation of industrial trucks, as well as the personal safety of the individual doing the work. This Service Manual provides general directions for accomplishing service and repair work with tested, effective techniques. Following them will help assure successful repair and reliable truck operation.

Copyrighted Material
Intended for CLARK dealers only
Do not sell or distribute

https://truckmanualshub.com/

There are numerous variations in procedures, techniques, tools and parts used for servicing industrial trucks, as well as in the skill of the person doing the work.

This manual cannot possibly anticipate all such variations and provide advice or precautions as to each. Accordingly, anyone departing from the instructions provided in this manual, through procedures used or choice of tools, materials, and parts may jeopardize his or her personal safety and the safety of the vehicle user.

Improper or careless techniques cause accidents. Don't take chances with incorrect or damaged equipment. Read and understand the procedures for safe operation and maintenance outlined in this manual.

Drive and work safely. Follow the safety signs and their messages displayed in the work area, on the truck, and in this manual.

Copyrighted Material
Intended for CLARK dealers only
Do not sell or distribute

https://truckmanualshub.com/

Section 2

Lifting, Jacking, and Blocking

Raising Drive Wheels 2
Chaining the Upright in Raised Position 3
Raising Rear of Truck 3
Raising Entire Truck 4
Shipping Tie-Down Instructions 5

WARNING

Lifting or jacking any large piece of equipment such as a fork truck presents obvious hazards. It must be done with great care and forethought. Consult the truck weight information in Group 40, Specifications, to ensure that your lifting equipment is of adequate capacity.

Copyrighted Material
Intended for CLARK dealers only
Do not sell or distribute

https://truckmanualshub.com/

⚠ CAUTION

To perform these service procedures, first:

- **Park truck on a level surface.**
- **Put the upright in a vertical position and lower the carriage fully down.**
- **Return control handle to neutral and turn key switch OFF.**

⚠ WARNING

Defective equipment can cause accidents: All tools and lifting equipment must be in good condition, meet the load capacity requirements and have OSHA labels when required. Tools with defects can fail, causing severe injury or death.

Raising Drive Wheels

This procedure uses the upright as a lever to lift the drive wheels off the floor and prevent accidents due to inadvertent powering of the drive wheels.

1. Park the truck safely.
2. Turn key switch ON. **Tilt the upright fully back.**
3. Put a solid 100 x 100 mm (4 x 4 inch) hardwood block under the front section of each upright rail. Put a 3–6 mm (0.125–0.250 inch) steel plate on top of each block.
4. **Tilt the upright fully forward.** This will raise the drive wheels off the floor.

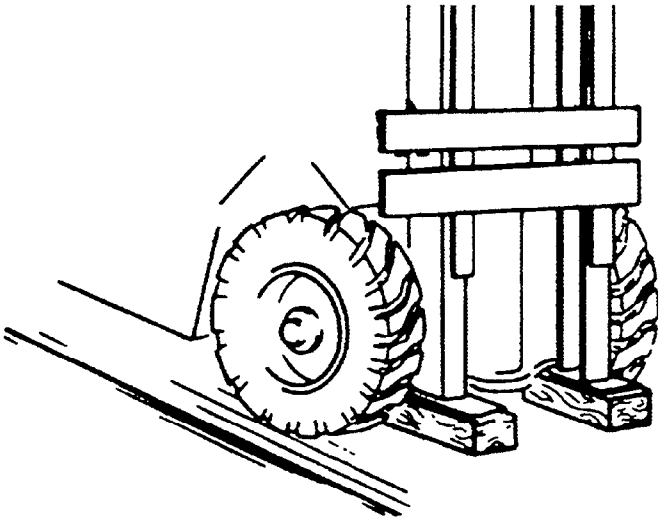

GENERIC ILLUSTRATION

5. Block the truck under the frame behind the drive wheels with solid blocking.
6. Turn key switch OFF.
7. Check for safe clearance between drive wheels, block and floor.
8. Check the stability of the truck. Be sure that the blocks are located securely under the frame before operating the drive motor or working on truck.
9. Lower the drive wheels to the floor by reversing this procedure.
   - Turn key switch ON.
   - Tilt upright fully back.
   - Turn key switch OFF.
10. Remove the blocks from under the frame and upright rails.

Copyrighted Material
Intended for CLARK dealers only
Do not sell or distribute

https://truckmanualshub.com/

Chaining the Upright in Raised Position

This procedure is used to safely provide clearance for access from the front of truck to components on or near the drive axle.

1. Park truck safely.
2. Put blocks at front of and rear of drive wheels.
3. Raise upright carriage.
4. Chain the center inner rail tie bar to the top outer rail tie bar as shown.

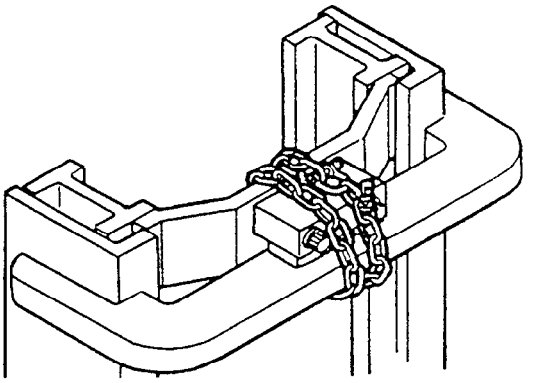

Triple Stage Uprights: Chain the center intermediate rail tie bar and the lower inner rail tie bar to the top outer rail tie bar.

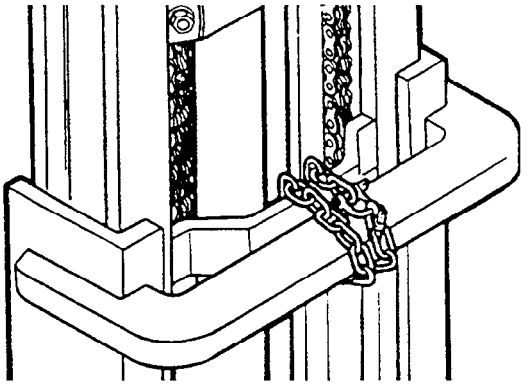

5. Reverse the procedure to remove the chains.

WARNING

Keep hands, tools, etc. out of upright.

Raising Rear of Truck

The truck may be raised at the rear by jacking and blocking under the center of the frame member at either the front or rear steer axle mounting, or under the center section of the steer axle.

Refer to truck data plate for truck weights.

WARNING

An incorrectly installed counterweight can move or fall unexpectedly. NEVER LIFT OR BLOCK A TRUCK USING THE COUNTERWEIGHT.Failure to follow procedures outlined in this manual can result in injury or death.

1. Park truck safely.
2. Put blocks at front and rear of drive wheels.

CAUTION

If possible, remove the battery from truck to reduce weight for added safety and ease of jacking.

3. Put a floor jack under the steer axle mounting frame member, **centered** between the two wheels.

WARNING

Never lift the truck by the counterweight.

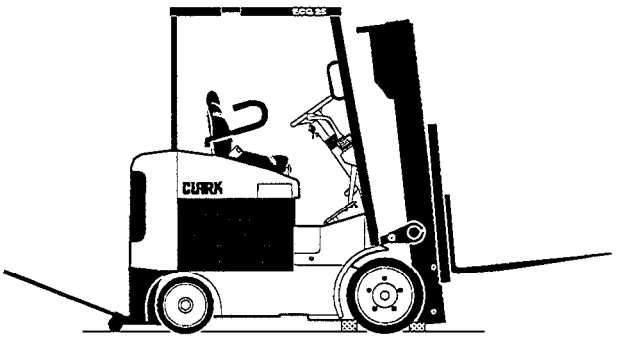

NOTE

If there is insufficient clearance under frame for your jack, the truck may first be driven onto shims, such as 25 x 150 x 300 mm (1 x 6 x 12 in.) pieces of board, to increase the truck frame underclearance.

Copyrighted Material
Intended for CLARK dealers only
Do not sell or distribute

https://truckmanualshub.com/

4. Raise the truck only as high as necessary to perform the maintenance work.
5. Put blocks at both sides of the truck, fully under the frame main side structure. Put the blocks in front of but close to the counterweight and steer wheels for best truck stability.

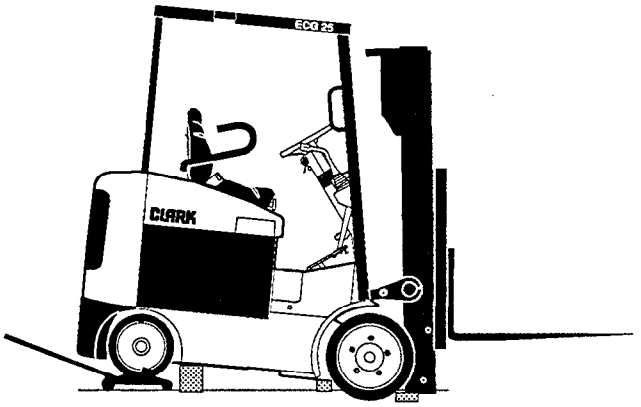

Put an equal number of blocks under each side of the truck to provide a level working position.

6. Lower the truck onto the blocks and remove the jack.

⚠ CAUTION

Before performing any maintenance work, check the truck for stable condition on the blocking by determining that it will not rock on blocks.

7. When maintenance work is completed, lower the rear of truck to the floor by reversing the above procedure and lowering each side of the truck 50 mm (2 in.) at a time:
   - Put jack under frame and raise truck.
   - Carefully remove blocks and lower truck.
   - Remove jack and blocks from drive wheels.

Raising Entire Truck

Refer to truck data plate for truck weights.

1. Park truck safely. Lower upright fully.
2. If necessary, drive truck onto boards to increase underclearance.

⚠ WARNING

SIDE-TO-SIDE TIPOVER. When jacking side of truck, be sure upright is lowered fully. Do not raise one side of the truck more than about 50 mm (2 in.) higher than the other, to avoid tipping truck over laterally.

END-TO-END TIPOVER. If the upright and drive axle are removed while the truck is blocked up, the truck will tip backward due to the heavy counterweight. Upright and counterweight must both be removed before attempting to raise the truck for drive axle removal. The back of the truck must be supported by blocking under the steer axle to prevent movement.

If the counterweight is removed while the truck is up on blocks, the weight of the upright and drive axle will cause the truck to fall forward.

3. Put the jack under side frame, near the center of the truck.

IMPORTANT

Be sure to put the jack squarely and fully under the main side structure of the frame.

4. Carefully raise the truck one side at a time, only as high as necessary to do the maintenance work, and not more than 150 mm (6 in.) total.

Copyrighted Material
Intended for CLARK dealers only
Do not sell or distribute

https://truckmanualshub.com/

5. Put blocks under the side frame, at each side of the jack. Spread the blocks close to the steer and drive wheels for maximum stability.
6. If using one jack, lower the truck onto the blocks and move the jack to the opposite side. Repeat the lifting procedure.
7. Put the same size blocks under each side of the truck so it will be leveled.

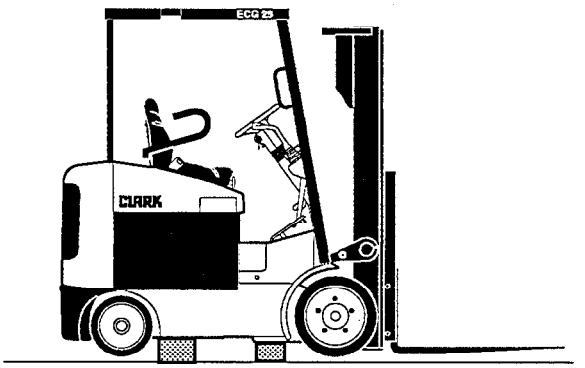

CAUTION

Before performing any maintenance work, check the truck for stable condition on the blocking.

8. When maintenance work is completed, lower the entire truck to the floor by reversing this procedure. Lower the truck one side at a time, while carefully removing the blocks. Be sure no tools or equipment are under the truck or wheels.

NOTE

Depending on jack height, shims under the tires may be needed for clearance to allow removal of jack.

Shipping Tie-Down Instructions

1. Front of Truck

   a. With Upright and Carriage Installed
   - Lower the carriage fully.
   - Put a tie-down (e.g., chain) between the carriage fork bars.

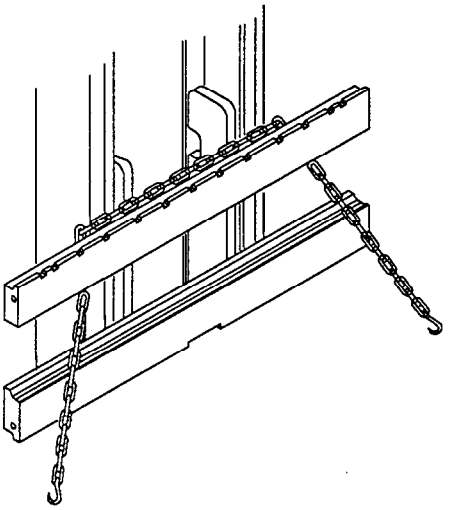

   b. Without Upright and Carriage Installed
   - Put a chain across the truck floor plate. Protect truck from chain damage by using covered chain or protective material under the chain at contact points.

2. Rear of Truck
   - Attach the tie-down to the toe-pin in bottom of counterweight.

Copyrighted Material
Intended for CLARK dealers only
Do not sell or distribute

https://truckmanualshub.com/

Section 3

Towing

Copyrighted Material
Intended for CLARK dealers only
Do not sell or distribute

https://truckmanualshub.com/

If your truck is disabled but can be moved freely on its own wheels without further damage, use the following procedures to tow the truck safely to a repair area.

WARNING

For your safety and the care of your truck, use the proper equipment and carefully follow these recommendations for safe towing.

Do not tow a lift truck if there is a problem with the brakes or tires, or if the steering cannot be operated.

Do not tow up or down ramps or steep inclines.

Do not tow the disabled truck if traction or weather conditions are poor.

1. Apply the parking brake or block the drive wheels on the disabled truck while working around it.
2. When possible, raise the forks on the disabled truck 300 mm (12 in) from the floor or ground. Secure the carriage on the upright with a chain.
3. Use a truck for towing that is of equal or larger capacity than the disabled truck. Carry a partial load on the towing truck for improved traction
4. Check that the counterweight bolts on both trucks are in place and properly torqued to 340-380 N•m (250-280 ft-lb). These bolts are made of special, high-tensile steel and are not commercially available. When necessary, replace these bolt only with genuine Clark replacement parts.
5. Use an approved, solid metal tow bar with towing couplers that connect to the towing pins in the counterweights of each truck.

NOTE

DOT-approved towing equipment is available from your Clark dealer.

6. Release the parking brake on the towed vehicle. Place directional control lever in NEUTRAL.
7. Tow the disabled truck backward. An operator must be on the disabled truck.

CAUTION

The power steering will not operate on the disabled truck when the power steering motor is not running. The steering handwheel will be difficult to turn.

8. Tow the truck slowly. Careful towing is necessary to prevent injury to personnel or damage to the disabled truck. The truck should be towed at a speed of less than 8 kph (5 mph, or a moderate walking speed) with a driver in place and steering the disabled truck

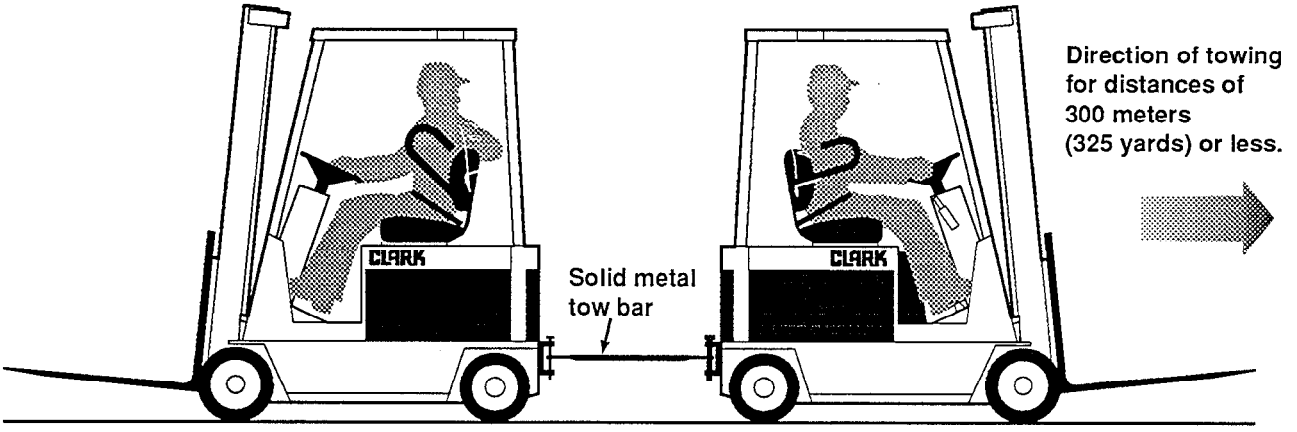

Disabled truck with driver in place to steer. Tow truck moving at 8 kph (5 mph) or less.

Copyrighted Material
Intended for CLARK dealers only
Do not sell or distribute

https://truckmanualshub.com/

IMPORTANT

Do not lift the disabled truck or any wheels off the floor while the truck is being towed.

9. Park the disabled truck in authorized areas only. Fully lower the forks to the floor. Leave the directional control in neutral. Turn the key switch to OFF, and engage the parking brake. Remove the key. Disconnect the battery. When necessary, block the wheels to prevent the truck from rolling.

⚠ WARNING

Always engage the parking brake when parking a lift truck. The truck can roll and cause injury or death to personnel near it.

Copyrighted Material
Intended for CLARK dealers only
Do not sell or distribute

https://truckmanualshub.com/

GROUP PS

PERIODIC SERVICE

Maintenance Schedules ..... Section 1

Planned Maintenance ..... Section 2

The PM Inspection Form ..... Section 3

Copyrighted Material
Intended for CLARK dealers only
Do not sell or distribute

https://truckmanualshub.com/

Section 1

Maintenance Schedules

Maintenance Schedules 2
Service Chart 3
Lubrication Chart Key 4
Miscellaneous Lubricants 5

Copyrighted Material
Intended for CLARK dealers only
Do not sell or distribute

https://truckmanualshub.com/

Maintenance Schedules

This Service Publication provides information covering normal service, maintenance and repair of the Clark industrial lift trucks noted on the cover. It has been specifically prepared to help owners and service personnel maintain these trucks in an efficient and safe operating condition.

About Planned Maintenance

The Planned Maintenance Procedures provide a basic step-by-step guide which should be followed in servicing the vehicle. Adjustment Procedures, Specifications, Lubrication Guides, Overhaul Procedures, and other data are found listed under Group and Section Numbers.

Regular, correct maintenance and care of industrial trucks is important not only for long and efficient truck life, but it is essential for safe operation. The importance of proper maintenance through planned service, inspection, and qualified repairs cannot be emphasized too strongly. Preventive maintenance instructions are provided for reference in setting up and conducting a recommended periodic Planned Maintenance (PM) program.

Planned Maintenance is a program in which inspections, minor adjustments, cleaning, lubrication, oil changes, and replacement of filters are performed on a scheduled and systematic basis. A solid PM program should incorporate a method of record keeping, which enables you to better determine PM schedules and track maintenance costs per truck.

An effective PM program should incorporate two basic phases:

1. An inspection performed by the driver or maintenance personnel at the beginning of each shift as required by OSHA. This is a quick visual check for obvious damage and leaks – a check of fluids and water levels, lights (if so equipped), instruments, and warning devices.
2. The Planned Maintenance routine is based on 50 to 250 operating hours – with the interval being determined by operating conditions.

Records will tell you how often PM should be done:

- If an operation is clean and not punishing, a PM interval can be extended.
- If an operation is extremely dirty and punishing, the PM interval may have to be reduced.

If the PM is closely followed, needs for repair, major adjustment and component replacement will be discovered automatically. Such work can then be scheduled, eliminating unnecessary downtime and cost. For instance, brake checks, which are part of the PM, will uncover the need for adjustments and/or repairs which may be required periodically.

The objectives of PM are:

1. Reduce costly unscheduled downtime.
2. Reduce maintenance costs.
3. Increase vehicle productivity.
4. Increase personal safety of drivers and other personnel.

Inspection Forms

To insure that the daily inspection and PM are properly performed, we recommend the use of inspection forms. Such forms not only provide a guide for the inspections and maintenance requirements for each vehicle, they will assist you in determining when to schedule a vehicle for major repairs. Consequently, these repairs can be done without the disruptive effect of unscheduled downtime.

NOTE

Refer to the Operator's Manual, located on the truck, for additional information on the operation, care, and maintenance of your truck.

Contact your authorized Clark dealer for more information on maintenance and repair of these trucks.

Copyrighted Material
Intended for CLARK dealers only
Do not sell or distribute

https://truckmanualshub.com/

ECG Service Chart

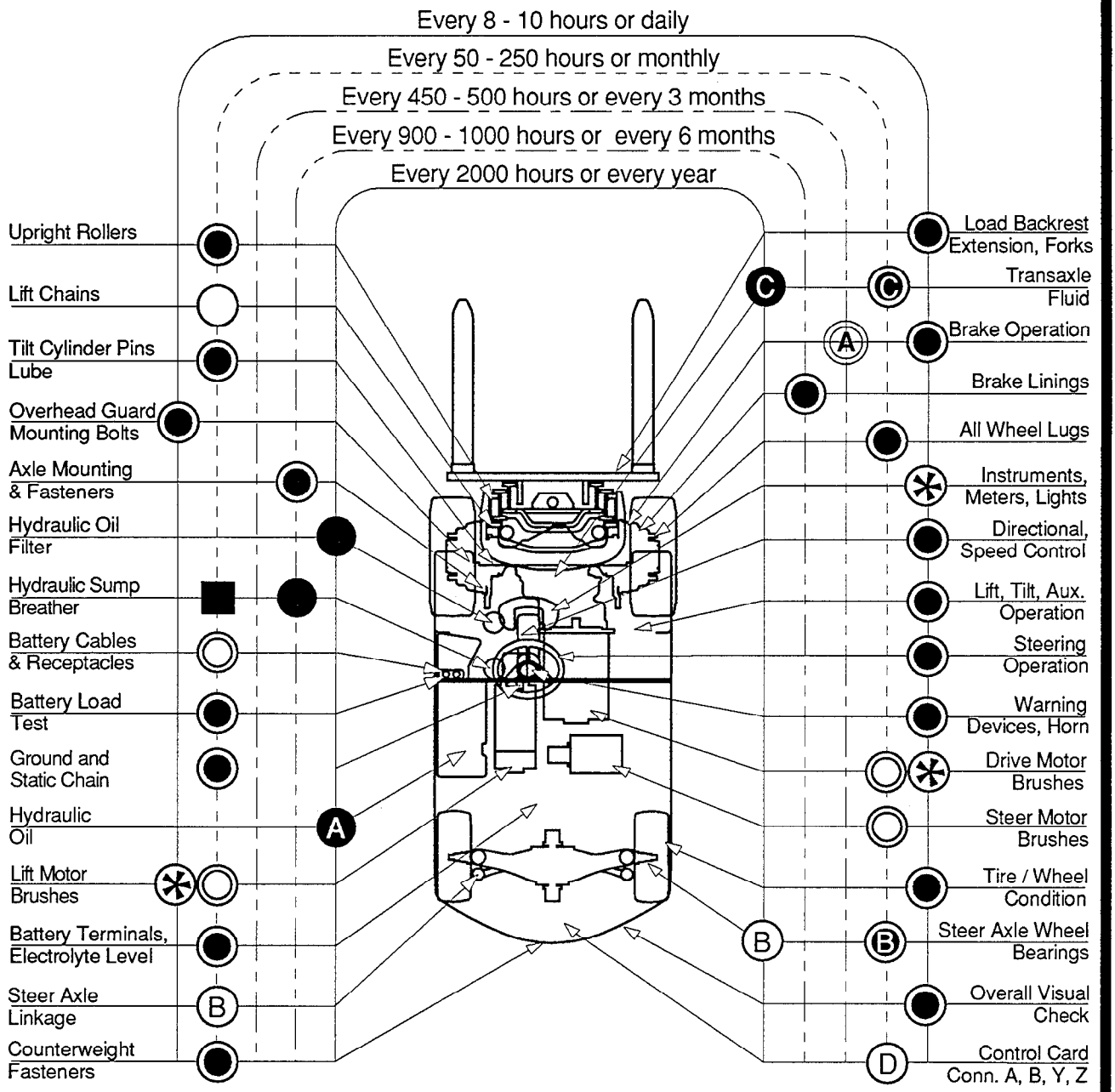

Check / Lubricate
Change or Replace
Clean / Air Clean
Check / Air Clean
Check
Monitor Indicator Lights and Service as Required

A - Hydraulic Oil	B - MP Grease	C - Transaxle Fluid	D - Terminal Lube
Clark # 1800236	NLG # 2	Clark # 2776236	Clark # 1803827

- Intervals refer to elapsed hour meter time and are based on Clark's experience found to be suitable and convenient under normal operating conditions.
- Service and Maintain as per Service and Operator Manuals. Special or harsh conditions may need additional intervals.

Clark Material Handling Co. ECG 20 / 25 / 30 / 32 2809860

Copyrighted Material
Intended for CLARK dealers only
Do not sell or distribute

https://truckmanualshub.com/

Lubrication Chart Key

L1		General Purpose Grease with EP Additive	**Use NLGI #1 Grade** A multi-purpose grease of refined mineral oil, blended with a lithium soap thickener or equal, containing anti-wear, anti-rust, and anti-oxidants with EP additives.
L2		General Purpose Grease with EP Additive and Moly Additive	**Use NLGI #2 Grade** A multi-purpose grease of refined mineral oil, blended with a lithium soap thickener or equal, containing anti-wear, anti-rust, and anti-oxidants with EP additives and 3 to 5% moly additives.
L4	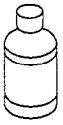	Chain Lube	**Clark Part No. 886399** Roller and Leaf Chain Lube. One case of 12 one-pint cans.
L5		Hydraulic Fluid	**Clark MS-68 Hydraulic Fluid:** **Part No. 885385** **1 case of 24 one-quart cans** **Part No. 885382** **1 case of 6 one-gallon cans** Use only high-quality hydraulic fluid with zinc or equivalent anti-wear additive, which meets the requirements of ASTM D-2882 pump wear test, with 50 mg total weight loss maximum, per Clark MS-68.

Copyrighted Material
Intended for CLARK dealers only
Do not sell or distribute

https://truckmanualshub.com/

Miscellaneous Lubricants

Miscellaneous Linkage

Any good grade of motor oil in SAE 10, 20 or 30 weight, as the temperature and conditions dictate.

Corrosion Protection

Mechanical Lubricant Clark Part No. 2802351

Apply to electrical connections any time they are disconnected. The lubricant should be reapplied before making the connection.

Application Examples (Standard and Cold Storage Applications):

- PL and DP plug connections
- Solenoid coil connections
- Reverse alarm terminals (if applicable)
- Push-on terminals
- Light terminals (headlights, strobe, etc.) (if applicable)
- Thermostat terminals (if applicable)
- Heater connection terminals (if applicable)

Corrosion Protection

Mechanical Paste Lubricant Clark Part No. 2802205

Apply to electrical connections any time they are disconnected. The lubricant should be reapplied before making the connection.

Application Examples (Standard and Cold Storage Applications):

- All power cable connections
  - All motor cable connections
  - Brake switch
  - Lift pump ground strap, both ends
  - Steer interlock switch
  - Reverse alarm (if applicable)
- All screw-on type wire terminals
  - Card retainer screws
  - All cable connection points on the control panel

Copyrighted Material
Intended for CLARK dealers only
Do not sell or distribute

https://truckmanualshub.com/

Section 2

Planned Maintenance

Use PM Report Form **2**

How to Perform the PM Periodic Inspections and Maintenance **2**
- Visual Inspection 2
- Operational Checks 5

Test Drive Truck with Load **6**
- Lift Mechanism and Controls 8
- Battery Compartment Inspection 9
- Motor SCR Controls Inspection 10
- Hydraulic Compartment Inspection 10

Cleaning **11**

Air-Cleaning **12**

Critical Fastener Torque Checks **12**

Lubrication, Fluids, and Filters **12**
- Hydraulic Sump 12
- Hydraulic Fluid and Filter Change 12
- Sump Tank Breather Maintenance 13
- Access to the Drive Axle 13
- Drive Axle Fluid 13
- Drive Axle Fluid Change 13
- Truck Chassis Inspection and Lubrication 13
- Upright and Tilt Cylinder Lubrication 13
- Lift Chains 13

Air-Cleaning Motors **14**

Copyrighted Material
Intended for CLARK dealers only
Do not sell or distribute

https://truckmanualshub.com/

Use PM Report Form

A planned maintenance program of regular, routine inspections and lubrication is important for long life and trouble-free operation of your lift truck. Make and keep records of your inspections. Use these records to help establish the correct PM intervals for your application and to indicate maintenance required to prevent major problems from occurring during operation.

As an aid in performing and documenting your PM inspections, Clark has prepared an Electric Truck Planned Maintenance Report form. Copies of this form may be obtained from your authorized Clark dealer. We recommend that you use this form as a checklist, to make a record of your inspection and truck condition.

The periodic maintenance procedures outlined in this manual are intended to be used with the PM report form. They are arranged in groupings of maintenance work that are done in a logical and efficient sequence.

A check mark or entry is made on the PM Report Form when the PM is performed. Please note the special coding system for indicating the importance of needed repairs and/or adjustments.

When you have finished the PM inspections, be sure to give a copy of the report to the designated authority or the person responsible for lift truck maintenance.

Do not make repairs or adjustments unless authorized to do so.

For safety:

- Remove all jewelry (watch, rings, bracelets, etc.) before working on the truck.
- Disconnect battery from truck receptacle before working on electrical components.
- Wear safety glasses. Wear a safety (hard) hat in industrial plants and in special work areas where protection is necessary or required.

How to Perform the PM Periodic Inspections and Maintenance

Visual Inspection

Perform a visual inspection of the lift truck and its components. Walk around the truck and take note of any obvious damage and maintenance problems. Check for loose fasteners and fittings.

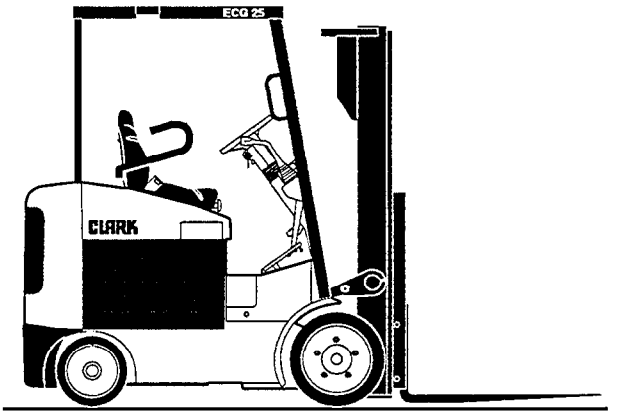

Be sure all capacity, safety, and warning plates or decals are attached and legible.

⚠ CAUTION

Do not operate a lift truck with damaged or missing decals and nameplates. Replace them immediately. They contain important information.

Inspect the truck for signs of external leakage of transmission fluid, etc. Check for hydraulic leaks and loose fittings. DO NOT use bare hands to check. Hydraulic Fluid may be hot or under pressure.

⚠ DANGER

HYDRAULIC FLUID PRESSURE: Do not use your hands to check for hydraulic leakage. Fluid under pressure can penetrate your skin and cause serious injury.

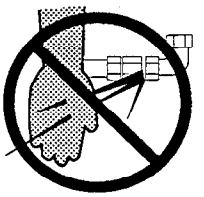

Be sure that the driver's overhead guard, load backrest extension, finger guards, and any other safety devices are in place, undamaged, and attached securely.

Copyrighted Material
Intended for CLARK dealers only
Do not sell or distribute

https://truckmanualshub.com/

⚠ WARNING

For trucks equipped with spark-enclosed (EE) construction, or with polyurethane tires, check the ground strap or chain for wear and secure attachment.

Check all of the critical components that handle or carry the load.

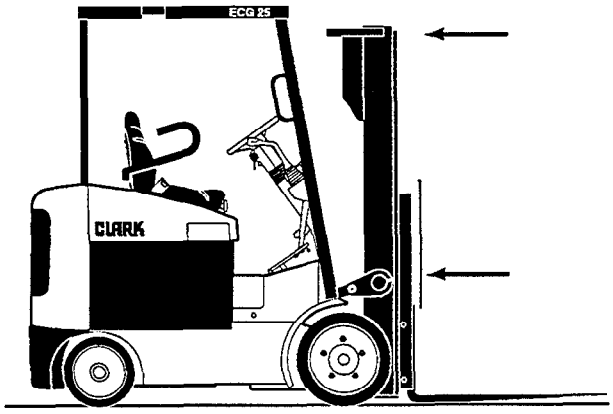

Check the overhead guard for damage. Be sure that it is properly positioned and all mounting fasteners are in place and tight.

⚠ CAUTION

If load backrest has been removed, a bolt and washer must be in place on each end of the top fork bar to act as a fork stop.

Check the load backrest for damage. Inspect the welds on the carriage and load backrest for cracks. Be sure that the mounting fasteners are all in place and tight.

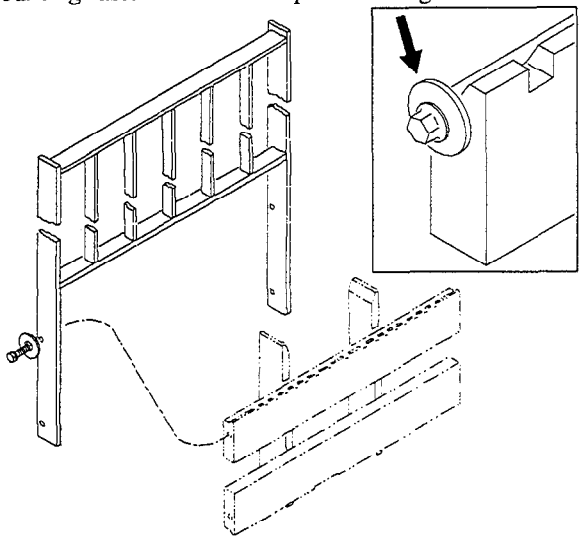

⚠ DANGER

Uprights can drop suddenly if not properly blocked. Look at the upright, but keep hands, tools, etc. out.

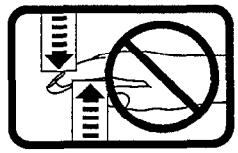

IMPORTANT

Uprights and lift chains require special attention and maintenance to maintain them in safe operating condition. Refer to Lift Chain Maintenance in Group 34 for additional information.

Check the upright assembly. Inspect the upright rails, carriage rollers, lift chains, lift and tilt cylinders. Look for obvious wear and damaged or missing parts. Check for any loose parts or fittings. Check for leaks, damaged or loose rollers, and rail wear (metal flaking). Carefully check the lift chains for wear, rust and corrosion, cracked or broken links, stretching, etc. Check that the lift and carriage chains are correctly adjusted to have equal tension. Check that the lift chain anchor fasteners and locking means are in place and tight.

Be sure all safety guards and chain retainers are in place and not damaged. Inspect the carriage stops and cylinder retainer bolts. Check all welded connections.

Inspect all lift line hydraulic connections for leaks. Check the lift cylinder rods for wear nicks, grooves, and scratches. Check the cylinder seals for leaks. Refer to Group 34 for details on uprights.

Copyrighted Material
Intended for CLARK dealers only
Do not sell or distribute

https://truckmanualshub.com/

Forks

Inspect the load forks for cracks, breaks, bending and wear. The fork top surfaces should be level and even with each other. The height difference between both fork tips should be no more than 6.4 mm (0.25 in.).

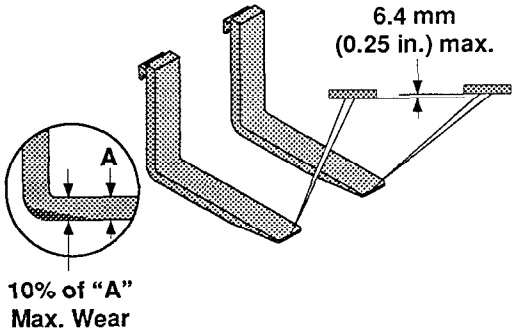

NOTE

Your Clark dealer has special tools for measuring fork wear.

⚠ WARNING

If the fork blade at the heel is worn down by more than 10%, the load capacity is reduced and the fork must be replaced. DO NOT attempt to fill with weld. See Group 34 for inspection procedure.

Check the amount of wear at the heel of the fork.

⚠ CAUTION

If the forks are obviously bent or damaged, have them inspected by a trained maintenance person before operating the truck.

Inspect the forks for twists and bends. To check, put a 2 x 4 x 24 in. long block on the blade of the fork with the 4 in. surface against the blade. Put a 24 in. carpenter's square on the top of the block and against the shank. Check the fork 18 in. above the blade to be sure it is not bent more than 2.54 mm (1 in.) at Y.

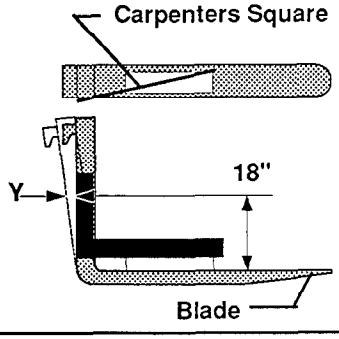

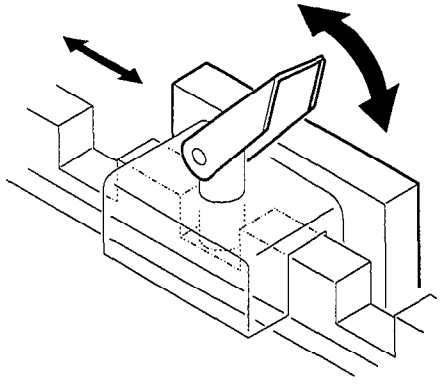

Inspect the fork latches. Be sure they are not damaged or broken, operate freely and lock correctly. Check the fork stop pins (or bolt and washer) for secure condition.

Wheels and Tires

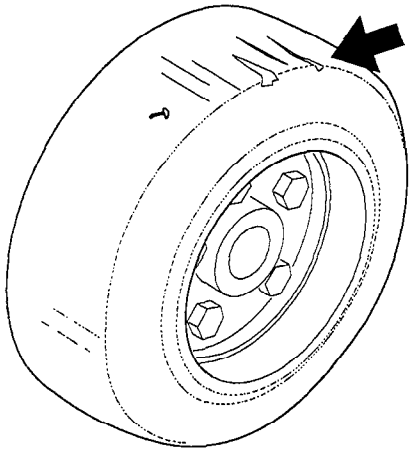

Check the condition of the drive and steer wheels and tires. Remove objects embedded in the tread. Inspect the tires for excessive wear, break, "chunking out," and bond failure between the tire and rim.

Copyrighted Material
Intended for CLARK dealers only
Do not sell or distribute

https://truckmanualshub.com/

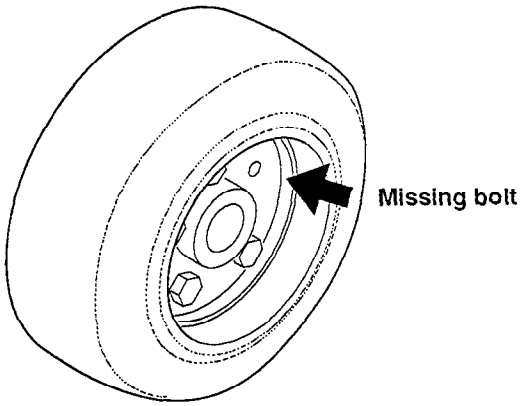

Check all wheel mounting bolts to be sure none are loose or missing.

⚠ CAUTION

Personnel working on wheels and tires must be trained and qualified to do wheel and tire maintenance.

Replace missing bolts and tighten loose bolts to the correct torque before operating the truck.

Operational Checks

1. Check horn to be sure it operates.

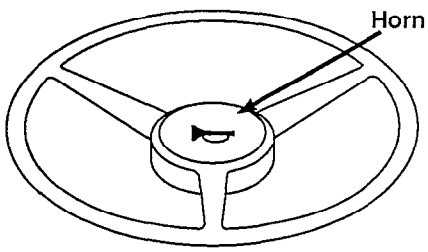

IMPORTANT

Because the battery is such an important part of electric truck operation, it requires its own specialized maintenance program, which should include full-scale cleaning and inspection. Refer to Group 12 for specific instructions.

2. **Check Diagnostic Display**
   - Turn key switch OFF and then ON. Read the digital readout.
   - Digital readout should display "8888" for about one second after you turn the key switch ON. This indicates that the digital readout is okay. Then, either the battery symbol or the wrench symbol light should come on.
   - Battery Symbol: When the battery symbol light comes on, the digital readout shows the percentage of usable remaining battery charge. If the readout registers 19 or less, the readout will flash. If the readout registers 9 or less, the hydraulic functions become inoperable. At this point, the battery is 80% discharged. There should be enough power remaining to get you to the battery charging station.
   - Wrench Symbol: If this light comes on, a status code will appear on the digital readout. The status code may indicate an easily correctable "operator fault," or it may indicate that the truck should be serviced.
   - If the status code registered is in the range of 1 to 6, it is easily correctable. Refer to the codes registered on the Status Codes table. Any other code is a service code covered in Group 19.

Copyrighted Material
Intended for CLARK dealers only
Do not sell or distribute

https://truckmanualshub.com/

3. **Check Function Control Levers**
   - Gently pull back on the lift control lever. The pump motor should turn on and the carriage should begin to elevate.
   - Release the control lever. It should return to neutral without binding. The pump motor should turn off. The control lever should not bind when moving it to any position.
   - Repeat procedures with tilt control lever. Forks should tilt evenly and smoothly.
   - If lift truck is equipped with an attachment, test the auxiliary control lever for correct function.
   - Briefly operate the attachment.

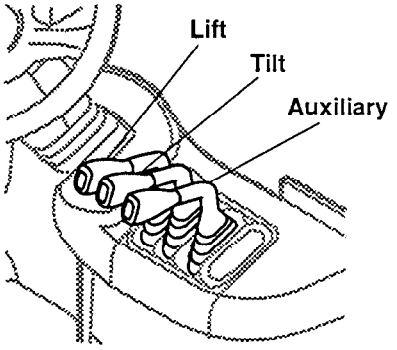

4. **Check Drive Motor (Brake) Cut-Off Switch**
   - Move the truck forward slowly. Slowly depress brake pedal. Drive motor should cut off before the brakes apply.
   - If operation is not satisfactory, DO NOT operate the truck. Take truckout of service and report condition to designated authority.
5. **Check Upright**
   - Note any excessive "slop" or "noise" in the upright. It may indicate roller damage, or that roller shimming, repair or adjustment may be required.
6. **Check Tilt Cylinder (Refer to Group 32 to do the following)**
   - Perform drift test.
   - Perform check and adjustment procedure.
   - Check rod seal condition.
   - Check mounting. Tighten as needed.
   - Check rod end. Tighten as needed.
7. **Check Truck Performance**

WARNING

Check all around to be sure that your intended path of travel is clear of obstructions and pedestrians.

- Drive the truck forward in a straight line at a high rate of speed. Listen for unusual drive train noise. Stop truck.
- Check acceleration from a stop to top travel speed. Acceleration should be smooth without hesitation. Stop the truck. Repeat procedure in reverse.
- Report condition on PM report form.

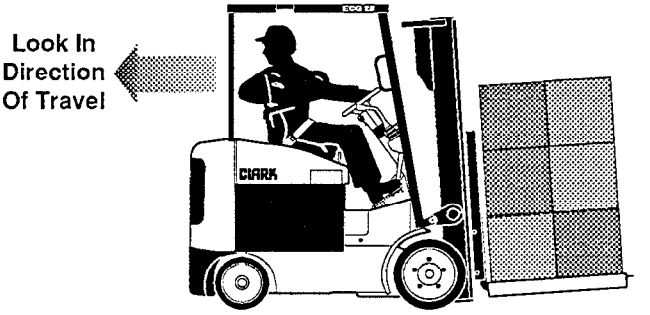

Test Drive Truck with Load

NOTE

Conduct these tests with a rated capacity load, if possible.

Test the truck for proper operation and drive train function by driving the truck in both the forward and reverse directions. Drive first in a straight line and slowly through a series of full right and left turns. Then repeat, driving in opposite direction.

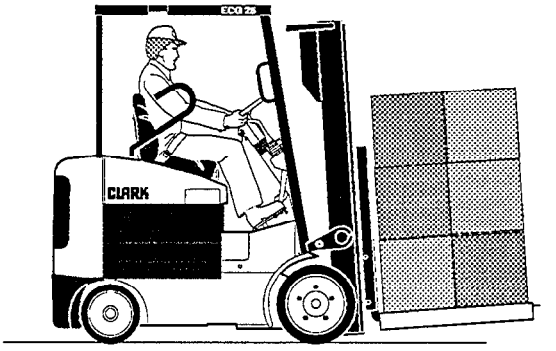

Carry Loads Low & Tilted Back

Copyrighted Material
Intended for CLARK dealers only
Do not sell or distribute

https://truckmanualshub.com/

Test for correct function of the transistor control.

Check Controlled Plugging (Braking)

1. Operate truck with parking brake set. It should not move. Release parking brake.
2. Operate truck at a slow speed in a forward direction of travel. Reverse direction of travel. The truck should slow down to a smooth controlled stop, and accelerate normally in the opposite direction.

   If plugging is as specified, then repeat the procedure at high speed. The truck should come to a smooth controlled stop in approximately 20 feet (6.10 mm) with accelerator in maximum travel position.
3. Repeat the procedure at high speed with the direction lever moved in reverse direction.

   If plugging (braking) is not as specified, refer to the adjustment instructions in Group 19 of this manual. Report condition to designated authority.

Check Accelerator

1. After checking to see that you have a clear path ahead, drive the truck in a straight line at a high rate of speed in a forward direction of travel. Listen for unusual drive train noise. Stop truck
2. Check acceleration from a stand still condition to top travel speed. Acceleration should be smooth without hesitation.
3. After checking to see that you have a clear path behind, drive the truck in reverse. Check acceleration from stand still condition through top travel speed. Acceleration should be smooth.

Check the accelerator pedal while conducting the speed range tests. It must move easily and smoothly throughout the acceleration stroke and return without binding. There should be no restriction to movement on either acceleration or deceleration.

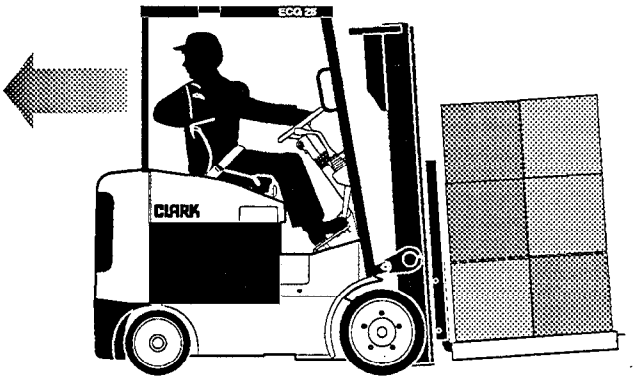

⚠ CAUTION

DO NOT operate lift truck if the brakes are not operating properly.Use only hydraulic fluid for ECG brakes, not brake fluid.

Test the service brake (drive motor cut-off) switch. Drive the truck FORWARD (or in REVERSE) at creep speed. While holding the accelerator pedal steady in creep speed position, depress brake pedal. The braking action should interrupt power to the drive motor and stop the truck. Release the brake pedal. The drive motor should again start moving the truck.

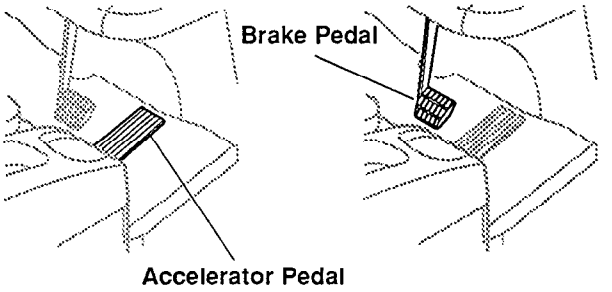

Test brake operation by depressing and releasing the brake pedal several times while driving the truck. The brakes should bring the truck to a smooth stop without pulling, squealing, or shuddering. Have the brakes adjusted or repaired as necessary. Drive motor should cut off before brakes apply.

To check brake holding capability and adjustment, park the truck on a grade and depress brake pedal. The brake should hold a lift truck with rated load on a 15% grade.

Check Steering

⚠ CAUTION

DO NOT operate lift truck if steering system is not operating properly.

Check steering control operation. First, drive the truck in a straight line. The truck must drive in a straight line without drifting toward either side. Then drive slowly (creep speed) through a series of full right and left turns. Check steering response and smoothness of operation. Turning effort must be the same in either direction. You will hear the power steering pump operate over relief when in a full turn. If there is a steering problem, have it repaired.

NOTE

Conduct the following test with a rated capacity load.

Copyrighted Material
Intended for CLARK dealers only
Do not sell or distribute

https://truckmanualshub.com/

Test for general drive train operation. Drive the truck at various speeds and operating conditions, in both FORWARD and REVERSE directions. Test shifting from NEUTRAL to FORWARD, then back to NEUTRAL. Test shifting from NEUTRAL to REVERSE, then back to NEUTRAL. Check for positive control action when changing directions.

Listen for clunking, squealing, grinding, scraping, or other unusual noises. Check for vibration. Listen for wheel bearing or other specific running noise.

Lift Mechanism and Controls

NOTE

Conduct these tests with a rated capacity load.

Test the operation of the hydraulic system and upright.

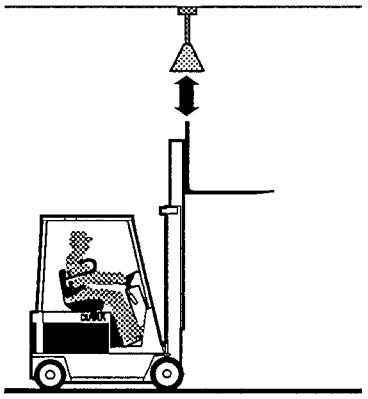

⚠ CAUTION

Be sure there is adequate overhead clearance before raising the upright.

Cycle (raise to full height and then lower) the upright at both slow and fast speed, with the upright tilted slightly backward. Watch the upright assembly as it rises. All movements of the upright, fork carriage, and lift chains must be even and smooth, without binding or jerking motions. Watch for chain wobble or looseness. The chains should have equal tension and move smoothly, without noticeable wobble.

Check function of the control lever and main hydraulic valve. Listen for abnormal noises in the hydraulic valve, main hydraulic pump, and system components.

If the maximum fork height is not reached, either the fluid level in the hydraulic sump tank is low, or there is severe binding within the upright.

⚠ WARNING

FALLING FORKS. Do not walk or stand under raised forks. The forks can fall and cause injury or death.

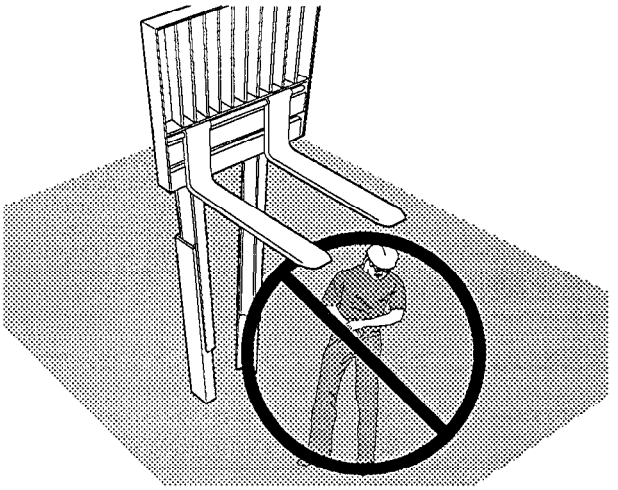

Never Walk Under Raised Forks!

Check the upright rails, rollers, carriage, lift chains, and cylinders as they move. Watch for binding or excessive freeplay (looseness) between the carriage and the upright rails and rollers. Listen for abnormal noises. If there is excessive clearance between the rails and channels, the upright roller needs adjustment. If the rails or carriage bind or hesitate when lowering, the rollers are either damaged or roller adjustment is incorrect.

Check the upright for excessive downdrift. Stop the fork carriage in an intermediate position. Check that it holds its position without moving down. If you observe downward movement (drift) or have a report of a drift problem, the lift cylinder seals may be worn. With forks elevated, turn key switch off. Pull back on the lift lever. The forks should not lower This tests the check valve.

Test the tilt function. Check for excessive tilt cylinder drift. Stop the upright at a position near vertical. Check that the upright holds its position without moving forward. If you observe forward movement (drift) or have a report of a tilt drift problem, the tilt cylinder seals may be worn.

Check fork height adjustment and carriage chain adjustment. Tilt the upright to the vertical position and fully lower the carriage. The forks should stop and be held approximately 13 mm (0.50 in.) above the floor. If the forks hit the floor, the carriage lift chains should be adjusted. Also check the rail chains.

If truck is equipped with an attachment, briefly operate the attachment to check the controls for correct function.

Copyrighted Material
Intended for CLARK dealers only
Do not sell or distribute

https://truckmanualshub.com/

Test for correct tilt cylinder rod adjustment. Raise the carriage to an intermediate position. Tilt the upright fully forward without a load on the forks. Check for upright racking (twisting) as the tilt cylinders reach the end of their stroke. Tilt the upright fully back. The upright should not rack (twist) when the tilt cylinders reach the end of their travel. If forward upright racking is found, adjustment of the tilt cylinder rod ends (yokes or spacers) is required. If backward racking is found, adding or removing shims is required. Refer to Group 32.

⚠ CAUTION

When you have completed the operational tests, park and leave truck according to standard shutdown procedures.

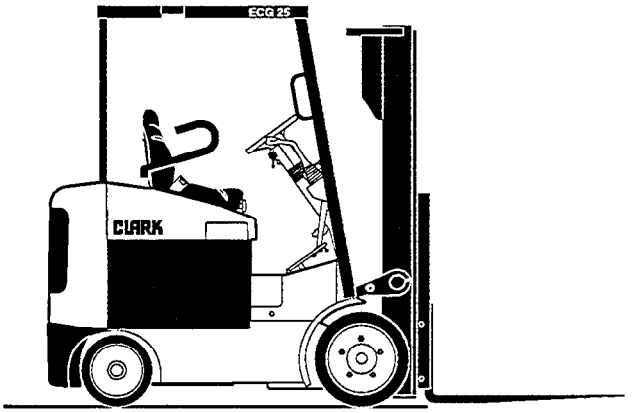

Standard Shutdown Procedures:

- Come to a complete stop.
- Park only in authorized locations.
- Lower the forks fully, tilt upright forward until fork tips touch floor.
- Allow travel control to return to neutral.
- Turn the key switch OFF.
- Apply the parking brake.
- Disconnect Battery

Make a record of all maintenance and operating problems you find.

Battery Compartment Inspection

Turn key switch OFF. Disconnect battery from truck receptacle.

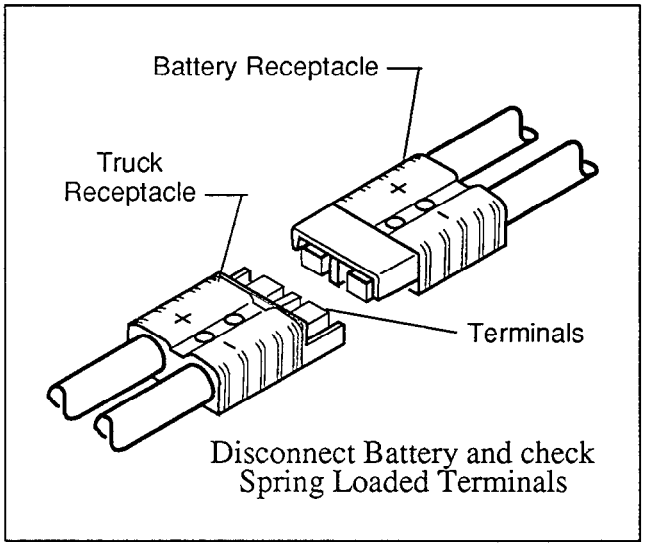

Inspect condition of the battery connector and truck battery receptacle. Check the spring-loaded terminals, connectors, and retaining tabs. Look for poor connections due to burning, bad crimps, or broken or loose retainers. Check the molded body for damage from overheating, burning, and chips or cracks. Replace receptacle terminals if pitted or corroded.

Inspect condition of the battery and cables. Check the battery cables for wear or other damage. Check for signs of interference or rubbing with other components. Be sure that the cable terminals are tight and clean. Clean off any deposits of corrosion found on the battery.

Never wash the battery when it is in the truck.

Check battery post terminals for corrosion and damage. Clean all corrosion from cable end and battery post. Check tightness of cable and post terminals.

If necessary, check the state-of-charge condition of the battery. Take a specific gravity test of the electrolyte with a hydrometer. Be sure to check a minimum of six battery cells.

Check the electrolyte level of the battery. Add distilled water, as required, to fill each cell to the correct level. Check to be sure the vent hole in each battery cell cap is open. If cap vents are plugged with corrosion, remove the caps and wash in a solution of baking soda and water.

Refer to Group 12, Battery, for additional information.

Copyrighted Material
Intended for CLARK dealers only
Do not sell or distribute

https://truckmanualshub.com/

Motor Transistor Controls Inspection

IMPORTANT

Do not clean electrical components with steam. Only approved solvents should be used to clean controls and SCR components.

Turn key switch OFF. Disconnect battery from truck receptacle. Remove the control compartment cover from the counterweight.

Discharge the capacitor by turning the key switch to ON after disconnecting the battery for 10 seconds, then turn key OFF.

Inspect the transistor controls for clean condition. Check for oily dirt buildup on contactors, transistor, control card, capacitor, etc. Inspect all control wiring terminals for any obvious damage. Look for cracks or worn areas in the wiring insulation. Check for loose connections at the control terminals. Air-clean as necessary. Treat the Oscillator Control Card Plugs with Clark 1801145-"Lectric-Like" Spray or Clark 1803827-brush on cleaner.

Hydraulic Compartment Inspection

Remove the floorplate.

Check the condition of all hydraulic system components, hoses, piping, and connections. Check for wear, leakage, and damage.

Remove the battery.

Inspect the drive motor, lift pump motor, and steering pump motor power cables. Check drive motor mounting fasteners. Check steering and lift pump motor mountings.

DANGER

HYDRAULIC FLUID PRESSURE: Do not use your hands to check for hydraulic leakage. Fluid under pressure can penetrate your skin and cause serious injury.

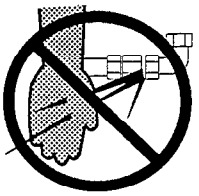

Brake Shoe and Drum Inspection

The brake linings, drum and adjustment setting can be inspected without removing the drum or hub. Refer to Group 23, Section 6 for inspection procedure.

Copyrighted Material
Intended for CLARK dealers only
Do not sell or distribute

https://truckmanualshub.com/

CLEANING

Cleaning Summary

- Battery Compartment.
- Drive Motor and Steer Motor.
- Axle Mounting.
- Hydraulic Compartment.
- Pump Motor.
- Control Compartment.
- Upright .

IMPORTANT

Do not clean electrical components with steam. Only approved solvents should be used to clean Solid State components. Scheduled cleaning (*as outlined*) should preclude the need for using a degreaser. Not all degreasers are acceptable. If a degreaser is to be used, we recommend degreaser or the equivalent to MS-180 Freon TF degreaser and cleaner.

⚠ WARNING

When cleaning with compressed air:

- **Wear eye protection and protective clothing when cleaning or drying with air pressure.**
- **Reduce air pressure to 30 PSI (207 kPa). Debris removed with air pressure can cause injury.**

Normal Cleaning

Blowing dirt off with an air hose periodically will, for the most part, eliminate any serious cleaning problems. Should the need arise for a more thorough cleaning, water may be hosed over the control and if necessary a mild detergent applied such as that used in washing dishes in the home. This detergent should be rinsed off and the control dried with an air hose. The control must be thoroughly dry before putting the truck back into service.

IMPORTANT

Cleaning the components of the truck is a vital part of the P.M. process. Keeping the components clean will increase their service life and assure trouble free truck operation.

Copyrighted Material
Intended for CLARK dealers only
Do not sell or distribute

https://truckmanualshub.com/

Air-Cleaning

Always maintain a lift truck in a clean condition. Do not allow dirt, dust, lint, or other contaminants to accumulate on the truck. Keep the truck free from leaking oil and grease. Wipe up all oil spills. Keep the controls and floorboard clean and dry. A clean truck makes it easier to see leaks and loose, missing or damaged parts, and will help prevent fires. A clean truck will run cooler.

The environment in which a lift truck operates will determine how often and to what extent cleaning is necessary. For example, trucks operating in manufacturing plants which have a high level of dirt or lint (e.g., cotton fibers, paper dust, etc.) in the air or on the floor, will require more frequent cleaning. If air pressure does not remove heavy deposits of grease, oil, etc., it may be necessary to use steam or liquid spray cleaner. DO NOT clean electrical components with steam.

NOTE

See special provision for blowing dust from pump and drive motors on page 14 of this section.

⚠ CAUTION

Battery must be disconnected and capacitors discharged before inserting air wand through access holes.

⚠ CAUTION

Wear suitable eye protection and protective clothing.

Lift trucks should be air-cleaned at every PM interval, and as often as required.

Air-cleaning should be done using an air hose with special adapter or extension having a control valve and nozzle to direct the air properly. Use clean, dry, low-pressure compressed air. Restrict air pressure to 207 kPa (30 psi).

Air-clean the following: upright assembly; drive axle; battery, cables, switches and wiring harness; transistor controls and wiring; drive, lift, and steering motors; steering axle and steering cylinder.

Critical Fastener Torque Checks

Fasteners in highly loaded (critical) components can quickly fail if they loosen. Loose fasteners can cause damage or component failure. For safety, it is important that the correct torque be maintained on all fasteners of components which directly support, handle or control the load, or protect the operator.

Check torque of critical items, including: overhead guard, drive axle mounting, drive and steering wheel mounting, counterweight mounting, load backrest extension, tilt cylinder mounting and yokes, upright mounting and components. Refer to Group 40 for torque specifications.

Lubrication, Fluids, and Filters

Hydraulic Sump

Check the hydraulic sump tank fluid level. Correct fluid level is important for proper hydraulic system operation. Low fluid level can cause pump damage. Overfilling can cause loss of fluid or lift system malfunction.

Hydraulic fluid expands as its temperature rises. Check the fluid level at operating temperature, after approximately 30 minutes of truck operation. To check the fluid level, park the truck on a level surface. Put the upright in a vertical position and lower the fork carriage fully down. Remove the floorplate and observe the fluid level marking on the sump tank. Refer to Group 29, Section 1 for more information on the sump tank. DO NOT overfill.

Check the condition of the hydraulic fluid for color, clarity, and contamination. Change (replace) the hydraulic fluid as necessary.

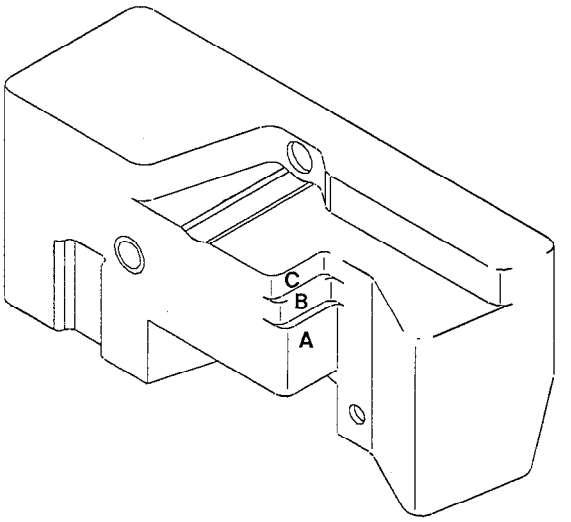

Hydraulic Fluid and Filter Change

Drain and replace the hydraulic sump fluid every 2000 operating hours, or sooner, as required. Replace the hydraulic fluid filter at every fluid change. Replace the sump tank breather/fill cap every 1000 operating hours.

NOTE

Always use genuine Clark Parts.

Copyrighted Material
Intended for CLARK dealers only
Do not sell or distribute

https://truckmanualshub.com/

Sump Tank Breather Maintenance

Remove the sump tank fil cap/breather and inspect for excessive contamination and damage. Clean and replace as recommended by the PM schedule, or as required by operating conditions.

Access to the Drive Axle

Access the Drive axle by removing the floorplate or through the upright.

WARNING

An upright or carriage can move unexpectedly. Chain or block the carriage and rails. Failure to follow this warning can result in serious injury or death.

Refer to Group SA, Section 2 for additional information on supporting the upright.

Block the wheels. Be sure to put blocking under the carriage and upright rails.

Drive Axle Fluid

Check the drive axle fluid level with the truck on a level surface and fluid at operating temperature.

Remove the fluid level inspection plug located on the left side of the drive axle housing. Fluid level should be at the bottom of the inspection hole. If fluid level is low, add enough fluid to bring fluid level up to bottom of the inspection hole. DO NOT overfill.

Add the recommended fluid only, as required.

Inspect the fill plug for damage. Replace as needed. Install and tighten the plug.

Drive Axle Fluid Change

NOTE

Check the PM interval (operating hours), or the condition of the fluid to determine if the drive axle fluid needs to be changed.

Drain and replace the drive axle fluid every 2000 operating hours. The fluid should be drained when it is at operating temperature. Put the truck in a level position. Block the wheels to prevent truck from moving.

Inspect and clean the drive axle breather (air vent) mounted on top of drive axle.. Refer to Lubrication Chart and Group 40.

Truck Chassis Inspection and Lubrication

Lubrication and inspection of truck chassis components, including steer wheels and wheel bearings, will be easier if the rear of the truck is raised and blocked up under the frame. Refer to Group SA, Section 2, for additional information.

IMPORTANT

Do not raise truck by lifting under the counterweight.

WARNING

Be sure to put blocking under the frame to keep the truck safe.

Be sure to clean the grease fittings before lubricating. Remove excess grease from all points after lubricating.

Upright and Tilt Cylinder Lubrication

Clean the fittings and lubricate the tilt cylinder rod end bushings.

Clean the fittings and lubricate the upright trunnion bushings (one fitting on top of trunnion, each side).

Lift Chains

Lubricate the entire length of the rail lift and carriage chains with Clark Chain and Cable Lube.

Copyrighted Material
Intended for CLARK dealers only
Do not sell or distribute

https://truckmanualshub.com/

Air Cleaning of Motors

IMPORTANT

No item of PM is more important than air cleaning of the motors as frequently as required which depends on the dust conditions.

WARNING

Before inserting metal air cleaning wand, disconnect the battery and discharge the capacitors by turning the key switch off, disconnecting battery, and then turning Key switch ON again.

Provision has been made to air clean dust from the motors without removing the battery. Turn the steer wheel into full cramp in one direction to access the closure plug. After blowing dust from motor on one side, reinstall the plug and repeat the procedure on the other side. This procedure is for use only when it is not possible to remove the battery which is much the preferred method of air cleaning.

The drive motor can be accessed for air cleaning by removing the floor plate.

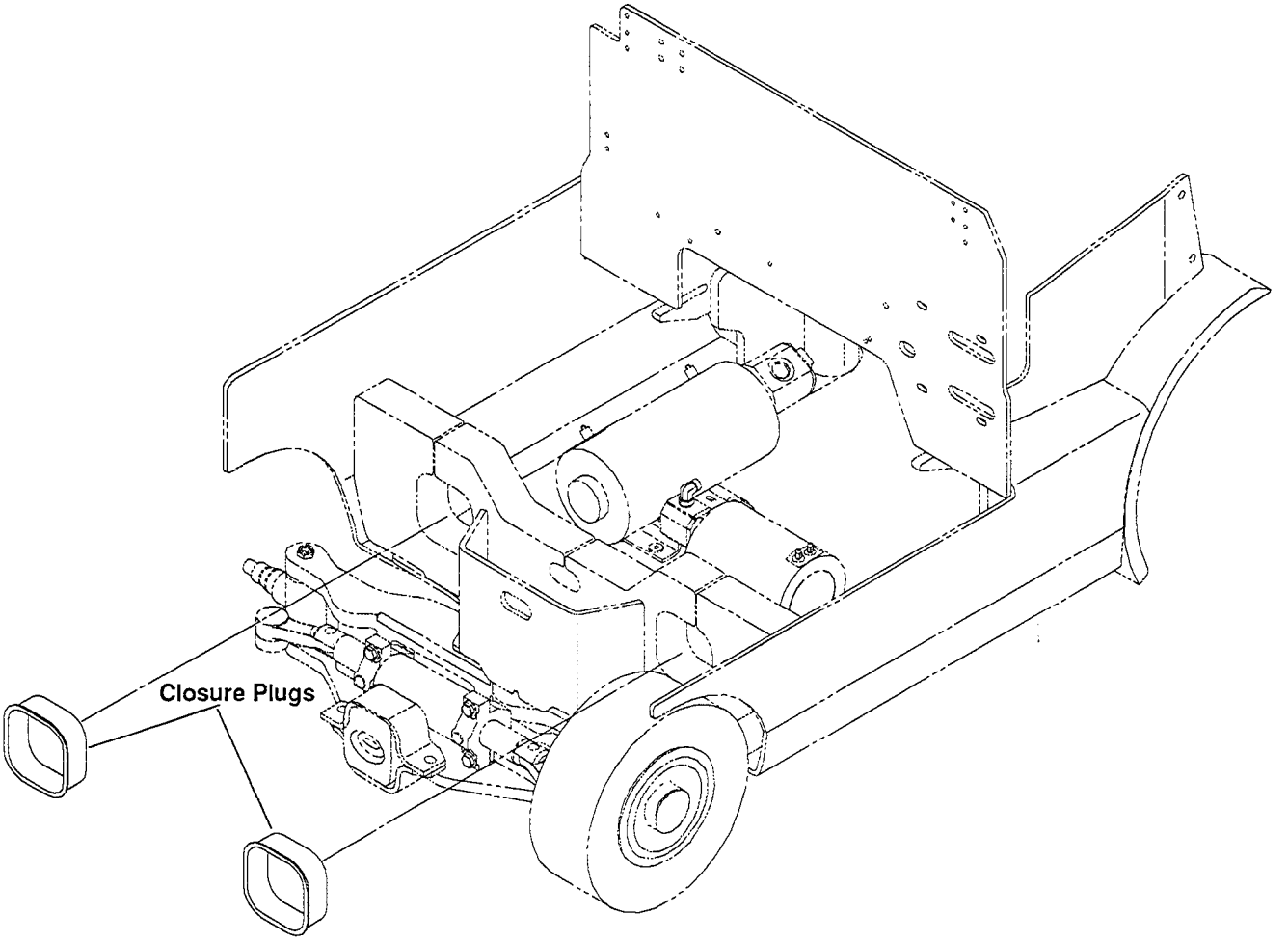

Copyrighted Material
Intended for CLARK dealers only
Do not sell or distribute

https://truckmanualshub.com/

Section 3

The PM Inspection Form

As an aid to service technicians performing and documenting PM inspections. Clark has prepared a Electric Truck Planned Maintenance Report form. (Sample appears on the next page.)

Use this form as a checklist, and make a record of your inspection and truck condition. Note the special coding system for indicating the importance of needed repairs and/or adjustments.

Copyrighted Material
Intended for CLARK dealers only
Do not sell or distribute

https://truckmanualshub.com/

CLARK

GAS LPG or DIESEL
PLANNED MAINTENANCE REPORT

CODE	
	O.K.
	Potential
	Urgent

✔ O.K.
x = Adjust (not P.M.)
r = Repair or replace
s = Requires shop repair

CUSTOMER

MODEL & SERIAL NO
ATTACHMENT NO

DATE	HOUR METER
DATE LAST P.M.	HRS. LAST P.M.
CUST P.O. NO.	

AUTHORIZED SIGNATURE | INSPECTOR | SPECIAL INSTRUCTIONS

A. TEST DRIVE MACHINE	**02 FUEL SYSTEM**	**12 CHARGING SYSTEM**	**29 / 30 HYDRAULIC SYSTEM**
a. Drive Train Noise	a. Clean Filler Cap	a. Alternator Mtg	a. Check for Leakage
b. Steering Operation	b. Check Accelerator &	*b. Inspect & Adjust Belts	b. Fluid Level-Condition
c. Service Brake Operation	Return Spring	c. Regulator Output Volts	c. Clean/Replace Breather
d. Inching Operation	c. Choke Operation		*d. Replace Filter Element
e. Transmission Operation	d. Fuel Leakage	**13 GAUGES-LIGHTS-INDICATORS**	e. Linkage Adjustment
f. Clutch Operation	e. Inspect Tank Fitting LPG	a. Hour Meter Operation	f. Hose Condition
g. Hydraulic System Operation	f. Solenoid Valve Operation LPG	b. Gauges-All Operate	g. Lift Speed (In./Sec.)
h. Engine Performance	g. Clean/Replace Filter	c. Lights-All Operate	No Load
i. Parking Brake Operation		d. Wiring Condition	Full Load
j. Pedal Pads & Linkages	**02 AIR INTAKE & EXHAUST**	e. Horn	h. Drift Test (In./Min.)
k. Return to neutral	a. Clean or Replace		Lift Cylinder
00 ENGINE	Air Filter	**20 DRIVE AXLE**	Tilt Cylinder
a. Mounting	b. Hoses & Clamps	*a. Differential Level	**32 TILT CYLINDERS**
*b. Tighten Head Bolts	c. Muffler & Exhaust	b. Clean Air Vent	a. Check for Leakage
c. RPM - Idle		c. Security of Mounting	b. Cylinder Rod Condition
Gov. No Load	**04 CLUTCH**	d. Check Wheel Bearings	c. Mounting Security
Tilt By-Pass	a. Lubricate Throw Out		d. Tilt Cylinder Adjustment
d. Vacuum - Idle	Bearing and Linkage	**23 WHEELS AND TIRES**	**34 UPRIGHT-CARRIAGE**
Gov. No Load	b. Pedal Adjustment	a. Tighten Mounting Bolts	a. Security of Mounting
Tilt By-Pass	c. Fluid Level	b. Tire Condition	b. Roller Condition/Clearance
e. Stall RPM		RF LF	c. Chain Condition
Fwd Rev	**06 & 08 TRANSMISSION**	RR LR	d. Chain Adjustment
High Low	a. Fluid Level	c. Check Air Pressure	e. Latches
f. Inspect Exhaust for Smoke	*b. Condition of Fluid	**23 BRAKE SYSTEM**	f. Cylinder Condition
01 CLEANING & LUBRICATION	c. Clean Air Vent	a. Check for Leakage	g. Forks, Locks, Stops
a. Air Clean Truck/Radiator	*d. Replace Filter	b. Cylinder Fluid Level	h. Rail Condition
b. Lubricate Truck	e. Fluid Leakage	c. Clean Vent Cap	i. Trunnion Ring Condition
01 ENGINE OILING	f. Inspect Control Linkage	d. Pedal Free Travel	j. Check Free Lift Guide
a. Check for Leakage		e. Pedal Drift	**34 LOAD BACK REST**
b. Check Oil Level	**11 IGNITION & CRANKING SYSTEM**	f. Cylinder Mounting	a. Condition
*c. Drain & Replace Oil	a. Check Neutral Start	*g. Check Service/Park Brake	b. Security of Mounting
*d. Replace Oil Filter	b. Check Anti-Restart	h. Hoses Fittings - Condition	**38 SHEET METAL & CWT**
e. Filler Cap Condition	c. Distributor Condition	**26 STEER AXLE**	a. Decals-Missing/Condition
f. Clean Crankcase Breather	*d. Point Condition/Dwell	a. Security of Mounting	b. Seat Condition-Operation
*g. Check/Replace PCV	e. Timing Setting	b. Axle Stop Adjustment	c. Side Door Latches
01 COOLING SYSTEM	f. Lube Distributor	c. Drag Link Adjustment	d. Counterweight bolts
a. Coolant Level/Condition	*g. Wiring Condition	d. Articulation Stops	**39 OVERHEAD GUARD**
b. Degree Protection		e. Check Wheel Bearings	a. Condition
c. Inspect Fan & Control	**12 BATTERY AND CABLES**	**26 STEERING SYSTEM**	b. Security of Mounting
*d. Inspect & Adjust Belts	*a. Clean & Check Terminals	a. Check for Leakage	**53 ATTACHMENTS**
*e. Drain/Flush Radiator	b. Fluid Level	b. Oil Level - Condition	a. Mounting Bolts
f. Coolant Leakage	c. Cranking Voltage	c. Security of Mounting	b. Leakage
g. Inspect Water Pump		d. Tilt Column Operation	c. Operation

COMMENTS:

**** SEE MAINTENANCE INTERVAL IN P.M.A. MANUAL***

59-760-0666/1 MAR 82

https://truckmanualshub.com/

GROUP 12

BATTERY

Battery Handling ..... Section 1

Battery Tests ..... Section 2

Copyrighted Material
Intended for CLARK dealers only
Do not sell or distribute

https://truckmanualshub.com/

Section 1

Battery Handling

Battery Handling 2

Battery Removal 3

Battery Maintenance 4
- How to Get Maximum Life Out of Your Battery 4
- Battery Vents 4
- Battery Cleaning 5
- Battery Charging 5
- Battery Electrolyte 5
- Clean Battery Compartment 5
- Replacement Batteries 5

Install Battery 5

Keeping Battery Records 6

Copyrighted Material
Intended for CLARK dealers only
Do not sell or distribute

https://truckmanualshub.com/

Battery Handling

CAUTION

Remove all jewelry (watch, rings, bracelets, etc.) before working on electrical systems. Severe burns can result from contact with electrical circuits.

WARNING

Battery service must be done by trained personnel. Battery acid can cause severe burns and injury. Do not smoke or have open flames around batteries.

WARNING

Electric truck batteries are heavy and awkward to handle. On charge, they give off hydrogen and oxygen which, in certain concentrations, are explosive. Electric truck batteries are also costly, so before you remove, service, or install a truck battery, consult BATTERY MANUFACTURER for more recommendations and instructions on handling and charging batteries. Carefully read and follow recommendations and instructions.

Change or service batteries only in an area designated for this purpose. Refer to page 4 for additional information.

- Be sure this area has provisions to flush and neutralize acid spillage.
- Be certain the area has proper ventilation to ventilate fumes from charging batteries.
- Check to see that there is fire protection. Fire extinguishers should be properly maintained and located in designated areas.

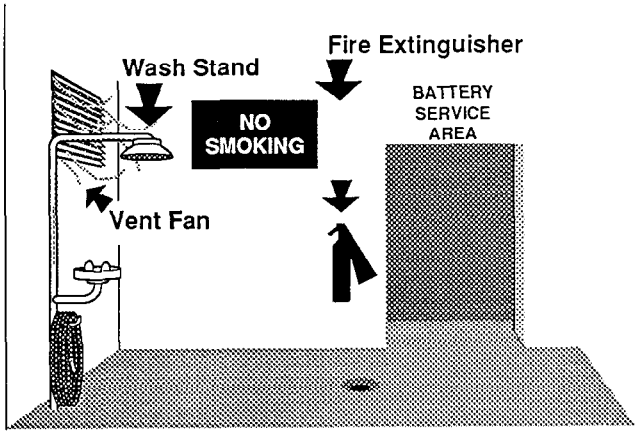

DANGER

Explosive gas is always present around batteries, especially when they are being charged.

- **No smoking allowed in the charging area.**
- **Battery electrolyte must never be checked with an open flame.**
- **Open flame, sparks, or electric arcs must never be allowed in the battery charging area.**

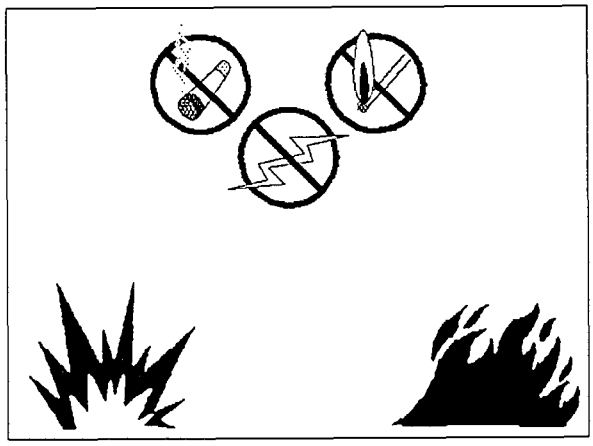

The battery contains corrosive sulfuric acid which can cause injury. If acid contacts your eyes or skin, flush immediately with water and get medical assistance.

Persons maintaining batteries must wear protective clothing such as:

- Face and head shields
- Long shirt sleeves
- Gauntlet gloves
- Rubber apron

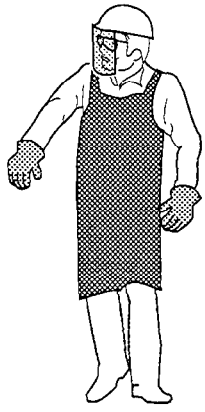

Copyrighted Material
Intended for CLARK dealers only
Do not sell or distribute

https://truckmanualshub.com/

Be sure the battery service area is equipped with material handling equipment designed for the purpose of removing and replacing batteries, such as a conveyer or overhead hoist equipped with safety hooks.

IMPORTANT

To prevent side forces from damaging the battery, the distance between the lifting hooks (of the spreader bar) must be adjusted to the same dimension as measured between the battery lifting eyes. Make sure the lifting hooks are the correct size to fit the lifting eyes of the battery.

- When using an overhead hoist, be sure to use an insulated spreader bar or similar lifting device.
- Be sure the hoist is equipped with a chain container to accumulate excess lifting chain. When this is not possible, be sure the battery is covered with a non-conductive material, such as plywood, as shown below.
- If the battery does not have a cover of its own, cover it with a non-conductive material such as plywood.

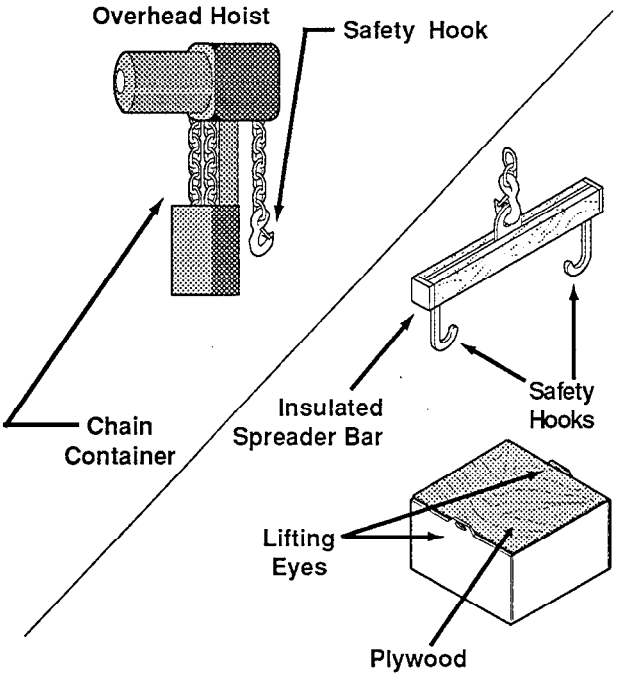

⚠ DANGER

Never lay tools or other metal objects on a battery. Metal objects contacting battery terminals will cause short circuits. The shorted circuits could ignite battery fumes and cause the battery to explode.

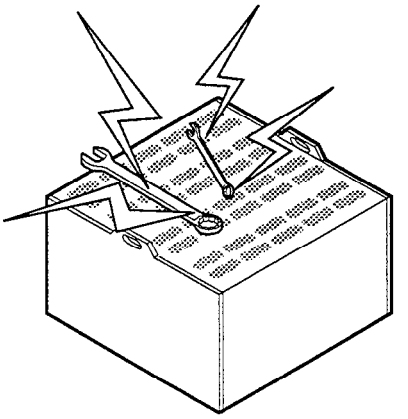

Battery Removal

1. Move truck to the designated battery service area.

⚠ CAUTION

SAFE PARKING. Before working on truck:

- **Park truck on a hard, level and solid surface, such as a concrete floor with no gaps or breaks.**
- **Put upright in vertical position and fully lower the forks or attachment.**
- **Put all controls in neutral. Turn key switch OFF and remove key.**
- **Apply the park brake and block the wheels.**

2. Tu. . key switch OFF and disconnect battery.

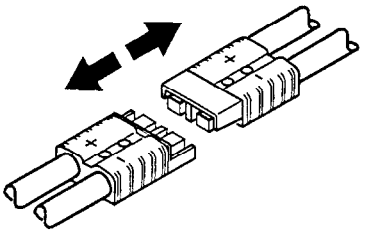

Battery Disconnected

3. Lift and latch seat deck to access battery.
4. If the battery to be handled is uncovered, cover battery with a non-conductive material (plywood, heavy cardboard, etc.) prior to removal from truck.

Copyrighted Material
Intended for CLARK dealers only
Do not sell or distribute

https://truckmanualshub.com/

IMPORTANT

Do not wash battery in truck.

⚠ CAUTION

An overhead hoist of sufficient lifting capacity (refer to "Weights" in Group 40) should be used to lift battery. The safety hooks of the insulated spreader bar should be attached to the lifting eyes provided in the battery casing.

5. Be sure battery is covered. Attach lifting device. Lift and remove battery.

Battery Maintenance

NOTE

To obtain maximum performance and battery life, follow the instructions supplied by your battery vendor.

Industrial batteries are used to supply the electrical power to operate an electric industrial truck. Their voltage depends on the number of individual cells they contain. There are approximately two volts for each cell in the commonly used lead-acid type battery. Batteries normally range from 6 volts to 72 volts. Their capacity varies depending on the application. *Only use batteries that comply with factory specifications as to size and capacity.*

How to Get Maximum Life Out of Your Battery

- Do not add acid to a battery. *Only qualified battery representatives should determine if this is necessary.*
- When lifting a battery, use a lifting device designed for this purpose.
- Check the electrolyte level after placing a battery on charge. The electrolyte level in a battery should be slightly below the lower lip of the filling hole vent. Do not overfill. Overfilling causes loss of electrolyte.
- Keep the battery clean, dry and in good condition.
- Keep metal objects and tools away from the top of the battery. Short circuits will cause battery damage and could ignite battery fumes, causing the battery to explode.
- Maintain good battery cable connections.
- Check power cables and wiring for damage that can cause premature drainage of the battery.
- Do not overcharge a battery.
- Do not undercharge a battery.
- Follow the instructions provided by the supplier(s) of the battery and battery charging equipment.
- Maintain accurate battery records. If battery troubles occur, these records will help you and your battery representative determine the nature of the problem.

Battery Vents

- **When Charging Batteries:** The vent caps must be kept in place to avoid electrolyte spray. Care must be taken to assure that vent caps are functioning. The vents must be open to allow the battery to breathe. The battery cover must be removed/opened to dissipate heat and explosive gas.
- **When Cleaning Batteries:** The vents must be tightly in place.

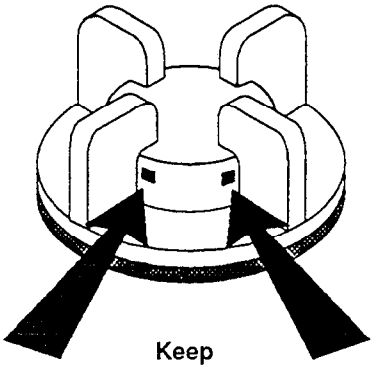

Keep Vents Open

Copyrighted Material
Intended for CLARK dealers only
Do not sell or distribute

https://truckmanualshub.com/

Battery Cleaning

The easiest and most satisfactory method of cleaning a battery is to wash it with a low-pressure cold water spray. The battery top can also be washed with a baking soda solution and rinsed with clear water.

IMPORTANT

- **Remove battery from truck before washing.**
- **Vent caps must be free of obstruction and in good condition.**
- **Battery top should be clean and free of cracks or breaks.**
- **Battery terminals must be clean and solidly mounted.**
- **Damaged batteries should be repaired or replaced. Consult your battery vendor.**

- Check to be sure all vent caps are tight before washing the battery.
- Fill a bucket with cold water. Add a box of baking soda to the bucket. Stir the solution until dissolved. *Keep this solution around the battery service area at all times.*
- After washing battery, thoroughly rinse with clear cold water.

Battery Charging

Follow the instructions supplied by the battery charger vendor.

Battery Electrolyte

- Check with battery manufacturer's documentation before working on battery electrolyte.
- Always use a carboy tilter or siphon when handling battery electrolyte.
- When mixing electrolyte, always pour acid into water – NEVER pour water into acid. *Pouring water into acid will cause a dangerous chemical action or splash.*

Clean Battery Compartment

- Using baking soda and water solution, clean the walls and floor of the compartment. Rinse with clear water.
- Blow off the compartment walls and floor with an air hose. Allow to air-dry.

⚠ WARNING

Wear eye protection and protective clothing when cleaning or drying with compressed air. Reduce air pressure to 207 kPa (30 psi). Debris removed with air pressure can cause injury.

Clean Battery Compartment

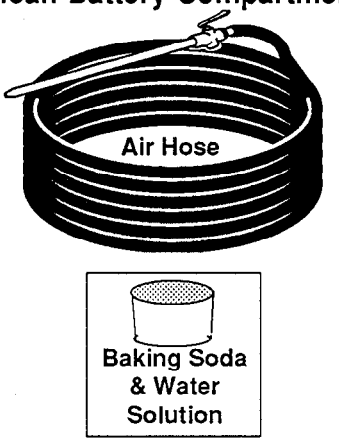

Replacement Batteries

⚠ CAUTION

Use a battery properly sized to the dimensions of the battery compartment. Batteries too small can shift and cause damage to the truck or injury to the operator or bystanders.

Only use batteries that comply with factory recommendations as to size and capacity.

Install Battery

If the battery is uncovered, cover the battery with a non-conductive material (i.e., plywood, heavy cardboard, etc.) prior to installation.

- Using an overhead hoist and insulated spreader bar, lift battery into battery compartment.
- Install battery retainer.
- Remove non-conductive material from battery.
- Connect battery to truck.

Copyrighted Material
Intended for CLARK dealers only
Do not sell or distribute

https://truckmanualshub.com/

Keeping Battery Records

Records should be maintained to get the best service out of your battery and truck.

These Records Should Contain:

- **Test Date.** Each test should be dated for future reference and comparison.
- **Specific Gravity and Temperature Readings.** Each battery cell should be checked and recorded before and after charging. The specific gravity reading of the electrolyte, calculated using a multiplier to account for the ambient temperature, should not be less than 1.260. If below 1.250, the battery should be recharged and tested.
- **Variation Between Each Cell Tested.** The variation in specific gravity reading between cells should not be greater than 15 points (0.015). If readings are greater, there are defective cells.

NOTE

The pilot cell should be changed occasionally to distribute any electrolyte loss over the battery when taking readings.

- **Load Voltage Tests** should be performed and recorded indicating the condition of a battery while it is performing work.
- **Actual Operating Hours of the Battery.** Record the actual time the battery is in use before putting it on charger.
- **Charging Time.** Keep an accurate record of the actual time the battery is on charger. After each charge, check to see if the battery is fully charged. Test the battery before placing it back into service. Record these results.
- **Visually Inspect** for loose terminal connections or posts, a cracked case, damaged cell covers (vent caps), or excessive corrosion. This data should be noted to help determine work environment and possible trouble areas.

Copyrighted Material
Intended for CLARK dealers only
Do not sell or distribute

https://truckmanualshub.com/

Section 2

Battery Tests

Battery Tests 2

Copyrighted Material
Intended for CLARK dealers only
Do not sell or distribute

https://truckmanualshub.com/

Battery Tests

NOTE
Use both tests described here.

Specific Gravity Test

Test at least six cells across battery with a temperature-corrected hydrometer (see chart). Battery is fully charged when the reading falls in the 1.280 to 1.300 range. If the difference between cells is more than .015, battery needs maintenance.

SPECIFIC GRAVITY TEST	
SPECIFIC GRAVITY	STATE OF CHANGE
1.260–1.300	100% CHARGED
1.230–1.250	75% CHARGED
1.200–1.220	50% CHARGED
1.170–1.190	25% CHARGED
1.140–1.160	VERY WEAK
1.110–1.130	DISCHARGED

BY USING A HYDROMETER, THE SPECIFIC GRAVITY OF THE ELECTROLYTE SOLUTION IN A BATTERY CAN BE DETERMINED. THE BATTERY SPECIFIC GRAVITY IS AN INDICATION OF THE BATTERY'S STATE OF CHARGE. IF THE STATE OF CHARGE IS LOW, THE HYDROMETER WILL READ LOW. IF THE STATE OF CHARGE IS HIGH, THE HYDROMETER WILL READ HIGH.

AS AN EXAMPLE A READING FROM:
1.260 TO 1.300 INDICATED A FULLY-CHARGED BATTERY.
1.200 TO 1.220 INDICATES A BATTERY IS IN A DISCHARGED CONDITION AND CANNOT GIVE SATISFACTORY SERVICE.

Load Test

Put the main hydraulic system into tilt by-pass while reading battery volts with a voltmeter.

Minimum acceptable voltage
for 36 volt battery . . . . . 28.8 volts
Minimum acceptable voltage
for 48 volt battery . . . . . 38.4 volts

Battery needs recharge or repair if voltage drops below 80% of the rated voltage of the battery.

Copyrighted Material
Intended for CLARK dealers only
Do not sell or distribute

https://truckmanualshub.com/

GROUP 13

ELECTRICAL SWITCHES

Foot and Hand Brake Switches ..... Section 1

Lift and Tilt Pump Switches ..... Section 2

Forward and Reverse Switches ..... Section 3

Accelerator Control Switch ..... Section 4

Copyrighted Material
Intended for CLARK dealers only
Do not sell or distribute

https://truckmanualshub.com/

Section 1

Foot and Parking Brake Switches

Safety 2

Foot Brake Switch 3
- Description 3
- Location 3
- Adjustment 3

Parking Brake Switch 4
- Description 4
- Location 4
- Adjustment 4

Copyrighted Material
Intended for CLARK dealers only
Do not sell or distribute

https://truckmanualshub.com/

Safety

WARNING

Always wear safety glasses.

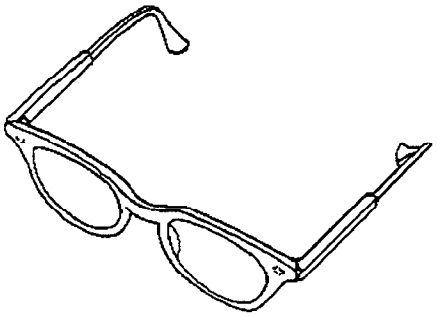

Remove all jewelry before working on truck.

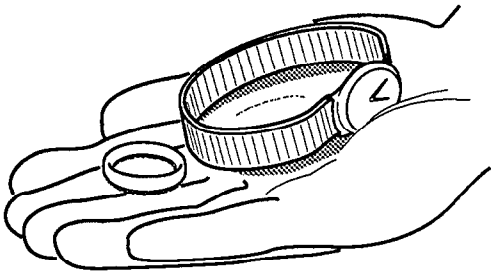

Move Truck to Service Area

1. Park truck on a flat level surface.
   - Fully lower lift carriage.
   - Tilt forks full forward.
2. Turn key switch OFF.
   - Remove key.
   - Disconnect truck battery.

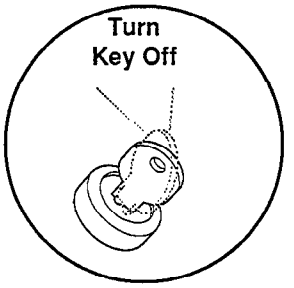

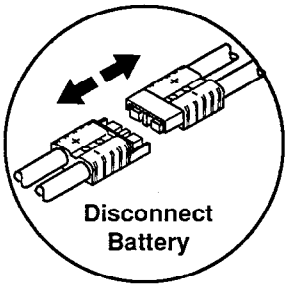

Copyrighted Material
Intended for CLARK dealers only
Do not sell or distribute

https://truckmanualshub.com/

Foot Brake Switch

Description

This microswitch is connected to the wire harness so it is normally open. It is mounted so when the brake pedal is in the up position, the switch is activated (closed circuit). The switch should be adjusted so it will deactivate (open) during the free travel portion of the brake pedal stroke.

IMPORTANT

The switch must cut electrical current to the drive motor before the brakes apply. Otherwise, excessive lining wear will result and the drive motor will overheat.

Location

The foot brake switch is located under the dash panel, mounted to the frame with two mounting screws.

Adjustment

1. Turn key switch OFF.
2. Loosen foot brake switch mounting screws.
3. Adjust position of switch so it just actuates. When this happens, an audible click can be heard.
4. Tighten mounting screws.
5. Check operation of switch by depressing brake pedal. Switch should actuate at the first downward movement of the pedal, and again just before the pedal reaches the full up position.

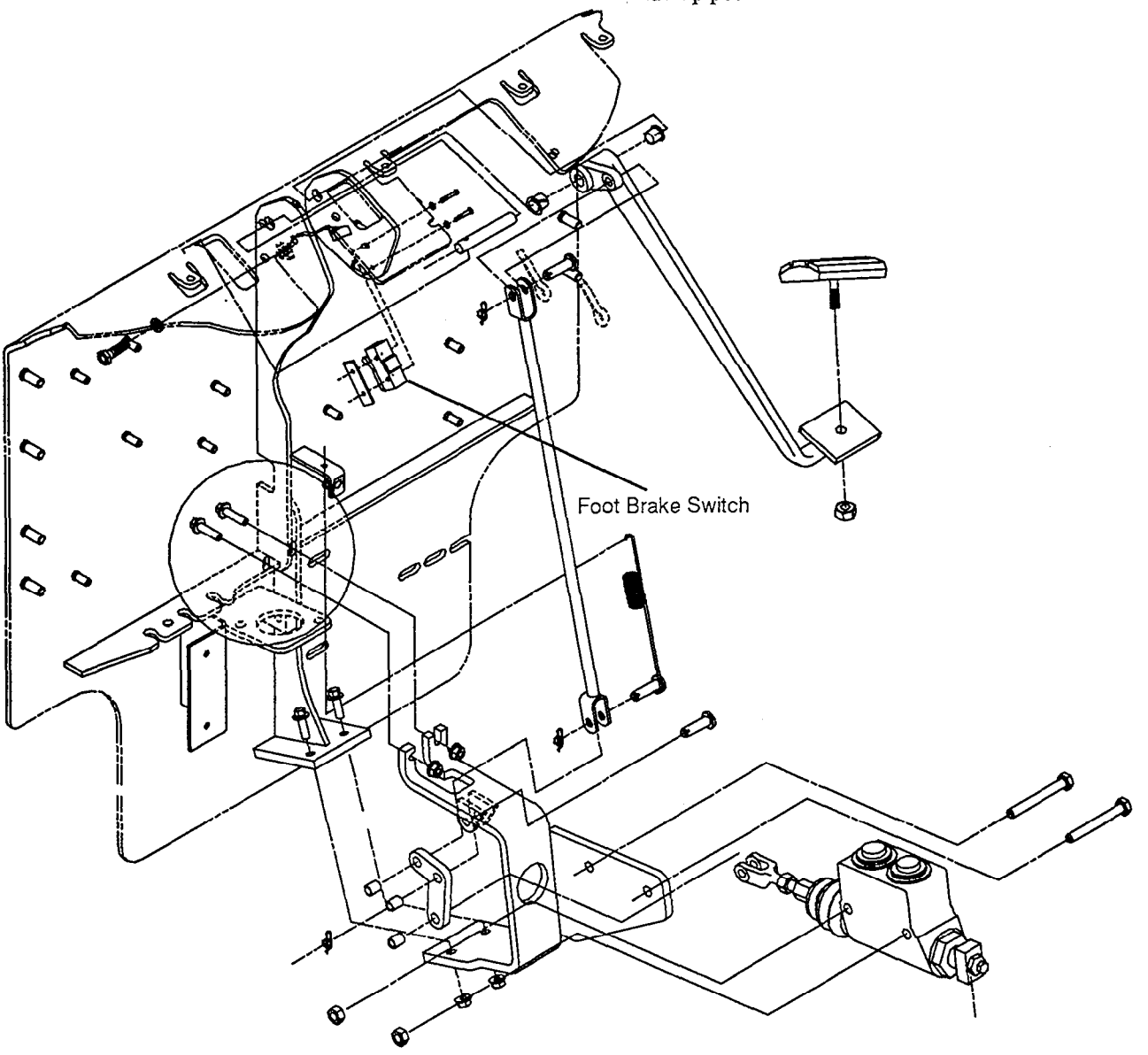

Copyrighted Material
Intended for CLARK dealers only
Do not sell or distribute

https://truckmanualshub.com/

Parking Brake Switch

Description

This microswitch is connected to the wire harness so it is normally open. It is mounted so when thepedal is depressed, electrical current to the drive motor is shut off.

IMPORTANT

The switch must cut electrical current to the drive motor before the brakes apply.. Otherwise, excessive lining wear will result and the drive motor will overheat.

Location

The parking brake switch is located at the base of the parking brake foot pedal.

Adjustment

1. Turn key switch OFF.
2. Loosen parking brake switch mounting screws.
3. Adjust position of switch so there is contact with center pin, and switch just actuates when parking brake lever is in the fully released position.
4. Tighten mounting screws.
5. Check operation of switch before truck is returned to service.

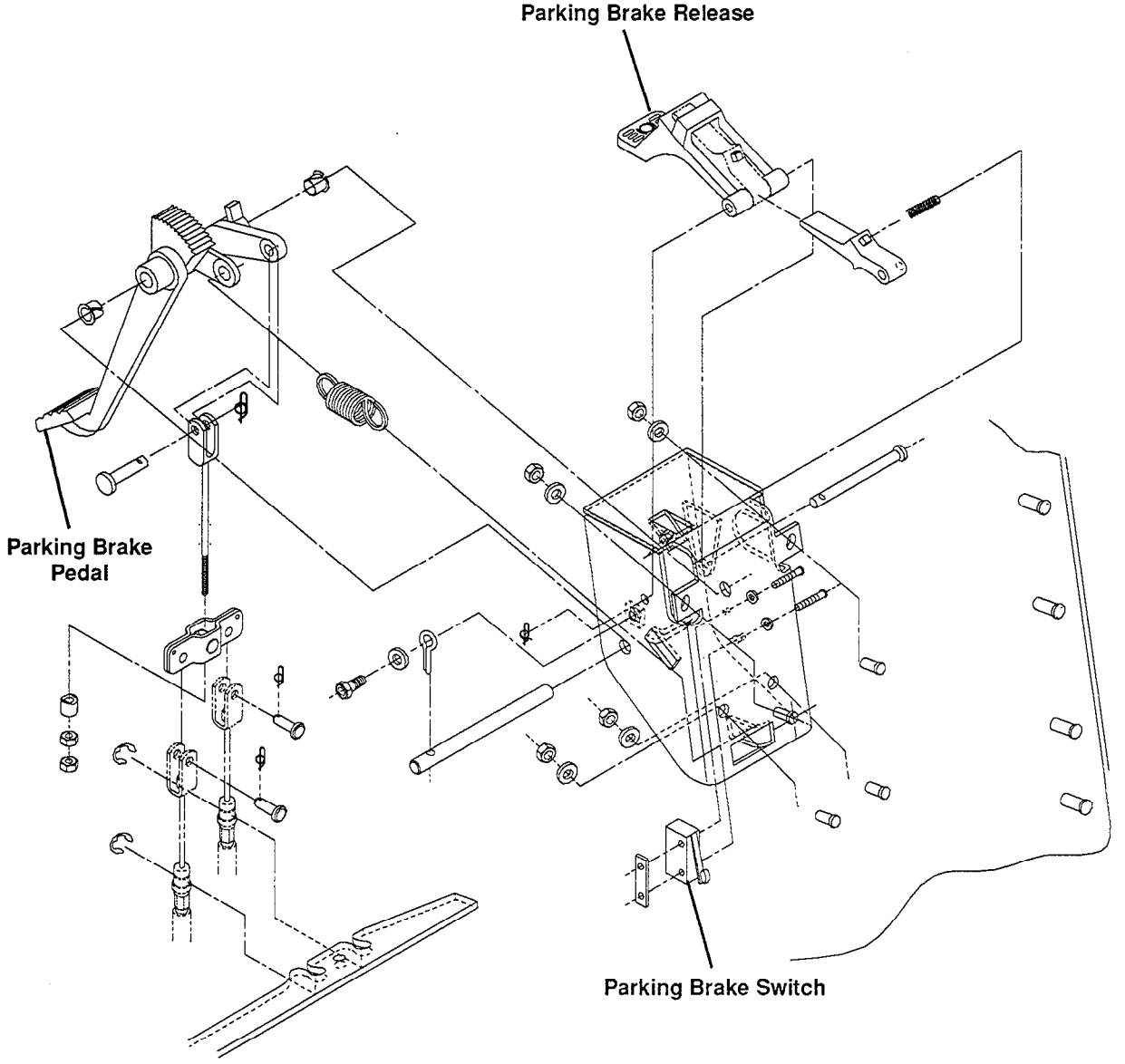

Copyrighted Material
Intended for CLARK dealers only
Do not sell or distribute

https://truckmanualshub.com/

Section 2

Lift and Tilt Pump Switches

Safety 2

Lift and Tilt Pump Switches 3

Description 3

Adjustment 3

Copyrighted Material
Intended for CLARK dealers only
Do not sell or distribute

https://truckmanualshub.com/

Safety

WARNING

Always wear safety glasses.

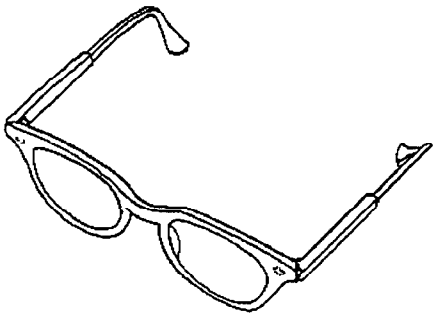

Remove all jewelry before working on truck.

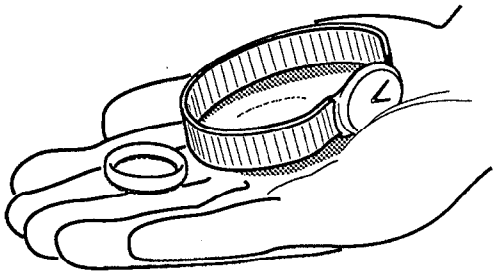

Move Truck to Service Area

1. Park truck on a flat level surface.
   - Fully lower lift carriage.
   - Tilt forks full forward.
2. Turn key switch OFF.
   - Remove key.
   - Disconnect truck battery.

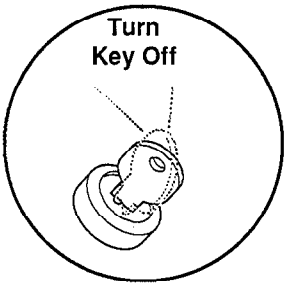

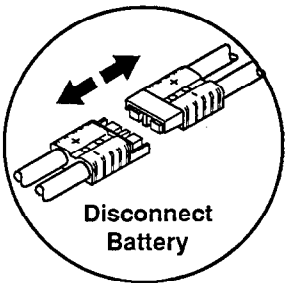

Copyrighted Material
Intended for CLARK dealers only
Do not sell or distribute

https://truckmanualshub.com/

Lift and Tilt Pump Switches

Description

The pump control switches are mounted on brackets at the valve spools and they are normally open. The switches are activated by movement of the valve spool.

Adjustment

1. Turn key switch to the OFF position.
2. Loosen switch mounting screws.
3. Adjust switch to activate after 2 mm (0.08 in.) of spool travel from neutral.
4. Tighten mounting screws.

IMPORTANT

Upon moving a control lever, the pump motor should start immediately, and the hydraulic function should begin.

5. Check operation of switch before truck is returned to service.

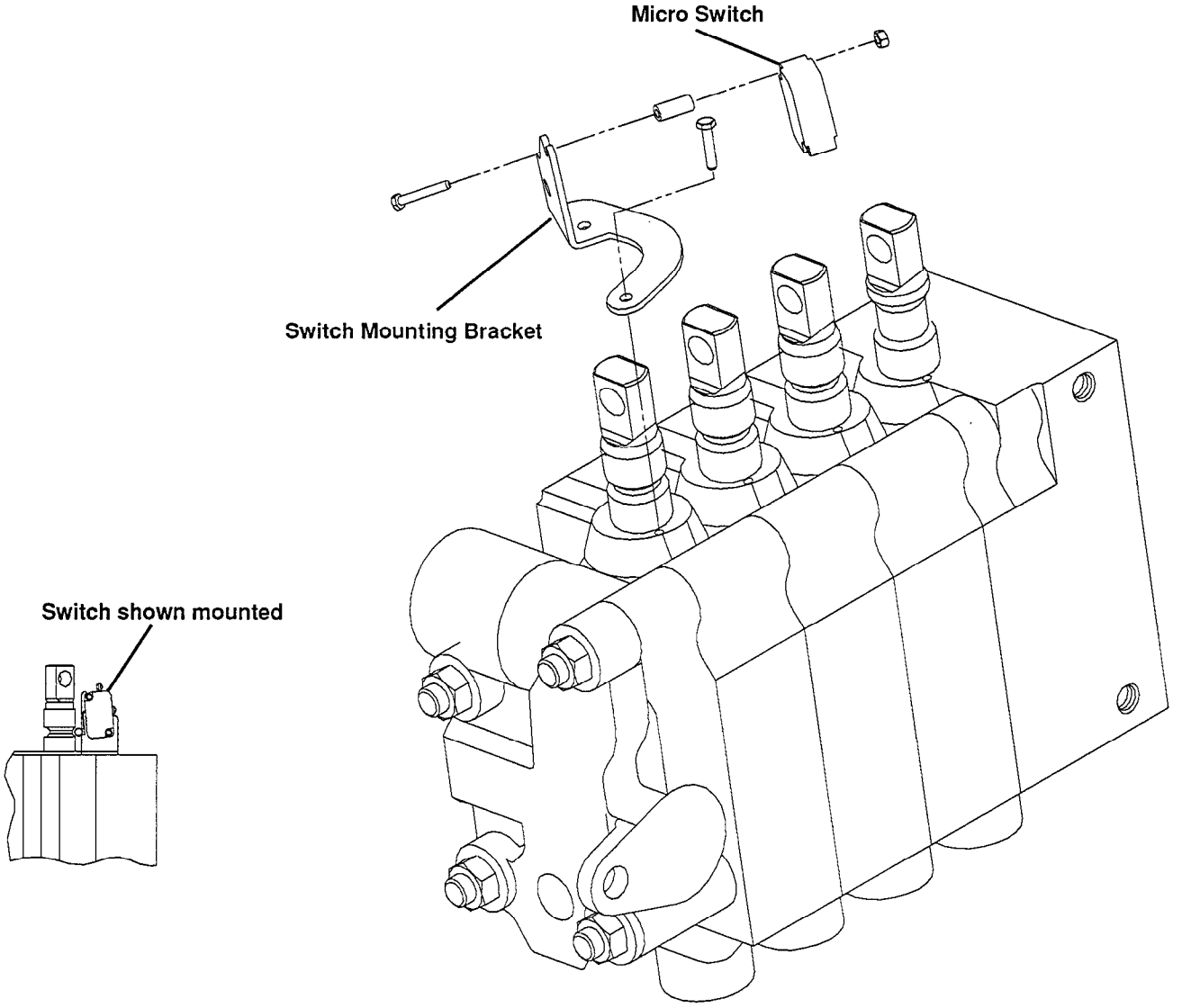

Copyrighted Material
Intended for CLARK dealers only
Do not sell or distribute

https://truckmanualshub.com/

Section 3

Forward and Reverse Switches

Safety 2

Forward and Reverse Switches 3

Description 3

Location 3

Adjustment 3

Copyrighted Material
Intended for CLARK dealers only
Do not sell or distribute

https://truckmanualshub.com/

Safety

WARNING

Always wear safety glasses.

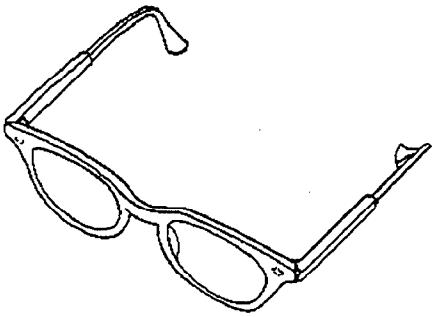

Remove all jewelry before working on truck.

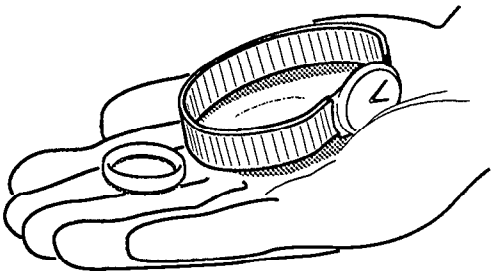

Move Truck to Service Area

1. Park truck on a flat level surface.
   - Fully lower lift carriage.
   - Tilt forks full forward.
2. Turn key switch OFF.
   - Remove key.
   - Disconnect truck battery.

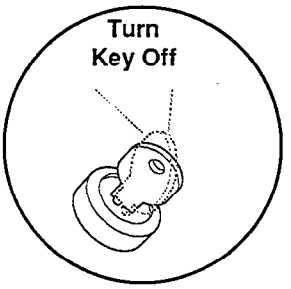

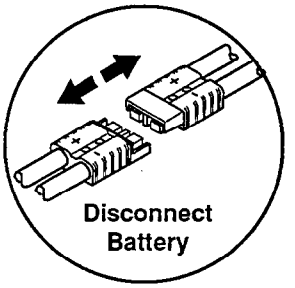

Copyrighted Material
Intended for CLARK dealers only
Do not sell or distribute

https://truckmanualshub.com/

Forward and Reverse Switches

Description

These switches are connected to the wire harness so they are normally open. When the directional control lever is placed in the FWD or REV detent, the proper switch is actuated (closed). A signal current is sent to the drive motor controller, which controls the rotational direction of the drive motor.

Location

The FWD and REV switches are located at the base of the directional control lever. They are actuated by a cam attached to the directional control lever.

Adjustment

1. Turn key switch OFF.
2. Loosen FWD and REV switch mounting screws.
3. Adjust position of FWD switch so it just actuates when directional control lever is in forward detent. Adjust REV switch so it just actuates when directional control lever is in reverse detent.
4. Tighten mounting screws.
5. Check operation of switches before truck is returned to service.

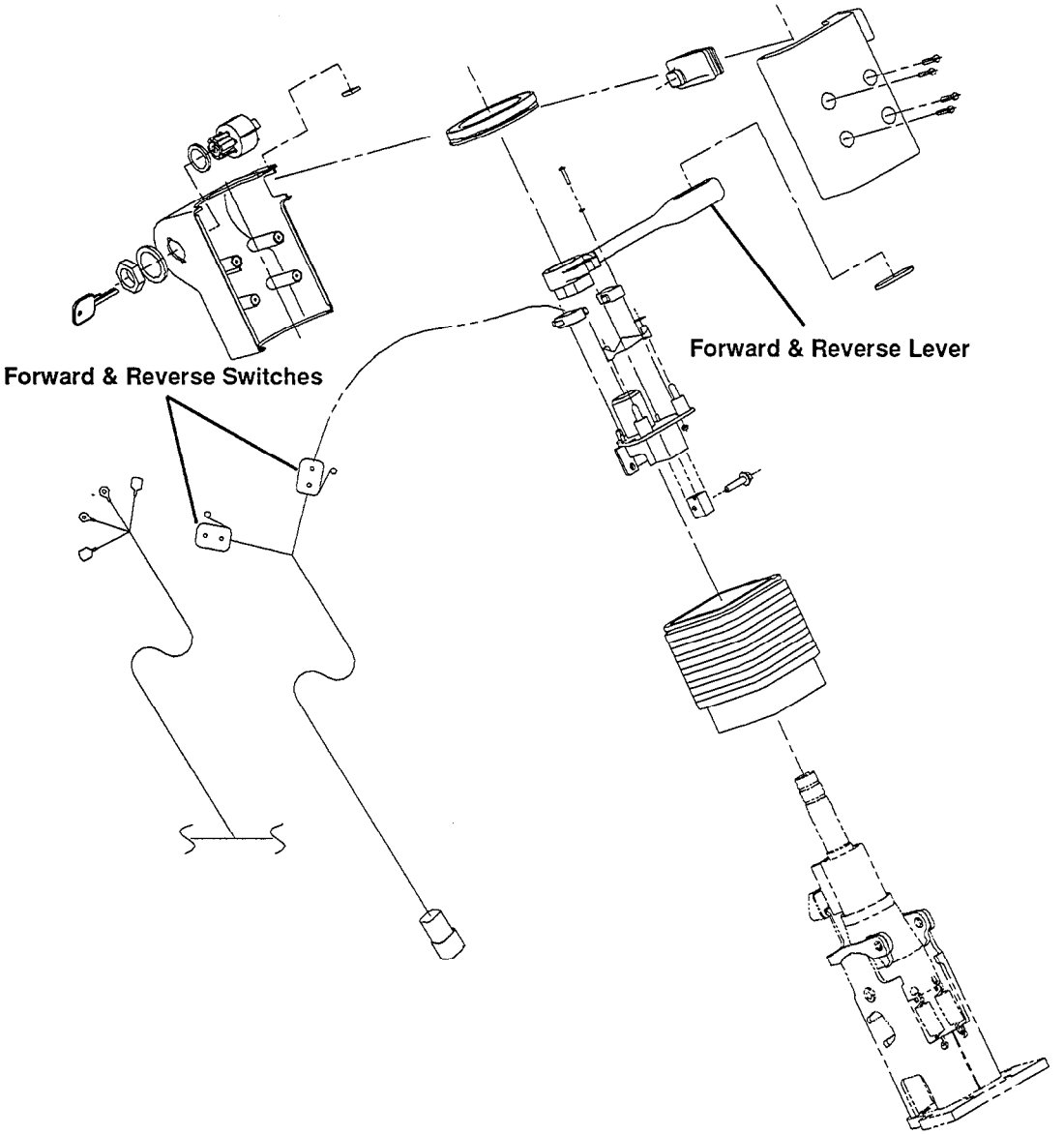

Copyrighted Material
Intended for CLARK dealers only
Do not sell or distribute

https://truckmanualshub.com/

Section 4

Accelerator Control Switch

Safety 2

Accelerator Control

Description 3

Location 3

Adjustment 3

Copyrighted Material
Intended for CLARK dealers only
Do not sell or distribute

https://truckmanualshub.com/

Safety

WARNING

Always wear safety glasses.

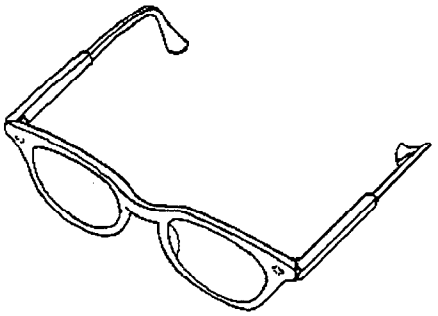

Remove all jewelry before working on truck.

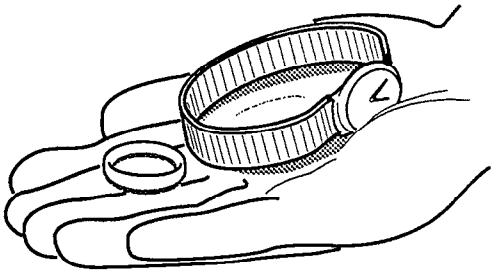

Move Truck to Service Area

1. Park truck on a flat level surface.
   - Fully lower lift carriage.
   - Tilt forks full forward.
2. Turn key switch OFF.
   - Remove key.
   - Disconnect truck battery.

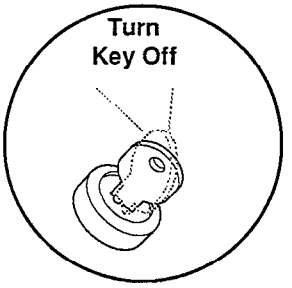

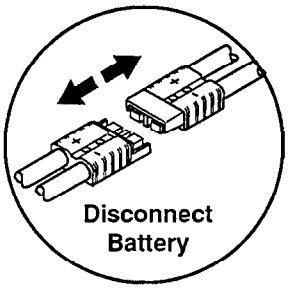

Copyrighted Material
Intended for CLARK dealers only
Do not sell or distribute

https://truckmanualshub.com/

Accelerator Control Switch

Accelerator Control Description

The accelerator control is operated by the accelerator foot pedal to send a signal for power demand to the control.

At the start, the accelerator control is stroked (by the action of the accelerator pedal), and in turn sends a signal to the Transistor control, requesting it to produce longer electrical pulses to the motor, which in turn will supply more power to the drive train.

An internal spring returns the control to start position.

The accelerator is an integral unit and is not servicable. Opening of the unit will void the warranty.

Accelerator Adjustments

1. Adjust bolt in until it stops.
2. Torque fasteners to 6 - 8 N•m (8.1 - 10.8 lbs-ft).
3. Press fit pin flush with

Accelerator Maintenance

Trouble with the accelerator control will normally be investigated in conjunction with trouble-shooting of the Transistor Control. Refer to Group 19 for proper procedure.

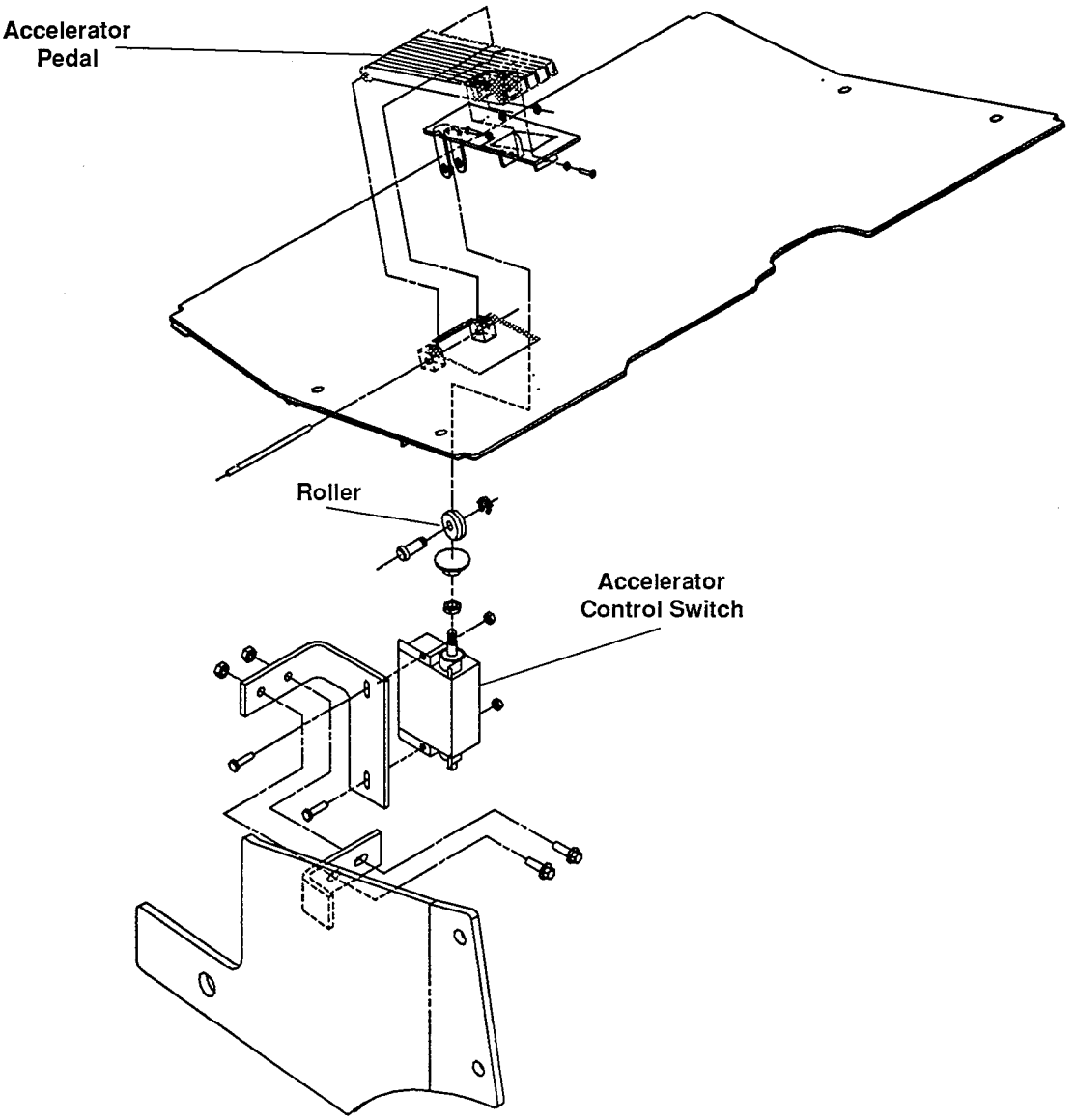

Copyrighted Material
Intended for CLARK dealers only
Do not sell or distribute

https://truckmanualshub.com/

GROUP 16

ELECTRICAL MOTORS

General Information ..... Section 1

Drive Motor ..... Section 2

Hydraulic Pump Motor ..... Section 3

Steering Pump Motor ..... Section 4

Copyrighted Material
Intended for CLARK dealers only
Do not sell or distribute

https://truckmanualshub.com/

Section 1

General Information

Safety 2

Servicing Electric Motors 2

Electric Motor Maintenance 3
- Operating Conditions 3
- Inspection Chart 3
- Inspection Procedures 3
- Motor Cleanliness 4
- Motor Insulation 4

Test for Motor Insulation "Resistance to Ground" 4
- Using a 500-Volt Megger 4
- Using a Simpson 260-6p Volt Ohmmeter or Equivalent Calibrated on the Rx10,000 Scale 4

Brush and Commutator Maintenance 5
- Brush and Commutator Inspection 5

Brush Inspection Chart 7

Copyrighted Material
Intended for CLARK dealers only
Do not sell or distribute

https://truckmanualshub.com/

Safety

WARNING

Always wear safety glasses.

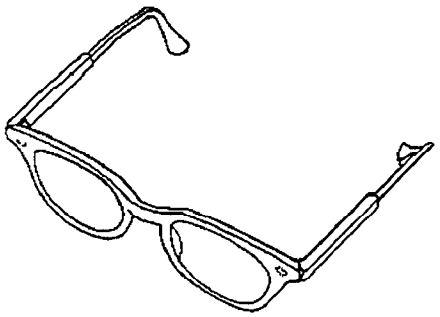

Remove all jewelry before working on truck.

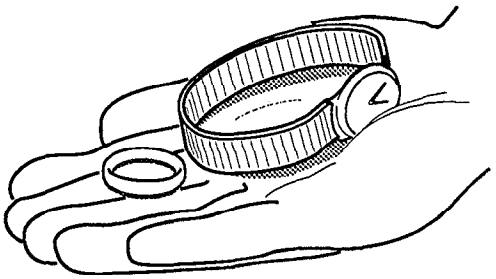

Servicing Electric Motors

Move Truck to Service Area

1. Park truck on a flat, level surface.
   - Fully lower lift carriage.
   - Tilt forks full forward.
2. Discharge the capacitors by:
   - Turning the key switch to OFF.
   - Disconnecting the battery.
   - Turning the key switch to ON for 10 seconds.
   - Remove the key.

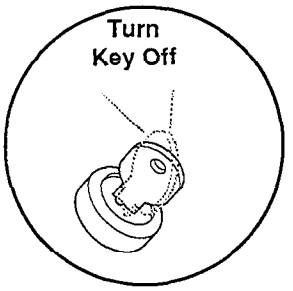

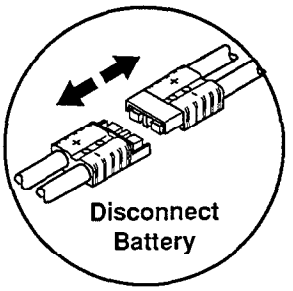

CAUTION

With the above method of discharging the capacitors, it is never necessary to short across them. Never use a screw driver as shown as this can destroy the transistor.

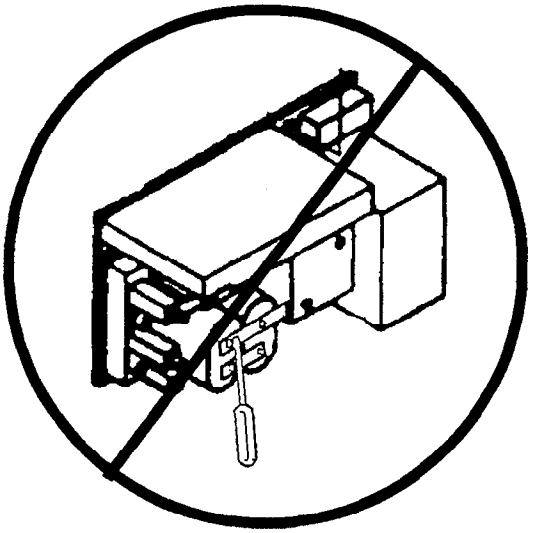

Copyrighted Material
Intended for CLARK dealers only
Do not sell or distribute

https://truckmanualshub.com/

Electric Motor Maintenance

A planned maintenance program of regular, routine inspections and cleaning is important for long life and trouble-free operation of electric motors. Make and keep records of your inspections. Use these records to help establish correct P.M. intervals and to indicate maintenance required to prevent major problems from occurring during operation.

Operating Conditions

The operating environment of lift truck motors varies widely. The following recommendations should be applied as actual conditions dictate.

Normal Service: An eight-hour day of indoor or outdoor material handling.

Severe Service: Extended operating hours or constant usage.

Extreme Service:
- Chemical processing
- Freezer operation
- Processing plants (poultry, meat)

Inspection Procedures

Before performing these service procedures:

- Park truck safely.
- Fully lower upright.
- Apply park brake.
- Turn key switch OFF.
- Disconnect battery from truck receptacle.
- Discharge capacitors as shown on opposite page. (See Servicing Electric Motors).

Copyrighted Material
Intended for CLARK dealers only
Do not sell or distribute

https://truckmanualshub.com/

Motor Cleanliness

Electric motors should be kept clean at all times to prevent shorting, minimize wear, and optimize cooling.

- Wipe off all dust, dirt, oil, water, etc., from outer surface of motor.
- Remove any debris from cooling air vents and around motor frame to prevent overheating.
- Air-clean (blow out) open motors using clean, dry (moisture-free) compressed air at 207 kPa (30 psi) maximum air pressure. Air-clean all inner areas around commutator and brushes, including cooling air vents and fan.

The presence of any oil on or near motor could indicate either bad bearings or leaking hydraulic system. Determine cause and repair problem before extensive motor damage occurs.

Motor Insulation

Reduced motor performance may be due to a breakdown in motor insulation, causing internal grounding or a short circuit.

Failure of motor insulation can be due to:

- contamination
- mechanical factors
- high temperatures

Contamination includes dirt, moisture, oily vapors, metal chips, carbon dust from brushes, etc.

Mechanical factors include shock, vibration, over speed, etc.

Prolonged operation or excessively high temperatures will cause insulation to become brittle and crack, leading to premature failure. The insulation condition can be judged both visually and by test measurement. Regular, periodic measurements of insulation resistance can give a useful indication of the rate of insulation deterioration.

A sudden drop or consistent trend toward low values of insulation resistance gives evidence that insulation is deteriorating and that failure may be imminent.

Test for Motor Insulation "Resistance to Ground"

Using a 500-Volt Megger

This test may be made with motor in the truck.

1. Disconnect battery from truck receptacle.
2. Disconnect power cables from motor terminals.
3. Connect one lead of the 500-volt megger to any motor terminal.

NOTE

Test ALL terminals individually or by interconnecting with jumper wires.

4. Connect other lead to motor frame. Apply voltage. Resistance should measure at least 1,000,000 ohms (1 megohm).
5. If less than 1 megohm is measured, air-clean motor and repeat test. If air cleaning does not make an improvement, the motor will have to be removed and disassembled for a closer inspection.

Using a Simpson 260-6p Volt-Ohmmeter (VOM) or Equivalent Calibrated on the Rx10,000 Scale

This test may be made with motor in the truck.

1. Disconnect battery from truck receptacle.
2. Disconnect power cables from motor terminals.
3. Connect the positive lead of the VOM to all terminal studs of test motor. Use jumper wires to connect motor terminals.

NOTE

Test ALL terminals individually, or joined together, as noted.

4. Connect VOM negative lead to motor frame. Resistance should measure at least 1,000,000 ohms (1 megohm).
5. If less than 1 megohm is measured, air-clean motor and repeat test. If air cleaning does not make an improvement, the motor will have to be removed and disassembled for a closer inspection.

Copyrighted Material
Intended for CLARK dealers only
Do not sell or distribute

https://truckmanualshub.com/

Brush and Commutator Maintenance

The key to planned maintenance of the brush and commutator is recognizing undesirable brush and commutator conditions. If this is done, corrective action can be taken before a major component is damaged beyond serviceability. The brushes and commutator should be inspected for even wear and good commutation.

Good Commutation: The brush wearing surface has a dark uniform coloring pattern.

Poor Commutation: The brush wearing surface appears rough, pitted, or scored, or signs of burning or heavy arching between bars are present. The coloring pattern exhibits:

- Streaky film with commutator wear.
- Bar edge burning.
- Uneven film.
- Carbon dust bridging between bars.

Brushes should be inspected for uneven wear and signs of overheating, i.e.:

- Discolored brush shunts.
- Discolored brush springs.

Refer to the Brush Inspection Chart at the end of this section.

Brush and Commutator Inspection

1. Remove brush cover(s). Remove brushes from brush holders. Clean brushes and holders. Check brush holders for damage.
2. Remove each brush from its brush holder. Inspect brushes and commutator for worn condition and uneven wear.
3. Clean commutator surface. Wipe commutator with a dry, lint-free cloth. DO NOT use lubricant or solvent on commutator.
4. Check appearance of commutator surface where brushes ride. Inspect commutator bars for burned, damaged, or raised areas. The best signs of good commutation are a dark brown, highly-polished commutator and uniform, glossy brush-wearing surfaces.
5. Measure and record the brush length at each inspection. The record will verify amount of brush wear and indicate if there is enough brush length remaining until next scheduled inspection.
6. Brushes must be replaced when worn to approximately half of original length.

IMPORTANT

New brushes must be of same size and equal or better grade (material specification) as replaced brushes.

Observe how old brushes are assembled in brush holders and position of brush lead (pigtail). New brushes must be installed in same manner.

7. Check brush shunt for good contact with brush holder. Be sure shunt is not damaged or burned, since this may cause brush spring to carry current and lose tension.

Copyrighted Material
Intended for CLARK dealers only
Do not sell or distribute

https://truckmanualshub.com/

8. If brushes do not need to be replaced and commutator is in good condition, install brushes and brush springs into brush holders.
9. If brushes are to be replaced, the motor should be removed from the truck., disassembled and the armature turned. The commutator can usually be cleaned up with a very light cut, if done every time the brushes are replaced. Check mica and undercut as necessary. This light cut will true any high bars and will assure proper life of new brushes.

IMPORTANT

Always replace both brushes and springs. Do not use old springs with new brushes.

NOTE

Be sure brush spring is correctly placed on brush holder and that brush is free to slide in brush box.

10. Clean and check brush box and connector screws. Tighten if loose. Be sure brush box shunt connection is tight. Install brush cover on motor case.
11. Check and tighten all motor bolts. Check lower nut on each terminal post. It should be installed finger-tight, then tightened another 1/4 turn with a wrench.

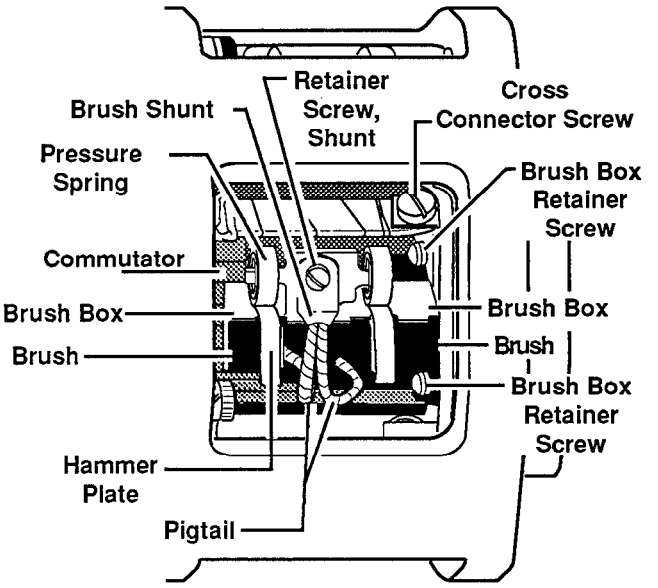

Copyrighted Material
Intended for CLARK dealers only
Do not sell or distribute

https://truckmanualshub.com/

Brush Inspection Chart

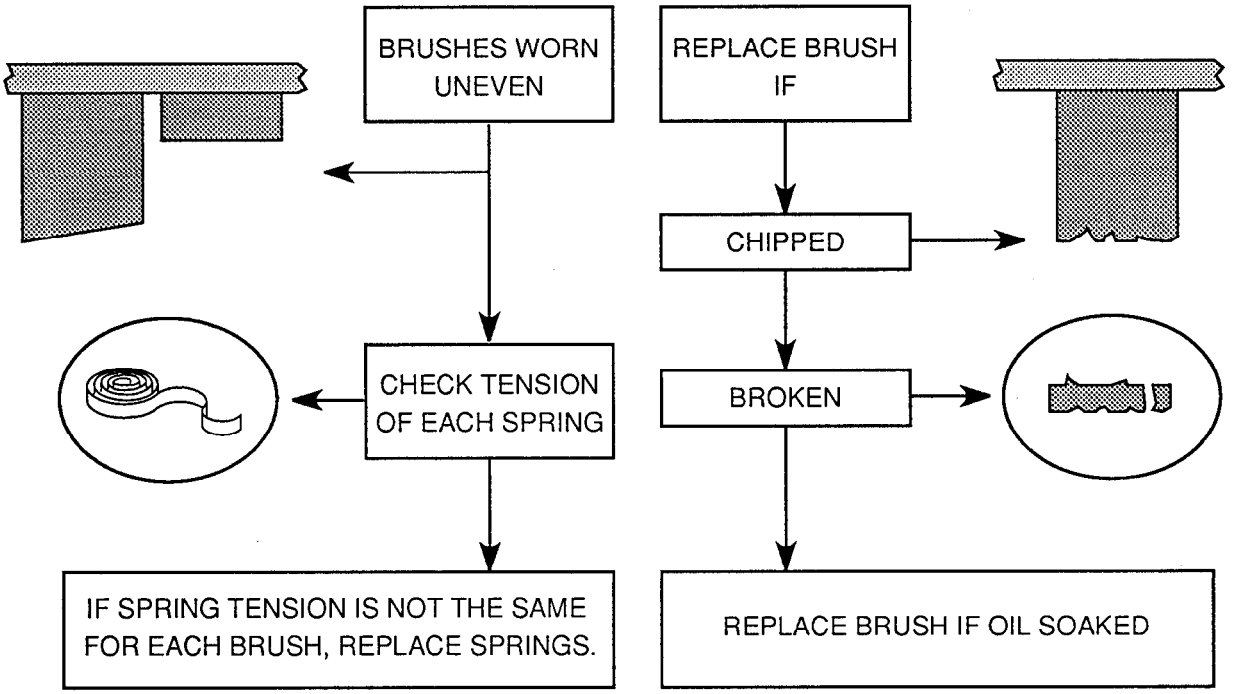

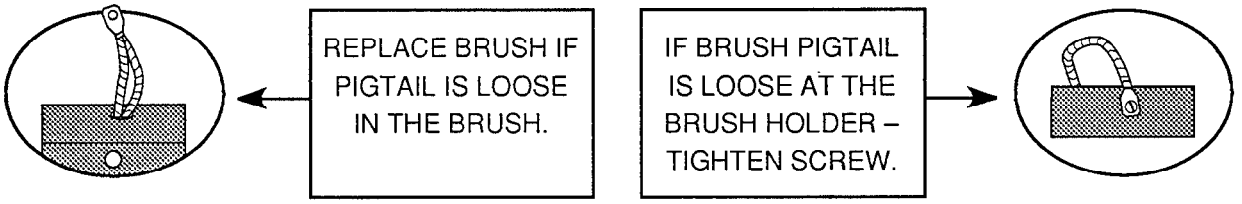

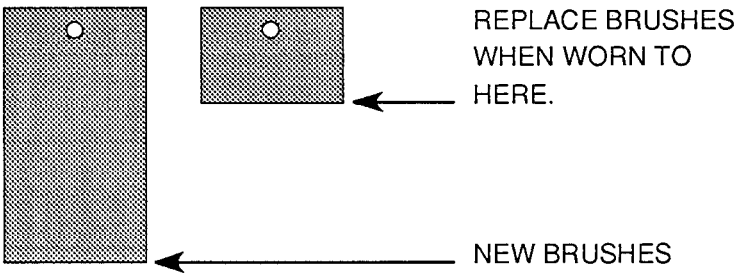

Copyrighted Material
Intended for CLARK dealers only
Do not sell or distribute

https://truckmanualshub.com/

Section 2

Drive Motor

Safety 2

General Information 2

Operating Conditions 2

Drive Motor Description 3

Drive Motor Removal and Installation 3

Drive Motor 4
- Disassembly 5
- Component Inspection and Troubleshooting 6
- Assembly 6

Drive Motor Specifications 8

Brush Inspection Chart 9

Copyrighted Material
Intended for CLARK dealers only
Do not sell or distribute

https://truckmanualshub.com/

Safety

WARNING

Always wear safety glasses.

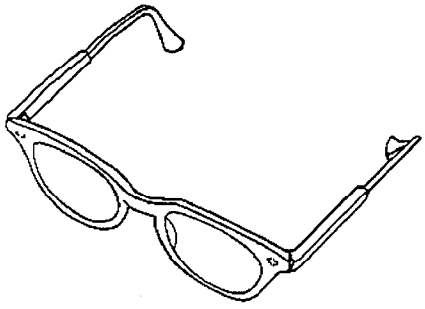

Remve all jewelry before working on truck.

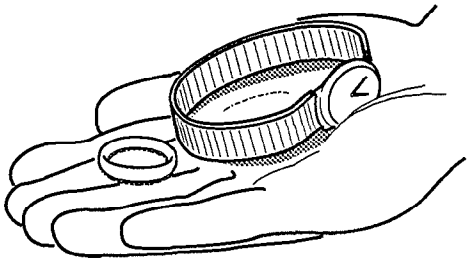

Wear eye protection and protective clothing when drying with air pressure. Reduce air pressure to 207 kPa (30 psi). Debris removed with air pressure can cause injury.

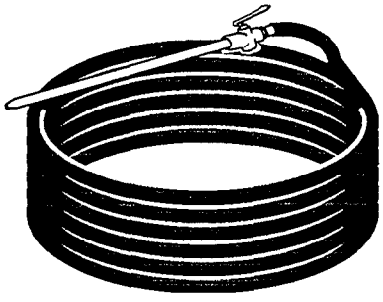

Use a torque wrench to tighten terminal connections.

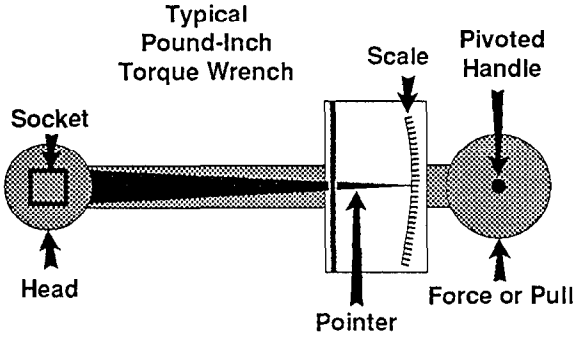

General Information

A routine maintenance schedule with recorded findings is the best way to reduce costly shutdowns and repair of equipment during operating hours.

The goal of any maintenance program, *long life and trouble-free operation*, depends upon time spent making inspections and correcting minor problems as they occur.

The key to planned maintenance of the brush and commutator is recognizing undesirable brush and commutator conditions. If this is done, corrective action can be taken before a major component is damaged beyond serviceability. The brushes and commutator should be inspected for even wear and good commutation at every PM.

Operating Conditions

The operating environment of lift truck motors varies widely. The service frequency shall depend upon the severity of operating conditions.

Normal Service: An eight-hour day of indoor or outdoor material handling.

Severe Service: Extended operating hours or constant usage.

Extreme Service:
- Chemical processing
- Freezer operation
- Processing plants (poultry, meat)

CAUTION

SAFE PARKING. Before working on truck:

1. **Park truck on a hard, level and solid surface, such as a concrete floor with no gaps or breaks.**
2. **Put upright in vertical position and fully lower the forks or attachment.**
3. **Put all controls in neutral. Turn key switch OFF and remove key.**
4. **Apply the park brake and block the wheels.**

Copyrighted Material
Intended for CLARK dealers only
Do not sell or distribute

https://truckmanualshub.com/

Drive Motor Description

The drive motor is a series-wound type with Class H insulation and a radial cooling fan. The exterior connections are easily accessible from top of motor where they are protected from external damage. The brushes are accessible and can be changed easily.

Drive Motor Removal and Installation

1. Tilt the steering column fully forward and remove the floor plate.

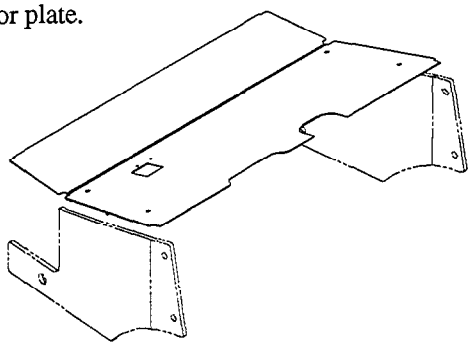

2. Disconnect battery and remove all electrical cables from the motor. Tag cable terminals to aid in reinstallation . Position cables out of the way of motor removal.
3. Remove the battery.
4. Put a chanin hook into the motor lifting eye and to an overhead hoist to assist in lowering motor. Snug up.
5. Remove bolts and nuts holding motor to axle. Install bolts in tapped holes in axle flange to assist in separating motor from drive axle.
6. Lower motor onto a low dolly and remove chain.
7. Jack up and block the rear of the truck high enough to slide motor from under truck.
8. Reinstall in reverse order. Use new O-ring, coated with drive axle fluid. New motors may have a plastic packing around the input shaft. Remove and discard this packing prior to motor installation.

WARNING

Use only approved hoist, chains, and straps. Be sure hoist and accessories have sufficient capacity to safely support the load.

9. Torque bolts and nuts to 70 - 80 N•m (152 - 159 lbs ft).

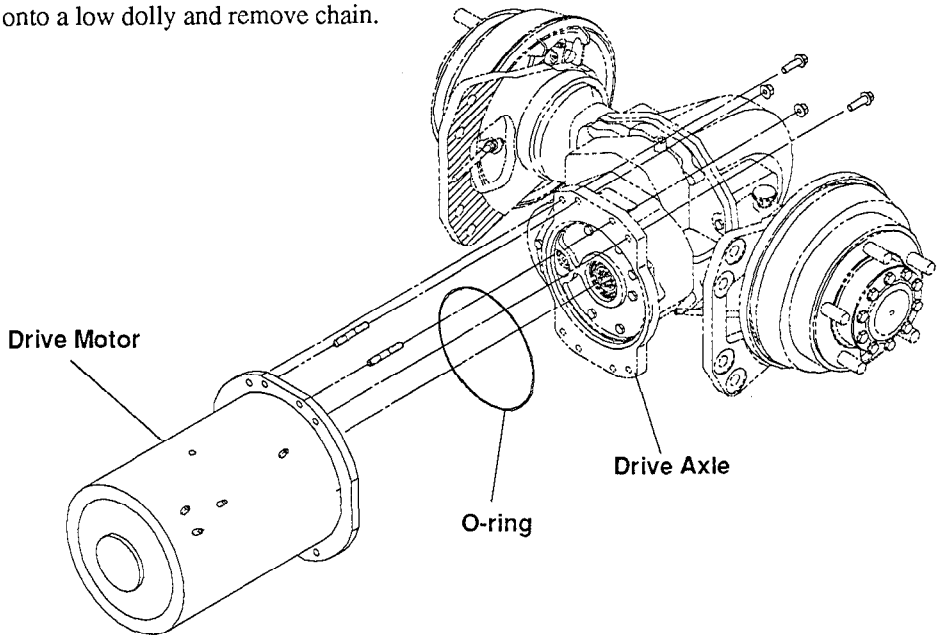

Copyrighted Material
Intended for CLARK dealers only
Do not sell or distribute

https://truckmanualshub.com/

Drive Motor

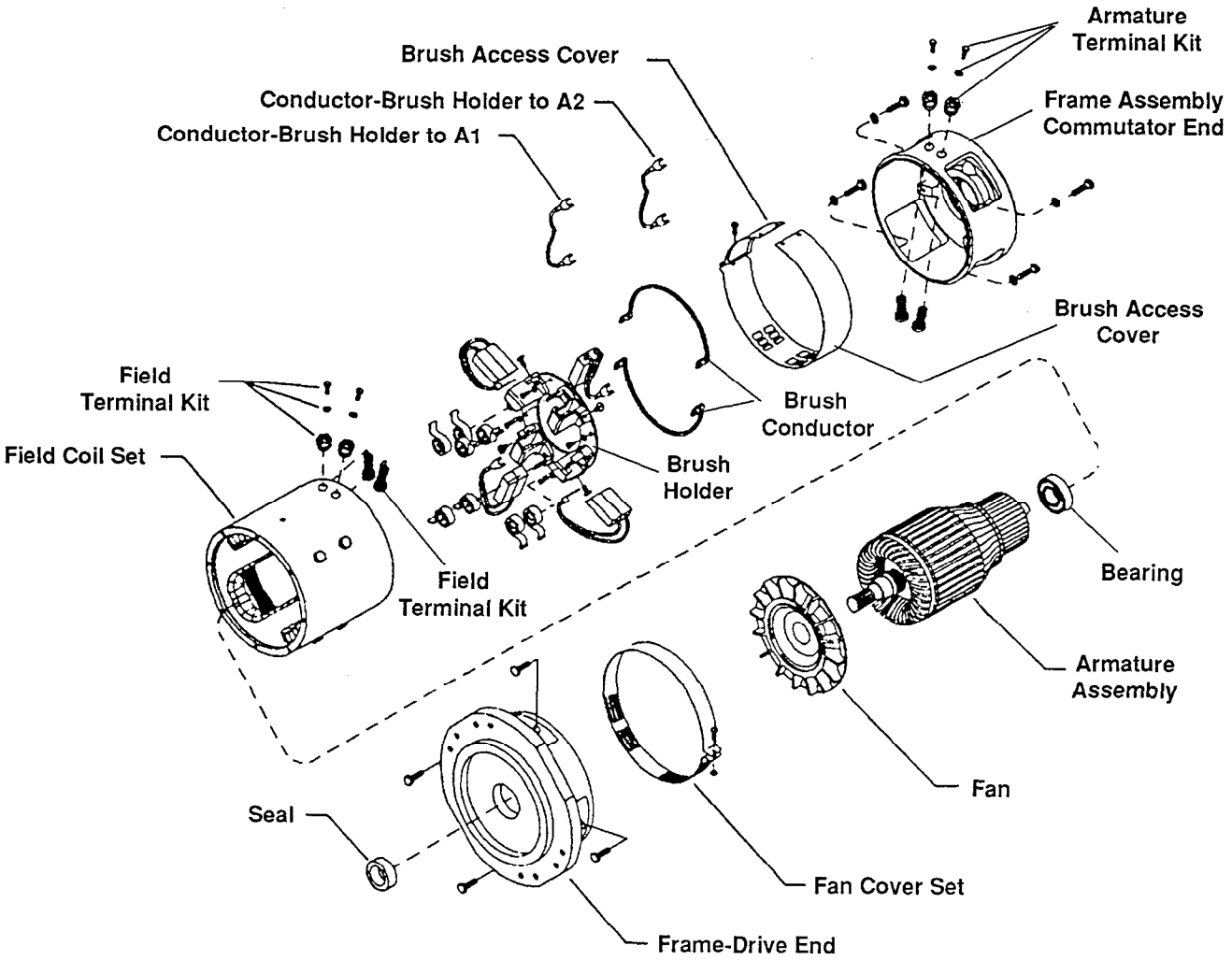

Copyrighted Material
Intended for CLARK dealers only
Do not sell or distribute

https://truckmanualshub.com/

DRIVE MOTOR DISASSEMBLY

1. Remove O-ring seal on mounting flange pilot.

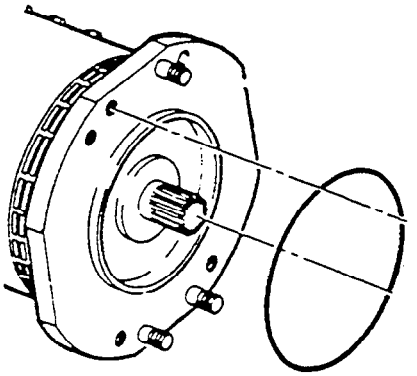

2. Fasten a lift chain to end frame. Make sure that bolts holding chain to motor are tightened fully against chain links to avoid bending bolts.

NOTE

If motor does not have tapped holes in end bell for attaching lift chain, use nylon slings of correct capacity or similar means to position motor as described below.

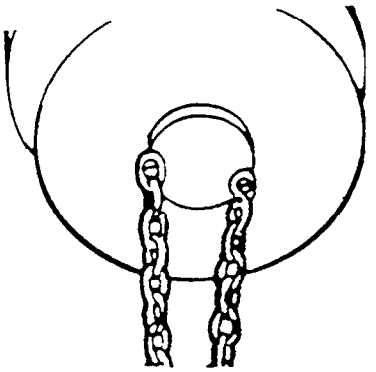

3. Upend drive motor and set it on fan end using blocks to support end bell.

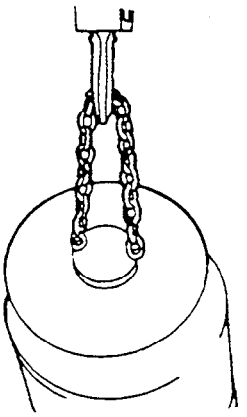

NOTE

Drive motor weighs approximately [107 kg.] 235 lbs.

4. Remove cover band.
5. Loosen bolts attaching drive end frame to motor housing (yoke).

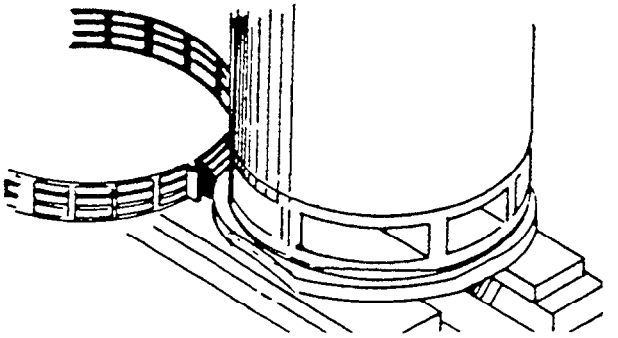

6. Put an identification match mark on both end frame and housing to assure proper location when assebling motor.

Lift drive motor off blocks about [25 mm] 1 inch and tap on end frame uniformly about its outer periphery with a soft-faced hammer to separate drive end frame from motor housing.

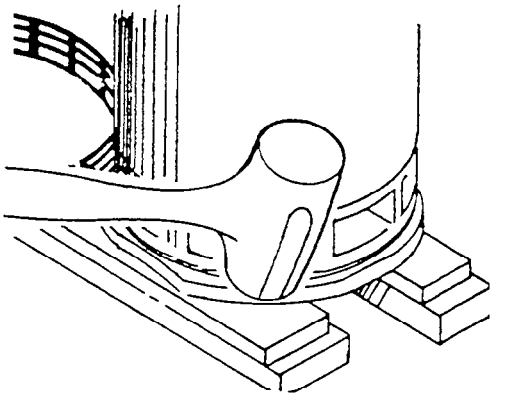

7. Lift housing about [25 mm] 1 inch.
8. Remove commutator end motor frame.
9. Carefully remove brushes. Check for cracks and damage. Replace brushes and brush springs referring to maintenance section for correct brush replacement procedure.

NOTE

Be sure brush spring is correctly placed on brush holder and that brush is free to slide in brush box.

Copyrighted Material
Intended for CLARK dealers only
Do not sell or distribute

https://truckmanualshub.com/

10. Lift housing assembly off armature assembly and store in a safe place.

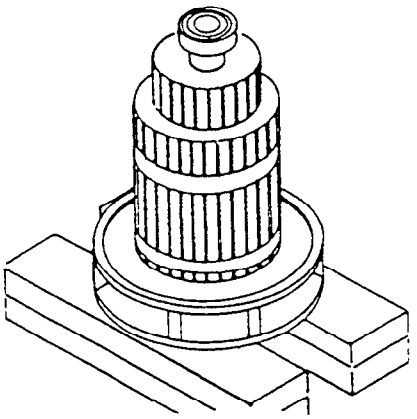

11. Lift armature assembly off drive end frame.
12. Remove and discard commutator end bearing from armature assembly.

NOTE

MAKE SURE THAT BEARING PULLER IS POSITIONED TO PULL ON INNER RACE OF BEARING.

IT IS RECOMMENDED PRACTICE TO ALWAYS REPLACE ALL BEARINGS WHEN A MOTOR IS OVERHAULED.

13. Remove oil seal from end frame and discard it.

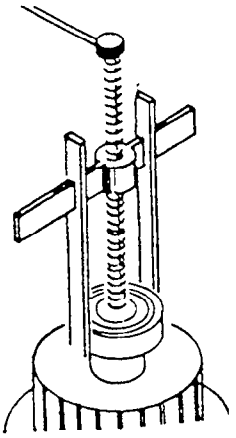

NOTE

There is no bearing in frame on drive end bell.

DRIVE MOTOR COMPONENTS INSPECTION

1. Carefully inspect all components of motor for wear, evidence of damage from overheating, rust or corrosion, excessive buildup of dirt or contaminants and for any other damage that would impair operation.
2. Discard all bearings and oil seals and replace with new.
3. Examine brush boxes for evidence of wear, arcing or external damage. Make sure connections are solid and tight.
4. Examine commutator for evidence of excessive wear, eroded surfaces, raised commutator bars, excessive heat build-up or any visible damage that would impair operation.
5. Discard brushes and replace with new.

Examine field windings making sure that insulation is in place and not damaged (no exposed surfaces). Look for any evidence of arcing or of excessive heat build-up.

6. Examine ventilating fan for any evidence of damage. If dirty, carefully clean surfaces.

DRIVE MOTOR ASSEMBLY

1. Install new bearing on commutator end of armature.

Use a socket or a tubular driver of correct size that fully contacts inner race to install.

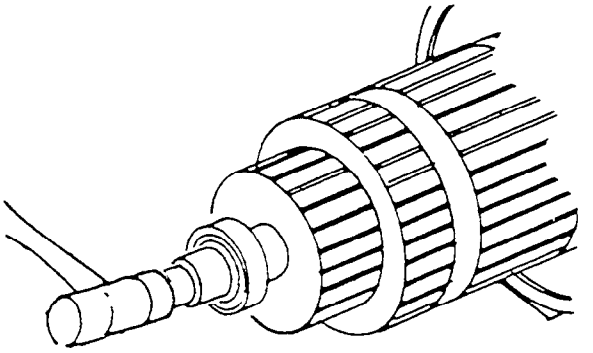

2. Install new seal in drive end frame. Make sure seal is fully seated in bore.

Put a coating of petroleum jelly on seal lips.

3. Put drive end frame on supporting blocks and insert armature assembly into frame. Be very careful not to damage sealing lips of oil seal as shaft is inserted.
4. **Use a chain hoist to lift drive motor housing assembly and lower it over armature assembly. Make sure alignment marks made earlier are matched.**

Copyrighted Material
Intended for CLARK dealers only
Do not sell or distribute

https://truckmanualshub.com/

5. Install and tighten mounting bolts attaching end frames to housing.
6. Use a chain hoist to upend motor and lay it on its side.
7. Install new drive motor seal (O-ring) on transmission mounting pilot.

DRIVE MOTOR INSTALLATION

1. Use a chain hoist to lower motor to floor.

Move motor underneath truck and use chain hoist to raise it into position.

Carefully insert motor shaft into splined pilot of drive axle pinion.

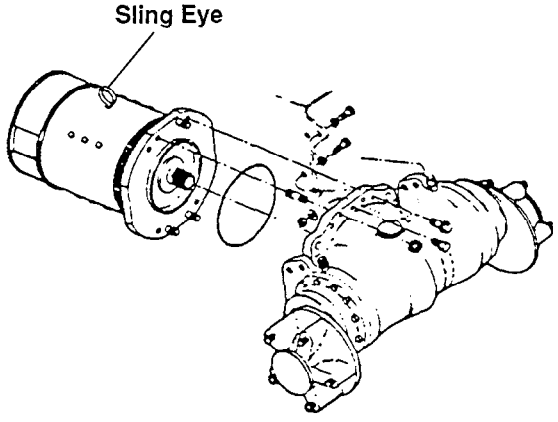

Check to be sure O-ring seal on pilot flange is in place.

2. Install and tighten upper fasteners attaching motor to drive axle and tighten to a torque of [70-80 N.m] 52-59 lbf.ft.
3. Remove hoist chain and install and tighten lower fasteners to [70-80 N.m] 52-59 lbf.ft..
4. Attach power cables to correct terminals on motor and tighten terminal nuts.
5. Fill drive axle to full level with specified oil. See drive axle section for correct oil fill procedure.
6. Install floorboard.
7. Check operation of truck to be sure installation is correct.

Copyrighted Material
Intended for CLARK dealers only
Do not sell or distribute

https://truckmanualshub.com/

Drive Motor Specifications

This motor is equipped with standard winding connections and meets latest revision of UL 583.

ROTATION: REVERSIBLE

C.W.D.E.

Forward Vehicle Direction

C.C.W.D.E.

Reverse Vehicle Direction

General

- Frame Size: 279.4 mm (11.0 in.) diameter.
- Weight (Approx.): 107 kg (235 lb).
- Internal Bearings on Commutator End: Bearings are sealed and lubricated with high-temperature grease for the life of the bearing.

Insulation

- Armature Components, Class H
- Commutator Components, Class H
- Field Components

External Connection Torque:
15.8–19.2 N•m (140–170 lb-in.)

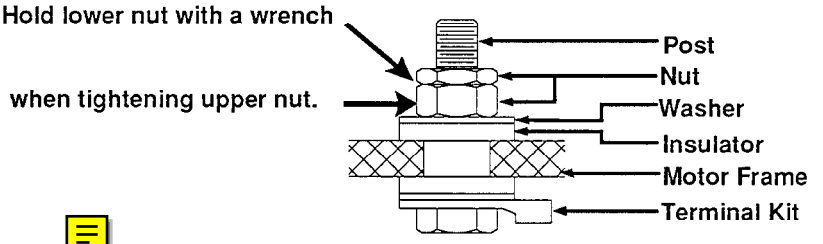

Brush Data

- 1 Brush per Holder
- 4 Brushes per Motor
- Maximum Length of Worn Brush: 15.75 mm (0.62 in.)
- Maximum Force per New Brush: 1985 gm (70 oz)
- Maximum Force per Worn Brush: 1644 gm (58 oz)
- Brush Drop: 0.85 Volts @ 100 Amps

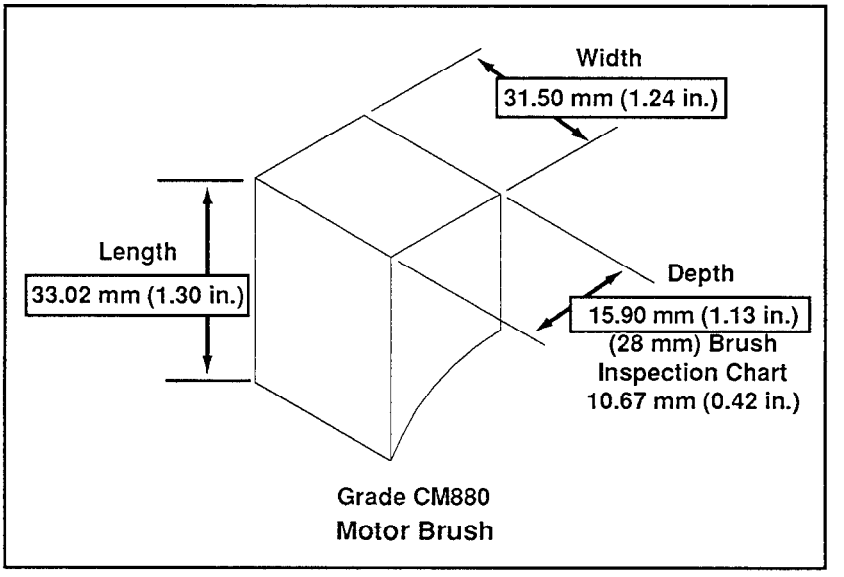

Copyrighted Material
Intended for CLARK dealers only
Do not sell or distribute

https://truckmanualshub.com/

Brush Inspection Chart

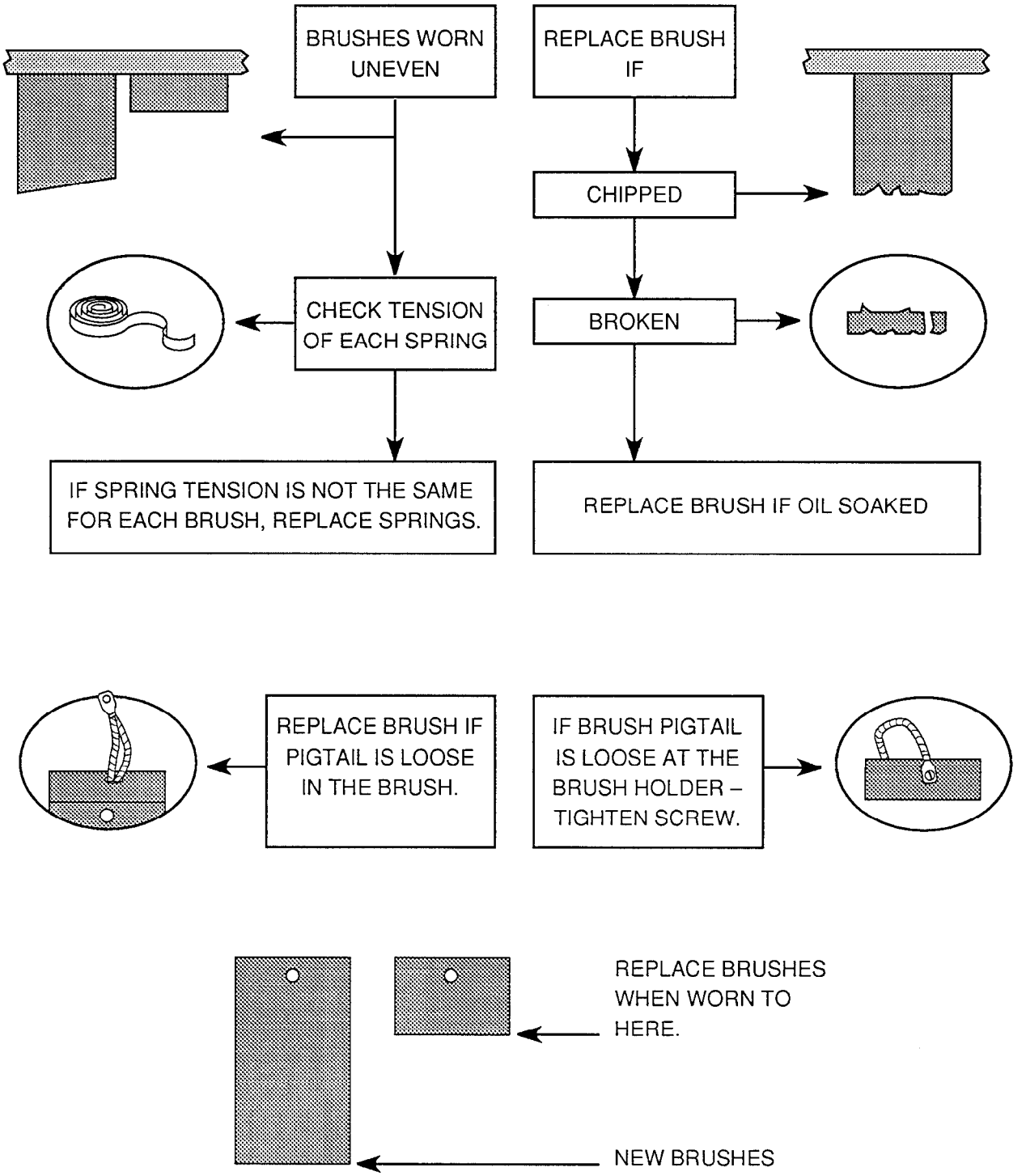

Copyrighted Material
Intended for CLARK dealers only
Do not sell or distribute

https://truckmanualshub.com/

Section 3

Hydraulic Pump Motor

Safety 2

General Information 3

Operating Conditions 3

Description 4

Maintenance 4

Hydraulic Pump Motor 4
- Removal 5
- Disassembly 5
- Reconditioning 6
- Component Inspection 6
- Assembly 7
- Installation 8

Pump Motor Specifications 9

Brush Inspection Chart 10

Copyrighted Material
Intended for CLARK dealers only
Do not sell or distribute

https://truckmanualshub.com/

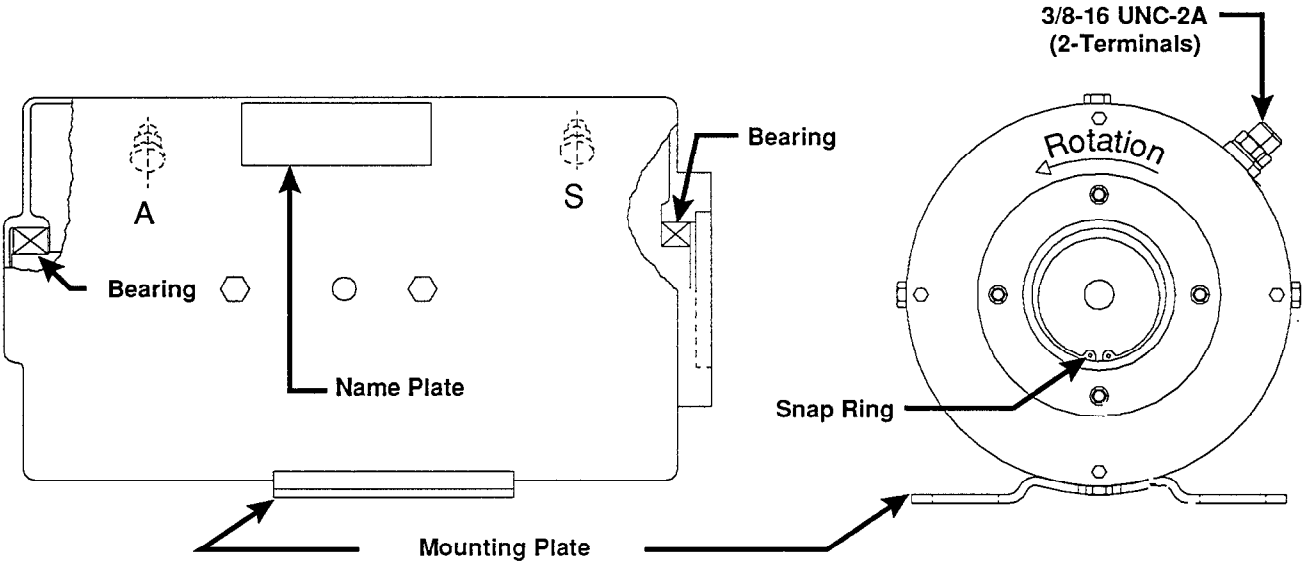

Safety

WARNING

Wear eye protection and protective clothing when drying with air pressure. Reduce air pressure to 207 kPa (30 psi). Debris removed with air pressure can cause injury.

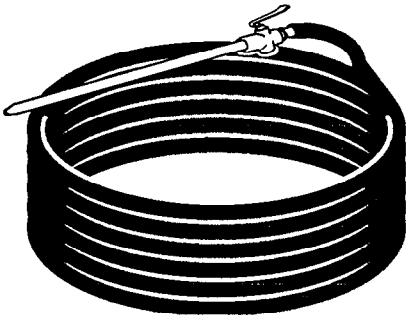

Remove all jewelry before working on truck.

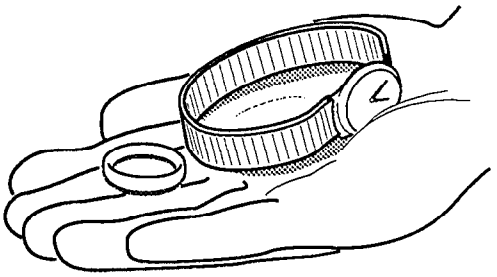

Always wear safety glasses.

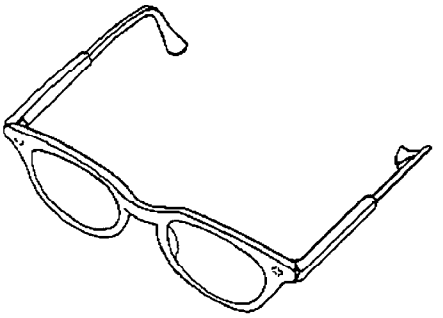

Use a torque wrench to tighten terminal connections.

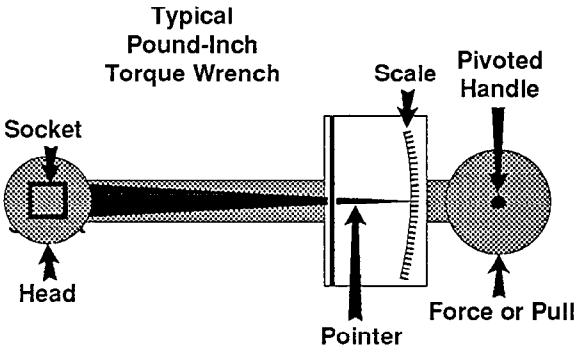

Copyrighted Material
Intended for CLARK dealers only
Do not sell or distribute

https://truckmanualshub.com/

General Information

A routine maintenance schedule with recorded findings is the best way to reduce costly shut-downs and repair of equipment during operating hours.

The goal of any maintenance program, *long life and trouble-free operation*, depends upon the time spent making inspections and correcting minor problems as they occur.

The key to planned maintenance of the brush and commutator is recognizing undesirable brush and commutator conditions. If this is done, corrective action can be taken before a major component is damaged beyond serviceability. The brushes and commutator should be inspected for even wear and good commutation.

Operating Conditions

The operating environment of lift truck motors varies widely. The service frequency shall depend upon the severity of operating conditions.

Normal Service: An eight-hour day of indoor or outdoor material handling.

Severe Service: Extended operating hours or constant usage.

Extreme Service:
- Chemical processing
- Freezer operation
- Processing plants (poultry, meat)

Hydraulic Pump Motor

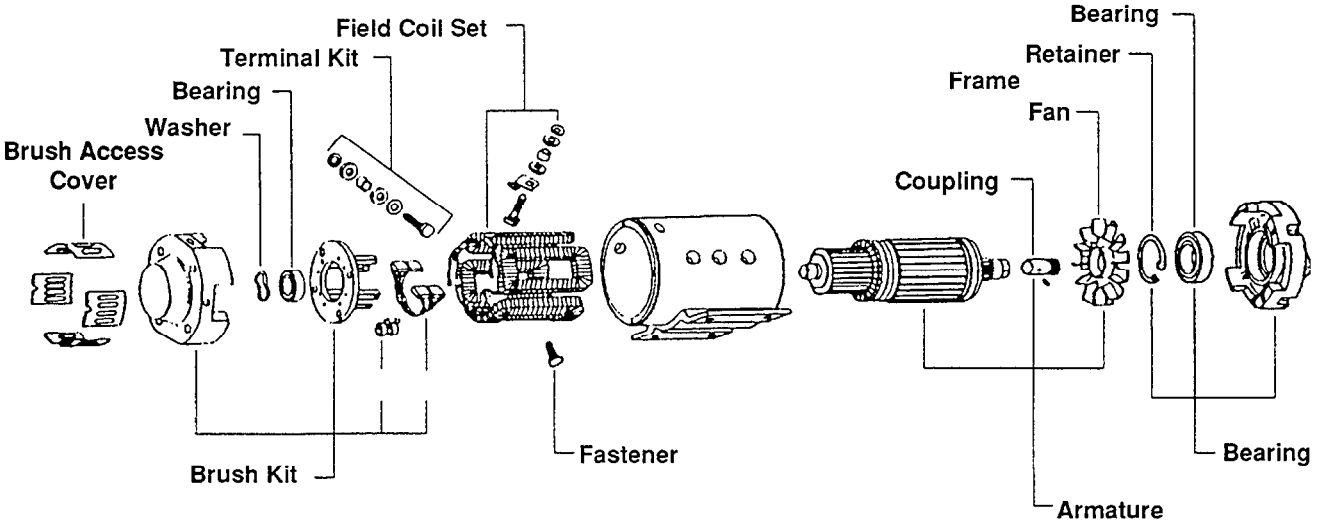

Copyrighted Material
Intended for CLARK dealers only
Do not sell or distribute

https://truckmanualshub.com/

LIFT PUMP MOTOR DESCRIPTION

The lift pump motor is a series wound type with Class H insulation and integral cooling fan. It has provisions on its driving end bell for mounting lift pump.

LIFT PUMP MOTOR MAINTENANCE

Refer to GROUP 16, SECTION 01 for electric motor general maintenance procedures.

⚠ CAUTION

Park truck safely before beginning work:

1. **Park truck on a hard, level and solid surface, such as a concrete floor with no gaps or breaks.**
2. **Put upright in vertical position and fully lower the forks or attachment.**
3. **Put all controls in neutral. Turn key switch OFF and remove key.**
4. **Apply the park brake and block the wheels.**
5. **Disconnect the battery.**
6. **Discharge capacitor.**

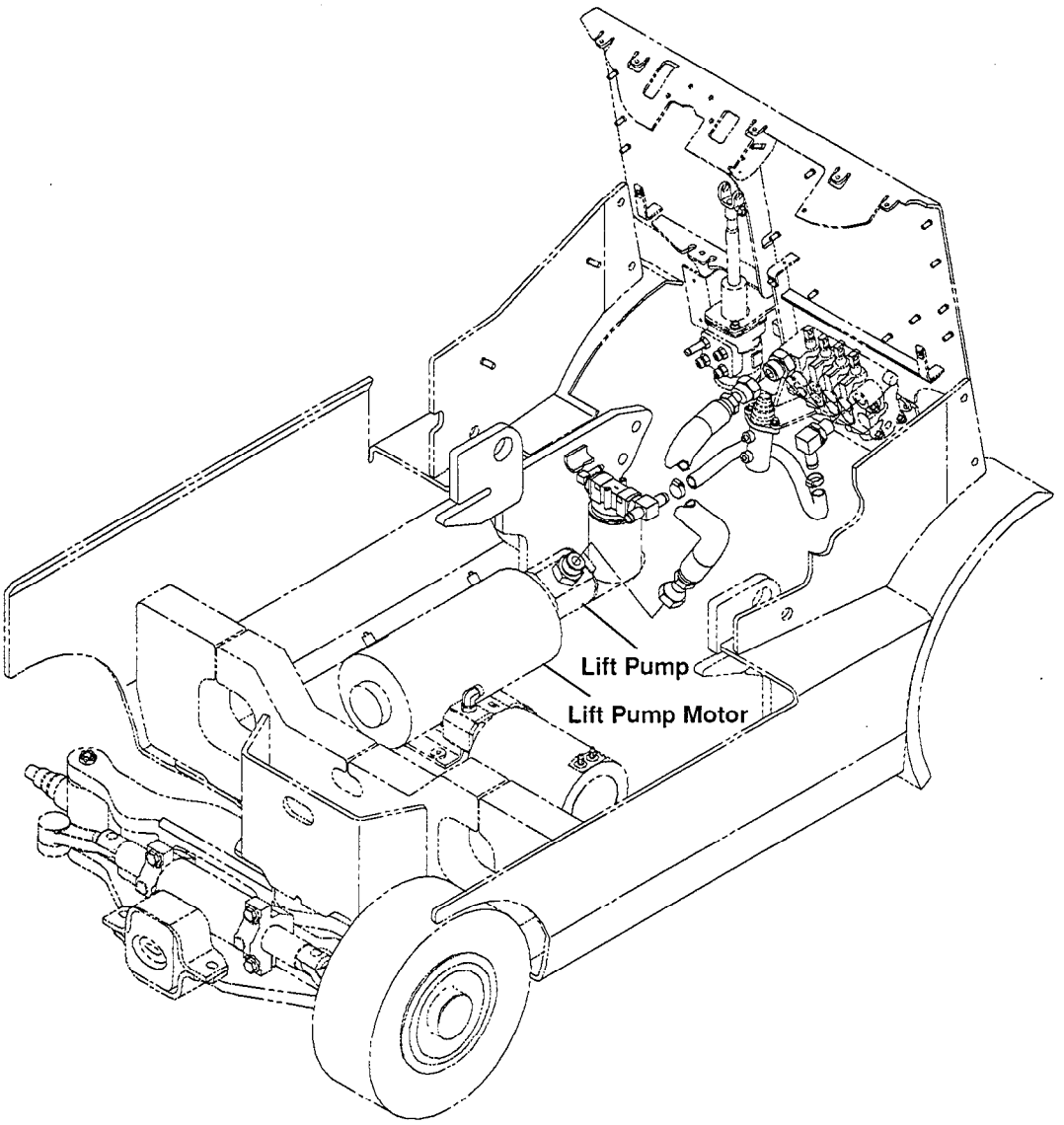

Copyrighted Material
Intended for CLARK dealers only
Do not sell or distribute

https://truckmanualshub.com/

LIFT PUMP MOTOR REMOVAL

1. Disconnect and remove battery.
2. Usually pump and motor are removed as an assembly.
3. Disconnect motor cables from motor.
4. Remove hydraulic lines from pump and cap ends.
5. Remove fasteners attaching motor to truck. Remove pump and motor assembly from truck.
6. Remove fasteners attaching pump to motor. Lift off pump and gasket and remove coupling

LIFT PUMP MOTOR DISASSEMBLY

NOTICE

If brushes have not been removed before disassembling motor, brushes must be lifted off commutator and held in raised position. This is done by lifting brush spring clip off end of brush and moving spring clip to one side of brush which traps or "locks" brush in place..

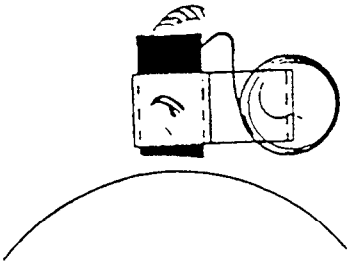

1. Put match mark on each end frame of motor and extend mark onto body. This will assure exact alignment of frames for assembly of motor.
2. Remove plastic brush covers.
3. Remove brushes if they are to be replaced. If brushes are not to be replaced, all brushes should be raised and locked in manner described above.
4. Use an impact tool to loosen (and also to torque at assembly) mounting screws in drive end frame.

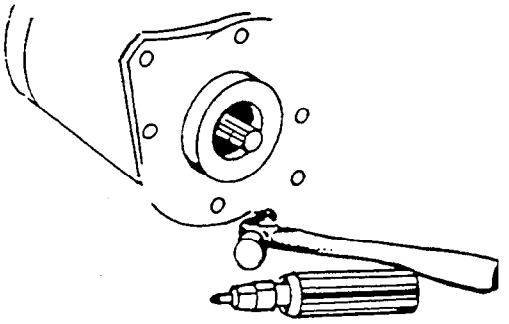

5. Use same procedure to remove screws in brush end frame.

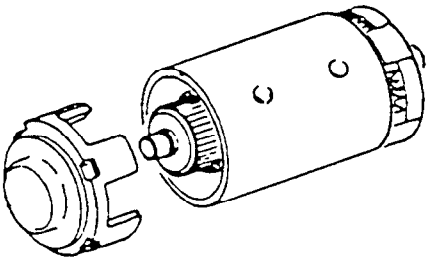

6. Remove brush end frame.
7. Remove drive end frame and armature assembly from body.

NOTE

Drive end frame and armature assembly can be removed first (for inspection of commutator and bearings).

Copyrighted Material
Intended for CLARK dealers only
Do not sell or distribute

https://truckmanualshub.com/

8. If necessary, remove (separate) drive end frame and bearing assembly from armature.

This is usually done by using a hydraulic press to force armature out of drive end bearing.

If a press is not available, it can be removed by careful use of a puller.

If this is method used, use care not to apply excessive or concentrated loads to aluminum end frame.

NOTE

The ventilation fan is not normally removed. If it is to be removed, it can be removed by using heat very carefully to expand it and allow it to be pulled off without damage.

9. To remove fan, use a puller over fan and against end of armature shaft. Exert a small pressure against fan. Use a propane torch to heat hub of fan around shaft.

When fan becomes loose (will be indicated by becoming loose on puller) it should be removed as quickly as possible.

After removal, clean shaft surface of armature.

10. Install new fan on shaft making sure it is tight fit.

Use Loctite Retaining Compound 40 or equivalent applied to inside of fan hub.

LIFT PUMP MOTOR INSPECTION

After motor has been disassembled, all components should be cleaned and inspected for wear and damage.

Thoroughly clean all components, except bearings and armature with a good grade petroleum-base cleaning solvent and then dry using compressed air.

The armature should be blown off with compressed air to remove brush dust and dirt from around commutator and windings. Bearings should be wiped with a clean cloth.

After cleaning and drying, inspect all components for problem areas that will require reconditioning.

1. COMMUTATOR END FRAME. Check brush holder insulation and wiring for cracks or any signs of burning. Check brush holders for wear, and check bearing recess for signs of wear.
2. DRIVE END FRAME. Check for cracks or other damage. Check bearing recess and snap ring groove for any signs of wear.
3. BEARINGS. Check bearings by turning them with fingers. If bearing has binding, gritty effects, excessive looseness, wobble, or turns very freely, it should be replaced.
4. ARMATURE. Check windings, commutator connections and commutator bars for any signs of burning or looseness. Check commutator for worn condition, excessive carbon build-up in undercuts between bars, and excessive runout. If brushes are to be replaced, the motor should be removed from the truck, disassembled and the armature turned. The commutator can usually be cleaned up with a very light cut if done every time the brushes are replaced. Check mica and undercut as necessary. This light cut will true any high bars and will assure proper life of new brushes. Refinish commutator surface if pitted or excessively worn. Check shaft bearing journals and internal spline for wear.
5. MOTOR BODY (Frame and Field Assembly). Inspect all insulation for burned, blackened or charred areas. Check coil connections and terminal studs.
6. COOLING FAN. Inspect for broken or loose sections.

MOTOR RECONDITIONING

1. COMMUTATOR REPAIR. Check commutator condition for carbon build-up in undercuts between commutator bars and for excessive wear and runout before proceeding further with disassembly. If necessary, or if brushes are to be replaced, commutator should be removed, turned and re-undercut.

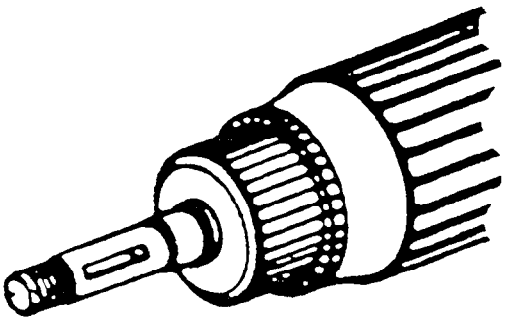

Copyrighted Material
Intended for CLARK dealers only
Do not sell or distribute

https://truckmanualshub.com/

2. BEARING REPLACEMENT. Remove bearing from drive end frame.

The bearing is retained with a snap ring. Remove internal snap ring from groove in frame at end of bearing, then press bearing out of groove.

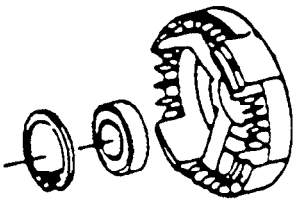

Install new bearing by pressing on outer race of bearing to force it into bore until it is firmly seated against shoulder.

Install snap ring to retain it.

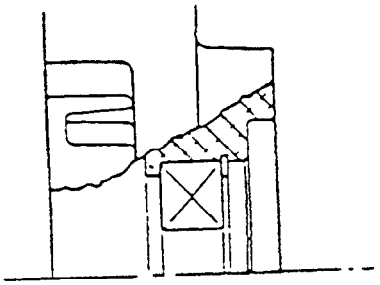

NOTE

Do not reuse bearings but replace with new.

3. If necessary, remove bearing from commutator end of armature shaft by using a bearing puller.

Protect end of armature shaft with a nut or thick flat washer.

Be careful not to damage commutator bars.

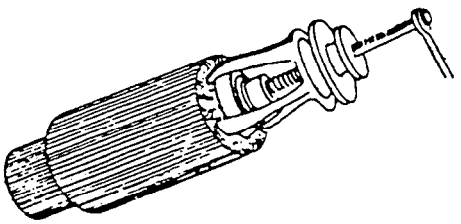

4. Install new bearing on armature shaft by pressing inner race of bearing firmly against shoulder on shaft.

5. BEARING LUBRICATION. Replacement bearings are packed with lubricant and need no further lubrication.

LIFT PUMP MOTOR ASSEMBLY

1. Press drive end frame assembly onto armature shaft until bearing inner race is firmly seated against shoulder on shaft.

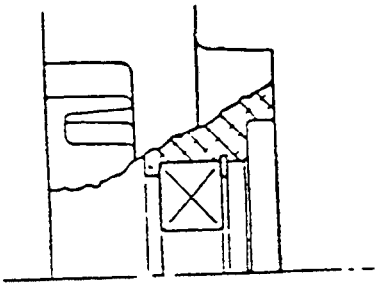

Section showing shaft in place against bearing.

NOTE

Install bearing on shaft by pressing on bearing inner race.

DO NOT PRESS OR USE FORCE AGAINST DRIVE END FRAME.

2. Install armature and drive end frame assembly into motor body.

Align match marks on end frame and motor body.

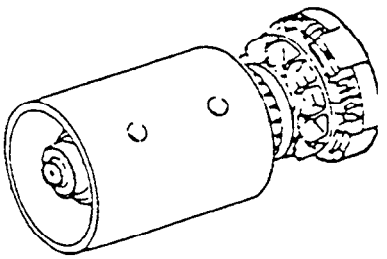

3. Install drive end frame mounting screws and tighten lightly to temporarily hold assembly. Tighten alternately to assure good mechanical alignment.

4. Install bearing spring (end thrust) washer into bearing bore in commutator end frame. Use thin film of grease to hold in place.

Copyrighted Material
Intended for CLARK dealers only
Do not sell or distribute

https://truckmanualshub.com/

NOTE

If brushes are installed, raise all brushes to locked position.

5. Assemble commutator end frame over bearings on armature until it joins motor body.

Be sure bearing spring washer has remained in place.

Make sure match marks are aligned.

6. Install commutator end cover mounting screws and tighten lightly to hold assembly temporarily. Tighten fasteners alternately to assure good mechanical alignment.
7. Fully tighten drive end frame mounting screws using impact tool set.
8. Use same tool set and procedure to tighten mounting screws in commutator end frame.
9. If brushes were not removed (replaced), set brushes to final (lowered) position, by moving brush springs to top of each brush.
10. If brushes were removed, install new brushes and brush springs by:

a) Inserting brushes in holder with lead wire in same position as when removed and make sure brush is free in holder.

b) Connect brush leads to correct terminals.

c) Install new brush spring clip on top of each brush.

LIFT PUMP MOTOR INSTALLATION

Normal practice is to install pump and motor as an assembly.

Refer to pump section for instructions of installation of pump on motor.

1. Position pump and motor assembly on truck. Install and tighten fasteners to a torque of [20-25 N.m] 117-221 lbf.in.
2. Install hydraulic lines on the pump.
3. Install motor cables on correct motor terminals.
4. Install battery.

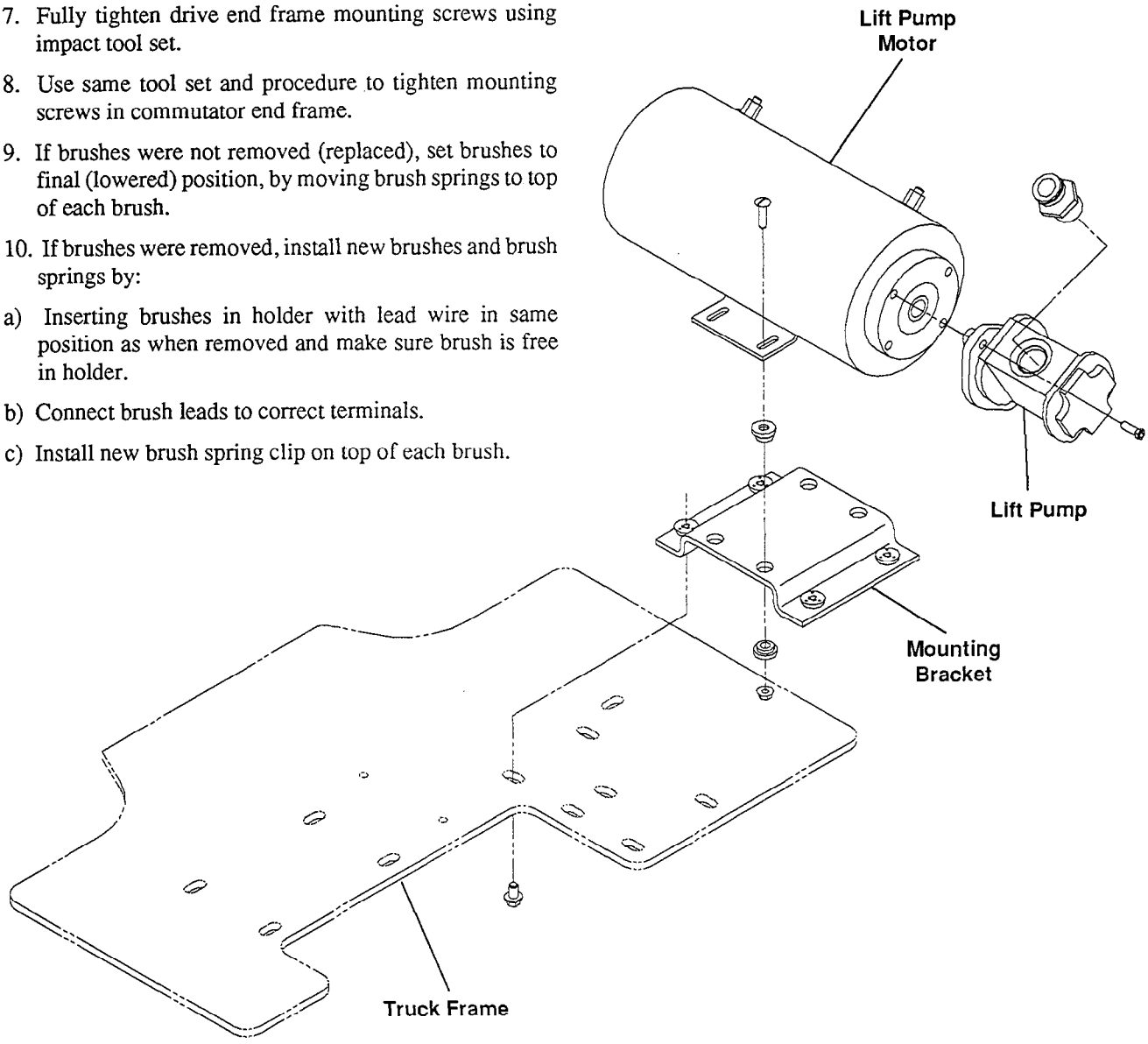

Copyrighted Material
Intended for CLARK dealers only
Do not sell or distribute

https://truckmanualshub.com/

Pump Motor Specifications

The motor is equipped with standard winding connections and meets latest revision of UL 583.

ROTATION

C.C.W.D.E.

Counterclockwise when viewed from drive end.

General

- Frame Size: 170.2 mm (6.7 in.) diameter.
- Weight (Approx.): 36.2 kg (80 lb).
- Internal Bearings on Pump End Commutator End: Bearings are double sealed and lubricated with high-temperature grease for the life of the bearing.

Motor Insulation

- Armature Components, Class H
- Commutator Components, Class H
- Field Components

External Connection Torque:
15.8–19.2 N•m (140–170 lb-in.)

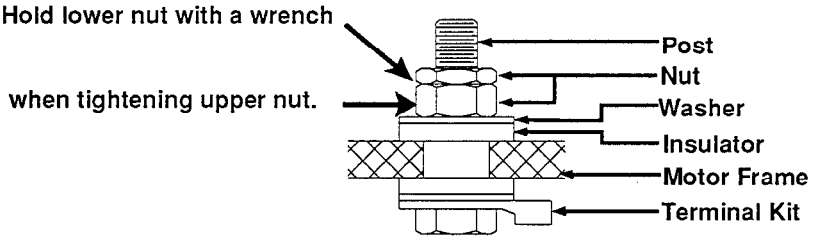

Brush Data

- 1 Brush per Holder
- 4 Brushes per Motor
- Maximum Length of Worn Brush: 15.75 mm (0.62 in.)
- Maximum Force per New Brush: 1077 gm (38 oz)
- Minimum Force per Worn Brush: 454 gm (16 oz)
- Brush Drop: 1.5 Volts @ 300 Amps

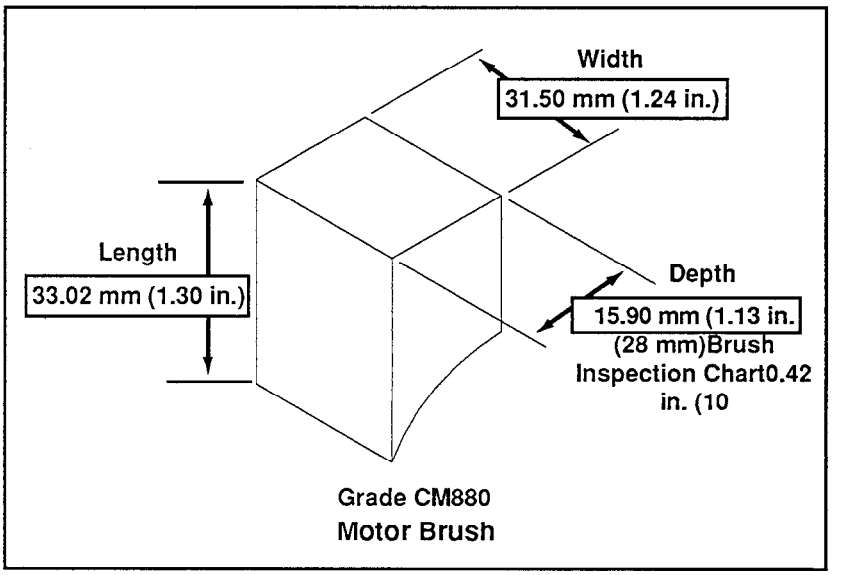

Copyrighted Material
Intended for CLARK dealers only
Do not sell or distribute

https://truckmanualshub.com/

Brush Inspection Chart

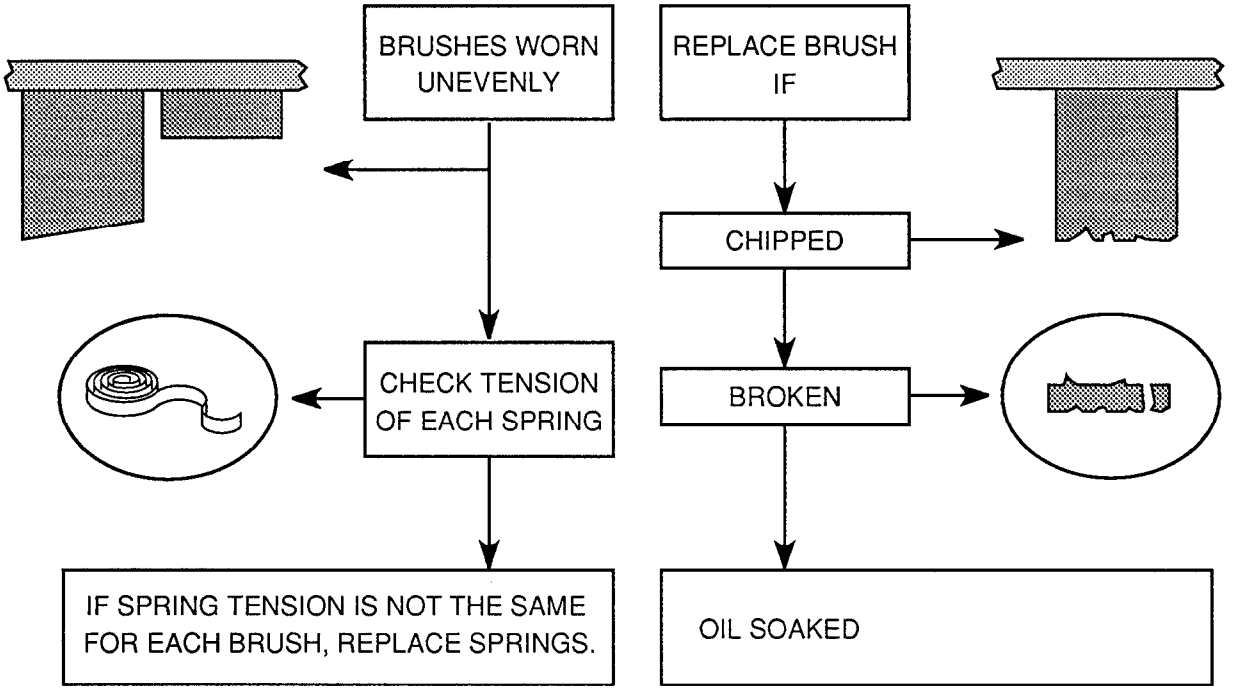

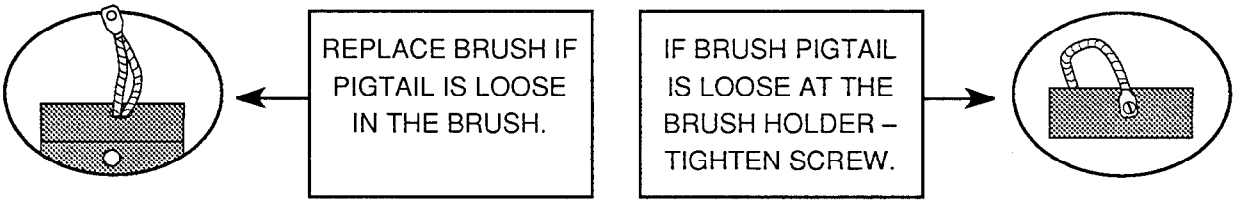

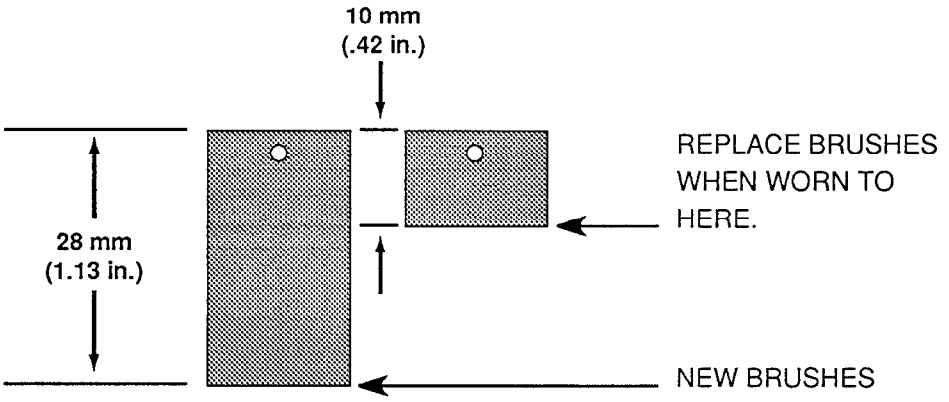

Copyrighted Material
Intended for CLARK dealers only
Do not sell or distribute

https://truckmanualshub.com/

Section 4

Steering Pump Motor

Safety 2

General Information 3

Operating Conditions 3

Steering Pump Motor (Permanent Magnet Type) 4
- Troubleshooting Prior to Disassembly 4
- Motor and Pump Removal 6
- Brush Removal and Inspection 7
- Motor Disassembly 7
- Armature Removal 8
- Motor Inspection 8
- Armature and Bearing Repair 9
- Bearing Lubrication 9
- Motor Assembly 9
- Motor and Pump Installation 11

Steering Pump Motor Specifications 11

Brush Inspection Chart 12

Copyrighted Material
Intended for CLARK dealers only
Do not sell or distribute

https://truckmanualshub.com/

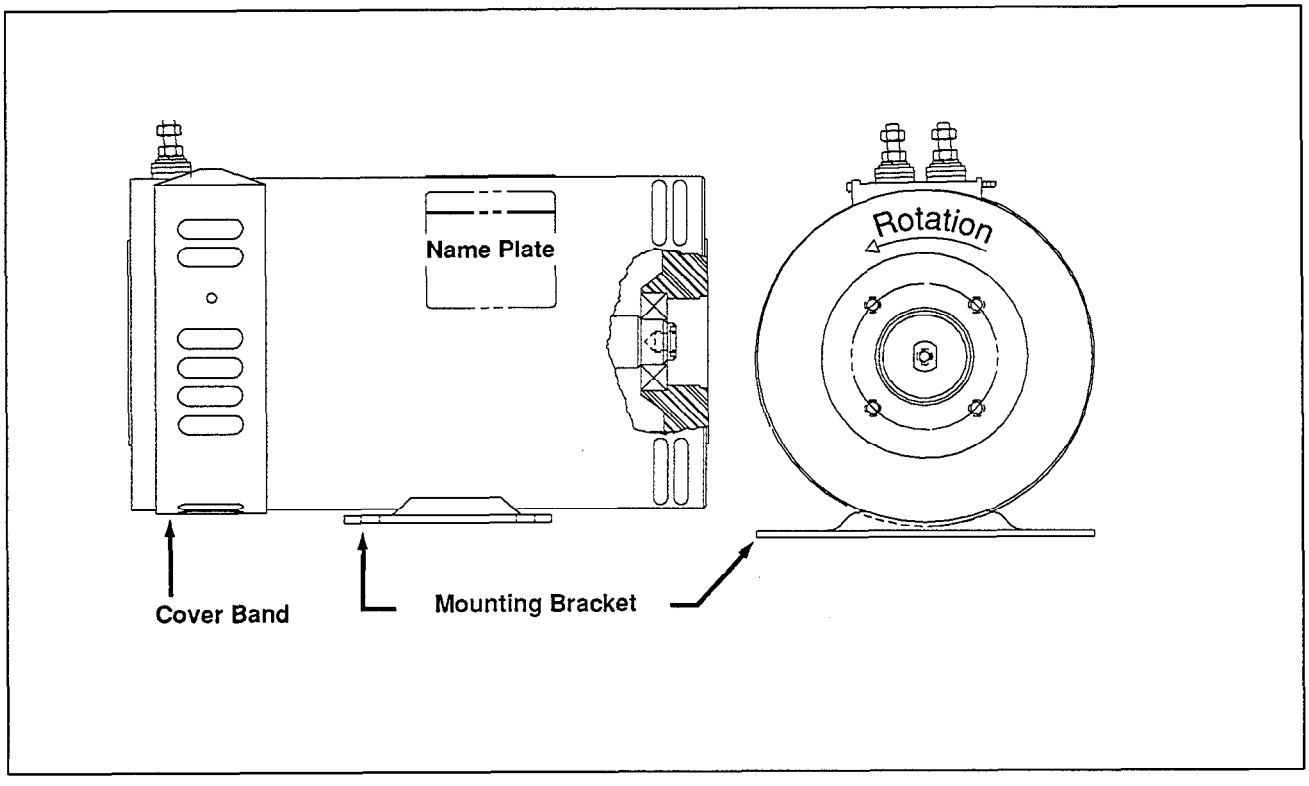

Safety

⚠ WARNING

Wear eye protection and protective clothing when drying with air pressure. Reduce air pressure to 207 kPa (30 psi). Debris removed with air pressure can cause injury.

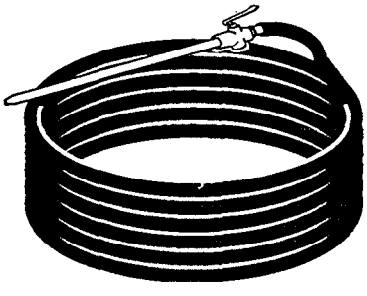

Remove all jewelry before working on truck.

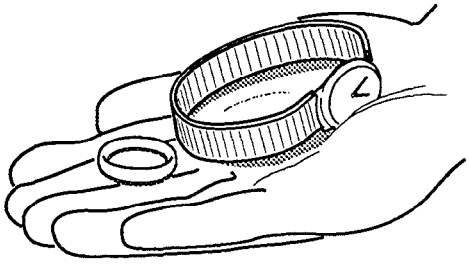

Always wear safety glasses.

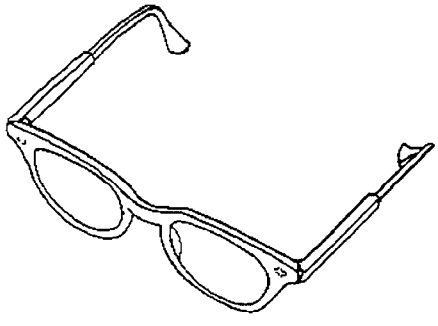

Use a torque wrench to tighten terminal connections.

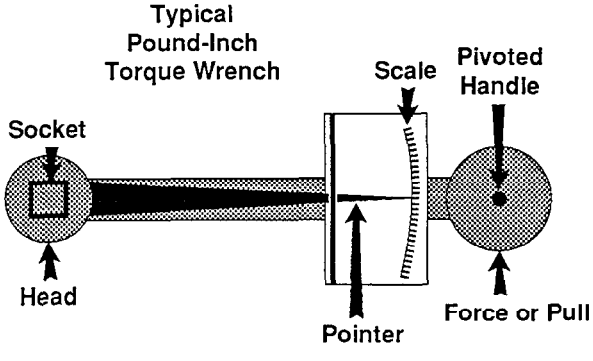

Copyrighted Material
Intended for CLARK dealers only
Do not sell or distribute

https://truckmanualshub.com/

General Information

A routine maintenance schedule with recorded findings is the best way to reduce costly shut-downs and repair of equipment during operating hours.

The goal of any maintenance program, *long life and trouble-free operation*, depends upon the time spent making inspections and correcting minor problems as they occur.

The key to planned maintenance of the brush and commutator is recognizing undesirable brush and commutator conditions. If this is done, corrective action can be taken before a major component is damaged beyond serviceability. The brushes and commutator should be inspected for even wear and good commutation at every PM.

Operating Conditions

The operating environment of lift truck motors varies widely. The service frequency shall depend upon the severity of operating conditions.

Normal Service: An eight-hour day of indoor or outdoor material handling.

Severe Service: Extended operating hours or constant usage.

Extreme Service:
- Chemical processing
- Freezer operation
- Processing plants (poultry, meat)

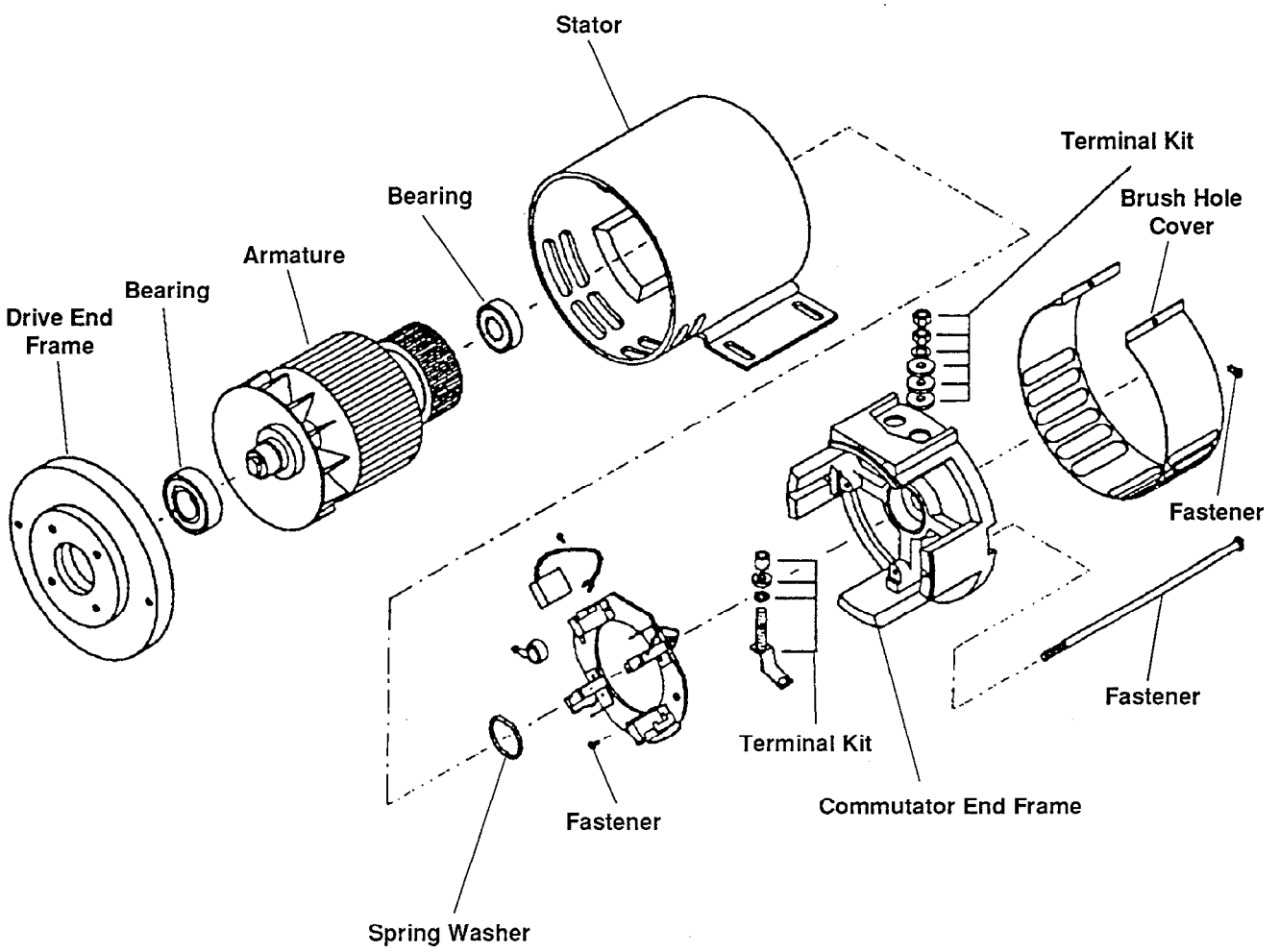

Copyrighted Material
Intended for CLARK dealers only
Do not sell or distribute

https://truckmanualshub.com/

Steering Pump Motor (Permanent Magnet Type)

The permanent magnet motor differs from conventional DC motors in that the field winding has been replaced with ceramic magnet pole pieces. **Do not impact, drop or squeeze the motors. This can damage the ceramic pole pieces, making motor unfit for use.**

Troubleshooting Prior to Disassembly

1. Read the nameplate to become familiar with the motor - especially the rated voltage.
2. Try to turn the shaft by hand. Keep motor leads separated while doing this. If the shaft turns freely, go to step 4. If the shaft won't turn, proceed to step 3.
3. The shaft could be tight for a number of reasons. This check is to determine if the tightness is of a temporary nature only.

   Obtain a power source to produce the rated voltage. **DO NOT make a permanent connection.** Touch the motor leads quickly to the power supply - just long enough to observe if the shaft turns. If it turns, hold the motor leads on the power supply for a longer time. If the motor sounds normal, go to step 4. If the motor sounds noisy, it should be disassembled. (See procedure in this section.)
4. Connect an ammeter in the circuit as shown below. With rated voltage applied and the shaft running free, the ammeter should read less than 20% of the nameplate full load current, indicating the original problem is external to the motor. A higher ammeter reading indicates a faulty armature.

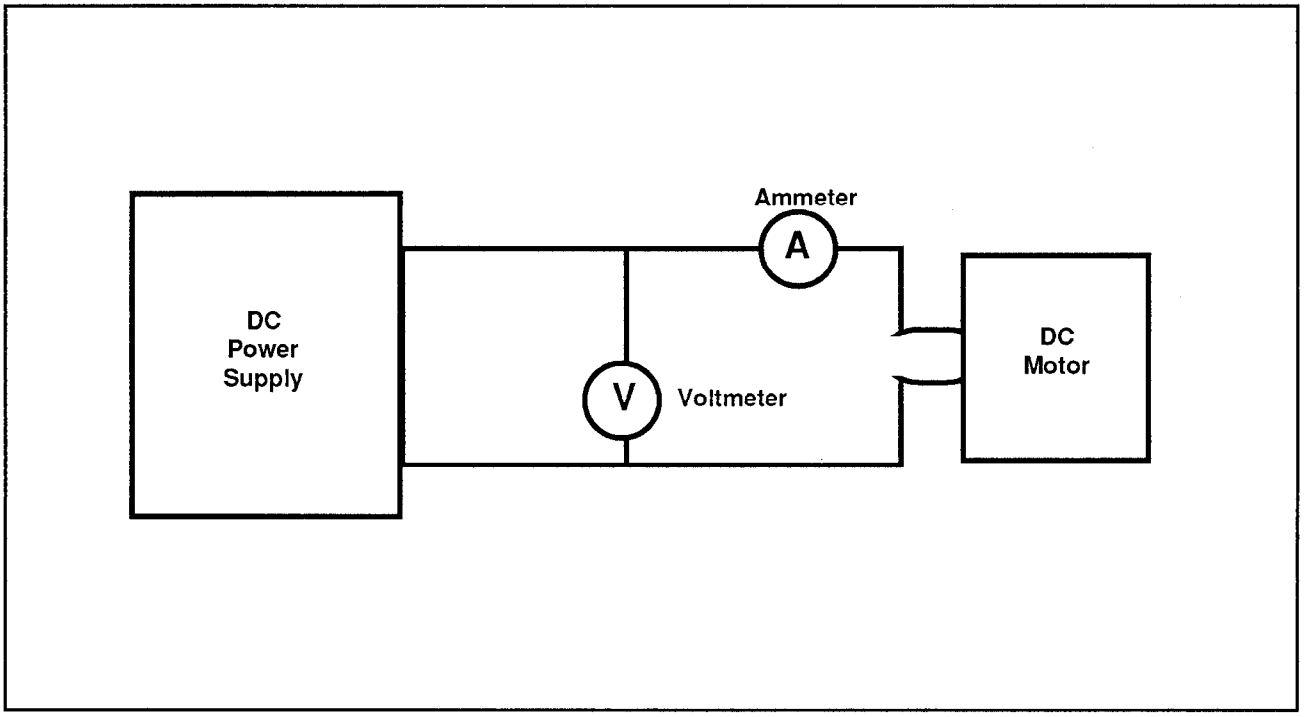

Copyrighted Material
Intended for CLARK dealers only
Do not sell or distribute

https://truckmanualshub.com/

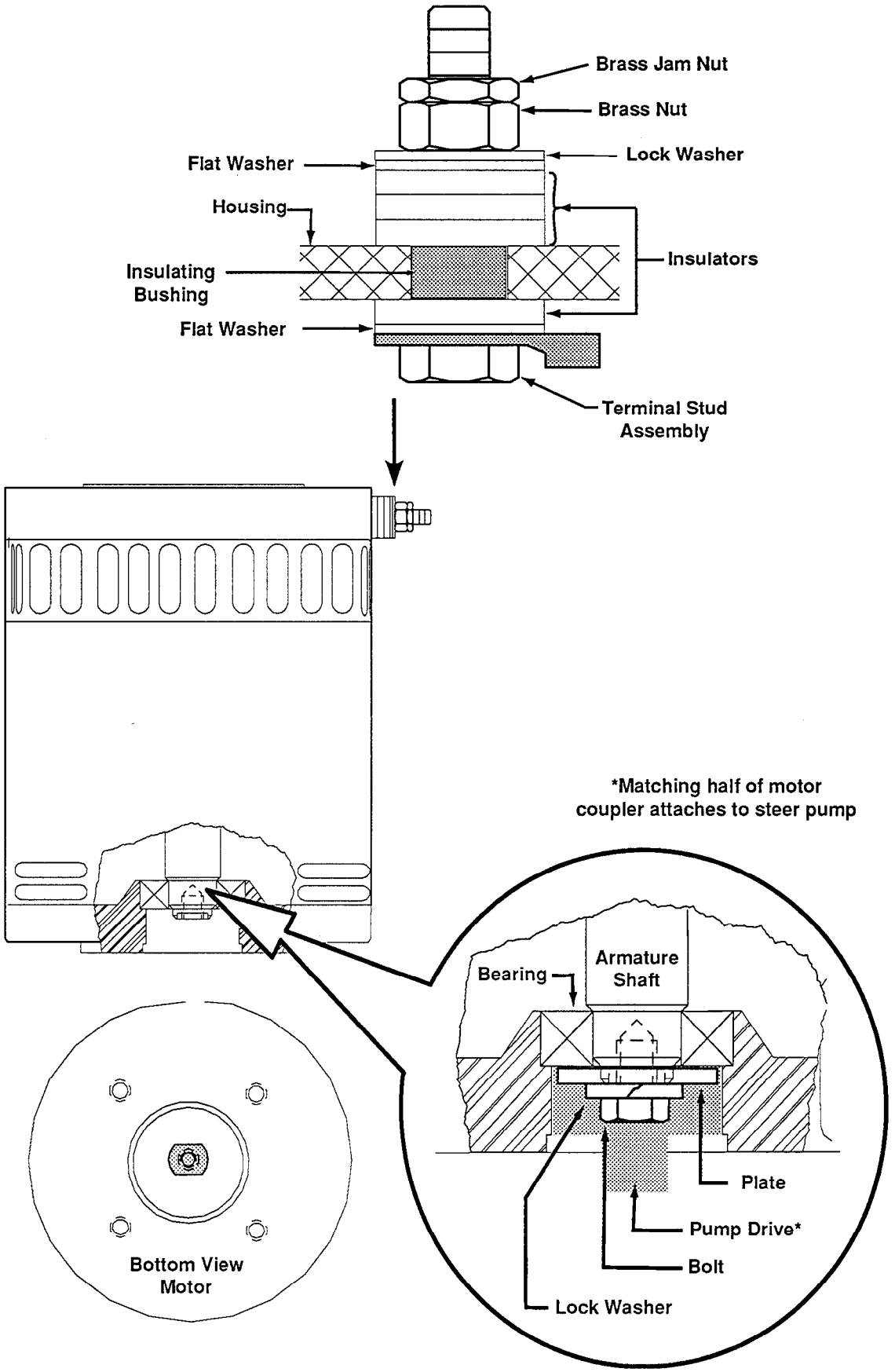

Copyrighted Material
Intended for CLARK dealers only
Do not sell or distribute

https://truckmanualshub.com/

⚠ CAUTION

Park truck safely before beginning work:

1. **Park truck on a hard, level and solid surface, such as a concrete floor with no gaps or breaks.**
2. **Put upright in vertical position and fully lower the forks or attachment.**
3. **Put all controls in neutral. Turn key switch OFF and remove key.**
4. **Apply the park brake and block the wheels.**
5. **Disconnect the battery.**
6. **Discharge capacitor.**

STEER PUMP MOTOR REMOVAL

1. Disconnect and remove battery.
2. Apply parking brake.
3. It is normal to remove pump and motor as a unit. Disconnect motor leads and move them out of way.
4. Remove bolts holding pump to mounting bracket.
5. Remove hydraulic hoses from pump and cap ends.

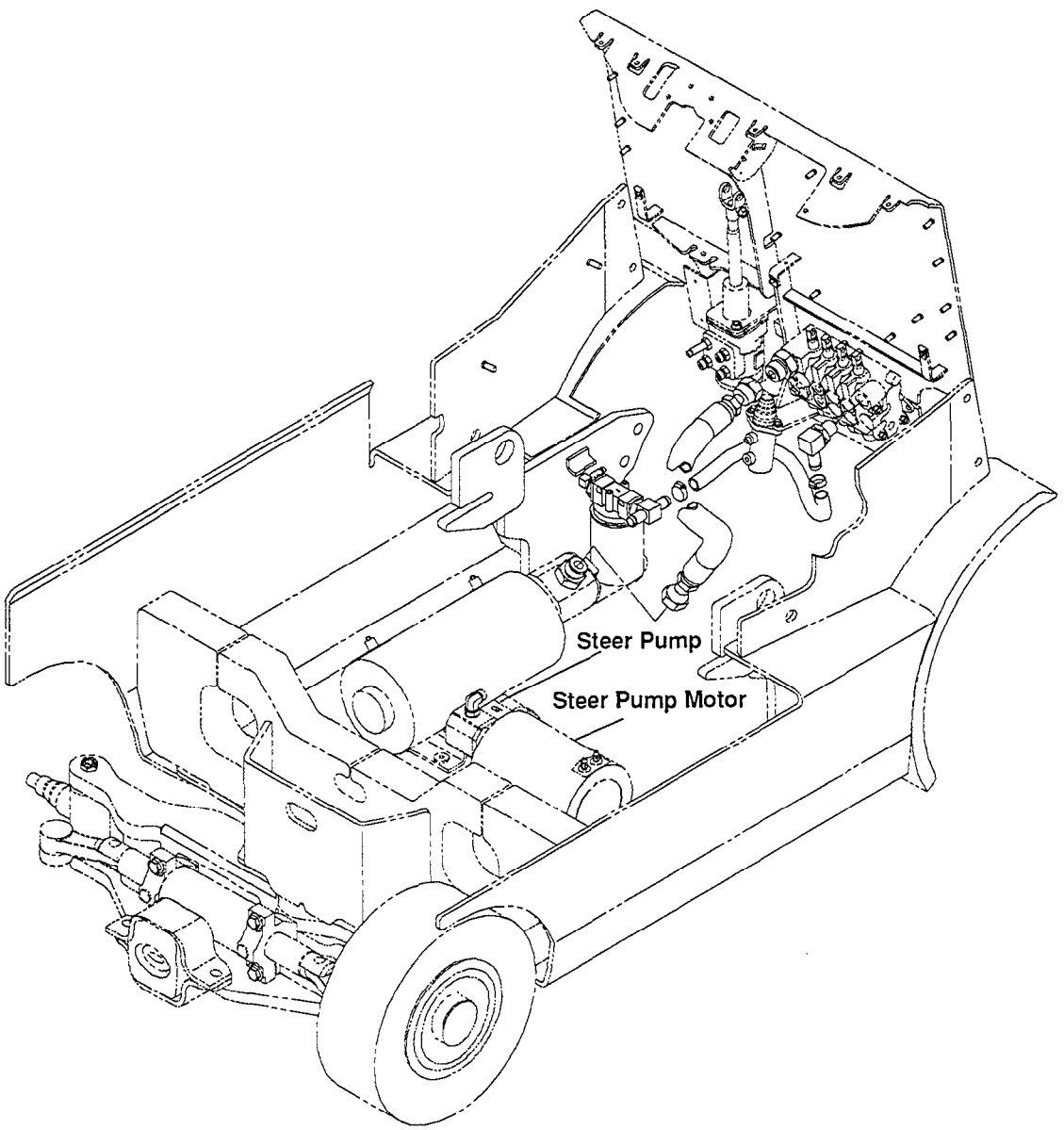

Copyrighted Material
Intended for CLARK dealers only
Do not sell or distribute

https://truckmanualshub.com/

BRUSH REMOVAL AND INSPECTION

1. Loosen and remove clamping screw in brush cover band.

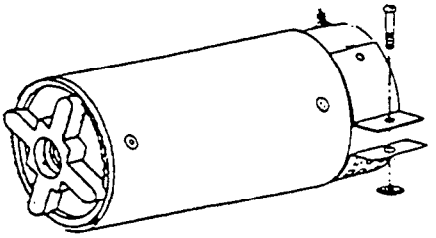

2. Remove brush cover band segments by prying cover pins out of engagement in motor housing.
3. Air clean inside of motor around brushes and commutator, using dry (moisture-free) compressed air.

NOTE

Observe how brushes are assembled in brush holders and position of brush lead (shunt). New brushes must be installed in same manner.

4. Brushes should be removed, as follows:

a) Remove brush spring clip from its mounting on top of brush assembly. Use a brush hook to reach into motor and lift brush springs.

b) Disconnect brush assembly lead.

c) Lift brush from brush holder.

5. **Remove any carbon dust or dirt from brush assembly.**

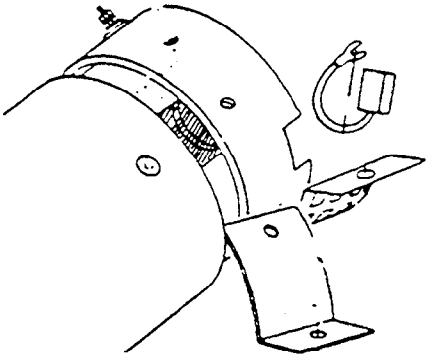

6. Inspect condition of brushes.

Remove each brush from brush holder and inspect brushes and commutator for worn condition and uneven wear, arcing, etc.

7. When reassembling motor, replace brushes and brush springs (complete set), as needed, by reversal of above procedure

NOTE

If brushes have not been removed before disassembling motor, brushes must be raised off commutator and held in "locked position." This is done by moving brush spring clip from top of brush and placing it against side of brush to hold (lock) brushes in a raised position in brush holders.

STEER PUMP MOTOR DISASSEMBLY

IMPORTANT

Do not place stator ring (motor housing) in any mechanical holding device (e.g., vise) during disassembly or assembly operation. Permanent distortion or other damage will result. With motor disassembled, care must also be taken not to drop stator ring assembly, since it can be distorted. Motor may be held by clamping on mounting bracket.

NOTE

Before disassembling motor, note if there are match marks on stator assembly housing and commutator cover. If marks are not visible, use a scribe tool to make match marks. These marks will be used at assembly.

IMPORTANT

PERMANENT MAGNET MOTORS SHOULD BE DISASSEMBLED ONLY IN A CLEAN AREA FREE OF FERROUS (IRON, STEEL) METAL CHIPS.

1. Remove brush cover band.
2. Remove brushes and brush springs.

IMPORTANT

If brushes are left installed, raise all brushes to locked position.

Copyrighted Material
Intended for CLARK dealers only
Do not sell or distribute

https://truckmanualshub.com/

3. Remove pump drive coupling segment from motor shaft end.
4. Loosen motor assembly thru-bolts at commutator-end cover.
5. Remove thru bolts from assembly.
6. Scribe a match mark on cover and housing, then remove drive end (pump mounting) cover.

Carefully pry on cover to loosen. Tap lightly on pry bar, if necessary.

7. The drive end bearing may now be inspected.

NOTE

Be sure parts have match marks before disassembly.

8. Remove commutator end cover for inspection of commutator and commutator end bearing.

Remove and save bearing spring washer from cover bore.

9. Carefully inspect commutator-end bearing and commutator surface for wear, burning, or other damage.

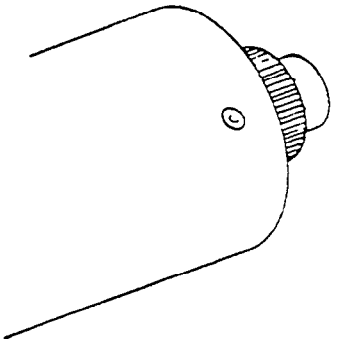

NOTE

It may not be necessary to remove armature, unless other inspection and tests show requirement for repair or servicing of stator assembly, armature or bearings. See discussion of procedure below.

ARMATURE REMOVAL - RECOMMENDED PROCEDURE

To avoid damage to either armature or permanent magnets, it is recommended that armature be removed only with motor housing and armature shaft positioned vertically.

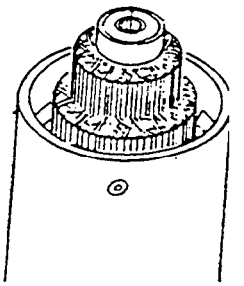

1. Reassemble either commutator-end cover or drive end cover to armature shaft and stator housing.
2. Support and hold stator housing firmly on end cover (a second person is suggested).
3. Pull armature out of assembly in one quick motion.

NOTE:

IT IS IMPORTANT THAT PULLING MOTION ON THE ARMATURE BE CONTINUOUS. DO NOT PULL PART WAY OUT AND RELEASE.

If pulling motion is not continuous it will allow magnets to pull armature back into stator and cause severe damage.

4. Remove end cover from stator housing.

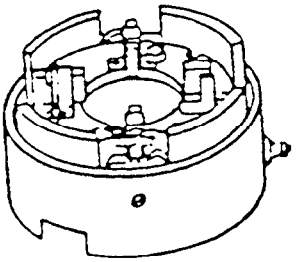

(Commutator-end cover with brushes in "locked" position shown).

STEER PUMP MOTOR INSPECTION

With motor disassembled, go through following checklist to locate problem:

A. Bearings - Should spin smoothly and easily, have ample lubrication and be free of corrosion. Replace bearings if they are worn out, damaged, or have been removed from armature shaft.

B. Armature. Check for grounds and shorted turns. Check commutator for worn condition, excessive carbon build-up in undercuts between bars, and excessive runout. Refinish commutator surface if pitted or excessively worn.

Copyrighted Material
Intended for CLARK dealers only
Do not sell or distribute

https://truckmanualshub.com/

C. Stator. Check magnets to be sure they are securely mounted.

D. Inspect wire harness and all connections on brush assembly for signs of damage due to overheating.

E. Brushes. Remove any carbon dust or dirt from brush ring assembly. Check brushes for wear and that they are free in brush holders.

ARMATURE AND BEARING REPAIR

1. Check commutator condition for carbon build-up in undercuts between bars and excessive wear and runout, prior to reassembly. If necessary, commutator should be turned and re-undercut.
2. Remove bearings with a standard ball bearing puller. Use extreme care not to damage armature with bearing puller.

NOTE

Do not reuse bearings which have been removed from armature shaft.

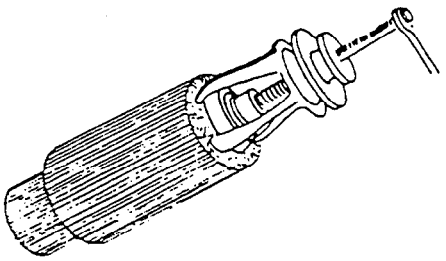

Typical view of bearing puller shown.

3. **Install new bearings on armature shaft. New bearings should be installed by pressing inner race of bearing into correct position against shoulder on armature shaft.**

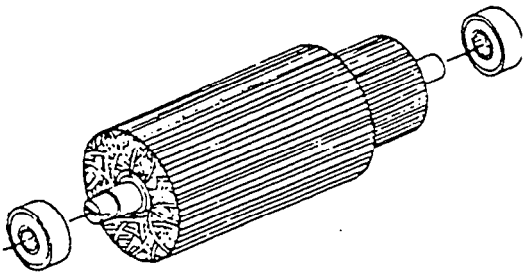

BEARING LUBRICATION

Replacement bearings are packed with lubricant during manufacture and require no further lubrication during life of bearing.

STEER PUMP MOTOR ASSEMBLY

1. Place commutator cover on a work bench with brush assembly facing upward.

NOTE

If brushes are installed, raise all brushes to locked position.

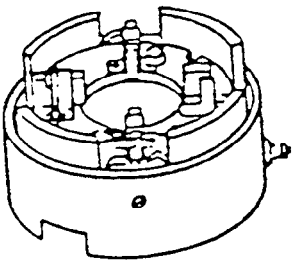

2. Place bearing spring washer into bearing bore in commutator cover.

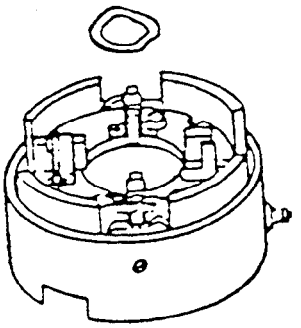

3. Take a complete armature assembly, with bearings installed, and insert comutator end bearing into bearing bore of cover.

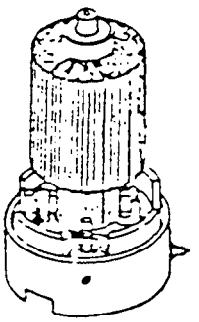

Keep armature assembly in a vertical position.

Copyrighted Material
Intended for CLARK dealers only
Do not sell or distribute

https://truckmanualshub.com/

4. Put complete stator assembly over vertical armature, and into position on commutator cover.

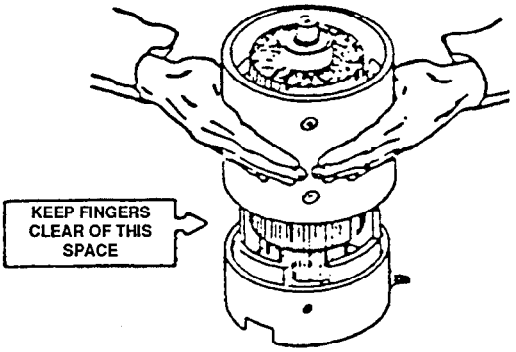

CAUTION

Care must be exercised at this point. There is a strong magnetic attraction between stator assembly and armature, which tends to pull stator assembly rapidly downward. It is important to have a firm grasp on stator assembly and be sure fingers are free from space between stator assembly and commutator cover.

5. The stator assembly must be placed in a definite relationship with commutator cover in order to obtain a neutral brush setting.

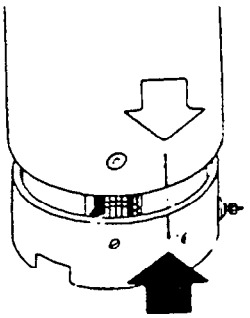

There should be match-marks on both items.

6. Assemble drive end cover in correct relationship. Install mounting thru bolts and tighten alternately to ensure a good mechanical alignment.

Do not use hammer or excessive force.

7. **If brushes were not removed (replaced), set brushes to final (lowered) position, by moving brush springs to top of each brush.** If brushes were removed, refer to step 8, below.

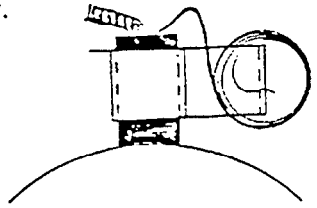

8. Install new brushes by reversing removal procedure:

a) Install brush with lead wires positioned as when removed.

b) Install brush assembly into brush holder. Be sure all brushes are free in holder.

c) Connect brush lead assembly.

d) Install brush spring clip on top of brush.

9. Install brush cover.

10. Install pump drive coupling segment.

11. Spin shaft by hand to check if it is free.

Be sure motor leads (if attached) are not touching together.

If leads are touching, a generator action will give effect of friction in motor.

12. A no-load test can be performed.

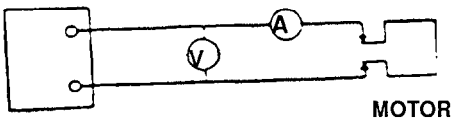

At rated voltage, observe no-load current. It should be less than 20% of name plate full-load current.

A higher reading indicates:

1. Brushes are not on neutral setting (check match-marks for exact alignment).

2. Faulty armature.

Copyrighted Material
Intended for CLARK dealers only
Do not sell or distribute

https://truckmanualshub.com/

STEER PUMP MOTOR INSTALLATION

1. It is normal practice to install pump and motor as an assembly.
2. Attach hydraulic lines to pump.
3. Position motor on mounting frame as shown
4. Tighten fastener to a torque of [40-45 N.m] 30-33 lbf.ft.
5. Install power cables on motor terminals.
6. Replace battery.

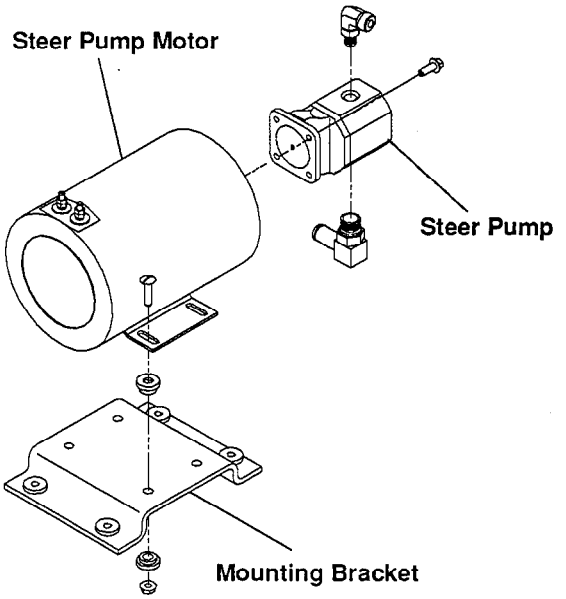

Steering Pump Motor Specifications

The motor is equipped with standard winding connections and meets latest revision of U.L. 583.

General

- Frame Size: 165.1 mm (6.5 in.) diameter.
- Weight (Approx.): 15.4 kg (34 lb).
- Internal Bearings on Pump End Commutator End: Bearings are double sealed and lubricated with high-temperature grease for the life of the bearing.

Motor Insulation

- Armature Components, Class H
- Commutator Components, Class H
- Field Components

Brush Data

- 1 Brush per Holder
- 4 Brushes per Motor
- Maximum Length of Worn Brush: 15.9 mm (0.375 in.)
- Maximum Force per New Brush: 1077 gm (38 oz)
- Minimum Force per Worn Brush: 454 gm (16 oz)
- Brush Drop: 0.05 Volts @ 29 Amps

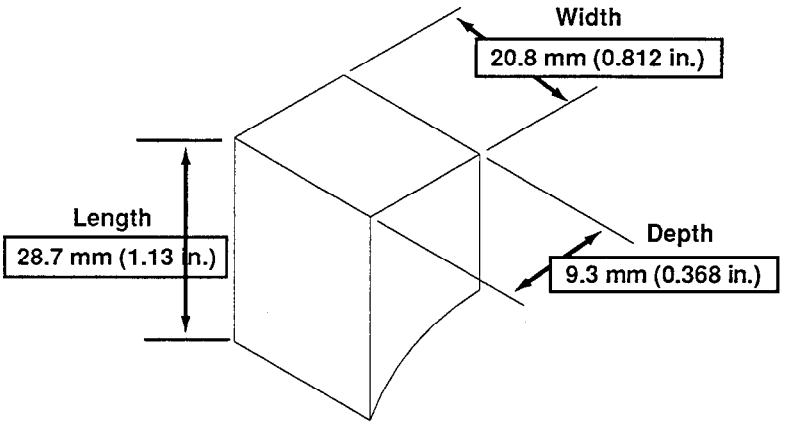

Grade CM880
Motor Brush

Copyrighted Material
Intended for CLARK dealers only
Do not sell or distribute

https://truckmanualshub.com/

Brush Inspection Chart

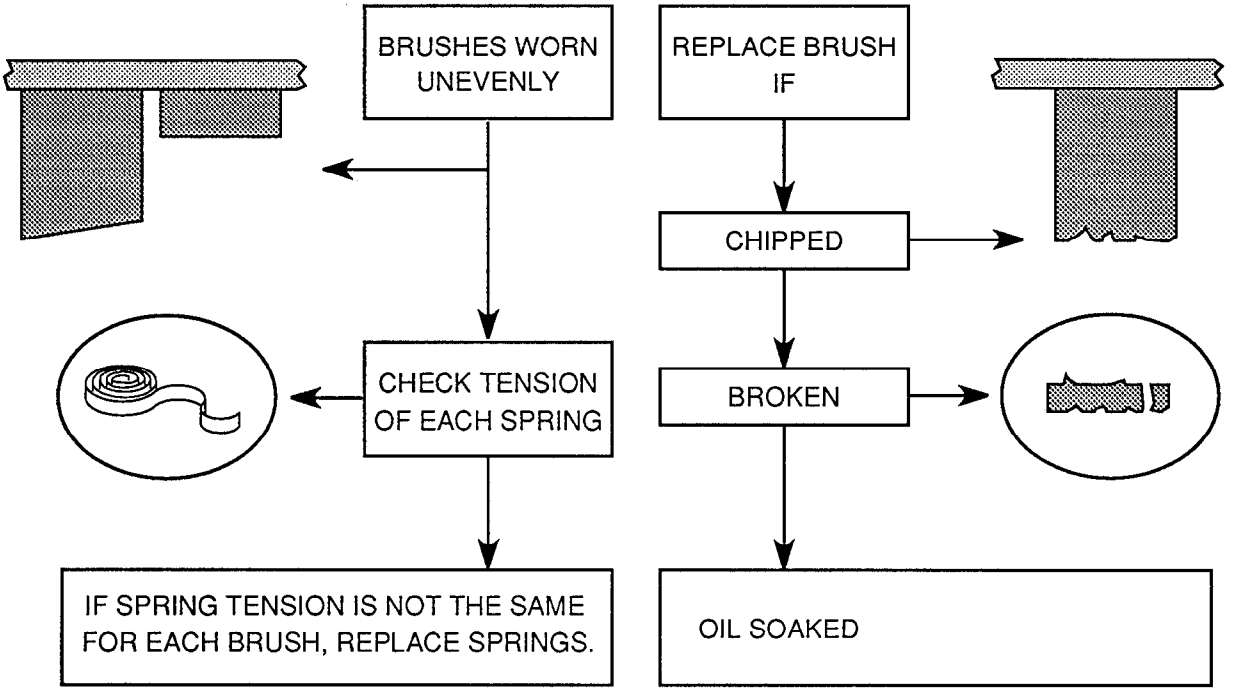

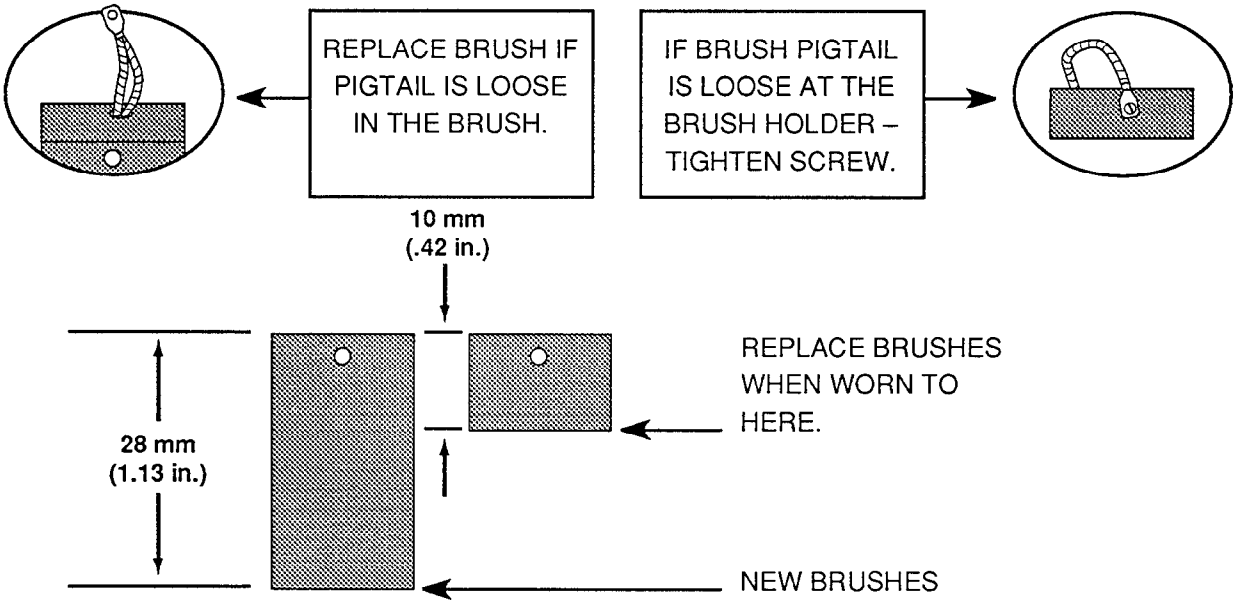

Copyrighted Material
Intended for CLARK dealers only
Do not sell or distribute

https://truckmanualshub.com/

GROUP 17

ELECTRICAL SCHEMATICS AND CONTACTORS

Wiring Schematics and Diagrams ..... Section 1
Contactors ..... Section 2

Copyrighted Material
Intended for CLARK dealers only
Do not sell or distribute

https://truckmanualshub.com/

Section 1

Wiring Diagrams

Standard Wiring Diagram 3
Standard Wiring Diagram with Pump Control 4
High Performance Wiring Diagram 5
High Performance Wiring Diagram with Pump Control 6

Copyrighted Material
Intended for CLARK dealers only
Do not sell or distribute

https://truckmanualshub.com/

THE PARTY POSSESSING THIS DOCUMENT ACKNOWLEDGES READING THE RESTRICTIVE LEGEND, AND THAT THE DATA DISCLOSED THEREIN IS PROPRIETARY TO THE COMPANY, AND WILL BE MAINTAINED IN CONFIDENCE BY THE RECIPIENT WHILE IN ITS POSSESSION, AND THEREAFTER, AND RETURNED TO THE COMPANY UPON REQUEST, INCLUDING ALL DERIVATIVE MATERIALS, OR COPIES THEREOF, AND NOT DISCLOSED TO OTHERS WITHOUT THE PRIOR WRITTEN PERMISSION OF THE COMPANY.

IN-24947

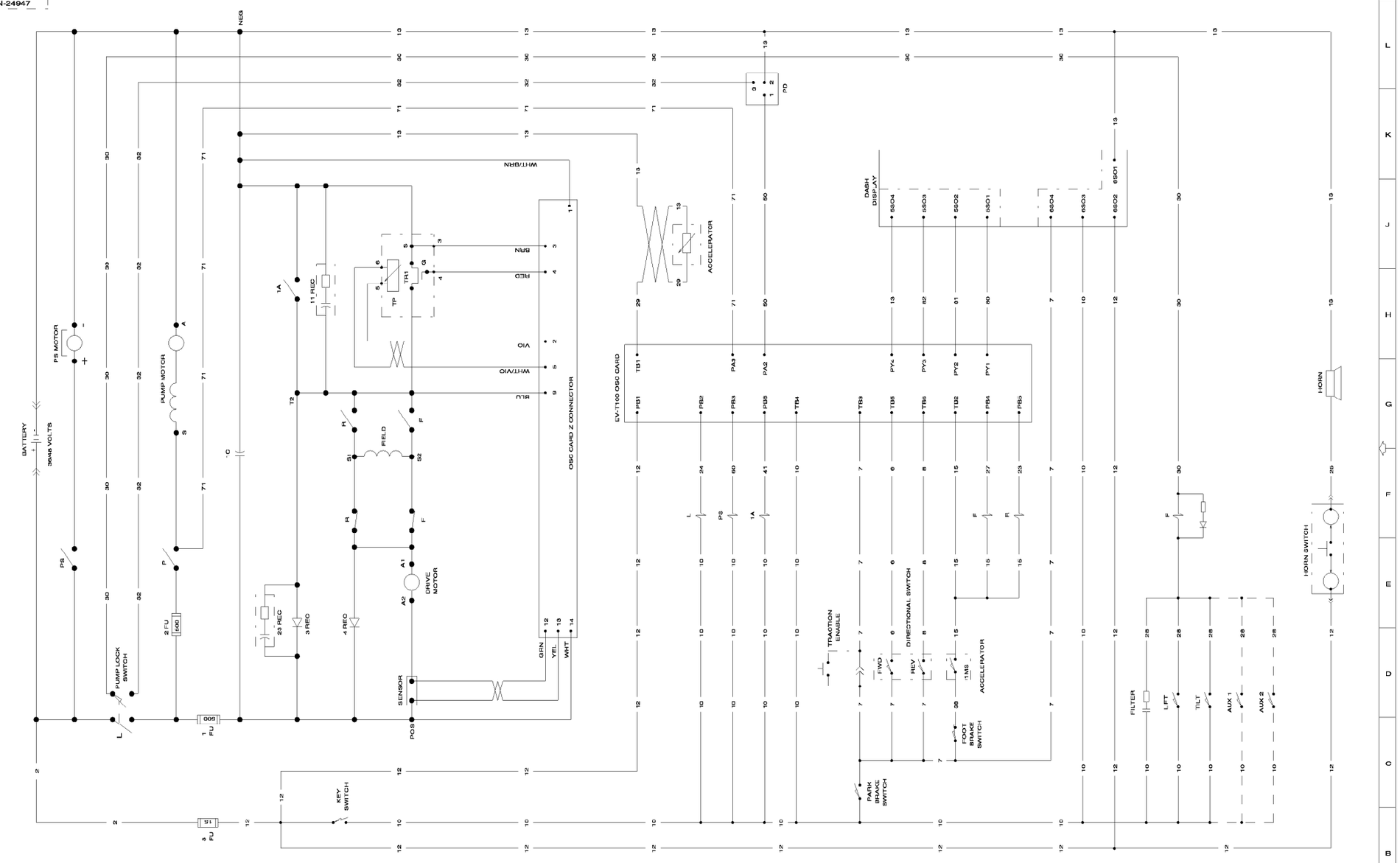

DESIGN CONTROL	METRIC	DIM ARE IN MM UNLESS ONE MILLIMETER EXCEPT AS NOTED
F		

UNPUBLISHED WORK. ALL RIGHTS RESERVED ©

DWN. C. RAO	16MAR95	
CHK. SEKISARSA	10MAY96	
PR. F960261	10MAY96	

WIRING DIAGRAM (STANDARD)

CLARK — DWG NO. IN-24947

ECG 20/32

E NO SCALE | WT | SHEET 1 OF 2

REV	ZONE	DESCRIPTION	ECO NOTICE	DATE	APPROVAL
B		RELEASED	F960261	10MAY96	CJR/AKS
A		PRELIMINARY		16MAR96	CJR/AKS

MATL. | FINIT. | HEAT TREAT

https://truckmanualshub.com/

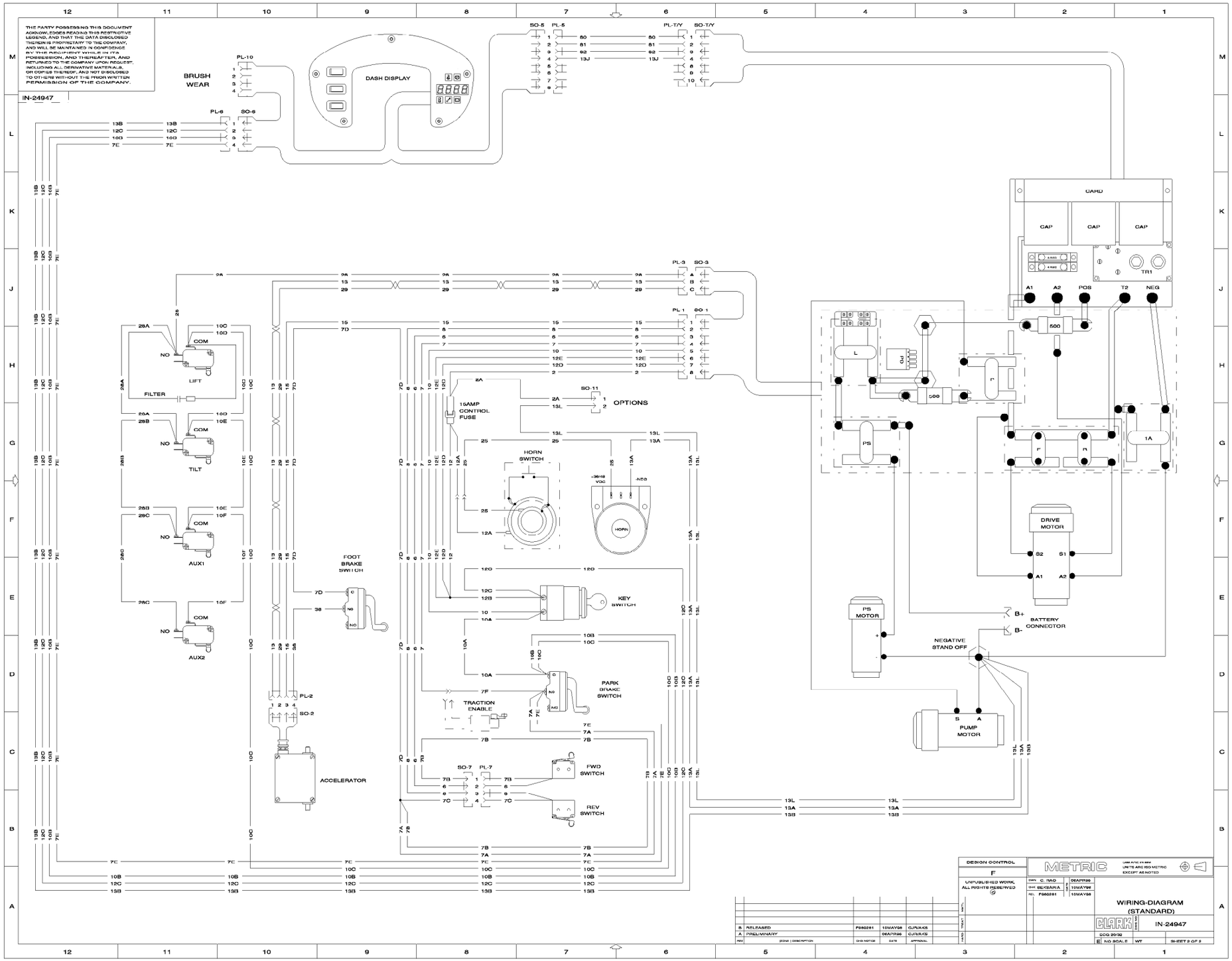

https://truckmanualshub.com/

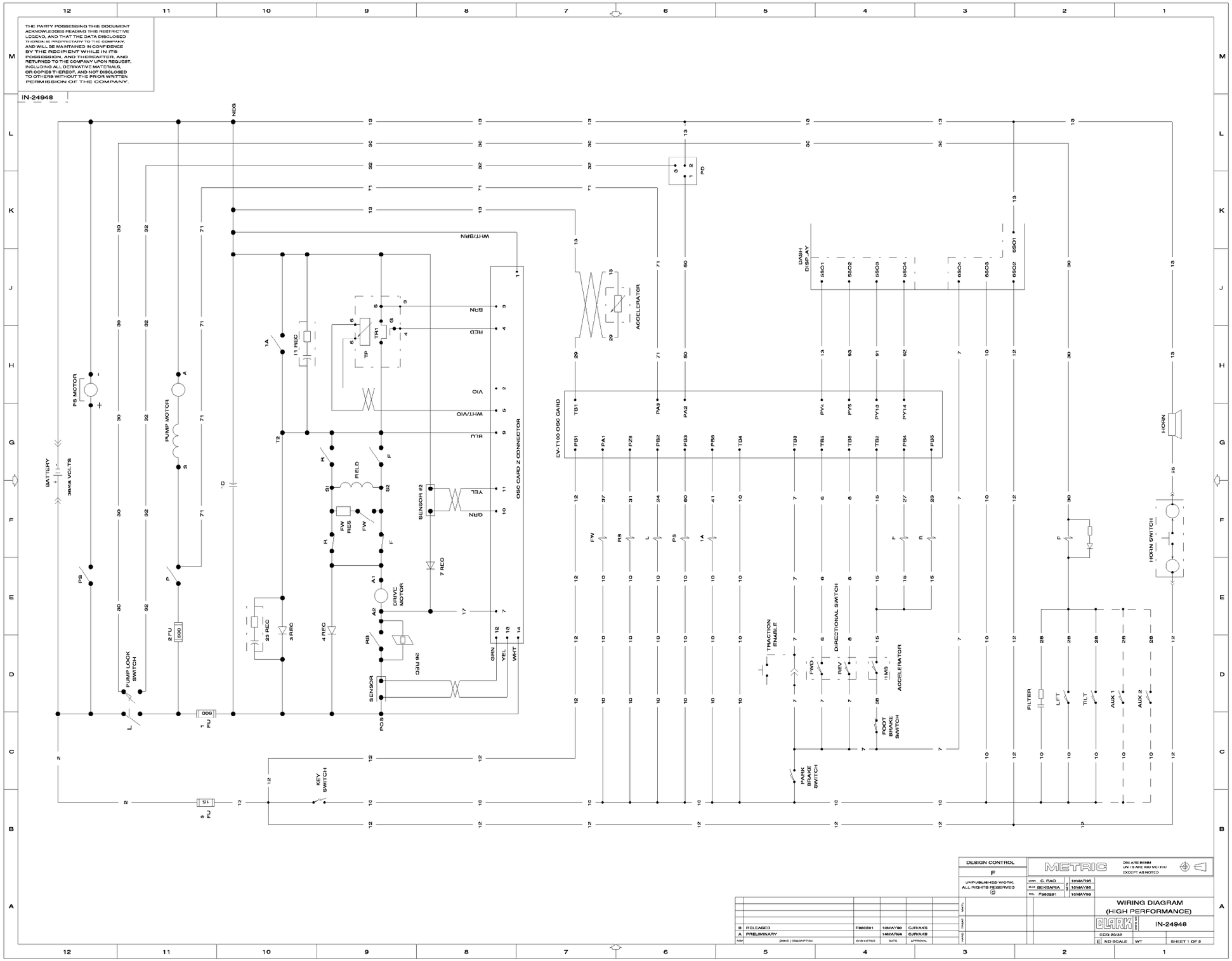

https://truckmanualshub.com/

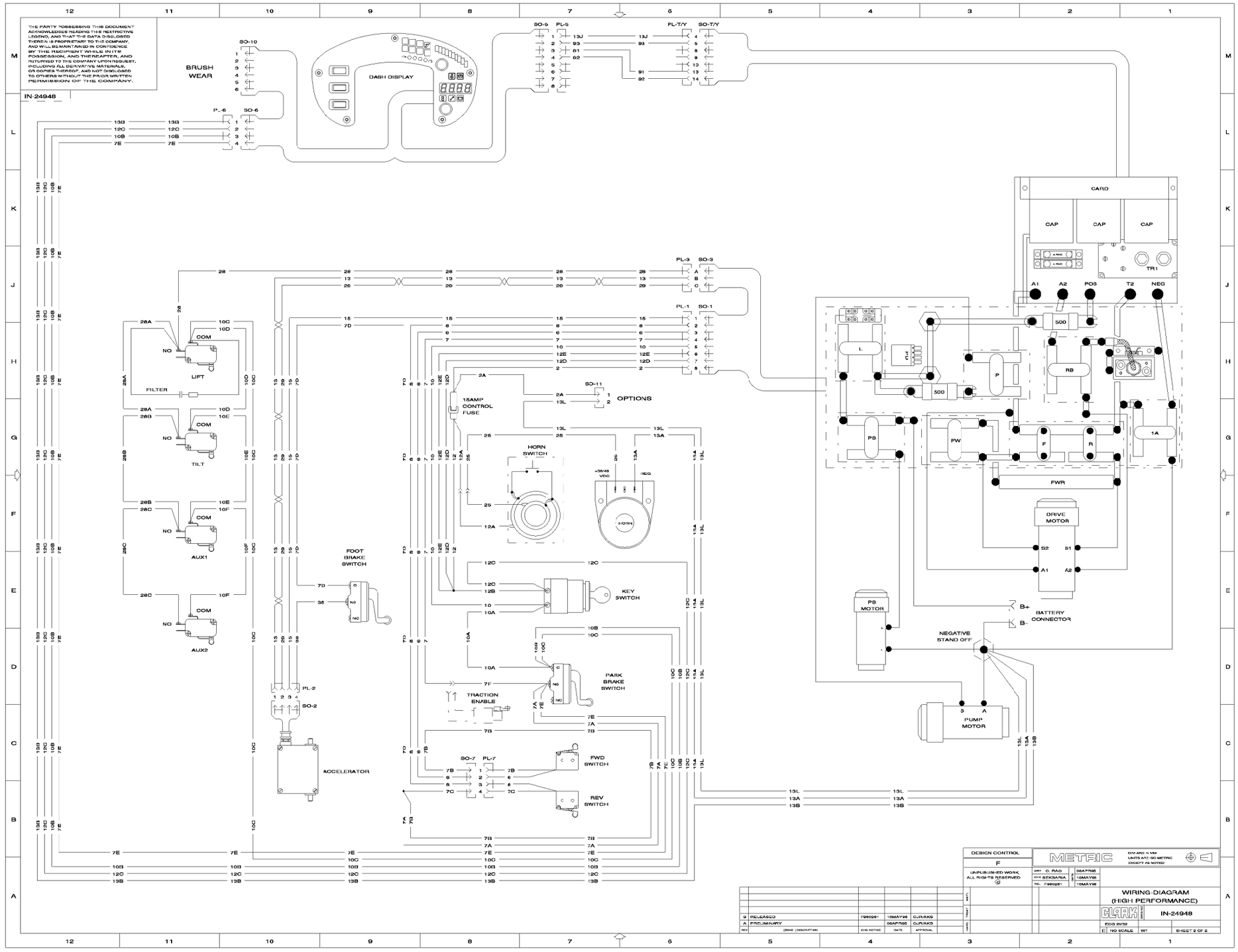

https://truckmanualshub.com/

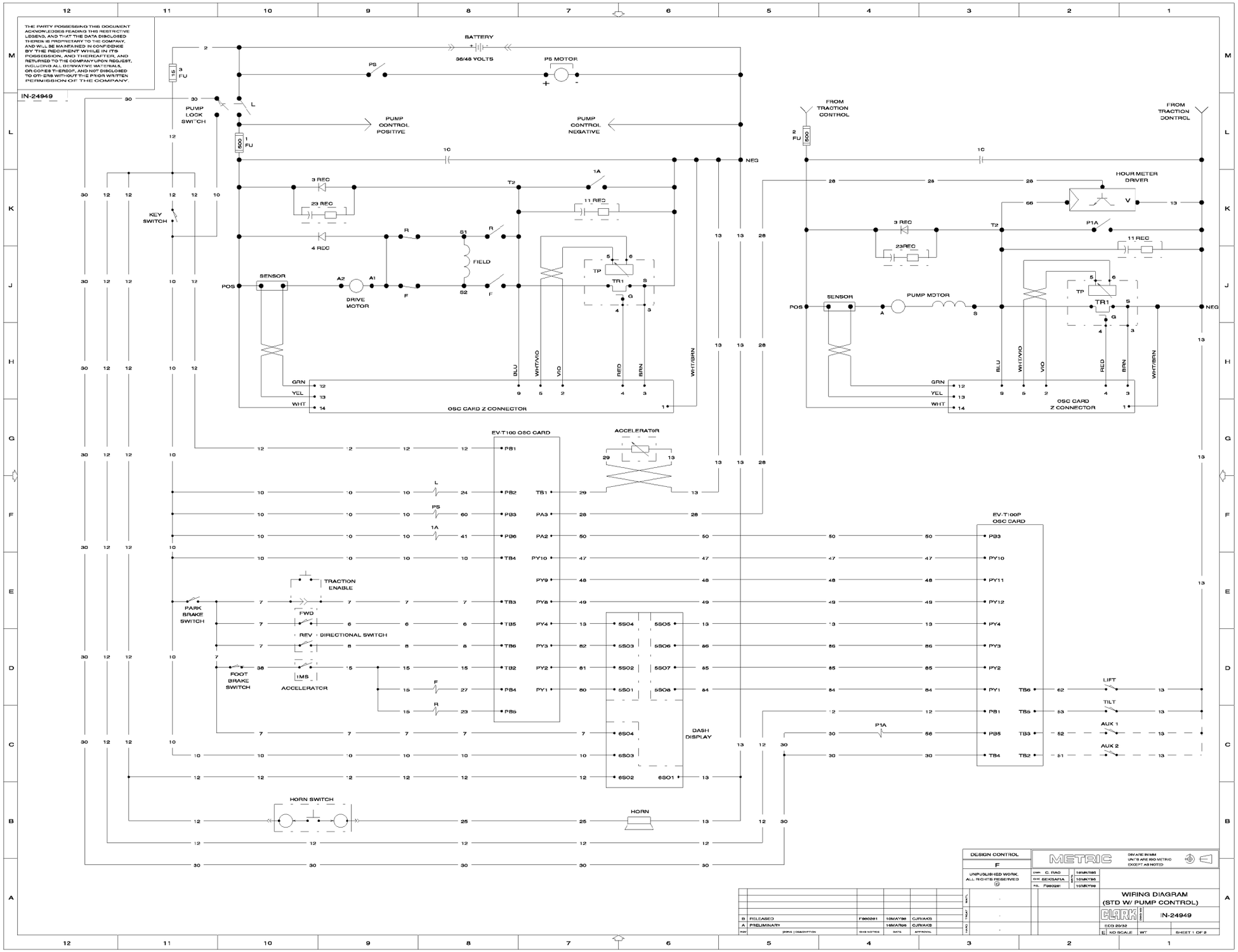

https://truckmanualshub.com/

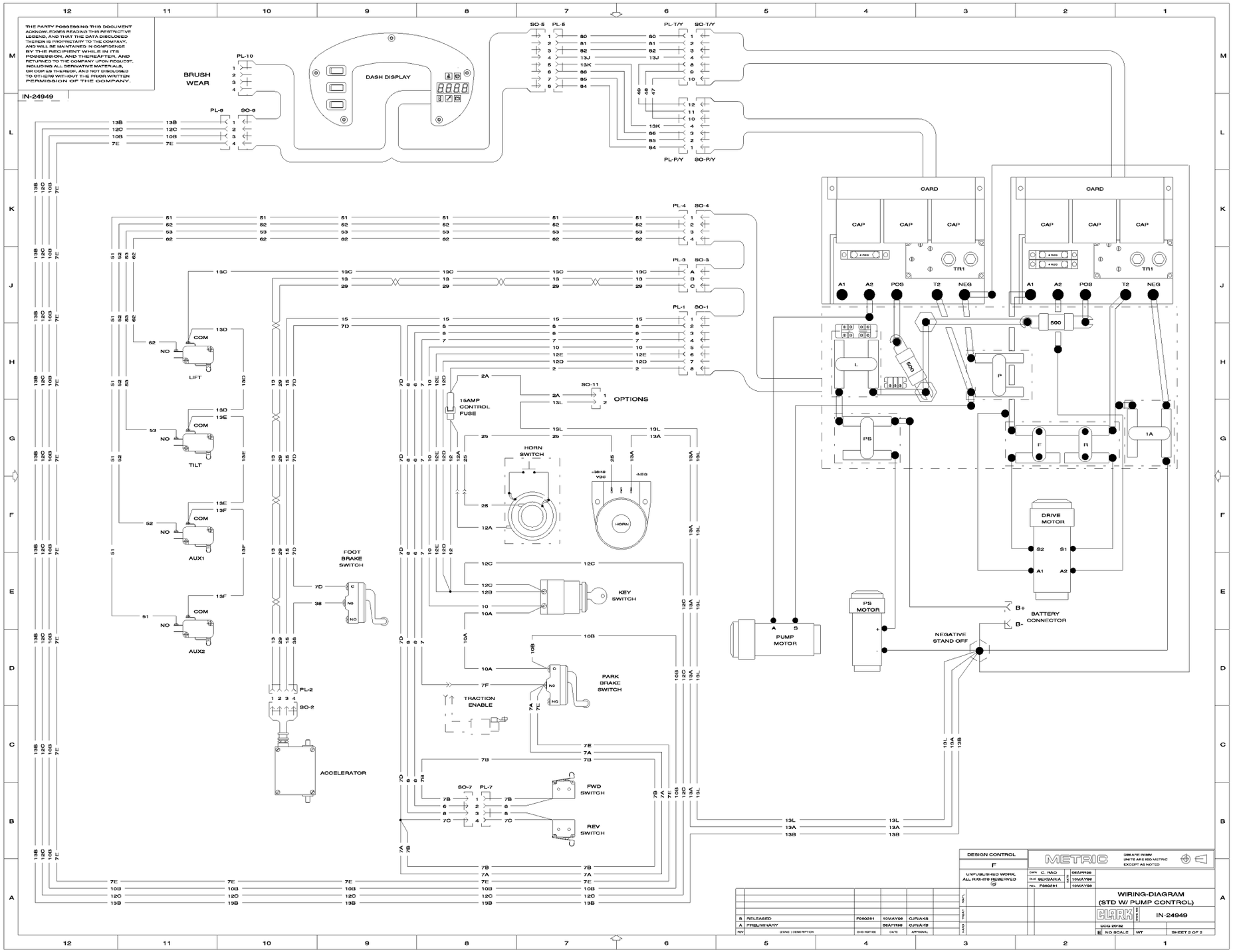

https://truckmanualshub.com/

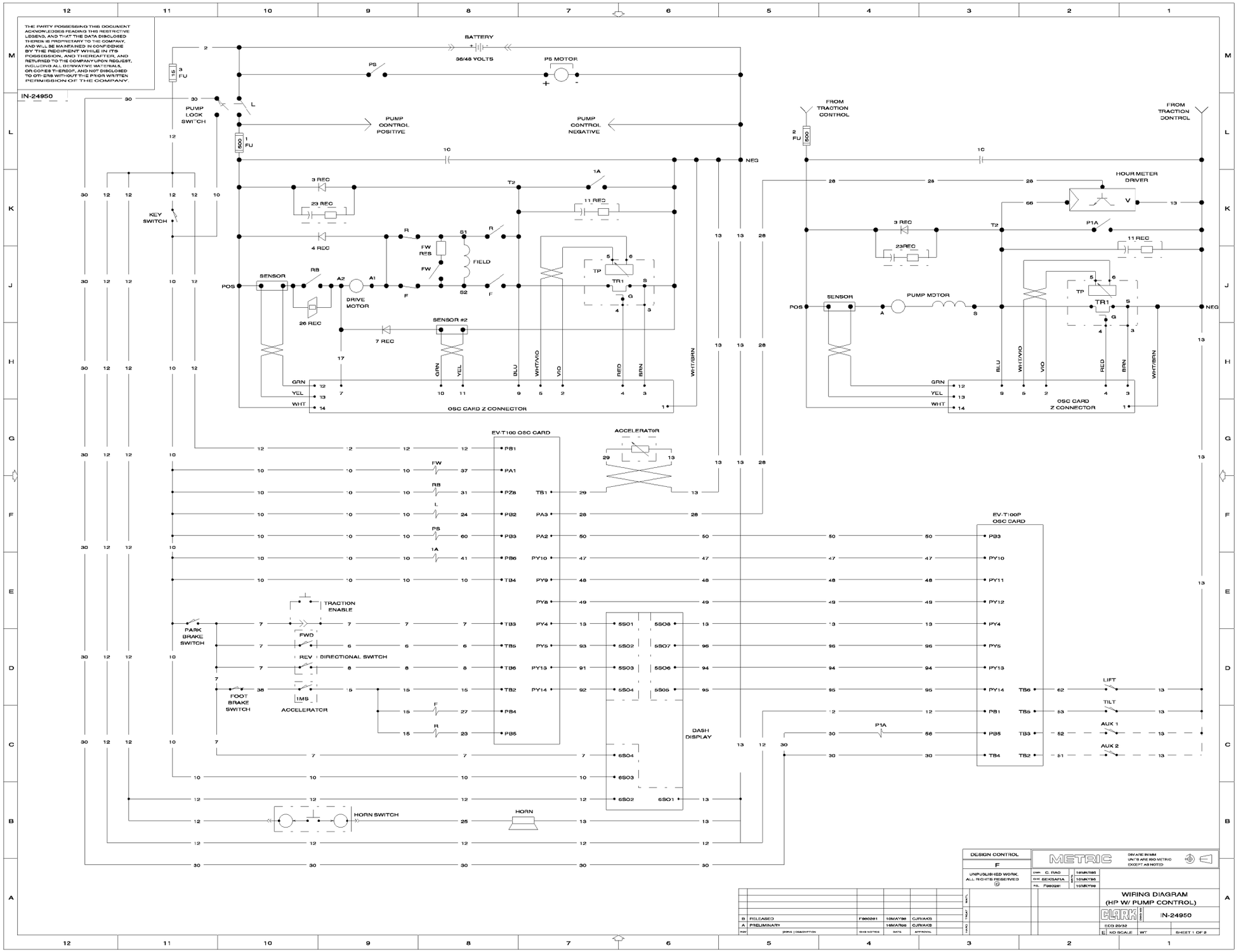

https://truckmanualshub.com/

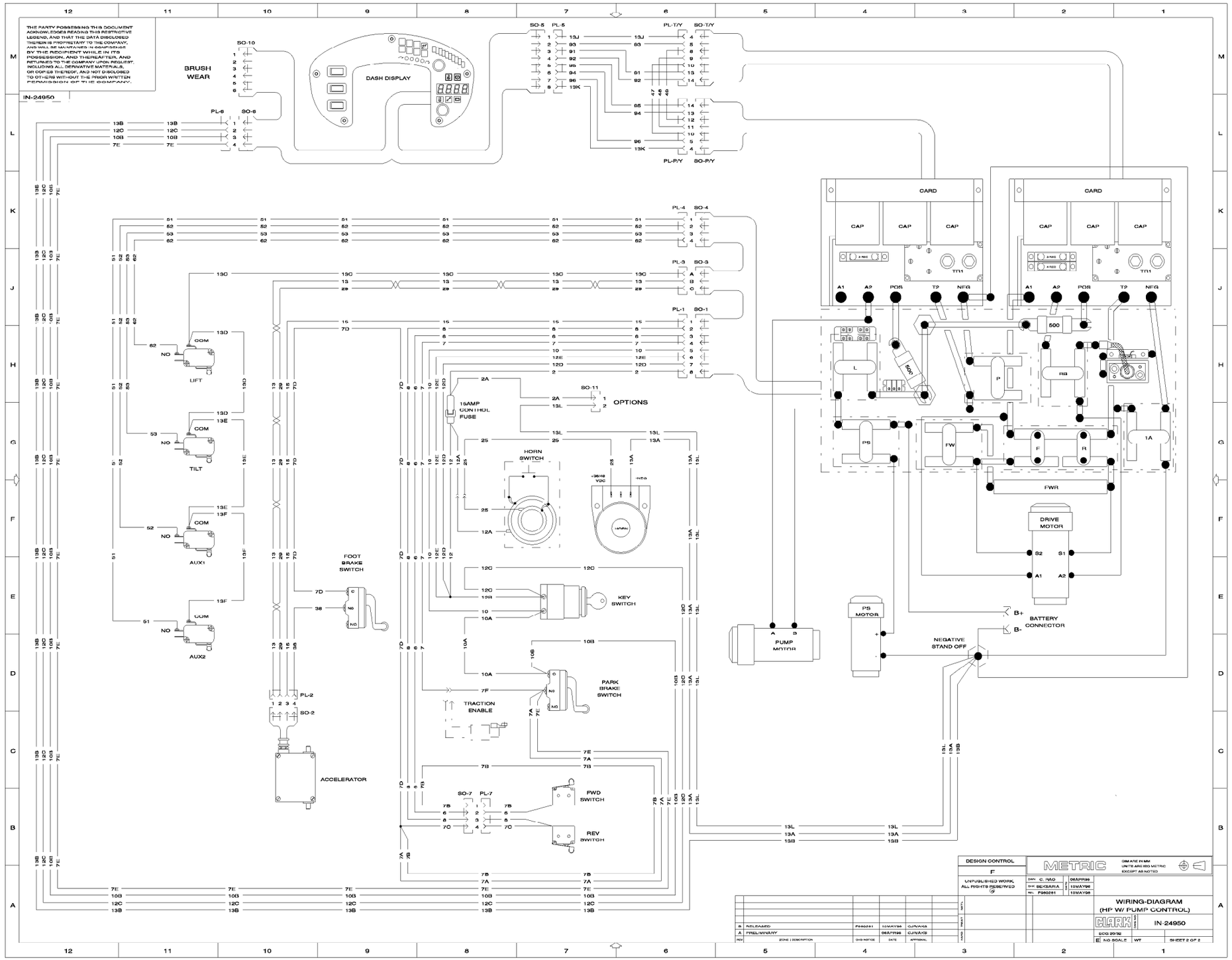

https://truckmanualshub.com/

Section 2
Contactors
Contents

Forward & Reverse Contactor Illustration 17-2-2
Disassembly 17-2-3
Forward & Reverse Contactor Illustration 17-2-4
Parts Inspection 17-2-5
Forward & Reverse Contactor Illustration 17-2-6
Reassembly 17-2-7
1A, FW, RB, Line & Pump Contactor Illustration 17-2-8
Disassembly 17-2-9
Parts Inspection 17-2-9
Reassembly 17-2-9
Power Steering Contactor Illustration 17-2-10
Disassembly 17-2-11
Parts Inspection 17-2-11
Reassembly 17-2-11
Control - Traction - Standard 17-2-11
Control - Traction - Standard with Pump 17-2-13
Control - Traction - High Performance 17-2-14
Control - Traction - High Performance with Pump 17-2-15

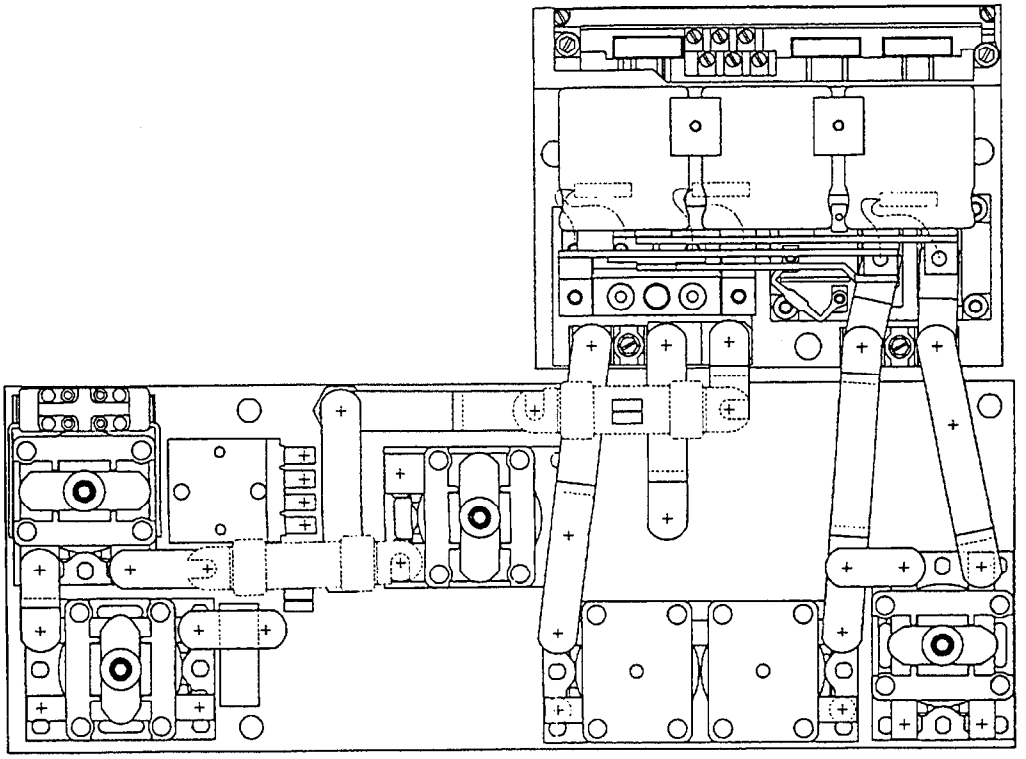

Control Panel

Copyrighted Material
Intended for CLARK dealers only
Do not sell or distribute

https://truckmanualshub.com/

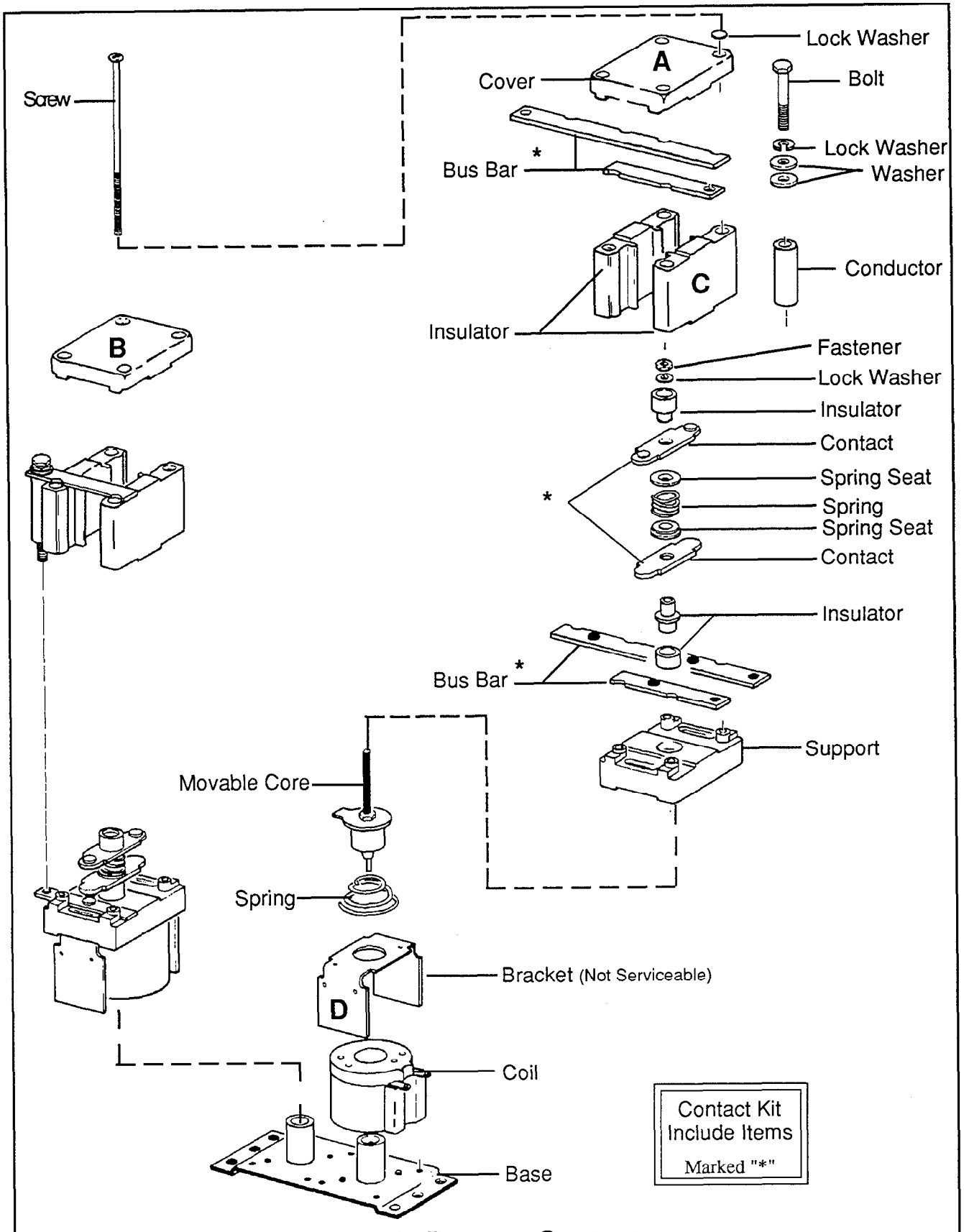

Forward / Reverse Contactors

Copyrighted Material
Intended for CLARK dealers only
Do not sell or distribute

https://truckmanualshub.com/

Forward / Reverse Contactor

⚠ WARNING

DISCONNECT BATTERY BEFORE WORKING ON CONTACTOR TIPS.

BEFORE ATTEMPTING TO DISASSEMBLE A CONTACTOR TO INSTALL A NEW SET, CAREFULLY OBSERVE LOCATION AND ORIENTATION OF EACH PART.

1. Check armature and movable contacts for freedom of movement by depressing movable are with a screwdriver or small rod. Refer to illustration on page 2.

- Check for any restrictions to movement and for return of parts by action of spring.

2. Inspect contact tips. Look for any worn or eroded surfaces. Look for evidence of tip welding. Inspect for evidence of any contaminants on tips (paint, dirt, paper or cloth material, etc.) which would impair operation.

- Do not use sandpaper or file tips. Any damage must be corrected by tip replacement.
- Tips must be replaced before they wear through and damage copper base.

To remove and replace contact tips:

1. Disconnect power cables from contactors. Remove bolts with washers, lockwashers and spacers from contacts. Move power cables out of the way.
2. Disconnect connecting buss bars from contacts.
3. Disconnect wiring from contactor coil terminals.
4. Remove mounting bolts securing Forward & Reverse Contactor Assembly to the control panel base plate that is attached to the truck. Remove assembly from truck.
5. **Disassemble the contactors.** Loosen cover screws on both contactors. There are four screws per cover. *Note location of contacts so the new ones may be installed to the same location as the old ones.*
6. Press downward on Cover (A) and completely back out cover screws until they are free of the contactor base. *Do not remove cover yet.*
7. Press downward on Cover (B) and disconnect screws from base. Hold pressure on Cover (B) and then remove Cover (A) from the assembly. Set cover and screws to one side.
8. Now remove Cover (B) and screws. *Again, note location of the buss bars, contacts and the large insulators (C) for ease of reassembly.*
9. Remove and discard upper contacts.
10. Remove and inspect Insulators (C) for cracks and damage. An insulator found to be cracked or broken should be replaced with a new one.
11. Remove and discard lower contacts.
12. Hold Bracket (D) with one hand and remove support sub-assembly (armature, contacts, etc.). The return spring should come off with the armature as it fits into a recess in the bottom of the armature.
13. Secure support in a vice equipped with soft jaws using minimum pressure to hold support.
14. Loosen and remove nut freeing core parts (washer, insulators, movable contacts, spring seats and spring). *Not the position and location of each part for proper reassembly.* Remove these parts.
15. Pull insulator and core bushing from core.
16. Remove armature core with spring from bottom of support and remove support from vice.
17. Remove Bracket (D) from coil and base.
18. Remove coil from base.
19. Disassemble the opposite (Reverse) contactor in same manner.
20. Inspect armature core insulators for cracks, breaks, etc. If parts are found to be damaged, they should be replaced with new ones.
21. Inspect springs for damage. Replace damaged parts with new ones.

Copyrighted Material
Intended for CLARK dealers only
Do not sell or distribute

https://truckmanualshub.com/

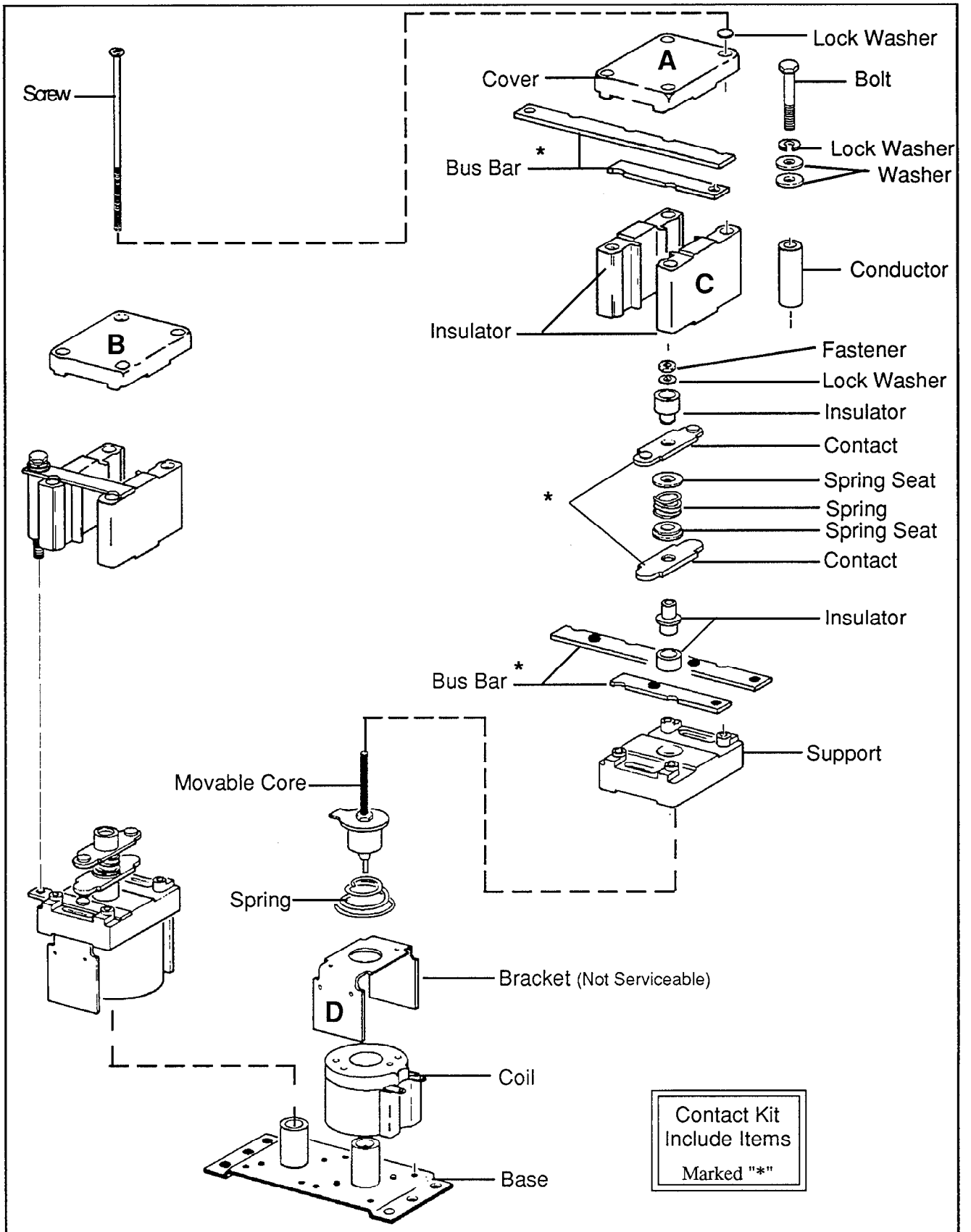

Forward / Reverse Contactors

Copyrighted Material
Intended for CLARK dealers only
Do not sell or distribute

https://truckmanualshub.com/

Forward / Reverse Contactor-continued-

22. Inspect spring seats for damage (cracks, breaks, etc.). Replace damaged parts with new.

23. Inspect the thin washer located on the armature for cracks, etc., and security of mounting.

- Material on the armature stem has been "up set" in four places to retain the washer. Inspect all four places to be certain this thin washer is properly retained and free to rotate about the armature stem.
- Inspect the "cone" surface of the armature and the corresponding surface in the base plate for scoring, etc.
- Inspect the small white bushing for wear. The bushing I.D. must be perfectly round. If the bushing becomes "egg" shaped (out-of-round), it should be replaced with a new bushing.

24. Inspect coil for damage.

IMPORTANT

The coil has four blind alignment holes in the top and two in the bottom. These holes must properly align with the off-set pins in the bracket and contactor base at reassembly.

- Inspect alignment holes to be certain they are perfectly round and not "egg" shaped (damaged).
- Inspect coil terminals for damage.
- Replace damaged parts with new ones.

25. Reassemble the contactors. Install both coils onto contactor base. *Terminal connections must point outward - away from cent of base. Be certain the coils are properly located over the base alignment pins.*

26. Locate Brackets (D) on each coil and onto the base. Be certain the bracket alignment pins properly seat in the holes on the top side of each coil.

27. Now, secure the Forward Contactor Assembly Support into the vise *using minimum pressure to hold the support.*

- Install spring into coil recess.
- Locate white bushing over armature stem and insert armature thru bottom of support positioning armature "tab" into support slot.
- Install spring and upper spring seat, upper contact, upper insulator, lockwasher and nut onto armature stem.

IMPORTANT

Torque Nut to: 18 to 20 lb. in. (2.0 to 2.4 N•m).

28. Remove support and movable contact assembly from the vice.

29. Assemble the Reverse Contactor Support and Movable Contact Assembly in the same manner.

30. Now locate the Forward Contactor Support and Movable Contact Assembly over Bracket (D).

IMPORTANT

Be certain the armature "tab" is pointing inward toward the center of the contactor base when positioning support over bracket. Refer to the boxed illustration on opposite page.

31. Now locate the Reverse Contactor Support and Movable Contact Assembly over its bracket. *Again, be certain the armature "tab" is pointing inward toward the center of the contactor base.*

32. Install the long lower buss bar and stationary contacts (having threaded holes in one end) into the grooves located on the top side of each contactor support. The cable end of the buss bar should extend outward on the right hand side of the forward contactor support and extend outward on the left hand side of the reverse contactor support. Be certain the notches in the buss bar and stationary contacts properly seat with the screw guides of each contactor support.

Copyrighted Material
Intended for CLARK dealers only
Do not sell or distribute

https://truckmanualshub.com/

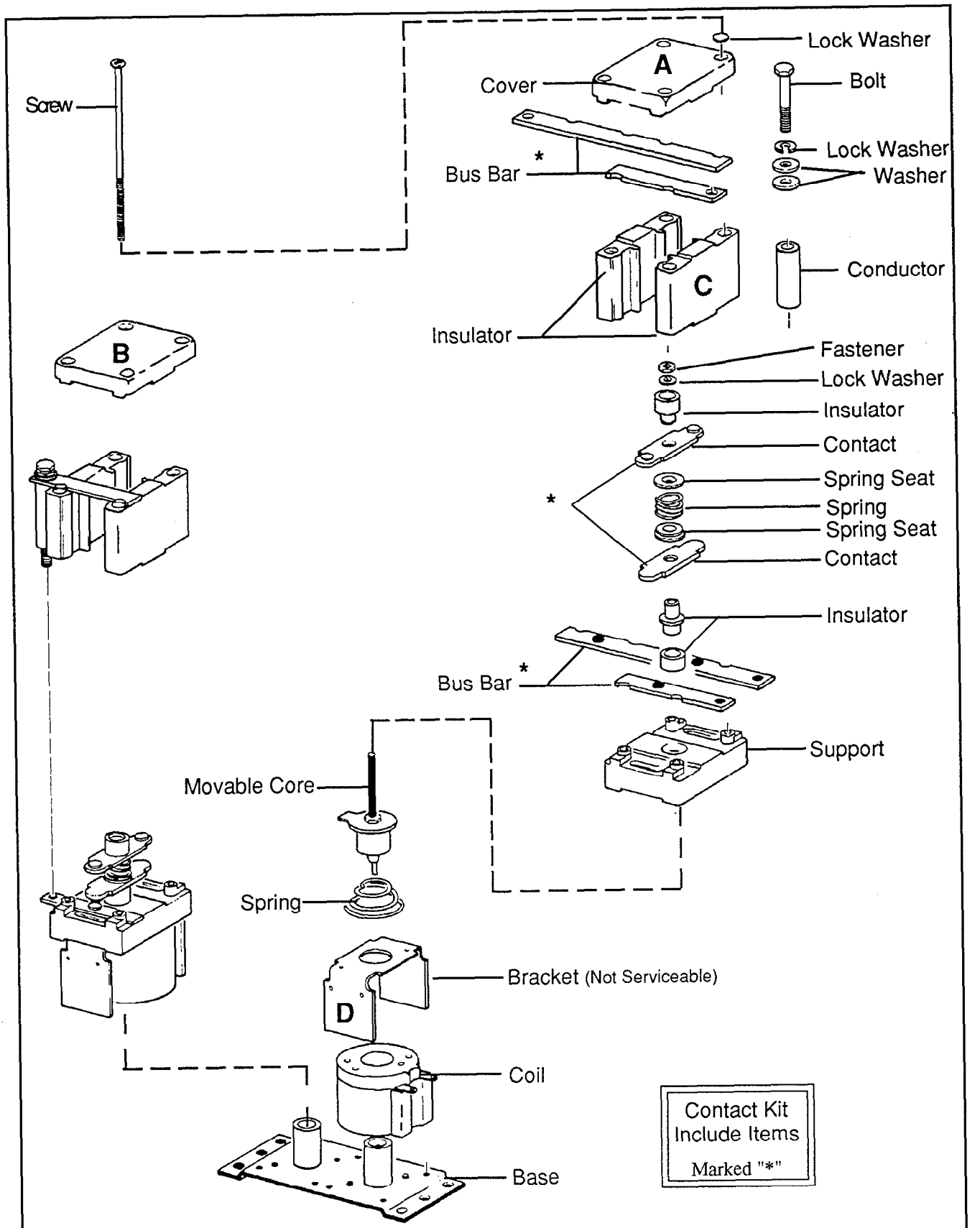

Forward / Reverse Contactors

Copyrighted Material
Intended for CLARK dealers only
Do not sell or distribute

https://truckmanualshub.com/

Forward / Reverse Contactor-continued-

33. Install the short buss bar and stationary contacts (having threaded holes in one end) in the same manner as previously described. *Be certain the notches in each bar fit properly to the screw guides of each support.*
34. Position Insulators (C) over the buss bar/contacts and supports as shown in illustration on opposite page. Be certain the opening in the bottom of the insulators face downward and that the insulators are properly seated in the slots of the supports.
35. Assemble spacer, upper buss bar/contacts over the insulators. Make certain the contacts are seated properly in the insulators.
36. Assemble covers (A & B). Make certain covers, buss bars & contacts are in alignment and press both covers downward with one hand ... hold in this position and install all cover screws until snug. Check to be sure all parts are in proper alignment, and position the Power Cable Bolts (with lockwashers, and washers) thru the upper buss bar/contacts and spacers. Tighten bolts finger tight into the lower buss bar/contacts.
37. Tighten cover screws to:

    14 to 18 lb. in. (1.6 to 2.0 N•m).
38. Use a bar or rod to move contacts. Be sure movement is free of binding and that tips are in correct orientation and tips contact correct mating parts.
39. Install Forward & Reverse Contactor Assembly to panel base plate.

Copyrighted Material
Intended for CLARK dealers only
Do not sell or distribute

https://truckmanualshub.com/

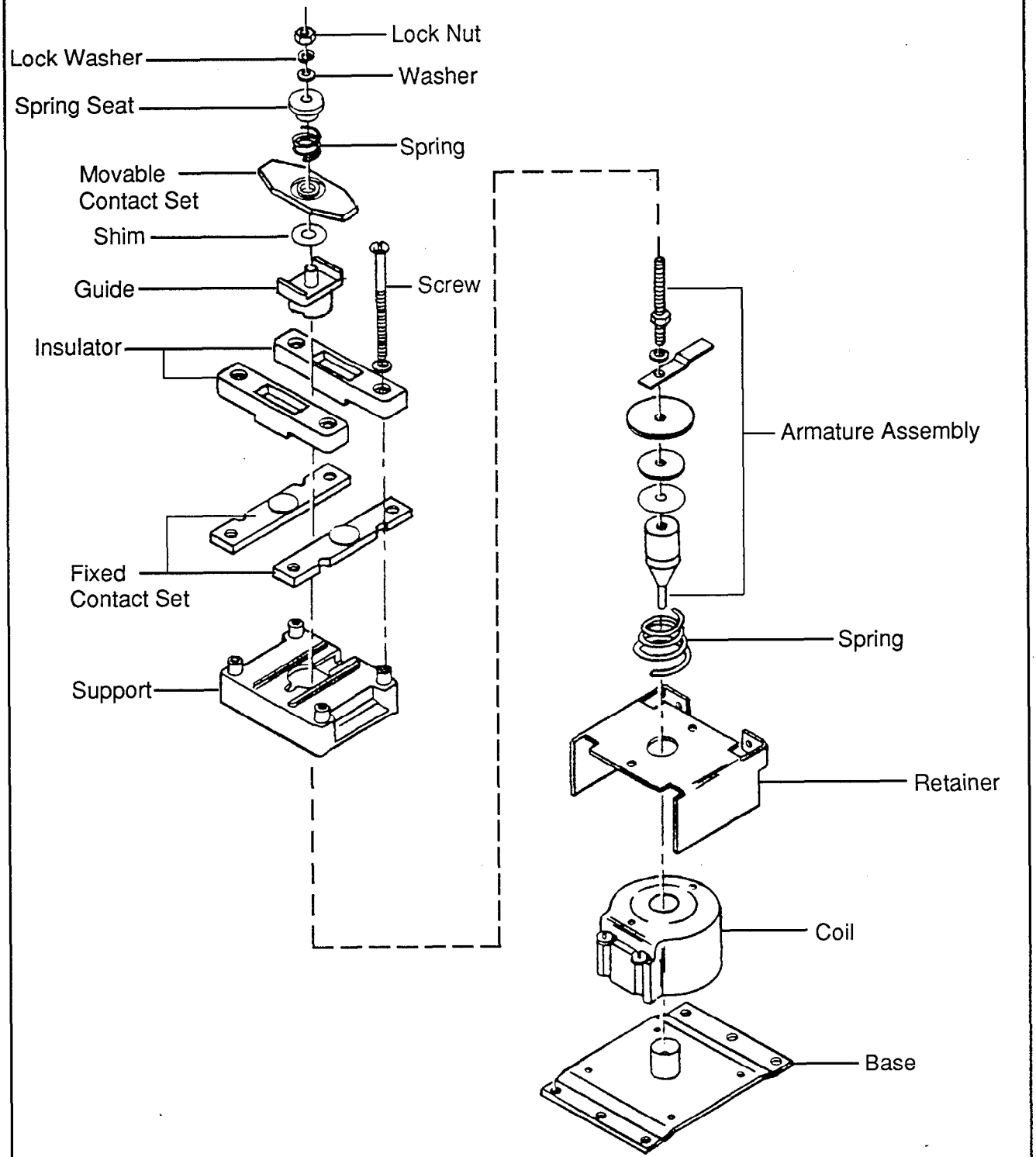

1-A, FW, RB, Line & Pump Contactors

Copyrighted Material
Intended for CLARK dealers only
Do not sell or distribute

https://truckmanualshub.com/

1-A, FW, RB, Line & Pump Contactors

WARNING

Disconnect battery before working on contactor tips.

Before attempting to disassemble a contactor to install a new contact set, carefully observe location and orientation of each part.

1. Check armature and movable contacts for freedom of movement by depressing movable are with a screwdriver or small rod. Refer to illustration on page 8.

- Check for any restrictions to movement and for return of parts by action of the spring.

2. Inspect contact tips. Look for any worn or eroded surfaces. Look for evidence of tip welding. Inspect for evidence of any contaminants on tips (paint, dirt, paper or cloth material, etc.) which would impair operation.

- Do not use sandpaper or file tips. Any damage must be corrected by tip replacement.
- Tips must be replaced before they wear through and damage copper base.

To remove and replace contact tips:

1. Loosen and remove two cover mounting screws securing cover to coil frame. *Observe position of positive (+) marking on the cover.*
2. Remove cover. *Be sure to note location of spring seat and spring under cover.*
3. Remove lock nut and lockwasher from each stationary contact stud.
4. Remove contact studs from cover.
5. Install new studs and secure with lock washers and lock nuts. Tighten lock nuts firmly on each stud.
6. Lift armature assembly with movable contact set from coil frame. *Observe location of components upon removal.*
7. Remove lock nut, contact set, insulating washer and spring from armature stem. Be careful not to disassemble or loose other parts under contact tips on armature assembly.
8. Install spring, washer, new contact set onto stem and secure with lock nut.
9. Assemble contactor by putting moving contact assembly armature shaft into coil plunger with return spring on top of armature shaft.
10. Put top cover over spring and install cover mounting screws. *Be sure return spring is in the cover recess.*

IMPORTANT

When assembling cover to base (frame) make sure it is installed with the positive sign (+) markings located properly.

Use a bar or rod to move contacts and be sure movement is free of binding. Be certain contact tips are in correct orientation and tips contact correct mating parts.

Copyrighted Material
Intended for CLARK dealers only
Do not sell or distribute

https://truckmanualshub.com/

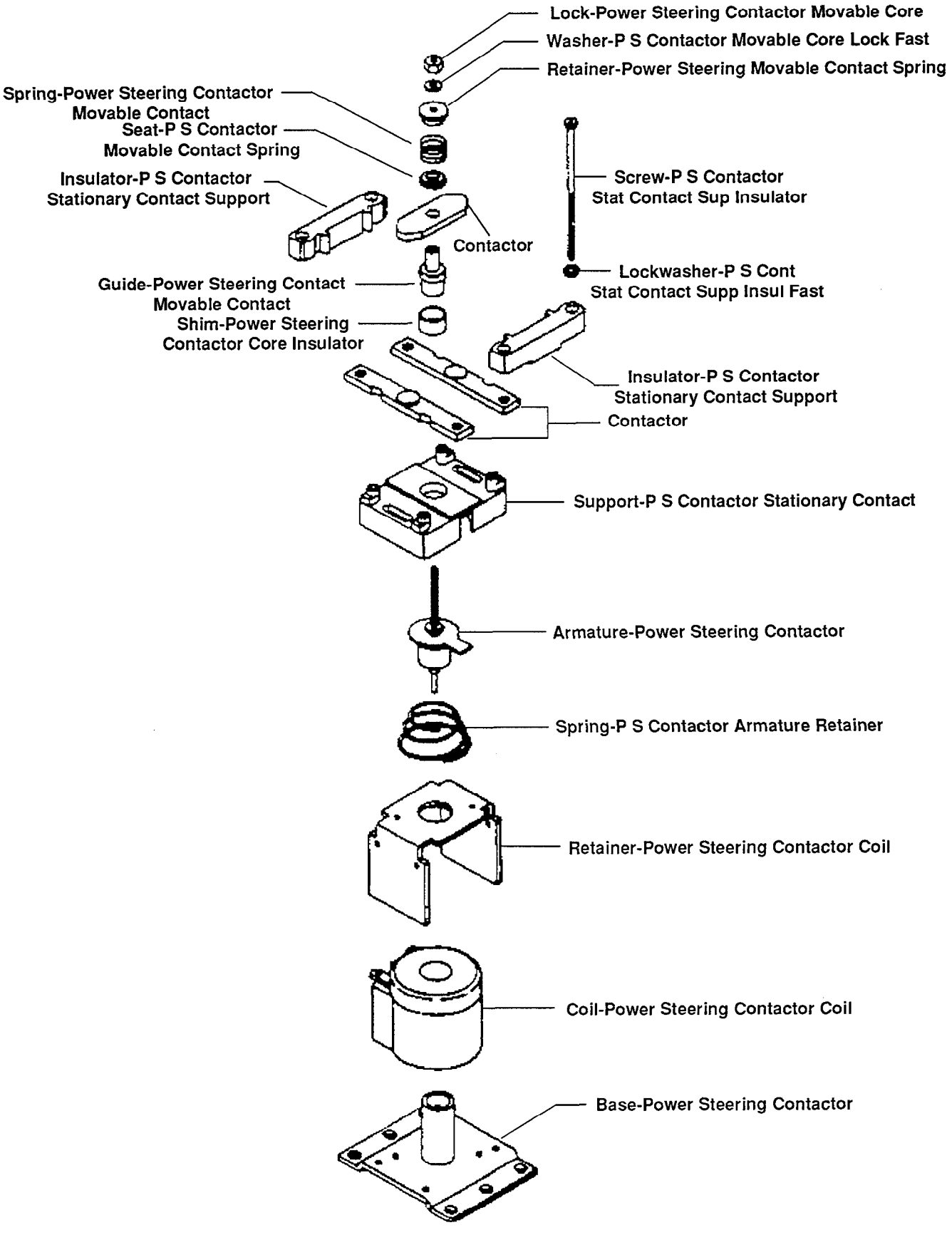

Copyrighted Material
Intended for CLARK dealers only
Do not sell or distribute

https://truckmanualshub.com/

Power Steering Contactor

WARNING

Disconnect battery before working on contactor tips.

Before attempting to disassemble a contactor to install a new contact set, carefully observe location and orientation of each part.

1. Check armature and movable contacts for freedom of movement by depressing movable are with a screwdriver or small rod. Refer to illustration on page 10.

- Check for any restrictions to movement and for return of parts by action of the spring.

2. Inspect contact tips. Look for any worn or eroded surfaces. Look for evidence of tip welding. Inspect for evidence of any contaminants on tips (paint, dirt, paper or cloth material, etc.) which would impair operation.

- Do not use sandpaper or file tips. Any damage must be corrected by tip replacement.
- Tips must be replaced before they wear through and damage copper base.

To remove and replace contact tips:

1. Loosen and remove two cover mounting screws securing cover to coil frame. *Observe position of positive (+) marking on the cover.*
2. Remove cover. *Be sure to note location of spring seat and spring under cover.*
3. Remove lock nut and lockwasher from each stationary contact stud.
4. Remove contact studs from cover.
5. Install new studs and secure with lock washers and lock nuts. Tighten lock nuts firmly on each stud.
6. Lift armature assembly with movable contact set from coil frame. *Observe location of components upon removal.*
7. Remove lock nut, contact set, insulating washer and spring from armature stem. Be careful not to disassemble or loose other parts under contact tips on armature assembly.
8. Install spring, washer, new contact set onto stem and secure with lock nut.
9. Assemble contactor by putting moving contact assembly armature shaft into coil plunger with return spring on top of armature shaft.
10. Put top cover over spring and install cover mounting screws. *Be sure return spring is in the cover recess.*

IMPORTANT

When assembling cover to base (frame) make sure it is installed with the positive sign (+) markings located properly.

Use a bar or rod to move contacts and be sure movement is free of binding. Be certain contact tips are in correct orientation and tips contact correct mating parts.

Copyrighted Material
Intended for CLARK dealers only
Do not sell or distribute

https://truckmanualshub.com/

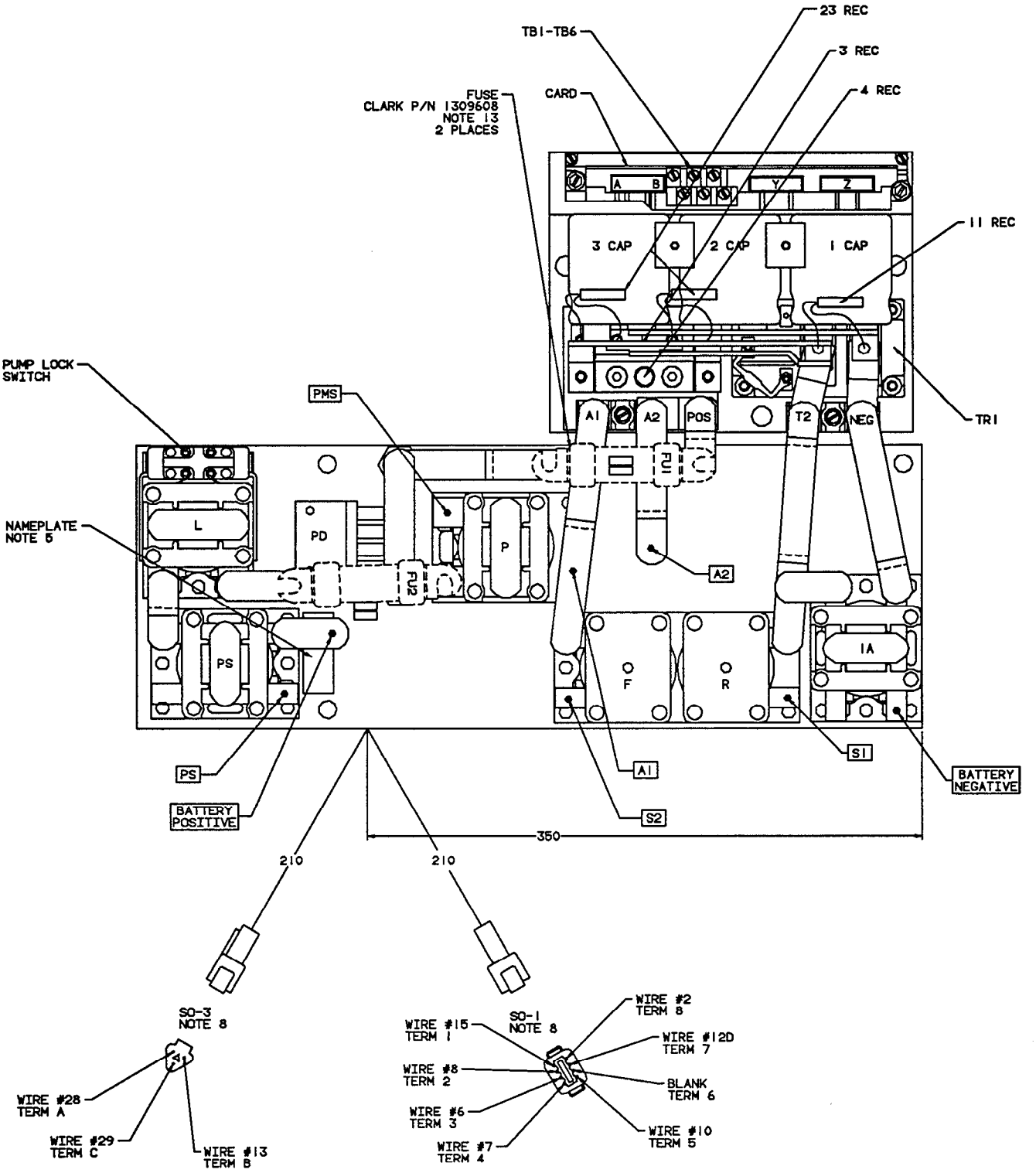

CONTROL-TRACTION-STANDARD

Copyrighted Material
Intended for CLARK dealers only
Do not sell or distribute

https://truckmanualshub.com/

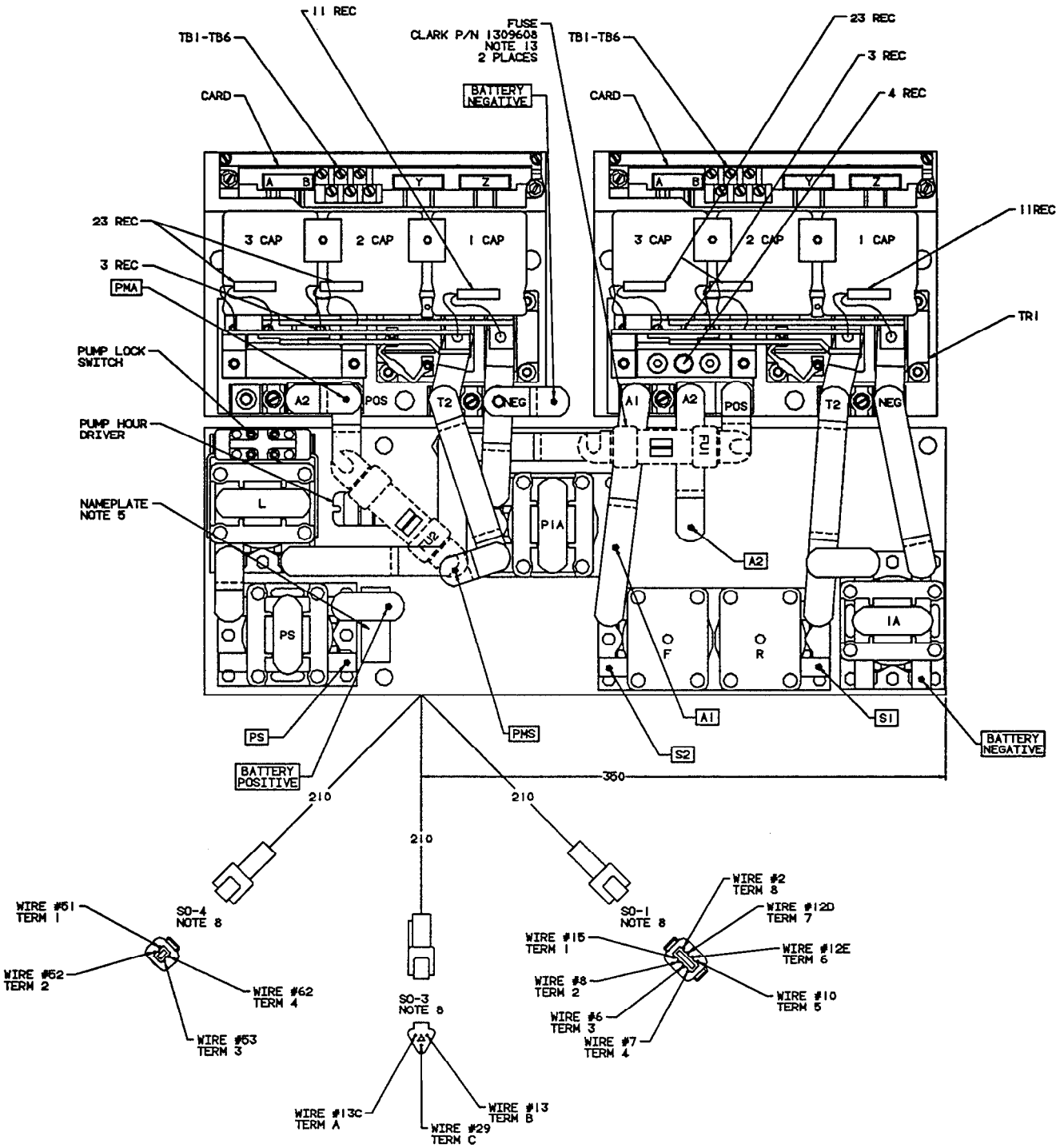

CONTROL-TRACTION-STANDARD WITH PUMP

Copyrighted Material
Intended for CLARK dealers only
Do not sell or distribute

https://truckmanualshub.com/

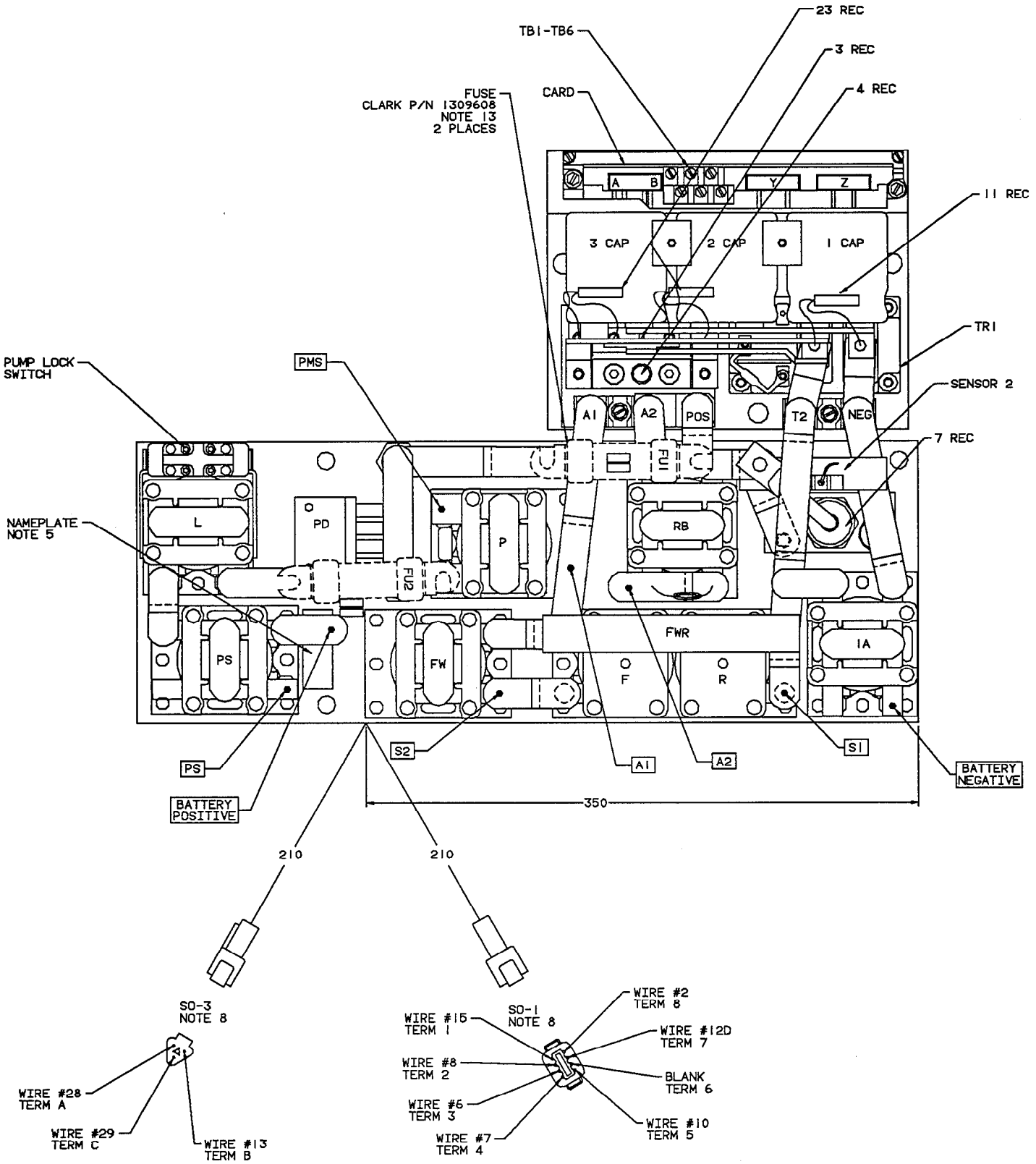

CONTROL-TRACTION-HIGH PERFORMANCE

Copyrighted Material
Intended for CLARK dealers only
Do not sell or distribute

https://truckmanualshub.com/

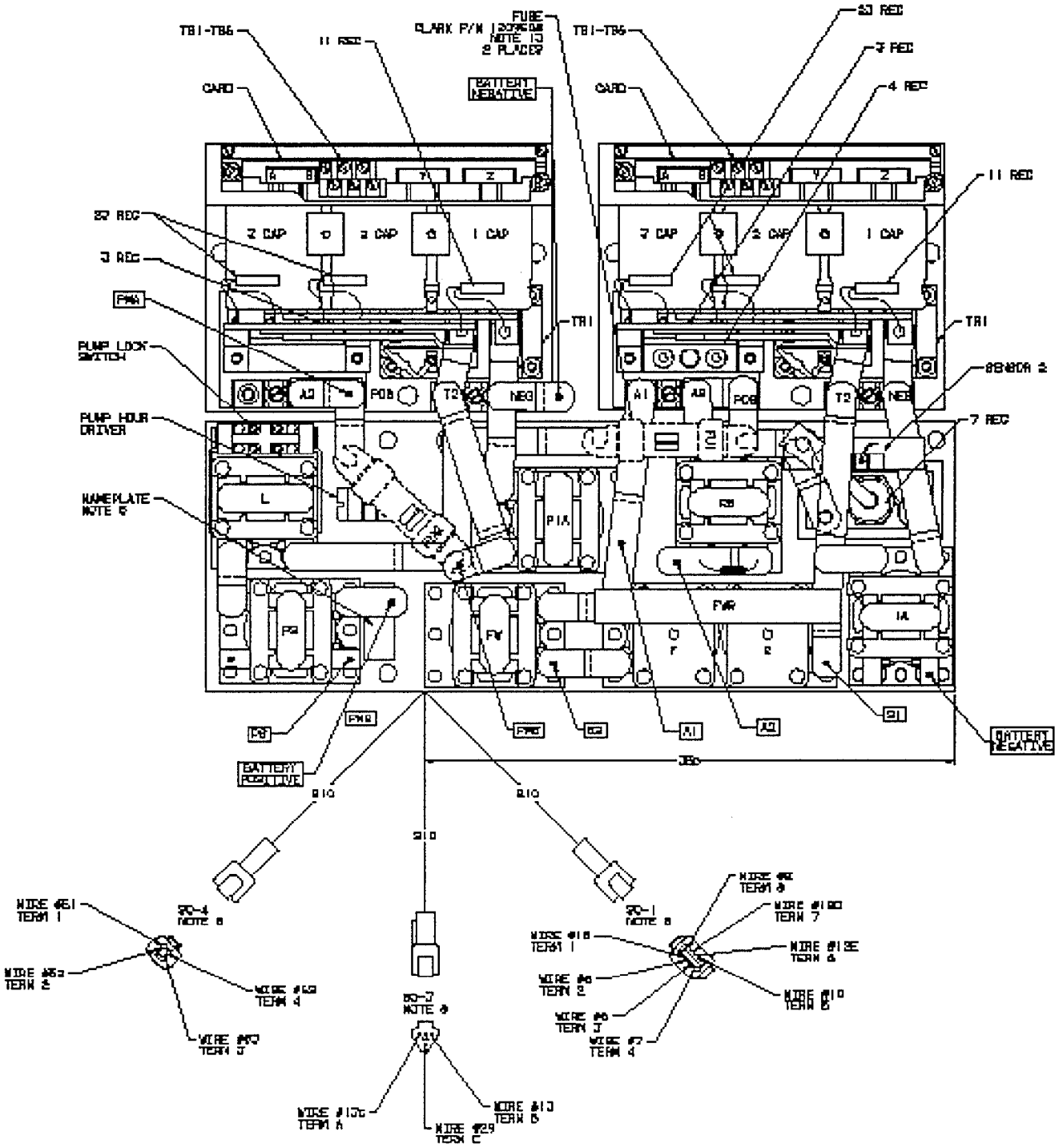

CONTROL-TRACTION-HIGH PERFORMANCE WITH PUMP

Copyrighted Material
Intended for CLARK dealers only
Do not sell or distribute

https://truckmanualshub.com/

GROUP 19

ELECTRICAL CONTROLS

Control Panel ..... Section 1

Sequence of Operation ..... Section 2

Electrical Checks & Instrument Panels ..... Section 3

Handset Instructions ..... Section 5

Copyrighted Material
Intended for CLARK dealers only
Do not sell or distribute

https://truckmanualshub.com/

GROUP 19 SECTION 01
CONTROL PANEL

CONTENTS NO. Page

CONTROL PANEL DESCRIPTION 19-01-01
CONTROL PANEL FEATURES 19-01-02
CONTROL PANEL MAINTENANCE 19-01-05
CONTROL TROUBLE-SHOOTING 19-01-06

19-01-01 CONTROL PANEL DESCRIPTION

The EVT100ZX CONTROL is an electronic device that controls electrical power supplied to the truck drive motor to provide smooth power to move the truck and to minimize power drain from battery.

The control consists of a Transistor unit and a contactor assembly unit. The Transistor unit monitors power demand of the truck and then responds by controlling the power applied to drive components. The contactor panel contains switching devices to direct heavy power loads to the drive motor and its components.

The control is energized by plugging in the battery. A capacitor charging circuit charges the capacitors (1C) to battery volts in approximately 2 seconds. When the key switch is closed the control will check that the 1C capactors are charged to a minimum of 85% battery volts then close the line contactor.

When the park brake switch is closed, the control then makes several safety checks:

1) T2 voltage is between 12% and 88% battery volts. This checks for shorted forward, reverse, and 1A contactors or shorted transistor or #3 REC and their snubbers (#11 & #23 RECs).

2) Checks for open 1MS switch input, terminal TB2 must be 0 volts for at least 1 second after voltage is applied and the park brake switch is closed.

4) Checks for open F and R switch inputs, TB5 and TB6 must be 0 volts.

3) Checks that the accelerator input voltage is greater than 2.5 volts.

If all the above safety checks are satisfied normal truck operation can begin.

Selecting either forward or reverse direction and depressing the accelerator will close the proper directional contactor completing the power circuit to the drive motor. The card then supplies gate voltage to the power Transistor turning it 'ON'. Current flows from the battery and from the 1C capacitor, through the motor armature, motor field, and power transistor back to battery negative. When the gate voltage at the transistor is removed, it turns 'OFF'. During the 'OFF-TIME', the energy stored in the motor, by virtue of the motor's inductance, will cause current to circulate through the motor around the loop formed by the #3 REC. providing what is called FLYBACK CURRENT. The battery current continues to flow from battery positive to the 1C capacitor to battery negative during the entire ''OFF-TIME'' due to the high frequency of oscillation. This action will charge the 1C capacitor to slightly higher than battery volts. The control converts battery current at battery voltage into a higher motor current at lower motor volts. This is why measured motor current will be greater than battery current except when the control is operating at 100% on-time or in the 1A mode.

The time for the next ON and OFF cycle to start is determined by the time the control card takes to oscillate. This frequency of oscillation is controlled by the accelerator input and automatic circuitry in the card. Slow speed is obtained by having maximum input voltage from the accelerator. As the input voltage decreases, the speed of the motor increases. The TRANSISTOR circuit is capable of delivering approximately 100% battery volts. For maximum torque operation, the 1A contactor is closed to apply full available battery voltage and power to the motor.

Copyrighted Material
Intended for CLARK dealers only
Do not sell or distribute

https://truckmanualshub.com/

Figure 1 and 2 show battery and motor current paths during the 'ON' and 'OFF' TIMES for a typical running condition of 100 amps motor current at 50% 'ON' TIME (half speed).

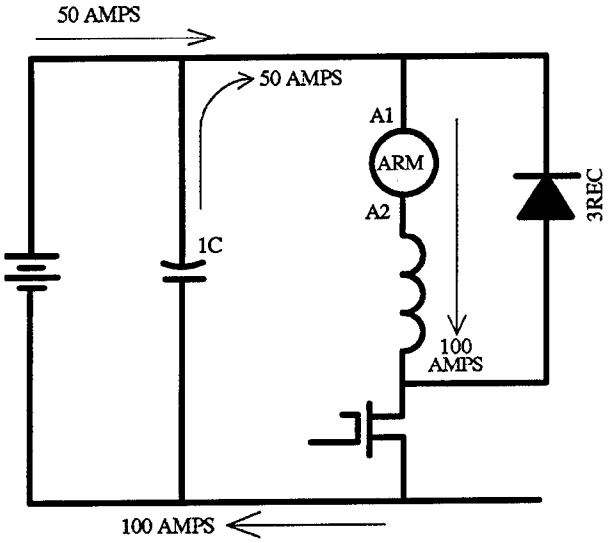

Figure 1

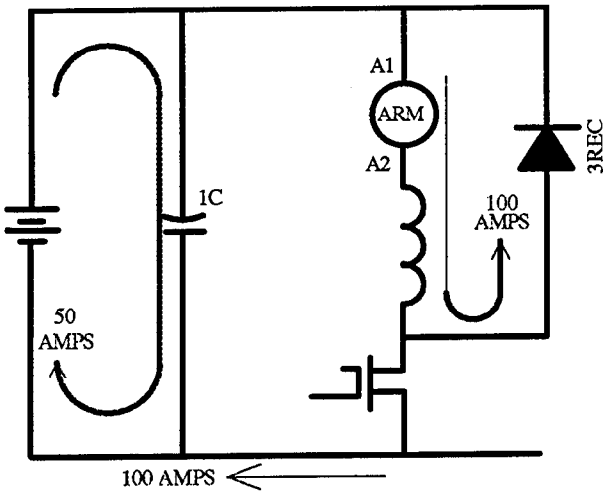

Figure 2

CONTROL FEATURES

OSCILLATOR - The oscillator section of the card has two adjustable features and one fixed feature. With the accelerator input voltage at maximum, the **Creep Speed** can be adjusted by Function 2 of the Handset. Top speed is fixed by the card design and is obtained with the accelerator input voltage at minimum. The % 'ON-TIME' has a range of approximately 5 to 100 percent. The operating frequency of the EVT100ZX control is 2KHz. At creep the 'ON-TIME' will decrease to approximately 20 microseconds while 'OFF-TIME' will become in the order of 480 microseconds. At full TRANSISTOR operation, this condition will be reversed (short OFF-TIME, long ON-TIME). This variation of ON and OFF-TIME of the oscillator produces the optimum power control through the TRANSISTOR range.
The rate at which the oscillator may increase it's percent ON-TIME is limited by **"CONTROLLED ACCELERATION"**. The minimum time required to go from creep speed to 95% ON-TIME point may be varied by Function 3 of the Handset. Adjustable from 0.1 seconds to 22 seconds. The 1A contactor will automatically close 0.2 seconds after the controlled acceleration stops and the accelerator input is less than 0.5 volts.

CURRENT LIMIT - This circuit monitors motor current by utilizing a sensor in series with the armature. The information detected across the sensor is fed back to the card so current may be limited to a pre-set value. If heavy load currents are detected, this circuit overrides the oscillator and limits the average current to a value set by Function 4 of the Handset. The C/L setting is based on the maximum thermal rating of the Transistor. Because of the flyback current through the #3 REC, the motor current usually runs 2 to 3 times battery current except at 100% ON time or when the 1A contactor is closed

PLUGGING - Slow down is accomplished when reversing direction by providing a small amount of retarding torque for deceleration. If the truck is moving in one direction and the directional lever is moved from one direction to the other, the motor field is reversed. The plug signal

Copyrighted Material
Intended for CLARK dealers only
Do not sell or distribute

https://truckmanualshub.com/

is initiated by the fact that the directional switch has moved from one direction to the other. The motor armature, driven by the inertia of the truck, acts as generator. This generated current passes through #4 REC and the sensor. The oscillator circuit regulates this plug current limit to a level set by the Handset. This controls the pulse width of the Transistor to regulate the generated motor current and bring the truck to a smooth stop and reversal. With the accelerator input at minimum, accelerator fully depressed, Function 5 will enable adjustment of the plugging current limit.

ACCELERATOR PEDAL POSITION PLUG - This feature will allow control of the plugging distance based on the accelerator pedal position. Accelerator pedal position will reduce the plugging current to the "value set by this function" as the accelerator is returned to the creep speed position. Maximum plug current is obtained with the accelerator in the full depressed position. This feature is adjusted by using Function 16 of the Handset.

REGENERATIVE BRAKING (RB) (High Performance Option Only) - During the standard running mode and plugging mode, the RB contactor remains picked up. If the truck is moving and the directional lever is moved from that direction to the other, the plugging signal is initiated. In the plugging mode the drive motor armature acts as a generator. Once the generated current reaches a preset current level as set by Function 10, the plugging mode transitions to the Regenerative Brake mode.

Transitioning to the RB mode opens the RB contactor, disconnecting the drive motor armature from battery positive and inserting the #7 REC and Sensor #2 in the RB circuit. During the RB mode, the generated current passes through the #4 REC, battery, sensor #2, #7 REC and back to the drive motor armature.

The control will remain in the RB mode as long as the regenerative brake current limit can be maintained. When the RB current cannot be maintained and drops below the level set by Function 9 on the Handset, RB C/L, the RB mode transitions back to the plugging mode. This transition will re-close the RB contactor, enabling the control to function in the plugging mode and bring the truck to a smooth and controlled stop and/or reversal. The accelerator pedal position will regulate the RB as well as the plugging current. The major advantage of Regenerative Brake is longer drive motor and brush life due to reduced motor heating and high plug currents.

FIELD WEAKENING (High Performance Option Only) - Field Weakening is a method of attaining higher travel speeds when the truck is running on a level surface. The Field Weakening (FW) contactor is closed when the drive motor current, in the 1A mode, falls below a value as Set by Function 7 on the Handset, "FW PU". The closing of the FW contactor places the FW resistor in parallel with the drive motor field weakening the strength of the magnetic force in the fields allowing the motor to generate higher travel speeds. If the drive motor current increases above a preset value as set by Function 8 of the Handset, "FW DO", the FW contactor will dropout putting the motor back into the 1A mode to climb ramps, inclines, etc.

RAMP START - This feature provides full TRANSISTOR torque to restart a truck on an incline. When stopping on an incline, the directional lever must be left in it's original position to allow the control to initiate full power when restarted and not revert to the plugging mode. The accelerator input will modulate the ramp start current.

FULL POWER TRANSITION - This built-in feature provides smooth transition from TRANSISTOR to 1A bypass. This is accomplished by the TRANSISTOR continuing to pulse until the 1A contactor power tips close.

ACCELERATOR VOLTS HOLD-OFF- This feature checks the voltage level at the accelerator input whenever the park brake switch is activated. If the accelerator input voltage is less than 2.5 volts, the control is turned

Copyrighted Material
Intended for CLARK dealers only
Do not sell or distribute

https://truckmanualshub.com/

'OFF'. This is to assure that the control is calling for low speed operation at start-up.

COIL DRIVERS - These drivers are internal to the logic card. They are the power devices that operate F, R, 1A, PS, RB, FW and Line contactor coils. These drivers energize or de-energize these coils on command from the logic card.

1A THERMAL HOLD OFF - This feature prevents the 1A contactor from closing when the truck is in *severe thermal cutback* to avoid torque jumps. If the control goes into severe thermal cutback, below 20% 'ON-TIME', the MUST PULSE TO TIME feature will inhibit the 1A timer.

MUST PULSE TO TIME - This feature prevents the 1A timer from timing if the oscillation pulse rate has not reached a preset level of operation.

PULSE MONITOR TRIP (PMT) - This feature shuts down or locks out control operation if fault conditions exist that would allow uncontrolled (run away) speed of the truck.

The PMT circuit **will not allow the control to start** under the follow conditions:

1. If the Transistor is shorted or if the 1A contactor tips are welded, the control will not allow the F and R contactor to close.

2. If the Fwd and/or Rev contactor tips are closed or the #3REC is shorted, the control will not start.

The PMT circuit **will shut down operation of the control** (opening of the F and R contactor)under the following conditions:

If the Transistor fails to turn 'OFF' or if 1A power tips remain closed when they should be open. After opening the F & R contactor, the PMT circuit will check for a fault, and if none is found will re-close the directional contactor. If the fault still exists, the directional contactor will open and remain open. If the 1A contactor closes or a directional change is made before a second failure, the look again feature will be reset. This eliminates the inconvenience of resetting the PMT with the key switch if the PMT is caused by random noise.

When the PMT circuit prevents the F & R contactors from closing, the PMT circuit must be reset by opening and re-closing the key switch.

THERMAL PROTECTOR (TP) - This is a temperature sensitive device that is internal to the Transistor module. If the Transistor's temperature begins to exceed the design limits, the thermal protector will lower maximum current limit and not allow the device to exceed its temperature limits. Even at a reduced current limit, the truck will normally be able to reach sufficient speed for full 1A operation, thereby allowing the panel to cool. As the panel cools, the thermal protector will automatically return the control to full power.

LOW VOLTAGE - Batteries under load, particularly if undersized or more than 80 percent discharged, will produce low voltages at the TRANSISTOR control terminals. **The EVT100ZX control is designed for use down to 50% of a nominal battery voltage.** Lower battery volts may cause the control to mis-operate; however the resulting PMT will open the F and R contactor in the event of a commutation failure.

HIGH FREQUENCY OPERATION - This feature provides constant high frequency oscillations at 2KHz for the control's entire operating range of creep speed to top speed. The high oscillation rate of the EVT100ZX allows quieter operation, higher average motor current with lower peak motor currents, less ripple current at the motor, and less motor heating.

ADJUSTABLE HOUR METER - The hour meter, internal in the oscillator card, can be set to any hour meter reading using the Handset. If a card

Copyrighted Material
Intended for CLARK dealers only
Do not sell or distribute

https://truckmanualshub.com/

is replaced in the field, the technician can now set the total truck hours to match the replaced card so that an accurate hour usage of the truck can be followed.

TIP BOUNCE TIMER AND ARCLESS 1A - The Tip Bounce Timer synchronizes the contactors and the power base so that under normal running conditions, the forward and reverse contactors do not make or break current. Under normal operation conditions, the 1A contactor makes current but does not have to break full motor current. Arcless interruption greatly increases 1A tip life.

CONTROL PANEL MAINTENANCE

The TRANSISTOR control, like all electrical apparatus, does have thermal losses. The semiconductor junctions have finite temperature limits, above which these devices may be damaged. For these reasons, normal maintenance should guard against any action which will expose components to excessive heat, such as steam cleaning, or which will reduce the dissipating ability of the control, such as restricting the air flow.

CAUTIONS:

* Capacitor polarity must be observed, do not connect them or test them with reverse polarity.

* Thermal grease must be used under the #3 REC and #4REC.

* Measurements of the Thermal Protector and other wires should be taken at the plug. Do not remove the wires from the plug without the proper tool to reconnect them.

* Capacitors must be replaced in banks of 3.

* The capacitor bank must be torqued to 6-8 inch pounds.

The following **DO'S** and **DON'TS** should be observed:

* Any controls that will be used in ambients of [50° C] 120° F or over should be brought to attention of Clark Material Handling Co.

* **All external components having inductive coils must be filtered**

* The control should not be steam cleaned. In dusty areas, use low-pressure air to blow off control. In oily or greasy areas, a mild solution of detergent or denatured alcohol can be used to wash off control. Then use low pressure air to blow unit completely dry.

* For the TRANSISTOR control to be most effective, it must be mounted against the truck frame. The truck frame, acting as an additional heat sink, will give improved truck performance by keeping the TRANSISTOR control cooler.

* Terminal boards and other exposed TRANSISTOR control parts should be kept free from dirt and paint that might change effective resistance between points.

THE TRUCK SHOULD NOT BE PLUGGED WHEN THE TRUCK IS JACKED UP AND THE DRIVE WHEEL IS IN A FREE-WHEELING POSITION. THE HIGH MOTOR SPEEDS CAN CREATE EXCESSIVE VOLTAGES THAT CAN BE HARMFUL TO THE CONTROL.

* Do not HIPOT (or MEGGER) control. Unless terminals of each semiconductor and card are connected together, the control may be damaged. Refer to control manufacturer before **hipotting**.

* Use a lead-acid battery with voltage and ampere hour rating as specified for the truck. Follow normal battery maintenance procedures, recharging before 80 percent discharged and with periodic equalizing charges.

Copyrighted Material
Intended for CLARK dealers only
Do not sell or distribute

https://truckmanualshub.com/

CONTROL PANEL TROUBLESHOOTING

When diagnosing and correcting the cause of trouble with an electrical control, **do not begin** by disassembling components.

Start by analyzing the complaint and symptoms. Make a preliminary investigation of trouble. Then systematically determine the probable cause.

The following points are fundamental to trouble-shooting an electrical system.

* Never start your troubleshooting until you get facts. Talk with truck operator and review work order.

* Operate the truck to observe fault and then determine what corrective action should be. Determine where to start.
* Perform the basic checks. Check battery and test for grounds and shorts. Do not take short cuts by assuming these checks do not have to be made.

* Useless work can be avoided by diagnosing trouble accurately on basis of preliminary investigation and correct use of information in the trouble-shooting guide. Take necessary time for sufficient preliminary investigation.

* Use explanations for status codes indicated to properly diagnose misoperations. You may also want to use the Sequence of Operation section of this manual as a diagnostic tool.

* Locate the trouble by a process of elimination. The cause is usually simple, rather than mysterious and complicated.

* MOST IMPORTANT, USE THE ELECTRICAL SCHEMATIC DIAGRAM FOR THE TRUCK YOU ARE WORKING ON. YOU MUST BE ABLE TO TRACE THE:

** **POWER CIRCUITS** which consist of heavy cables and main power components of truck.

** **SPEED CIRCUITS** which control speed, time delay, controlled plugging and Regenerative braking.

** **DIRECTIONAL CIRCUITS** which control forward and reverse contactors.

** **ACCESSORY CIRCUITS** which control components, including horn, pump contactor and dash display.

ALL TESTING SHOULD BE DONE WITH DRIVE WHEEL RAISED OFF THE FLOOR.

TROUBLE-SHOOTING NOTES

Trouble-shooting is based on using a digital voltmeter to determine if correct voltages are available to permit the control to operate correctly.

The pulsing of the Transistor is too fast for conventional instruments to measure. When the control is functioning properly, a high pitch hum can be heard.

Before proceeding with any testing, visually check for loose wiring, signs of overheating of components, condition of battery and battery receptacle, etc.

WARNING

BEFORE TROUBLE-SHOOTING OR TESTING, THE DRIVE WHEEL MUST BE RAISED OFF THE FLOOR, THE BATTERY DISCONNECTED AND THE CAPACITOR DISCHARGED.

BREAKING THIS RULE CAN CAUSE SERIOUS INJURY TO YOURSELF

To discharge the capacitors:

1. **Turn key switch OFF and unplug the battery.**
2. **Turn the key switch ON, the line contactor should energize and**

Copyrighted Material
Intended for CLARK dealers only
Do not sell or distribute

https://truckmanualshub.com/

the seat belt warning signal should sound until the capacitors are discharged.

Or

2. Using a 200 ohm, 2 watt resistor, short between the POS and NEG power terminals of the control. Hold the resistor in place for 2 seconds before removing.

CAUTION: Using a shorting device without a resistor load could cause damage to the control.

Check resistance(s) from frame to power and control terminals. A resistance of less than 20,000 ohms can cause misleading symptoms. If less than 20,000 ohms resistance is measured, conduct further tests to eliminate short circuit / ground fault conditions.

Refer to Systems Diagnostic area for detailed information on sequence of operation and trouble-shooting of control.

Tools and test equipment required are:
* Handset #915374
* Clip leads
* Volt-ohm meter(VOM)*(20,000 ohms)
* General hand tools

Copyrighted Material
Intended for CLARK dealers only
Do not sell or distribute

https://truckmanualshub.com/

Group 19
SECTION 2

ECG
ELECTRICAL
SEQUENCE OF OPERATION

EVT100ZX
STANDARD CONTROL

Sequence	Page
Schematic	2
Connect the Battery	4
Close the Key Switch	6
Close the Key Switch (Continued)	8
Park Brake Switch & Static Return to Off (SRO) Checks	10
Energizing the Directional Contactors	12
Energizing the Directional Contactors (Continued)	14
Turning 'ON' the Transistor	16
Turning 'OFF' the Transistor, Capacitor Charging and Flyback	18
Accelerator, Thermal Protector and Pulse Monitor Trip (PMT)	20
1A Contactor Operation	22
Plugging	24
Plugging (continued)	26
Plugging (continued)	28
Hydraulic Functions	30

Copyrighted Material
Intended for CLARK dealers only
Do not sell or distribute

https://truckmanualshub.com/

OPERATIONAL SEQUENCE #1

This standard schematic is shown with all switches and contactors in their normal 'OFF' position. No circuits are operating. The four basic areas of circuitry are identified.

POWER

DIRECTIONAL

SPEED

ACCESSORY

Copyrighted Material
Intended for CLARK dealers only
Do not sell or distribute

https://truckmanualshub.com/

EVT100ZX Schematic

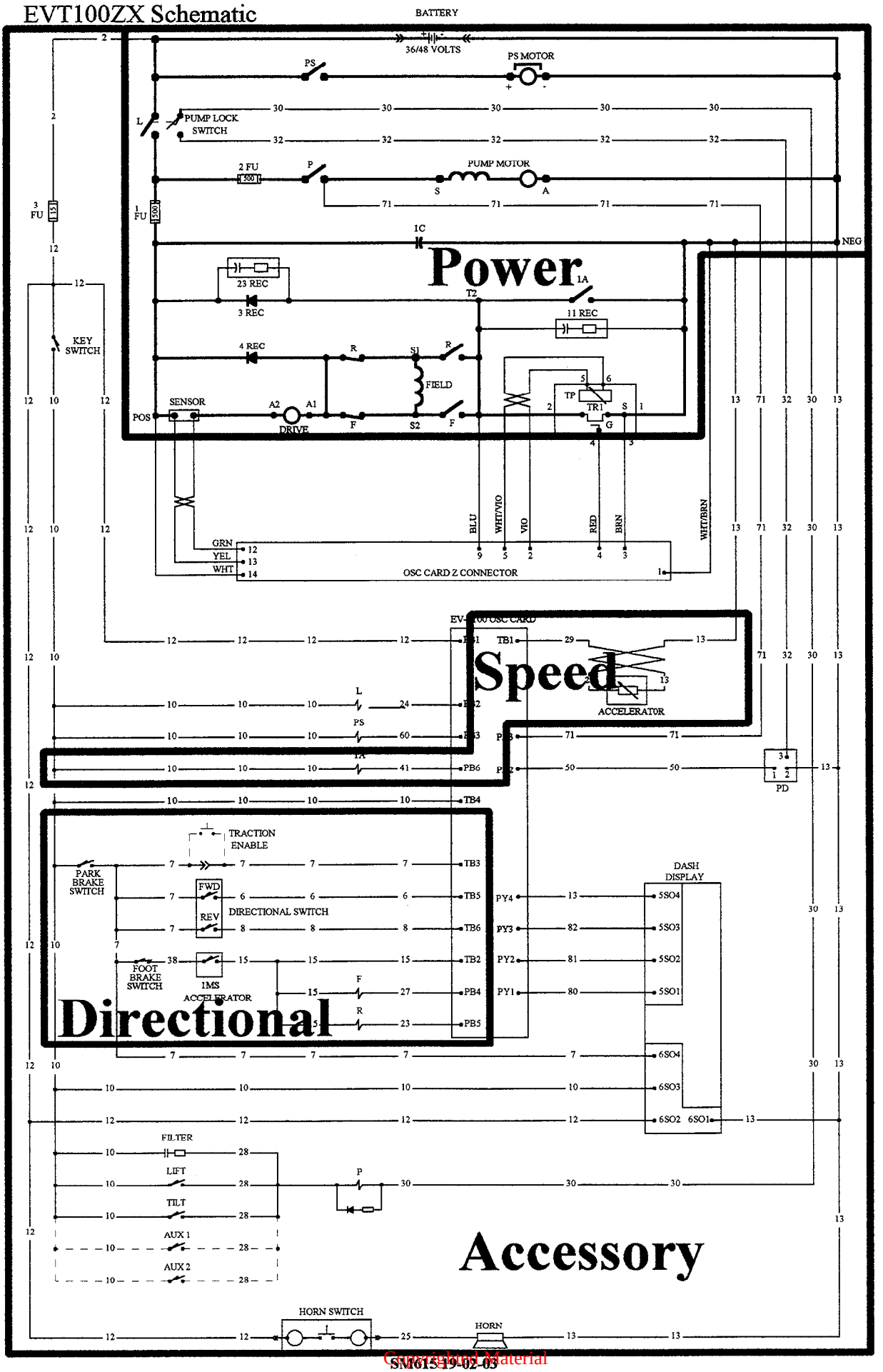

Copyrighted Material
Intended for CLARK dealers only
Do not sell or distribute

IN-24947

https://truckmanualshub.com/

OPERATIONAL SEQUENCE #2

Connect the Battery

A. Battery positive will be applied to terminal PB-1 of the EVT100ZX control card through wire #2, 3 FU and wire #12.

B. The negative circuit will be completed from terminal PZ-1 of the EVT100ZX card through the white/brown wire to the control panel negative cable terminal.

C. The EVT100ZX card, through an internal circuit, supplies a controlled capacitor charging current through the white wire at terminal PZ-14 to the positive side of the 1C capacitor.

D. The capacitors will charge to battery volts in approximately 2 seconds. When the 1C capacitors are charged to battery volts, the flow of the charging current will stop.

Note: Status Code -51 will be displayed if the 1C capacitors do not charge to above 85% battery volts. It is normal for Status Code -51 to be intermittently be displayed for about 2 seconds during the charging time, when the battery is initially plugged in.

E. Battery Positive is supplied through wire #12 to the key switch.

F. The horn is operated by pushing the horn button which will supply battery voltage to the horn through wire #25, and negative through wire #13.

G. Battery Positive is supplied through wire #12 to the dash display at terminal 6SO2. The dash display is connected to Battery Negative through the #13 wire at terminal 6SO1.

Voltages Present:

A. Battery positive
B. Battery negative
C. Battery positive
D. Battery voltage across 1C capacitors
E. Battery positive
F. Battery positive on wire #25, battery negative on wire #13
G. Battery positive on wire #12, battery negative on wire #13

Copyrighted Material
Intended for CLARK dealers only
Do not sell or distribute

https://truckmanualshub.com/

EVT100ZX Schematic

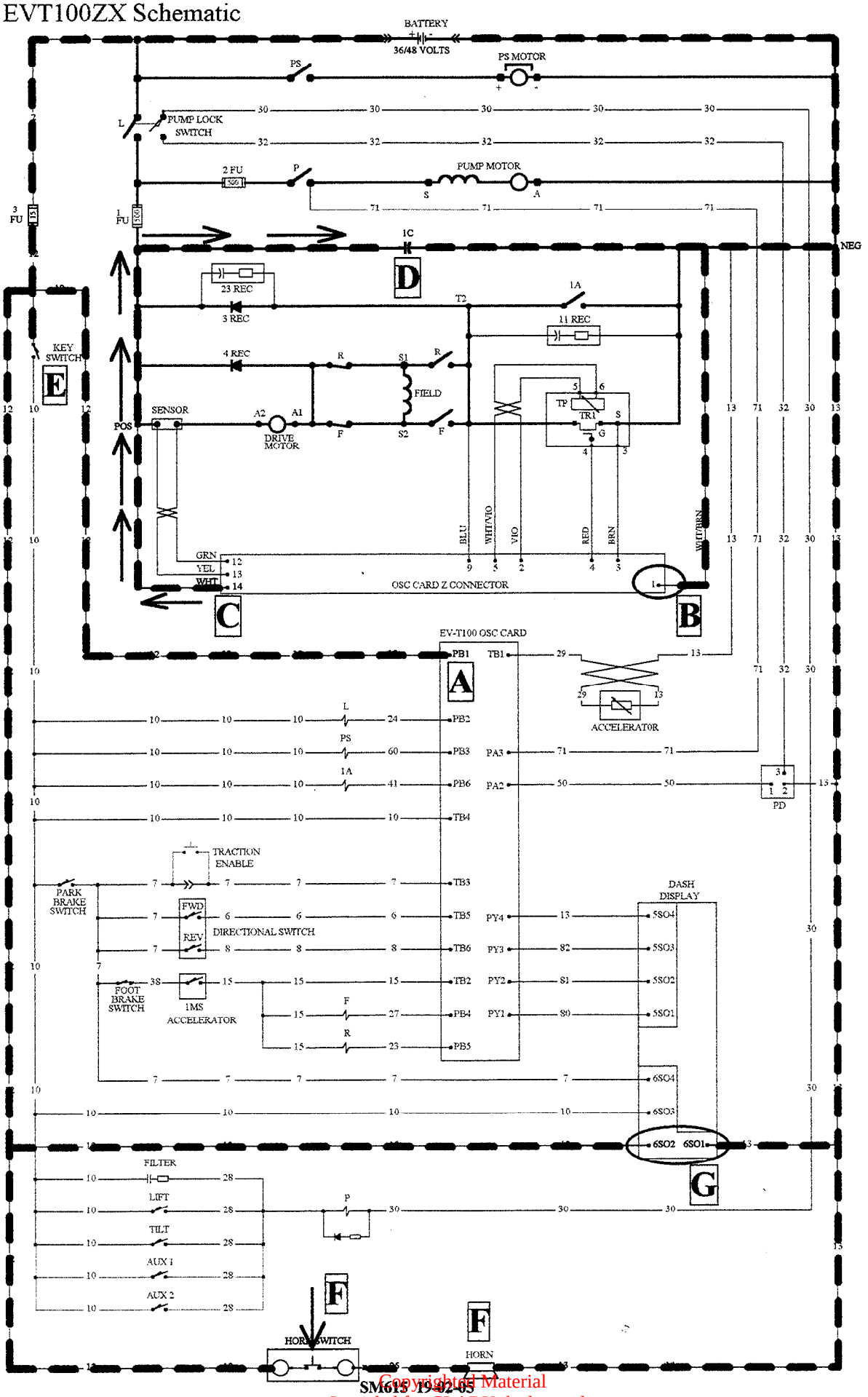

Copyrighted Material
Intended for CLARK dealers only
Do not sell or distribute

IN-24947

https://truckmanualshub.com/

OPERATIONAL SEQUENCE #3

Close the Key Switch

A. Closing the Key Switch will supply battery positive to terminal TB-4 of the EVT100ZX control card, Line, PS and 1A contactor coils, all hydraulic function switches and the Park Brake Switch through the #10 wires. The card will check the battery volts at this time to see if it corresponds with the voltage setting within the card.

Note: Status Code -15 or -16 will be displayed if the battery voltage is less than or higher than the preprogrammed battery voltage setting, function #15.

B. Battery Positive will also be supplied to the Dash Display through wire #10 to terminal 6SO3. This voltage will signal the dash display self test, lighting all indicators for about 2 seconds, and to sound the Seat Belt Warning Alarm and turn the Seat Belt Warning Indicator ON for 8-10 seconds.

C. The EVT100ZX control card will send data signals on wires #80, #81, #82, and #13 to the dash display to light all the display segments as a visual check for the operator. If all the segments are working, 8888 will be displayed for about 2 second.

D. After the 2 second segment check, the EVT100ZX control card will sense the absence of battery voltage at terminal TB-3 indicating that the park brake switch is not closed. It will send a signal to the dash display to show a -01 Status Code representing an open park brake switch.

Note: If the truck hours exceed the preprogrammed maintenance reminder hours (functions 19 & 20), a Status Code -99 will be displayed for about 4 seconds between the 8888 display and the normal truck display. The truck will be disabled while the -99 Status Code and the maintenance indicator are displayed.

E. The Dash Display will sense the absence of battery voltage at terminal 6SO4 also indicating that the park brake switch is not closed. The Dash Display will illuminate the Park Brake indicator.

Voltages Present:

A. Battery positive on all #10 wires
B. Battery positive at terminal 6SO3
C. NA
D. 0 volts at terminal TB-3
E. 0 volts at terminal 6SO4

Copyrighted Material
Intended for CLARK dealers only
Do not sell or distribute

https://truckmanualshub.com/

EVT100ZX Schematic

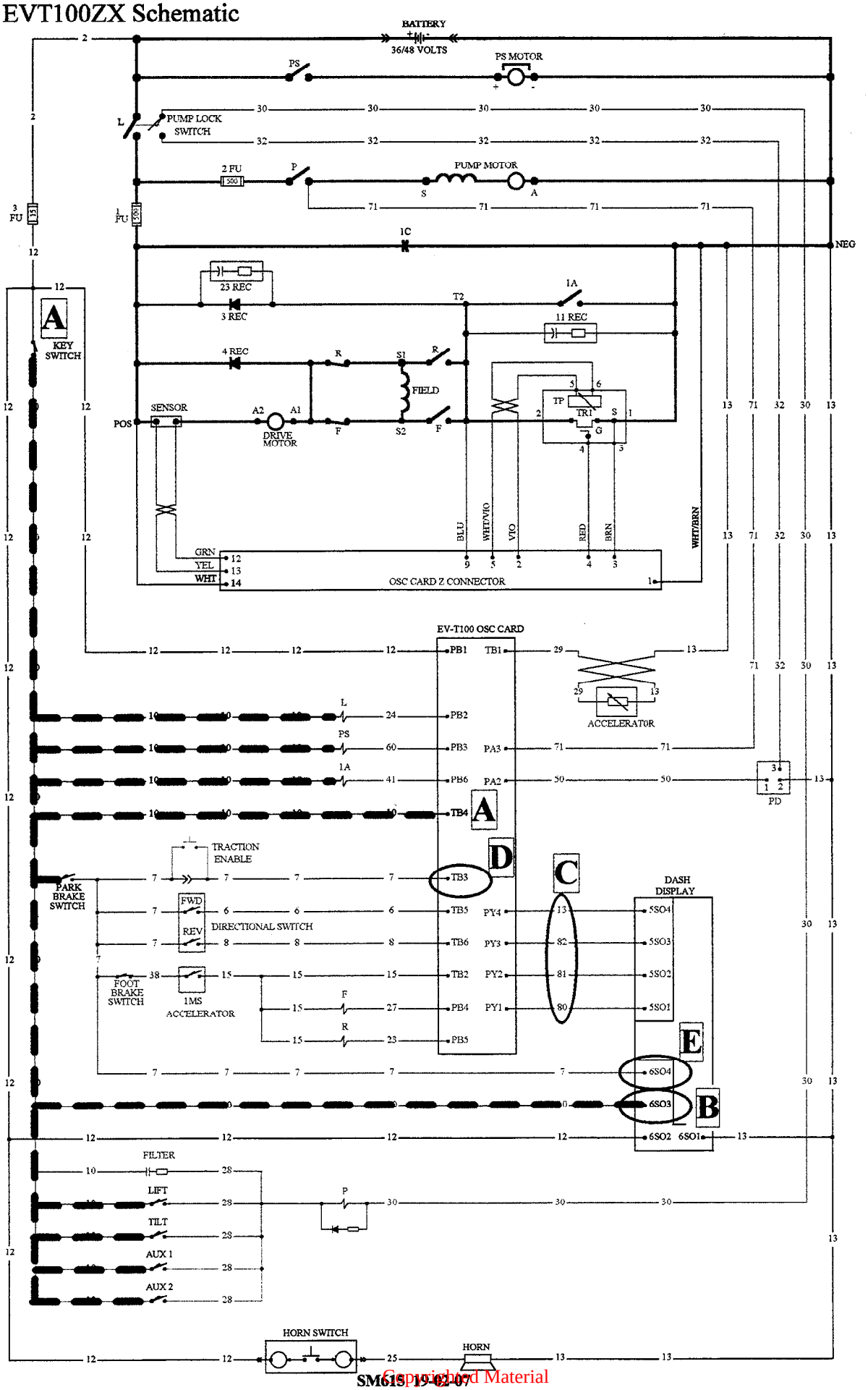

Copyrighted Material
Intended for CLARK dealers only
Do not sell or distribute

IN-24947

https://truckmanualshub.com/

OPERATIONAL SEQUENCE #3

Close the Key Switch (Continued)

F. If the 1C capacitors are fully charged, the EVT100ZX control card will complete the circuit from wire #24 at terminal PB-2 to battery negative. This will energize the line contactor coil in turn closing the line contactor power tips.

G. The closing of the line contactor power tips will release (close) the Pump Lock switch.

H. The closure of the pump lock switch will connect the pump contactor coil to the pump driver through wires #30 and #32.

J. The EVT100ZX control card checks the battery condition by checking the battery volts between terminal PB-1 and battery negative. If the battery is not discharged, the card will supply a voltage signal from terminal PA-2 through wire #50 to terminal #1 of the Pump Driver turning the driver ON providing battery Negative to the pump contactor coil.

K. The closure of the line contactor power tips will keep the 1C capacitors charged to battery volts.

L. The EVT100ZX control card will monitor the capacitor charge on the white wire at terminal PZ-14.

Note: Status Code -50 will be displayed if the capacitor voltage does not remain above 85% battery volts after the line contactor closes.

Voltages Present:

F. Approximately 10-13 volts across the coil
G. Battery volts across the 1C capacitors.
H. Battery positive.
J. 2-8 volts
K. 0 volts at terminal TB-3.
L. 0 volts at terminal 6SO4.

Copyrighted Material
Intended for CLARK dealers only
Do not sell or distribute

https://truckmanualshub.com/

EVT100ZX Schematic

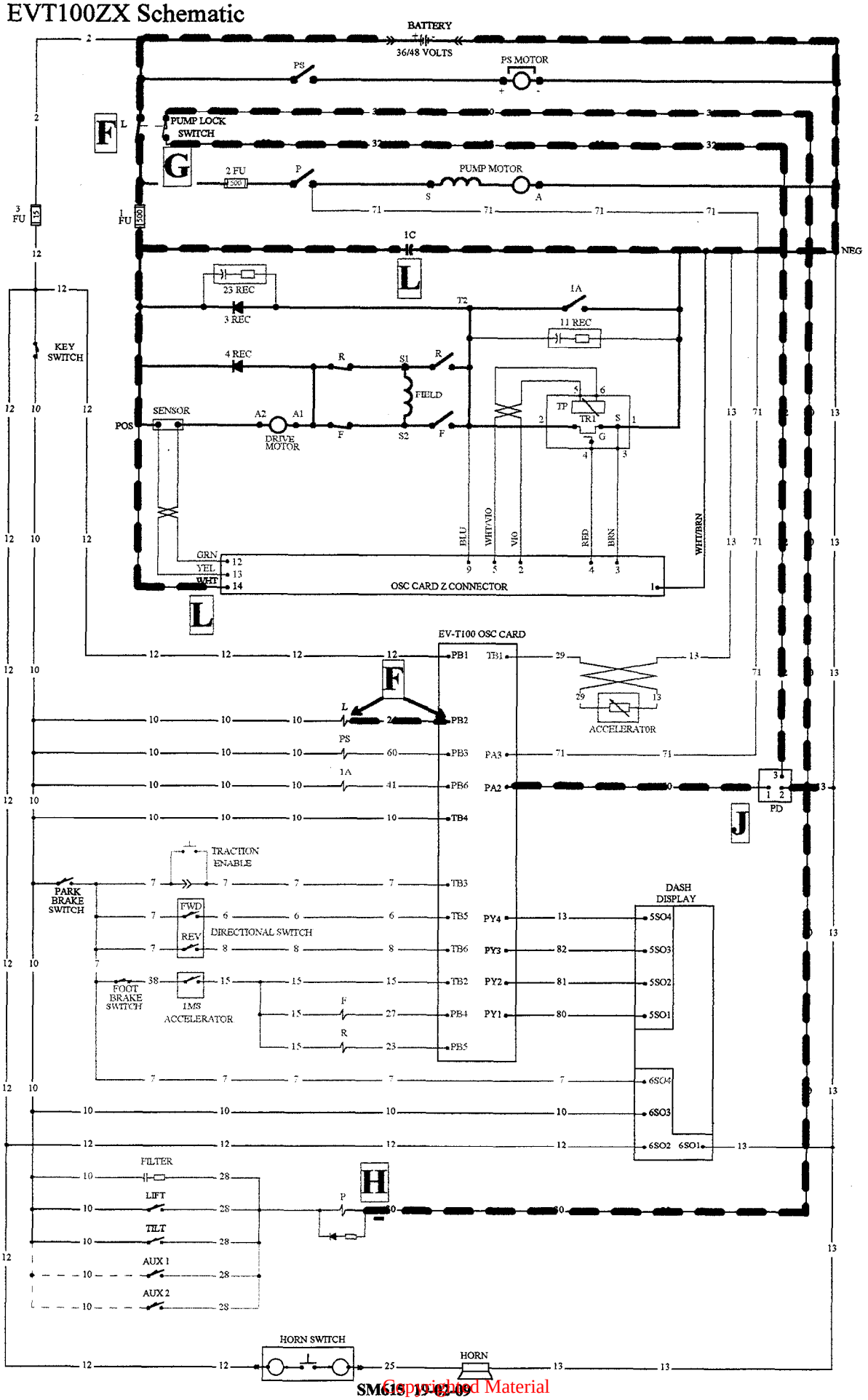

Copyrighted Material
Intended for CLARK dealers only
Do not sell or distribute

IN-24947

https://truckmanualshub.com/

OPERATIONAL SEQUENCE #4

Park Brake Switch & Static Return to Off (SRO) Checks

A. Releasing the park brake lever will close the park brake switch.

B. Battery volts will be supplied through the #7 wire to the dash display terminal 6S04. The parking brake indicator will turn OFF.

C. Battery volts will also be supplied through the #7 wire to terminal TB-3 of the EVT100ZX control card. The -01 Status code on the display will be replaced by the battery condition display or some other status code.

D. Battery volts will also be supplied to the common terminal of the directional switches and through the normally closed points of the foot brake switch and wire #38 to the common terminal of the 1MS switch.

E. The control will not allow the truck to start until the following SRO checks are satisfied:

1) Voltage at terminals TB-3 of the EVT100ZX control card must be at battery voltage. (Status Code -01 if voltage is 0)

2) Checks for open F & R switch inputs, terminals TB-5 and TB-6 must be 0 volts for 1.0 second after voltage is applied to terminal TB3. (Status Code -02 or -03)

3) Checks for open 1MS switch input, terminals TB-2 must be 0 volts for 1.0 second after voltage is applied to terminal TB3. (Status Code 11)

4) Checks the accelerator input voltage at terminal TB-1 of the EVT100ZX control card. Must be greater than 2.5 volts. (Status Code -08)

Note: The EVT100ZX control will repeat the above SRO checks any time that the park brake switch remains open for more than 2.0 seconds.

F. If all of the above SRO checks are satisfied, the EVT100ZX control card will send a signal to the dash display to show the state of battery charge.

Note: The battery state of charge is displayed as a 3 digit positive number dependent on the battery condition, and the battery indicator will be 'ON'.

Voltages Present:

A. Battery Positive
B. Battery Positive
C. Battery Positive
D. Battery Positive
E. See explanations 1-4 above.
F. NA

Copyrighted Material
Intended for CLARK dealers only
Do not sell or distribute

https://truckmanualshub.com/

EVT100ZX Schematic

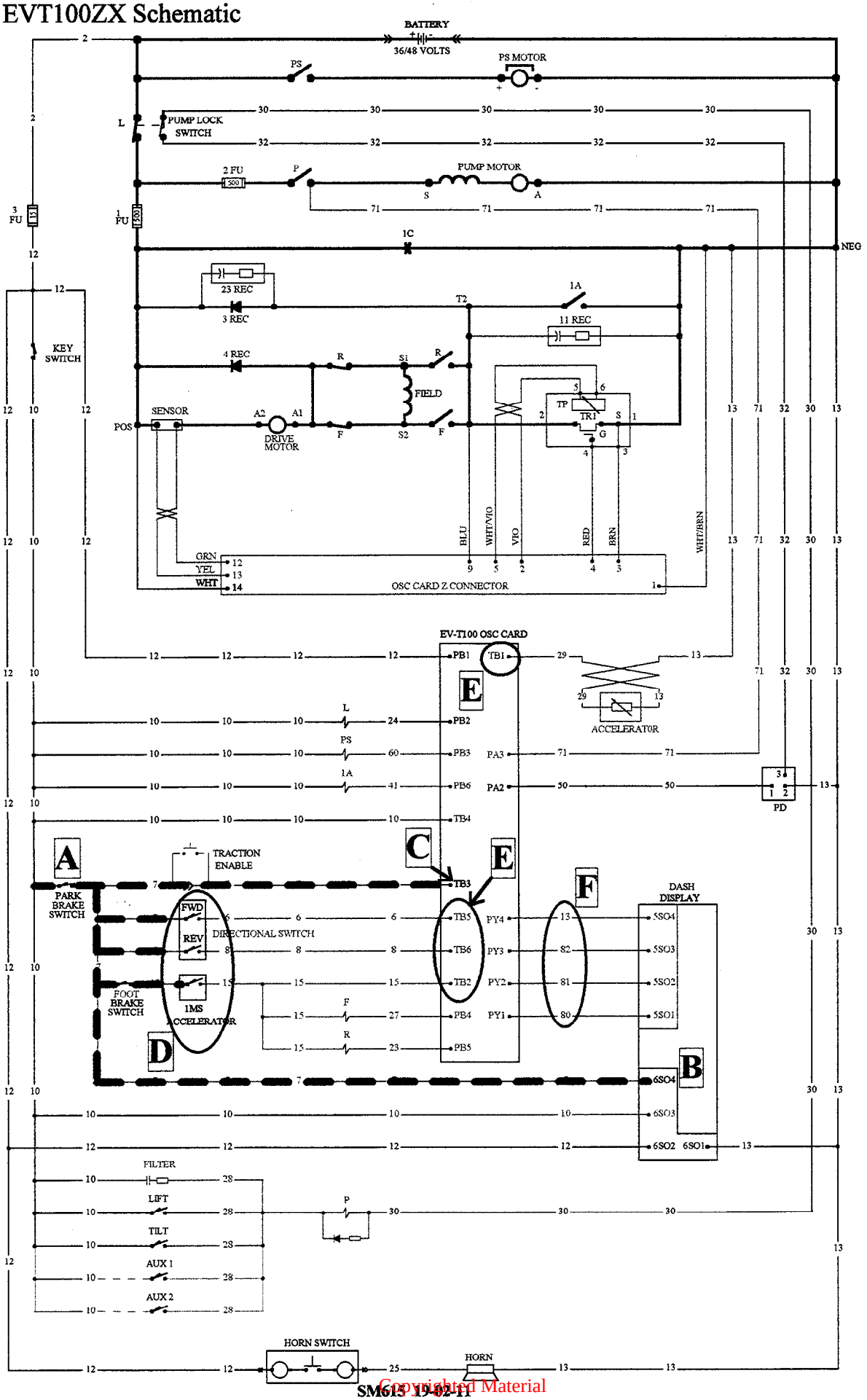

Copyrighted Material
Intended for CLARK dealers only
Do not sell or distribute

IN-2494

https://truckmanualshub.com/

OPERATIONAL SEQUENCE #5

Energizing the Directional Contactors

A. Moving the directional lever to forward will close the forward switch. With the forward switch closed, battery positive will be applied to terminal TB-5 of EVT100ZX control card through wire #6.

B. The EVT100ZX control will now make the following start-up checks:

1) T2 voltage, terminal PZ-14, must be above 12% battery volts. This checks for shorted 1A contactor driver, shorted power transistor, shorted #11 REC Snubber, or welded 1A contactor tips. (Status Code -46)

2) T2 voltage, terminal PZ-14, must be below 88% battery volts. This checks for shorted forward or reverse contactor drivers, shorted #3 REC, 23 REC or welded forward or reverse contactor tips. (Status code -48)

3) The current sensor is present in the power circuit and the green and yellow wires from the sensor are connected to terminals PZ-12 and PZ-13 of the EVT100ZX control card. (Status Code -42 or -43)

C. When the EVT100ZX control card senses battery positive at terminals TB-3 and TB-5 and 0 volts at TB-6, it will complete the circuit from the power steer contactor coil to battery negative through wire #60 at terminal PB-3 of the EVT100ZX control card.

Note: If battery voltage is applied to both terminals TB-5 and TB-6 at the same time, the control will be shut OFF. (Status Code -09)

D. This will energize the power steer contactor coil and in turn, close the normally open contactor tips.

E. The power steer motor now operates because current flows from battery positive to the steer motor and to battery negative. (NOTE: Permanent Magnet Motor)

NOTE: The EVT100ZX control card will now start to accumulate the running hours of the truck because the power steer motor is now running. The EVT100ZX control card tracks the running time in Seconds, Minutes and Hours but the time is displayed only in full 1 hour increments.

Voltages Present:

A. Battery positive at TB-5
B. See explanations 1-3 above
C. 10-13 volts across the PS coil
D. Battery positive
E. Battery volts across motor

Copyrighted Material
Intended for CLARK dealers only
Do not sell or distribute

https://truckmanualshub.com/

EVT100ZX Schematic

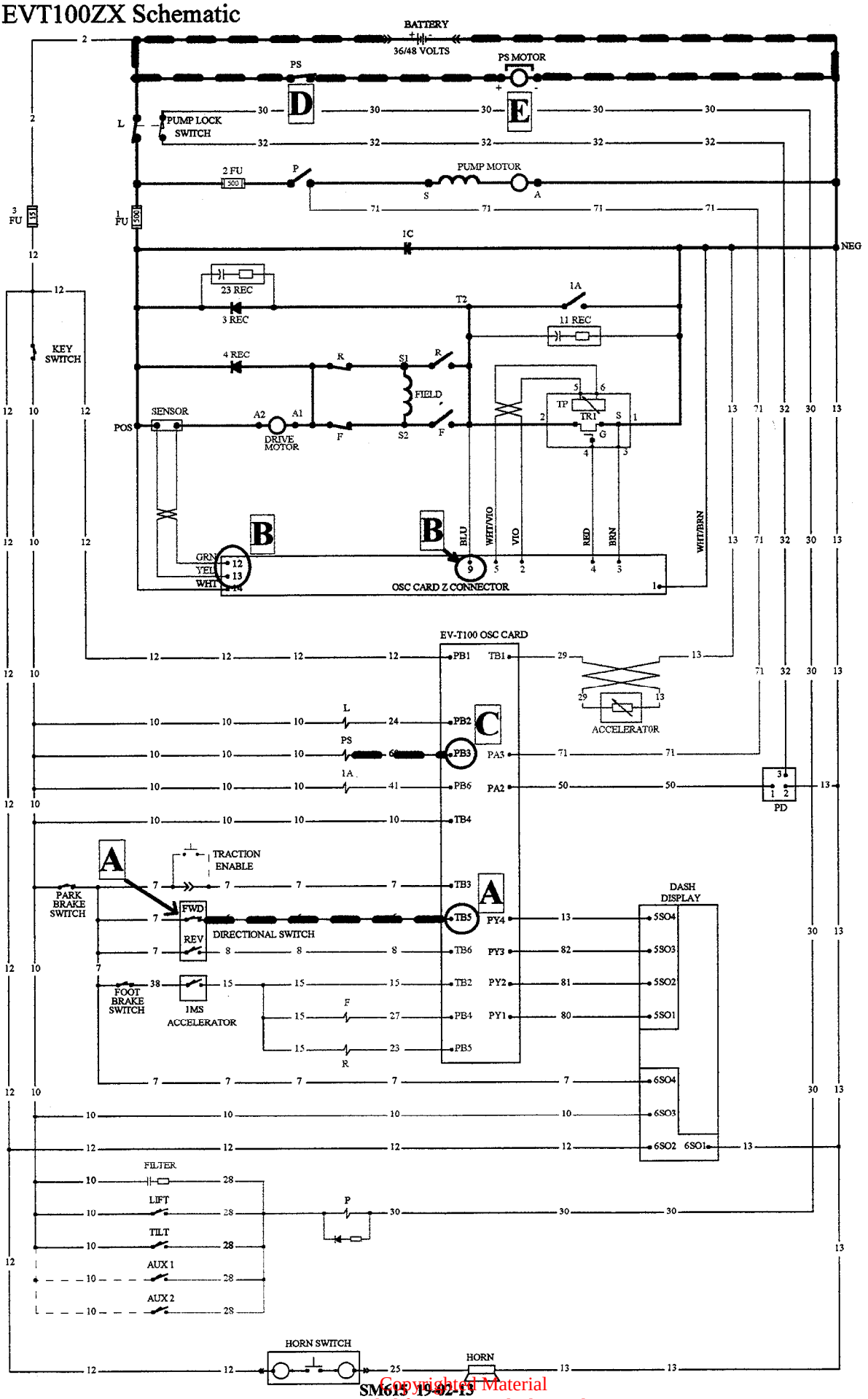

Copyrighted Material
Intended for CLARK dealers only
Do not sell or distribute

IN-24947

https://truckmanualshub.com/

OPERATIONAL SEQUENCE #5

Energizing the Directional Contactors (Continued)

F. Depressing the accelerator pedal slightly will close the 1MS switch and supply battery voltage through the #15 wires to terminal TB-2 and to the Forward and Reverse contactor coils.

G. When the EVT100ZX control card senses battery positive at terminals TB-2 and TB-5 and 0 volts at terminal TB-6, it will complete the circuit from the forward contactor coil to battery negative through wire #27 at terminal PB-4 of the control card.

H. This will energize the forward contactor coil and in turn, open the normally closed contactor tips and close the normally open tips.

NOTE: The EVT100ZX control card monitors the current flowing through the directional contactor coil circuits. Status Code -23 will be displayed if the current is less than a preset value.

Voltages Present:

F. Battery positive on wire #15
G. 10-13 volts across the fwd contactor coil.
H. NA

Copyrighted Material
Intended for CLARK dealers only
Do not sell or distribute

https://truckmanualshub.com/

EVT100ZX Schematic

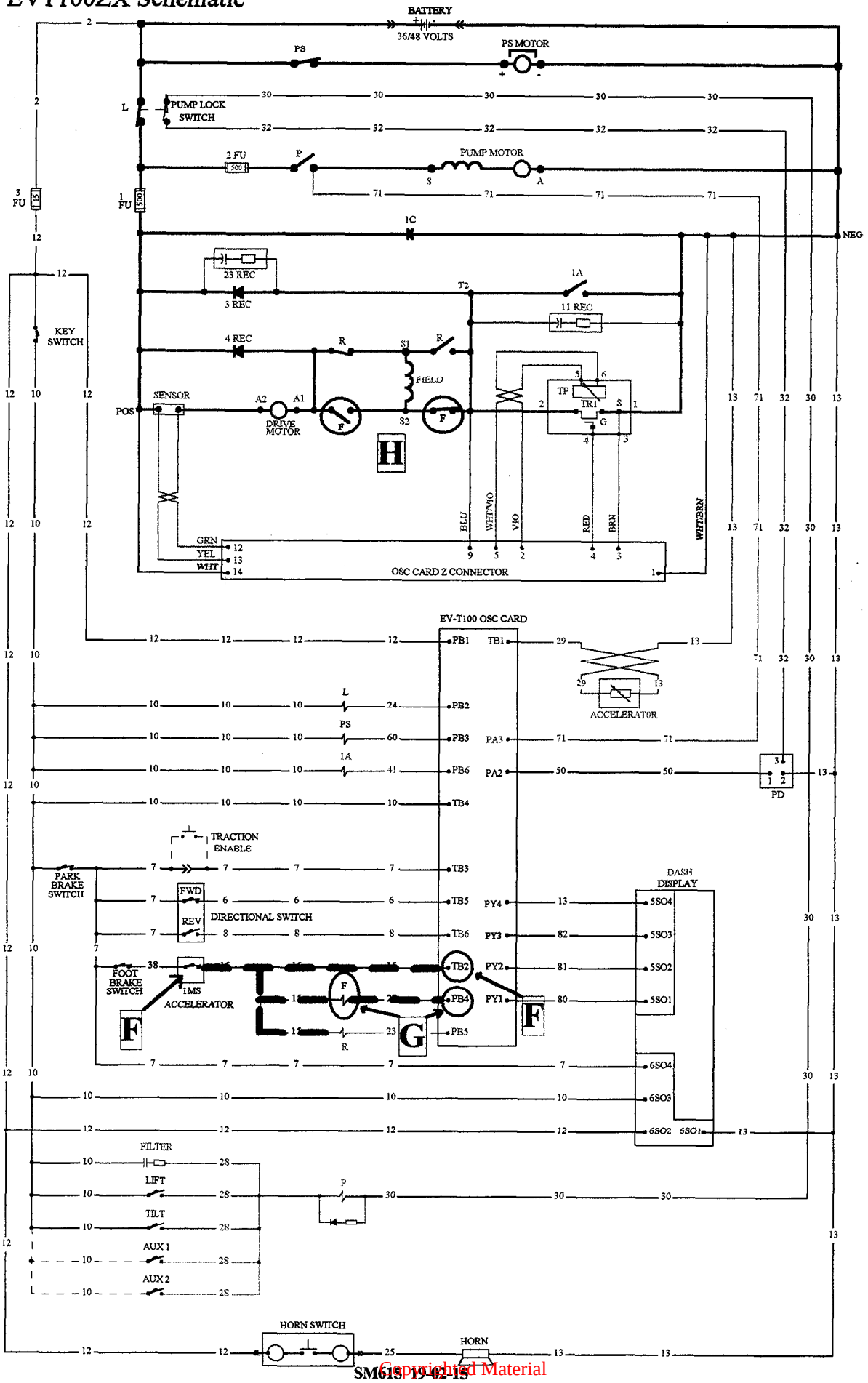

Copyrighted Material
Intended for CLARK dealers only
Do not sell or distribute

IN-24947

https://truckmanualshub.com/

OPERATIONAL SEQUENCE #6

Turning ON the Transistor

A. The EVT100ZX control senses that the forward contactor has closed and the motor circuit is not open when it senses that the T2 voltage, through the blue wire at terminal PZ-9, is at battery positive.

Note: Status Code -24 will be displayed if T2 voltage is less than 88% battery volts.

B. A signal from the accelerator at terminal TB-1 of the EVT100ZX control card starts an internal time delay which controls the oscillator in the card.

C. The EVT100ZX control card applies a gate voltage from terminal PZ-4 and PZ-3, through the red and brown wires respectively, to the gate of the transistor. The transistor will turn 'ON' completing the drive motor circuit to battery negative.

NOTE: Status Code -45 will be displayed if the transistor fails to turn 'ON' due to intermittent or open gate connection or faulty transistor.

D. Current now flows from the battery, through the 1FU fuse, the line contactor, sensor, drive motor armature and field windings, the closed directional contactor tips and through the transistor to battery negative.

E. Current will also flow from the 1C capacitors through the same drive motor circuit to battery negative. The amount of current flowing out of the capacitors will depend on the percent ON-time of the control.

F. The interaction of magnetic energy between the motor fields and the armature causes the armature to rotate.

Voltages Present:

A. Battery positive at terminal PZ-9 (T2).
B. Less than 3.5 volts at terminal TB-1.
C. Not measurable.
D. Battery positive.
E. N/A
F. N/A

Copyrighted Material
Intended for CLARK dealers only
Do not sell or distribute

https://truckmanualshub.com/

EVT100ZX Schematic

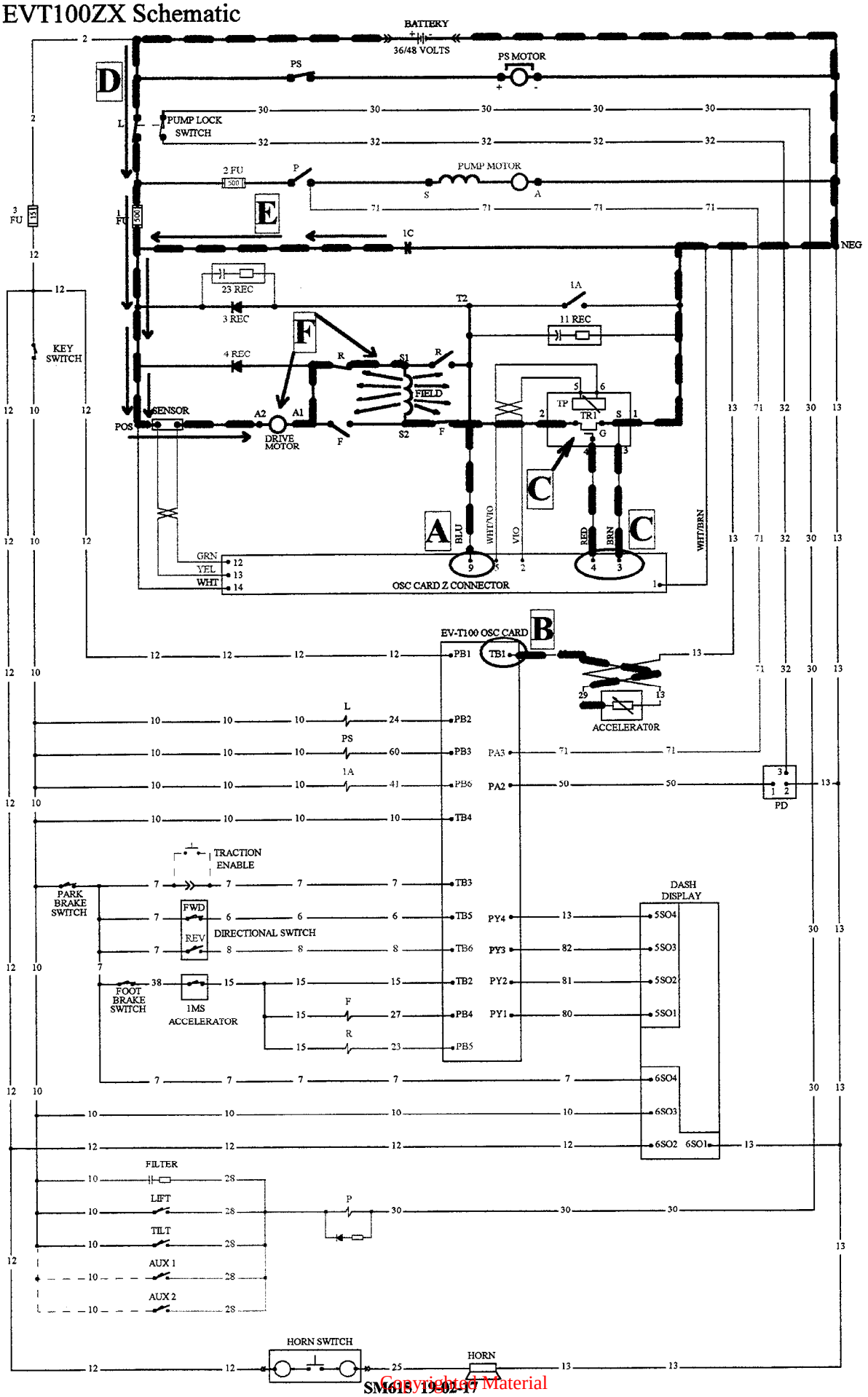

Copyrighted Material
Intended for CLARK dealers only
Do not sell or distribute

IN-24947

https://truckmanualshub.com/

OPERATIONAL SEQUENCE #7

Turning 'OFF' the Transistor, Capacitor Charging and Flyback

A. The control now removes the gate voltage and the transistor will turn 'OFF'.

NOTE: Status Code -44 will be displayed if the transistor fails to turn 'OFF' due to intermittent or open gate connection or faulty transistor.

B. The current stops flowing because the battery and capacitors can no longer complete a circuit through the drive motor back to battery negative. The magnetic energy of the drive motor field collapses. This collapsing magnetic field induces a voltage across the field that is opposite to battery voltage.

C. This reverse voltage forces current to flow through the #3 REC, sensor and armature. This current, called 'FLYBACK CURRENT', continues to drive the armature during the transistor's OFF-time.

D. Battery current will continue to flow into the 1C capacitors during the transistor OFF-time because the line contactor is closed and the 1C capacitors have been partially discharged. This current will stop flowing when the 1C capacitors are charged to battery voltage.

Voltage Present:

Too quick to measure.

Note: Average drive motor current, compared to battery current, will be about two to three times as great when operating in the transistor range.

Note: The purpose of the #23 REC is to filter the generated voltage spikes created by the #3 REC turning 'ON' and 'OFF'.

Copyrighted Material
Intended for CLARK dealers only
Do not sell or distribute

https://truckmanualshub.com/

EVT100ZX Schematic

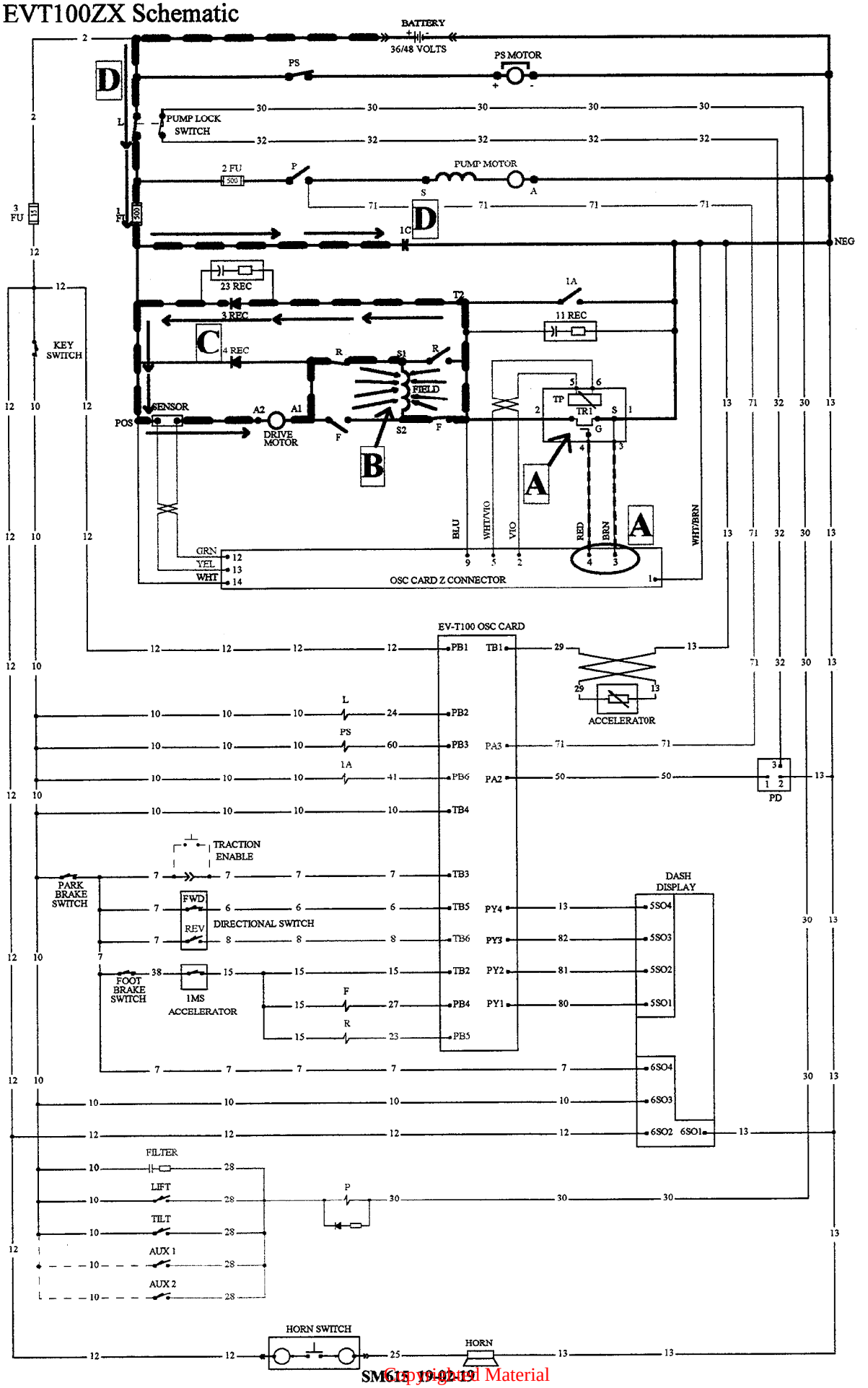

Copyrighted Material
Intended for CLARK dealers only
Do not sell or distribute

IN-24947

https://truckmanualshub.com/

OPERATIONAL SEQUENCE #8

Accelerator, Thermal Protector and Pulse Monitor Trip (PMT)

Turning the transistor ON and OFF produces a pulse. A switching technique that controls the pulse width is used to control the speed and/or power of the truck. Increased pulse width produces more speed and/or power.

A. The width of pulses is governed by the accelerator and the current sensor. Depressing the accelerator pedal changes (decreases) the accelerator input signal at terminal TB-1 of the EVT100ZX control card. The internal oscillator circuit of EVT100ZX control card will increase the pulse width as accelerator input signal is further decreased. The current sensor continuously monitors the motor current and signals the control to shorten the pulse length during high motor currents.

NOTE: Status Code -82 will be displayed if the drive motor is stalled in the Control mode with the motor current equal to or greater than 500 Amps for 8 seconds or longer. This is called "Anti Stall Reminder" for the operator.

B. If the control is overworked, the transistor and the built-in thermal protector (TP) will get hot. Resistance in the TP will increase and reduce the current limit regardless of accelerator position. This reduction in current limit is called 'Thermal Cutback'. As the control cools, the TP will automatically return the current limit to the preset value as defined by the C/L setting of the EVT100ZX control card.

Note: Even at reduced current limit during thermal cutback, the truck should be able to reach sufficient speed for 1A contactor operation. Status Code -41 will be displayed if the control is in severe thermal cutback and the 1A contactor will not close.

C. When the transistor is turned ON, the #3 REC stops conducting.

D. The blue wire to terminal PZ-9 of the EVT100ZX control card allows the control to sense pulsing. If the transistor fails to turn OFF, the card opens the circuit from terminals PB-4 and PB-5 to battery negative so the directional contactor coils de-energize, dropping out (opening) the contactor tips.

E. The control will quickly re-close the proper contactor in a 'LOOK AGAIN' mode and drop out the contactors (PMT) if the problem still exists. To reset the PMT, the key switch must be opened and re-closed with the directional switches and accelerator in neutral.

Voltages Present:

A. 3.5-4.0 volts at creep speed. 0.5 volts or less at top speed.
B. Less than 0.5 volts across the TP is no cutback; greater than 3.4 volts across the TP is severe cutback.
Others N/A

Copyrighted Material
Intended for CLARK dealers only
Do not sell or distribute

https://truckmanualshub.com/

EVT100ZX Schematic

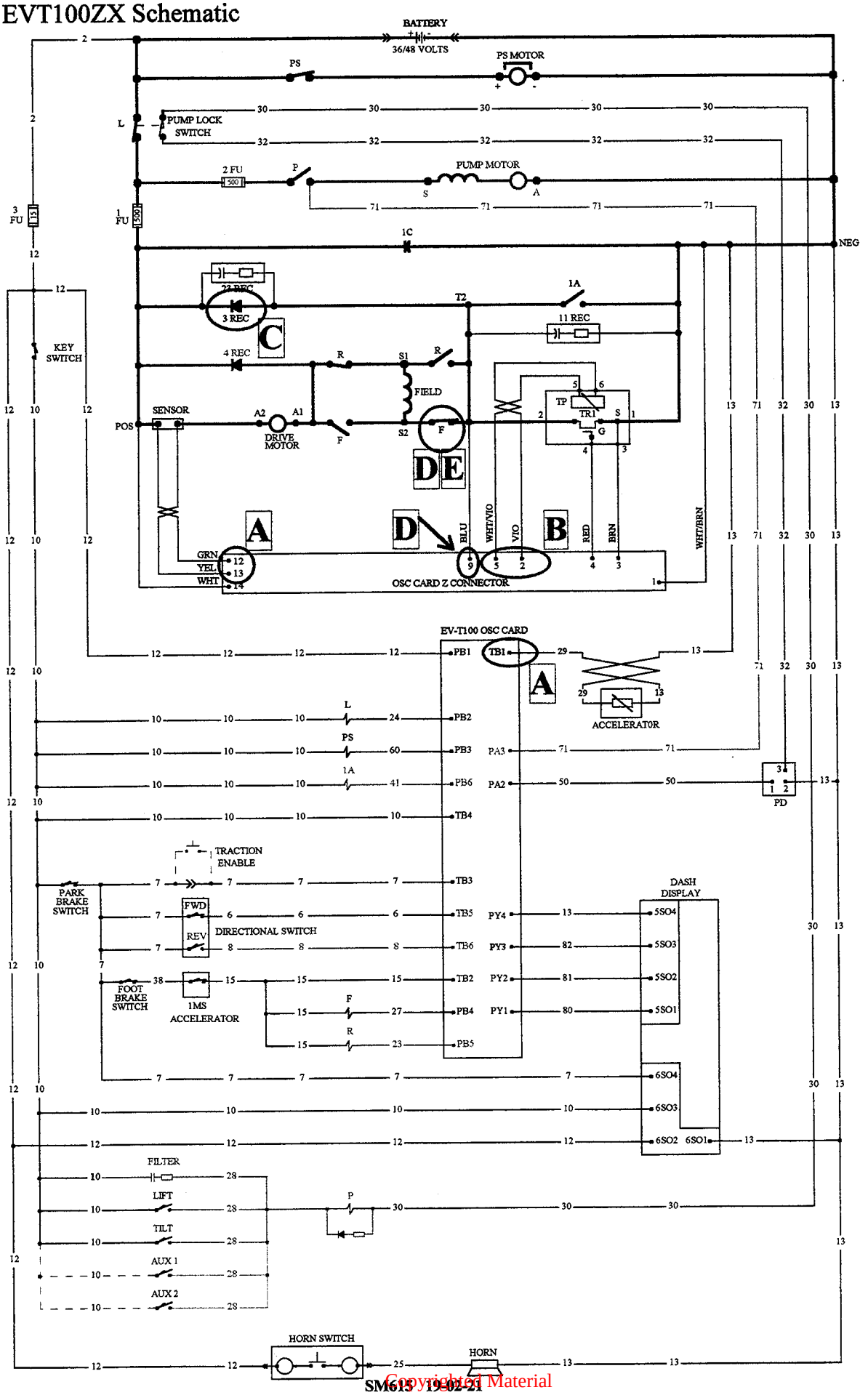

Copyrighted Material
Intended for CLARK dealers only
Do not sell or distribute

IN-24947

https://truckmanualshub.com/

OPERATIONAL SEQUENCE #9

1A Contactor Operation

The transistor circuit is capable of delivering approximately 100% of available battery voltage to the drive motor. For full speed and/or power, the 1A contactor is closed to bypass the transistor panel and apply full available battery voltage to the drive motor.

A. Depressing the accelerator fully will signal the EVT100ZX control for maximum drive motor speed / power demand.

B. The control will increase the width of the pulses at the preset rate as defined by the Controlled Acceleration (C/A) setting of the EVT100ZX control card.

C. The control continuously monitors the change of motor voltage through the blue wire at terminal PZ-9 of the EVT100ZX control card. When the motor voltage stops increasing, the card starts the 1A time delay.

D. After a short time delay, the card completes the circuit from terminal PB-6 through wire #41, to the 1A contactor coil negative terminal. This energizes the 1A coil.

E. The 1A contactor power points (tips) close completing the bypass circuit. The control will continue to pulse until the 1A contactor tips are fully closed as sensed by blue wire at terminal PZ-9 of the EVT100ZX control card. This feature of EVT100ZX is called a Full Power Transition.

NOTE: Status Code -83 will be displayed if the drive motor is stalled in the 1A mode with the motor current equal to or greater than 500 Amps for 8 seconds or longer. This is called "Anti Stall Reminder" for the operator.

F. Releasing the accelerator pedal partially will signal the EVT100ZX control card to turn 'ON' the transistor and de-energize the 1A contactor. Turning 'ON' the transistor provides an alternate path (up to current limit) for current to flow and thus, squelching (limiting) the arc at the 1A tips as they begin to open.

Note: The EVT100ZX has a built in thermal hold-off feature. 1A will not close if the control is in severe thermal cut-back.

Voltages Present:

A. 0.5 volts or less.
B. NA
C. NA
D. 10-13 volts across the contactor coil terminals.
E. Battery volts across the drive motor.
F. NA

Copyrighted Material
Intended for CLARK dealers only
Do not sell or distribute

https://truckmanualshub.com/

EVT100ZX Schematic

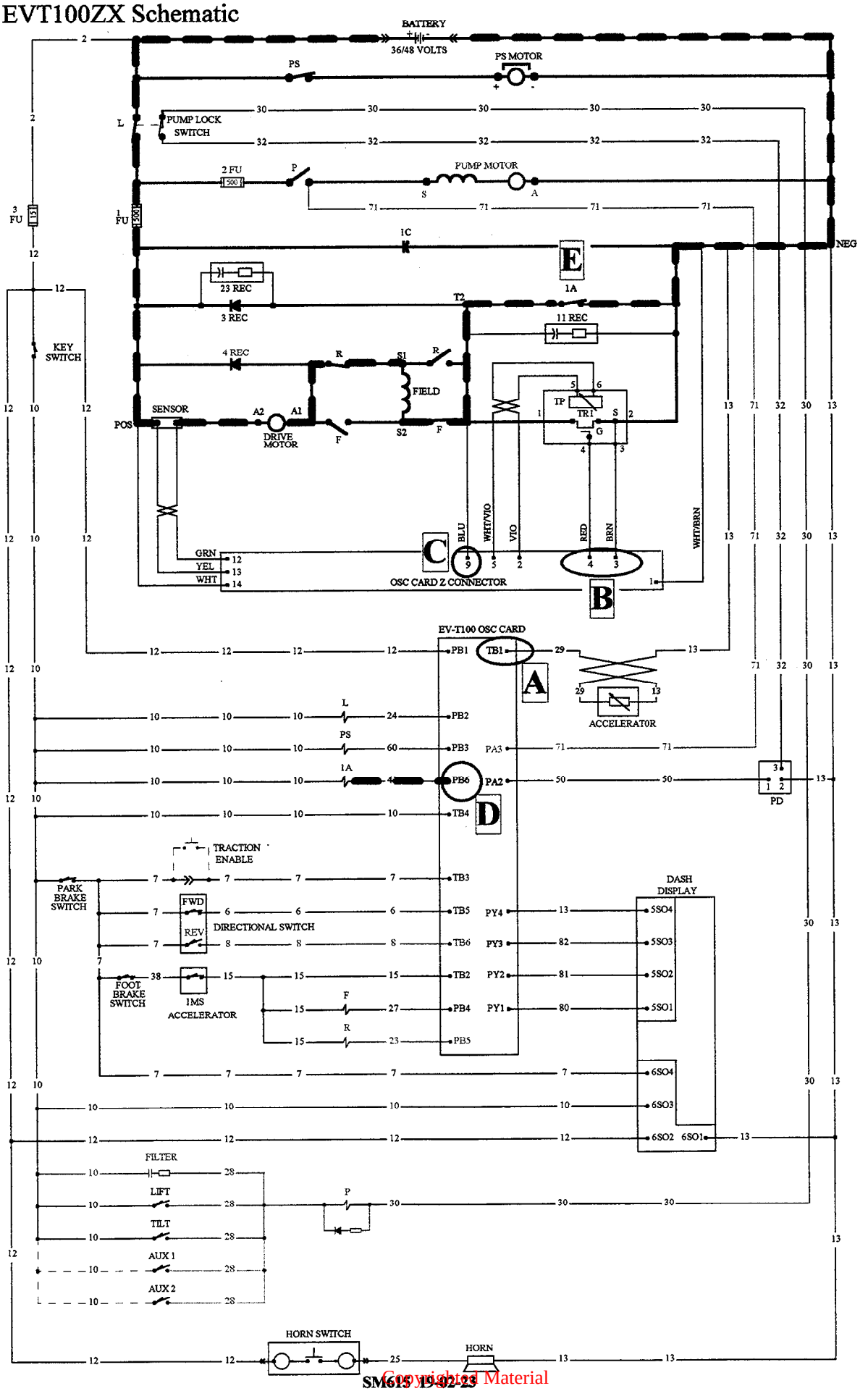

Copyright - JT Material
Intended for CLARK dealers only
Do not sell or distribute

IN-24947

https://truckmanualshub.com/

OPERATIONAL SEQUENCE #10

Plugging

Controlled plugging (using the reverse power of the drive motor as a brake) is attained when changing direction from forward to reverse (or reverse to forward).

A. The directional control lever is moved from forward, opening the forward switch.

B. While the lever is in it's neutral position, both the directional switches are open.

C. The control stops functioning because the voltage has been removed from terminal TB-5 of the EVT100ZX control card.

D. The forward and 1A contactor coils are de-energized and the contactor tips return to their normal position, opening the drive motor circuit.

Note: The truck will be coasting forward.

Copyrighted Material
Intended for CLARK dealers only
Do not sell or distribute

https://truckmanualshub.com/

EVT100ZX Schematic

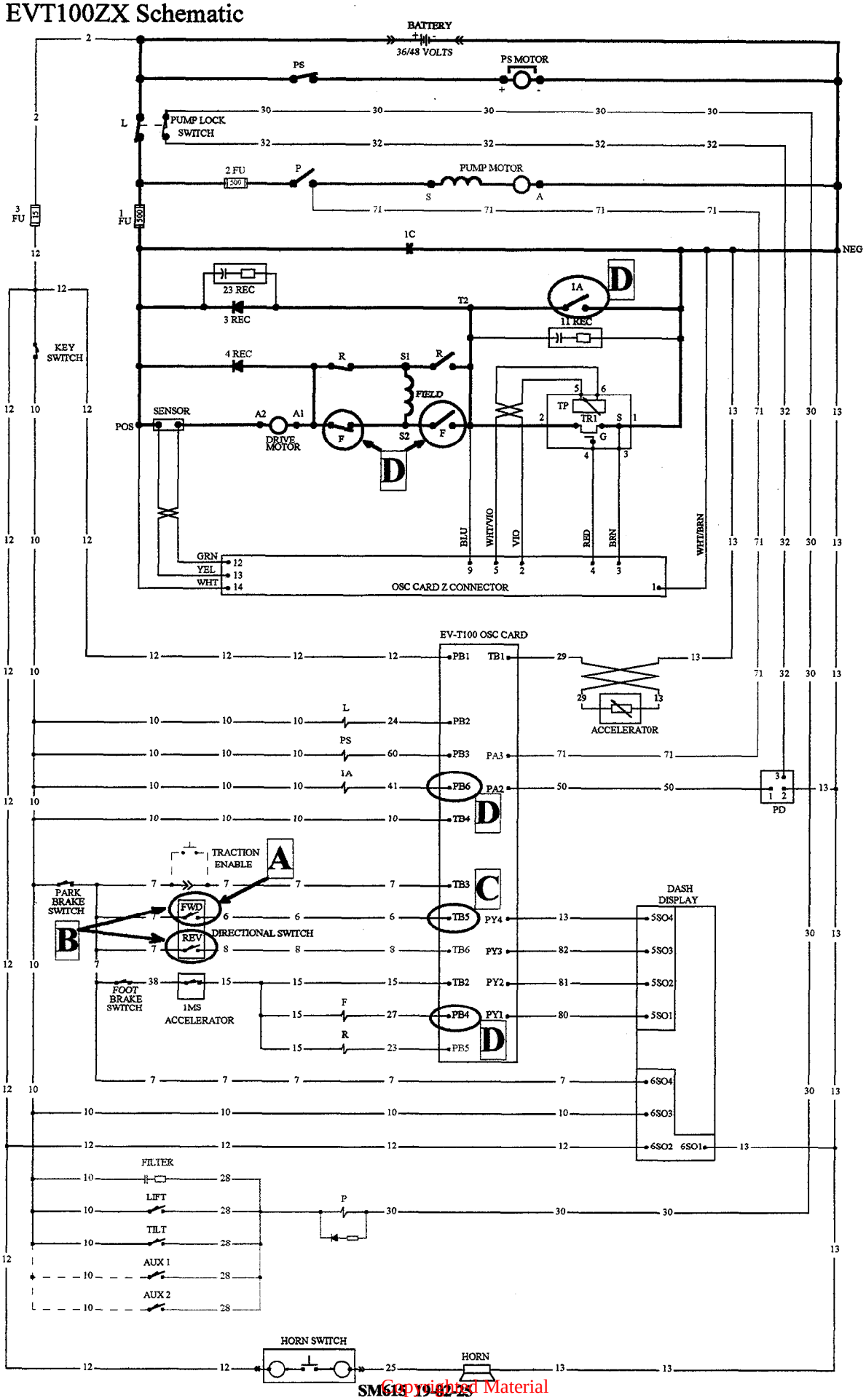

Copyrighted Material
Intended for CLARK dealers only
Do not sell or distribute

IN-24947

https://truckmanualshub.com/

OPERATIONAL SEQUENCE #10

Plugging (continued)

E. The operator moves the directional lever through neutral to reverse, closing the reverse directional switch.

F. With the reverse switch closed, voltage is applied to terminal TB-6 of the EVT100ZX control card. The control senses that the truck has been moving and that the lever has been moved through neutral. This causes the plugging logic in the control to take over.

G. The control now completes the circuit from the reverse contactor coil to battery negative through wire #23 at terminal PB-5 of the EVT100ZX control card.

H. This will energize the reverse contactor coil and in turn, open the normally closed contactor tips and close the normally open tips. This will change the drive motor circuits to the reverse direction.

J. The control now gates ON the transistor.

Copyrighted Material
Intended for CLARK dealers only
Do not sell or distribute

https://truckmanualshub.com/

EVT100ZX Schematic

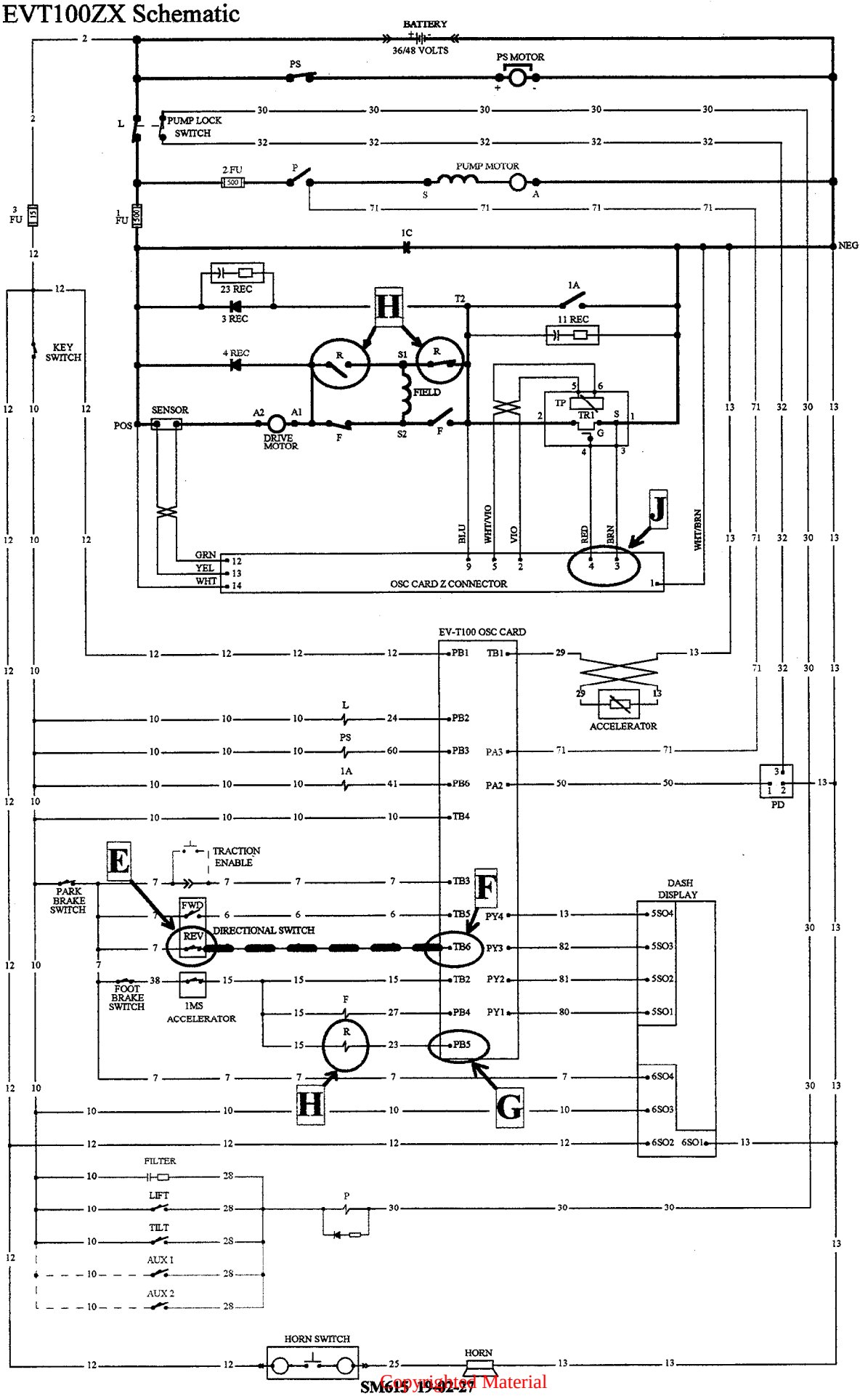

Copyrighted Material
Intended for CLARK dealers only
Do not sell or distribute

IN-24947

https://truckmanualshub.com/

OPERATIONAL SEQUENCE #10

Plugging (continued)

As the transistor is turned ON, the truck is continuing to travel in the forward direction because of inertia. The motor armature now becomes a generator because the drive motor fields have been reversed and the armature is driven against the magnetic effects of the field.

K. The voltage polarity reverses across the armature of the motor, changing the voltage of terminal A1 to positive with respect to terminal A2 of the drive motor. This voltage causes the #4 REC to conduct and thus, provides a path for the generated current.

L. This generated current flows through the current sensor signaling the EVT100ZX control card to over-ride the main oscillator section of the control allowing only a predetermined slow pulsing, as defined by the preset 'PLUG' setting of the control card and by the accelerator position. The control is locked into the plugging mode.

Note: The plugging distance can be controlled by changing (regulating) the position of the accelerator pedal.

M. The control also over-rides the 1A timer section and will not allow the 1A coil to be energized during the controlled plugging operation.

N. This slow pulsing will bring the truck to a smooth, controlled stop. The control senses that the truck has stopped by monitoring nearly zero current through the current sensor. The voltage polarity at the armature will return to normal and the truck will start to accelerate normally in the opposite direction.

Copyrighted Material
Intended for CLARK dealers only
Do not sell or distribute

https://truckmanualshub.com/

EVT100ZX Schematic

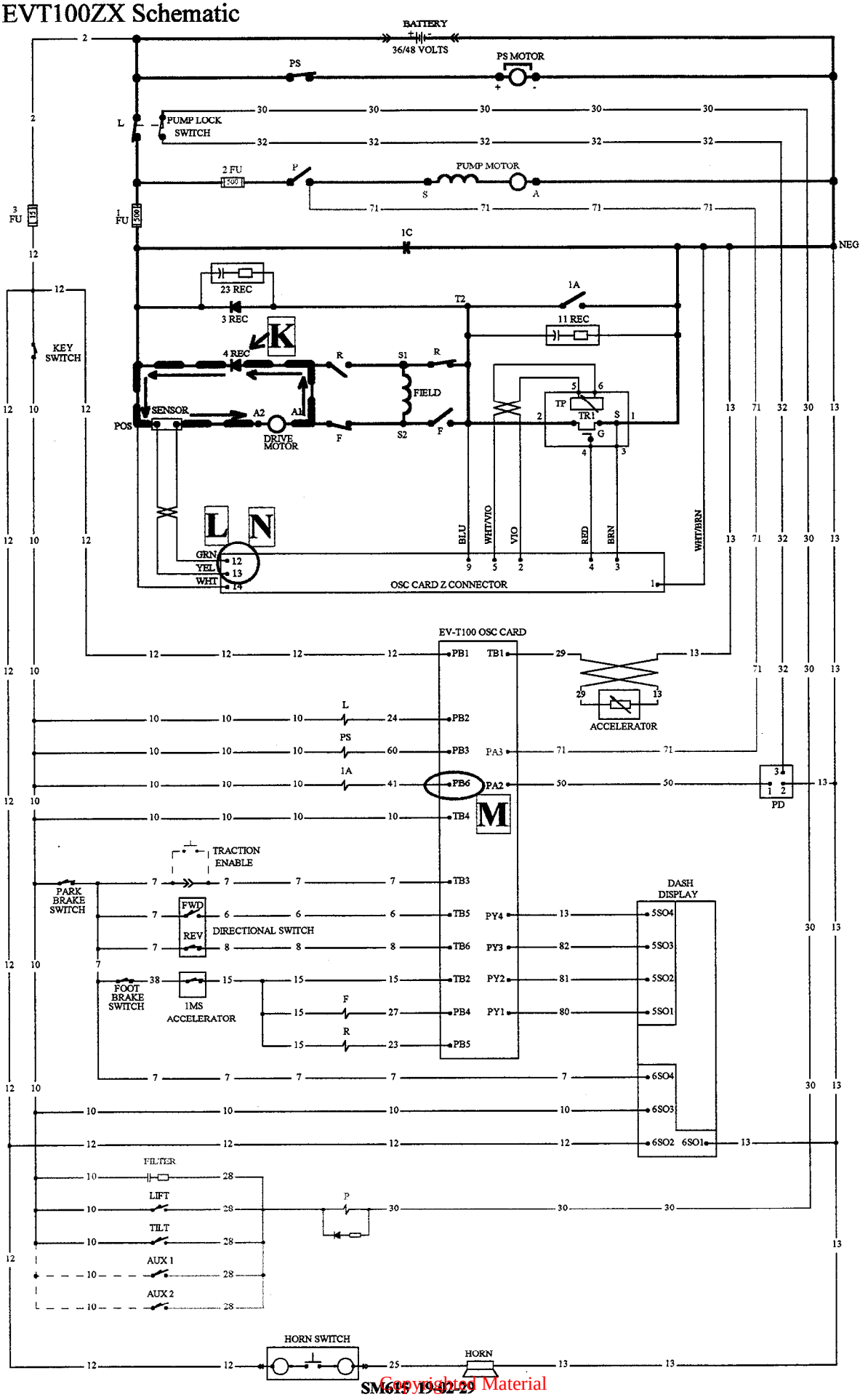

Copyrighted Material
Intended for CLARK dealers only
Do not sell or distribute

IN-24947

https://truckmanualshub.com/

OPERATIONAL SEQUENCE #11

Hydraulic Functions

In Operational Sequence #3, closing the key switch closed the Line contactor which in turn closed the Pump Lock Switch. The EVT100ZX control card then supplied a voltage signal from terminal PA-2 through wire #50 to terminal #1 of the pump driver. This connected the pump contactor coil to battery negative.

A. Operating any of the hydraulic control valve levers will close the appropriate switch, Lift, Tilt, Aux1 or Aux2.

B. The Pump contactor coil is supplied battery voltage through wire #28.

C. The pump coil, being energized, closes the Pump Contactor power tips. Current now flows through the #2 Fuse, the pump motor, to battery negative.

D. The Pump Motor now operates and in turn rotates the hydraulic pump.

E. The closing of the pump contactor tips also supplies a battery positive signal through the #71 wire to the EVT100ZX control card terminal PA3. This signal will cause the internal hour meter to accumulate the total running hours.

Voltages Present:
A. NA
B. Battery positive on wire #28
C. Battery positive at motor terminal "S"
D. Battery volts across the pump motor
E. Battery positive on wire #71

NOTE: If the EVT100ZX control card senses that the battery has discharged 80%, dash display will be blinking 009 or less, the card will cease to supply the voltage signal to the pump driver, once the valve switches are opened, causing the driver to open the negative circuit to the pump contactor coil. All hydraulic functions except lower will be inoperative.

NOTE: The filter in parallel with the hydraulic switches is to eliminate any arcing at the internal switch points. This greatly extends the operating life of the switch.

NOTE: The filter across the pump contactor coil is used to dissipate the voltage spike that is generated when the contactor coil is de-energized. Without this filter, a generated spike would likely cause the EVT100ZX control to miss-operate and cause various status codes and intermittent PMT faults.

Copyrighted Material
Intended for CLARK dealers only
Do not sell or distribute

https://truckmanualshub.com/

EVT100ZX Schematic

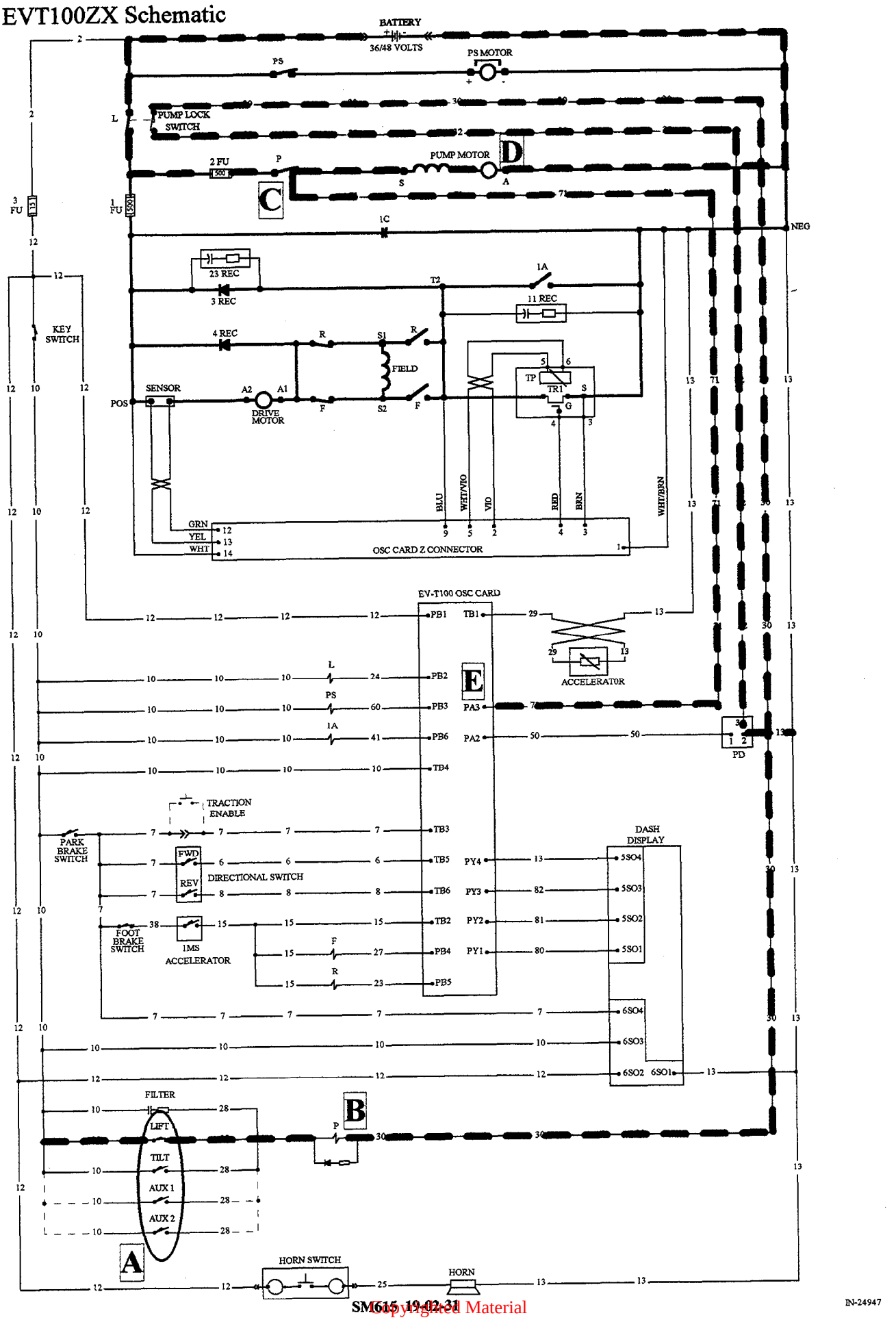

Copyrighted Material
Intended for CLARK dealers only
Do not sell or distribute

IN-24947

https://truckmanualshub.com/

Section 3

Electrical Checks and Instrument Panels

Recommended Tests 2
Dash Displays 7

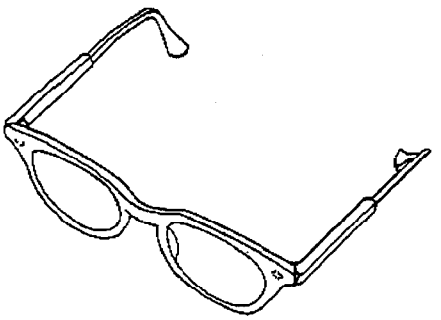

Always wear Safety Glasses

Remove all Jewelry before working on truck

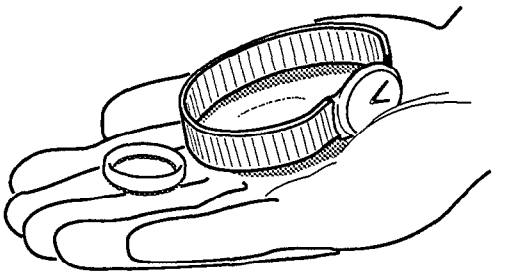

Copyrighted Material
Intended for CLARK dealers only
Do not sell or distribute

https://truckmanualshub.com/

1. **Move truck to service area.**
- Park truck on a flat level surface.
- Fully lower upright
- Tilt forks forward until fork tips touch the floor.

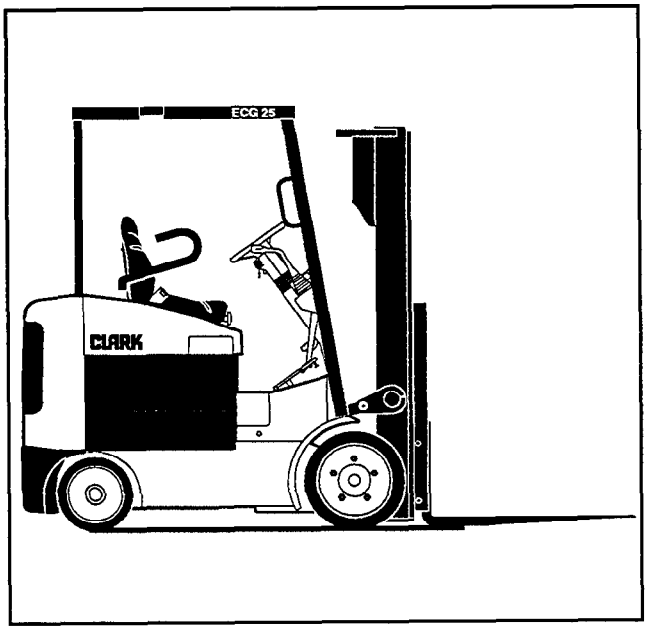

2. **Turn key switch off.**
- Remove key.
- Disconnect truck battery.

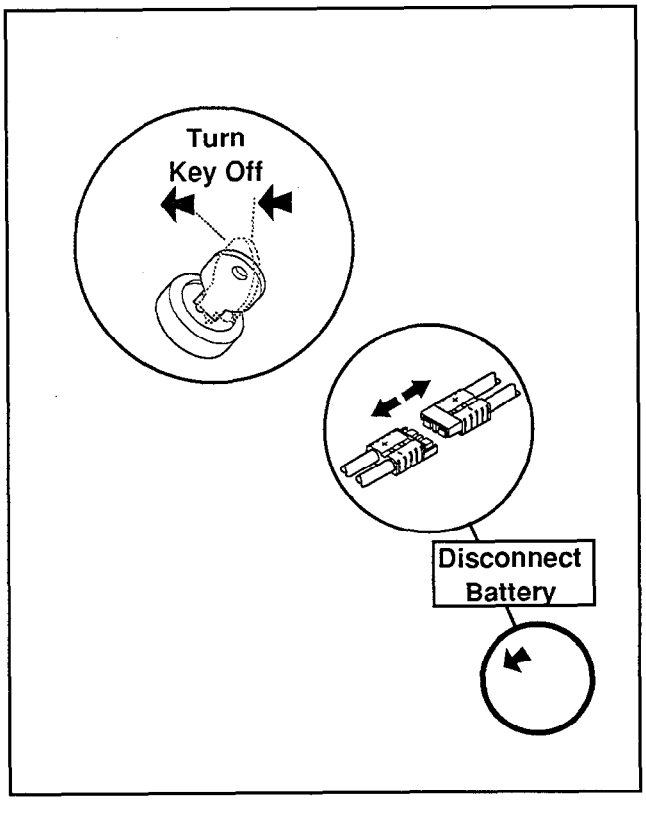

4. <u>Discharge the Capacitors</u>
- Turn the key switch to OFF.
- Disconnect the battery
- Turn the key switch to ON. You will hear the system shut down.

Copyrighted Material
Intended for CLARK dealers only
Do not sell or distribute

https://truckmanualshub.com/

Electrical Inspections

· IMPORTANT

Connector Plugs and Receptacles are permanently labeled with the proper PL (Plug) and SO (Socket/ Receptacle) number for easy identification.

⚠ CAUTION

Match the plug number with the appropriate receptacle number before making a connection. If you do not, electrical shorts and possible damage to the equipment may result. i.e., Plug #PL-6 plugs into pin socket #SO-6, etc.

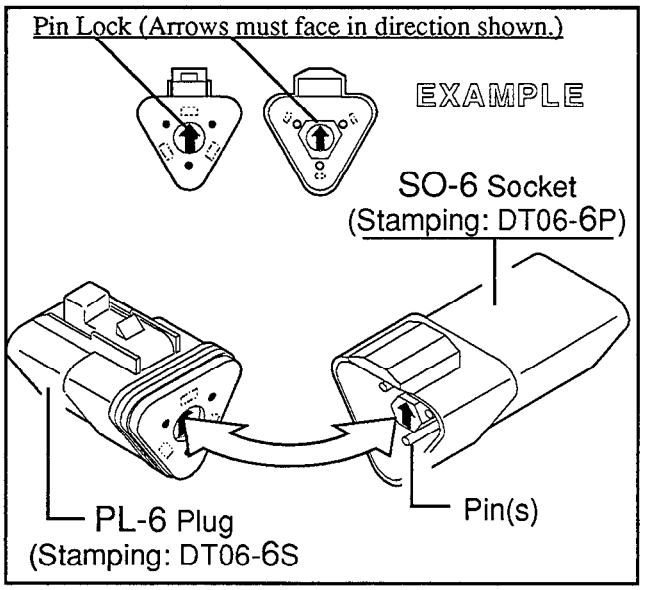

IMPORTANT

Tape Markers are used to correctly position each wire harness and electrical cable on the truck. When correctly installed, the tape marker will be hidden by the mounting clamp (guide). Be sure to follow the instructions, where noted in this manual, when installing a wire harness or electrical cables. If you do not, possible shorts and equipment damage may result.

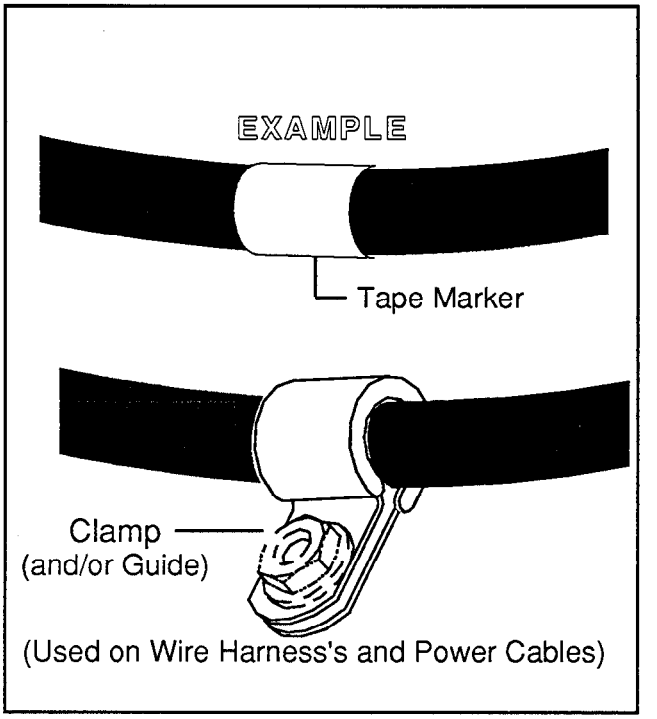

Torque specifications (where noted) for mounting hardware, clamps, etc., must be adhered to or equipment damage may result.

Special Instructions have been illustrated to show proper installation of multiple cable and wire connections. If the instructions are not specifically followed, possible electrical shorts and control damage may result.

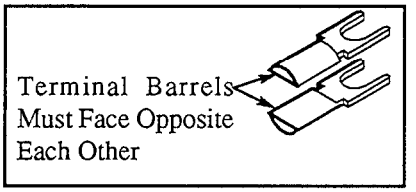

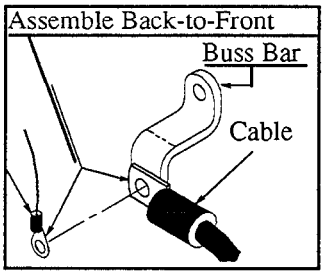

Copyrighted Material
Intended for CLARK dealers only
Do not sell or distribute

https://truckmanualshub.com/

Power Cables

- Cables having small cuts in the casing may be repaired with electrical tape.
- Cables having damage as shown in illustration below should be removed immediately and replaced with new. Be certain the replacement cable is the exact same length, size and has the proper connector. Make absolutely certain the cable end is properly crimped and its connection properly torqued upon installation.

Every cable and wiring harness on this truck is manufactured to an exact specification. A shorter cable or harness will not fit. If either a harness or cable is routed improperly, it will not fit. Subsequently, electrical shorts and damaged components may result if the replacement part is the wrong one, or if it is routed incorrectly.

Repairable Damage

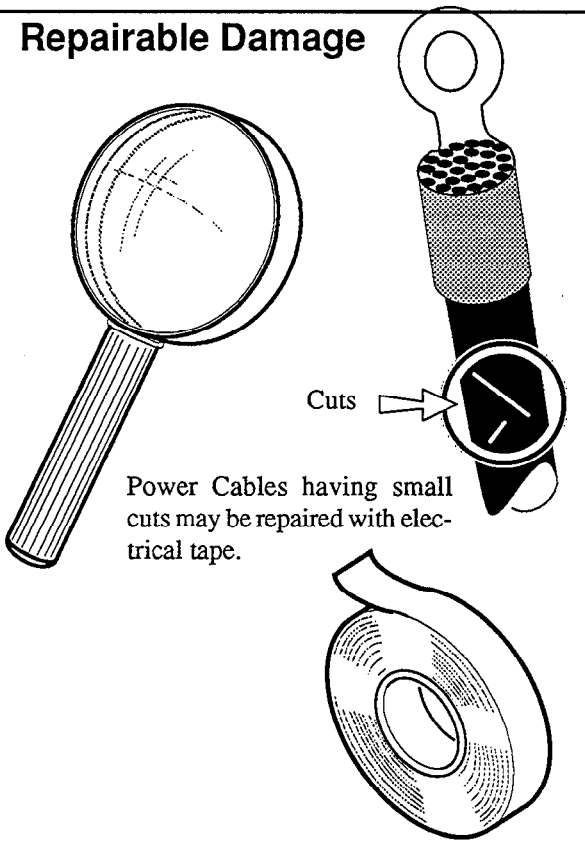

Power Cables having small cuts may be repaired with electrical tape.

Cable unfit for further service.

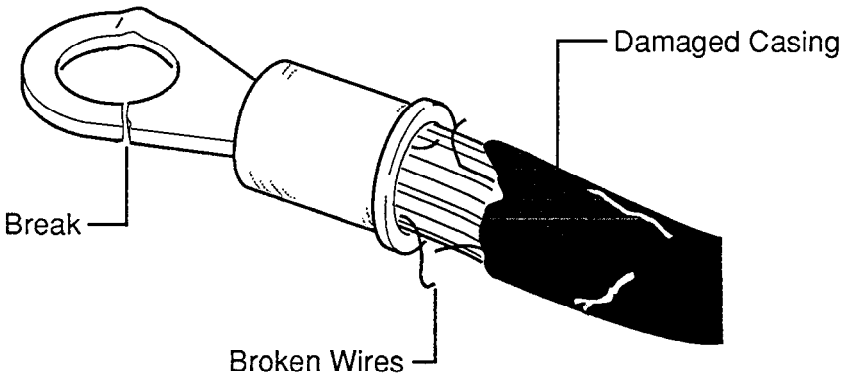

Copyrighted Material
Intended for CLARK dealers only
Do not sell or distribute

https://truckmanualshub.com/

IMPORTANT

Improperly Torqued Fasteners Can Cause Damage

- Use an appropriate wrench and tighten all fasteners to the torque specified in the following inspection procedures.

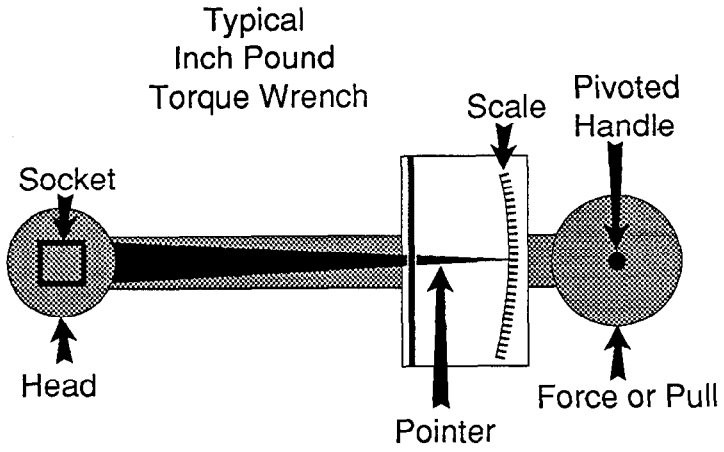

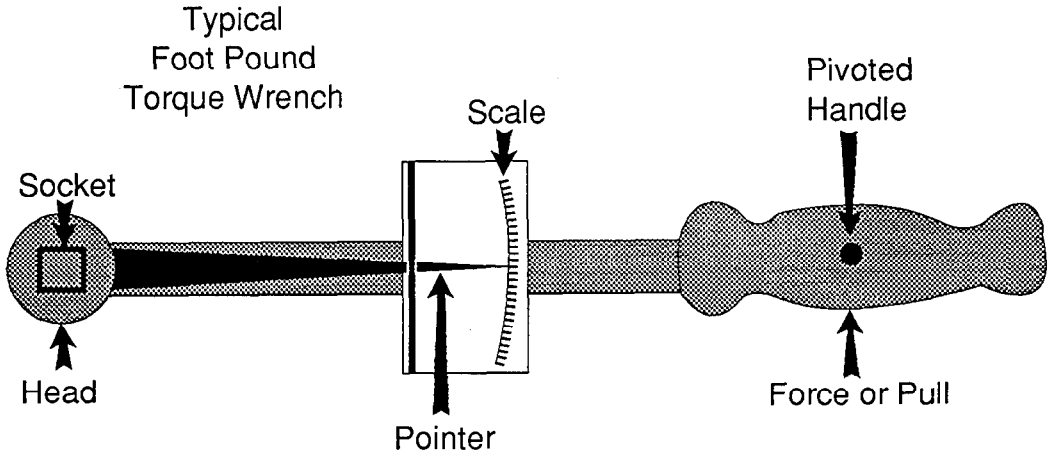

Copyrighted Material
Intended for CLARK dealers only
Do not sell or distribute

https://truckmanualshub.com/

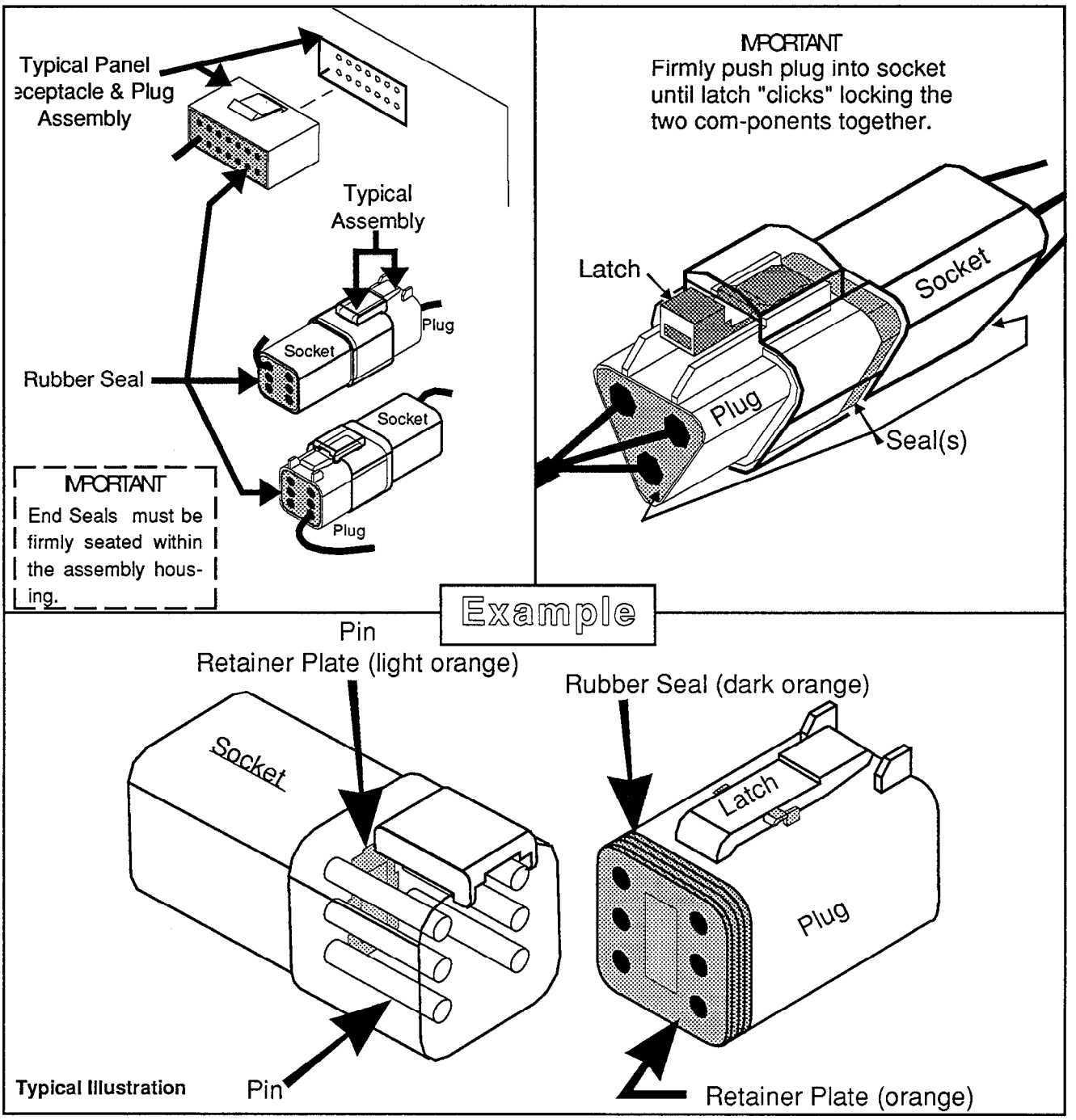

Typical Illustration

The **electrical connectors** on this truck are equipped with **rubber seals** to protect them from water and condensation. There is a seal at each end (wire end) of the connector. The plug is equipped with a seal and retainer plate, see above. There is a pin retainer plate in the socket sub-assembly.

- Check seals for damage that would make them unfit for further service(cuts, etc.). Make certain the end seals are seated flush with the end of the connector housing.
- The retainer plates snap into place to secure the pins and their sockets.

  Check the plates for damage and security of mounting.

Copyrighted Material
Intended for CLARK dealers only
Do not sell or distribute

https://truckmanualshub.com/

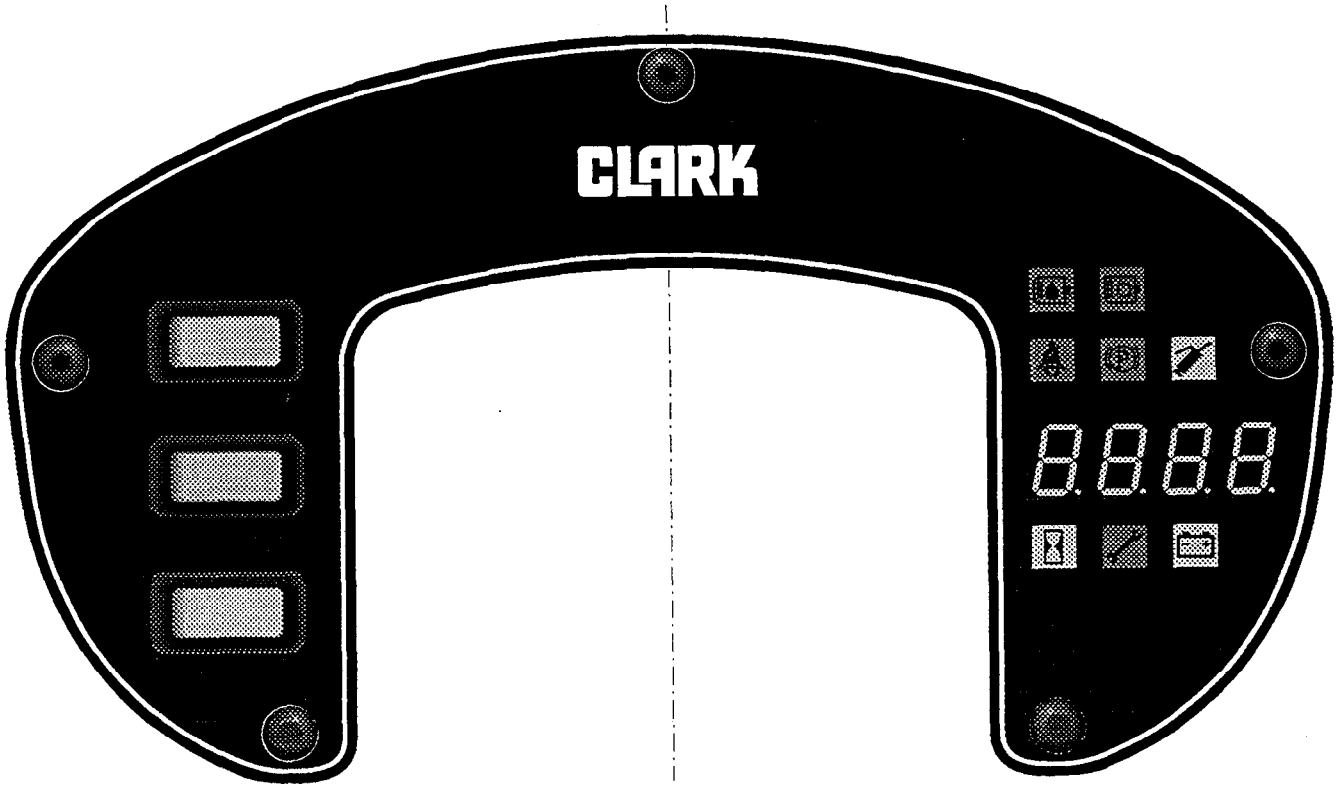

STANDARD DISPLAY

CLARK

Version
IS-32

19

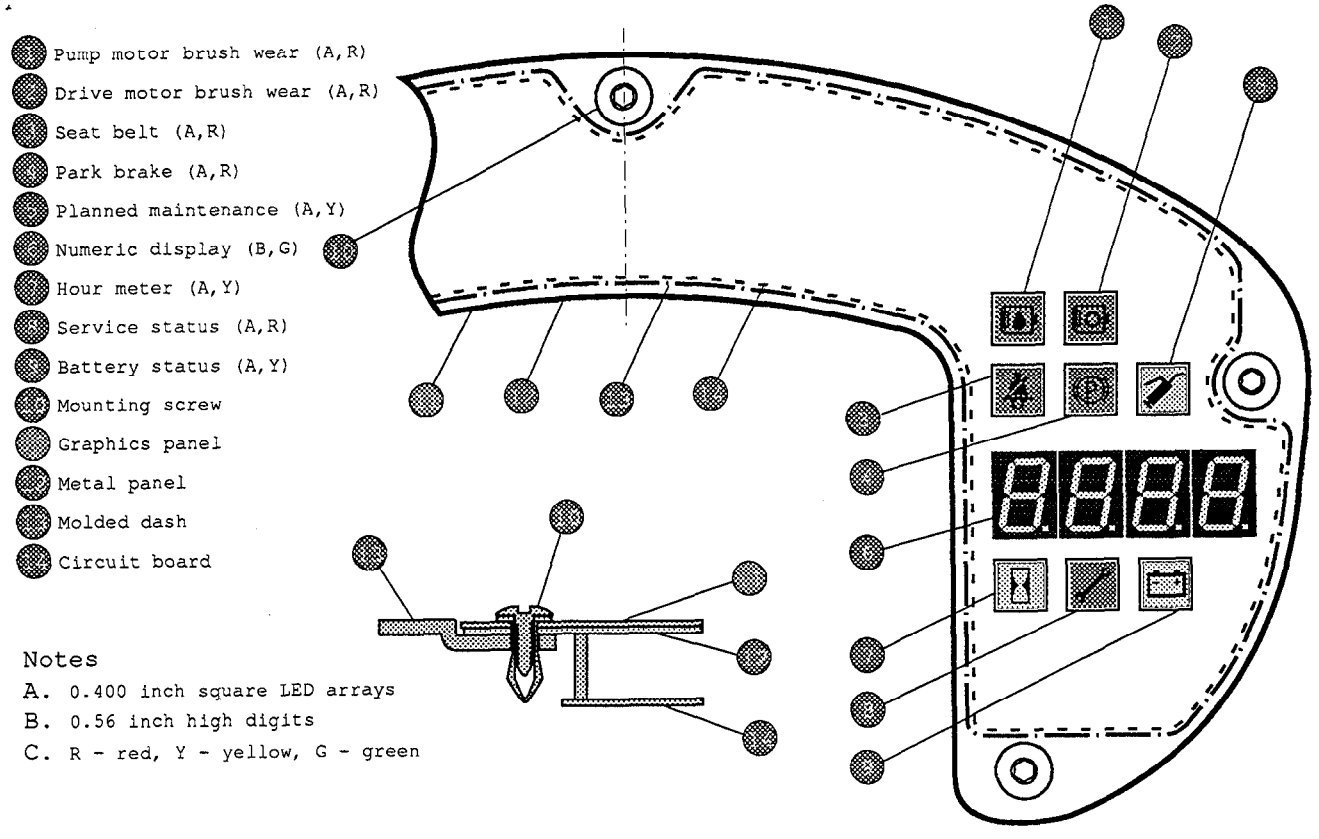

Notes
A. 0.400 inch square LED arrays
B. 0.56 inch high digits
C. R - red, Y - yellow, G - green

Copyrighted Material
Intended for CLARK dealers only
Do not sell or distribute

https://truckmanualshub.com/

Graphics Panel Design

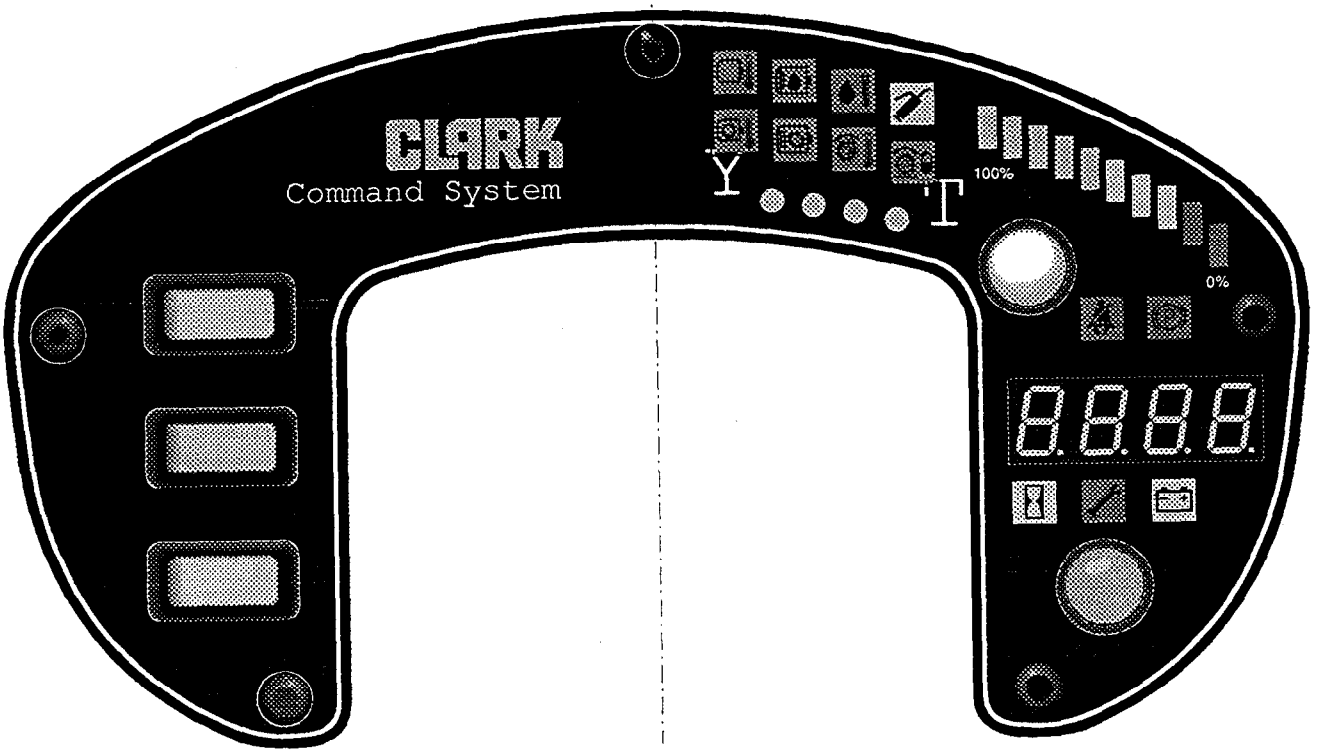

HIGH PERFORMANCE DISPLAY

Control Specifications: ES-32
Circuit Board Design

Appendix D

- Pump motor temperature (A,R)
- Pump motor brush wear (A,R)
- Pump control temperature (A,R)
- Planned maintenance (A,Y)
- Drive motor temperature (A,R)
- Drive motor brush wear (A,R)
- Traction control temperature (A,R)
- Drive motor overload (A,R)
- Low performance (B,Y)
- Med low performance (B,Y)
- Med high performance (B,Y)
- High performance (B,Y)
- Performance selector button
- Battery level [high] (G)
- Battery level [med] (Y)
- Battery level [low] (R)
- Seat belt (A,R)
- Parking brake (A,R)
- Numeric display (C,G)
- Hour meter (A,Y)
- Service status (A,R)
- Battery status (A,Y)

- Diagnostic button (G)
- Mounting screw
- Graphics panel
- Metal panel
- Molded dash
- Circuit board

N
A
B
C
D

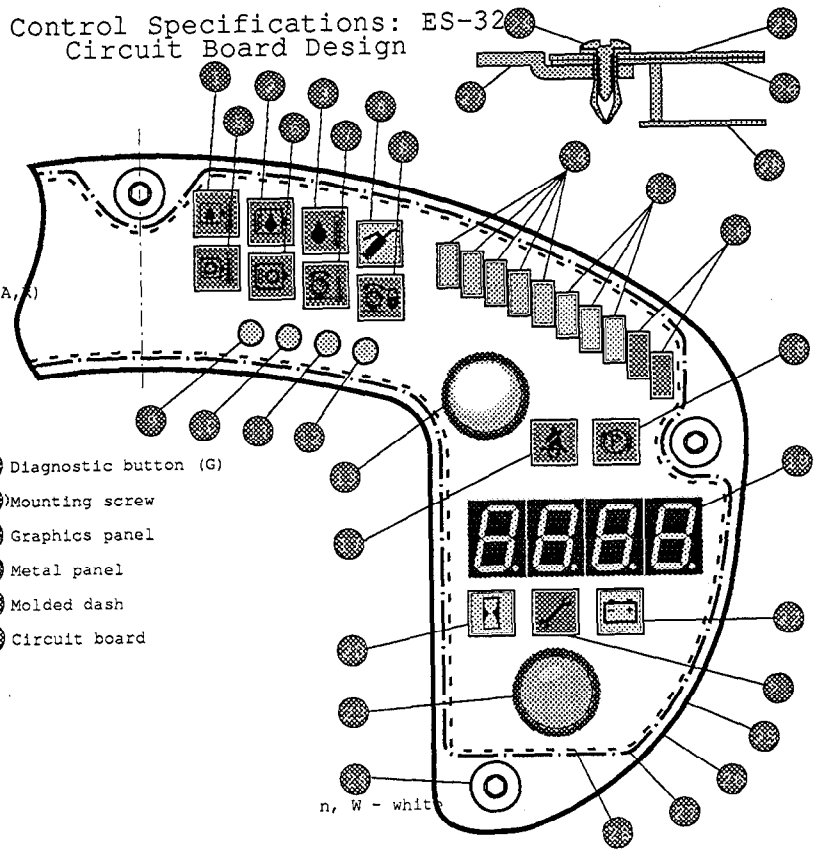

ECG Instrumentation - Command System

page 22

Copyrighted Material
Intended for CLARK dealers only
Do not sell or distribute

https://truckmanualshub.com/

GROUP 19
SECTION 5

Calen

HANDSET INSTRUCTIONS FOR THE ECG EVT100ZX CONTROL

Using Handset Part Number 915374

Page

Factory Card Settings - Standard Panel	2
Factory Card Settings - High Performance Panel	3
Factory Card Settings - Pump Panel w/ Std Traction	4
Factory Card Settings - Pump Panel w/ Hi Perf Traction	5
Adjusting Function #14 - IR Comp	6
Status Code Retrieval	9

Copyrighted Material
Intended for CLARK dealers only
Do not sell or distribute

https://truckmanualshub.com/

ECG OSCILLATOR CARD FACTORY SETTINGS
STANDARD PANEL

Function Code	Button	Factory Setting	Description	Value
1	1	001	Fault Code	
2	**2**	**018-022**	**Creep**	**1 to 1.2% ON Time**
3	**3**	**004-006**	**C/A & 1A Time**	**0.44 to 6 Seconds**
4	4	250-255	Current Limit	Maximum
5	**5**	**148-152**	**Plugging**	**665 to 677 Amps**
6	6	250-255	1A Drop Out	Function Disabled
7	7	000-001	NA	NA
8	8	000-001	NA	NA
9	9	000-001	NA	NA
10	10	000-001	NA	NA
11	11	000-001	NA	NA
12	12	000-001	NA	NA
13	13	000-001	NA	NA
14	**14**	**020**	**IR Comp**	**See Set-up Pg 6**
15	15	184-250	Battery Voltage	Dual 36 or 48 Volts
16	CONT/1	058-062	Pedal Position Plug	282 to 295 Amps
17	CONT/2	005-009	Card Type	Standard High C/L
18	CONT/3	175-177	Steer Time Delay	23.5 - 24.5 Seconds
19	CONT/4	050	Maintenance Hours 001 = 1 hour	50 Hours
20	CONT/5	002	Maintenance Hours 001 = 100 hours	200 Hours
21	**CONT/6**	**000-001**	**Maintenance Speed Limit**	**Function Disabled**
22	CONT/7	000-001	NA	NA
23	CONT/8	000	NA	NA
24	CONT/9	000	NA	NA
25	CONT/10	000-001	NA	NA
26	CONT/11	000-001	NA	NA
27	CONT/12	024-030	Plug % ON Time	12% ON Time
28	CONT/13	000	Last Fault Flag	Use Chart Pg 9
29	**CONT/14**	**000**	**Hour Meter - Tens/Units**	
30	**CONT/15**	**000**	**Hour Meter - Thou/Hund**	

Functions highlighted in bold can be adjusted outside these parameters to suit your customer's needs.

Refer to Service Information Manual VOL III for latest factory settings.

Copyrighted Material
Intended for CLARK dealers only
Do not sell or distribute

https://truckmanualshub.com/

ECG OSCILLATOR CARD FACTORY SETTINGS
HIGH PERFORMANCE PANEL

Function Code	Button w/Key ON PB Switch Open	Setting	Description	Value
1	1	001	Fault Code	
2	**2**	**020-040**	**Creep**	
3	3	009-011	C/A & 1A Time	
4	4	250-255	Current Limit	Maximum
5	5	168-172	Plugging	
6	6	250-255	1A Drop Out	Function Disabled
7	7	046-054	Field Weakening PU	
8	8	061-069	Field Weakening DO	
9	9	200-220	Regen Brake C/L	
10	10	0040-060	Regen Brake Start	
11	11	000-001	NA	NA
12	12	000-001	NA	NA
13	13	000-001	NA	NA
14	**14**	**020**	**IR Comp**	**Use Set-up Pg 6**
15	15	184-250	Battery Voltage	Dual 36 or 48 Volts
16	CONT/1	058-062	Pedal Position Plug	
17	CONT/2	045-049	Card Type	High Performance
18	CONT/3	175-177	Steer Time Delay	
19	CONT/4	050	Maintenance Hours 001 = 1 hour	50 Hours
20	CONT/5	002	Maintenance Hours 001 = 100 hours	200 Hours
21	**CONT/6**	**000-001**	**Maintenance Speed Limit**	**Function Disabled**
22	CONT/7	184	Performance Mode	
23	CONT/8	000	NA	NA
24	CONT/9	000	NA	NA
25	CONT/10	000-001	NA	NA
26	CONT/11	000-001	NA	NA
27	CONT/12	024-030	Plug % On Time	
28	CONT/13	000	Last Fault Flag	See Chart Pg 9
29	**CONT/14**	**000**	**Hour Meter - Tens/Units**	
30	**CONT/15**	**000**	**Hour Meter - Thou/Hund**	
	Key Switch ON, PB Switch Closed Plus			
48	CONT/1	021-023	Mode 1 - CA	
49	CONT/2	028-036	Mode 1 - FWPU	
50	CONT/3	140-160	Mode 1 - RB C/L	
51	CONT/4	108-112	Mode 1 - Plugging	
52	CONT/5	017-019	Mode 2 - CA	
53	CONT/6	034-042	Mode 2 - FWPU	
54	CONT/7	160-180	Mode 2 - RB C/L	
55	CONT/8	138-142	Mode 2 - Plugging	
56	CONT/9	013-015	Mode 3 - CA	
57	CONT/10	040-048	Mode 3 - FWPU	
58	CONT/11	180-200	Mode 3 - RB C/L	
59	CONT/12	168-172	Mode 3 - Plugging	
60	CONT/13	009-011	Mode 4 - CA	
61	CONT/14	046-054	Mode 4 - FWPU	
62	CONT/15	200-220	Mode 4 - RB C/L	

Functions highlighted in bold can be adjusted outside these parameters to suit your customer's needs.

Refer to Service Information Manual VOL III for latest factory settings.

Copyrighted Material
Intended for CLARK dealers only
Do not sell or distribute

https://truckmanualshub.com

ECG OSCILLATOR CARD FACTORY SETTINGS
PUMP PANEL W/STANDARD TRACTION

Function Code	Button w/Key ON	Setting	Description	Value
1	1	001	Fault Code	
2	2	074-076	IR Comp Start	
3	3	024-026	C/A & 1A Time	
4	4	250-255	Current Limit	Maximum
5	5	000-001	NA	NA
6	6	000-001	NA	NA
7	7	150-200	IR Comp Rate	
8	8	000-001	NA	NA
9	9	000-001	NA	NA
10	10	000-001	NA	NA
11	11	075-077	Aux 2 Speed	
12	12	061-063	Aux 1 Speed	
13	13	061-063	Tilt speed	
14	14	200-255	Lift Speed	
15	15	000-001	NA	NA
16	CONT/1	009-011	SP/Torq	
17	CONT/2	063-071	Card Type	
18	CONT/3	000-001	NA	NA
19	CONT/4	000-001	NA	NA
20	CONT/5	000-001	NA	NA
21	CONT/6	000-001	NA	NA
22	CONT/7	000-001	NA	NA
23	CONT/8	000	NA	NA
24	CONT/9	000	NA	NA
25	CONT/10	000-001	NA	NA
26	CONT/11	000-001	NA	NA
27	CONT/12	000-001	NA	NA
28	CONT/13	000	Last Fault Flag	See Chart Pg 9
29	**CONT/14**	**000**	**Pump Motor Hour Meter - Tens/Units**	
30	**CONT/15**	**000**	**Pump Motor Hour Meter - Thou/Hund**	

Functions highlighted in bold can be adjusted outside these parameters to suit your customer's needs.

Refer to Service Information Manual VOL III for latest factory settings.

Copyrighted Material
Intended for CLARK dealers only
Do not sell or distribute

ECG OSCILLATOR CARD FACTORY SETTINGS
PUMP PANEL W/HI PERF TRACTION

Function Code	Button w/Key ON	Setting	Description	Value
1	1	001	Fault Code	
2	2	074-076	IR Comp Start	
3	3	024-026	C/A & 1A Time	
4	4	250-255	Current Limit	Maximum
5	5	000-001	NA	NA
6	6	000-001	NA	NA
7	7	150-200	IR Comp Rate	
8	8	000-001	NA	NA
9	9	000-001	NA	NA
10	10	000-001	NA	NA
11	11	075-077	Aux 2 Speed	
12	12	061-063	Aux 1 Speed	
13	13	061-063	Tilt speed	
14	14	200-255	Lift Speed	
15	15	000-001	NA	NA
16	CONT/1	009-011	SP/Torq	
17	CONT/2	063-071	Card Type	
18	CONT/3	000-001	NA	NA
19	CONT/4	000-001	NA	NA
20	CONT/5	000-001	NA	NA
21	CONT/6	000-001	NA	NA
22	CONT/7	184	Performance Mode	
23	CONT/8	000	NA	NA
24	CONT/9	000	NA	NA
25	CONT/10	000-001	NA	NA
26	CONT/11	000-001	NA	NA
27	CONT/12	000-001	NA	NA
28	CONT/13	000	Last Fault Flag	See Chart Pg 9
29	**CONT/14**	**000**	**Pump Motor Hour Meter - Tens/Units**	
30	**CONT/15**	**000**	**Pump Motor Hour Meter - Thou/Hund**	
	Button w/Key OFF			
48	CONT/1	072-076	Mode 1 - CA	
49	CONT/2	040-042	Mode 1 - Aux 1	
50	CONT/3	105-115	Mode 1 - Lift	
51	CONT/4	000-001	NA	
52	CONT/5	060-064	Mode 2 - CA	
53	CONT/6	047-049	Mode 2 - Aux 1	
54	CONT/7	120-130	Mode 2 - Lift	
55	CONT/8	000-001	NA	
56	CONT/9	048-052	Mode 3 - CA	
57	CONT/10	054-056	Mode 3 - Aux 1	
58	CONT/11	200-255	Mode 3 - Lift	
59	CONT/12	000-001	NA	
60	CONT/13	024-026	Mode 4 - CA	
61	CONT/14	061-063	Mode 4 - Aux 1	
62	CONT/15	200-255	Mode 4 - Lift	

Functions highlighted in bold can be adjusted outside these parameters to suit your customer's needs.

Refer to Service Information Manual VOL III for latest factory settings.

Copyrighted Material
Intended for CLARK dealers only
Do not sell or distribute

https://truckmanualshub.com

Function #14 - Internal Resistance Compensation (IR Comp) Setting

When a truck is manufactured with an EVT100ZX control panel, the oscillator card of the panel must be programmed before it can operate and leave the plant, therefore we must program the card to perform in a way that is acceptable to the majority of our customers. Because of the differences between batteries and customer applications, Function #14 (IR Compensation) may need to adjusted by the dealer. The IR Compensation setting calibrates the trucks electrical system to the battery and/or application so that the BDI and the Lift interrupt system will function accurately. If Function #14 is not set correctly to match the battery or application, the customer may complain that the truck's battery is either over or under-discharged when the lift interrupt system locks out the hydraulic controls.

Refer to the following for instructions on how to tell if the IR Compensation is properly set for the type battery installed and application.

1. The truck should be tested when the dash display has a reading between 80 and 20, a fully charged or discharged battery may not allow an accurate test to be performed.

2. Drive the truck in top speed for at least 2 minutes across a flat floor, at the end of the drive note and record the reading on the trucks dash display. This reading will be known as the "Dash Display Reading".

3. After allowing the truck to set for about 5 minutes, measure the voltage between the "POS and "NEG" terminals on the SCR panel. Divide the voltage reading by the number of cells in the trucks battery (36 volt battery has 18 cells), this will be known as the "Open Circuit Volts Per Cell".

4. For the following steps refer to the chart on the following page.

5. Mark the chart with the Dash Display Reading taken from the truck on the bottom line of the graph. Draw a vertical line from the Dash Display Reading mark made straight up to the top of the graph.

6. Mark the chart with the truck's Open Circuit Volts Per Cell on the left hand side of graph, marked Open Circuit Volts Per Cell. Draw a horizontal line straight across the graph to the right hand side.

7. Locate and mark the point where the two lines meet, this is the level of IR compensation the truck is programmed for.

8. If the mark is on or very close to the diagonal black line called "Ideal Compensation", no adjustment to the program is necessary.

9. If the mark is above the Ideal Compensation line, lower the Function 14 programmed setting by 1 or 2 points.

10. If the mark is below the Ideal Compensation line, raise the Function 14 programmed setting by 1 or 2 points.

11. If a program adjustment was made, **disconnect the battery for 30 seconds**, then repeat the test to verify if the proper level of compensation has been attained.

Copyrighted Material
Intended for CLARK dealers only
Do not sell or distribute

-Below is an example test where the Dash Display Reading was '45' and the voltage reading was 36.54 volts. The battery has 18 cells, so the Open Circuit Volts Per Cell is 2.03 volts. The example graph below shows that this truck has the proper level of compensation.

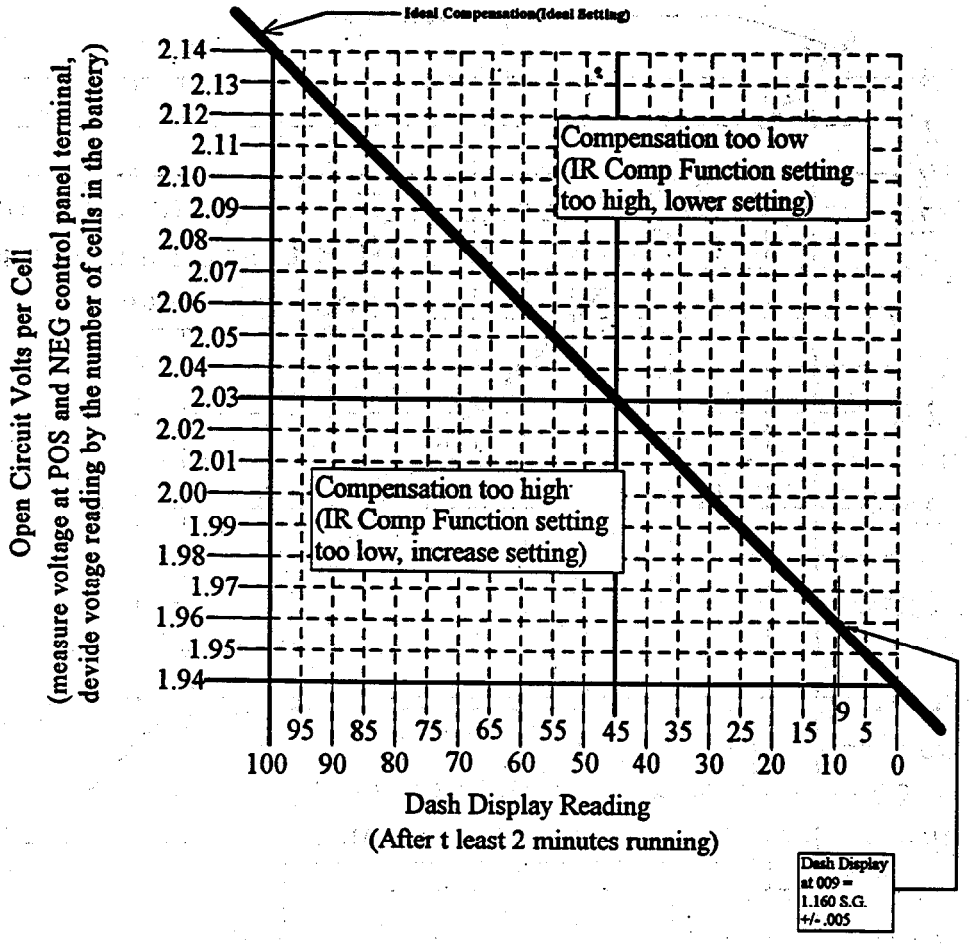

See EVT100ZX worksheet on the following page.

Copyrighted Material
Intended for CLARK dealers only
Do not sell or distribute

https://truckmanualshub.com/

EVT100ZX
Internal Resistance Compensation Setting
Function #14

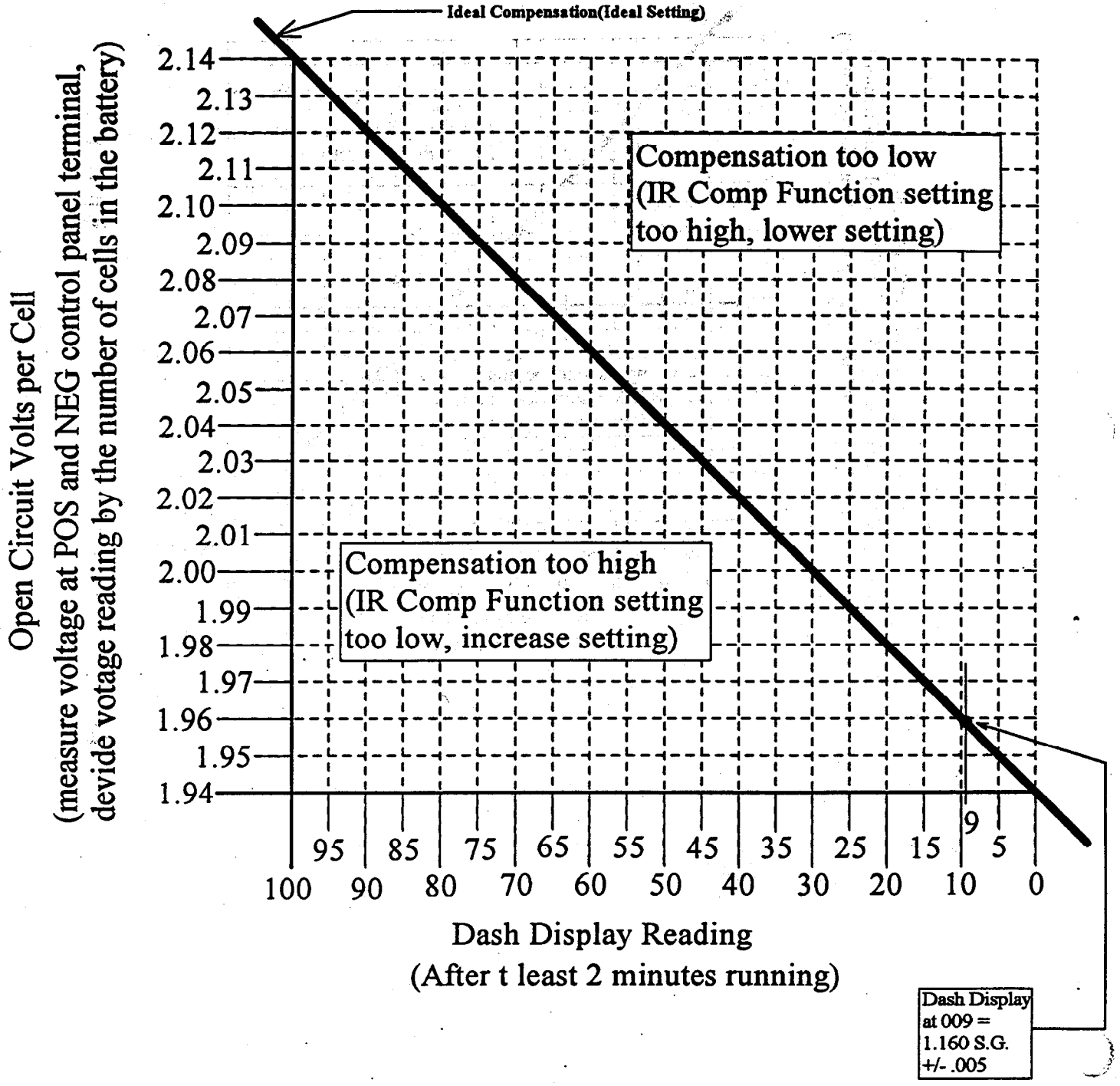

Copyrighted Material
Intended for CLARK dealers only
Do not sell or distribute

Stored Status Code Retrieval

The EVT100ZX control is capable of storing up to 16 Status Codes along with the Battery Condition and the Hour Meter Reading at the time status code was recorded. The control will only store a status code that will cause a PMT or the -82 and/or -83 codes that are a result of the drive motor being stalled.

The last status code to occur can be accessed by itself, without the battery condition or hour meter by accessing the Function #1 register.

Use the following procedure to access the last 16 stored status codes:

1. Turn the Key switch to OFF and disconnect the battery receptacle. Turn the Key switch to ON. The Line contactor should energize and the seat belt warning signal should sound until the capacitors are discharged.

Warning: Never plug or unplug the 'Y' connector of the harness or the Handset from the oscillator card unless the battery has been disconnected and the 1C capacitors discharged.

2. Remove the 'Y' plug from the oscillator card and insert the handset 'Y' connector into the card.

3. Reconnect the battery receptacle but leave the key switch in the OFF position.

4. Depress the 'CONT' and 'ESC' buttons on the handset simultaneously.

5. The handset will now display a two digit Status Code. Record this status code on the EVT100ZX Status Code Worksheet in the Flag #18 status code box.

6. Depress the 'CONT' button on the handset. The handset will now display a three digit battery state of charge for flag #18. Record this reading in the Flag #18 Battery Condition box.

7. Depress the 'CONT' button on the handset. The handset will now display a four digit hour meter reading for flag #18. Record this reading in the Flag #18 hour meter box.

8. Depress the 'CONT' button again. The handset will now display another two digit Status Code. Record this reading in the Flag #20 Status Code box.

9. Each time the 'CONT' button is depressed the handset will display the next bit of information, 2 digit status code, 3 digit battery condition, and 4 digit hour meter reading. Continue through this sequence recording the displays on the worksheet until all the boxes are full. The display will go blank with the next depression of the 'CONT' button. To review all 16 Flag positions again, depress the 'CONT' and 'ESC' buttons simultaneously and flag #18 status code will reappear. You must continue through the entire 16 Flag numbers before the display will go blank again.

10. When all the information is recorded on the worksheet, turn the Key switch ON. With the Park brake applied (-01 displayed on the

Copyrighted Material
Intended for CLARK dealers only
Do not sell or distribute

https://truckmanualshub.com/

handset), depress the 'CONT' button to enter the programming mode (8888 displayed). Now depress the 'CONT' and the 13 button simultaneously to access Function #28.

11. The handset will now display the 'Last Fault Flag' number. This number tells you that the next memorized status code, along with the battery condition and hour meter reading at the time of the status code, will be inserted into that Flag Number. Record this number by circling the corresponding Flag Number on the worksheet. The Last Fault Flag Number tells you that the last stored status code is the one previous to the circled Flag Number.

See Worksheet on the following page.

Copyrighted Material
Intended for CLARK dealers only
Do not sell or distribute

EVT100ZX Status Code Worksheet

FLAG NUMBER	STATUS CODE 2 Didget	BATTERY COND 3 Didget	HOUR METER 4 Didget
18			
20			
22			
24			
26			
28			
30			
32			
34			
36			
38			
40			
42			
44			
46			
48			

Truck Serial Number	
Hour Meter Reading	
Date	

Copyrighted Material
Intended for CLARK dealers only
Do not sell or distribute

https://truckmanualshub.com/

TRACTION STATUS CODE	DESCRIPTION OF STATUS	CAUSE OF STATUS INDICATION
NONE	Segments do not illuminate on the Dash Display and/or the Handset.	No input voltage to the control card or the display unit.
MEMORY RECALL **NO**	**CORRECTIVE ACTIONS**	**TROUBLE-SHOOTING DIAGRAM**
Circuits valid for Traction Controller & Pump Controller	**SYMPTOM** Display screen on Dash Display and/or Handset is blank. **POSSIBLE CAUSE** **Positive or negative control voltage is not present.** • Insure that the key switch is closed and voltage is present between PB1 & battery negative (Power Terminal "N"). Also check for voltage between TB4 and control negative. **Open circuit between control card Plug Y & the Dash Display or Handset.** • Check for an open circuit or loose connection going from the "Y" plug and the Dash Display or Handset. **Defective Dash Display or Handset.** • Replace Dash Display or Handset.	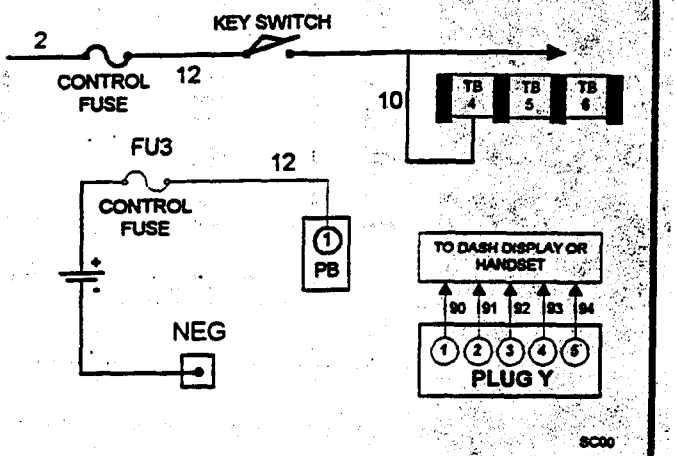

TRACTION STATUS CODE	DESCRIPTION OF STATUS	CAUSE OF STATUS INDICATION
-01	No seat switch or deadman switch input. (No voltage to TB3)	This status code will be displayed when TB3 is less than 50% battery volts.
MEMORY RECALL **NO**	**CORRECTIVE ACTIONS**	**TROUBLE-SHOOTING DIAGRAM**
Circuits valid for Traction Controller	**SYMPTOM** Forward or Reverse contactor will not close. **POSSIBLE CAUSE** **Mis-adjusted or defective seat or deadman switch.** • Check to see that the seat switch closes properly. **Open circuit between battery positive and TB3.** • Check for loose connections or broken wires: - Between the seat switch and TB3. - Between the key switch and the battery positive side of the seat switch. - Between the seat switch and TB4. • On vehicles without a seat/deadman switch, check for a loose connection or broken wire from TB4 and/or TB3.	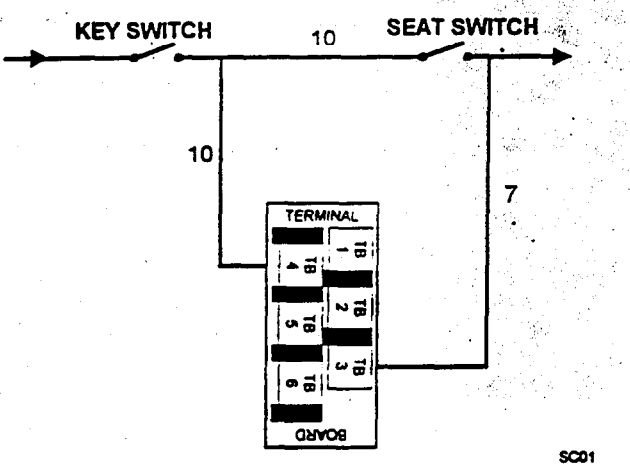

Copyrighted Material
Intended for CLARK dealers only
Do not sell or distribute

https://forklifttrucksmanuals.com/

TRACTION TATUS CODE	DESCRIPTION OF STATUS	CAUSE OF STATUS INDICATION
-02	Forward directional switch is closed on initial power up.	This status code will be displayed when TB5 is greater than 60% of battery voltage at initial key switch on.
MEMORY RECALL NO	CORRECTIVE ACTIONS	TROUBLE-SHOOTING DIAGRAM
Circuits valid for Traction Controller	**SYMPTOM** Forward contactor will not close because of Static Return to Off (SRO) lock out. **POSSIBLE CAUSE** **Forward directional switch is closed on initial start up (i.e. closure of battery, key switch or seat/deadman switch).** • Return directional switch lever to neutral and then return lever to forward position. **Forward directional switch is welded closed or mis-adjusted to be held closed.** • Replace or adjust directional switch to insure that it opens when the directional switch is returned to neutral. **Short circuit between TB2 and TB5.** • Disconnect the wire from TB5 and check for a short circuit between TB2 and the wire that was connected to TB5. **Defective logic card.** • Replace the logic card.	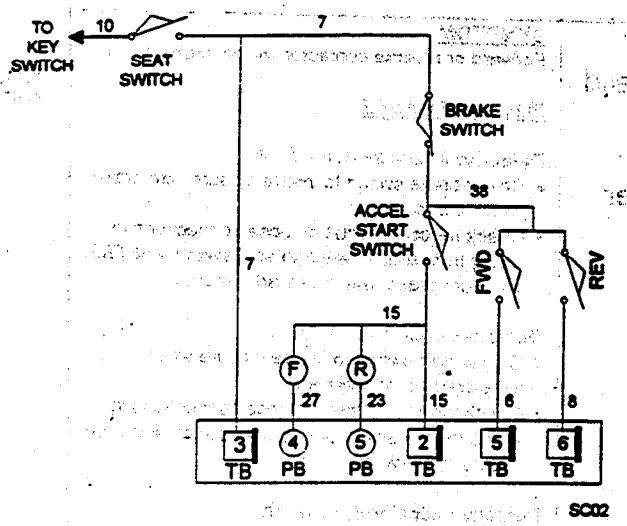

TRACTION STATUS CODE	DESCRIPTION OF STATUS	CAUSE OF STATUS INDICATION
-03	Reverse directional switch is closed on initial power up.	This status code will be displayed when TB6 is greater than 60% of battery voltage at initial key switch on.
MEMORY RECALL NO	CORRECTIVE ACTIONS	TROUBLE-SHOOTING DIAGRAM
Circuits valid for Traction Controller	**SYMPTOM** Reverse contactor will not close because of Static Return to Off (SRO) lock out. **POSSIBLE CAUSE** **Reverse directional switch is closed on initial start up (i.e. closure of battery, key switch or seat/deadman switch).** • Return directional switch lever to neutral and then return lever to reverse position. **Reverse directional switch is welded closed or mis-adjusted to be held closed.** • Replace or adjust directional switch to insure that it opens when the directional switch is returned to neutral. **Short circuit between TB2 and TB6.** • Disconnect the wire from TB6 and check for a short circuit between TB2 and the wire that was connected to TB6. **Defective logic card.** • Replace the logic card.	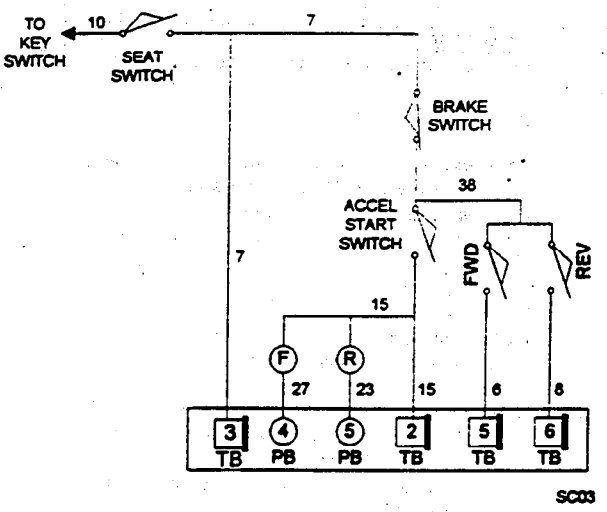

Copyrighted Material
Intended for CLARK dealers only
Do not sell or distribute

https://forkliftmanualshub.com/

TRACTION STATUS CODE	DESCRIPTION OF STATUS	CAUSE OF STATUS INDICATION
-05	Start switch or brake switch fails to close.	This status code will be displayed when TB1 is less than 2.5 volts and TB2 is less than 60% of battery volts.

MEMORY RECALL NO	CORRECTIVE ACTIONS	TROUBLE-SHOOTING DIAGRAM
Circuits valid for Traction Controller	**SYMPTOM** Forward or reverse contactor will not pick up. **POSSIBLE CAUSE** **Defective brake switch circuit.** • Check brake switch to insure closure with brake pedal released. • Check for open circuit or loose connections in wiring from brake switch to seat switch and TB3, and from brake switch to start switch. **Defective start switch circuit.** • Check start switch to insure closure when accelerator is depressed. • Check for open circuit or loose connections in wiring from brake switch to start switch and from TB2 to start switch. **Defective accelerator switch.** • Check accelerator switch potentiometer for proper operation and ohmic value.	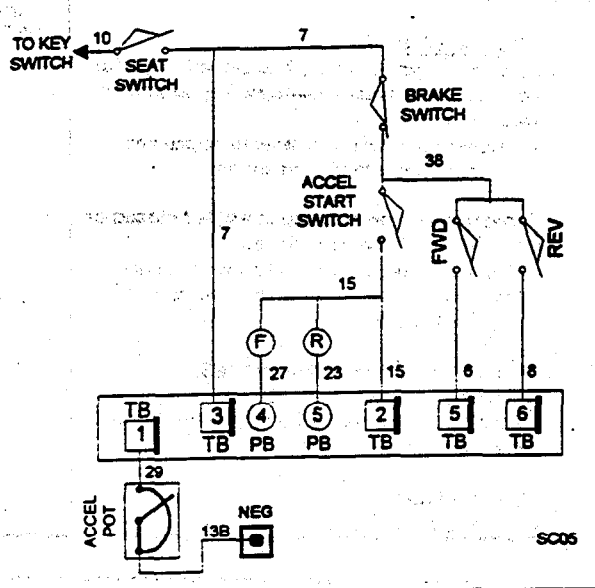

TRACTION STATUS CODE	DESCRIPTION OF STATUS	CAUSE OF STATUS INDICATION
-06	Accelerator depressed with no direction selected.	This status code will be displayed when TB5 & TB6 are less than 60% of battery volts, and TB1 is less than 2.5 volts.

MEMORY RECALL NO	CORRECTIVE ACTIONS	TROUBLE-SHOOTING DIAGRAM
Circuits valid for Traction Controller	**SYMPTOM** Forward or reverse contactor will not pick up. **POSSIBLE CAUSE** **Accelerator pedal is depressed before closing forward or reverse directional switch.** • Status code will disappear when directional switch is closed or when accelerator pedal is released. **Defective directional switch** • Check forward or reverse switch to insure closure when direction is selected. **Open circuit between directional switch(es) and battery positive or between directional switch(es) and TB5 or TB6.** • Check all control wires and connections shown in Trouble Shooting Diagram.	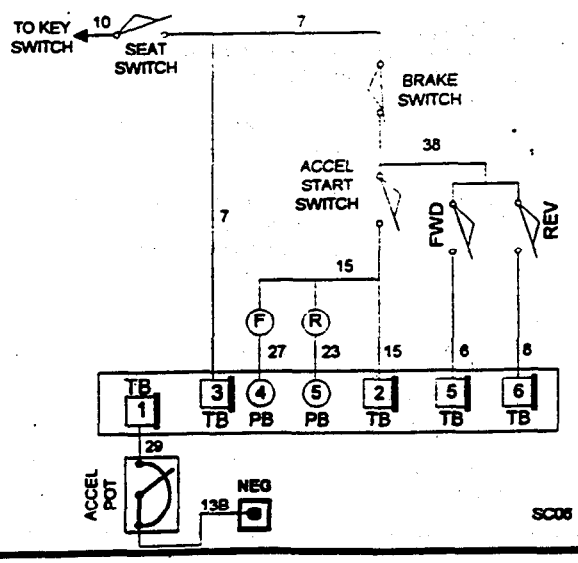

Copyrighted Material
Intended for CLARK dealers only
Do not sell or distribute

https://truckmanualshub.com/

TRACTION STATUS CODE	DESCRIPTION OF STATUS	CAUSE OF STATUS INDICATION
-07	Accelerator input voltage too high during run mode.	This status code will be displayed when the accelerator input voltage at TB1 is higher than 3.7 volts, and a directional contactor is picked up.
MEMORY RECALL NO	CORRECTIVE ACTIONS	TROUBLE-SHOOTING DIAGRAM
Circuits valid for Traction Controller	**SYMPTOM** Forward or reverse contactor picks up but control will not operate when accelerator pedal is depressed or status code -07 is displayed then disappears when the vehicle starts to accelerate. **POSSIBLE CAUSE** **Accelerator input mis-adjusted or defective.** • Input voltage at TB1 should be less than 3.7 volts. Adjust or replace accelerator unit to insure that the voltage at TB1 will vary from 3.5 volts to less than .5 volts when the pedal is depressed. **Open circuit between battery negative and TB1 in accelerator input circuit.** • Check for broken wires or loose connections or open potentiometer / voltage supply in the circuit shown in Figure 1. **Short circuit from battery positive to wiring in accelerator input circuit.** • Disconnect wire from TB1 and measure voltage at wire to negative. Should be zero volts for potentiometer type and less than 3.7 volts for solid state type accelerator input.	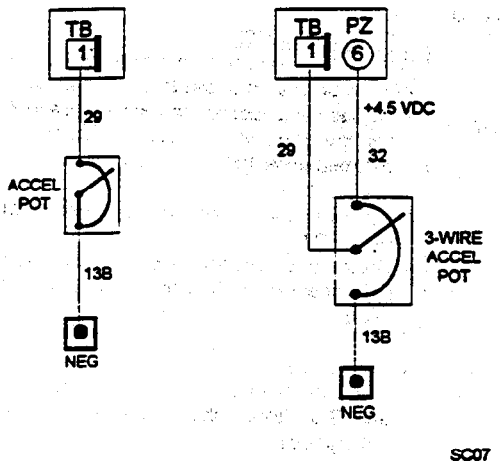

TRACTION STATUS CODE	DESCRIPTION OF STATUS	CAUSE OF STATUS INDICATION
-08	Accelerator input voltage too low on power up after initial key switch closure.	This status code will be displayed when the accelerator input voltage at TB1 is less than 3.0 volts, and any of the following connections are opened & closed: battery plug, seat switch or key switch.
MEMORY RECALL NO	CORRECTIVE ACTIONS	TROUBLE-SHOOTING DIAGRAM
Circuits valid for Traction Controller	**SYMPTOM** Forward or reverse contactor does not pick up. **POSSIBLE CAUSE** **Accelerator input mis-adjusted or defective.** • Input voltage at TB1 should be more than 3.0 volts. Adjust or replace accelerator unit to insure that the voltage at TB1 is more than 3.0 volts before depressing pedal. **Short circuit between battery negative and TB1 in accelerator input circuit.** • Disconnect wire from TB1. Check for short circuit from wire to battery negative. Resistance should be greater than 4.7K ohms. **Defective Card** • Disconnect wire from TB1. Measure voltage from TB1 to negative. Voltage should be greater than 4.5 volts, if not, replace card.	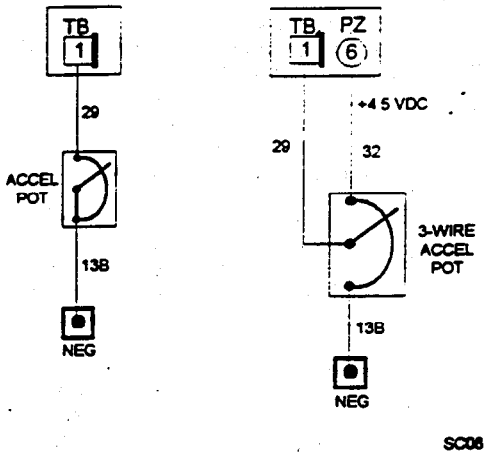

Copyrighted Material
Intended for CLARK dealers only
Do not sell or distribute

https://truckmanualshub.com/

TRACTION STATUS CODE	DESCRIPTION OF STATUS	CAUSE OF STATUS INDICATION
-09	Both the forward and reverse directional switches are closed at the same time.	This status code will be displayed when TB5 & TB6 are greater than 60% of battery volts at the same time.
MEMORY RECALL **NO**	**CORRECTIVE ACTIONS**	**TROUBLE-SHOOTING DIAGRAM**
Circuits valid for Traction Controller	**SYMPTOM** Forward or reverse contactor will not pick up. **POSSIBLE CAUSE** **Forward or reverse directional switch welded closed or mis-adjusted to be held closed.** • Replace or adjust directional switches to insure that they open when directional switch is returned to neutral. **Short circuit between battery positive and TB5 and/or TB6.** • Disconnect wires from TB5 and TB6 and check wire for short circuit to positive side of directional switch. **Defective card** • Disconnect wires and measure voltage at TB5 and TB6. Voltage should be less than 60% of battery volts.	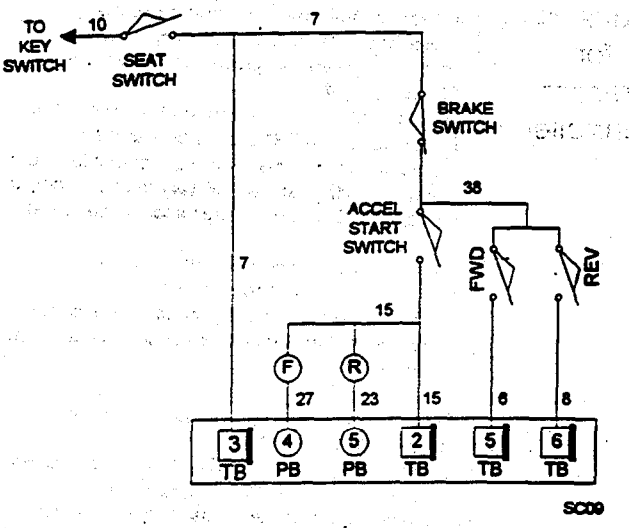

TRACTION STATUS CODE	DESCRIPTION OF STATUS	CAUSE OF STATUS INDICATION
-11	Start switch closed on power up after initial key switch closure.	This status code will be displayed when TB2 is greater than 60% of battery voltage when the key switch is closed.
MEMORY RECALL **NO**	**CORRECTIVE ACTIONS**	**TROUBLE-SHOOTING DIAGRAM**
Circuits valid for Traction Controller	**SYMPTOM** Forward or reverse contactor does not pick up. **POSSIBLE CAUSE** **Start switch input mis-adjusted or defective.** • Input voltage at TB2 should be less than 60% battery volts at key switch closing. Adjust or replace accelerator unit to insure that the voltage at TB2 is less than 60% battery volts before closing the start switch pedal. **Short circuit between battery positive and TB2 in start switch input circuit.** • Disconnect wire from TB2. Check for short circuit from wire to battery positive. Resistance should be greater than 4.7K ohms. **Defective Card** • Disconnect wire from TB2. Measure voltage from TB2 to negative. Voltage should be zero, if not, replace card.	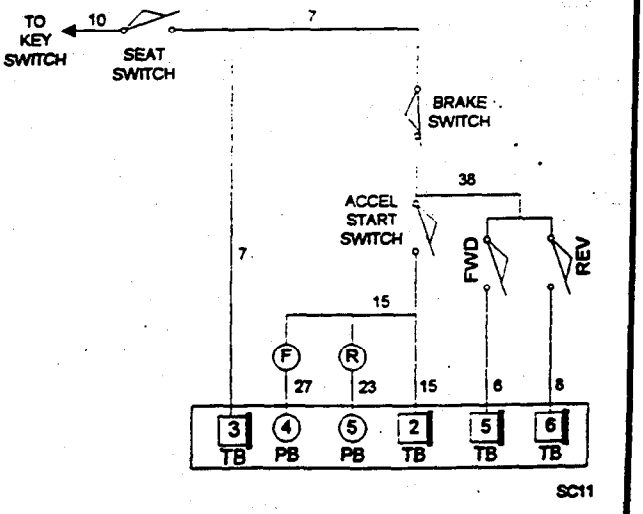

Copyrighted Material
Intended for CLARK dealers only
Do not sell or distribute

https://truckmanualshub.com/

TRACTION STATUS CODE	DESCRIPTION OF STATUS	CAUSE OF STATUS INDICATION
-15	Battery voltage is too low or control card is mis-adjusted.	This status code will be displayed when the battery volts are less than 1.95 volts per cell at initial key switch on. See table below.

MEMORY RECALL	CORRECTIVE ACTIONS	TROUBLE-SHOOTING DIAGRAM
NO		
Circuits valid for Traction Controller	**SYMPTOM** Forward or reverse contactor will not pick up. **POSSIBLE CAUSE** **Discharged battery** • Check battery for proper open circuit voltage as shown in SC 15 figure and charge battery, if required. **Defective battery** • Check each battery cell for proper voltage (greater than 1.95 volts at cell). Replace or repair battery. **Incorrect control card adjustment.** • Check Function 15 for proper adjustment for battery being used. See Handset instruction sheet for details. Adjust to proper settings. **Check "minimum" battery volts at PB1 & NEG.**	

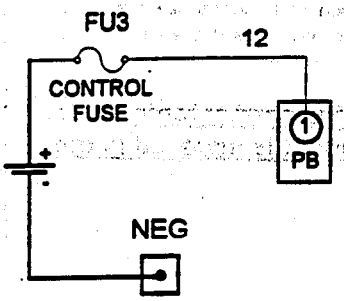

NOMINAL BATTERY VOLTS	MINIMUM LIMIT VOLTS AT 1.95 VDC PER CELL
24	23.4
36	35.1
48	46.8
72	70.2
80	78

SC15

TRACTION STATUS CODE	DESCRIPTION OF STATUS	CAUSE OF STATUS INDICATION
-16	Battery voltage is too high or control card is mis-adjusted.	This status code will be displayed when the battery volts are greater than 2.4 volts per cell at initial key switch on. See table below.

MEMORY RECALL	CORRECTIVE ACTIONS	TROUBLE-SHOOTING DIAGRAM
NO		
Circuits valid for Traction Controller	**SYMPTOM** Forward and reverse contactor will not pick up. **POSSIBLE CAUSE** **Incorrect control card adjustment** • Check Function 15 for proper adjustment for battery being used. See Handset instructions for details. Adjust to proper setting. **Battery over charged or incorrect battery used.** • Check battery for proper open circuit voltage as shown in SC 16 figure. If voltage is excessive, check battery charger for proper output voltage. **Check "maximum" battery volts at PB1 & NEG.**	

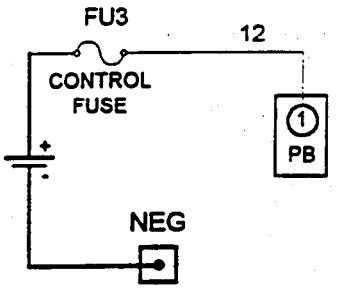

NOMINAL BATTERY VOLTS	MAXIMUM LIMIT VOLTS AT 2.40 VDC PER CELL
24	28.8
36	43.2
48	57.6
72	86.4
80	96.0

SC16

Copyrighted Material
Intended for CLARK dealers only
Do not sell or distribute

https://manualshub.com/

TRACTION STATUS CODE	DESCRIPTION OF STATUS	CAUSE OF STATUS INDICATION
-17	"Card Type" selection is invalid.	This status code will be displayed when the card type selection value is set to an invalid number.
MEMORY RECALL NO	CORRECTIVE ACTIONS	TROUBLE-SHOOTING DIAGRAM
Circuits valid for Traction Controller	**SYMPTOM** Forward or reverse contactors will not close. **POSSIBLE CAUSE** **Invalid card type selection.** • Review function 17 in the Handset Instruction sheets. Adjust and set card type value as instructed by OEM service manual. **Verify that the correct logic card catalog number is installed in the controller.**	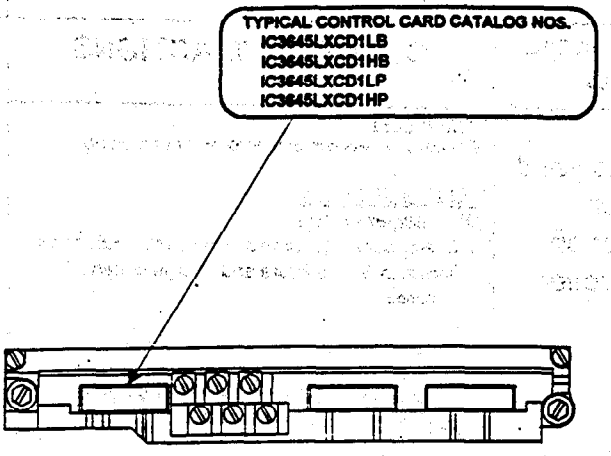 SC17

TRACTION STATUS CODE	DESCRIPTION OF STATUS	CAUSE OF STATUS INDICATION
-21	3-wire Accelerator input is less than 0.25 volts.	This status code will be displayed when TB1 voltage is less than 0.25 volts.
MEMORY RECALL NO	CORRECTIVE ACTIONS	TROUBLE-SHOOTING DIAGRAM
Circuits valid for Traction Controller	**SYMPTOM** Controller will not operate. **POSSIBLE CAUSE** **Accelerator potentiometer needs adjustment or is damaged.** • Input voltage at TB1 must be greater than 0.25 volts when the accelerator pedal is fully released. **Short-circuit between battery negative and TB1 in accelerator input circuit.** • Disconnect wire from TB1 and check for short-circuit from end of wire to battery NEG. Resistance must be greater than 4.7 K ohms. **Open-circuit between accelerator potentiometer and PZ6.** • Make sure +4.5 volts is present from PZ6 to accelerator.	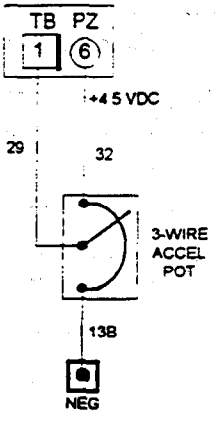 SC21

Copyrighted Material
Intended for CLARK dealers only
Do not sell or distribute

https://truckmanualshub.com/

TRACTION STATUS CODE	DESCRIPTION OF STATUS	CAUSE OF STATUS INDICATION
-23	Forward and reverse contactor coil current is low.	This status code will be displayed when the current draw in the forward or reverse contactor coil circuit is less than 100 milliamps & T2 volts is <88% of Bat volts.
MEMORY RECALL NO	CORRECTIVE ACTIONS	TROUBLE-SHOOTING DIAGRAM
Circuits valid for Traction Controller	**SYMPTOM** Forward or reverse contactor will not pick up. Status code may alternate between code 23 and code 24. Complete check for code 23, if the problem is not found, perform check for code 24. **POSSIBLE CAUSE** **Defective F and R contactor coil circuit.** • Check for open circuit or loose connection between PB4 and positive side of F contactor coil and between PB5 and positive side of R contactor coil. • Remove plug B. Check ohmic value from PB4 to positive side of F coil. Value should be 10 to 14 ohms. Make same check for R coil. **Defective 1A, FW, RB, L1, or SP contactor coil.** • Remove plug B. Check ohmic value from positive side of each coil to its respective plug connection. Value should be 10 to 14 ohms.	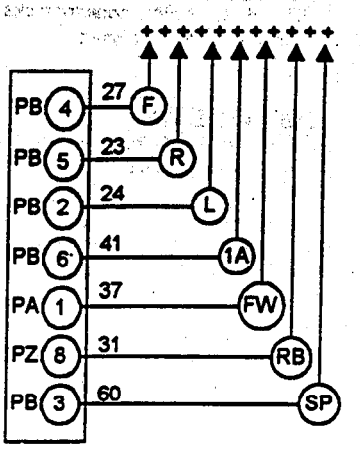 SC23

TRACTION STATUS CODE	DESCRIPTION OF STATUS	CAUSE OF STATUS INDICATION
-24	T2 voltage is low. (Less than 88% battery voltage.)	This status code will be displayed when T2 volts is less than 88% of battery volts and the "F" & "R" driver is energized.
MEMORY RECALL NO	CORRECTIVE ACTIONS	TROUBLE-SHOOTING DIAGRAM
Circuits valid for Traction Controller	**SYMPTOM** Control does not operate. Status code may alternate between code 23 and code 24. Complete checks for 24, if the problem is not found, perform code 23 check. **POSSIBLE CAUSE** **Defective F or R contactor.** • F or R power tips fail to close because: 1) Welded normally closed power tips. 2) Binding contactor tip assembly. 3) Defective F or R contactor coil. (See status code 23) **"RB" contactor (if applicable) failed to close.** **Open motor circuit** • Check for open circuit or loose connection in motor circuit from the A1 connection to the A2 connection on the control panel.	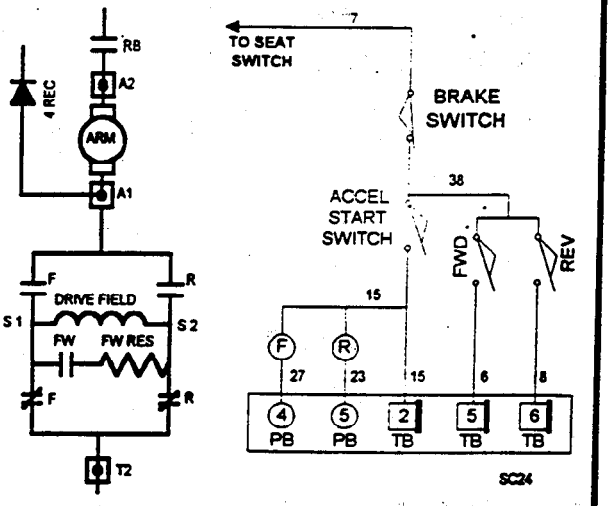 SC24

Copyrighted Material
Intended for CLARK dealers only
Do not sell or distribute

https://forkliftmanualshub.com/

TRACTION STATUS CODE	DESCRIPTION OF STATUS	CAUSE OF STATUS INDICATION
-26	Shorted coil driver for SP, RB, L, or FW contactors.	This status code will be displayed when there is a shorted SP, RB, L, or FW coil driver.
MEMORY RECALL NO	**CORRECTIVE ACTIONS**	**TROUBLE-SHOOTING DIAGRAM**
Circuits valid for Traction Controller	**SYMPTOM** SP, RB, L, or FW contactor picks up immediately when key switch is closed. **POSSIBLE CAUSE** **Defective coil driver internal to logic card.** • Replace logic card.	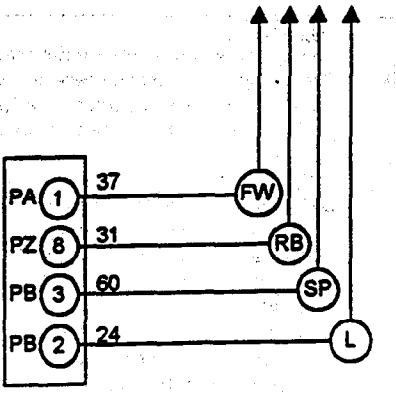

TRACTION STATUS CODE	DESCRIPTION OF STATUS	CAUSE OF STATUS INDICATION
-27	Logic card power supply is less than 10 Volts DC.	This status code will be displayed when the logic card power supply is less than 10 volts.
MEMORY RECALL YES	**CORRECTIVE ACTIONS**	**TROUBLE-SHOOTING DIAGRAM**
Circuits valid for Traction Controller	**SYMPTOM** Forward or reverse contactors close and open, then can only be closed by opening and closing the key switch. **POSSIBLE CAUSE** **Discharged Battery** • Check battery to insure proper state of charge. Voltage may be dropping below 10 Volts DC under load. **Loose connection at PB1.** • Insure that the wire connection at PB1 is tight. **Defective logic card** • Replace logic card. **Defective Q1 Power Transistor.** • Measure for low resistance (<200 ohms) at PZ4 to NEG.	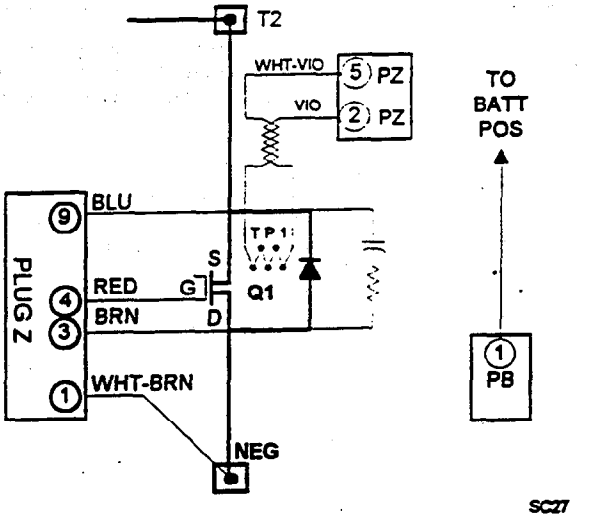

Copyrighted Material
Intended for CLARK dealers only
Do not sell or distribute

https://forklift-manuals.com/

TRACTION STATUS CODE	DESCRIPTION OF STATUS	CAUSE OF STATUS INDICATION
-41	Open thermal protector (TP) or transistor over temperature.	This status code will be displayed when the voltage between PZ2 and PZ5 is greater than 0.8 volts.
MEMORY RECALL NO	CORRECTIVE ACTIONS	TROUBLE-SHOOTING DIAGRAM
Circuits valid for Traction Controller	**SYMPTOM** Reduced or no power to traction motor in control range. **POSSIBLE CAUSE** **Control is in thermal cut-back.** • Allow control to cool, status code should disappear. **Open thermal protector circuit.** • Check for loose connection or broken wire between: - WHT/VIO wire-Thermal protector and PZ5 - VIO wire-Thermal protector and PZ2. **Defective thermal protector.** • Disconnect wires from PZ2 and PZ5. At room temperature (25° C or 75° F) measure resistance between WHT/VIO and VIO wire. Replace Q1 if ohmic value is greater than 1200 ohms.	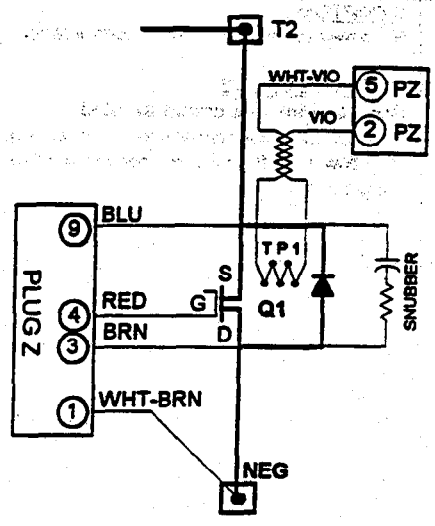

TRACTION STATUS CODE	DESCRIPTION OF STATUS	CAUSE OF STATUS INDICATION
-42	Controller "motor current sensor" input is missing (PZ12 - Green).	This status code will be displayed when the voltage between PZ12 & PZ13 is greater than 0.1 volts with no current flowing in the motor circuit.
MEMORY RECALL NO	CORRECTIVE ACTIONS	TROUBLE-SHOOTING DIAGRAM
Circuits valid for Traction Controller	**SYMPTOM** No power to traction motor in control range. **POSSIBLE CAUSE** **Open sensor wire circuit to PZ12 .** • Check for loose connection or broken wire (green wire) from current sensor to PZ12 on the logic card.	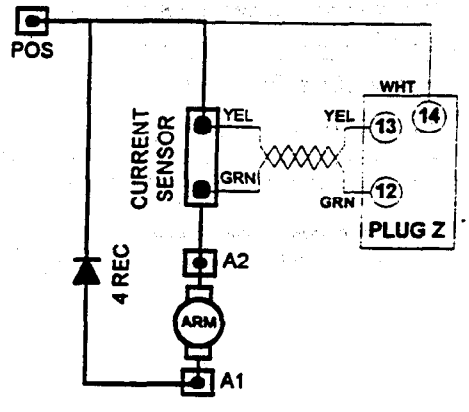

Copyrighted Material
Intended for CLARK dealers only
Do not sell or distribute

https://manualshub.com/

TRACTION STATUS CODE	DESCRIPTION OF STATUS	CAUSE OF STATUS INDICATION
-43	Controller "motor current sensor" input is missing (PZ13 - Yellow).	This status code will be displayed when the voltage between PZ12 & PZ13 is greater than 0.1 volts with no current flowing in the motor circuit.
MEMORY RECALL **NO**	**CORRECTIVE ACTIONS**	**TROUBLE-SHOOTING DIAGRAM**
Circuits valid for Traction Controller	**SYMPTOM** No power to traction motor in control range. **POSSIBLE CAUSE** **Open sensor wire circuit to PZ13 .** • Check for loose connection or broken wire (yellow wire) from current sensor to PZ13 on the logic card.	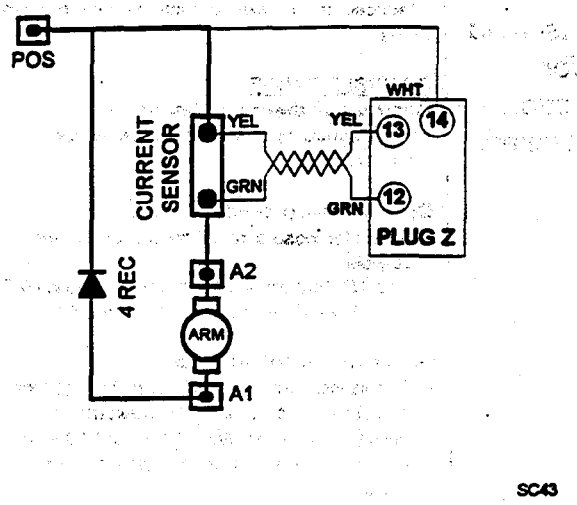

TRACTION STATUS CODE	DESCRIPTION OF STATUS	CAUSE OF STATUS INDICATION
-44	Power Transistor (Q1) did not turn off properly.	This status code will be displayed when, during control operation, the transistor fails to turn off. This will result in a PMT condition.
MEMORY RECALL **YES**	**CORRECTIVE ACTIONS**	**TROUBLE-SHOOTING DIAGRAM**
Circuits valid for Traction Controller	**SYMPTOM** Forward or reverse contactors close and open, then can only be closed by opening and closing the key switch. **POSSIBLE CAUSE** **Defective Q1 power transistor.** • Turn off time for transistor is out of specification. No field test is possible. Replace transistor. • Check for open circuit or loose connections between the transistor and PZ4 (red wire).	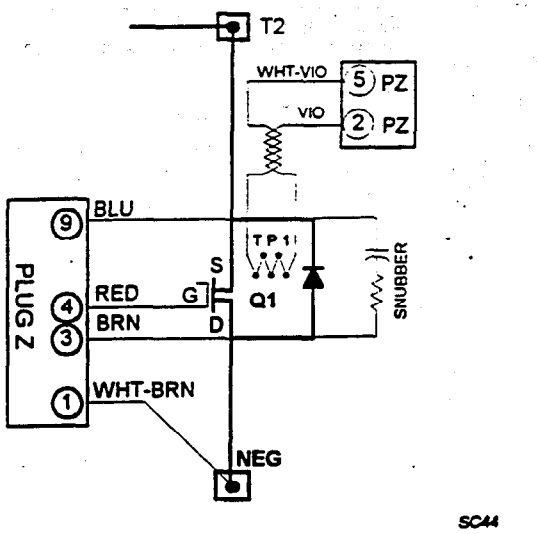

Copyrighted Material
Intended for CLARK dealers only
Do not sell or distribute

https://truckmanualshub.com/

TRACTION STATUS CODE	DESCRIPTION OF STATUS	CAUSE OF STATUS INDICATION
-45	Power Transistor (Q1) did not turn on properly.	This status code will be displayed when the Power Transistor fails to gate "on".
MEMORY RECALL **YES**	**CORRECTIVE ACTIONS**	**TROUBLE-SHOOTING DIAGRAM**
Circuits valid for Traction Controller	**SYMPTOM** Forward or reverse contactor will close and open, and then can only be closed by opening and closing the key switch. **POSSIBLE CAUSE** **Defective transistor circuit.** • Check for open circuit or loose connections between the transistor and PZ4 (red wire). • Check for open circuit or loose connection between T2 and PZ9 (blue wire). **Defective Q1 power transistor.** • Intermittent or open transistor gate. Field test may or may not show defect. Replace transistor after above checks show no problem found.	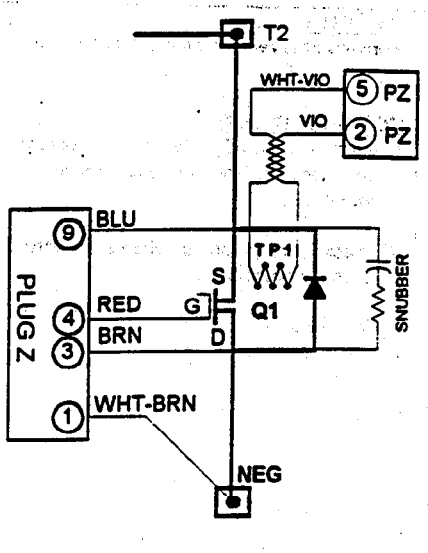

TRACTION STATUS CODE	DESCRIPTION OF STATUS	CAUSE OF STATUS INDICATION
-46	"Look Ahead" test for T2 volts less than 12% of battery volts.	This status code will be displayed when the voltage at T2 is less than 12% of battery volts.
MEMORY RECALL **NO**	**CORRECTIVE ACTIONS**	**TROUBLE-SHOOTING DIAGRAM**
Circuits valid for Traction Controller	**SYMPTOM** Forward or reverse contactor will not pick up. **POSSIBLE CAUSE** **Defective Q1 power transistor.** • Check for shorted transistor. **Defective 1A contactor.** • Check for welded 1A contactor power tips. **Defective snubber.** • Check for shorted snubber.	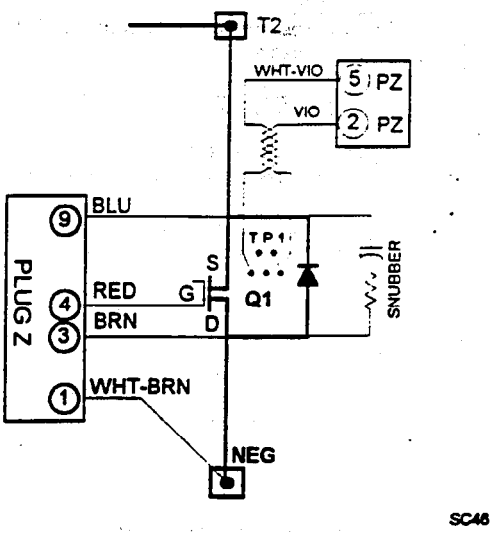

Copyrighted Material
Intended for CLARK dealers only
Do not sell or distribute

https://truckmanualshub.com/

TRACTION STATUS CODE	DESCRIPTION OF STATUS	CAUSE OF STATUS INDICATION
-48	"Look Ahead" test for T2 volts greater than 88% of battery volts.	This status code will be displayed when the voltage at T2 is greater than 88% of battery volts.
MEMORY RECALL NO	CORRECTIVE ACTIONS	TROUBLE-SHOOTING DIAGRAM
Circuits valid for Traction Controller	**SYMPTOM** Forward or reverse contactor will not pick up. **POSSIBLE CAUSE** **Defective forward or reverse contactor.** • Check for welded forward or reverse contactor power tips. • Check for sluggish operation of forward or reverse contactor. **Defective 3 REC circuit.** • Check for shorted 3 REC.	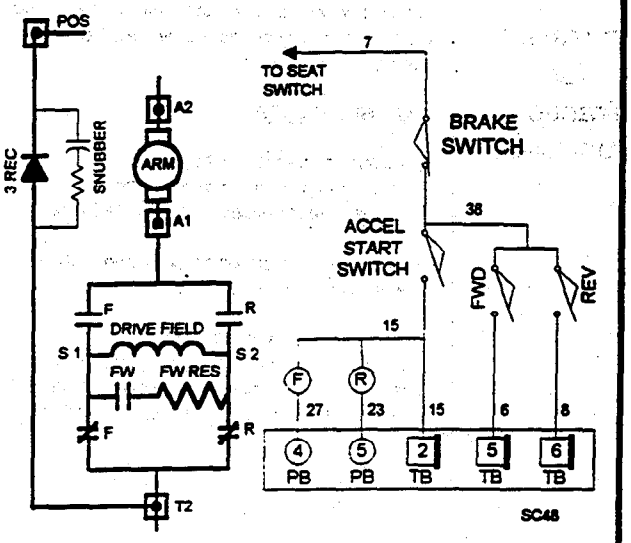

TRACTION STATUS CODE	DESCRIPTION OF STATUS	CAUSE OF STATUS INDICATION
-50	Capacitor volts low after line contactor closes.	This status code will be displayed when the capacitor volts is less than 85% of battery volts during the run mode.
MEMORY RECALL NO	CORRECTIVE ACTIONS	TROUBLE-SHOOTING DIAGRAM
Circuits valid for Traction Controller	**SYMPTOM** Forward or reverse contactor picks up. Control does not operate. **POSSIBLE CAUSE** **Defective Line contactor.** • Check for open line contactor power tips. • Check for loose or open connections in cables from battery positive to control positive circuit. **Defective Power fuse.** • Check power fuse for open circuit. **No battery voltage at PZ14.** • Check for battery voltage at POS and PZ14. • Check for loose connection at PZ14 (white wire).	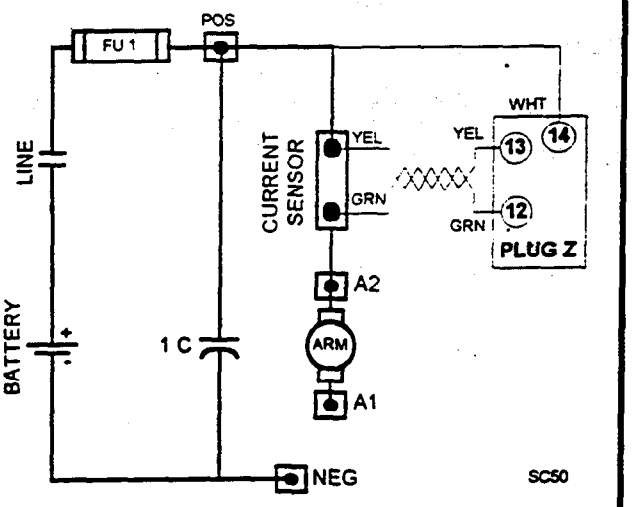

Copyrighted Material
Intended for CLARK dealers only
Do not sell or distribute

https://truckmanualsnb.com/

TRACTION STATUS CODE	DESCRIPTION OF STATUS	CAUSE OF STATUS INDICATION
-51	Capacitor volts are low before the line contactor closes (internal card function during precharge).	This status code will be displayed during "key on" when the capacitor volts is less than 85% of battery volts at initial key switch on.
MEMORY RECALL **NO**	**CORRECTIVE ACTIONS**	**TROUBLE-SHOOTING DIAGRAM**
Circuits valid for Traction Controller	**SYMPTOM** Line contactor does not close when Capacitor does not precharge. **POSSIBLE CAUSE** **Defective capacitor.** • Check capacitor bank per component checking section. • Check for loose or open connections in capacitor circuit. **Defective control fuse for PB1 input.** • Check control fuse for open circuit. **Defective logic card** • Replace logic card. **Defective Q1 power transistor.** • Check transistor Q1 for shorted condition and replace if necessary. **Note:** Repeated "charging/discharging" the capacitors during trouble shooting will cause status code -51. Also, "do not" connect **any** loads to the load side of the Line Contactor.	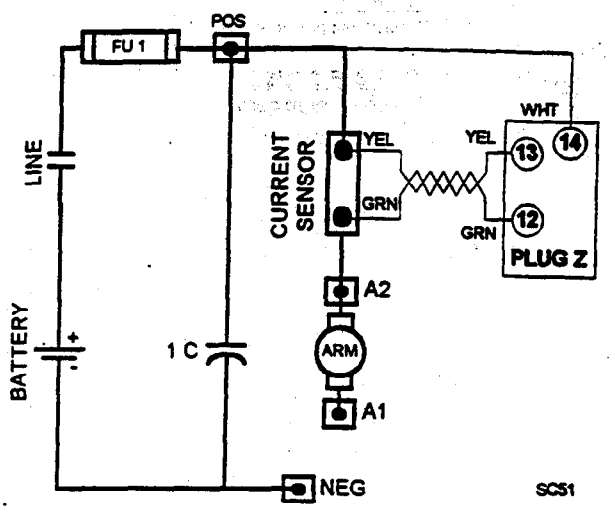

TRACTION STATUS CODE	DESCRIPTION OF STATUS	CAUSE OF STATUS INDICATION
-53	Power Transistor fails to turn off during plugging operation.	This status code will be displayed when the transistor fails to turn off while plugging. This will result in a PMT condition.
MEMORY RECALL **YES**	**CORRECTIVE ACTIONS**	**TROUBLE-SHOOTING DIAGRAM**
Circuits valid for Traction Controller	**SYMPTOM** Forward or reverse contactors close and open, then can only be closed by opening and closing the key switch. **POSSIBLE CAUSE** **Defective Q1 power transistor.** • Turn off time for transistor is out of specification. No field test is possible. Replace transistor. • Check for open circuit or loose connections between the transistor and PZ4 (red wire)	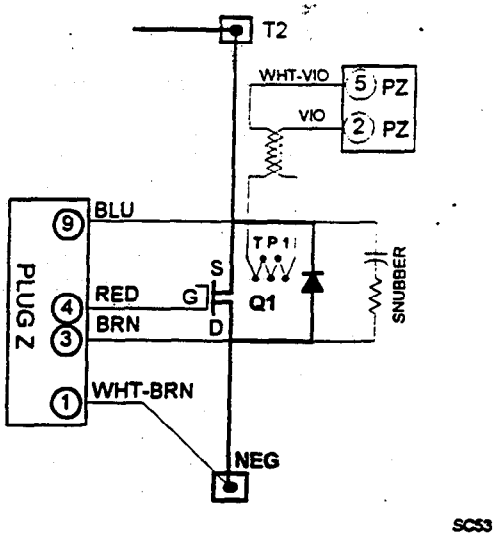

Copyrighted Material
Intended for CLARK dealers only
Do not sell or distribute

https://www.manualshub.com/

TRACTION STATUS CODE	DESCRIPTION OF STATUS	CAUSE OF STATUS INDICATION
-54	Shorted F, R, or 1A contactor coil driver on the logic card.	This status code will be displayed when any of the Forward, Reverse or 1A contactor coil driver(s) is shorted internal to the logic card.
MEMORY RECALL **NO**	**CORRECTIVE ACTIONS**	**TROUBLE-SHOOTING DIAGRAM**
Circuits valid for Traction Controller	**SYMPTOM** Control will not operate. **POSSIBLE CAUSE** **Defective logic card.** • Replace logic card.	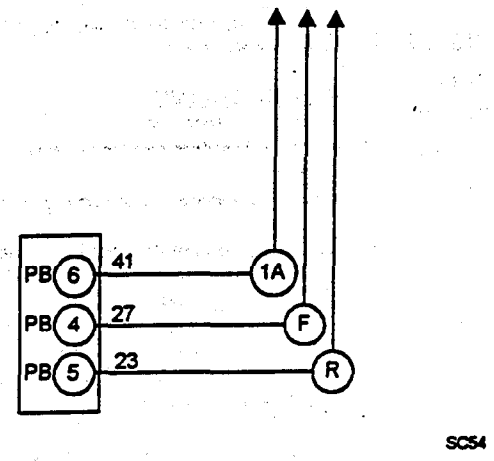

TRACTION STATUS CODE	DESCRIPTION OF STATUS	CAUSE OF STATUS INDICATION
-57	Controller "motor current sensor" input voltage polarity check.	This status code will be displayed when the voltage input to PZ13 and PZ12 is the wrong polarity.
MEMORY RECALL **YES**	**CORRECTIVE ACTIONS**	**TROUBLE-SHOOTING DIAGRAM**
Circuits valid for Traction Controller	**SYMPTOM** Forward or reverse contactors close and open, then can only be closed by opening and closing the key switch. **POSSIBLE CAUSE** **Reversed yellow and green current sensor wires.** • Insure that the green wire connects to PZ12 with no open circuits and that the yellow wire connects to PZ13 with no open circuits or loose connections. **Reversed power cable connection.** • Insure that the battery positive cable connects to control POS and the motor A2 cable connects to control A2. **Line contactor tips open during run mode.** • Check contactor operation and contactor tips.	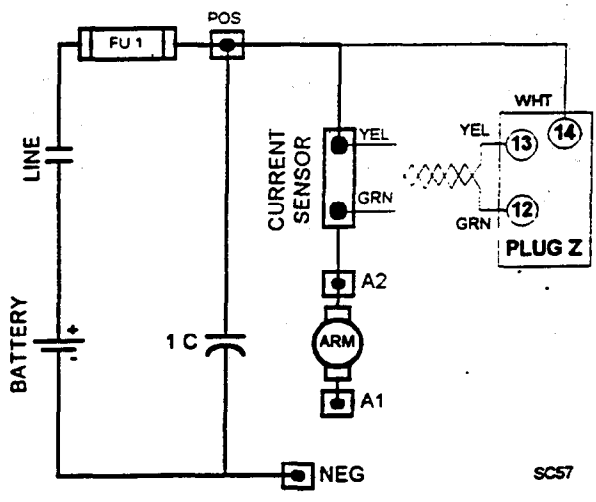

Copyrighted Material
Intended for CLARK dealers only
Do not sell or distribute

https://www.manualslib.com/

TRACTION STATUS CODE	DESCRIPTION OF STATUS	CAUSE OF STATUS INDICATION
-70	Regen current sensor input missing (green wire).	This status code will be displayed when the input signal at PZ10 is missing.
MEMORY RECALL YES	CORRECTIVE ACTIONS	TROUBLE-SHOOTING DIAGRAM
Circuits valid for Traction Controller	**SYMPTOM** Control does not operate. **POSSIBLE CAUSE** Defective regen sensor input circuit. • Check green sensor wire for open circuit or loose connection between sensor (welded connection) and PZ10.	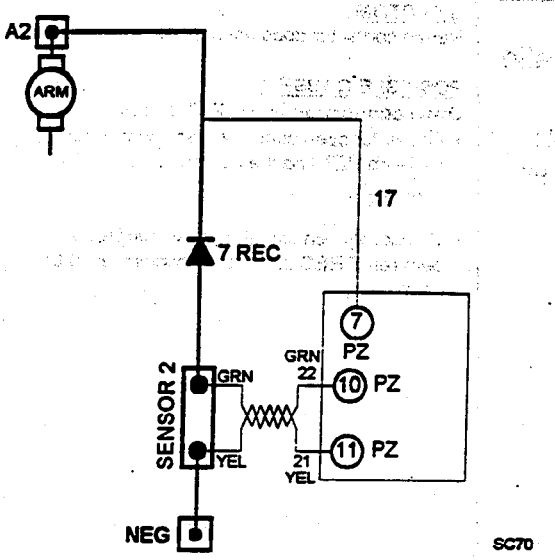

TRACTION STATUS CODE	DESCRIPTION OF STATUS	CAUSE OF STATUS INDICATION
-71	Regen current sensor input missing (yellow wire).	This status code will be displayed when the input signal at PZ11 is missing.
MEMORY RECALL YES	CORRECTIVE ACTIONS	TROUBLE-SHOOTING DIAGRAM
Circuits valid for Traction Controller	**SYMPTOM** Control does not operate. **POSSIBLE CAUSE** Defective regen sensor input circuit. • Check yellow sensor wire for open circuit or loose connection between sensor (welded connection) and PZ11.	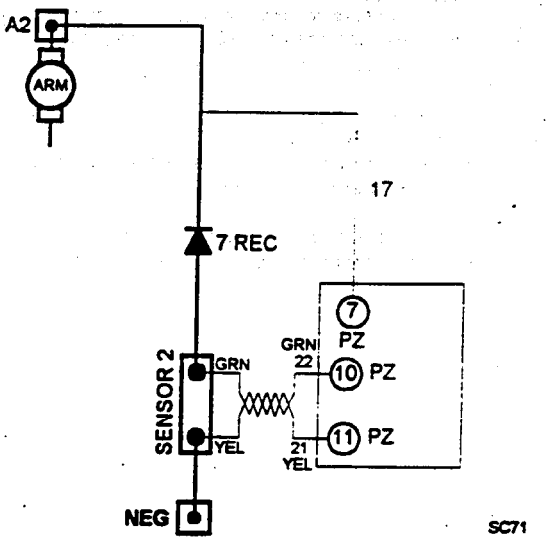

Copyrighted Material
Intended for CLARK dealers only
Do not sell or distribute

https://truckmanualshub.com/

TRACTION STATUS CODE	DESCRIPTION OF STATUS	CAUSE OF STATUS INDICATION
-72	Regen contactor (RB) does not pick up.	This status code will be displayed when the logic card is in the run mode and less than 50% battery volts at PZ7.
MEMORY RECALL YES	CORRECTIVE ACTIONS	TROUBLE-SHOOTING DIAGRAM
Circuits valid for Traction Controller	**SYMPTOM** Regen contactor does not operate. **POSSIBLE CAUSE** **Open connection in the PZ7 circuit.** • Check for open circuit or loose connection between PZ7 and the A2 connection of the controller. • Check for open circuit or loose connection between 7 REC and the A2 connection of the controller.	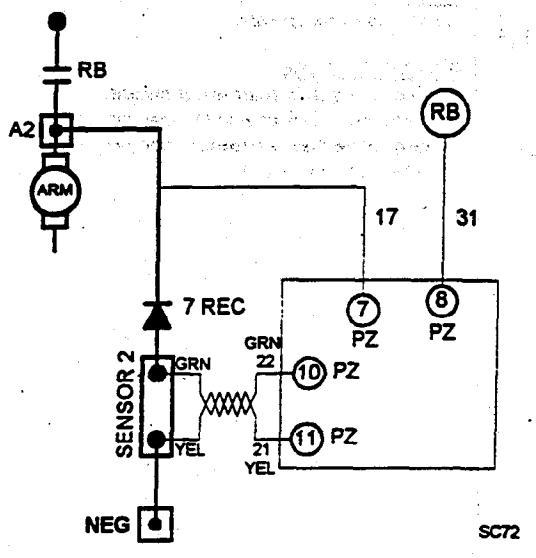

TRACTION STATUS CODE	DESCRIPTION OF STATUS	CAUSE OF STATUS INDICATION
-73	Regen contactor (RB) does not drop out or drops out slowly.	This status code will be displayed when the RB contactor power tips fail to open after 100 milliseconds after power is removed from the RB contactor coil.
MEMORY RECALL YES	CORRECTIVE ACTIONS	TROUBLE-SHOOTING DIAGRAM
Circuits valid for Traction Controller	**SYMPTOM** Forward or reverse contactor close and open, then opens and can only close by opening and closing the key switch. **POSSIBLE CAUSE** **Defective RB contactor.** • Check RB contactor for smoothness of operation and excessive wear on moving parts. **Short circuit to positive at PZ7 input.** • Check for short circuit between PZ7 and battery positive.	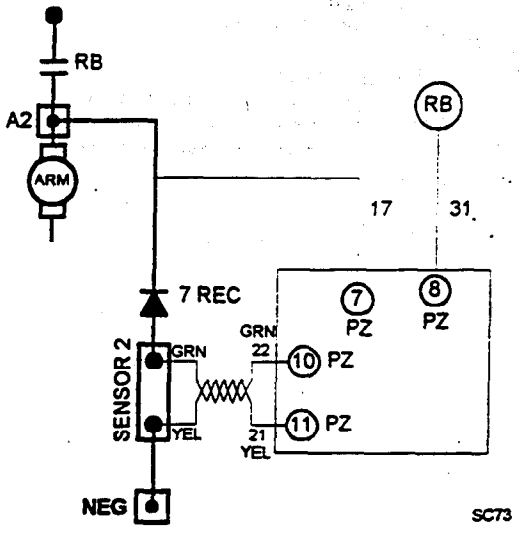

Copyrighted Material
Intended for CLARK dealers only
Do not sell or distribute

https://truckmanualshub.com/

TRACTION STATUS CODE	DESCRIPTION OF STATUS	CAUSE OF STATUS INDICATION
-74	Regen contactor (RB) picks up too slowly.	This status code will be displayed when the RB contactor power tips do not close within 100 milliseconds after power is applied to the RB contactor coil.
MEMORY RECALL YES	CORRECTIVE ACTIONS	TROUBLE-SHOOTING DIAGRAM
Circuits valid for Traction Controller	**SYMPTOM** Forward or reverse contactor close and open, then opens and can only close by opening and closing the key switch. **POSSIBLE CAUSE** **Defective RB contactor.** • Check RB contactor for smoothness of operation and excessive wear on moving parts. **Intermittent PZ7 input.** • Check for loose connections in PZ7 circuit from PZ7 to RB contactor A2 connection. **Defective RB contactor coil circuit.** • Check RB contactor coil for proper ohmic value. It should be 10-14 ohms. • Check coil connection from PZ8 to RB coil (-) for loose connection. • Check coil connection from battery positive to RB coil (+) for loose connection.	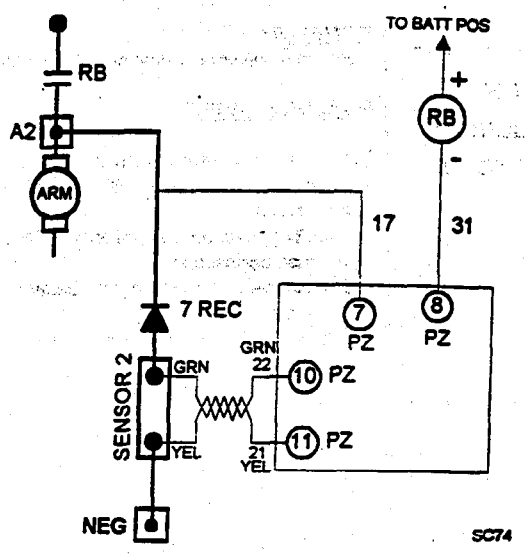

TRACTION STATUS CODE	DESCRIPTION OF STATUS	CAUSE OF STATUS INDICATION
-76	Capacitor (1C) voltage too high.	This status code will be displayed when the voltage on the capacitor goes above 96 volts during the regenerative braking cycle.
MEMORY RECALL YES	CORRECTIVE ACTIONS	TROUBLE-SHOOTING DIAGRAM
Circuits valid for Traction Controller	**SYMPTOM** Forward or reverse contactor close and open, then opens and can only close by opening and closing the key switch. **POSSIBLE CAUSE** • Unplugging the battery connector during regenerative braking. • Line contactor bouncing open during regen. • Main power fuse opening during regen. • Intermittent battery plug connection.	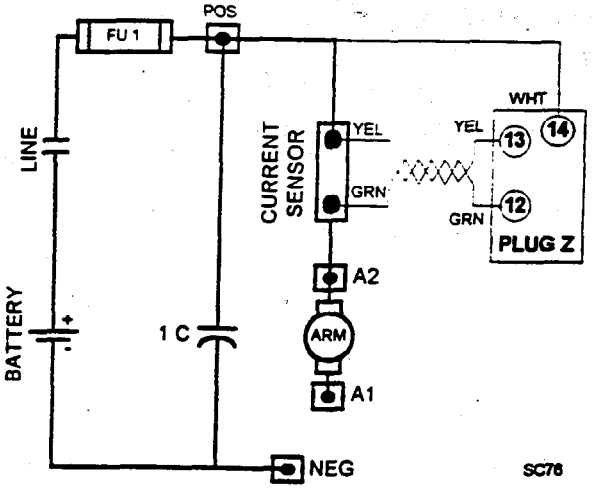

Copyrighted Material
Intended for CLARK dealers only
Do not sell or distribute

TRACTION STATUS CODE	DESCRIPTION OF STATUS	CAUSE OF STATUS INDICATION
-80	Voltage at capacitor (1C) is less than 14 volts.	This status code will be displayed when the voltage at PZ14 is less than 14 volts. This occurs typically in the run mode of operation.
MEMORY RECALL YES	CORRECTIVE ACTIONS	TROUBLE-SHOOTING DIAGRAM
Circuits valid for Traction Controller	**SYMPTOM** Forward or reverse contactor will not pick up. **POSSIBLE CAUSE** **Line Contactor opened up during run.** • Check connection from PB2 to L coil (-) for loose connection. • Check connection from battery (+) to L coil (+) for loose connection. • Check power connection from battery (+) to contactor L. • Check FU1 and FU3 for blown element.	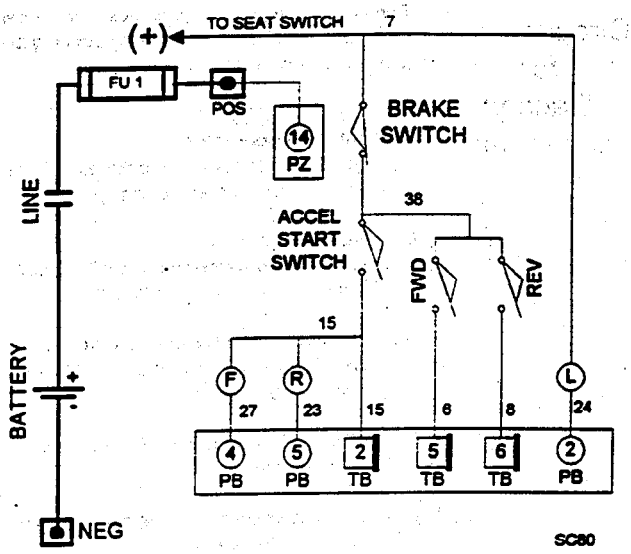

TRACTION STATUS CODE	DESCRIPTION OF STATUS	CAUSE OF STATUS INDICATION
-81	Battery voltage is less than 14 volts.	This status code will be displayed when the battery voltage measured at PB1 is less than 14 volts.
MEMORY RECALL YES	CORRECTIVE ACTIONS	TROUBLE-SHOOTING DIAGRAM
Circuits valid for Traction Controller	**SYMPTOM** Forward or reverse contactor will not pick up. **POSSIBLE CAUSE** **Line Contactor opened up during run.** • Check connection from PB2 to L coil (-) for loose connection. • Check connection from battery (+) to L coil (+) for loose connection. • Check power connection from battery (+) to contactor L. • Check FU1 and FU3 for blown element.	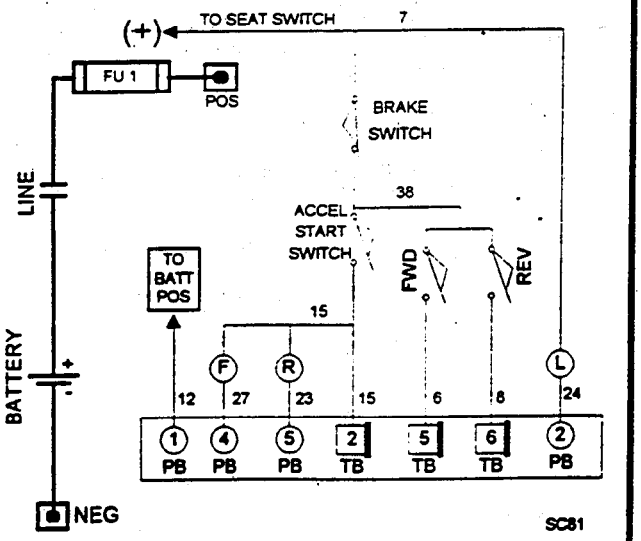

Copyrighted Material
Intended for CLARK dealers only
Do not sell or distribute

https://truckmanualshub.com/

TRACTION STATUS CODE	DESCRIPTION OF STATUS	CAUSE OF STATUS INDICATION
-90	USER DEFINED STATUS CODE See Instructions for Truck Management Module for details.	This status code will be displayed when the voltage at the respective terminal of the TMM or Pump Logic Card is at zero volts.
MEMORY RECALL NO	CORRECTIVE ACTIONS	TROUBLE-SHOOTING DIAGRAM
Circuits valid for Traction Controller & Pump Controller	**SYMPTOM** Status Code flashes "on and off". **POSSIBLE CAUSE** **User defined status code is displayed by switch closure or motor brush sensor closure to Negative.** • See GEH-TMM7A Truck Management Module Instructions for OEM Defined Status Codes for complete corrective action required. **Other causes for status code:** • Terminal 1 (TMM7A) is shorted to Negative. • Plug PA3 (Pump) is shorted to Negative. • Defective input switch (shorted). • Defective TMM card. • Defective Pump card.	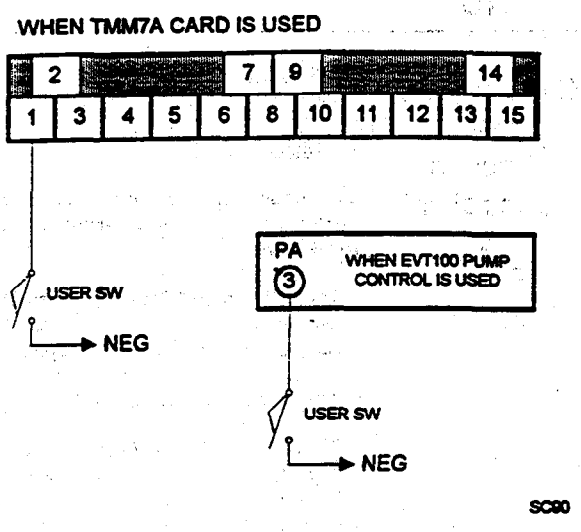

TRACTION STATUS CODE	DESCRIPTION OF STATUS	CAUSE OF STATUS INDICATION
-91	USER DEFINED STATUS CODE See Instructions for Truck Management Module for details.	This status code will be displayed when the voltage at the respective terminal of the TMM or Pump Logic Card is at zero volts.
MEMORY RECALL NO	CORRECTIVE ACTIONS	TROUBLE-SHOOTING DIAGRAM
Circuits valid for Traction Controller & Pump Controller	**SYMPTOM** Status Code flashes "on and off". **POSSIBLE CAUSE** **User defined status code is displayed by switch closure or motor brush sensor closure to Negative.** • See GEH-TMM7A Truck Management Module Instructions for OEM Defined Status Codes for complete corrective action required. **Other causes for status code:** • Terminal 3 (TMM7A) is shorted to Negative. • Plug PA6 (Pump) is shorted to Negative. • Defective input switch (shorted). • Defective TMM card. • Defective Pump card.	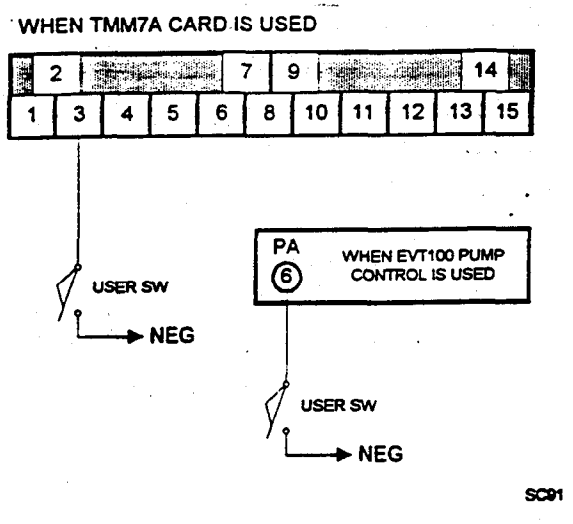

Copyrighted Material
Intended for CLARK dealers only
Do not sell or distribute

https://forklifthub.com/

TRACTION STATUS CODE	DESCRIPTION OF STATUS	CAUSE OF STATUS INDICATION
-95	**USER DEFINED STATUS CODE** See Instructions for Truck Management Module for details.	This status code will be displayed when the voltage at the respective terminal of the TMM or Pump Logic Card is at battery volts.
MEMORY RECALL **NO**	**CORRECTIVE ACTIONS**	**TROUBLE-SHOOTING DIAGRAM**
Circuits valid for Traction Controller & Pump Controller	**SYMPTOM** Status Code flashes "on and off". **POSSIBLE CAUSE** **User defined status code is displayed by switch closure or motor brush sensor closure to Positive.** • See GEH-TMM7A Truck Management Module Instructions for OEM Defined Status Codes for complete corrective action required. **Other causes for status code:** • Terminal 12 (TMM7A) is shorted to Positive. • Plug PZ10 (Pump) is shorted to Positive. • Defective input switch (shorted). • Defective TMM card. • Defective Pump card.	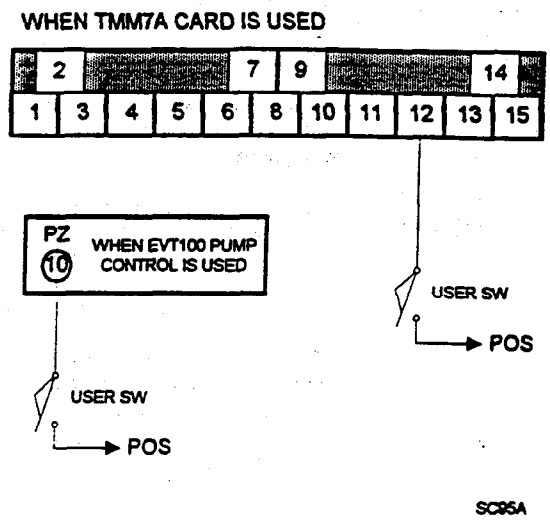

TRACTION STATUS CODE	DESCRIPTION OF STATUS	CAUSE OF STATUS INDICATION
-99	**USER DEFINED STATUS CODE** Maintenance Alert & Speed Limit.	This status code will be displayed when the "normal" hourmeter reading exceeds the "maintenance alert hours" setting for the truck.
MEMORY RECALL **NO**	**CORRECTIVE ACTIONS**	**TROUBLE-SHOOTING DIAGRAM**
Circuits valid for Traction Controller	**SYMPTOM** Status Code is displayed for 4-seconds when the key switch is first turned on, and/or the truck may run at a reduced speed. **CUSTOMER SELECTED SETTING WITH THE HANDSET:** **User defined status code is displayed when the normal hourmeter reading exceeds the programmed "maintenance alert hours" setting selected by the user.** • Maintenance Code Hourmeter, Function 19 & 20 are programmed with the Handset and command the display of status code -99. • If desired, Maintenance Code Speed Limit, Function 21 can be programmed with the Handset. User should perform desired maintenance function.	NO DIAGRAM USER SHOULD PERFORM THE DESIRED MAINTENANCE FUNCTION

Copyrighted Material
Intended for CLARK dealers only
Do not sell or distribute

https://truckmanualshub.com/

PUMP STATUS CODE	DESCRIPTION OF STATUS	CAUSE OF STATUS INDICATION
-117	"Card Type" selection is invalid.	This status code will be displayed when the card type selection value is set to an invalid number.
MEMORY RECALL NO	CORRECTIVE ACTIONS	TROUBLE-SHOOTING DIAGRAM
Circuits valid for Pump Controller	**SYMPTOM** Pump control will not operate. **POSSIBLE CAUSE** **Invalid card type selection.** • Review function 17 in the Handset Instruction sheets. Adjust and set card type value as instructed by OEM service manual. **Verify that the correct logic card catalog number is installed in the controller.**	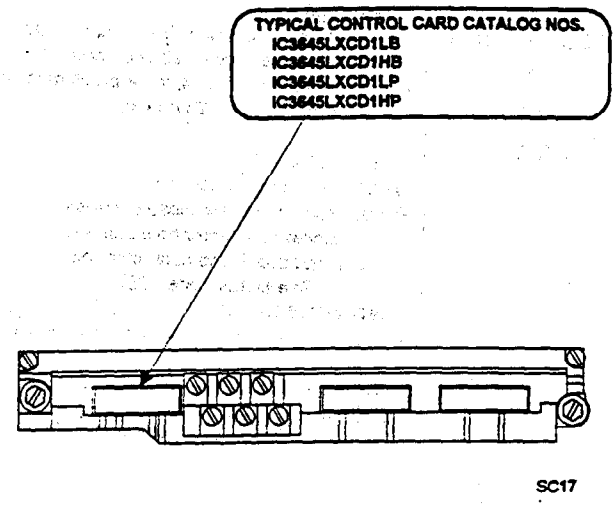

PUMP STATUS CODE	DESCRIPTION OF STATUS	CAUSE OF STATUS INDICATION
-123	Pump contactor coil current is low.	This status code will be displayed when the current draw in the pump contactor coil circuit is less than 100 milliamps and T2 is less than 88% of battery volts.
MEMORY RECALL NO	CORRECTIVE ACTIONS	TROUBLE-SHOOTING DIAGRAM
Circuits valid for Pump Controller	**SYMPTOM** Pump contactor will not pick up. Status code may alternate between code 123 and code 124. Complete check for code 123, if the problem is not found, perform check for code 124. **POSSIBLE CAUSE** **Defective Pump contactor coil circuit.** • Check for open circuit or loose connection between PB4 and positive side of P contactor coil. • Remove plug B. Check ohmic value from PB4 to positive side of P coil. Value should be between 10 and 14 ohms. **Defective P1A contactor coil.** • Remove plug B. Check ohmic value from positive side of coil to its plug connection. Value should be between 10 and 14 ohms.	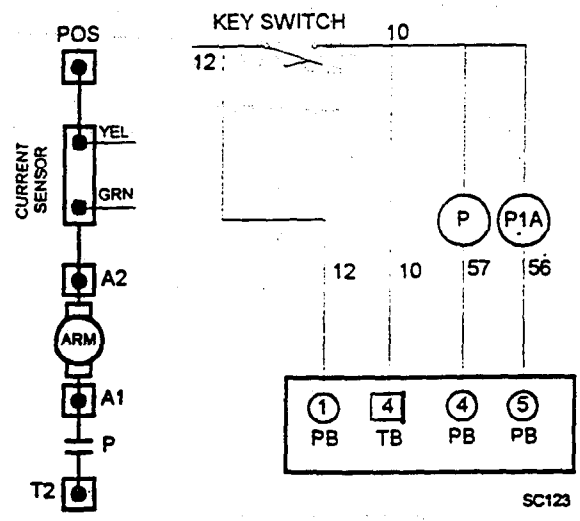

Copyrighted Material
Intended for CLARK dealers only
Do not sell or distribute

https://truckmanualshub.com/

PUMP STATUS CODE	DESCRIPTION OF STATUS	CAUSE OF STATUS INDICATION
-124	T2 voltage is low. (Less than 88% of battery voltage.)	This status code is displayed when T2 voltage is less than 88% of battery volts and the Pump driver is energized.
MEMORY RECALL **NO**	**CORRECTIVE ACTIONS**	**TROUBLE-SHOOTING DIAGRAM**
Circuits valid for Pump Controller	**SYMPTOM** Control does not operate. Status code may alternate between code 123 and code 124. Complete checks for 124, if the problem is not found, perform code 123 check. **POSSIBLE CAUSE** **Defective Pump contactor.** Pump power tips fail to close because: 1) Binding contactor tip assembly. 2) Defective Pump contactor coil. (See status code 123) **Open motor circuit** • Check for open circuit or loose connection in pump motor circuit from the A1 connection to the A2 connection on the control panel. **Defective P1A contactor.** • Perform checks as outlined in status 123.	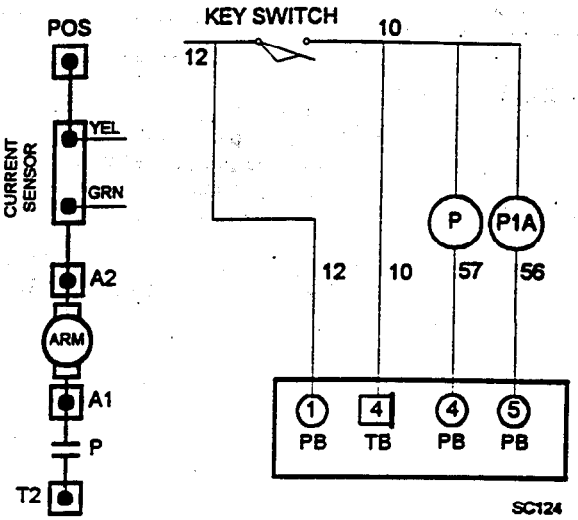

PUMP STATUS CODE	DESCRIPTION OF STATUS	CAUSE OF STATUS INDICATION
-127	Logic card power supply is less than 10 VDC.	This status code is displayed when the logic card power supply is less than 10 volts.
MEMORY RECALL **YES**	**CORRECTIVE ACTIONS**	**TROUBLE-SHOOTING DIAGRAM**
Circuits valid for Pump Controller	**SYMPTOM** Pump control does not operate. **POSSIBLE CAUSE** **Discharged Battery** • Check battery to insure proper state of charge. **Loose connection at PB1.** • Insure that the wire connection at PB1 is tight and control fuse is not blown. **Defective logic card.** • Replace logic card.	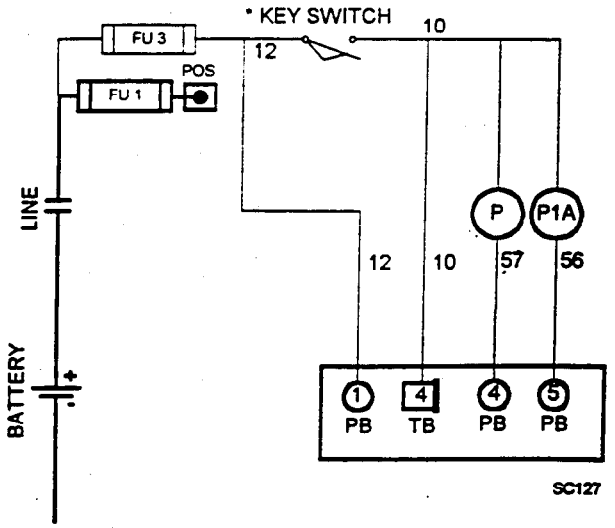

Copyrighted Material
Intended for CLARK dealers only
Do not sell or distribute

https://truckmanualshub.com/

PUMP STATUS CODE	DESCRIPTION OF STATUS	CAUSE OF STATUS INDICATION
-141	Open thermal protector (TP1) or transistor is over temperature.	This status code is displayed when the voltage between PZ2 and PZ5 is greater than 0.8 volts.
MEMORY RECALL **NO**	**CORRECTIVE ACTIONS**	**TROUBLE-SHOOTING DIAGRAM**
Circuits valid for Pump Controller	**SYMPTOM** Reduced or no power to pump motor in control range. **POSSIBLE CAUSE** **Control is in thermal cut-back.** • Allow control to cool, status code should disappear. **Open thermal protector circuit.** • Check for loose connection or broken wire between: W/VIO wire-Thermal protector and PZ5 VIO wire-Thermal protector and PZ2. **Defective thermal protector.** • Disconnect wires from PZ2 and PZ5. At room temperature (25° C or 75° F) measure resistance between WHT/VIO and VIO wire. Replace Q1 if ohmic value is greater than 1200 ohms.	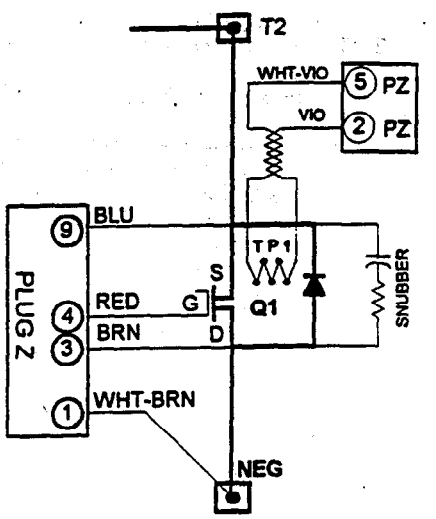

PUMP STATUS CODE	DESCRIPTION OF STATUS	CAUSE OF STATUS INDICATION
-142	Pump Controller "motor current sensor" input is missing (PZ12 - GRN).	This status code is displayed when the voltage between PZ12 and PZ13 is greater than 0.1 volts with no current flowing in the motor circuit.
MEMORY RECALL **NO**	**CORRECTIVE ACTIONS**	**TROUBLE-SHOOTING DIAGRAM**
Circuits valid for Pump Controller	**SYMPTOM** No power to pump motor in control range. **POSSIBLE CAUSE** **Open sensor wire circuit to PZ12 .** • Check for loose connection or broken wire (green wire) from current sensor to PZ12 on the logic card.	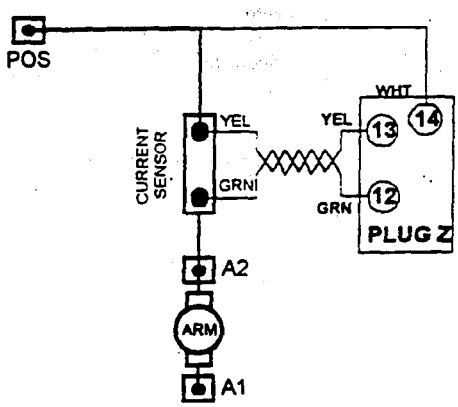

Copyrighted Material
Intended for CLARK dealers only
Do not sell or distribute

https://truckmanualshub.com/

PUMP STATUS CODE	DESCRIPTION OF STATUS	CAUSE OF STATUS INDICATION
-143	Pump Controller "motor current sensor" input is missing (PZ13 - YEL).	This status code is displayed when the voltage between PZ12 and PZ13 is greater than 0.1 volts with no current flowing in the motor circuit.
MEMORY RECALL **NO**	**CORRECTIVE ACTIONS**	**TROUBLE-SHOOTING DIAGRAM**
Circuits valid for Pump Controller	**SYMPTOM** No power to pump motor in control range. **POSSIBLE CAUSE** **Open sensor wire circuit to PZ13 .** • Check for loose connection or broken wire (yellow wire) from current sensor to PZ13 on the logic card.	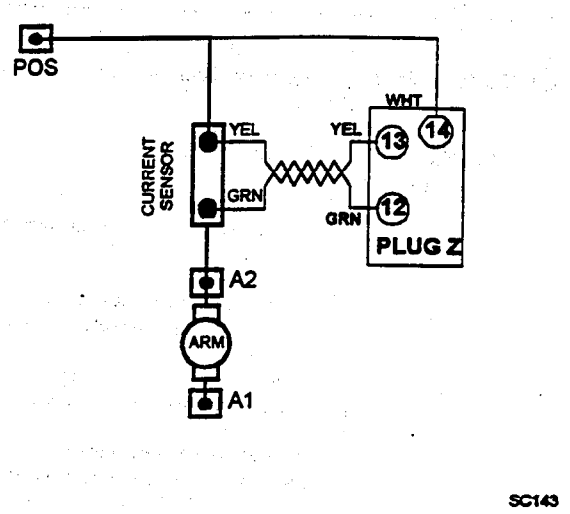

PUMP STATUS CODE	DESCRIPTION OF STATUS	CAUSE OF STATUS INDICATION
-144	Power Transistor (Q1) did not turn off properly.	This status code is displayed when the transistor fails to turn off. This will result in a PMT condition.
MEMORY RECALL **YES**	**CORRECTIVE ACTIONS**	**TROUBLE-SHOOTING DIAGRAM**
Circuits valid for Pump Controller	**SYMPTOM** If equipped with a P Contactor, control will not operate. With no P Contactor, control may run continuously. **POSSIBLE CAUSE** **Defective Q1 power transistor.** • Turn off time for transistor is out of specification. No field test is possible. Replace transistor. • Check for open circuit or loose connections between the transistor and PZ4 (red wire).	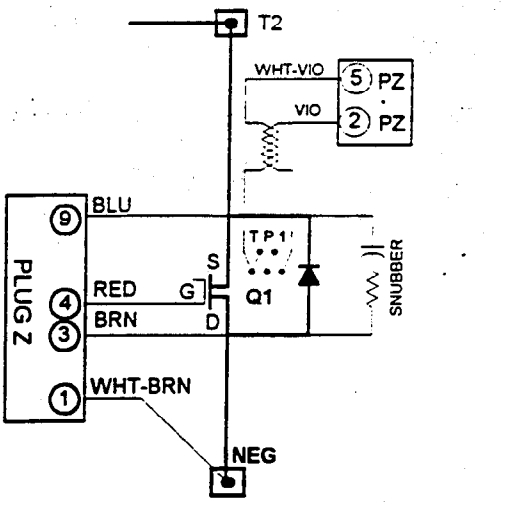

Copyrighted Material
Intended for CLARK dealers only
Do not sell or distribute

https://truckmanualshub.com/

PUMP STATUS CODE	DESCRIPTION OF STATUS	CAUSE OF STATUS INDICATION
-145	Power Transistor (Q1) did not turn on properly.	This status code is displayed when the transistor fails to turn on.
MEMORY RECALL **YES**	**CORRECTIVE ACTIONS**	**TROUBLE-SHOOTING DIAGRAM**
Circuits valid for Pump Controller	**SYMPTOM** Pump control does not operate. **POSSIBLE CAUSE** **Defective transistor circuit.** • Check for open circuit or loose connections between the transistor and PZ4 (red wire). • Check for open circuit or loose connection between T2 and PZ9 (blue wire) **Defective Q1 power transistor.** • Intermittent or open transistor gate. Field test may or may not show defect. Replace transistor if checks above show no problem found.	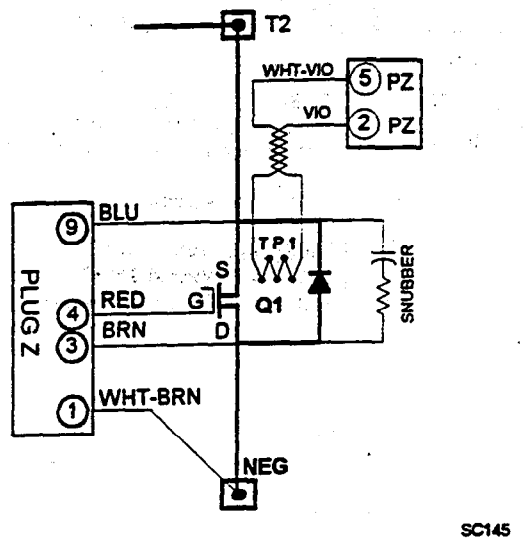

PUMP STATUS CODE	DESCRIPTION OF STATUS	CAUSE OF STATUS INDICATION
-146	"Look Ahead" test for T2 volts less than 12% of battery volts.	This status code will be displayed when the voltage at T2 is less than 12% of battery volts.
MEMORY RECALL **YES**	**CORRECTIVE ACTIONS**	**TROUBLE-SHOOTING DIAGRAM**
Circuits valid for Pump Controller	**SYMPTOM** If equipped with a P Contactor, control will not operate. With no P Contactor, control may run continuously. **POSSIBLE CAUSE** **Defective Q1 power transistor.** • Check for shorted transistor. **Defective P1A contactor.** • Check for welded P1A contactor power tips. **Defective Snubber.** • Check for shorted snubber.	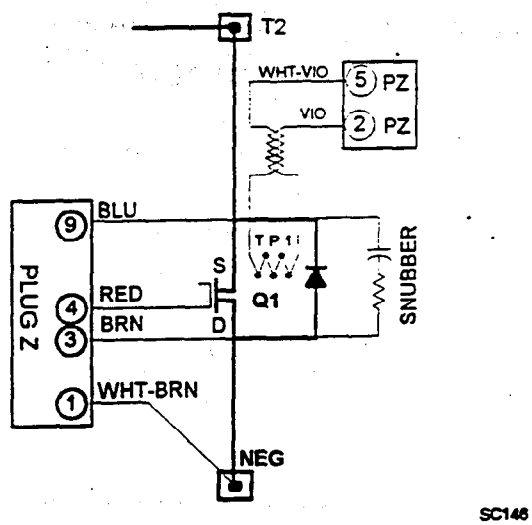

Copyrighted Material
Intended for CLARK dealers only
Do not sell or distribute

https://truckmanualshub.com/

PUMP STATUS CODE	DESCRIPTION OF STATUS	CAUSE OF STATUS INDICATION
-148	"Look Ahead" test for T2 volts greater than 88% of battery volts.	This status code will be displayed when the voltage at T2 is greater than 88% of battery volts.
MEMORY RECALL **NO**	**CORRECTIVE ACTIONS**	**TROUBLE-SHOOTING DIAGRAM**
Circuits valid for Pump Controller	**SYMPTOM** Pump contactor will not pick up. **POSSIBLE CAUSE** **Defective pump contactor.** • Check for welded pump contactor power tips. • Check for sluggish operation of pump contactor. **Defective 3 REC circuit.** • Check for shorted 3 REC. • Check for shorted snubber.	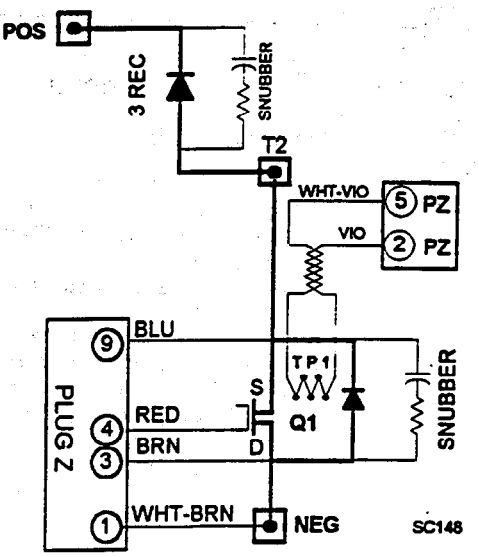

PUMP STATUS CODE	DESCRIPTION OF STATUS	CAUSE OF STATUS INDICATION
-150	Capacitor volts low after line contactor closes.	This status code will be displayed when the capacitor volts is less than 85% of battery volts in the run mode.
MEMORY RECALL **NO**	**CORRECTIVE ACTIONS**	**TROUBLE-SHOOTING DIAGRAM**
Circuits valid for Pump Controller	**SYMPTOM** Pump control does not operate.. **POSSIBLE CAUSE** **Defective Line contactor.** • Check for open line contactor power tips. • Check for loose or open connections in cables from battery positive to control positive circuit. **Defective Power fuse.** • Check power fuse for open circuit. **No battery voltage at PZ14.** • Check for battery voltage at POS and PZ14. • Check for loose connection at PZ14.	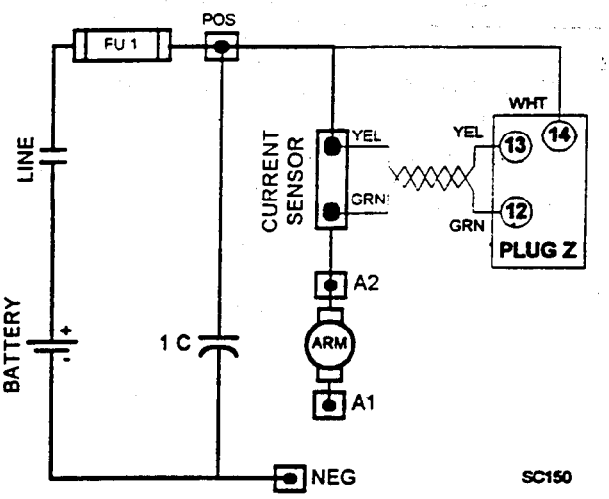

Copyrighted Material
Intended for CLARK dealers only
Do not sell or distribute

PUMP STATUS CODE	DESCRIPTION OF STATUS	CAUSE OF STATUS INDICATION
-151	Capacitor volts are low before the line contactor closes. (Internal card function during precharge)	This status code will be displayed during "key on" when the capacitor volts is less than 85% of battery volts at initial key switch on.
MEMORY RECALL **NO**	**CORRECTIVE ACTIONS**	**TROUBLE-SHOOTING DIAGRAM**
Circuits valid for Pump Controller	**SYMPTOM** Line contactor does not close due to no Capacitor Precharge. **POSSIBLE CAUSE** **Defective capacitor.** • Check capacitor bank per component checking section. • Check for loose or open connections in capacitor circuit. **Defective control fuse for PB1 input.** • Check control fuse for open circuit. **Defective logic card.** • Replace logic card. **Defective Q1 power transistor.** • Check transistor Q1 for shorted condition and replace if necessary. **Note:** Repeated "charging/discharging" the capacitors during trouble shooting will cause status code -151. Also, "do not" connect **any** loads to the load side of the Line Contactor.	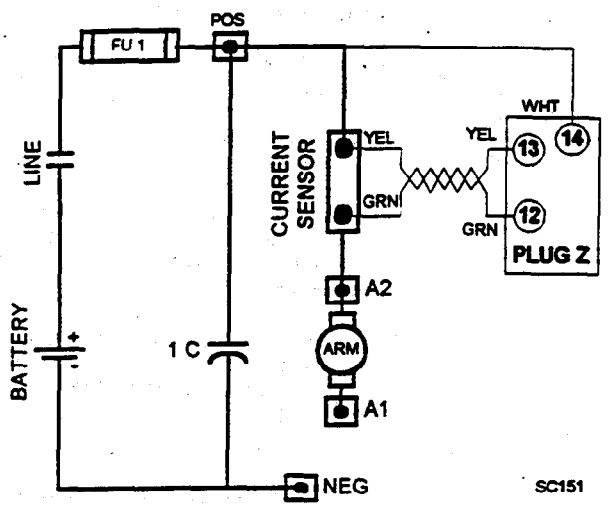

PUMP STATUS CODE	DESCRIPTION OF STATUS	CAUSE OF STATUS INDICATION
-154	Shorted P or P1A contactor coil driver on the logic card.	This status code will be displayed when either the Pump (P) or Pump 1A (P1A) contactor coil driver is shorted internal to the logic card.
MEMORY RECALL **NO**	**CORRECTIVE ACTIONS**	**TROUBLE-SHOOTING DIAGRAM**
Circuits valid for Pump Controller	**SYMPTOM** Pump Control will not operate. **POSSIBLE CAUSE** **Defective logic card.** • Replace logic card.	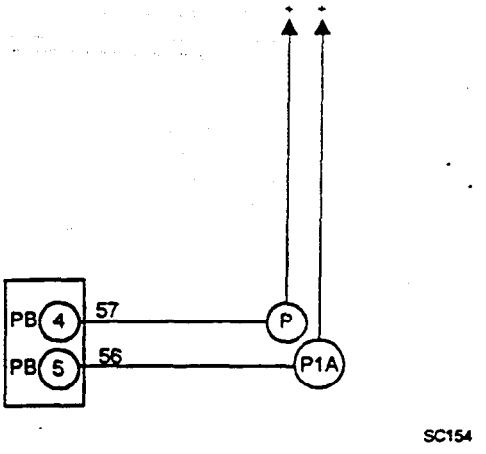

Copyrighted Material
Intended for CLARK dealers only
Do not sell or distribute

https://truckmanualshub.com/

PUMP STATUS CODE	DESCRIPTION OF STATUS	CAUSE OF STATUS INDICATION
-157	Controller "motor current sensor" input voltage polarity check.	This status code will be displayed when the voltage input to PZ13 and PZ12 is of the wrong polarity.
MEMORY RECALL **NO**	**CORRECTIVE ACTIONS**	**TROUBLE-SHOOTING DIAGRAM**
Circuits valid for Pump Controller	**SYMPTOM** If equipped with a P Contactor, control will not operate. With no P Contactor, control may run continuously. **POSSIBLE CAUSE** **Reversed yellow and green current sensor wires.** • Insure that the green wire connects to PZ12 with no open circuits and that the yellow wire connects to PZ13 with no open circuits or loose connections. **Reversed power cable connection.** • Insure that the battery positive cable connects to control POS and the motor A2 cable connects to control A2.	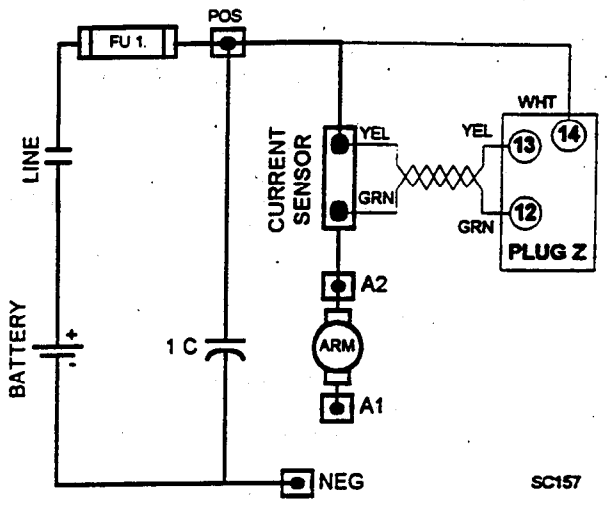

PUMP STATUS CODE	DESCRIPTION OF STATUS	CAUSE OF STATUS INDICATION
-180	Voltage at capacitor (1C) is less than 14 volts.	This status code will be displayed when the voltage at PZ14 is less than 14 volts. This occurs typically in the run mode of operation.
MEMORY RECALL **NO**	**CORRECTIVE ACTIONS**	**TROUBLE-SHOOTING DIAGRAM**
Circuits valid for Pump Controller	**SYMPTOM** Pump (P) or Pump 1A (P1A) contactor will not pick up, or pump motor will not run. **POSSIBLE CAUSE** **Line Contactor opened up during run.** • Check connection from PB2 to L coil (-) for loose connection. • Check connection from battery (+) to L coil (+) for loose connection. • Check power connection from battery (+) to contactor L. • Check for loose connections on P and P1A contactor coils. • Check FU1 and FU3 for blown element.	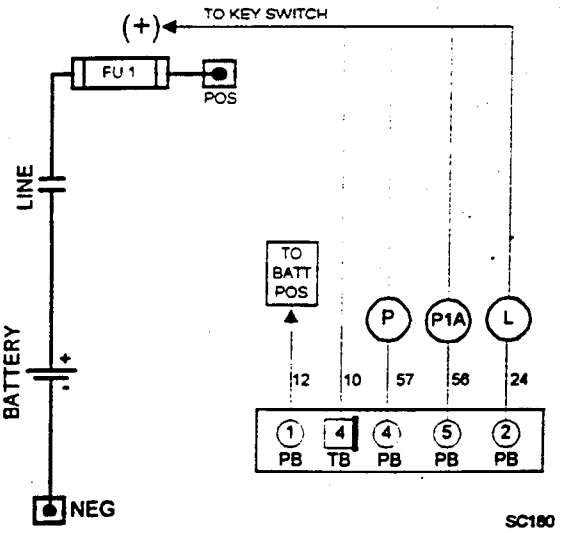

Copyrighted Material
Intended for CLARK dealers only
Do not sell or distribute

https://truckmanualshub.com/

PUMP STATUS CODE	DESCRIPTION OF STATUS	CAUSE OF STATUS INDICATION
-181	Battery voltage is less than 14 volts.	This status code will be displayed when the battery voltage measured at PB1 is less than 14 volts.
MEMORY RECALL **NO**	**CORRECTIVE ACTIONS**	**TROUBLE-SHOOTING DIAGRAM**
Circuits valid for Pump Controller	**SYMPTOM** Pump (P) or Pump 1A (P1A) contactor will not pick up, or pump motor will not run. **POSSIBLE CAUSE** **Line Contactor opened up during run.** • Check connection from PB2 to L coil (-) for loose connection. • Check connection from battery (+) to L coil (+) for loose connections. • Check power connection from battery (+) to contactor L. • Check for loose connections on P and P1A contactor coils. • Check FU1 and FU3 for blown element.	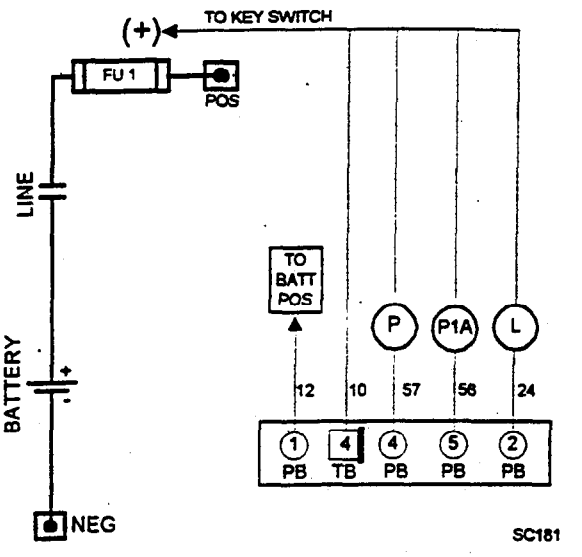

Copyrighted Material
Intended for CLARK dealers only
Do not sell or distribute

https://truckmanualshub.com/

GROUP 20

DRIVE AXLE

Drive Axle Specifications and Description ..... Section 1

Drive Axle Troubleshooting ..... Section 2

Drive Axle Removal and Installation ..... Section 3

Drive Axle Overhaul and General Practices ..... Section 4

Drive Axle Ends Overhaul ..... Section 5

Copyrighted Material
Intended for CLARK dealers only
Do not sell or distribute

https://truckmanualshub.com/

Section 1

Drive Axle Specifications and Description

Specifications 2
General Specifications 2
Torque Specifications 2
Service Intervals 2

Locations 3

Description 3

Copyrighted Material
Intended for CLARK dealers only
Do not sell or distribute

https://truckmanualshub.com/

Specifications

General Specifications

- Speeds: Infinitely variable, forward and reverse.
- Ring and Pinion Gear Type: Spiral bevel.
- Differential Type: 4 pinion
- Fluid Capacity: 3.97 L (4.2 qts).
- Drive Axle Fluid: Transmission Fluid, Clark Part Number 2776236.

Torque Specifications

- Drive Motor-to-Adaptor and Differential Housing Fasteners: Apply Loctite 242 to clean degreased fastener threads and sequence tighten every fifth fastener around circle until all eight fasteners are tightened to 70-80 N•m (52-59 lb-ft).
- Axle End Assembly-to-Differential Housing Bolts 90-110 N•m (66-81 lb-ft).
- Ring Gear-to-Diff Case Fasteners: 205-250 N•m (151-185 lb-ft).
- Adaptor to Diff Case: 60-65 N•m (44-48 lb-ft).
- Hub Bearing Retaining Nut: Tighten until bearings bind slightly in rotation. Back off nut 1/8 turn and install locking washer and lock nut.
- Pinion Shaft Nut: 270-340 N•m (200-250 lb-ft)
- Differential Case to Axle Housing Fasteners: 49-60 N•m (36-44 lb-ft)
- Axle Mounting Bracket-to-Frame Fasteners: 450–500 N•m (332-369 lb-ft).
- Front Wheel-to-Axle Fasteners: 300-370 N•m (225–275 lb-ft).

Service Intervals

- Replace drive axle oil every 2000 operating hours.

Copyrighted Material
Intended for CLARK dealers only
Do not sell or distribute

https://truckmanualshub.com/

Locations

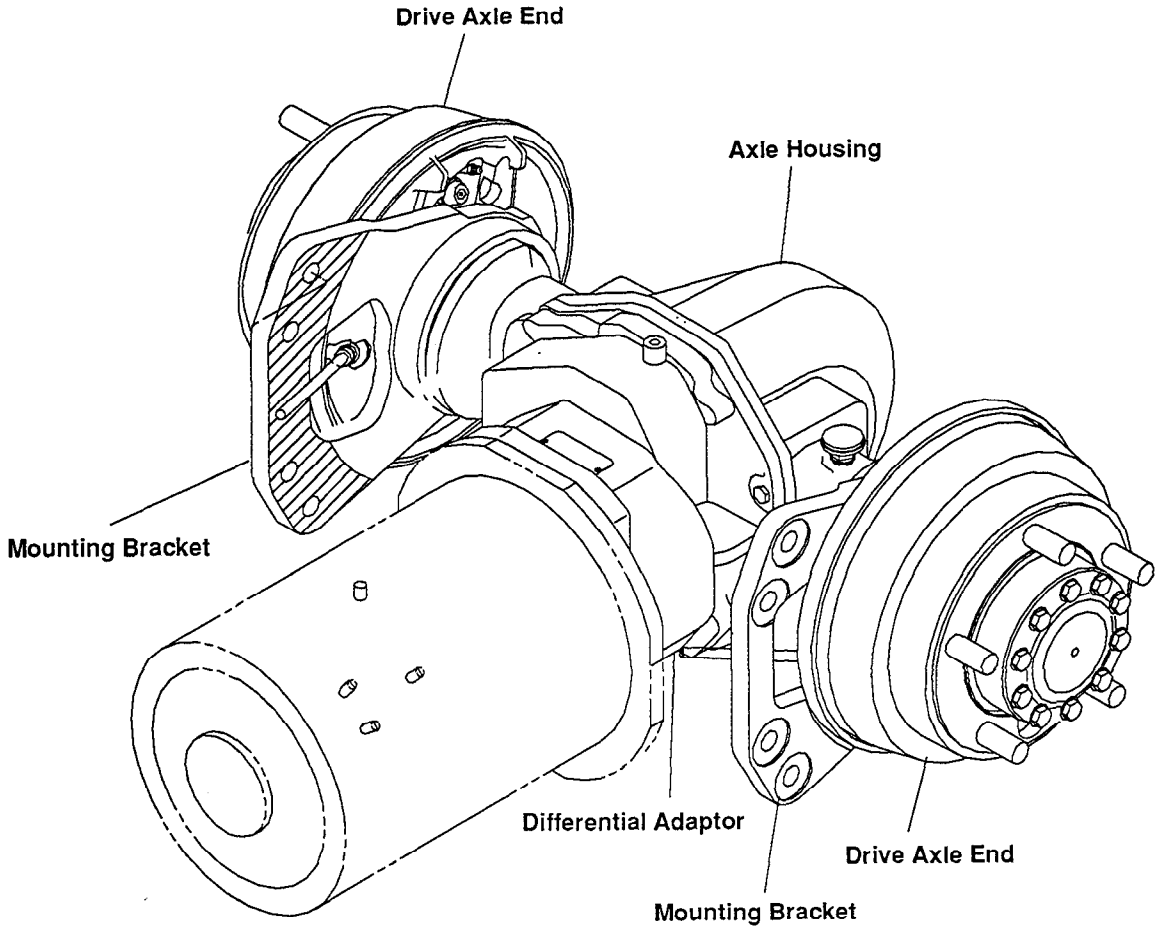

Description

Drive Motor

The drive motor is dual voltage rated at 36 or 48 volts. The motor is radial fan cooled, which cools the motor in forward and reverse directions. Motor is series wound for high torque at low speeds and is mounted directly to the differential adaptor.

Differential Adaptor

The axle adaptor is located between the drive motor and differential housing and serves as a transition mounting componet.

Drive Axle

The axle housing encloses the differential and contains the axle shafts. The axle shaft ends spline into the differential side gears. The rotation of this differential case drives the differential side gears and pinions, which drives the two axle shafts at the differential rate needed for cornering.

The axle shafts drive hub assemblies mounted at the ends of the axle housing on opposed tapered roller bearings. A brake shoe assembly is mounted behind each hub on the axle end and acts on a brake drum that bolts to and encloses the hub.

Copyrighted Material
Intended for CLARK dealers only
Do not sell or distribute

https://truckmanualshub.com/

Section 2

Drive Axle Troubleshooting

Troubleshooting Techniques 2
Symptoms and Causes 2

Copyrighted Material
Intended for CLARK dealers only
Do not sell or distribute

https://truckmanualshub.com/

Troubleshooting Techniques

The following information serves as an aid to isolating problems in a drive axle that is not functioning correctly.

When troubleshooting a drive axle problem, keep in mind that the drive axle is only the central unit of a group of related power train components. Proper operation of the drive axle depends on the condition and correct functioning of the other related components. Therefore, to properly diagnose a suspected problem in the drive axle, consider the drive axle fluid, drive axle assembly, controls, and drive motor as a complete system.

To identify and correct a drive axle fault, refer to the description in Section 1, along with symptoms and causes indicated below.

Inspection and overhaul of the suspect components is described in various locations within this group.

Symptoms and Causes

The following lists typical drive axle troubles and possible causes.

Truck Won't Move in Either Direction

- Battery disconnected.
- Park brake on.
- Check electrical control system. See Group 19.
- Check directional control switches. See Group 13.
- Check contactors. See Group 17.
- Check drive motor. See Group 16.

Truck Moves Only in Forward or Only in Reverse

- Check electrical control system. See Group 19.
- Check contactors. See Group 17.
- Check directional control switch. See Group 13.

Overheating

- Low or contaminated fluid level.
- Truck travel function being loaded excessively.
- Worn bearings.
- Check drive motor for air flow or damage. See Group 16.
- Brakes Dragging. See Group 23.

Loss of Power

- Low battery charge.
- Drive axle bearings worn or seized.
- Overheating – See Overheating above.

Copyrighted Material
Intended for CLARK dealers only
Do not sell or distribute

https://truckmanualshub.com/

Section 3

Drive Axle Removal and Installation

Drive Axle Removal and Installation **2**
Drive Axle Removal 2
Drive Axle Installation 2

Copyrighted Material
Intended for CLARK dealers only
Do not sell or distribute

https://truckmanualshub.com/

Drive Axle Removal

⚠ CAUTION

Park truck safely before beginning work:

1. **Park truck on a hard, level and solid surface, such as a concrete floor with no gaps or breaks.**
2. **Put upright in vertical position and fully lower the forks or attachment.**
3. **Put all controls in neutral. Turn key switch OFF and remove key.**
4. **Apply the park brake and block the wheels.**
5. **Disconnect the battery.**
6. **Discharge capacitor.**

1. Remove upright. See Upright Removal, Group 34, for procedures.

⚠ CAUTION

Place a BLOCK UNDER THE COUNTERWEIGHT to prevent tip-back when the drive axle is removed.

Make sure any lifting equipment, including sling, chain, hoist, or eyebolt, is of sufficient capacity and is safety inspected and approved.

2. Lift and block front of truck frame. Remove front wheels, brake lines and fittings and motor cables.
3. Place a rolling transmission jack under the axle housing and raise jack until it contacts the axle housing.
4. Remove the four drive axle mounting bolts from each side of truck. Lower the jack slightly and slowly pull the drive axle assembly from the truck.
5. Remove drive motor. See Drive Motor Removal, Group 16, for procedures.

Drive Axle Installation

1. All mounting surfaces must be clean and free of paint before assembly.
2. Install drive motor. See Drive Motor Installation, Group 16, for procedures.
3. Position drive axle with mounting brackets on rolling transmission jack. Slowly roll drive axle assembly under truck and raise slightly to align mounting bracket holes with frame holes. Install mounting bolts and tighten to the following torquing procedure:

   A. Fastener, holes and all mating surfaces must be unlubricated.

   B. Impact wrenches to be used only to snug up fasteners. (Approx. 1204 N•m, 150 lbf/ft).

   C. Torque measuring wrench must be used to obtain final torque values.

   D. Wrench rotation from snug to final torque, not to be more than 1/4 turn. Final torque300-370 N•m (3225-275 lbf/ft).
4. Install motor cables, brake fittings and lines. Install front wheels and tighten nuts to 542–745 N•m (400–550 lb-ft).
5. Install upright. See Upright Installation, Group 34, for procedures.
6. Fill axle with transmission fluid part number 2776236.
7. Bleed brake system before operating truck. Refer to Group 23 for bleeding procedure.

Copyrighted Material
Intended for CLARK dealers only
Do not sell or distribute

https://truckmanualshub.com/

Section 4

Drive Axle General Practices and Overhaul

General Practices 2
Disassembling Components 2
Cleaning Parts 2
Inspecting Parts 2
General Practice Repairing and Replacing Parts 3
Bearings 3
Gears and Shafts 3
Splines 3
O-Rings and Gaskets 3
Oil Seals 4
Housings 4
Threaded Fasteners and Snap Rings 4
Assembling Components 4
Overhaul Procedures 5
Drive Axle Disassembly 5
Differential Overhaul 8
Shim Thickness Determination 9
Install Pinion Shaft and Set Preload 10
Install differential Cage 11
Set differential Bearing Preload 11
Set Ring Gear and Pinion Backlash 12
Checking Ring and Pinion Gear Tooth Contact Pattern 12
Install Input Shaft 13
Install Differential Case To Axle Housing 13
Install Axle Shafts and Axle Ends 14

Copyrighted Material
Intended for CLARK dealers only
Do not sell or distribute

https://truckmanualshub.com/

General Practices

The following procedures should be applied throughout the process of disassembling, inspecting, cleaning, repairing, installing, and assembling drive axle components.

Specific disassembly and assembly procedures are given later in this section. Follow those procedures closely.

Disassembling Components

Before disassembling the drive axle, you must drain the drive axle fluid, disconnect the necessary hydraulic lines, and remove the drive axle from the truck as described in Section 3. Observe the following practices during disassembly:

- **Cleanliness** – Work in a clean place. It is important that no dirt or foreign material enters the unit during repairs. Dirt is an abrasive and can damage bearings. Always clean the outside of the unit before starting the planned disassembly.
- **Assemblies** – When disassembling the various assemblies lay all parts on a clean bench in the same sequence as removed. This procedure will simplify assembly and reduce the possibility of losing parts.
- **Using Tools to Move Parts** – Always apply force to shafts, bearings, housings, etc., with restraint. Movement of some parts is restricted. Never apply force to the part being driven after it stops solidly. The use of soft hammers, bars, and mauls for all disassembly work is recommended.
- **Bearings** – Remove bearings that will be reused with pullers designed for this purpose. Lubricate bearings with clean oil and wrap them in a lint-free cloth or clean paper to protect them while not in use.
- **Snap Rings** – Remove snap rings with pliers designed for this purpose. Snap rings removed in this manner can be reused if they are not sprung or loose in the groove.

Cleaning Parts

⚠ WARNING

Gasoline is NOT an acceptable cleaning solvent because of its extreme combustibility. It is unsafe in the workshop environment.

- Proper cleaning requires complete disassembly.
- Wash steel parts with machined surfaces in a commercial solvent.
- Clean the inside and outside of bearing caps, housings, etc. Cast parts which do not have machined or polished surfaces may be cleaned in hot solution.
- Wash castings or other rough parts in solvent, or clean in hot solution tanks using mild alkali solutions, heating parts thoroughly before rinsing.

NOTE

Do not use rags to dry parts with rough surfaces, such as castings.

- Rinse all parts thoroughly. Dry immediately with clean rags, except for parts with rough surfaces. Lightly oil parts and wrap them in corrosion-resistant paper if they will not be used immediately. Store parts in a clean, dry place.
- Clean bearings thoroughly in clean, approved solvent until completely cleaned. Dry bearings using moisture-free compressed air. Be careful to direct air stream across bearing to avoid spinning. Lubricate bearings with clean oil and wrap them in a lint-free cloth or clean paper to protect them until installation.
- Do not spin bearings when drying them. Bearings may be rotated slowly by hand to facilitate drying.

Inspecting Parts

Closely inspect all drive axle components after cleaning and before assembly to determine whether they require replacement.

Careful and complete inspection of all parts is very important. Replacement of all parts showing indication of wear, overstressing, or damage will save time and money at a later date.

Inspect:

- Steel parts for notches, visible steps or grooves. Look for scuffing, deformation, or discoloration related to improper lubrication.
- Bearing balls, cages or retainers, rollers, and raceways for pitting, discoloration, and spalled areas.

Copyrighted Material
Intended for CLARK dealers only
Do not sell or distribute

https://truckmanualshub.com/

- Gear teeth for signs of excessive wear, pitting, or cracking along contact lines. Check tooth contact pattern.
- Machined surfaces of cast or malleable parts for cracks, scoring, and wear. Look for elongation of drilled holes, wear on machined surfaces, and nicks or burrs in mating surfaces.
- Fasteners for rounded heads, bends, cracks, or damaged threads.

IMPORTANT

Any damage that affects the alignment or structural integrity of the housing requires replacement. Repair by welding or straightening should not be attempted. Such processes can affect the housing metallurgy and cause it to fail completely when under load.

- All housings for cracks or leaks, loose studs, or cross-threaded holes.

Repairing and Replacing Parts

Replace lower-cost parts such as thrust washers, seals, etc., that protect the drive axle from premature wear and do not add greatly to the cost of rebuild.

Replace heavily worn but unbroken parts.

Steel parts such as shafts or gears are not repairable. If worn or damaged, replace them, along with mating parts as necessary.

Seals and washers should be routinely replaced. Fasteners with self-locking patches may be reused if secured with several drops of Heavy Duty Threadlocker (Clark P/N 1802302).

Drive axle housing repairs are limited to removal of nicks or burrs on machined surfaces or replacement of damaged studs.

Since the cost of a new part is generally a small fraction of the total cost of downtime and labor, avoid reusing a questionable part which could lead to additional repairs and expense soon after initial assembly. To aid in determining the reuse or replacement of any drive axle part, also consider the unit's history, hours of use, application, etc.

When replacement is necessary, use only genuine Clark parts to assure continued performance and extended life from your unit.

Recommended inspection procedures for various types of parts are as follows:

Bearings

- Replace bearings that are pitted, discolored, or spalled. Always replace bearing cups and cones as a set. Do not replace a bearing or race separately.
- Replace bearings with excessive clearances.
- Check bearing fits. Bearing inner races should fit tight to the shaft; outer races slightly tight to slightly loose in housing bore. If bearing spins freely in bore, however, housing should be replaced.

Gears and Shafts

- Check gear teeth for frosting and pitting. Frosting of gear tooth faces presents no threat of transmission failure. Often in continued operation of the unit, frosted gears will "heal" and not progress to the pitting stage. And in most cases, gears with light to moderately pitted teeth have considerable gear life remaining and can be reused. But gears with advanced-stage pitting should be replaced.
- If the Magnaflux process is available, use it to check parts for damage.
- If gear teeth show areas where the case-hardening is worn through or cracked, the gear must be replaced.
- Inspect all shafts to be sure they are not bent or cracked and that splines are not damaged.

Splines

- Check splines on all shafts and gears for abnormal wear. If splines are severely worn or pitted, replace the specific part affected.

O-Rings and Gaskets

- Replace all O-rings at overhaul.
- Replace all gaskets at overhaul.
- O-rings and seals should be lubricated with transmission fluid before assembly.

Copyrighted Material
Intended for CLARK dealers only
Do not sell or distribute

https://truckmanualshub.com/

Oil Seals

- Replace all oil seals at overhaul.
- Use extra care when installing seals. Seal lips and sealing surfaces can be easily nicked and damaged, thereby destroying the sealing ability.

Housings

- Check all housings for damage, cracks, and wear. Replace damaged housings as needed.
- Gasket sealing surfaces should be clean and free of nicks and burrs.

Threaded Fasteners and Snap Rings

- Inspect all fasteners for damage and wear. Replace all damaged fasteners.
- Snap rings are to be installed with flat side away from load. Replace any damaged or suspect snap rings.

Assembling Components

These practices should be followed during assembly:

- **Cleanliness** – Be sure that interiors of all housings are clean. It is important that dirt and other foreign materials be kept out of the drive axle during assembly. Dirt is an abrasive and can damage polished surfaces of bearings and washers.
- **Removing Burrs** – Make sure all lead-in chambers for oil seals, piston ring grooves, and O-rings are smooth and free from burrs. Inspect at assembly.
- **Initial Lubrication of Parts** – Apply light coating of transmission fluid, Clark part number 2776236.
- **Use of Sealing Compounds and Threadlockers** – Use only where specified.

  Make sure there is no excess or loose sealing compound or threadlocker that could enter the oil system.

  Threads should be clean and dry before application of thread compound.
- **Gaskets** – Be sure all gaskets are installed. An omission of any gasket can result in oil leakage.
- **Capscrews and Threaded Fasteners** – Use only threaded fasteners of the correct part number and material specification. Replace all fasteners that have a questionable condition. Threads should be clean and dry before application of thread compound. Apply lubricant or thread compound only as specified. Be sure all fasteners are installed (none omitted) and torqued to the correct specification.
- **Bearings** – Use of the proper bearing installation tool is recommended for the installation of bearings. The proper tool applies equal force to both bearing races, preventing damage to balls/rollers and races while maintaining correct bearing alignment with bore and shaft. Avoid using a tubular or sleeve-type driver whenever possible.
- **Torque Recommendations** – Correct torque application is extremely important to assure long drive axle life and dependable performance. Over-tightening or under-tightening can result in a loose installation and, in many instances, eventually cause damage to drive axle gears, shafts, and/or bearings. Use a torque wrench whenever possible to attain recommended torque ratings. Torque recommendations are given in this section with the specific assembly procedures.
- **Tool Reference** – Some repair procedures in this manual may show the use of specialized tools. Their use is recommended as they make drive axle repair easier, faster, and prevent costly damage to critical parts.

  But for the most part, ordinary mechanic's tools such as socket wrenches, screwdrivers, etc., and other standard shop items such as a press, mauls, and soft bars are all that is needed to successfully disassemble and assemble the drive axle.

IMPORTANT

Refer to the appropriate Customer Service Parts Book for the correct service replacement parts to be used during assembly of the drive axle.

Copyrighted Material
Intended for CLARK dealers only
Do not sell or distribute

https://truckmanualshub.com/

Overhaul Procedures

Overhaul involves following the general practices given earlier in this Section and performing the specific procedures given in the remainder of this Section.

Please read the general practices before proceeding.

NOTICE

Cleanliness is of extreme importance in the repair and overhaul of this assembly.

Perform all disassembly and assembly work in a clean area. Overhaul the transaxle only in a clean, dust-free location, using clean tools and equipment. Dirt or grit will damage the highly-machined surfaces and result in premature failure of components. The exterior surface of the unit *must* be thoroughly cleaned of all dirt and foreign substances to prevent contamination of the parts during overhaul. Protect all components from dust and dirt while repairs are being made. Be sure the work area is kept clean.

Drive Axle Disassembly

NOTICE

Keep all parts in order as disassembly progresses. Take care to properly identify each part and its order of removal. If necessary, keep notes and put markings on parts using a non-destructive marker such as a felt-tipped pen.

Disassembling Drive Axle

Use a chain hoist to lift the drive axle and place on a suitable table or bench. Position in its in normal orientation. Place wood blocks under the differential case so that it will not move as components are removed.

1. If the drive axle was not previously drained, remove **the drain plug** and drain the oil.
2. Disconnect **brake line fittings** at brake backing plates. Remove bolt that holds **brake line tee** to differential. Lift tee and connected lines away.

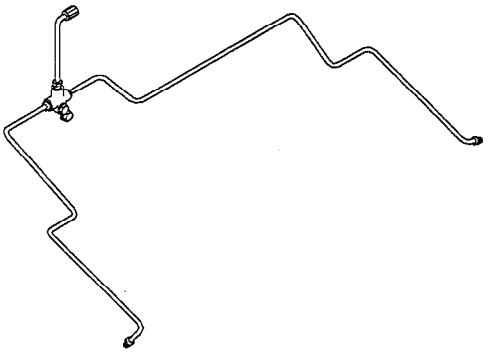

3. If you intend to overhaul the **brake** assemblies, disassemble those components as described in the "Service Brake Inspection and Overhaul" Section in Group 23

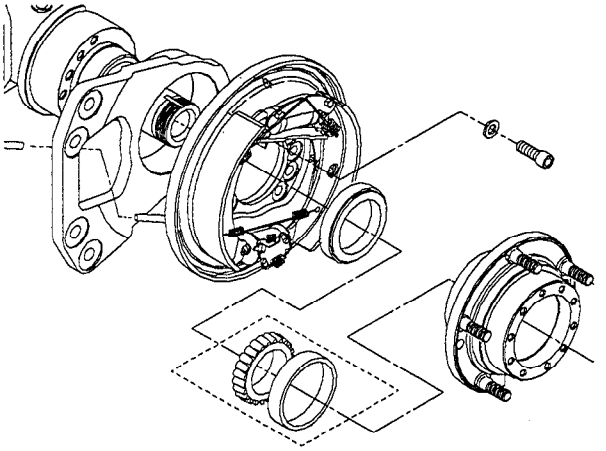

4. Remove the 10 axle mounting bolts from both axle shafts.

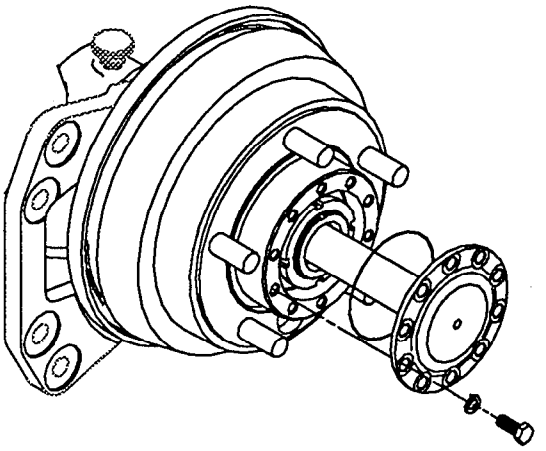

Copyrighted Material
Intended for CLARK dealers only
Do not sell or distribute

https://truckmanualshub.com/

5. Remove the mounting bolts and pull the differential assembly and adapter plate from the drive axle as shown. Use bolts in the blind tapped holes in the diff flange to assist in forcing the two cases apart.

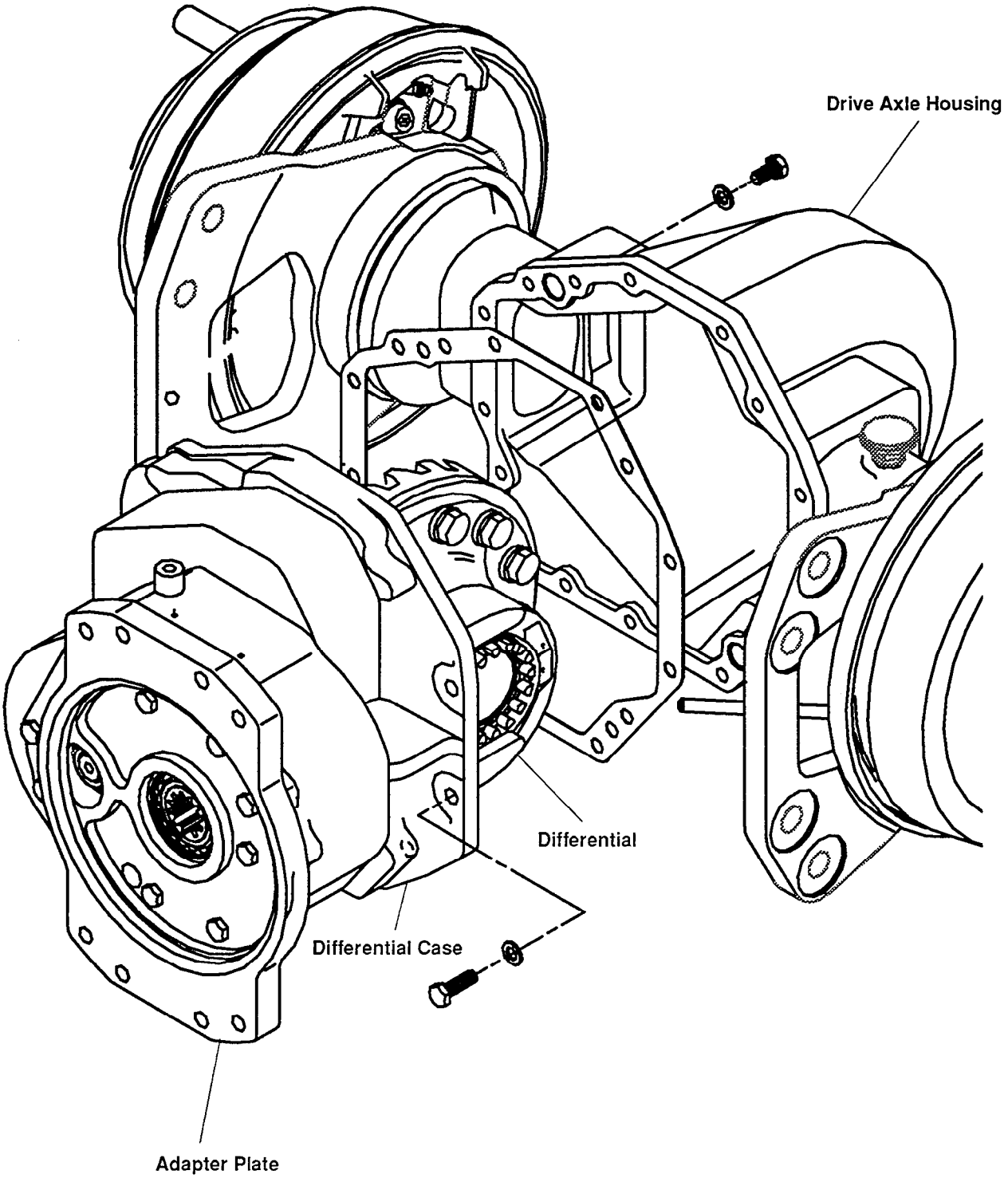

Copyrighted Material
Intended for CLARK dealers only
Do not sell or distribute

https://truckmanualshub.com/

6. Disassemble the adapter, ring gear and pinion and differentail as shown below.

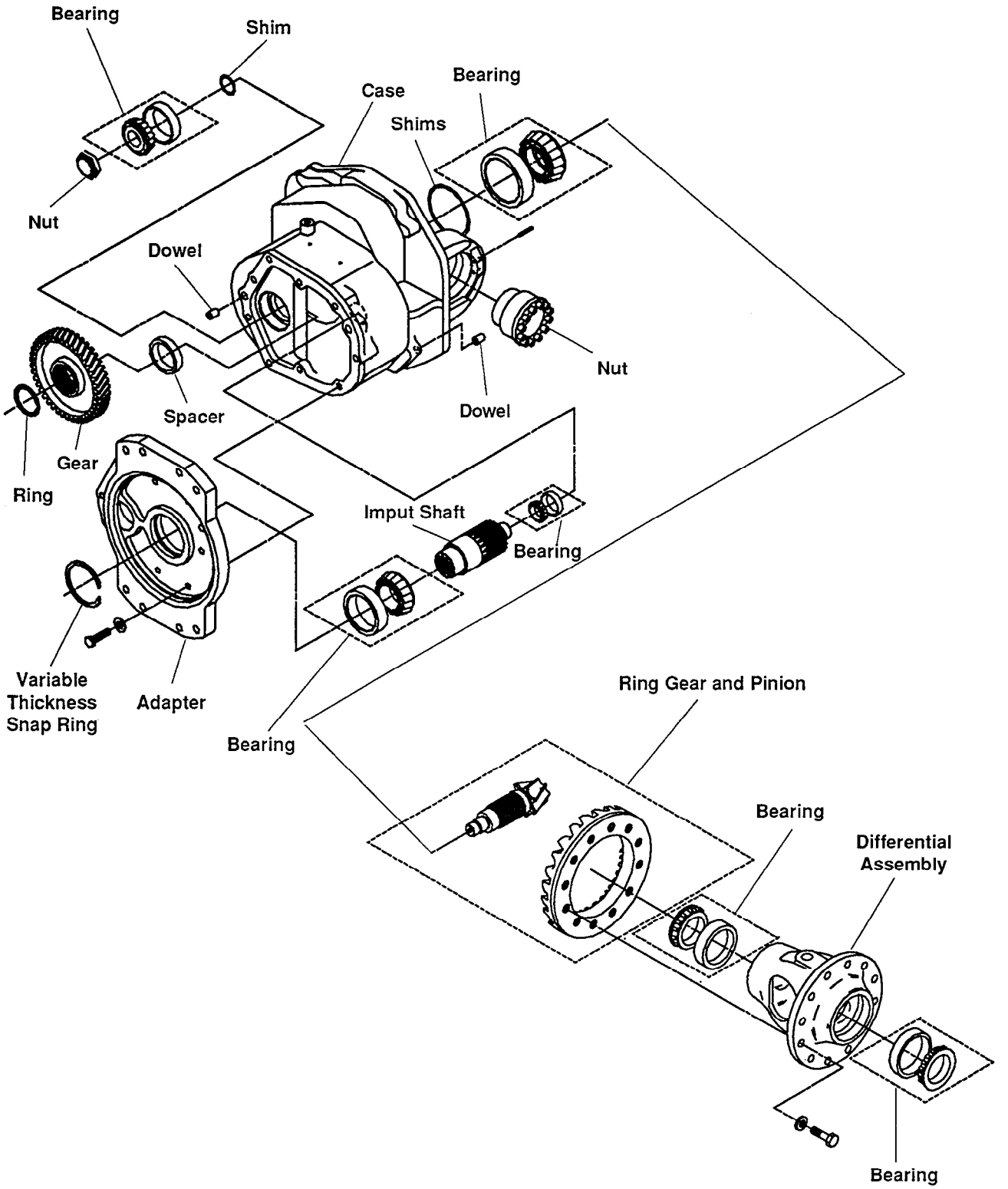

Copyrighted Material
Intended for CLARK dealers only
Do not sell or distribute

https://truckmanualshub.com/

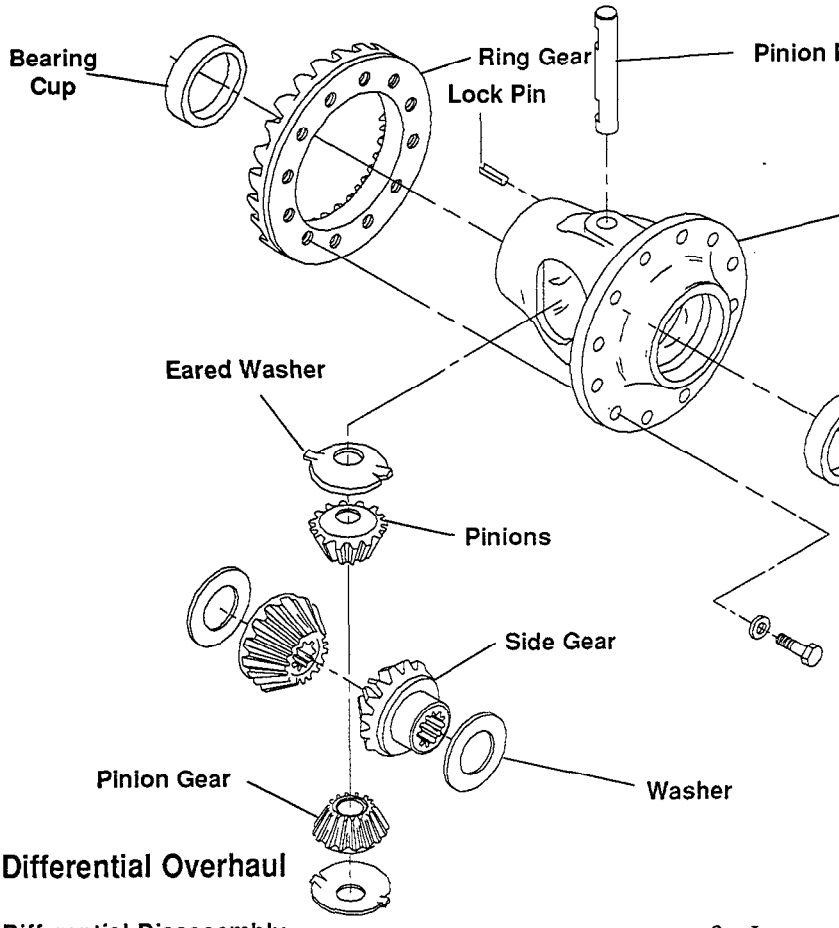

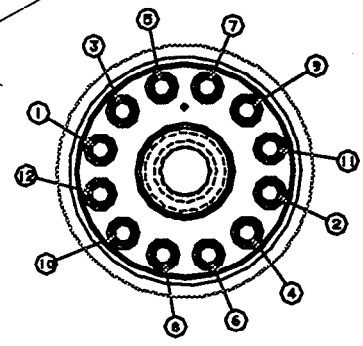

Diff Bolt Pattern

Bolts to be clean and dry. Apply primer T and Loctite #227. Torque to 190-240 N•m (140-177 Lbf ft). Tighten in sequence as shown.

Differential Overhaul

Differential Disassembly

1. Unbolt the ring gear from the differential casing.
2. Using a small drift pin or rod, drive the differential pinion pin lock pin from the casing.
3. Remove pinion pin .
4. Remove eared washer and pinion from differential casing.
5. If bearings or cups need replacement, drive cups from casing.
6. Remove side gears and washers.

Differential Reassembly

Before reassembly, clean, inspect and lubricate all parts.

IMPORTANT

Replace both the pinion and ring gear as matched set only.

1. Press bearing cups to bottom of bores if they are being replaced. Cups must be replaced if bearings are being replaced.
2. Insert the side gears and washers into the differential assembly.
3. Insert washers into grooves in casing.
4. Insert both pinion gears into position on the side gears.
5. Rotate the side gears and pinions until the bores in the pinions align with the pin hole in the housing.
6. Insert the pinion pin into the housing. Rotate the pinion pin so that one of its slots can receive the lock pin.
7. Drive lock pin into the casing so that the lock pin engages the pinion pin.
8. Mount the ring gear to the casing :
   a. Use a vice with soft jaws to hold the casing.
   b. Clean and dry all bolts and ring gear threads.
   c. Apply Loctite Primer T (Clark part #1803836) and Loctite 277 (Clark part #1802302) to all threads.
   d. Use alignment studs to position the ring gear.
   e. Install 12 mounting bolts with washers, and torque to 205-250 N•m (151-185 ft-lb).

⚠ CAUTION

RING GEAR BOLTS. Use only new ring gear bolts. Used bolts can failed prematurely.

Copyrighted Material
Intended for CLARK dealers only
Do not sell or distribute

https://truckmanualshub.com/

Installing the Pinion Bearings, Pinion Shaft, and Output Gear

IMPORTANT

REPLACE RING AND PINION AS A SET. Pinion and ring gear must be replaced as a new set if either is to be replaced.

Determining Shim Pack Thickness

The position of the pinion along the radius of the ring gear is called the "pinion mounting distance." This distance must be kept within a specified range for the ring gear and pinion to mesh properly. Because manufacturing tolerances vary among ring and pinion sets, the actual pinion mounting distance may require shimming in order to match the specified pinion mounting distance.

To determine the shim pack thickness required for the ring gear and pinion set you are installing:

1. Note the number on the end of the pinion shaft.
2. Locate the number on the chart below.
3. Select the shim pack thickness next to the number you located.
4. Check the shim pack height with a micrometer before installation.

IMPORTANT

You must determine the thickness of and install the required shim pack whenever you replace the ring gear and pinion set, or the old shim pack.

Shim Pack Thickness Chart

Mark on Pinion	Shim Pack Thickness (mm)	(inch)
50	0.26	0.010
48	0.28	0.011
46	0.30	0.012
44	0.32	0.012
42	0.34	0.013
40	0.36	0.014
38	0.38	0.015
36	0.40	0.016
34	0.42	0.016
32	0.44	0.017
30	0.46	0.018
28	0.48	0.019
26	0.50	0.020
24	0.52	0.020
22	0.54	0.021
20	0.56	0.022
18	0.58	0.023
16	0.60	0.024
14	0.62	0.024
12	0.64	0.025
10	0.66	0.026
8	0.68	0.027
6	0.70	0.027
4	0.72	0.028
2	0.74	0.029
0	0.76	0.030

Mark on Pinion	Shim Pack Thickness (mm)	(inch)
0	0.76	0.030
-2	0.78	0.031
-4	0.80	0.031
-6	0.82	0.032
-8	0.84	0.033
-10	0.86	0.034
-12	0.88	0.035
-14	0.90	0.035
-16	0.92	0.036
-18	0.94	0.037
-20	0.96	0.038
-22	0.98	0.038
-24	1.00	0.039
-26	1.02	0.040
-28	1.04	0.041
-30	1.06	0.042
-32	1.08	0.042
-34	1.10	0.043
-36	1.12	0.044
-38	1.14	0.045
-40	1.16	0.046
-42	1.18	0.046
-44	1.20	0.047
-46	1.22	0.048
-48	1.24	0.049
-50	1.26	0.049

Copyrighted Material
Intended for CLARK dealers only
Do not sell or distribute

https://truckmanualshub.com/

Installing Pinion Shaft and Setting Preload

Refer to Figure 31A.

1. Drive ***outer*** **bearing cup**, if removed, fully into bore.
2. Install the ***inner*** **bearing shim pack**, as selected.
3. Drive the ***inner*** **bearing cup** into the bore firmly against the shim pack.
4. Press (or expand with induction bearing heater) the **inner pinion bearing** onto the **pinion shaft** until it butts against the shoulder of the pinion.
5. Install the spacer as shown.
6. Position the **output gear** in the case with the long hub of the gear outward as shown.
7. Insert the **pinion shaft** and **inner bearing** into the case and through the **output gear**. Seat the bearing with a sharp blow to the pinion end with a soft-faced hammer.
8. Slip the output gear **snap ring** on the pinion shaft, but do not install it into its groove at this time.

   Bearing Installation Tip: To brace the pinion shaft in preparation for driving on the outer bearing, install the differential assembly adjusting nuts as shown on page 11. Then install a T-bar bearing puller into the adjusting nuts and tighten finger-tight against pinion.
9. Drive **outer bearing** onto the pinion shaft.
10. Install the ***old*** **pinion shaft nut** and torque to 270-340 N•m (200-250 ft-lb). Hold or block the pinion shaft with a brass bar or similar soft material to prevent the shaft from turning while tightening the nut. Anchor case to bench if necessary,
11. Unblock the **pinion shaft** and use a torque wrench to measure the pinion shaft bearing rolling-torque preload (Figure 31B). Preload torque should be 0.8-2.3 N•m (7-20 ft-lb).
12. If the preload torque is outside the specified range, you must add shims to increase preload or remove shims to decrease it. To add or remove shims, remove the pinion shaft nut and bearing and repeat steps 9 through 12.
13. After the preload torque proves to be within the specified range, ***replace the pinion shaft nut with a new one.*** **Do not reuse the pinion shaft nut.** Torque nut 270-340 N•m (200-250 ft-lb).
14. Install the **snap ring** into its groove, making sure it is fully seated.
15. If used, remove T-bar puller and adjusting nuts.

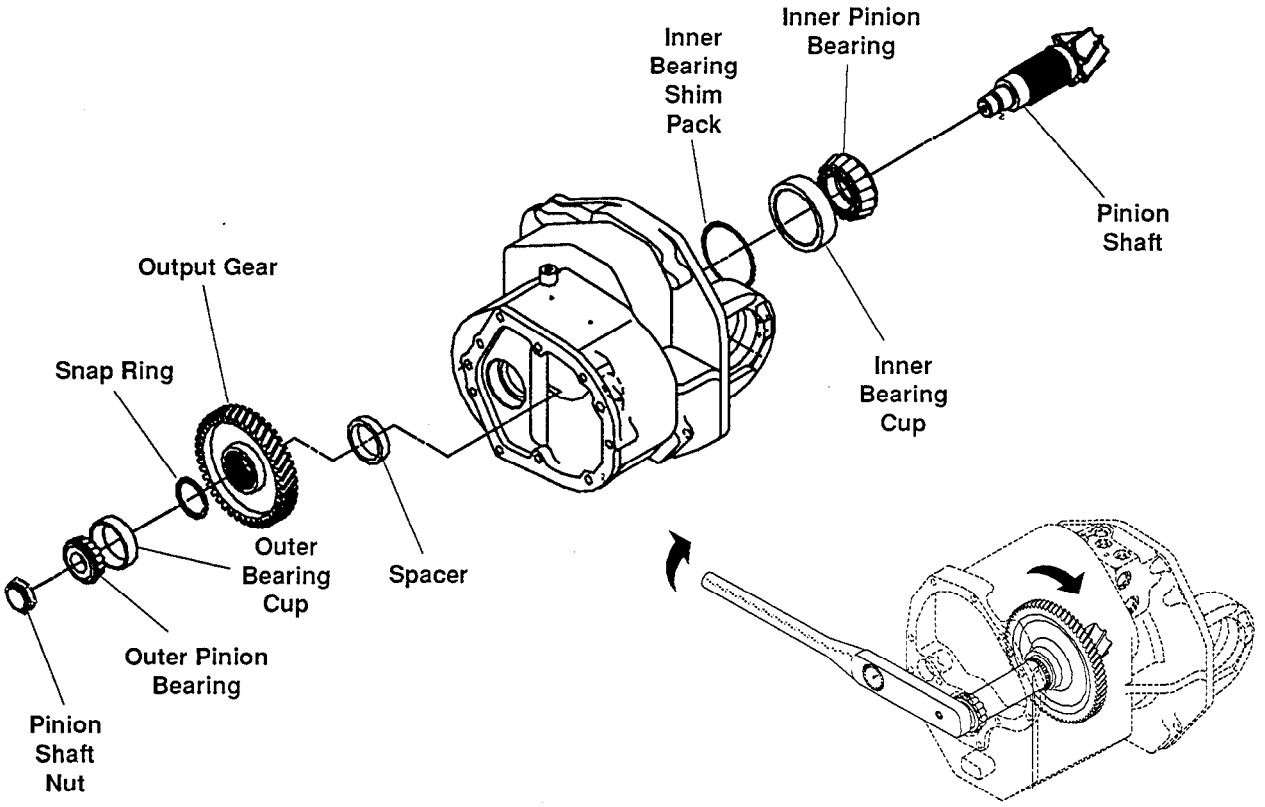

PRELOAD TORQUE CHECK

Copyrighted Material
Intended for CLARK dealers only
Do not sell or distribute

https://truckmanualshub.com/

Installing the Differential

Installing Differential Cage

1. Press the left and right cups into the differential cage, if removed.

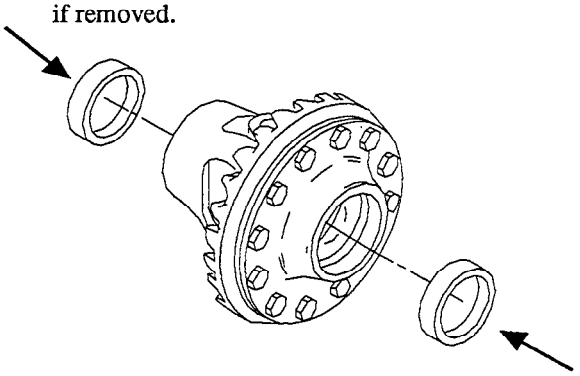

2. Place **bearings** in differential assembly as shown.
3. Position differential assembly between carrier "ears." Block under ring gear to hold assembly in position.
4. Loosely install **adjusting nuts** through ears and into bearings.

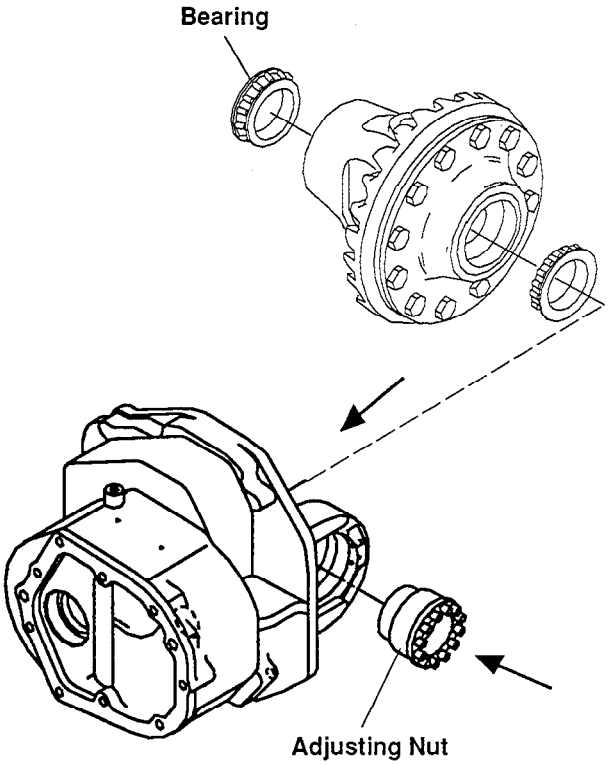

Setting Differential Bearing Preload

The differential bearing preload is the bearings' resistance to turning, which is controlled by how tightly the bearings are sandwiched between their races. The change in distance (deflection) *between the differential carrier ears* caused by tightening the differential adjusting nuts is a convenient indicator of preload. To measure the deflection:

1. *Securely clamp transmission case to bench* and set up a dial indicator so that it is zeroed against a flat on a carrier ear as shown.
2. Tighten one or both of the adjusting nuts until the pinion *appears* to correctly mesh with the ring gear and there is a small amount of play (backlash) between the pinion and ring gear.
3. Read the deflection on the dial indicator.

   Your goal is for this deflection to measure 0.076 mm (0.003 in), without changing the temporary backlash set in step 2.

   To change the deflection without affecting the backlash, tighten both adjusting nuts *equally*, or loosen both *equally*: Use a clockwise rotation on both adjusting nuts to increase the deflection as shown. Use a counter-clockwise-rotation on both nuts to decrease the deflection. When the deflection is correct, precisely set backlash as described on the next page.

NOTE

The deflection of one carrier ear should measure 0.075 mm (0.003 in). The total deflection measured from flat to flat should be 0.15 mm (0.006 in).

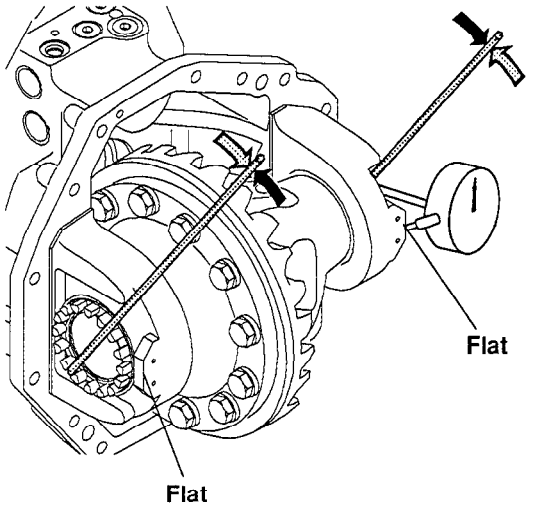

Copyrighted Material
Intended for CLARK dealers only
Do not sell or distribute

https://truckmanualshub.com/

Setting Ring Gear and Pinion Backlash

The backlash measurement is the distance a ring gear tooth can travel between pinion teeth with the pinion stationary. Because the pinion and ring gear teeth are beveled, you can change the backlash by changing how deeply the teeth mesh into each other. To adjust backlash *without changing preload*, you shift the ring gear along it axis by tightening one adjusting nut while loosening the other an equal amount. To measure and adjust backlash:

1. Set up a dial indicator on a ring gear tooth as shown at "**A**". Hold or block the pinion so that it cannot rotate.
2. Rotate the ring gear through backlash as shown at "**B**" and read the measurement.

   Backlash must be 0.20-0.28 mm (0.008-0.011 in).

   If the measurement is less than required, you need to shift the ring gear away from the pinion, if more than required, into the pinion.
3. To shift the ring gear position, rotate the adjusting nuts *equally in opposite rotations* (loosen one nut, tighten the other) as shown at "**C**".

   Tip: Insert a rod in the recess on the carrier ear and between cleats on the adjusting nut. Rotate the adjusting nut with the rod as far as the recess allows—this is one "notch." Keep count of each "notch" you rotate the adjusting nut. Repeat on other adjusting nut using same number of "notches."

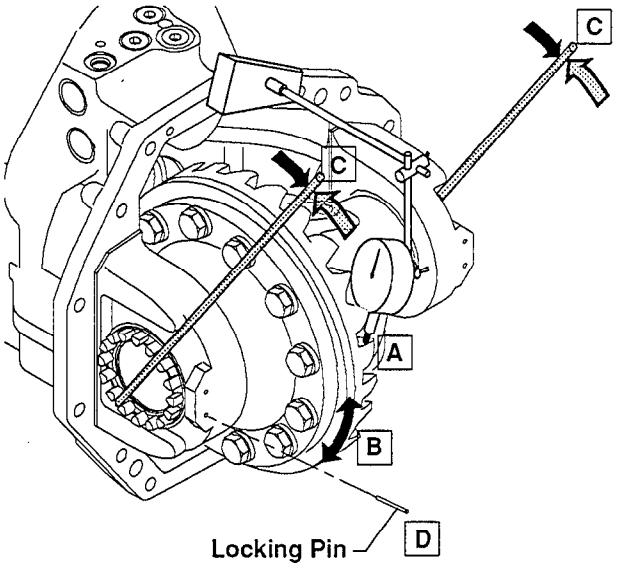

= Increase backlash. Decrease backlash. =

4. Check the resulting backlash on three teeth around the ring gear. Repeat adjustments until the preload and backlash measurements are both correct.
5. Drive **locking pins "D"** through the upper or lower holes in the differential carrier ears and between cleats in adjusting nuts.

Checking Ring and Pinion Gear Tooth Contact Pattern

To check the ring gear and pinion for proper tooth contact pattern (correct position):

1. Apply a thin, even coating of gear checking compound, to the ring gear teeth.
2. Rotate the ring and pinion gears through a minimum of one revolution and apply a load (hold by hand) to the gears as they are turned.

   When the ring gear is turned, the compound is squeezed away by the contact action of the teeth, leaving bare areas that are the exact shape, size and area of the tooth contact pattern.
3. Check the tooth contact area on the sides of the ring gear teeth. On an old gear set, the contact pattern must match wear pattern. On a new gear set, the tooth contact pattern must be as shown. If the contact pattern is incorrect, recheck the pinion mounting procedure and the ring-and-pinion backlash reading. Disassemble the parts, add or remove inner bearing shims as needed to adjust pinion position, and adjust differential bearing nuts to correct backlash.

   Adding shims corrects a "high" pattern. Removing shims corrects a "low" pattern.

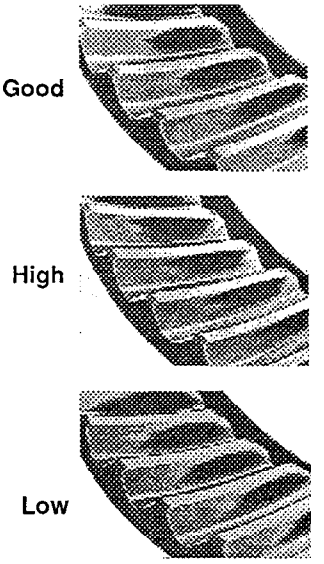

IMPORTANT

Each time the ring gear or pinion is moved, the backlash and the differential bearing preload must be checked and reset as needed.

Copyrighted Material
Intended for CLARK dealers only
Do not sell or distribute

https://truckmanualshub.com/

Installing Input Shaft

1. Install inner bearing cup in the case.
2. Put inner bearing onto input shaft and install shaft into case.
3. Install outer bearing onto input shaft and cup into adaptor.
4. Bolt adaptor to case. Apply thin even layer of Loctite # 515 before assembly. Torque bolts to 60 - 65 N•m (44 - 48 lbf-ft).
5. Select the thickest snap ring that will fit into adaptor and install.

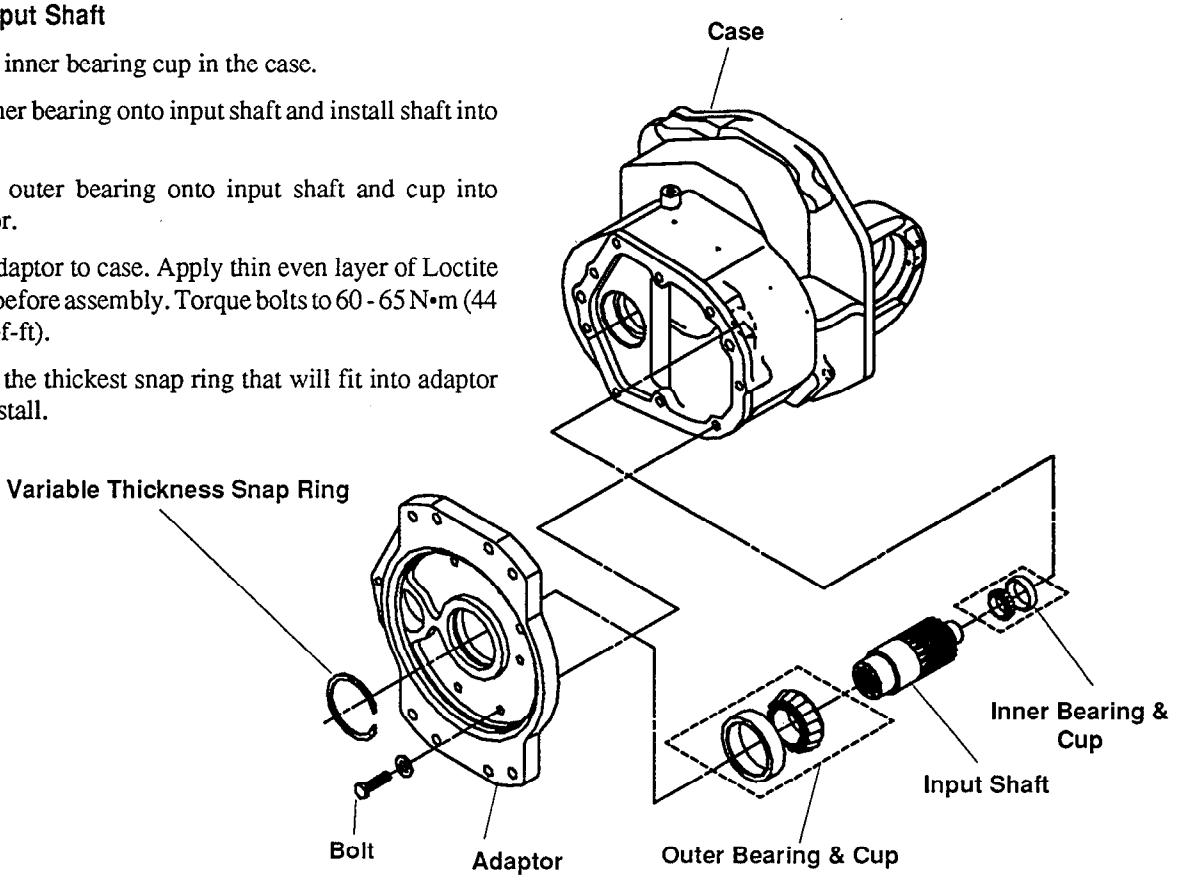

Joining Differential and Axle Housings

Clean all gasket mating surfaces. If there are any nicks, remove them with emery cloth. Then join the housings as follows.

Differential Case to Axle Housing

1. Place gasket over dowels on mounting flange on transmission case. **Do not use gasket sealer.**
2. With a hoist, bring the axle housing and differential case together, using the alignment studs for guides.
3. Loosely install six mounting bolts with washers through the differential case mounting flange and into the threaded holes in the axle housing mounting flange.
4. Remove the alignment studs and loosely install 11 mounting bolts with washers through the axle mounting flange, through the gasket, and into the threaded holes in the differential case mounting flange.
5. Gradually torque all of the above-mentioned **mounting bolts**, in a criss-cross pattern, 49 - 60 N•m (36 - 44 ft-lb).

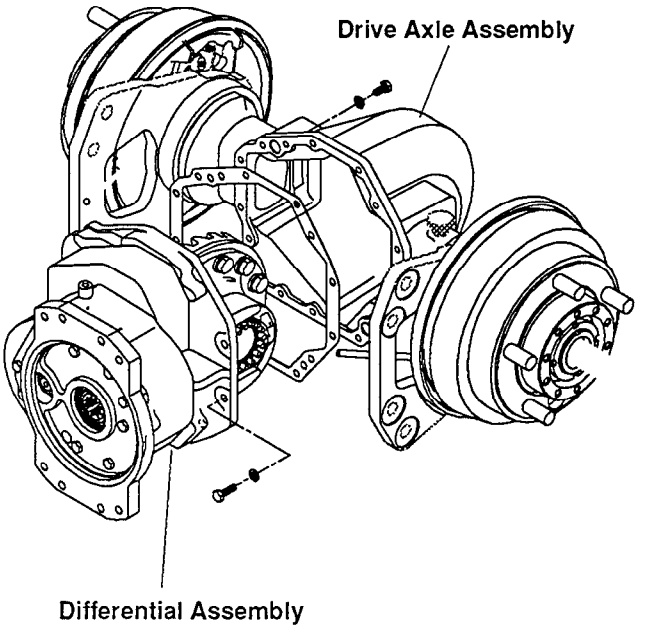

Copyrighted Material
Intended for CLARK dealers only
Do not sell or distribute

https://truckmanualshub.com/

Installing Axle Shafts and Axle Ends

1. If axle hub and/or brake assemblies were removed, install them as described in the "Axle Hub Overhaul" Section in this Group (20), and the "Service Brake Inspection and Overhaul" Section in Group 23.

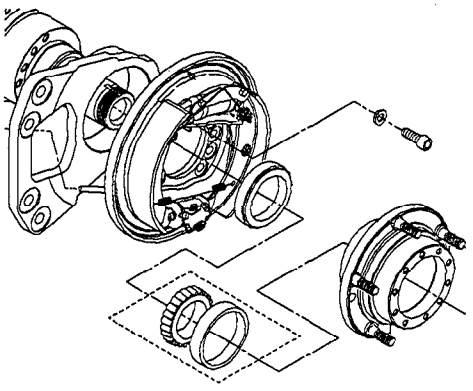

2. Insert O-ring into groove in axle shaft as shown. Insert axle shaft into axle assembly and torque mounting bolts 90-110 N•m (67-81 ft-lb).

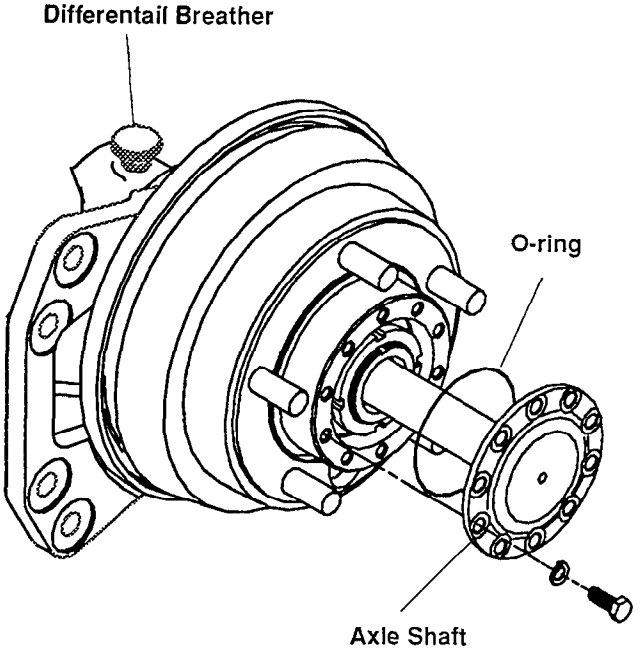

3. Install the breather; Apply Loctite 17009 to threads and torque 45 - 50 N•m (33 - 37 ft-lb).

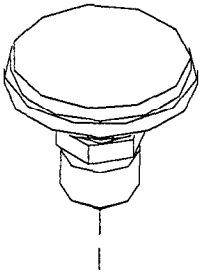

4. Reinstall the brake lines and bleed brakes. Refer to brake bleeding procedure in Group 23.

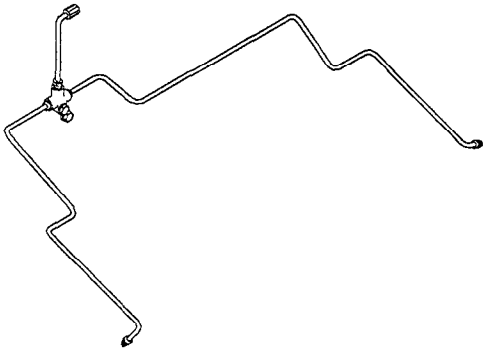

5. Refill the drive axle with 6.5 L (6.87 qts) of Clark transmission fluid part number 2776236.

Copyrighted Material
Intended for CLARK dealers only
Do not sell or distribute

https://truckmanualshub.com/

Section 5

Drive Axle Ends Overhaul

Drive Wheel Removal

The drive axle ends can be overhauled with the drive axle in the truck. If the drive axle is to be left in the truck:

1. Safely raise and properly block the front of the truck as described in the lifting and jacking Section of Group SA.
2. Remove the drive wheels as described in Group 22.

Drive Axle Shaft Removal and Replacement

1. Remove 10 mounting bolts and washers from each axle shaft flange.
2. Pull axle shaft out of axle housing.
3. Remove O-Ring from hub.
4. Reverse steps 1 through 3 for installation. Use new O-Ring, Torque mounting bolts to 90-110 N•m (66-81 ft-lb).

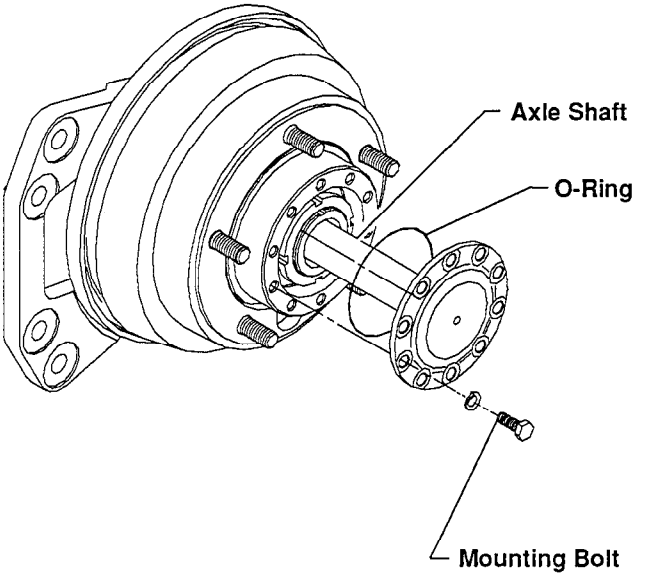

Copyrighted Material
Intended for CLARK dealers only
Do not sell or distribute

https://truckmanualshub.com/

Axle End Removal

The following procedures refer to the **illustration on the next page.**

1. Separate brake drum from hub. If necessary, screw jackscrews though holes in drum to force drum apart from hub. Remove drum.
2. Bend back tab on locking washer to clear slot in lock nut.
3. Remove locknut from spindle. Special wrench, construction shown on **page 4,** may be used.
4. Remove tongued washer from spindle.
5. Remove outer bearing from spindle.
6. Remove hub from spindle.
7. Remove inner bearing.
8. Remove and discard oil seal from hub.
9. Extract inner and outer bearing cups from hub if bearings are to be replaced.

Axle Mounting Bracket Removal and Installation

1. Remove or install the brake assembly as described in "Service Brake Overhaul" in Group 23.
2. Remove or install the axle mounting bracket by sliding it off or on the axle housing. Use anti-seize compound, Clark part #1802307, on the contact surfaces before installing the bracket.

Inspection, Cleaning, and Repair

Inspect bearings and cups for wear. Replace bearing and cup as a set if either is worn. Clean parts with a Stoddard-type solvent.

Axle End Assembly

1. Press new cups into hub, if cups were removed.
2. Lube inner bearing with transmission fluid, Clark part # 2776236, and install bearing.
3. Prepare surfaces and install oil seal:
   a. Remove nicks, scratches, and burrs from hub and spindle surfaces that will receive the seal.
   b. Apply a light coat of Loctite Primer N, Clark part #1803267, and Loctite Gasket Maker, Clark part #1802303 to seal outer diameter and hub inner diameter.
   c. Press new oil seal into hub with special driver, which can be constructed from drawing on page 4.

IMPORTANT

OIL SEAL LEAKS. The oil seal must be replaced with a new one each time the hub is removed. Use extreme care not to damage the seal during installation. Use the proper seal driver, shown on page 4.

4. Install hub over spindle.
5. Lube outer bearing with transmission fluid, Clark part # 2776236, and install.
6. Install tongued washer, locking washer, and locknut (hand-tight) .
7. While turning hub, torque locknut to 200-245 N•m (147-181 ft-lb) with special wrench shown on page 4. Loosen locknut- then hand-tighten locknut until bearing has no end-play.
8. Loosen locknut until tab on washer lines up with slot in locknut. Bend tab on washer into slot on locknut.
9. Align inspection slot on brake drum with inspection slot on hub. Install brake drum by sliding it over studs mounted on hub. Tap drum with a soft-faced hammer to seat it against the hub. Remount the wheel as described in Group 22.

Copyrighted Material
Intended for CLARK dealers only
Do not sell or distribute

https://truckmanualshub.com/

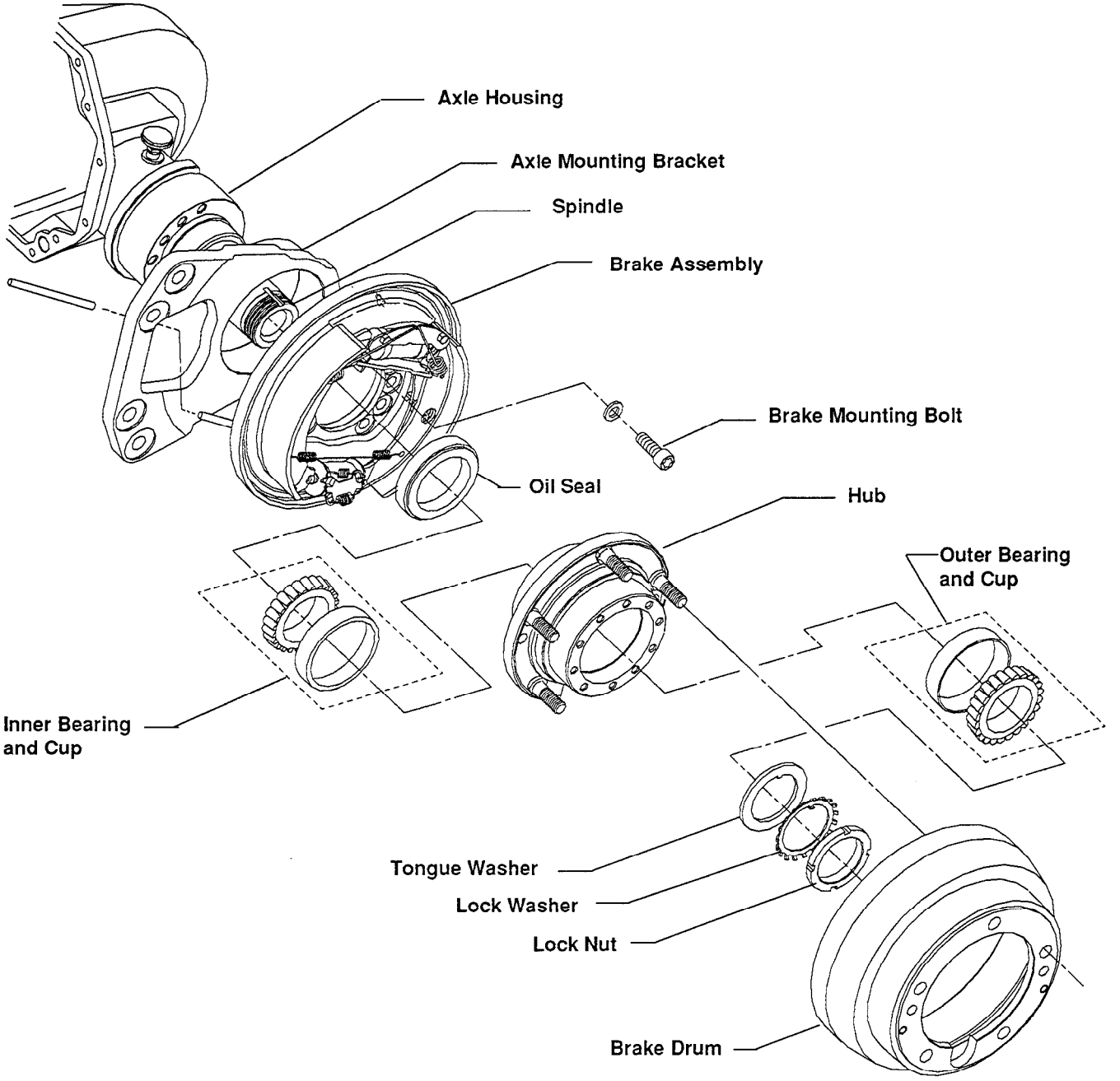

Copyrighted Material
Intended for CLARK dealers only
Do not sell or distribute

https://truckmanualshub.com/

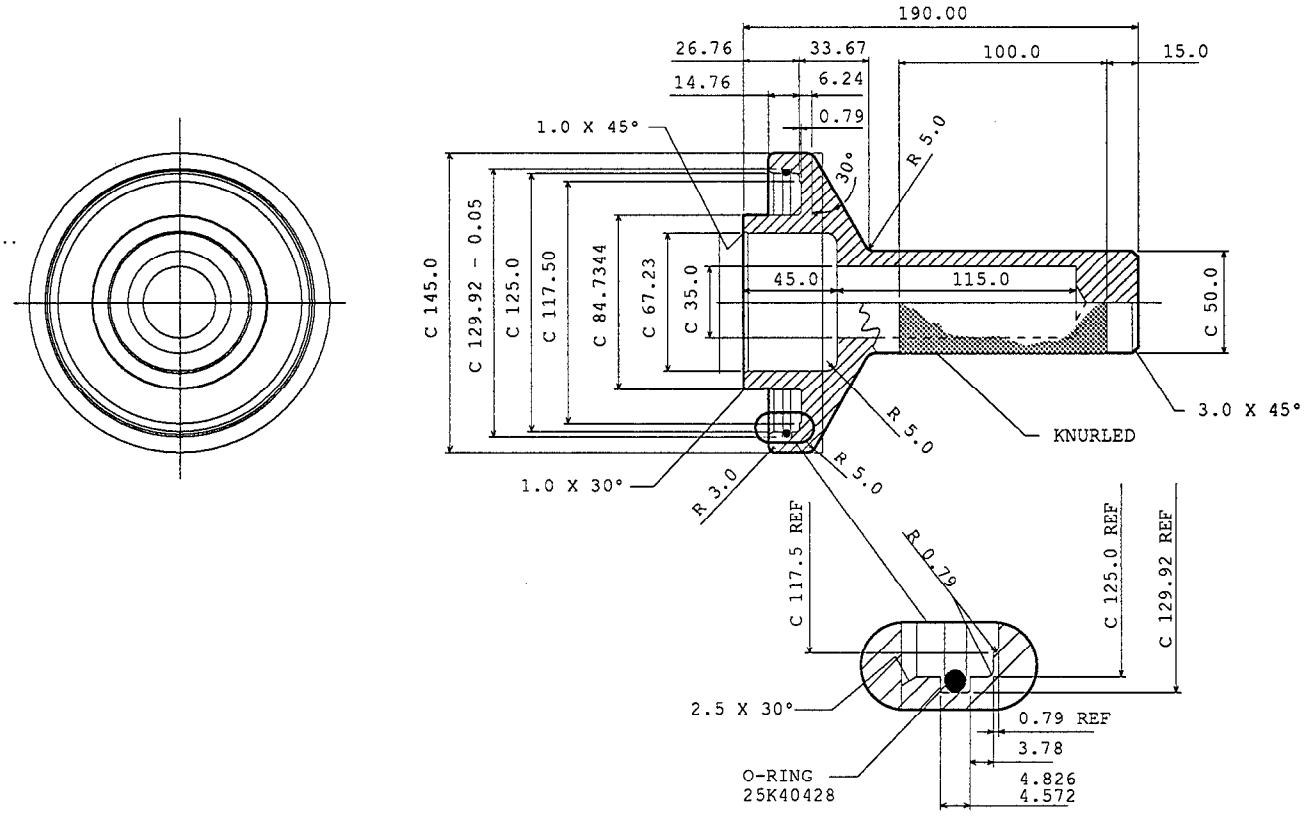

Hub Oil Seal Driver. Construct as shown.

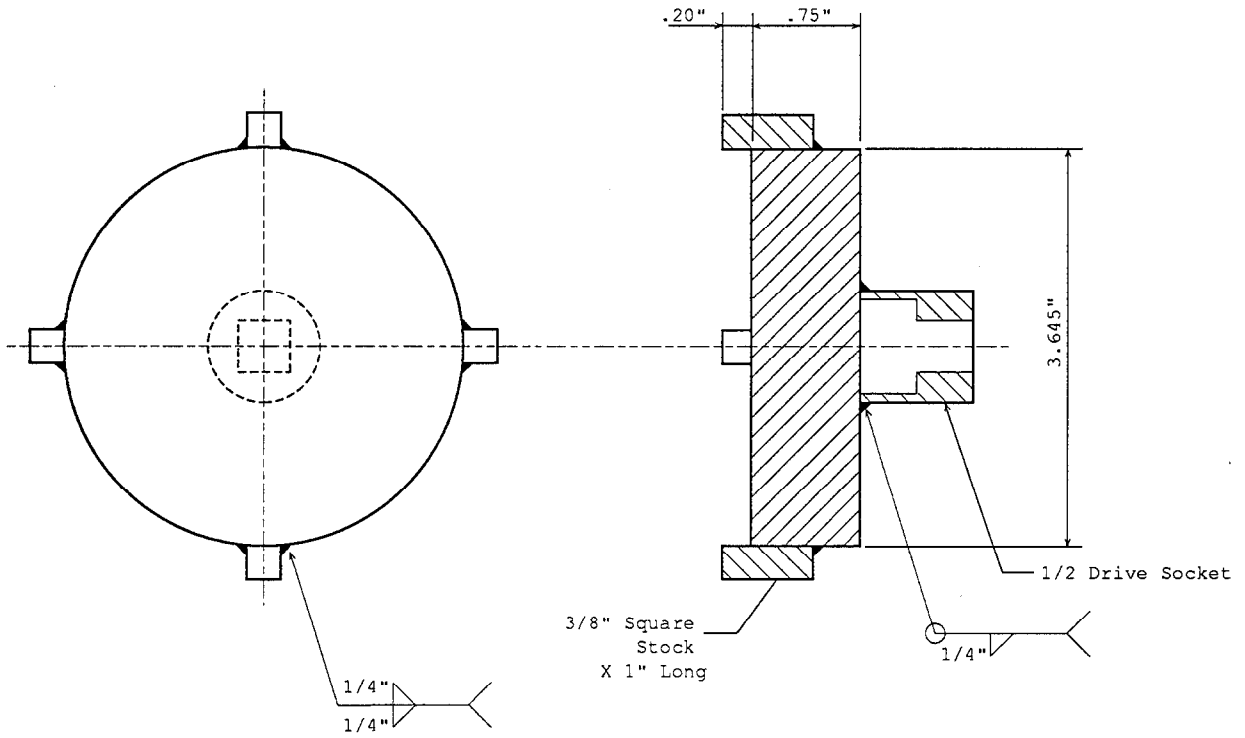

Hub Locknut Wrench. Construct as shown.

Copyrighted Material
Intended for CLARK dealers only
Do not sell or distribute

https://truckmanualshub.com/

Section 1

Wheels and Tires
Specifications and Description

General Cushion Tire Maintenance and Inspection 2
Inspection and Maintenance 2
Wheel Removal and Installation 3
Cushion Tire Replacement 5

Copyrighted Material
Intended for CLARK dealers only
Do not sell or distribute

https://truckmanualshub.com/

Specifications

Steer Tire Types: Cushion rubber electric compound.

Drive Tire Types: Cushion rubber electric compound.

Fastener Torques

Steer Tire Mounting Nut Torques: Refer to steer wheel mounting on page

Drive Wheel Mounting Nut Torques: 300 - 370 N•m (225 - 275 lb-ft).

Service Intervals

Wheel Mounting Bolts Check and Tightening: Every 50-250 hours of operation and each PM.

Tire Condition: Daily inspection.

⚠ CAUTION

SAFE PARKING. Before working on truck:

1. **Park truck on a hard, level, and solid surface, such as a concrete floor with no gaps or breaks.**
2. **Put upright in vertical position and fully lower the forks or attachment.**
3. **Put all controls in neutral. Turn key switch OFF and remove key.**
4. **Disconnect battery.**
5. **Apply the park brake and block the wheels.**

General Cushion Tire Maintenance and Inspection

1. Inspect cushion tires and remove objects (nails, metal fragments, etc.) embedded in the tread of the tire. Be careful not to cause further damage to tire when removing these objects.
2. Check tire for separation from the base band. If a thin steel rule or similar tool can be inserted more than 12 mm (0.5 in.) into the separation area from the side of the tire, the tire should be replaced.

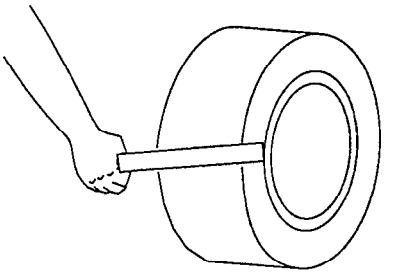

3. Check tire for damage from chunking or heat damage. This is a judgment requirement for replacement. In general, if the damage is greater than 12 mm (0.5 in.) deep and involves more than a 50 x 50 mm (2 x 2 in.) area, it will usually affect the tire performance and the tire should be replaced.
4. Avoid overloading and do not allow vehicle to stand under heavy loads for prolonged periods as this will cause a "flat" spot on the tires.
5. Check steering axle alignment regularly to protect against premature, irregular tread wear and separation.
6. If rubber tires come in contact with oils, grease, and gasoline they should be wiped clean without delay.
7. Regular lubrication of all wheel bearings will assure free rolling and eliminate tire drag when stopping or starting.

Copyrighted Material
Intended for CLARK dealers only
Do not sell or distribute

https://truckmanualshub.com/

Drive Wheel Removal and Installation

Removal

1. Loosen wheel bolts, then use a portable jack of sufficient capacity placed under the frame of truck to raise wheel off floor. See "Lifting, Jacking, and Blocking" in Group SA for correct, safe procedures for jacking the truck.

⚠ CAUTION

Tire and wheel assembly is very heavy. Be prepared to handle the full weight.

2. Remove bolts and cone washers and lift the tire and wheel assembly from drive axle hub.

Installation

1. Install wheel and tire assembly on drive axle hub. Begin tightening the lug nuts to seat the nuts in the beveled wheel openings.

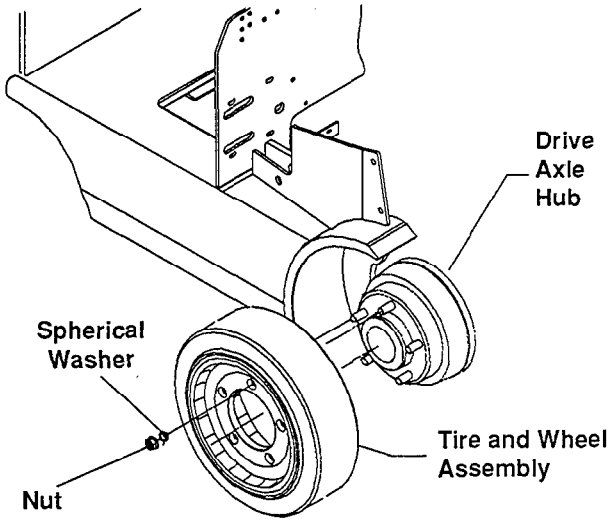

2. Use a crisscrossing nut-tightening sequence to torque the lug nuts to an inital torque of 54-81 N•m (40-60 ft-lb). Typical crisscrossing nut-tightening sequence is shown.

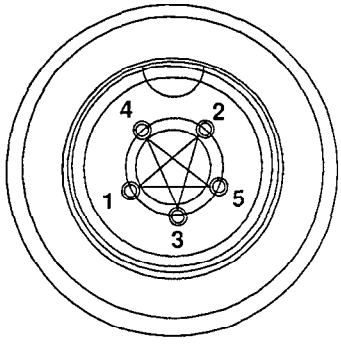

3. Begin the crisscrossing sequence again and torque the wheel bolts to: 300 - 370 N•m (225 - 275 lb-ft).

IMPORTANT

Do not overtorque the wheel bolts. Damage to the wheel bolts, cone washers, wheel, or drive-axle hub may result.

4. Lower truck to floor and remove blocking and jack.

Steer Wheel Removal and Installation

Removal

1. Park the truck safely and use a jack of suitable capacity placed under the frame of truck to lift steer wheel off the floor as described in "Lifting, Jacking and Blocking" in Group SA.
2. Remove the hub cap by prying it from wheel hub.

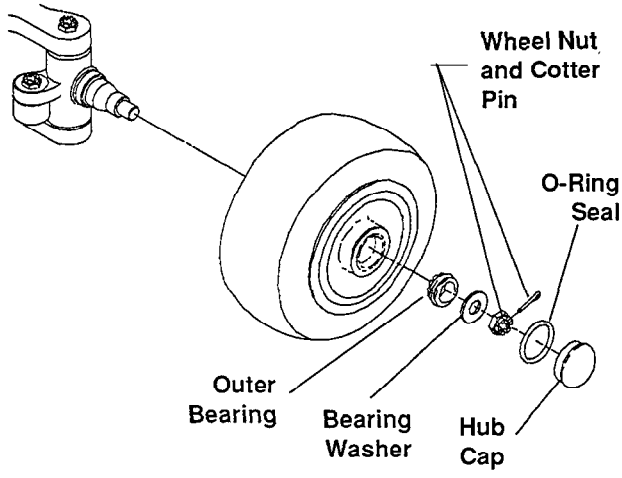

3. Clean the excess grease from around wheel nut. Remove cotter pin from wheel nut.
4. Loosen and remove O-ring, wheel nut and washer
5. Pull out on wheel hub slightly to loosen bearing, then remove outer bearing. Store in clean place.

Copyrighted Material
Intended for CLARK dealers only
Do not sell or distribute

https://truckmanualshub.com/

6. Carefully remove wheel assembly from axle spindle. Support the wheel hub to avoid dragging the grease seal at the back side across the thread on spindle end.

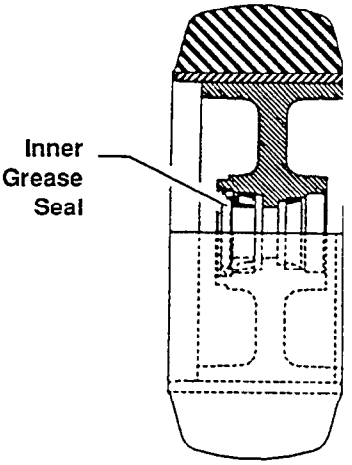

7. If no other maintenance is to be done on wheel bearings, cover the wheel hub to protect the grease seal and inner bearing from contamination during tire replacement.

Installation

1. Make sure the truck is safely supported on a suitable jack or blocking.
2. Be sure axle spindle is clean and that wheel hub inside and bearings are clean and have been serviced and lubricated (packed correctly) before installation.

NOTE

Refer to Group 26, "Steer Axle", for additional information on removing and servicing steer wheels and bearings.

3. Install wheel on spindle. Be carefull not to damage seal lip when moving the hub over the end of spindle and threads.
4. Install outer bearing after packing bearing cavitity one-half full with proper grease.

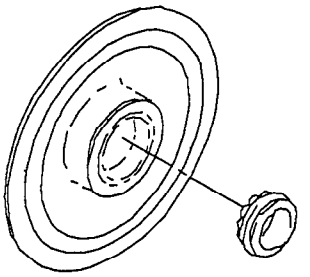

5. Install bearing washer and wheel nut and hand tighten wheel nut

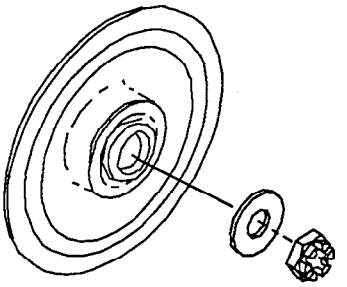

6. While rotating wheel (hub) counterclockwise, torque the wheel nut to 27 - 31 N•m (20 - 23 ft-lb).
7. Back the wheel nut up until it is loose.
8. While turning the wheel counterclockwise, torque the wheel nut to 2.3 - 2.8 N•m (20 - 24 in-lb; 1.7 - 2 ft-lb).
9. Back wheel nut off to nearest slot in nut and lock with new cotter pin. Bend tabs on cotter pin.
10. Recheck for correct bearing adjustment by rotating the wheel by hand. Wheel should rotate freely or with only slight "drag". Readjust bearings, as necessary. Adjust torque on wheel nut as necessary to avoid binding in bearings.
11. Pack the area around wheel nut with grease.

Copyrighted Material
Intended for CLARK dealers only
Do not sell or distribute

https://truckmanualshub.com/

12. Replace the O-ring and install hubcap by tapping into place with a rubber or plastic-faced hammer.

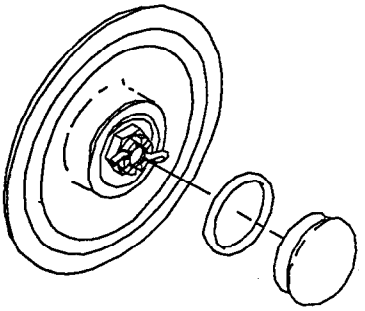

13. Lower truck to floor and remove jack.

Cushion Tire Replacement

⚠ CAUTION

Replacement of the original equipment tires with tires other than those recommended by CLARK may result in decreased operating performance and stability.

1. The correct procedure for tire removal and replacement requires a suitable press for pressing old tire off wheel and pressing new tire onto wheel..

IMPORTANT

Cushion tires cannot be used after once being pressed on and removed from the wheel. The correct press fit is destroyed after one installation and removal. Replace with new tire.

2. Note and measure the offset of wheel to tire before removing tire.

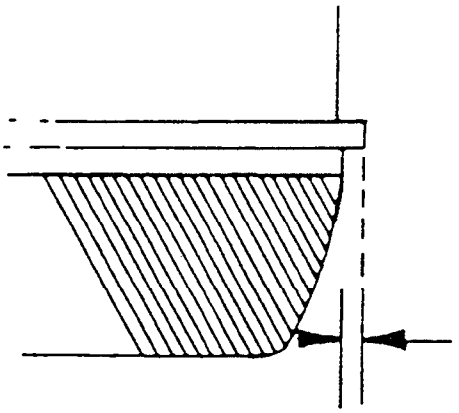

3. Position tire on press, making sure there is adequate clearance for the tire to be pressed off of wheel.

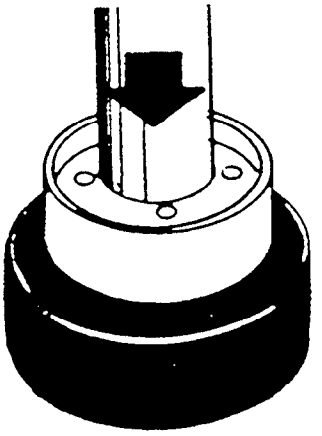

4. Use suitable tooling with the hydraulic press to correctly contact the base band of tire to press it off the wheel.

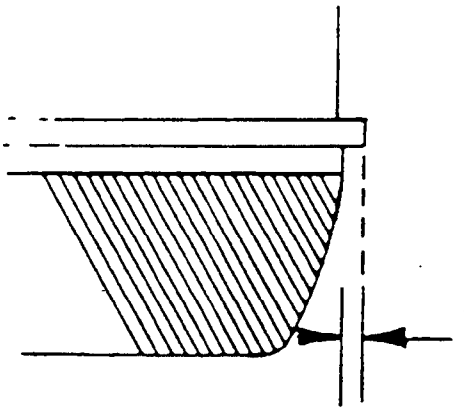

5. Install new tire. Mount all tires with identification and type markings toward outside of wheel. Be sure to press the tire on the wheel with the same offset as measured above when originally installed.

Copyrighted Material
Intended for CLARK dealers only
Do not sell or distribute

https://truckmanualshub.com/

GROUP 23

BRAKE SYSTEM

Braking System Specifications and Description ..... Section 1

Service Brake Troubleshooting ..... Section 2

Brake Pedal Linkage & Adjustments ..... Section 3

Brake Bleeding ..... Section 4

Master Cylinder Service ..... Section 5

Service Brake Adjustment and Overhaul ..... Section 6

Parking Brake Service ..... Section 7

Copyrighted Material
Intended for CLARK dealers only
Do not sell or distribute

https://truckmanualshub.com/

Section 1

Brake System Specifications and Descriptions

Specifications 2
General Description 2
Service Brake Operation 2
Park Brake Operation 2
Service Requirements 2

Copyrighted Material
Intended for CLARK dealers only
Do not sell or distribute

https://truckmanualshub.com/

Specifications

Service Brake:

Type: Drum and shoe. Self-adjusting.

Fluid: Hydraulic, Clark spec MS-68 only.

IMPORTANT

The brake system uses hydraulic fluid, not brake fluid.

Shoe-to-Drum Gap: 0.45-0.60 mm (.017-.024 in)

Shoe Lining Thickness: 1.0 mm (0.039 in) minimum.

Drum Thickness: 20.6 mm (0.787 inch) minimum.

Maximum Rebore Diameter: 303 mm (11.92 in).

Pedal Freeplay: None

Star Wheel Adjustment Gap: 0.5-0.6 mm (0.020-0.023 in)

Parking Brake:

Type: Ratchet pedal linked to service brake shoe at each wheel.

Holding Test: Rated load on 15% grade.

General Description

Brake pedal linkage – A mechanical system through which the brake pedal operates the master cylinder.

Master cylinder – Houses the brake fluid reservoir, low and high pressure pistons, and a pressure relief valve. The pistons are activated by brake pedal movement.

Hydraulic brake lines – These lines carry the hydraulic flow from the master cylinder to the wheel cylinders.

Service brake assembly – The drums, shoes and wheel cylinders.

Parking brake – Operates the service brake shoes via cables. See "Parking Brake Adjustment", in this Group for details.

Service Brake Operation

When operator depresses the brake pedal, the low-pressure piston in the master cylinder moves forward, closing off the reservoir ports. Cylinder displacement to the brake line is made up of the low-pressure chamber cup and the high-pressure chamber cup. Fluid displaced by low-pressure cup travels through a bypass port over the high-pressure cup and into the brake lines.

Once all braking surfaces at the axles are in contact, line pressures will start to build. When this line pressure reaches the predetermined (factory set) pressure setting of the relief valve, the relief valve opens, allowing any further displacement from low-pressure cup to flow directly into the reservoir. The high-pressure cup flares, due to the pressure drop across it, and cylinder displacement to the brake line is made up only of the displacement of the high-pressure cup. Line pressure is determined by the diameter of the high-pressure piston cup and the amount of force applied to the piston.

Parking Brake Operation

The operator applies the parking brake by depressing a foot pedal, which is then held down by a ratchet. The depressed pedal tensions cables connected to a brake shoe at each brake assembly, thereby applying the brakes.

The operator releases the park brake by pulling up on a release handle. This handle releases the ratchet, and a return spring returns the pedal and cable to the off position. The ratchet also operates the parking brake interlock switch and the parking brake indicator light switch.

Service Requirements

Operational checks and inspection of linkage, brake lining, and brake lines are specified in the Periodic Service Chart in Group PS.

Service brake linkage adjustment and lube are not normally required.

Brakes are self-adjusting and normally require no adjustment.

A leaking master cylinder should be overhauled or replaced.

Copyrighted Material
Intended for CLARK dealers only
Do not sell or distribute

https://truckmanualshub.com/

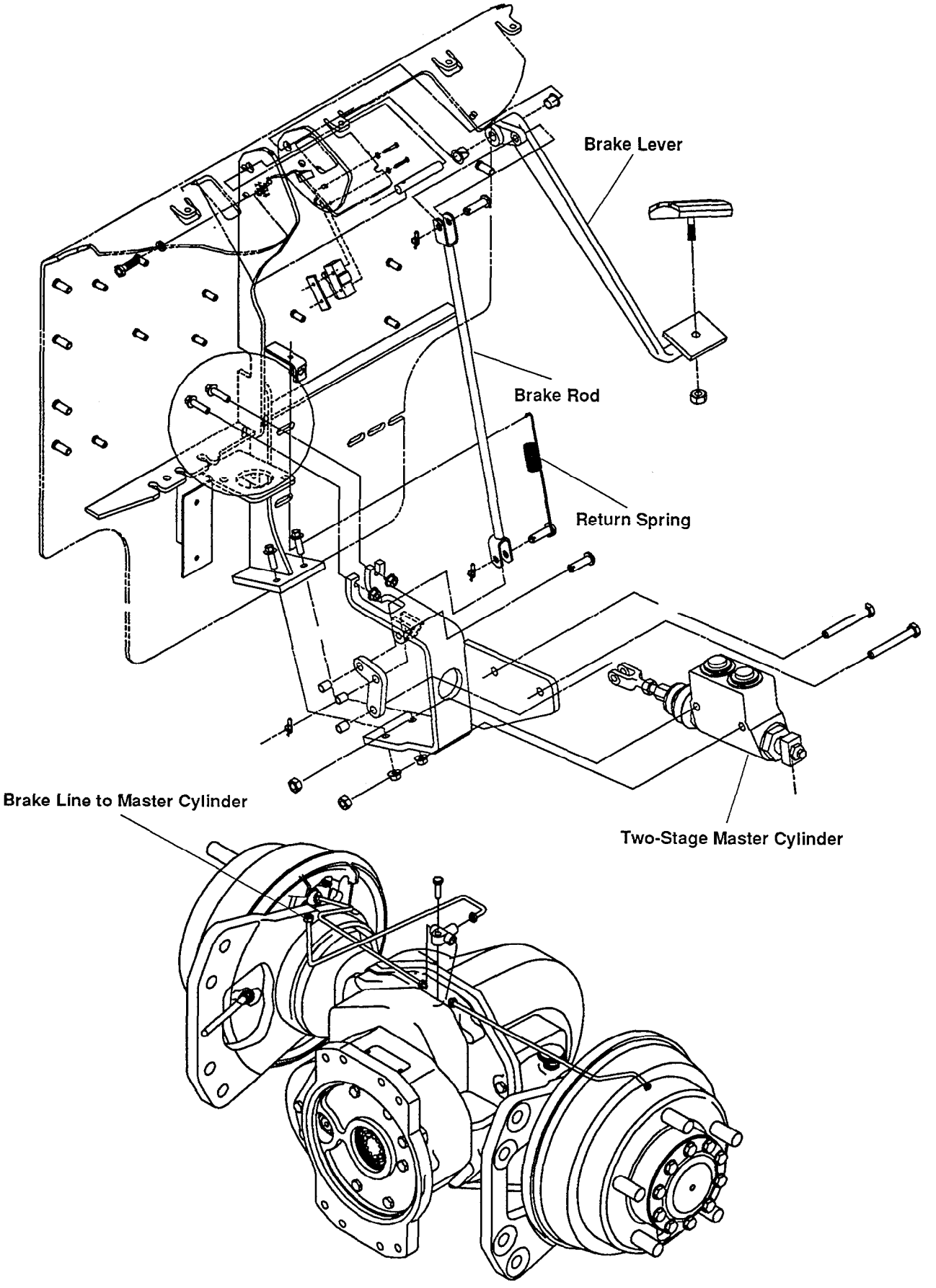

Copyrighted Material
Intended for CLARK dealers only
Do not sell or distribute

https://truckmanualshub.com/

Section 2

Service Brake Troubleshooting

Service Brake Troubleshooting 2

Copyrighted Material
Intended for CLARK dealers only
Do not sell or distribute

https://truckmanualshub.com/

Service Brake Troubleshooting

Condition	Causes/Corrective Actions
Brake pedal drops to floor	A C
Brake pedal spongy	A B
Brakes stick, drag excessively, make noise, or overheat	F G
Excessive effort required to apply brake	A

Causes/Corrective Actions

A. External leak in wheel cylinder or other component of braking system... Inspect/replace/repair.

B. Air in braking system... Bleed and recheck.

C. Linkage broken or return spring damaged... Inspect/repair.

D. Brake master cylinder defective... Inspect/overhaul or replace.

E. Shoe linings worn or brakes misadjusted... Inspect/repair/adjust.

F. Shoe linings glazed, oily, or contaminated with other substance... Replace or clean.

G. Parking brake misadjusted... Adjust.

Copyrighted Material
Intended for CLARK dealers only
Do not sell or distribute

https://truckmanualshub.com/

Section 3

Pedal and Linkage Adjustments

Introduction 2
Adjustment 2

Copyrighted Material
Intended for CLARK dealers only
Do not sell or distribute

https://truckmanualshub.com/

THE PARTY POSSESSING THIS DOCUMENT ACKNOWLEDGES READING THE RESTRICTIVE LEGEND, AND THAT THE DATA DISCLOSED THEREIN IS PROPRIETARY TO THE COMPANY, AND WILL BE MAINTAINED IN CONFIDENCE BY THE RECIPIENT WHILE IN ITS POSSESSION, AND THEREAFTER, AND RETURNED TO THE COMPANY UPON REQUEST, INCLUDING ALL DERIVATIVE MATERIALS, OR COPIES THEREOF, AND NOT DISCLOSED TO OTHERS WITHOUT THE PRIOR WRITTEN PERMISSION OF THE COMPANY.

IN-24974

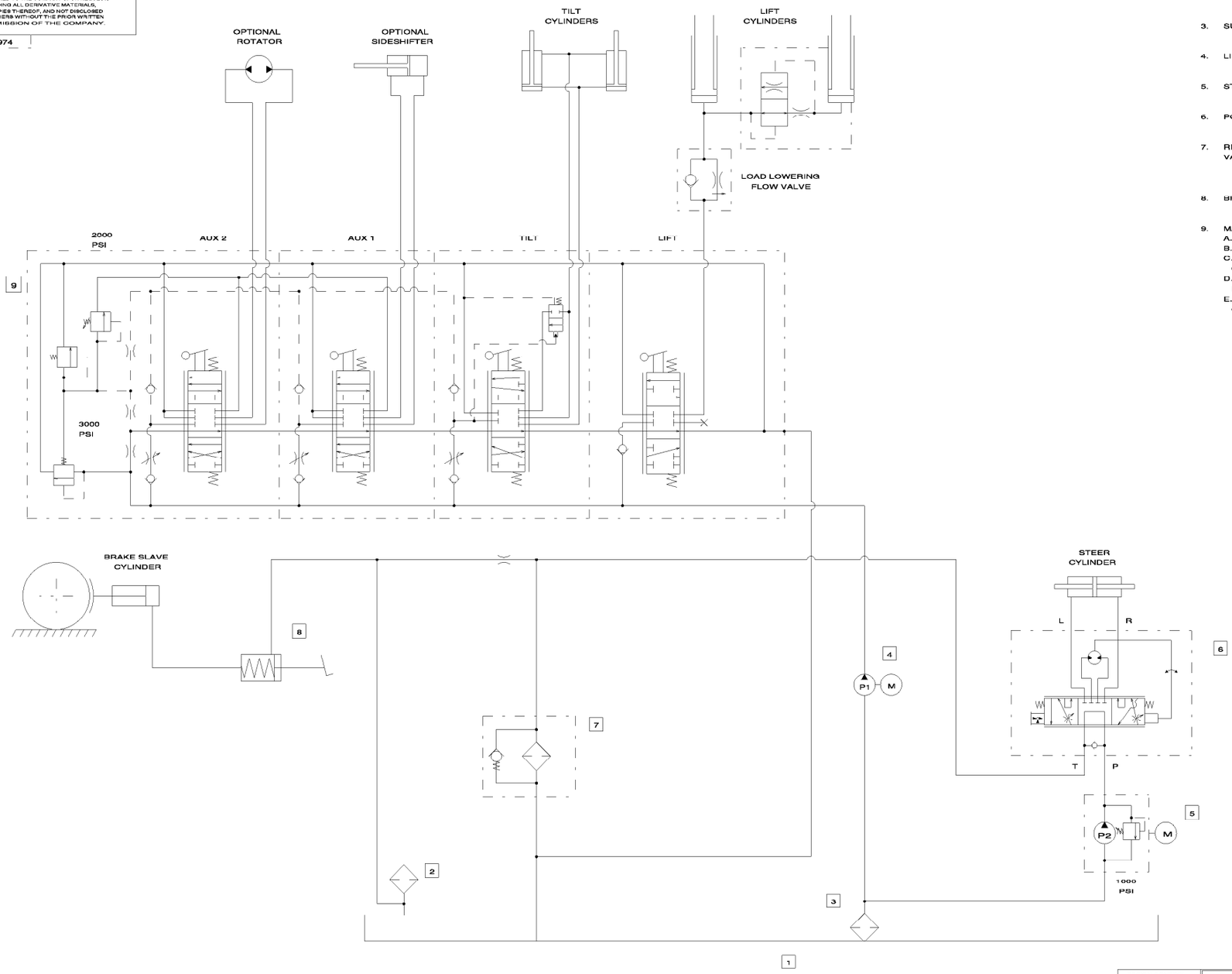

1. HYDRAULIC SUMP TANK.
2. FILLER, BREATHER & STRAINER.
3. SUCTION STRAINER.
4. LIFT PUMP & MOTOR.
5. STEER PUMP & MOTOR.
6. POWER STEERING VALVE.
7. RETURN LINE FILTER & BYPASS VALVE.
8. BRAKE MASTER CYLINDER
9. MAIN HYDRAULIC VALVE WITH:
   A. MAIN PRESSURE RELIEF VALVE.
   B. LOW LEAKAGE LIFT SPOOL.
   C. TILT SPOOL WITH INTEGRAL COUNTERBALANCE VALVE.
   D. AUX SPOOLS WITH SECONDARY PRESSURE RELIEF VALVE.
   E. ADJUSTABLE PRESSURE COMPENSATED FLOW CONTROLS.

REV	ZONE	DESCRIPTION	CHG NOTICE	DATE	APPROVAL
A		RELEASED	F060388	20JUN96	CJR/CJR

DESIGN CONTROL: F

UNPUBLISHED WORK. ALL RIGHTS RESERVED ©

METRIC — DIM ARE IN MM UNLESS OTHERWISE NOTED EXCEPT AS NOTED

DWN	C. RAO	20JUN95
CHK	C. RAO	20JUN95
APL	F060388	20MAY96

SCHEMATIC - HYDRAULIC

CLARK — DRAWING IN-24974

ECO 20/33

E | NONE | WT | SHEET 1 OF 1

https://truckmanualshub.com/

Introduction

The illustration shows the service brake linkage which links the brake pedal to the master cylinder.

Adjustment

Adjust the master cylinder push rod assembly to eliminate any slack in the pedal linkage. Adjust only the minimum required to remove pedal play. Do not over-adjust to where the master cylinder piston does not return to full stroke upon releasing the pedal. Tighten jam nut to 39 - 44 N•m (29 - 32 lb-ft).

Adjust the brake switch position so that switch clicks when pedal is pushed no more than 6.3mm (.25 inch). Ensure that the switch clicks back when pedal is released.

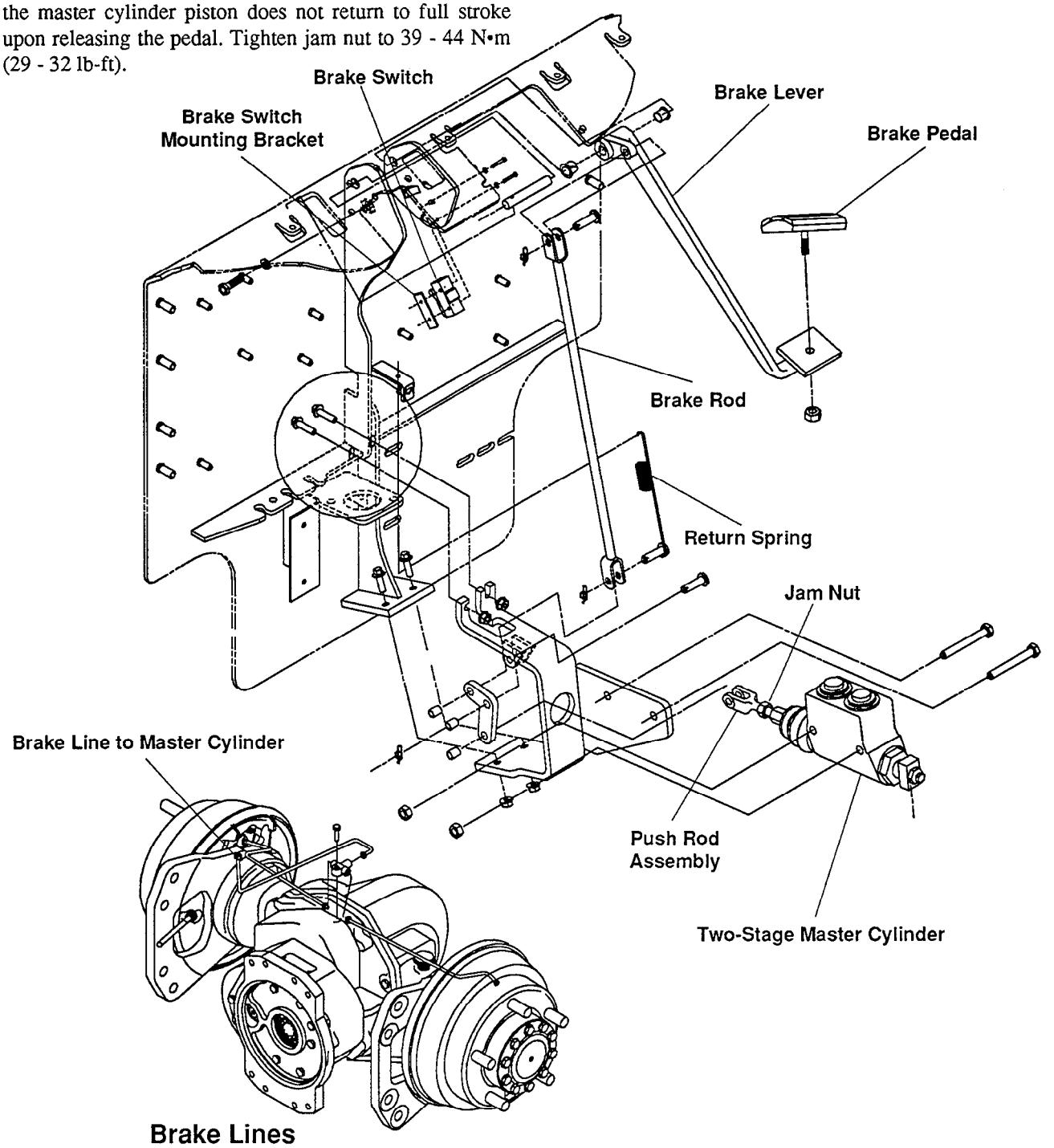

Copyrighted Material
Intended for CLARK dealers only
Do not sell or distribute

https://truckmanualshub.com/

Section 4

Brake System Bleeding

Bleed brakes when:

- The brake pedal feels spongy.
- The brake master cylinder or wheel cylinders—or lines between—have been leaking and/or have been repaired or replaced.
- Troubleshooting otherwise indicates that air has been introduced into the system.

CAUTION

The brake system uses Clark spec MS-68 hydraulic fluid. Do not use brake fluid.

Bleed the brakes as follows:

1. Park truck on level floor. Put direction control in neutral. Lower forks to floor, tilt forward, and apply parking brake.
2. Remove cap from the master cylinder to be sure it is full of fluid.
3. Attach a clear hose to a bleed screw on one of the brake cylinders. Place the other end of the hose in a jar containing hydraulic fluid, Clark part #1802155.
4. Open the bleed screw.
5. Depress the brake pedal and watch fluid flow into the jar. When the fluid appears to be free of bubbles, tighten the bleed screw, then release the pedal.
6. Check the fluid in the master cylinder. Refill as required.
7. Release the parking brake and operate the brake pedal. If the brake pedal does not come up or still feels spongy, bleed the system again.

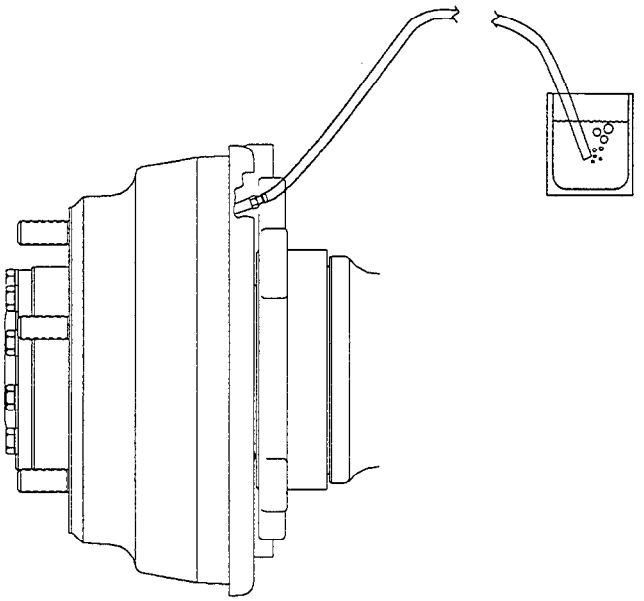

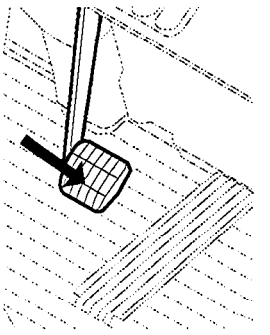

Copyrighted Material
Intended for CLARK dealers only
Do not sell or distribute

https://truckmanualshub.com/

Section 5

Brake Master Cylinder Service

Master Cylinder Removal 2

Master Cylinder Installation 2

Master Cylinder Overhaul 3

Disassembly 3
Reassembly 4
Relief Valve Disassembly 4
Relief Valve Reassembly 5
Master Cylinder Installation 5
Adjustemnt 5

Copyrighted Material
Intended for CLARK dealers only
Do not sell or distribute

https://truckmanualshub.com/

Master Cylinder Removal

CAUTION

SAFE PARKING. Before working on truck:

1. **Park truck on a hard, level and solid surface, such as a concrete floor with no gaps or breaks.**
2. **Put upright in vertical position and fully lower the forks or attachment.**
3. **Put all controls in neutral. Turn key switch OFF and remove key.**
4. **Apply the park brake and block the wheels.**
5. **Disconnect the battery.**

1. Place a pan directly under the master cylinder to catch brake fluid drippings. Remove brake lines from the master cylinder. Cap or plug the open ports and fittings.
2. Remove the rue pin and spring and then the clevis pin from the brake rod.
3. Remove mounting fasteners, lockwashers, and nuts to remove master cylinder.

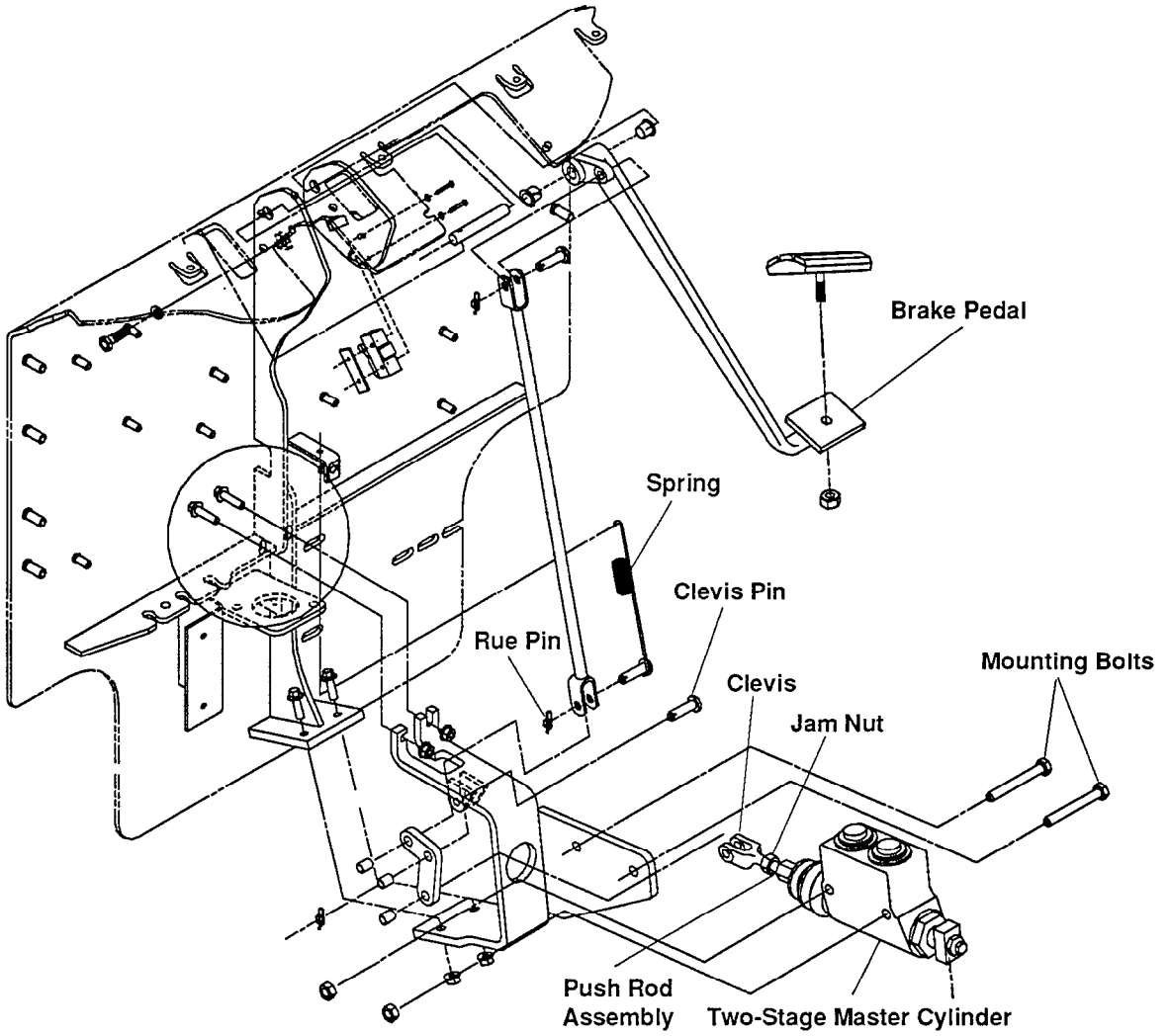

Copyrighted Material
Intended for CLARK dealers only
Do not sell or distribute

https://truckmanualshub.com/

Master Cylinder Overhaul

The instructions contained in this section cover the disassembly, repair, and assembly of this cylinder assembly. This sequence would normally be followed after the cylinder assembly has been removed from the machine.

NOTE

Cleanliness is of extreme importance in reconditioning these cylinder assemblies. The exterior of these cylinder assemblies should be thoroughly cleaned before attempting any disassembly of the unit. This precaution will greatly reduce the possibility of dirt or other foreign matter entering the cylinder during disassembly.

Always work in a clean area and on a clean work surface.

Disassembly

1. Drain fluid from unit before disassembling.
2. Remove push rod and boot (23).
3. Place cylinder in vise, end plug (1) upward, in a vertical position.
4. Remove end plug (1). Several parts should follow end plug as it is removed due to preload on spring (7).

CAUTION

End plug is under tension of spring (7).

5. Retainer assembly (6) should follow end plug (1) as it is removed. Remove o-ring (8) from housing (18).
6. Remove spring (7) from housing (18).
7. Remove piston assembly (17) from housing (18) by pushing on piston assembly with a wooden dowel from the small diameter end of housing.

(continued on page 4)

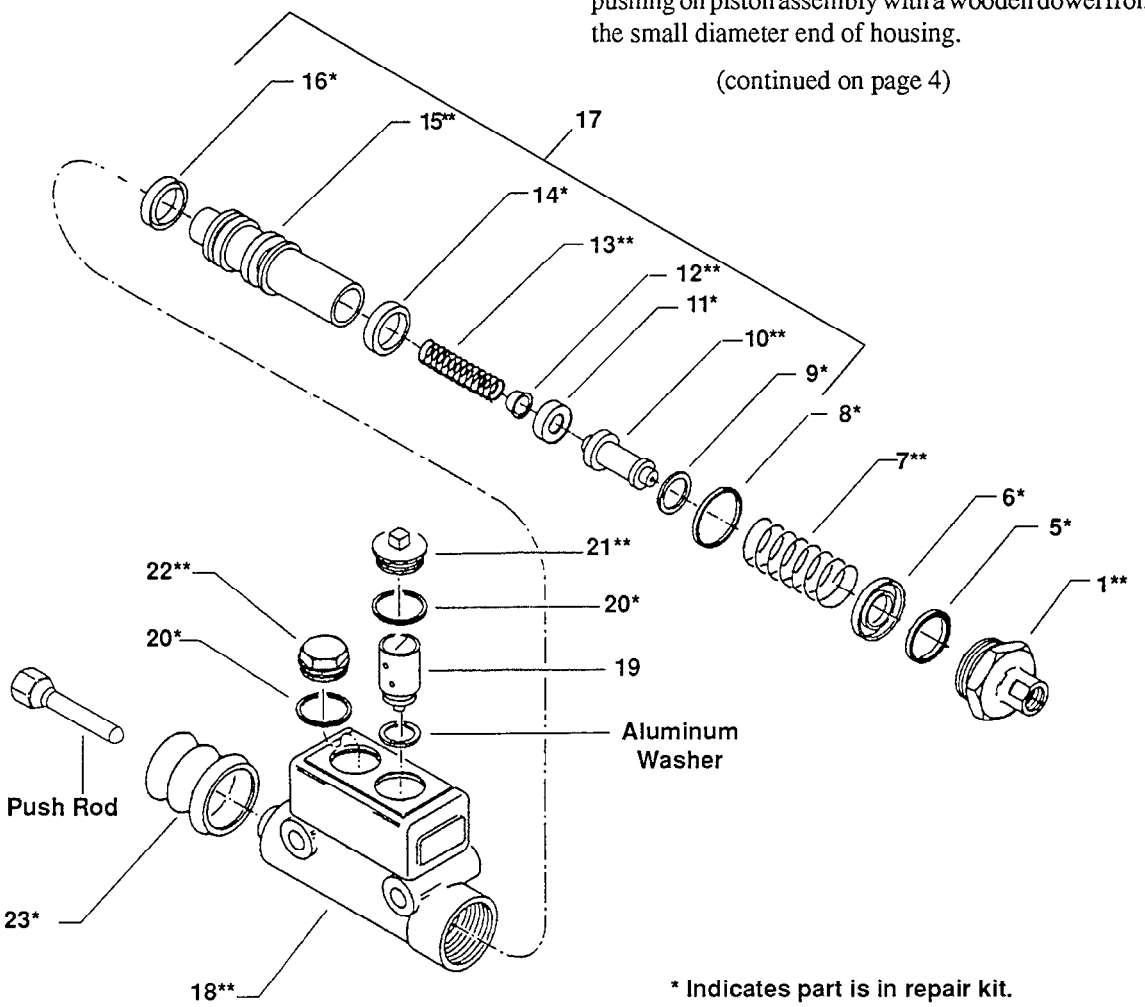

* Indicates part is in repair kit.
** Indicates a non-servicable part.

Copyrighted Material
Intended for CLARK dealers only
Do not sell or distribute

https://truckmanualshub.com/

8. Depress piston (10) and remove snap ring (9) from piston (15). Remove spring (13) and retainer (12) from piston (15).
9. Remove cup (11) from piston (10) and cups (14 & 16) from piston (15). Note direction of cups for reassemble purposes.

IMPORTANT

When removing cups be care not to scratch or mar pistons or cup glands.

10. Remove filler plug (22) and gasket (20).
11. See Relief Valve Section for relief valve (19) disassembly procedure.
12. Clean cylinder bore and all parts thoroughly in clean Clark MS-68 hydraulic fluid

Reassembly

NOTE

Be sure to lubricate rubber components from repair kit with clean Clark MS-68 hydraulic fluid.

1. Install new gasket (20) and filler plug (22) in housing (18).
2. Install new cups (14 & 16) on piston (15) and new cup (11) on piston (10). Note direction of cups.

NOTE

Be careful not to scratch or mar pistons or cup glands.

3. Install spring (13) into piston (15). Place retainer (12) over end of spring (13).
4. Insert piston (10) into piston (15) with cup (11) against retainer (12). Depress piston (10) and install new snap ring (9).
5. Install piston assembly (17) into housing (18). Note direction of piston assembly.
6. Install spring (7) over piston assembly (17).
7. Install new o-ring (8) in housing (18).
8. Install new seal (5) on a new retainer assembly (6). Position new retainer assembly (6) on spring (7). Note direction of retainer assembly.
9. Carefully guide new retainer assembly (6) into housing (18) and begin threading end plug (1) by hand.
10. Install new boot (23) on housing (18).
11. Reinstall push rod.
12. Tighten end plug (1) to approximately 67.8-108.5 N•m (50-80 lbs-ft.).
13. See Relief Valve Section for relief valve assembly (19) replacement

Relief Valve Disassembly

1. Remove filler plug (21) and gasket (20).
2. Remove relief valve assembly (19) by turning it counter clockwise (a special MICO Relief Valve Tool, 02-720-001 is available from:

MICO, Incorporated

1911 Lee Boulevard (Zip Code 56003-2507)

P.O. Box 8118/North Mankato, MN U.S.A, 56002-8118

ph: (507) 625-6426 Facsimile (507) 625-3212

CAUTION

Do not temper with factory setting on relief valve. Adjusting screw is staked.

The relief valve housing is slotted on the top edge -- use these slots ONLY, when removing or inserting relief valve. If relief valve will not turn, position tool on relief valve, rap sharply with hammer then turn valve out.

3. After removing relief valve assembly, an aluminum washer may still be in the reservoir at the relief valve port. Remove the aluminum washer.

Copyrighted Material
Intended for CLARK dealers only
Do not sell or distribute

https://truckmanualshub.com/

Relief Valve Reassembly

1. Insert new aluminum washer from new relief valve assembly into reservoir at relief valve port.
2. Insert new relief valve assembly (19) into master cylinder. Tighten relief valve using the slots on top edge of relief valve housing only. Torque 20.3-27.1 N•m (15-20 lbs-ft.).
3. Install new gasket (20) and filler plug (21). Torque fill plug 33.9-40.7 N•m (25-30 lbs-ft.).

CAUTION

Do not temper with factory setting on relief valve. Adjusting screw is staked.

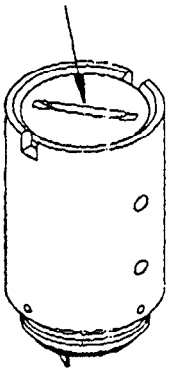

Master Cylinder Installation

1. Insert mounting fasteners through master cylinder and holes in mounting plate. Install lockwashers and loosely tighten nuts.
2. Install clevis pin through brake rod and pivot arm. Connect spring to clevis pin and install rue pin.
3. Align hole in pedal arm with hole in actuating rod clevis. Install clevis pin.
4. Install brake lines. Leave outlet fitting loose.
5. Slowly stroke brake pedal until brake fluid is seen at master cylinder outlet. Connect brake line.
6. Bleed brake system. See Section 4, Brake System Bleeding.

Adjustment

Adjust the master cylinder push rod assembly to eliminate any slack in the pedal linkage. Adjust only the minimum required to remove pedal play. Do not over-adjust to where the master cylinder piston does not return to full stroke upon releasing the pedal. Tighten jam nut to 39 - 44 N•m (29 - 32 lb-ft).

Copyrighted Material
Intended for CLARK dealers only
Do not sell or distribute

https://truckmanualshub.com/

Section 6
Service Brake Adjustment and Overhaul

External Inspection 1

Shoe-to-Drum Gap Adjustment 1

Internal Inspection and Repair 2
Brake Drum Removal and Replacement 2
Inspection 2
Brake Shoe Removal 2
Brake Shoe Replacement 2
Shimming Adjuster Gaps 2
Cylinder Removal and Replacement 3
Adjuster Removal and Replacement 3

Wheel Cylinder Overhaul 4

Brake Assembly Removal, and Installation 4

External Inspection

The brake linings, drum, and adjustment setting can be inspected without removing the drum or hub.

1. Jack up and block the front of the truck as described in Group SA.
2. Remove the wheel and examine the linings through the shoe inspection notch in the drum.

   If the linings appear to be worn to a thickness of 1 mm (0.04 in) or less at any point, replacement of both shoes is required.
3. If the linings are OK, measure each shoe-to-drum gap through the shoe inspection notch, first rotating the notch into alignment with the lower end of each shoe. If the gap is not 0.45-0.60 mm (.017-.024 in), adjust as described in "Shoe-to-Drum Gap Adjustment."

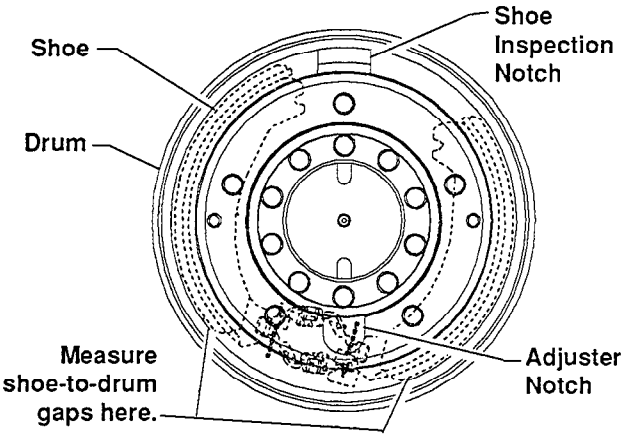

Figure 1. **Inspection and Adjustment Notches**

4. Rotate the adjuster notch over the adjuster (at 7 o'clock position).
5. Through the adjuster notch, measure the gap between each tab and adjacent star wheel with a feeler gauge. The gap should be 0.5-0.6 mm (0.020-0.023 in). If either gap is out of range, shim star wheel shaft as described in "Shimming Adjuster Gaps."

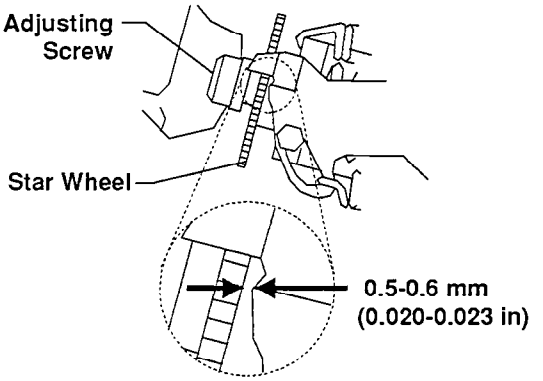

Figure 2. **Adjuster Gap Setting (1 of 2 Star Wheels)**

Shoe-to-Drum Gap Adjustment

The brake shoes are self-adjusting. However, **manual adjustment is required when shoes are replaced or if brake shoes are binding against drums.**

To decrease gap (for each shoe):

1. Measure the shoe-to-drum gap as described in "External Inspection."
2. Through the adjuster notch, rotate the star wheel one click with screwdriver or adjusting tool .
3. Repeat steps 1 and 2 until proper gap is achieved.

To increase gap, remove drum, pry shoe from adjuster, and turn adjusting screw (see Figure 2.)

Copyrighted Material
Intended for CLARK dealers only
Do not sell or distribute

https://truckmanualshub.com/

Internal Inspection and Repair

Jack up and block the front of the truck as described in Group SA. Remove the wheel. The hub does not have to be removed.

Brake Drum Removal and Replacement

The drum fits tightly on the hub. To remove drum, install M12 screws into the jackscrew holes to push the drum away from the hub. To install the hub, align the adjuster notch with the notch in the hub and drive the drum against the hub with a soft mallet.

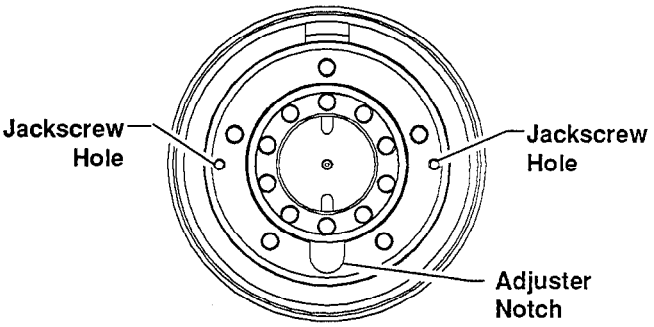

Figure 3. **Jackscrew and Adjuster Notch Locations**

Inspection

Brake Shoes: If the linings are cracked or scored or the linings are worn to 1 mm (.04 in) or less, the shoes must be replaced. Both sets of shoes should be replaced when one is replaced.

Brake Drum: The maximum allowed internal diameter for the brake drum is 303 mm (11.93 in). Brake drum walls should be free from scoring. **Brake drums should be machined each time brake shoes are replaced, to provide a smooth and uniformly round braking surface.**

Wheel Cylinder: Check for leakage under the boots at each end of cylinder. If the cylinder leaks, or troubleshooting otherwise indicates a bad cylinder, disassemble and inspect the wheel cylinder. If the cylinder surface is scratched or pitted, replace the cylinder. Always replace the cups.

General: Check for worn-out springs, warped backplate, and loose or corroded fasteners. **Check adjuster for proper operation and replace if faulty.**

Shimming Adjuster Gaps

1. With brake shoes mounted, use a feeler gauge to determine the amount of clearance that must be added or subtracted from the gap described in "External Inspection." The gap should be 0.5-0.6 mm (0.020-0.023 in).
2. Remove the brake shoes as described in "Brake Shoe Removal."
3. From the adjuster, pull each star wheel shaft that is out of adjustment. Clean star wheel shafts and lubricate with anti-seize compound, Clark part #1802307.
4. Measure and install the needed shims (Clark part) as determined in step 1. Insert shafts as far into adjuster as possible.
5. Check gap again after brake shoe installation.

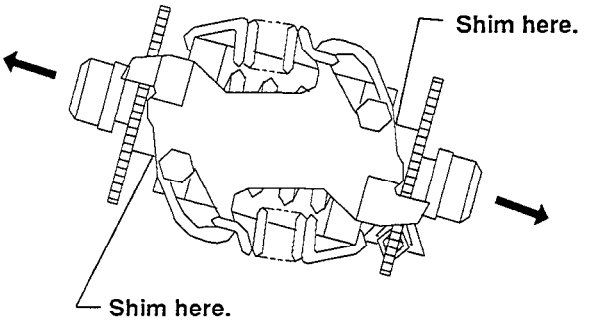

Figure 4. **Star Wheel Gap Shim Installation**

Brake Shoe Removal

Remove the guide springs, lower return springs, upper return springs, and shoes (Figure 6).

Brake Shoe Replacement

1. Place the forward shoe—the shoe with the parking brake lever—into position on the adjusters and cylinder rods (Figure 6).
2. Install the parking brake cable, making sure it is hooked on the lever and clipped to the backing plate,
3. Install guide spring and upper return spring.
4. Install cross-strut (with spring and spring retainer), making sure notch in cross-strut end engages slot in parking brake lever on forward shoe.
5. Place the rearward shoe into position on the adjuster and cylinder rods, making sure the spring-end of the cross-strut engage the upper notch on the shoe.

Copyrighted Material
Intended for CLARK dealers only
Do not sell or distribute

https://truckmanualshub.com/

6. Install the guide spring and upper return spring.
7. Install lower return spring, making sure spring offset is downward to avoid interference with hub.
8. Make sure that the parking brake lever is in its shoe notch and that cylinder push rods are in their shoe sockets (Figure 5).

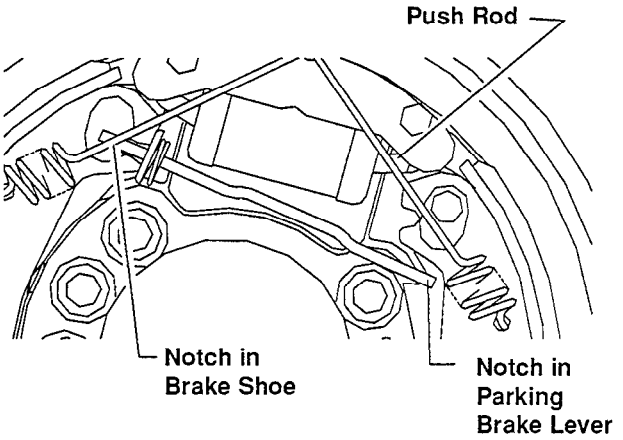

Figure 5. **Placement of Cross-Strut**

NOTE

If braking does not seem to be adequate after replacing shoes, it can be improved by wearing in (burnishing). This involves operating the truck forward and in reverse, while repeatedly applying the brakes.

Cylinder Removal and Replacement

1. Remove the brake shoes as described previously.
2. Remove the spring anchor, brake cylinder push rods, and brake cylinder mounting bolts and washers.
3. Tap cylinder from backing plate with soft mallet.
4. When reinstalling: Seal the gap where the brake cylinder fitting extends through the backing plate with silicon caulk. Tighten cylinder mounting bolts and spring anchor plate mounting bolts to 15 N•m (133 in-lb).

Adjuster Removal and Replacement

1. Remove the brake shoes as described above.
2. Remove the adjuster mounting bolt from backside of mounting plate, and remove the adjuster.
3. When reinstalling: Adjuster springs should be replaced with new ones if weak or damaged. Torque adjuster mounting bolt to 10 N•m (89 in-lb).

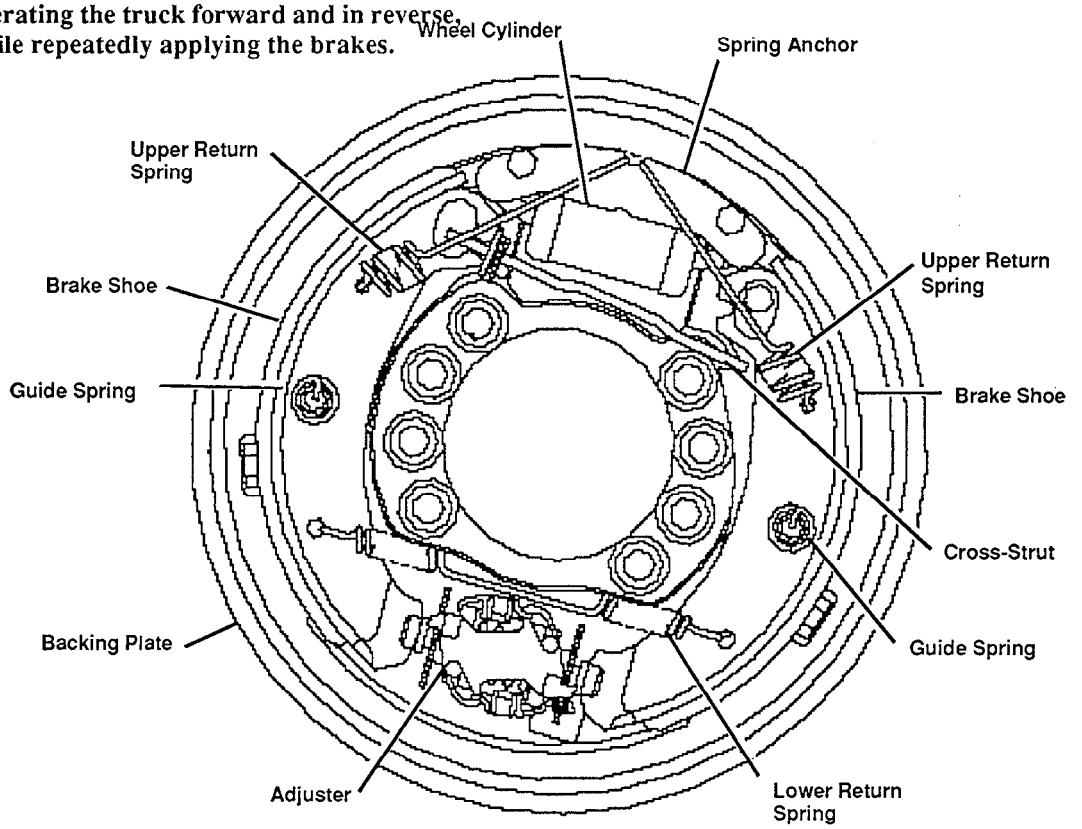

Figure 6. **Brake Assembly**

Copyrighted Material
Intended for CLARK dealers only
Do not sell or distribute

https://truckmanualshub.com/

Wheel Cylinder Overhaul

1. Pull off rubber boots.
2. Push out internal parts (loosen with wooden dowel if necessary).
3. Replace cylinder if scored or pitted.
4. Clean pistons, spring, and casing in Stoddard-type solvent or hydraulic fluid, Clark part #1802155.
5. Dip parts in hydraulic fluid.
6. Install spring and pistons.
7. Install each cup from its respective end of cylinder.
8. Replace boots.

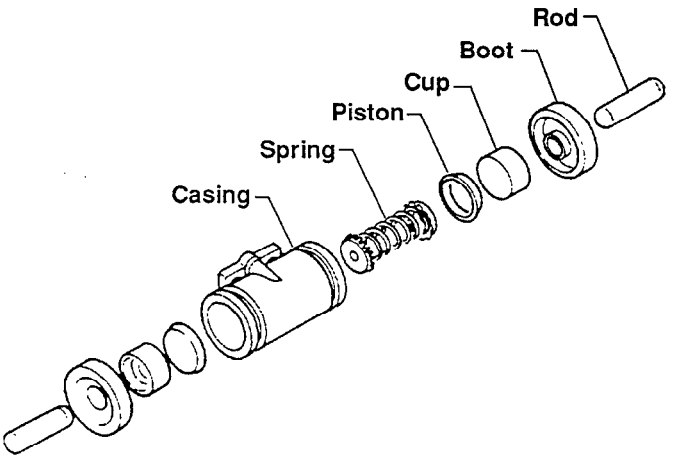

Figure 7. **Wheel Cylinder—Disassembled**

Brake Assembly Removal, and Installation

To access the service brake assembly, remove the axle hub and brake drum as described in Group 20, in the "Drive Axle Ends Overhaul" Section. Inspect the drum as described earlier.

To remove the service brake assembly:

1. Remove the brake shoes as explained earlier.
2. Pull the C-clip that holds the parking brake cable to the backing plate.
3. Unhook the parking brake cable end from the lever and pull the cable from the assembly.
4. Disconnect the brake line from the fitting. Cap or plug fittings.
5. Unbolt the brake assembly from the axle.
6. When reinstalling the brake assembly, torque the mounting bolts to 307-376 N•m (226-277 ft-lb) in a staggered sequence. Torque fitting 15-19 N•m (133-168 ft-lb).
7. Bleed the brake system as described in the brake bleeding Section of this Group (23).

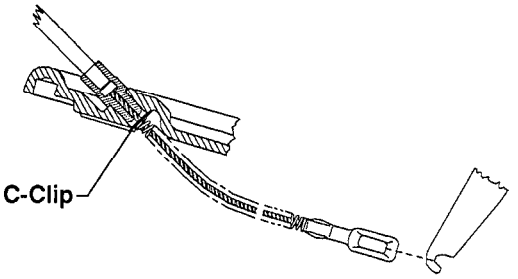

Figure 8. **Parking Brake Cable**

Copyrighted Material
Intended for CLARK dealers only
Do not sell or distribute

https://truckmanualshub.com/

Section 7. Parking Brake Service

Operation

The operator applies the parking brake by depressing a **foot pedal,** which is then held down by a **ratchet**. The depressed pedal tensions cables connected to a brake shoe at each brake assembly, thereby applying the brakes.

The operator releases the parking brake by pulling up on a **release handle**. This handle releases the ratchet, and a **return spring** returns the pedal and cable to the off position. The ratchet also operates the parking brake interlock switch and the parking brake indicator light switch.

Adjustment

1. With the pedal fully raised, **upstop** against tab on bracket, **adjust** slack out of brake cables and tighten **adjusting/locking nuts.**
2. Actuate and release pedal six to eight times.
3. Readjust and tighten nuts.

Removal and Replacement

As shown in illustration below, with these notes:

- Remove **return spring** for better access to **bracket mounting nuts.**
- Adjust position of interlock and indicator **switches** with pedal upstop against tab on bracket. Switch contacts should snap from their operated contact position to their normal position when pedal is depressed one ratchet click.
- Torque **switch mounting nuts** 0.8-1.0 N•m (7-9 in-lb). Torque **bracket mounting nuts** 20-23 N•m (177-210 in-lb).
- Apply a thin coat of Clark lubricant, part #1802155, to ratchet teeth and ball end of **wire rope** prior to assembly.

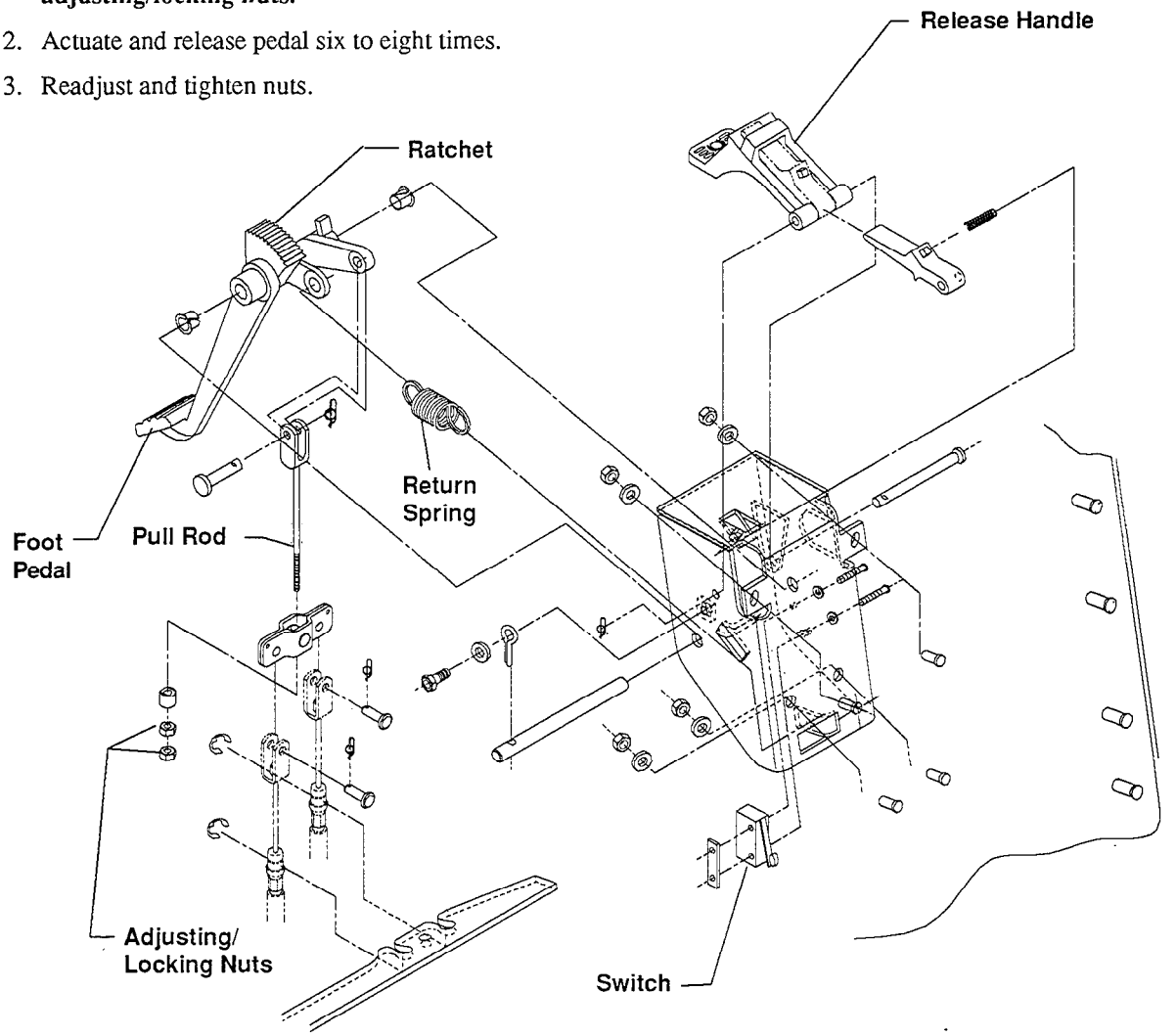

Copyrighted Material
Intended for CLARK dealers only
Do not sell or distribute

https://truckmanualshub.com/

Parking Brake Cable Removal and Installation

1. Disconnect each parking brake cable from the ratchet assembly as shown in the illustration below.

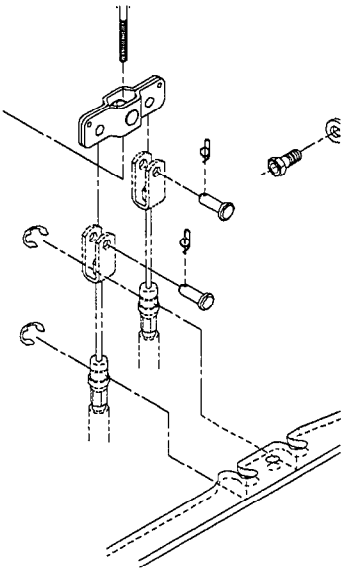

2. Remove the parking cable from the service brake assembly by first removing the brake shoes as described in the "Brake Overhaul and Adjustment" Section of this Group.
3. Pull out the C-clip that holds the parking brake cable to the backing plate.
4. Unhook the parking brake cable end from the lever on the shoe and pull the cable from the assembly.

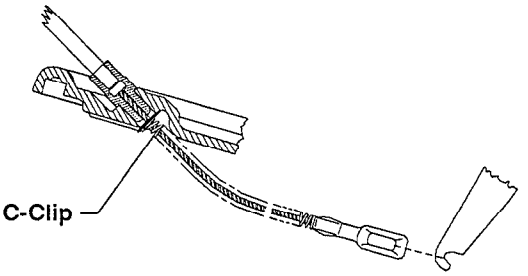

5. Installation is the reverse of removal.

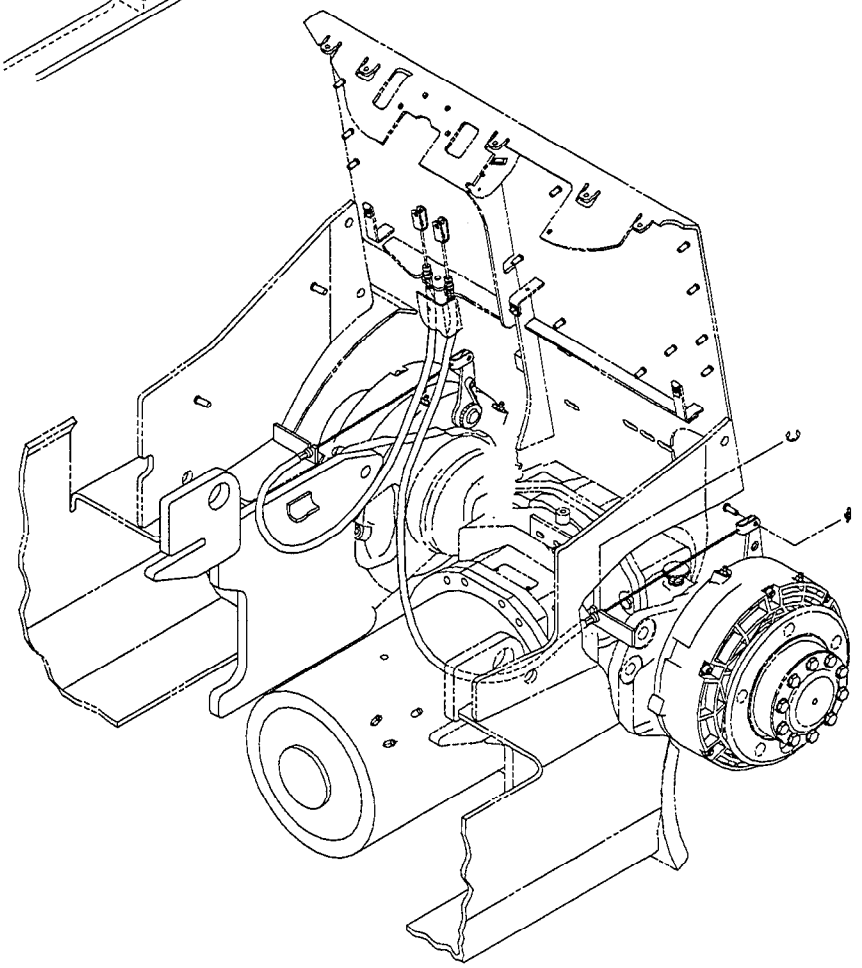

Copyrighted Material
Intended for CLARK dealers only
Do not sell or distribute

https://truckmanualshub.com/

GROUP 25

STEERING COLUMN AND GEAR

Steering System Specifications and Description ..... Section 1

Steering System Troubleshooting ..... Section 2

Steering Column Removal and Installation ..... Section 3

Steering System Relief Pressure Check and Adjustment ..... Section 4

Steering Gear Overhaul ..... Section 5

Copyrighted Material
Intended for CLARK dealers only
Do not sell or distribute

https://truckmanualshub.com/

Section 1

Steering System Specifications and Description

Specifications

Steering System Type: Hydrostatic power steering with load sensing, dynamic signal neutral circuit.

Steering System Relief Pressure Setting: 7587 kPa (1100 psi)

Service Intervals

Check the steering system relief pressure annually or after every 2000 hours of operation. Make a visual inspection of steering control unit hydraulic fittings periodically to ensure that the fittings are tight with no leakage.

Fastener Torques

Steering Handwheel Nut: 35-40 N•m (25.5-29.5 ft-lb)

Steering Column Cover Hex Bolts: 2-3 N•m (18-27 in-lb; 1.5-2.25 ft-lb)

Directional Control Base Lock Nut: 0.8-1 N•m (7-9 in-lb; 0.6-0.75 ft-lb)

Directional Control Base Flange Capscrew: 3.5-4.0 N•m (2.5-2.9 ft-lb)

Tilt Lock Assembly Base-to-Cowl Bolts: 20-25 N•m (14.8-18.5 ft-lb)

Orbitrol Bracket Bolts: 34-38 N•m (25-28 ft-lb)

Lower Column Assembly Base-to-Steering Gear Bolts: 34-38 N•m (25-28 ft-lb)

Wiring Harness Bracket Bolts: 11-13 N•m (8-9.5 ft-lb)

Description

All truck models have a hydrostatic power steering system, which is supplied with oil pressure from the power steering hydraulic pump. The steering hand wheel operates the steering gear (steering control unit), which directs oil flow to the steering cylinder on the steer axle. A steering system pressure relief valve is built in the steer pump to prevent over-pressurization of the steering system. The pressure relief setting can be tested by installing a test fitting at the steer pump outlet.

The power steering gear is a remote positioning control valve that senses the input signal from the steering hand wheel, multiplies this signal to assist in reducing the steering effort, and causes the steering axle to turn the wheels to the desired position by supplying hydraulic flow to the steering cylinder.

The steering gear is connected to the bottom of the steering column. When the steering hand wheel is turned, it is linked mechanically to the steering gear spool and causes this spool valve to shift from its closed neutral position to a "turn" position that allows oil under pressure to flow to the steering cylinder.

When the steering hand wheel stops turning, centering springs in the valve automatically center the spool, stopping the flow of oil to the cylinder.

The low pressure oil from the opposite side of the steering cylinder is returned through the opposite port in the gear. It is controlled by the same spool as the high pressure port.

In the event of a pump failure, the steering gear can generate sufficient hydraulic power by movement of the steering handwheel to serve as a limited steering method. An internal check valve automatically closes to divert this generated oil flow to the proper port of the steering cylinder. The handwheel turning effort is considerably higher, however, than with power steering.

Copyrighted Material
Intended for CLARK dealers only
Do not sell or distribute

https://truckmanualshub.com/

The column tilt lock mechanism allows the operator to adjust the steering column. The column tilt lever knob releases the adjustment setting and the column returns to the up position by the use of springs. The tilt lock mechanism, the directional control lever, and the key switch are protected by the steering column cover. The cover can be removed for service to steering column components. The entire column can be removed for service or replacement. The steering gear, attached to the base of the column, can be removed without disassembling the other parts of the steering column.

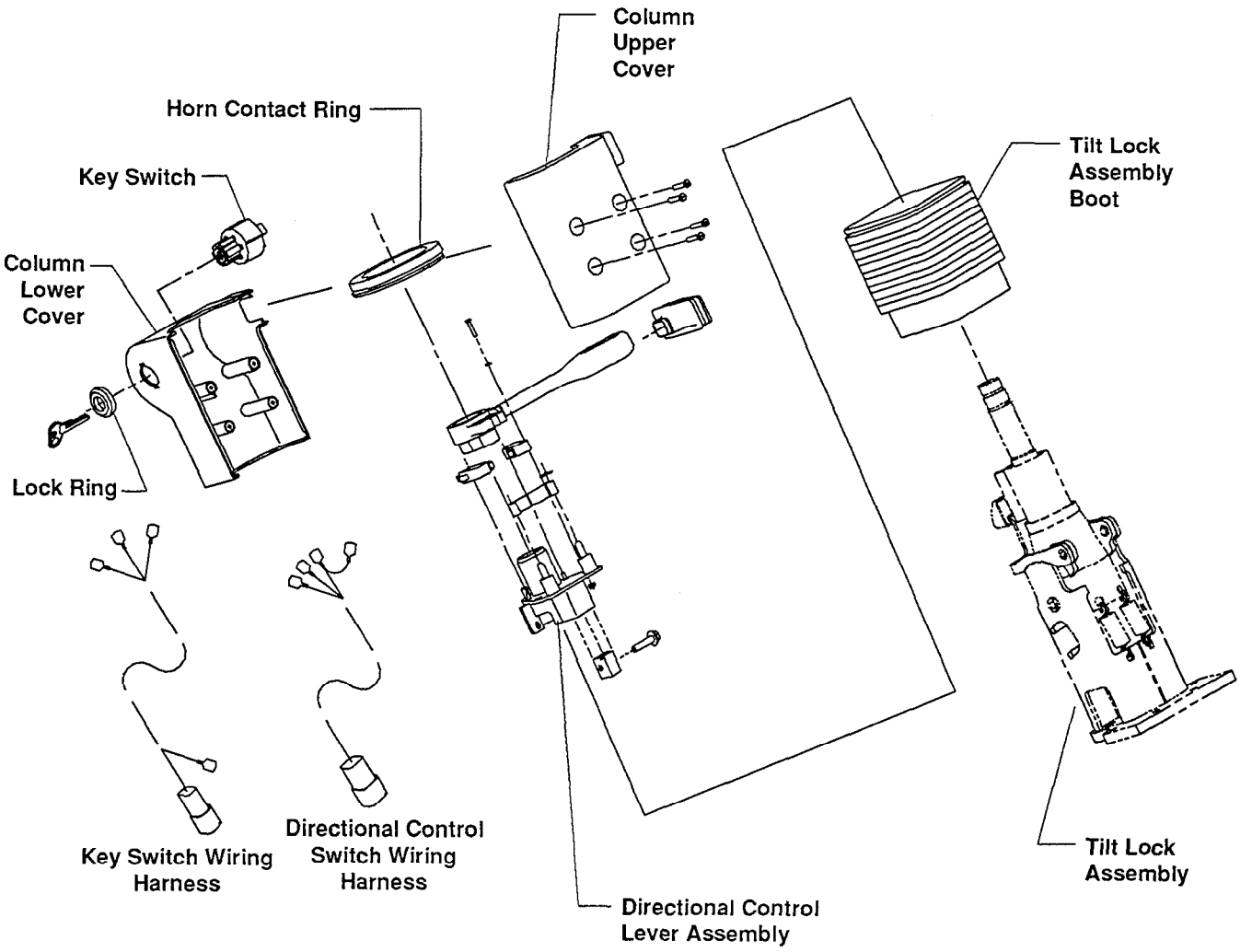

Copyrighted Material
Intended for CLARK dealers only
Do not sell or distribute

https://truckmanualshub.com/

Section 2

Steering System Troubleshooting

No steering

- Hydraulic fluid level very low.
- Air in hydraulic oil.
- Steering column sections not connected properly.
- Hose broken.
- Steer pump contaminated or defective.

Hard steering

- Hydraulic fluid level low.
- Air in hydraulic oil.
- Steering gear contaminated or defective.
- Relief valve setting too low; adjust or replace.
- System leaking.
- Axle load too heavy.
- Lack of lubrication.
- Defective steering gear.

High number of handwheel turns

- Steering cylinder seal leakage.
- Worn steering gear.

Steering handwheel spins freely

- Air in system (cavitation).
- Low oil supply.
- Steering column detached from steering gear.
- Defective steering gear.

Jerky steering

- Steering gear malfunction because of worn parts or contamination. Steering gear may require overhaul.

Truck turns in wrong direction

- Hydraulic lines not installed correctly.

Handwheel kickback

- Check valve faulty (or not in system).

Slow steering response

- Oil viscosity too high.
- Contaminated or defective steering gear.

Chatter conditions

- Loose mountings or linkage. Make certain all mounting fasteners and other linkage is tight.
- Pressure relief valve set too low and is out of adjustment; adjust or replace the relief valve.
- Insufficient pump flow. Check pump for leaks and see Section 5 of this Group..

Unsatisfactory steering in either direction

- Air in system due to excessive wear in steering cylinder. Check for air in system. Excessive noise or foamy condition of hydraulic fluid indicates aeration. Check that air is not entering the system through poor threads, cracked, split, or worn hoses, bad pump seals, bad O-rings, bad gaskets, or loose connections.

  Worn cylinders result in leakage past the piston. Overhaul (see Group 26, Section 6) or replace the steer cylinder.
- Incorrect system pressure due to worn pump. Replace the relief valve or repair or replace the steer pump .

Noise during turns

- Worn bearing(s) in steering arm; replace bearings.
- Worn pin in steering knuckle; replace pin.
- Worn bearings in steering knuckle; replace bearings.
- Steering knuckle is loose; tighten castle nut.

Copyrighted Material
Intended for CLARK dealers only
Do not sell or distribute

https://truckmanualshub.com/

Constant noise from steering axle

- Loose or worn hub bearing cones. Adjust or replace hub bearing cones. Replace bearing cones and bearing cups as a set.

Noise when axle pivots

- Steering axle mountings worn; replace mountings.
- Steering axle mounting cap(s) loose; tighten mounting cap(s).

Fluctuating pressure

- Faulty operation of relief valve. Fluctuating pressure or loss of pressure in the system is usually caused by scales, chips, sludge, or filings that have lodged between the relief valve and seat. A damaged spring or worn valve may also be the cause of the trouble. Flush and refill the system and replace the hydraulic return line filter element. If condition still exists, replace the steer pump.

Low pressure at the pump

- Refer to the pump troubleshooting and overhaul procedures in Group 26.

Low pressure at the steering gear

- Refer to Group 26.

Steer cylinder rod binding or sticking

- Binding of linkage. With hydraulic flow shut off from the cylinder and the rod end uncoupled, the rod should slide freely in or out by hand. If the piston is binding, overhaul or replace the cylinder.

Copyrighted Material
Intended for CLARK dealers only
Do not sell or distribute

https://truckmanualshub.com/

Section 3
Steering Column and Component Removal and Replacement

Steering Column and Component Removal **2**
Key Switch Removal 2
Hand Wheel, Horn Contact Ring, and Directional Control Assembly Removal 2
Column Tilt Lock Assembly Removal 4
Steering Gear and Lower Steering Column Removal 4

Steering Column and Component Replacement **5**
Steering Gear and Lower Steering Column Replacement 5
Column Tilt Lock Assembly Replacement 6
Directional Control Assembly Reassembly 6
Directional Control Assembly and Key Switch Replacement 7
Steering Hand Wheel Replacement 8

IMPORTANT

Before removing any component for overhaul, make sure the correct repair parts, seals, and gasket sets are available.

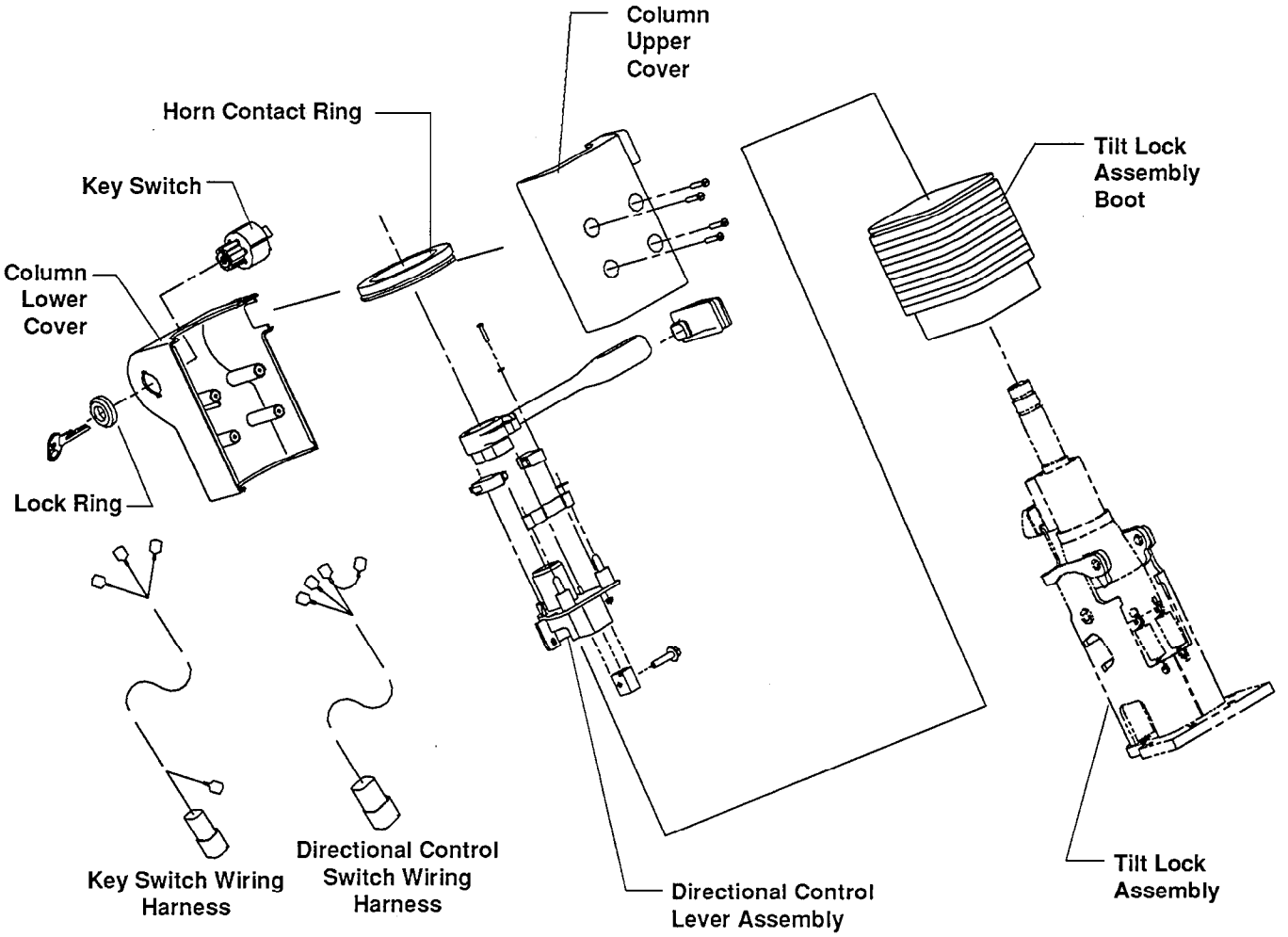

Typical Steering Column Assembly

Copyrighted Material
Intended for CLARK dealers only
Do not sell or distribute

https://truckmanualshub.com/

⚠ CAUTION

SAFE PARKING. Before working on truck:

1. **Park truck on a hard, level, and solid surface, such as a concrete floor with no gaps or breaks.**
2. **Put upright in vertical position and fully lower the forks or attachment.**
3. **Put all controls in neutral. Turn key switch OFF and remove key.**
4. **Apply the parking brake and block the wheels.**

Steering Column and Component Removal

Use the following steps to disassemble the steering column for service to the:

- Key Switch
- Horn Button
- Directional Control Lever Assembly
- Column Tilt Lock Assembly
- Upper and Lower Steer Column
- Steering Gear.

Determine which component requires service and check the procedure for removing that component. Read the procedure completely before beginning disassembly.

Key Switch Removal

1. Disconnect the battery.
2. Remove the four socket head bolts holding the two halves of the column cover together. The directional control assembly and the key switch are exposed.

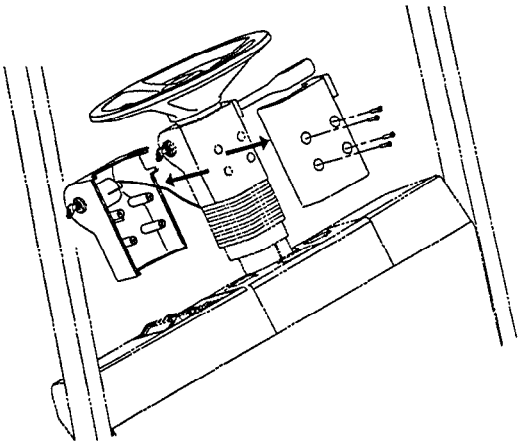

3. Remove the lock ring nut securing the key switch to the lower cover. Label all wires and terminals for correct reconnection when reassembling.

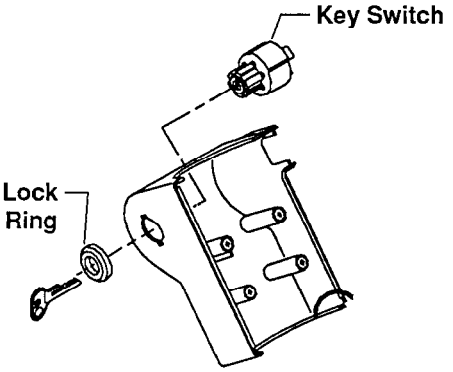

Hand Wheel, Horn Contact Ring, and Directional Control Assembly Removal

1. Disconnect the battery.
2. Gently pry the horn button from the steering hand wheel hub using a small, flat-bladed screw driver.

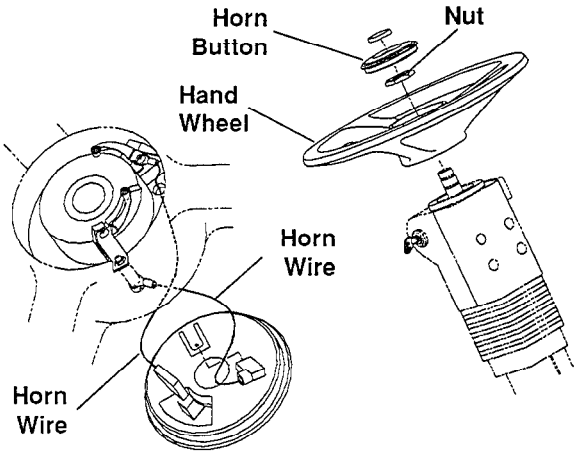

3. Disconnect the horn wire from the steer column and unplug the horn contact wires from the terminal on the bottom of the horn button.
4. Remove the nut holding the hand wheel to the steering column.
5. Use a wheel puller to remove the hand wheel from the steering column. Hand wheel has two M8X1.25 threaded inserts in the hub for this purpose.

Copyrighted material
Intended for CLARK dealers only
Do not sell or distribute

https://truckmanualshub.com/

6. Unplug the horn contact ring wire from the terminal on the bottom of the handwheel.

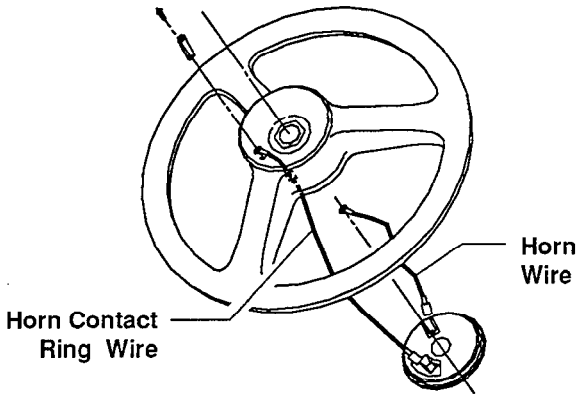

7. Using a 2.5 mm allen wrench, remove the four socket head bolts holding the two halves of the column cover together. Remove the top cover. Gently pull the bottom cover away.

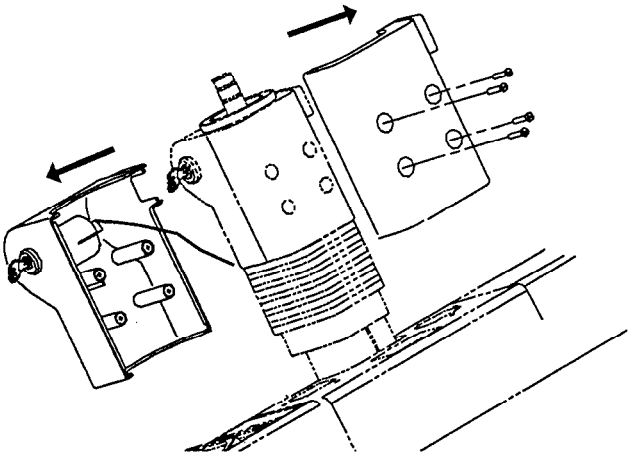

NOTE

Use care when removing the bottom cover as the ignition switch wiring is attached.

8. Remove the horn contact ring. Unplug the wire from the terminal on the bottom of the ring.

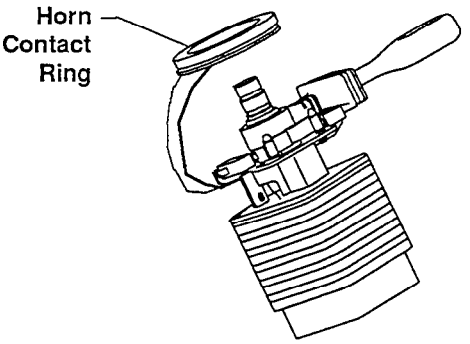

9. Lift the directional control lever and boot off the die-cast base.

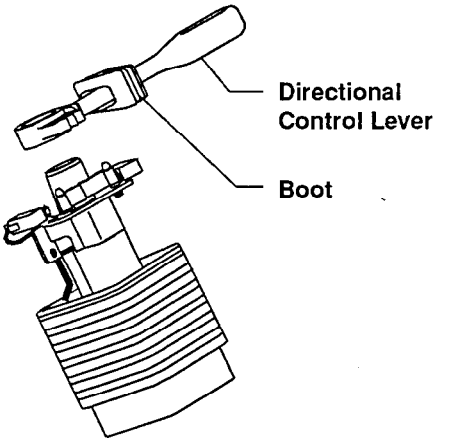

10. Unplug wires from directional switches. Label all wires and terminals for correct connection when reassembling. Remove the direction control switches by removing the mounting screws on the base.

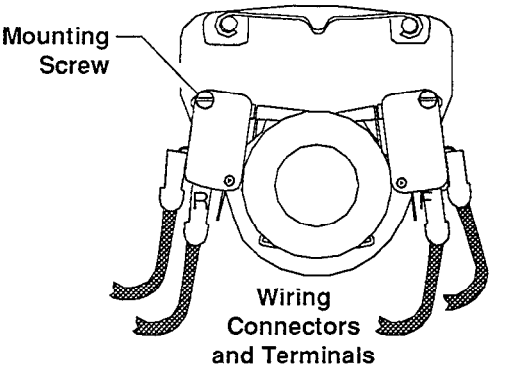

Directional Control Lever Detent Spring Removal

1. If not already disassembled, remove the four socket bolts holding the two sides of the column cover together. Remove the top cover.
2. Pry the two retainer clips from the posts on the directional control base securing the detent spring. Lift spring off posts.

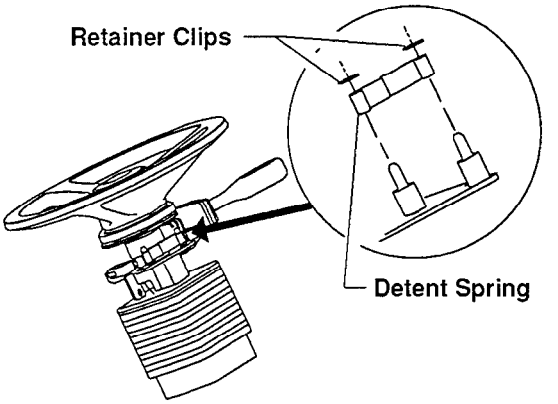

Copyrighted Material
Intended for CLARK dealers only
Do not sell or distribute

https://truckmanualshub.com/

Column Tilt Lock Assembly Removal

NOTE

The tilt lock assembly is not serviceable; only the return springs are serviceable. The tilt lock assembly should be removed only for replacement as a complete assembly.

1. See "Hand Wheel, Horn Contact Ring, and Directional Control Assembly Removal" to remove the steering hand wheel, horn ring, and directional control assembly.
2. Unplug the key switch and directional control switches. Label all wires for correct reassembly. Disconnect the key and directional control wiring harness from the main harness at lower right of cowl.
3. Loosen the pinch bolt of the lower universal joint connection.

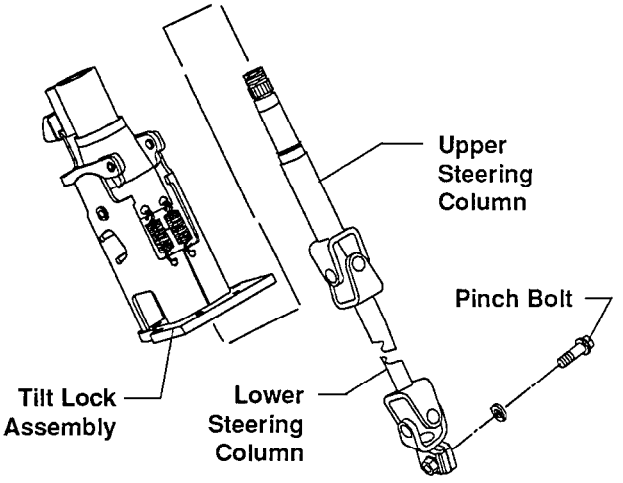

4. Remove the four bolts holding the base of the tilt lock assembly to the cowl.

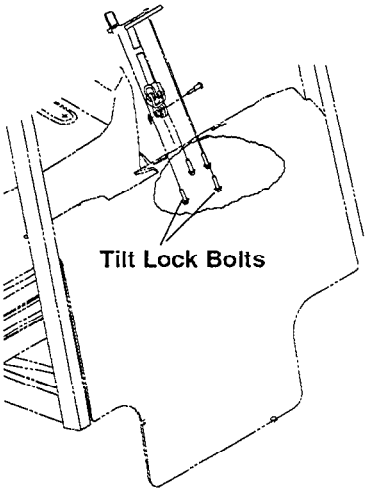

Steering Gear and Lower Steering Column Removal

NOTE

Lower steer column is not serviceable. It should be removed only for replacement as a new assembly.

1. Put a pan under the truck to catch hydraulic fluid which will drip when fittings are loosened. Label the four hose fittings of the steering gear to make sure they are reassembled correctly. Loosen and remove the hydraulic fittings at the steering gear. Cap the ends to prevent fluid leaks. Cap the steering gear ports to prevent dust and debris from getting into the steering gear. Keep hydraulic ports and hoses clean.

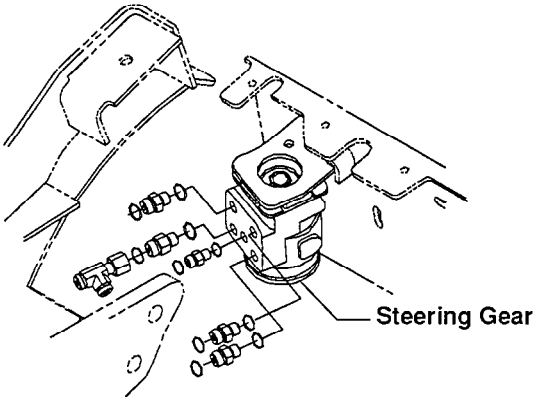

2. If upper portion of the steering column has not been removed, loosen the pinch bolt of the lower universal joint connection.
3. Remove the two bolts and spacers securing the lower column shaft and steering gear to the bracket on the lower cowl.

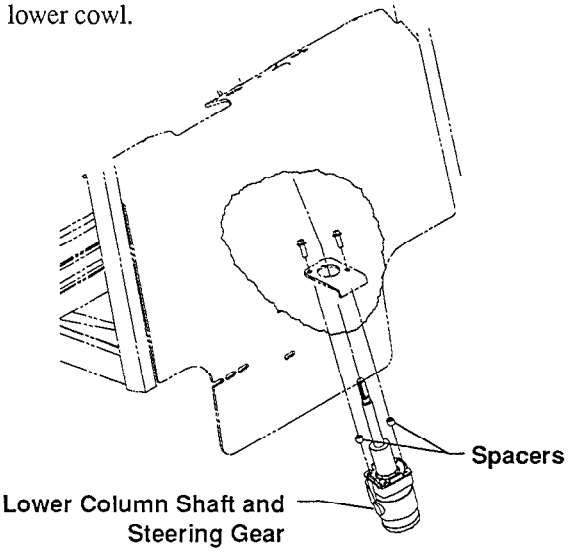

4. Remove the bolts to detach the steering gear from the lower steering column.

Copyrighted Material
Intended for CLARK dealers only
Do not sell or distribute

https://truckmanualshub.com/

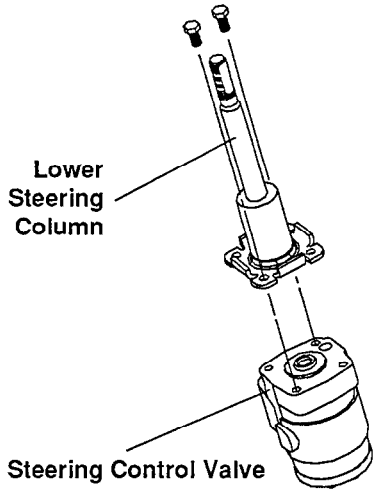

5. Remove the lower shaft and steering gear assembly from the truck.

Steer Column and Component Replacement

These steps cover the procedures for reinstallation of the steering column including the steering gear, the tilt lock assembly, directional control assembly, ignition switch, and steering hand wheel and horn.

IMPORTANT

Make sure all parts are clean and dry before reassembling.

It may be necessary to assemble the steering column in place and hand tighten fittings so that the correct alignment of the entire column and parts can be checked. Once you have the correct alignment, torque all fittings to their correct specifications.

Steering Gear and Lower Steering Column Replacement

NOTE

If the upper steering column has not been removed, the lower steering column must be left loose at the universal joint pinch connection to allow some play in the column for positioning the steering gear.

1. Attach the steering gear to the lower column base. Torque the two bolts to 34-38 N•m (25-28 ft-lb).
2. Set the column into position with the lower column assembly aligned through the bracket mounted on the lower frame cowl.

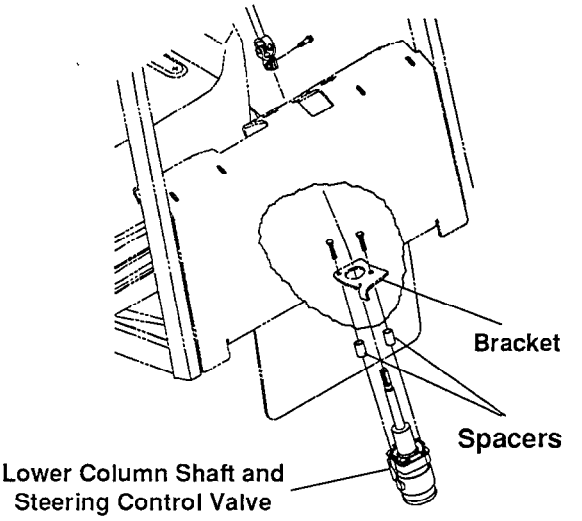

3. Coat the splines of the lower assembly with a light coat of anti-seize lubricant and insert into the universal joint pinch connector of the upper assembly. Match the skip tooth on the spline with spline on universal joint. Torque the pinch bolt to 25-30 N•m (18.5-22.25 ft-lb).
4. Reconnect the clean hydraulic fluid lines to the clean steering gear. Make sure the hoses are reconnected to the correct ports. Torque the fittings per Group 40, "Hydraulic Fitting Tightening Procedure."

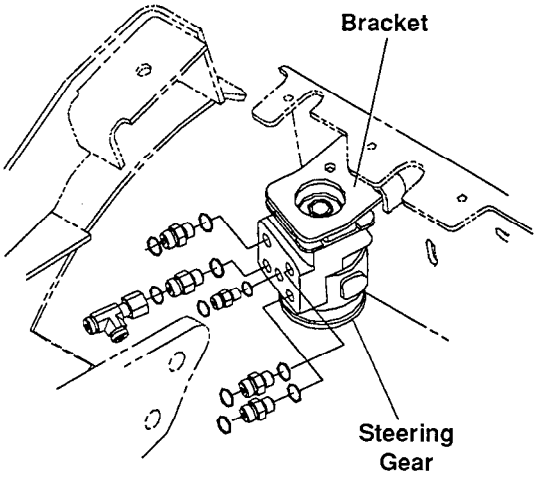

Copyrighted Material
Intended for CLARK dealers only
Do not sell or distribute

https://truckmanualshub.com/

Column Tilt Lock Assembly Replacement

1. Set the tilt lock assembly onto the cowl. Replace the four bolts and torque to 20-25 N•m (14.8-18.5 ft-lb).

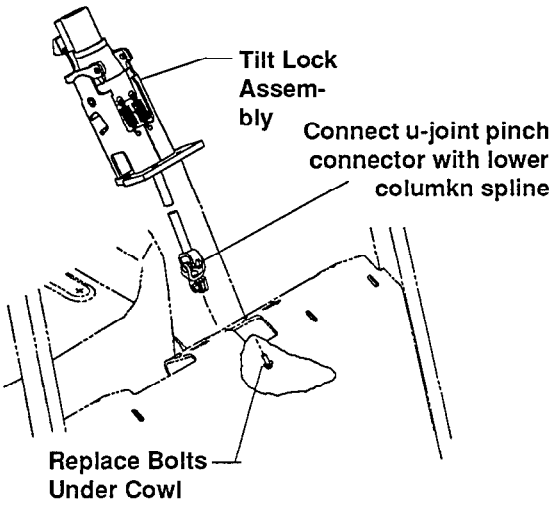

Directional Control Assembly Reassembly

1. Slip the lever boot onto the lever if it has been removed.
2. Make sure the flange capscrew and clamp are on the directional control base.

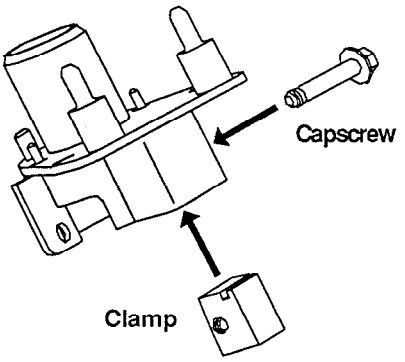

3. Install the detent spring on the posts of the base and secure with the retainer clips.

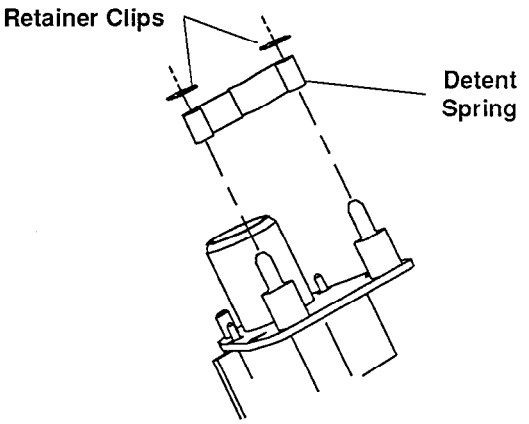

4. Reset the forward or reverse switch onto the base and secure with screws.

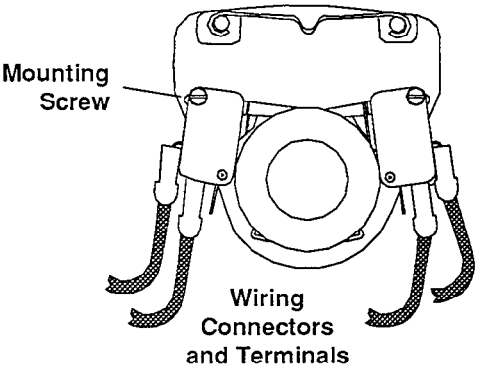

5. Apply a thin coat of grease in the bore of the directional control lever. Slip the lever onto the directional control base.

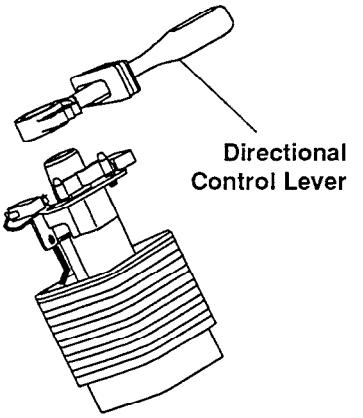

6. Tighten the capscrew/clamp of the directional control lever assembly to 3.5-4 N•m (2.5-2.9 ft-lb).

- Clean the capscrew and apply Loctite 262 before applying torque.

Copyrighted Material
Intended for CLARK dealers only
Do not sell or distribute

https://truckmanualshub.com/

7. Adjust the directional control using the following illustration:

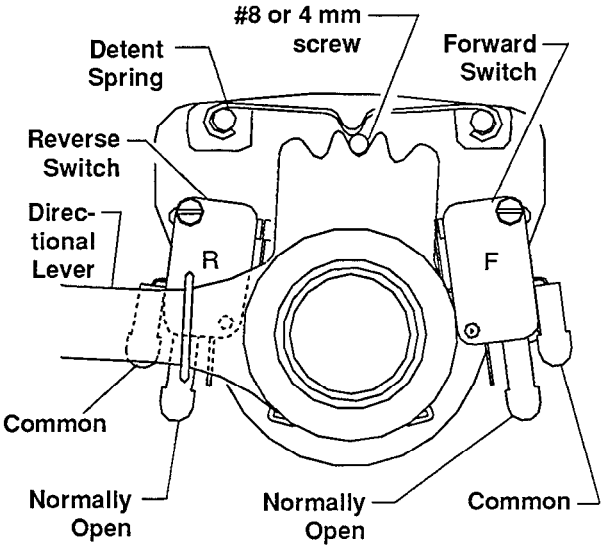

a. Loosen mounting screws and set the directional switch boxes to approximately the middle of the mounting slot on the assembly base.

b. Connect a continuity meter on the forward switch from the Common terminal to the Normally Open terminal. If the adjustment procedure is being performed with the directional control assembly mounted on the steering column, connect the continuity meter from the Normally Open terminal to vehicle ground.

c. Rotate the directional control lever in the forward direction (push lever up) until a #8 (or 4 mm) screw can be inserted into the middle detent on the lever.

d. Loosen the mounting screw on the forward switch and adjust the switch box to achieve continuity through the switch.

e. Remove #8 (4 mm) screw and return lever to neutral detent. Switch must break continuity, If switch does not break continuity, it must be readjusted using the above steps.

f. When adjustment is correct, torque switch box mounting screws to 0.8-1.0 N•m (7-9 in-lb; 0.6-0.73 ft-lb).

g. Repeat procedure for Reverse switch.

Directional Control Assembly and Key Switch Replacement

1. Disconnect the battery.

2. Slip the directional control assembly onto the steering column shaft.

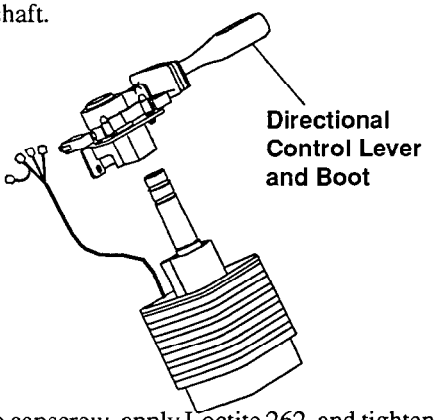

3. Clean the capscrew, apply Loctite 262, and tighten the clamp bolt of the assembly to 3.5-4 N•m (2.5-2.9 ft-lb).

4. Check the assembly for smooth operation and make necessary adjustments before proceeding.

5. Connect the wiring to the directional control switches according to the labels you made during disassembly.

7. Set the key switch into the mounting hole on the lower half of the column cover. Tighten the lock ring nut to 10-14 N•m (7.5-10.3 ft-lb).

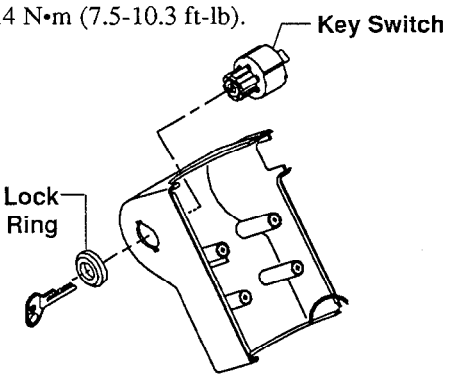

8. Reconnect the horn contact ring wires to the horn contact ring.

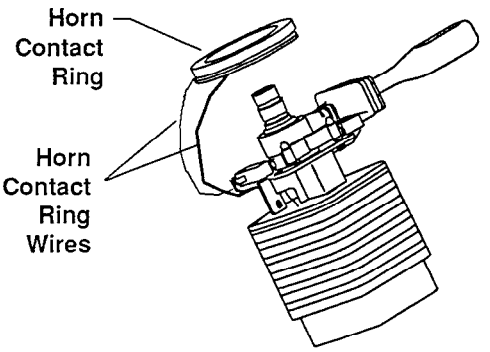

Copyrighted Material
Intended for CLARK dealers only
Do not sell or distribute

https://truckmanualshub.com/

9. Slip the horn contact ring onto the steering column. The groove in the ring should be on the lower portion of the ring when it is replaced on the column. The terminal should be on the right-hand side of the truck.

10. Join both halves of the cover over the upper column. The parting line of the boot must be aligned with the parting line of the two cover halves. Set the directional control lever boot into the correct position. The horn ring contact should be positioned so that the two cover halves fit the groove in the ring. Tighten the four socket bolts to 2-3 N•m (1.5-2.25 ft-lb).

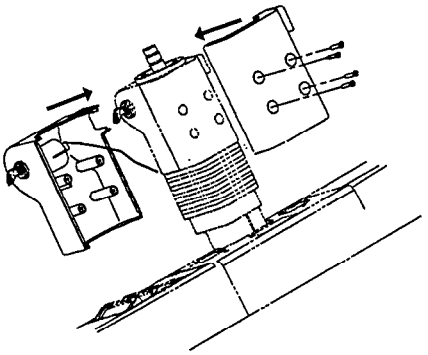

Steering Hand Wheel Replacement

1. Reconnect the horn contact ring wire from the base of the handwheel to the bottom of the horn button.

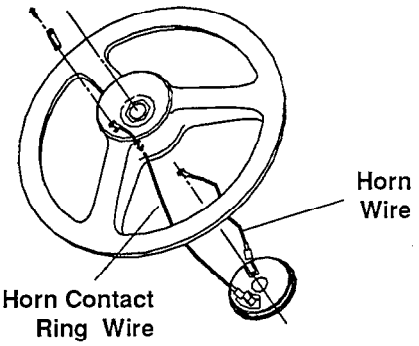

2. Apply a coat of insulating paste (Clark part no. 2802205) to horn contact ring, then set the handwheel into position and tap with a rubber or plastic mallet to seat it on the column.

3. Tighten the nut onto the column to a torque of 35-40 N•m (25.5-29.5 ft-lb).

4. Screw the horn wire into the column and plug it into its connection on the bottom of the horn button.

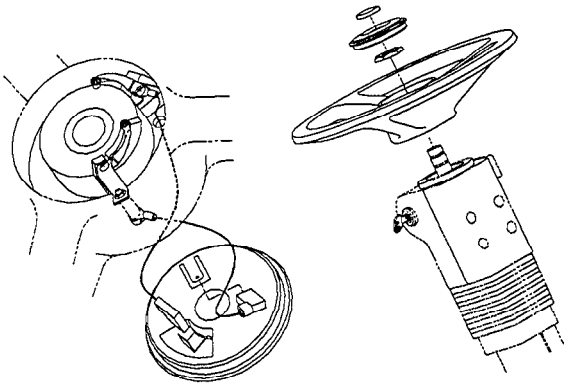

5. Set the horn button into place and pop it into position carefully. The horn symbol should be parallel to the CLARK lettering on the hand wheel.

6. Reconnect the battery.

7. Replace the center cowl cover over the steering column. See Group 38 for instructions to replace the cowl covers. Torque the screws to 8-10 N•m (5.5-7.5 ft-lb).

IMPORTANT

If you set the column loosely into place to assure correct alignment, recheck that all mounting brackets, the universal pinch joint, and all fasteners are torqued to their correct limits. See the individual steps in the reassembly procedures to find torque limits.

Turn the key switch ON to check it's function. Make sure no fluid leaks are evident in the steering control valve hydraulic fittings. Remove the wheel chocks to check all functions of the steering column, including directional controls, tilt lock mechanism, and steering gear for correct operation before returning the truck to service.

Reproduced Material
Intended for CLARK dealers only
Do not sell or distribute

https://truckmanualshub.com/

Section 4

Steering System Relief Pressure Check and Adjustment

⚠ CAUTION

SAFE PARKING. Before working on truck:

1. **Park truck on a hard, level, and solid surface, such as a concrete floor with no gaps or breaks.**
2. **Put upright in vertical position and fully lower the forks or attachment.**
3. **Put all controls in neutral. Turn key switch OFF and remove key.**
4. **Apply the parking brake and block the wheels.**

Description and Operation

Steering system relief pressure settings above the specified values can cause failure of the steer lines, damage to seals in the steering gear, and steering linkage breakage on the steer axle.

The steering system's pressure relief valve is part of the main hydraulic pump assembly. Steering system relief pressure is adjustable and should be checked if indicated by troubleshooting. Use the gauge port on the pump to check steering relief pressure.

Steering system relief pressure setting should be 7587 kPa (1100 psi).

NOTE

If relief pressure is not correct, the problem may be caused by dirt in the valve or relief valve on the steer pump or worn parts in the steering control valve or steer pump.

⚠ WARNING

Do not use your hands to check for hydraulic leakage. Use a piece of cardboard or paper to search for leaks. Escaping fluid under pressure can penetrate the skin causing serious injury. Relieve pressure before disconnecting hydraulic or other lines. Tighten all connections before applying pressure. Keep hands and body away from pinholes and nozzles which eject fluids under high pressure.

If any fluid is injected into the skin, it must be surgically removed within a few hours by a doctor familiar with this type of injury or gangrene may result.

Steering System Relief Pressure Setting Check and Adjustment

This procedure requires installation of a pressure gauge at the gauge port on the main hydraulic pump. The pressure is measured while the steering handwheel is turned fully in one direction to put the steering system in bypass.

Steering system relief pressure setting may be checked using a Mico Quadrigage (Clark Part No. 1800106) or with a conventional pressure gauge, 0-20,700 kPa (0-3000 psi).

1. Tilt the steering column fully forward and raise the seat deck.

Copyrighted Material
Intended for CLARK dealers only
Do not sell or distribute

https://truckmanualshub.com/

2. Remove floor plate to access steering gear.
3. Install Quadrigage at pressure inlet of steering gear.

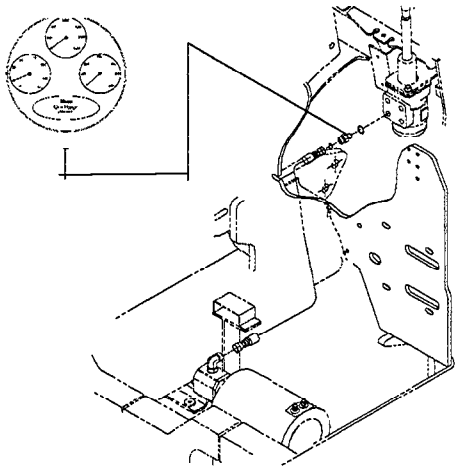

4. Put the key in the key switch and turn it on.
5. Remove the battery to access the steer pump.

NOTE

After the battery is removed, power is still needed to actuate the system for continuing adjustment. Do this by either setting the battery alongside the truck and connecting with an approved connection cable or by moving another electric truck operating on the same voltage and using it for a power source.

5. Turn the steering handwheel in one direction until steering cylinder reaches its stop (relief bypass). Hold steering handwheel in relief position until pressure reading is taken, and then release. Turn off key switch. Pressure should read 7587 kPa (1100 psi).
6. To adjust the steering pressure relief to 7587 kPa (1100 psi):
   a. Carefully pry the plug out of the relief valve body, to access the adjustor.

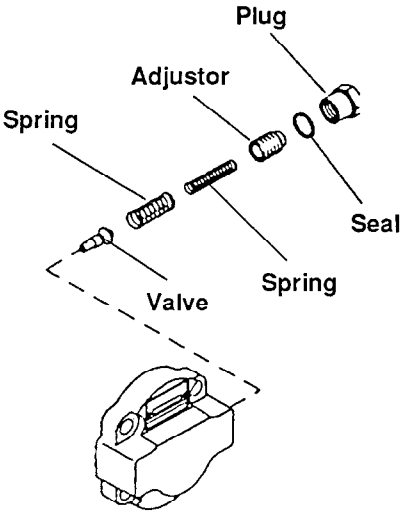

   b. Clockwise adjustment of the relief valve seat raises the pressure setting at which the valve relieves pressure; counterclockwise adjustments lowers the pressure setting at which the valve relieves pressure.
7. Turn key switch on and repeat steps to read and adjust the relief pressure setting until correct relief pressure is set.
   - Once you adjust to the correct relief pressure setting, reset the plug in the valve bore.
   - If the correct relief pressure cannot be gained, consider overhauling the steer pump or replacing the pressure relief valve. See Group 26, "Steer Pump Overhaul" for instruction to remove, overhaul or replace the pump or the relief valve.
8. Disconnect the pressure gauge and reinstall the floor plate.

Copyrighted Material
Intended for CLARK dealers only
Do not sell or distribute

https://truckmanualshub.com/

Section 5

Steering Gear Overhaul

Disassembly **2**
Meter (Gerotor) End 2
Control End 2

Parts Inspection **4**

Reassembly **4**
Control End 4
Meter (Gerotor) End 6

IMPORTANT

Before removing any component for overhaul, make sure the correct repair parts, seals, and gasket sets are available.

⚠ CAUTION

Because of unsatisfactory results of field rebuilding of the Gerotor Unit, the manufacturer recommends that only bearing and seal replacement be attempted in the field and that unit rebuilding be done only by qualified rebuilders. Clark Material Handling Company agrees with this. If field rebuilding is absolutely necessary, the rebuilt unit should be thoroughly tested after reinstallation in the truck. Extreme cleanliness is critical to successful rebuilding of these units.

Copyrighted Material
Intended for CLARK dealers only
Do not sell or distribute

https://truckmanualshub.com/

Disassembly

Cleanliness is extremely important when repairing a steering gear. Work in a clean area. Before disconnecting lines, clean port area of unit thoroughly. Use a wire brush to remove foreign material and debris from around exterior joints of the unit.

NOTE

Although not all illustrations show the unit in a vise, it is recommended to keep the unit in the vise during disassembly. Follow the clamping procedures explained throughout the text.

Meter (Gerotor) End

1. Clamp unit in vise, meter end up. Clamp lightly on edges of mounting area, as shown. Use protective material on vise jaws. Do not overtighten jaws.

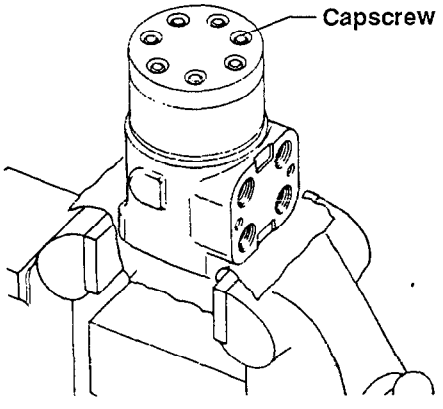

2. Remove capscrews.

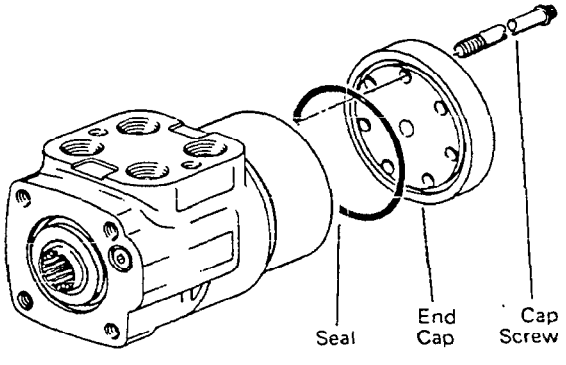

3. Remove end cap.
4. Remove seal from end cap.
5. Remove meter (gerotor). Be careful not to drop star (rotor).

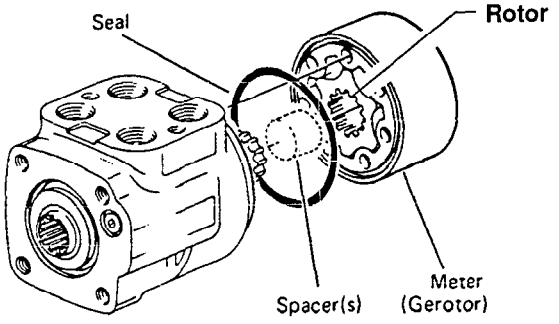

6. Remove seal from meter.
7. Remove drive spacer(s).
8. Remove drive.

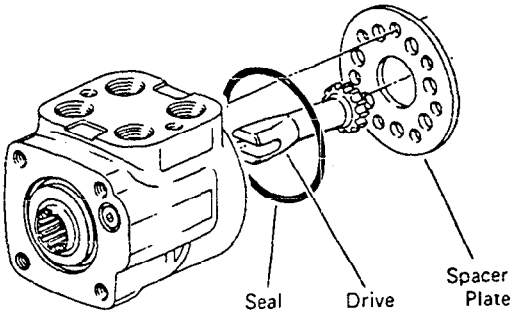

9. Remove spacer plate.
10. Remove seal from housing.

Control End

11. Remove housing from vise and place on a clean soft cloth to protect surface finish. Use a thin-bladed screwdriver to pry retaining ring from housing.

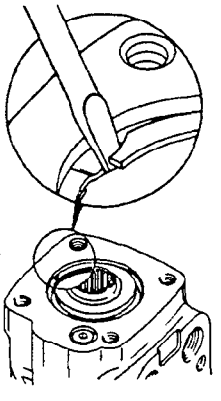

Copyrighted Material
Intended for CLARK dealers only
Do not sell or distribute

https://truckmanualshub.com/

12. Place assembly so shaft is horizontal. Rotate spool and sleeve until pin is horizontal. Push spool and sleeve assembly forward with your thumbs just far enough to free seal gland bushing from housing. Remove bushing.

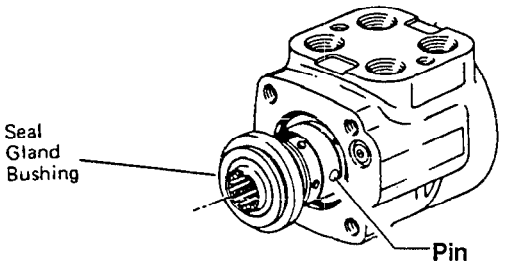

13. Remove quad ring seal from seal gland bushing.

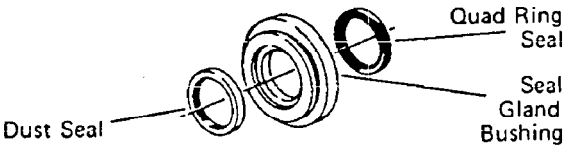

14. Use a thin-bladed screwdriver to pry dust seal from seal gland bushing. Do not damage bushing.

15. Remove two bearing races and the needle thrust bearing from spool and sleeve assembly.

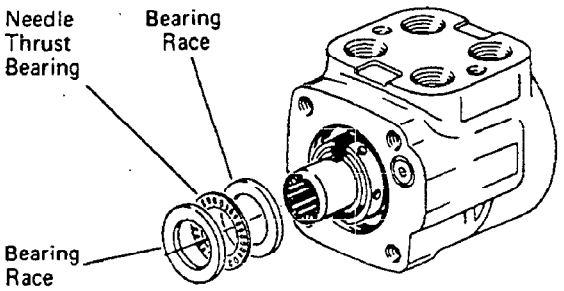

16. Remove spool and sleeve assembly from cap (14-hole) end of housing.

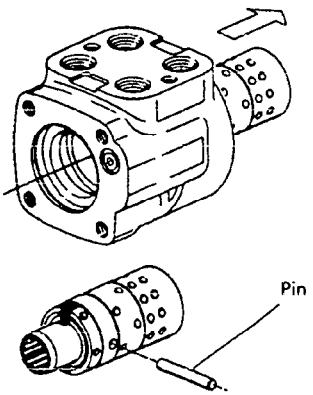

IMPORTANT

Do not bind spool and sleeve in housing. Rotate spool and sleeve assembly slowly when removing from housing.

17. Push pin from spool and sleeve assembly.

18. Push spool partially from control end of sleeve, then remove six centering springs from spool carefully by hand. Note their position in the unit before they are removed.

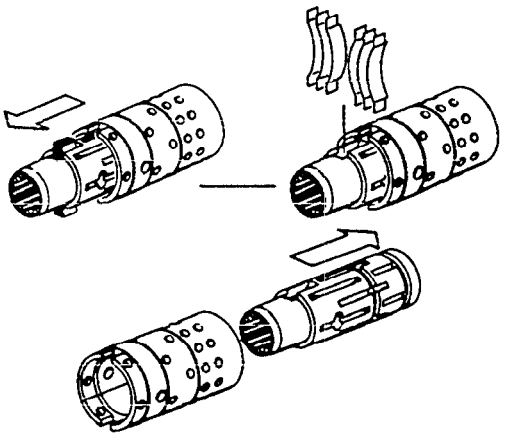

19. Push spool back through and out of sleeve. Rotate spool slowly when removing from sleeve.

20. Remove seal from housing.

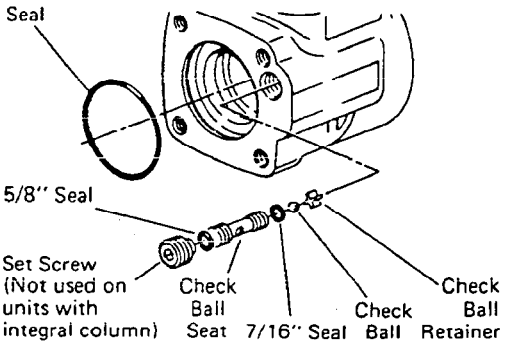

21. Remove set screw from housing.

22. Screw a 1/8-inch-24 NC machine screw into end of check ball seat. Then pull on screw with pliers to lift seat out of housing.

23. Remove two seals from check valve seat.

24. Tip housing to remove check ball and check ball retainer.

Copyrighted Material
Intended for CLARK dealers only
Do not sell or distribute

https://truckmanualshub.com/

Parts Inspection

Inspect all parts for damage, cracks, broken parts, damaged threads, corrosion or erosion of surfaces, worn spots, nicks or scratches.

Check all mating surfaces. Replace any parts that have scratches or burrs that could cause leakage. Discard all old seals and replace with new ones.

Clean all metal parts in clean solvent. Blow dry with air. Do not wipe dry with cloth or paper towel because lint or other matter can get into the hydraulic system and cause damage. Do not use a coarse grit or try to file or grind these parts.

If parts are left exposed, cover them with a clean cover to prevent airborne dust from collecting on them.

Reassembly

Refer to Service Parts Book when ordering replacement parts. A good service policy is to replace all old seals with new seals at overhaul.

NOTE

Lubricate all seals (with exception of new quad ring seal) with clean petroleum jelly such as Vaseline.

Do not use excessive lubricant on seals for meter (gerotor) section.

Make sure all parts are clean and free of dust. Before assembly, lightly coat all internal metal parts with oil.

Control End

1. Use a needle-nosed pliers to lower check ball retainer into check valve hole of housing. Make sure retainer is straight (not tilted on edge) in housing.

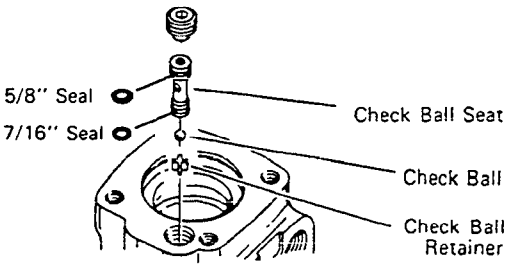

2. Install check ball in housing.
3. Lubricate 5/8-inch diameter seal and 7/16-inch diameter seal. Install seals on check ball seat, as above.
4. Lubricate check ball seat and seals thoroughly before installing seat in housing. When installing seat do not twist or damage seals. Install check ball seat in housing; insert open end of seat first. Push check ball seat to bottom of hole.
5. Install set screw. Use a 5/16-inch Allen wrench to torque set screw to 11 N•m (100 in-lb; 8.3 ft-lb). To prevent interference of parts, make sure top of set screw is slightly below housing mounting surface.
6. Assemble spool and sleeve carefully so that the spring slots line up at the same end. Rotate spool while sliding parts together. Some spool and sleeve sets have identification marks; align these marks. Test for free rotation. Spool should rotate smoothly in sleeve with finger tip force applied at splined end.

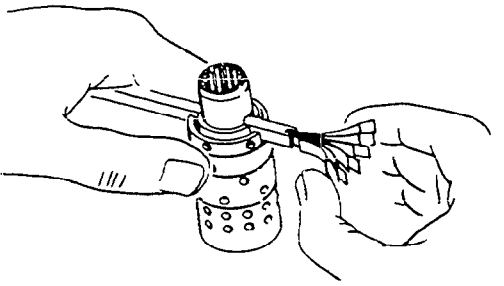

7. Bring spring slots of both parts in line and stand parts on end of bench. Insert spring installation tool (available as Part No. 6000057) through spring slots of both parts. Position three pairs of centering springs (or two sets of 3 each) on bench so that extended edge is down and arched center section is together. In this position, insert one end of entire spring set into spring installation tool, as shown.

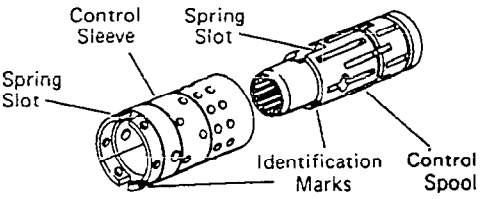

On those units which use the low torque centering springs, there are two pairs of centering springs (or two sets of each) and one pair (two) spring spacers. The spring spacers are installed together between the two sets of centering springs. The installation procedure is the same as that used on the standard (three pairs of centering springs) units.

Copyrighted Material
Intended for CLARK dealers only
Do not sell or distribute

https://truckmanualshub.com/

8. Compress extended end of centering spring set and push into spool sleeve assembly withdrawing installation tool at the same time.

9. Center the spring set in the parts so that they push down evenly and flush with the upper surface of the spool and sleeve.

10. Install pin through spool and sleeve assembly until pin becomes flush at both sides of sleeve.

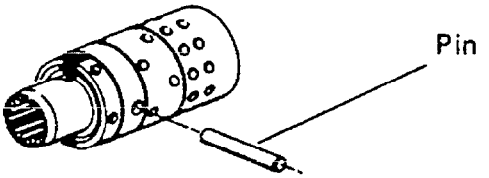

11. Position the spool and sleeve assembly so that the splined end of the spool enters the 14-hole end of housing first.

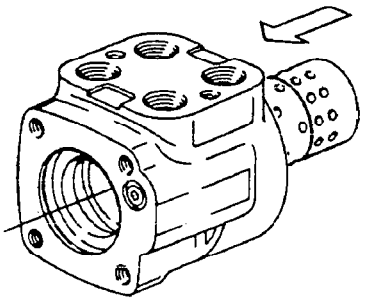

IMPORTANT

Be extremely careful that the parts do not tilt out of position while being installed. Push parts gently into place with slight rotating action; keep pin nearly horizontal. Push the spool assembly entirely within the housing bore until the parts are flush at the meter end or 14-hole end of housing. Do not push the spool assembly beyond this point to prevent the cross pin from dropping into the discharge groove of the housing. With the spool assembly in this flush position, check for free rotation within the housing by turning with light finger tip force at the splined end.

12. Place housing on clean, lint free cloth. Install 2-1/8-inch diameter seal in housing.

13. Install two bearing races and the needle thrust bearing in the order shown.

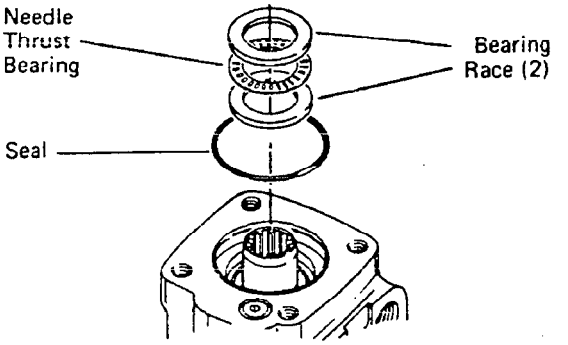

14. Install 25mm (1-in) diameter dust seal in seal gland bushing; flat or smooth side of dust seal must face down towards bushing.

15. Install dry quad ring seal in seal gland bushing. Smooth seal in place with your finger. Do not use any seal that falls freely into pocket of bushing. Seal should not "fall" into place but should require light force to seat.

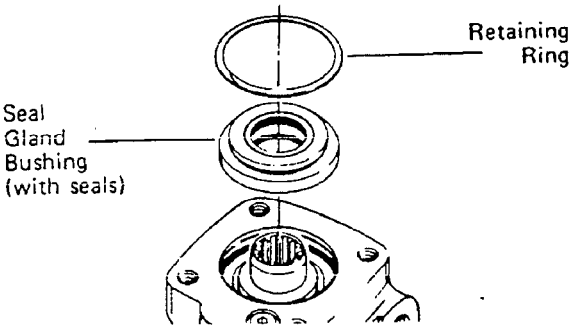

Copyrighted Material
Intended for CLARK dealers only
Do not sell or distribute

https://truckmanualshub.com/

16. Install seal gland bushing over the spool end with a twisting motion. Tap the bushing in place with a rubber hammer. Make sure the bushing is flush against the bearing race.

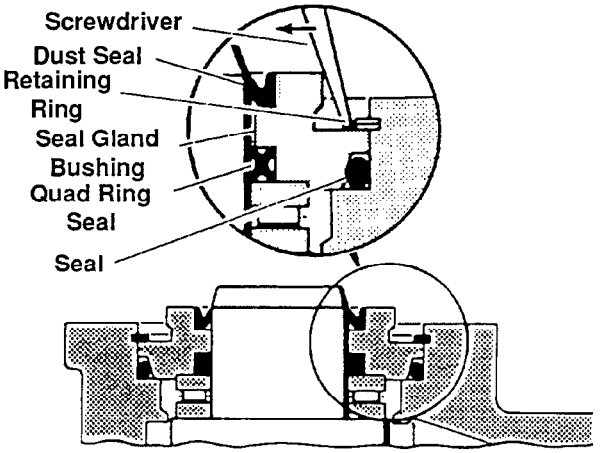

17. Install retaining ring in housing. After installing ring, tap on ring or pry with screwdriver around entire circumference of ring to properly seat ring in groove.

18. Clamp housing in vise, as shown. Clamp lightly on edges of mounting area. Do not overtighten jaws.

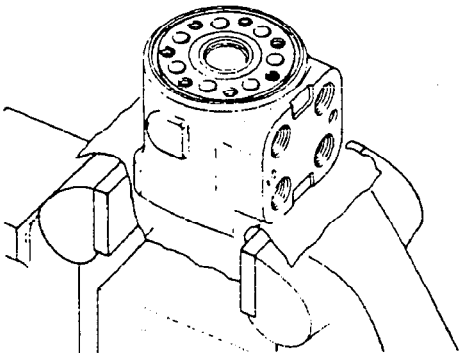

NOTICE

Check to ensure that the spool and sleeve are flush or slightly below the surface of the housing.

IMPORTANT

Clean the upper surface of the housing by wiping with the palm of clean hand. Clean each of the flat surfaces of the meter section parts in a similar way when ready for reassembly. Do not use cloth or paper to clean surfaces.

19. Install 73.5 mm (2.89 in.) ID seal in housing.

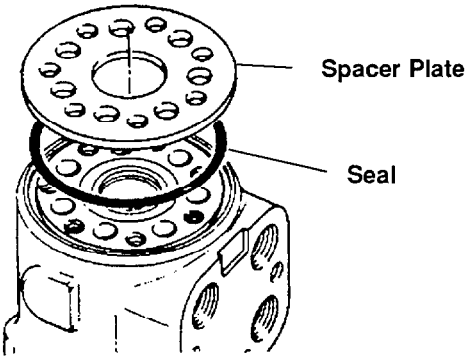

20. Install spacer plate. Align bolt holes in spacer plate with tapped holes in housing.

21. Rotate spool and sleeve assembly until pin is parallel with port face. Install drive, making sure you engage drive with pin.

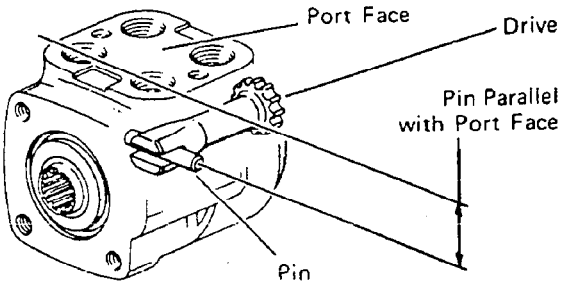

IMPORTANT

Failure to properly install drive and pin may cause unit to self steer.

NOTE

To assure proper alignment, mark spline end of drive shaft with a line parallel to slot on other end, before installing.

Copyrighted Material
Intended for CLARK dealers only
Do not sell or distribute

https://truckmanualshub.com/

22.Install 73.5 mm (2.89 in.) seal in meter (gerotor).

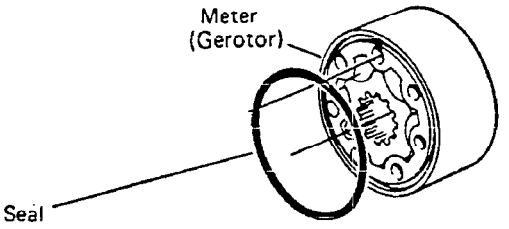

23. With seal side of meter toward spacer plate, align star valleys on drive. Note the parallel relationship of reference lines A, B, C, and D in figure. Align bolt holes without disengaging meter from drive. Be sure star has engaged drive spline in position shown.

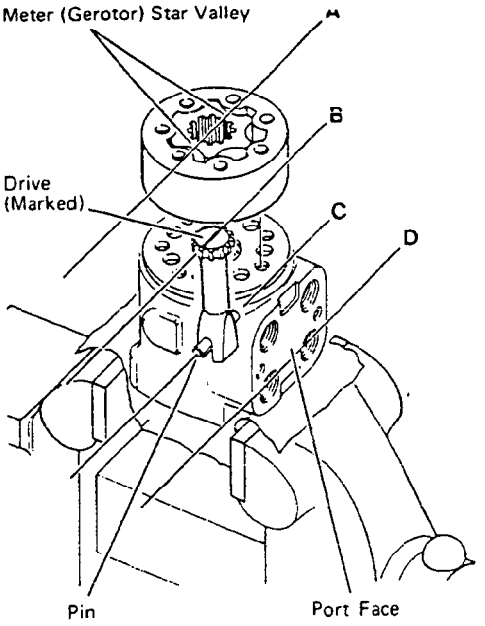

A

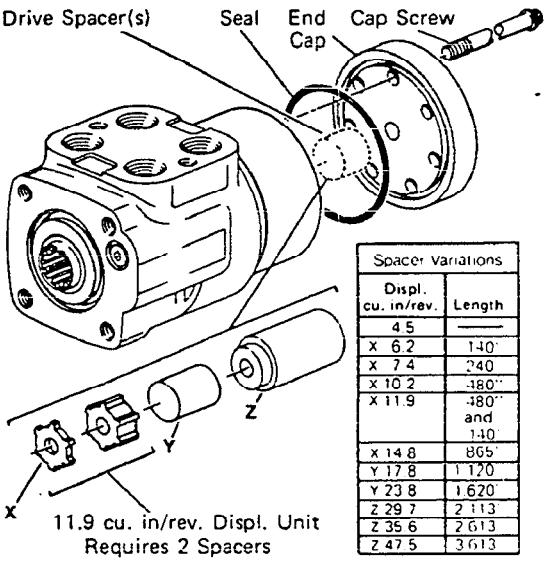

Spacer Variations	
Displ. cu. in/rev.	Length
4.5	——
X 6.2	140"
X 7.4	240
X 10.2	.480"
X 11.9	.480" and .140"
X 14.8	865"
Y 17.8	1.120
Y 23.8	1.620
Z 29.7	2.113
Z 35.6	2.613
Z 47.5	3.613

24. Install drive spacer(s) when used, in meter.

25. Install 73.5 mm (2.89 in.) seal in end cap.

26. Install end cap on gerotor, and align holes.

27. Install 7 dry cap screws in end cap. Pretighten screws to initial torque of 17 N•m (150 in-lb), then torque screws to final torque of 31 N•m (275 in-lb) in the sequence shown.

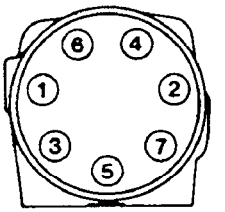

28. Inspect the assembly to be sure all parts have been installed and fasteners correctly installed and tightened.

(Reprint courtesy of EATON Corporation)

Copyrighted Material
Intended for CLARK dealers only
Do not sell or distribute

https://truckmanualshub.com/

GROUP 26

STEERING AXLE

Steering Axle Specifications and Description ..... Section 1

Steer Wheel Bearing
Maintenance and Adjustment ..... Section 2

Steering Axle Removal and Installation ..... Section 3

Steering Axle Overhaul ..... Section 4

Steering Cylinder Removal and Installation ..... Section 5

Steering Cylinder Overhaul ..... Section 6

Steering Pump Removal and Installation ..... Section 7

Steering Pump Overhaul ..... Section 8

Copyrighted Material
Intended for CLARK dealers only
Do not sell or distribute

https://truckmanualshub.com/

Section 1

Steer Axle Specifications and Description

Specifications

Steering System Relief Pressure Setting: 7585 kPa (1100 psi).

Steer Cylinder Type: Double-acting, piston-type.

Turning Radius: ECG 20 w/30.5 Batt=69.4in (1762.9 mm)
ECG 20 w/34.5 Batt=73.5in (1867.0 mm)
ECG 25 w/30.5 Batt=71.9 in (1826.3 mm)
ECG 25 w34.5 Batt=74.1 in (1881.3mm)
ECG 30 w/30.5 Batt=73.1 in (1857.3mm)
ECG 30 w/34.5 Batt=76.0 in (1930.5mm)
ECG 32 w/34.5 Batt=77.3 in (1962.3mm)

Fastener Torques

Steer Axle Mounting Bolts: 170-190 N•m (125-140 ft-lb)

Cylinder to Axle Mounting Bolts: 280-320 N•m (205-234.5 ft-lb)

Steering Link to Steering Knuckle Nuts: 135-150 N•m (98-110 ft-lb)

Steer Knuckle King Pin Castle Nuts: See installation procedures in Section 4, "Steer Axle Overhaul."

Service Intervals

Steering Linkage Inspection and Lubrication: Every 50-250 hours and each PM.

Steer Wheel Bearing Inspection and Lubrication: Every 50-250 hours of operation.

Steer Cylinder Seals Leakage Check: Every 50-250 hours and each PM.

Steer Axle Mounting Inspection: Every 50-250 hours and each PM.

Power Steering Relief Pressure Check: Every year or 2000 hours of operation.

Description

The steer axle has the steer cylinder, steer knuckles, and steering links mounted on it. All these components can be removed, serviced, and replaced.

The steering gear (steering control unit) at the base of the steering column directs hydraulic fluid to one end or the other of the steer cylinder to pivot the steer wheels.

The steer axle is bolted to the truck frame. The steer cylinder is connected to the steering knuckles by steer links. Mounting trunnions allow the axle to tilt independently of the truck and "silent" mounts cushion the axle on the trunnions.

All bearings used in the steer axle linkage have lubrication fittings and are serviceable. Axle removal, replacement, and service for all components, including overhaul of the steer cylinder, is explained in the Sections for this Group.

Copyrighted Material
Intended for CLARK dealers only
Do not sell or distribute

https://truckmanualshub.com/

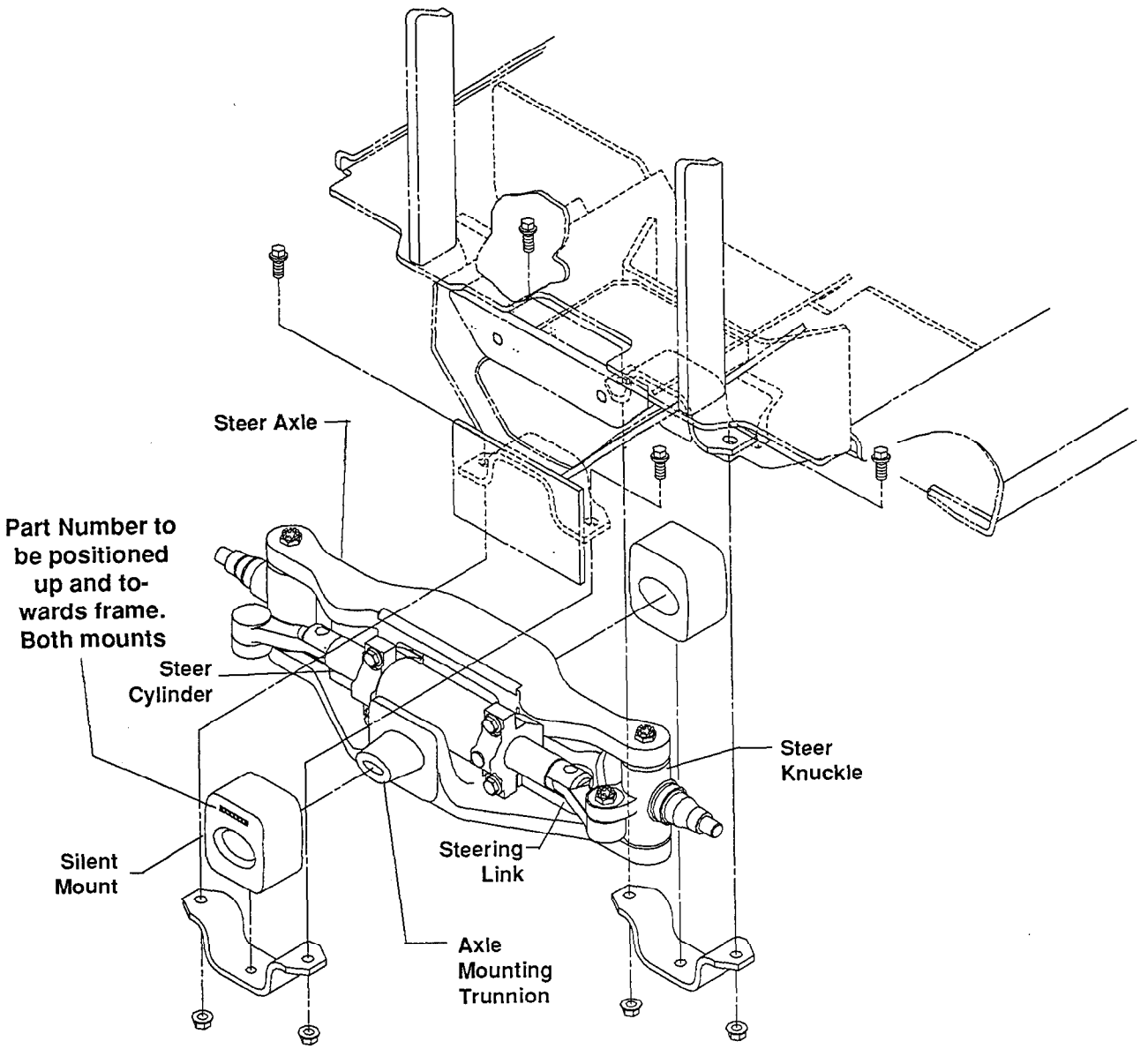

Steer Axle and Mounting

Copyrighted Material
Intended for CLARK dealers only
Do not sell or distribute

https://truckmanualshub.com/

Section 2

Steer Axle Wheel Bearing Maintenance and Adjustment

Wheel Bearing Check 1

Wheel Bearing Lubrication 1
Bearing Disassembly 2
Bearing Reassembly 3

Wheel Bearing Adjustment 4

IMPORTANT
Before removing any component for overhaul, make sure the correct repair parts, seals, and gasket sets are available.

⚠ CAUTION
SAFE PARKING. Before working on truck:
1. **Park truck on a hard, level, and solid surface, such as a concrete floor with no gaps or breaks.**
2. **Put upright in vertical position and fully lower the forks or attachment.**
3. **Put all controls in neutral. Turn key switch OFF and remove key.**
4. **Apply the parking brake and block the wheels.**

Wheel Bearing Check

A wheel bearing check should be performed every PM. Wheel bearings need adjustment only after 2000 hours or as needed. It is recommended that you clean and repack the bearings before adjustment. Check hourmeter total hours and refer to the truck's PM schedule. See steer wheel bearing lubrication procedure below.

To check the steer wheel bearings for excessive free play or looseness:

1. Grasp the wheel with both hands and try to move it by a rocking motion top-to-bottom.
2. Try to pull it in and out along the wheel spindle.

Watch for excessive free movement in wheel bearings or steering knuckle bearings. There should be a small amount of free movement. If the wheel has excessive free movement, the bearings require additional service and/or adjustment.

Wheel Bearing Lubrication

These procedures cover bearing lubrication for the cushion-tire wheels with the bearings installed in the wheel. Use the procedures to clean, repack and adjust bearings.

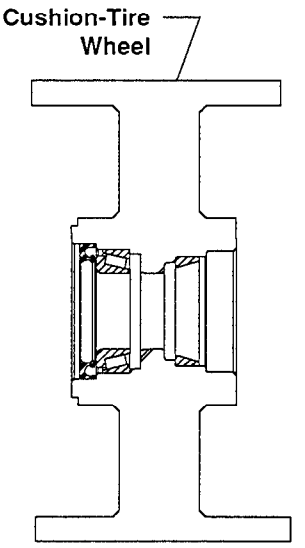

Cushion-tire wheel-bearing assembly.

Copyrighted material
Intended for CLARK dealers only
Do not sell or distribute

https://truckmanualshub.com/

Bearing Disassembly

1. Be sure truck is parked and blocked up correctly and safely to raise steer wheels off the floor. Refer to "Lifting, Jacking, and Blocking," in the Group "SA."

NOTE

Because of the heavy weight of the wheel and tire, it is suggested to first remove the wheel and tire assembly from spindle when servicing the bearings to avoid damage to the grease seal when the wheel hub is moved off or on the spindle. It also makes the work simpler and easier.

2. Refer to the exploded view illustration of the wheel bearing assembly.. Loosen and remove the hubcap from wheel or hub. You may have to lightly tap hub cap with a hammer and chisel and use a pry bar to loosen. Be careful not to damage mounting surfaces. Remove O-ring from hubcap.
3. Clean the excess grease from around the wheel nut.
4. Remove cotter pin, loosen and remove wheel nut and bearing washer.
5. Remove outer bearing by pulling out on the cushion wheel slightly to loosen bearings.

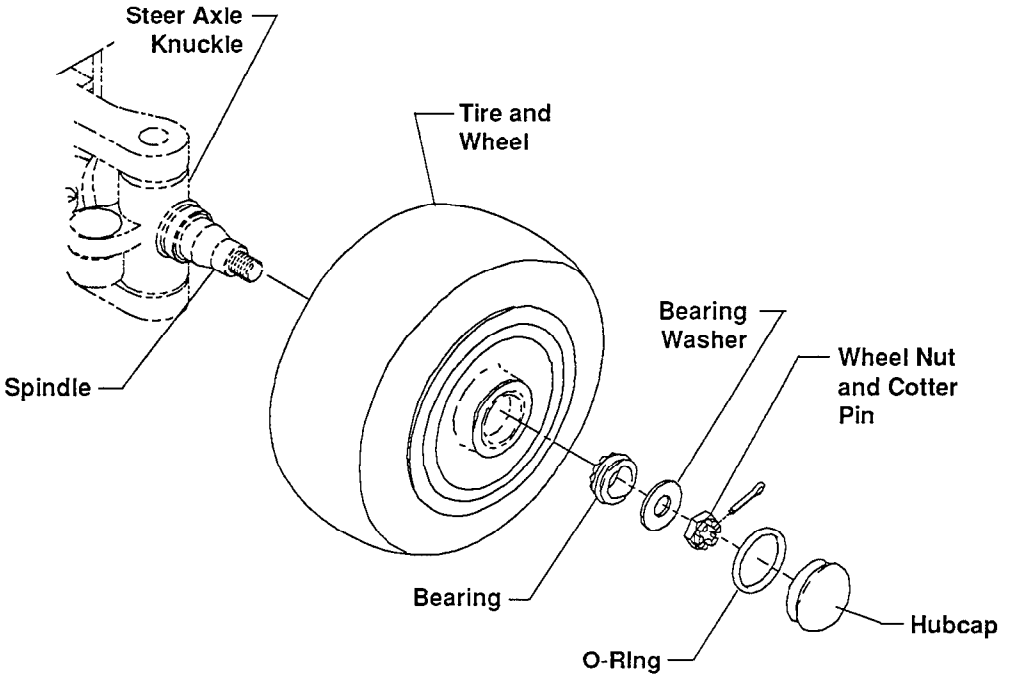

Wheel Bearing Assembly

Copyrighted Material
Intended for CLARK dealers only
Do not sell or distribute

https://truckmanualshub.com/

6. Pull the wheel or hub off the spindle. Support the wheel or hub to avoid dragging the grease seal at the back side across the thread on spindle end.
7. Clean the old grease out of center of the wheel or hub.
8. To remove inner bearing and seal, lay wheel or hub down with outer edge up (support hub on blocking). Remove the inner bearing cone and grease seal, using a brass drift pin, rod, or piece of pipe to drive the bearing and seal out of the hub.

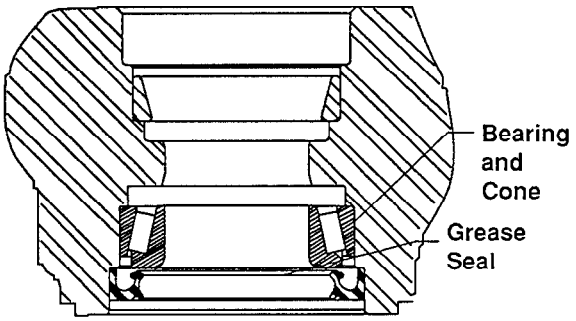

9. Clean and inspect the bearing cups and cones for wear or other damage. Replace, as necessary.

IMPORTANT

Keep serviceable bearing cups and cones matched together. Always replace bearing cups and cones as a set.

10. Inspect grease seal for wear and damage. Replace as necessary. It is recommended to install a new grease seal whenever old ones are removed.
11. Use a standard puller to remove bearing cups from hub or wheel if bearings require replacement.

Bearing Reassembly

NOTE

Use Grade No. 2 EP multi-purpose grease, Clark MS-107C.

1. Install new inner and outer bearing cups by pressing into hub or wheel. Be sure cups are fully seated in bore.

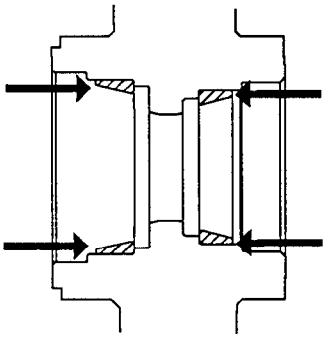

2. Pack the bearings with grease and install the inner bearing in the hub or wheel.

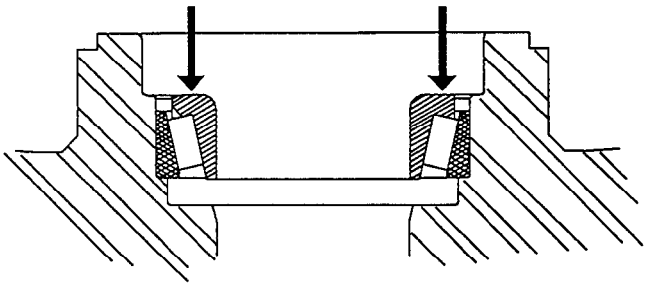

3. Pack cavity between bearing and grease seal half full with grease.
4. Install new grease seal in hub or wheel inner bore. Apply coating of grease to inside diameter of seal lips prior to assembly, then install seal in hub or wheel bore.

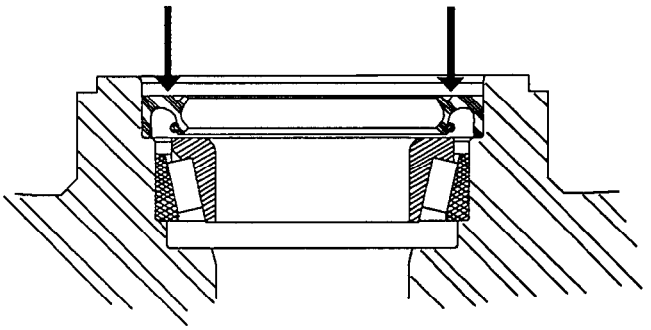

5. Carefully press or tap grease seal into place with a soft-faced mallet until seal is seated in bottom of bore.
6. Install hub or wheel on spindle. Be careful not to damage grease seal lip when moving the hub over the end of spindle and threads.
7. Pack cavity in hub between bearings one-half full with grease.

Copyrighted Material
Intended for CLARK dealers only
Do not sell or distribute

https://truckmanualshub.com/

8. Install the outer wheel bearing after it has been packed with grease.

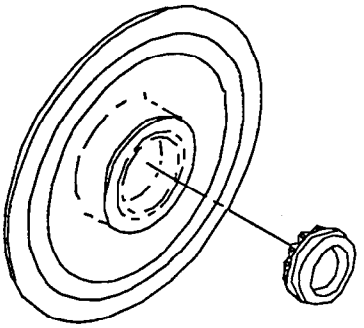

9. Install bearing washer and hand tighten wheel nut.

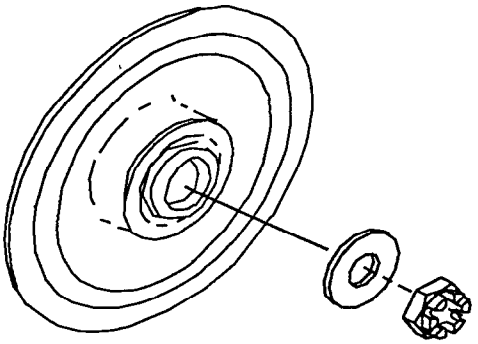

10. Rotate hub or wheel counter clockwise and torque wheel nut to 27-31 N•m (20-23 ft-lb).
11. Back wheel nut up until it is loose.
12. While turning the hub or wheel counter clockwise, torque the wheel nut to 2.3-2.8 N•m (1.7-2 ft-lb).
13. Back up wheel nut to nearest slot and install new cotter pin. Bend cotter pin tabs.
14. Recheck for correct bearing adjustment by rotating the wheel by hand. Wheel should rotate freely or with only slight "drag". Readjust bearings by adjusting wheel nut as necessary to avoid binding in bearings.
15. Pack the area around wheel nut with grease.
16. Refit O-ring on hubcap and install hubcap by tapping into place with a rubber or plastic-faced hammer.

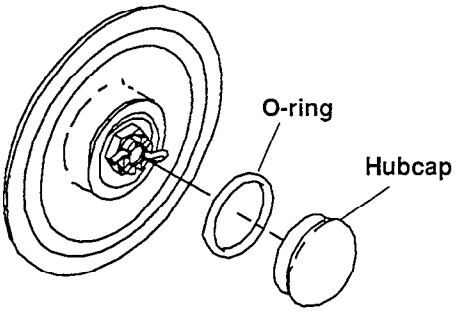

Wheel Bearing Adjustment

The steer wheel bearings are retained and adjusted by the wheel nut.

NOTE

You should clean and repack the wheel bearings before performing a wheel bearing adjustment. See "Wheel Bearing Lubrication" in this Section for the complete procedure.

⚠ CAUTION

SAFE PARKING. REFER TO PAGE 1.

1. Make sure the truck is parked on a level, hard surface, the upright is fully lowered, the drive wheels are chocked, and the steer wheels are jacked and blocked securely. Refer to "Lifting, Jacking, and Blocking" for safe procedures.
2. Remove hubcap.
3. Remove and discard cotter pin.
4. Loosen wheel nut.
5. After wheel nut is loosened, hit the top of wheel to loosen the bearings. This moves the bearings free of their seated, running position.
6. Rotate hub or wheel counter clockwise and torque wheel nut to 27-31 N•m (20-23 ft-lb).
7. Back wheel nut up until it is loose.
8. While turning the hub or wheel counter clockwise, torque the wheel nut to 2.3-2.8 N•m (1.7-2 ft-lb).
9. Back up wheel nut to nearest castellation slot and install new cotter pin.
10. Recheck for correct bearing adjustment by rotating the wheel by hand. Wheel should rotate freely or with only slight "drag". Readjust bearings by adjusting wheel nut as necessary to avoid binding in bearings.
11. Bend cotter pin tabs over.
12. Pack the area around wheel nut with grease.
13. Refit O-ring on hubcap if removed or replaced and install hubcap by tapping into place with a rubber or plastic-faced hammer.

Copyrighted Material
Intended for CLARK dealers only
Do not sell or distribute

https://truckmanualshub.com/

Section 3

Steer Axle Removal and Replacement

Steer Axle Removal 2

Steer Axle Replacement 3

Copyrighted Material
Intended for CLARK dealers only
Do not sell or distribute

https://truckmanualshub.com/

CAUTION

SAFE PARKING. Before working on truck:

1. **Park truck on a hard, level, and solid surface, such as a concrete floor with no gaps or breaks.**
2. **Put upright in vertical position and fully lower the forks or attachment.**
3. **Put all controls in neutral. Turn key switch OFF and remove key.**
4. **Apply the parking brake and block the wheels.**

Steer Axle Removal

1. Remove the counterweight before removing the steer axle. Refer to Group 38, Section 2, "Counterweight Removal and Replacement." (It is possible to remove the steer axle without removing the counterweight but much easier if it is removed).

WARNING

Do not remove the counterweight unless you have training and are familiar with the correct procedures. Counterweights can fall if not handled correctly and cause severe injury or death.

WARNING

Do not raise truck by hoisting on overhead guard or by jacking or lifting on counterweight.

2. Block the drive wheels of the truck and raise and block the rear end. Remove steer wheels. See "Lifting, Jacking, and Blocking" in Group "SA" for safe procedures to jack the truck.

CAUTION

Make sure truck is correctly raised and safely blocked using hardwood blocks under the frame. Be sure the blocking will permit installation of the axle without disturbing the blocking.

3. Loosen and remove hydraulic steering lines from steering cylinder. Plug fittings and cap open ends of lines. Keep all hydraulic fittings and openings clean.

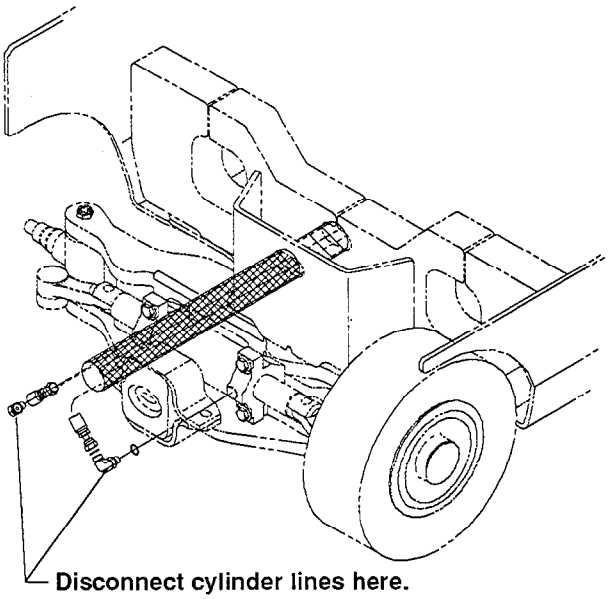

CAUTION

Axle must be supported before any attaching fasteners are removed.

4. If another lift truck is used to temporarily support axle while removing, put forks in center of carriage about 305 mm (12 in) apart. Move forks under axle and raise it just to remove its weight from mounting bolts. Or use a portable floor jack to carefully support the axle at its center section.
5. Loosen and remove nuts from axle mounting bolts, front and rear.
   - Remove the mount plates from the bottom of the trunnion mounts of the steer axle (Figure A.).
6. Remove the mounting bolts.
7. Lower the axle allowing its weight to pull the silent blocks out of frame recesses. Watch the silent blocks to be sure they release freely from frame. You may have to loosen blocks with a pry bar if they bind.
8. Carefully withdraw the axle from beneath the truck and move to safe storage.

Copyrighted Material
Intended for CLARK dealers only
Do not sell or distribute

https://truckmanualshub.com/

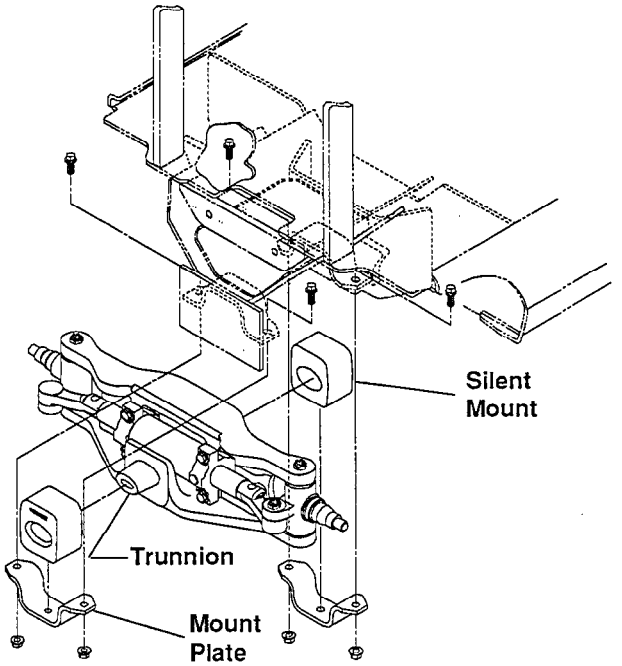

Steer Axle Mounting

Steer Axle Replacement

Replacement is the reverse of removal. Refer to Figure A for replacement.

CAUTION

Make sure truck is correctly raised and safely blocked using hardwood blocks under the frame. Be sure the blocking will permit installation of the axle without disturbing the blocking.

1. If silent blocks have been removed from axle, install new silent block assemblies. Use a rubber or plastic mallet to seat the silent mounts onto the axle trunnions.
2. Make sure that the silent blocks are positioned correctly front and rear on the steer axle trunnions at the start of installation. Align the silent blocks square with the axle.
3. Use a fork lift truck or mobile floor jack to temporarily support and raise the axle into place under the truck. If another lift truck is used to handle axle, center the forks with about 305 mm (12 in) spread between them. Place steer axle assembly in secure position on fork tips.

   If hydraulic jack is used, be sure axle is securely supported on jack pad.

WARNING

Heavy components can fall and cause severe injury. Keep your body clear at all times.

4. Install axle assembly into frame by slowly raising it up while guiding silent block bushings into frame sockets.
5. Install silent block mounting bolts through frame socket holes and silent block, front and rear.

   Reset the two mounting plates under the silent blocks of the axle.
6. Install nuts on silent block fasteners and tighten to 170-190 N•m (125-140 ft-lb).
8. Remove temporary axle support from under truck.
9. Connect the hydraulic lines to steering cylinder. Tighten fittings to 12-14 N•m (106-123 in-lb; 8.8-10.3 ft-lb).

IMPORTANT

Make sure all fittings and openings on the hydraulic lines are clean.

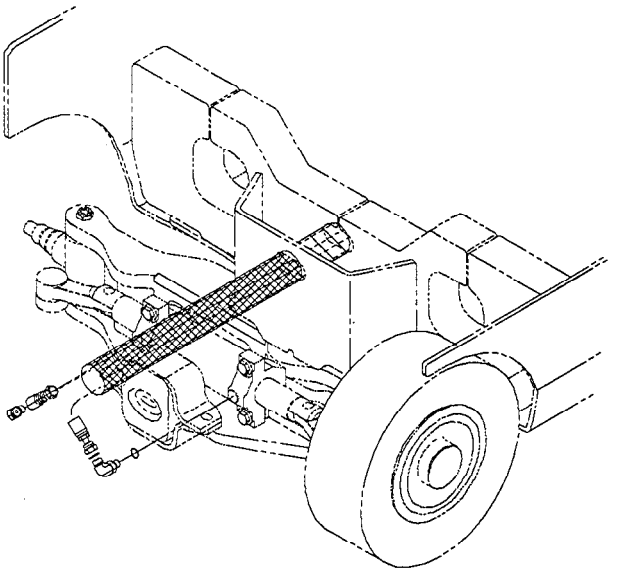

10. carefully raise the truck off the blocking as described in "Lifting, Jacking and Blocking". Remove the blocking and lower the truck to the floor.
11. If removed, reinstall counterweight; refer to Group 38, Section 2, "Counterweight Removal and Replacement".

Copyrighted Material
Intended for CLARK dealers only
Do not sell or distribute

https://truckmanualshub.com/

12. Check the axle and steering system for proper operation. Operate the steering gear to move the steer wheels to maximum travel in both directions. Note any unusual motion or noise.

    If the system appears to be operating correctly, drive the truck slowly. Fully steer the vehicle in each direction and check response.

13. Check steering cylinder hose line connections and cylinder rod seals for any evidence of oil leakage before returning the truck to service.

Copyrighted Material
Intended for CLARK dealers only
Do not sell or distribute

https://truckmanualshub.com/

Section 4

Steer Axle Overhaul

Preparation for Steer Axle Disassemble and Overhaul 2

Steer Axle Disassembly 2

Parts Inspection 3

Steer Axle Reassembly 3

IMPORTANT

Before removing any component for overhaul, make sure the correct repair parts, seals, and gasket sets are available.

⚠ CAUTION

SAFE PARKING. Before working on truck:

1. **Park truck on a hard, level, and solid surface, such as a concrete floor with no gaps or breaks.**
2. **Put upright in vertical position and fully lower the forks or attachment.**
3. **Put all controls in neutral. Turn key switch OFF and remove key.**
4. **Apply the parking brake and block the wheels.**

Copyrighted Material
Intended for CLARK dealers only
Do not sell or distribute

https://truckmanualshub.com/

Preparation For Steer Axle Disassembly and Overhaul

NOTE

Cleanliness is of extreme importance in the repair and overhaul of this assembly.

- Before starting disassembly, thoroughly clean the axle assembly of all accumulations of dirt, oil, corrosion, and other substances to prevent contamination of the parts during disassembly and overhaul.
- Work in a clean area.
- Keep all parts in order as disassembly progresses. Take care to properly identify each part and its order of removal. If necessary, keep notes and put markings on parts using a non-destructive marker such as a grease pencil or felt-tipped pen.
- If necessary, see Section 3, "Steer Axle Removal and Replacement," for the procedures to remove the steer axle from the truck.
- See Section 5, "Steer Cylinder Removal and Replacement," for the procedures to remove the steering cylinder and steering links from the steer axle.
- See Section 6, "Steering Cylinder Overhaul," to disassemble the steer cylinder.

Steer Axle Disassembly

To disassemble the steering knuckle, kingpin, and bearing from the steer axle, it is not necessary to remove the axle from the truck.

1. Remove the snap ring from the bottom of the steering link pin and remove the pin. Steering link is free to be removed from the cylinder rod and knuckle.

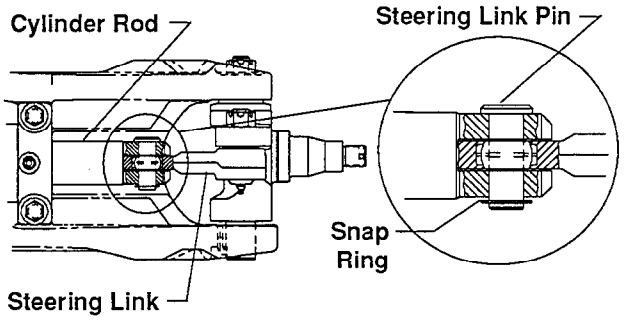

2. Remove and discard cotter pin from kingpin castellated nut. Remove the nut.

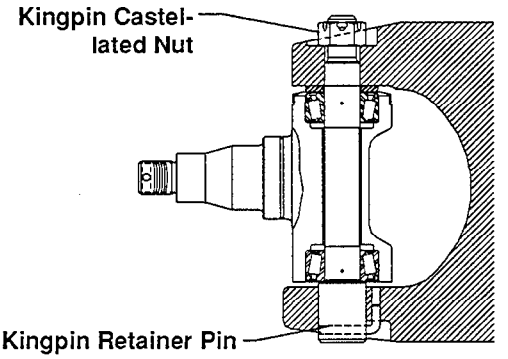

3. Drive the kingpin down and out of the assembly. Remove the steering knuckle. Note right and left knuckle parts.

IMPORTANT

Do not let the knuckle or pin fall when the pin is removed.

4. Remove the kingpin retainer pin from the base of the kingpin.
5. Remove the knuckle bearing washers, dust covers, upper and lower grease seals, bearings, and bearing cups from the assembly.

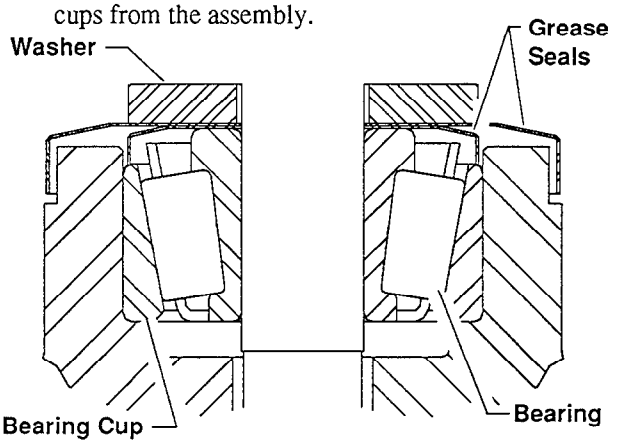

Bearing cups may be removed by hand, by using a bearing puller, or by tapping out using a brass drift pin.

Copyrighted Material
Intended for CLARK dealers only
Do not sell or distribute

https://truckmanualshub.com/

Parts Inspection

1. Clean all bearings, cups, seals, pins, and other parts in an approved cleaning fluid.
2. Inspect all parts for scratches, chips and wear. Check the steering arms of the knuckles to be sure they are not bent or twisted. Check all threaded parts for damage.
3. Replace all parts which show damage.
4. If parts are to be left exposed, coat all mating surfaces of parts with a light coating of engine oil.

Steer Axle Reassembly

Recommended greasing procedure:

a. Use Grade No. 2 EP multi-purpose grease, Clark MS-107 or equivalent.

b. Pack all tapered roller bearings with grease before assembly.

c. Pack knuckle pin (bearing) seals with grease before assembly.

d. Fill steer link sockets with grease through grease fittings after axle is assembled.

1. Install the upper and lower knuckle bearing cups into the knuckle housing bore. Tap into place with a brass drift pin or equivalent.

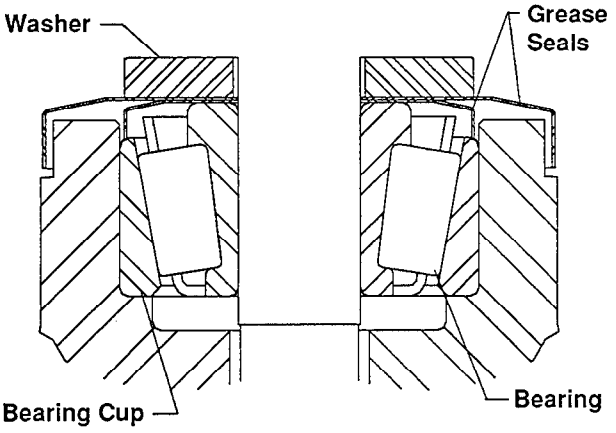

IMPORTANT

Make sure that bearing cup is fully seated against the shoulder in bore. There must be no gap left between cup and the shoulder in the bore at assembly.

2. Apply grease to upper and lower knuckle bearings and install bearings, grease seals, and washers to bores of knuckle.
3. Set the retainer pin into the king pin and slide the king pin into the steer axle/knuckle bore.

IMPORTANT

Make sure that retainer pin enters the hole in the underside of the axle

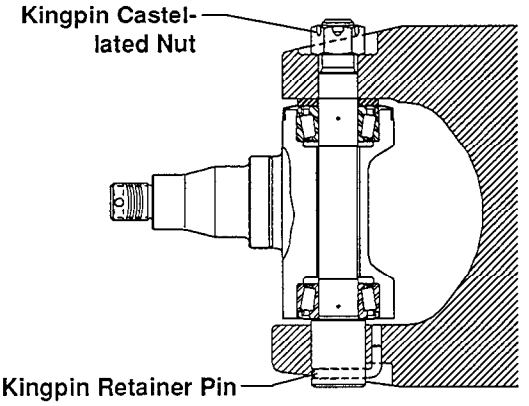

4. Reset the kingpin castellated nut to the top of the kingpin. Torque nut to 50-60 N•m (36.5-44 ft-lb).
5. Rotate the steer knuckle three times through its full range of movement. Check to be sure that it is free to rotate in the bearings without binding.
6. Loosen the kingpin nut and retorque the nut to 30-35 N•m (22.2-25.5 ft-lb).
7. Advance the nut to the next castellated slot and lock the nut into position with a new cotter pin. Bend cotter pin tabs over.
8. Replace steering link pin and snap ring to join the cylinder rod to the steering link and knuckle.

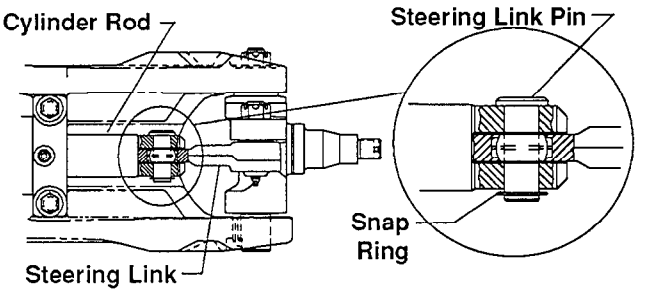

9. Reinstall grease fitting in knuckle housing and lubricate with recommended grease.

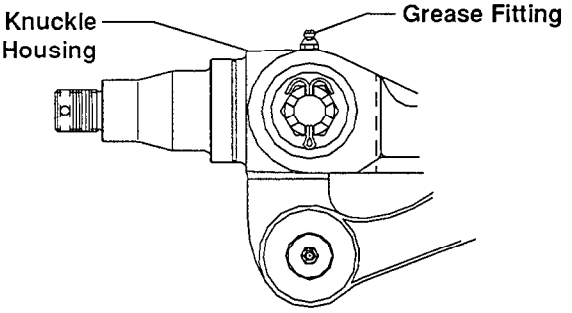

Copyrighted Material
Intended for CLARK dealers only
Do not sell or distribute

https://truckmanualshub.com/

Section 5

Steer Cylinder Removal and Replacement

⚠ CAUTION

SAFE PARKING. Before working on truck:

1. **Park truck on a hard, level, and solid surface, such as a concrete floor with no gaps or breaks.**
2. **Put upright in vertical position and fully lower the forks or attachment.**
3. **Put all controls in neutral. Turn key switch OFF and remove key.**
4. **Apply the parking brake and block the wheels.**

Steer Cylinder Removal

The steer cylinder can be removed from the steer axle for overhaul or replacement without removing the steer axle from the truck. The cylinder should be overhauled or replaced if steering problems or troubleshooting information indicate the cylinder is malfunctioning. See Group 25, Section 2, "Steering System Troubleshooting," for steering problem diagnoses. See Section 6 in this Group for steer cylinder overhaul procedures.

1. Place a drain pan under the steer cylinder and remove the hydraulic lines from the cylinder fittings. Cap fittings and lines to prevent fluid from leaking and to protect the components and hydraulic system from dust and dirt. Label hoses and fittings for correct reassembly.

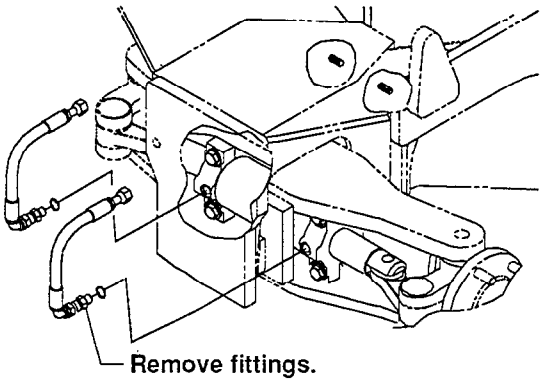

2. Remove the snap ring from the bottom of the steering link pin. Steering link pin attaches steer cylinder rod end to steering link.

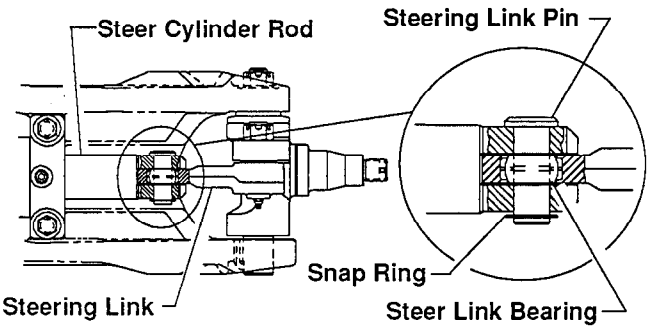

NOTE

Mark left-side and right-side parts for correct reassembly.

3. Tap steer link pin upward until it clears the steering link bearing and remove the pin.
4. Remove steer link bearing from steering link-to-cylinder rod end bore.
5. Rotate the steering link away from the cylinder rod end.
6. Repeat steps 1 through 5 for the opposite side of the steer cylinder.
7. Remove the four steer cylinder mounting bolts and washers from the steer axle. Removal torque on these bolts can be as high as 405 N•m (300 ft-lb).

Cylinder is now ready to be removed from the steer axle body. Cylinder must be lifted off dowel pins positioning cylinder to axle body.

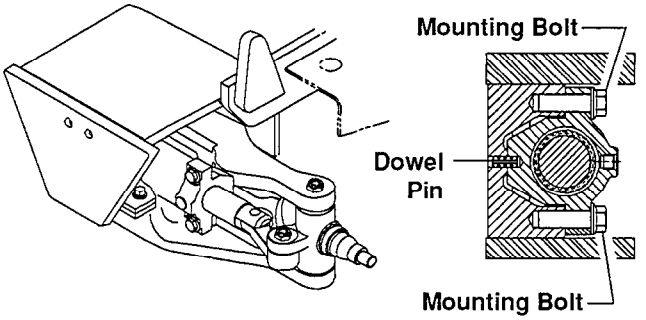

⚠ CAUTION

Cylinder is somewhat heavy and bulky. When removing cylinder from mounting be prepared to lift and move the full weight of the cylinder.

Copyrighted Material
Intended for CLARK dealers only
Do not sell or distribute

https://truckmanualshub.com/

Parts Inspection

Completely inspect all parts:

1. Clean all bearings, cups, seals, pins, and other parts in an approved cleaning fluid.
2. Inspect all parts for scratches, chips, scoring, and uneven or heavy wear. Check steering links to be sure they are not bent or twisted. Check all threaded parts for damage.
3. Replace all parts showing excessive wear or signs of damage.
4. If parts are to be left exposed, coat all mating surfaces of parts with a light layer of engine oil. Keep all parts clean and covered.
5. Remove and clean all grease fittings before reassembling cylinder components.

Refer to Section 6, "Steer Cylinder Overhaul", if pressure check or troubleshooting tips indicate a problem with steer cylinder performance.

Steer Cylinder Replacement

1. Remount the steer cylinder onto the steer axle dowel pins; set bolts and washers in place and torque mounting bolts to 280-320 N•m (205-234.5 ft-lb).

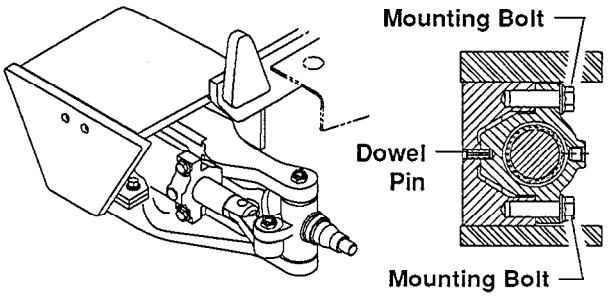

CAUTION

Cylinder is somewhat heavy and bulky. When remounting cylinder to steer axle body, be prepared to lift and maneuver the full weight of the cylinder as you set it into position.

2. Position the steering link with the cylinder rod end. Reuse steer link bearing if still serviceable. Install new bearings if scoring or wear marks are evident or if the bearings do not operate smoothly.

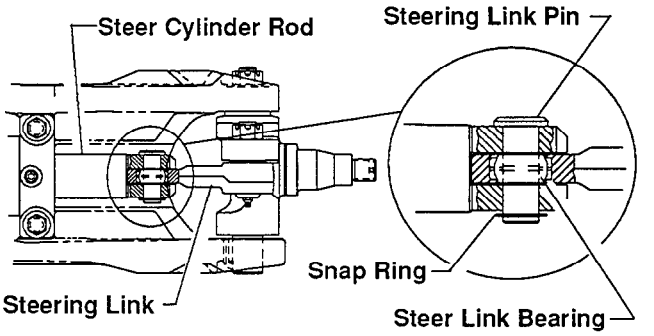

3. Rotate steering link into cylinder rod end and align bearing hole with rod end.
4. Tap pin through steer link bearing hole with snap ring groove on lower end.

IMPORTANT

Make sure bearing is properly aligned with pin in the hole.

5. Install the snap ring to the steering link pin.
6. Repeat steps 1 to 5 for rod end-to-steering link connection for opposite side.
7. Clean and replace hydraulic hoses on correct, clean, cylinder fittings. See Group 40, Hydraulic Fitting Tightening Procedure" for replacement procedures.

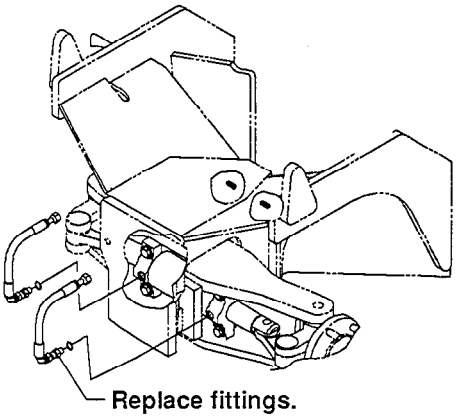

8. Check to be sure all lube fittings are installed. Fill all lubrication points with correct lubricant. See recommended greasing procedure above.
9. Test function of steer cylinder before returning the truck to service.

Copyrighted Material
Intended for CLARK dealers only
Do not sell or distribute

https://truckmanualshub.com/

Section 6

Steer Cylinder Overhaul

Preparation for Steer Cylinder Disassembly and Overhaul 2
Steer Cylinder Disassembly 2
Parts Inspection 2
Steer Cylinder Reassembly 3
Operational Pressure Test 4

IMPORTANT

Before removing any component for overhaul, make sure the correct repair parts, seals, and gasket sets are available.

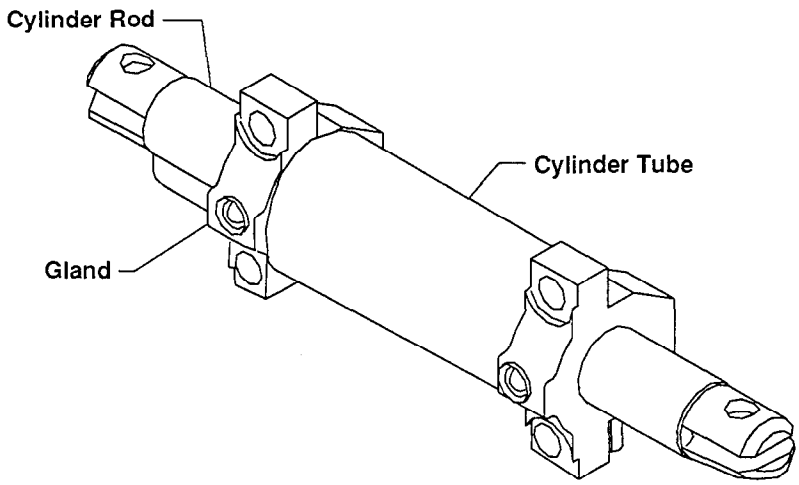

Steering Cylinder
Cushion-tire truck cylinder with "C" stamped on rod end.

Copyrighted Material
Intended for CLARK dealers only
Do not sell or distribute

https://truckmanualshub.com/

Preparation for Steer Cylinder Disassembly and Overhaul

Refer to Section 5 for removal of steer cylinder from the steer axle body.

IMPORTANT
Cleanliness is of extreme importance in the repair and overhaul of this assembly.

1. Overhaul steer cylinder only in a clean, dust-free location, using clean tools and equipment. Dirt or grit will damage the highly-machined surfaces and will result in leakage or premature failure of components. Cleanliness of the hydraulic circuit is extremely important to the proper operation and maintenance of the system. Be sure the work area is clean.
2. Before disassembly, the exterior of the steer cylinder should be carefully cleaned to remove all dirt and grease accumulation.
3. Be sure all hydraulic fluid has been removed from the cylinder. Stroking the piston rod will help force the fluid out.
4. Before starting disassembly, the steer cylinder should be carefully examined to determine if there is any external damage.

Steer Cylinder Disassembly

1. Clamp the steer cylinder assembly in a vise. Wrap the cylinder in a course cloth to prevent slipping and scratching. Use extreme caution when tightening vise and do not overtighten; cylinder can be bent, distorted, and potentially destroyed.
2. Remove one gland by pulling it from cylinder barrel and pulling it off the piston rod.

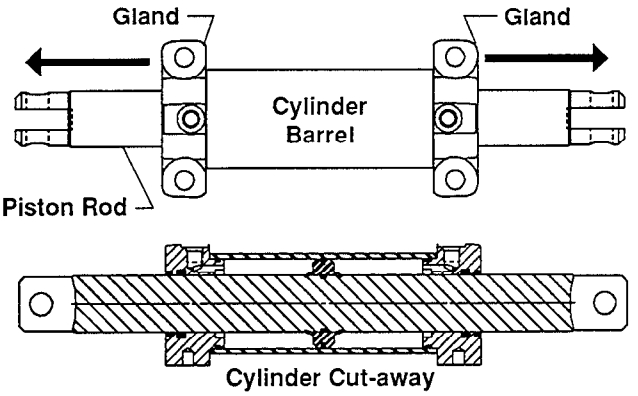

3. Remove the piston and rod assembly from the cylinder.
4. Remove gland from opposite end of steer cylinder.
5. Remove the seal and O-ring set from the piston. Discard seals. Replace with new seal set at assembly.

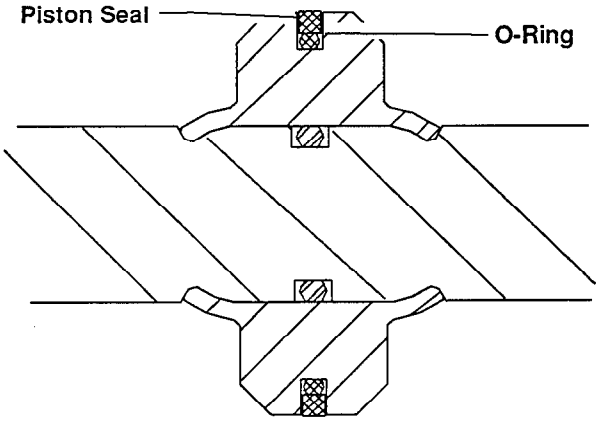

6. Remove (inner) gland packing (O-ring) seal. Replace with new seals at assembly.

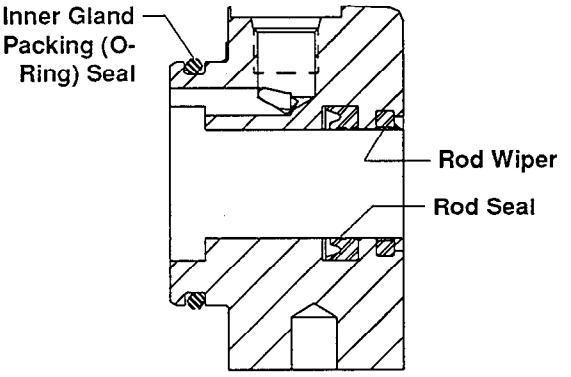

7. Remove the rod (U-cup) seal and rod wiper from gland and discard. Note direction of seal and wiper seating for correct reassembly. Replace with new seals and wipers at assembly.

Parts Inspection

1. Carefully clean all parts in an approved solvent and place on a clean surface.
2. Check the piston for chips, cracks, and looseness on the rod. If loose, replace rod and piston assembly.
3. Be sure the piston-seal groove in the piston is smooth, true, and undamaged.
4. Check the piston rod for damage. Look for scratches, grooves, gouges, pitting, corrosion or other evidence of unusual wear. Minor surface damage may be repaired by use of fine abrasion cloth or stoning. Deeper damage will require replacement of piston rod assembly.

Copyrighted Material
Intended for CLARK dealers only
Do not sell or distribute

https://truckmanualshub.com/

5. Carefully inspect the cylinder internal bore for wear, scratches, corrosion or other damage. Check the outside for damage. Inspect all welds for cracks.
6. Inspect the cylinder ports and threads to be sure they are free of contamination and that the threads are clean and not damaged.
7. Check the gland for cracks or damage that could cause failure.
8. Deep gouges or pitted surfaces require replacement of parts.
9. Put a light coating of hydraulic fluid on all parts. If parts are to be left disassembled for a period of time, such as overnight, they should be covered with a clean cloth.

Steer Cylinder Reassembly

Check to make sure the overhaul kit you have is correct and that all parts are included.

IMPORTANT

Be sure inside of cylinder and all parts are clean before starting reassembly.

Assemble cylinder carefully to prevent damage to seal lips and O-rings. Seals should be lubricated with hydraulic oil to assist assembly into cylinder barrel and gland.

Heating seal rings in boiling water before starting assembly will aid in assembly.

1. Install new O-ring seal on the piston.

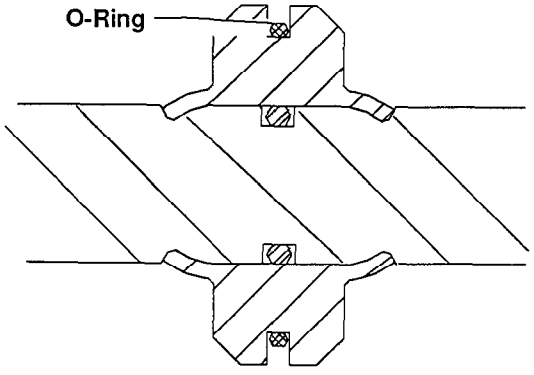

2. Install new piston seal over the O-ring seal.

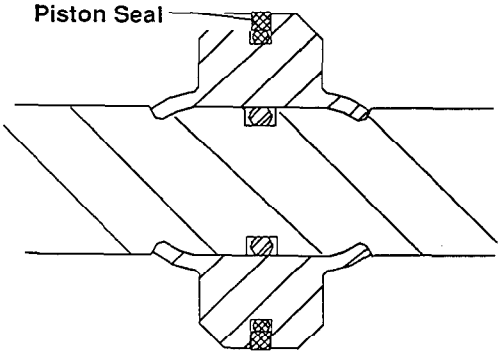

3. Install new gland packing (O-ring) seal on inner end of gland.

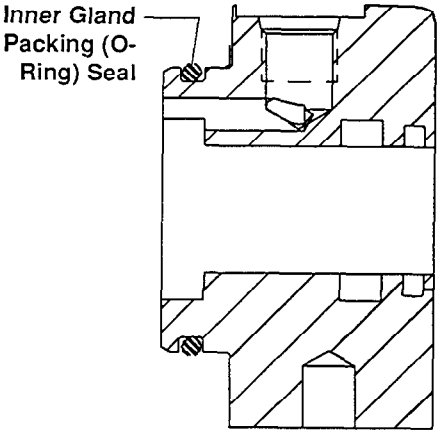

4. Install new rod wiper and rod (U-cup) seal in outer end of gland.

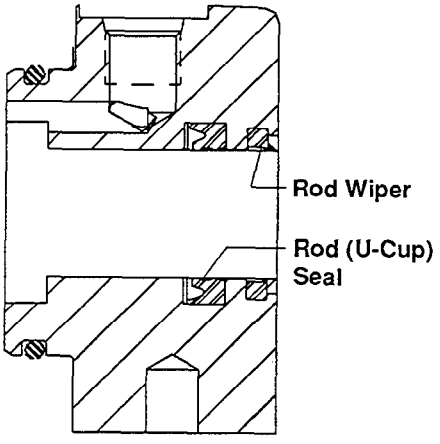

IMPORTANT

Be sure the rod wiper and rod (U-cup) seal are installed in the correct directions.

5. Lightly lubricate the cylinder and gland mating surfaces with hydraulic oil before assembly.

Copyrighted Material
Intended for CLARK dealers only
Do not sell or distribute

https://truckmanualshub.com/

6. Install the gland onto the cylinder bore rim, making sure gland is fully seated on cylinder.
7. Install piston and rod assembly into the cylinder.

NOTE

A special part is included in the parts kit to allow you to slip the gland over the rod end without damaging the gland seals.

8. Repeat above procedure for installation of opposite gland.

Operational Pressure Test

Once cylinder is remounted on axle (see Section 5), connect pressure source in turn at each port. Extend piston rod at each side and test with internal pressure of 13790 kPa (2000 psi). At this pressure no leakage must occur. Typical operating pressure is 7585 kPa (1100 psi).

Copyrighted Material
Intended for CLARK dealers only
Do not sell or distribute

https://truckmanualshub.com/

Section 7

Steering Pump Removal and Installation

Description 2
Steering Pump Removal 3
Steering Pump Installation 3

Copyrighted Material
Intended for CLARK dealers only
Do not sell or distribute

https://truckmanualshub.com/

Description

The integral steering pump and motor assembly draws oil through the suction line screen fitting in the sump and sends it to the steering gear. Oil is directed to either side of the steering cylinder, back to the steering gear, and finally to the sump.

The steering system pressure relief valve is located in the pump assembly. This valve limits the fluid pressure to the steering circuit by routing excess fluid to the return circuit, avoiding possibly damaging pressures from building in the circuit.

Serviceable items are the pump, motor, and the suction line filter. Other components, such as hoses, fittings, and clamps, are non-serviceable and should be replaced if faulty.

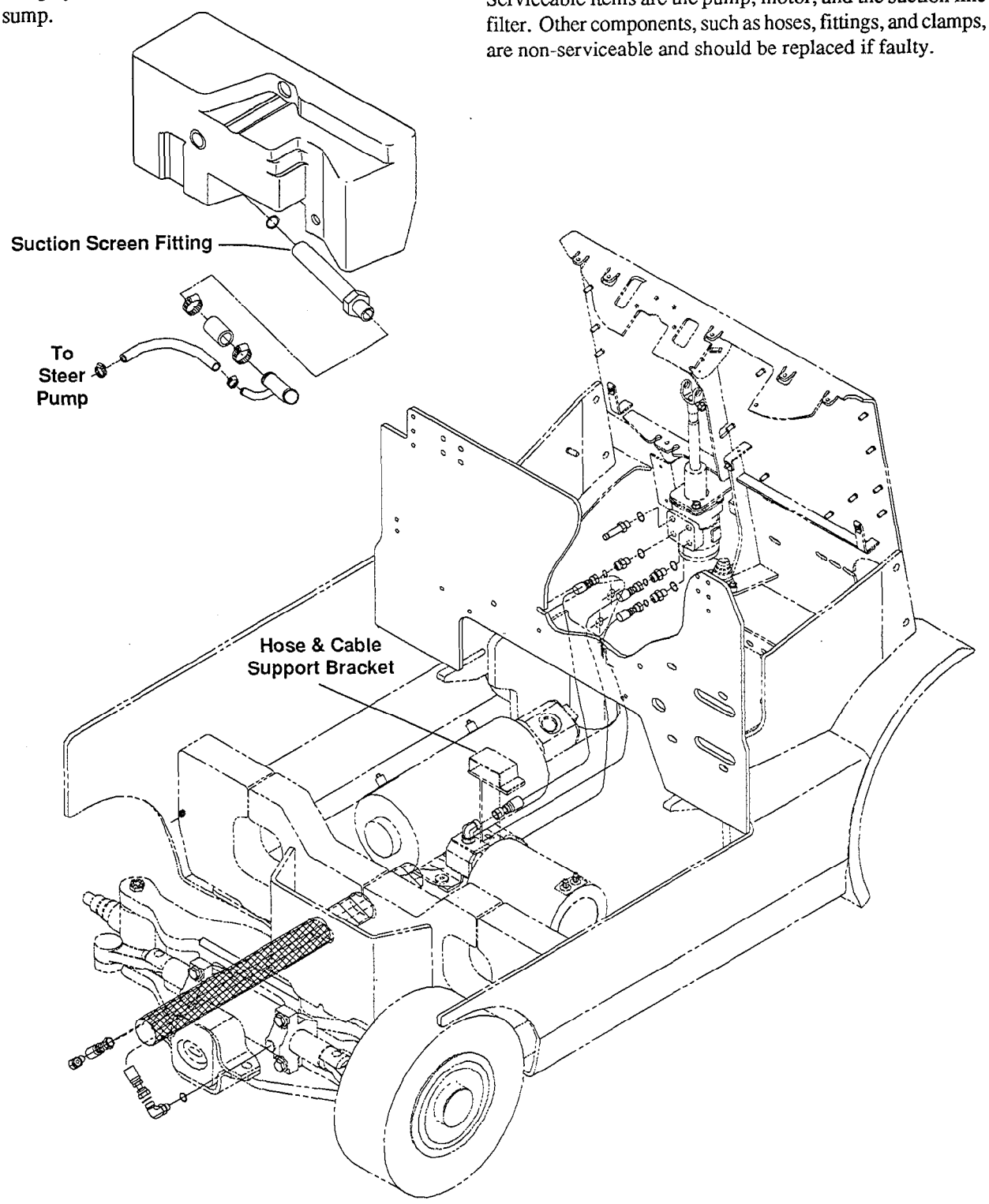

Copyrighted Material
Intended for CLARK dealers only
Do not sell or distribute

https://truckmanualshub.com/

Steering Pump Removal

The steering pump is located under the battery compartment. Remove the battery to access steering pump. The pump can be removed from the machine without removing the pump/motor assembly.

Set up a shallow pan to catch oil from hoses and pump.

1. Disconnect suction line from top of pump and cap the line. Place end of line above oil level in sump and out of the way to prevent oil spillage.
2. Disconnect steering valve line from bottom of pump.
3. Remove bolts from hose and cable support bracket and push aside to provide access to steer pump.
4. Remove pump mounting fasteners.
5. Remove pump and pump drive coupling.
6. Cap all open lines to prevent contamination of hydraulic system.
7. See Section 8, Steering Pump Overhaul, for service to the pump.

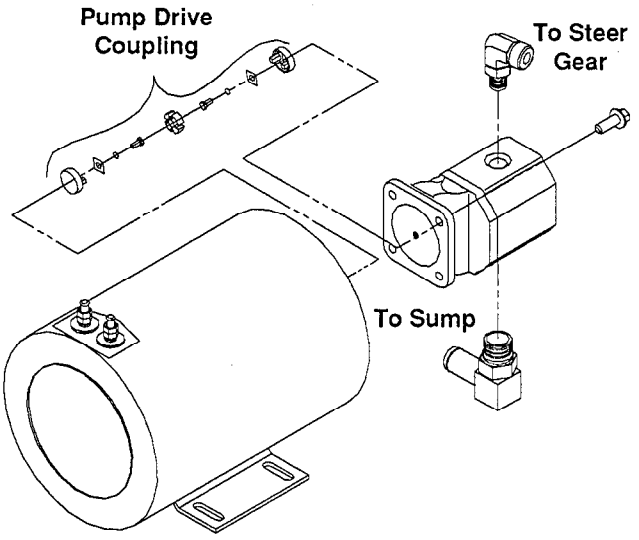

Steering Pump Installation

IMPORTANT

Keep all components clean during installation.

1. Be sure pump is well oiled prior to installation. Put a generous amount of clean oil in the gear cavity.
2. Install drive coupling and pump on motor. Install and tighten fasteners.
3. Connect steering valve line to top of pump. Tighten fitting.
4. Connect suction line to bottom of pump. Slide hose clamp into place and tighten.

NOTE

Always clean hydraulic sump suction screen fitting when installing pump. See Group 29.

5. Check sump fluid level. Add Clark specification MS-68 hydraulic fluid if necessary.
6. Operate pump 2–3 minutes before pressurizing. Adjust relief valve to 7585 kPa (1100 psi). Check for leaks.

Copyrighted Material
Intended for CLARK dealers only
Do not sell or distribute

https://truckmanualshub.com/

Section 8

Steering Pump Overhaul

Preparation for Pump Disassembly 2
Routine Maintenance 2
Pump Disassembly 2
Inspection and Repair 2
Assessment 2
Body 2
Mounting Flange & End Cover 3
Bushes 3
Gears 3
Pump Exploded View 3
Pump Assembly 4
Running-In 5

Copyrighted Material
Intended for CLARK dealers only
Do not sell or distribute

https://truckmanualshub.com/

Preparation for Pump Disassembly

IMPORTANT

Before removing any component for overhaul, make sure the correct repair parts, seals, and gasket sets are available.

- Overhaul pump only in a clean, dust free location, using clean tools and equipment. Dirt or grit will damage the highly machined surfaces and will result in leakage or premature failure of the pump. Be sure the work area is clean.
- Plug openings before cleaning and brushing to avoid contaminating internal parts. Clean exterior of pump with a good grade solvent and dry thoroughly. Use a wire brush if necessary to remove dirt accumulations.
- Before beginning disassembly, scribe match marks on the body and cover to ensure that pump will be assembled in the same manner as it was shipped from factory. If the body or rear cover is replaced during overhaul, scribe a match mark on the new part as on the part it replaced. This ensures that inlet and outlet, with respect to rotation, is kept the same.

Routine Maintenance

- No maintenance is necessary other than periodic checks for tightness of the mounting bolts and port fittings plus visual examination for oil leaks. The unit should be kept externally clean, especially in the area of the shaft seal as dirt can accelerate seal wear and cause leakage.
- The unit must be operated on clean hydraulic fluid. Directions for filter service in this Group must be adhered to. A fluid cleanliness level of ISO4406 17/14 or better is recommended to give maximum life.

Steering Pump Disassembly

IMPORTANT

Keep parts in order as removed to assure correct assembly later.

1. Lightly mark the end cover, body and mounting flange (3, 9 and 12) to ensure reassembly in the correct position.
2. Remove bolts and spring washers (1 and 2).
3. Remove end cover (3), body O-ring (4), bush seal and back-up seal (6 and 5).
4. Turn the unit over and lightly tap the mounting flange (12) to disengage if from the locating dowels and slide the flange squarely off the shaft.

IMPORTANT

Be careful not to damage the machined bore in mounting section (15) when removing the seal because this will result in leakage past seal.

5. Remove circlip (14) and shaft seal (13).
6. Remove body O-ring (4), bush seal and back-up seal (6 and 5).
7. Before removing the internal components mark the bushes to denote the location in the body. On a plain area away from seal location mark:

FD	=	Bush on driveshaft flange end
FI	=	Bush on driven gear flange end
CD	=	Bush on driveshaft cover end
CI	=	Bush on driven gear cover end

8. With the unit lying on its side, hold the driveshaft (10) and pull it squarely out of the body bringing with it the bushes (7 and 8).
9. Remove driven gear (11) and the two remaining bushes.

Inspection and Repair

Assessment

Each component should be thoroughly cleaned, carefully examined and assessed for suitability of reuse. Below is a guide for inspection the various components.

Body

Inspect the body bore cut-in where gears wipe into the body.

The body can only be reused if the cut-in is bright and polished in appearance and the depth does not exceed .08 mm (.003 inch).

The body should be replaced if the surface is scored, has a matt appearance or shows signs that the tip of the gears have dug in and torn away the surface material.

The body should be inspected to ensure that there is no superficial damage which may adversely effect performance or sealing. Pay particular attention to the port threads and body O-ring seal recesses.

Copyrighted Material
Intended for CLARK dealers only
Do not sell or distribute

https://truckmanualshub.com/

Steering Pump Exploded View

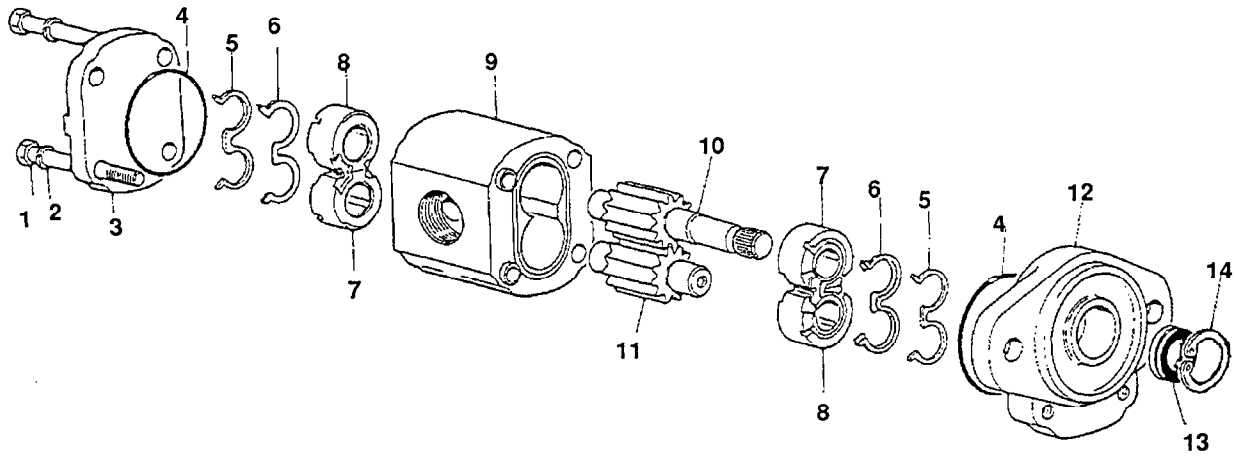

Main Hydraulic Pump

1. Bolt
2. Spring Washer
3. End Cover
4. Body O-ring
5. Back Up Seal
6. Bush Seal
7. Bush
8. Bush
9. Body Dowel Sub-Assembly
10. Drive Shaft
11. Driven Gear
12. Mounting Flange
13. Shaft Seal
14. Circlip

Mounting Flange and End Cover

The inner surfaces should be inspected to ensure that there is no unusual wear or scoring in the regions where the body O-rings and bush seals contact, which could result in external leakage.

Check the shaft seal recess for scoring or damage that could result in oil leakage around the outer diameter of the shaft seal. Replacement shaft seals can be refitted with Loctite hydraulic sealant to overcome slight damage in this area.

Bushes

The side faces which abut the gears should be perfectly flat showing no sigh of scoring. Characteristically there are bright polished areas on this surface caused by loading against the gear side faces, which is often more pronounced on the low pressure side. These should be replaced if there is any general scoring or fine scoring with a matt appearance or tearing of the surface material. Often there is a witness where the tips of the opposing gears have wiped an overlap resembling a half moon shape. There must be no noticeable wear step as it is critical that the bush side face is completely flat to the gear side face.

The bush bearing liners are acceptable providing that they are not scored or show other damage. The general outside area of the bush should not show any prominent signs of wear.

Gears

The gear side faces should be examined for bruising or scoring. Often operation on contaminated fluid shows scoring between the root of the gear and the journal undercut, which leaves a wear step. If a wear step can be felt, coincidental with the root diameter, by drawing a sharp pointed tool across the surface from the undercut outwards towards the tip of the gear, then the gear is unserviceable.

The gear teeth should then be carefully examined to ensure that there are no signs of bruising or pitting..

The journal bearing surfaces should be completely free from scoring or bruising. The surface should appear highly polished and smooth to the touch.

(continued on next page)

Copyrighted Material
Intended for CLARK dealers only
Do not sell or distribute

https://truckmanualshub.com/

Gears (continued)

Examine the area where the shaft seal lips run on the driveshaft, this shows up as a polished ring or rings. If a noticeable groove can be felt or there is scoring, the shaft should be replaced.

Provided the driveshaft spline is not damaged or worn and the gears have not been harmed as described above, then the gears can be reused. If, however, the gears are damaged they must be replaced as a matched set.

As a matter of good practice, when pumps have been dismantled, all seals should be replaced. It is most important that only genuine Clark seals be used.

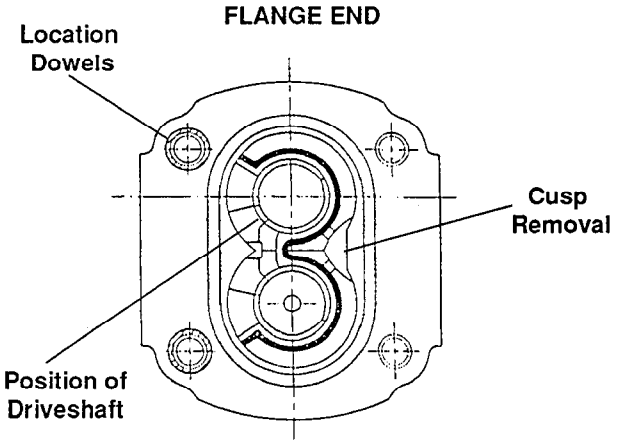

ARRANGEMENT OF BUSHES & GEAR SET IN BODY

Reassembling the Unit

Ensure all parts are perfectly clean and lubricate bushes and gears with clean hydraulic fluid (ensure O-ring recess and end faces of body remain dry). This will assist assembly of components into the body bores.

1. Refit cover end bushes (CD and CI) into the undowelled end of the body from where they were removed. The ''C' shape cut-out in the bushes must be to the side of the body with the cusp removal flat as shown.
2. Place the end cover (3) against the undowelled end of the body (9) and stand the assembly on the cover so the dowels are uppermost and to the lefthand side.
3. Fit driveshaft (10) and driven gear (11) into their original positions in the body.
4. Refit flange end bushes (FD and FI) into their original bores remembering the 'C' cut-out must be to the side of the body with the cusp removal flat and match the cover end bushes.
5. Fit new body O-ring (4), bush seal and back-up seal (5 and 6) ensuring that the seals locate correctly in the seal grooves.
6. Fit new shaft seal into the recess in the mounting flange with the 'garter' spring facing into the pump. Refit circlip (14). Remember that if the seal recess was scored then Loctite hydraulic sealant must be applied to the outer diameter of the seal.
7. Fit shaft seal assembly sleeve over driveshaft and carefully refit mounting flange (12) enduring that it locates squarely onto the dowels in the body - remove assembly sleeve.
8. Holding the whole unit together, carefully turn it over but ensuring it is supported on the mounting flange and not the driveshaft.
9. Remove end cover (3) and fit new body O-ring (4), bush seals and back-up seals (6 and 5).
10. Replace the end cover and refit bolts and spring washers. Torque tighten bolts to 46-51 N•m (34-38 lb ft).
11. Pour a small amount of clean hydraulic fluid into a port and check that the shaft can be rotated without undue force using a smooth jawed vice.

Copyrighted Material
Intended for CLARK dealers only
Do not sell or distribute

https://truckmanualshub.com/

Running-In

A unit which has been reassembled with either new gear, bushes or body, must be carefully run-in before it is subjected to full working conditions.

Ideally this should be done on a test rig as shown below, where pressure can be gradually applied and any wiping from the body cut-in arrested by filters.

It is recommended that the unit is run-in at 1500 rpm, initially, at zero pressure for one minute, then in stages with the pressure increased by 500 psi every minute, until maximum rated pressure has been attained. Frequently check the system temperature, enduring that it does not exceed the maximum permissible figure of 80* C. If the temperature exceeds the system or unit specification, the test must be delayed and operated off-load until acceptable temperatures are obtained.

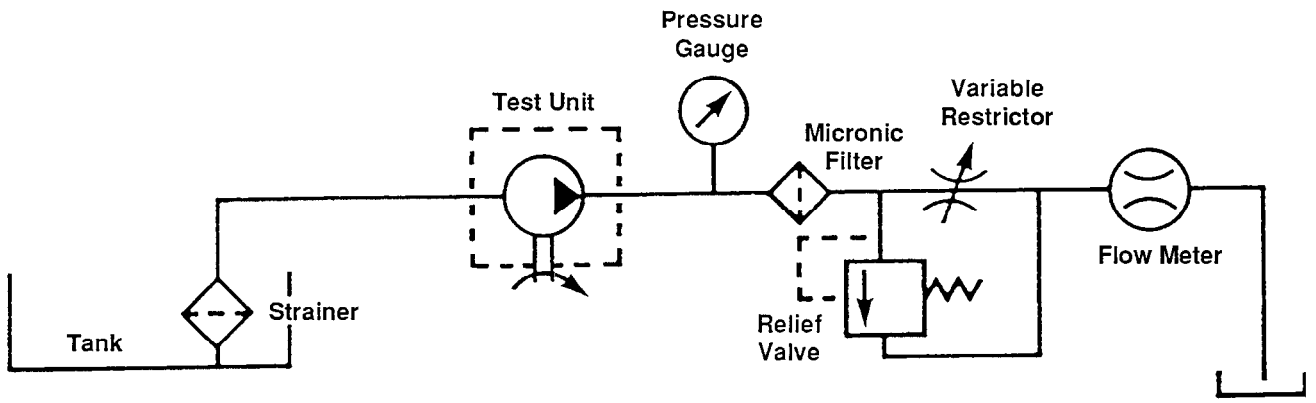

TYPICAL PUMP TEST CIRCUIT

Copyrighted Material
Intended for CLARK dealers only
Do not sell or distribute

https://truckmanualshub.com/

GROUP 29

HYDRAULIC SUMP, FILTERS, AND PUMP

Main Hydraulic Sump, Filters, and Pump
Specifications and Description ..... Section 1

Main Hydraulic Pump Troubleshooting ..... Section 2

Main Hydraulic Pump Removal and Installation..... Section 3

Main Hydraulic Pump Overhaul ..... Section 4

NOTE

This group covers the main hydraulic pump for the load handling system.

Other hydraulic-related components and circuits are described and illustrated in Group 25 "Steering Column and Gear," Group 26 "Steering System," Group 30 "Hydraulic Control Valve/Lift Circuit," Group 32 "Tilt Cylinders," and Group 34 "Uprights." Refer to these groups for hydraulic components not covered in this group.

Copyrighted Material
Intended for CLARK dealers only
Do not sell or distribute

https://truckmanualshub.com/

Section 1

Main Hydraulic Sump, Filters, and Pump Specifications and Description

Specifications 2
Service Intervals 2
System Description 2
Sump Tank Description 4
Fluid and Filter Change 5
Refilling and Testing 6

Copyrighted Material
Intended for CLARK dealers only
Do not sell or distribute

https://truckmanualshub.com/

Specifications

Hydraulic Pump Type: Integral gear-type pump and motor assembly.

Sump Capacity: Usable oil = 19 Litres (5.0 Gal)

Hydraulic Fluid Type: Clark Hydraulic Fluid MS-68 (or other specification MS-68).

Filter Type: Disposable, 25 micron, full flow return line oil filter, 100 mesh suction line screen and a 10 micron filter cap/breather filter.

Service Intervals

Hydraulic Fluid Level Checks: Every 8–10 hours or daily.

Hydraulic Fluid Change (Drain and Refill): Every 2000 hours of operation or every year.

Hydraulic Fluid Filter Replacement: After the first 50 hours of operation, then every year or 2000 hours of operation.

Description

NOTE

See Group 30 for a description of the complete hydraulic circuit.

The hydraulic sump is located in the left side compartment of the truck frame. The sump is equipped with a suction line screen, full-flow return line filter, filter cap/breather.

The integral main hydraulic pump and motor assembly is mounted to the truck frame beneath the battery compartment.

The main hydraulic pump draws oil through the suction line screen in the sump and sends oil to the main control valve. From the main control valve, the oil is directed to the lift cylinders, tilt cylinders, auxiliary function and back to the sump.

Serviceable items are the pump, motor, suction line screen and the return line filter. Other components, such as hoses, fittings, and clamps, are nonserviceable and should be replaced if worn or damaged.

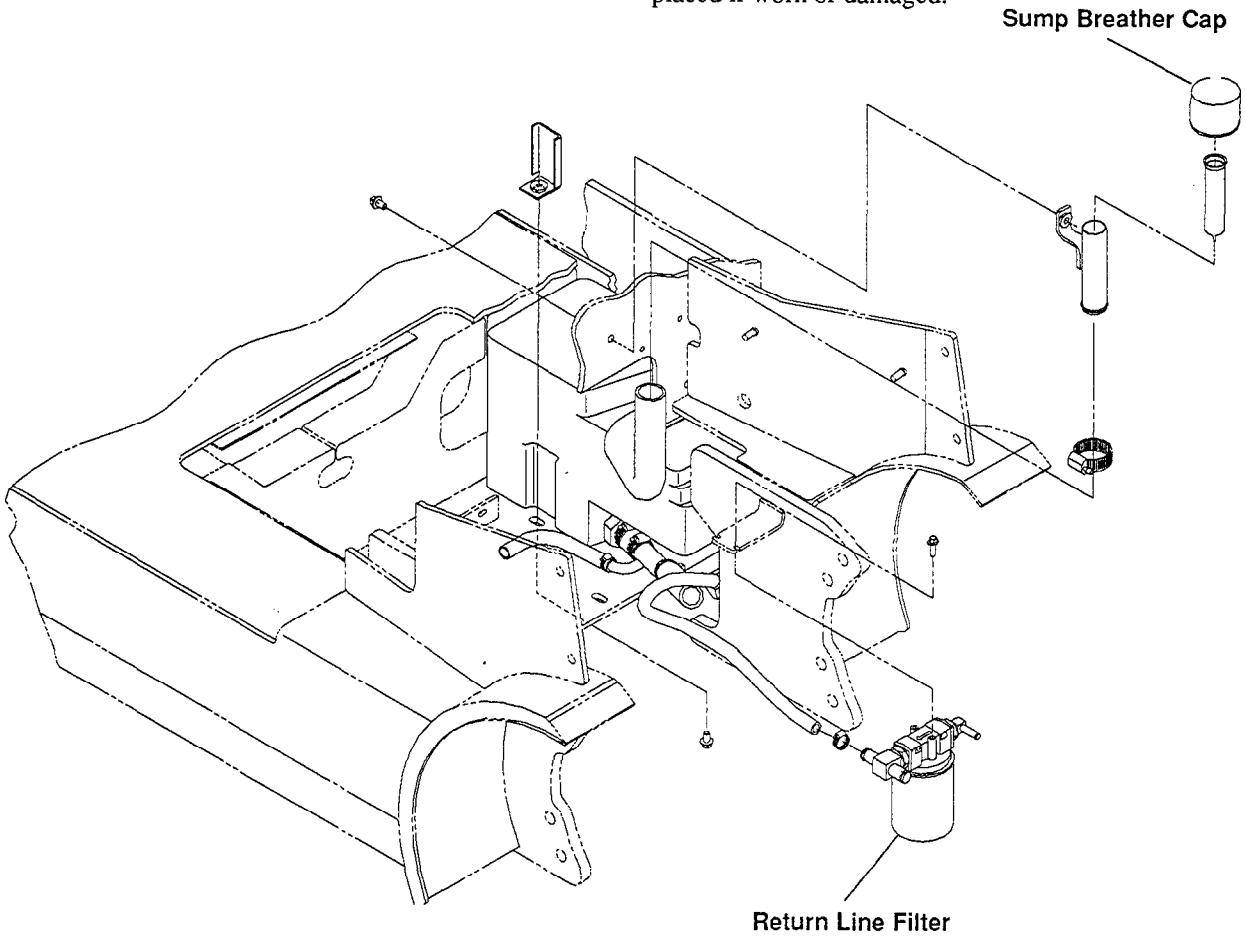

Copyrighted Material
Intended for CLARK dealers only
Do not sell or distribute

https://truckmanualshub.com/

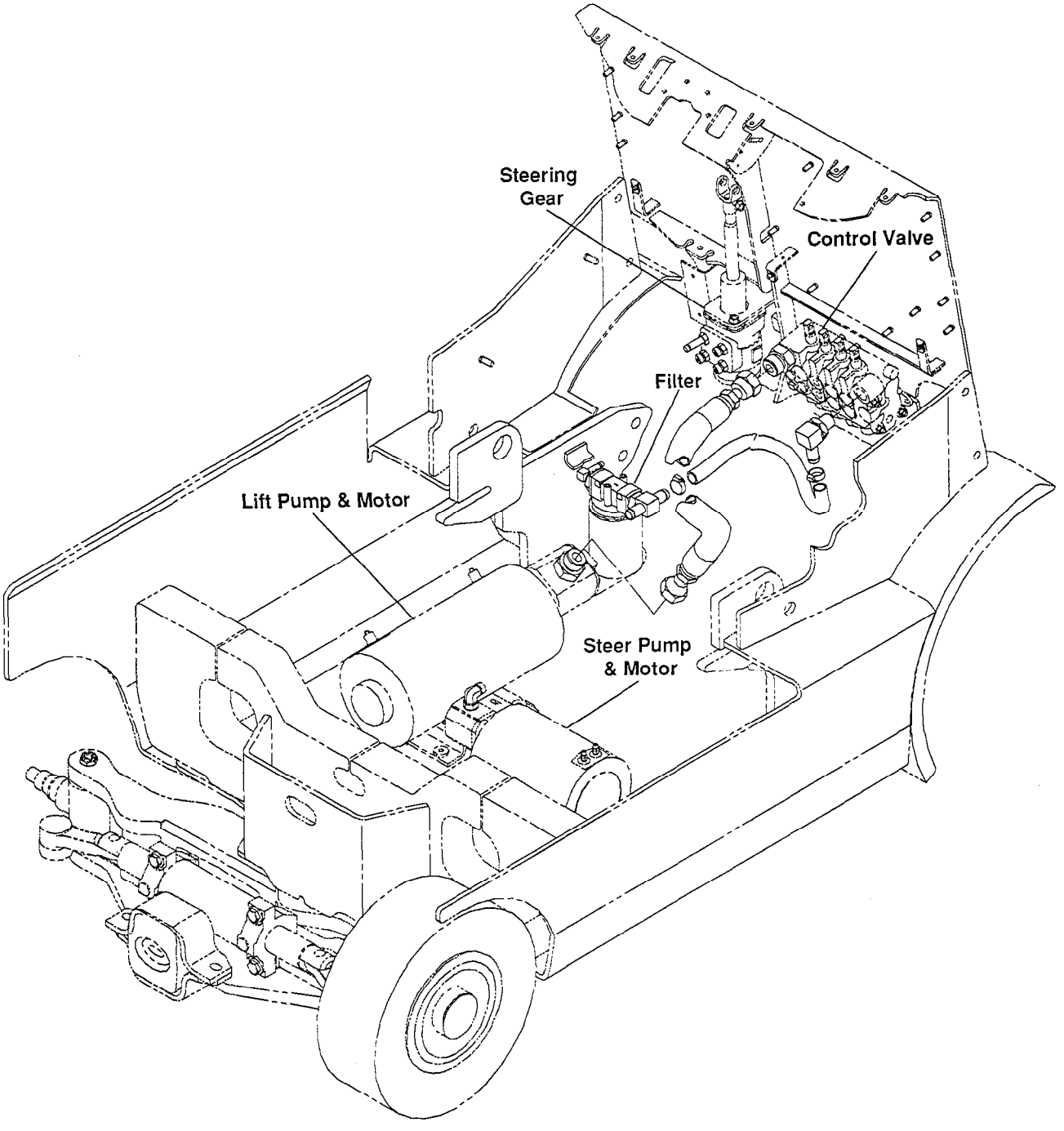

Copyrighted Material
Intended for CLARK dealers only
Do not sell or distribute

https://truckmanualshub.com/

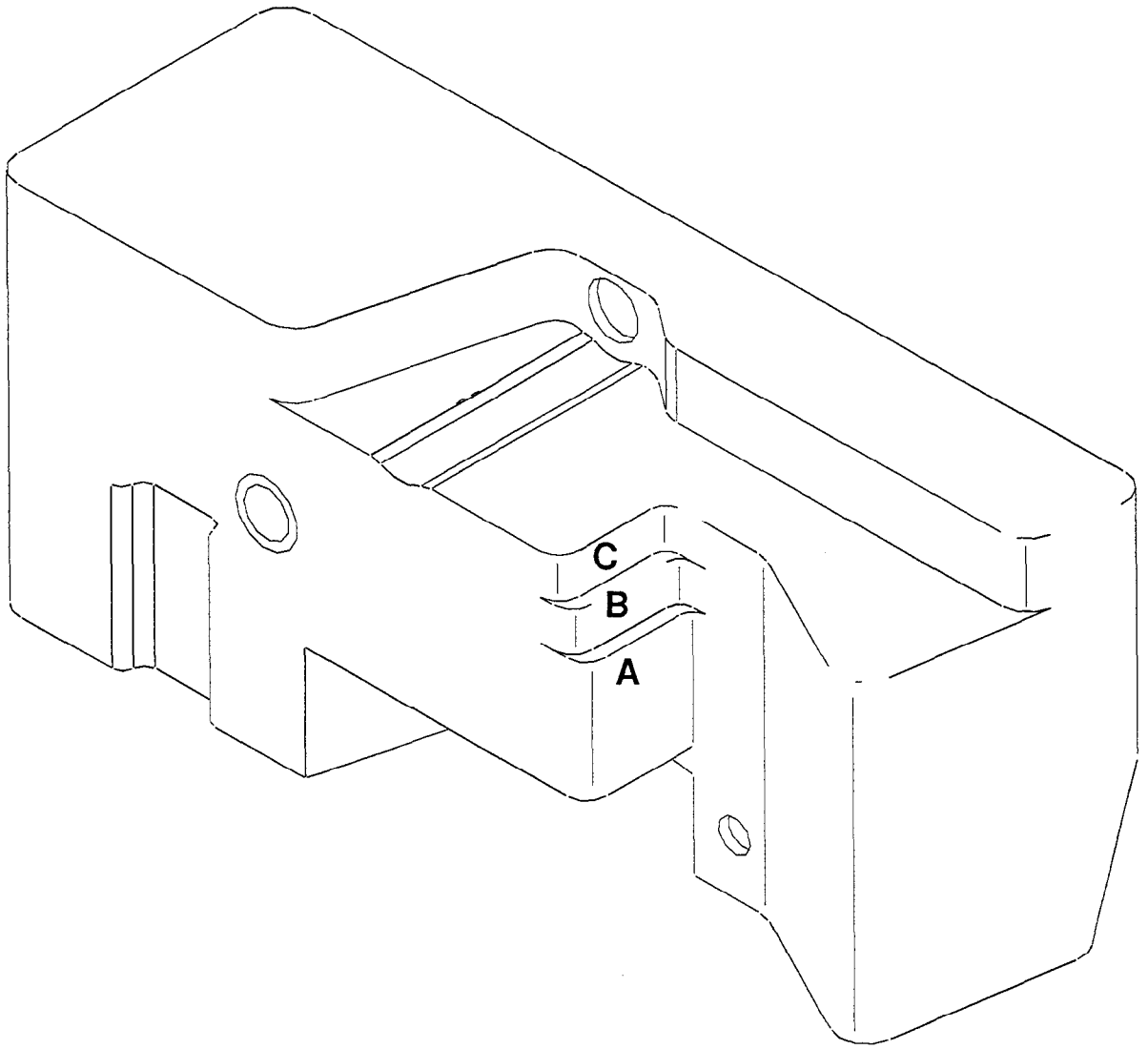

Sump Tank Fill Levels

The sump tak has three level marks, "A", "B", & "C", visible under the floor plate, which are the 3, 4 & 5 gallon marks.

Fill to level "A" for standard upright up to 150" MFH and HI-LO upright up to 139"MFH.

Fill to level "B" for standard upright 153 MFH and above, Hi-LO upright 140" MFH and above and TSU upright up to 217" MFH.

Fill to level "C" for TSU upright 218" and above and all Quad uprights

⚠ CAUTION

The tank head space above level "C" is required for operation of the hydraulic system. Never fill sump tank above level "C".

Copyrighted Material
Intended for CLARK dealers only
Do not sell or distribute

https://truckmanualshub.com/

Hydraulic Fluid and Filter Change

⚠ CAUTION

SAFE PARKING. Before working on truck:

1. **Park truck on a hard, level, and solid surface, such as a concrete floor with no gaps or breaks.**
2. **Put upright in vertical position and fully lower the forks or attachment.**
3. **Put all controls in neutral. Turn key switch OFF and remove key.**
4. **Apply the parking brake and block the wheels.**

There is no drain plug in the hydraulic sump tank. When the sump tank must be drained of all fluid, the procedure is to remove the pump suction line from the sump outlet fitting and allow the fluid to drain into a suitable drain pan. Unless the sump tank is to be removed for other repair or maintenance, the hydraulic fluid can also be changed by one of the following methods:

1. Removal of the sump breather/filler cap and strainer and pumping the fluid out by suction using a separate pump and hose.
2. Pumping the fluid out by using the truck hydraulic system. This method, described below, may be used most easily and satisfactorily for routine changing of the fluid.

Remove the floorboard for access to the hydraulic oil filter and diaqgnostic port on the control valve. The floorplate folds to lift out. No fasteners are used.

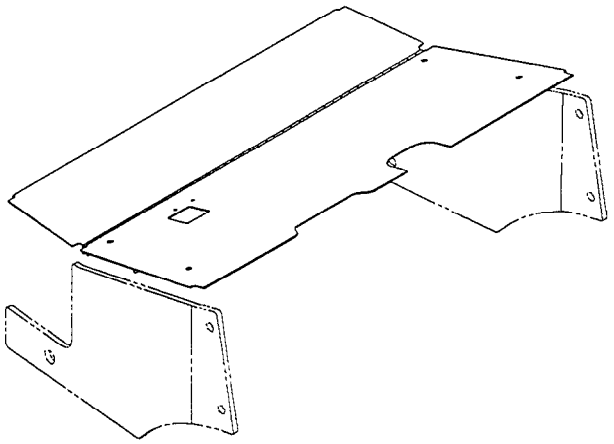

Remove the snap-on cap and connect a suitable drain hose to the diagnostic check port fitting.

NOTE: Use quick-disconnect adapter fitting.

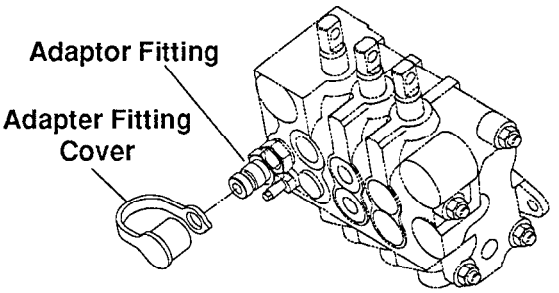

You will need a drain pan of 19 L (5 gal) minimum capacity. Be sure the outlet end of the drain line is directed into the drain pan and held from moving when pressurized.

Turn key switch ON.

Move tilt control lever to the back tilt position to start the lift pump. Hold tilt lever in this position until sump tank is emptied. A steady stream of used oil should flow from the drain line.

Continue operation until the sump tank is emptied. This point will be reached when the pump starts to cavitate. When cavitation occurs the pump speed will increase and the speed sound will whine. **Release the tilt lever immediately** when pump cavitation occurs.

IMPORTANT

Be careful when sump is nearly emptied and oil flow becomes erratic as the pump approaches cavitation Do not operate pump after cavitation occurs.

Turn the key switch OFF.

Disconnect drain line from truck. Replace the diagnostic port cover and reinstall the cowl covers.

NOTICE

If old oil is excessively dirty or hydraulic system is contaminated, it is recommended that the sump tank be completely drained by removing the pump suction line from the sump outlet and flushed withy clean oil.

Copyrighted Material
Intended for CLARK dealers only
Do not sell or distribute

https://truckmanualshub.com/

Remove, clean and replace the sump pick-up screen.

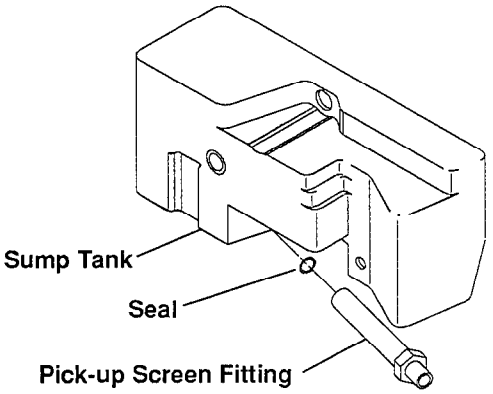

Remove and discard old oil filter. Install new filter. Follow the installation instructions printed on the filter body. Also, check that the hydraulic line connections at the filter head are tightened correctly.

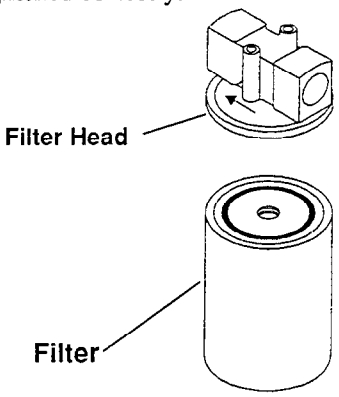

Remove and replace the sump breather cap. Remove and clean the screen from the sump fill tube.

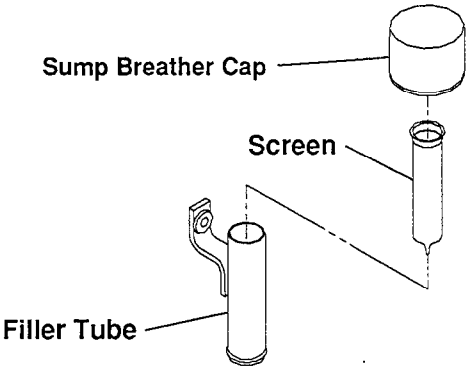

Refill the sump tank with Clark MS-68 Hydraulic Fluid.

Check truck operation. Turn key switch ON. Operate the hydraulic system. Cycle the lift system serval times: raise the lift carriage to full height and lower fully down. Check for leaks. Recheck sump tank fluid level.

CAUTION

Be sure there is adequate overhead clearance before raising upright.

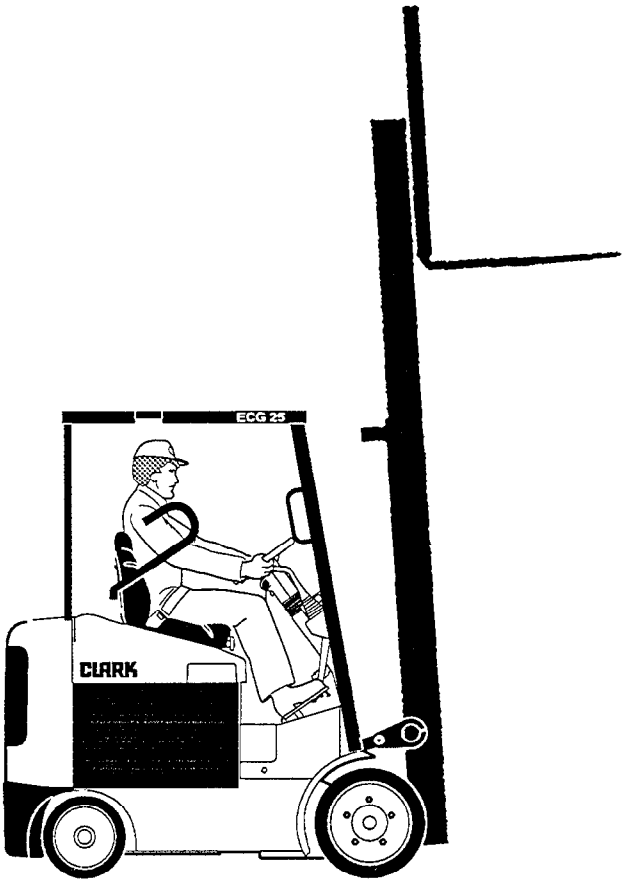

Turn the key switch OFF.

Copyrighted Material
Intended for CLARK dealers only
Do not sell or distribute

https://truckmanualshub.com/

Section 2

Main Hydraulic Pump Troubleshooting

Noisy Pump 2
Pump Not Delivering Hydraulic Fluid 2
Failure to Build Pressure 2
Pump Not Developing Sufficient Pressure 2
Pump Output Low 2
Foaming Fluid 2
Overheated Pump and/or Fluid 2
External Leakage 3
Shaft Seal Leakage 3

Copyrighted Material
Intended for CLARK dealers only
Do not sell or distribute

https://truckmanualshub.com/

The following is a list of problems and solutions relating to the main hydraulic pump and associated components. For other hydraulic system troubleshooting, refer to Groups 30 and 34.

Noisy Pump

- Hydraulic fluid level low; measure and correct fluid level.
- Fluid viscosity too high; change to specified fluid.
- Sump suction screen dirty; check and clean.
- Air leak at pump inlet line; check plumbing tightness.
- Inlet line restriction; check for foreign material or line kinks, check and clean sump suction screen.
- Air leak at pump shaft packing; replace packing.
- Defective hydraulic pump; continue other troubleshooting items, then consider servicing or replacing pump.

Pump Not Delivering Hydraulic Fluid

- Hydraulic fluid level low; check and correct fluid level.
- Sump suction screen dirty; check and clean.
- Inlet line restriction; check for foreign material or line kinks, check and clean sump suction screen.
- Air leak in suction line; check plumbing tightness.
- Fluid viscosity too high; check fluid viscosity and change to specified fluid.
- Defective hydraulic pump; continue other troubleshooting items, then consider servicing or replacing pump.

Failure to Build Pressure

- Hydraulic fluid level low; measure and correct fluid level.
- Defective relief valve or pump; perform pressure check to test valve and pump.

Pump Not Developing Sufficient Pressure

- Leak in hydraulic control system; check system for and correct leaks.
- Inlet line restriction; check for foreign material or line kinks, check and clean sump suction screen.
- Suction screen dirty; clean screen.
- Defective hydraulic pump; continue other troubleshooting items, then consider servicing or replacing pump.

Pump Output Low

- Cavitating pump; see "Noisy Pump."
- Air in fluid or wrong fluid; drain and fill with correct fluid.
- System relief valve set too low or too high, stuck or leaking; correct relief valve, pump may be OK.
- Overheated fluid; see "Overheated Pump and/or Fluid."
- Contaminated fluid; eliminate contamination source and replace fluid.
- Gear face, body or cover nicked; repair or replace pump.
- Excessive side loading, wear plate tight in body bore, pinched thrust plate; inspect and service pump.

Foaming Fluid

- Cavitating pump; see "Noisy Pump."
- Wrong fluid; drain and fill with correct fluid.

Overheated Pump and/or Fluid

- Low viscosity fluid; drain and fill with correct fluid.
- Contaminated fluid; drain fluid, clean suction screen, replace filter and fill sump.
- Cavitating pump; see "Noisy Pump."
- Pump drive shaft misaligned; check mounting and alignment.
- Axial loading on drive shaft; check shaft end clearance and shaft alignment; check for worn key/spline.
- Relief valve usually in bypass; check relief setting.

Copyrighted Material
Intended for CLARK dealers only
Do not sell or distribute

https://truckmanualshub.com/

External Leakage

- Excessive system pressure; replace pressure control valve on main hydraulic valve.
- Faulty or distorted pump seal gasket; replace seal gasket.
- Damaged surfaces on pump body or cover; correct and replace as required.

Shaft Seal Leakage

- Damaged or worn seal; replace.
- Shaft scratched or worn or seal nicked; repair (polish) or replace and add new seal.
- Front cover bearing out of position; replace front cover assembly.
- Shaft seal housing bore scratched; replace front cover assembly.
- Improper fit of shaft; replace front cover assembly.
- Contamination; inspect and service pump.
- Pump operated in wrong rotation; replace shaft and pressure loading seals.
- Seal installed backwards; inspect and service seal.

Copyrighted Material
Intended for CLARK dealers only
Do not sell or distribute

https://truckmanualshub.com/

Section 3

Main Hydraulic Pump Removal and Installation

Main Hydraulic Pump Removal 2
Main Hydraulic Pump Installation 3

Copyrighted Material
Intended for CLARK dealers only
Do not sell or distribute

https://truckmanualshub.com/

Main Hydraulic Pump Removal

⚠ CAUTION

SAFE PARKING. Before working on truck:

1. **Park truck on a hard, level and solid surface, such as a concrete floor with no gaps or breaks.**
2. **Put upright in vertical position and fully lower the forks or attachment.**
3. **Put all controls in neutral. Turn key switch OFF and remove key.**
4. **Disconnect the battery.**
5. **Apply the park brake and block the wheels.**

The main hydraulic pump is located beneath the battery. The pump can be removed from the truck without removing the pump and motor assembly.

Serviceable items are the pump, motor and the suction line filter. Other components such as hoses, fittings and clamps are non-serviceable and should be replaced if faulty.

NOTE

Capacity of hydraulic sump is 19 L (5 gal).

1. Place a drip pan under the hydraulic pump to oil that will drain from the pump and hoses when they are disconnected.
2. Remove bolts from hose and cable support bracket and push aside to provide access to steer pump.
3. Disconnect suction line from pump and plug the line.

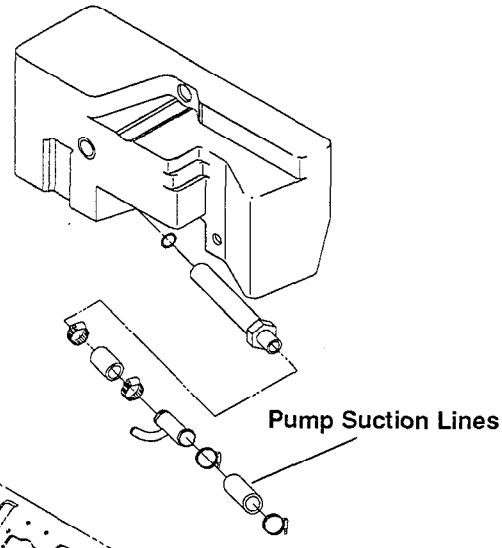

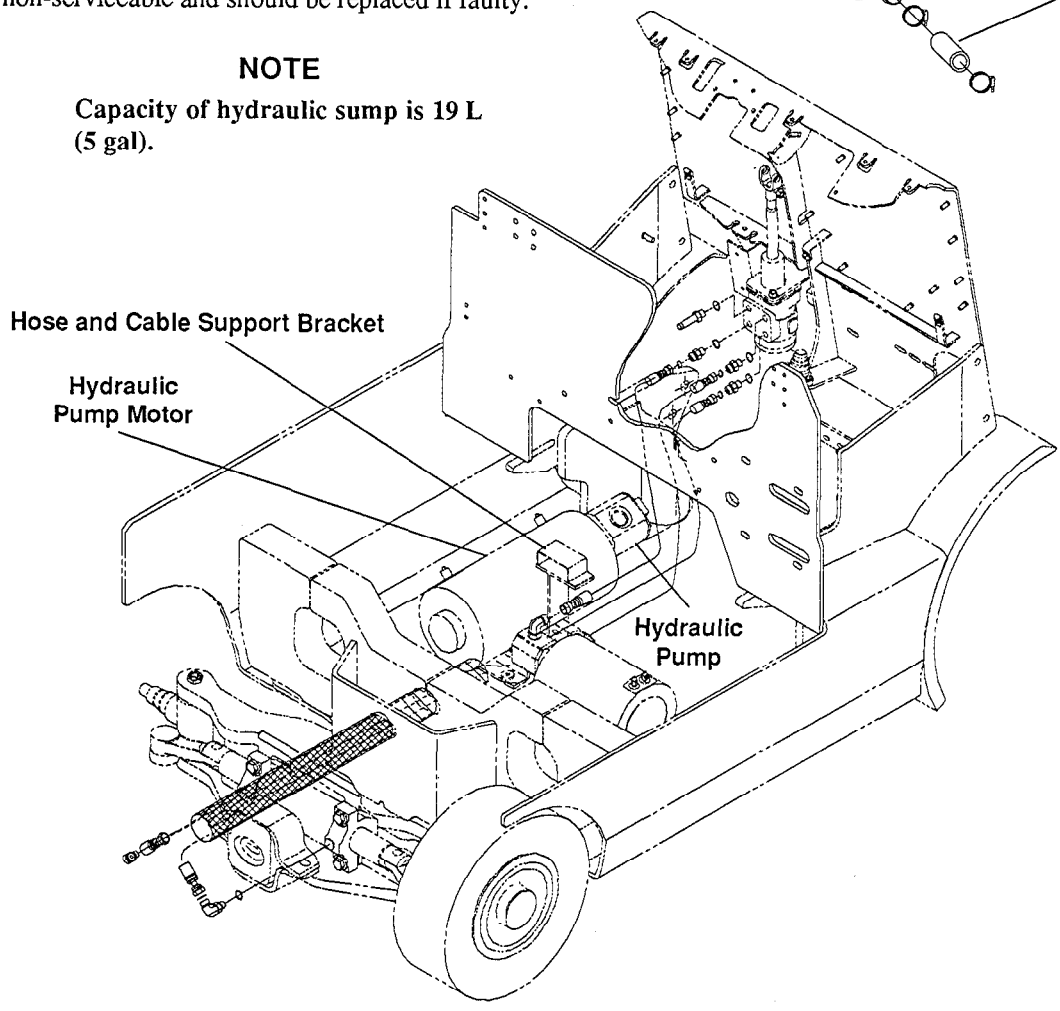

Copyrighted Material
Intended for CLARK dealers only
Do not sell or distribute

https://truckmanualshub.com/

4. Disconnect the pressure line from the pump. Cap the hose and set aside.

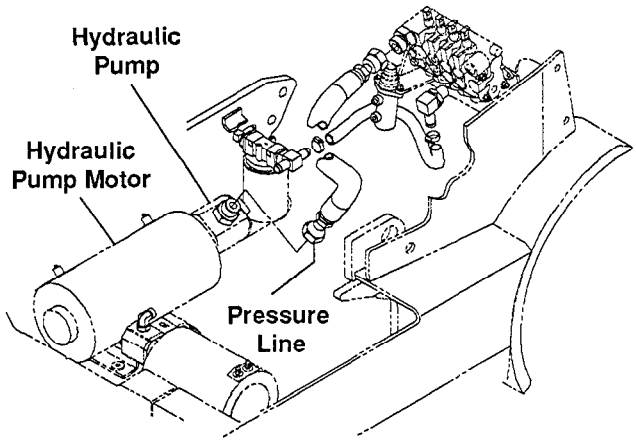

5. Remove the pump mounting fasteners.The ground strap will come off with the fasteners.

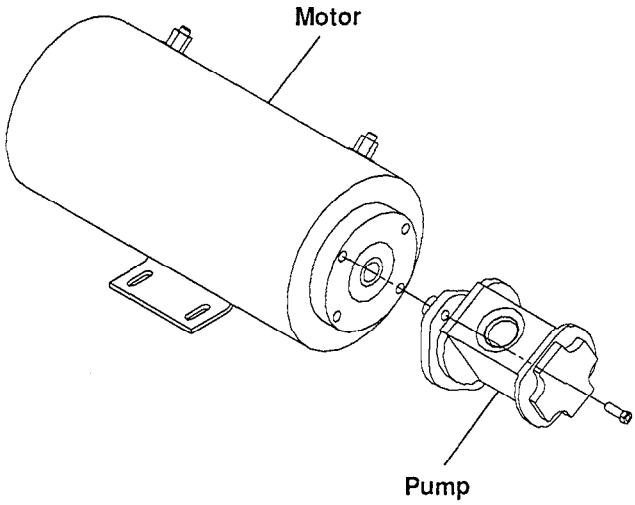

Main Hydraulic Pump Installation

IMPORTANT

Keep all components clean during installation.

1. Be sure new or serviced pump is well lubricated before installation.
2. Install pump onto motor. Install and tighten capscrews. Make sure ground wire is attached to lower capscrews.
3. Slide suction hose and clamp into place and tighten.
4. Connect pump outlet hose and tighten. Use two wrenches to tighten hose fittings to prevent twisting of lines.

NOTE

Always clean or replace hydraulic sump suction screen fitting when installing new or rebuilt pump. See Section 1, Main Hydraulic Filters and Fluid Maintenance.

5. Refill sump as necessary using Clark Specification MS-68 hydraulic fluid. See Section 1 for description of sump tank fill levels.
6. Reinstall hose and cable support bracket.
7. Check operation of hydraulic system. See Section 1, Main Hydraulic Filters and Fluid Maintenance.
8. Check fluid level of sump again. Add fluid as necessary.

NOTE

For Hydraulic Pump Overhaul Procedures see Section 4.

Copyright Material Maytag
Intended for CLARK dealers only
Do not sell or distribute

https://truckmanualshub.com/

Section 4

Main Hydraulic Pump Overhaul

Preparation for Pump Disassembly 2
Routine Maintenance 2
Main Hydraulic Pump Disassembly 2
Inspection and Repair 2
Assessment 2
Body 2
Mounting Flange & End Cover 3
Bushes 3
Gears 3
Main Hydraulic Pump Exploded View 3
Main Hydraulic Pump Assembly 4
Running-In 5

Copyrighted Material
Intended for CLARK dealers only
Do not sell or distribute

https://truckmanualshub.com/

Preparation for Pump Disassembly

IMPORTANT

Before removing any component for overhaul, make sure the correct repair parts, seals, and gasket sets are available.

- Overhaul pump only in a clean, dust free location, using clean tools and equipment. Dirt or grit will damage the highly machined surfaces and will result in leakage or premature failure of the pump. Be sure the work area is clean.
- Plug openings before cleaning and brushing to avoid contaminating internal parts. Clean exterior of pump with a good grade solvent and dry thoroughly. Use a wire brush if necessary to remove dirt accumulations.
- Before beginning disassembly, scribe match marks on the body and cover to ensure that pump will be assembled in the same manner as it was shipped from factory. If the body or rear cover is replaced during overhaul, scribe a match mark on the new part as on the part it replaced. This ensures that inlet and outlet, with respect to rotation, is kept the same.

Routine Maintenance

- No maintenance is necessary other than periodic checks for tightness of the mounting bolts and port fittings plus visual examination for oil leaks. The unit should be kept externally clean, especially in the area of the shaft seal as dirt can accelerate seal wear and cause leakage.
- The unit must be operated on clean hydraulic fluid. Directions for filter service in this Group must be adhered to. A fluid cleanliness level of ISO4406 17/14 or better is recommended to give maximum life.

Main Hydraulic Pump Disassembly

IMPORTANT

Keep parts in order as removed to assure correct assembly later.

1. Lightly mark the end cover, body and mounting flange (3, 9 and 12) to ensure reassembly in the correct position.
2. Remove bolts and spring washers (1 and 2).
3. Remove end cover (3), body O-ring (4), bush seal and back-up seal (6 and 5).
4. Turn the unit over and lightly tap the mounting flange (12) to disengage if from the locating dowels and slide the flange squarely off the shaft.

IMPORTANT

Be careful not to damage the machined bore in mounting section (15) when removing the seal because this will result in leakage past seal.

5. Remove circlip (14) and shaft seal (13).
6. Remove body O-ring (4), bush seal and back-up seal (6 and 5).
7. Before removing the internal components mark the bushes to denote the location in the body. On a plain area away from seal location mark:

FD	=	Bush on driveshaft flange end
FI	=	Bush on driven gear flange end
CD	=	Bush on driveshaft cover end
CI	=	Bush on driven gear cover end

8. With the unit lying on its side, hold the driveshaft (10) and pull it squarely out of the body bringing with it the bushes (7 and 8).
9. Remove driven gear (11) and the two remaining bushes.

Inspection and Repair

Assessment

Each component should be thoroughly cleaned, carefully examined and assessed for suitability of reuse. Below is a guide for inspection the various components.

Body

Inspect the body bore cut-in where gears wipe into the body.

The body can only be reused if the cut-in is bright and polished in appearance and the depth does not exceed .08 mm (.003 inch).

The body should be replaced if the surface is scored, has a matt appearance or shows signs that the tip of the gears have dug in and torn away the surface material.

The body should be inspected to ensure that there is no superficial damage which may adversely effect performance or sealing. Pay particular attention to the port threads and body O-ring seal recesses.

Copyrighted Material
Intended for CLARK dealers only
Do not sell or distribute

https://truckmanualshub.com/

Main Hydraulic Pump Exploded View

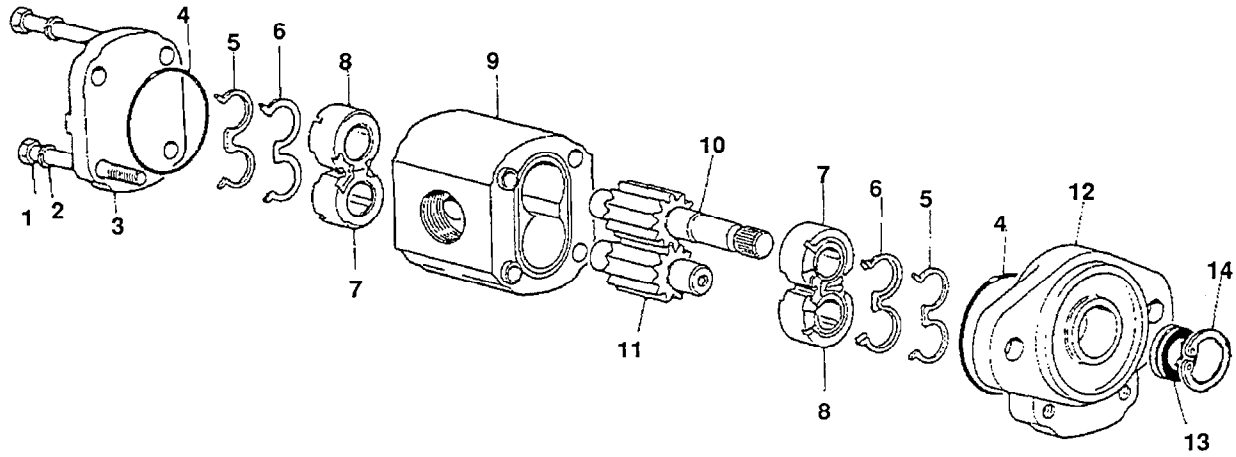

Main Hydraulic Pump

1. Bolt
2. Spring Washer
3. End Cover
4. Body O-ring
5. Back Up Seal
6. Bush Seal
7. Bush
8. Bush
9. Body Dowel Sub-Assembly
10. Drive Shaft
11. Driven Gear
12. Mounting Flange
13. Shaft Seal
14. Circlip

Mounting Flange and End Cover

The inner surfaces should be inspected to ensure that there is no unusual wear or scoring in the regions where the body O-rings and bush seals contact, which could result in external leakage.

Check the shaft seal recess for scoring or damage that could result in oil leakage around the outer diameter of the shaft seal. Replacement shaft seals can be refitted with Loctite hydraulic sealant to overcome slight damage in this area.

Bushes

The side faces which abut the gears should be perfectly flat showing no sigh of scoring. Characteristically there are bright polished areas on this surface caused by loading against the gear side faces, which is often more pronounced on the low pressure side. These should be replaced if there is any general scoring or fine scoring with a matt appearance or tearing of the surface material. Often there is a witness where the tips of the opposing gears have wiped an overlap resembling a half moon shape. There must be no noticeable wear step as it is critical that the bush side face is completely flat to the gear side face.

The bush bearing liners are acceptable providing that they are not scored or show other damage. The general outside area of the bush should not show any prominent signs of wear.

Gears

The gear side faces should be examined for bruising or scoring. Often operation on contaminated fluid shows scoring between the root of the gear and the journal undercut, which leaves a wear step. If a wear step can be felt, coincidental with the root diameter, by drawing a sharp pointed tool across the surface from the undercut outwards towards the tip of the gear, then the gear is unserviceable.

The gear teeth should then be carefully examined to ensure that there are no signs of bruising or pitting..

The journal bearing surfaces should be completely free from scoring or bruising. The surface should appear highly polished and smooth to the touch.

(continued on next page)

Copyrighted Material
Intended for CLARK dealers only
Do not sell or distribute

https://truckmanualshub.com/

Gears (continued)

Examine the area where the shaft seal lips run on the driveshaft, this shows up as a polished ring or rings. If a noticeable groove can be felt or there is scoring, the shaft should be replaced.

Provided the driveshaft spline is not damaged or worn and the gears have not been harmed as described above, then the gears can be reused. If, however, the gears are damaged they must be replaced as a matched set.

As a matter of good practice, when pumps have been dismantled, all seals should be replaced. It is most important that only genuine Clark seals be used.

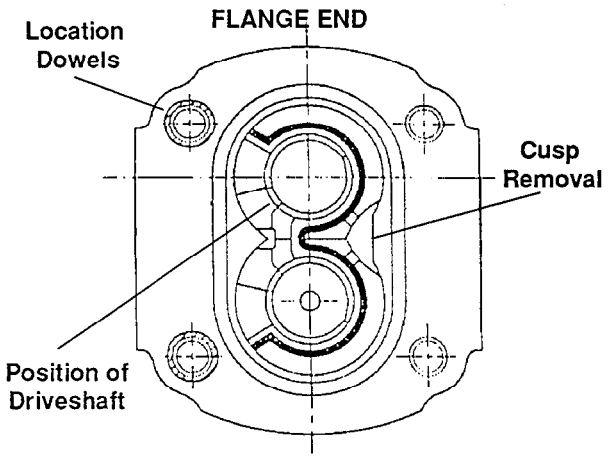

ARRANGEMENT OF BUSHES & GEAR SET IN BODY

Reassembling the Unit

Ensure all parts are perfectly clean and lubricate bushes and gears with clean hydraulic fluid (ensure O-ring recess and end faces of body remain dry). This will assist assembly of components into the body bores.

1. Refit cover end gushes (CD and CI) into the undowelled end of the body from where they were removed. The ''C' shape cut-out in the bushes must be to the side of the body with the cusp removal flat as shown.
2. Place the end cover (3) against the undowelled end of the body (9) and stand the assembly on the cover so the dowels are uppermost and to the lefthand side.
3. Fit driveshaft (10) and driven gear (11) into their original positions in the body.
4. Refit flange end bushes (FD and FI) into their original bores remembering the 'C' cut-out must be to the side of the body with the cusp removal flat and match the cover end bushes.
5. Fit new body O-ring (4), bush seal and back-up seal (5 and 6) ensuring that the seals locate correctly in the seal grooves.
6. Fit new shaft seal into the recess in the mounting flange with the 'garter' spring facing into the pump. Refit circlip (14). Remember that if the seal recess was scored then Loctite hydraulic sealant must be applied to the outer diameter of the seal.
7. Fit shaft seal assembly sleeve over driveshaft and carefully refit mounting flange (12) enduring that it locates squarely onto the dowels in the body - remove assembly sleeve.
8. Holding the whole unit together, carefully turn it over but ensuring it is supported on the mounting flange and not the driveshaft.
9. Remove end cover (3) and fit new body O-ring (4), bush seals and back-up seals (6 and 5).
10. Replace the end cover and refit bolts and spring washers. Torque tighten bolts to 46-51 N•m (34-38 lb ft).
11. Pour a small amount of clean hydraulic fluid into a port and check that the shaft can be rotated without undue force using a smooth jawed vice.

Copyrighted Material
Intended for CLARK dealers only
Do not sell or distribute

https://truckmanualshub.com/

Running-In

A unit which has been reassembled with either new gear, bushes or body, must be carefully run-in before it is subjected to full working conditions.

Ideally this should be done on a test rig as shown below, where pressure can be gradually applied and any wiping from the body cut-in arrested by filters.

It is recommended that the unit is run-in at 1500 rpm, initially, at zero pressure for one minute, then in stages with the pressure increased by 500 psi every minute, until maximum rated pressure has been attained. Frequently check the system temperature, enduring that it does not exceed the maximum permissible figure of 80* C. If the temperature exceeds the system or unit specification, the test must be delayed and operated off-load until acceptable temperatures are obtained.

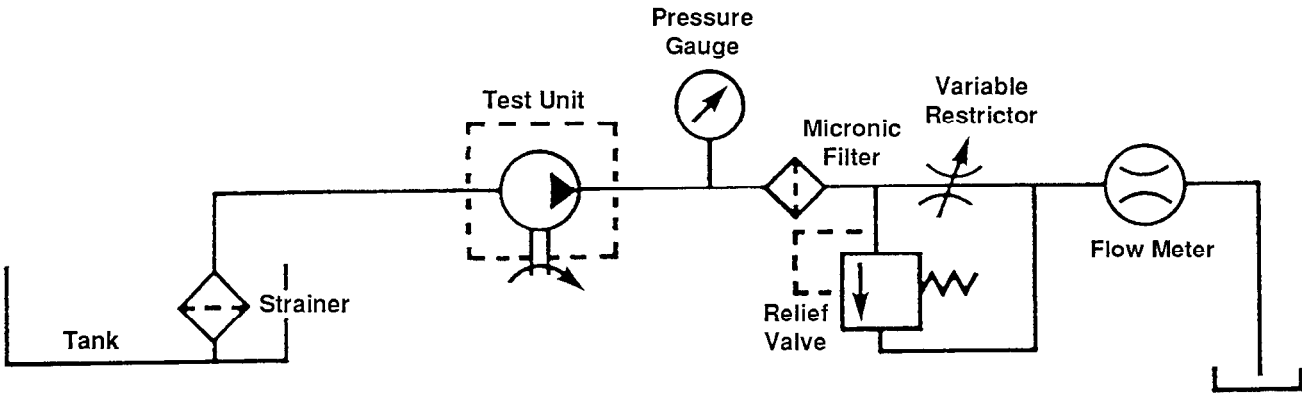

TYPICAL PUMP TEST CIRCUIT

Copyrighted Material
Intended for CLARK dealers only
Do not sell or distribute

https://truckmanualshub.com/

GROUP 30

HYDRAULIC CONTROL VALVE/LIFT CIRCUIT

Hydraulic Control Valve/Lift Circuit
Specifications and Description ..... Section 1

Hydraulic System Schematic ..... Section 2

Hydraulic System Troubleshooting ..... Section 3

Hydraulic system Pressure Checks
and Adjustments ..... Section 4

Hydraulic Control Valve Removal
and Replacement ..... Section 5

Hydraulic Control Valve Overhaul ..... Section 6

IMPORTANT

Other hydraulic-related components and circuits are described and illustrated in Group 25, "Steering Column and Gear", Group 26 "Steer Axle", Group 29, "Hydraulic Sump, Filters and Pump", Group 32, "Tilt Cylinders", and Group 34, "Uprights". Refer to these other groups for hydraulic components not covered in this group.

Copyrighted Material
Intended for CLARK dealers only
Do not sell or distribute

https://truckmanualshub.com/

Section 1

Hydraulic Control Valve/Lift Circuit Specifications and Description

Specifications

Hydraulic Fluid Type: Clark specification MS-68 (Clark part #1802155 and #1800236)

Main Relief Valve Setting: 20,000 to 21,000 kPa (2900 to 3000 psi) at rated flow.

Auxiliary Relief Valve Setting: 13,300 to 14,300 kPa (1925 to 2075 psi) at rated flow.

Rated Flow:

Lift spool (spool #1): 76 L/min (20 gpm).
Tilt spool (spool #2): 38 L/min (10 gpm).
Auxiliary spool (spool #3): 38 L/min (10 gpm).

Integral Pressure Compensated Flow Control Settings:
Tilt spool (spool #2):

Tilt Flow Settings:

Upright Usage	Tilt Speed (°/sec)	Flow Lpm	Flow (gpm)
5715 mm (225 in) MFH & above	3	9	(2.5)
Below 5715 mm (225 in) MFH	5	15	(4)
European Upright Option	8	26	(7)

Auxiliary spool (spool #3): 9 L/min (2.5 gpm).

Maximum Pressure Drop at Rated Flow:
Inlet to outlet: 689 kPa (100 psi).
Lift spool (spool #1):

- Inlet to cylinder port: 689 kPa (100 psi)
- Cylinder port to outlet: 550 kPa (80 psi).

Tilt spool (spool #2):
- Inlet to cylinder port: 689 kPa (100 psi)
- Cylinder port to outlet: 550 kPa (80 psi).

Auxiliary spools (spools #3 and #4):
- Inlet to cylinder port: 345 kPa (50 psi)
- Cylinder port to outlet: 207 kPa (30 psi).

Flow Control Adjustments: Adjustable from 4 to 38 L/min (1 to 10 gpm). Before adjusting, turn fully CCW to stop.

Flow Control Adjustments: Adjustable from 4 to 38 L/min (1 to 10 gpm). Before adjusting, turn fully CCW to stop.

AUX FLOW CONTROL ADJUSTMENTS	
FLOW SETTING L/min (gpm)	CLOCKWISE TURNS OF ADJUSTMENT SCREW
6 (1.5)	.50
9 (2.5)	.75
15 (4)	1.50
21 (5.5)	2.125
26 (7)	3.00
38 (10)	4.50

Service Intervals

Hydraulic System Relief Pressure Check: Every year or every 2000 hours of operation.

Fastener Torques

Lever to Spool Rod Turnbuckle Adjustment Jam Nuts: 28.5-32.5 ft-lb (39-44 N•m).

Pivot Pin Keeper Hexnut: 14.5-18.5 ft-lb (20-25 N•m).

Lever Pivot-Bracket Mounting Nuts: 14.5-17 ft-lb (20-23 N•m).

Copyrighted Material
Intended for CLARK dealers only
Do not sell or distribute

https://truckmanualshub.com/

Description

The following description focuses primarily on hydraulic circuitry controlled by the main hydraulic control valve, that is, the lift/tilt/aux circuit. Various other hydraulic systems come into play, however, and are mentioned. The entire hydraulic system is depicted in the schematics in Section 2 (next page).

Descriptions of the braking and steering circuits are given in Groups 23 and 25.

The main hydraulic pump (described in Group 29) is driven by the pump motor and draws fluid from the sump through a particle-blocking suction screen.

The main hydraulic control valve features an open-center, parallel-circuit type modular design. It has the main (lift/tilt) pressure relief valve (steering pressure relief valve is on steer pump), a secondary pressure relief valve for optional auxiliary components, a lift spool, a tilt spool with an integral counterbalance valve, optional auxiliary spools, and adjustable pressure-compensated flow controls. All spools are low-leakage design.

The main hydraulic valve has from two to four valve sections. Each section performs a separate function; standard two spool assemblies have a inlet/lift section (with fluid inlet port), a tilt section, and an outlet section. A third and fourth section may be added to control auxiliary components.

When lift attachments are used, an auxiliary section may be added to the outer (RH) side of the standard (lift/tilt only) main valve. The optional auxiliary sections also have an adjustable relief valve and can be assembled with optional flow control levels.

The valve spools are arranged in standard sequence (from the operator's position) to first provide lift control, then tilt, and finally auxiliary control. The control levers are spring-loaded (by the valve spool centering springs) to return them to neutral when released. Oil flow is controlled by the amount or distance the control handles are moved. Excess oil flow is returned to the sump. A check valve prevents reverse flow.

When all the control valve spools are in neutral, the micro switch turns the pump motor OFF and not fluid flows. When a spool is partially shifted and the associated cylinder or other actuator has not reached its end-of-travel, some of the fluid flows to the cylinder (actuator) and the rest flows to the sump line. In both cases, the pressure in the system should be less than the amount required to open the relief valves.

The main relief valve vents flow to the sump when one of the following conditions is present:

- The operator continues to hold the lift control in the lift position after the lift mechanism reaches its end-of-travel.
- Too heavy a load is being lifted.
- The operator continues to hold the tilt control in the tilt position after the tilt mechanism has reached its end-of-travel (This is called "tilt bypass.")
- Auxiliary relief fails to operate.

The auxiliary relief valve vents flow to the sump when the operator continues to hold the attachment control in the operated position after the attachment reaches its end-of-travel.

Main and auxiliary relief pressure settings can be checked through a gauge port on the pump.

Flow from the sump return line is filtered before entering the sump. If the filter is clogged, a by-pass valve routes the flow around the filter.

A tilt-lock valve built into the main control valve assembly locks the upright into its current tilt position when the truck is turned off. A load lowering flow valve mounted on the upright limits the speed at which the operator can lower a load, decreasing the speed for heavier loads. A velocity fuse built into one of the lift cylinder ports prevents the upright from falling rapidly should a hydraulic line rupture or be disconnected.

NOTE

Hydraulic plumbing arrangement is illustrated in Group 29.

Copyright CLARK
Intended for CLARK dealers only
Do not sell or distribute

https://truckmanualshub.com/

Section 2-Hydraulic Schematic

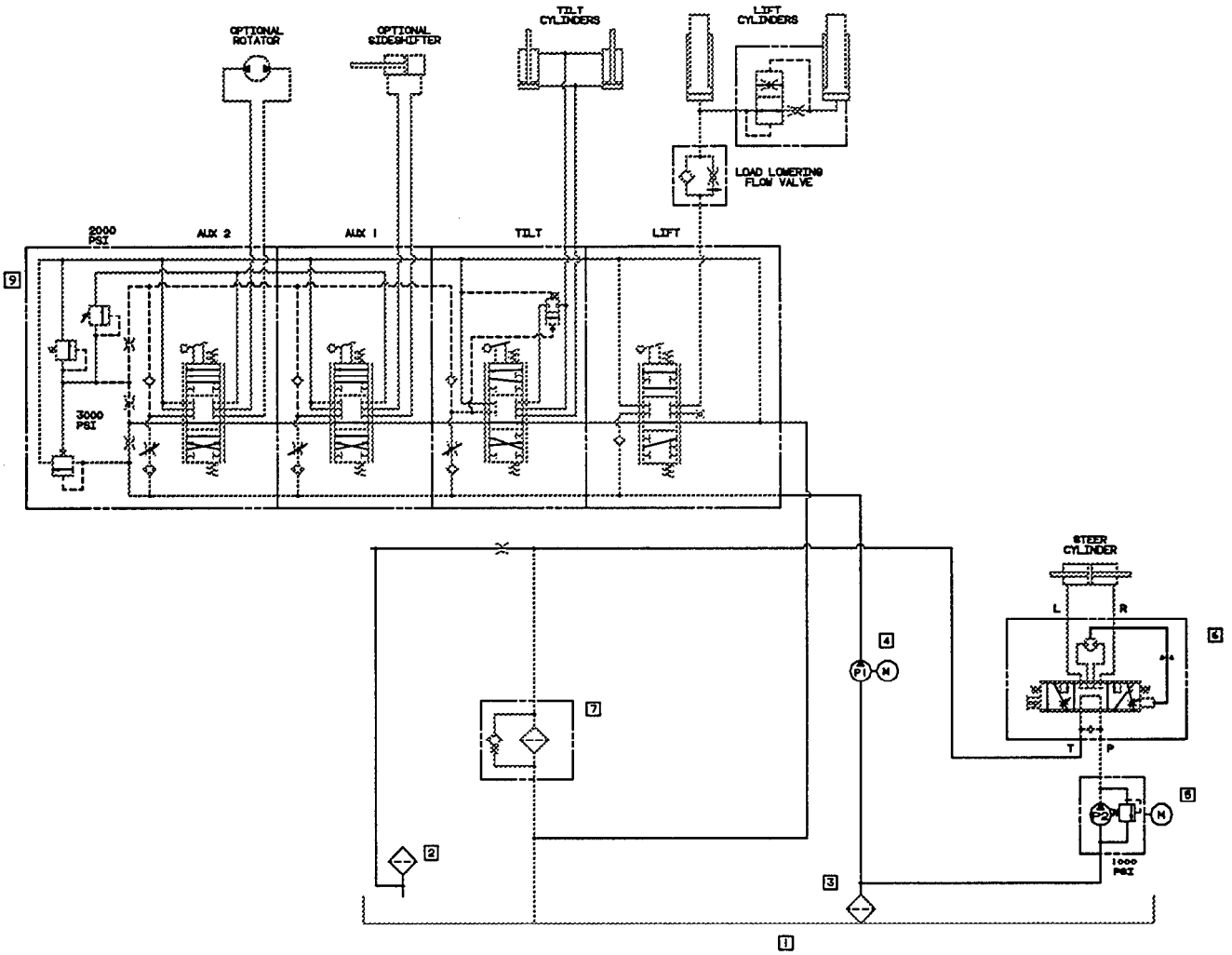

1 Hydraulic Sump Tank
2 Filler, Breather and Strainer
3 Suction Strainer
4 Lift Pump & Motor
5 Steer Pump & Motor
6 Power Steering Valve
7 Return Line Filter & Bypass Valve

9 Main Hydraulic Valve With:
- A. Main Pressure Relief Valve
- B. Low Leakage Lift Spool
- C. Tilt Spool With Integral Counterbalance Valve
- D. Aux Spools with Secondary Pressure Relief Valve
- E. Adjustable Pressure Compensated Flow Controls

Copyrighted Material
Intended for CLARK dealers only
Do not sell or distribute

https://truckmanualshub.com/

Section 3

Hydraulic System Troubleshooting

The following is a list of problems and solutions relating to the main hydraulic control valve and associated components. For other hydraulic system troubleshooting, refer to Groups 29 and 34.

No lift, tilt, or auxiliary function

- Hydraulic fluid very low; check and fill to correct level.
- Hose or fittings broken; replace component.
- Defective main lift valve; check other Troubleshooting items for possible cause, then consider rebuilding or replacing main lift valve.
- Hydraulic pump defective; check other Troubleshooting items for possible cause, then consider rebuilding or replacing pump.

No motion, slow or jerky action of hydraulic system

- Spool not moved to full stroke; check travel and linkage adjustment.
- Relief valve not properly set, stuck in place, and/or worn; check and clean valve, replace if necessary.
- Dirt or foreign particles lodged between relief valve control poppet and seat; check valve and clean.
- Valve body cracked inside; check and replace entire valve.

Foaming hydraulic fluid

- Low oil level; check and fill to correct level.
- Wrong fluid; drain and refill with correct oil.
- Oil too heavy; change to correct viscosity.
- Pump inlet line restriction or line kinked; clean line and suction screen or repair kinked hose.
- Hydraulic pump cavitating (pumping air with fluid); check hydraulic plumbing for airtight hoses and connections.

Overheated hydraulic fluid

- Thin fluid; drain and fill with correct fluid.
- Fluid contaminated; drain sump, clean suction screen, replace filter, and refill.
- Cavitating pump; check hydraulic plumbing for airtight hoses and connections.
- Pump driveshaft misaligned; check mounting and alignment.
- Axial loading on drive shaft; check shaft end clearance and shaft alignment; check for worn key/spline.
- Relief valve in bypass; check relief setting.

Load cannot be lifted to maximum height

- Hydraulic fluid low; check and fill to correct level.
- Hydraulic pump defective; check other Troubleshooting items for possible cause, then consider rebuilding or replacing pump.

Oil leaks at top of lift (secondary) cylinder(s)

- Plugged vent line; check and clear line.
- Worn or damaged piston seal; rebuild cylinder.
- Scored cylinder wall; replace cylinder.

See Group 34, "Cylinder Removal, Overhaul, and Replacement."

Oil leak at tilt or auxiliary function cylinder

- Worn or damaged seal; rebuild cylinder.
- Scored piston rod; repair or replace rod.

See Group 34, "Cylinder Removal, Overhaul, and Replacement."

Load will not hold

- Oil bypassing between lift spool and valve body; overhaul valve and spool.
- Spool not centered; see spool remedies for correcting problems when spools do not return to neutral.
- Oil bypassing piston in cylinder; repair or replace cylinder.

Oil leaks at either end of main hydraulic valve spool

- Defective O-ring seals; rebuild valve.

Copyrighted Material
Intended for CLARK dealers only
Do not sell or distribute

https://truckmanualshub.com/

Spring-centered spools do not return to neutral

- Broken springs; rebuild valve.
- Entrapped foreign particles; check and clean system and valve.
- Bent spool; replace with new valve section.
- Misalignment or binding of linkage; check and align/adjust linkage.

No relief valve action (high pressure)

- Small particles of dirt in relief valve subassembly; check, clean, and/or replace relief valve, clean hole.
- Relief valve subassembly installed backwards; reinstall correctly.

Load drops when spool is moved from neutral to lift position

- Dirt or foreign particles lodged between check valve ball and seat; check and clean.
- Sticking or scored check valve; clean if sticking, replace if scored, replace poppet.

Copyrighted Material
Intended for CLARK dealers only
Do not sell or distribute

https://truckmanualshub.com/

Section 4

Hydraulic System Pressure Checks and Adjustments

⚠ CAUTION

SAFE PARKING. Before working on truck:

1. **Park truck on a hard, level, and solid surface, such as a concrete floor with no gaps or breaks.**
2. **Put upright in vertical position and fully lower the forks or attachment.**
3. **Put all controls in neutral. Turn key switch OFF and remove key.**
4. **Apply the parking brake and block the wheels.**

Relief Pressure Checks

Following is the procedure for checking main hydraulic valve lift pressure and auxiliary relief pressure (if the truck is equipped with an auxiliary component).

Hydraulic system relief pressure setting may be checked using a Mico Quadrigage (Clark Part No. 923770) or with a conventional pressure gauge with suitable pressure range calibration. To cover all models of the truck, a gauge with capacity range of 0 to 34,475 kPa minimum (0 to 5000 psi) is recommended.

⚠ WARNING

HYDRAULIC FLUID SAFETY. Keep all hydraulic ports and components clean. Wipe the area on the pump around the diagnostic check port completely clean to prevent any contamination from entering the hydraulic system.

When checking the hydraulic system, do not use your hands to check for leakage. Use a piece of cardboard or paper to search for leaks. Escaping fluid under pressure can penetrate the skin causing serious injury. Relieve pressure before disconnecting hydraulic or other lines. Tighten all connections before applying pressure. Keep hands and body away from pinholes and nozzles which eject fluids under high pressure.

1. Remove the covers enclosing the main hydraulic valve to access the hydraulic system pressure diagnostic check port.

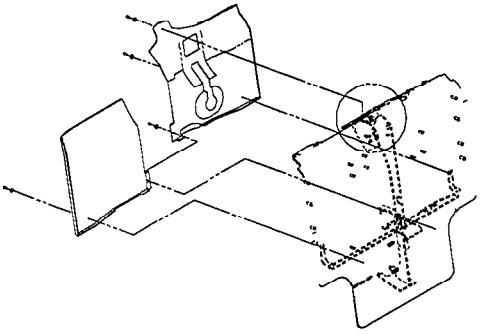

2. Remove the cap from the gauge port on the valve and connect pressure gauge to the fitting.

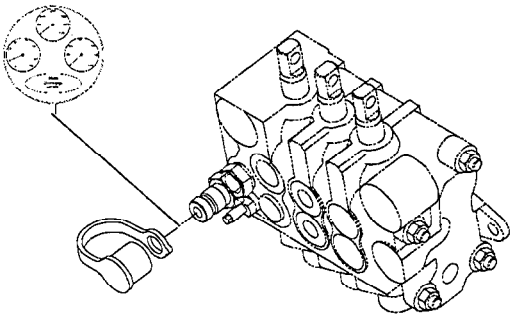

NOTE

Use quick-disconnect adapter fitting, Clark Part #913125.

3. **Check main relief pressure:** Turn key switch on, move the tilt control lever to full back (or forward) tilt relief position. Hold tilt control in relief position until pressure reading is obtained, and then release. Gauge should read 20,000 to 21,000 kPa (2900 to 3000 psi).

IMPORTANT

Do not operate system in relief any longer than required to read the pressure gauge.

4. **Check auxiliary relief pressure:** (Truck must have auxiliary component and auxiliary section added to main hydraulic valve.) Move the auxiliary control lever to full back or forward relief position. Hold auxiliary control in relief position until pressure reading is obtained, and then release. Gauge should read 13,300 to 14,300 kPa (1925 to 2075 psi).

Copyrighted Material
Intended for CLARK dealers only
Do not sell or distribute

https://truckmanualshub.com/

Main Pressure Relief Adjustment

IMPORTANT

Main pressure relief setting is set at the factory and should not be adjusted. If the relief pressure does not measure within the setting range, a hydrostat in the pressure relief valve must be replaced. If you attempt to adjust the hydrostat in the relief valve, your warranty on the equipment may be voided.

To replace the hydraulic system main pressure relief valve:

1. Remove the plug, O-ring, and spring from hydraulic valve port shown in the following illustration.

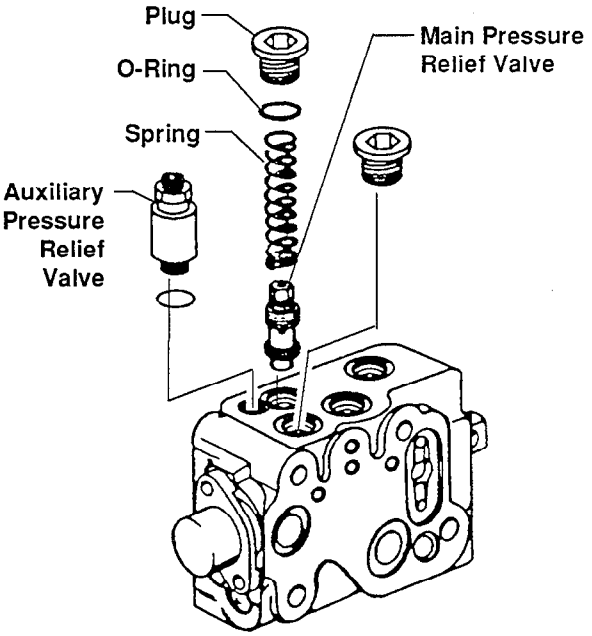

2.Remove the main pressure relief valve.

3. Screw open the main pressure relief valve and remove the hydrostat in the valve.
4. Replace the hydrostat in the same position with the new unit.
5. Recap the pressure relief valve and replace in the valve body.
6. Replace the spring, O-ring, and plug.

Auxiliary Pressure Relief Adjustment

IMPORTANT

The auxiliary relief setting only applies to a hydraulic valve that has auxiliary sections added.

To adjust the hydraulic system auxiliary pressure relief valve:

1. Loosen the jam nut on the auxiliary relief valve adjustment screw.

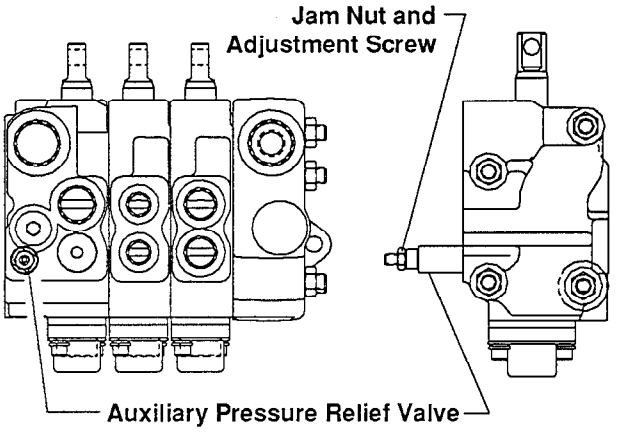

2. Turn the adjustment screw to set the auxiliary pressure relief setting to the normal range.
3. Reset the jam nut on the auxiliary relief valve adjustment screw.

Copyrighted Material
Intended for CLARK dealers only
Do not sell or distribute

https://truckmanualshub.com/

Flow Control Adjustments

To make the following adjustments, position the tilt cylinders mid-way in their stroke (upright vertical).

1. Remove the nut from the main hydraulic valve tie-bolt stud.

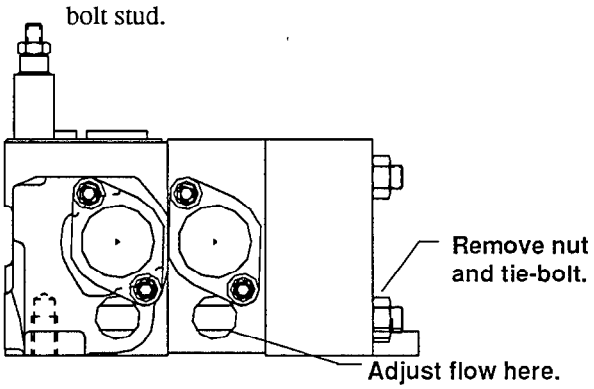

Bottom View of Typical Valve (no auxiliary attachments).

2. Remove the stud from the valve.
3. Turn the flow control adjuster fully counterclockwise to the stop. Do not tighten against stop, or you can damage valve seat.
4. Turn adjuster clockwise per flow control charts.
5. Repeat steps 3 and 4 for each flow control change required.
6. Reinstall the tie bolt stud in the valve. Torque the stud to 38-43 N•m (28-32 ft-lb).
7. Reinstall the nut on the tie bolt and torque to 38-43 N•m (28-32 ft-lb).

AUX FLOW CONTROL ADJUSTMENTS	
FLOW SETTING L/min (gpm)	CLOCKWISE TURNS OF ADJUSTMENT SCREW
6 (1.5)	.50
9 (2.5)	.75
15 (4)	1.50
21 (5.5)	2.125
26 (7)	3.00
38 (10)	4.50

TILT FLOW CONTROL ADJUSTMENT			CLOCKWISE TURNS OF ADJUSTMENT SCREW
AVERAGE TILT SPEED		USAGE	
(' / sec)	L/min (gpm)		
3	5 (2.5)	Uprights at 5715 MFH (225") and above	.75
5	15 (4)	Uprights below 5715 MFH (225")	1.50
8	26 (7)	European upright option	3.00

Copyrighted Material
Intended for CLARK dealers only
Do not sell or distribute

https://truckmanualshub.com/

Section 5

Hydraulic Control Valve Removal and Replacement

Hydraulic Control Valve Removal **2**
Preparation for Valve Removal 2
Control Valve Linkage Disassembly 2
Valve Removal 2

Hydraulic Control Valve Replacement **3**
Valve Replacement 3
Control Valve Linkage Reassembly 3

Operational Checks **4**

⚠ CAUTION

SAFE PARKING. Before working on truck:

1. **Park truck on a hard, level, and solid surface, such as a concrete floor with no gaps or breaks.**
2. **Put upright in vertical position and fully lower the forks or attachment.**
3. **Put all controls in neutral. Turn key switch OFF and remove key.**
4. **Apply the parking brake and block the wheels.**

Copyrighted Material
Intended for CLARK dealers only
Do not sell or distribute

https://truckmanualshub.com/

Hydraulic Control Valve Removal

IMPORTANT

Keep all hydraulic ports, components, and fittings completely clean during valve removal and replacement to prevent any contamination from entering the hydraulic system.

Preparation for Valve Removal

1. Park truck in a safe position and fully lower the upright.
2. Return all controls to neutral, apply the parking brake, and turn key switch OFF.
3. Move all hydraulic control levers to all working positions and return them to neutral. Be sure there is no hydraulic pressure applied to the system by attachments.
4. Remove floor plate.
5. Remove the right cowl cover from under the dash in the operator's compartment. See removal and replacement procedures in Group 38.
6. Air clean the hydraulic valve and fittings.
7. Place a drain pan under the truck and loosen and remove all hydraulic lines from the valve. Plug the valve ports. Mark or tag each line as removed to assure correct position of line at assembly.

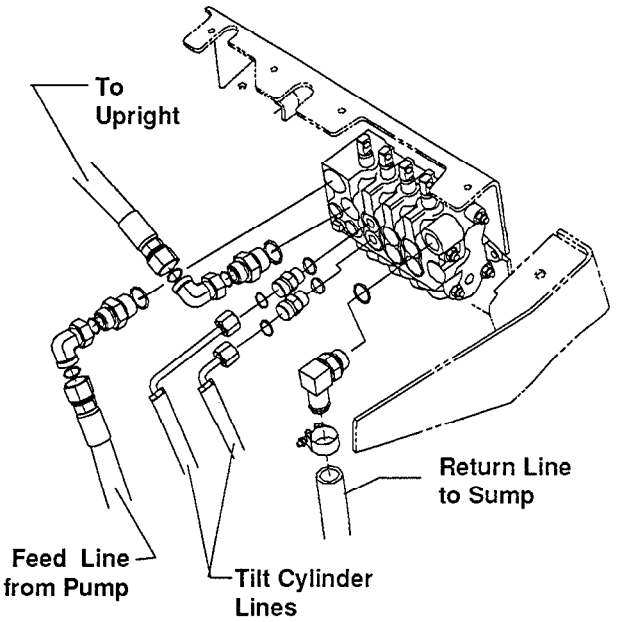

8. Cap ends of lines to keep them clean. Tie ends of lines to truck to prevent loose ends dropping and leaking oil onto floor.

Control Valve Linkage Disassembly

Remove the cotter rings and clevis pins connecting the lift and tilt (and auxiliary, as applicable) lever rods from the hydraulic valve spools. Back off the lower jam nut at the turn buckle to allow the valve spool to be rotated before removing the clevis pins.

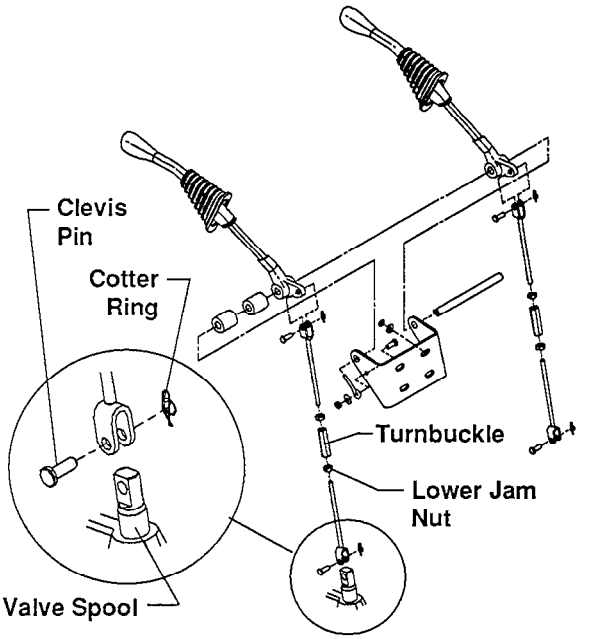

Valve Removal

1. Remove the three hex capscrews mounting the hydraulic valve to the hydraulic assembly bracket (lower cowl). Two of the capscrews thread into the valve itself; the third is secured with a flange nut.

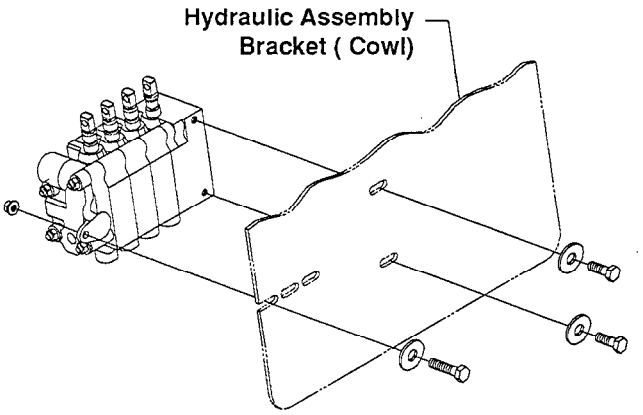

2. Remove valve assembly from truck. See Section 6 for valve overhaul instructions.

NOTE

Be sure to clean up any oil spills and dry the floor to prevent accidents.

Copyrighted Material
Intended for CLARK dealers only
Do not sell or distribute

https://truckmanualshub.com/

Hydraulic Control Valve Replacement

Valve Replacement

1. Position the main valve on the hydraulic assembly bracket (lower cowl). Install valve mounting fasteners and tighten hand tight so that valve mounting can be adjusted for alignment with the lever connecting rods.

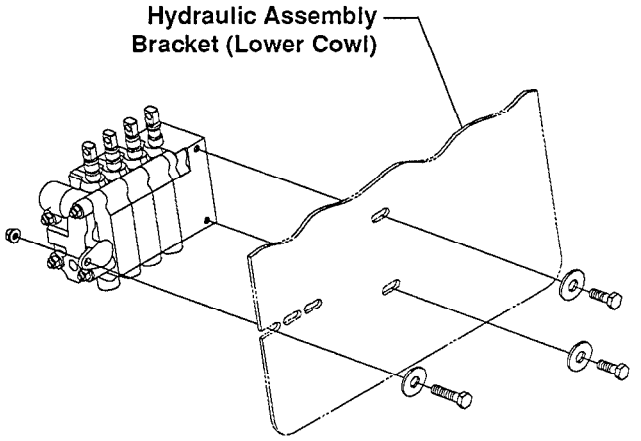

2. Install the hydraulic lines on the proper ports. Make sure all lines are clean, are routed correctly in the truck, and are not kinked. Torque fittings according to "Hydraulic Fitting Tightening Procedure" in Group 40.

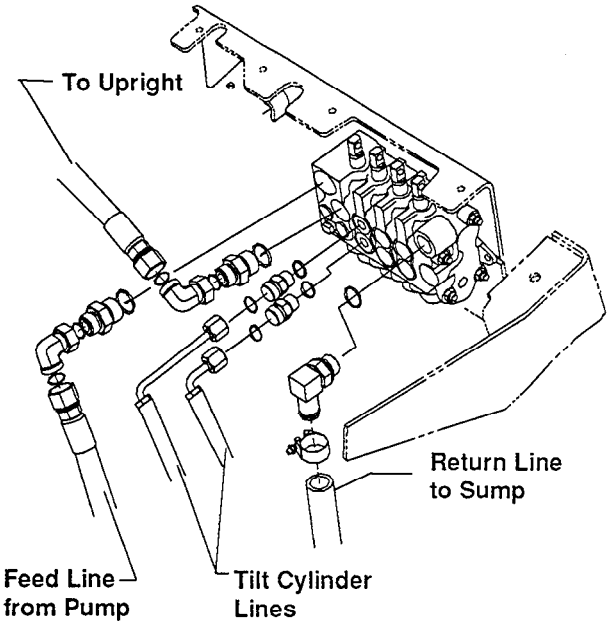

3. Adjust the valve to align with the lever connecting rods.

Control Valve Linkage Reassembly

1. Insert the clevis pins through the rod-end clevises and valve spools of the lift and tilt spools (and auxiliary-lever rods and spools where applicable) and secure with the cotter rings. Rotation of the valve spools is required to allow insertion of the clevis pins. Rotate spools back so all pins are in line.

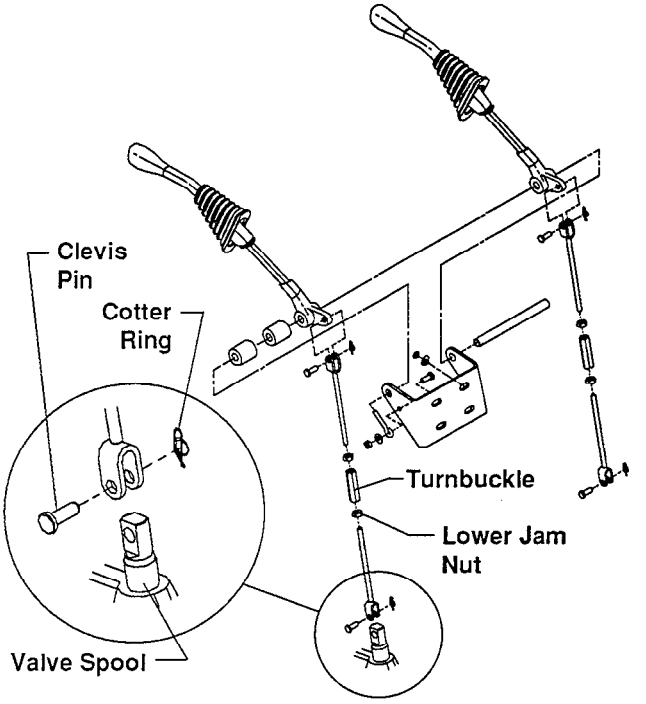

NOTE

The illustration above and system specification torques also apply for auxiliary hydraulic functions, such as a side-shifter or rotator.

2. When alignment between the lever rods and the valve is set and levers are inline and level with one another, tighten the valve mounting capscrews and flange nuts to 40-50 N•m (30-33 ft-lb).

Copyrighted Material
Intended for CLARK dealers only
Do not sell or distribute

https://truckmanualshub.com/

Reinstall Valve

1. Reinstall valve and valve plumbing. Torque valve mounting bolts to 40-45 N•m (30-33 lbf-ft).

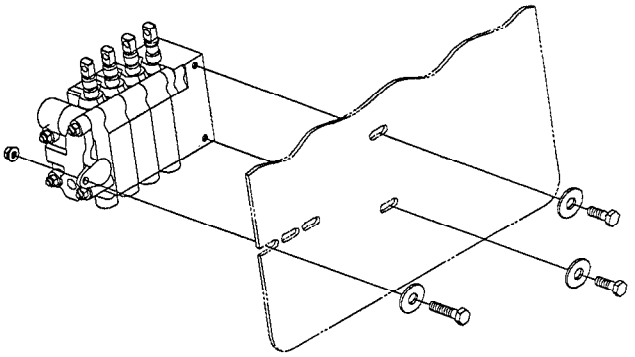

Lift and Tilt Pump Switches

Adjustment

1. Turn key switch to the OFF position.
2. Loosen switch mounting screws.
3. Adjust switch to activate after 2 mm (0.08 in.) of spool travel from neutral.
4. Tighten mounting screws.

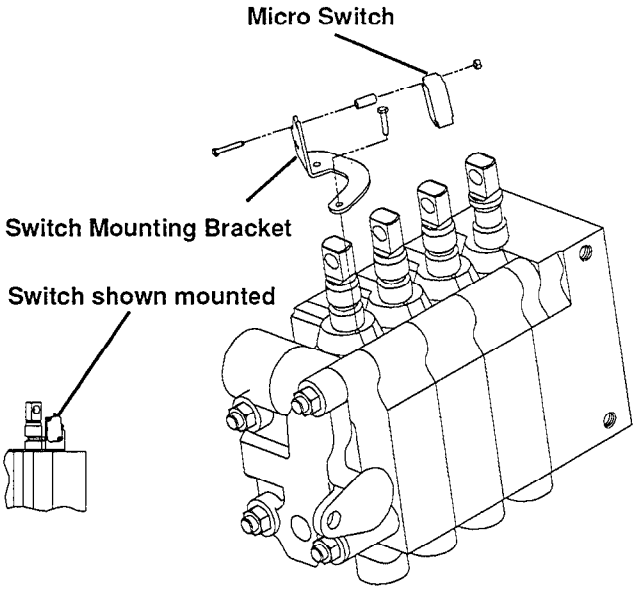

Operational Checks

1. Operate the truck and hydraulic system. Check the system for leaks.

WARNING

Do not use your hands to check for hydraulic leakage. Use a piece of cardboard or paper to search for leaks. Escaping fluid under pressure can penetrate the skin causing serious injury. Relieve pressure before disconnecting hydraulic or other lines. Tighten all connections before applying pressure. Keep hands and body away from pinholes and nozzles which eject fluids under high pressure.

If any fluid is injected into the skin, it must be surgically removed within a few hours by a doctor familiar with this type injury or gangrene may result.

2. Check the operation of the valve and hydraulic system by moving the valve control levers to the various positions. The levers must operate smoothly with no binding. When released from any working position, the levers must return sharply to their neutral positions.

   If valve spools do not moved or return to correct position for full function of lift, tilt, or auxiliary cylinders:

   a. Loosen jam nuts on adjustment turnbuckles of lever rods.

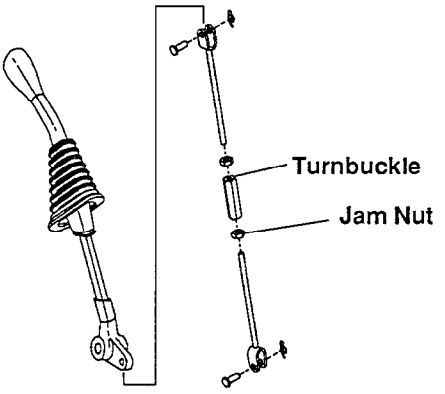

   b. Adjust turnbuckle to increase or decrease spool movement to correct measure.

   c. Retighten turnbuckle jam nuts to 39-44 N•m (28.5-32.5 ft-lb).

3. Refer to Section 4, "Hydraulic System Pressure Check" if valve was disassembled or overhauled.
4. Replace the cowl cover under the operator's compartment dash. See removal and replacement procedures in Group 38.

Copyrighted Material
Intended for CLARK dealers only
Do not sell or distribute

https://truckmanualshub.com/

Section 6

Hydraulic Control Valve Overhaul

Preparation for Disassembly 1
Disassembly 2
Cleaning, Inspection, and Repair 3
Reassembly 4
Relief Valve Settings 4

IMPORTANT

Before removing any component for overhaul, make sure the correct repair parts, seals, and gasket sets are available.

The following overhaul instructions describe a two spool assembly with the inlet/lift section, a tilt (or auxiliary) section, and outlet section (outlet section contains no spool).

Preparation for Disassembly

IMPORTANT

Overhaul valve only in a clean, dust-free location, using clean tools and equipment. Dirt or grit will damage the highly-machined surfaces and will result in leakage or premature failure of components. Cleanliness of the hydraulic circuit is extremely important to the proper operation and maintenance of the system. Be sure the work area is clean.

- Clean outside of valve with a good grade of solvent and dry thoroughly.
- Before starting disassembly, the valve should be carefully examined to determine if there is any evidence of external damage.

Copyrighted Material
Intended for CLARK dealers only
Do not sell or distribute

https://truckmanualshub.com/

Disassembly

During disassembly, pay particular attention to identification of parts for reassembly. Spools are selectively fitted to valve bodies and you must return each spool to the same body from which it was removed. You must also be sure to reassemble the valve sections in the original order.

NOTE

Valve sections may or may not require separation for overhaul.

If only valve spools are being overhauled, you do not have to separate the sections. For a complete overhaul, including replacement of the seals, retainers, O-rings, springs, and balls used between the sections, follow steps 1 and 2. To overhaul only the valve spools, begin with step 3.

1. Remove the nuts and studs connecting the valve sections.
2. Remove and label all parts between the sections for correct reassembly. These include:
   a. Retainers and seals which are included in the replacement seal kit.
   b. O-rings, springs, and ball which are replaced separately.

NOTE

Keep parts in order as removed and avoid mixing the sections and parts.

3. Disassemble each valve spool, one at a time, from bottom of valve as shown in the illustration.
4. Remove the valve spools by tapping lightly on the top end with a soft-faced hammer to drive them out of the valve body.
5. Arrange the parts in the sequence of removal.

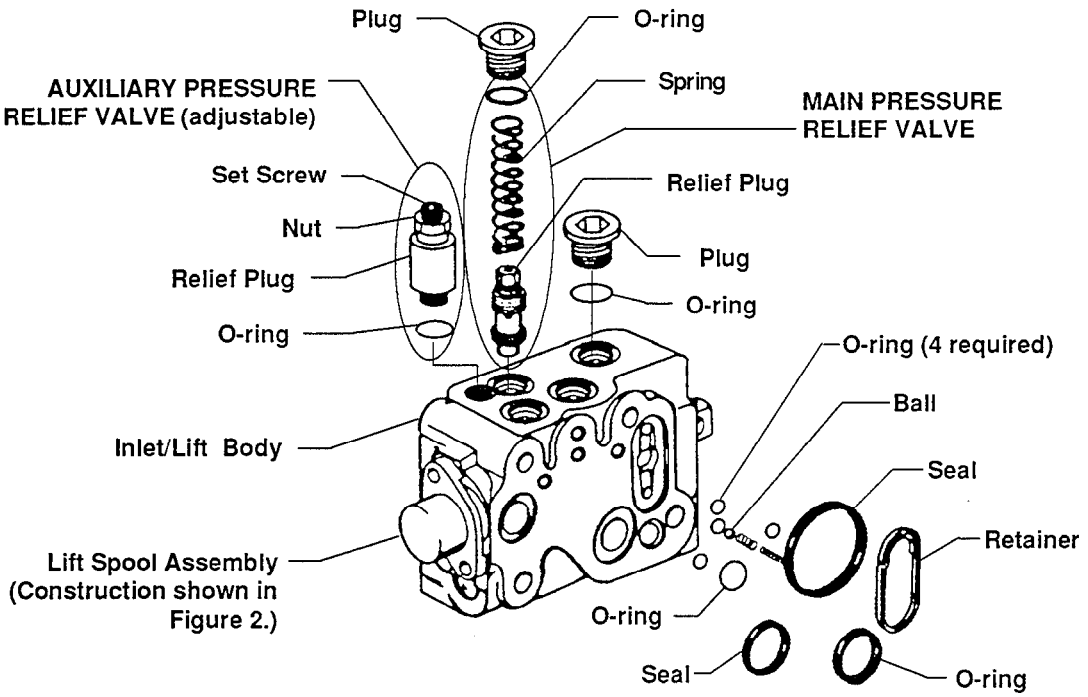

Figure 1. Inlet/Lift Body, Main Pressure Relief Valve, and Auxiliary Pressure Relief Valve. Contents of spool assembly are shown in Figure 2.

Copyrighted Material
Intended for CLARK dealers only
Do not sell or distribute

https://truckmanualshub.com/

NOTE

Remove the outlet port section only if there is need for further inspection and cleaning of contaminants in the valve. To remove, loosen and remove the nuts and studs and separate the outlet port section from the valve body. Label and keep all parts for correct reassembly.

Cleaning, Inspection, and Repair

1. Discard all old seals. Wash all parts in a clean mineral oil solvent and place them on a clean surface for inspection.
2. Carefully remove any burrs by light stoning or lapping. Be sure there is no paint or burrs on mating surfaces of valve bodies.
3. Inspect valve spools and bores for burrs and scoring. If scoring is not deep enough to cause leakage, the surfaces can be stoned or polished with crocus cloth. If scoring is excessive, valve body and spool must be replaced. Check each valve spool for free movement in its bore.
4. Inspect the main pressure relief valve for damage. Relief valve must be free from contamination, burrs, and scoring. Plug, spring, and O-ring should be cleaned and inspected for damage.

NOTE

Entire relief valve assembly must be replaced if damaged. Relief valve pressure is controlled by a hydrostat in the valve relief valve assembly and is set at the factory. No adjustments are recommended; if pressure relief setting is not in recommended range, hydrostat must be replaced.

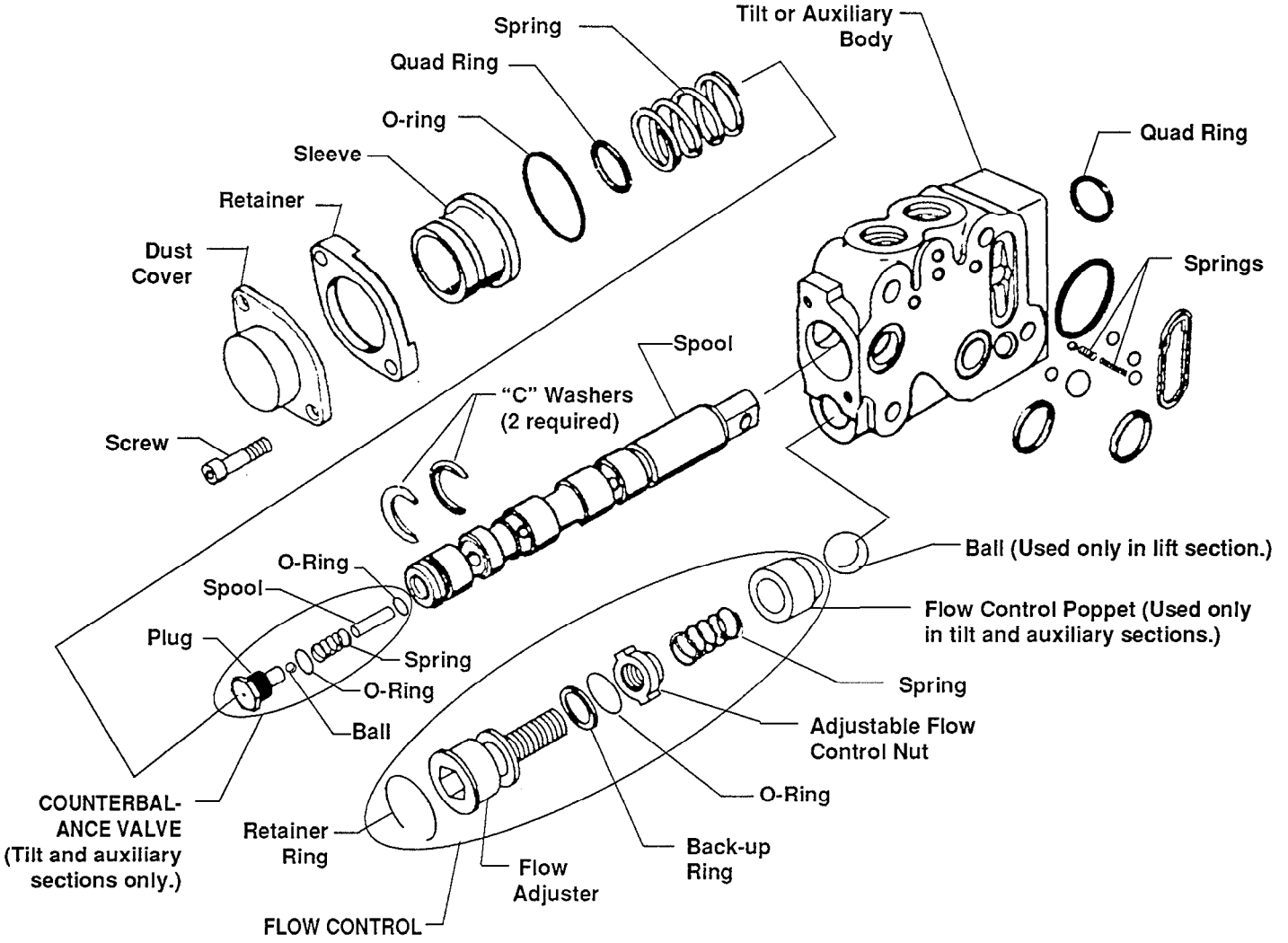

Figure 2. Valve Spool and Tilt (or Auxiliary) Body . Differences in lift (or tilt) and auxiliary components noted.

Copyrighted Material
Intended for CLARK dealers only
Do not sell or distribute

https://truckmanualshub.com/

5. Inspect the lift and tilt relief valves for damage. Check the relief valve for smooth free movement in its bore. The valve poppet should move easily from only the force of its own weight.
6. Inspect the valve body to make sure it has not been physically damaged. Examine all threads to be sure they are clean and not damaged or burred. Inspect all bores and poppet seats. Poppet seat must be even all around its circumference with no nicks, burrs, or indentations in any of the seat face.
7. All springs should be free of corrosion and not broken or bent.
8. If parts must be left unassembled for a period of time or overnight, cover with a lint-free clean material.

Reassembly

Use the exploded view illustration of the valve section, spools, and relief valves for reassembly.

1. Assemble valve in reverse order of disassembly.
2. Coat all parts with clean hydraulic oil to facilitate assembly and provide initial lubrication. Petroleum jelly can be used to hold seal rings in place during assembly.
3. Use new O-rings and seals for all parts.
4. Install seal rings and the seal ring retainer in the grooves in body of each inlet and center section. Use petroleum jelly to hold the seals in place. Carefully place the sections together in the same order in which they were removed.
5. Torque dust-cover screws to 10.8-13.5 N•m (8-10 ft-lb).
6. Reinsert studs between valve sections and torque nuts to 27-34 N•m (20-25 ft-lb).

Relief Valve Settings

After overhaul and reinstallation of the main hydraulic valve, the hydraulic system relief pressure and auxiliary valve relief pressure settings (if truck and valve are equipped with an auxiliary component and section) must be checked. See the hydraulic system checks and adjustments Section of this Group (30) for procedures.

If the truck is not equipped with any auxiliary equipment, no adjustments are necessary. If an auxiliary section has been added to the hydraulic valve and auxiliary components have been installed on the truck, check the relief pressure. See the hydraulic system checks and adjustments Section of this Group (30) for procedures.

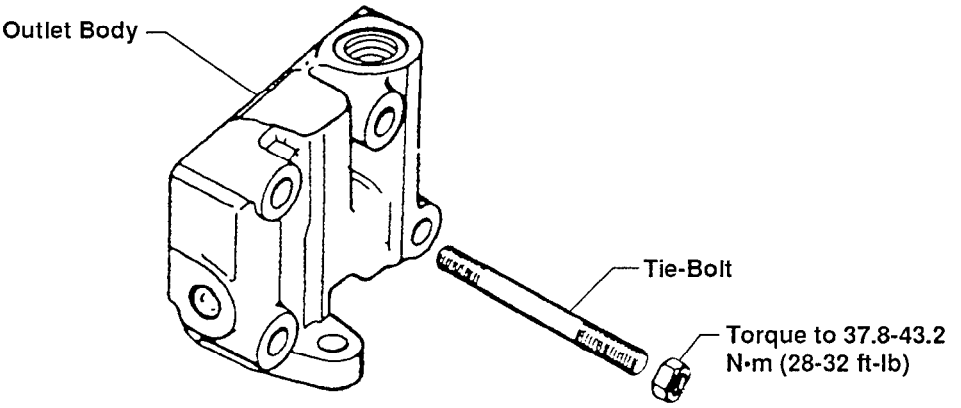

Figure 3. Outlet Body

Copyrighted Material
Intended for CLARK dealers only
Do not sell or distribute

https://truckmanualshub.com/

GROUP 32

TILT CYLINDERS

Tilt Cylinder Specifications and Description ..... Section 1

Checks and Adjustments ..... Section 2

Tilt Cylinder Removal and Installation ..... Section 3

Tilt Cylinder Overhaul ..... Section 4

IMPORTANT

Other hydraulic-related components and curcuits are described and Illustrated in Group 25, "Steering Column and Gear", Group 26 "Steer Axle", Group 29, "Hydraulic Sump, Filters, and Pump", Group 30, Hydraulic Control Valve/Lift Circuit." and Group 34, "Uprights." Refer to these other groups for hydraulic components not covered in this group.

Copyrighted Material
Intended for CLARK dealers only
Do not sell or distribute

https://truckmanualshub.com/

Section 1

Tilt Cylinder Specifications and Description

Specifications

See Group 30 for hydraulic system specifications.

Tilt Cylinder Type: Double-acting

Maximum Operating Pressure: 21,000 kPa (3,000 psi)

Tilt Ranges*:

Std (through 2667 mm (105 in) MFH)	6°B-10°F
Std (above 2667 mm (105 in) MFH)	8°B-8°F
TSU (through 4775 mm (188 in) MFH)	5°B-6°F
TSU (4800-6096 mm (189-240 in) MFH)	5°B-3°F
TSU (above 6096 mm (240 in) MFH)	3°B-0°F with tilt limit over ride to 3°F

* Abbreviations: Std = Standard, high-visibility upright; TSU = Triple-stage upright; MFH = maximum fork height; B = back tilt; F = forward tilt. See truck data plate for upright MFH.

Fastener Torques

Rod-End Yoke Bolts: 166-193 N•m (122-142 ft-lb)

Rod-End Pin Lock Plate Fasteners: 8-10 N•m (10.8-13.5 ft-lb).

Base Mount Pin Lock Plate Fasteners: 8-10 N•m (10.8-13.5 ft-lb).

Service Intervals

Tilt Cylinder Drift Test: Every 50-250 hours or each PM.

Tilt Cylinder Check and Adjustment: Every 50-250 hours or each PM.

Tilt Cylinder Rod Seal Condition Check: Every 50-250 hours or each PM.

Tilt Cylinder Mounting Check and Tightening: Every 50-250 hours or each PM.

Tilt Cylinder Rod-End Check and Tightening: Every 50-250 hours or each PM.

Tilt Cylinder Rod-End Lubrication: Every 50-250 hours or each PM.

Description

The tilt cylinders provide backward and forward tilt of the upright. The forward and back tilt angles are governed by the cylinder stroke and by use of spacersand differentlength rod ends. The tilt cylinders are pin-mounted to the truck frame and upright using yokes, clevises, and pins. Pins are held in place by a lock plate and fastener to prevent the pins from working their way out.

The tilt cylinders are serviced by removing them from the truck and disassembling them for complete overhaul, including installation of new seals and or other cylinder components.

The tilt lock valve is integrated into the tilt section of the main hydraulic control valve. The tilt lock valve prevents the upright from tilting forward when the truck is not running. The tilt lock valve is not serviceable and must be replaced as a valve section if defective.

Copyrighted Material
Intended for CLARK dealers only
Do not sell or distribute

https://truckmanualshub.com/

Section 2

Tilt Cylinder Checks and Adjustments

Tilt Cylinder Drift Test 1
Drift Causes and Remedies 2

Tilt Cylinder Racking Check 2
Forward Adjustment 2
Backward Adjustment 3

Tilt Flow Control Adjustments 3

⚠ CAUTION

SAFE PARKING. Before working on truck:

1. **Park truck on a hard, level, and solid surface, such as a concrete floor with no gaps or breaks.**
2. **Put upright in vertical position and fully lower the forks or attachment.**
3. **Put all controls in neutral. Turn key switch OFF and remove key.**
4. **Apply the parking brake and block the wheels.**

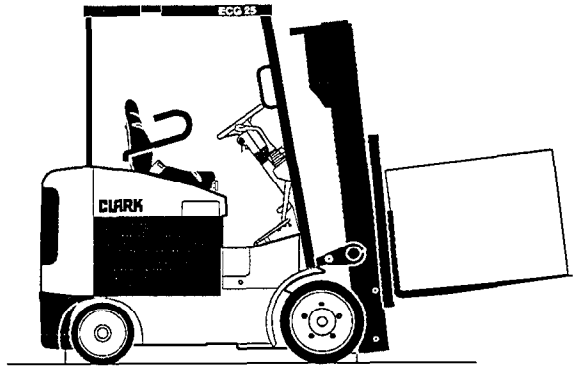

Tilt Cylinder Drift Check

To check tilt cylinder drift, a rated capacity load is placed on the forks, lifted up and held to determine if the tilt cylinder rods moves (drifts) in a specified length of time.

It is recommended that a test load, made up of a full-capacity load equally distributed on a 1220 x 1220 mm (48 x 48 in) pallet, be used. The material used to make up the test load must be stacked to provide load stability and must not extend beyond the pallet. It must be secured on the pallet. Refer to the truck data plate for capacity rating.

1. Adjust fork width as wide as possible to distribute the load. Refer to truck nameplate for capacity rating.

   ⚠ CAUTION

   Test load must be stacked stably, not extend beyond the pallet, and be secured on the pallet.

2. Drive the forks into the load pallet until the test load and pallet rest against the load backrest. Apply the parking brake and chock the wheels.
3. Raise the capacity load 305 mm (12 in) off the ground and tilt the upright fully back. Shut off the truck.
4. Measure and write down the distance between the cylinder-spacer face and the rod-end yoke.

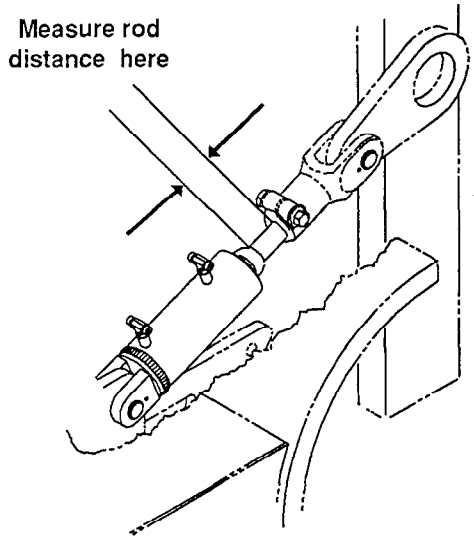

Copyrighted Material
Intended for CLARK dealers only
Do not sell or distribute

https://truckmanualshub.com/

5. Wait five minutes and measure and write down distance between rod end and spacer.
6. The measurement must not exceed the following measures:

Temperature	Drift
26.7° C (80° F)	0.6°, 4.0 mm, 0.157 in
37.8° C (100° F)	1.1°, 7.0 mm, 0.276 in
48.9° C (120° F)	1.5°, 10.0 mm, 0.394 in

Drift Causes and Remedies

Tilt cylinder drift indicates the following possible problems:

- Tilt cylinder hydraulic circuit hoses or fittings are leaking. Check the circuit components and repair as necessary.
- Cylinder piston seals are worn, damaged, or defective allowing fluid past the piston and causing the rod to drift. Consider rebuilding the cylinders if the other remedies in this list are not successful. See Section 3 for cylinder removal and replacement and Section 4 for cylinder repair, if necessary.
- The main hydraulic tilt valve is misadjusted, worn, or defective. Fluid is leaking past the valve and causing the tilt cylinders to drift. See Group 30 for hydraulic valve troubleshooting.

Tilt Cylinder Racking Check

Upright racking occurs when tilt cylinder strokes are unequal. Cylinders should be checked regularly during operation to determine if cylinder strokes are the same. To check for racking:

- Make sure truck is parked on level surface with parking brake applied and wheels chocked.
- Check condition of the tilt cylinder, rod-end yoke, mounting pins, piston rod, rod wiper, cylinder gland, etc., for excessive wear or damage. Make repairs before making twisting adjustment.
- Use a capacity load (see truck nameplate) centered on the forks.

⚠ CAUTION

Be sure to secure the load to the fork carriage to keep it from falling off when tilted forward.

Raise the upright only to the height that will allow the fork tips to clear the floor when tilted fully forward.

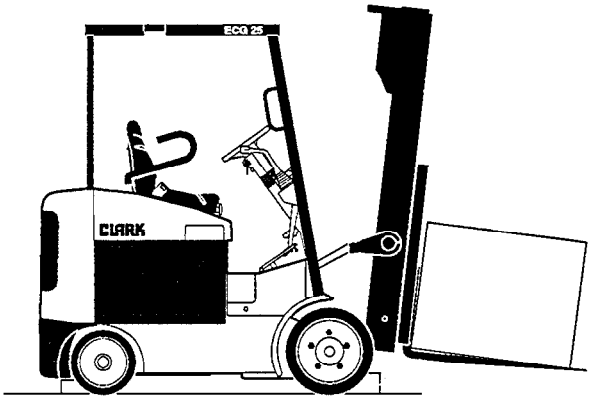

Forward Adjustment

1. Slowly tilt upright fully forward to the end of the tilt cylinder stroke.
2. As the cylinders approach the end of the stroke, watch both piston rods for equal movement and upright for twisting. Note if upright "racks" (is twisted at the end of its movement by unequal stroke of tilt cylinders).

NOTE

Correct the twisting effect by shortening the cylinder that is the longest length. Forward twisting must be adjusted before backward twisting. If forward adjustment is not needed, continue with backward adjustment.

3. To adjust, loosen rod-end yoke capscrew on the tilt cylinder that extends the farthest, and turn piston rod into rod-end yoke to shorten.

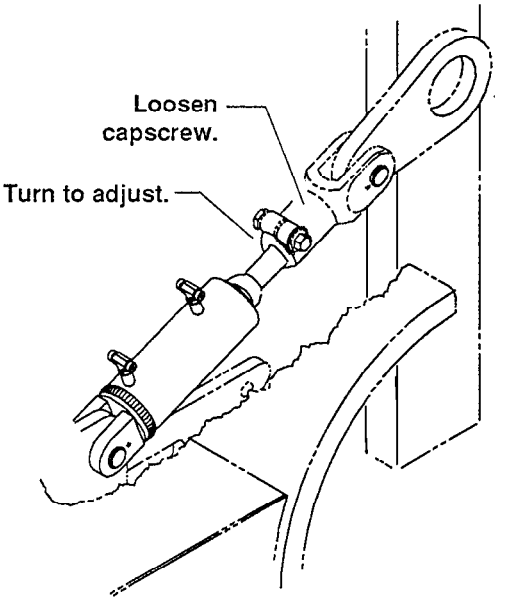

Forward Adjustment: Pneumatic-tire truck rod-end yoke orientation shown.

Copyrighted Material
Intended for CLARK dealers only
Do not sell or distribute

https://truckmanualshub.com/

NOTE

Use wrench flat on rod under spacer (if installed). Move spacer for access.

4. Continue to turn rod into rod end until tilt cylinder strokes are equal.

IMPORTANT

The rod must be threaded onto the rod-end yoke a distance at least as great as the diameter of the rod plus 6.5 mm (0.25 in).

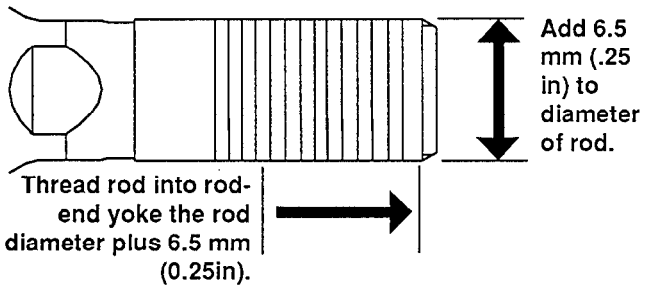

5. Tighten capscrew of the rod-end yoke to 166-193 N•m (122-142 ft-lb), and repeat the racking test.
6. Repeat steps 1-5 for fine corrections if any racking remains evident.
7. When no racking occurs, retighten capscrew of the rod-end yoke to 166-193 N•m (122-142 ft-lb).
8. Check all tilt functions before returning the truck to service.

Backward Adjustment

Perform forward check and adjustment first. Then:

1. Slowly tilt upright fully backwards while watching piston rods. They should both bottom out at the same time. If they don't, adjust backward tilt using the following steps.
2. Stop the upright when the first tilt cylinder bottoms out against its rod spacer.
3. Go to the opposite cylinder and remove the capscrew on the rod-end yoke and screw rod out of yoke. Count the number of turns required to remove the rod from the yoke.
4. Use rod shims to fill in the space between the rod-end yoke and spacer. Screw rod back into yoke the same number of turns needed to remove.

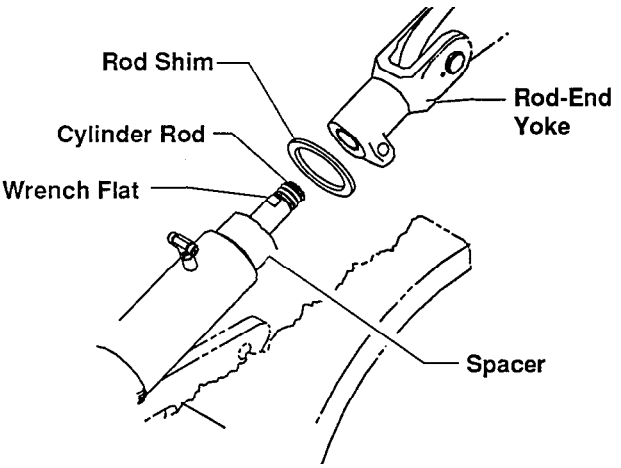

5. Tighten capscrew of the rod-end yoke to 166-193 N•m (122-142 ft-lb), and repeat the racking test.
6. Repeat steps 1-5 for fine corrections if any racking remains evident.
7. When no racking occurs, retighten yoke capscrew to 166-193 N•m (122-142 ft-lb).
8. Check all tilt functions before returning the truck to service.

Tilt Flow Control Adjustments

See checks and adjustments Section of Group 30, "Hydraulic Control Valve/Lift Circuit," for adjustment procedure.

Copyrighted Material
Intended for CLARK dealers only
Do not sell or distribute

https://truckmanualshub.com/

Section 3

Tilt Cylinder Removal and Replacement

Tilt Cylinder Removal 2

Parts Inspection 3

Tilt Cylinder Replacement 3

Copyrighted Material
Intended for CLARK dealers only
Do not sell or distribute

https://truckmanualshub.com/

CAUTION

SAFE PARKING. Before working on truck:

1. **Park truck on a hard, level, and solid surface, such as a concrete floor with no gaps or breaks.**
2. **Put upright in vertical position and fully lower the forks or attachment.**
3. **Put all controls in neutral. Turn key switch OFF and remove key.**
4. **Apply the parking brake and block the wheels.**

Tilt Cylinder Removal

1. Move tilt lever back and forth several times to relieve any pressure.
2. Use an adequate chain and hoist to support the upright so that it cannot fall when tilt cylinder pins are removed.

WARNING

The upright assembly is heavy. Use only hoists with enough capacity to lift the entire assembly. Keep hands and feet away from the assembly. Use prybars to move the assembly into position for tilt cylinder replacement.

3. Remove the floorboard.

NOTE

Put a drain pan under the truck at each tilt cylinder position before removing the hydraulic lines.

4. Disconnect and cap hydraulic lines from the tilt cylinders (see illustration on facing page). Remove the hose connections on both sides of the tee fittings of the right-side cylinder. Keep all fittings and ports clean.

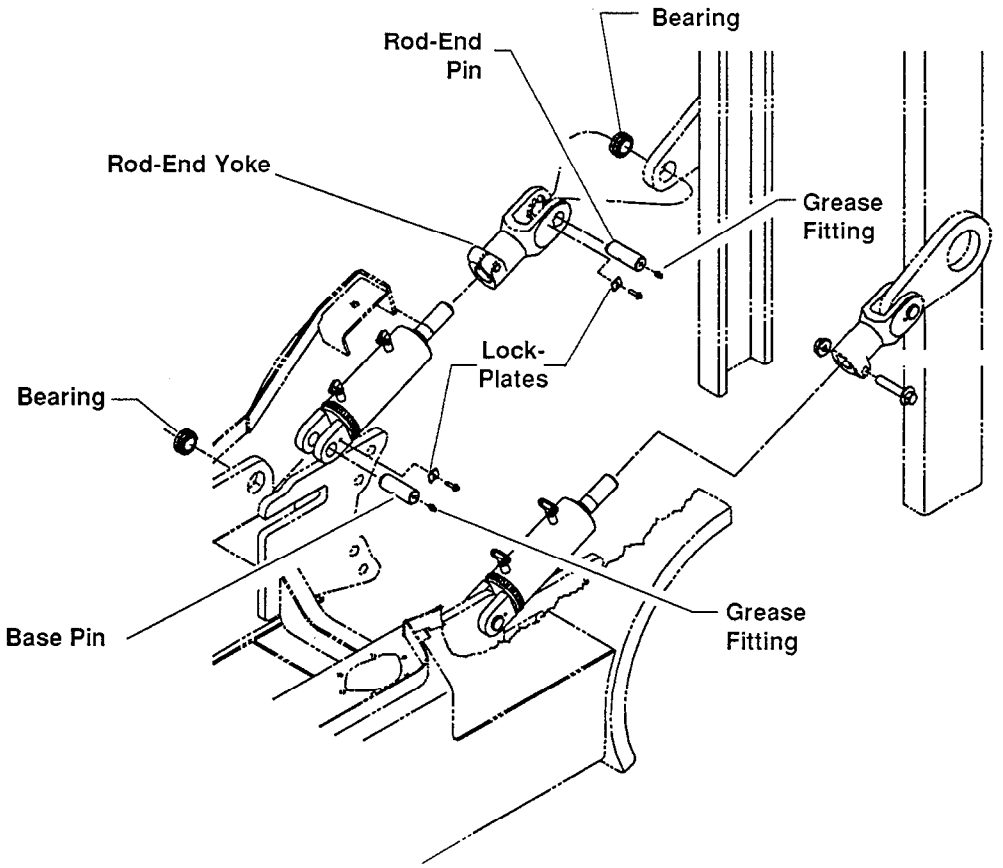

Tilt Cylinder Mounting Components

Copyrighted Material
Intended for CLARK dealers only
Do not sell or distribute

https://truckmanualshub.com/

5. Support cylinder with a sling to prevent the cylinder from dropping when pins are removed.
6. Remove lock-plate from tilt cylinder rod-end yoke. Use a soft drift and hammer to tap rod-end pin out of yoke.
7. Pop the cover from tilt cylinder base access port on the step to the operator's compartment.
8. Remove the lock-plate from cylinder base yoke. Use a soft drift and hammer to tap pin out of yoke.
9. Remove cylinder assembly.

Parts Inspection

1. Clean all bearings, pins, and other components in an approved cleaning fluid.
2. Inspect all parts for scratches, nicks, dents, and wear. Check the cylinder rods to be sure they are smooth with no scratches. Check all threaded parts for damage.
3. Replace all parts which show damage.
4. If parts are to be left exposed, coat all mating surfaces of parts with a light layer of engine oil.

Tilt Cylinder Replacement

1. Position tilt cylinder base yoke on frame mounting bracket.
2. Insert base pin in cylinder base yoke and through frame mounting bracket, making sure slot in pin is in line with the lock-plate. Grease fitting must point toward center of truck.

IMPORTANT

Make sure the spherical bearing is aligned so that pin fits smoothly in yoke.

3. Install base pin lock-plate in slot and fasten to yoke with fastener and washer. Tighten fastener to a torque of 8-10 N•m (5.9-7.4 ft-lb).
4. Position rod-end yoke on upright mounting bracket and insert rod-end pin, making sure lock-plate slot is in correct position. Grease fitting must be toward center of truck. Make sure the spherical bearing is aligned so that pin fits smoothly in yoke.

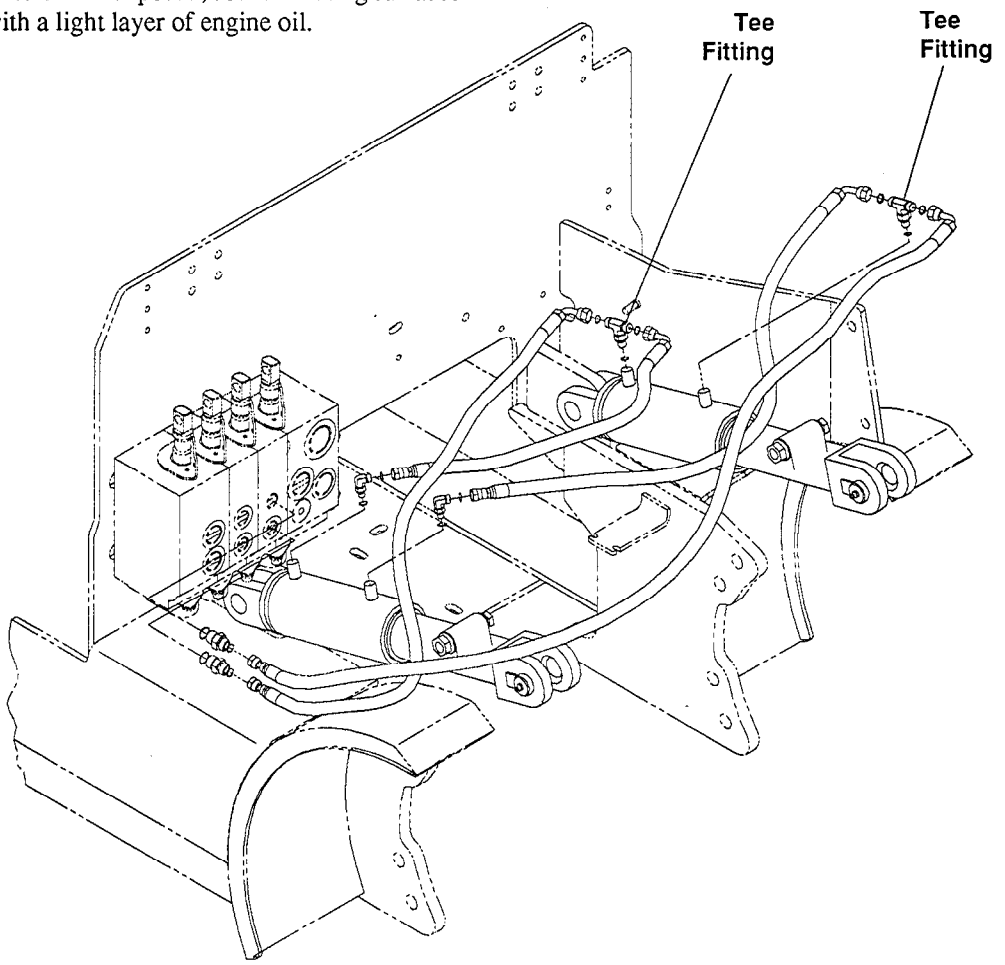

Tilt Cylinder Hydraulic Fittings

Copyrighted Material
Intended for CLARK dealers only
Do not sell or distribute

https://truckmanualshub.com/

NOTE

If the rod-end yoke has been removed from the rod or loosened for adjustment, reinstall the clamp bolts to a torque of 166-193 N•m (122-142 ft-lb). Nuts must be on inside of upright rails

Orientation of the rod-end yoke bolt hole is to be up as shown on the left side of the illustration on the previous page.

5. Install rod-end lock-plate in slot and fasten to yoke with fastener and washer. Tighten fastener to a torque of 8-10 N•m (5.9-7.4 ft-lb).
6. Install tilt cylinder hydraulic lines. Check Group 40 for hydraulic fitting tightening procedures. O-rings of fittings should be lightly coated with clean hydraulic fluid or compatible oil.
7. Remove hoist chain from upright.
8. See Section 2 for tilt cylinder adjustment procedures. When adjustments are made, check all upright components under load before returning the truck to service.

Copyrighted Material
Intended for CLARK dealers only
Do not sell or distribute

https://truckmanualshub.com/

Section 4

Tilt Cylinder Overhaul

Preparation for Disassembly 2

Disassembly 2

Inspection 2

Reassembly 3

IMPORTANT

Before removing any component for overhaul, make sure the correct repair parts, seals, and gasket sets are available.

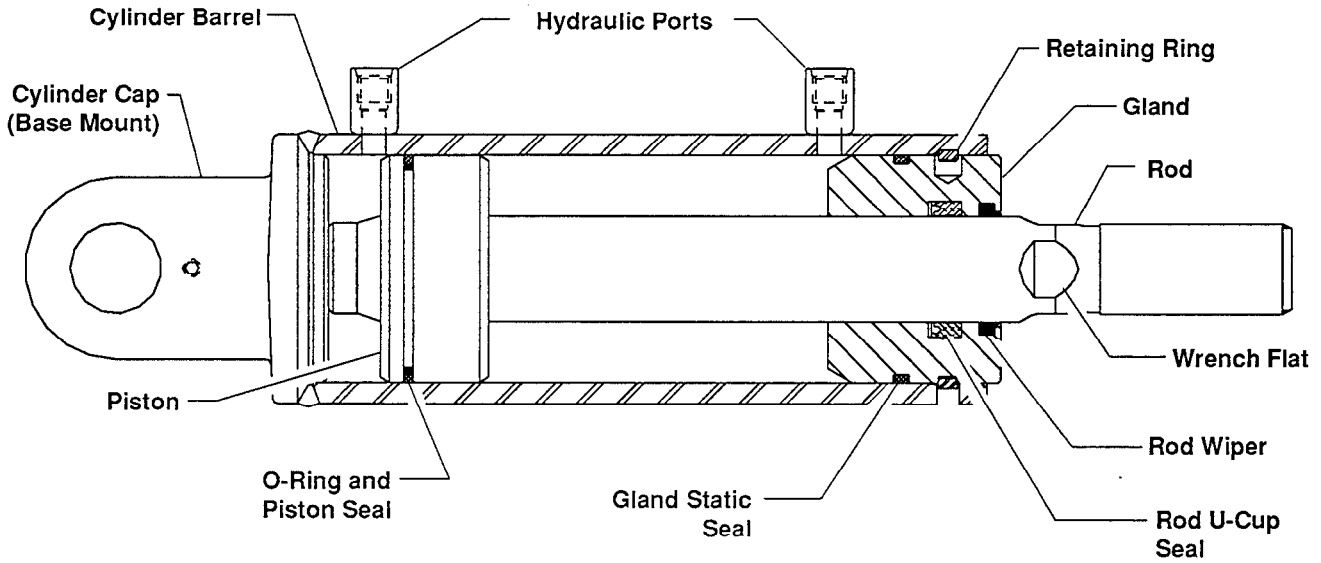

Typical Tilt Cylinder Cross section

Copyrighted Material
Intended for CLARK dealers only
Do not sell or distribute

https://truckmanualshub.com/

Preparation For Disassembly

IMPORTANT

Overhaul tilt cylinders only in a clean, dust-free location, using clean tools and equipment. Dirt or grit will damage the highly-machined surfaces and will result in leakage or premature failure of components. Cleanliness of the hydraulic circuit is extremely important to the proper operation and maintenance of the system. Be sure the work area is clean.

1. Before disassembly, the exterior of the tilt cylinder should be carefully cleaned to remove all dirt and grease accumulation.
2. Be sure all hydraulic oil has been removed from the cylinder. Stroking the piston rod will help force the oil out.
3. Before starting disassembly, the tilt cylinder should be carefully examined to determine if there is any evidence of external damage.

Disassembly

The tilt cylinder can be held by clamping the base end or the barrel in a vise while disassembling.

IMPORTANT

Do not use excessive force when clamping on the barrel.

1. Remove the retaining ring on the gland by unlatching it from the hole in the side of the gland. Use a spanner wrench to rotate the gland and unwind the ring out of the cylinder barrel.

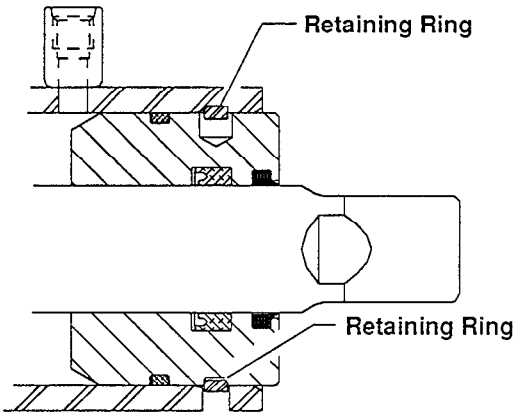

2. Carefully pull the rod, piston assembly, and gland from the cylinder barrel. Remove gland from rod.

WARNING

The use of compressed air to blow the piston out of the barrel is not recommended. High-pressure air can result in piston and rod being ejected at high velocity (explosively), causing severe injury to personnel and property damage.

3. Remove and discard the piston seal and O- ring from the piston.

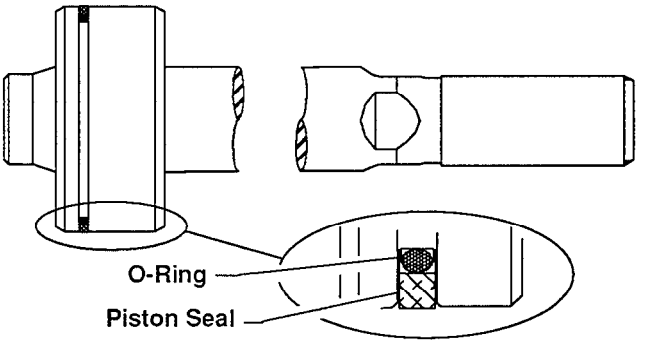

4. Remove and discard the rod U-cup seal, static seal, and piston rod wiper from the gland.

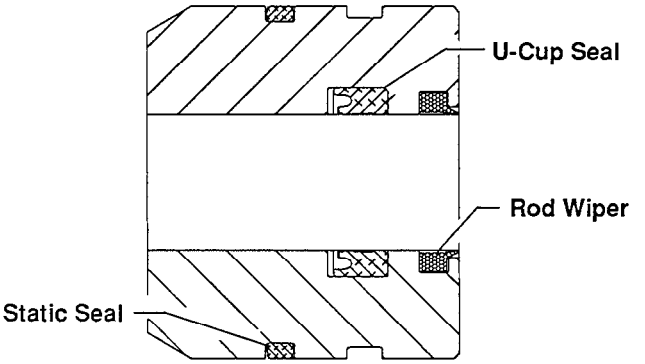

Inspection

1. Carefully clean all parts in an approved solvent and place on a clean surface.
2. Check the piston and rod for damage. Look for gouges, scratches, corrosion, or evidence of unusual wear. Minor surface damage may be repaired by use of fine abrasion cloth or stoning. Deeper damage will require replacement of piston rod assembly.
3. Be sure the threads on rod are undamaged.
4. Inspect the tilt cylinder barrel internal bore for wear, scratches or other damage. Check the outside for damage. Inspect all welds for cracks.

Copyrighted Material
Intended for CLARK dealers only
Do not sell or distribute

https://truckmanualshub.com/

Deep gouges or pitted surfaces require replacement of parts.

Check the gland, base end, and ports for cracks or damage that could cause failure. Inspect the ports to be sure they are free of contamination and that the threads are clean and not damaged.

5. Put a light coating of hydraulic fluid on all parts. If parts are to be left disassembled for a period of time, e.g., overnight, they should be covered with a clean cloth.

Reassembly

Be sure inside of cylinder and all parts are clean before starting reassembly. Seals may be lubricated with hydraulic oil to assist assembly into cylinder barrel.

1. Install piston rod wiper, rod U-cup, and static seal on the gland. Make sure U-Cup and wiper are installed in proper orientation as shown in the illustration.

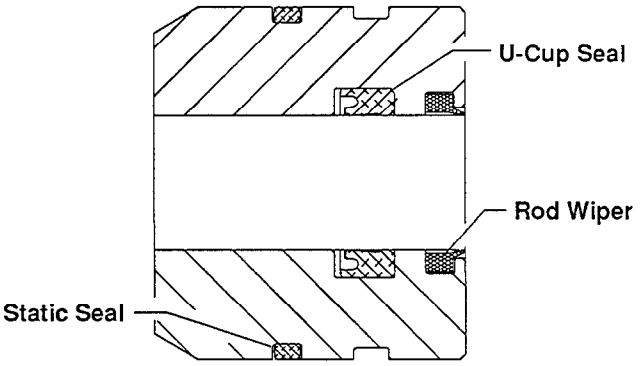

2. Replace the piston O-ring and piston seal.

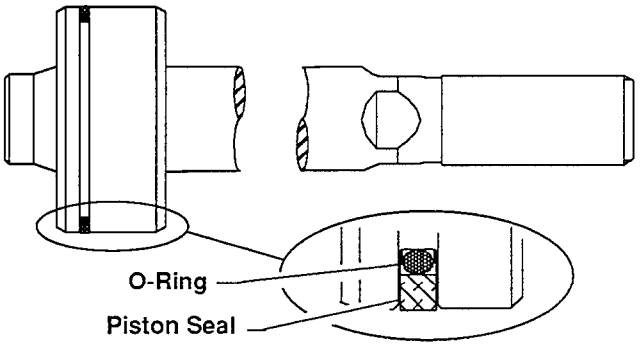

3. Install gland on piston rod. Use gentle pressure and careful movements to avoid damage to the U-cup seal and rod wiper when these parts are moved over the piston rod end.

NOTE

Reassemble cylinder carefully to prevent damage to seal lips and O-rings.

4. Install piston into cylinder barrel. Be careful not to damage the piston seals when installing the piston into end of cylinder.
5. Then, install gland into cylinder. Be careful not to damage gland static seal. Make sure the gland is fully seated in the cylinder barrel.
6. Install the gland retainer ring:

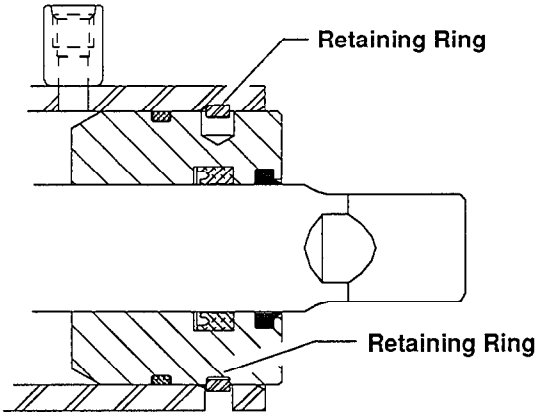

   a. Route the retainer ring through the slot in the cylinder case.
   b. Latch the retainer ring to the hole in the side of the gland.
   c. Use a spanner wrench to rotate the gland and wind the retainer in place.

7. Check the assembly by making sure the piston slides freely in and out of the cylinder.

See Section 3 for replacement procedures; see Section 2 for checks and adjustments before returning the truck to service.

Copyrighted Material
Intended for CLARK dealers only
Do not sell or distribute

https://truckmanualshub.com/

GROUP 34

UPRIGHTS

Upright Specifications and Description ..... Section 1

Troubleshooting ..... Section 2

Upright Inspection ..... Section 3

Carriage and Upright Roller Clearance Checks
and Shim Adjustments ..... Section 4

Cylinder Removal, Shimming, Overhaul
and Replacement ..... Section 5

Upright Chain Inspection, Adjustment,
and Installation ..... Section 6

Fork and Carriage Removal and Installation ..... Section 7

Upright Removal and Replacement ..... Section 8

Copyrighted Material
Intended for CLARK dealers only
Do not sell or distribute

https://truckmanualshub.com/

Section 1
Upright Specifications and Description

General Specifications

Upright Weight: Approximately 363 kg (800 lb) to approximately 1000 kg (2200 lb) without carriage

Carriage Weight: Approximately 109 kg (240 lb) to 122 kg (270 lb) with a 41 inch carriage

Fork Weight: Approximately 50-68 kg each (110-150 lb)

IMPORTANT

Before hoisting, the weights of upright, carriage, forks and attachments being lifted must be combined to determine what lifting capacity is required of the hoisting equipment.

Capacities and Lift Heights: Upright, carriage, and fork capacity and upright lift heights are listed on the truck's data plate.

Lubricants:

- All Purpose Grease (MS-9)
- Innerslide Lubricant (Clark P/N 886396)
- Chain and Cable Lube (Clark P/N 886399)

Cylinder Types

Standard uprights use two lift cylinders. Triple stage uprights use three cylinders, a primary (center-mounted) cylinder, and two secondary cylinders. All primary cylinders used on triple-stage uprights (TSUs) are piston cylinders. The lift and secondary cylinders used on standard uprights and TSUs can be piston or ram cylinders.

The types of cylinders used on the truck are listed below. Check the first five characters of the upright number stamped on the upright of the truck to determine the type of cylinder, piston or ram, used on the upright.

IMPORTANT

Before removing any component for overhaul, make sure the correct repair parts, seals, and gasket sets are available.

Upright Type	Upright Number	Cylinder Type
Standard	V1080	Piston-Type Lift Cylinder
	V1081	Piston-Type Lift Cylinder
	V1082	Ram-Type Lift Cylinder
	V1083	Ram-Type Lift Cylinder
TSU	M1080	Piston-Type Secondary Cylinder
	M1081	Piston-Type Secondary Cylinder
	M1082	Ram-Type Secondary Cylinder
	M1083	Ram-Type Secondary Cylinder

Drift:

Upright should not drift (fall) 25 mm (1 in) in five minutes under a capacity load. If drift over 25 mm (1 in) in five minutes is evident, cylinder should be checked for internal leakage. See Section 3 for drift test procedures.

Fastener and Fitting Torque Specifications

Trunnion Mounting Bolts: 74.25 N•m (55 ft-lb)

Load Back Rest: 168.75-189 N•m (125-140 ft-lb)

Chain Anchor Bolt Jam Nut: 100-200 N•m (74-148 ft-lb)

Carriage Side-Thrust Roller Bolts: 40-50 N•m (29.5-37 ft-lb)

Hose Fittings: See Group 40, "Hydraulic Fitting Tightening Procedure."

Rod End Bolts: 164-190 N•m (122-142 ft-lb)

Tilt Cylinder Rod-End Pin Lock Plate: 19-21.5 N•m (121-136 in-lb).

Copyrighted Material
Intended for CLARK dealers only
Do not sell or distribute

https://truckmanualshub.com/

Service Intervals

- All upright components should be visually checked every day during the Operator's Daily Inspection.
- A thorough visual inspection should be performed by a trained service professional every 50-250 hours.
- Lift chains should be inspected and lubricated every 50-250 hours or monthly.
- Lift chain tension should be checked every 50-250 hours or monthly.
- Upright and carriage roller checks should be performed every 50-250 hours or monthly.
- Roller patterns should be checked every 6 months or after 1000 hours of service.
- Racking and drift tests should be performed every 6 months or after 1000 hours of service.
- The complete extended inspection should be performed at least every year or 2000 hours of operation.

Description

The upright assembly includes the lift chains, lift cylinders, carriage, forks, and mast or rail sets. Each of the components can be serviced using the tests, checks, adjustments, and removal and replacement procedures in the following Sections.

The upright uses the hydraulic cylinders and chain sets to lift the carriage and rail sets. On standard, two-stage uprights, the lift cylinders lift the carriage with chains and directly lift the inner rail set. On triple-stage uprights, the primary (free-lift) cylinder lifts the carriage by chains. When the primary cylinder reaches its maximum extension, fluid is diverted to the secondary lift cylinders, which lift the inner rails using a second set of chains and lift the intermediate rails by direct lift.

Friction and play between the nesting rails is controlled by roller sets mounted on the rails and carriage. When rails or rollers become worn, the gap between the rollers and rails becomes larger, creating more play in lifting and lowering operations. The rail web to roller side clearances can be reduced by shimming the rollers to close the gap between the roller and rails. The gap between the rail flange and roller bearing surface can be reduced by the use of oversize rollers on a one-time basis.

Forks use a hanger design for mounting on the carriage. Auxiliary attachments may be added to the upright for specialized handling operations. The hydraulic circuit is modified with a hose adapter kit and an auxiliary section is added to the main hydraulic valve to operate the attachment.

The lift and secondary cylinders on standard uprights and triple-stage uprights (TSUs) may be either piston- or ram-type cylinders. The primary cylinder on TSUs is a piston-type cylinder. See the chart under "Specifications" to determine the type of cylinder used on the upright you are servicing.

Piston-type cylinders contain a by-pass check valve in the piston that allows air and fluid that have accumulated in the rod end of the cylinder to return to the system. The check valve can be removed and cleaned if indicated by troubleshooting. A non-serviceable check-ball-type cushioning function is built into ram and piston cylinders for smooth staging during the lowering cycle. The primary cylinder on TSUs incorporates cushioning on the lift cycle. A flow control valve in the hydraulic port of the lift cylinders (secondary cylinders on TSUs) prevents the mast from falling rapidly in case of sudden fluid pressure loss due to line breaks or other malfunction of the hydraulic circuit.

As explained in more detail in Group 30, the main pump sends fluid to the main hydraulic control valve, which contains spools that route fluid to the lift cylinders and tilt cylinders. The valve assembly also contains a counterbalance valve that prevents upright tilt when the truck is not operating.

Fluid flow rates for lift functions are factory set and not adjustable. Flow rates for tilt and auxiliary functions are controlled by adjustments on the main hydraulic valve. A non-adjustable "load-lowering" flow valve mounted on the upright limits upright lowering speed.

Groups 29 and 30 contain general hydraulic information including upright hydraulic functions. Other hydraulic checks for the upright appear in "Troubleshooting," Section 2.

Copyrighted Material
Intended for CLARK dealers only
Do not sell or distribute

https://truckmanualshub.com/

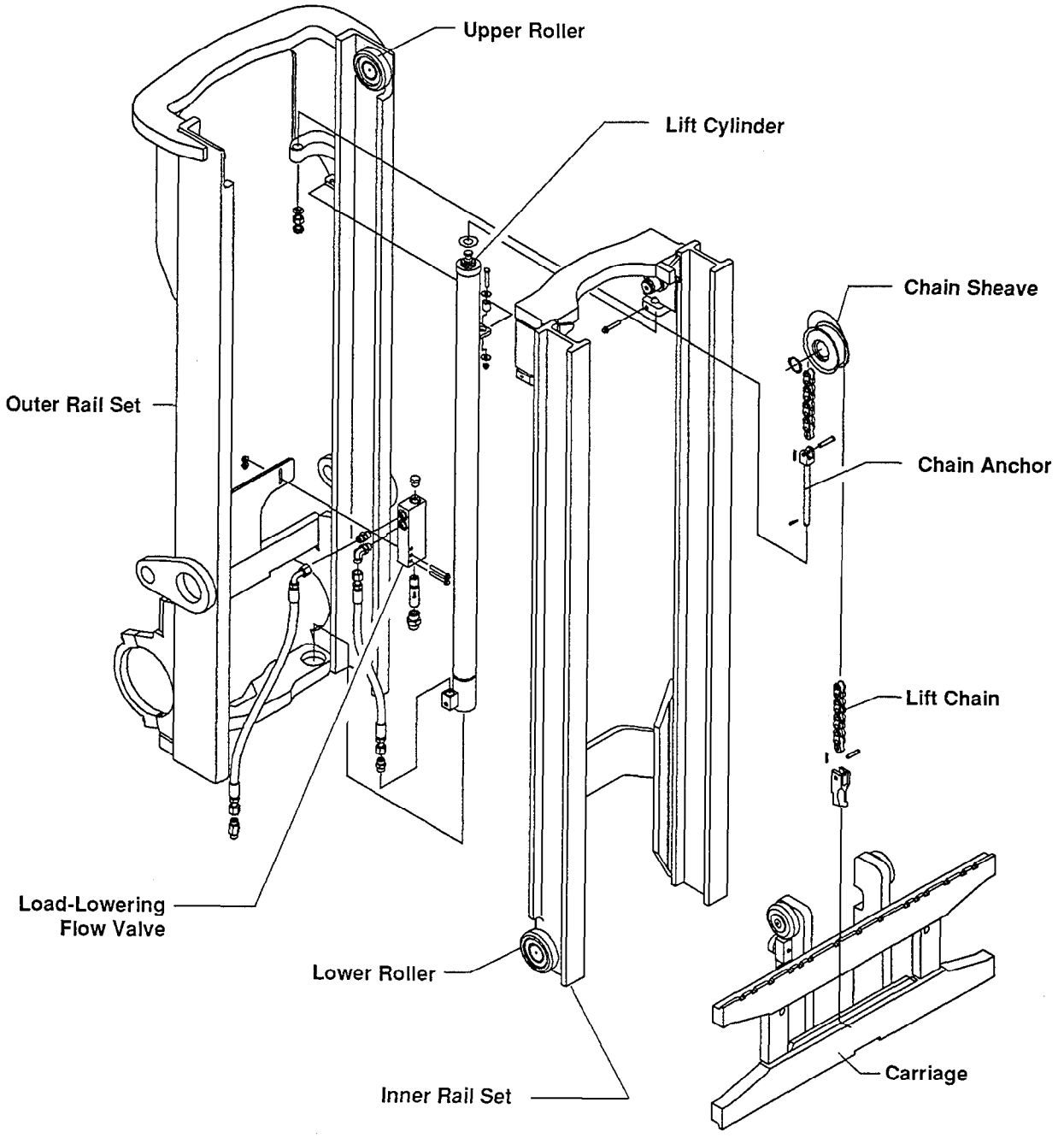

Typical Standard (Two-Stage) Upright Assembly

Copyrighted Material
Intended for CLARK dealers only
Do not sell or distribute

https://truckmanualshub.com/

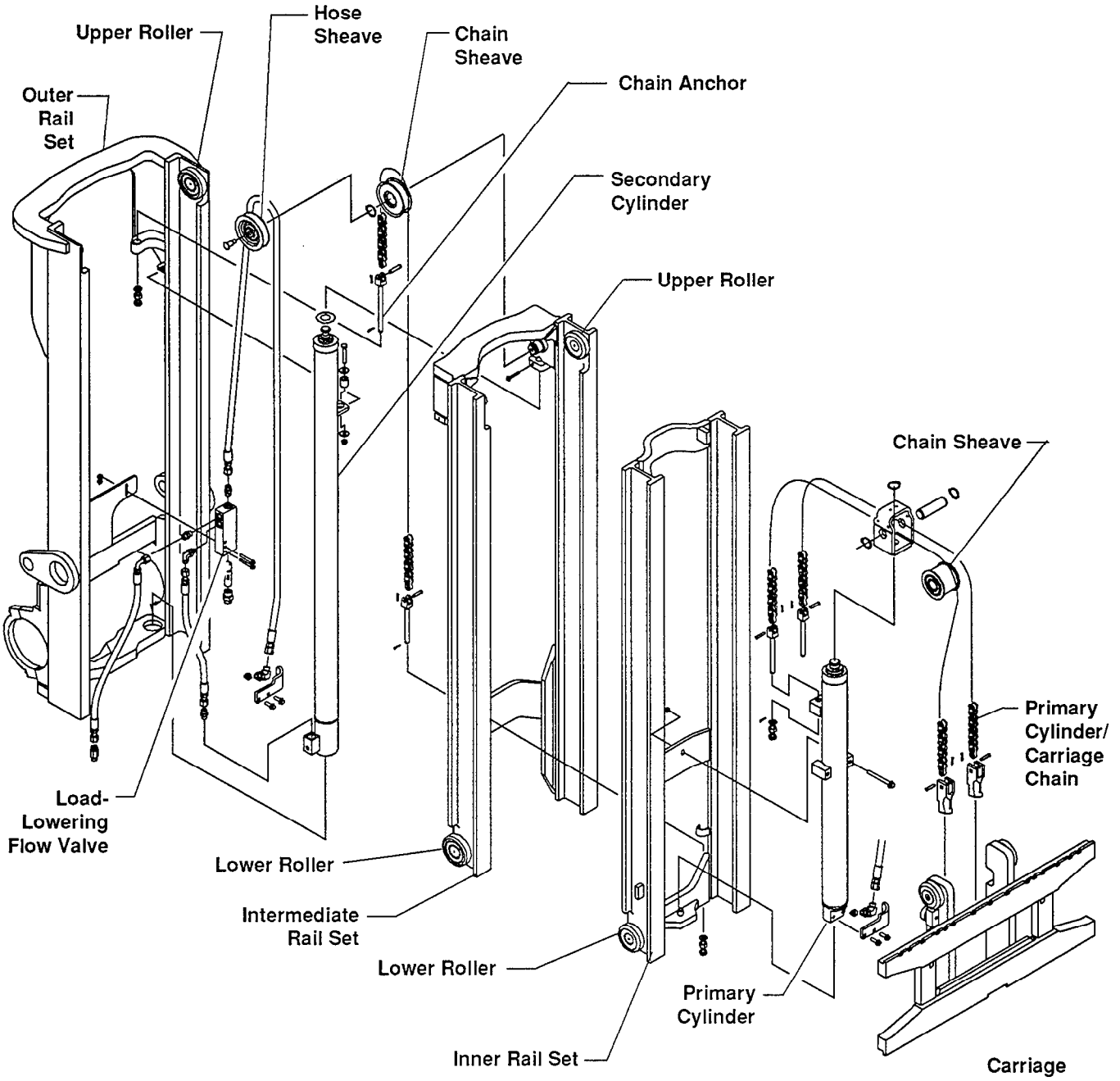

Typical Triple-Stage Upright Assembly

Copyrighted Material
Intended for CLARK dealers only
Do not sell or distribute

https://truckmanualshub.com/

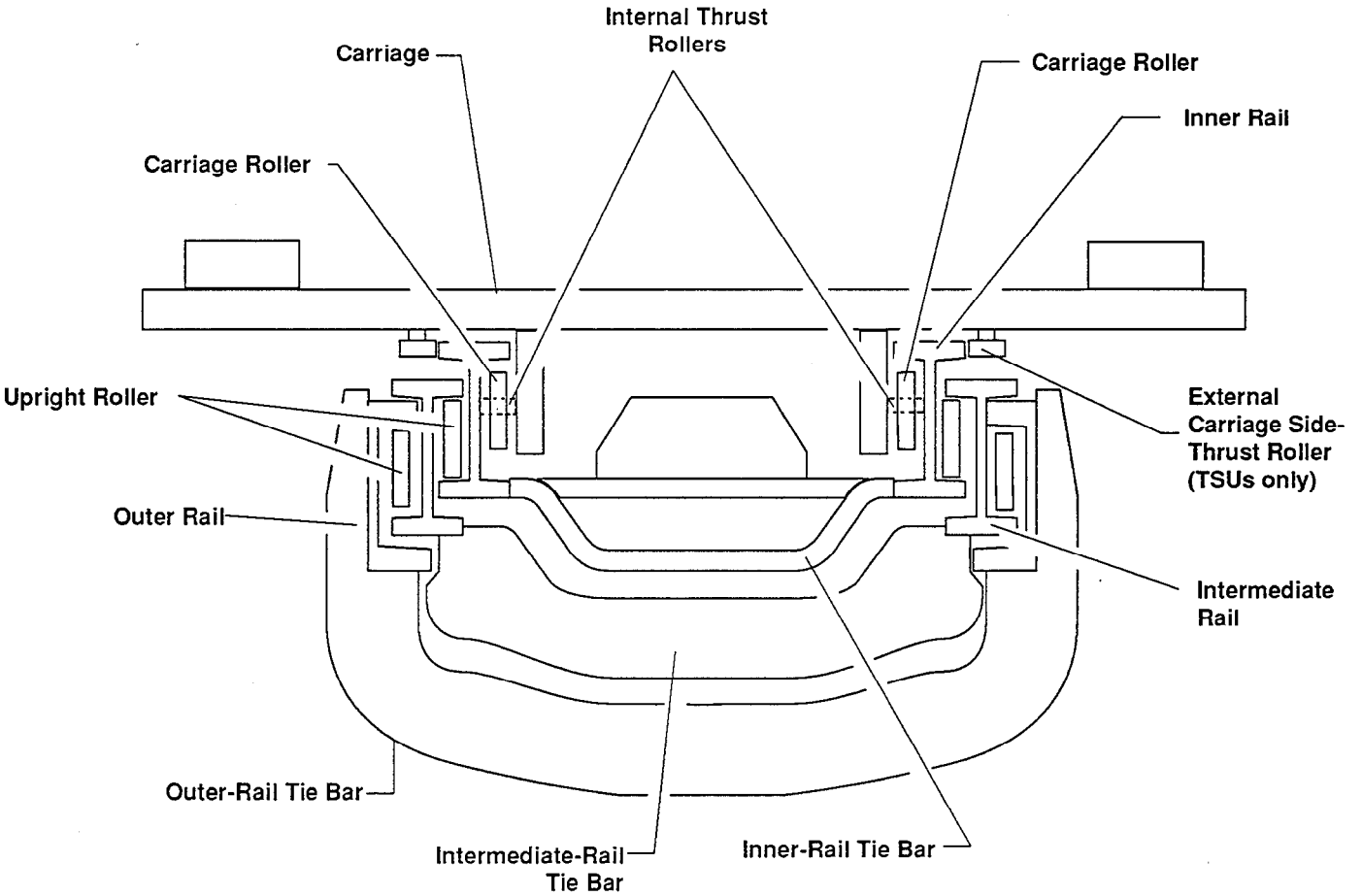

Typical Triple Stage Upright - Overhead View

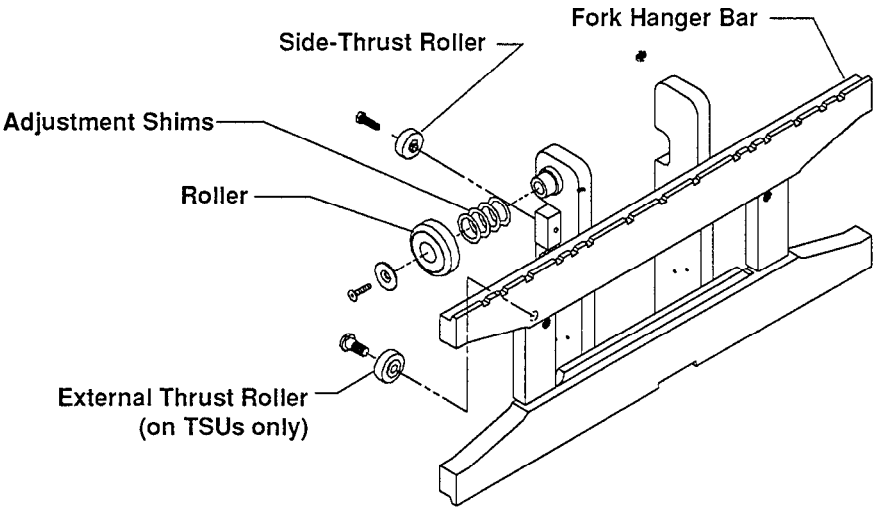

Carriages and Roller Sets

Copyrighted Material
Intended for CLARK dealers only
Do not sell or distribute

https://truckmanualshub.com/

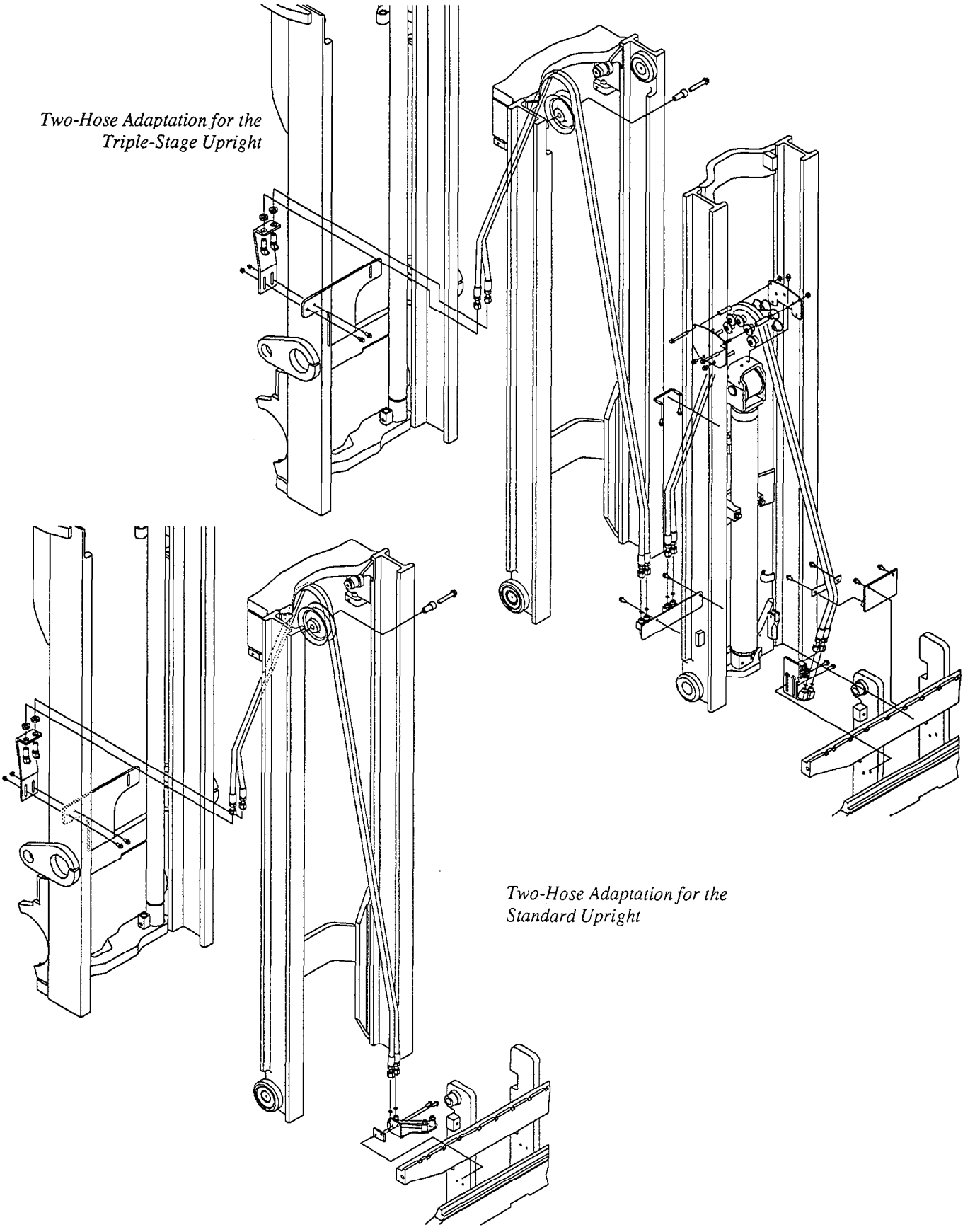

Copyrighted Material
Intended for CLARK dealers only
Do not sell or distribute

https://truckmanualshub.com/

Section 2

Troubleshooting

The visual inspection and the operational checks presented in Section 3 should be used to determine problems with the upright. Possible problems, causes, and remedies are listed below.

Other troubleshooting information about the hydraulic circuit and components appears in the troubleshooting Sections of Groups 29 and 30. Use these other troubleshooting Sections for more detailed problem isolation with Upright hydraulic functions.

WARNING

The procedures for troubleshooting uprights, carriages, and forks involve movement of the components. Failure to follow these warnings can result in serious injury.

Make sure overhead clearances are adequate before raising the upright to full lift height.

Do not walk or stand under raised forks.

Block carriage and upright whenever making checks with the upright elevated.

Keep clear of load and carriage when making any check or adjustment.

Keep your arms and fingers away from moving parts of the upright.

Do not reach through open areas of the upright.

Upright noise

- Bent or broken components; inspect upright thoroughly and repair or replace components as required.
- Damaged upright roller; check condition of rollers and replace defective rollers.
- Roller scuffing rails; clean and lubricate rails.
- Roller (carriage or upright) shimming needs adjustment; check and adjust as required.
- Fit between roller edge and rail flange excessively loose in rails; replace with oversized, "Select-Fit" rollers. See "Upright Roller Clearance Check and Shim Adjustment."
- Dry lift chain; lubricate chain.
- Dry hose sheave or rollers; check condition of all sheaves and rollers and lubricate as necessary.
- Damaged chain sheaves; check condition of chain sheaves and repair or replace.
- Excessive fork hanger or carriage fork bar wear; inspect and replace as necessary.
- Seals dry; lubricate rod.
- Seals dry - all primary cylinders; remove gland and add 100 ml (3.4 oz) of hydraulic oil to rod side of piston, see "Cylinder Removal, Shimming, Overhaul, and Replacement."

No lift, tilt, or auxiliary function

- Hydraulic fluid level low; check level and fill.
- Broken hoses or fittings; check and repair.
- Damaged or blocked sump strainer; check and clean.
- Hydraulic pump defective; see Group 29 for pump troubleshooting.
- Defective main hydraulic control valve; see Group 30 for valve troubleshooting.
- Defective upright load-lowering flow valve; disassemble valve, check and clean or replace.

No lift function but tilt operates

- Broken hoses or fittings; check and repair.
- Cylinder is damaged; inspect and repair.
- Main hydraulic control valve, lift section defective; see Group 30 for valve troubleshooting and service information.
- Upright load-lowering flow valve damaged; disassemble valve, check and clean or replace.

Copyrighted Material
Intended for CLARK dealers only
Do not sell or distribute

https://truckmanualshub.com/

Load cannot be lifted to maximum height

- Hydraulic fluid level low, check level and fill.
- Debris in upright; check and clean.
- Check cylinder for external leakage; replace cylinder if cracked.
- Cylinder shimming is incorrect; check and adjust shimming.
- Internal leakage on lift or secondary piston cylinders; remove rod and piston and clean check valves; also clean and inspect/replace piston seals. See Section 5.
- Cylinder check valve on lift or secondary piston cylinders not functioning properly; remove rod and piston and clean check valves; also clean and inspect/replace piston seals. See Section 5.
- Hydraulic pump defective; see Group 29 for pump troubleshooting information.
- Upright rails binding:
  a. Perform a visual inspection and check for worn, or distorted parts, broken or cracked rails or tie-bars, correct chain and hosing placement and operation
  b. Check rollers for contamination and proper operation, perform roller clearance check and adjustment

Lift speed sluggish

- Hydraulic fluid level low; check level and fill.
- Broken hoses or fittings; check and repair.
- Pump inlet line restricted; remove from pump and clean.
- Damaged or binding upright roller; check condition of roller and replace if necessary.
- Internal leakage on piston-type lift and secondary cylinders (with load); perform cylinder checks listed under "Load cannot be lifted to maximum height."
- Hydraulic pump defective; see Group 29 for pump troubleshooting information.
- Defective main lift valve; see Group 30 for valve troubleshooting and service information.
- Defective velocity fuse; remove fuse from cylinder hydraulic port, clean and recheck for proper operation.
- Defective upright load-lowering flow valve; remove valve clean, inspect, and replace if necessary.

Lowering speed sluggish

- Damaged or binding upright roller; check condition of roller and replace if necessary.
- Damaged or kinked hydraulic hose or tube; check condition of hose and tube, repair or replace as necessary.
- Defective upright load-lowering flow valve; check, clean and replace valve if necessary.
- Defective velocity fuse; remove fuse from cylinder hydraulic port, clean and recheck for proper operation.

Load bounces excessively when lowering

- Air in hydraulic system, TSU ram-type cylinders; set capacity load on upright and lift from fully collapsed to full lift height for 10-15 cycles.
- Defective upright load-lowering flow valve; check, clean and replace valve if necessary.
- Defective main lift valve; see Group 30 for valve troubleshooting and service information.
- Defective velocity fuse; remove fuse from cylinder hydraulic port, clean and recheck for proper operation.

Upright mis-staging (TSU lifting)

- Debris in upright roller area of carriage; check and clean.
- Interference between carriage and inner rail or cylinder; check staging alignment and adjust or repair as necessary.
- Bent or broken carriage or inner rail; replace part - do not try to repair by welding.
- Damaged or binding carriage roller; check condition of roller and replace if necessary.
- Carriage roller shimming or thrust roller out of adjustment; perform roller checks on carriage and make adjustments as necessary.
- Damaged or kinked primary cylinder hose; check condition of hose, repair or replace as necessary.
- Primary cylinder chain or chain sheave binding or damaged; inspect and repair.
- Internal leakage in primary lift cylinder; perform cylinder checks listed under "Load cannot be lifted to maximum height."
- Damaged primary lift cylinder causing binding in the cylinder; inspect and repair or replace cylinder.

Copyrighted Material
Intended for CLARK dealers only
Do not sell or distribute

https://truckmanualshub.com/

- Defective velocity fuse; remove fuse from cylinder hydraulic port, clean and recheck for proper operation.

Upright mis-staging (TSU lowering)

- Debris in upright roller area or tie bar area; check and clean.
- Bent or broken carriage or inner rail; replace part - do not try to repair by welding.
- Damaged or binding roller on upright; check condition of roller and replace if necessary.
- Carriage and upright roller shimming or thrust roller out of adjustment; perform roller checks on upright and/or carriage and make adjustments as necessary.
- Damaged or kinked lift cylinder hose; check condition of hose, repair or replace as necessary.
- Lift cylinder chain or chain sheave binding or damaged; inspect and repair.
- Bent cylinder rod; inspect and replace rod and/or cylinder as necessary.
- Internal leakage in piston-type cylinders; perform cylinder checks listed under "Load cannot be lifted to maximum height."
- Damaged lift cylinder causing binding in the cylinder; inspect and repair or replace cylinder.
- Defective velocity fuse; remove fuse from cylinder hydraulic port, clean and recheck for proper operation.

Upright mis-staging (Standard upright lowering)

- Damaged or binding roller on upright; check condition of roller and replace if necessary.
- Top carriage roller retaining cap screw loose; check and replace cap screw.
- Lift cylinder chain or chain sheave binding or damaged; inspect and repair.
- Debris in upright roller area or tie bar area; check and clean.
- Bent or broken carriage or inner rail; replace part - do not try to repair by welding.
- Carriage and upright roller shimming or thrust roller out of adjustment; perform roller checks on upright and/or carriage and make adjustments as necessary.
- Defective velocity fuse; remove fuse from cylinder hydraulic port, clean and recheck for proper operation.

External leakage on primary cylinder

- Gland loose; check and tighten primary cylinder gland to 135 N•m (100 ft-lb) and glands on lift (secondary) cylinders to 100 N•m (73 ft-lb).
- Cracked cylinder tube; replace tube.
- Rod seal damage; replace seals and check for:
  - Damaged rod seal groove in gland; check for damage to groove and replace seal or gland if necessary
  - Scored cylinder wall; repair or replace cylinder tube if necessary
  - Leaking check valve; clean and replace if necessary
  - Leaking O-ring seal on check valve; replace check valve.
- Gland static seals (O-rings and back-up ring) damaged; replace back-up ring.
- Gland static seals sealing surface damaged; check groove and bore and repair or replace as necessary.

External leakage on lift (Standard) and secondary cylinder (TSUs)

- Gland loose; check and tighten gland on cylinders to 100 N•m (73 ft-lb).
- Cracked cylinder tube; inspect and replace tube.
- Seal damage in piston-type cylinders; replace piston seals and rod seals.
- Rod seal damage, ram-type cylinders; replace rod seals.
- Damaged seal groove, piston-type cylinders; check for scratches, nicks, or burrs and repair or replace rod and piston.
- Scored cylinder wall, TSU piston-type cylinders; replace tube and all seals.
- Scored or damaged rod; replace rod and all seals.
- Damaged gland back-up seal; inspect and replace seal.
- Gland static seals sealing surface damaged; check grooves and bore.

Oil leak at top of lift cylinder

- Scored cylinder wall; see Section 5.
- Worn or damaged gland rod-seal; see procedures for piston-type cylinders under "Cylinder leaking internally."

Copyrighted Material
Intended for CLARK dealers only
Do not sell or distribute

https://truckmanualshub.com/

Unsatisfactory lift or tilt cylinder drift test results

- Cylinder leaking internally; remove cylinder gland and check:
  a. Primary cylinder should have only 3.4 ounces (100 ml) on rod side of the piston
  b. Piston- and ram-type lift and secondary cylinders should be dry on rod side of piston.

If fluid is leaking past piston:

a. On piston-type cylinders, remove rod and piston, clean check valves and clean and inspect/replace piston seals
b. On ram-type cylinders, inspect/replace rod and piston.

See Section 5.

- Cylinder hydraulic fittings loose or worn; check fitting O-rings, tighten fittings according to Group 40, "Hydraulic Fitting Tightening Procedure."
- Check valve worn or damaged; remove rod and piston, clean check valve and replace if necessary.
- Control valve spool linkage malfunctioning, damaged, or worn; see Group 30, Section 5 for linkage adjustment and/or replacement.
- Counterbalance function in main hydraulic control valve malfunctioning, damaged, or worn; inspect and clean or replace if necessary.

Copyrighted Material
Intended for CLARK dealers only
Do not sell or distribute

https://truckmanualshub.com/

Section 3

Upright Inspection

Basic Visual Inspection 2

Extended Inspection 3
Forks 3
Lift Chains 4
Carriage and Upright Weldments 5
Carriage and Upright Rollers 6
Cylinders 7
Hydraulic Plumbing 9
Upright Drift 9
Trunnion Bearings 10

⚠ CAUTION

SAFE PARKING. Before working on truck:

1. **Park truck on a hard, level, and solid surface, such as a concrete floor with no gaps or breaks.**
2. **Put upright in vertical position and fully lower the forks or attachment.**
3. **Put all controls in neutral. Turn key switch OFF and remove key.**
4. **Apply the parking brake and block the wheels.**

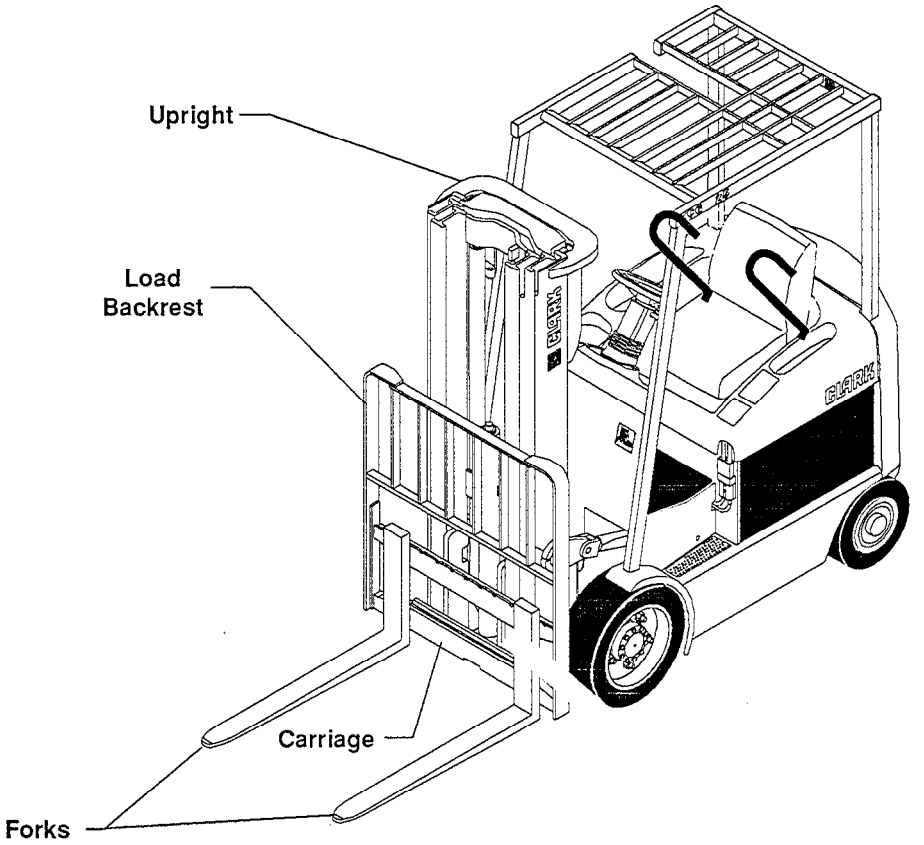

Copyrighted Material
Intended for CLARK dealers only
Do not sell or distribute

https://truckmanualshub.com/

Basic Visual Inspection

Use the following steps to conduct an initial visual inspection of the upright. This is the same type of inspection operators should be conducting on a daily basis.

If you note problems with any component during the basic visual inspection, continue with "Extended Inspection" for checks and service.

WARNING

The procedures for checking, maintaining, and adjusting uprights, carriages, and forks involve movement of the components. Failure to follow these warnings can result in serious injury. Always use extreme caution.

Do not walk or stand under raised forks.

Keep clear of load and carriage when making any check or adjustment.

Keep your arms and fingers away from moving parts of the upright.

Do not reach through open areas of the upright.

General

- Check to make sure all fasteners are secure.
- Check to make sure the upright lifts and lowers smoothly with and without a capacity load.
- Check for visible damage to components.

Forks

- Check function and security of the fork latch.
- Inspect the forks for cracks, especially the hanger and heel areas.
- Check for wear in the fork heel. If heel wear is evident, perform the extended inspection.
- Inspect the fork hanger and carriage fork bar for excessive wear.
- Inspect for bent forks.

Load Backrest

- Inspect load backrest for damage such as cracks or bending.
- Check for tight mounting fasteners.

Lift Chains

Inspect the chains for:

- Proper lubrication. The links should have a coat of oil on all surfaces. Lubrication oil should penetrate completely into chain joints.
- Good condition of the chain links and pins. No rust, corrosion, stiffness, or cracking should be evident. Pins should not be turned or protruding.
- Excessive side wear or edge wear on the chain plates.
- Correct, equal tension on chain sets.
- Secure anchor bolt, adjustment nut, and jam nut mounting.
- Correct alignment of the chain anchors to the chain and chain sheaves. Adjust turned chain anchors.
- Loose, broken, or damaged anchor bolt pins and cotter pins. Replace defective pins and cotter pins.

Rollers

Inspect the upright and carriage rollers for:

- Broken or loose rollers.
- Loose, broken, or misadjusted thrust roller on the carriage.
- Obvious signs of failed bearing seals.

NOTE

Some grease will purge from the bearings in the first 100-200 hours of operation.

- Excessive looseness in carriage or upright roller shimming.

Upright and Carriage Weldments

Inspect the upright and carriage for:

- Debris or foreign objects on the components.
- Bent, cracked, or broken components.
- Undesirable wear on or contact between components.
- Irregular roller patterns and signs of excessive wear or scraping on the rails.

Hydraulic System

Inspect the upright hydraulic system components for:

- Damage or wear on all hoses and hydraulic tubes.
- Leaks on hoses, fittings, or valves.
- Leakage on the cylinders.
- Excessive drift in lift or tilt operations.

Copyrighted Material
Intended for CLARK dealers only
Do not sell or distribute

https://truckmanualshub.com/

Extended Inspection

The extended inspection should be performed whenever the basic visual inspection indicates upright problems, as specified for PMs, or at least every 2000 hours.

Forks

Forks have a limited service life because of wear and fatigue. Forks should be tested every 50-250 hours using a visual inspection, a fork thickness check, a fork bending check, and a fork gap check. If replacement is necessary, always replace the pair to ensure fork integrity.

Fork Alignment

1. Park the truck on a flat, even surface, tilt upright to vertical position, and set forks 25-50 mm (1-2 in) above the ground.
2. Compare fork arms to be sure they are straight, on the same plane (level), and the same length.
3. Measure the distance from the fork tips to the ground. The height difference between the forks tips should be no more than 3% of the fork length. For example, a 1066 mm (42 in) fork should not vary more than 30.5 mm (1.2 in) up or down from its mate. See "B" in following figure.

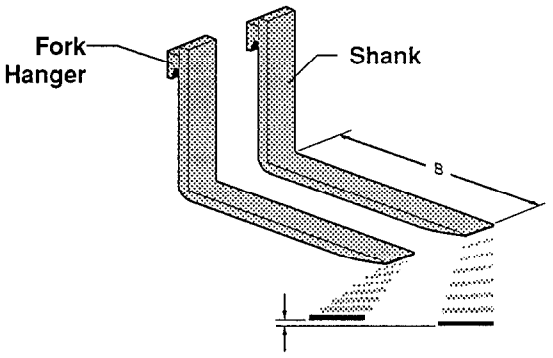

Fork Arm Height

4. If the fork tips are not aligned within the specified 3% difference, the cause of the problem must be determined and corrected before returning the truck to service. If replacement is necessary, always replace the forks in a set.

Fork Bending

Overloading, glancing blows against solid objects, or picking up loads unevenly can bend or twist a fork. Use the following procedure to check for fork bending.

1. Place a 50 x 100 x 610 mm (2 x 4 x 24 in) wood block flat on the fork. Make sure the block is not resting on the heel radius.

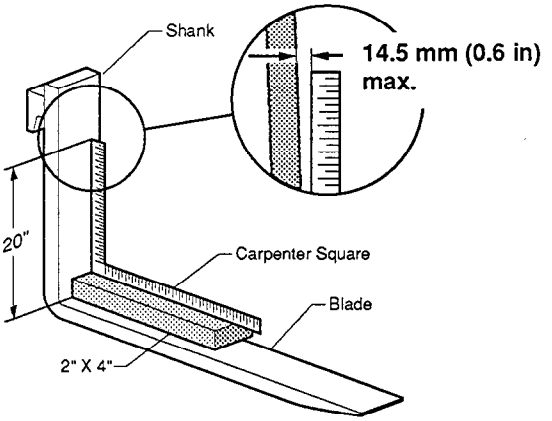

Fork Bending Check

2. Set a carpenter's square on the block against the fork shank
3. Check the fork 508 mm (20 in) above the blade to make sure it is not bent more than 14.5 mm (0.6 in) at the maximum.
4. If blades are bent over the 14.5 mm (0.6 in) allowance they should be replaced as a set.

See Section 7, "Fork and Carriage Removal and Replacement," for procedures to remove and replace the forks.

Fork Fatigue

Fatigue cracks normally start in the heel area or on the underside of the top hanger. If cracks are found, the fork should be replaced. Dye penetrants or magnaflux can be used for a more accurate inspection.

Fork Wear and Heel Wear

Industrial Truck Association (ITA) standards require that a fork be removed from service when the blade or heel thickness is reduced by 10% over its original thickness. If the heel is 10% smaller than the arm, the load capacity could be reduced by 20%. A 5,000-pound (2272 kg) capacity fork with 10% wear can only safely handle 4,000 pounds (1818 kg).

Use of fork wear calipers are recommended (Clark part number 1803641) to gauge fork wear as follows:

1. Use the outside jaws of the caliper to measure fork thickness in the shank area of the fork.

Copyrighted Material
Intended for CLARK dealers only
Do not sell or distribute

https://truckmanualshub.com/

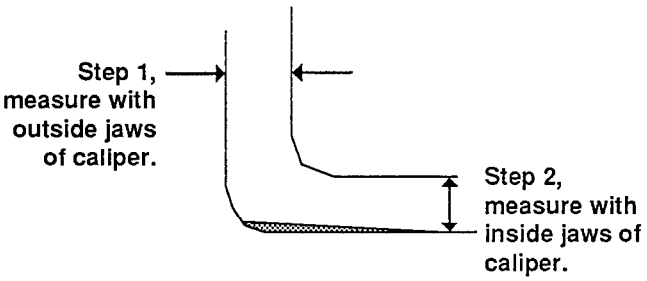

NOTE

Hold the caliper square and use light pressure to squeeze the outer jaw tips against the fork shank. Take care not to accidentally alter the reading of the calipers.

2. Check the fork blade area to the inside jaws of the caliper.
3. If the inside jaws fit over the fork in the blade area, wear exceeds allowable 10% wear and a new set of forks should be installed.

Fork Hanger Wear and Carriage Fork Bar Wear

Inspect the fork hangers and carriage fork bar. Excessive wear can cause the fork to disengage the fork bars or reduce fork hanger life.

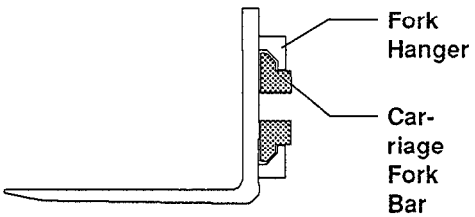

- If fork hangers are excessively worn, replace the forks as a set.
- If carriage fork bar is excessively worn, replace the carriage.

IMPORTANT

Do not weld on forks or carriage. Replace the worn parts with new parts.

Fork Latch and Carriage Fork Stops

1. Check fork latches for proper operation. Latches should operate smoothly. The spring should be in good condition and securely lock the fork into position. Replace the fork latch if it does not operate properly.

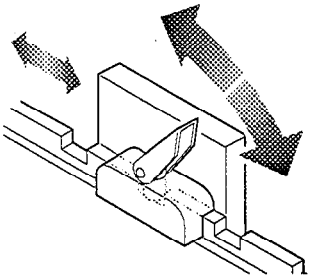

NOTE

A small amount of lubricant can be applied to the fork latch. Do not over lubricate and allow lubricant to run down on carriage fork bar.

2. Check fork stops for widening of notches or rounding of top edge. Replace the carriage if fork stops are excessively worn.

Lift Chains

The following checks should be performed every 50-250 hours to ensure correct chain performance See Section 6 for more complete chain inspection and maintenance procedures.

Chain Wear (Stretch) - All Lift Chains

Lift chain stretch due to wear in the joints can be measured using a measuring tape or Clark's chain check ruler.

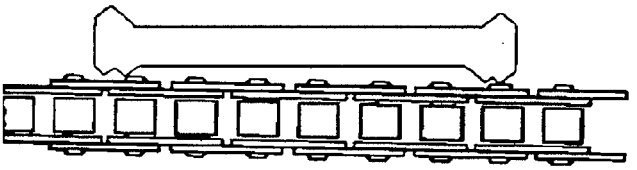

Chain Check Ruler - Clark Part Number 59-960-9908

When any section of the chain has worn and increased its original length by 3% or more, the chain must be replaced. When checking chain wear, always measure a segment of the chain that rolls over a sheave.

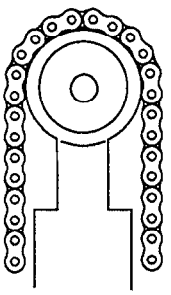

Copyrighted Material
Intended for CLARK dealers only
Do not sell or distribute

https://truckmanualshub.com/

IMPORTANT

Never replace a single chain in a set. Always replace the two chains in a set for consistent lift operation. Always replace anchor pins when replacing chains.

1. For example, measure a 305 mm (12 in) segment of the chain that does not roll over a sheave and count the number of links in the segment.
2. Find an area of the chain that normally runs over the sheave. This can usually be identified by wear on the plate edges that roll over the sheave.
3. If the same number of links measures over 315 mm (12.36 in) the chain must be replaced.

If using a chain check ruler, see instructions on the ruler.

Chain replacement procedures appear in Section 6.

Chain Length

IMPORTANT

Perform a chain length check and adjustment every 50-250 hours. Checks and adjustments should also be performed to adjust for chain stretch and tire wear.

Chain length must be adjusted if:

- The fork-to-ground clearance is less than 5 mm (.20 in) or more than 25 mm (1.0 in) when the upright is vertical.
- The center of the bottom carriage roller comes within 20 mm (0.80 in) of the bottom edge of the inner rail.
- The carriage safety stop hits the inner rail stop at full lift height.
- On TSUs, the difference between the bottom of the inner rail and the outer rail is greater than 10 mm (0.40 in).

See Section 6 for chain length adjustment procedures.

Chain Tension

IMPORTANT

Center any auxiliary attachments before beginning tension check

1. Raise the upright enough to put tension on the chains to be checked.
2. Push the chains forward and pull them backward; the amount of tension should be equal on both sides.

WARNING

Do not reach through the upright to push chains for tension check.

3. If one chains moves more than the other;
   a. Lower the forks to ease tension on the chains.
   b. Adjust chain adjustment nuts for equal tension on both chains. See Section 6 for chain adjustment procedures
4. Repeat the tension test and make adjustments until the tension is equal on both chains when the carriage and upright are raised.

Carriage and Upright Weldments

The carriage and upright should be checked for fatigue cracks and bent components every 2000 hours or every year.. Fatigue cracks start in areas of stress after a high number of load cycles. Stress concentrations typically exist in welded joints, in the area around a welded joint, or in the corners of parts. Dye penetrant, magnaflux, or other crack detection methods can be used to find or trace cracks. If cracks are found in any structural weldment, the component should be replaced before returning the truck to service.

- Bent components indicate excessive loading or high impacts to the weldments. Bent components are usually structurally damaged and should be replaced.
- Inspect roller contact patterns on the rail sections. Roller contact patterns should be smooth and regular.
  - In some applications, it may take up to 500 hours of operation to develop a roller contact pattern on the flange of the rail.
  - In applications where heavy loads are common, a rail lubricant may be required to allow proper wear-in on the roller.
- Check rails and carriage for wear due to undesirable contact between components. Such contact can be an indication of broken rollers, loose components, foreign objects or debris on the upright, or a broken weldment.
  - If contact or rubbing exists, the condition must be corrected immediately.
  - Rail and carriage weldments with damage should be replaced.
- Tie bar areas should be free of foreign objects and debris. The roller area of the rail should be cleaned every 500-1000 hours in a normal application.
  - In applications where excessive amounts of contaminants settle in the rail channels, cleaning may be required on 50-250 hour intervals.
  - If excessive contamination exists, the rollers should be exposed and the bearing seal areas cleaned thoroughly.

    See Section 4 for carriage roller and upright roller removal and installation.

Copyrighted Material
Intended for CLARK dealers only
Do not sell or distribute

https://truckmanualshub.com/

Carriage and Upright Rollers

Carriage Thrust Rollers

The carriage uses two types of thrust rollers.

- The internal thrust roller is found on both standard and TSUs. The carriage internal thrust rollers are located on the lift bracket and run on the inside web of the inner rail. The internal thrust roller is intended to carry a portion of the carriage lateral load.
- The second type of carriage thrust roller is an external thrust roller. The external thrust roller runs along the outside flange of the inner rail to control lateral load on the carriage. External thrust rollers are found on TSUs only.

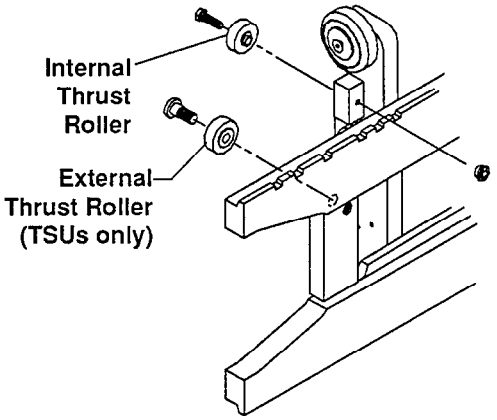

Both types of thrust rollers should be checked for smooth rotation, seal integrity, radial bearing tightness, and a tight cap screw. A roller should turn smoothly without sticking and be grit free. Replace the roller if any defect is found.

External thrust roller cap screws have a locking patch to prevent the cap screw from backing out. Repeated removal will deteriorate the ability of the patch to hold the cap screw. If the cap screw is backing out without holding, a new cap screw is recommended. The cap screw can also be cleaned and set using thread locking compound Loctite 271 (Clark Part 1802302). The internal thrust rollers use a jam nut to ensure that the bearing remains secure.

NOTE

Some grease will purge from the bearings in the first 100-200 hours of operation. This is not necessarily a sign of a failed roller bearing seal.

The external thrust rollers on a TSU are not adjustable. The internal thrust roller adjusts using a locking cam on the mounting cap screw. See Section 4 for roller replacement and internal thrust roller adjustment procedures.

Carriage and Upright Main Load Rollers

Inspect the carriage and upright main load rollers for broken, loose, or rough bearings. Defective rollers should be replaced.

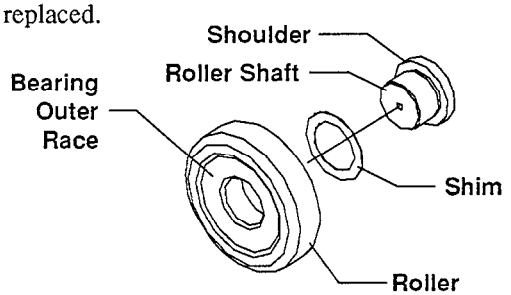

Indications of broken or damaged rollers include:

- Part of all of roller bearing missing
- Bearing outer race loose
- Scraping noise from the upright
- Scraping of carriage fork bar on inner rail (carriage rollers)
- Upright rail sections scraping together (upright rollers)
- Upright mis-staging
- Excessive looseness of the rail section or carriage demonstrated by the following load test.

NOTE

Some grease will purge from the bearings in the first 100-200 hours of operation. This is not necessarily a sign of a failed roller bearing seal.

Load Test

A load test helps you to determine the amount of clearance between the moving upright parts. The upright requires some lateral movement between the interlocking rails and the carriage. But, too much or too little clearance can be the cause of binding and uneven operation.

⚠ WARNING

An upright or carriage can move unexpectedly during service procedures causing severe injury:

Do not walk or stand under raised forks.

Keep clear of load and carriage when making any check or adjustment.

Keep your arms and fingers away from moving parts of the upright.

Do not reach through open areas of the upright.

Failure to follow these warnings can result in serious injury.

Copyrighted Material
Intended for CLARK dealers only
Do not sell or distribute

https://truckmanualshub.com/

1. Place a capacity load on the forks and secure it to the carriage.

CAUTION

Test load must be stacked stably, not extend beyond the pallet, and be secured on the pallet. Operate the truck only from within the operator's compartment.

2. Tilt the upright back slightly and raise the upright to its maximum extension several times. Note the smoothness of operation, the carriage play, and play between the rails.
3. Move the load 102 mm (4 in) off center on the forks and resecure it to the carriage.
4. Raise the upright to its maximum extension and lower the load to the floor several times.
5. Repeat the step, moving the load 102 mm (4 in) off center to the other side.
6. Raise the upright to its maximum extension and lower the load to the floor several times.

Carefully observe the smoothness of operation, particularly in carriage play, and play between the rails. If any unusual movement, staging, or noise occurs during the test, correct the problem before returning the truck to service. Continue with the following roller shimming checks if too much play is evident in the carriage and rails in the load test. The troubleshooting guide may also help to identify specific problems with upright operation.

Roller Side-Clearance

The carriage and upright rollers are shimmed between the inner race and the roller shaft shoulder to maintain minimal clearance between the side of the roller and the web of the adjacent rail. Shim adjustments help accommodate manufacturing tolerances and wear in the upright rail sections.

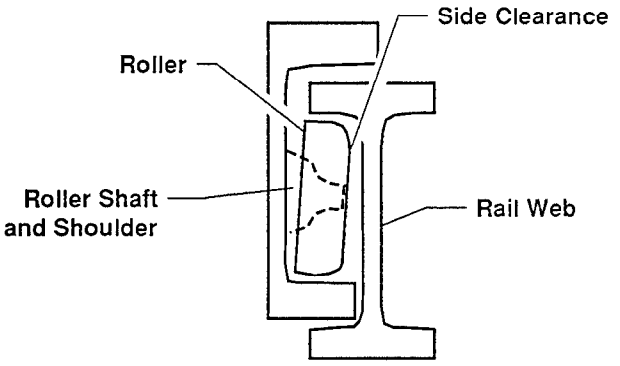

Signs of loose shimming include:

1. Excessive lateral (side-to-side) movement in the upright rail sections
2. Excessive lateral shift in the upright at, or near, full maximum fork height (MFH)
3. Irregular roller patterns on the rail.

Signs of over shimming include:

1. Mis-staging or hanging up of the upright
2. Excessive wear in the rail web
3. Premature bearing failure.

Perform the following roll pattern check and the load test if the need for roller shimming is suspected. See Section 4 for detailed clearance measurement procedures.

Roll Patterns

Impressions made by rollers on upright rails are called roll patterns. Roll patterns can provide indication of the need for upright or carriage adjustment.

WARNING

Keep clear of load and carriage when making any checks or adjustments.

1. Elevate the carriage about 4 feet (1.3 m).
2. Apply a light, thin layer of grease to the roller contact area.
3. Lower the forks and pick up a capacity load. Raise and lower the upright several times.
4. Back out from the load and raise the carriage.

Compare the impressions of the rollers on each side of the upright rails. The impressions should look the same on both sides. Look for signs of metal scoring or gouging which can indicate excessive pressure caused by damaged or misadjusted rollers.

Carriage rollers, including side-thrust rollers, and all upright rollers can be checked by examining roll patterns. If irregular impressions result from the checks, perform the "Lift Cylinder Shimming Check" and the "Load Test" to further diagnose problems.

See Section 4 for procedures to measure clearances and adjust carriage or upright rollers.

Cylinders

Use the Drift Test, presented under "Hydraulic Checks" below, for additional diagnosis of cylinder condition. See Section 5 for cylinder repair.

External Leakage (All Cylinders)

To check for external leakage on the primary cylinder:

1. Clean the top of the gland and rod to remove any buildup of debris.

Copyrighted Material
Intended for CLARK dealers only
Do not sell or distribute

https://truckmanualshub.com/

2. Check rod surface for defects or unusual wear.
   - Nicks, burrs, or other sharp defects can cause damage to the seal and will lead to leaks. The rod should be repaired or replaced.
   - For piston-type cylinders, small blunt defects in the top and midsection of the rod can be tolerated in this cylinder design. The high pressure sealing is over the last several inches of stroke. This type of defect is acceptable if leakage is not evident.
   - For ram-type cylinders, defect tolerances are narrower than for sealed-piston cylinders. Damage to these rods requires replacement.
3. Check for external leakage from the cylinder barrel, gland O-rings and backup ring, and the rod seal.

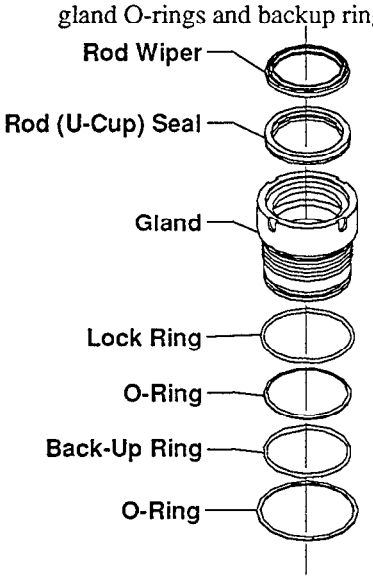

   - The gland O-rings and backup ring are near-zero leakage seals. If, after cleaning the gland and tube, oil accumulates to form a run, the O-rings and backup ring should be replaced (see Section 5).
   - External leakage from the barrel requires replacement of the barrel.

NOTE

The seals are installed with lubricant and a trace amount will be in the gland/tube interface area.

4. After cleaning the top of the gland and the barrel, cycle the upright 5-10 times. If a ring of oil forms to run 3 mm (0.125 in) down the rod, the cylinder must be overhauled or replaced.

Internal Leakage on Primary Cylinder

To check for internal leakage on the primary cylinder:

1. Lift the upright to maximum height then lower forks completely.
2. Cycle the upright 5-10 times through the first 2/3 length of the primary stroke and lower forks completely.
3. Slowly lift the carriage 305-610 mm (1-2 ft) into the secondary lift stage then lift to full extension.
4. If the carriage does not lift to full height, the problem is likely an internal leak and the cylinder should be overhauled.
5. If the carriage does lift to full height, but you still suspect an internal leak, repeat the procedure with a 40-70% capacity load.

NOTE

The primary cylinder normally has approximately 100 ml (3.4 oz) of hydraulic fluid on the rod side of the piston as a precharge.

Use the Drift Test, presented under "Hydraulic Checks" below, for additional diagnosis of cylinder condition. See Section 5 for cylinder repair.

Internal Leakage on Piston-Type Lift and Secondary Cylinders

To check for internal leakage in Standard lift and TSU secondary cylinders:

1. Lift the upright to MFH then lower forks completely.
2. Cycle the upright 5-10 times through the first 2/3 length of the lift cylinder stroke and lower forks completely.
3. Lift the upright to full MFH.

Watch for the lift cylinder to increase lift speed. If you see an increase in lift speed, one or both of the lift cylinders have an internal leak and requires overhaul.

If the upright does not increase lifting speed, but you still suspect an internal leak, repeat the procedure with a capacity load. If the upright does not extend to full MFH, the problem is likely an internal leak and the cylinder should be overhauled.

Lift Cylinder Shimming

The lift cylinders on both standard uprights and TSUs bottom out at the end of the stroke to limit upright extension. The upright has dual lift cylinders and the cylinders' extension length must be equal. If not, "racking," or side-to-side shifting, results. Rod extension length is made equal by using shims under the rod end of the cylinder. To determine if shimming of the cylinders is required to prevent racking, perform the following operational check:

Copyrighted Material
Intended for CLARK dealers only
Do not sell or distribute

https://truckmanualshub.com/

CAUTION

Make sure truck is parked on level surface with parking brake applied and wheels chocked; make sure overhead clearance is adequate to extend upright to its full height.

1. Center the forks or attachments on the upright.
2. Check for equal chain tension.
3. Raise the upright from the retracted position to full lift height. Note the point when the lift cylinders reach the end of their stroke.
   - If the upright shifts right or left noticeably, shimming is required.
   - Repeat the check three times before adding shims.

NOTE

Offset or unbalanced loads and off-center attachments can cause the upright to shift even with proper lift cylinder shimming.

See Section 5 for lift cylinder shimming procedure. Racking adjustments for tilt cylinders appear in Group 32, Section 2, "Tilt Cylinder Checks and Adjustments."

Hydraulic Plumbing

Use the Lift Cylinder Shimming Check, the Load Test, and the following Drift Test to check the performance of the hydraulic system.

1. Check all fittings for leakage. Disassemble fittings and inspect the seals. Replace seals as required. See Group 40 for hydraulic fitting tightening procedures.
2. Check all hoses and tubes for wear and damage.
   a. Hoses or tubes with scrapes or kinks should be replaced.
   b. Hoses with outer cover wear exposing the reinforcement braiding should be replaced.

Upright Drift

Drift tests check cylinder, main valve, and hydraulic circuit integrity under load pressures. A load is held elevated for an extended period to determine how much the upright "drifts" (moves) over a specified time period. A tilt cylinder drift test appears in Group 32, Section 2, "Tilt Cylinder Checks and Adjustments."

WARNING

An upright or carriage can move unexpectedly during service procedures causing severe injury:

Do not walk or stand under raised forks.

Keep clear of load and carriage when making any check or adjustment.

Keep your arms and fingers away from moving parts of the upright.

Do not reach through open areas of the upright.

Failure to follow these warnings can result in serious injury.

1. Raise the empty upright and carriage to its full extension and lower to a point halfway down from full extension.
2. Shut off the truck. Apply the parking brake and chock the wheels.
3. With a pencil or chalk, make a mark across the rails on one side of the upright.

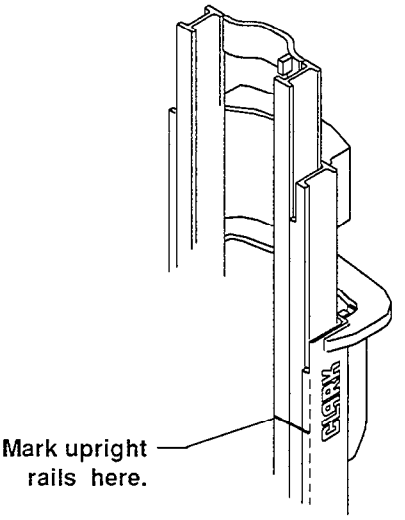

WARNING

Keep clear of load and carriage when making any checks or adjustments. Do not use the upright to climb; use an approved platform.

4. Wait five minutes and recheck the mark. Measure and write down the distance the marks on the inner and intermediate rails have drifted from the mark on the outer rail.
5. If upright rails drift 25 mm (1 in) or more in the five minutes, read and follow the procedures presented in "Drift Causes and Remedies."

Copyrighted Material
Intended for CLARK dealers only
Do not sell or distribute

https://truckmanualshub.com/

6. If no drift does not exceed 25 mm (1 in) in five minutes, retest the upright with a 50% load. Adjust fork width as wide as possible to lift the half-load equally distributed on a 1220 x 1220 mm (48 x 48 in). Refer to truck nameplate for capacity rating.

CAUTION

Test load must be stacked stably, not extend beyond the pallet, and be secured on the pallet.

Drift Causes and Remedies

If drift of 25 mm (1 in) or more is evident under a half-load, consider the following causes and remedies:

- The main hydraulic valve is misadjusted, worn, or defective. Fluid is leaking past the valve and causing the upright cylinders to drift. See Group 30 for hydraulic valve troubleshooting and service.
- Upright hydraulic circuit hoses or fittings are leaking. Check the circuit components and repair as necessary.
- Cylinder piston seals are worn, damaged, or defective allowing fluid past the piston causing drift.
- Primary cylinder or piston-type lift or secondary cylinders have a check valve that allows oil to flow back to the rod side of the cylinder. This check valve may be clogged or defective. Inspect the check valve for proper sealing and operation.

Consider rebuilding the cylinders if the first two remedies in this list are not successful. See Section 5 for removal, overhaul, and replacement procedures for primary and secondary cylinders.

Trunnion Bearings

To check the trunnion mounting:

1. Check for missing, broken, bent, or loose trunnion cap fasteners. Replace any damaged parts.
2. Lift the upright 305-610 mm (1-2 ft) and tilt the upright fully forward.
3. Check for trunnion bearing or cap wear by inserting a feeler gauge between the trunnion cap and the axle-mounting bearing surface.

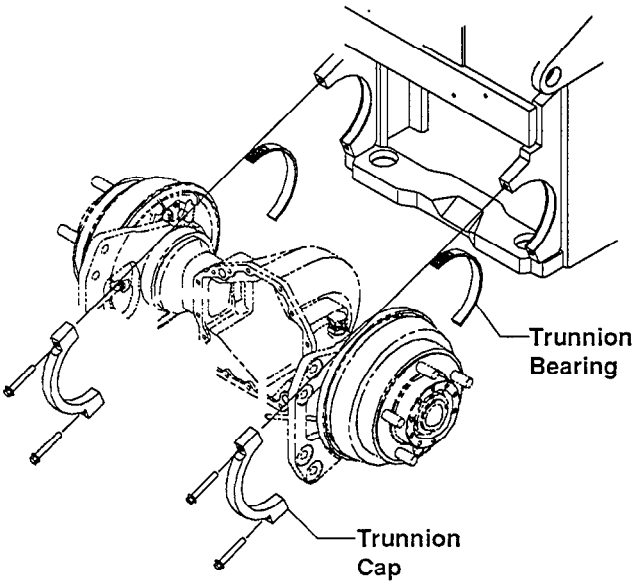

- The gap should not exceed 0.75 mm (0.03 in).
- If the gap exceeds 0.75 mm (0.03 in) the bearing or cap may need replacement.

See Section 8, "Upright Removal and Replacement," for procedures to remove and replace the trunnion bearing.

Copyrighted Material
Intended for CLARK dealers only
Do not sell or distribute

https://truckmanualshub.com/

Section 4

Carriage and Upright Roller Clearance Checks and Shim Adjustments

Introduction 1

Roller Side Clearance Checks 3
General Roller Side Clearance Checking Procedure 3
Directions for Checking Specific Rollers 4
Carriage Rollers 4
Upright Rollers 5

Internal Thrust Roller Adjustment 5

Oversize Rollers 6

Lift Roller Shimming 6
Carriage Roller Shimming 6
Upright Roller Shimming 7
Upright Disassembly 7
Roller Removal, Shimming, and Replacement 8
Upright Reassembly 9
Overshimming 10

IMPORTANT

Before removing any component for overhaul, make sure the correct repair parts and/or kits are available.

WARNING

An upright or carriage can move unexpectedly:

- **Do not walk or stand under raised forks**
- **Keep clear of load and carriage when making any check or adjustment**
- **Keep your arms and fingers away from moving parts of the upright.**
- **Block the carriage or upright when working with the components in a raised position.**
- **Do not reach through open areas of the upright.**
- **Never attempt to move or align the rails by hand.**

Failure to follow these warnings can result in serious injury.

WARNING

Use an approved safety platform to reach the upper areas of the upright. Never use the upright as a ladder.

Introduction

Standard upright assemblies have two lift roller sets mounted on the rails, three lift roller sets mounted on the carriage, and one internal thrust roller set mounted on the carriage.

The triple-stage upright assemblies have four lift roller sets mounted on the rails, three lift roller sets mounted on the carriage, and two thrust roller sets ("internal" and "external") mounted on the carriage. (see the "Roller Side Clearance Chart" on next page.)

Each carriage and upright lift roller is nested within its adjacent rail set. The front "face" of the lift roller handles front-to-back friction and play between the nesting segments of the upright assembly, the side "face" of the roller radius handles side-to-side friction and play. The rollers are canted (tilted) to allow the side face to bear properly on the web.

Copyrighted Material
Intended for CLARK dealers only
Do not sell or distribute

https://truckmanualshub.com/

Rail flange wear can cause excess play between the lift rollers and the rail flange. The only way to correct this is to install oversize rollers—only one size of which is available. If oversize rollers were fitted previously, the only remedy for excessive front-to-back play is to replace the rail set. (carriage middle rollers are always standard-size rollers; see "Oversize Rollers" later in this Section for details on roller replacement.)

The gap between the roller "side" and the web of adjacent rail set affects the side-to-side motion of the upright—which should be as small as possible without causing the sliding segments to bind. The same is true of the internal thrust rollers.

You check the performance effect of the lift roller side clearance and internal thrust roller clearance by means of the load

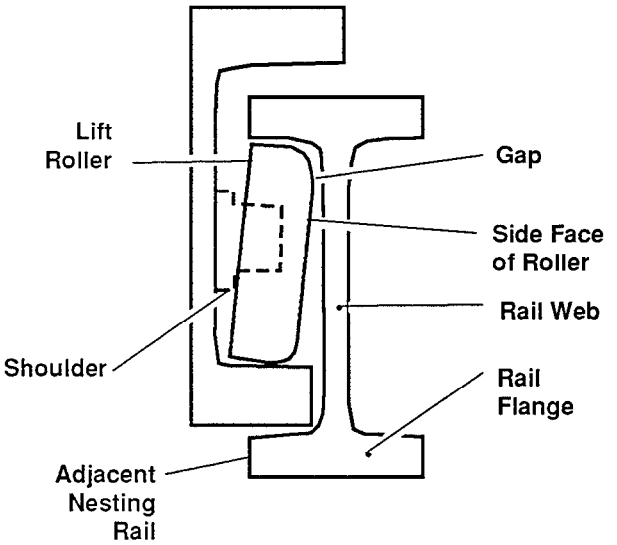

Roller Side Clearance Chart

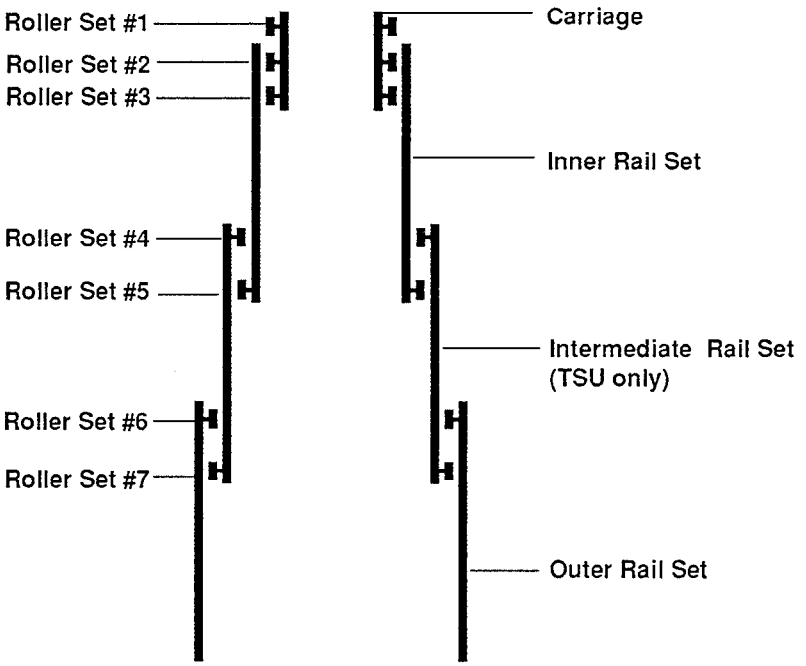

Roller Set #	Web Area Forming Gap	Gap at Minimum Span of Rail Set: Target[a] (mm)	Target[a] (in)	Allowed[b] (mm)	Allowed[b] (in)	Gap at Maximum Span of Rail Set: Target[a] (mm)	Target[a] (in)	Allowed[b] (mm)	Allowed[b] (in)
#1	Front, Inner rail[c]	0.5-1.5	0.02-0.06	0.05-1.25	0.02-0.05	d	d	2.25	0-0.09
#2	Front, Inner rail	0-0.75	0-0.03	0-1.5[e]	0-0.06	d	d	2.25	0-0.09
#3	Back, Inner rail	0-0.75	0-0.03	0-1.0	0-0.04	d	d	2.25	0-0.09
#4	Back, Inner rail	0-0.75	0-0.03	0-1.0	0-0.04	d	d	2.25	0-0.09
#5	Back, Intermd rail	0-0.75	0-0.03	0-1.0	0-0.04	d	d	2.25	0-0.09
#6	Back, Intermd rail	0-0.75	0-0.03	0-1.0	0-0.04	d	d	2.25	0-0.09
#7	Back, Outer rail	0-0.75	0-0.03	0-1.0	0-0.04	d	d	2.25	0-0.09

a. Target is the desired gap after reshimming the roller set.
b. Allowed is the acceptable gap when checking roller set.
c. Internal side thrust rollers should extend 0.25-0.50 mm (0.01-0.02 in) beyond #1 rollers.
d. Ideal is same as final measured gap at minimum width point of rail set.
e. Measured at top of inner rail.

Copyright CLARK Material
Intended for CLARK dealers only
Do not sell or distribute

https://truckmanualshub.com/

test described in Section 3. To evaluate with certainty that the clearance is excessive, you perform the checks given below.

To correct excessive lift roller side clearance, you add shims as described later in this Section. To correct internal thrust roller clearance, you adjust thrust roller position as described later in this Section.

Roller Side Clearance Checks

The same basic procedure is used for checking all the lift rollers. That general procedure is given in the subsection directly below. Special instructions for specific rollers follow that subsection. Follow those directions (in the subsection called "Directions for Checking Specific Rollers") and you will be directed to general and specific information you need.

General Roller Side Clearance Checking Procedure

For each roller set, you need to measure the gap between the outside face of a roller and its adjacent nesting rail. In general, the lift roller side clearance check procedure is as follows:

1. With the spanner tool, find and mark the narrowest and widest spans in each rail set at the roller-contact areas in the rail webs:
   - Inner Rail Set—Mark narrowest and widest spans for both the front and back web areas.
   - Outer and Intermediate Rail Sets—Mark narrowest and widest spans for the back web area only.

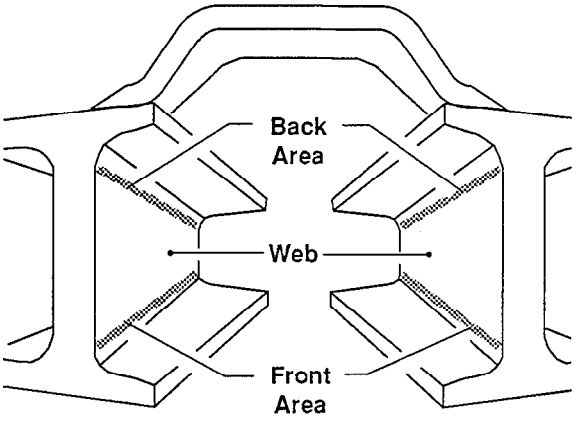

Web Areas on Typical Rail Set

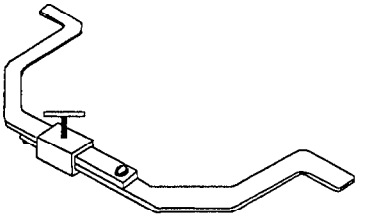

Spanner Tool. Clark part #180109

2. Position the carriage or rails so that the roller set you want to check is at the mark for the narrowest span on the adjacent nesting rail set.

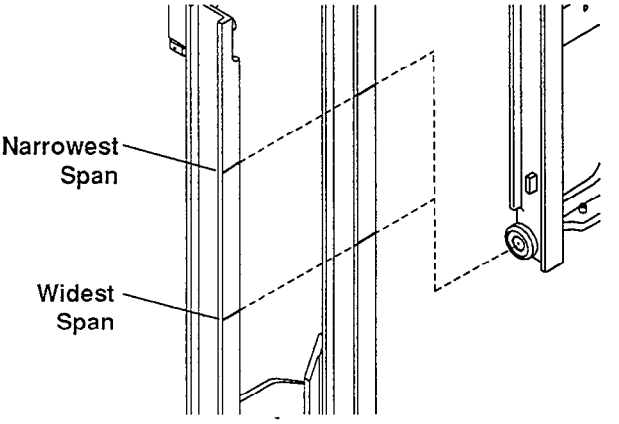

Example of Aligning Roller Set with Widest and Narrowest Spans Marked on Adjacent Rail Set. Rail sets are shown separated for clarity.

3. Clamp the rails together opposite the roller you intend to check. Use wooden shim blocks to protect the rails. Place clamp as close to roller as possible. Torque clamp to 25 N•m (20 ft-lb).

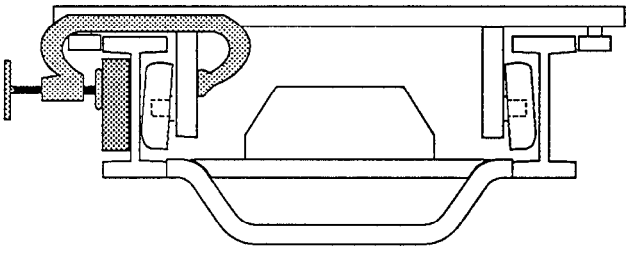

4. Measure the gap with a feeler gauge. Make sure roller is tight against its shoulder. Write down the result.

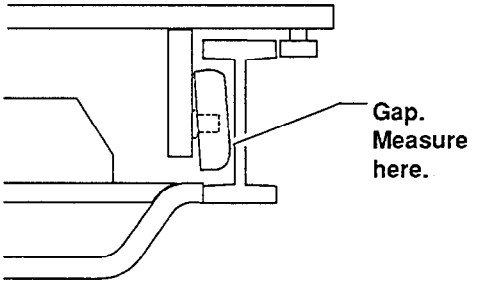

5. Repeats steps 2 through 4 for the widest span marked on the rail set.

Copyrighted Material
Intended for CLARK dealers only
Do not sell or distribute

https://truckmanualshub.com/

6. If the clearance at the *widest* rail set span is more than 2.25 mm (0.09 in), the roller set needs shimming.

   If the clearance at the *narrowest* rail set span is more than 1.0 mm (0.04 in), the roller set should be shimmed; however, it is OK for the middle carriage roller gap to be up to 1.5 mm (0.06 in).

7. Repeat entire procedure for each roller set, following the instructions in "Directions for Checking Specific Rollers" below.

Directions for Checking Specific Rollers

Use these directions to supplement the general procedures given above.

Carriage Rollers

Bottom Carriage Rollers

Follow the general procedure above.

Middle Carriage Rollers

The middle rollers are difficult to access and require the following special procedures.

1. Raise the carriage until the middle rollers are at the top of the inner rails.

2. Measure roller side clearance at the *top* of the inner rails. Note measurement here:

   _____.

   If gap is less than 1.5 mm (0.06 in), shimming is not required.

   If gap is more than 1.5 mm (0.06 in), check clearance at narrowest span by comparison with the top of the rail set as follows:

   a. With spanner tool, measure span of inner rail set at top of the front web area. Note measurement here: _____.

   b. With spanner tool, measure span of inner rail set at narrowest span of front web area. Note measurement here: _____.

   c. Subtract measurement in step **b** from measurement in step **a**, Write result here:

      b-a= _____.

      If the calculated gap is less than or equal to the gap measured in step 2, the roller set does not *require* shimming. Otherwise, the roller set should be shimmed.

Top Carriage Rollers and Internal Thrust Rollers

The internal thrust rollers are nearly perpendicular to the top carriage lift rollers and contact the same flange area as the carriage rollers. The top carriage lift rollers and the internal thrust rollers should be checked together.

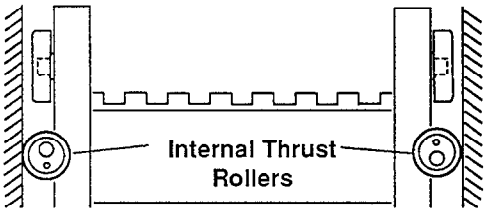

1. Move the top carriage lift roller to the narrowest span on the inner rails set.

2. Clamp rail to one side as in general procedures. Check clearance of lift roller on *clamped* side. Locate the clamp between the thrust roller and the bottom roller of the carriage

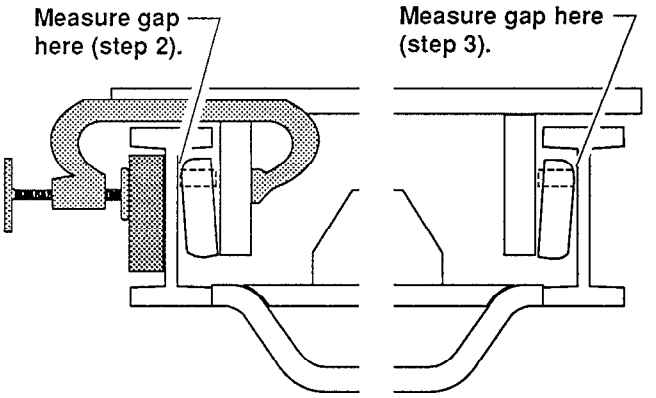

   The internal thrust roller should contact the web and cause the lift roller to stand off from the web by .01 to 1 mm (0.001-0.03 in). If the gap is outside this range, the internal thrust roller must be adjusted as explained later in this Section under "Internal Thrust Roller Adjustment."

3. Check clearance on lift roller *opposite clamped side* as in the general procedures. If clearance is greater than 1.25 mm (0.05 in), the roller set should be shimmed.

4. Move clamp to opposite side and check clearance on clamped side as in step 2 directly above. Gap should be 0.01-1.0 mm (0.001-0.03 in).

5. Move the top carriage lift roller to the widest span on the inner rail set and check clearance as in general procedures.

Copyrighted Material
Intended for CLARK dealers only
Do not sell or distribute

https://truckmanualshub.com/

Upright Rollers

1. Remove the carriage as described in Section 7 of this Group.
2. Fully extend the upright making sure carriage hoses and chains are secured out of the way to prevent damage.

WARNING

An upright or carriage can move unexpectedly:

- **Do not walk or stand under raised forks**
- **Keep clear of load and carriage when making any check or adjustment**
- **Keep your arms and fingers away from moving parts of the upright.**
- **Do not reach through open areas of the upright.**
- **Never attempt to move or align the rails by hand.**
- **Use an approved safety platform to reach the upper areas of the upright. Never use the upright as a ladder.**

Failure to follow these warnings can result in serious injury.

3. Follow the "General Roller Side Clearance Checking Procedure" given earlier in this Section.

   The clamping procedure is as illustrated below.

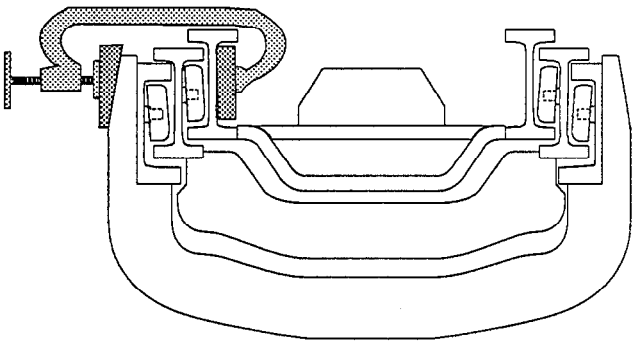

Internal Thrust Roller Adjustment

The internal thrust rollers should be adjusted to extend 0-0.75 mm (0.03 in) into the top carriage roller side clearance. Carriage roller side clearance should be within tolerances before you adjust the thrust rollers.

NOTE

Carriage must be replaced on upright before adjusting internal thrust rollers. See Section 8 for carriage replacement procedures.

1. Lift the carriage to the top of the inner rail.
2. Loosen the jam nut on the back of the thrust roller cap screw and then loosen the cap screw. Rotate the bearing to pivot toward the carriage and away from the rail.

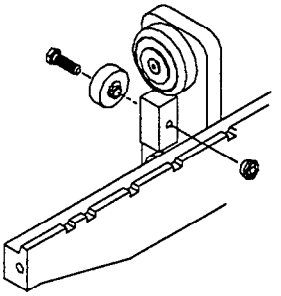

3. Lower the carriage to a convenient height to do the adjustment.
4. Clamp the carriage between the top and middle carriage roller.
   - Use a shim block under the clamp on the outside of the channel rail.
   - Torque on the clamp should not exceed 25 N•m (20 ft-lb).
5. Insert a 0.5 mm (0.02 in) temporary shim between the top carriage roller and the rail web on the side opposite the clamp. If a 0.5 mm (0.02 in) shim will not fit, insert a 0.25 mm (0.01 in) shim.

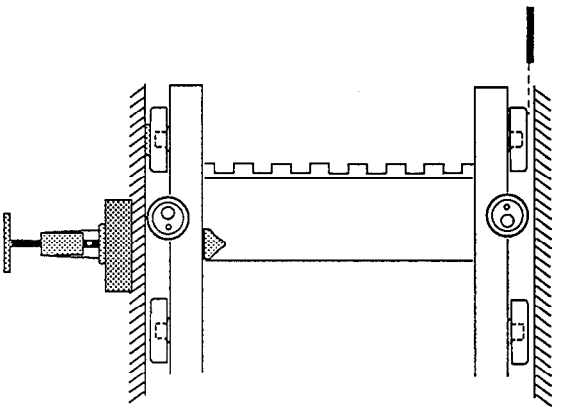

Copyrighted Material
Intended for CLARK dealers only
Do not sell or distribute

https://truckmanualshub.com/

6. Move the clamp to the shimmed side and clamp the rollers against the shim and the rail web by positioning the clamp between the top and middle carriage rollers.

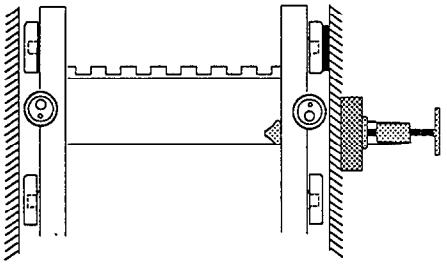

7. Cam the thrust roller on the shimmed side against the rail clockwise and tighten the cap screws firmly.

NOTE

Make sure the roller does not rotate with the cap screw when tightening.

8. Insert a 0.5 mm (0.02 in) shim in the opposite roller. If a 0.5 mm (0.02 in) shim will not fit, insert a 0.25 mm (0.01 in) shim.
9. Loosen the clamp and remove the shim.
10. Reposition the clamp on the opposite side and draw the roller against the shim and rail web.
11. Cam the thrust roller on this shimmed side toward the rail clockwise and tighten the cap screws firmly.

NOTE

Make sure the roller does not rotate with the cap screw when tightening.

12. Loosen the clamp and remove the shim.
13. Use a crow's foot to torque the cap screws 70-80 N•m (51.5-59.2 ft-lb).

NOTE

If a crow's foot is not available, the carriage can be raised to the top of the inner rail and a socket used to tighten to the correct torque.

14. Position the carriage to access the jam nut on the back side of the cap screw and torque to 70-80 N•m (51.5-59.2 ft-lb).

Oversize Rollers

At the time of roller shimming, you may want to replace the lift rollers with oversize rollers to counter rail flange wear as detected by inspection and the load test. Because there is only one size of oversize rollers, you can install them only if they were not installed previously.

Identify oversize rollers as follows: If a roller is oversize, it has an indented radius in the outer edge of its mounting side, as shown below.

Lift Roller Shimming

You need to shim lift rollers if the roller side clearance checks indicated that clearance was excessive at either the narrowest or widest span of the roller set's adjacent rail set.

Your objective in shimming is to add only enough shims to bring the clearances at both the widest and narrowest spans into tolerances. In practice, you achieve this by shimming to obtain the smallest possible clearance at the narrowest span of the rail set.

Carriage Roller Shimming

Using the measurement you recorded in previously in the "Roller Side Clearance Checks," determine the number of shims required to reduce the carriage roller clearance at the narrowest span on the inner rail to 0-0.75 mm (0-0.03 in):

1. Remove the carriage as described in Section 8, "Fork and Carriage Removal and Replacement."
2. Remove the rollers (note the number of shims already on the roller shafts, if any).

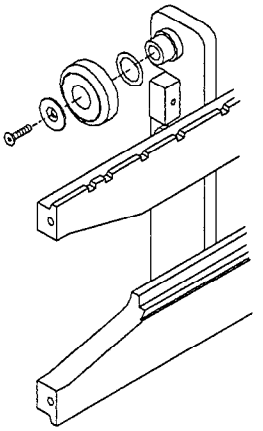

- Clean and inspect roller bearings, shims, and shafts.
- Replace any defective parts.

3. Add shims to the top and bottom rollers as determined in the previous steps.
   - Install shims with the same number on each side.
   - When an odd number of shims is required, always place the odd shim on the same side on all roller sets.

Copyrighted Material
Intended for CLARK dealers only
Do not sell or distribute

https://truckmanualshub.com/

4. Use a straight bar to determine the number of shims to add to the middle roller shaft as shown in the following illustration. This shimming may be asymmetric, meaning the numbers of shims do not have to match those of the top and bottom rollers.

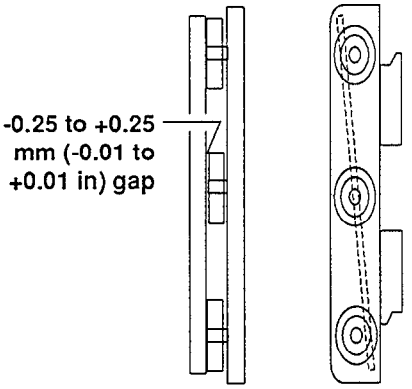

5. Reinstall all bearings; torque top roller fasteners to 40-45 N•m (30-33 in-lb).

Carriage internal thrust rollers must be adjusted after the carriage is shimmed. Adjust as described previously.

Upright Roller Shimming

Use the following procedures to remove, shim, and replace rollers. Use the preceding checks to determine the number of shims required to reduce the roller clearances to 0.75 mm (0.03 in) or less.

WARNING

Use an approved safety platform. Never use the upright as a ladder.

CAUTION

The carriage should be removed for shimming or when any service is performed on the upright. See Section 8, for removal and replacement procedures.

Upright Roller Removal

1. After the carriage has been removed, lower the upright rails until both of the secondary (final) lift cylinders are completely collapsed.
2. Jack the truck and block under the frame so that the bottom of the upright is approximately 254 mm (10 in) off the floor. See "Lifting, Jacking, and Blocking" in Group SA for safe procedures.
3. Set the parking brake and block the steer wheels.
4. Tilt the upright to as near vertical as possible.
5. Using a hoist and lifting strap of adequate capacities, connect the lifting strap to the inner rail on standard uprights or intermediate rails on triple-stage uprights. Lift hoist to remove slack from the strap.

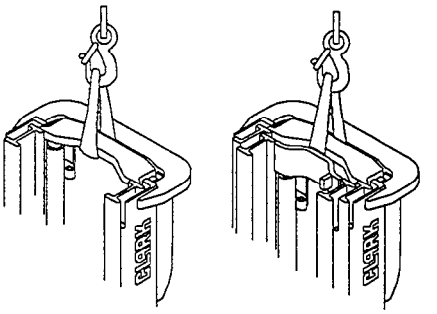

6. Disconnect the flow control valve manifold from the upright bracket.

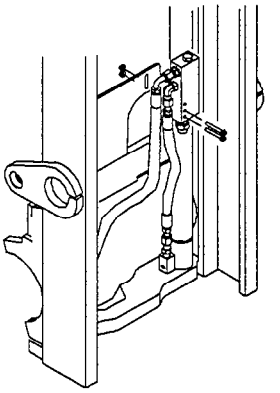

7. Disconnect the cylinder guide bolts.

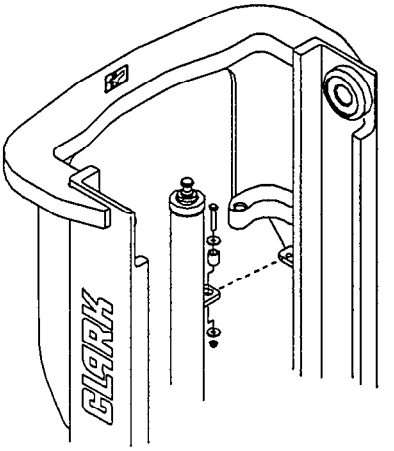

Copyrighted Material
Intended for CLARK dealers only
Do not sell or distribute

https://truckmanualshub.com/

8. Secure the cylinder to prevent its falling and disconnect the cylinder rod retaining bolts.

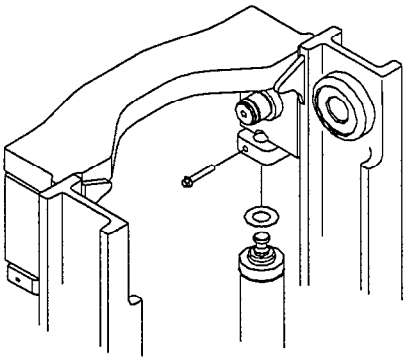

NOTE

For 4-hose adapters, you must disconnect the hose sheave and bracket. This is not necessary for 2-hose adapters.

9. Move the sheave with the hoses and any other connected components out of the way.
10. Disconnect the rail cylinders by raising the rails to free the cylinder rod ends from the tie bar. Tilt the cylinders inward and secure out of the way of the tie bars.
11. Lower the assembly completely to expose the rollers.

The lower roller set of the inner rail and upper roller set of the outer rail on standard and triple-stage uprights are now exposed for shim adjustment.

Roller Removal, Shimming, and Replacement

To add shims to, or replace the rollers:

1. Use a puller to remove the rollers from the posts. Or, gently pry the rollers off the posts. Pry at different points around the bearing to work it off. Do not damage the bearing seals on the backside of the roller.
2. Inspect all roller components when removed:

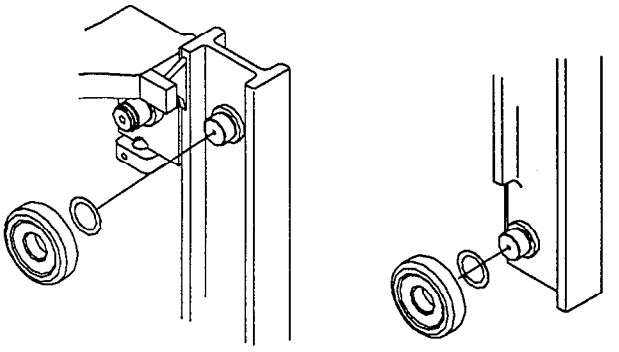

   a. Clean and inspect the rollers, shims, and roller shafts.
   b. Bearings should be in good condition and allow the roller to spin smoothly with a true rotation.
   c. Clean rail sections and add lubricant if necessary.
   d. Replace any worn or damaged component.
3. If the clearance check indicated an even number of shims needed, split the number evenly between the rollers on either side of the upright.
4. If the clearance check indicated an odd number of shims needed, keep the odd number to the same side on all rails of the upright. If three shims are needed, for example, add one to the rollers on the left side. Add the other two on the rollers on the right side.
5. Reposition the rollers onto the roller shaft and use a plastic or hard-rubber mallet to gently tap the roller. Seat the roller evenly by continuing to tap gently until it is fully seated and snug against the added shims.

Copyrighted Material
Intended for CLARK dealers only
Do not sell or distribute

https://truckmanualshub.com/

Upright Reassembly

The following steps detail the procedures for reassembling the upright.

WARNING

The upright can move unexpectedly:

- **Keep your arms and fingers away from moving parts of the upright.**
- **Do not reach through open areas of the upright.**
- **Never attempt to move or align the rails by hand.**

Failure to follow these warnings can result in serious injury.

1. Connect the lifting strap to the inner rail on standard uprights or intermediate rails on triple-stage uprights and raise the rails just high enough to clear the lift cylinders. Use a prybar to guide the rails and allow the rollers to reenter the rail channel.

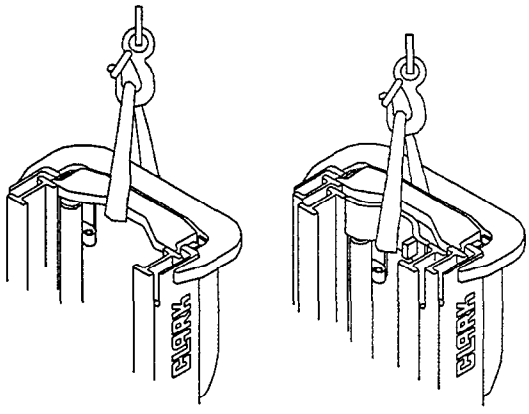

2. Reposition the rail cylinders and slowly and carefully lower the rails to seat the rod end into the mounting.

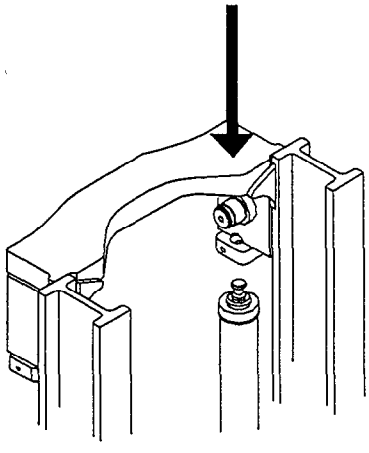

3. Reconnect the cylinder guide bolts. Do not tighten until inner and/or intermediate rails are in the fully lowered position. Torque guide bolts nuts to 20-25 N•m (14.8-18.5 ft-lb).

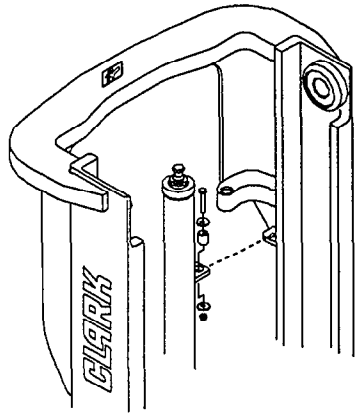

4. Reconnect the cylinder rod retaining bolts. Torque rod retaining bolts to 20-25 N•m (14.8-18.5 ft-lb).

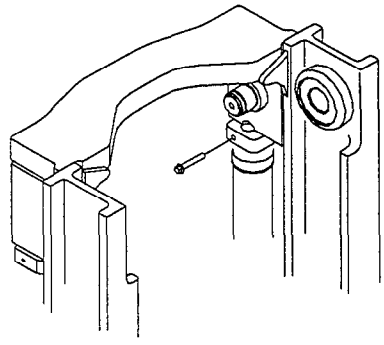

6. Replace the 4-hose sheave and bracket assembly onto the upright. Torque nuts to 20-25 N•m (14.8-18.5 ft-lb).
7. Reconnect the load lowering flow valve to the upright bracket. Torque nuts to 20-25 N•m (14.8-18.5 ft-lb).

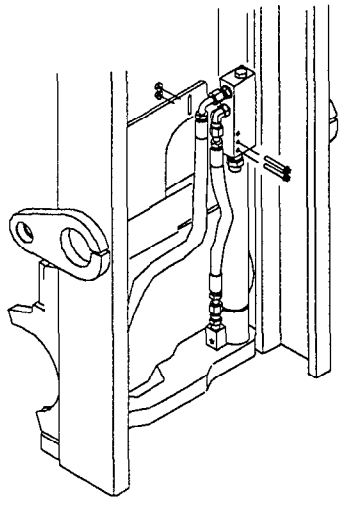

Copyrighted Material
Intended for CLARK dealers only
Do not sell or distribute

https://truckmanualshub.com/

8. Jack up the truck only enough to remove the blocking and slowly lower the truck so that its full weight is on the floor.
9. Replace the carriage and forks.
10. Test the upright lift and tilt functions; make sure all upright components work correctly and smoothly. Check for overshimming as described in the next subsection. Repeat the load test to make sure the upright works correctly under load. When you are sure all components are operating correctly, perform the chain adjustment checks in Section 3 before returning the truck to service.

Overshimming

Use these steps to check for overshimming:

1. With the forks removed, lift the upright to maximum fork height.
2. Slowly lower the upright.
   - The carriage should not bind or hang up at any point along the rails.
   - If the carriage binds or hangs up, and the rails are not clogged with grease or debris, the carriage requires reshimming. See "Troubleshooting" for other mis-staging problems

Copyrighted Material
Intended for CLARK dealers only
Do not sell or distribute

https://truckmanualshub.com/

Section 5
Cylinder Removal, Shimming, Overhaul, and Replacement

Cylinder Types 1

Lift Cylinder Shimming Procedure 1

Primary Cylinder Removal and Replacement (TSU Only) 2

Lift and Secondary Cylinder Removal and Replacement 3

Cylinder Overhaul 4
Cylinder Disassembly 4
Parts Inspection and Service 5
Cylinder Reassembly 5

Cylinder Types

Standard uprights use two lift cylinders. Triple stage uprights use three cylinders, a primary (center-mounted) cylinder, and two secondary cylinders. All primary cylinders used on triple-stage uprights (TSUs) are piston cylinders. The lift and secondary cylinders used on standard uprights and TSUs are either piston or ram cylinders.

The types of cylinders used on the truck are listed below. Check the first five characters of the upright number stamped on the upright of the truck to determine the type of cylinder, piston or ram, used on the upright.

IMPORTANT

Before removing any component for overhaul, make sure the correct repair parts, seals, and gasket sets are available.

Upright Type	Upright Number	Cylinder Type
Standard	V1080	Piston-Type Lift Cylinder
	V1081	Piston-Type Lift Cylinder
	V1082	Ram-Type Lift Cylinder
	V1083	Ram-Type Lift Cylinder
TSU	M1080	Piston-Type Secondary Cylinder
	M1081	Piston-Type Secondary Cylinder
	M1082	Ram-Type Secondary Cylinder
	M1083	Ram-Type Secondary Cylinder

⚠ CAUTION

To remove, or partially remove, the cylinders from the upright for shimming or overhaul, start with the truck in a safe position:

- **Turn key switch to OFF and remove key**
- **Parking brake applied**
- **Directional lever in neutral**
- **Forks lowered completely**
- **Wheels blocked.**

Lift Cylinder Shimming Procedure

To shim the lift cylinders to correct unequal cylinder stroke:

1. Fully lower upright until both lift cylinders are collapsed.
2. Attach a hoisting strap to the tie bar of the inner rail or intermediate rail tie bar of TSUs.

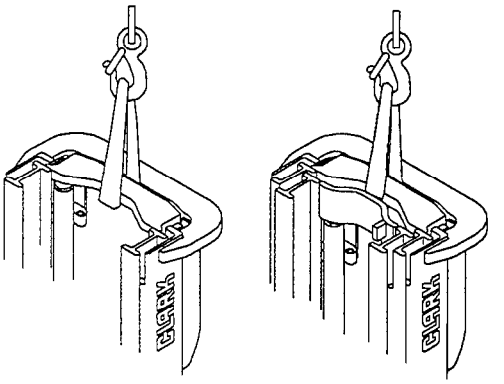

Copyrighted Material
Intended for CLARK dealers only
Do not sell or distribute

https://truckmanualshub.com/

CAUTION

Make sure hoisting equipment is of adequate capacity and in good working order.

3. Remove the cylinder rod retaining bolt.

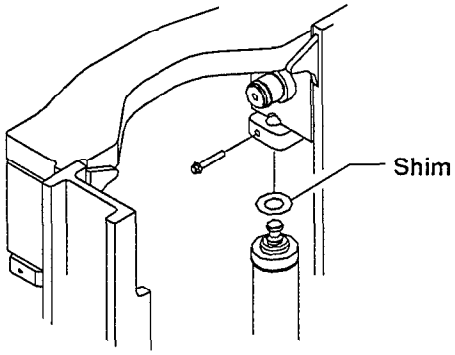

4. Slowly lift the inner (or intermediate) rails off the top of the cylinder to expose the cylinder rod top.

CAUTION

Block rail in up position.

5. Insert shim(s) over rod end of cylinder with the shorter stroke to compensate for unequal stroke length.
6. Slowly lower the inner or intermediate rail back onto the rod ends.

WARNING

Do not try to maneuver the cylinder or rails with your hands. Use a prybar.

7. Replace cylinder rod retaining bolt to secure rod end into inner or intermediate rail mounting hole. Torque the cylinder rod retaining bolts to 20-25 N•m (14.8-18.5 ft-lb).
8. Repeat the racking test and adjustment until no racking is evident during upright lift extension.
9. Check all upright functions before returning the truck to service.

Primary Cylinder Removal and Replacement (TSU Only)

Remove the primary cylinder for replacement only. Cylinder can be overhauled without removing it from the upright. See "Cylinder Overhaul" for procedures.

1. Make sure the cylinder is completely collapsed and pressure is released.
2. Disconnect and cap the hydraulic line at the base of the cylinder.

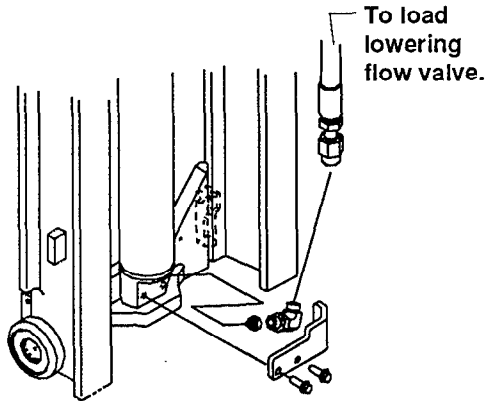

3. Remove and discard cotter pins from chain anchor bolt pins on the cylinder.
4. Remove the pins, draw the chain through the sheave, and drape the chain over the carriage.

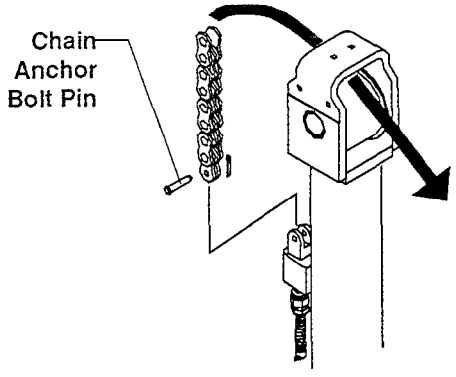

5. Remove the snap ring holding the chain sheave (and hose bracket, if equipped) on the rod end and move assembly off top of rod.

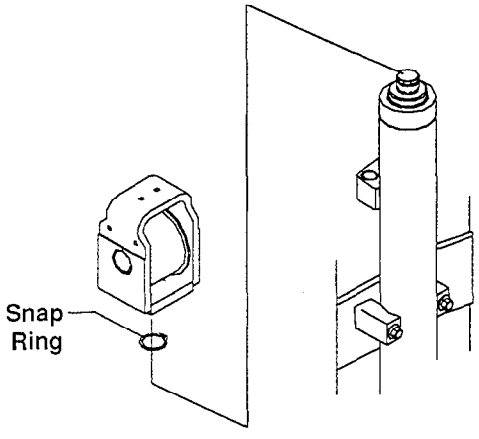

Copyrighted Material
Intended for CLARK dealers only
Do not sell or distribute

https://truckmanualshub.com/

6. Disconnect cylinder mounting collar bolts and lift cylinder off mounting base.

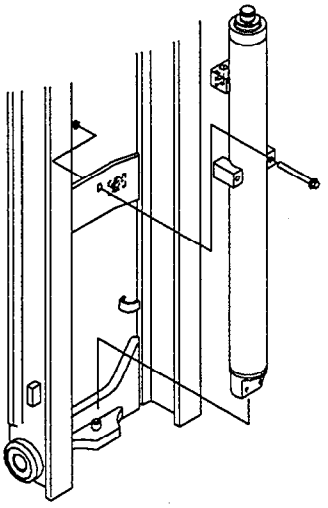

Use these steps in reverse to replace the cylinder. Check Group 40 for hydraulic fitting tightening procedures. If complete cylinder was removed, torque hydraulic line bracket to 40-45 N•m (30-33 ft-lb); torque cylinder mounting collar bolt nuts to 70-80 N•m (52-59 ft-lb).

Lift and Secondary Cylinder Removal and Replacement

Only piston-type lift and secondary cylinders must be removed from the upright for overhaul. Ram-type cylinders do not need to be removed for overhaul; the cylinder gland and rod can be removed for overhaul while leaving the cylinder tube mounted on the truck. Use these procedures if any piston- or ram-type lift or secondary cylinder must be completely replaced.

1. Make sure the cylinders are completely collapsed and pressure is released.
2. Tilt the upright to as near vertical as possible.
3. Using a hoist and lifting strap of adequate capacities, lift the carriage to access the hydraulic lines at the base of the cylinders.

⚠ CAUTION

Make sure hoisting equipment is of adequate capacity and in good working order.

4. Disconnect and cap the hydraulic line from the base of each cylinder. Remove the mounting bolts from the manifold block.

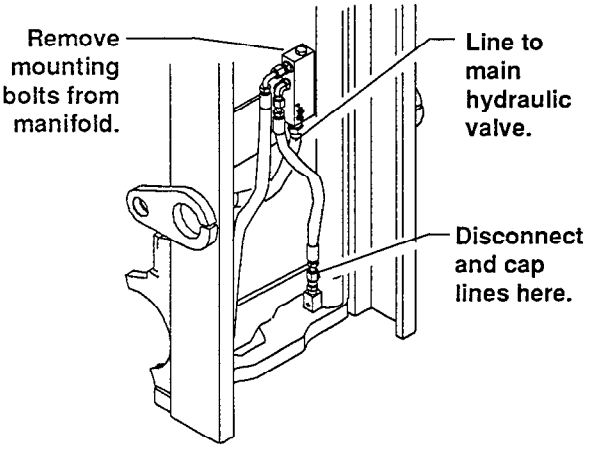

5. Lower the carriage
6. Using a hoist and lifting strap of adequate capacities, connect the lifting strap to the inner rail on standard uprights and inner and intermediate rails on triple-stage uprights.

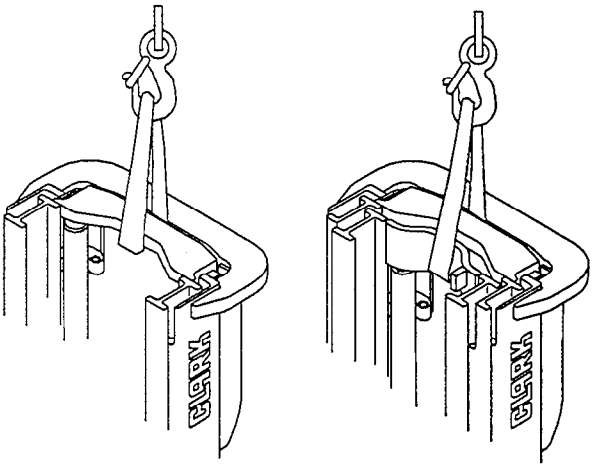

7. Disconnect the cylinder guide bolts.

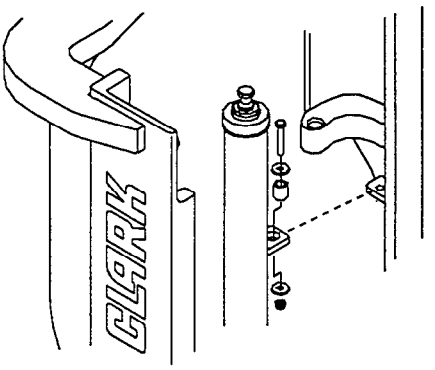

Copyrighted Material
Intended for CLARK dealers only
Do not sell or distribute

https://truckmanualshub.com/

8. Disconnect the cylinder rod retaining bolts.

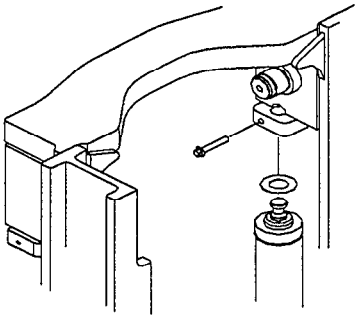

9. Remove the cylinders by raising the inner rail (and intermediate rail on the triple stage upright) to free the cylinder rod ends from the tie bar.
10. Remove any shims and note number and location.
11. Lift the cylinders off the base mount.

Use these steps in reverse to replace the cylinders. Torque the cylinder rod retaining bolts to 20-25 N•m (14.8-18.5 ft-lb). Torque the cylinder guide bolt nuts to 30-35 N•m (22.2-25.6 ft-lb). Check Group 40 for hydraulic fitting tightening procedures.

Cylinder Overhaul

Use these steps to overhaul the primary and lift and secondary (TSU) cylinders.

NOTE

During overhaul, set rod or cylinder on a work bench with adequate support for safe and convenient disassembly. Two sets of 4x4 in (100x100 mm) "V"-notched blocks are helpful; one set for the cylinder barrel and one set for the piston rod. The blocks prevent nicks and scratches from harming the piston or rod.

Cylinder Disassembly

- To overhaul the primary cylinder, it is not necessary to remove the cylinder from the upright. Instead, free the rod end of the cylinder as explained in "Cylinder Removal."
- To overhaul piston-type cylinders, you should remove the cylinders from the upright as explained in "Cylinder Removal." The cylinders have seals on the piston, and the rods must be removed for seal replacement.
- The ram-type lift cylinders are sealed on the rod only. The only serviceable seals are inside the gland. It is not necessary to remove these cylinders from the upright for overhaul. Instead, free the rod end of the cylinder as explained in "Cylinder Removal."

1. Clean the rod-end and gland thoroughly to prevent contamination from falling into the cylinder during disassembly.
2. With a blunt punch or chisel, bend the lock ring out of the locking grooves of the gland.
3. Use a spanner wrench to remove the gland. Reuse the lock ring if undamaged.
4. Carefully lift the rod out of the cylinder and place in a clean area.
5. Inspect the tube and tube end for damage and cover the cylinder tube end to prevent contamination.
6. Remove all rings and seals from the piston and the gland.

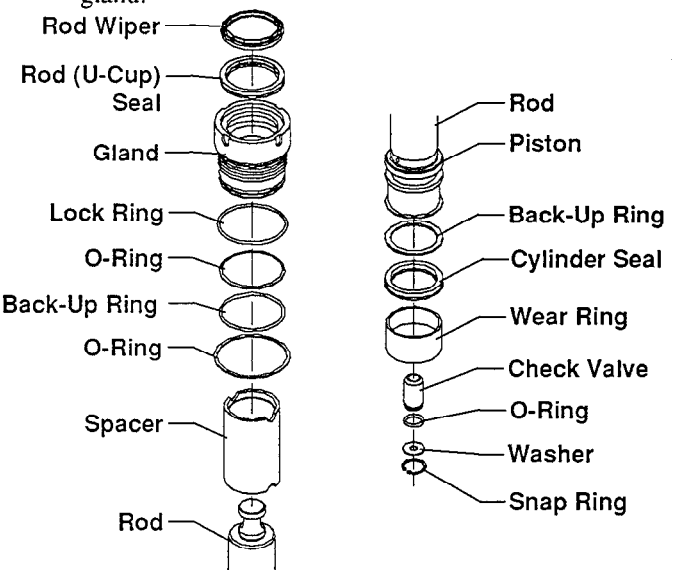

7. For piston-type cylinders:

a. Remove the check valve from the piston for inspection and cleaning by removing the snap ring from the piston bore.

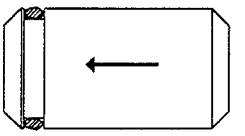

Check Valve. Arrow shows direction of flow

b. Use a blunt hook to pop the check valve out.

IMPORTANT

Use extreme care that you do not make nicks and burrs on the interior surface area of the cap or cylinder or the piston.

Copyrighted Material
Intended for CLARK dealers only
Do not sell or distribute

https://truckmanualshub.com/

Parts Inspection and Service

1. Clean all parts completely in a suitable solvent. Dry all parts with a soft clean cloth.
2. Inspect cylinder barrel and bore for cracks, pining, scoring, or other irregularities that may require replacement of the barrel.
3. Inspect the piston and rod for nicks, scratches, scoring, or other defects that may demand new parts.
4. Check all gland and piston seal grooves for nicks, burrs, and scratches that can damage seals during reinstallation.
5. Inspect and clean the check valves.
6. Inspect all seals, including the check valve O-ring.

NOTE

Minute imperfections inside the cylinder barrel or on the piston or rod may be improved for acceptable use by careful honing. However, removal of material that produces a notch, groove, or out-of-roundness may cause excessive leakage during operation and a shortened life.

7. Use new parts as necessary. Always use the Packing Kit listed in the parts manual. New kits include all the seals, wiper rings, wear rings and O-rings necessary for the particular cylinder

Cylinder Reassembly

Take care when installing these parts to make sure that no parts are damaged.

1. Coat all packing, seals and rings in clean, hydraulic oil (Clark part number 1800236 qt., 1802155 gal.) prior to reassembly. Coat the inside of the gland nut bore with hydraulic oil.
2. Replace the U-cup seal (groove toward bottom of cylinder), rod wiper, and O-ring and back-up seals on the gland.

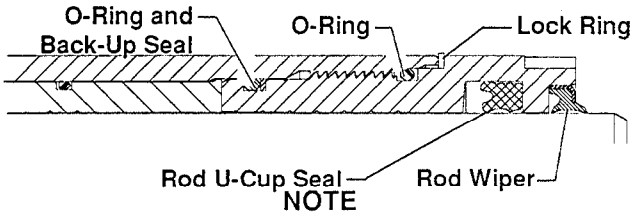

NOTE

O-rings should be carefully installed to eliminate cuts or twisting.

3. Replace the piston seals:
   a. Primary cylinder pistons require a piston seal and wear ring. Install the piston seal from the top of the rod. Use a ring compressor to compress the piston seal. This prevents damage to the seal during reassembly.

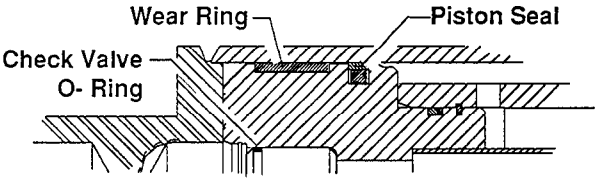

   b. Piston-type lift and secondary cylinder require a cylinder seal, a back-up ring, and a wear ring on the piston. Install the cylinder seal from the top of the rod.

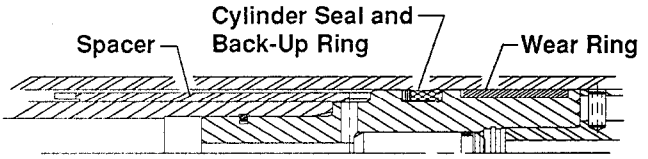

   c. Ram-type, lift (secondary) cylinder pistons require no seals.
4. For protection against corrosion, lubricate spacers (where used) with petroleum-based hydraulic fluid. Slide the spacer onto the rod.
5. Insert the piston and rod into the cylinder. Be careful not to scratch or damage the cylinder gland nut threads.
6. For primary cylinders, add 3.4 oz (100 ml) of hydraulic oil into the cylinder on the rod side of the piston.
7. Install the lock ring onto the gland. Lubricate cylinder threads and screw gland onto cylinder. Be careful not to damage gland seal. Make sure the gland is fully seated on the cylinder barrel. Deform the lock ring into slots in the tube and the gland.
8. Check the assembly by making sure the piston slides freely in and out of the cylinder.
9. Tighten the gland nut:
   - On primary cylinders, tighten the gland nut to 135 N•m (100 ft-lb).
   - On lift and secondary cylinders, tighten the gland nut to 100 N•m (75 ft-lb).

This competes the cylinder repair procedure. Replace the cylinders as described in "Cylinder Removal and Replacement." Complete the chain length adjustment in Section 3 for correct carriage and rail position. When all adjustments are completed, return the truck to service.

Copyrighted Material
Intended for CLARK dealers only
Do not sell or distribute

https://truckmanualshub.com/

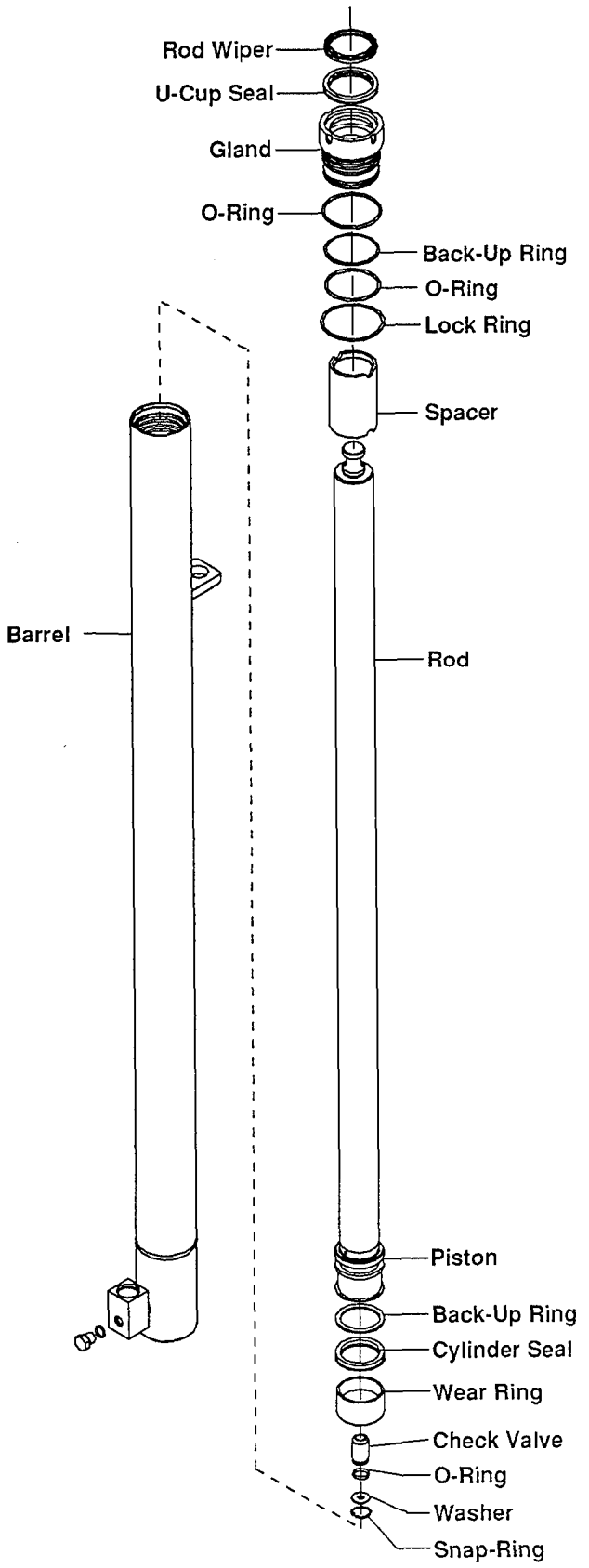

Typical Piston-Type Standard Upright Lift and TSU Secondary Cylinder

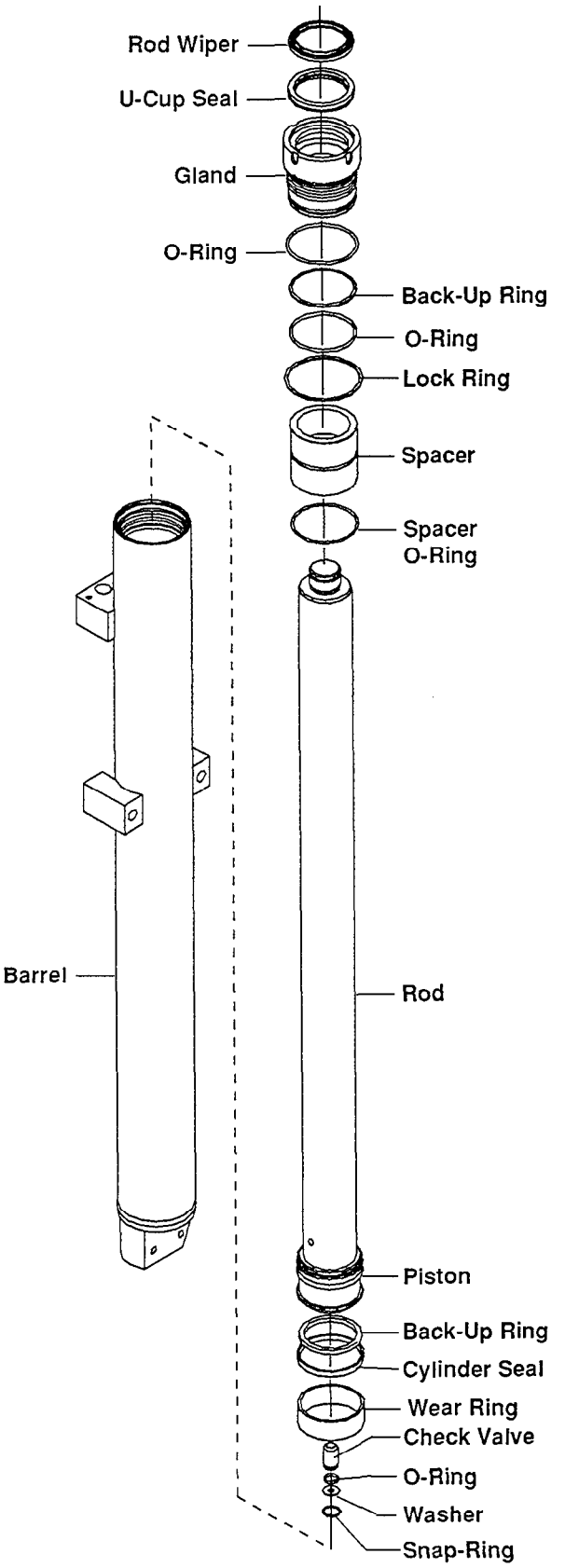

Triple-Stage Upright Primary Cylinder

Copyrighted Material
Intended for CLARK dealers only
Do not sell or distribute

https://truckmanualshub.com/

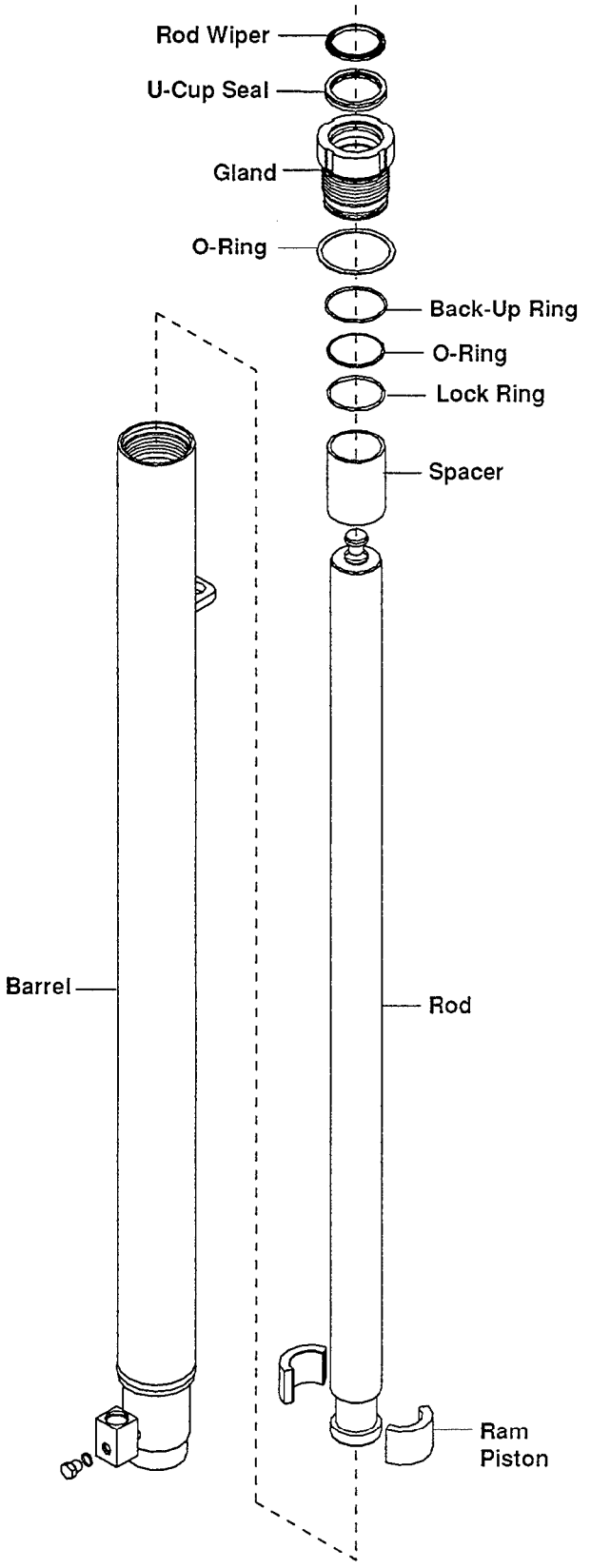

Standard and Triple-Stage Uprights Ram Cylinder

Copyrighted Material
Intended for CLARK dealers only
Do not sell or distribute

https://truckmanualshub.com/

Section 6
Upright Chain Inspection, Adjustment, and Replacement

Periodic Inspections 3

Chain Length Adjustments 4
Standard Upright Chain Length Adjustment 5
Triple-Stage Upright (TSU) Chain Length Adjustments 5

Chain Lubrication 7

Chain Removal and Replacement 7
General Guidelines 7
Lift Chains (Standard and TSUs) 7
Primary Cylinder/Carriage Chains (TSUs). 8

Other Chain Service Notes 8

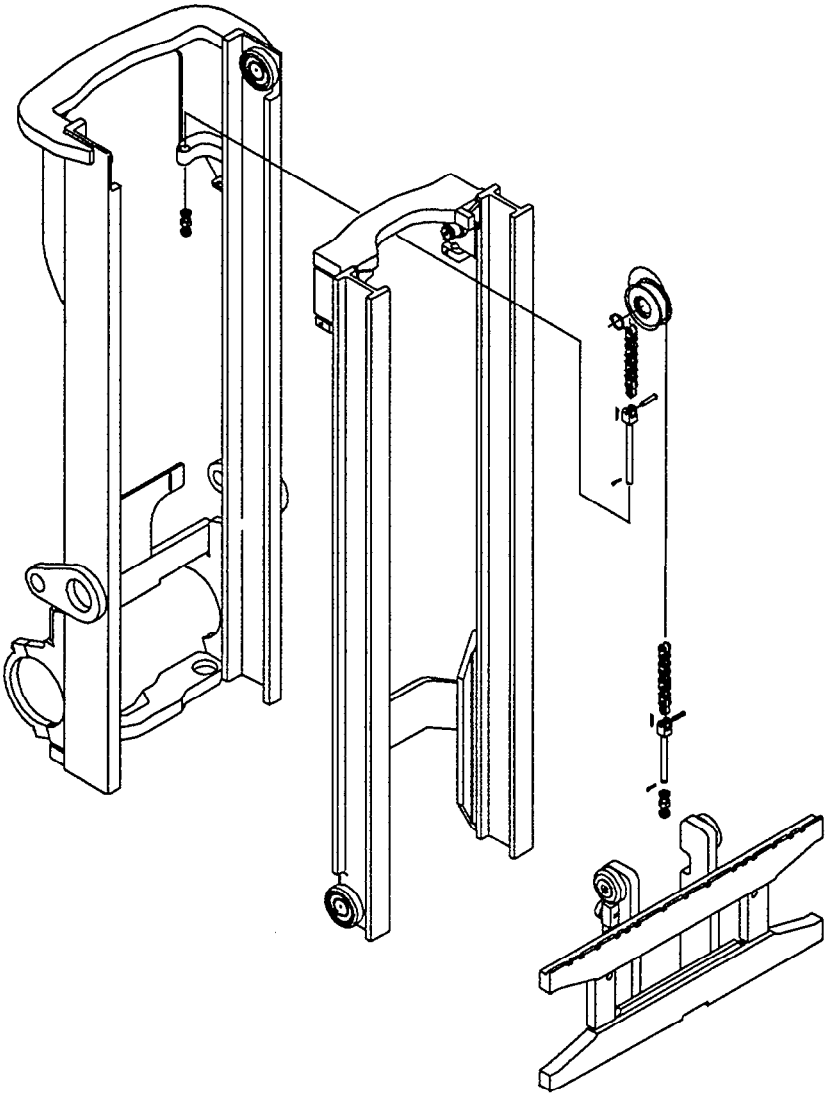

Chain Configuration - Standard Uprights

Copyrighted Material
Intended for CLARK dealers only
Do not sell or distribute

https://truckmanualshub.com/

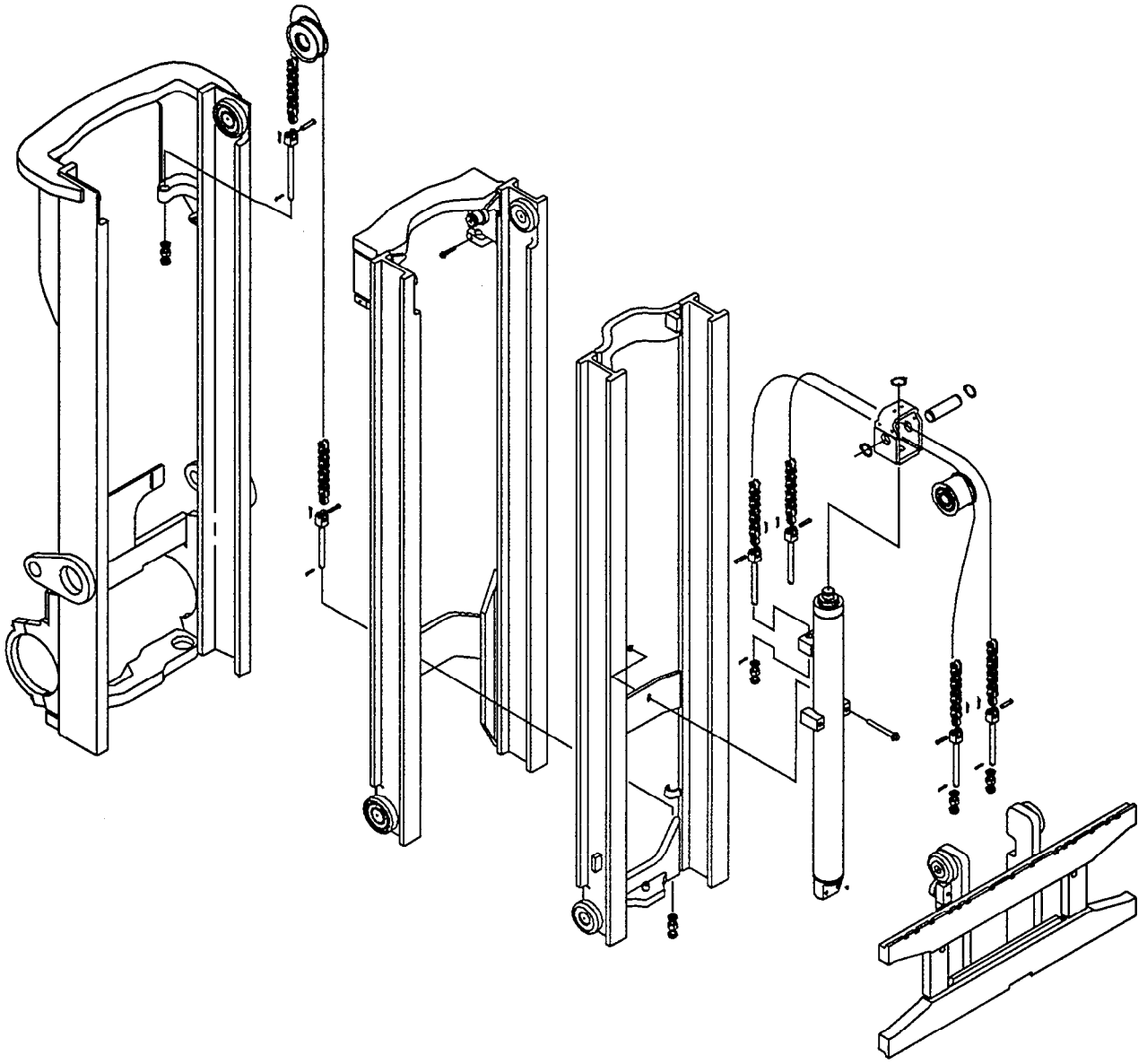

Chain Configurations - Triple Stage Uprights

Copyrighted Material
Intended for CLARK dealers only
Do not sell or distribute

https://truckmanualshub.com/

Periodic Inspections

Each 50-250 hours of operation (more frequently in severe or extreme environments), chains should be inspected and lubricated. Inspection should focus on the following:

Elongation

When a length of 12.00 inches (305 mm) of new chain has elongated to a length of 12.360 inches (315 mm), it should be discarded and replaced. It is important to measure the chain in the section that moves over the sheaves because it receives the most frequent articulation. Measuring the chain near its clevis terminals could give an erroneous reading as it would not have flexed as frequently, if indeed at all, as nearer the middle of the assembly.

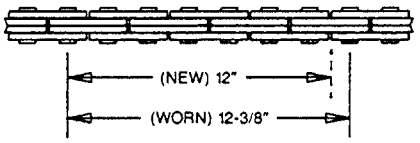

Chains should be replaced when wear exceeds 3% or when 12 inches (305 mm) of chain is stretched 3/8 inch (10 mm).

Edge Wear

Check the chain for wear on the link plate edges caused by running back and forth over the sheave. The maximum reduction of material should not exceed 5%. This can be compared to a normal link plate height by measuring a portion of chain that does not run over the sheave. Distorted or battered plates on leaf chain can cause tight joints and prevent flexing.

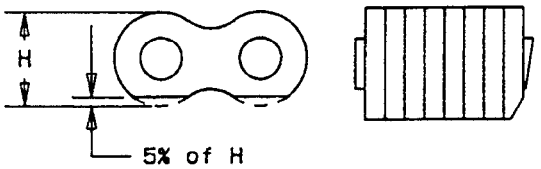

Worn contours and worn surfaces on the outside links or pin heads should not exceed 5% of new link height.

Turning or Protruding Pins

Highly loaded chain operating with inadequate lubrication can generate abnormal frictional forces between pin and link plates. In extreme instances, the torque could surpass the press fit force between the pins and the outside plates, resulting in pin rotation. When chain is allowed to operate in this condition, a pin, or series of pins, can begin to twist out of a chain resulting in failure. The pin head rivets should be examined to determine if the "VEE" flats are still in correct alignment. Chain with rotated/displaced heads or abnormal pin protrusion should be replaced immediately. Do not attempt to repair the chain by welding or driving the pin(s) back into the chain. Once the press fit integrity between outside plates and pins has been altered, it cannot be restored. Any wear pattern on the pin heads or the sides of the link plates indicates misalignment in the system. This condition damages the chain and increases frictional loading, and should be corrected.

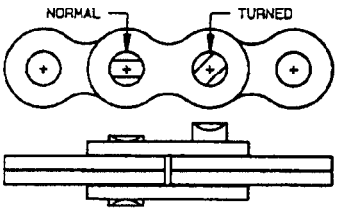

Turned pins and abnormal pin protrusion.

Cracked Plates

The chains should periodically be inspected very carefully, front and back as well as side to side, for any evidence of cracked plates. If any one crack is discovered, the chain(s) should be replaced. It is important, however, to determine the causes of the crack before installing new chain so the condition does not repeat itself.

- Fatigue Cracking - Fatigue cracks are a result of repeated cyclic loading beyond the chain's endurance limit. The magnitude of the load and frequency of its occurrence are factors which determine when fatigue failure will occur. The loading can be continuous or intermittent (impulse load).

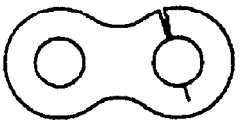

Fatigue cracks generally run from the pin hole toward the edge of the link plate approximately 90° from the line of pull.

Fatigue cracks almost always start at the link plate pin hole (point of highest stress) and are perpendicular to the chain pitch line. They are often microscopic in their early stage. Unlike a pure tensile failure, there is no noticeable yielding (stretch) of the material.

Copyrighted Material
Intended for CLARK dealers only
Do not sell or distribute

https://truckmanualshub.com/

- Stress-Corrosion Cracking - The outside link plates, which are heavily press fitted to the pins, are particularly susceptible to stress corrosion cracking. Like fatigue cracks, these initiate at the point of highest stress (pin hole) but tend to extend in an arc-like path between the holes in the pin plate.

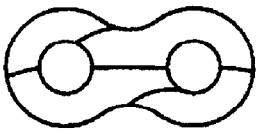

Arc-like cracks in plates are a sign of stress corrosion.

More than one crack can often appear on a link plate. In addition to rusting, this condition can be caused by exposure to an acidic or caustic medium or atmosphere.

Stress corrosion is an environmentally assisted failure. Two conditions must be present: a corrosive agent and static stress. In the chain, static stress is present at the pin hole due to the press fit pin. No cyclic motion is required, and the plates can crack during idle periods. The reactions of many chemical agents (such as battery acid fumes) with hardened steel can liberate hydrogen which attacks and weakens the steel grain structure.

For this same reason, never attempt to electroplate a leaf chain or its components. The plating process liberates hydrogen, and hydrogen embrittlement cracks will appear. These are similar in appearance to stress corrosion cracks.

If a plated chain is required, consult Clark. Plated chains are assembled from modified, individually plated components which may reduce the chain rating.

- Corrosion Fatigue - Corrosion fatigue cracks are very similar (in many cases identical) to normal fatigue cracks in appearance. They generally begin at the pin hole and move perpendicular (90°) to the chain pitch line.

Corrosion fatigue is not the same as stress corrosion. Corrosion fatigue is the combined action of an aggressive environment and a cyclic stress (not a static stress alone, as in stress corrosion).

Ultimate Strength Failure

This type of failure is caused by overloads far in excess of the design load.

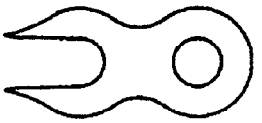

Broken plate caused by overload.

Tight Joints

All joints in leaf chain should flex freely. Tight joints resist flexure and increase internal friction, thus increasing chain tension required to lift a given load. Increased tension accelerates wear and fatigue problems.

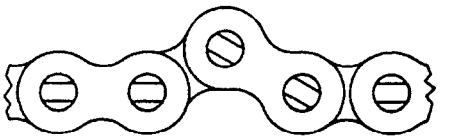

If lubrication does not loosen a tight joint, the chain may have corrosion and rust problems or bent pins and must be replaced.

See Section 3 for detailed chain stretch, length, and tensions checks.

Chain Length Adjustments

WARNING

An upright or carriage can move unexpectedly:

- **Do not walk or stand under raised forks**
- **Keep clear of load and carriage when making any check or adjustment**
- **Keep your arms and fingers away from moving parts of the upright.**
- **Block the carriage or upright when working with the components in a raised position.**
- **Do not reach through open areas of the upright.**
- **Never attempt to move or align the rails by hand.**

Failure to follow these warnings can result in serious injury.

Copyrighted Material
Intended for CLARK dealers only
Do not sell or distribute

https://truckmanualshub.com/

Standard Upright Chain Length Adjustment

To adjust chain length on the standard upright use the following illustration and procedures:

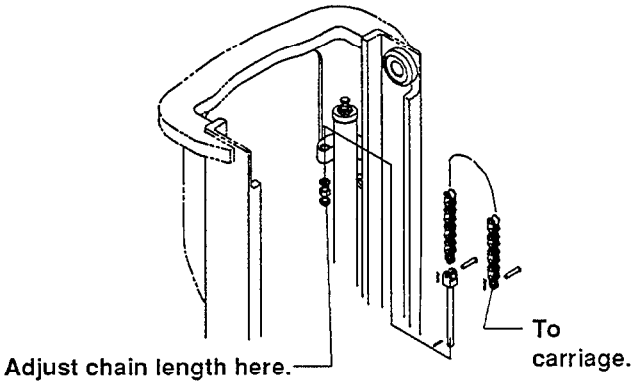

1. Fork-to-ground clearance:
   a. Set the upright to vertical position.
   b. Break the jam nuts loose on the chain anchors.

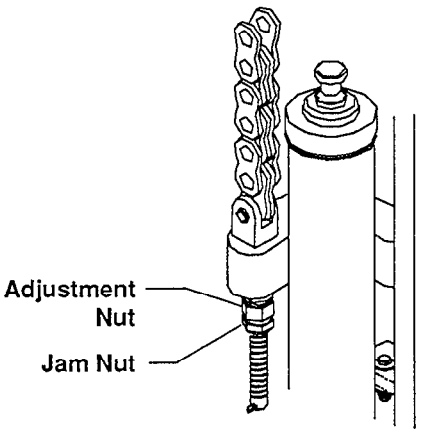

   c. Turn the chain adjustment nuts until clearance between forks and ground is 10-20 mm (0.40-0.80 in).

IMPORTANT

For all chain anchor adjustments:

- **Threaded chain anchors must be left free to pivot in mounting hole.**
- **Anchor cotter pin heads must be to the inside of the upright.**
- **Torque jam nuts to adjustment nuts to 100-200 N•m (74-148 ft-lb).**
- **Make sure chain anchors are secured so that no twist is evident in the chains.**

2. Carriage roller position:
   a. Raise carriage about 1 m (3.2 ft) and smear a bead of grease on the bottom 75 mm (3 in) inner rail in the area of the roller pattern.
   b. Tilt upright fully back and completely lower.
   c. Raise carriage about 1 m (3.2 ft) and measure the distance from where the center of the bottom carriage roller stopped to the bottom edge of the inner rail. Distance should not be less than 20 mm (0.80 in) or chain length adjustment is required.
3. Carriage stop-to-upright:
   a. Lift upright to its full height and check for clearance on the carriage safety stop.
   b. If the carriage stop hits the upright stop, adjust the chain anchor adjustment nuts out until there is at least 3 mm (0.12 in) clearance between the stops.

IMPORTANT

The carriage stop must not be allowed to contact the upright stop under any circumstance during normal operations.

If all three chain length requirements listed above cannot be met, the tire diameter may be out of the design range allowance. Also, excessive tire wear will decrease carriage stop clearance.

Oversized tires will reduce the bottom carriage roller engagement on the inner rail when the carriage is in the lowered position. The fork-to-ground clearance can deviate from the 10-20 mm (0.40-0.80 in) allowance by a small amount if necessary to maintain the safe 20 mm (0.80 in) clearance of the bottom carriage roller to the lower edge of the inner rail.

Triple-Stage Upright (TSU) Chain Length Adjustments

Triple-stage uprights use two chain sets; one set for carriage lift and one set for rail lift. Adjustment anchors for the lift cylinder stage are located at the back of the outer rail. Adjustment anchors for the primary lift stage are behind the primary cylinder. Carriage chain anchors are not intended for adjustment.

For TSU inner rail lift chains, chain length must be adjusted if the difference between the bottom of the inner rail and the outer rail is greater than 10 mm (0.40 in).

For the TSU primary cylinder lift chain, the chain length must be adjusted if:

- The fork-to-ground clearance is less than 5 mm (0.20 in) or more than 25 mm (1.0 in) when the upright is vertical.
- The center of the bottom carriage roller comes within 20 mm (.80 in) of the bottom edge of the inner rail.
- The carriage safety stop hits the inner rail stop at full lift height.

Copyrighted Material
Intended for CLARK dealers only
Do not sell or distribute

https://truckmanualshub.com/

To adjust the cylinder lift chains on a TSU use the following illustration and procedures:

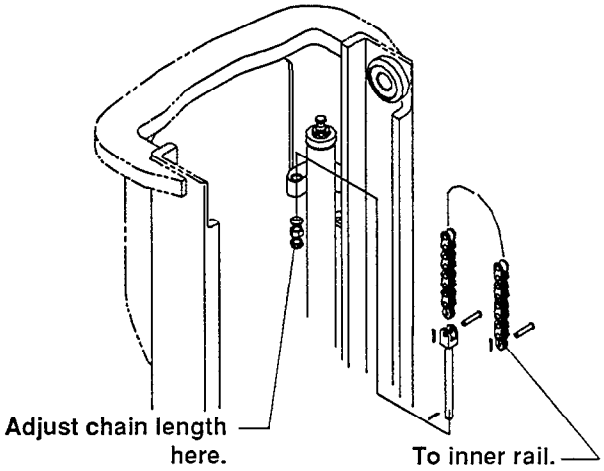

1. Set the upright in the vertical position.
2. Break the jam nuts loose on the chain anchors.
3. Adjust the chain anchor adjustment nuts until the bottom of the inner rail is within 2.5 mm (0.10 in) of the bottom of the outer rail.

To adjust the primary cylinder lift chain on a TSU use the following illustration and procedures:

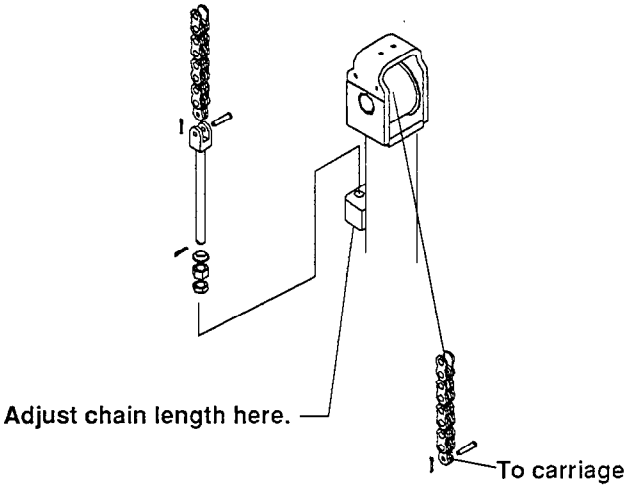

1. Fork-to-ground clearance:
   a. Set the upright to vertical position.
   b. Break the jam nuts loose on the chain anchors.
   c. Turn the chain adjustment nuts until clearance between forks and ground is 10-20 mm (0.40-0.80 in).

IMPORTANT

For all chain anchor adjustments:

- **Threaded chain anchors must be left free to pivot in mounting hole.**
- **Anchor cotter pin heads must be to the inside of the upright.**
- **Torque jam nuts to adjustment nuts to 100-200 N•m (74-148 ft-lb).**
- **Make sure chain anchors are secured so that no twist is evident in the chains.**

2. Carriage roller position:
   a. Raise carriage about 1 m (3.2 ft) and smear a bead of grease on the bottom 75 mm (3 in) of the inner rail in the area of the roller pattern.
   b. Tilt upright fully back and completely lower.
   c. Raise carriage again about 1 m (3.2 ft) and measure the distance from where the center of the bottom carriage roller stopped to the bottom edge of the inner rail. Distance should not be less than 20 mm (0.80 in) or chain length adjustment is required.
3. Carriage stop-to-upright:
   a. Lift upright to its full height and check for clearance on the carriage safety stop.
   b. If the carriage stop hits the upright stop, adjust the chain anchor adjustment nuts out until there is at least 3 mm (0.12 in) clearance between the stops.

IMPORTANT

The carriage stop must not be allowed to contact the upright stop under any circumstance during normal operations.

If all three chain length requirements listed above cannot be met, the tire diameter may be out of the design range allowance. Also, excessive tire wear will decrease carriage stop clearance.

Oversized tires will reduce the bottom carriage roller engagement on the inner rail when the carriage is in the lowered position. The fork-to-ground clearance can deviate from the 10-20 mm (0.40-0.80 in) allowance by a small amount if necessary to maintain the safe 20 mm (0.80 in) clearance of the bottom carriage roller to the lower edge of the inner rail.

Copyrighted Material
Intended for CLARK dealers only
Do not sell or distribute

https://truckmanualshub.com/

Chain Lubrication

Like all bearing surfaces, the precision-manufactured, hardened-steel, joint-wearing surfaces of leaf chain require a film of oil between all mating parts to prevent accelerated wear.

Maintaining a lubricant film on all chain surfaces will:

- Minimize joint wear.
- Improve corrosion resistance.
- Reduce the possibility of pin turning.
- Minimize tight joints.
- Promote smooth, quiet chain action.
- Lower chain tension by reducing internal friction in the chain system.

Laboratory wear tests show #40 oil to have greater ability to prevent wear than #10 oil. Generally, the heaviest (highest viscosity) oil that will penetrate the joint is best.

Whatever method is used, the oil must penetrate the chain joint to prevent wear. Applying oil to external surfaces will prevent rust, but oil must flow into the live bearing surfaces for maximum wear life.

To prepare the chain for oiling, the leaf chain plates should be brushed with a stiff brush or wire brush to clear the space between the plates so that oil may penetrate the live bearing area.

Oil may be applied with a narrow paint brush or directly poured on. Chain should be well flooded to be sure the oil penetrates the joint.

In locations difficult to reach, it may be necessary to use a good quality oil under pressure such as an aerosol can or pump pressure spray.

Chain Removal and Replacement

⚠ WARNING

The procedures for removing and replacing chain sets involve hoisting and blocking components.

- **Do not walk or stand under raised forks.**
- **Keep your arms and fingers away from moving parts of the upright.**
- **Do not reach through open areas of the upright.**

Failure to follow these warnings can result in serious injury. See "Lifting, Jacking, and Blocking" for safe blocking procedures.

General Guidelines

- Chain Movement - Make sure that the chain operating path is clear and that the chain articulates freely through its full range of operation.
- Lubrication - Assure that the chain is well lubricated with the heaviest oil that will penetrate the void between the link plate apertures and the pins.
- Paint - Make sure the chain does not get painted over at any time.
- Protection - Where necessary, as a protection from atmosphere or sliding wear, the chain may be covered with a layer of grease. It should be noted, however, that the grease will have to be removed at a later date for chain inspection and relubrication.
- Chain Mountings - Double check to be sure all chain fastening devices are secured and all adjustments have been made to assure uniform loading of multiple chain applications. Check chain anchors and pins for wear, breakage, and misalignment. Damaged anchors and pins should be replaced.
- Sheaves - Sheaves with badly worn flanges and outside diameter should be replaced. This wear may be due to chain misalignment or frozen bearings.

Lift Chains (Standard and TSUs)

To remove and replace the lift cylinder and/or carriage chain set on standard and triple-stage uprights (TSU):

1. Attach a hoist strap on the carriage of the standard upright or inner rail of the TSU.
2. Lift the carriage or inner rail slightly to create slack in the chains. Block the carriage or inner rail up for safety.
3. Remove the chain anchor pins on the outer rail and pull the chains off of the sheaves on the inner or intermediate rails.

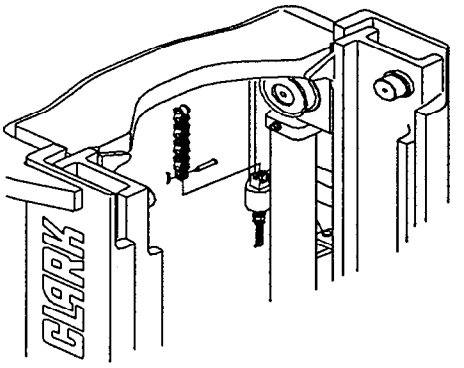

Copyrighted Material
Intended for CLARK dealers only
Do not sell or distribute

https://truckmanualshub.com/

4. Remove the chain anchor pins from the carriage on the standard upright or the inner rail on the TSU. On the TSU, the inner rails must be lowered to the floor to access the chain anchor pins.

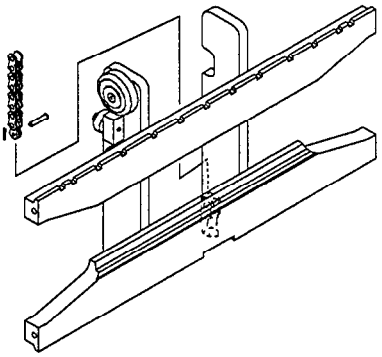

Lift Chain Removal from Carriage (standard upright)

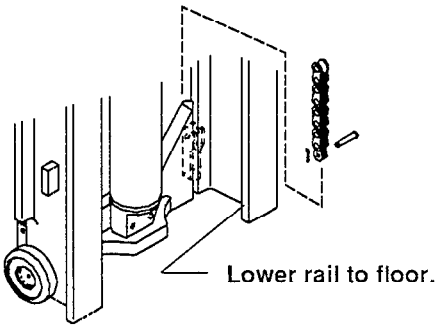

Triple-Stage Upright Lift Chain Removal from Inner Rail

NOTE

If a hose adapter assembly is used, the chain sheaves must be loosened and removed to prevent the hoses from stretching when the inner rails of the TSU are lowered to access the chain anchor pins.

5. Use the steps in reverse order to replace the lift chain set.

Primary Cylinder/Carriage Chains (TSUs)

1. Tilt the upright forward, lower it, and completely collapse the primary cylinder to create slack in the chains. The carriage may also be lifted and blocked in position and the primary cylinder completely collapsed to create slack in the chains.
2. Remove the chain anchor pins from the back of the primary cylinder. Pull the chains through the chain sheave and lay over the carriage load backrest.

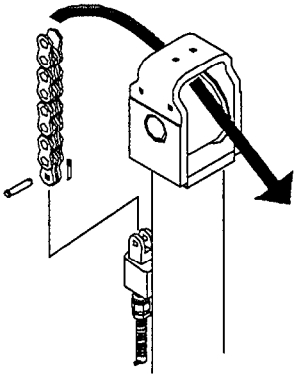

3. Remove the chain anchor pins from the back of the carriage.

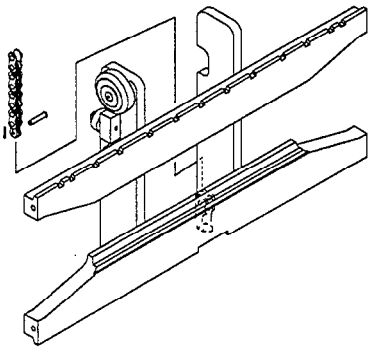

4. Use these steps in reverse to replace the primary cylinder/carriage chain.

Perform the chain length adjustment and chain tension check before returning the truck to service.

Other Chain Service Notes

- Use lengths of factory assembled chain. Do not build lengths from individual components.
- Do not attempt to rework damaged chains by replacing only the components obviously faulty. The entire chain may be compromised and should be discarded.
- Never electroplate assembled leaf chain or its components. Plating will result in failure from hydrogen embrittlement. Plated chains are assembled from modified, individually plated components.
- Welding should not be performed on any chain or component. Welding spatter should never be allowed to come in contact with chain or components.
- Leaf chains are manufactured exclusively from heat treated steels and therefore must not be annealed. If heating a chain with a cutting torch is absolutely necessary for removal, the chain should not be reused.

Copyrighted Material
Intended for CLARK dealers only
Do not sell or distribute

https://truckmanualshub.com/

Section 7

Fork and Carriage Removal and Replacement

⚠ CAUTION

SAFE PARKING. Before working on truck:

1. **Park truck on a hard, level, and solid surface, such as a concrete floor with no gaps or breaks.**
2. **Put upright in vertical position and fully lower the forks or attachment.**
3. **Put all controls in neutral. Turn key switch OFF and remove key.**
4. **Apply the parking brake and block the wheels.**

Fork Removal

NOTE

Forks do not need to be removed to remove the carriage.

1. Release the fork latches.

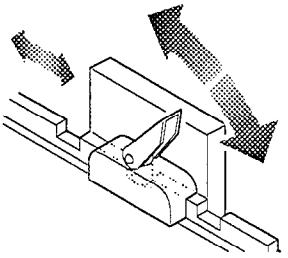

Latch Operation

2. Move each fork to the notch on the bottom of the lower carriage cross bar.

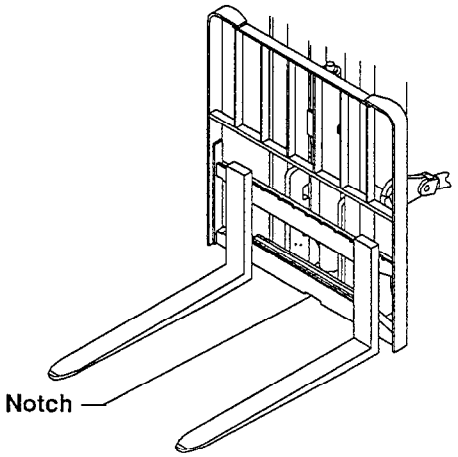

3. Lift tip of each fork and put a 100 x 100 mm (4 x 4 in) block under the fork arm near the heel.

⚠ CAUTION

Forks weigh 45-68 kg (100-150 lbs) each. Take care when lifting.

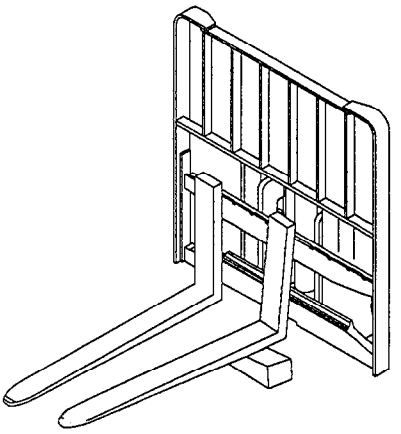

Blocking the Fork

4. Push down on tips of the forks to disengage the fork hooks from the carriage fork bar.
5. Lift fork heel and remove block.

⚠ CAUTION

Forks are not stable sitting free in upright position. Use care when working around the forks.

6. Back the truck away from the forks.

Fork Replacement

1. Carefully drive truck up close to forks.

⚠ CAUTION

Forks are not stable sitting free in upright position. Use care when working around the forks.

2. Drag forks into position close to carriage and to line up with the notch on the lower carriage cross bar.
3. Lift fork heel and place block under arm near the heel.

Copyrighted Material
Intended for CLARK dealers only
Do not sell or distribute

https://truckmanualshub.com/

4. Lift tips of forks to engage the fork hooks on the upper carriage fork bar.
5. Remove blocks from under fork.
6. Check fork latches when repositioning forks to upper carriage fork notches.

Carriage Removal

The carriage should be removed for shimming or when any service procedure is performed on the upright.

WARNING

The procedures for checking, maintaining, and adjusting uprights, carriages, and forks involve movement of the components.

- **Do not walk or stand under raised forks.**
- **Keep clear of load and carriage when making any check or adjustment.**
- **Keep your arms and fingers away from moving parts of the upright.**
- **Do not reach through open areas of the upright.**
- Do not use hand to move upright or carriage.

Failure to follow these warnings can result in serious injury.

1. Set upright tilt to 0 degrees (vertical). Raise the carriage about 12 in (305 mm).
2. Place a heavy pallet under the forks. Turn the key off.
3. Lower the carriage onto the pallet and keep lowering (until the primary cylinder is all the way down on TSUs). Before proceeding with the next step read the following warning.

WARNING

You may need to pull on the hoses/cables and chains while lowering the primary cylinder to get it all the way down. This is done to create slack in hoses/cables and chains and to displace as much oil as possible, which will reduce oil loss when disconnecting hydraulic lines for auxiliary components.

Use a helper to hold the control handle in the lowering position while you pull on the carriage chains to fully collapse the primary cylinder (on TSUs). When pulling on the chains to lower the primary cylinder (on TSUs), the key switch must be off. Keep hand clear.

4. Once the carriage is fully lowered, clamp the front of one fork to the pallet to prevent the carriage from falling over backwards when removed.

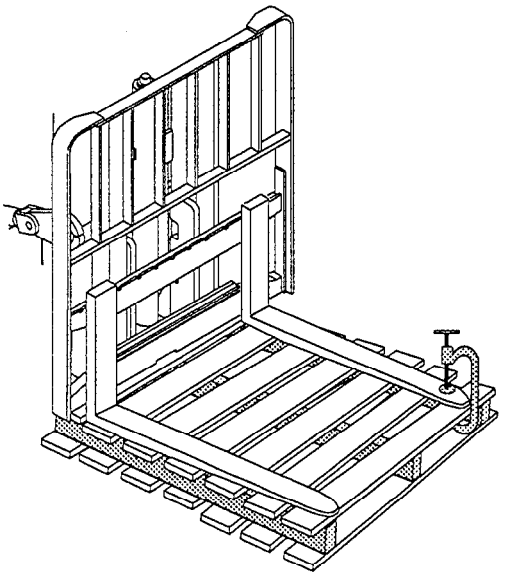

5. For carriage auxiliary components, the hose sheave bracket must be unbolted from the primary cylinder chain sheave bracket. Move the hose bracket off the chain bracket.

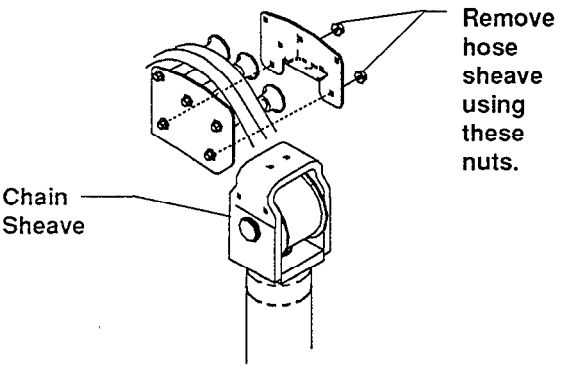

Copyrighted Material
Intended for CLARK dealers only
Do not sell or distribute

https://truckmanualshub.com/

6. Disconnect the carriage chains at the base of the carriage. Pull chains back off primary cylinder sheave.

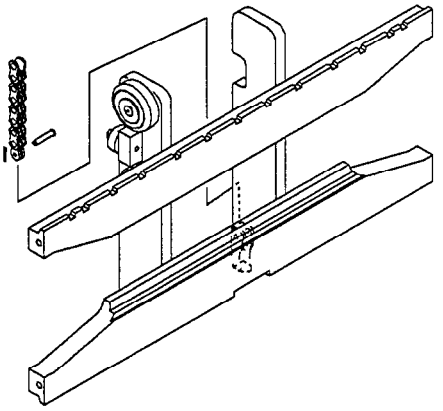

7. For carriage auxiliary components, disconnect hoses (2- or 4-hose assemblies) from carriage. Remove the bolts and strap fixture also.

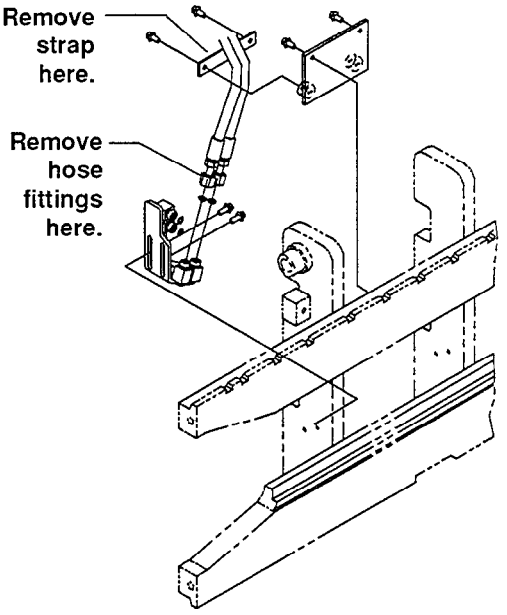

- Cap all lines to prevent leaks.
- Label all lines and fittings for correct reassembly.

8. Elevate the primary cylinder to its maximum height. Be sure all hoses and loose parts are secured out of the way to prevent damage.
9. Continue elevating the upright until the inner rail clears the carriage.

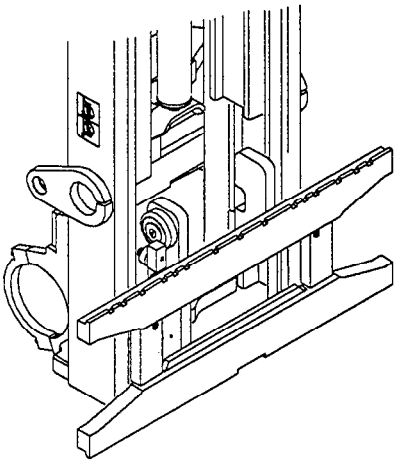

10. Remove steer wheel blocks. Release the parking brake and slowly back the truck away from the carriage.
11. Lower the upright rails until both of the secondary cylinders are completely collapsed.

Carriage Replacement

To replace the carriage:

1. First check to be sure the carriage is securely clamped to the pallet.
2. Move the truck up to the carriage assembly with the inner rail centered on the carriage.
3. Raise the upright until the inner rail is high enough to clear the upper carriage rollers.
4. Tilt the upright until it is at the same angle as the carriage assembly.
5. Now slowly move the truck forward until the inner rail is centered over the carriage rollers.

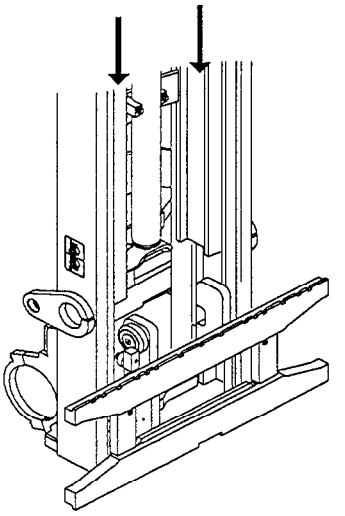

Copyrighted Material
Intended for CLARK dealers only
Do not sell or distribute

https://truckmanualshub.com/

WARNING

Never attempt to move or align the carriage or bearings by hand. Use a pry bar.

6. Lower the upright until the inner rail clears all of the carriage rollers.

NOTE

If the rail or bearings bind, raise the upright, back away from the carriage and check to be sure the carriage rollers are installed properly.

7. When the inner rail has cleared the carriage rollers, continue to lower the upright until the lift cylinders are lowered completely.
8. Reset the truck in a safe position:
   - Ignition off
   - Parking brake applied
   - Directional lever in neutral
   - Forks completely lowered
   - Block steer wheels.
9. Reinstall the carriage lift chains to the base of the carriage.

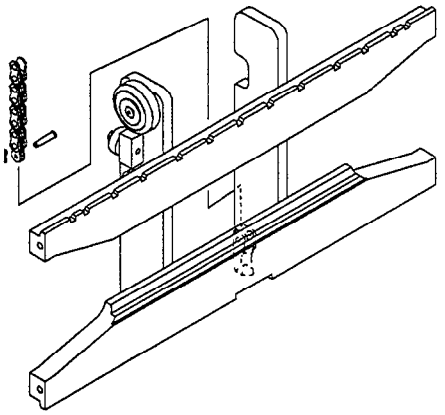

- Set anchor bolts so that no twist develops in the chains.
- Anchor pin heads must be pointing to the inside of the upright.
- Use new cotter pins.

IMPORTANT

Always use new anchor pins when replacing chain sets.

10. If the carriage is equipped with a carriage auxiliary component, reconnect the hose sheave bracket to the top of the primary cylinder chain sheave bracket.

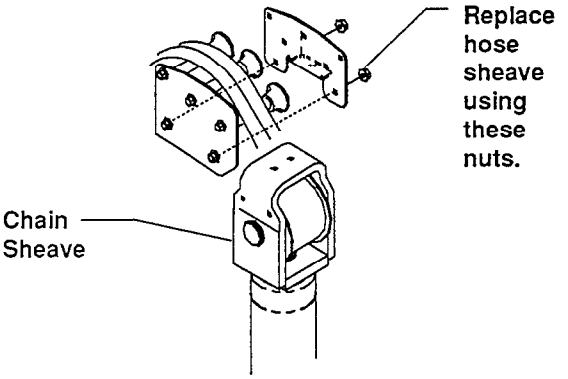

11. Reconnect the hoses and mounting strap to the carriage auxiliary component if the carriage is so equipped.

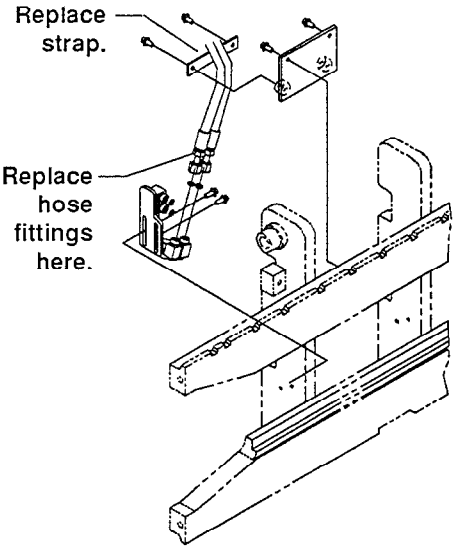

- Lubricate all O-rings with a light coating of system hydraulic fluid or a compatible oil.
- Use two wrenches to tighten hose fittings to prevent hoses from twisting.
- See Group 40 for hydraulic fitting tightening procedures.

12. Adjust carriage height according to Section 6 and chain tension according to Section 3.
13. Remove the "C" clamp from the pallet and check the operation of the carriage and the upright. Carefully check for oil leaks. Make sure the carriage and upright work smoothly and correctly before returning the truck to service.

Copyrighted Material
Intended for CLARK dealers only
Do not sell or distribute

https://truckmanualshub.com/

Section 8

Upright Removal and Replacement

This Section describes how to remove the entire upright assembly from the truck. The carriage and forks must be removed from the upright assembly before the upright is removed. (For uprights with an auxiliary component, a side-shifter for example, the two hydraulic hoses powering the auxiliary component must be removed before the carriage is removed.) See Section 7, "Fork and Carriage Removal and Replacement," for procedures to remove the carriage and fork assembly from the upright.

⚠ CAUTION

SAFE PARKING. Before working on truck:

1. **Park truck on a hard, level, and solid surface, such as a concrete floor with no gaps or breaks.**
2. **Put upright in vertical position and fully lower the forks or attachment.**
3. **Put all controls in neutral. Turn key switch OFF and remove key.**
4. **Apply the parking brake and block the wheels.**

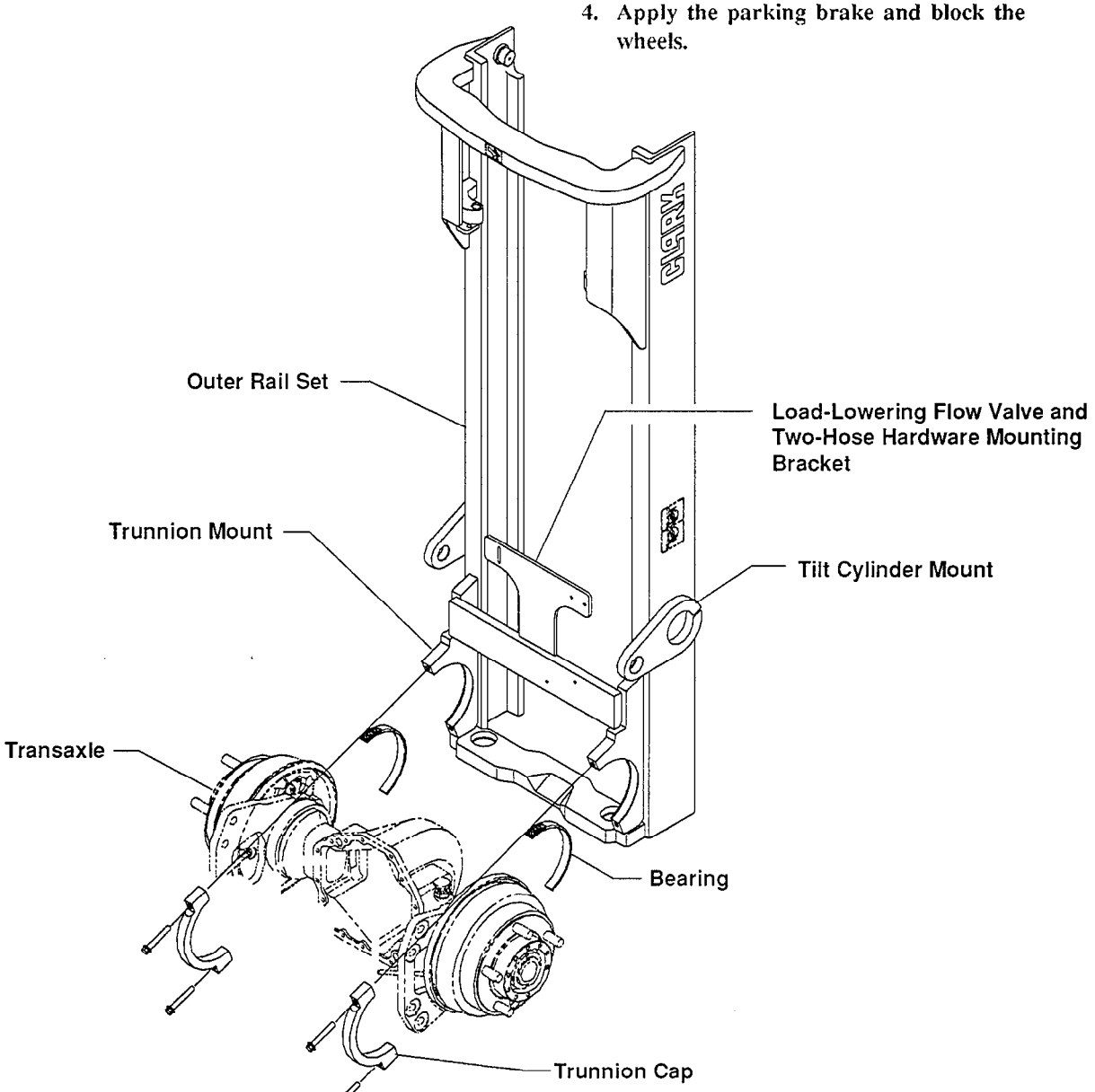

Typical Upright Installation

Copyrighted Material
Intended for CLARK dealers only
Do not sell or distribute

https://truckmanualshub.com/

Upright Removal

The following procedures are for uprights with carriage and forks, or auxiliary components removed. See Section 7, "Fork and Carriage Removal and Replacement," for instructions on removing the forks and carriage.

WARNING

The upright assembly is heavy. Use only hoists with enough capacity to lift the entire assembly. Keep clear of the assembly as it is being hoisted and set down. Keep hands and feet away from the assembly.

1. Attach a hoist and strap of adequate capacity to the upright as shown below. Tension the hoist so that the upright cannot fall when upright mounting pins and tilt cylinder pins are removed.

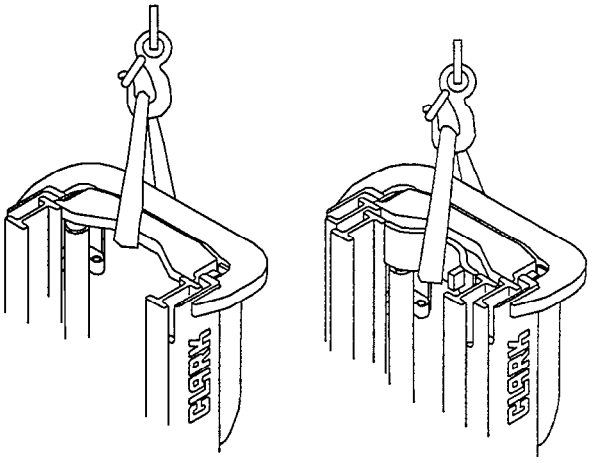

2. Disconnect and cap hydraulic line at the load-lowering flow valve. Secure the hose out of the way of the upright.

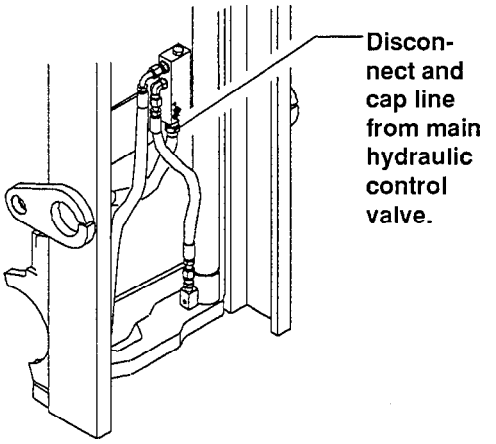

NOTE

For two-hose adapter assemblies, the hydraulic lines to the upright must also be disconnected and capped.

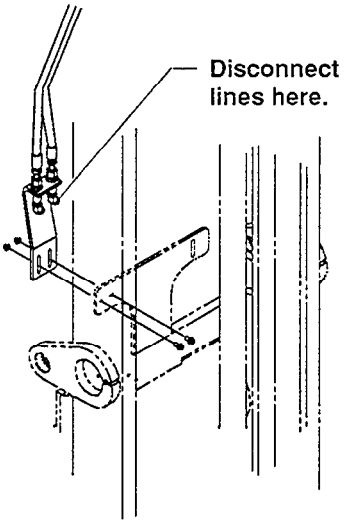

Copyrighted Material
Intended for CLARK dealers only
Do not sell or distribute

https://truckmanualshub.com/

3. Remove tilt cylinder rod-end lock plates and rod-end pins from upright.

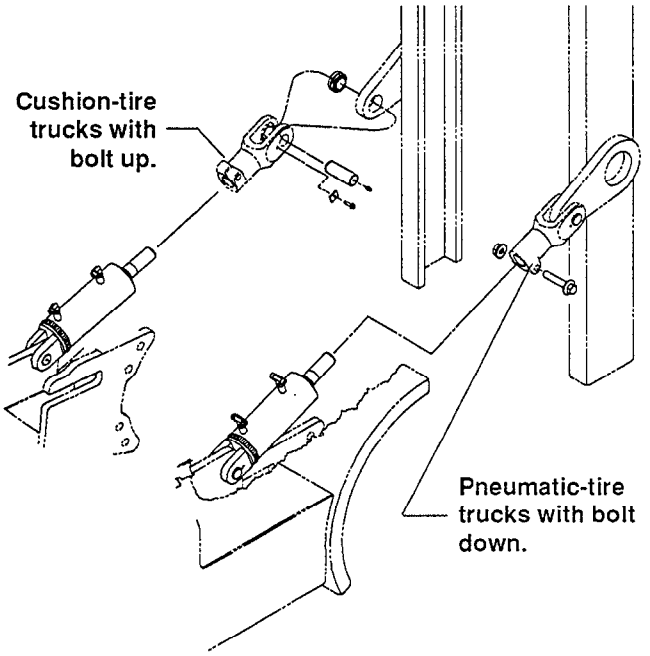

4. Remove trunnion ring bolts and lift upright off frame. See illustration on page 1.
5. Slowly set upright down on the floor, 100 x 100 mm (4 x 4 in) blocking, or sturdy pallets set end-to-end.

Upright Replacement

1. Use an overhead chain hoist of adequate capacity and an approved lift chain to lift upright into position

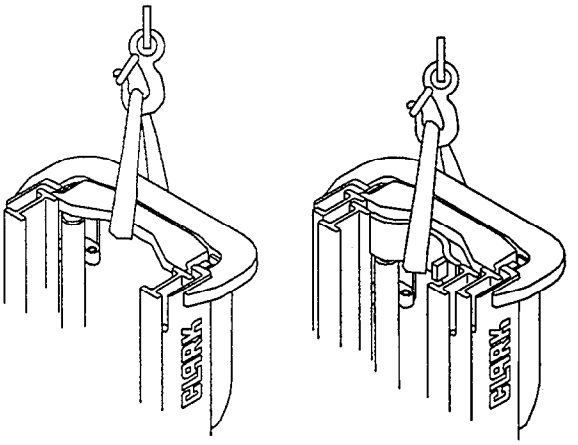

WARNING
Keep hands clear of assembly

2. Secure mounting bearing to inner, load-bearing half of the trunnion mounting using double-sided tape. Install trunnion ring mounting bolts and use Loctite 271 (Clark part number 1802302). Torque to 55 ft-lb (74.25 N•m).

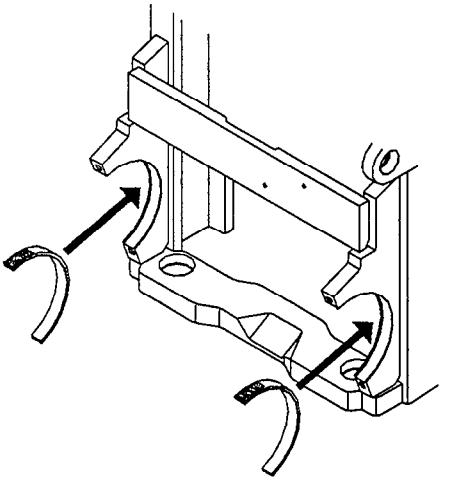

Copyrighted Material
Intended for CLARK dealers only
Do not sell or distribute

https://truckmanualshub.com/

3. Install rod end pins, lock plates, and fasteners. Tighten lock plate fasteners to a torque of 121-136 in-lb (19.3-21.5 N•m).

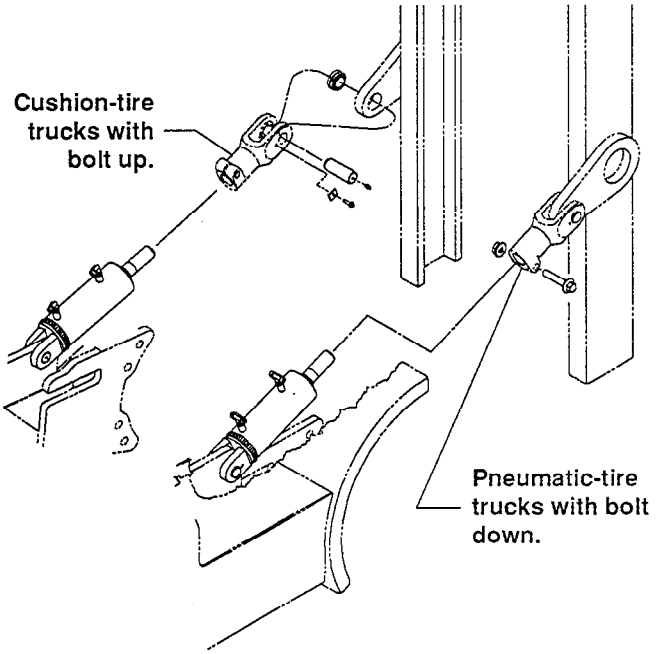

4. Attach hydraulic lines to the upright flow control valve:

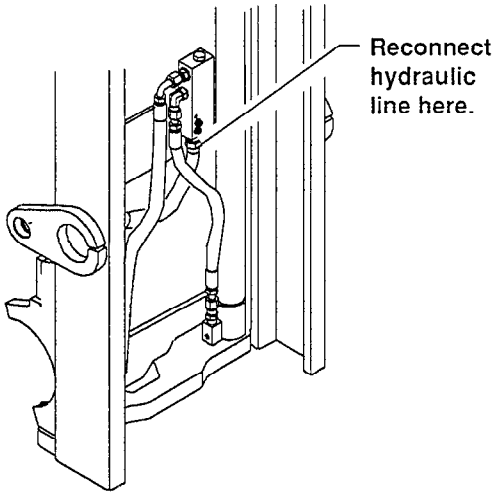

- Lubricate all O-rings with a light coating of system hydraulic fluid or a compatible oil.
- Use two wrenches to tighten hose fittings to prevent twisting lines.
- See Group 40 for hydraulic fitting tightening procedures.

NOTE

Reconnect two-hose adapter assembly hydraulic lines to the upright-mounted bracket.

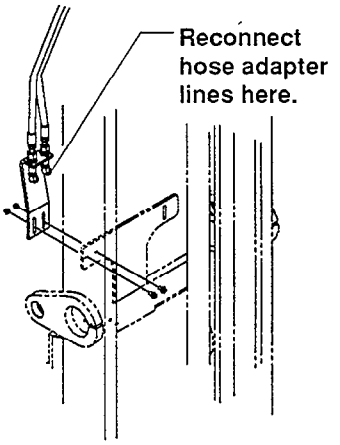

5. Remove the lift chain between the upright and hoist.
6. Completely check all upright and hydraulic components under load before returning the truck to service.
7. See Section 8, "Fork and Carriage Removal and Replacement," for steps to replace the carriage and fork assembly.

Copyrighted Material
Intended for CLARK dealers only
Do not sell or distribute

https://truckmanualshub.com/

GROUP 38

COUNTERWEIGHT AND CHASSIS

Counterweight Specifications and Description ..... Section 1

Counterweight Removal and Installation ..... Section 2

Overhead Guard Removal and Installation ..... Section 3

Floor Plate, Seat and Seat Deck Removal
and Installation ..... Section 4

Copyrighted Material
Intended for CLARK dealers only
Do not sell or distribute

https://truckmanualshub.com/

Section 1

Counterweight Specifications and Description

Specifications 2
Description 2
General Maintenance 2

Copyrighted Material
Intended for CLARK dealers only
Do not sell or distribute

https://truckmanualshub.com/

Specifications

Fastener Torques

Counterweight Mounting Bolts: 340-380 N•m (251–280 lb-ft)

Description

The counterweight is a solid, cast-iron piece mounted to the back of the lift truck. It is used to counterbalance the loads placed on the upright at the front of the truck. The weight must be great enough to counteract forward tipping when lifting or stopping with a capacity load. The battery provides much of the counterweight on an electric truck.

WARNING

The minimum battery weight for your truck is stamped on the nameplate. Never operate the truck with a battery that weighs less.

Large, hardened steel bolts hold the counterweight to the frame.

Different counterweights are used based on truck capacity and battery compartment length.

Truck Capacity	Battery Compartment Length	Counterweight
4000 lbs (2000kg)	30.5"	910 lbs (413kg)
4000 lbs (2000kg)	34.5"	910 lbs (413kg)
5000 lbs (2500kg)	30.5"	2130 lbs (966kg)
5000 lbs (2500kg)	34.5"	1390 lbs (631kg)
6000 lbs (3000kg)	30.5"	2630 lbs(1193kg)
6000 lbs (3000kg)	34.5"	2130 lbs (966kg)
6500 lbs (3200kg)	34.5"	2630 lbs (1193kg)

General Maintenance

WARNING

The counterweight is extremely heavy. Do not remove the counterweight unless you have training and are familiar with the correct procedures. Counterweights can fall if not handled correctly and can cause severe injury or death. Keep your hands, feet, and body clear of the counterweight at all times.

Hoisting equipment must be capable of handling the weight of the counterweight when removing or replacing. Make sure your lifting equipment is of adequate capacity to handle the weight.

The counterweight must be maintained in good condition and securely attached to the lift truck. Because of its heavy weight and bulky mass, the counterweight must be carefully supported and handled. When removed from the truck, store at floor level as shown below to be sure it will not fall or tip, causing damage or injury.

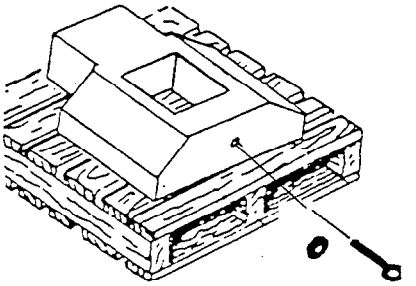

Generic Illustration

Copyrighted Material
Intended for CLARK dealers only
Do not sell or distribute

https://truckmanualshub.com/

Section 2

Counterweight Removal and Installation

Counterweight Removal 2
Counterweight Installation 3

Copyrighted Material
Intended for CLARK dealers only
Do not sell or distribute

https://truckmanualshub.com/

Counterweight Removal

⚠ CAUTION

SAFE PARKING. Before working on truck:

1. **Park truck on a hard, level and solid surface, such as a concrete floor with no gaps or breaks.**
2. **Put upright in vertical position and fully lower the forks or attachment.**
3. **Put all controls in neutral. Turn key switch OFF and remove key.**
4. **Apply the park brake and block the wheels.**

⚠ WARNING

Observe proper, safe lifting practices when lifting counterweight on or off truck.

Counterweight should only be lifted by appropriately-sized eye bolt installed through the top lifting hole.

Use only overhead lifting equipment having a safe lifting capacity in excess of that of the counterweight.

1. Remove the Electronic Controls cover.

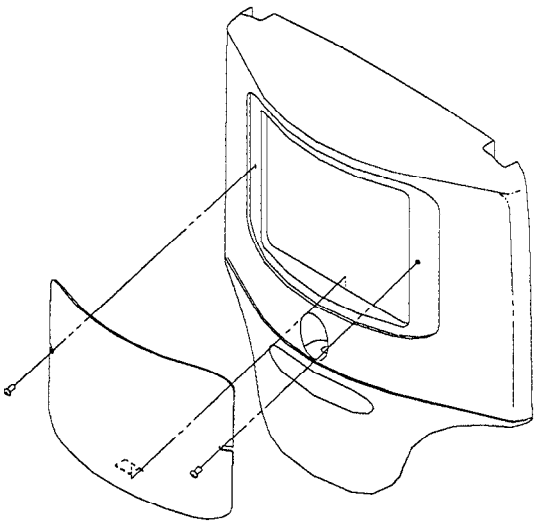

2. Install eye bolt into the counterweight. Eyebolt must be able to lift up to 1193 kg (2630 lbs) depending on the truck model.
3. Using an overhead hoist with sufficient lifting capacity, attach hoist chain to eyebolt. Slowly lift hoist until slack is removed from chain.
4. Remove the counterweight mounting bolts.

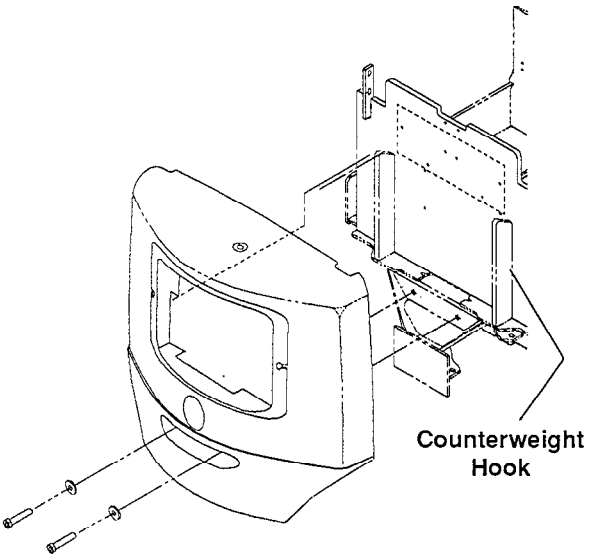

⚠ WARNING

Stand clear of the counterweight as it is being hoisted, moved, or mounted.

5. Slowly lift the counterweight from the truck frame until it is free from the counterweight hooks on the frame and can be moved back to clear the electronic controls. Take care not to damage the controls.
6. Slowly lower the counterweight onto a sturdy pallet. Set the counterweight on its flat side if possible.

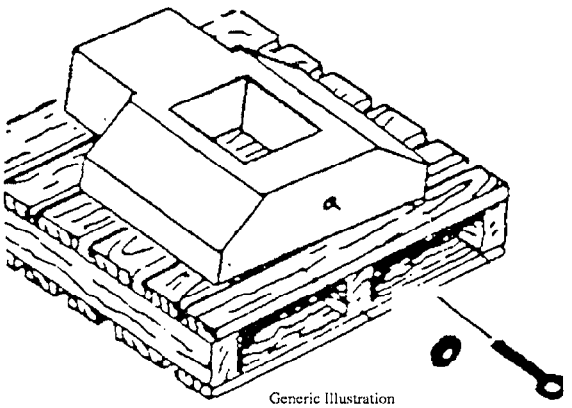

Copyrighted Material
Intended for CLARK dealers only
Do not sell or distribute

https://truckmanualshub.com/

Counterweight Installation

⚠ WARNING

Stand clear of the counterweight as it is being hoisted, moved, or mounted.

During mounting, always use prybars for location adjustments. Do not place any part of your body between the counterweight and truck.

1. Check the counterweight seals. If worn or damaged, replace.

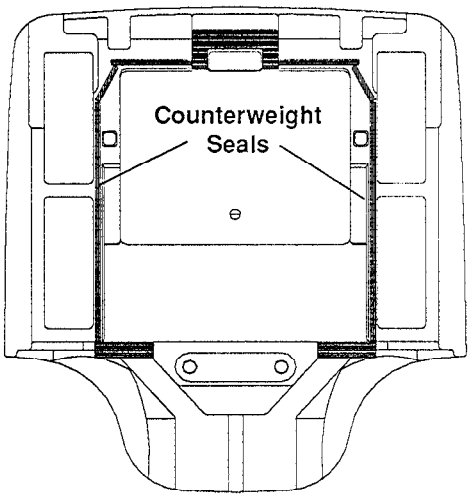

2. Slowly raise the counterweight to the rear of the truck, just high enough to clear the counterweight hooks on the frame. Take care not to damage the electronic controls. Slowly lower the counterweight onto the frame hooks.

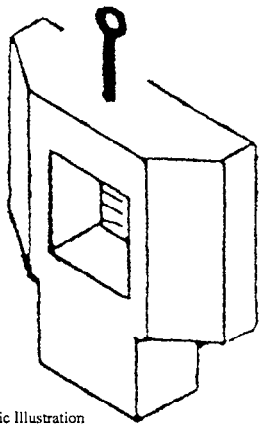

Generic Illustration

3. Maker sure that the bolt holes in the counterweight align properly with the mating holes in the frame.

4. Inspect the counterweight mounting bolts to make sure they are in good condition before installing. Use only Clark replacement parts. Torque the mounting bolts to 340-380 N•m (251-280 lb-ft).

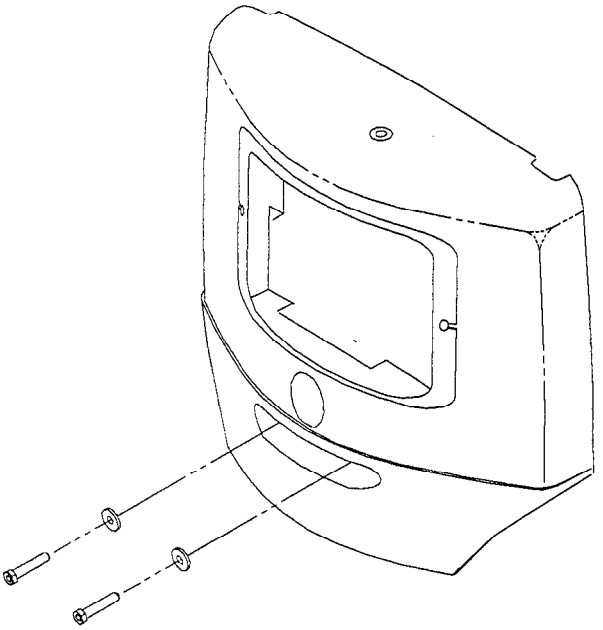

5. Remove the hoist and eyebolts.

IMPORTANT

Never allow a truck to be put into service without the counterweight mounting bolts in place. Check the bolts and torque regularly..

Copyrighted Material
Intended for CLARK dealers only
Do not sell or distribute

https://truckmanualshub.com/

Section 3

Overhead Guard Removal and Installation

Overhead Guard Removal 2
Overhead Guard Installation 2

Copyrighted Material
Intended for CLARK dealers only
Do not sell or distribute

https://truckmanualshub.com/

⚠ CAUTION

SAFE PARKING. Before working on truck:

1. **Park truck on a hard, level and solid surface, such as a concrete floor with no gaps or breaks.**
2. **Put upright in vertical position and fully lower the forks or attachment.**
3. **Put all controls in neutral. Turn key switch OFF and remove key.**
4. **Apply the park brake and block the wheels.**

Overhead Guard Removal

1. It is not anticipated that it should be necessary to remove the overhead guard from the truck in the course of normal service or repair. The instrument panel/cowl assemblies are supported by the overhead guard.

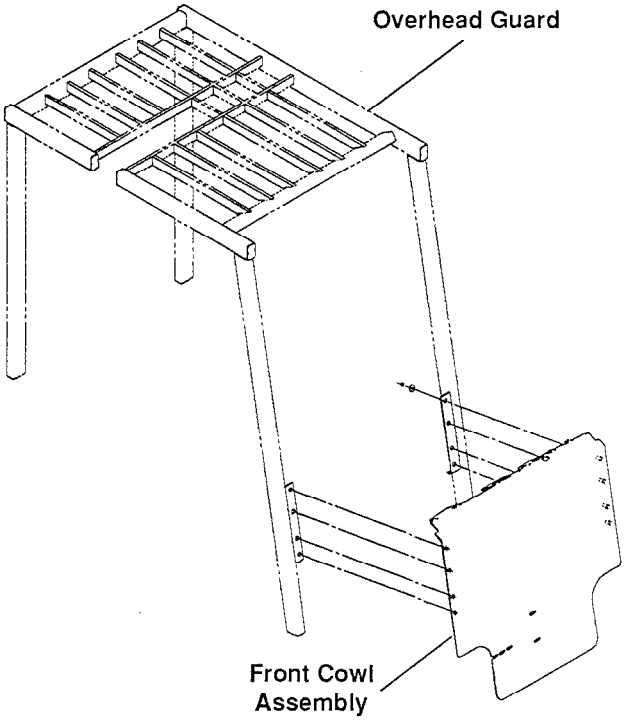

2. If the ovehear rguard must be removed from the truck to be repaired or replaced because of damage it would be necessary to support the Cowl Assembly with an overhead lifting device before removing fasteners holding the Front Cowl Assembly to the overhead guard.
3. Remove the battery.
4. Remove the overhead guard mounting bolts.
5. Lift overhead guard from the truck.

Overhead Guard Installation

1. Put overhead guard in place on the truck chassis.
2. Install the eight overhead guard mounting bolts. Tighten to 88-95 N•m (65-70 lb-ft).

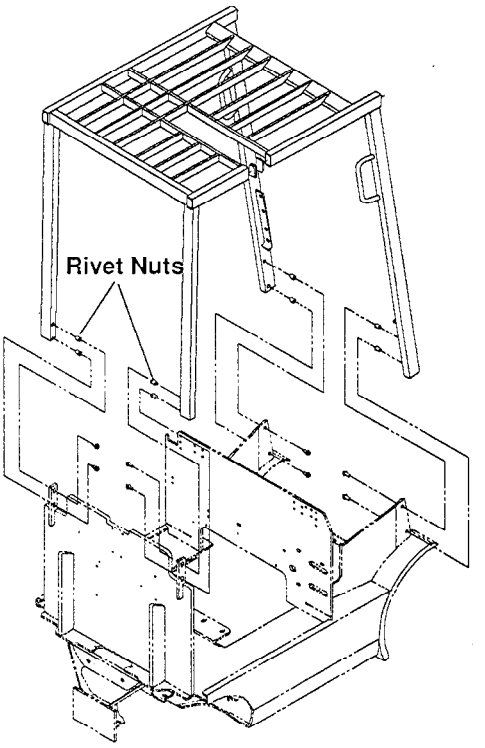

3. For installation of rivet nuts use AVK Rivet Nut Gun #AKPT3P12175, available from:

   AVK Industrial Products

   Valencia, CA

⚠ WARNING

Overhead guard must be in place to protect operator from falling objects.

Copyrighted Material
Intended for CLARK dealers only
Do not sell or distribute

https://truckmanualshub.com/

Section 4

Floor Plate and Seat Deck Removal and Installation

Floor Plate Removal and Installation 2
Operator's Seat Deck Removal 2
Operator's Seat Deck Reinstallation 3

Copyrighted Material
Intended for CLARK dealers only
Do not sell or distribute

https://truckmanualshub.com/

⚠ CAUTION

SAFE PARKING. Before working on truck:

1. **Park truck on a hard, level and solid surface, sucha s a concrete floor with no gaps or breaks.**
2. **Put upright in vertical position and fully lower the forks or attachment.**
3. **Put all controls in neutral. Turn key switch OFF and remove key.**
4. **Apply the park brake and block the wheels.**

Floor Plate Removal and Installation

1. Tilt the steering column fully forward.
2. Fold the floor plate on its hinge and lift out the operator's compartment.. Rubber mat lifts out with floor plate. Floor plate is not fastened to the truck.

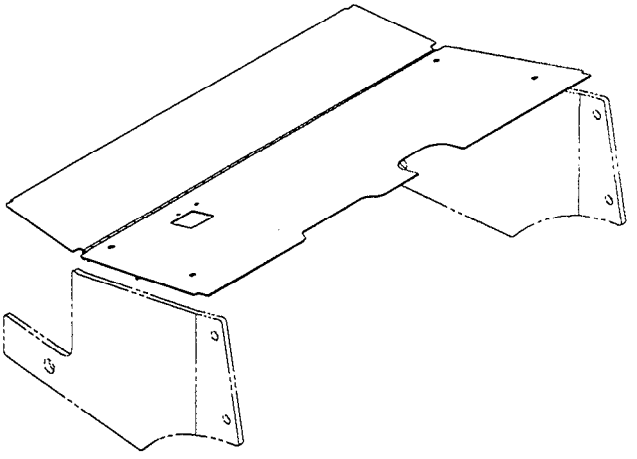

3. To replace the floor plate, position the front of floor plate first, then unfold it out into position.

IMPORTANT

Make sure the accelerator pedal has a full stroke and does not bind.

Operator's Seat Deck and Hood Support Removal and Installation

Removal

1. Raise and latch the seat deck open.
2. Remove the nuts holding the seat slide studs to the seat deck support..

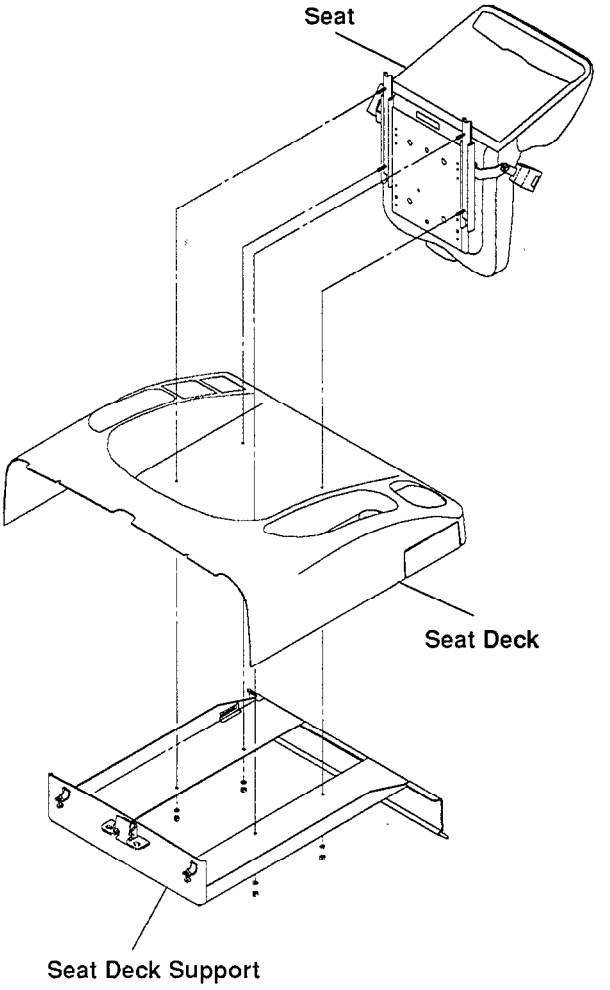

3. The seat deck, which is held on the seat deck support by the seat mounting fasteners, may now also be removed

Copyrighted Material
Intended for CLARK dealers only
Do not sell or distribute

https://truckmanualshub.com/

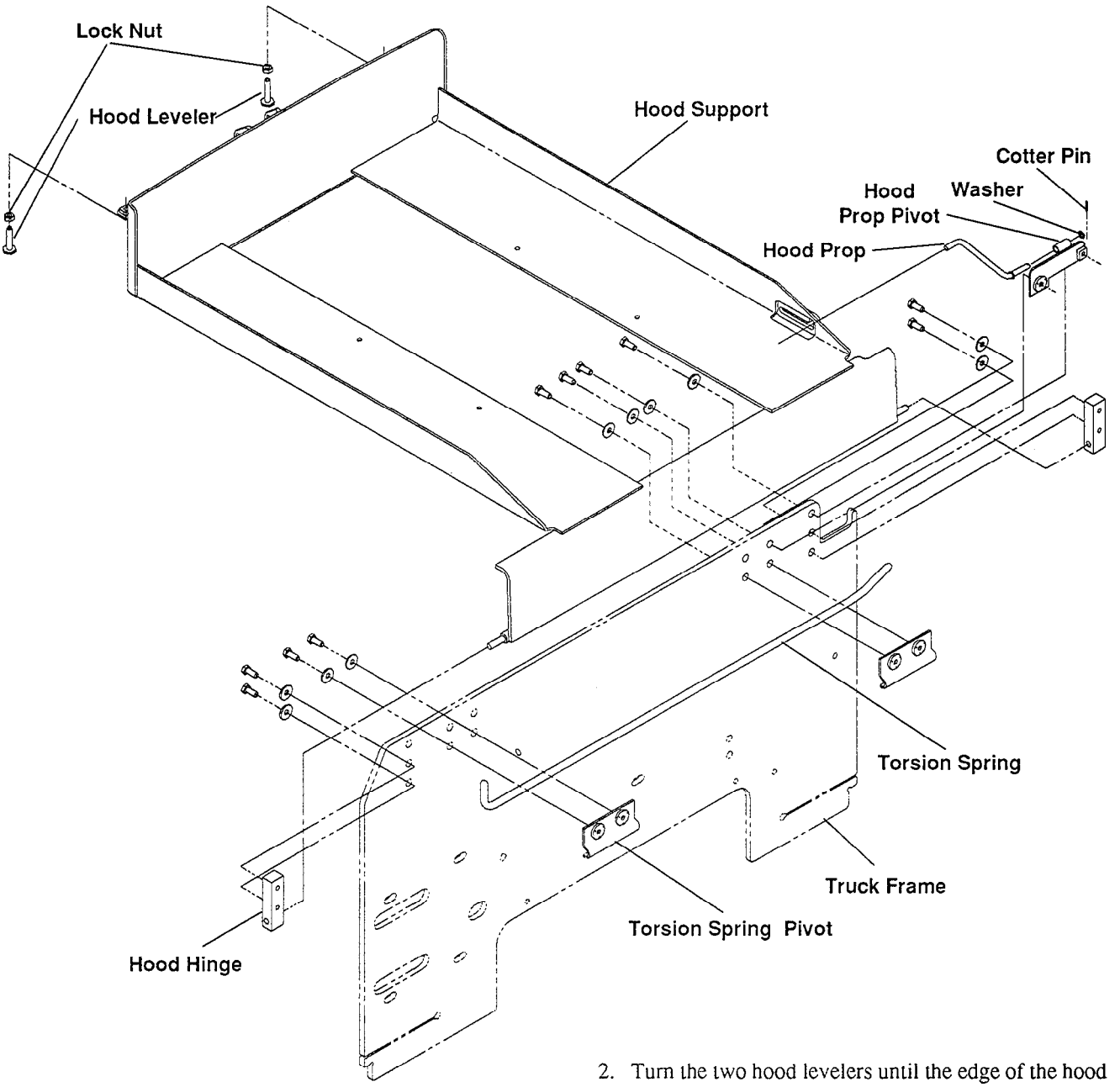

4. Remove the hood support hardward and remove the hood support.

Reinstallation.

1. Reinstall the hood support in reverse order that it was removed.

WARNING

Failure to follow this reinstallation procedure may result in operator injury. Ensure full latch engagement for battery retention.

2. Turn the two hood levelers until the edge of the hood is even with the edge of the counterweight.

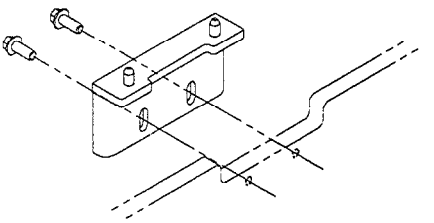

3. Position the striker bracket and torque the mounting bolts. After torqueing, verify smooth operation of the hood and latch and verify that the latch provides full engagement to the striker bracket when the hood is fully closed

Copyrighted Material
Intended for CLARK dealers only
Do not sell or distribute

https://truckmanualshub.com/

GROUP 40

SPECIFICATIONS

Nameplate and Decals ..... Section 1

General Specifications ..... Section 2

Hydraulic Fitting Tightening Procedure ..... Section 3

Copyrighted Material
Intended for CLARK dealers only
Do not sell or distribute

https://truckmanualshub.com/

Section 1

Nameplate and Decals

Nameplate and Decal Locations 2

Nameplate and Decals 4
- Truck Data and Capacity Plate 4
- Warning Decal 5
- Operator Safety Decal 5
- Polarity Warning Decal 6
- Battery Connector Warning Decal 6
- Hand Safety Warning Decal 6
- Keep Away from Forks Decal 7

Copyrighted Material
Intended for CLARK dealers only
Do not sell or distribute

https://truckmanualshub.com/

Nameplate and Decal Locations

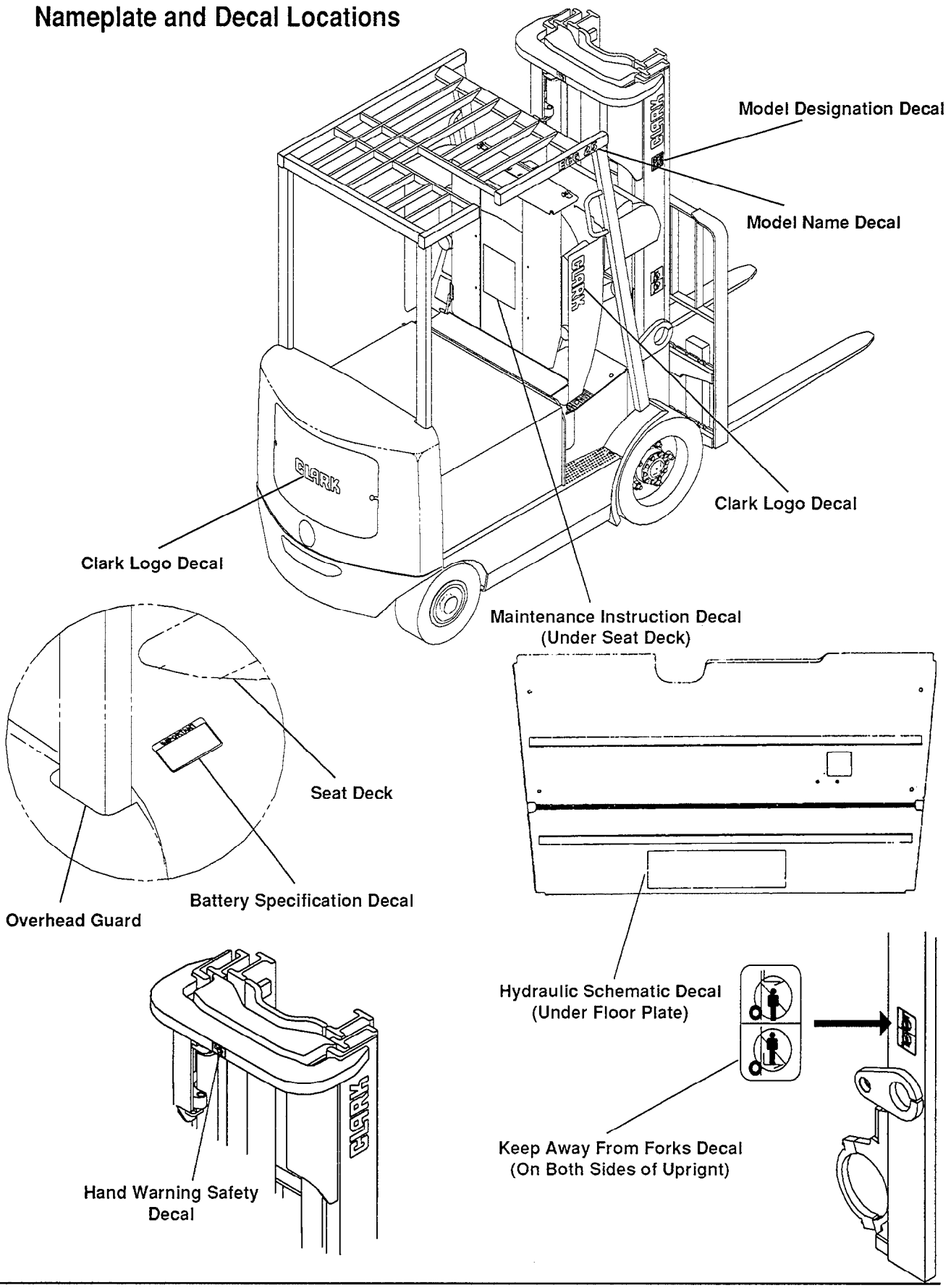

Copyrighted Material
Intended for CLARK dealers only
Do not sell or distribute

https://truckmanualshub.com/

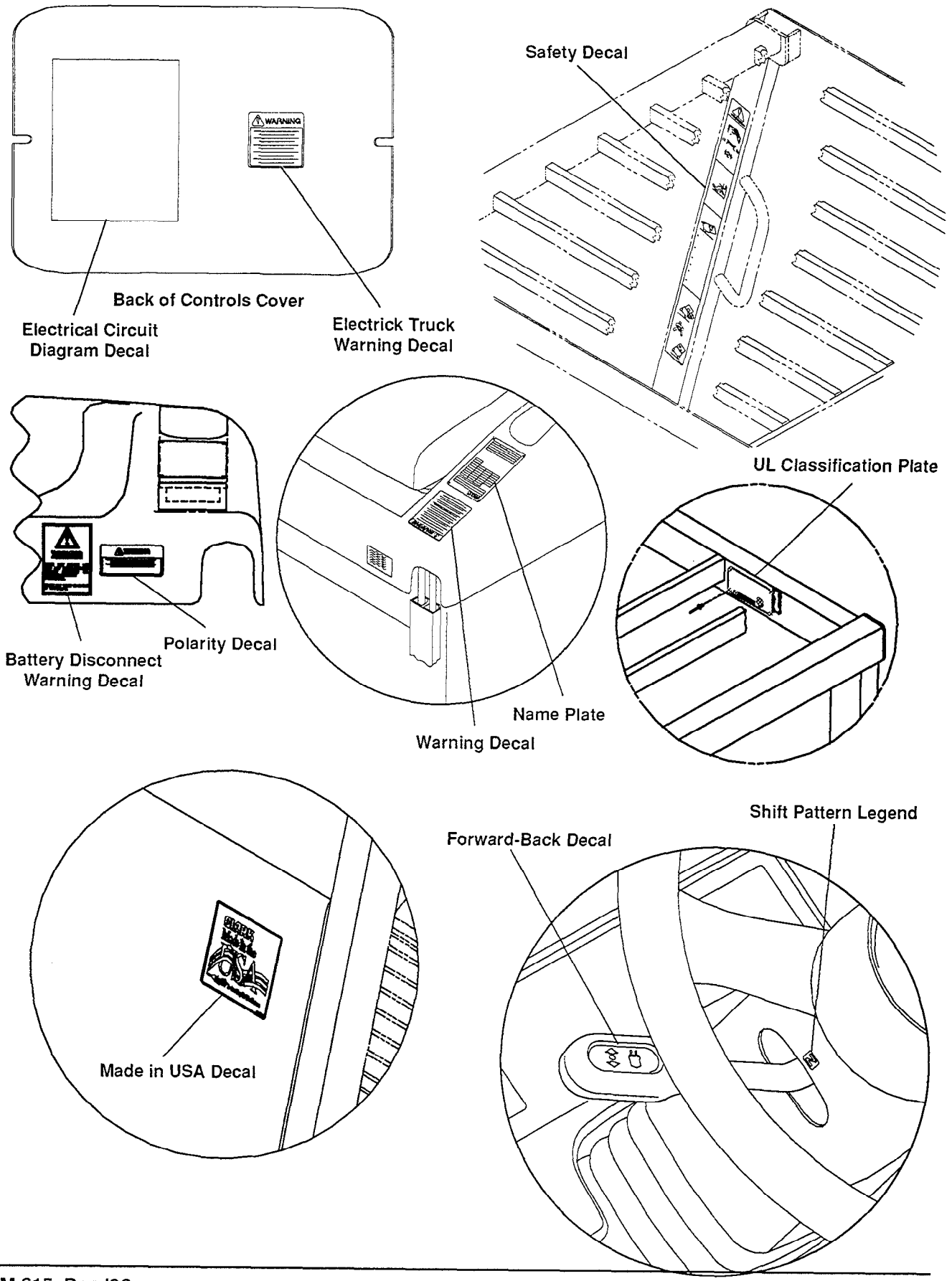

Copyrighted Material
Intended for CLARK dealers only
Do not sell or distribute

https://truckmanualshub.com/

Nameplate and Decals

This section shows the nameplate (data and capacity plate) and decals required to be on all operating Clark industrial trucks. The nameplate lists the data on the truck – type and serial number – and the capacities of the truck. Decals depict or explain the hazards the operator must avoid when operating the truck. The nameplate and decals are placed in specific locations on the truck and are intended to warn others working around the truck of its hazards as well. The nameplate and decals MUST BE IN PLACE on all trucks.

If any decals or the nameplate are missing from the truck, check with your local Clark dealer for replacements. This is required by OSHA.

IMPORTANT

Do not allow a lift truck with damaged or missing decals or data plate to be placed in service. Replace them immediately. They contain important information as described on the following pages. This is required by OSHA. The location of all decals is also shown on the following pages.

Truck Data and Capacity Plate

The truck data and capacity plate provides essential information about the truck. This information is important for both operators and service personnel. Operators can see what the truck's capacities and load ratings are. Service personnel must identify the truck model, type, and serial number when ordering parts. Refer to numbers on example data plate illustration.

1. Truck model number or registered name.
2. Truck serial number--An identification number assigned to this particular truck and should be used when requesting information or ordering service parts for this truck from your authorized CLARK dealer. The serial number is also stamped on the frame.
3. Attachment description (if any installed)--The user must see that the truck is marked to identify the attachment(s), including weight of the truck/attachment combination and truck capacity with the attachment.
4. Capacity rating, load center, and lifting height data--Shows the maximum load capacity of this truck with relation to load centers and fork heights (see diagram on plate). Personal injury and damage to the truck can occur if these capacities are exceeded. **Do not exceed the maximum capacity specified.**
5. Truck weight – The approximate weight of the truck without a load on the forks. The truck weight plus the weight of the load must be considered when operating on elevators, elevated floors, etc., to be sure it is safe.

⚠ CAUTION

Before attachments are added, or if the truck is modified after leaving the factory, you must contact your authorized Clark dealer for authorization and a new nameplate as capacity will new affected. This is required by OSHA.

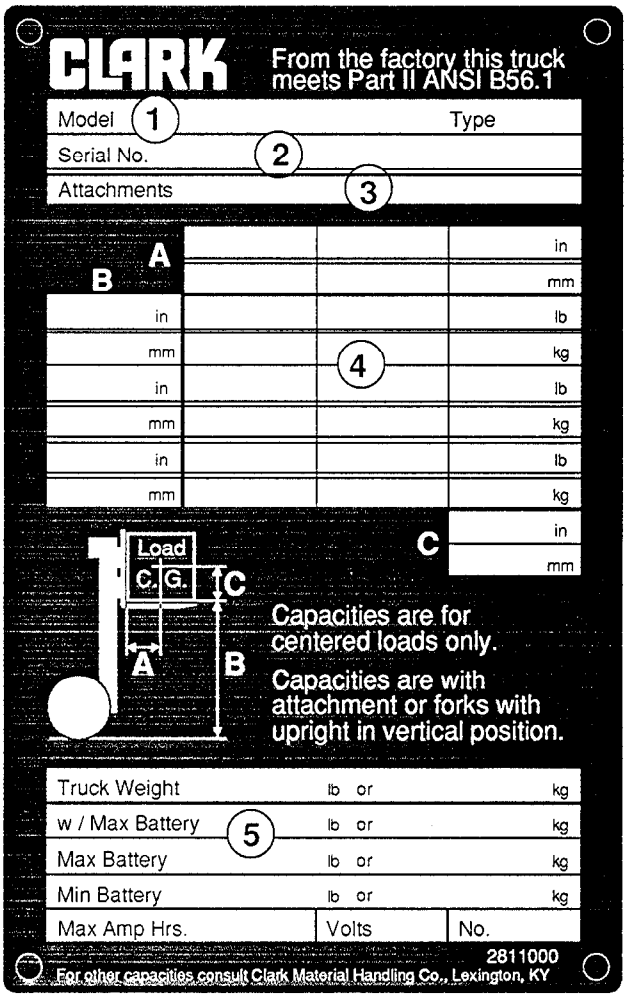

Copyrighted Material
Intended for CLARK dealers only
Do not sell or distribute

https://truckmanualshub.com/

Warning Decal

The Operator Safety Warning Decal describes basic safe operating procedures that should be used when operating the truck. This decal depicts important points about truck operation and warns operators about truck safety hazards. This decal is meant as a reminder for operators. It is placed where operators can review the points daily as they conduct a visual inspection and prepare the truck for work.

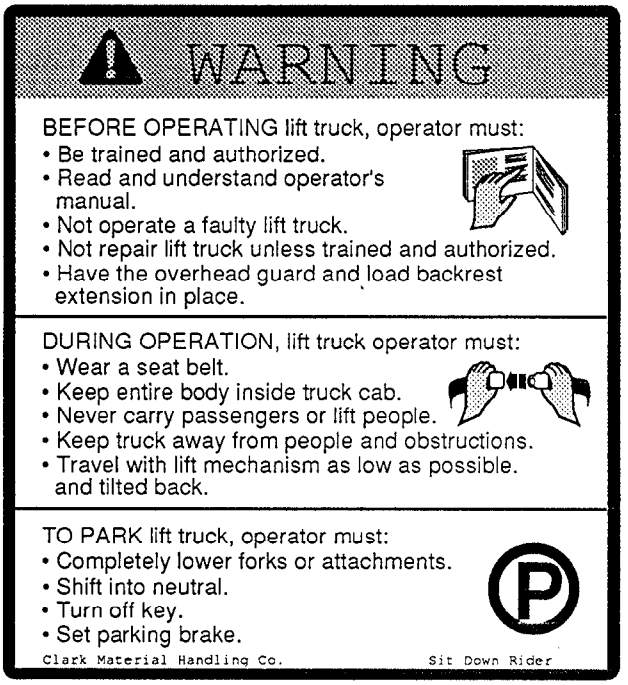

IMPORTANT

Safety and warning decals are placed in conspicuous locations on the truck to remind operators of essential procedures or to prevent them from making an error that could damage the truck or cause personal injury. Safety and warning decals should be replaced immediately if missing, damaged or illegible. This is required by OSHA.

Lift trucks can be tipped over if operated improperly. Experience with lift truck accidents has shown that the driver cannot react quickly enough to jump clear of the truck and overhead guard as the truck tips. To protect operators from severe injury or death in the event of a tip-over, make sure this decal is in place to remind them to always use their seat belts.

Operator Safety Decal

The Operator Safety Decal depicts important points about truck operation and warns operators about truck safety hazards. The Operator Safety Decal is meant as a reminder for operators and is placed where operators can review the points daily as they conduct a visual inspection and prepare the truck for work.

Copyrighted Material
Intended for CLARK dealers only
Do not sell or distribute

https://truckmanualshub.com/

Hand Safety Warning Decal

This safety decal is placed on the upright to warn of the danger of injury from movement between rails, chains, sheaves, fork carriage, and other parts of the upright assembly. Operators and others should never climb on or reach into the upright. Personal injury will result if any body part is put between moving parts of the upright.

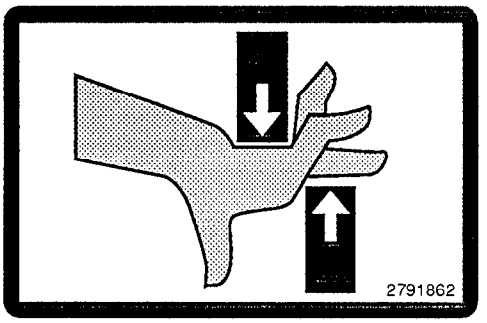

Keep Away from Forks Decal

This safety decal is placed on the upright to warn of the danger of injury from forks when they are in the raised position. Operators and others should never ride on or stand under forks or attachments. The forks can fall and cause injury or death.

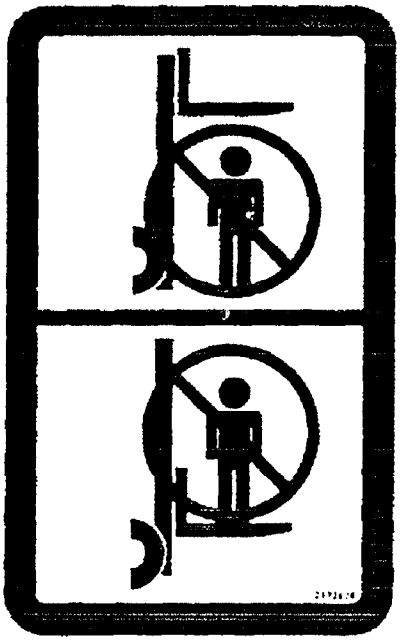

Battery Disconnect Warning Decal

This warning decal is located on the front of the seat deck.It warns of the danger of truck movement when removing or inserting the battery connector by calling for turning the key switch to OFF and setting the parking brake.

WARNING

Turn key switch off and set parking brake before removing or inserting battery connector.

Truck may start in motion if you do not.

Polarity Warning Decal

This warning decal is located on the front of the seat deck, adjacent to the Battery Disconnect Warning Decal. It notes the need to disconnect the battery before handling electrical components and to always make electrical connections positive to positive and negative to negative to prevent damage.

WARNING

- Disconnect battery before handling electrical components.
- Connect positive to positive, negative to negative to prevent damage.

Copyrighted Material
Intended for CLARK dealers only
Do not sell or distribute

https://truckmanualshub.com/

Electric Truck Warning Decal

This warning decal is located on the inside of the electrical contactor compartment door. It warns that to prevent unexpected movement of the truck when working on it, to raise the drive wheels, disconnect the battery, discharge the capacitors and refer to maintenance procedures.

Copyrighted Material
Intended for CLARK dealers only
Do not sell or distribute

https://truckmanualshub.com/

Section 2

General Specifications

Weights and Performance Specifications **2**
Capacities 2
Truck Weights and Axle Weights 2
Parking Brake Test 2
Travel Speeds 2
Turning Radius 3
Drift, Lift and Tilt Cylinders 3
Lift and Lowering Speeds, Upright 4

Critical Fastener Torque Specifications **4**
Brake System Specifications 4
Steering Column and Gear Specifications 4
Steer Axle Specifications 4
Hydraulic Sump, Filters, and Pump Specifications 4
Hydraulic Valve/Lift Circuit Specifications 5
Tilt Cylinders Specifications 5
Upright Specifications 5
Counterweight and Chassis Specifications 5

Copyrighted Material
Intended for CLARK dealers only
Do not sell or distribute

https://truckmanualshub.com/

Weights and Performance Specifications

Capacities

For standard trucks.

Models	At 500 mm (24 in) Load Center
ECG 20	2000 kg 4000 lbs
ECG 25	2500 kg 5000 lbs
ECG 30	3000 kg 6000 lbs
ECG 32	3200 kg 6500 lbs

Note: Rated capacity applies when using uprights with maximum fork height up to and including 4318 mm (170 in) For ECG 20-30 and 4166 mm (164 in) for ECG 32.

Truck Weights and Axle Weights

Approximate weights for standard trucks with 189"TSU upright & minimum batteryt weight, 30.4 inch compartment.

	Unloaded Vehicle Weight) (lbs/kg)	With Load-Front Weight (lbs/kg)	With Load-Rear Axle Weight (lbs/kg)	Without Load-Front Axle Weight (lbs/kg)	Without Load-Rear Axle Weight (lbs/kg)
ECG 20	9270/4206	11910/5404	1350/613	4830/2191	4440/2015
ECG 25	10490/4760	13470/6112	2010/912	4620/2096	5870/2663
ECG 30	11070/5023	15250/6919	1820/826	4620/2096	6450/2926
ECG 32*	11800/5354	16460/7468	1830/830	5260/2387	6540/2967

Note: Refer to the truck data plate for exact service and axle weights.

*Data for ECG 32 is for a 34.5" battery Compartment.

Parking Brake Test

The brake must be capable of holding the truck with a full rated-capacity load on a 15 % grade.

Travel Speeds

Maximum speeds with standard upright for Standard/High Performance Models.

	36 Volt	48 Volt
ECG 20 no load	11.6/14.0 kph (7.2/8.7 mph)	14.8/17.7 kph (9.2/11.0 mph)
ECG 25 no load	11.4/13.8 kph (7.1/8.6mph)	14.6/17.4 kph (9.1/10.8 mph)
ECG 30 no load	11.4/13.7 kph (7.1/8.5 mph)	14.5/17.2 kph (9.0/10.7 mph)
ECG 32 no load	11.3/13.5 kph (7.0/8.4 mph)	14.3/17.1 kph (8.9/10.6 mph)
ECG 20 with load	10.9/13.0 kph (6.8/8.1 mph)	14.0/16.9 kph (8.7/10.5 mph)
ECG 25 with load	10.6/12.4 kph (6.6/7.7 mph)	13.5/16.3 kph (8.4/10.1 mph)
ECG 30 with load	10.0/11.6 kph (6.2/7.2 mph)	13.0/15.6 kph (8.1/9.7 mph)
ECG 32 with load	9.5/10.9 kph (5.9/6.8 mph)	12.6/15.3 kph (7.8/9.5mph)

Copyrighted Material
Intended for CLARK dealers only
Do not sell or distribute

https://truckmanualshub.com/

Turning Radius, 30.4 inch Battery Compartment

ECG 20 mm-in.-1762.8/69.4

ECG 25 mm-in.-1825.0/71.9

ECG 30 mm-in.-1857.3/73.1

ECG 32* mm-in.-1962.3/77.3

* Data for ECG 32 is for a 34.5 Inch Battery Compartment

Drift, Lift and Tilt Cylinders

Lift Cylinder Downdrift: Should not exceed 25 mm (1 in) in a 5-minute period.

Tilt Cylinder Drift: Should not exceed 25 mm (1 in) in a 10-minute period.

Determined by marking and measuring carriage descent and upright forward tilt from raised, non-tilted position with hydraulic fluid at operating temperature: and a capacity load held evenly distributed on lift forks. (If a pallet is used, load should not extend beyond pallet; load should be stacked to provide maximum stability). Fork completely engaging load and adjusted as wide as possible to provide even distribution of weight.

Lift and Lowering Speeds, Upright

	Lift Loaded		Lower Loaded		Lift Empty		Lower Empty	
	m/s	(fpm)	m/s	(fpm)	m/s	(fpm)	m/s	(fpm)
ECG 20 36V								
Standard	0.29	(58)	0.,44	(87)	0.43	(95)	0..43	(85)
Triple-Stage	0.28	(55)	0.43	(84)	0.43	(85)	0.42	(82)
ECG 20 48V								
Standard	0.41	(80)	0..44	(87)	0.62	(123)	0.43	(85)
Triple-Stage	0..39	(77)	0.43	(84)	0.56	(110)	0.42	(82)
ECG 25 36V								
Standard	0.44	(52)	0..44	(87)	0.48	(95)	0.43	(85)
Triple-Stage	0..25	(50)	0.43	(84)	0.43	(85)	0.42	(82)
ECG 25 48V								
Standard	0.38	(75)	0..44	(87)	0.62	(123)	0.43	(85)
Triple-Stage	0.37	(72)	0.43	(84)	0.56	(110)	0.42	(82)
ECG 30 36V								
Standard	0..22	(43)	0.45	(89)	0.45	(88)	0.44	(87)
Triple-Stage	0.22	(43)	0.43	(84)	0.41	(80)	0.42	(82)
EG 30 48V								
Standard	0.31	(62)	0.45	(89)	0.57	(112)	0.44	(87)
Triple-Stage	0.31	(61)	0.43	(84)	0.52	(103)	0.42	(82)
ECG 32 36V								
Standard	0.20	(40)	0.45	(89)	0.45	(88)	0.44	(87)
Triple-Stage	0..20	(40)	0.43	(84)	0.41	(80)	0.42	(82)
ECG 32 48V								
Standard	0.30	(60)	0.45	(88)	0.57	(112)	0.44	(87)
Triple-Stage	0.30	(59)	0.43	(84)	0.52	(103)	0.42	(82)

Copyrighted Material
Intended for CLARK dealers only
Do not sell or distribute

https://truckmanualshub.com/

Critical Fastener Torque Specifications

For standard transaxle trucks and hydrostatic transmission trucks.

	Tightening Torque, Dry	
	N•m	ft-lb
Drive Axle-to-Frame Mounting Bolts:	450-500	332-369
Drive Wheel Lug Nuts	300-370	225-275
Steer Axle Mounting Bolts	170-190	125-140
Steer Wheel Lug Nuts	221-251	163.7-186.6
Steering Handwheel Retaining Nut	35-40	25.5-29.5
Tilt Cylinder Yoke Clamp Bolts	166-193	122-142
Tilt Cylinder Pin Retainer Bolts		
Front	8-10	5.9-7.4
Rear	8-10	5.9-7.4
Counterweight Mounting Bolts (Bottom)	340-380	250-280

Brake System Specifications

Service Brake

Type: Drum and shoe. Self-adjusting.

Fluid: Fluid provided by hydraulic reservoir integral with master cylinder .

Shoe-to-Drum Gap: 0.45-0.60 mm (.017-.024 in).

Shoe Lining Thickness: 1.0 mm (0.039 in) min.

Drum Thickness: 20.6 mm (0.787 inch) min.

Pedal Freeplay: None.

Star Wheel Adjustment Gap: 0.5-0.6 mm (0.020-0.023 in).

Parking Brake

Type: Ratchet linked to service brake shoe at each wheel.

Holding Test: Rated load on 15% grade.

Steering Column and Gear Specifications

Steering System Type: Hydrostatic power steeing.

Steering System Relief Pressure Setting: 7587 kPa (1100 psi)

Nominal Flow Rating: 23 L/min (6 gal/min)

Inlet Pressure Rating: 12400 kPa (1800 psi)

Return Pressure Rating: 1000 kPa (150 psi) maximum

Steer Axle Specifications

Steer Cylinder Type: Double-acting, piston-type.

Turning Radius:

ECG 20 - 1762.8 mm (69.4 in)

ECG 25 - 1825.0 mm (71.9 in)

ECG 30 - 1857.3 mm (73.1 in)

ECG 32 - 1962.3 mm (77.3)

Hydraulic Sump, Filters, and Pump

Specifications

Hydraulic Pump Type: Integral gear type pump and motor assembly.

Sump Type and Capacity: Removable tank mounted in truck side frame with maximum capacity of 19 L (5 gallons)

Hydraulic Fluid Type: Clark Hydraulic Fluid specification MS-68.

Hydraulic Fluid Filters: Return line filter and suction line screen mounted in sump.

Return Filter Type: Disposable, 25 micron, full flow.

Suction Screen: 100 mesh stainless steel screen.

Copyrighted Material
Intended for CLARK dealers only
Do not sell or distribute

https://truckmanualshub.com/

Hydraulic Valve/Lift Circuit Specifications

Rated Flow:

Lift spool (spool #1): 76 L/min (20 gpm)

Tilt spool (spool #2): 38 L/min (10 gpm)

Auxiliary spool (spool #3): 38 L/min (10 gpm).

Integral Pressure Compensated Flow Control Settings:

Tilt spool (spool #2): 24 L/min (6 gpm)

Auxiliary spool (spool #3): 15 L/min (4 gpm).

Maximum Pressure Drop at Rated Flow:

Inlet to outlet: 689 kPa (100 psi)

Lift spool (spool #1):
- Inlet to cylinder port: 689 kPa (100 psi)
- Cylinder port to outlet: 550 kPa (80 psi)

Tilt spool (spool #2):
- Inlet to cylinder port: 689 kPa (100 psi)
- Cylinder port to outlet: 550 kPa (80 psi)

Auxiliary spools (spools #3 and #4):
- Inlet to cylinder port: 345 kPa (50 psi)
- Cylinder port to outlet: 207 kPa (30 psi).

Auxiliary Component Flow Control Adjustments:

Flow Setting L/min	Flow Setting (gpm)	Clockwise Turns of Adjustment Screw
6	1.5	.50
9	2.5	.75
15	4.0	1.50
21	5.5	2.125
26	7.0	3.00
38	10.0	4.50

Counterweight and Chassis Specifications

Counterweight weights:

413 Kg (910 lbs)

631 Kg (1390 lbs)

966 Kg (2130 lbs)

1193 kg (2630 lbs)

Tilt Cylinders Specifications

Tilt cylinder type: double-acting with shims

Maximum operating pressure: 22,070 kPa (3,200 psi; 220 bar)

Tilt Flow Control Adjustments (factory setting is 15 L/min (4 gal/min):

Tilt Ranges

(Abbreviations — Std = Standard, high-visibility upright; TSU = Triple-stage upright; MFH = maximum fork height; B = back tilt; F = forward tilt)

Std (through 2667 mm (105 in) MFH)	6°B-10°F
Std (above 2667 mm (105 in) MFH)	8°B-8°F
TSU (through 4775 mm (188 in) MFH)	5°B-6°F
TSU (4800-6096 mm (189-240 in) MFH)	5°B-3°F
TSU (above 6096 mm (240 in) MFH)	3°B-0°F with tilt limit override to 3°F

Upright Specifications

Upright Weight: approximately 482 kg (1060 lb) to approximately 682 kg (1500 lb)

Carriage Weight: approximately 111 kg (245 lb)

Fork Weight: approximately 50-68 kg each (110-150 lb)

IMPORTANT

Before hoisting, the weights of upright, carriage, and forks must be combined to determine what lifting capacity is required of the hoisting equipment.

Capacities and Lift Heights: Upright, carriage, and fork capacity and upright lift heights are listed on the truck's data plate.

Lubricants:

All Purpose Grease (Clark spefication MS-9)

Innerslide Lubricant (Clark part #886396)

Chain and Cable Lube (Clark part #886399)

Copyrighted Material
Intended for CLARK dealers only
Do not sell or distribute

https://truckmanualshub.com/

Section 3

Hydraulic Fitting Tightening Procedure

1. Tighten fitting finger tight until it stops turning, while moving the fitting lightly side to side to prevent cocking or thread damage.
2. Using finger tips only, lightly snug fitting with a wrench until it bottoms out on the seat or port. Do not overtighten.

Copyrighted Material
Intended for CLARK dealers only
Do not sell or distribute