View thousands of Crane Specifications on FreeCraneSpecs.com
https://truckmanualshub.com

Repair Parts Manual

TB 80

engine powered
diesel
gasoline
LPG

Manufactured 01-97 through 01-01

P/N 0112013
May 1997 - revised December 2001

Snorkel

View thousands of Crane Specifications on FreeCraneSpecs.com
https://truckmanualshub.com/

General information

About this manual:

This repair parts manual covers current production machines only.

While Snorkel has attempted in every way to confirm that all information in this manual is correct, improvements are being constantly made to the machine that may not be reflected in this manual.

If you find information in this manual that is not correct, or is confusing, you are urged to report your findings to Snorkel for our evaluation.

Your input is important to us and will be used in future printings of this manual.

Every person who repairs this machine must be qualified and authorized to do so.

⚠CAUTION

DO NOT modify this aerial platform without prior written consent of Snorkel Engineering Department. Modification may void the warranty, adversely affect stability, or affect the operational characteristics of the aerial platform.

This machine is covered by a limited warranty that specifically identifies items warrantied by Snorkel and those items covered by original manufacturers warranty.

A copy of the Snorkel Limited Warranty is located on the inside of the back cover of this manual.

All correspondence relative to this machine, such as field reports, discrepancy reports, requests for information, etc., should be directed to:

Snorkel International, Inc.
P.O. Box 1160
St. Joseph, MO 64502-1160 USA
Phone: (816)-364-0317

http://www.snorkelusa.com

Abbreviations

The following abbreviations may be used in this manual:

AC . . . . . alternating current
ANSI . . . . . American National Standards Institute
CCA . . . . . cold cranking amps
cm . . . . . centimeter
DC . . . . . direct current
EMS . . . . . envelope management system
GFCI . . . . . ground fault circuit interrupt
LP . . . . . liquified petroleum
LPG . . . . . liquified petroleum gas
mm . . . . . millimeters
ft . . . . . feet
in . . . . . inch
lbs . . . . . pounds
no . . . . . number
NPT . . . . . national pipe thread
psi . . . . . pounds per square inch
qty . . . . . quantity
UL . . . . . Underwriters Laboratories Inc.

Electrical Hazard

⚠DANGER

The aerial platform is not electrically insulated. Death or serious injury can result from contact with, or inadequate clearance from, an energized conductor.

Do not go closer than the minimum safe approach distance as defined by the minimum Safe Approach Distance as defined by ANSI Standards.

Regard all conductors as energized.

Allow for electrical wire sag and aerial platform sway.

If the work platform, or any part of the aerial platform contacts a high-voltage electrical conductor, the entire machine can become electrically charged.

If that happens, remain on the machine and do not contact any other structure or object. This includes the ground, adjacent buildings, poles, and any other objects that are not part of the aerial platform.

Such contact could make your body a conductor to the other object, creating an electrical shock hazard resulting in death or serious injury.

If an aerial platform is in contact with an energized conductor the platform operator must warn ground personnel in the vicinity to stay away. Their bodies can conduct electricity creating an electrical shock hazard resulting in death or serious injury.

Do not approach or leave the aerial platform until the electricity has been turned off.

Do not attempt to operate the lower controls when the work platform or any part of the aerial platform is in contact with a high-voltage electrical conductor or if there is an immediate danger of such contact.

Personnel on or near an aerial platform must be continuously aware of electrical hazards, recognizing that death or serious injury can result from contact with an energized conductor.

© Snorkel – all rights reserved

Printed in USA

View thousands of Crane Specifications on FreeCraneSpecs.com
https://truckmanualshub.com

Table of Contents

Service and parts information

To order service or repair parts i
ANSI and OSHA compliance i
Manuals i
Parts order form ii

Section 1. - Repair parts

Chassis/turntable 1-2
Extendable axle, rear - 2 wheel drive 1-4
Extendable axle, rear - 4 wheel drive 1-6
Axle stop 1-8
Steering 1-10
Drive, front axle 1-12
Drive, rear axle 4 wheel drive 1-14
Hub and wheel, rear axle 2 wheel drive 1-16
Lift and swing 1-18
Swing drive 1-20
Fuel tank 1-22
Hydraulic oil reservoir mounting 1-23
Booms, base end 1-24
Booms and hose carrier 1-27
Booms 1-29
Extension cylinder 1-34
Hose carrier 1-37
Platform mounting 1-38
Platform gate 1-40
Platform rotator 1-42
Engine and mounting, Continental TM-27 1-44
Engine, Continental TM-27 1-47
Engine and mounting, Cummins 4B 1-48
Engine, Cummins 4B 1-51
Engine and mounting, Deutz F4L-1011F 1-52
Engine, Deutz F4L-1011F 1-55
Engine and mounting, Ford LRG-423 1-56
Engine, Ford LRG-423 1-59
Engine and mounting, Ford LRG-425 1-60
Engine, Ford LRG-425 1-63
Air cleaner 1-64
Exhaust and air cleaner, Deutz 1-65
Exhaust and air cleaner, Continental 1-66
Exhaust and air cleaner, Cummins 1-68
Exhaust and air cleaner, Ford 1-70
Cowling 1-73
Placards and decals 1-74
Gear hub, Auburn 1-76
Gear hub, Fairfield 1-78
Swing drive, Fairfield 1-80
Swing drive, Gear Products 1-82
Swing drive brake 1-84
Pinion guard 1-86

Section 2. - Hydraulics

Chassis hydraulic equipment, 2 wheel drive 2-2
Chassis hydraulic hoses, 2 wheel drive 2-5
Chassis hydraulic equipment, 4 wheel drive 2-6
Chassis hydraulic hoses, 4 wheel drive 2-9
Hydraulic equipment, turntable 2-10
Hydraulic hoses, turntable 2-13
Control valve and fittings, non-proportional 2-14
Control valve, non-proportional 2-16
Control valve and fittings, proportional 2-18
Control valve, proportional 2-20
Control valve, axle jacking 2-22
Drive control valve 2-24
Series parallel package, right hand 2-26
Series parallel package, left hand 2-28
Drive motor with brake 2-30
Hydraulic oil reservoir 2-32
Accumulator 2-34
AC generator valve 2-35
Anti-cavitation valve 2-36
Axle interlock valve 2-37
Blocking valve, extend 2-38
Blocking valve, lift 2-39
Centerpost and fittings 2-40
Cylinder, axle extend - GBI 2-42
Cylinder, axle extend - Seabee 2-43
Cylinder, extension - GBI 2-44
Cylinder, extension - Seabee 2-45
Lift cylinder 2-46
Cylinder, lift - GBI 2-47
Cylinder, lift - Rosenboom 2-48
Cylinder, lift - Seabee 2-49
Jacking cylinder before 12-04-2000 2-50
Jacking cylinder after 12-04-2000 2-51
Cylinder, jacking - GBI 2-52
Cylinder, jacking - Rosenboom 2-53
Cylinder, jacking - Seabee 2-54
Cylinder, master level - GBI 2-55
Cylinder, master level - Prince 2-56
Cylinder, master level - Rosenboom 2-57
Cylinder, master level - Seabee 2-58
Cylinder, slave level - GBI 2-59
Cylinder, slave level - Prince 2-60
Cylinder, slave level - Rosenboom 2-61
Cylinder, slave level - Seabee 2-62
Cylinder, steering - GBI 2-63
Cylinder, steering - Prince 2-64
Cylinder, steering - Rosenboom 2-65
Cylinder, steering - Seabee 2-66
Dual sequence valve, right hand 2-67
Dual sequence valve, left hand 2-68
Dual sequence valve, 4 wheel drive 2-69
Dual holding valve, platform rotation 2-70
Emergency power unit 2-71
High range speed selector valve 2-72
Hydraulic pump 2-73
Hydraulic warm-up valve 2-74
Hydraulic oil return filter 2-75
Motion control valve, turntable swing 2-76
Platform rotator, Helac 2-77
Platform rotator, Parker 2-78
Pressure manifold 2-79
Pump control valve 2-80
Steer cut-out valve, 2 wheel drive 2-81

View thousands of Crane Specifications on FreeCraneSpecs.com
https://truckmanualshub.com

Table of contents

Steer cut-out valve, 4 wheel drive 2-82
Shuttle valve 2-83

Section 3. - Electrical

Turntable electrical, Continental TM-27 3-2
Turntable electrical, Cummins 4B 3-6
Turntable electrical, Deutz F4L-1011F 3-10
Turntable electrical, Ford LRG-423 3-14
Turntable electrical, Ford LRG-425 3-18
Lower controls, Continental 3-22
Lower controls, Cummins before 8-16-99 3-25
Lower controls, Cummins after 8-16-99 3-26
Lower controls, Deutz before 8-16-99 3-29
Lower controls, Deutz after 8-16-99 3-30
Lower controls, Ford LRG-423 3-33
Lower controls, Ford LRG-425 3-34
Wiring box 3-37
Wiring box, Ford LRG-425 3-41
Wiring box panel 3-46
Wiring box panel, Ford LRG-425 3-49
Platform foot switch 3-50
Upper control box 3-51
Boom switch, drive speed 3-55
Boom switch, lift/swing speed 3-56
Electric fuel pump 3-57
GFCI 110 volt power 3-58
Controller, drive/steer 3-60
Controller, extend/retract 3-62
Controller, lift/swing 3-64

Section 4. - Factory installed options

AC generator mounting 4-2
AC generator 4-5
Air line to platform 4-6
Dual fuel, Ford engine 4-9
Dual fuel, Ford with 40 gallon gasoline tank 4-10
LP fuel only, Ford engine 4-13
Dual fuel engine, Ford LRG-423 4-14
LP fuel only engine, Ford LRG-423 4-16
Dual fuel engine, Ford LRG-425 4-18
Head lights 4-20
Tail lights 4-23
Isolation valve 4-24
Engine block heater 4-25
Motion alarm, drive 4-26
Upper control box cover 4-27
Hydraulic warm-up 4-28
Tow package 4-31
Air inlet heater, Deutz 4-32
Cold start kit, ether 4-33
Warning light, dual beacon 4-34
Warning light, single beacon 4-35
Work lights 4-36
Sandblast kit 4-37

View thousands of Crane Specifications on FreeCraneSpecs.com
https://truckmanualshub.com

To order service or repair parts

When placing an order for service or repair parts, please have the following information available for your machine.

- ✓ Machine model number
- ✓ Machine serial number
- ✓ Snorkel part number
- ✓ Description of part
- ✓ Quantity of parts required
- ✓ Your purchase order number
- ✓ Address for order to “Ship To”
- ✓ Your desired shipment method

The parts order form on the following page may be mailed or faxed to the attention of Parts Worldwide at the following location:

Snorkel International, Inc.
P.O. Box 1160
St. Joseph, MO 64502-1160 USA

Phone: 1-(800)-255-0317
Parts Worldwide Fax: (816)-364-6312

Attention: Parts Department

For your convenience, our electronic on-line ordering system is available at the following Internet location:

http://www.omniquip.com

Manuals

Manuals are available from Snorkel to support any of the machines that we produce.

The specific manuals for TB 80 are as follows:

- ✓ Operator’s Manual
  Snorkel part number - 0112012
- ✓ Repair Parts Manual
  Snorkel part number - 0112013
- ✓ Troubleshooting Guide
  Snorkel part number - 0112143
- ✓ ANSI Manual of Responsibilities
  ANSI/SIA A92.5-1992

ANSI and OSHA compliance

All owners and users of the aerial platform must read, understand, and comply with all applicable regulations. Ultimate compliance to OSHA regulations is the responsibility of the user and their employer.

ANSI publications clearly identify the responsibilities of all personnel who may be involved with the aerial platform. A reprint of the “Manual of Responsibilities for Dealers, Owners, Users, Operators, Lessors and Lessees of ANSI/SIA A92.5-1992 Boom-Supported Elevating Work Platforms” is available from Snorkel dealers or from the factory upon request.

Copies are also available from:

Scaffold Industry Association
20335 Ventura Blvd. Suite 310
Woodland Hills, CA 91364-2471 USA

Record machine information here:

Model number

_____

Serial number

_____

Date of purchase

_____

Purchased from

_____

Snorkel dealer or distributor

_____

View thousands of Crane Specifications on FreeCraneSpecs.com
https://truckmanualshub.com/

Parts order form

Fill out completely and fax to (816)-364-6312 attention: Parts Worldwide

Date _____

Company _____

Address _____

_____

Contact name _____

Phone number _____

Fax number _____

Account number _____

Purchase order number _____

Model _____

Serial number _____

Optional equipment _____

Purchase order number _____

Ship to _____

_____

_____

_____

Ship by _____

Part number	Description	Quantity	Price

Note: Backordered parts will be shipped as soon as available by the same shipping method as the original order unless indicated below:

- ☐ Ship complete order only - do not backorder parts.
- ☐ Ship all available parts and supply information of disposition of backordered parts.
- ☐ Other instructions as specified _____

_____

View thousands of Crane Specifications on FreeCraneSpecs.com
https://truckmanualshub.com/

TB 80

OmniQuip® TEXTRON

Snorkel® INTERNATIONAL

View thousands of Crane Specifications on FreeCraneSpecs.com
https://truckmanualshub.com

Chassis/turntable

item	part no	qty	description
1		1	Chassis - (consult factory)
2		1	Turntable - (consult factory)
3		1	Counterweight - (consult factory)
4	971379	4	Capscrew 5/8-11 x 3-3/4 inch long hex head grade 8
5	5560678	8	Washer 5/8 medium flat
6	5560169	4	Washer 5/8 hard flat ASTM-F436
7	5560036	4	Nut 5/8-11 self locking
8	0110756	1	Rotation bearing gear
9	5560170	24	Washer 3/4 hard flat ASTM-F436
10	5560120	24	Capscrew special 3/4-10 self locking
11	5560171	22	Washer 7/8 hard flat ASTM-F436
12	5560143	22	Capscrew special 7/8-9 self locking
13	3040295	1	Connector
14	0050137	1	Lubrication hose
15	5074401	1	Bulkhead locknut
16	5037102	1	Bulkhead connector
17	5570001	1	Grease fitting 1/8 NPT straight
18	0111191	2	Access cover, chassis ends
19	0111192	1	Access cover, steer
20	0111193	1	Access cover, drive
21	986299	14	Washer 3/8 medium flat
22	987119	14	Washer 3/8 medium lock
23	970469	14	Capscrew 3/8-16 x 1 inch long hex head grade 5
24	5038702	1	Male 45° elbow

View thousands of Crane Specifications on FreeCraneSpecs.com
https://truckmanualshub.com

Chassis/turntable

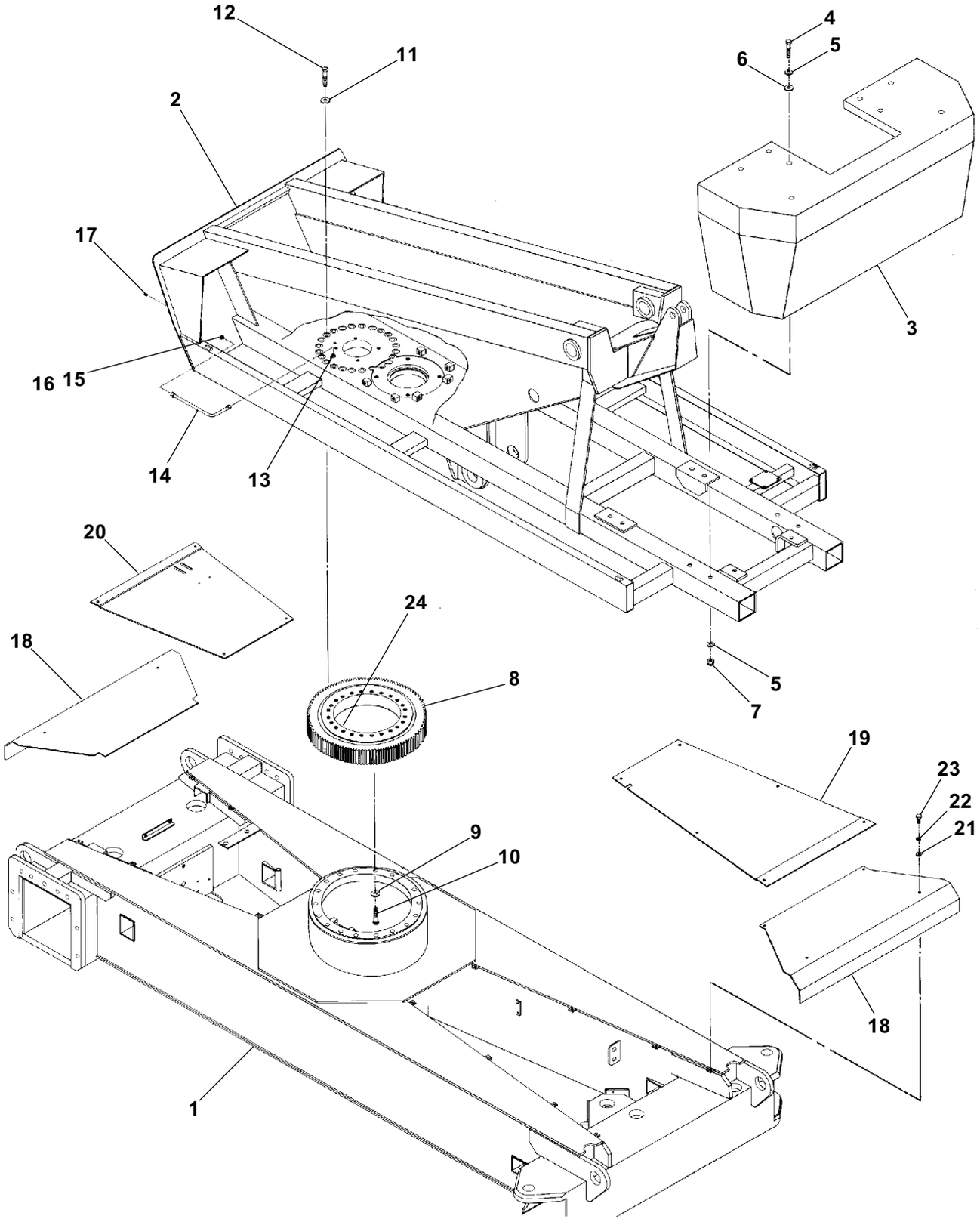

View thousands of Crane Specifications on FreeCraneSpecs.com
https://truckmanualshub.com

Extendable axle, rear - 2 wheel drive

item	part no	qty	description
1	0111280	1	Axle, rear left hand
2	0110257	1	Hose carrier tube
3	971309	1	Capscrew 5/8-11 x 2 inch long hex head grade 5
4	5560169	1	Washer 5/8 hard flat ASTM-F436
5	5560036	1	Nut 5/8-11 self locking
6	0111221	2	Flange, left hand
7	0110281	1	Cylinder, axle extend - (see hydraulics section for parts breakdown)
8	5560035	16	Nut 3/4-10 self locking
9	5560170	32	Washer 3/4 hard flat ASTM-F436
10	5560676	16	Capscrew 3/4-10 x 3-1/2 inch long hex head grade 8
11	970439	12	Capscrew 3/8-16 x 5/8 inch long socket flat head
12	0080293	4	Slide pad
13			Slide pad shim, (use thickness required to fill gap)
	0070030	4	Shim, .030 inch thick
	0072567	4	Shim, .063 inch thick
	0090141	4	Shim, .090 inch thick
14	0110260	1	Pin, axle extend cylinder rod end
15	987109	2	Washer 5/16 medium lock
16	5560677	2	Capscrew 5/16-18 x 1/2 inch long socket button head
17	0111279	1	Axle, rear right hand
18	0110261	1	Pin, axle extend cylinder base end
19	0111362	1	Lock pin
20	5580002	1	Snapper pin
21	984069	2	Nut 1/4-20 hex
22	5560086	2	Capscrew 1/4-20 x 1 inch long hex head grade 5
23	0110594	1	Pin lock retainer
24	0111222	2	Flange, right hand
25	0111303	1	Scraper pad, right hand axle
26	0111304	1	Scraper pad, left hand axle

View thousands of Crane Specifications on FreeCraneSpecs.com
https://truckmanualshub.com

Extendable axle, rear - 2 wheel drive

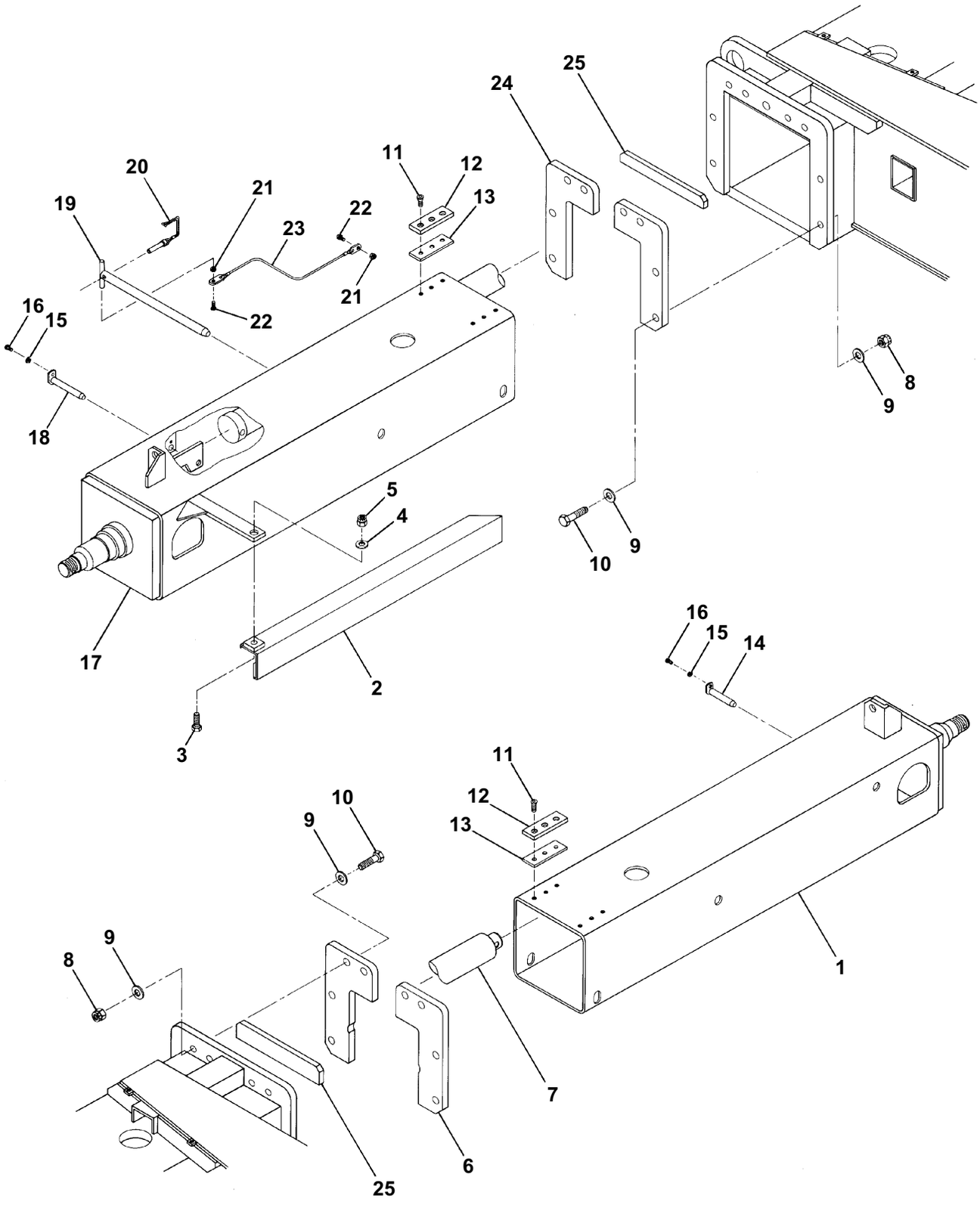

View thousands of Crane Specifications on FreeCraneSpecs.com

Extendable axle, rear - 4 wheel drive

item	part no	qty	description
1	0111146	1	Axle, rear left hand
2	0110257	1	Hose carrier tube
3	971269	2	Capscrew 5/8-11 x 1 inch long hex head grade 5
4	5560169	2	Washer 5/8 hard flat ASTM-F436
5	5560036	2	Nut 5/8-11 self locking
6	0111221	2	Flange, left hand
7	0110281	1	Cylinder, axle extend - (see hydraulics section for parts breakdown)
8	5560035	16	Nut 3/4-10 self locking
9	5560170	32	Washer 3/4 hard flat ASTM-F436
10	5560676	16	Capscrew 3/4-10 x 3-1/2 inch long hex head grade 8
11	970439	12	Capscrew 3/8-16 x 5/8 inch long socket flat head
12	0080293	4	Slide pad
13			Slide pad shim, (use thickness required to fill gap)
	0070030	4	Shim, .030 inch thick
	0072567	4	Shim, .063 inch thick
	0090141	4	Shim, .090 inch thick
14	0110260	1	Pin, axle extend cylinder rod end
15	987109	2	Washer 5/16 medium lock
16	5560677	2	Capscrew 5/16-18 x 1/2 inch long socket button head
17	0111145	1	Axle, rear right hand
18	0110261	1	Pin, axle extend cylinder base end
19	0111362	1	Lock pin
20	5580002	1	Snapper pin
21	984069	2	Nut 1/4-20 hex
22	5560086	2	Capscrew 1/4-20 x 1 inch long hex head grade 5
23	0110594	1	Pin lock retainer
24	0111222	2	Flange, right hand
25	0111303	1	Scraper pad, right hand axle
26	0111304	1	Scraper pad, left hand axle

View thousands of Crane Specifications on FreeCraneSpecs.com
https://truckmanualshub.com

Extendable axle, rear - 4 wheel drive

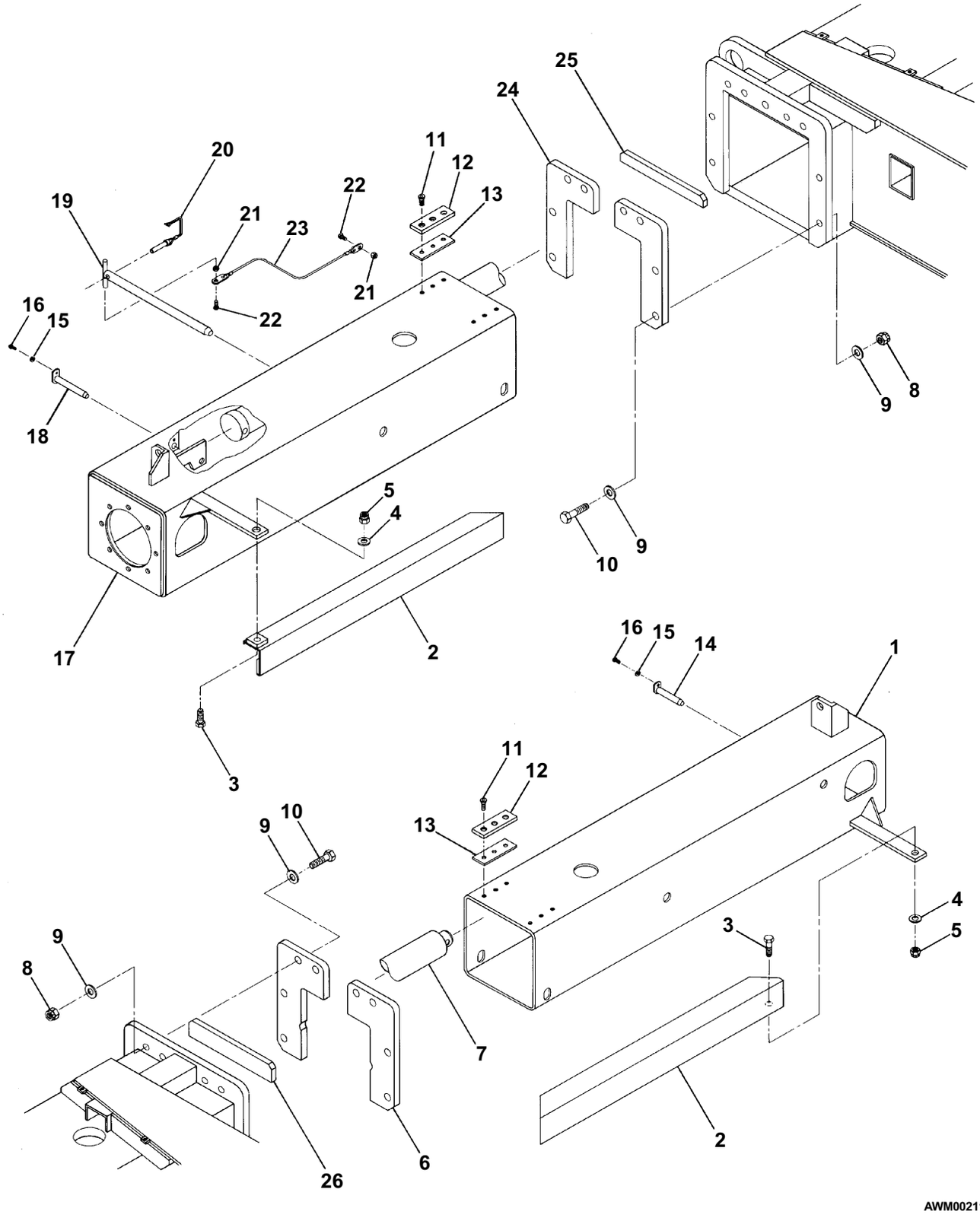

View thousands of Crane Specifications on FreeCraneSpecs.com
https://truckmanualshub.com/

Axle stop

item	part no	qty	description
1	0111270	2	Tray
2	970239	2	Capscrew 5/16-18 x 3/4 inch long hex head grade 5
3	986269	2	Washer 5/16 medium flat
4	984089	2	Nut 5/16 hex
5	0110926	2	Axle stop rod
6	5560035	4	Nut 3/4-10 self locking
7	984469	4	Nut 3/4-10 hex jam

View thousands of Crane Specifications on FreeCraneSpecs.com
https://truckmanualshub.com

Axle stop

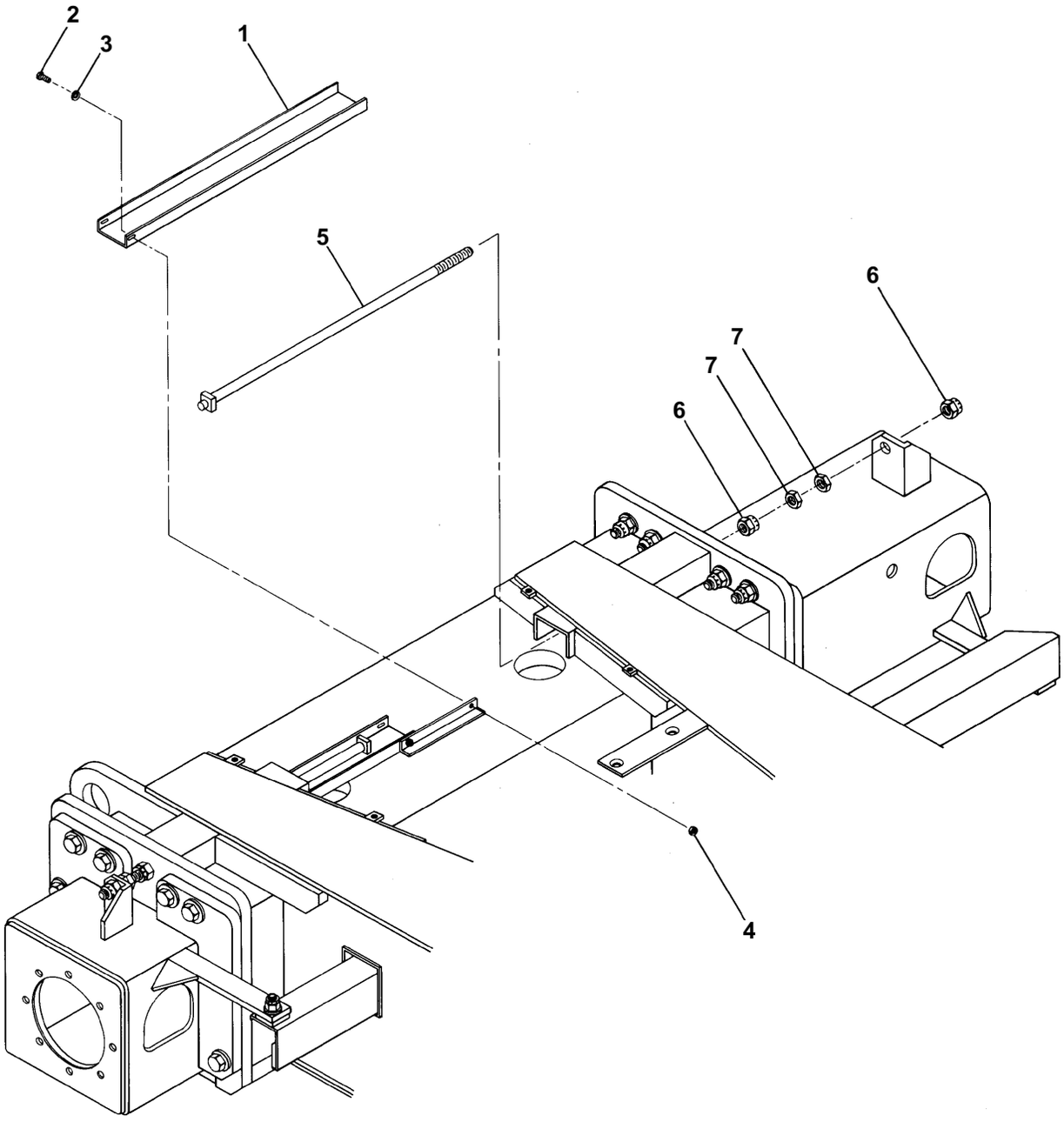

View thousands of Crane Specifications on FreeCraneSpecs.com
https://truckmanualshub.com

Steering

item	part no	qty	description
1	0111123	2	Steering yoke
2	0111135	1	Steering arm
3	0072438	4	Washer
4	5560018	4	Spindle nut
5	988229	4	Cotter pin 1/4 inch diameter x 2-1/2 inch long
6	0080885	4	King pin
7	5560660	6	Machine bushing 3 inch OD x 2 inch ID x 14 gauge thick
8	25560089	2	Shim, .031 inch thick
	5560091	2	Shim, .015 inch thick
9	2503220	4	Bearing
10	5070026	2	Cap, wheel service
11	5560202	1	Tie rod hex jam nut for adjustable tie rod
12	2580001	2	Thrust washer
13	5560134	2	Adjustment bolt
14	984469	2	Nut 3/4-10 hex jam
15	0070007	1	Cylinder, steering - (see hydraulics section for parts breakdown)
16	0070442	2	Pin, steering cylinder
17	0110323	1	Pin, steering arm
18	5560688	3	Machine bushing 2-1/4 OD x 1-1/2 inch ID x 14 gauge thick
19	0070033	3	Pin lock
20	987109	2	Washer 5/16 medium lock
21	970239	8	Capscrew 5/16-18 x 3/4 inch long hex head grade 5
22	0090840	2	Thrust bearing
23	2502416	2	Bearing
24	0111136	1	Bearing spacer
25	0111130	2	Tie rod
26	2690005	2	Tie rod end
27	5560689	2	Machine bushing 1-1/2 inch OD x 1 inch ID x 14 gauge thick
28	0150094	2	Pin, tie rod
29	5560152	4	Roll pin 5/16 inch diameter x 1-3/4 inch long
30	0080348	2	Spacer
31	0110320	2	Lock pin
32	5570001	2	Grease fitting 1/8 NPT straight
33	984109	2	Washer 5/16 medium flat

View thousands of Crane Specifications on FreeCraneSpecs.com
https://truckmanualshub.com

Steering

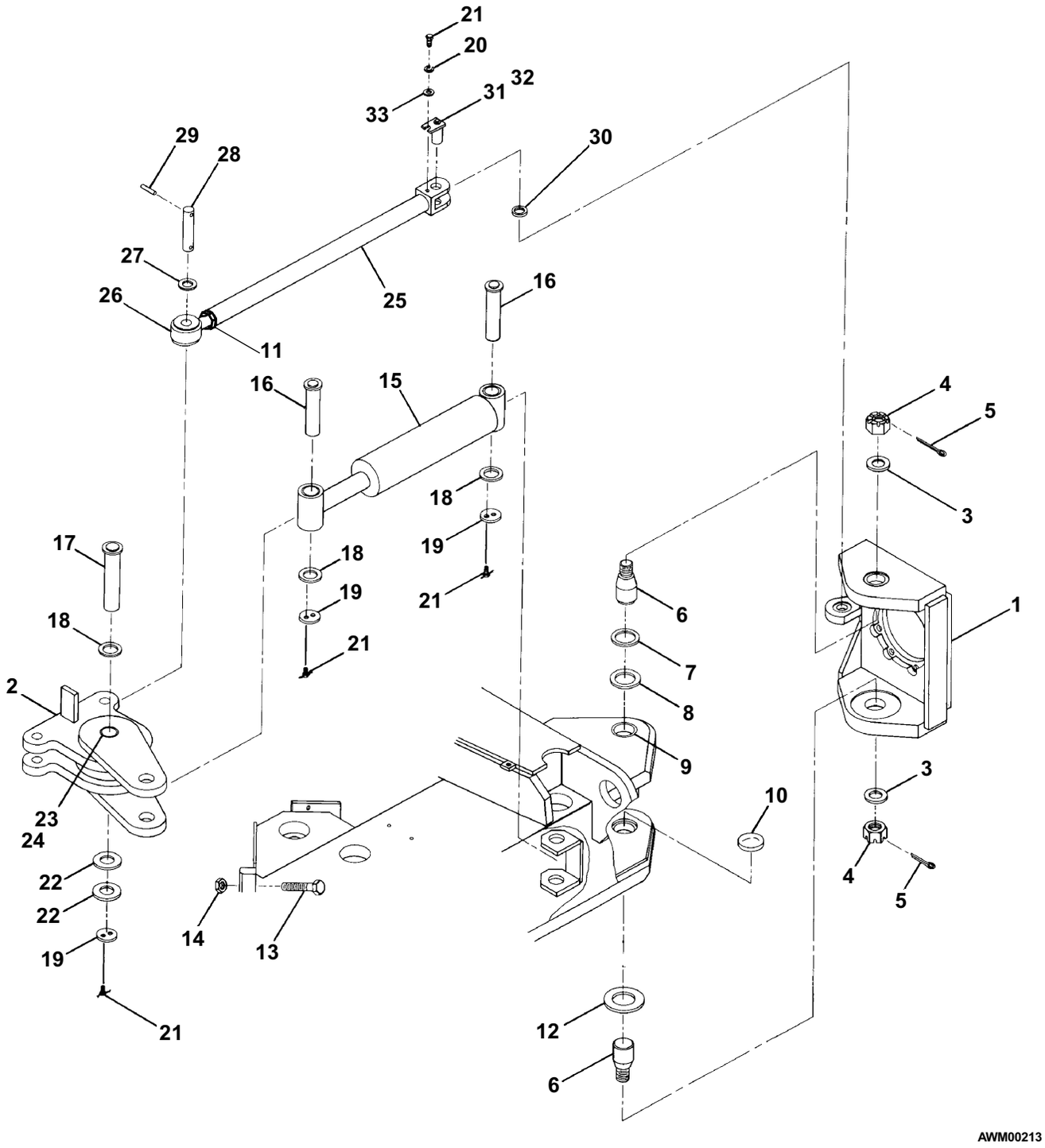

View thousands of Crane Specifications on FreeCraneSpecs.com
https://truckmanualshub.com

Drive, front axle

item	part no	qty	description
1	6030037	2	Drive motor with brake - (see page 2-30 for parts breakdown)
2	5560245	4	Capscrew 5/8-11 x 1-1/2 inch long socket head
3	987159	4	Washer 5/8 medium lock
4	7110159	2	O-ring
5	2690001	2	Bearing, self aligning
6	5560099	12	Capscrew special 5/8-11 self locking
7	5560169	8	Washer 5/8 hard flat ASTM-F436
8	984449	16	Nut 5/8 hex jam
9	5560131	4	Nut 5/8-11 self locking
10	0111674	4	Wheel stud
11	0111675	4	Wheel stud wedge
12	0110283	2	Gear hub (see page 1-76 for Auburn gear hub parts breakdown) (see page 1-78 for Fairfield gear hub parts breakdown)
13	0110537	2	Tire and wheel, foam filled 15 x 22.5 16 ply
14	7280010	20	Wheel nut

View thousands of Crane Specifications on FreeCraneSpecs.com
https://truckmanualshub.com/

Drive, front axle

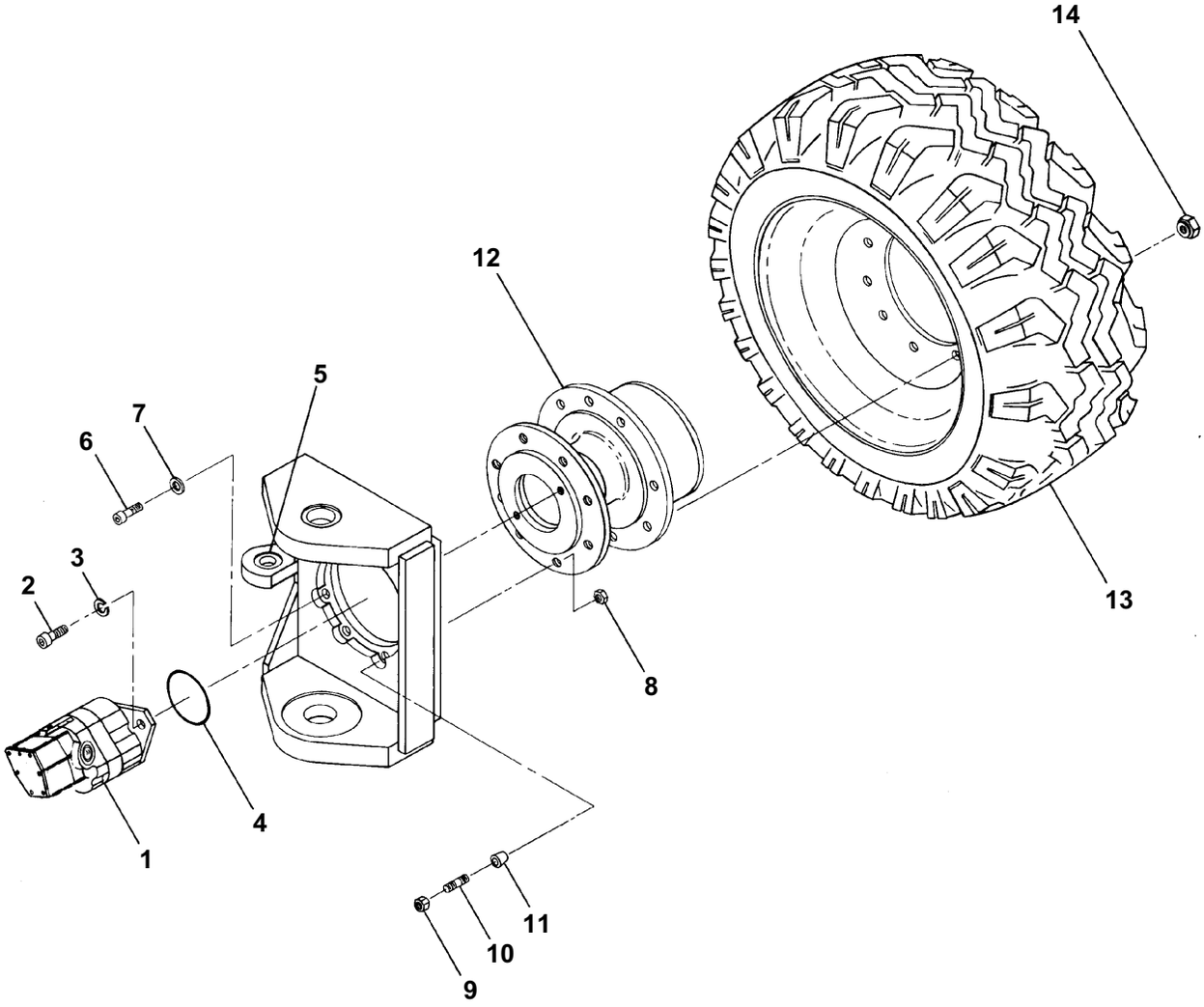

Note: Do not mix tire brands or sizes on any one machine

AWM00214

View thousands of Crane Specifications on FreeCraneSpecs.com
https://truckmanualshub.com

Drive, rear axle 4 wheel drive

item	part no	qty	description
1	6030037	2	Drive motor with brake - (see page 2-30 for parts breakdown)
2	5560245	4	Capscrew 5/8-11 x 1-1/2 inch long socket head
3	987159	4	Washer 5/8 medium lock
4	7110159	2	O-ring
5	5560099	16	Capscrew special 5/8-11 self locking
6	5560169	16	Washer 5/8 hard flat ASTM-F436
7	984449	16	Nut 5/8 hex jam
8	0110283	2	Gear hub (see page 1-76 for Auburn gear hub parts breakdown) (see page 1-78 for Fairfield gear hub parts breakdown)
9	0110537	2	Tire and wheel, foam filled 15 x 22.5 16 ply
10	7280010	20	Wheel nut

View thousands of Crane Specifications on FreeCraneSpecs.com
https://truckmanualshub.com

Drive, rear axle 4 wheel drive

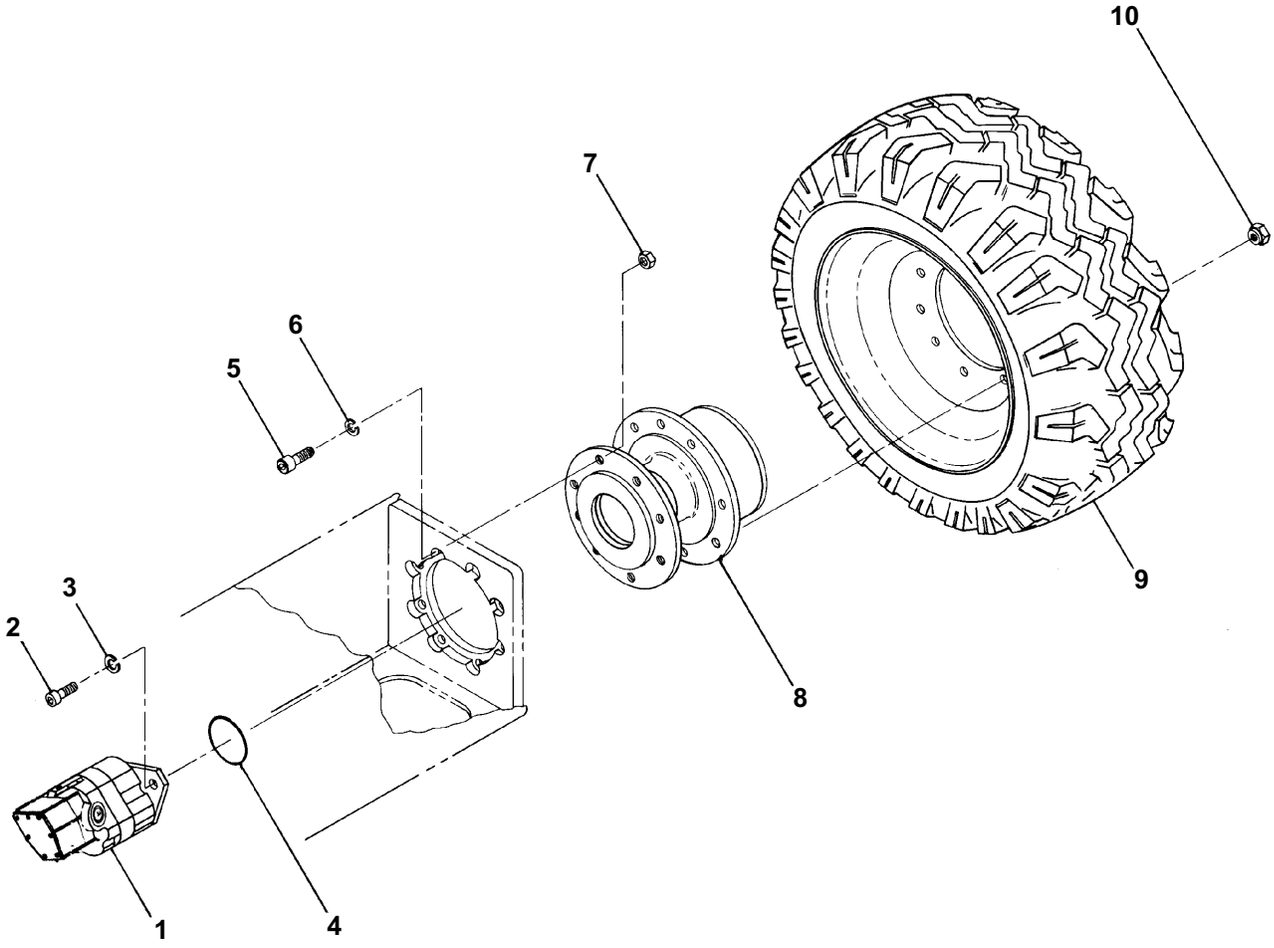

Note: Do not mix tire brands or sizes on any one machine

AWM00215

View thousands of Crane Specifications on FreeCraneSpecs.com
https://truckmanualshub.com

Hub and wheel, rear axle 2 wheel drive

item	part no	qty	description
1	7150003	2	Grease seal
2	2560006	2	Inner bearing cone
3	7280024	20	Wheel bolt
4	0080181	2	Hub - (includes wheel bolt item 3)
5	2540004	2	Outer bearing cup
6	2540005	2	Inner bearing cup
7	2560005	2	Outer bearing cone
8	5560025	2	Key washer
9	5560026	2	Spindle nut
10	5560661	2	Cotter pin 3/8 inch diameter x 2-1/2 inch long
11	0080186	2	Hub cap
12	0080185	2	Gasket, hub cap
13	987099	8	Washer 1/4 medium lock
14	970009	8	Capscrew 1/4-20 x 1/2 inch long hex head grade 5
15	0110537	2	Tire and wheel, foam filled 15 x 22.5 16 ply
16	7280010	20	Wheel nut

View thousands of Crane Specifications on FreeCraneSpecs.com
https://truckmanualshub.com

Hub and wheel, rear axle 2 wheel drive

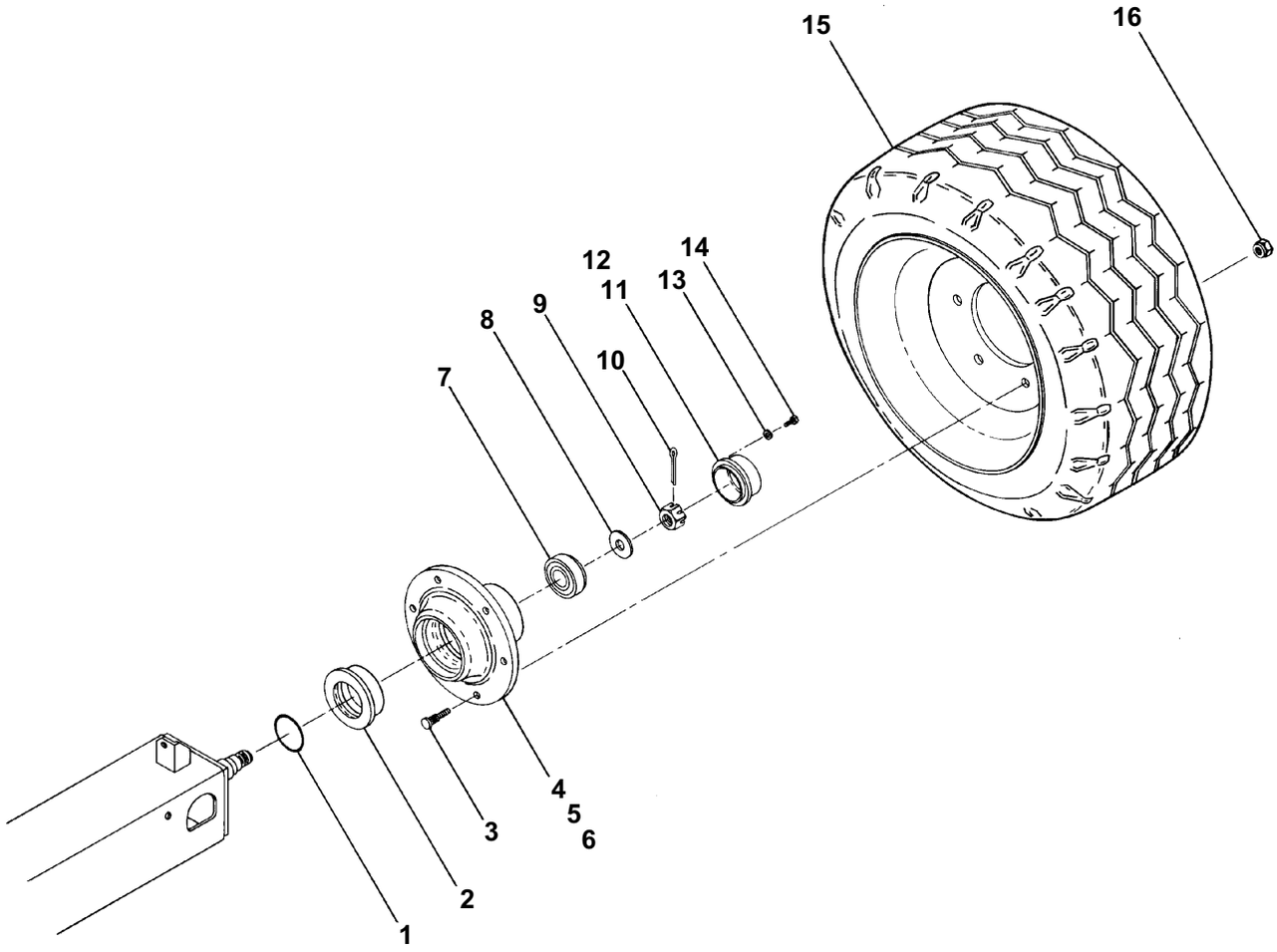

Note: Do not mix tire brands or sizes on any one machine

AWM00216

View thousands of Crane Specifications on FreeCraneSpecs.com
https://truckmanualshub.com

Lift and swing

item	part no	qty	description
1	0111299	1	Centerpost and fittings - (see page 2-40 for parts breakdown)
2	0070472	1	Key
3	0070256	1	Adapter plate, centerpost
4	5590003	1	Retaining ring
5	987159	4	Washer 5/8 medium lock
6	5560051	4	Capscrew 5/8-11 self locking
7	0110837	1	Swing drive - (see page 1-20 for parts breakdown)
8	0110343	1	Mount plate - (required for Fairfield swing drive only)
9	5570008	1	Air vent
10	0110681	4	Capscrew 5/8-11 drilled head
11	0070033	2	Pin lock
12	0110169	1	1/2 inch hydraulic tube
13	5560170	4	Washer 3/4 hard flat ASTM-F436
14	5560100	4	Capscrew 3/4-10 self locking socket head
15	0110942	1	Adjustment ring, Fairfield swing drive
	0110781	1	Adjustment ring, Gear Products swing drive
16	984449	6	Nut 5/8 hex jam
17	5560022	6	Adjustment bolt
18	0110168	1	Lift cylinder - (see hydraulics section for parts breakdown)
19	0110341	1	Pin, lift cylinder base end to turntable
20	0110235	2	Pin lock
21	0110237	1	Pin, base boom to lift cylinder rod end
22	0110236	1	Pin, master level cylinder rod end
23	0070473	4	Capscrew 5/16-18 drilled head
24	9980012	1	.040 inch diameter stainless steel safety lockwire - (sold in one pound can)
25	0070007	1	Cylinder, master level - (see hydraulics section for parts breakdown)
26	0070442	1	Pin, master level cylinder base end to turntable
27	7720302	1	Reducer bushing

View thousands of Crane Specifications on FreeCraneSpecs.com
https://truckmanualshub.com

Lift and swing

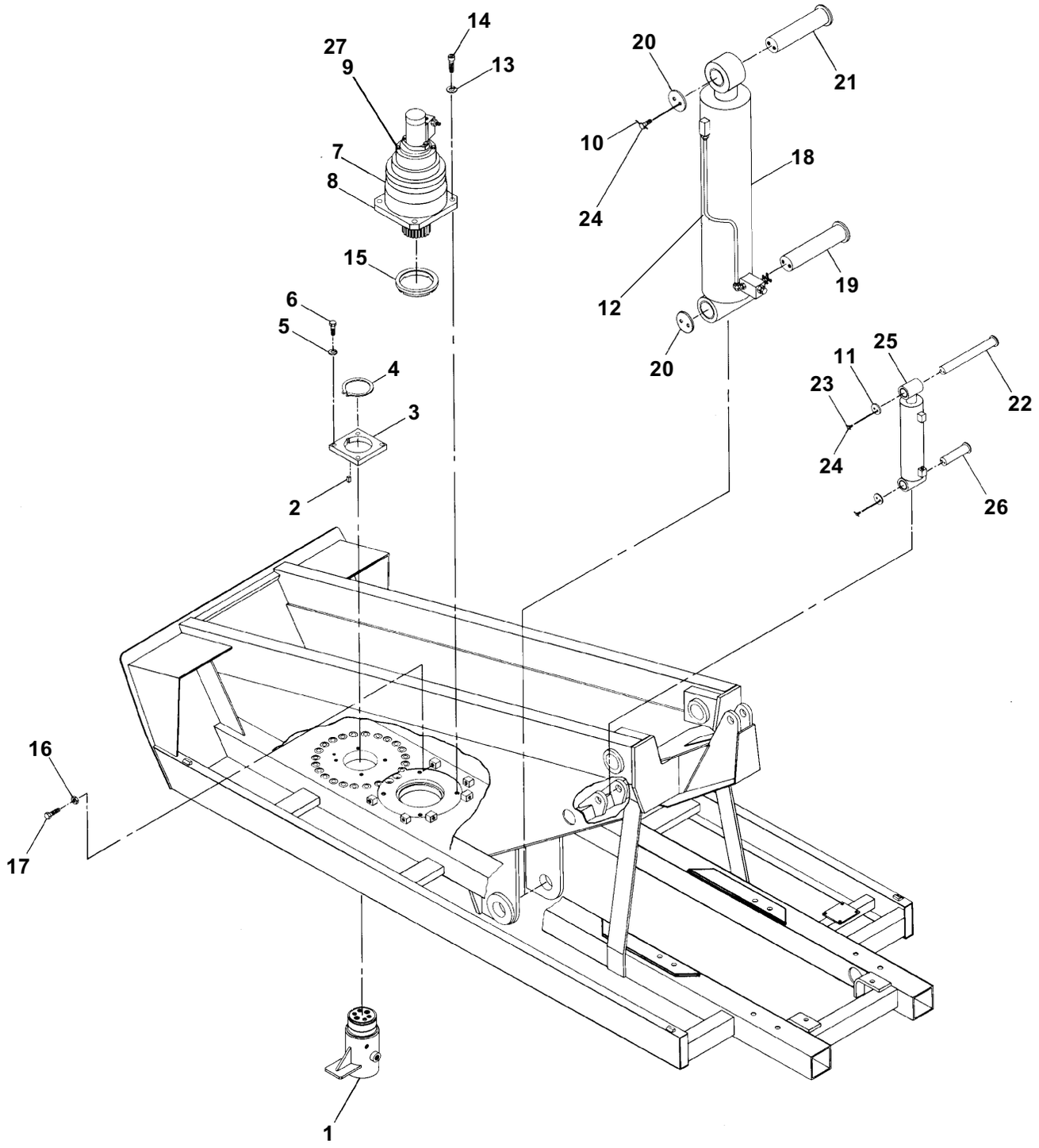

View thousands of Crane Specifications on FreeCraneSpecs.com
https://truckmanualshub.com

Swing drive

item	part no	qty	description
	0110837	1	Swing drive
1	0110805	1	Swing drive, Fairfield - (see page 1-80 for parts breakdown)
	0110780	1	Swing drive, Gear Products - (see page 1-82 for parts breakdown)
2	0110985	1	Swing drive brake - (see page 1-84 for parts breakdown)
3	6030017-99	1	Motor, swing drive
	0071089	1	Seal repair kit, TRW motor
	8230073	1	Seal repair kit, White motor
4	6010216	1	Motion control valve, turntable swing - (see page 2-76 for parts breakdown)
5	0112272	1	Tube and fitting
6	0112418	2	Elbow 90°
7	0112421	2	Capscrew 1/2-13 x 1-1/4 inch long socket head
8	0112422	2	Washer 1/2 split ring lock
9	0112423	4	Capscrew 5/16-18 x 3-1/2 inch long hex head grade 5
10	0112424	4	Washer 5/16 medium lock plated
11	7190005	1	Gasket, swing drive motor

View thousands of Crane Specifications on FreeCraneSpecs.com
https://truckmanualshub.com/

Swing drive

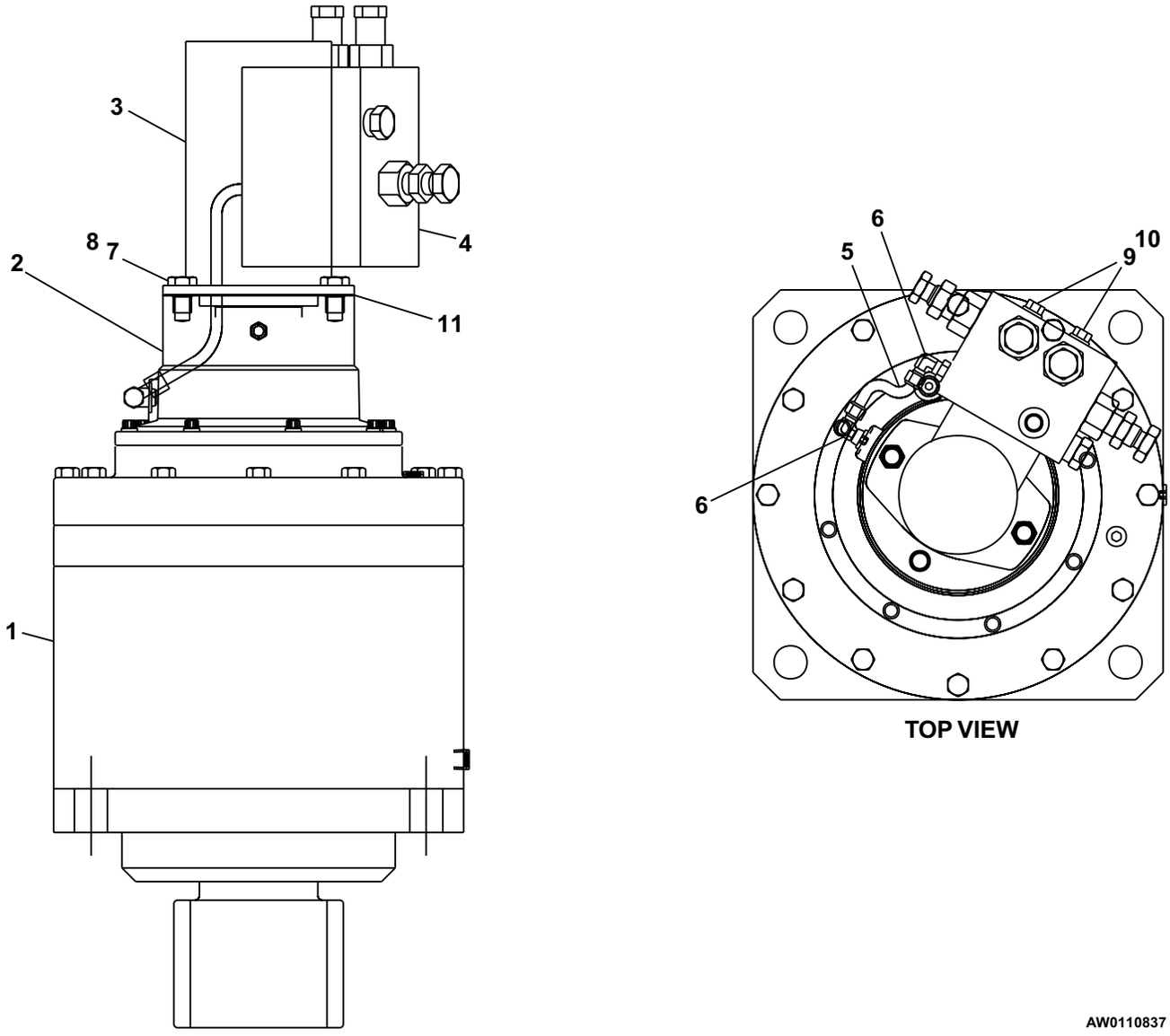

View thousands of Crane Specifications on FreeCraneSpecs.com

Fuel tank

item	part no	qty	description
1	0080030	1	Fuel tank, 40 gallon capacity - (includes cap and fuel gauge, item 6)
	9940001	1	Replacement cap, fuel tank
2	0110358	1	Fuel tank support
3	970449	3	Capscrew 3/8-16 x 3/4 inch long hex head grade 5
4	987119	7	Washer 3/8 medium lock
5	0110539	1	Fuel tank spacer
6	0070483	1	Fuel gauge - (includes gauge lens)
	8180014	1	Replacement gauge lens
7	970469	8	Capscrew 3/8-16 x 1 inch long hex head grade 5
8	984109	4	Nut 3/8-16 hex
9	970029	4	Capscrew 1/4-20 x 3/4 inch long hex head grade 5
10	0071940	2	Fuel tank strap
11	987099	4	Washer 1/4 medium lock
12	984049	4	Nut 1/4-20 hex
13	5560033	6	Nut 3/8-16 self locking
14	970589	2	Capscrew 3/8-16 x 4-1/2 inch long hex head grade 5
15	7714202	1	Pipe plug 1/4 NPT square head

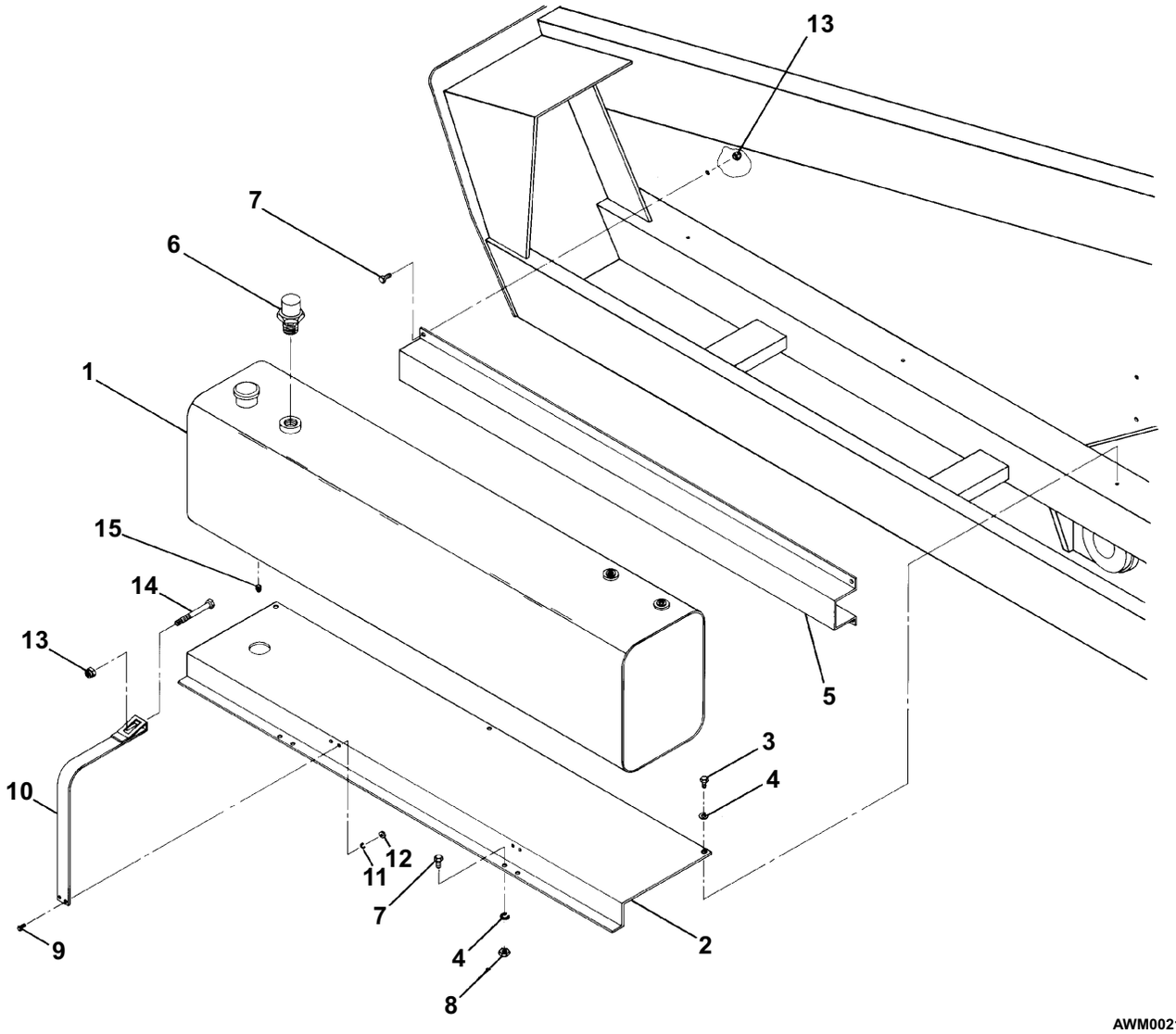

View thousands of Crane Specifications on FreeCraneSpecs.com
https://truckmanualshub.com

Hydraulic oil reservoir mounting

item	part no	qty	description
1	0110364	1	Hydraulic oil reservoir - (see page 2-32 for parts breakdown)
2	5090007	1	Liquid level gauge with thermometer
3	0110362	2	Mount strap, hydraulic oil reservoir
4	970029	4	Capscrew 1/4-20 x 3/4 inch long hex head grade 5
5	987099	4	Washer 1/4 medium lock
6	984069	4	Nut 1/4-20 hex
7	7714304	1	Pipe plug 1/4 NPT square head
8	0110361	1	Support, hydraulic oil reservoir
9	970449	4	Capscrew 3/8-16 x 3/4 inch long hex head grade 5
10	987119	4	Washer 3/8 medium lock
11	970469	7	Capscrew 3/8-16 x 1 inch long hex head grade 5
12	984109	4	Nut 3/8-16 hex
13	5560033	5	Nut 3/8-16 self locking
14	970629	2	Capscrew 3/8-16 x 5 inch long hex head grade 5
15	0110363	1	Spacer, hydraulic oil reservoir

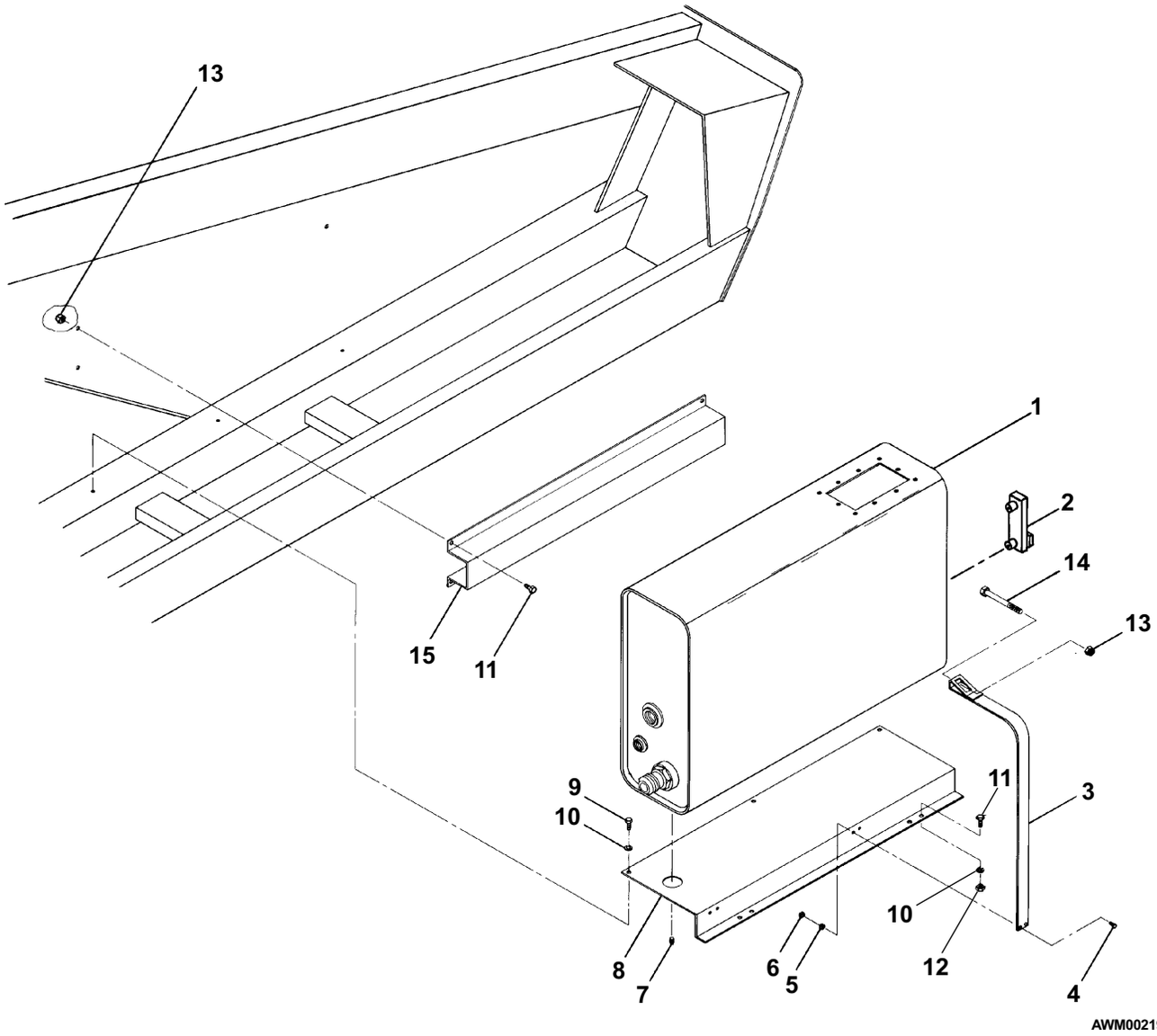

View thousands of Crane Specifications on FreeCraneSpecs.com
https://truckmanualshub.com/

Booms, base end

item	part no	qty	description
1	0111897	1	Booms and hose carrier - (see page 1-27 for parts breakdown)
2	0110238	1	Pin, base boom to turntable
3	5560004	1	Nut 1/4-20 self locking
4	5093002	1	Hose clamp
5	0070440	1	Pin, link to turntable
6	0110235	1	Pin lock
7	9070033	1	Pin lock
8	9980012	1	.040 inch diameter stainless steel safety lockwire - (sold in one pound can)
9	0070473	2	Capscrew 5/16-18 drilled head
10	987109	2	Washer 5/16 medium lock
11	0110681	2	Capscrew 5/8-11 drilled head
12	987159	2	Washer 5/8 medium lock
13	5093012	1	Clamp
14	5093010	5	Clamp
15	5090009	1	Clamp
16	970029	5	Capscrew 1/4-20 x 3/4 inch long hex head grade 5
17	986019	5	Washer 1/4 medium flat
18	987099	5	Washer 1/4 medium lock
19	970449	3	Capscrew 3/8-16 x 3/4 inch long hex head grade 5
20	986299	3	Washer 3/8 medium flat
21	987119	3	Washer 3/8 medium lock

View thousands of Crane Specifications on FreeCraneSpecs.com
https://truckmanualshub.com/

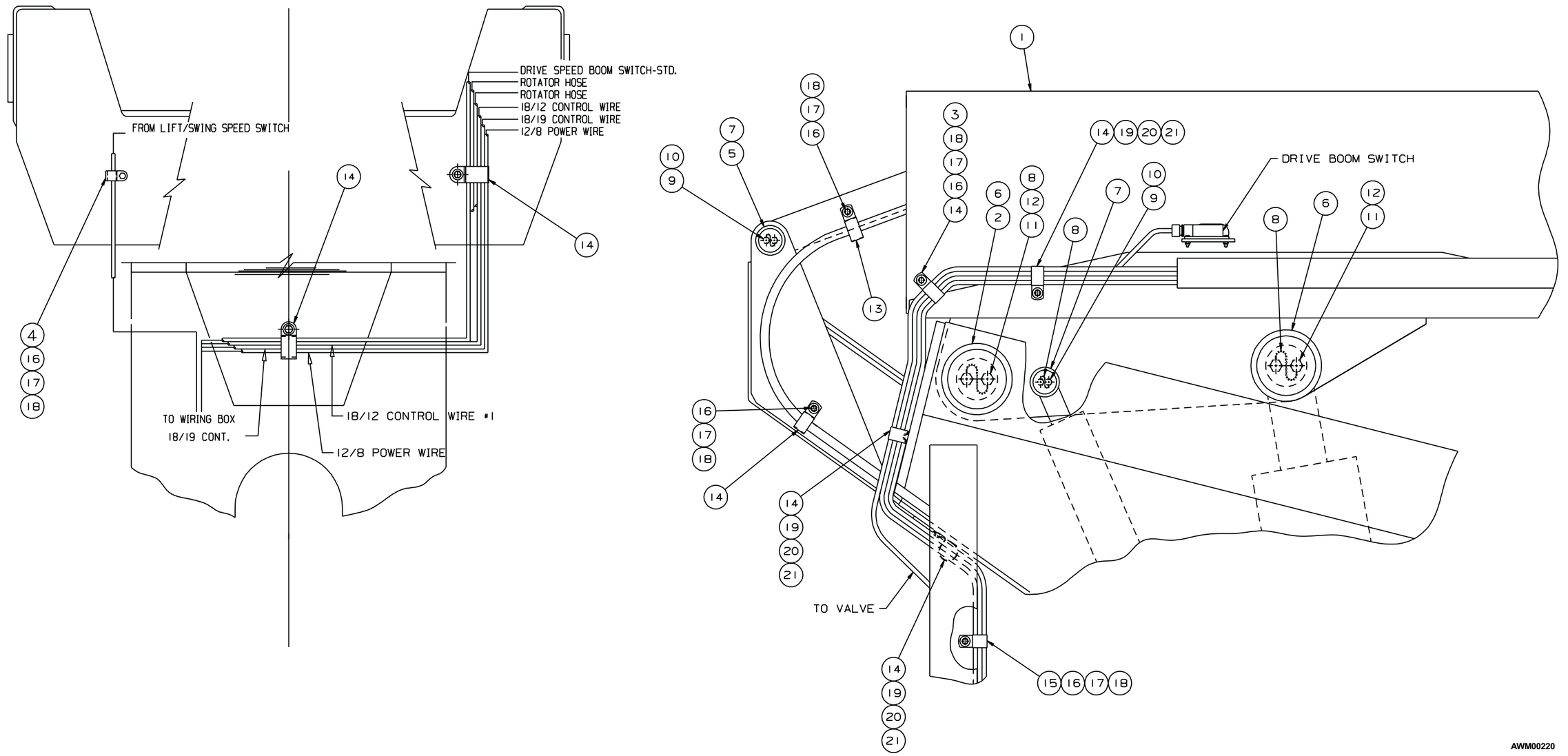

TITLE	Booms, base end
	Snorkel model TB 80
DWG. AWM00220	

View thousands of Crane Specifications on FreeCraneSpecs.com
https://truckmanualshub.com/

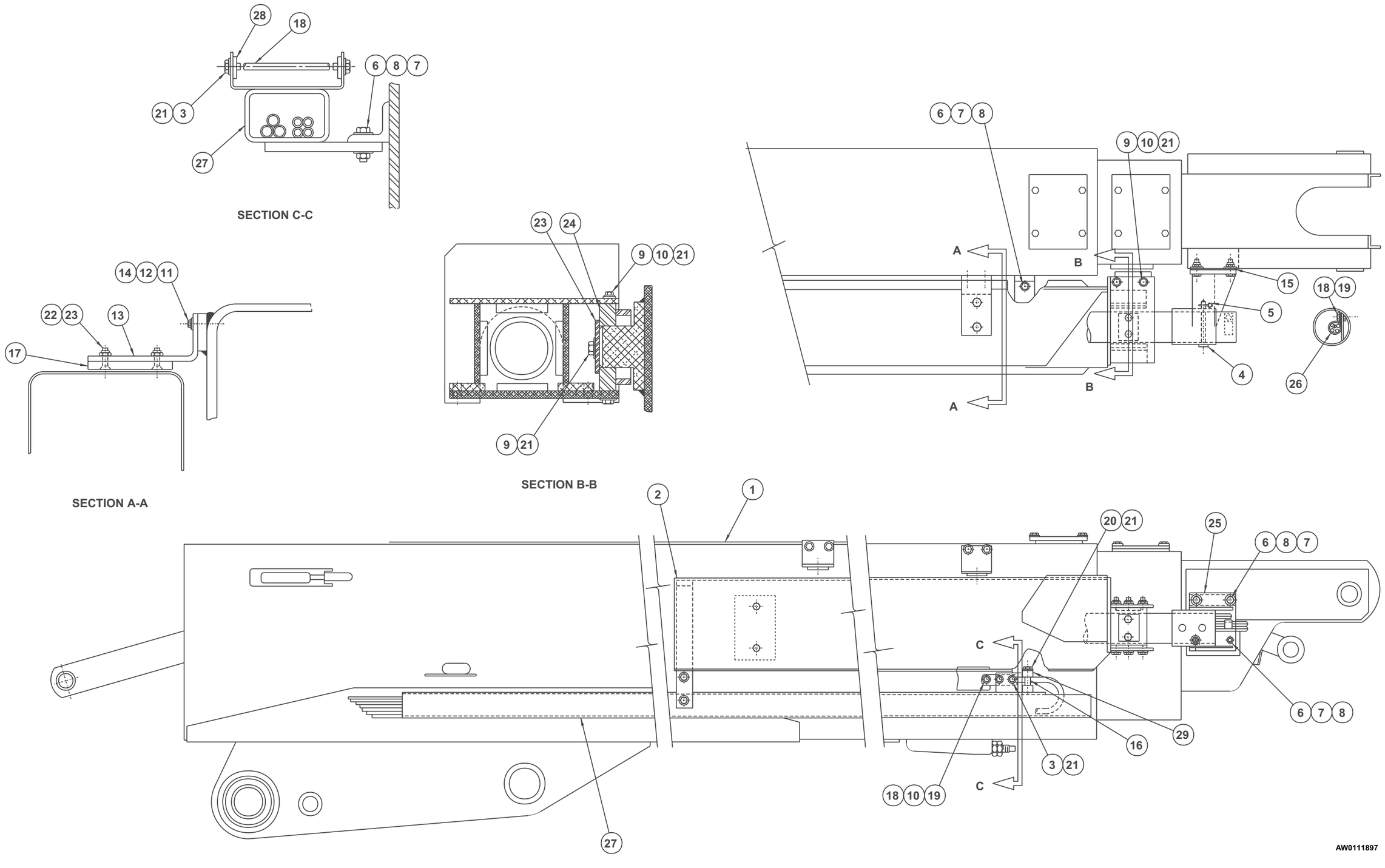

Snorkel INTERNATIONAL

TITLE Booms and hose carrier

Snorkel model TB 80

View thousands of Crane Specifications on FreeCraneSpecs.com
https://truckmanualshub.com/

Booms and hose carrier

item	part no	qty	description
	0111897	1	Booms and hose carrier
1	0111896	1	Booms - (see page 1-29 for parts breakdown)
2	0111951	1	Hose carrier - (see page 1-37 for parts breakdown)
3	970429	4	Capscrew 3/8-16 x 1/2 inch long hex head grade 5
4	0072105	1	Clevis pin
5	5560014	1	Hairpin clip pin
6	970909	8	Capscrew 1/2-13 x 1-1/2 inch long hex head grade 5
7	5560039	8	Nut 1/2-13 self locking
8	986359	8	Washer 1/2 medium flat
9	970469	6	Capscrew 3/8-16 x 1 inch long hex head grade 5
10	986299	6	Washer 3/8 medium flat
11	970369	6	Capscrew 5/16-18 x 1 inch long hex head grade 5
12	987109	6	Washer 5/16 medium lock
13	0072951	2	Guide bar
14	986019	6	Washer 1/4 medium flat
15	0111120	2	Spacer
16	0110581	2	Spacer
17	0070029	2	Slide pad
18	5560686	1	Capscrew 3/8-16 x 6 inch long hex head grade 5
19	5560033	6	Nut 3/8-16 self locking
20	970509	2	Capscrew 3/8-16 x 2 inch long hex head grade 5
21	987119	12	Washer 3/8 medium lock
22	972489	4	Capscrew 3/8-16 x 1-1/2 inch long socket flat head
23	0070506	1	Pin lock
24	0110602	1	Pin joint plate
25	0112071	1	Tube bracket
26	5093027	1	Clamp
27	0110840	1	Support tube
28	0110592	2	Mounting lug
29	0110590	1	Tube clamp, upper

View thousands of Crane Specifications on FreeCraneSpecs.com
View thousands of Crane Specifications on FreeCraneSpecs.com
https://truckmanualshub.com/

View thousands of Crane Specifications on FreeCraneSpecs.com
https://truckmanualshub.com

Booms

item	part no	qty	description
	0111896	1	Booms, complete
1	0110891	1	Base boom
2	0110630	1	Intermediate boom
3	0110631	1	Tip boom
4	0110628	1	Extension cylinder - (see hydraulics section for parts breakdown)
5	0071486	1	Cylinder, slave level - (see hydraulics section for parts breakdown)
6	0110661	1	Pin, slave level cylinder to tip boom
7	0070033	2	Pin lock
8	9980012	1	.040 inch diameter stainless steel safety lockwire - (sold in one pound can)
9	0110699	1	Pad plate
10	0080293	8	Slide pad
11	0090444	2	Slide pad spacer
12	0070300	22	Slide pad shim, .030 inch thick
13	0072681	2	Slide pad mount
14	0110700	1	Pad plate
15	0070485	2	Slide pad spacer
16	0110547	1	Conduit
17	0110665	2	Wire rope anchor
18	0110186	2	Wire rope, retract
19	0110703	4	Slide pad
20	0110705	1	Cable support, left hand
21	0060089	2	Slide pad
22	0110190	2	Pin, cylinder anchor
23	0110191	2	Cylinder anchor
24	0110670	1	Pin, cable retainer
25	0110671	1	Pin, retract sheave
26	2502032	1	Bearing
27	988179	2	Cotter pin 1/8 inch diameter x 1 inch long
28	0071342	1	Shim
29	0111700	2	Cable sheave
30	0111322	2	Sheave cage
31	0111888	1	Boom switch, drive speed - (see page 3-55 for parts breakdown)
32	0071216	1	Guard, boom switch
33	0071921	2	Spacer, 5/8 inch thick
34	0071922	2	Spacer, 1-1/4 inch thick
35	0151860	2	1/2 inch hydraulic hose
36	5093000	1	Clamp
37	0110704	1	Cable support, right hand
38	0080522	1	1/2 inch hydraulic hose
39	0111889	1	Boom switch, lift/swing speed - (see page 3-56 for parts breakdown)
40	5093004	3	Clamp
41	2502028	2	Bearing
42	5560331	4	Capscrew 1/4-20 x 1 inch long socket flat head
43	5560004	4	Nut 1/4-20 self locking
44	0070473	4	Capscrew 5/16-18 drilled head
45	970259	6	Capscrew 5/16-18 x 1 inch long hex head grade 5
46	970269	6	Capscrew 5/16-18 x 1-1/4 inch long hex head grade 5
47	5560031	12	Nut 5/16-18 self locking
48	987109	12	Washer 5/16 medium lock
49	986269	12	Washer 5/16 medium flat
50	5560679	16	Capscrew 3/8-16 x 5/8 inch long socket flat head
51	972449	22	Capscrew 3/8-16 x 3/4 inch long socket flat head
52	978409	6	Capscrew 3/8-16 x 1-1/2 inch long socket flat head
53	5560644	16	Capscrew 3/8-16 x 1-1/4 inch long socket flat head
54	0072682	2	Slide pad
			Parts list continued on next page

View thousands of Crane Specifications on FreeCraneSpecs.com

Booms

item	part no	qty	description
55	5560680	11	Capscrew 3/8-16 x 1-3/4 inch long socket flat head
56	5560146	2	Anchor bolt
57	5560681	8	Capscrew 3/8-16 x 2-1/4 inch long socket flat head
58	5560682	3	Capscrew 3/8-16 x 2-1/2 inch long socket flat head
59	5560683	10	Capscrew 3/8-16 x 5/8 inch long hex head grade 5
60	970449	18	Capscrew 3/8-16 x 3/4 inch long hex head grade 5
61	970469	8	Capscrew 3/8-16 x 1 inch long hex head grade 5
62	0111317	1	Cable retainer
63	972489	6	Capscrew 3/8-16 x 1-1/2 inch long hex head grade 5
64	5560033	50	Nut 3/8-16 self locking
65	0072683	2	Slide pad spacer, 1/4 inch thick
66	987119	36	Washer 3/8 medium lock
67	986299	48	Washer 3/8 medium flat
68	5560005	2	Washer 3/8 medium flat
69	5560053	4	Nut 5/8-11 self locking
70	0110005	2	Spacer
71	5560649	6	Machine screw #10-24 x 1 inch long truss head
72	986009	6	Washer #10 medium flat
73	984049	6	Nut #10-24 hex
74	984469	4	Nut 3/4-10 hex jam
75	5560170	4	Washer 3/4 hard flat ASTM-F436
76	5074401	2	Bulkhead locknut
77	5034501	2	Bulkhead straight thread 90° elbow
78	987099	4	Washer 1/4 medium lock
79	0070768	2	1/4 inch hydraulic hose
80	970009	4	Capscrew 1/4-20 x 1/2 inch long hex head grade 5
81	0110695	1	Slide pad
82	0070369	4	Slide pad
83	0110706	6	Slide pad shim, .030 inch thick
84	0110701	2	Spacer
85	0110696	1	Slide pad
86	0110702	2	Spacer
87	0110707	6	Slide pad shim, .090 inch thick
88	0090141	10	Slide pad shim, .090 inch thick
89	2504857	2	Bearing
90	5560684	4	Washer 7/8 flat ASTM-F436
91	5560685	4	Nut 7/8-9 hex jam
92	0110976	2	Spacer
93	0110977	2	Spacer
94	3040262	2	Conduit coupler 1/2 inch
95	3040187	2	Connector
96	0073111	2	Slide pad spacer, 1/8 inch thick
97	0080294	2	Slide pad
98	0070043	2	Slide pad shim, .030 inch thick
99	0073343	2	Slide pad shim, .090 inch thick
100	5560126	20	Threaded insert 3/8-16 thread
101	2500035	2	Bearing
102	0111324	2	Cable guide
103	0111314	1	Complete slide pad kit - (kit includes all boom slide pads and mounting hardware)

View thousands of Crane Specifications on FreeCraneSpecs.com
https://truckmanualshub.com/

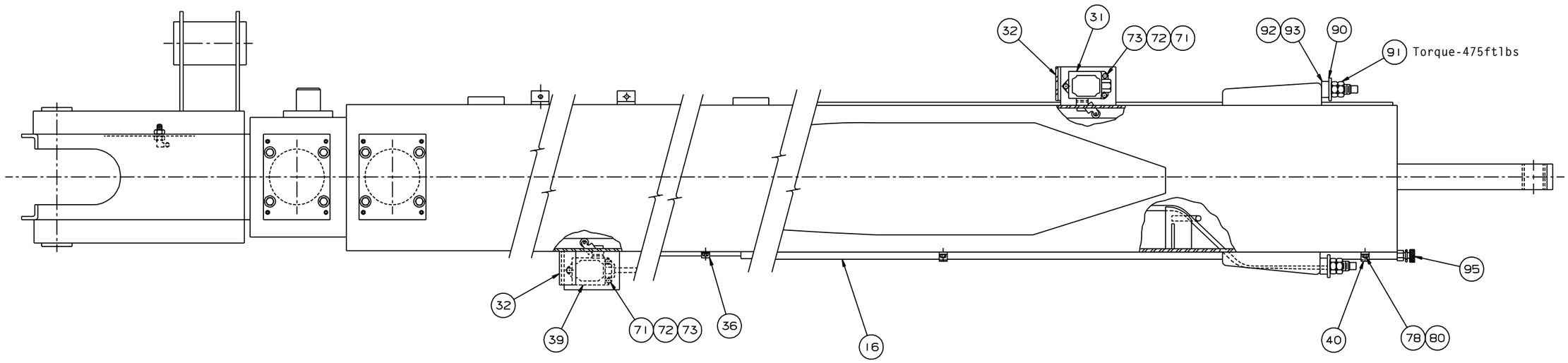

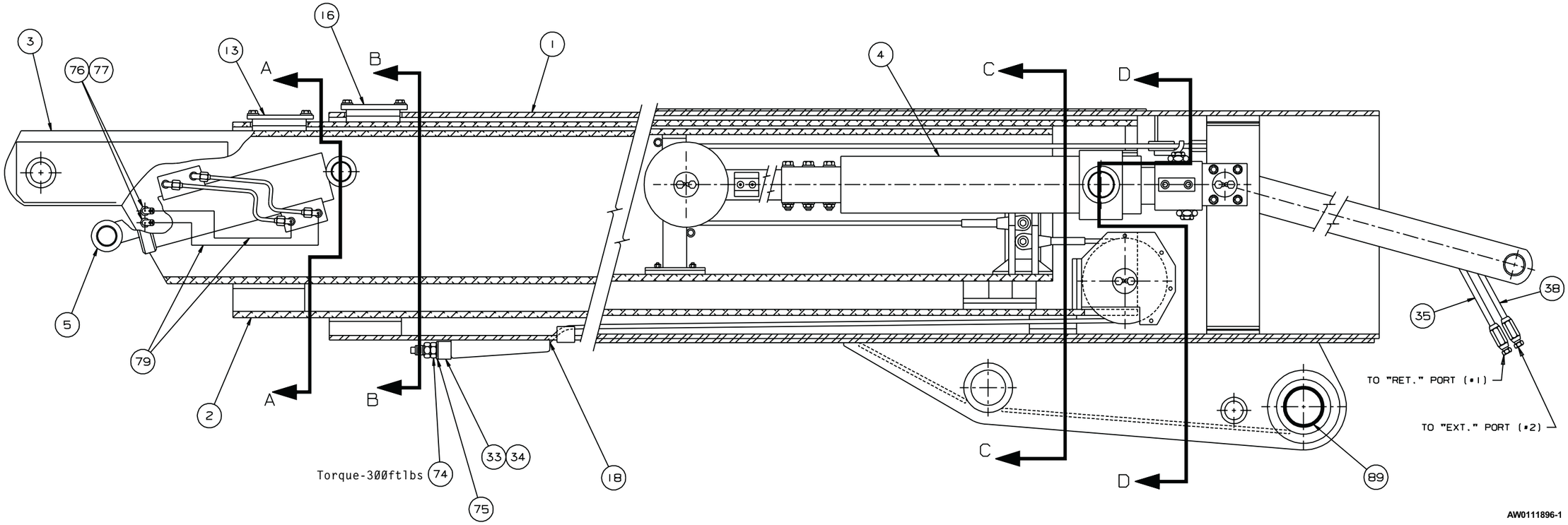

DWG. 0111896-1	TITLE Booms sheet 1 Snorkel model TB 80	OmniQuip Snorkel INTERNATIONAL

View thousands of Crane Specifications on FreeCraneSpecs.com
https://truckmanualshub.com/

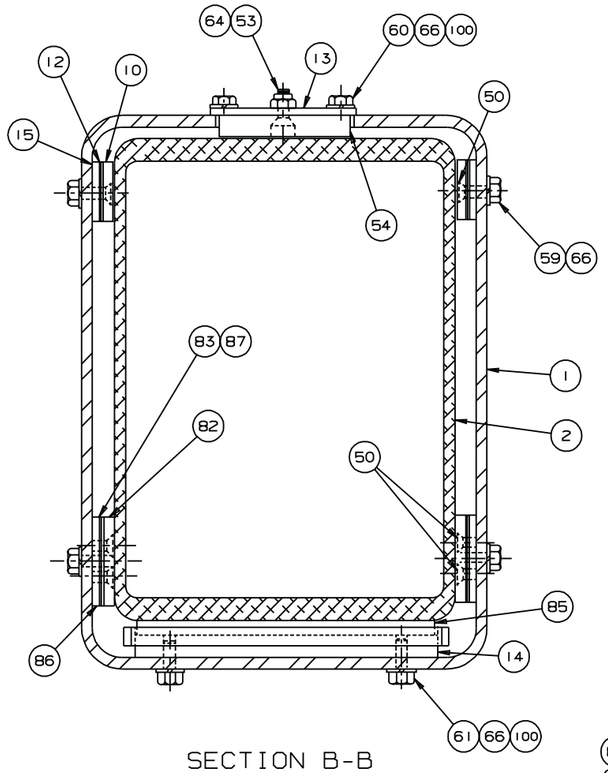

SECTION B-B

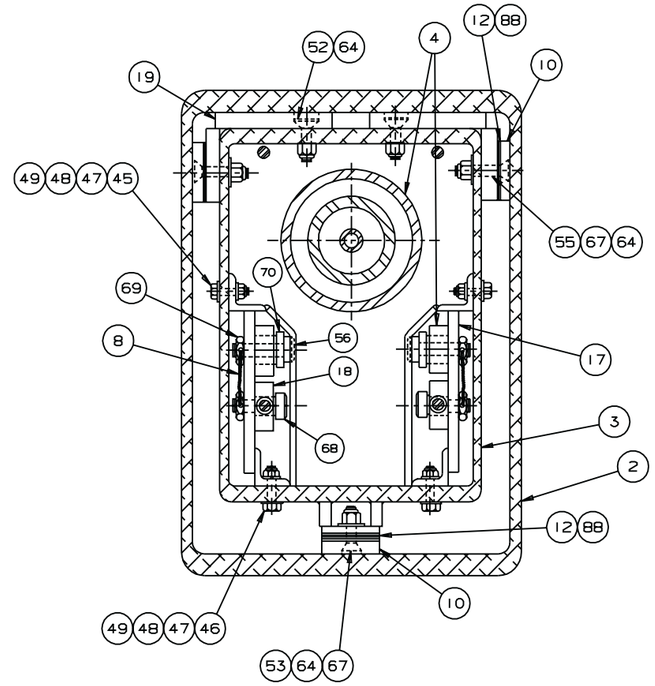

SECTION C-C

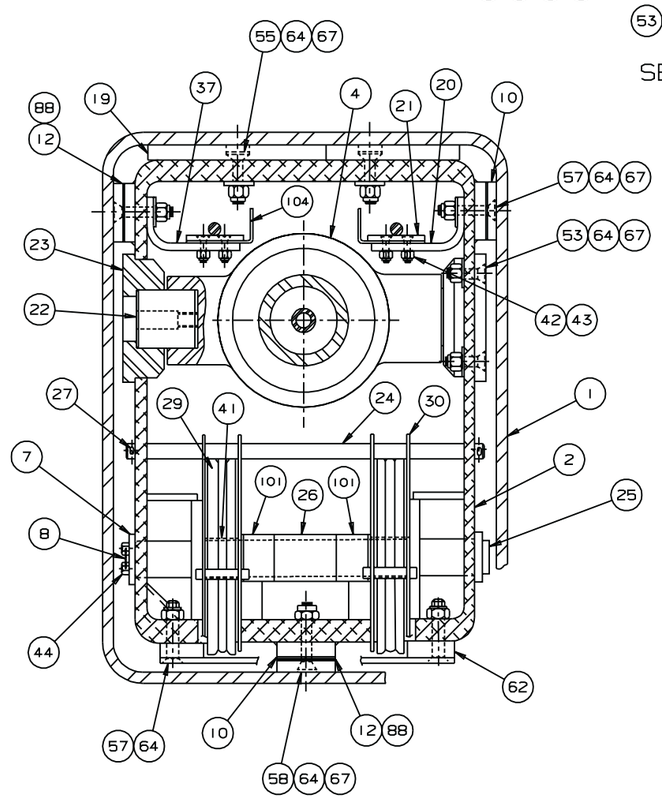

SECTION D-D

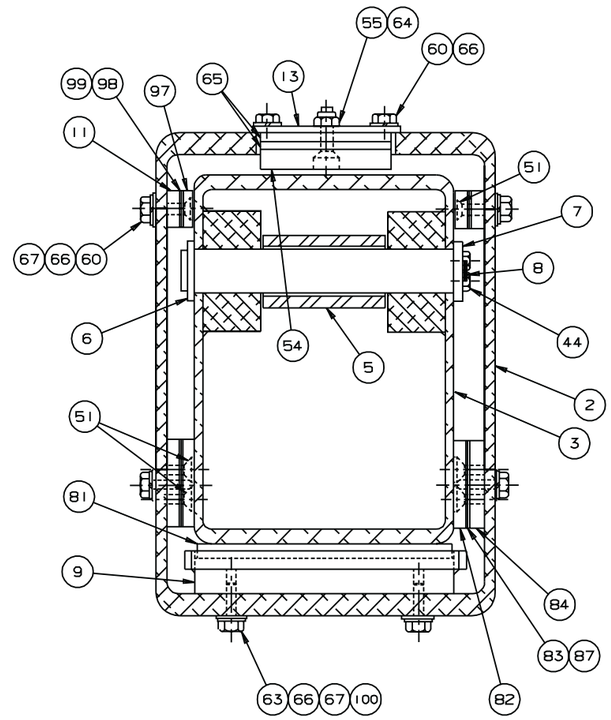

SECTION A-A

AW0111896-2

Snorkel INTERNATIONAL	TITLE Booms sheet 2 Snorkel model TB 80	
Page 1 - 32		DWG. 0111896-2

View thousands of Crane Specifications on FreeCraneSpecs.com
View thousands of Crane Specifications on FreeCraneSpecs.com
https://truckmanualshub.com/

View thousands of Crane Specifications on FreeCraneSpecs.com
https://truckmanualshub.com/

Extension cylinder

item	part no	qty	description
	0110628	1	Extension cylinder
1	0111822	1	Support bracket, base end
2	0110623	1	Cylinder, extension - (see hydraulics section for parts breakdown)
3	0110647	1	Support bracket, rod end
4	971009	3	Capscrew 1/2-13 x 4 inch long hex head grade 5
5	5560168	6	Washer 1/2 hard flat ASTM-F436
6	5560039	11	Nut 1/2-13 self locking
7	970919	8	Capscrew 1/2-13 x 1-3/4 inch long socket flat head
8	0111701	2	Sheave, extend cable
9	0112064	2	Wire rope, extend
10	0110645	1	Pin, extend sheave
11	0070033	2	Pin lock
12	0070473	4	Capscrew 5/16-18 drilled head
13	5560005	2	Anchor bolt
14	9980012	1	.040 inch diameter stainless steel safety lockwire - (sold in one pound can)
15	0191070	1	Plate, slide pad mounting
16	2502028	2	Bearing
17	0191071	1	Slide pad
18	2502432	2	Bearing
19	5560254	5	Thrust washer
20	0110166	1	Link
21	0070141	5	Slide pad
22	0071341	6	Slide pad shim, .063 inch thick
23	972449	10	Capscrew 3/8-16 x 3/4 inch long socket flat head
24	0070029	2	Slide pad
25	0070838	2	Slide pad shim, .030 inch thick
26	0071272	2	Slide pad shim, .063 inch thick
27	5560644	10	Capscrew 3/8-16 x 1-1/4 inch long socket flat head
28	5560033	10	Nut 3/8-16 self locking
29	0070440	1	Link pin
30	5065709	2	Straight thread adapter
31	5037006	2	Swivel nut 90° elbow

View thousands of Crane Specifications on FreeCraneSpecs.com
https://truckmanualshub.com/

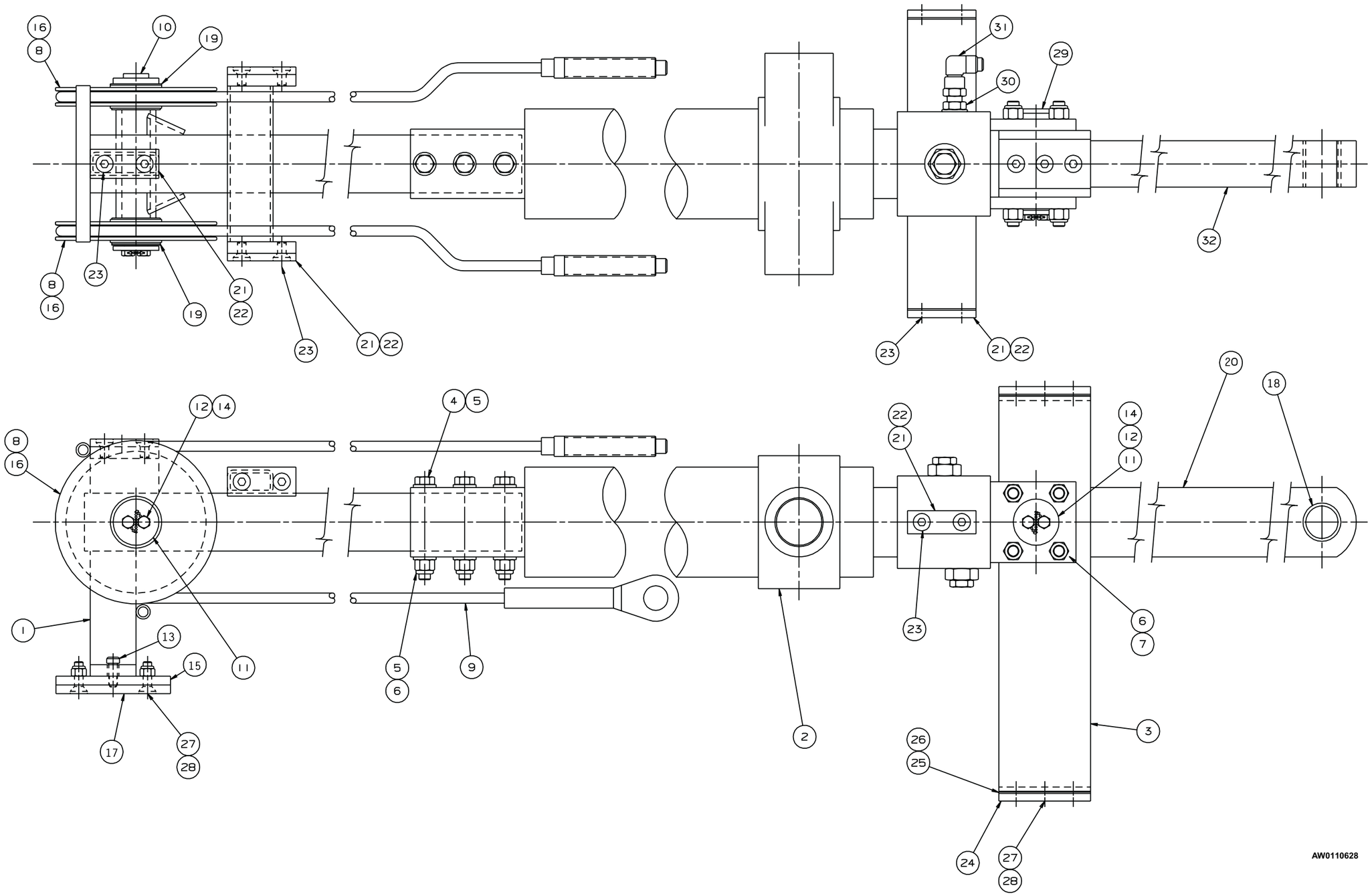

TITLE Extension cylinder	Snorkel INTERNATIONAL
DWG. 0110628	Snorkel model TB 80
	Page 1 - 35

View thousands of Crane Specifications on FreeCraneSpecs.com
https://truckmanualshub.com/

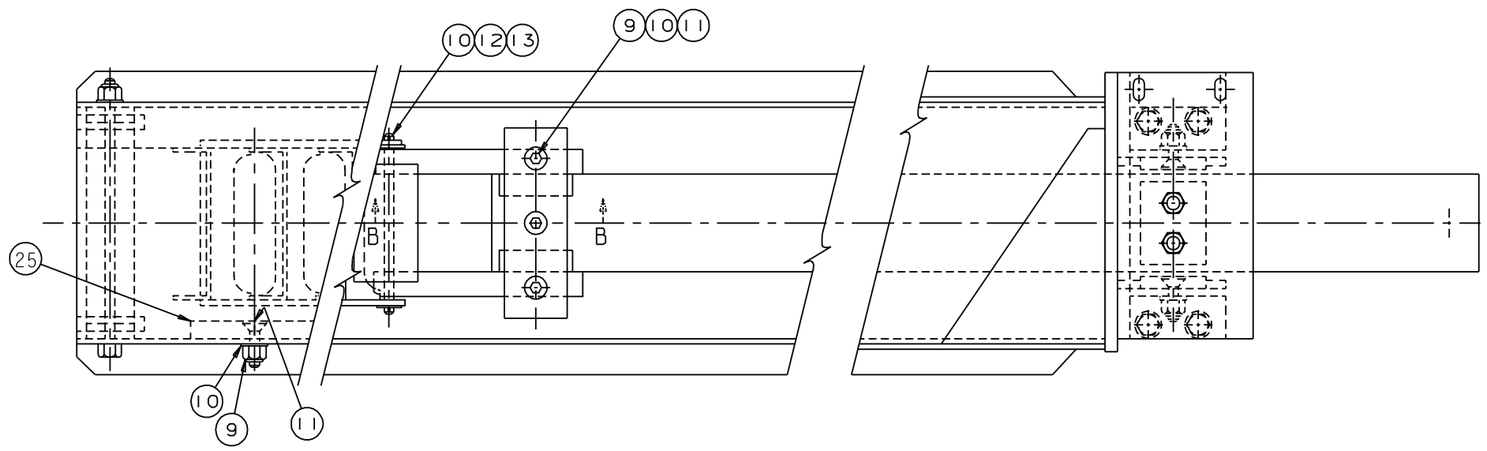

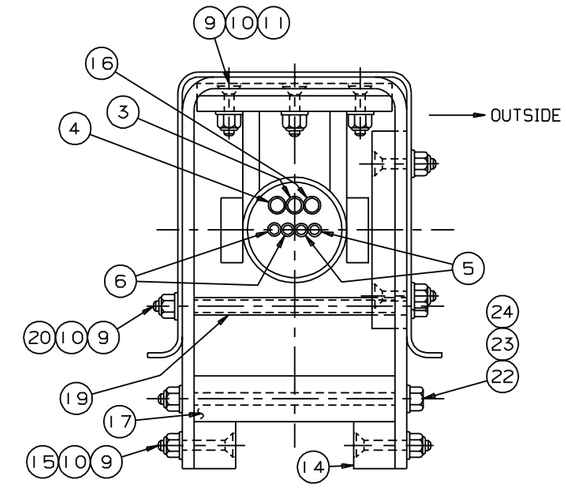

VIEW A-A

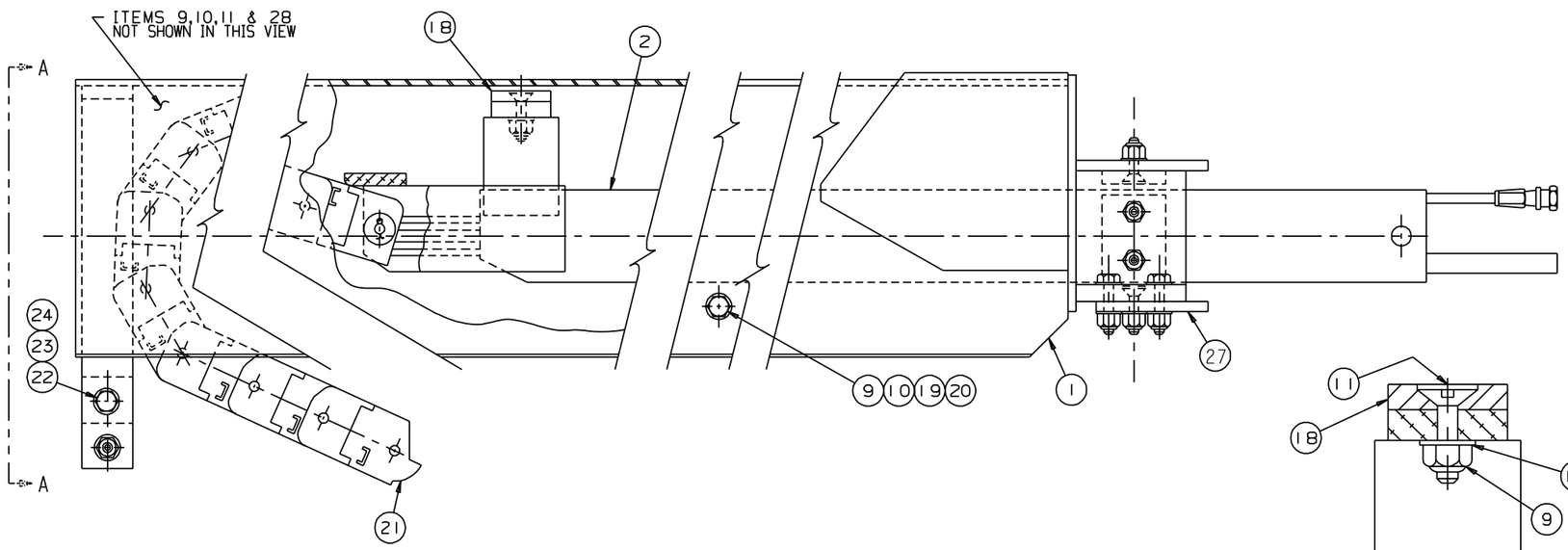

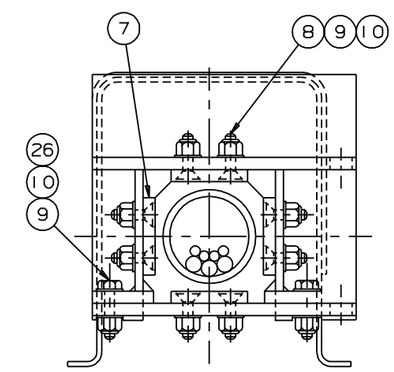

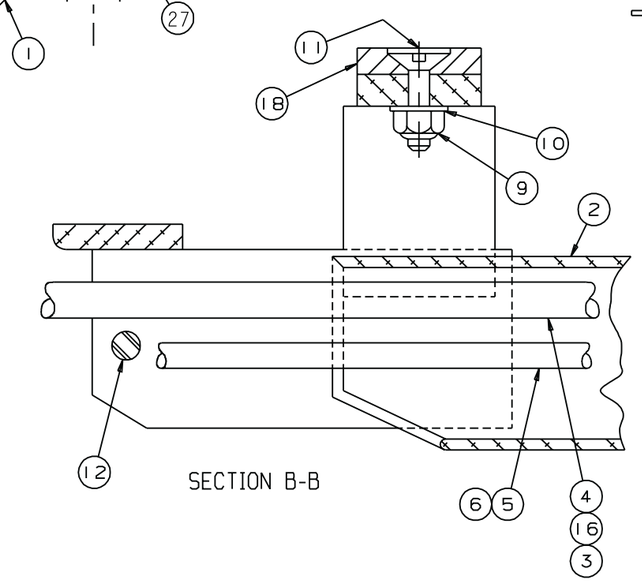

SECTION B-B

AW0111951

Snorkel INTERNATIONAL	TITLE Hose carrier Snorkel model TB 80	DWG. 0111951
Page 1 - 36		

View thousands of Crane Specifications on FreeCraneSpecs.com
https://truckmanualshub.com/

Hose carrier

item	part no	qty	description
	0111951	1	Hose carrier, complete
1	0110206	1	Hose carrier
2	0110571	1	Carrier tube
3	3010009	1	Wire harness, control wire #1, 18 gauge/12 conductor x 100 feet long - (terminals not included)
	3046972		Replacement terminal
4	3010006	1	Wire harness, power wire, 12 gauge/8 conductor x 100 feet long - (terminals not included)
	3044854		Replacement terminal
5	0110219	2	3/16 inch hydraulic hose - (leveling hoses)
6	0111957	2	3/16 inch hydraulic hose - (rotation hoses)
7	0100105	4	Slide pad
8	5560644	8	Capscrew 3/8-16 x 1-1/4 inch long socket flat head
9	5560033	29	Nut 3/8-16 self locking
10	986299	43	Washer 3/8 medium flat
11	978409	5	Capscrew 3/8-16 x 1-1/2 inch long socket flat head
12	0110583	1	Pin
13	988169	2	Cotter pin 1/8 inch diameter x 3/4 inch long
14	0110842	2	Slide pad
15	5560681	2	Capscrew 3/8-16 x 2-1/4 inch long socket flat head
16	3010005	1	Wire harness, control wire #2, 18 gauge/19 conductor x 100 feet long - (terminals not included)
	3046972		Replacement terminal
17	0110841	1	Slide pad
18	0070031	1	Slide pad
19	0110227	10	Spacer
20	970639	10	Capscrew 3/8-16 x 8 inch long hex head grade 5
21	9920017	118	Plastic track link
22	5560687	1	Capscrew 1/2-13 x 8 inch long hex head grade 5
23	986359	2	Washer 1/2 medium flat
24	5560039	1	Nut 1/2-13 self locking
25	0110603	1	Slide pad
26	970529	4	Capscrew 3/8-16 x 2-1/2 inch long hex head grade 5
27	0110610	1	Anchor plate, bottom

View thousands of Crane Specifications on FreeCraneSpecs.com
https://truckmanualshub.com

Platform mounting

item	part no	qty	description
1		1	Platform - (consult factory)
2	0072552	1	Platform rotator - (see page 1-42 for parts breakdown)
3		1	Platform gate - (see page 1-40 for proper platform gate)
4	0070441	1	Pin, slave level cylinder to platform
5	0070446	1	Pin, platform to tip boom
6	0070033	1	Pin lock
7	0070132	1	Pin lock
8	987109	4	Washer 5/16 medium lock
9	0070473	4	Capscrew 5/16-18 drilled head
10	9980012	1	.040 inch diameter stainless steel safety lockwire - (sold in one pound can)
11	5560039	4	Nut 1/2-13 self locking
12	986359	8	Washer 1/2 medium flat
13	971009	2	Capscrew 1/2-13 x 4 inch long hex head grade 5
14	970909	2	Capscrew 1/2-13 x 1-1/2 inch long hex head grade 5
15	0070874	1	Cover, platform rotator
16	0070351	1	Bearing spacer
17	2502832	2	Bearing

View thousands of Crane Specifications on FreeCraneSpecs.com
https://truckmanualshub.com

Platform mounting

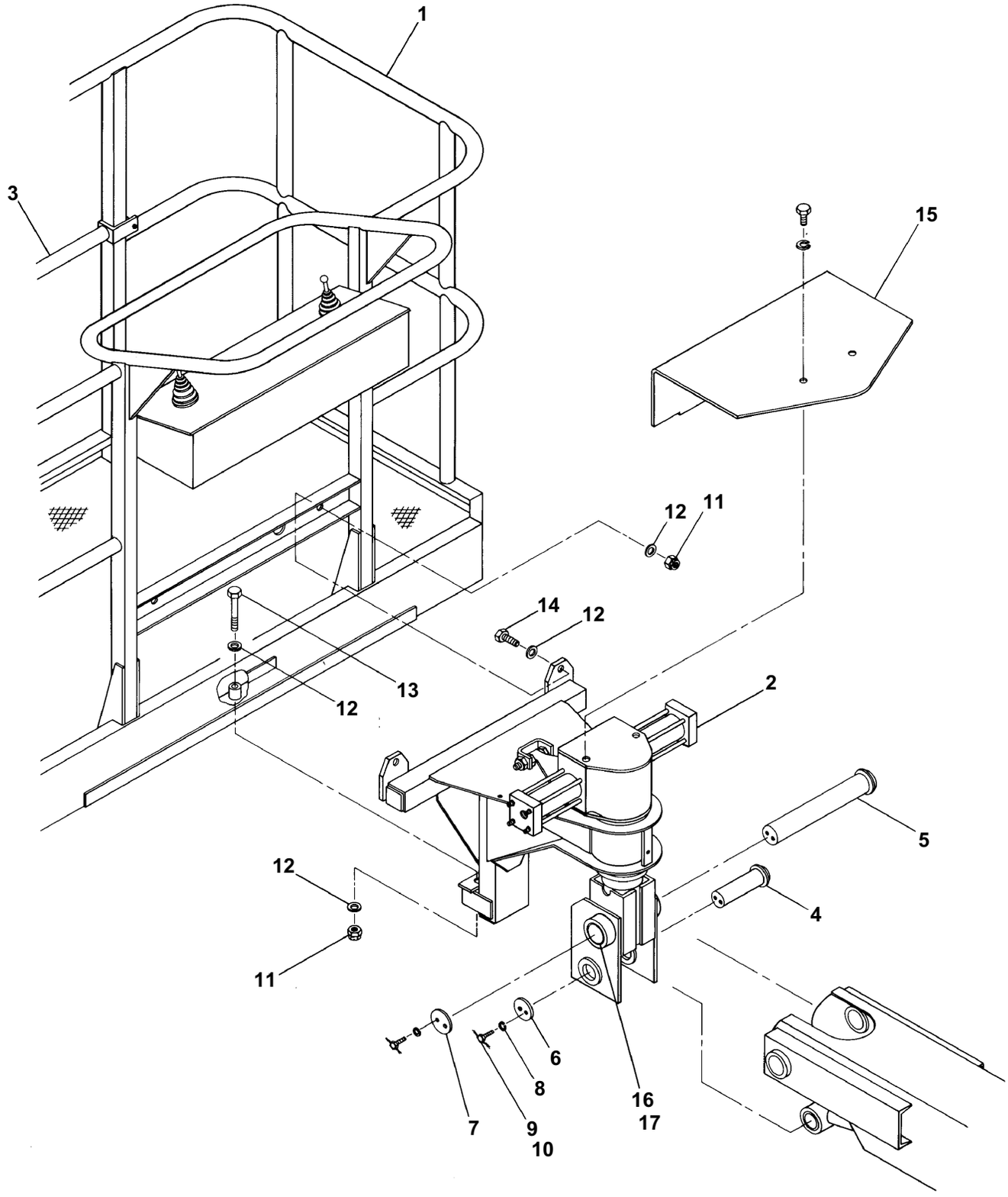

View thousands of Crane Specifications on FreeCraneSpecs.com
https://truckmanualshub.com/

Platform gate

item	part no	qty	description
			Gravity gate for 5 ft and 8 ft steel platforms
1	0071951	1	Gravity gate, steel platform
2	0150509	2	Roller, steel gravity gate
3	0071953	2	Roller spacer, steel gravity gate
4	970529	2	Capscrew 3/8-16 x 2-1/2 inch long hex head grade 5
5	5560033	2	Nut 3/8-16 self locking
			Gravity gate for 5 ft and 8 ft aluminum platforms
	016117728	1	Gravity gate service kit - (kit includes items 6 through 10)
6	0161177	1	Gravity gate, aluminum platform
7	0161182	2	Roller, aluminum gravity gate
8	0161184	2	Roller spacer, aluminum gravity gate
9	970889	2	Capscrew 1/2-13 x 1 inch long hex head grade 5
10	5560039	2	Nut 1/2-13 self locking
			Swinging gate for 5 ft and 8 ft steel platforms
11	0071834	1	Swinging gate, steel platform
12	0322724	1	Pin, gate hinge
13	988179	2	Cotter pin 1/8 inch diameter x 1 inch long
14	986359	2	Washer 1/2 medium flat
15	0071837	1	Spring, torsion
16	2570002	2	Bearing
17	2667500	1	Knob, gate hinge pin
			Swinging gate for 5 ft and 8 ft aluminum platforms
18	0160970	1	Swinging gate, aluminum platform
19	0322724	1	Pin, gate hinge
20	5560056	1	Roll pin 1/8 inch diameter x 1 inch long
21	0071837	1	Spring, torsion
22	2570002	2	Bearing
23	2667500	1	Knob, gate hinge pin
24	0161472	1	Latch stop
25	970099	3	Capscrew 1/4-20 x 5/8 inch long hex head grade 5
26	984529	3	Nut sert 1/4-20
27	987099	2	Washer 1/4 medium lock
28	86019	1	Washer 1/4 medium flat
29	300891	1	Door latch
			Full height swinging gate for 8 ft steel platforms
30	0074468	1	Full height swinging gate, steel platform
31	0322724	1	Pin, gate hinge
32	988179	2	Cotter pin 1/8 inch diameter x 1 inch long
33	986359	2	Washer 1/2 medium flat
34	0071837	1	Spring, torsion
35	2570002	2	Bearing
36	2667500	1	Knob, gate hinge pin
37	300891	1	Door latch
38	984529	3	Nut sert 1/4-20
39	970099	3	Capscrew 1/4-20 x 5/8 inch long hex head grade 5
40	987099	2	Washer 1/4 medium lock
41	986019	1	Washer 1/4 medium flat
42	0181574	1	Latch stop

View thousands of Crane Specifications on FreeCraneSpecs.com
https://truckmanualshub.com

Platform gate

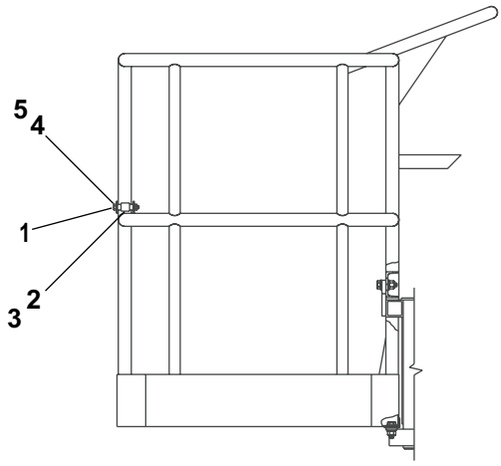

Gravity gate, steel platform

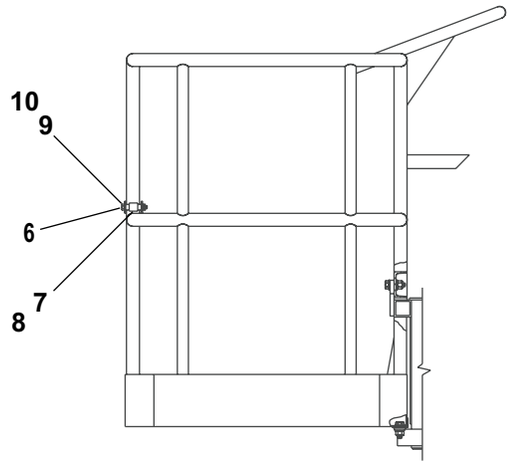

Gravity gate, aluminum platform

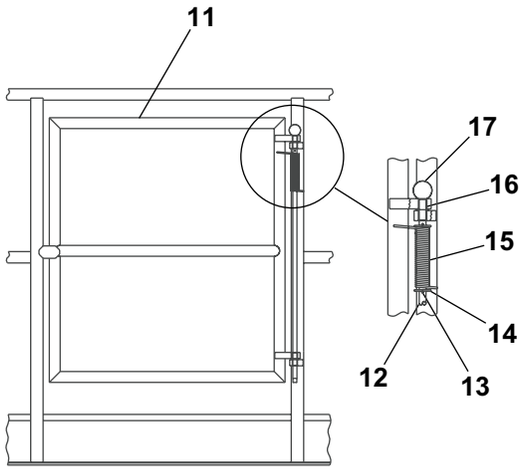

Swinging gate, steel platform

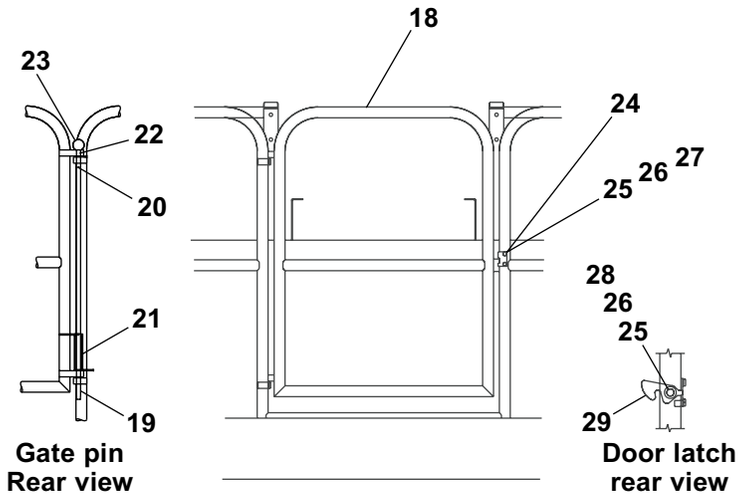

Gate pin
Rear view

Door latch
rear view

Swinging gate, aluminum platform

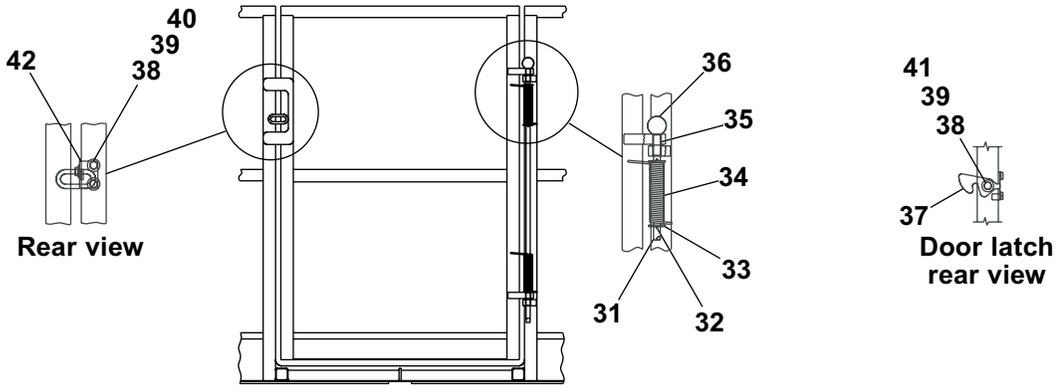

Rear view

Door latch
rear view

Full height swinging gate, steel platform

AWM00207

View thousands of Crane Specifications on FreeCraneSpecs.com
https://truckmanualshub.com/

Platform rotator

item	part no	qty	description
	0072552	1	Platform rotator
1	0072553	1	Pylon, platform rotator - (requires 0072555 collar)
2	0070916	1	Key
3	0072555	1	Collar
4	0072561	1	Thrust bearing
5	2504856	2	Bearing
6	0072562	1	Bearing spacer
7	0072556	1	Mounting frame, platform rotator
8	970919	2	Capscrew 1/2-13 x 1-3/4 inch long hex head grade 5
9	970849	6	Capscrew 1/2-13 x 1-1/4 inch long hex head grade 5
10	987139	6	Washer 1/2 medium lock
11	0072818	1	Torque plate, platform rotator
12	0073783	1	Valve spacer
13	6010628	1	Dual holding valve, platform rotation - (see page 2-70 for parts breakdown)
14	986269	2	Washer 5/16 medium flat
15	987109	4	Washer 5/16 medium lock
16	970349	2	Capscrew 5/16-18 x 2-3/4 inch long hex head grade 5
17	7110157	1	O-ring - (used on Helac rotator only)
	7110348	1	O-ring - (used on Parker rotator only)
18	0070570	1	Platform rotator, Helac - see page 2-77 for parts breakdown
	0110771	1	Platform rotator, Parker - see page 2-78 for parts breakdown)
19	0070132	1	Pin lock
20	0070473	2	Capscrew 5/16-18 drilled head
21	9980012	1	.040 inch diameter stainless steel safety lockwire - (sold in one pound can)
22	0072508	1	Cover plate, platform rotator
23	7110157	1	O-ring - (used on Helac rotator only)
	7110348	1	O-ring - (used on Parker rotator only)
24	984409	2	Nut 1/2-13 hex jam

View thousands of Crane Specifications on FreeCraneSpecs.com
https://truckmanualshub.com/

Platform rotator

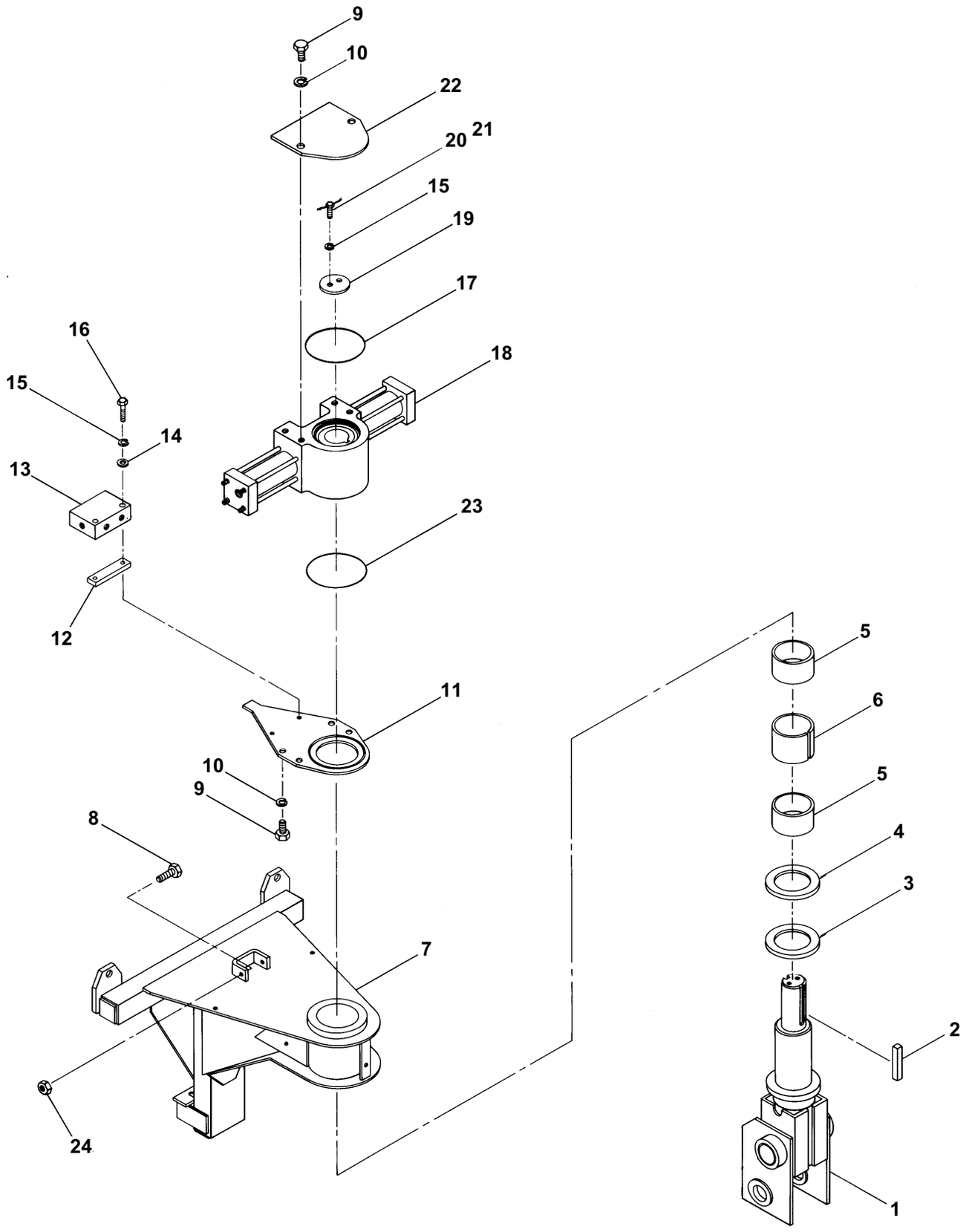

View thousands of Crane Specifications on FreeCraneSpecs.com
https://truckmanualshub.com

Engine and mounting, Continental TM-27

item	part no	qty	description
1	0111440	1	Engine, Continental TM-27 - (see page 1-47 for parts breakdown)
2	7630242	1	Radiator - (does not include radiator cap)
3	0180441	2	Radiator support bracket
4	0180444	2	Angle, radiator
5	7630181	1	Drain cock
6	0111349	2	Motor mount, front
7	7630104	4	Engine mount
8	0071599	18	Engine mount washer
9	7630180	4	Radiator cushion
10	5560179	8	Washer
11	7630136	1	Radiator hose
12	7630080	1	Radiator hose
13	0180832	1	Mount plate, overflow reservoir
14	7630227	1	Overflow reservoir
	8060277	1	Replacement reservoir cap
15	5560639	6	Capscrew 5/8-11 x 4-1/2 inch long hex head grade 5
16	5560036	6	Nut 5/8-11 self locking
17	970519	4	Capscrew 3/8-16 x 2-1/4 inch long hex head grade 5
18	986299	4	Washer 3/8 medium flat
19	5560033	4	Nut 3/8-16 self locking
20	970889	4	Capscrew 1/2-13 x 1 inch long hex head grade 5
21	987139	4	Washer 1/2 medium lock
22	986359	10	Washer 1/2 medium flat
23	5560678	6	Washer 5/8 medium flat
24	5560086	6	Capscrew 1/4-20 x 1 inch long hex head grade 5
25	986019	4	Washer 1/4 medium flat
26	5560004	6	Nut 1/4-20 self locking
27	5550030	4	Clamp
28	5010012	1	Radiator overflow hose 5/16 inch diameter x 60 inch long
29	970239	4	Capscrew 5/16-18 x 3/4 inch long hex head grade 5
30	987109	4	Washer 5/16 medium lock
31	970909	6	Capscrew 1/2-13 x 1-1/2 inch long hex head grade 5
32	5560039	6	Nut 1/2-13 self locking
33	7630153	1	Fuel filter
34	5090006	1	Street 90° elbow, brass
35	5550020	1	Clamp
36	5010011	1	Fuel hose 5/16 inch diameter x 120 inch long
37	7714202	1	Pipe plug 1/4 NPT square head
38	5090032	1	Fitting, straight barbed
39	0110200	1	1 inch diameter hydraulic hose
40	0111883	1	Suction hose 1-1/2 inch diameter
41	5058824	1	Clamp, suction hose

View thousands of Crane Specifications on FreeCraneSpecs.com
https://truckmanualshub.com/

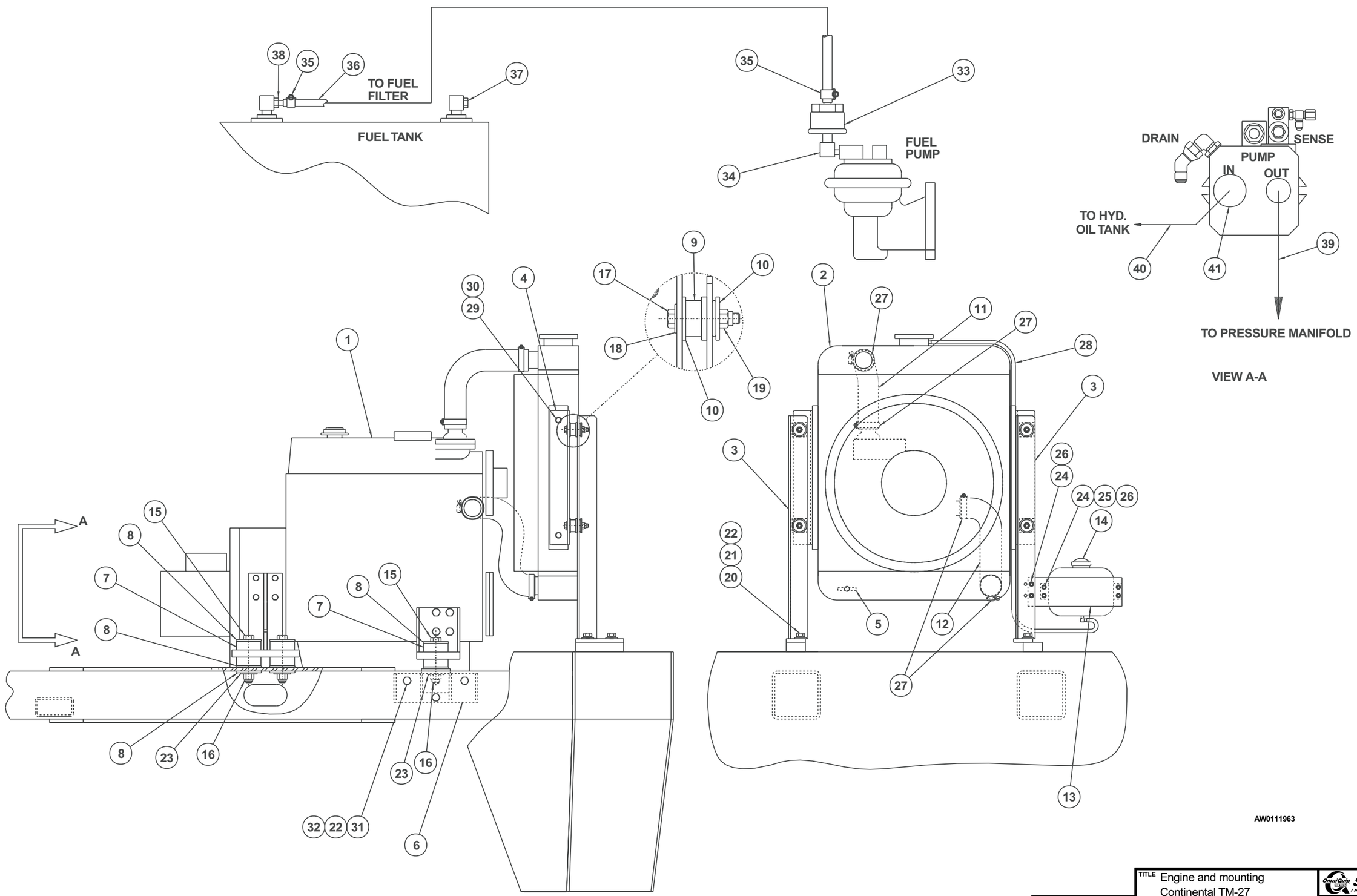

TITLE	Engine and mounting Continental TM-27 Snorkel model TB 80
DWG. 0111963	

View thousands of Crane Specifications on FreeCraneSpecs.com
https://truckmanualshub.com/

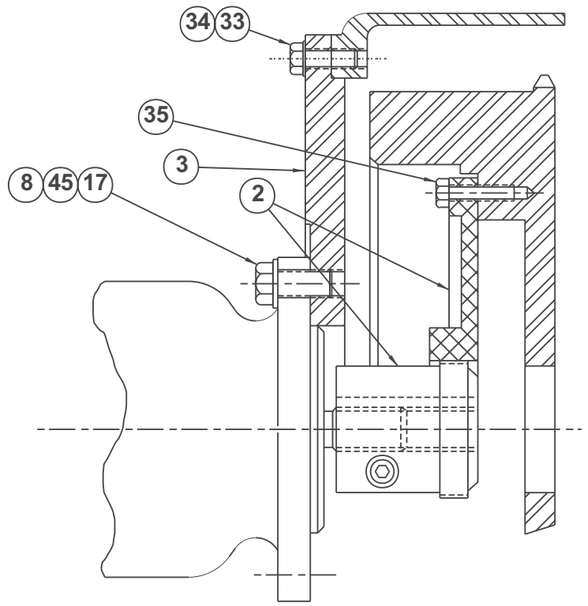

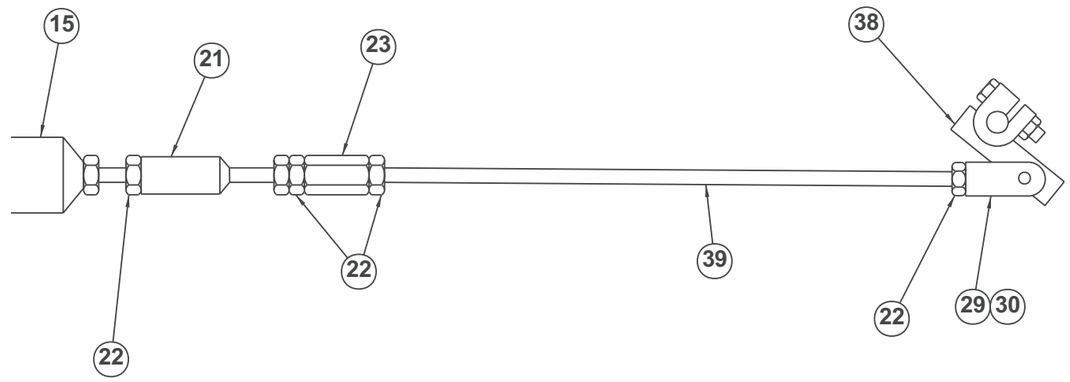

SECTION A-A

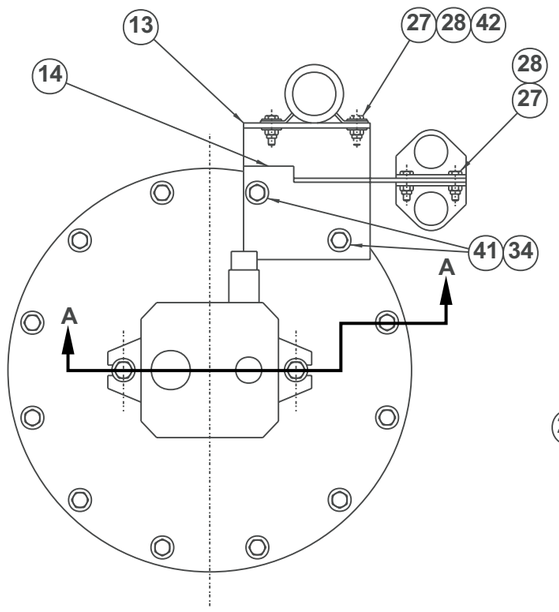

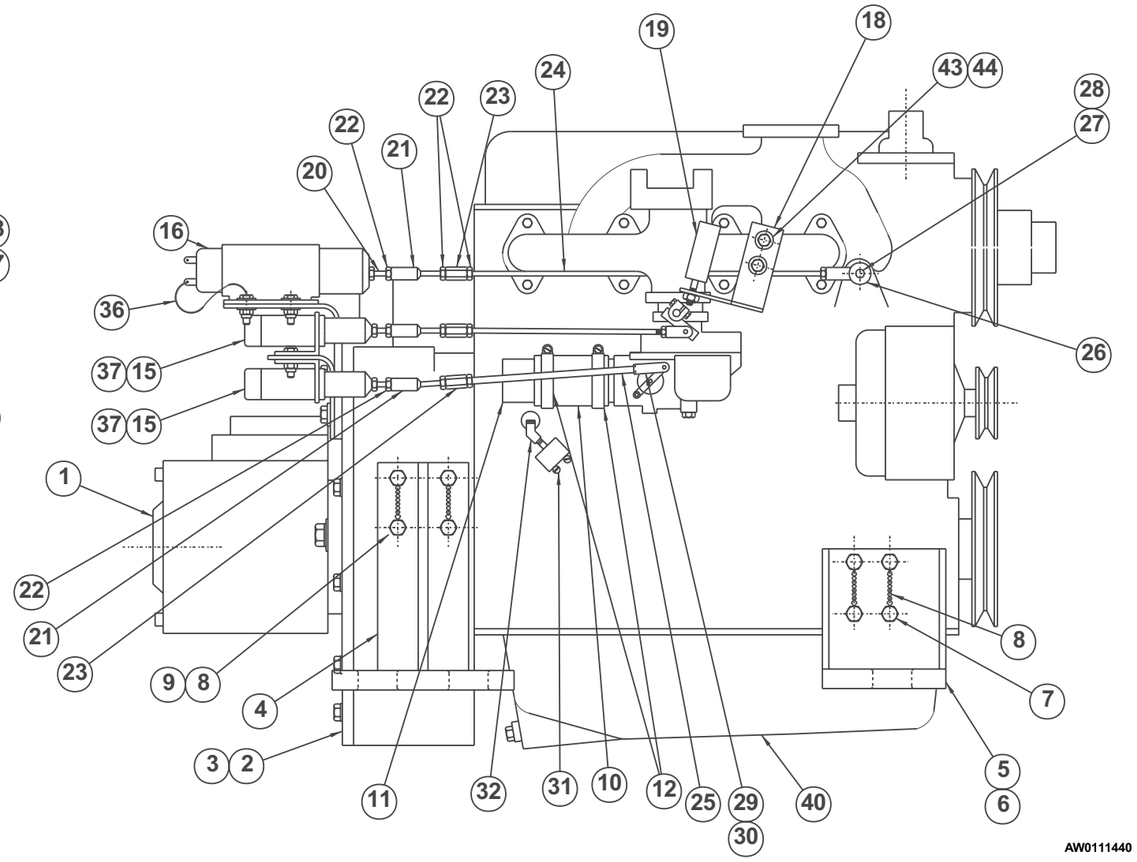

AW0111440

Snorkel INTERNATIONAL	TITLE Engine Continental TM-27 Snorkel model TB 80	DWG. 0111440
Page 1 - 46		

View thousands of Crane Specifications on FreeCraneSpecs.com

Engine, Continental TM-27

item	part no	qty	description
	0111440	1	Engine, Continental TM-27
1	0111578	1	Hydraulic pump - (see page 2-73 for parts breakdown)
2	7630249	1	Flexible coupling
3	0081226	1	Engine adapter
4	0111405	2	Motor mount
5	0111400	1	Motor mount
6	0111401	1	Motor mount
7	5560207	8	Capscrew metric M14-2.00 x 30mm long hex head
8	9980012	1	.040 inch diameter stainless steel safety lockwire - (sold in one pound can)
9	5560206	8	Capscrew 3/8-16 x 1 inch long hex head grade 8
10	0081341	1	Air intake hose
11	0081365	1	Tube
12	5550030	2	Clamp
13	0111452	1	Mount angle
14	0111509	1	Mounting bracket
15	3040063	2	Solenoid
16	3040488	1	Solenoid
17	5560136	2	Capscrew 1/2-13 self locking drilled head
18	0111454	1	Bracket
19	3040494	1	Solenoid
20	0073638	1	Stud, jump size
21	2650001	3	Swivel, in-line
22	984039	12	Nut 1/4-28 hex
23	5560094	3	Coupler nut
24	0111484	1	Rod
25	0111485	1	Throttle rod
26	2690004	1	Rod end
27	5560086	1	Capscrew 1/4-20 x 1 inch long hex head grade 5
28	5560004	1	Nut 1/4-20 self locking
29	2690001	2	Bearing, self aligning
30	2620001	2	Clevis pin
31	3020095	1	Switch, oil pressure
32	5090031	1	Pipe elbow 45° 1/8 NPT
33	970449	10	Capscrew 3/8-16 x 3/4 inch long hex head grade 5
34	987119	12	Washer 3/8 medium lock
35	970469	6	Capscrew 3/8-16 x 1 inch long hex head grade 5
36	0071959	1	Jumper wire
37	3040466	2	Return spring
38	0111495	1	Throttle arm
39	0151353	1	Control rod
40	7620025	1	Engine, Continental TM-27
41	970499	2	Capscrew 3/8-16 x 1-3/4 inch long hex head grade 5
42	986019	8	Washer 1/4 medium flat
43	5560357	2	Capscrew metric M8-1.25 x 25mm long hex head
44	5560628	2	Washer metric M8 lock
45	5560168	2	Washer 1/2 hard flat ASTM-F436

View thousands of Crane Specifications on FreeCraneSpecs.com
https://truckmanualshub.com/

Engine and mounting, Cummins 4B

item	part no	qty	description
1	0112135	1	Engine, Cummins 4B - (see page 1-51 for parts breakdown)
2	7630117	6	Engine mount
3	0071599	12	Engine mount washer
4	0180997	1	Angle, radiator mounting
5	0180998	1	Angle, radiator mounting
6	0180441	2	Bracket, radiator support
7	7630239	1	Radiator cap - 13 PSI
8	7630263	1	Radiator hose, upper
9	7630262	1	Radiator hose, lower
10	5550030	2	Clamp
11	5550050	2	Clamp
12	0180832	1	Mount plate, overflow reservoir
13	7630227	1	Overflow reservoir
	8060277	1	Replacement reservoir cap
14	5010012	1	Radiator overflow hose 5/16 inch diameter x 72 inch long
15	7630180	4	Radiator cushion
16	7630247	1	Radiator
17		1	Drain cock - (included with radiator - not sold separately)
18	5560179	8	Washer, snubbing
19	5090032	1	Fitting, straight barbed
20	5090030	1	Vacuum fitting
21	7720201	1	Reducer bushing
22	5010011	1	Fuel hose 5/16 inch diameter x 108 inch long
23	0071722	1	3/16 inch hydraulic hose
24	5550028	4	Clamp
25	5560639	6	Capscrew 5/8-11 x 4-1/2 inch long hex head grade 5
26	5560036	6	Nut 5/8-11 self locking
27	5560169	6	Washer 5/8 hard flat ASTM-F436
28	970889	4	Capscrew 1/2-13 x 1 inch long hex head grade 5
29	987139	4	Washer 1/2 medium lock
30	5560168	4	Washer 1/2 hard flat ASTM-F436
31	970239	4	Capscrew 5/16-18 x 3/4 inch long hex head grade 5
32	987109	4	Washer 5/16 medium lock
33	986269	4	Washer 5/16 medium flat
34	970049	6	Capscrew 1/4-20 x 1 inch long hex head grade 5
35	5560004	6	Nut 1/4-20 self locking
36	986019	4	Washer 1/4 medium flat
37	970519	4	Capscrew 3/8-16 x 2-1/4 inch long hex head grade 5
38	986299	4	Washer 3/8 medium flat
39	5560033	4	Nut 3/8-16 self locking
40	0110200	1	1 inch diameter hydraulic hose
41	0111883	1	Suction hose 1-1/2 inch diameter
42	5058824	1	Clamp, suction hose

View thousands of Crane Specifications on FreeCraneSpecs.com
https://truckmanualshub.com/

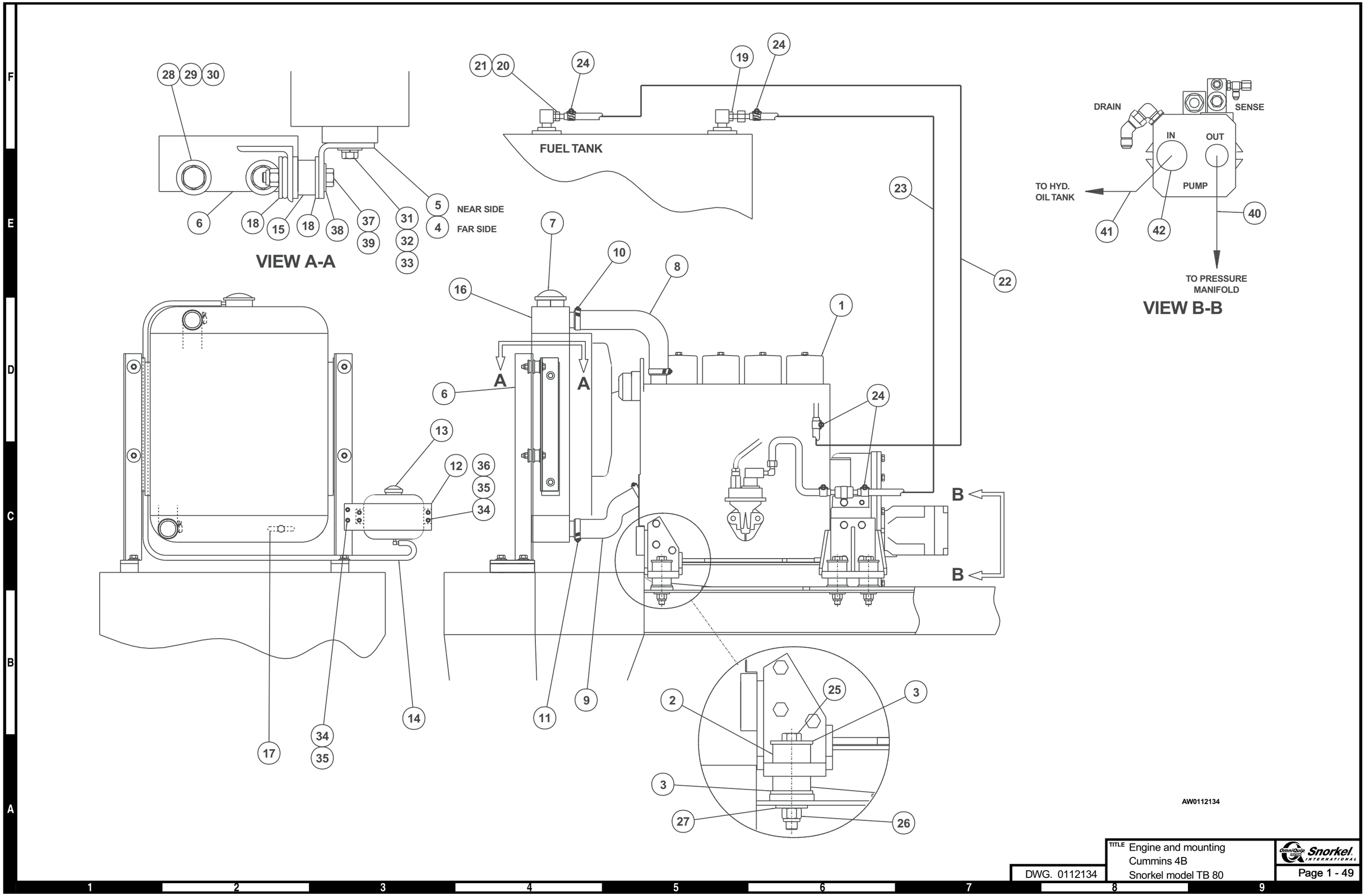

TITLE Engine and mounting
Cummins 4B
Snorkel model TB 80

DWG. 0112134

Snorkel INTERNATIONAL

View thousands of Crane Specifications on FreeCraneSpecs.com
https://truckmanualshub.com/

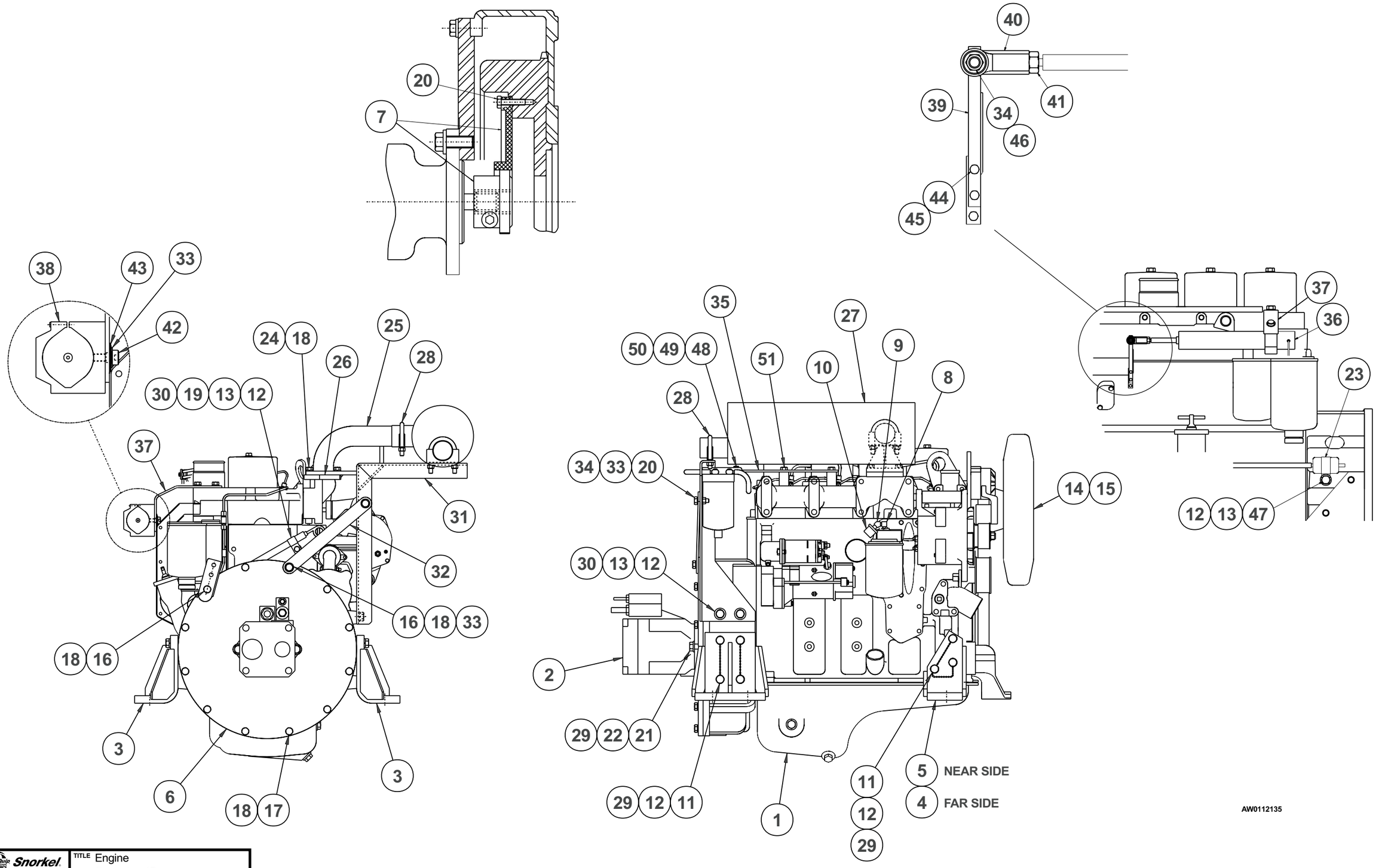

Snorkel INTERNATIONAL

TITLE Engine
Cummins 4B
Snorkel model TB 80

DWG. 0112135

View thousands of Crane Specifications on FreeCraneSpecs.com
https://truckmanualshub.com/

Engine, Cummins 4B

item	part no	qty	description
	0112135	1	Engine, Cummins 4B
1	7624745	1	Engine, Cummins 4B
2	0111578	1	Hydraulic pump - (see page 2-73 for parts breakdown)
3	0111779	2	Motor mount, rear
4	0111781	1	Motor mount, front left hand
5	0111780	1	Motor mount, front right hand
6	0080691	1	Plate, engine adapter
7	7630248	1	Flexible coupling
8	5090006	1	Street 90° elbow, 1/8 NPT
9	5090031	1	Street elbow 45°, 1/8 NPT
10	3020095	1	Switch, oil pressure
11	5560694	14	Capscrew metric M12-1.75 x 35mm long hex head
12	5560614	18	Washer metric M12 lock
13	5560631	4	Capscrew metric M12-1.75 x 20mm long hex head
14	5560634	4	Capscrew metric M8-1.25 x 45mm long hex head
15	5560355	4	Washer metric M8 lock
16	5560695	2	Capscrew metric M10-1.5 x 40mm long hex head
17	5560617	10	Capscrew metric M10-1.5 x 35mm long hex head
18	5560356	16	Washer metric M10 lock
19	5093002	1	Clamp
20	5560696	7	Capscrew 3/8-16 x 1-1/8 inch long hex head grade 5
21	5560136	2	Capscrew 1/2-13 self locking drilled head
22	5560168	2	Washer 1/2 hard flat ASTM-F436
23	5093012	1	Clamp
24	971999	4	Capscrew metric M10-1.5 x 25mm long hex head
25	0111808	1	Exhaust tube
26	7630264	1	Gasket
27	7630255	1	Muffler
28	5550007	2	Clamp
29	9980012	1	.040 inch diameter stainless steel safety lockwire - (sold in one pound can)
30	5560364	3	Washer metric M10 flat
31	0111817	1	Exhaust support
32	0111819	1	Exhaust support strap
33	986299	4	Washer 3/8 medium flat
34	5560033	2	Nut 3/8-16 self locking
35	0181837	1	Fuel filter bracket
36	20082045	1	Actuator
37	0191647	1	Actuator mount bracket
38	7630323	1	Mounting block
39	0191646	1	Throttle lever
40	2690006	1	Rod end
41	5560697	1	Nut 3/8-24 hex jam
42	8060077	1	Shoulder bolt 3/8-16 x 3/8 inch long
43	5530017	1	Washer 3/8 curved spring
44	5560664	2	Washer metric M6 lock
45	5560698	2	Capscrew metric M6-1.0 x 20mm long hex head
46	970499	1	Capscrew 3/8-16 x 1-3/4 inch long hex head grade 5
47	5560699	1	Washer metric M12 flat
48	970059	2	Capscrew 1/4-20 x 1-1/2 inch long hex head grade 5
49	5560004	2	Nut 1/4-20 self locking
50	986019	2	Washer 1/4 medium flat
51	971999	2	Capscrew metric M10

View thousands of Crane Specifications on FreeCraneSpecs.com
https://truckmanualshub.com

Engine and mounting, Deutz F4L-1011F

item	part no	qty	description
1	0111953	1	Engine, Deutz F4L-1011F - (see page 1-55 for parts breakdown)
2	0111750	1	Mount bracket, right hand front
3	0111751	1	Mount bracket, left hand front
4	0071599	8	Engine mount washer
5	7630130	4	Engine mount
6	7630286	1	Fuel filter
7	0151786	1	3/16 inch diameter fuel return hose
8	5010011	1	Fuel hose 5/16 inch diameter x 120 inch long
9	5033604	1	Male adapter
10	5090032	1	Fitting, straight barbed
11	5560169	4	Washer 5/8 hard flat ASTM-F436
12	5550028	5	Clamp
13	5560131	4	Nut 5/8-11 self locking
14	5560168	16	Washer 1/2 hard flat ASTM-F436
15	5560039	8	Nut 1/2-13 self locking
16	5560639	4	Capscrew 5/8-11 x 4-1/2 inch hex head grade 5
17	970909	6	Capscrew 1/2-13 x 1-1/2 inch long hex head grade 5
18	970929	2	Capscrew 1/2-13 x 2 inch long hex head grade 5
19	5093000	2	Clamp
20	5093006	1	Clamp
21	5560638	1	Capscrew metric M8-1.25 x 16mm long hex head
22	5560355	1	Washer metic M8 lock
23	5058824	1	Clamp, suction hose
24	0110199	1	1 inch diameter hydraulic hose
25	0111821	1	Suction hose 1-1/2 inch diameter

View thousands of Crane Specifications on FreeCraneSpecs.com
https://truckmanualshub.com/

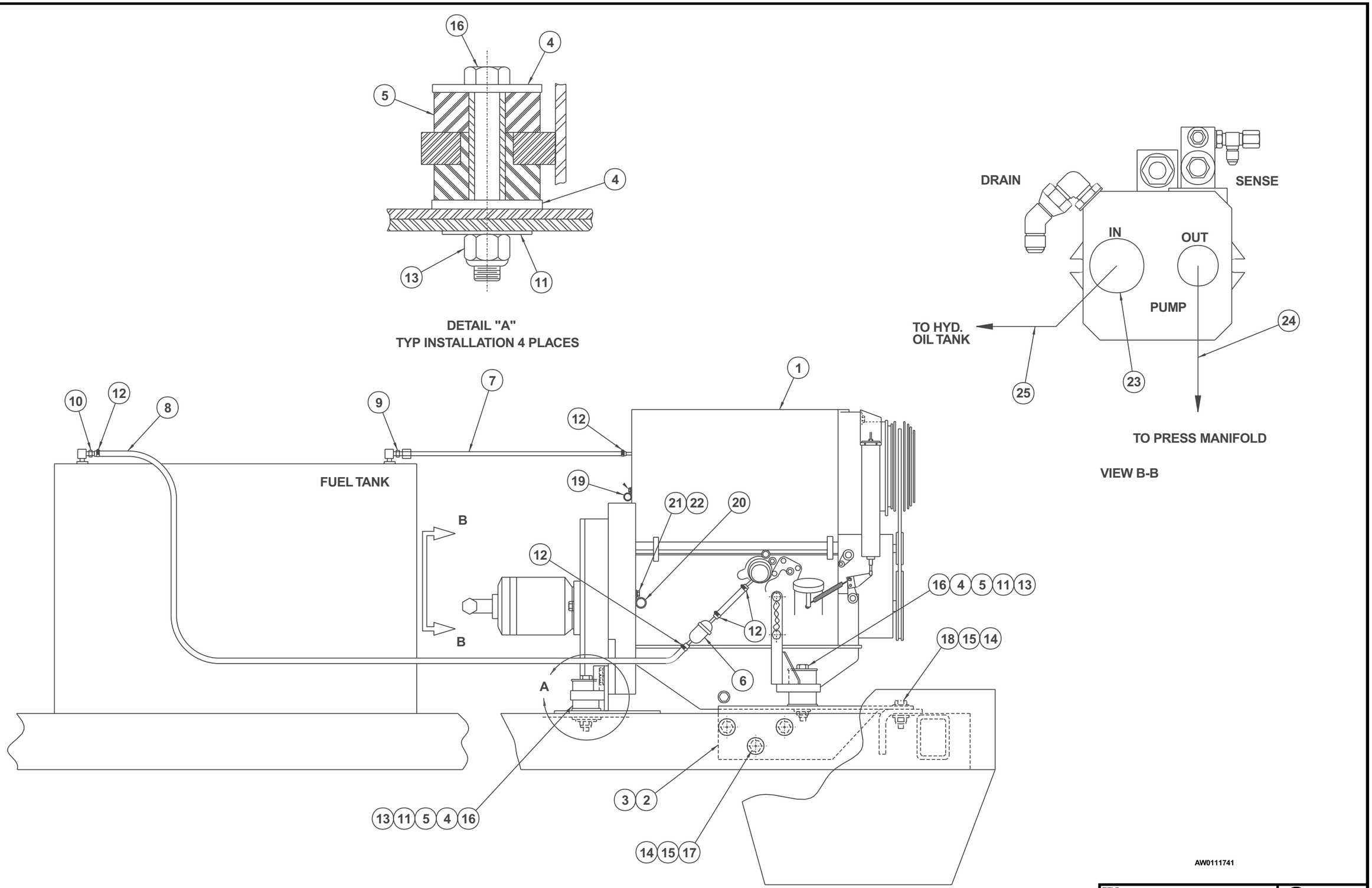

DWG. 0111741	TITLE Engine and mounting Deutz F4L-1011F diesel Snorkel model TB 80

Snorkel INTERNATIONAL

View thousands of Crane Specifications on FreeCraneSpecs.com
https://truckmanualshub.com/

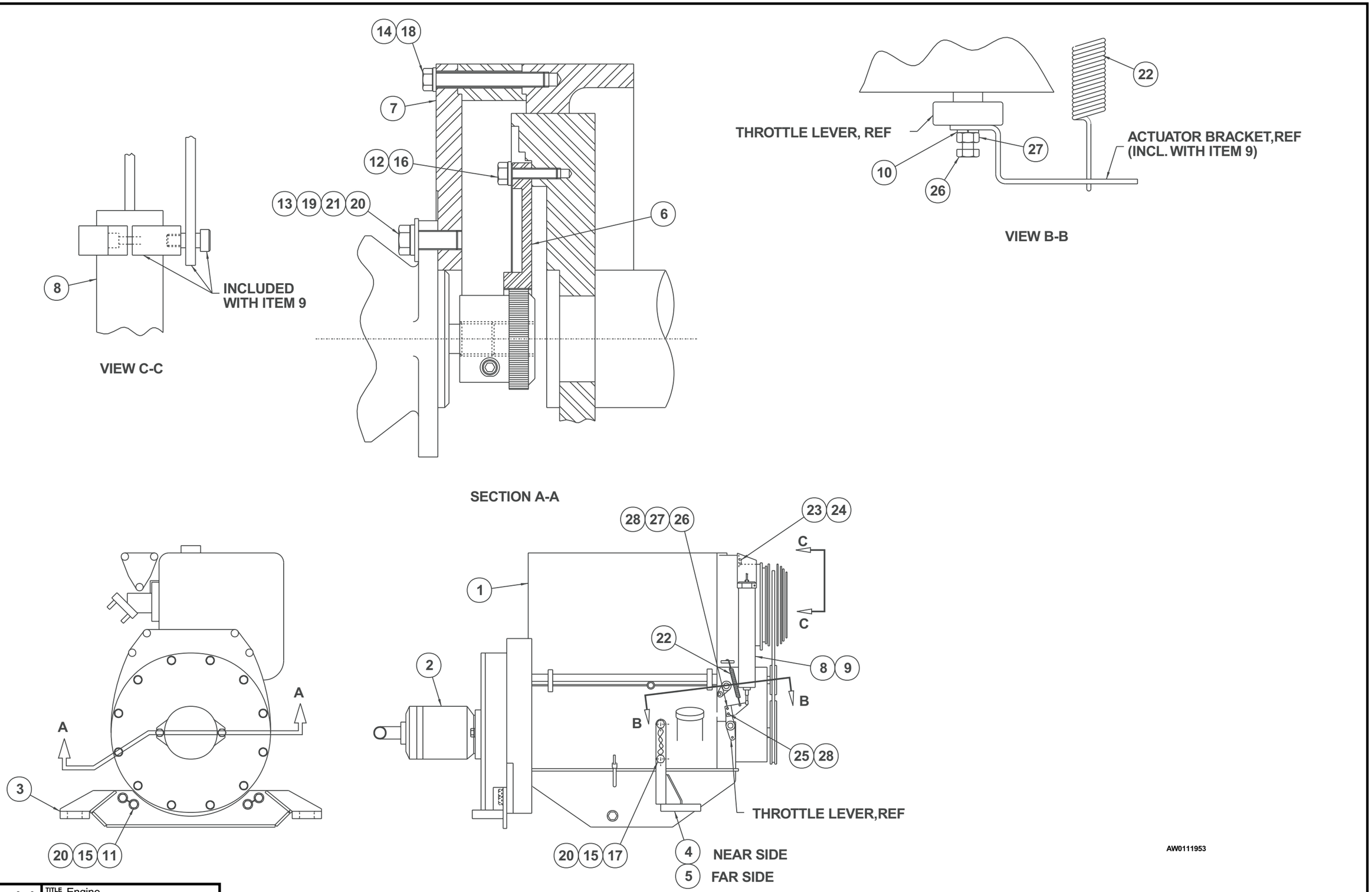

Snorkel INTERNATIONAL

TITLE Engine
Deutz F4L-1011F
Snorkel model TB 80

DWG. 0111953

View thousands of Crane Specifications on FreeCraneSpecs.com
https://truckmanualshub.com/

Engine, Deutz F4L-1011F

item	part no	qty	description
1	0111953	1	Engine, Deutz F4L-1011F
2	0111578	1	Hydraulic pump - (see page 2-73 for parts breakdown)
3	0081624	1	Motor mount, rear
4	0081619	1	Motor mount, front right hand
5	0081614	1	Motor mount, front left hand
6	7630249	1	Flexible coupling
7	0081226	1	Plate, engine coupling
8	20082045	1	Actuator kit
9	7630311	1	Mount kit, Addco actuator - (includes spring - item 22)
10	5560664	2	Washer metric M6 lock
11	5560207	4	Capscrew metric M12-2.00 x 30mm long hex head drilled
12	986299	6	Washer 3/8 medium flat
13	987139	2	Washer 1/2 medium lock
14	5560356	8	Washer metric M10 lock
15	5560377	8	Washer metric M14 lock
16	5560626	6	Capscrew metric M10-1.5 x 30mm long hex head
17	5560028	4	Capscrew metric M14-2.00 x 50mm long hex head drilled
18	5560653	8	Capscrew metric M10-1.5 x 85mm long hex head
19	5560168	2	Washer 1/2 hard flat ASTM-F436
20	9980012	1	.040 inch diameter stainless steel safety lockwire - (sold in one pound can)
21	5560136	2	Capscrew 1/2-13 self locking drilled head
22	8010246	1	Spring - (included with mount kit)
23	5560638	2	Capscrew metric M8-1.25 x 16mm long hex head
24	5560355	2	Washer metric M8 lock
25	5560690	1	Capscrew metric M6-1.25 x 18mm long hex head
26	5560628	1	Capscrew metric M6-1.0 x 12mm long hex head
27	984169	1	Nut metric M6-1.0 hex

View thousands of Crane Specifications on FreeCraneSpecs.com
https://truckmanualshub.com/

Engine and mounting, Ford LRG-423

item	part no	qty	description
1	0111845	1	Engine, Ford LRG-423 - (see page 1-59 for parts breakdown)
2	7630242	1	Radiator - (does not include radiator cap)
3	0180441	1	Bracket, radiator support
4	0081860	2	Angle, radiator
5	7630180	4	Radiator cushion
6	5560179	8	Washer
7	7630332	1	Radiator hose, lower
8	7630191	1	Radiator hose, upper
9	5550030	4	Clamp
10	7630117	4	Engine mount
11	0071599	8	Engine mount washer
12	0180832	1	Mount plate, overflow reservoir
13	7630227	1	Overflow reservoir
	8060277	1	Replacement reservoir cap
14	5010012	1	Radiator overflow hose 5/16 inch diameter x 60 inch long
15	970909	6	Capscrew 1/2-13 x 1-1/2 inch long hex head grade 5
16	5560039	6	Nut 1/2-13 self locking
17	5550028	4	Clamp
18	5010011	1	Fuel hose 5/16 inch diameter x 120 inch long
19	7714202	1	Pipe plug 1/4 NPT square head
20	5090032	1	Fitting, straight barbed
21		1	Drain cock - (included with engine)
22	970239	4	Capscrew 5/16-18 x 3/4 inch long hex head grade 5
23	987109	4	Washer 5/16 medium lock
24	970369	4	Capscrew 5/16-18 x 1 inch long hex head grade 5
25	986359	4	Washer 1/2 medium flat
26	987139	4	Washer 1/2 medium lock
27	5560639	4	Capscrew 5/8-11 x 4-1/2 inch long hex head grade 5
28	5560169	4	Washer 5/8 hard flat ASTM-F436
29	5560036	4	Nut 5/8-11 self locking
30	5560086	6	Capscrew 1/4-20 x 1 inch long hex head grade 5
31	5560004	6	Nut 1/4-20 self locking
32	986019	4	Washer 1/4 medium flat
33	0081464	2	Motor mount, front
34	986269	4	Washer 5/16 medium flat
35	7630239	1	Radiator cap - 13 psi
36	970519	4	Capscrew 3/8-16 x 2-1/4 inch long hex head grade 5
37	986299	4	Washer 3/8 medium flat
38	5560033	4	Nut 3/8-16 self locking
39	5093004	2	Clamp
40	987099	1	Washer 1/4 medium lock
41	970029	4	Capscrew 1/4-20 x 3/4 inch long hex head grade 5
42	0070792	1	1/2 inch hydraulic hose
43	0110868	1	Electric fuel pump - (see page 3-57 for parts breakdown)

View thousands of Crane Specifications on FreeCraneSpecs.com
https://truckmanualshub.com/

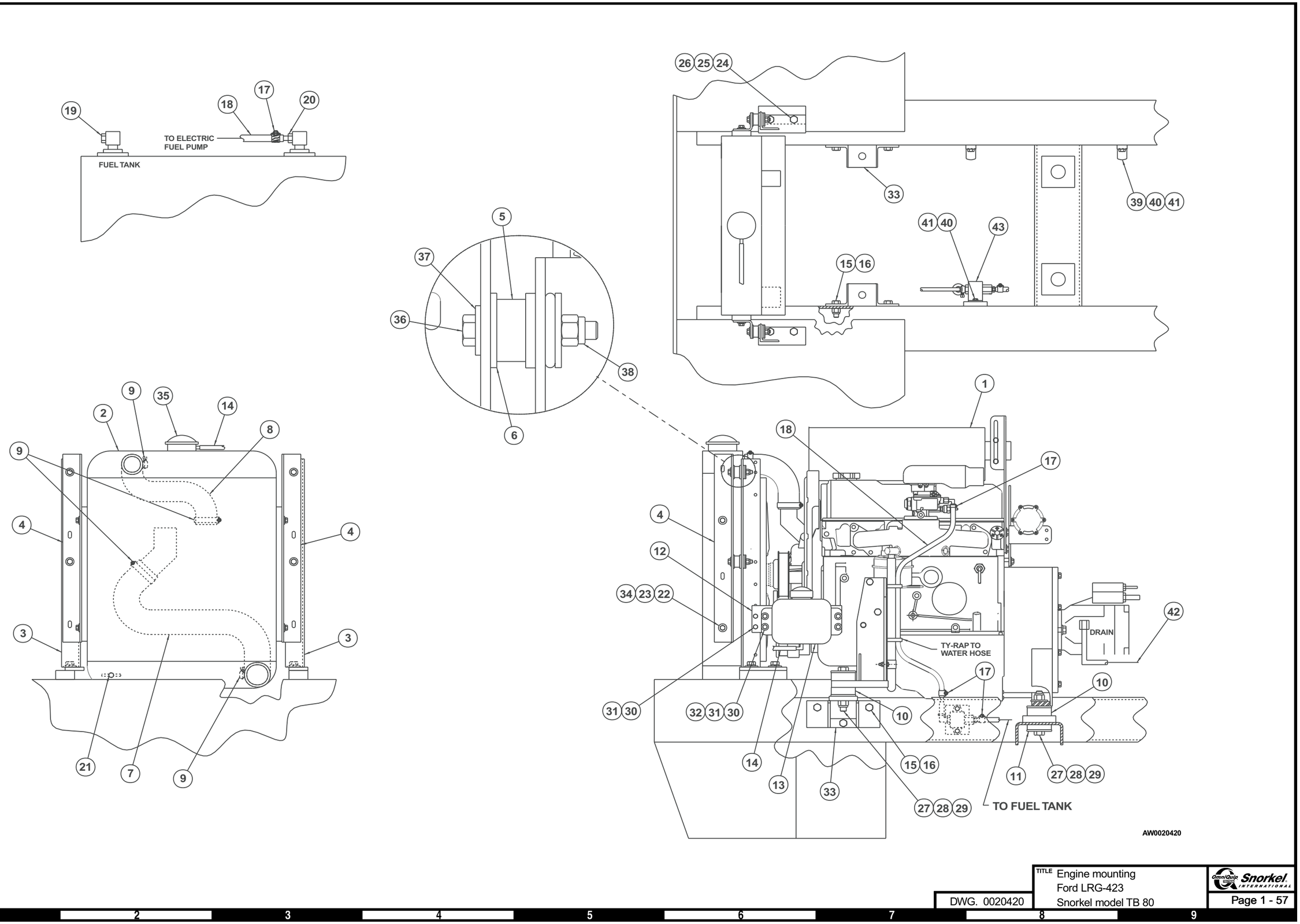

DWG. 0020420

TITLE Engine mounting
Ford LRG-423
Snorkel model TB 80

View thousands of Crane Specifications on FreeCraneSpecs.com
https://truckmanualshub.com/

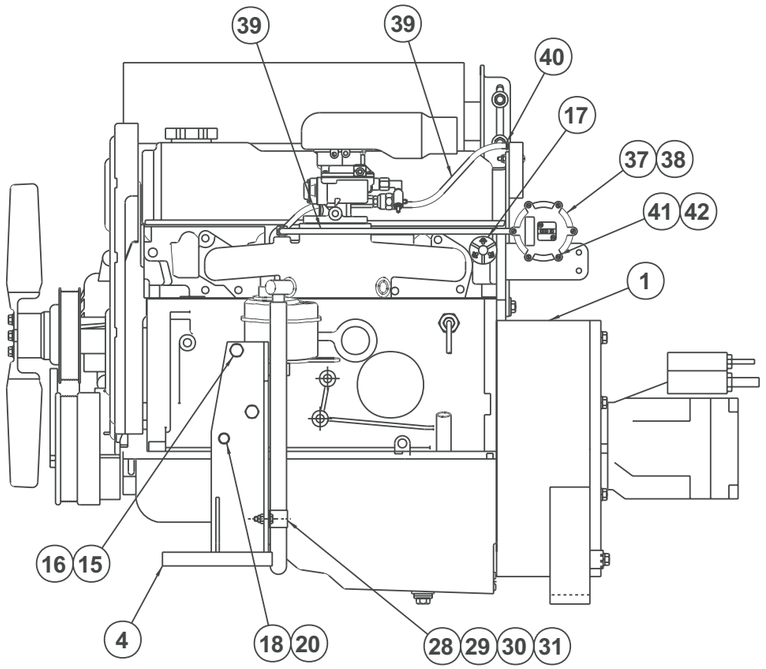

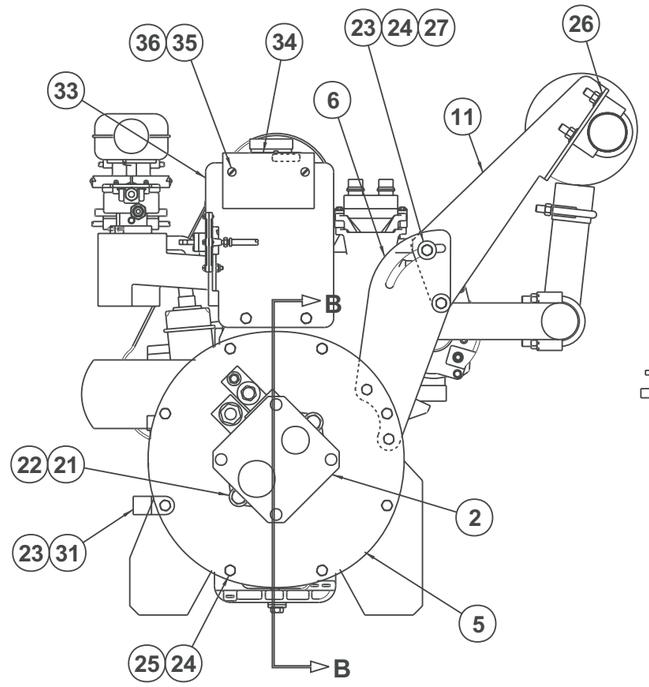

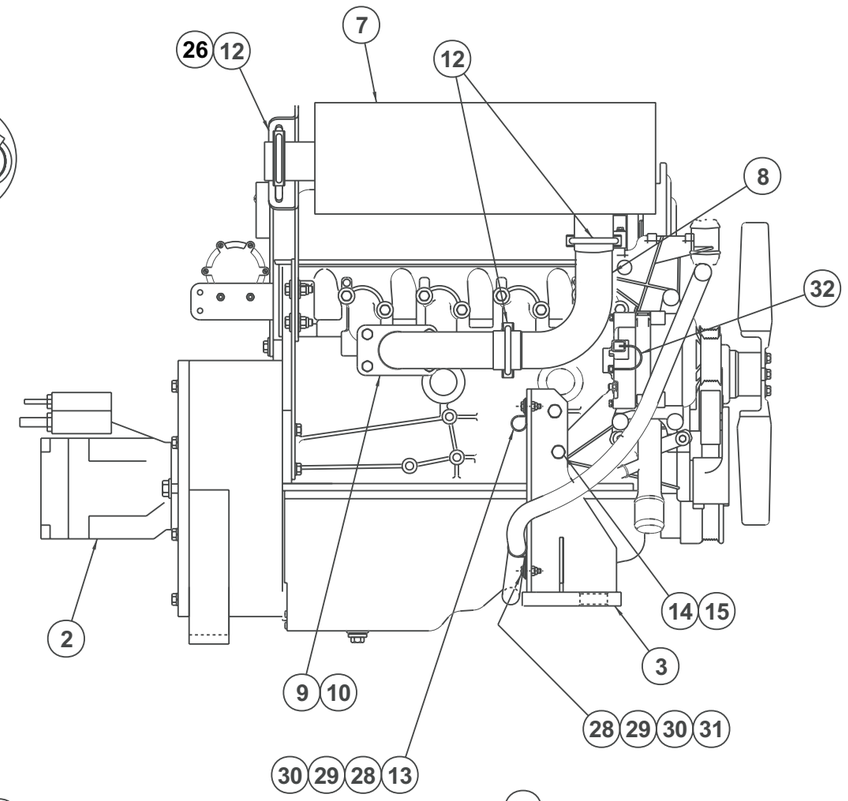

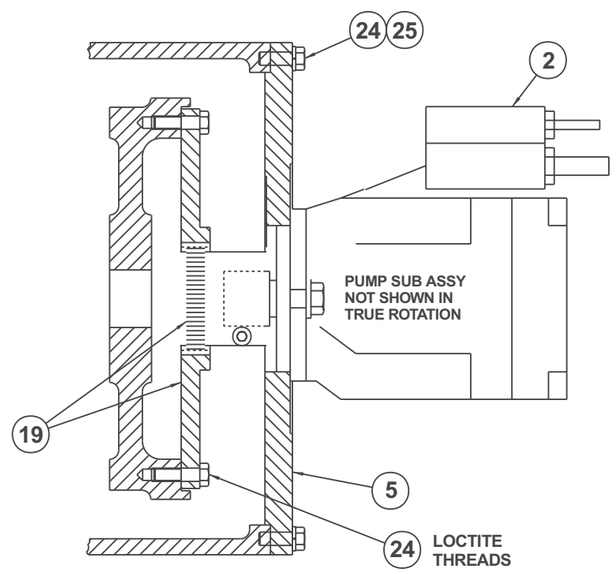

SECTION B-B

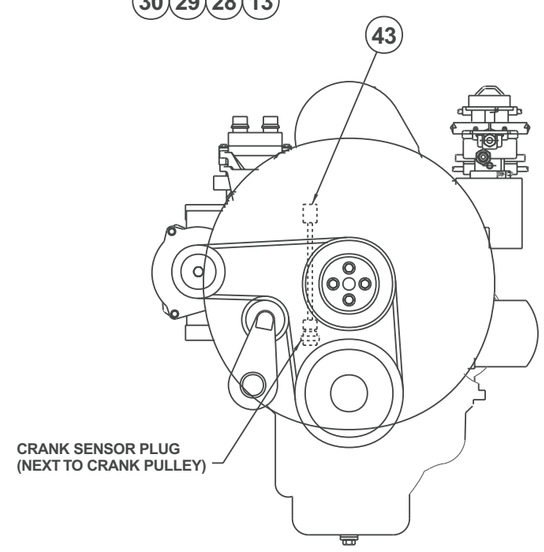

FRONT VIEW OF
ENGINE

AW0111845

Snorkel INTERNATIONAL

TITLE Engine
Ford LRG-423
Snorkel model TB 80

DWG. 0111845

View thousands of Crane Specifications on FreeCraneSpecs.com

Engine, Ford LRG-423

item	part no	qty	description
	0111845		Engine, Ford LRG-423
1	7620040	1	Engine, Ford LRG-423 gasoline
2	0111578	1	Hydraulic pump - (see page 2-73 for parts breakdown)
3	0111838	1	Motor mount, right hand
4	0111839	1	Motor mount, left hand
5	0080827	1	Engine adapter, Ford engine
6	0181535	1	Exhaust bracket, lower
7	7630255	1	Muffler
8	0181453	1	Exhaust pipe
9	0111886	1	Exhaust flange, LRG Ford
10		1	Exhaust gasket - (included with engine, item 1)
11	0181534	1	Exhaust bracket, upper
12	5550014	3	Exhaust clamp
13	5093004	1	Clamp
14	5560652	2	Capscrew metric M10-1.5 x 70mm long hex head
15	5560356	4	Washer metric M10 lock
16	971999	2	Capscrew metric M10-1.5 x 25mm long hex head
17	3020095	1	Switch, oil pressure
18	5560357	1	Capscrew metric M8-1.25 x 25mm long hex head
19	7630249	1	Flexible coupling
20	5560355	3	Washer metric M8 lock
21	970849	2	Capscrew 1/2-13 x 1-1/4 inch long hex head grade 5
22	5560168	2	Washer 1/2 hard flat ASTM-F436
23	986299	3	Washer 3/8 medium flat
24	970479	17	Capscrew 3/8-16 x 1-1/4 inch long hex head grade 5
25	987119	8	Washer 3/8 medium lock
26	986269	2	Washer 5/16 medium flat
27	5560033	2	Nut 3/8-16 self locking
28	970029	3	Capscrew 1/4-20 x 3/4 inch long hex head grade 5
29	986019	3	Washer 1/4 medium flat
30	5560004	3	Nut 1/4-20 self locking
31	5093006	3	Clamp
32	0111869	1	Wire harness, alternator
33	0110862	1	Bracket, spark module mount
34	7630329	1	Spark module - (included with engine, item 1)
35	5560650	2	Machine screw #10-24 x 2 inch long truss head
36	5560034	2	Nut #10-24 self locking
37	3020054	1	Vacuum switch - (included with engine, item 1)
	8130005	1	Replacement switch
38	5090024	1	Vacuum fitting 1/8 NPT brass straight
39	5010007	1	Vacuum hose, 3/16 inch diameter x 18 inch long
40	5090026	4	Clamp
41	5560651	2	Machine screw #10-32 x 1 inch long truss head
42	5560038	2	Nut #10-32 self locking
43	0111887	1	Wire harness, crank sensor

View thousands of Crane Specifications on FreeCraneSpecs.com

Engine and mounting, Ford LRG-425

item	part no	qty	description
1	0112083	1	Engine, Ford LRG-425 - (see page 1-63 for parts breakdown)
2	7630677	1	Radiator
3	0180441	2	Bracket, radiator support
4	0081860	2	Angle, radiator
5	7630180	4	Radiator cushion
6	5560179	8	Washer
7	7630332	1	Radiator hose, lower
8	7630749	1	Radiator hose, upper
9	5550030	4	Clamp
10	7630117	4	Engine mount
11	0071599	8	Engine mount washer
12	0180832	1	Mount plate, overflow reservoir
13	7630227	1	Overflow reservoir
	8060277	1	Replacement reservoir cap
14	5010012	1	Radiator overflow hose 5/16 inch diameter x 60 inch long
15	970909	6	Capscrew 1/2-13 x 1-1/2 inch long hex head grade 5
16	5560039	6	Nut 1/2-13 self locking
17	5550028	6	Clamp
18	5010011	1	Fuel hose 5/16 inch diameter x 120 inch long
19	5093037	1	Fitting, straight
20	5090032	1	Fitting, straight barbed
21		1	Drain cock - (included with engine)
22	970239	4	Capscrew 5/16-18 x 3/4 inch long hex head grade 5
23	987109	4	Washer 5/16 medium lock
24	970889	4	Capscrew 1/2-13 x 1 inch long hex head grade 5
25	986359	4	Washer 1/2 medium flat
26	987139	4	Washer 1/2 medium lock
27	5560639	4	Capscrew 5/8-11 x 4-1/2 inch long hex head grade 5
28	5560169	4	Washer 5/8 hard flat ASTM-F436
29	5560036	8	Nut 5/8-11 self locking
30	5560086	6	Capscrew 1/4-20 x 1 inch long hex head grade 5
31	5560004	14	Nut 1/4-20 self locking
32	986019	8	Washer 1/4 medium flat
33	0111349	2	Motor mount, front
34	986269	4	Washer 5/16 medium flat
35	7630239	1	Radiator cap - 13 psi
36	970519	4	Capscrew 3/8-16 x 2-1/4 inch long hex head grade 5
37	986299	4	Washer 3/8 medium flat
38	5560033	4	Nut 3/8-16 self locking
39	0112092	1	Decal, engine control module
40	970029	2	Capscrew 1/4-20 x 3/4 inch long hex head grade 5
41	987099	2	Washer 1/4 medium lock
42	0111713	1	Motor mount, rear
43	970319	2	Capscrew 5/16-18 x 2-1/2 inch long hex head grade 5
44	5560678	8	Washer 5/8 medium flat
45	970069	8	Capscrew 1/4-20 x 1-1/4 inch long hex head grade 5
46	0112093	1	Bracket, ECM mounting
47	3020081	1	Switch, toggle
48	7630687	1	Engine control module - (included with engine, item 1)
49	7630678	1	Fuel line connector - (included with engine, item 1)
50	7630679	1	Fuel line connector - (included with engine, item 1)
51	7630680	1	Fuel line connector - (included with engine, item 1)
52	7630681	1	Pressure regulator - (included with engine, item 1)
53	7630682	1	Fuel pump - (included with engine, item 1)
54	7630683	1	Fuel filter - (included with engine, item 1)
55	7630686	1	High pressure hose - (included with engine, item 1)
56	7630685	1	Pressure regulator clamp - (included with engine, item 1)
57	7630691	1	High pressure fuel clamp - (included with engine, item 1)
58	7630688	1	Indicator lamp

View thousands of Crane Specifications on FreeCraneSpecs.com
https://truckmanualshub.com/

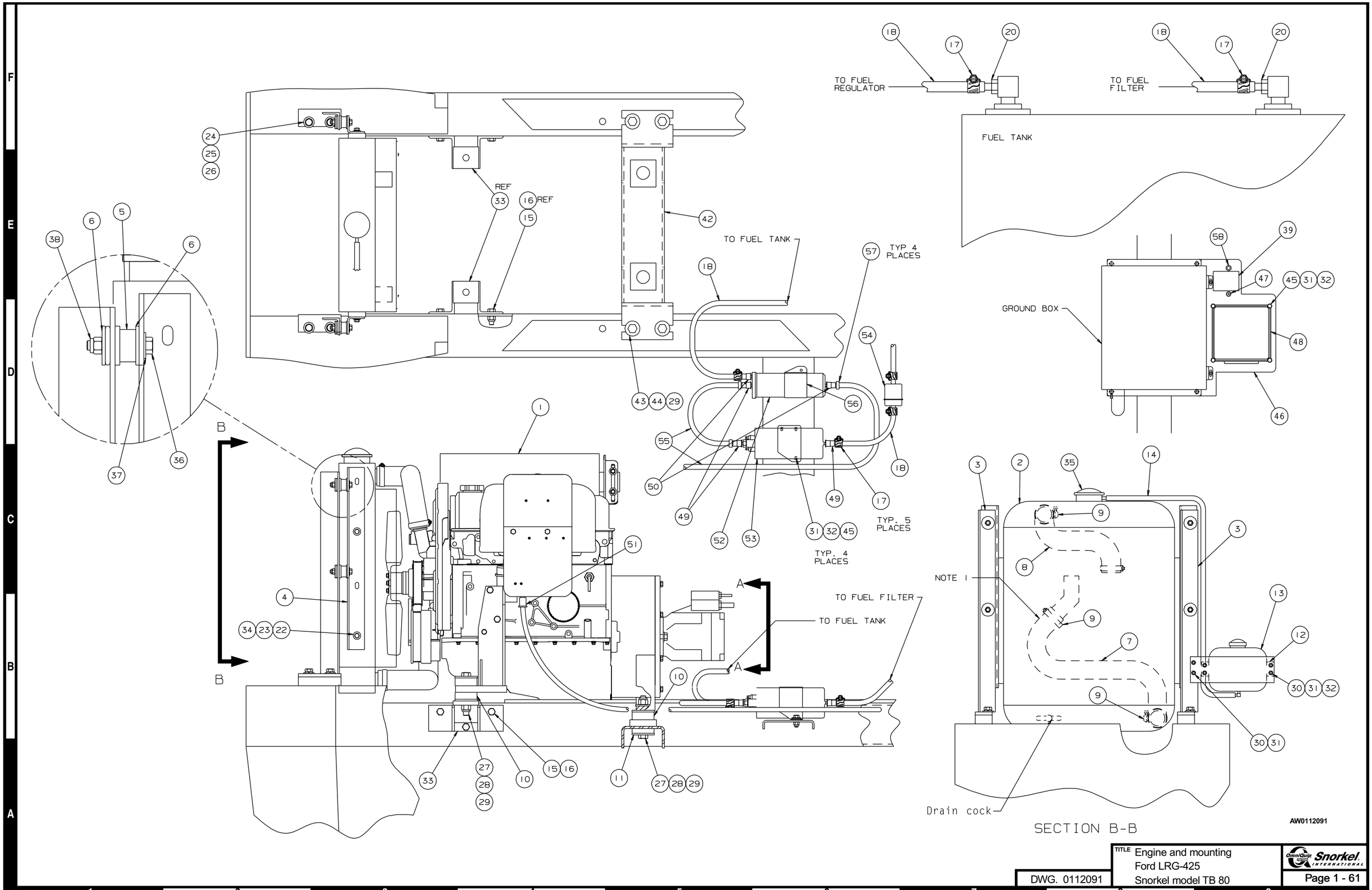

DWG. 0112091	TITLE Engine and mounting Ford LRG-425 Snorkel model TB 80

OmniQuip Snorkel INTERNATIONAL

View thousands of Crane Specifications on FreeCraneSpecs.com
https://truckmanualshub.com/

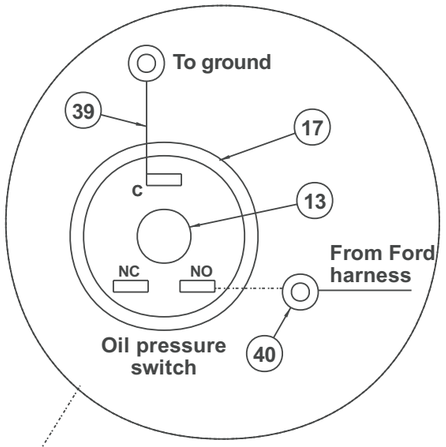

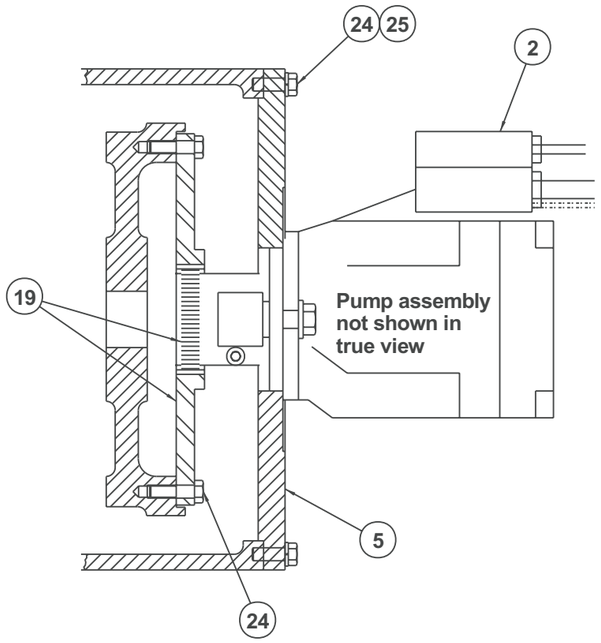

Section A-A

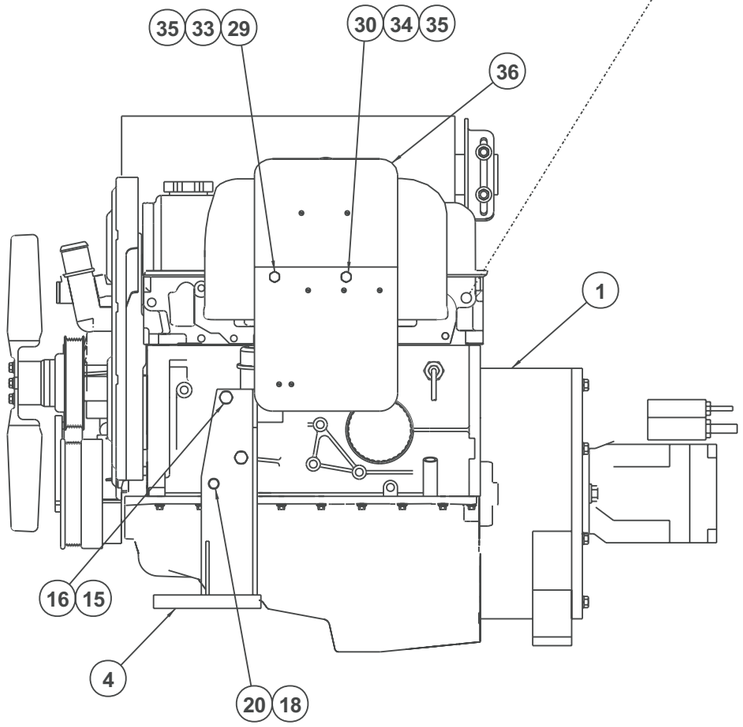

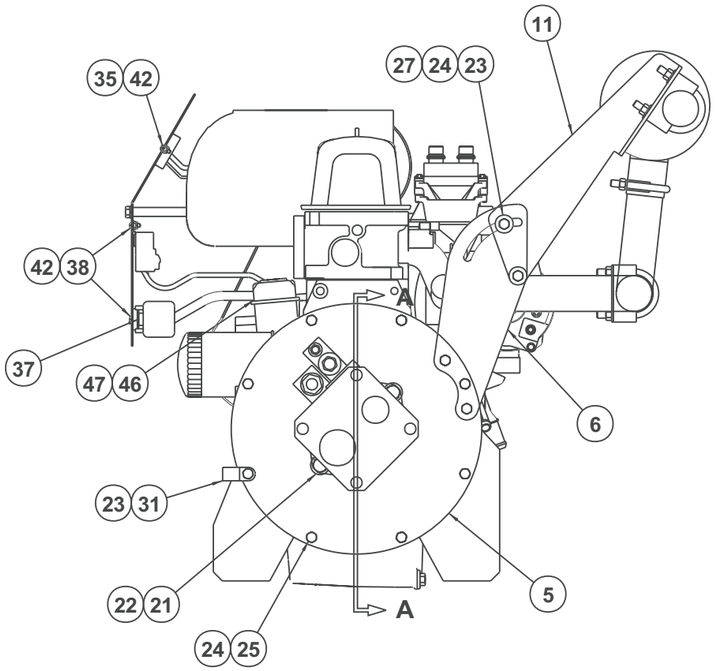

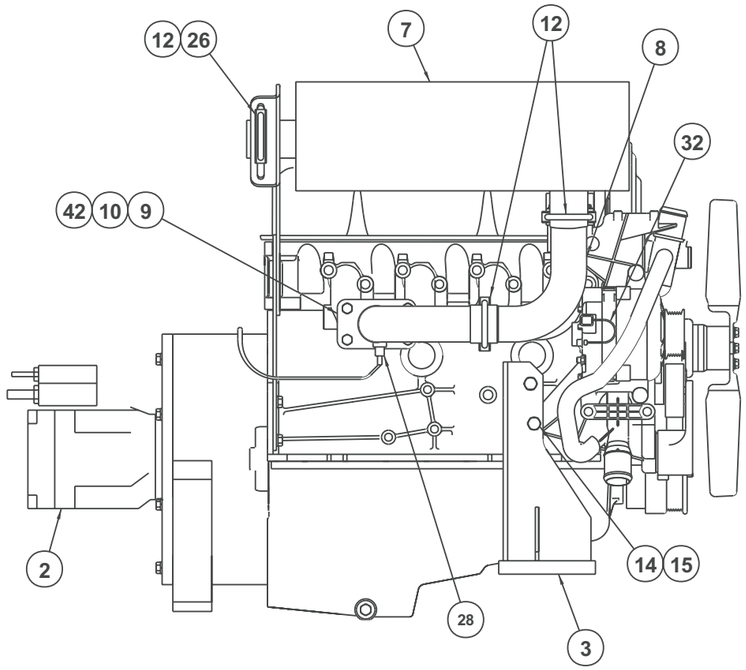

AW0083368

OmniQuip Snorkel INTERNATIONAL	TITLE Engine Ford LRG-425 Snorkel model TB 80	
Page 1 - 62		DWG. 0083368

View thousands of Crane Specifications on FreeCraneSpecs.com
https://truckmanualshub.com/

Engine, Ford LRG-425

item	part no	qty	description
	0112083	1	Engine, Ford LRG-425
1	7620055	1	Engine, Ford LRG-425 gasoline
2	0111578	1	Hydraulic pump - (see page 2-73 for parts breakdown)
3	0111838	1	Motor mount, right hand
4	0111839	1	Motor mount, left hand
5	0080827	1	Engine adapter, Ford engine
6	0181535	1	Exhaust bracket, lower
7	7630255	1	Muffler
8	0181453	1	Exhaust pipe
9	0112088	1	Exhaust flange, LRG Ford
10		1	Exhaust gasket - (included with engine, item 1)
11	0181543	1	Exhaust bracket, upper
12	5550014	3	Exhaust clamp
13	7720201	1	Reducer
14	5560652	2	Capscrew metric M10-1.5 x 70mm long hex head
15	5560356	4	Washer metric M10 lock
16	971999	2	Capscrew metric M10-1.5 x 25mm long hex head
17	3020095	1	Switch, oil pressure
18	5560357	1	Capscrew metric M8-1.25 x 25mm long hex head
19	7630249	1	Flexible coupling
20	5560355	3	Washer metric M8 lock
21	5560136	2	Capscrew 1/2-13 self locking drilled head
22	5560168	2	Washer 1/2 hard flat ASTM-F436
23	986299	1	Washer 3/8 medium flat
24	970479	14	Capscrew 3/8-16 x 1-1/4 inch long hex head grade 5
25	987119	14	Washer 3/8 medium lock
26	986269	2	Washer 5/16 medium flat
27	5560033	2	Nut 3/8-16 self locking
28		1	Hego sensor - (included with engine)
29	0112084	1	Spacer, 3 inch
30	0112085	1	Spacer, 4 inch
31	5093006	2	Clamp
32	0111869	1	Wire harness, alternator
33	5569823	1	Capscrew metric M8-1.25 x 105mm long hex head
34	5569824	1	Capscrew metric M8-1.25 x 130mm long hex head
35	5560610	2	Machine screw #10-24 x 1-1/4 inch long truss head
36	0112086	1	Engine harness cover plate
37	0112087	1	Connector bracket, 42 pin
38	5560609	5	Machine screw #10-24 x 1/2 inch long truss head
39	0071563	1	Jumper wire
40	3044145	1	Terminal #8 stud insulated 22/18 wire
41	5560034	2	Nut #10-24 self locking
42	5560625	1	Capscrew metric M10-1.5 x 20mm long hex head

View thousands of Crane Specifications on FreeCraneSpecs.com
https://truckmanualshub.com

Air cleaner

item	part no	qty	description
	7630003	1	Air cleaner
1		1	Housing - (not sold separately)
2	8040106	1	Primary filter element
3	8040107	1	Secondary filter element
4	8040112	1	Cleaner cap baffle
5	8040114	1	Clamp
6	8040111	1	Dust cap
7	8040115	1	Vacuator valve

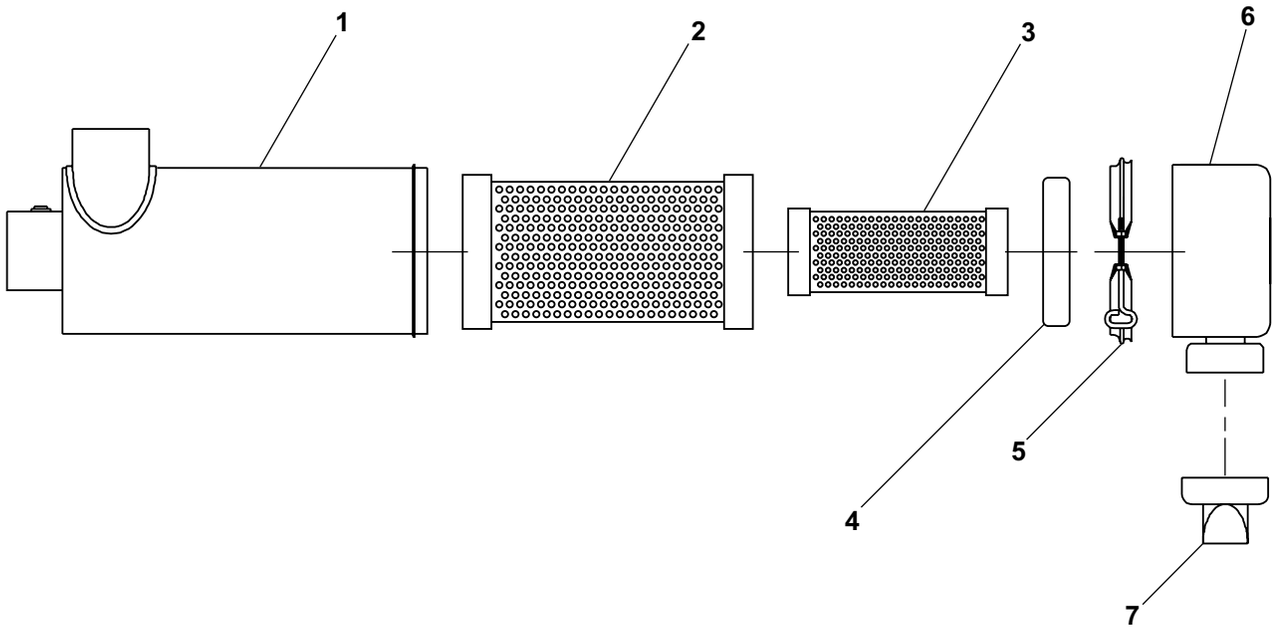

AW7630003

View thousands of Crane Specifications on FreeCraneSpecs.com
https://truckmanualshub.com

Exhaust and air cleaner, Deutz

item	part no	qty	description
1	7630003	1	Air cleaner - (see page 1-64 for parts breakdown)
2	7630005	2	Air cleaner mounting band
3	0080679	1	Air inlet tube
4	7630004	1	Air inlet hood
5	0071510	4	Spacer, air cleaner
6	7630016	2	Elbow, 3 inch 90° rubber
7	0081053	1	Air intake hose
8	0081052	1	Air intake tube
9	0081639	1	Air intake tube
10	5560659	1	Pop rivet #AD44-ABS
11	0081640	1	Exhaust pipe
12	5550007	1	Exhaust clamp
13	5550050	1	Clamp
14	7630140	1	Filter condition indicator
15	970499	4	Capscrew 3/8-16 x 1-3/4 inch long hex head grade 5
16	986299	4	Washer 3/8 medium flat
17	5560033	4	Nut 3/8-16 self locking

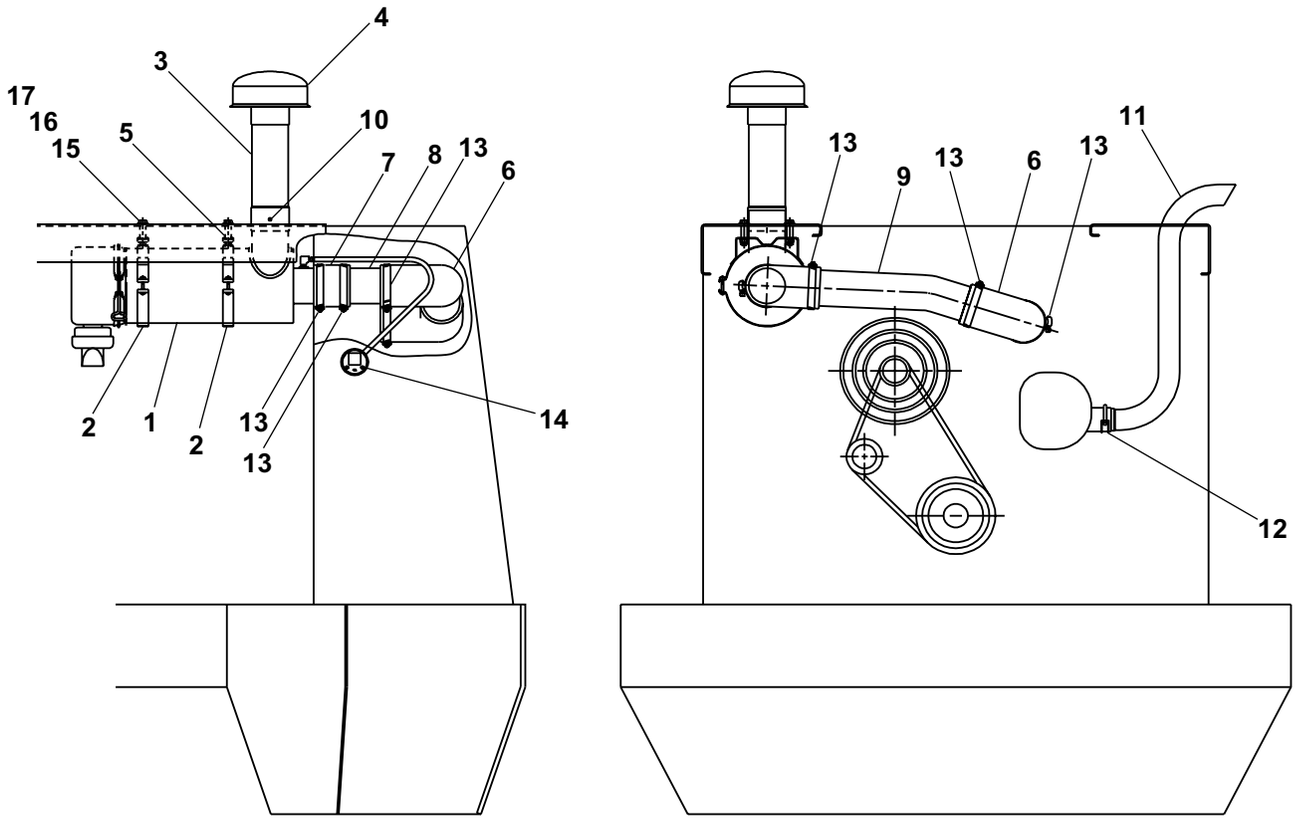

View thousands of Crane Specifications on FreeCraneSpecs.com
https://truckmanualshub.com

Exhaust and air cleaner, Continental

item	part no	qty	description
1	7630003	1	Air cleaner - (see page 1-64 for parts breakdown)
2	7630005	2	Air cleaner mounting band
3	0071510	4	Spacer, air cleaner
4	0080679	1	Air inlet tube
5	7630004	1	Air inlet hood
6	5550030	2	Clamp
7	7630016	1	Elbow, 3 inch 90° rubber
8	7630197	2	Elbow, 2 inch 90° rubber
9	5550040	4	Clamp
10	5550050	2	Clamp
11	0181018	1	Reducer tube, 3 inch to 2 inch
12	0111448	1	Air intake tube
13	0111483	1	Brace, air intake tube
14	5550014	1	Exhaust clamp
15	5550027	2	Exhaust clamp
16	0111451	1	Tail pipe brace
17	0111450	1	Tail pipe
18	0111479	1	Header pipe
19	7630243	1	Muffler
20	5560659	3	Pop rivet #AD44-ABS
21	970289	4	Capscrew 5/16-18 x 1-3/4 inch long hex head grade 5
22	5560031	4	Nut 5/16-18 self locking
23	986269	4	Washer 5/16 medium flat
24	972029	2	Capscrew metric M8-1.25 x 20mm long hex head
25	5560628	2	Washer metric M8 lock
26	971999	2	Capscrew metric M10-1.5 x 25mm long hex head
27	5560356	2	Washer metric M10 lock
28	7630140	1	Filter condition indicator
29	7630256	1	Exhaust gasket
30	5010002	1	Hose
31	0081365	1	Air intake tube
32	0080671	1	Air intake hose

View thousands of Crane Specifications on FreeCraneSpecs.com
https://truckmanualshub.com/

Exhaust and air cleaner, Continental

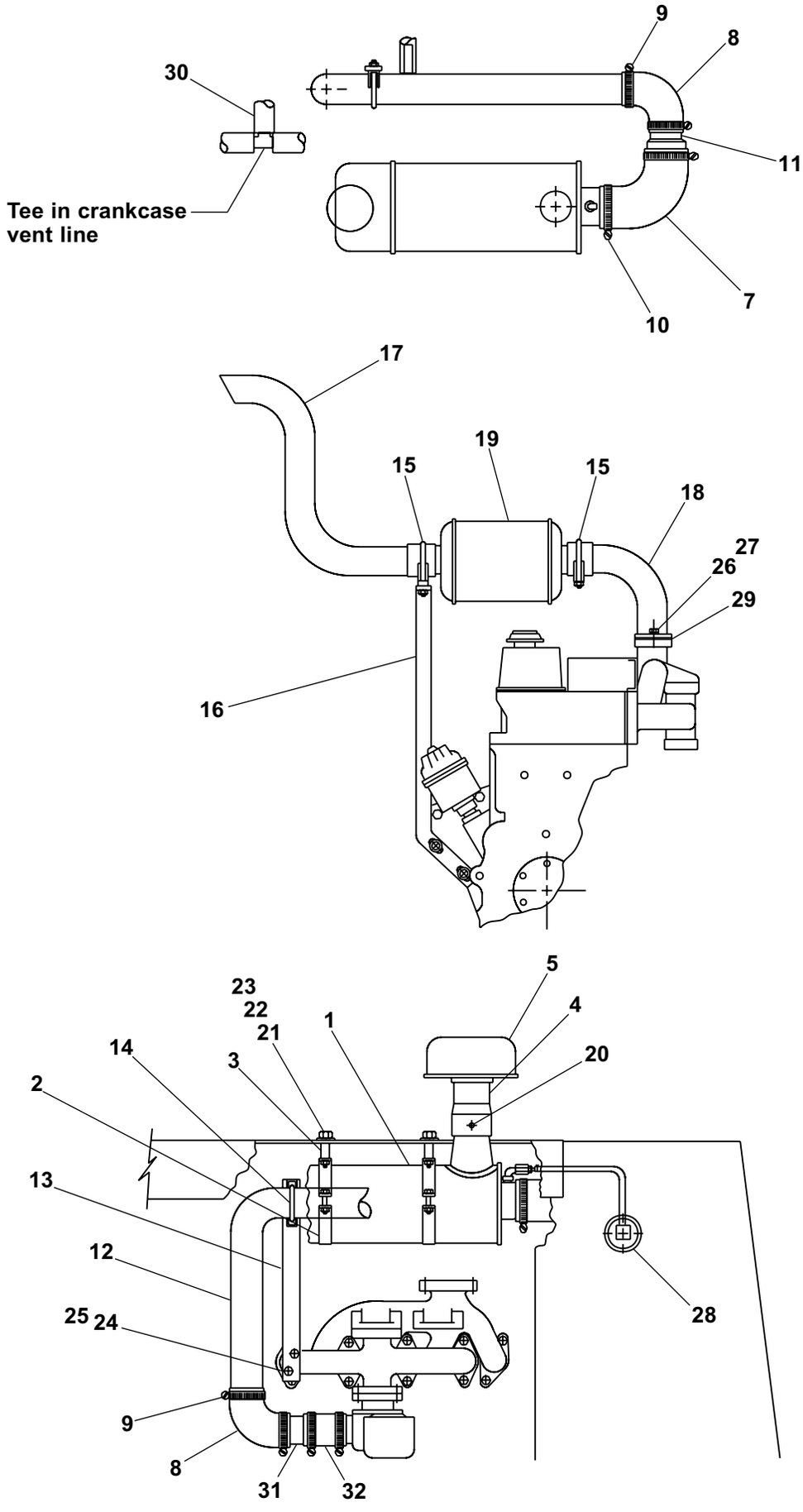

View thousands of Crane Specifications on FreeCraneSpecs.com
https://truckmanualshub.com

Exhaust and air cleaner, Cummins

item	part no	qty	description
1	7630003	1	Air cleaner - (see page 1-64 for parts breakdown)
2	7630005	2	Air cleaner mounting band
3	0080679	1	Air inlet tube
4	7630004	1	Air inlet hood
5	0071510	4	Spacer, air cleaner
6	7630016	2	Elbow, 3 inch 90° rubber
7	0111826	1	Air inlet tube
8	5560005	4	Nut 1/4-20 self locking
9	5550050	4	Clamp
10	5560655	1	Pop rivet #AD32-ABS
11	0180979	1	Exhaust pipe
12	7630140	1	Filter condition indicator
13	970499	4	Capscrew 3/8-16 x 1-3/4 inch long hex head grade 5
14	986299	4	Washer 3/8 medium flat
15	5560033	4	Nut 3/8-16 self locking
16	5090302	4	Clamp
17	5560609	4	Machine screw #10-24 x 1/2 inch long truss head

View thousands of Crane Specifications on FreeCraneSpecs.com
https://truckmanualshub.com

Exhaust and air cleaner, Cummins

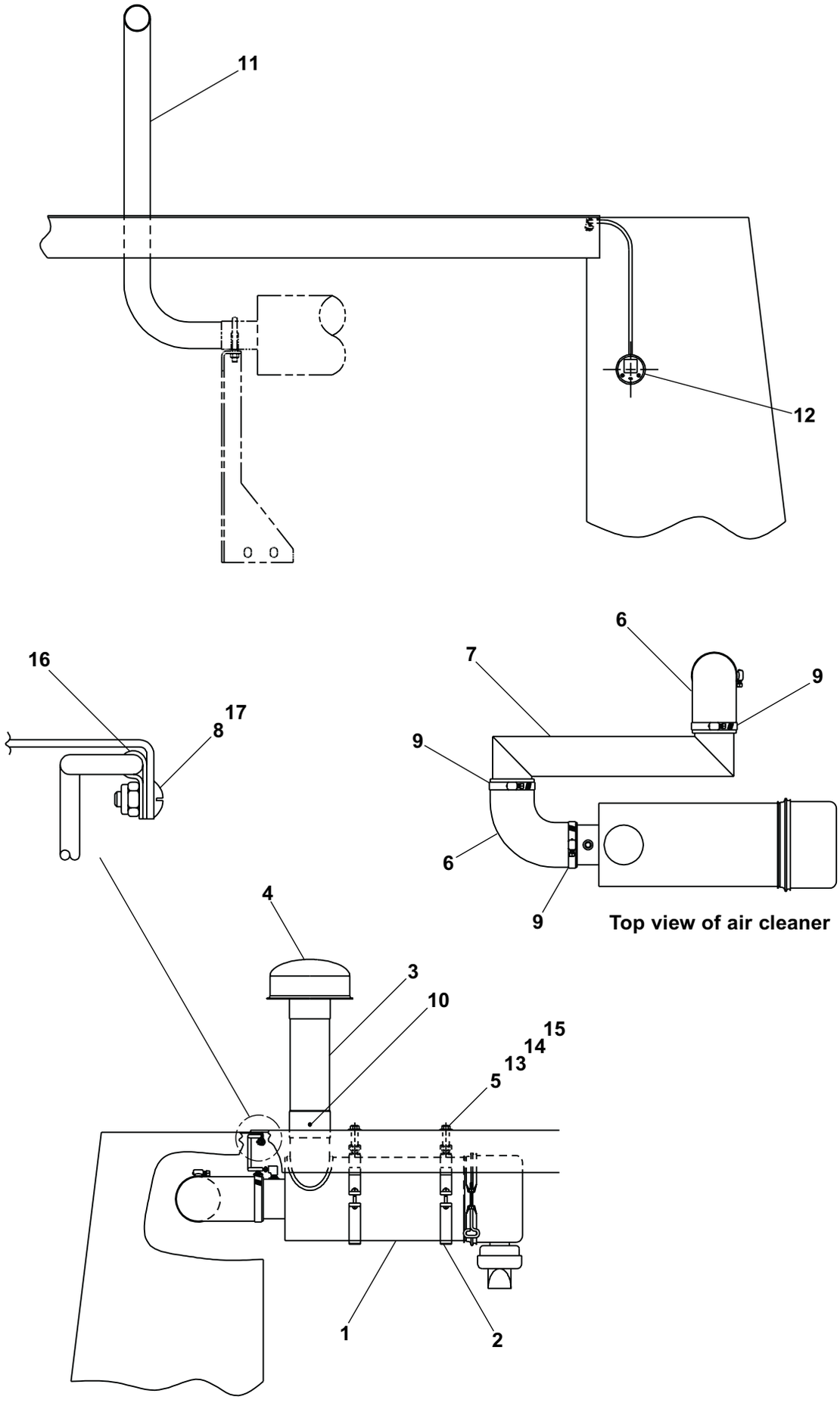

View thousands of Crane Specifications on FreeCraneSpecs.com
https://truckmanualshub.com/

Exhaust and air cleaner, Ford

item	part no	qty	description
1	7630003	1	Air cleaner, Ford LRG-423 - (see page 1-64 for parts breakdown)
	7630689	1	Air cleaner, Ford LRG-425
	8140006	1	Replacement primary filter element
2	7630004	1	Air inlet hood
3	7630005	2	Air cleaner mounting band - (Ford LRG-423 only)
4	0071510	4	Spacer, air cleaner - (Ford LRG-423)
	0071510	2	Spacer, air cleaner - (Ford LRG-425)
5	0080679	1	Air inlet tube
6	0082123	1	Air cleaner elbow
7	0180988	1	Tail pipe - (Ford LRG-423)
	0111959	1	Tail pipe - (Ford LRG-425)
8	7630016	1	Elbow, 3 inch 90° rubber
9	7630197	2	Elbow, 2 inch 90° rubber - (LRG-425 only)
10	5550050	2	Clamp
11	5550040	4	Clamp
12	0082694	1	Tube elbow
13	7630140	1	Filter condition indicator
14	5010001	1	Emission control hose 11/32 inch diameter - (Ford LRG-423)
	5010020	1	Emission control hose 5/8 inch diameter - (Ford LRG-425)
15	5090030	1	Vacuum fitting - (Ford LRG-423 0nly)
16	5090006	1	Street 90° elbow, brass - (Ford LRG-423 only)
17	5090024	1	Vacuum fitting 1/8 NPT brass straight - (Ford LRG-423 only)
18	5560658	3	Pop rivet #AD36-ABS
19	970509	4	Capscrew 3/8-16 x 2 inch long hex head grade 5 - (Ford LRG-423)
	5560357	2	Capscrew metric 8M-1.25 x 25mm long hex head - (Ford LRG-425)
20	986299	8	Washer 3/8 medium flat
21	5560033	4	Nut 3/8-16 self locking
22	5090027	1	Union elbow female 1/8 x 1/8 brass
23	5090302	1	Tube clamp
24	5560609	4	Machine screw #10-24 x 1/2 inch long truss head
25	5560034	4	Nut #10-24 self locking

View thousands of Crane Specifications on FreeCraneSpecs.com
https://truckmanualshub.com/

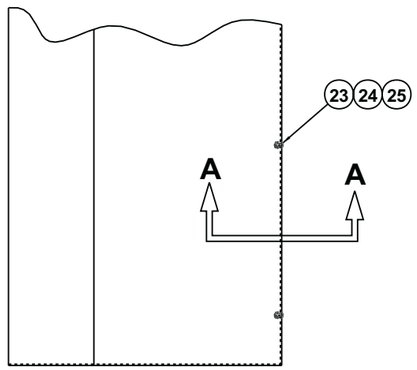

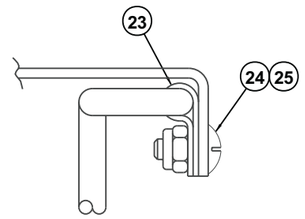

Section A-A

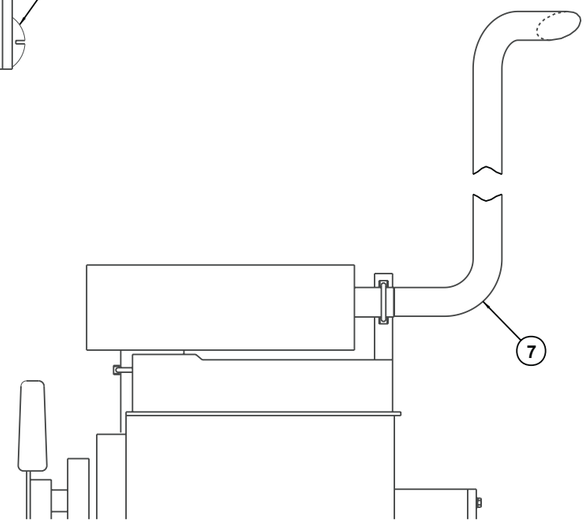

Exhaust installation

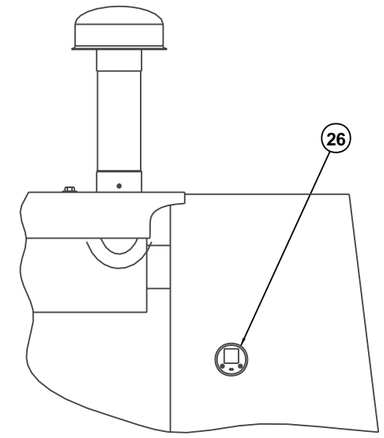

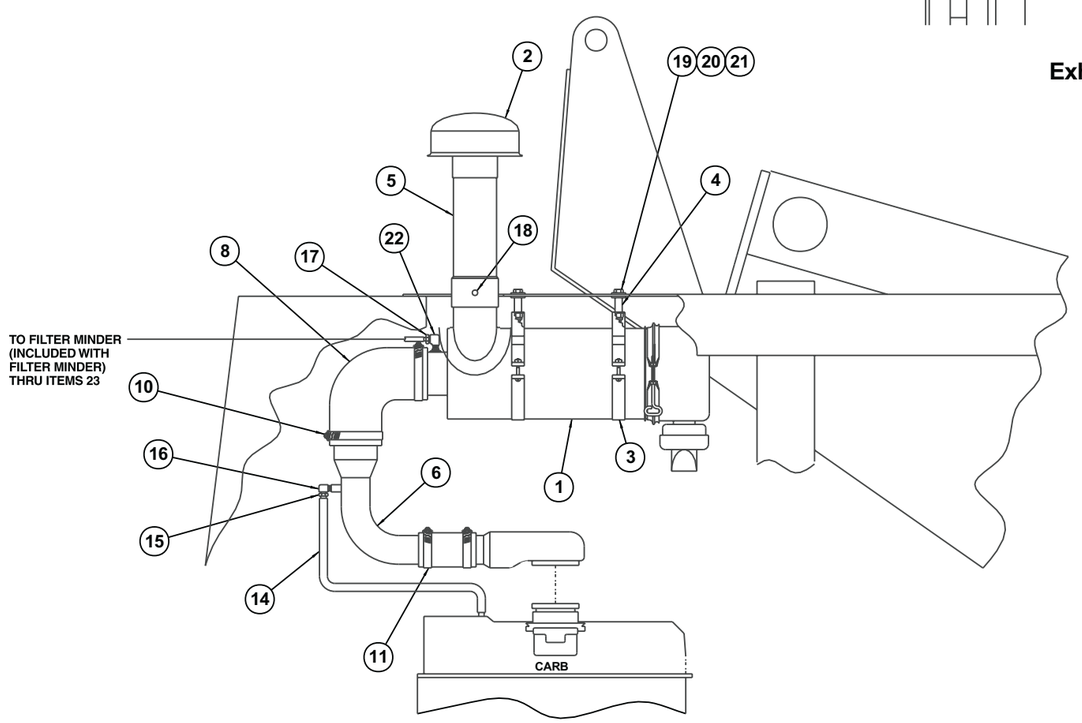

Ford LRG-423

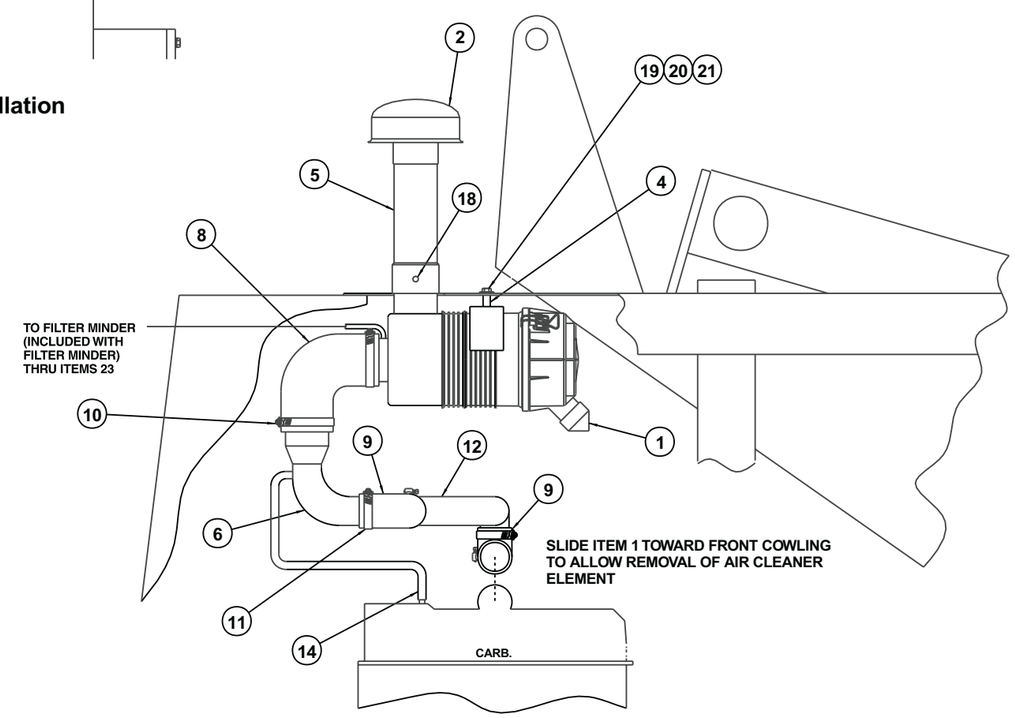

Ford LRG-425

AW0082695

DWG. 0082695	TITLE Exhaust and air cleaner Ford LRG-423 and LRG-425 Snorkel model TB 80

Snorkel INTERNATIONAL

View thousands of Crane Specifications on FreeCraneSpecs.com
https://truckmanualshub.com/

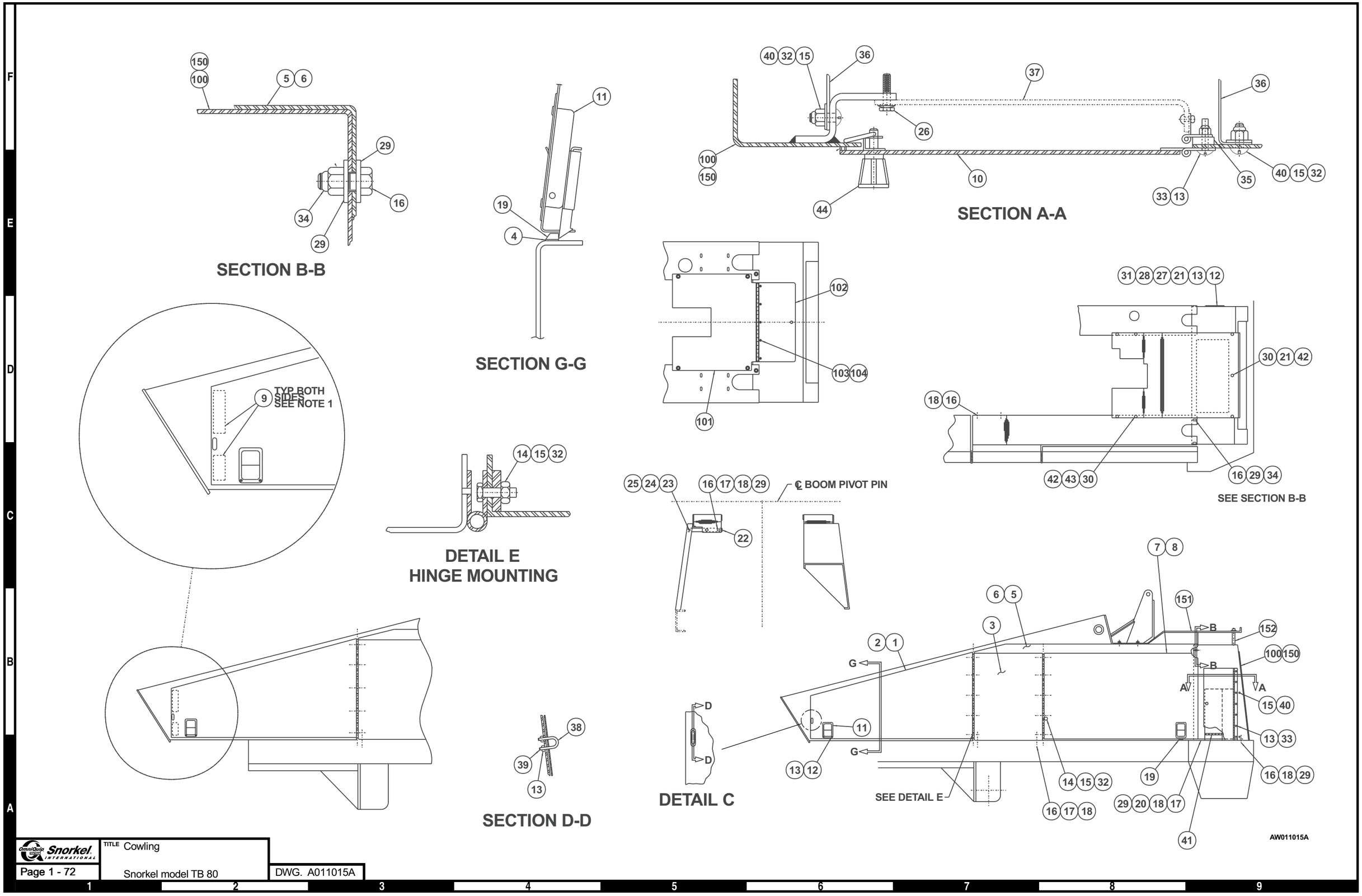

Snorkel INTERNATIONAL

TITLE Cowling

Snorkel model TB 80

DWG. A011015A

View thousands of Crane Specifications on FreeCraneSpecs.com
https://truckmanualshub.com/

Cowling

item	part no	qty	description
1	0110033	1	Cowling door, rear left hand
2	0110034	1	Cowling door, rear right hand
3	0110040	2	Door post - (includes hinge)
	0080087	1	Replacement door post hinge
4	0071441	4	Spacer, door striker
5	0110035	1	Cowling side, left hand
6	0110036	1	Cowling side, right hand
7	0080008	1	Cowling door, front left hand
8	0080009	1	Cowling door, front right hand
9	5560333	1	Rubber strip x 22 inch long
10	0111800	1	Lower controls door - (includes latch with knob, item 44)
11	0070539	4	Door latch
12	974659	28	Machine screw #10-24 x 1/2 inch long round head
13	5560034	43	Nut #10-24 self locking
14	970049	20	Capscrew 1/4-20 x 1 inch long hex head grade 5
15	5560004	14	Nut 1/4-20 self locking
16	970849	20	Capscrew 1/2-13 x 1-1/4 inch long hex head grade 5
17	5560039	16	Nut 1/2-13 self locking
18	987139	18	Washer 1/2 medium lock
19	0170793	4	Striker
20	970989	4	Capscrew 1/2-13 x 3-1/2 inch long hex head grade 5
21	5560645	3	Capscrew 3/8-16 x 5-1/2 inch long hex head grade 5
22	0110039	2	Upper door post bracket
23	970479	4	Capscrew 3/8-16 x 1-1/4 inch long hex head grade 5
24	984109	4	Nut 3/8-16 hex
25	987119	4	Washer 3/8 medium lock
26	5560086	2	Capscrew 1/4-20 x 1 inch long hex head with sems
29	0070547	1	Hinge, louvered door
30	5560033	7	Nut 3/8-16 self locking
31	0071717	1	Door, louvered
32	986019	24	Washer 1/4 medium flat
33	974709	7	Machine screw #10-24 x 1 inch long round head
34	5560039	4	Nut 1/2-13 self locking
35	0110482	1	Spacer bar
36	0110483	1	Lower control panel cover
37		1	Lower controls - (see proper lower controls in electrical section for your machine)
38	5560135	2	Staple plate
39	976689	8	Machine screw #10-24 x 3/4 long flat head
40	975089	4	Capscrew 1/4-20 x 3/4 inch long round head
41	25560083	1	Trim lock x 15 inch long
42	986299	7	Washer 3/8 medium flat
43	970469	4	Capscrew 3/8-16 x 1 inch long hex head grade 5
44	5510004	1	Lower controls door latch and knob
			Following parts required for machines with Continental, Cummins or Ford engines
100	0110037	1	Front cowling
101	0111244	1	Engine cover
102	0111243	1	Engine cover - (includes latch and knob)
	5510003	1	Replacement latch and knob
103	5560609	6	Machine screw #10-24 x 1/2 long truss head
104	5560034	6	Nut #10-24 self locking
			Following additional parts required for machines with Deutz engines
150	0111755	1	Front cowling
151	0111013	1	Sandblast cover
152	0111358	3	Spacer

View thousands of Crane Specifications on FreeCraneSpecs.com
https://truckmanualshub.com/

Placards and decals

item	part no	qty	description
	0112137	1	Complete placard and decals kit, TB 80 - (does not include upper control box placards)
	0112138	1	Platform decal kit, TB 80 - (does not include upper control box placards)
1	0074372	1	Placard, engine rpm
2	0323896	5	Decal, danger electrical hazard
3	9979420	1	Placard, emergency bleed down valve
4	560239	4	Decal, Snorkel brand logo
5	0323897	1	Decal, danger you must not operate
6	0190988	1	Decal, lower control instructions
7	0074311	7	Decal, danger cylinder failure - (1 per cylinder)
8	0323899	1	Decal, danger electrical hazard
9	0070540	3	Decal, yellow arrow
10	0070541	3	Decal, blue arrow
11	0070901	1	Placard, caution serial number
12	0071425	1	Placard, platform identification
13	7030004	2	Decal, OmniQuip logo
14	0071927	1	Decal, hydraulic oil
15	0073491	1	Decal, safe operation information
16	0112027	1	Decal, TB 80 logo
17	0072276	4	Placard, lug nut torque
18	451986	1	Placard, danger do not alter switch
19	0072531	1	Decal, danger electrical hazard
20	0110708	1	Placard, danger axle/jack
21	0072541	1	Placard, danger do not operate
22	7030003	1	Decal, lube recommendations
23	0073139	1	Crankcase oil tag - (used for shipping only)
24	0073492	1	Decal, rotate while greasing
25	0150448	1	Decal, attach fall restraint
26	0181562	1	Placard, ANSI A92.5-1992
27	0073667	2	Decal, inspect wire ropes
28	0073668	1	Decal, caution do not use boom
29	0073585	2	Decal, made in USA
30	0070921	1	Placard, 125 volts 15 amps
31	0190989	1	Decal, danger do not reach
32		1	Placard, platform capacity - (consult factory)
33	0073043	1	Decal, operating manual enclosed
34	0073224	1	Decal, notice manual reorder
35	0110959	1	Placard, upper control box top
36	0180846	1	Placard, upper control box front
37	0072530	1	Decal, danger electrical hazard
38	0082003	1	Placard, lower controls
39	0071925	1	Decal, gasoline fuel - (used on gasoline engine machine)
40	0071926	1	Decal, diesel fuel - (used on diesel engine machine)
41	0151410	3	Decal, danger rotating engine parts
42	0074316	1	Decal, caution governor damage - (used on gasoline engine machine)
43	0111343	1	Decal, high range selector valve
44	0111342	1	Decal, high range selector location
45	0111390	2	Decal, 4 x 4 logo - (4 wheel drive machine)
46	0073298	2	Placard, danger foam filled tires - (used on foam filled tire machine)
47	7030001	1	Stripes, red/white
48	0162311	1	Decal, CE logo - (used on CE option)

View thousands of Crane Specifications on FreeCraneSpecs.com
https://truckmanualshub.com/

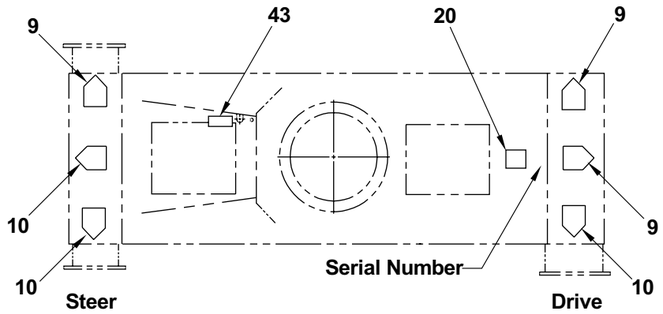

Top of Chassis

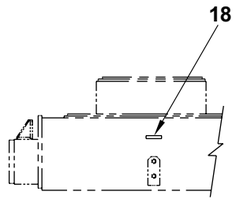

Rear of chassis

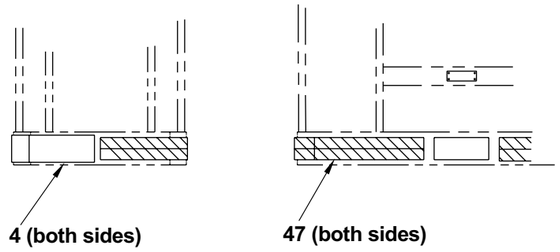

CE Platform Striping

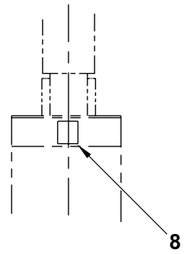

Tip Boom Rotator

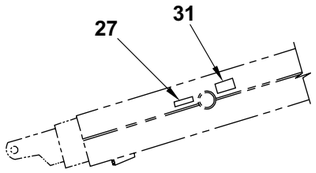

Boom Assembly

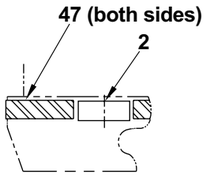

Counterweight Rear View

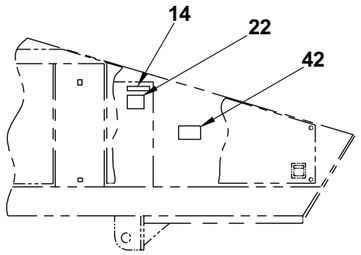

Left Side

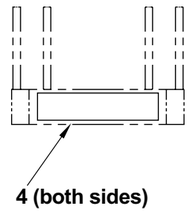

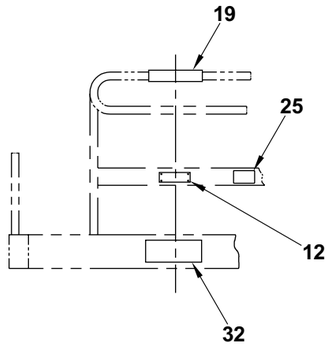

Standard Platform

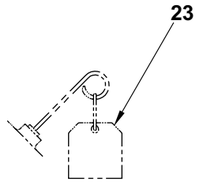

Engine Oil Dipstick

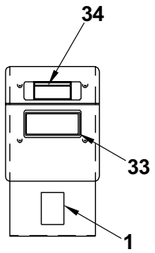

Manual Record Box

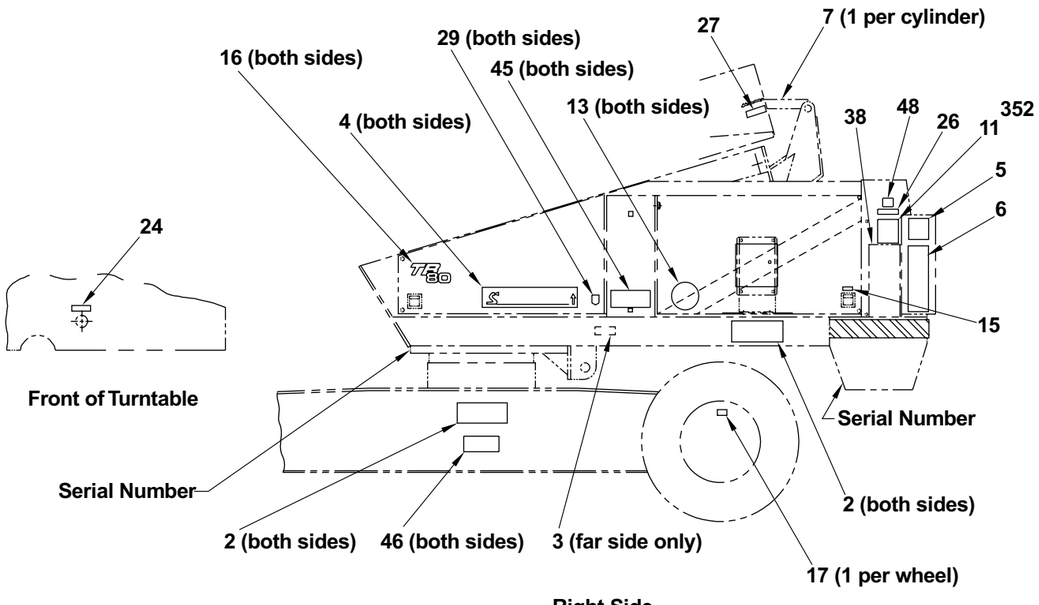

Front of Turntable

Right Side

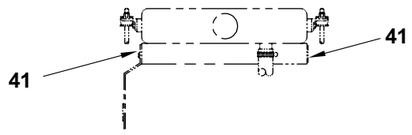

Top of Radiator

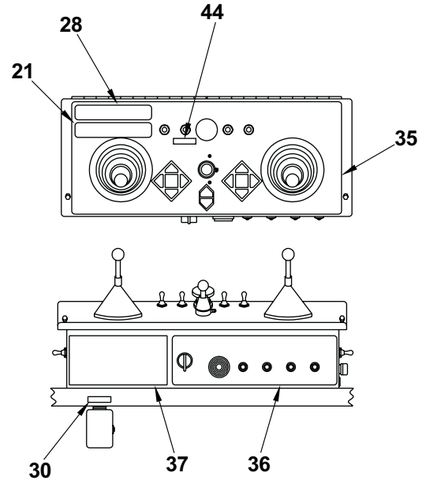

Platform Control Box

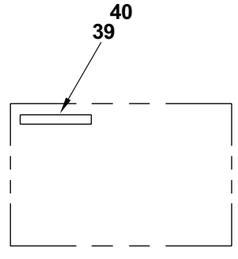

Fuel Tank

AW011014F

DWG. AW011014F	TITLE Placards and decals Snorkel model TB 80

Snorkel INTERNATIONAL

View thousands of Crane Specifications on FreeCraneSpecs.com
https://truckmanualshub.com/

Gear hub, Auburn

item	part no	qty	description
	0110283	1	Gear hub, Auburn
1	0112216	1	Spindle
2	8010027	1	Oil seal
3	8010030	1	Bearing cone
4	8010029	1	Bearing cup
5	0112217	1	Bearing cup
6	0112218	1	Bearing cone
7	8010275	1	Thrust washer
8	8010276	1	Lock washer
9	8010277	1	Lock nut
10	8010021	1	Pipe plug
11	8010105	12	Flat washer
12	8010278	12	Capscrew, hex head
13	0112219	1	Cover
14	0112220	1	Primary Sun gear
15	8010145	2	Retaining ring
16	8010075	1	Thrust washer
17	8010149	1	O-ring
18	8010143	1	Plunger
19	8010080	1	Disengage cover
20	8010168	2	Capscrew, hex head
21	0112221	1	Primary carrier
22	0112222	1	Secondary carrier
23	0112223	1	Ring gear
24	8010279	2	Thrust washer
25	0112224	1	Disengage spring
26	0112225	1	Hub
27	8010280	10	Wheel bolt
28	0112226	1	Input shaft
29	8010281	1	Shipping plug
30	8010138	1	Coupling
31	0112227	1	Pipe plug
32	8010028	1	Pipe plug
33	8010021	1	Magnetic plug

View thousands of Crane Specifications on FreeCraneSpecs.com
https://truckmanualshub.com

Gear hub, Auburn

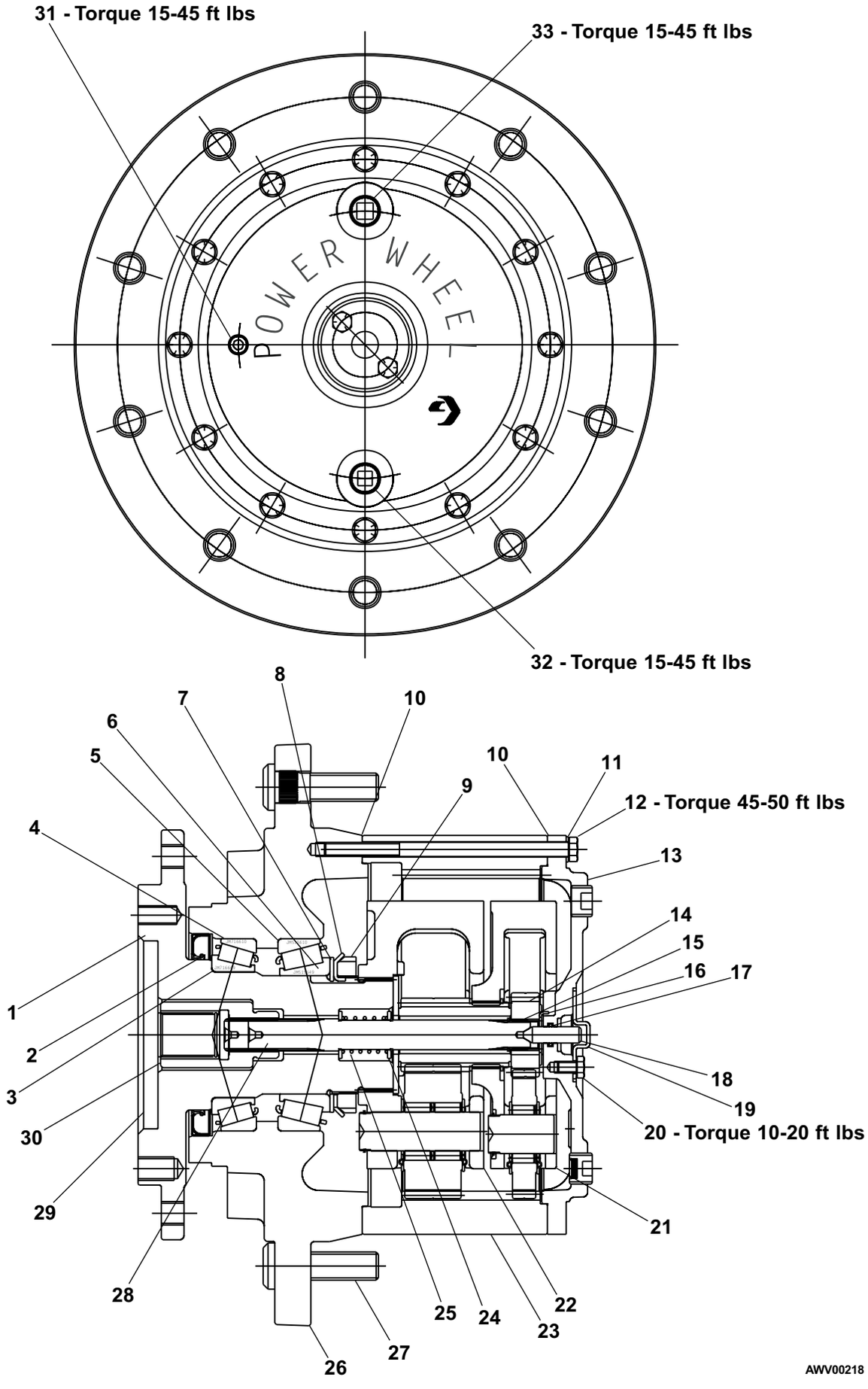

View thousands of Crane Specifications on FreeCraneSpecs.com
https://truckmanualshub.com/

Gear hub, Fairfield

item	part no	qty	description
	0110283	1	Gear hub, Fairfield
1	0112214	1	Cover
2	0112207	1	Ring gear
3	8060010	2	O-ring
4	0112203	1	Pipe plug
5	8060073	2	Thrust bearing
6	8060074	4	Thrust bearing
7	8060071	1	Retaining ring
8	8060070	1	Thrust washer
9	8060072	1	Housing
10	0112202	1	Bearing cone
11	0112201	1	Bearing cup
12	8060075	10	Stud
13	0112200	1	Bearing cone
14	0112199	1	Bearing cup
15	8060009	1	Lip seal
16	0112198	1	Spindle
17	8060077	4	Shoulder bolt 3/8-16
18	8060068	8	Capscrew 3/8-16
19	0112210	1	Coupling
20	0112209	1	Input shaft
21	8060138	2	Thrust washer
22	0112211	1	Spring
23	8060139	1	Retaining ring
24	8060140	1	Retaining ring
25	0112206	1	Internal gear
26	0112204	1	Carrier
27	0112205	1	Sun gear
28	0112208	1	Input spacer
29	8060241	1	Pipe plug
30	8060013	1	U-ring
31	8060129	1	O-ring
32	8060034	1	Disengage rod
33	8060035	1	Disengage cap
34	0112215	1	Cap cover
35	8060038	4	Capscrew 1/4-20
36	8060244	1	Thrust spacer

View thousands of Crane Specifications on FreeCraneSpecs.com
https://truckmanualshub.com/

Gear hub, Fairfield

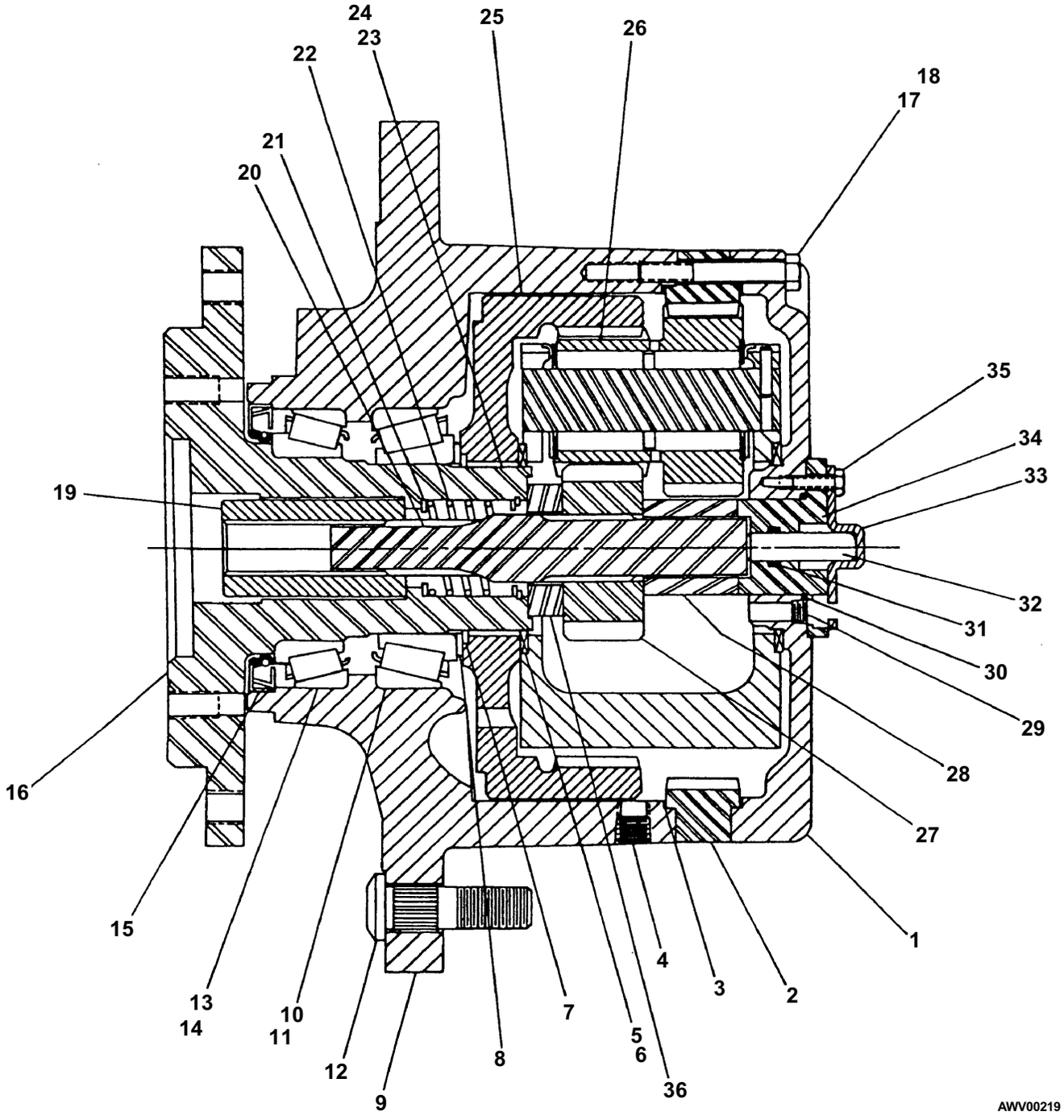

View thousands of Crane Specifications on FreeCraneSpecs.com
https://truckmanualshub.com/

Swing drive, Fairfield

item	part no	qty	description
	0110805	1	Swing drive, Fairfield
	0110688	1	Seal repair kit - (kit includes items 2 and 17)
1	8060105	1	Output shaft
2	Kit item	1	Seal - (not sold separately)
3	8060251	1	Hub
4	8060106	1	Bearing cup
5	8060107	1	Bearing cone
6	8060213	3	Magnetic pipe plug
7	8060108	1	Bearing cup
8	8060109	1	Bearing cone
9	8060243	1	Tanged washer
10	8060253	1	Lock washer
11	8060254	1	Lock nut
12	8060071	1	Retaining ring
13	8060256	1	Internal gear
14	8060257	2	Plug
15	8060212	1	Pipe plug
16	8060259	1	Ring gear
17	Kit item	2	O-ring - (not sold separately)
18	8060260	1	Cover
19	8060212	1	Pipe plug
20	8060262	1	Carrier
21	8060263	4	Thrust washer
22	8060073	2	Thrust bearing
23	8060122	1	Thrust washer
24	8060008	1	Input gear
25	8060102	6	Thrust washer
26	8060266	3	Roll pin
27	8060267	8	Bolt
28	8060268	4	Shoulder bolt
29	8060269	4	Lock washer
30	8060103	3	Spacer
31	8060084	4	Needle roller
32	8060101	3	Pinion shaft
33	8060104	6	Thrust washer
34	8060272	3	Cluster gear

View thousands of Crane Specifications on FreeCraneSpecs.com
https://truckmanualshub.com/

Swing drive, Fairfield

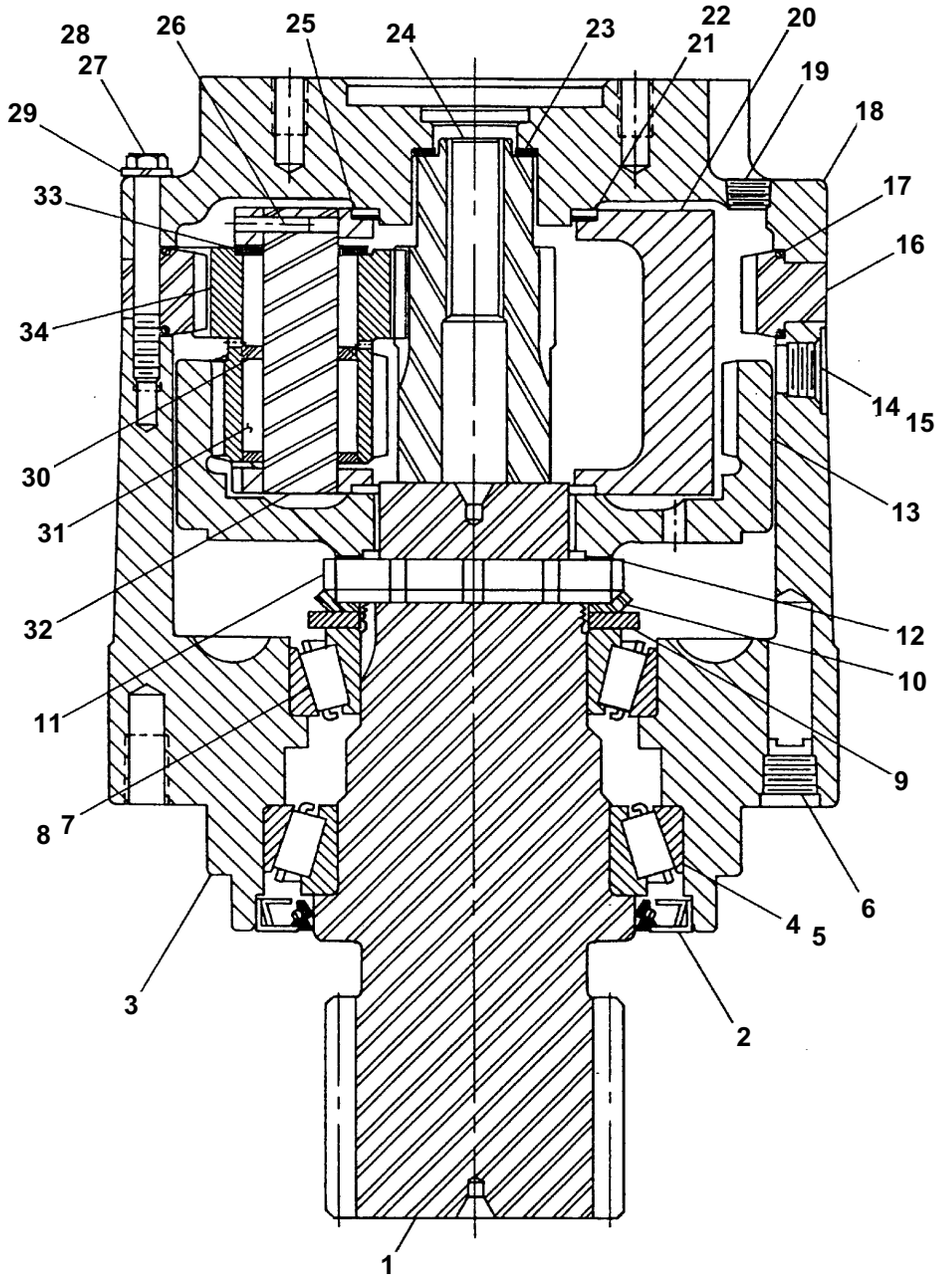

AWV00220

View thousands of Crane Specifications on FreeCraneSpecs.com
https://truckmanualshub.com/

Swing drive, Gear Products

item	part no	qty	description
	0110780	1	Swing drive, Gear Products
	8070148	1	Seal repair kit - (kit includes items 2, 6, 7, 23, 29, 31, 32, 35 and 36)
1	8070321	1	Output shaft
2	Kit item	1	Seal - (not sold separately)
3	8070323	1	Base
4	8070345	1	Bearing cone
5	8070346	1	Bearing cup
6	Kit item	1	Base gasket - (not sold separately)
7	Kit item	1	O-ring - (not sold separately)
8	8070325	1	Main housing
9	8070348	1	Bearing cone
10	8070349	1	Bearing cup
11	070350	3	Thrust bearing
12	8070326	1	Secondary planet carrier
13	8070327	1	Nut
14	8070328	1	Cotter pin
15	8070329	1	Output shaft
16	8070330	3	Secondary planet gear
17	8070331	3	Secondary planet shaft
18	8070332	3	Roll pin
19	8070333	3	Primary planet gear
20	8070351	1	Snap ring
21	8070334	1	Bronze spacer
22	8070335	1	Primary planet carrier
23	Kit item	1	Top ring gear gasket - (not sold separately)
24	8070337	1	Brake cylinder
25	8070355	3	Primary planet shaft
26	8070006	4	Friction disc
27	8070005	4	Friction disc
28	8070113	1	Brake piston
29	Kit item	1	O-ring - (not sold separately)
30	8070165	1	Back-up ring
31	Kit item	1	O-ring - (not sold separately)
32	Kit item	1	Back-up - (not sold separately)
33	8070338	1	Cover
34	8070004	16	Brake spring
35	Kit item	1	Top cover gasket - (not sold separately)
36	Kit item	1	Motor gasket - (not sold separately)
37	8070339	1	Mounting hole cover
38	8070340	2	Stud
39	8070352	1	O-ring
40	8070192	1	Input shaft
41	8070168	1	Back-up plate
42	8070341	1	Vent
43	8070342	3	Fill plug
44	8070343	1	Brake port plug

View thousands of Crane Specifications on FreeCraneSpecs.com
https://truckmanualshub.com/

Swing drive, Gear Products

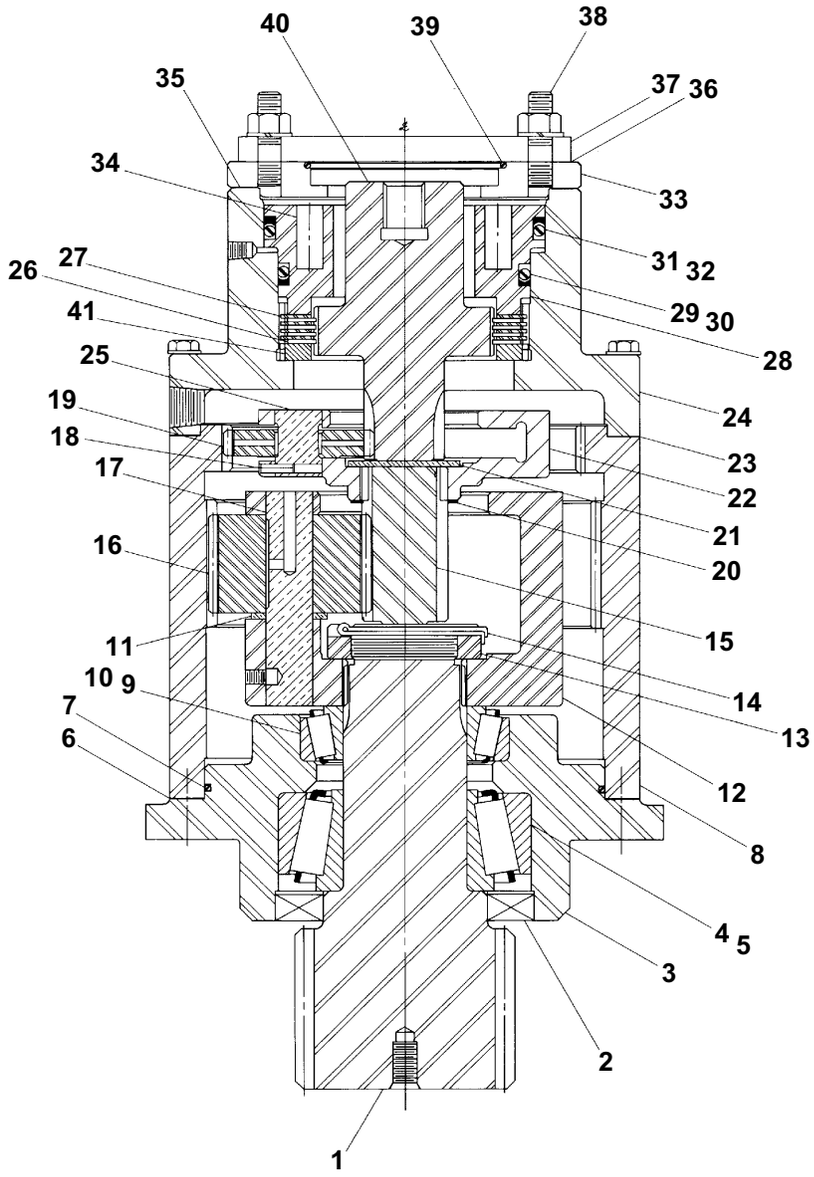

View thousands of Crane Specifications on FreeCraneSpecs.com
https://truckmanualshub.com

Swing drive brake

item	part no	qty	description
	0110985	1	Swing drive brake
	0111707	1	Seal repair kit - (kit includes items 2, 4, 15, 16, and 17)
1	8060261	1	Housing
2	Kit item	1	Gasket - (not sold separately)
3	8060184	1	Ball bearing
4	Kit item	1	Oil seal - (not sold separately)
5	8060252	1	Spring retainer
6	8060030	6	Compression spring
7	8060250	1	Splinded shaft
8	8060246	2	Torque pin
9	8060181	1	Primary disc
10	8060031	2	Compression spring
11	8060182	1	Rotating disc
12	8060183	1	Stationary disc
13	8060247	1	Piston
14	8060245	1	Packing back-up ring
15	Kit item	1	O-ring - (not sold separately)
16	Kit item	1	Packing back-up ring - (not sold separately)
17	Kit item	1	O-ring - (not sold separately)
18	8060185	1	Ball bearing
19	8060218	1	Bleeder screw
20	8060219	1	Protective plug
21	8060220	1	Power plate
22	8060225	4	Capscrew, hex flanged
23	8060226	1	Pressure relief valve

View thousands of Crane Specifications on FreeCraneSpecs.com
https://truckmanualshub.com

Swing drive brake

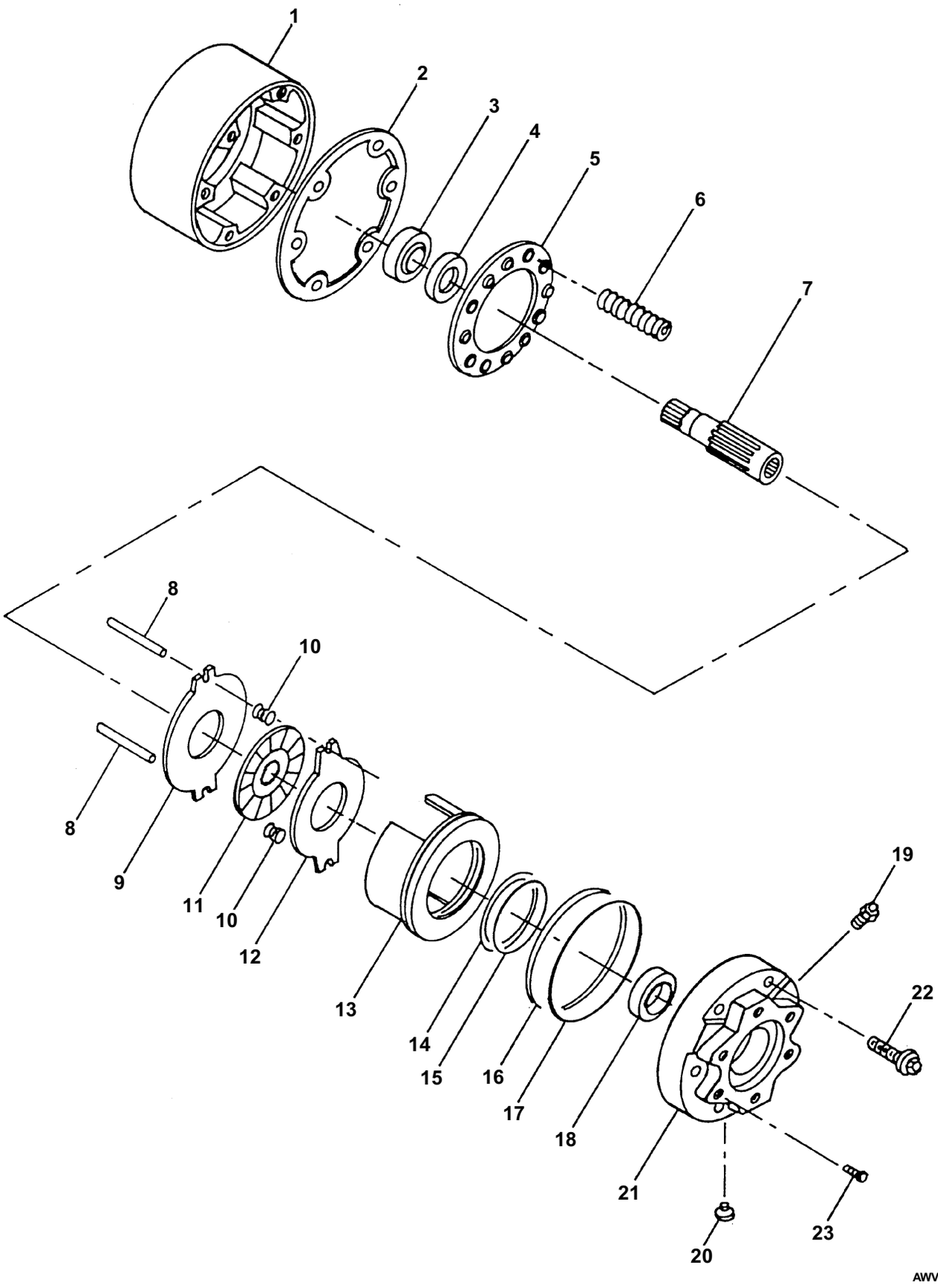

View thousands of Crane Specifications on FreeCraneSpecs.com
https://truckmanualshub.com

Pinion guard

item	part no	qty	description
1	0111373	1	Pinion guard
2	5569836	2	Set screw 3/4-10 x 1-3/4 inch long hex socket head
3	987179	2	Washer 3/4 medium lock
4	986459	2	Washer 3/4 medium flat
5	984469	2	Nut 3/4-10 hex jam

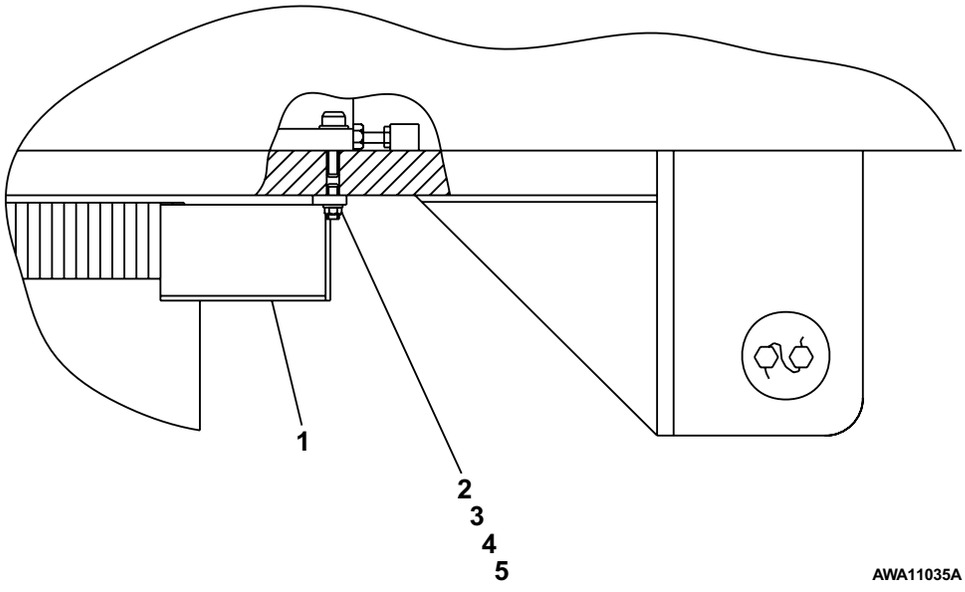

View thousands of Crane Specifications on FreeCraneSpecs.com
https://truckmanualshub.com/

TB 80

OmniQuip® TEXTRON

Snorkel® INTERNATIONAL

View thousands of Crane Specifications on FreeCraneSpecs.com
https://truckmanualshub.com

Chassis hydraulic equipment, 2 wheel drive

item	part no	qty	description
1	0111291	1	Control valve, axle jacking - (see page 2-22 for parts breakdown)
2	0111292	1	Jacking cylinder - (see hydraulic section for parts breakdown)
3	6010222	3	Cam valve
	0110714	1	Seal repair kit
4	0111290	1	Shuttle valve - (see page 2-83 for parts breakdown)
5	0111431	1	Drive control valve, 2 wheel drive - (see page 2-24 for parts breakdown)
6	5070026	2	Cap, wheel service
7	970029	2	Capscrew 1/4-20 x 3/4 inch long hex head grade 5
8	986019	2	Washer 1/4 medium flat
9	0111490	1	Steer cut-out valve, 2 wheel drive - (see page 2-81 for parts breakdown)
10	5035408	2	Bulkhead run tee
11	5034406	2	Bulkhead union
12	5074406	4	Bulkhead locknut
13	5035405	1	Bulkhead run tee
14	5074403	1	Bulkhead locknut
15	0111425	1	Mount angle
16	5560667	4	Machine screw #10-24 x 3/8 inch long pan head
17	987089	4	Washer #10 medium lock
18	5560693	4	Capscrew 3/4-10 x 1-3/4 inch long socket head
19	987179	4	Washer 3/4 medium lock
20	5075203	2	Hex head plug
21	0111528	1	Dual sequence valve, left hand - (see page 2-68 for parts breakdown)
22	5035303	2	Straight thread 90° elbow
23	0110495	1	Base plate, cam valve
24	970449	3	Capscrew 3/8-16 x 3/4 inch long hex head grade 5
25	987119	7	Washer 3/8 medium lock
26	986299	7	Washer 3/8 medium flat
27	972559	2	Capscrew 3/8-16 x 1 inch long socket flat head
28	984109	8	Nut 3/8-16 hex
29	0111305	1	Guard
30	970469	6	Capscrew 3/8-16 x 1 inch long hex head grade 5
31	970009	2	Capscrew 1/4-20 x 1/2 inch long hex head grade 5
32	987099	4	Washer 1/4 medium lock
33	0111527	1	Dual sequence valve, right hand - (see page 2-67 for parts breakdown)

View thousands of Crane Specifications on FreeCraneSpecs.com
https://truckmanualshub.com/

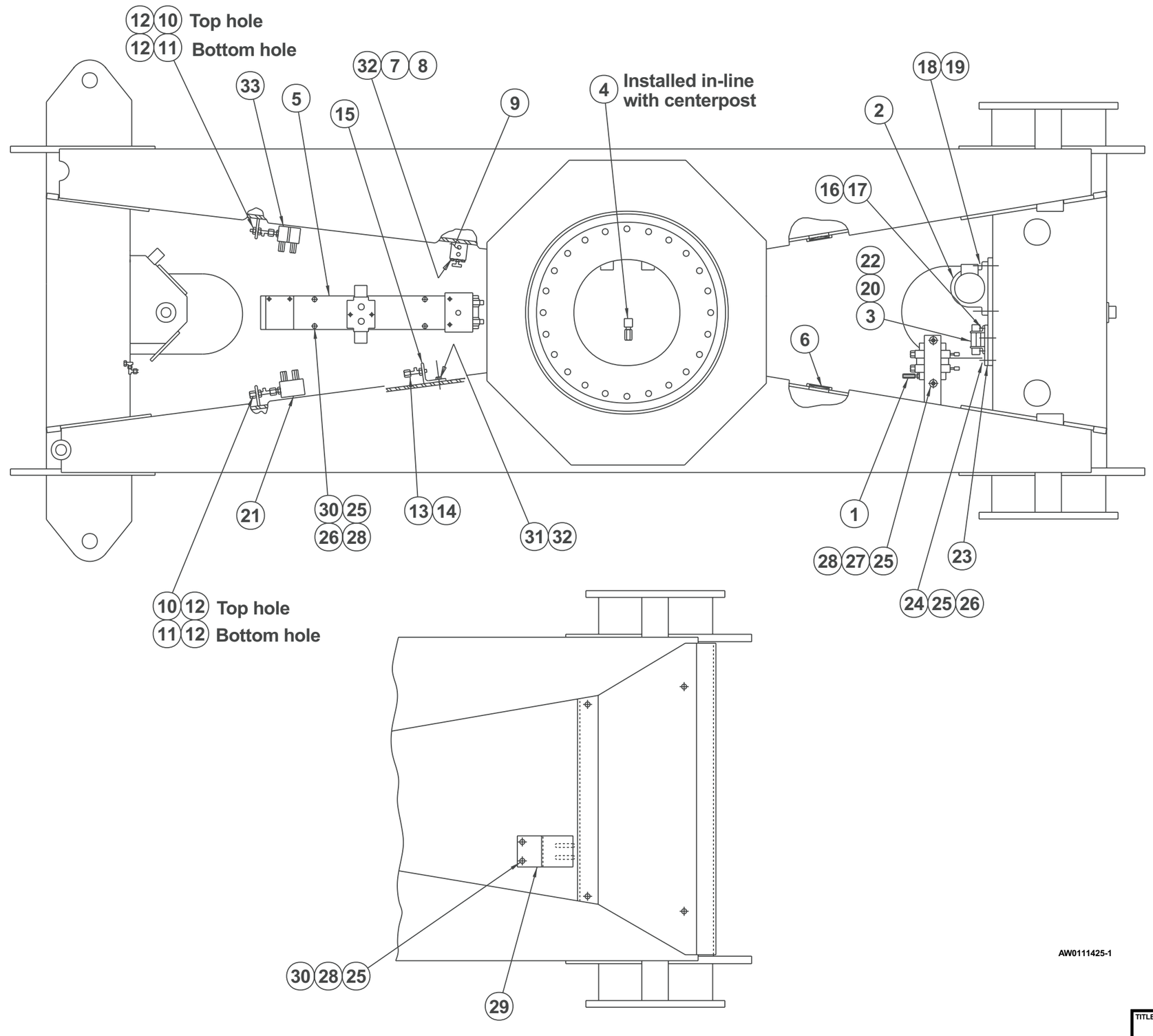

TITLE	Chassis hydraulic equipment 2 wheel drive Snorkel model TB 80
DWG. 0111425-1	

Snorkel INTERNATIONAL

View thousands of Crane Specifications on FreeCraneSpecs.com
https://truckmanualshub.com/

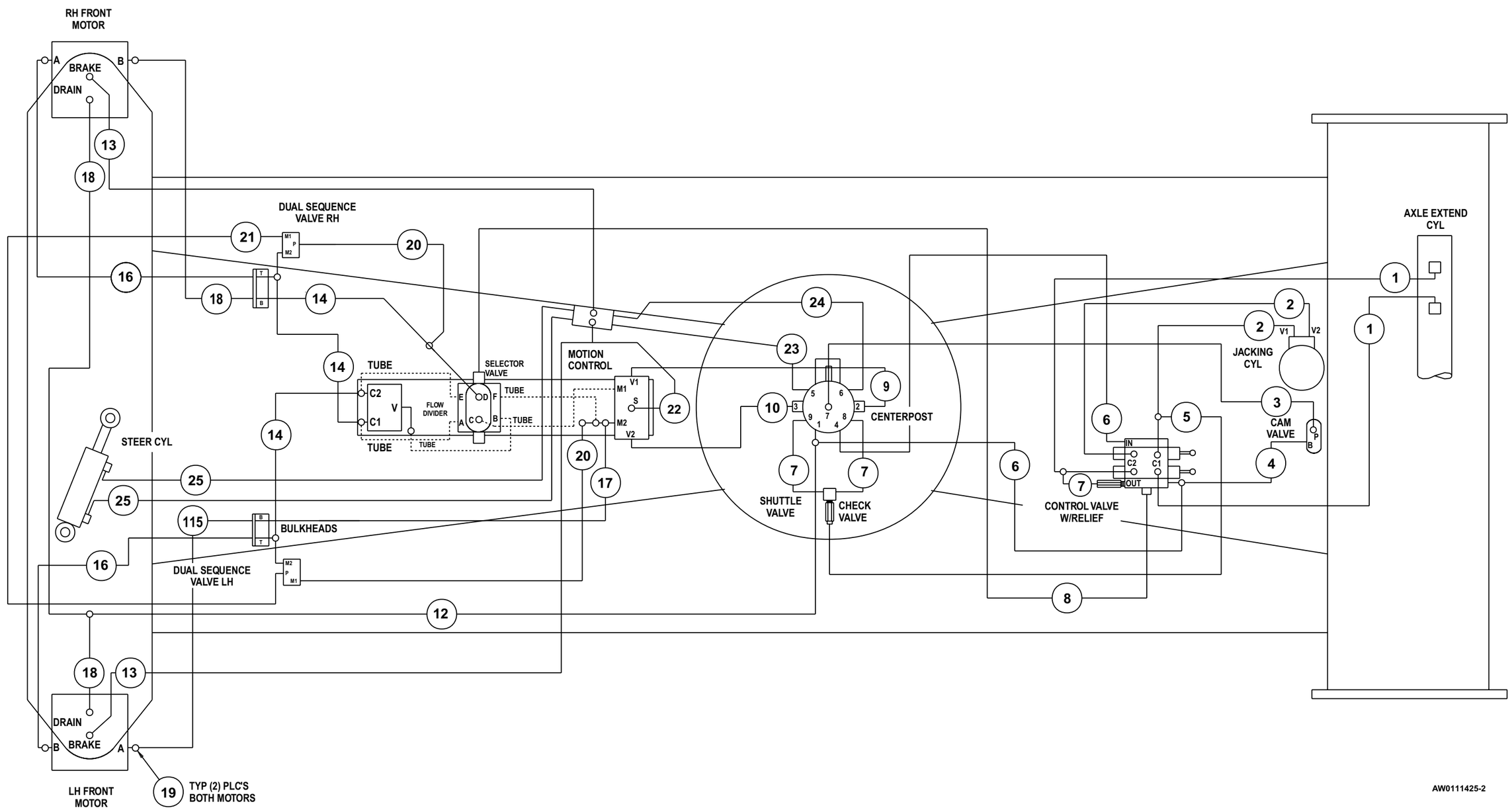

OmniQuip Snorkel INTERNATIONAL

TITLE Chassis hydraulic hoses
2 wheel drive
Snorkel model TB 80

View thousands of Crane Specifications on FreeCraneSpecs.com
https://truckmanualshub.com

Chassis hydraulic hoses, 2 wheel drive

item	part no	qty	description
1	0100270	2	1/4 inch hydraulic hose
2	0070799	2	1/4 inch hydraulic hose
3	0080386	1	1/4 inch hydraulic hose
4	0080359	1	1/4 inch hydraulic hose
5	0070781	1	1/4 inch hydraulic hose
6	0070782	1	1/4 inch hydraulic hose
7	0070773	2	1/4 inch hydraulic hose
8	0100271	3	1/4 inch hydraulic hose
9	0080941	1	3/4 inch hydraulic hose
10	0080939	1	3/4 inch hydraulic hose
11	0080524	1	3/4 inch hydraulic hose
12	0020279	1	3/8 inch hydraulic hose
13	0070771	2	1/4 inch hydraulic hose
14	0323804	3	3/4 inch hydraulic hose
15	0110173	2	3/4 inch hydraulic hose
16	0110171	2	3/4 inch hydraulic hose
17	0081080	1	3/8 inch hydraulic hose
18	0111286	1	3/8 inch hydraulic hose
19	5080015	4	Last chance filter
20	0073040	2	1/2 inch hydraulic hose
21	0020280	2	1/4 inch hydraulic hose
22	0070765	1	1/4 inch hydraulic hose
23	0070780	1	1/4 inch hydraulic hose
24	0090299	1	1/4 inch hydraulic hose
25	0070783	2	1/4 inch hydraulic hose

View thousands of Crane Specifications on FreeCraneSpecs.com
https://truckmanualshub.com

Chassis hydraulic equipment, 4 wheel drive

item	part no	qty	description
1	0111291	1	Control valve, axle jacking - (see page 2-22 for parts breakdown)
2	0111292	1	Jacking cylinder - (see hydraulic section for parts breakdown)
3	6010222	3	Cam valve
	0110714	1	Seal repair kit
4	0111290	1	Shuttle valve - (see page 2-83 for parts breakdown)
5	0111273	1	Anti-cavitation valve - (see page 2-36 for parts breakdown)
6	0111344	1	High range speed selector valve - (see page 2-72 for parts breakdown)
7	0111264	1	Drive control valve, 4 wheel drive - (see page 2-24 for parts breakdown
8	0110495	3	Base plate, cam valve
9	0323310	1	Bar clamp
10	5034203	1	Union 90° elbow
11	5036705	2	Swivel nut run tee
12	5034505	1	Bulkhead straight thread 90° elbow
13	5070026	2	Cap, wheel service
14	5074406	4	Bulkhead locknut
15	974679	12	Machine screw #10-24 x 5/8 inch long round head
16	987089	12	Washer #10 medium lock
17	0111305	1	Guard
18	5035408	3	Bulkhead run tee
19	970319	6	Capscrew 5/16-18 x 2-1/2 inch long hex head grade 5
20	987109	6	Washer 5/16 medium lock
21	984089	2	Nut 5/16-18 hex
22	972559	2	Capscrew 3/8-16 x 1 inch long socket flat head
23	970426	9	Capscrew 3/8-16 x 7/8 inch long hex head grade 5
24	970469	8	Capscrew 3/8-16 x 1 inch long hex head grade 5
25	987119	17	Washer 3/8 medium lock
26	986299	15	Washer 3/8 medium flat
27	5560611	8	Nut 3/8-16 hex
28	5560693	4	Capscrew 3/4-10 x 1-3/4 inch long socket head
29	987179	4	Washer 3/4 medium lock
30	5035303	5	Straight thread 90° elbow
31	0112030	4	Shim
32	5075203	5	Hex head plug
33	0111492	1	Steer cut-out valve, 4 wheel drive - (see page 2-82 for parts breakdown)
34	0111535	1	Series parallel package, right hand - (see page 2-26 for parts breakdown)
35	0111536	1	Series parallel package, left hand - (see page 2-28 for parts breakdown)
36	0111530	1	Dual sequence valve, 4 wheel drive - (see page 2-69 for parts breakdown)
37	0111528	1	Dual sequence valve, left hand - (see page 2-68 for parts breakdown)
38	5037008	2	Swivel nut 90° elbow
39	970059	2	Capscrew 1/4-20 x 1-1/2 inch long hex head grade 5
40	986019	4	Washer 1/4 medium flat
41	987099	4	Washer 1/4 medium lock
42	5560369	2	Capscrew 1/4-20 x 4 inch long hex head grade 5

View thousands of Crane Specifications on FreeCraneSpecs.com
https://truckmanualshub.com/

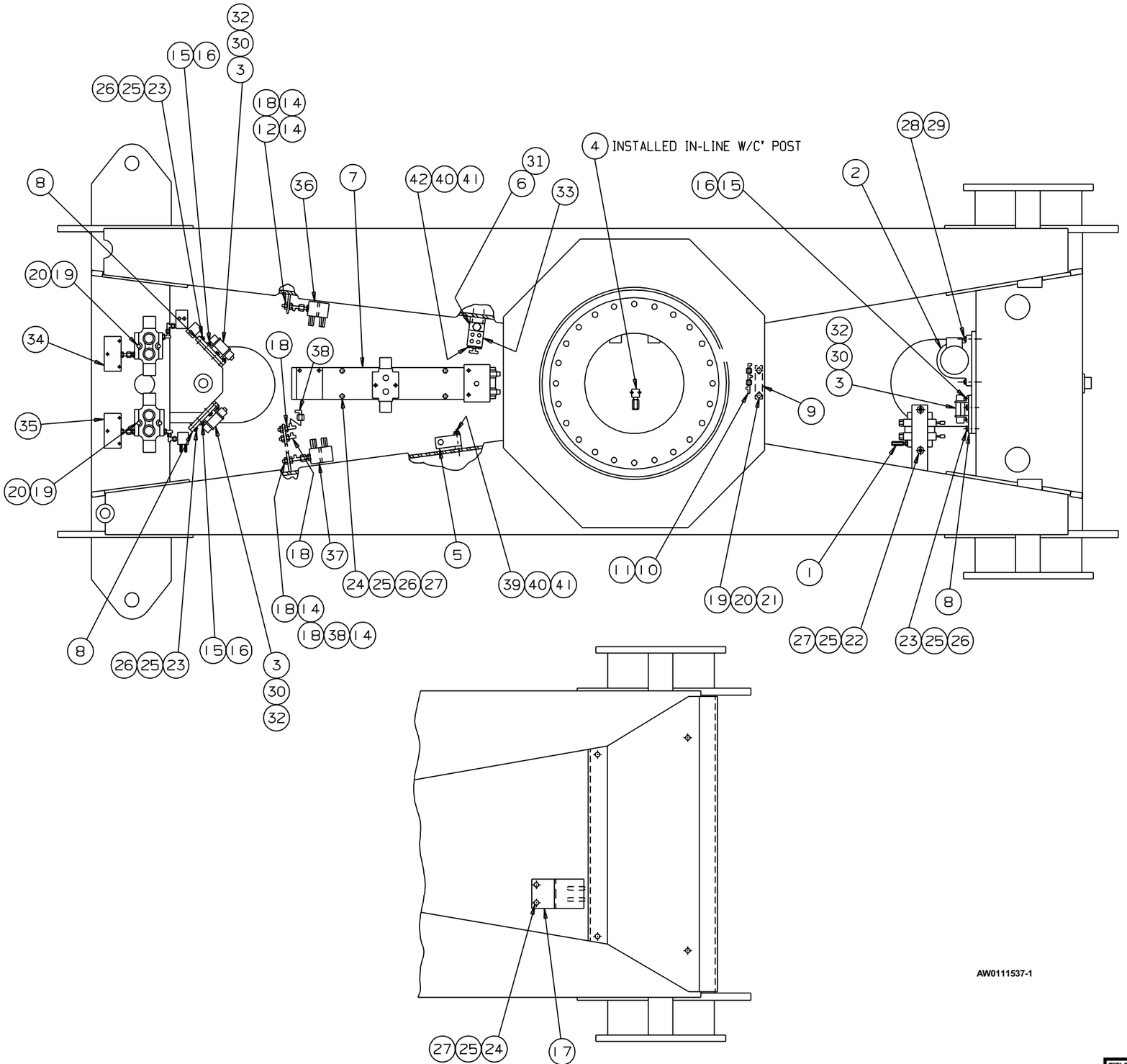

DWG. 0111537-1	TITLE Chassis hydraulic equipment 4 wheel drive Snorkel model TB 80

View thousands of Crane Specifications on FreeCraneSpecs.com
https://truckmanualshub.com/

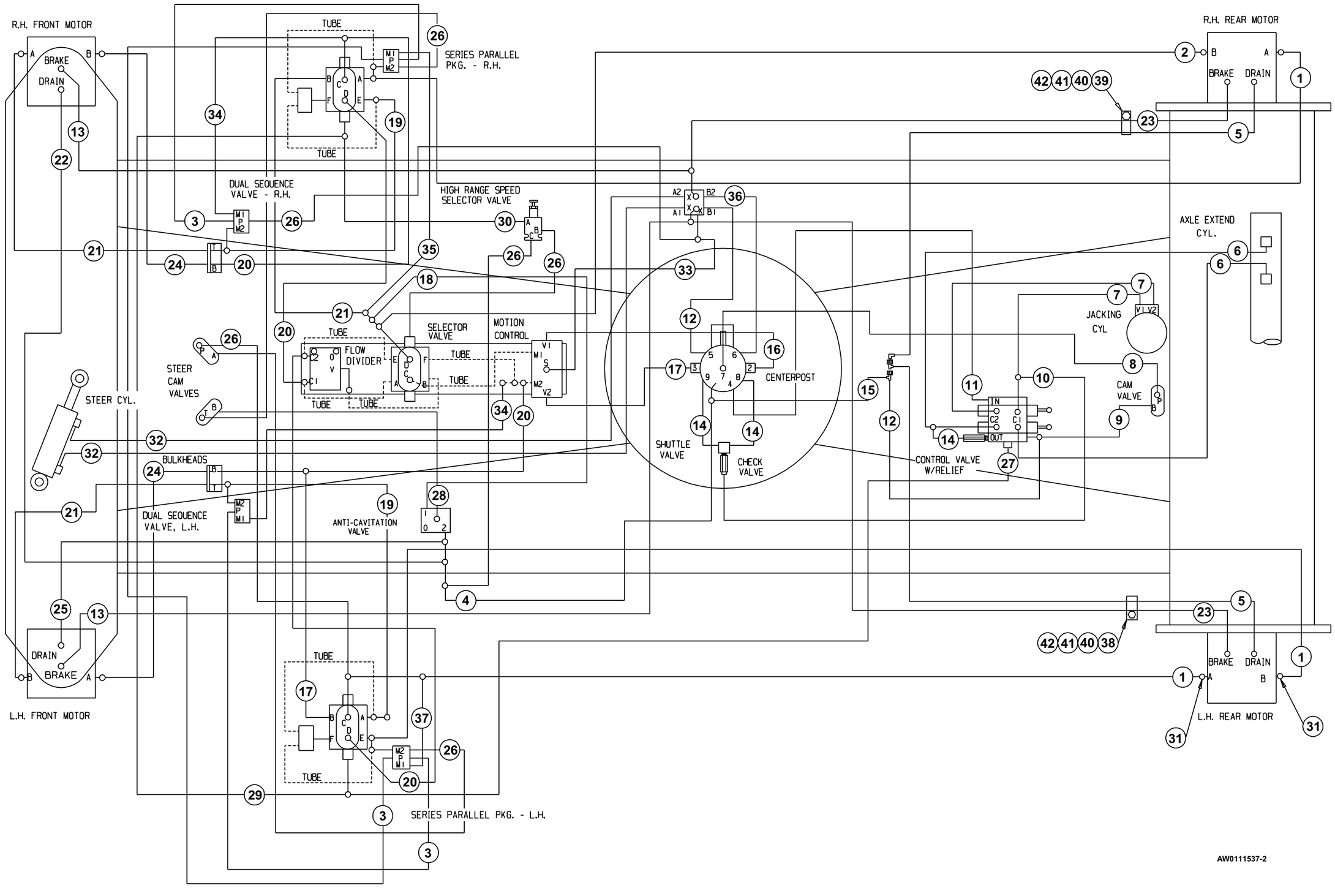

Snorkel INTERNATIONAL

Page 2 - 8

TITLE Chassis hydraulic hoses
4 wheel drive
Snorkel model TB 80

View thousands of Crane Specifications on FreeCraneSpecs.com
https://truckmanualshub.com

Chassis hydraulic hoses, 4 wheel drive

item	part no	qty	description
1	0111282	3	3/4 inch hydraulic hose
2	0111283	1	3/4 inch hydraulic hose
3	0040276	3	1/4 inch hydraulic hose
4	0110285	1	3/4 inch hydraulic hose
5	0090402	2	3/8 inch hydraulic hose
6	0100270	2	1/4 inch hydraulic hose
7	0070779	2	1/4 inch hydraulic hose
8	0080386	1	1/4 inch hydraulic hose
9	0080359	1	1/4 inch hydraulic hose
10	0070781	1	1/4 inch hydraulic hose
11	0070782	1	1/4 inch hydraulic hose
12	0070780	2	1/4 inch hydraulic hose
13	0070771	2	1/4 inch hydraulic hose
14	0070773	3	1/4 inch hydraulic hose
15	0020276	1	3/8 inch hydraulic hose
16	0080941	1	3/4 inch hydraulic hose - (before 2-01-00)
	0080939	1	3/4 inch hydraulic hose - (after 2-01-00)
17	0110173	2	3/4 inch hydraulic hose
18	0110173	1	3/4 inch hydraulic hose
19	0323804	2	3/4 inch hydraulic hose
20	0080524	4	3/4 inch hydraulic hose
21	0110171	3	3/4 inch hydraulic hose
22	0111286	1	3/8 inch hydraulic hose
23	0100491	2	1/4 inch hydraulic hose
24	0110173	2	3/4 inch hydraulic hose
25	0081080	1	3/8 inch hydraulic hose
26	0020280	6	1/4 inch hydraulic hose
27	0111346	1	1/4 inch hydraulic hose
28	0101278	1	1/4 inch hydraulic hose
29	0070768	1	1/4 inch hydraulic hose
30	0070911	1	1/4 inch hydraulic hose
31	5080015	8	Last chance filter
32	0070783	2	1/4 inch hydraulic hose
33	0070765	1	1/4 inch hydraulic hose
34	0073040	2	1/2 inch hydraulic hose
35	0070792	1	1/2 inch hydraulic hose
36	0090299	1	1/4 inch hydraulic hose
37	0020424	1	1/2 inch hydraulic hose
38	5093013	1	Clamp
39	5093014	1	Clamp
40	970469	2	Capscrew 3/8-16 x 1 inch long hex head grade 5
41	986299	4	Washer 3/8 medium flat
42	5560033	2	Nut 3/8-16 self locking

View thousands of Crane Specifications on FreeCraneSpecs.com

Hydraulic equipment, turntable

item	part no	qty	description
1	0112077	1	Control valve and fittings, non-proportional - (see page 2-14 for parts breakdown)
2	0111857	1	Control valve and fittings, proportional - (see page 2-18 for parts breakdown)
3	0111878	1	Pump control valve - (see page 2-80 for parts breakdown)
4	0111879	1	Pressure manifold - (see page 2-79 for parts breakdown)
5	0111876	1	Blocking valve, extend - (see page 2-38 for parts breakdown)
6	0111877	1	Blocking valve, lift - (see page 2-39 for parts breakdown)
7	0112029	1	Hydraulic oil return filter - (see page 2-75 for parts breakdown)
8	0082055	1	Accumulator - (see page 2-34 for parts breakdown)
9	5093014	2	Clamp
10	0072940	1	Emergency power unit - (see page 2-71 for parts breakdown)
11	5034602	2	Bulkhead 45° elbow
12	5074401	6	Bulkhead locknut
13	5070005	4	Diagnostic nipple
14	970569	2	Capscrew 3/8-16 x 3-1/2 inch long hex head grade 5
15	986299	14	Washer 3/8 medium flat
16	987119	12	Washer 3/8 medium lock
17	970449	4	Capscrew 3/8-16 x 3/4 inch long hex head grade 5
18	5560641	2	Capscrew 5/16-18 x 3-1/2 inch long hex head grade 5
19	986269	8	Washer 5/16 medium flat
20	987109	8	Washer 5/16 medium lock
21	970479	6	Capscrew 3/8-16 x 1-1/4 inch long hex head grade 5
22	970239	1	Capscrew 5/16-18 x 3/4 inch long hex head grade 5
23	970319	5	Capscrew 5/16-18 x 2-1/2 inch long hex head grade 5
24	970709	4	Capscrew 7/16-14 x 1 inch long hex head grade 5
25	986179	4	Washer 7/16 medium flat
26	987129	4	Washer 7/16 medium lock
27	0190878	1	Axle interlock valve - (see page 2-37 for parts breakdown)
28	5035403	2	Bulkhead run tee
29	25560277	1	Trim lock x 24 inch long
30	5034401	1	Bulkhead union
31	5034501	1	Bulkhead straight thread 90° elbow
32	5034404	1	Bulkhead union
33	5074404	1	Bulkhead locknut
34	5560033	2	Nut 3/8-16 self locking
35	5093000	2	Clamp
36	970029	1	Capscrew 1/4-20 x 3/4 inch long hex head grade 5
37	986019	1	Washer 1/4 medium flat
38	987099	1	Washer 1/4 medium lock

View thousands of Crane Specifications on FreeCraneSpecs.com
https://truckmanualshub.com/

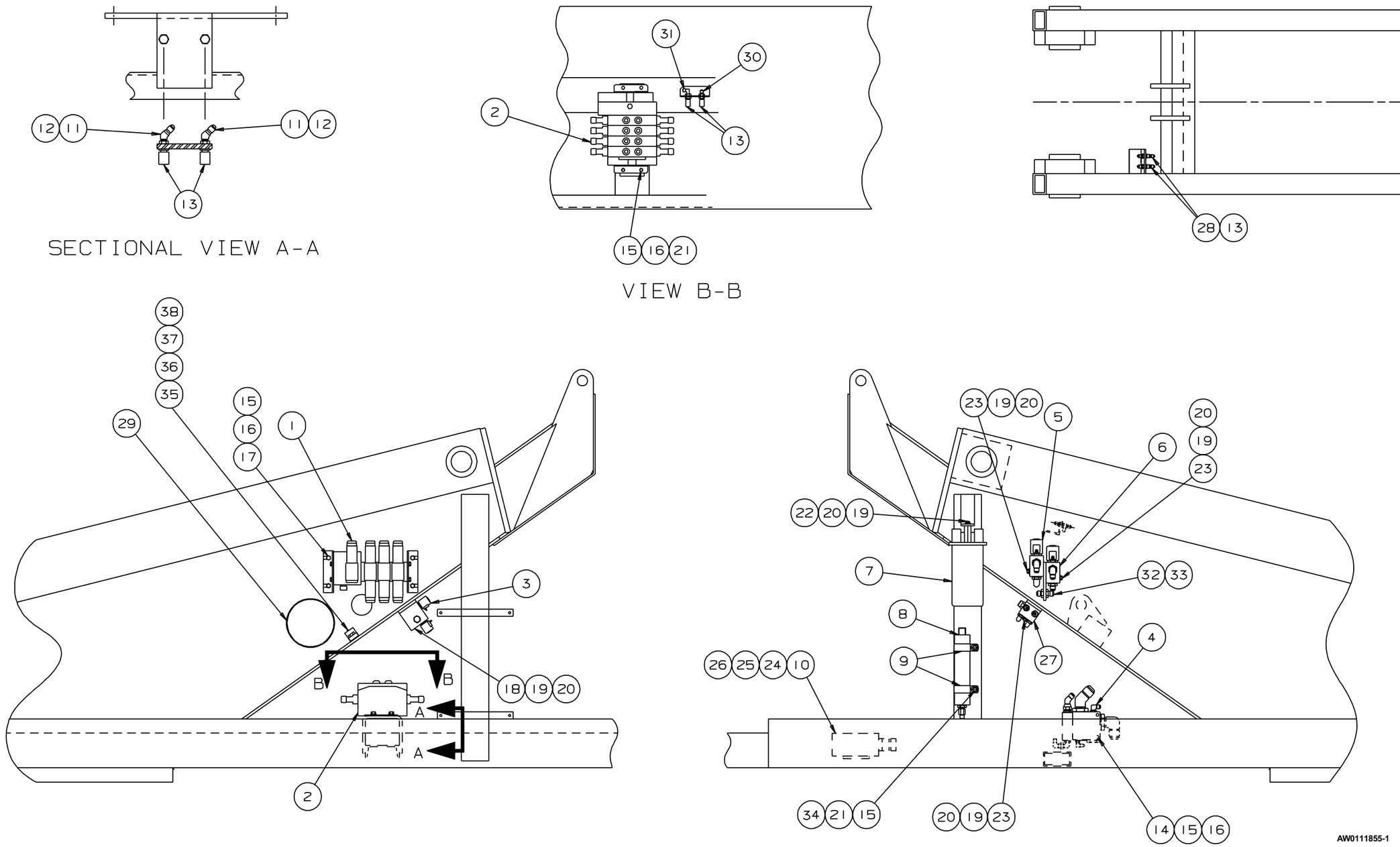

TITLE Turntable hydraulic equipment

Snorkel model TB 80

DWG. 0111855-1

View thousands of Crane Specifications on FreeCraneSpecs.com
https://truckmanualshub.com/

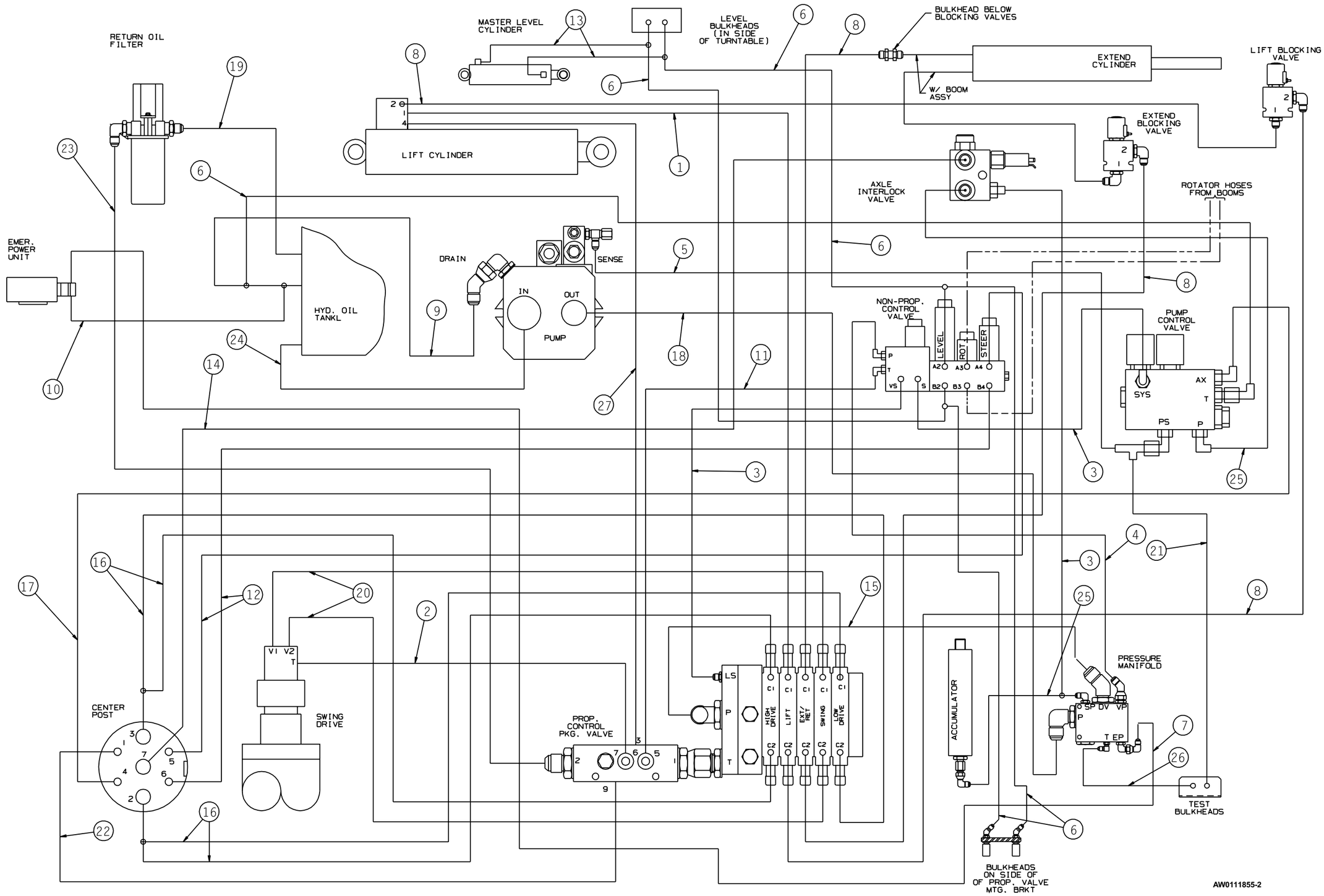

Snorkel INTERNATIONAL

TITLE Turntable hydraulic hoses

Snorkel model TB 80

DWG. 0111855-2

View thousands of Crane Specifications on FreeCraneSpecs.com
https://truckmanualshub.com

Hydraulic hoses, turntable

item	part no	qty	description
1	0080522	1	1/2 inch hydraulic hose
2	0070771	1	1/4 inch hydraulic hose
3	0020280	3	1/4 inch hydraulic hose
4	0020273	1	3/8 inch hydraulic hose
5	0020283	1	1/4 inch hydraulic hose
6	0050137	6	1/4 inch hydraulic hose
7	0050400	1	3/8 inch hydraulic hose
8	0060315	4	1/2 inch hydraulic hose
9	0070927	1	1/2 inch hydraulic hose
10	0070792	1	1/2 inch hydraulic hose
11	0070786	1	3/8 inch hydraulic hose
12	0080362	2	3/8 inch hydraulic hose
13	0080359	2	1/4 inch hydraulic hose
14	0100271	1	1/4 inch hydraulic hose
15	0111843	1	1 inch hydraulic hose
16	0111844	4	1/2 inch hydraulic hose
17	0111287	1	1/4 inch hydraulic hose
18	0110200	1	1 inch hydraulic hose - (Deutz machines only)
	0110199	1	1 inch hydraulic hose
19	0180943	1	1-1/4 inch hydraulic hose
20	0180784	2	1/2 inch hydraulic hose
21	0180946	1	1/4 inch hydraulic hose
22	0110198	1	1/2 inch hydraulic hose
23	0111882	1	1-1/4 inch hydraulic hose
24	0111121	1	Suction hose 1-1/2 inch diameter - (Deutz machines only)
	0111883	1	Suction hose 1-1/2 inch diameter
25	0070768	2	1/4 inch hydraulic hose
26	0070765	1	1/4 inch hydraulic hose
27	0060297	1	1/4 inch hydraulic hose

View thousands of Crane Specifications on FreeCraneSpecs.com
https://truckmanualshub.com

Control valve and fittings, non-proportional

item	part no	qty	description
	0112077	1	Control valve and fittings, non-proportional
1	6010974	1	Control valve, non-proportional - (see page 2-16 for parts breakdown)
2	0191640	2	Angle
3	5065805	6	Long straight thread adapter
4	5063905	4	Fitting nut
5	5064001	4	Tube end reducer
6	5035320	1	Straight thread 90° elbow
7	5065703	2	Straight thread adapter
8	5036703	2	Swivel nut run tee
9	5037005	1	Swivel nut 90° elbow
10	5065708	1	Straight thread adapter
11	5075205	2	Hex head plug
12	0082010	1	Decal set, non-proportional control valve
13	970239	2	Capscrew 5/16-18 x 3/4 inch long hex head grade 5
14	987109	4	Washer 5/16 medium lock
15	986269	6	Washer 5/16 medium flat
16	0191641	1	Spacer plate
17	5560674	2	Capscrew 5/16-18 x 1-1/2 inch long hex head grade 5

View thousands of Crane Specifications on FreeCraneSpecs.com
https://truckmanualshub.com

Control valve and fittings, non-proportional

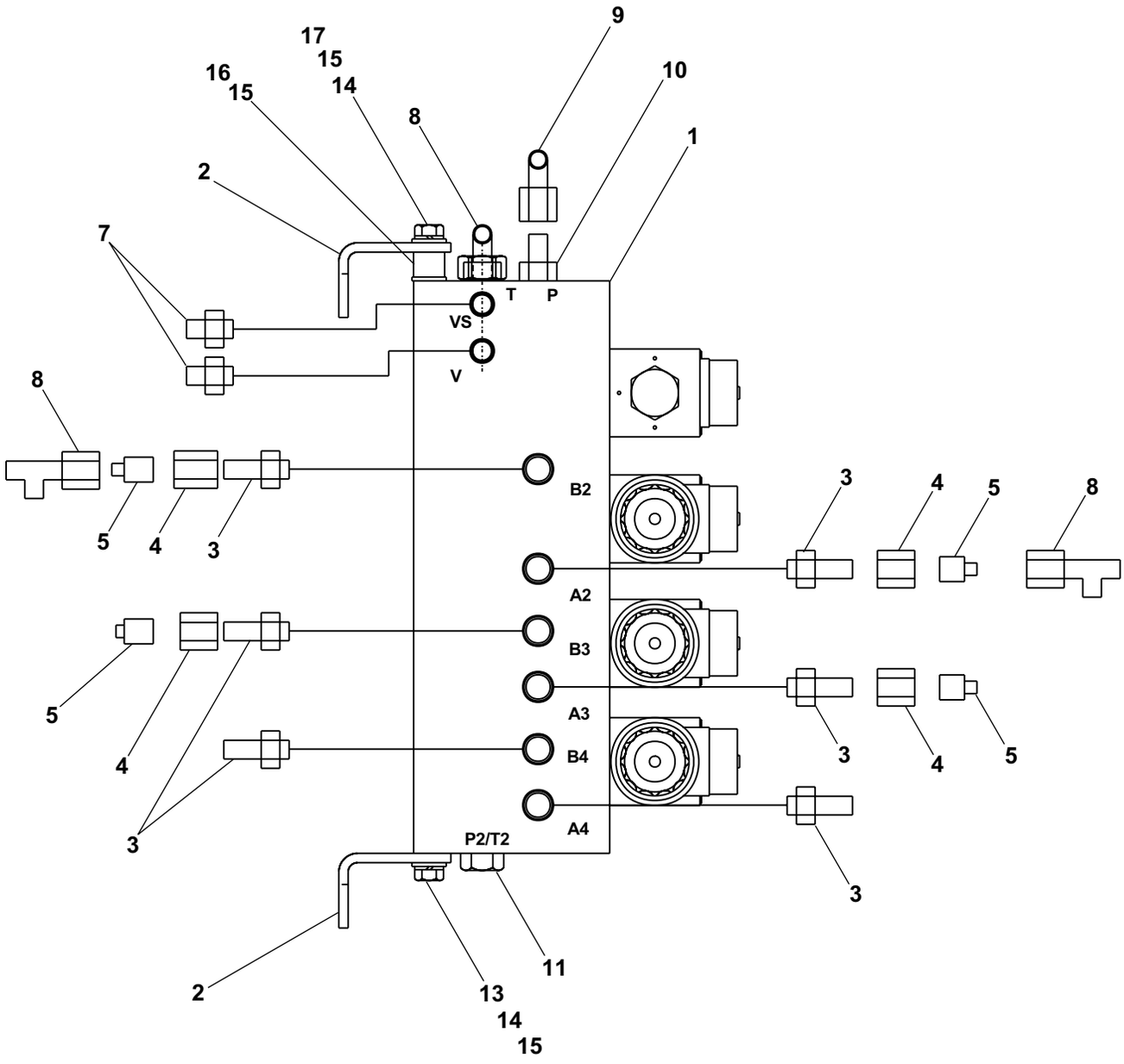

View thousands of Crane Specifications on FreeCraneSpecs.com
https://truckmanualshub.com/

Control valve, non-proportional

item	part no	qty	description
	6010974	1	Control valve, non-proportional
1	8230105	1	Manifold body, aluminum
2	8230106	4	Relief valve
3	8230107	2	Check valve
4	8230108	1	Flow control valve
5	8230109	1	Shuttle valve
6	8230110	1	Directional control valve section, inlet
7	6010904	1	Directional control valve section, level
8	6010904	1	Directional control valve section, rotate
9	6010908	1	Directional control valve section, steer
10	8230111	1	Orifice, 1.0 mm diameter orifice

View thousands of Crane Specifications on FreeCraneSpecs.com
https://truckmanualshub.com/

Control valve, non-proportional

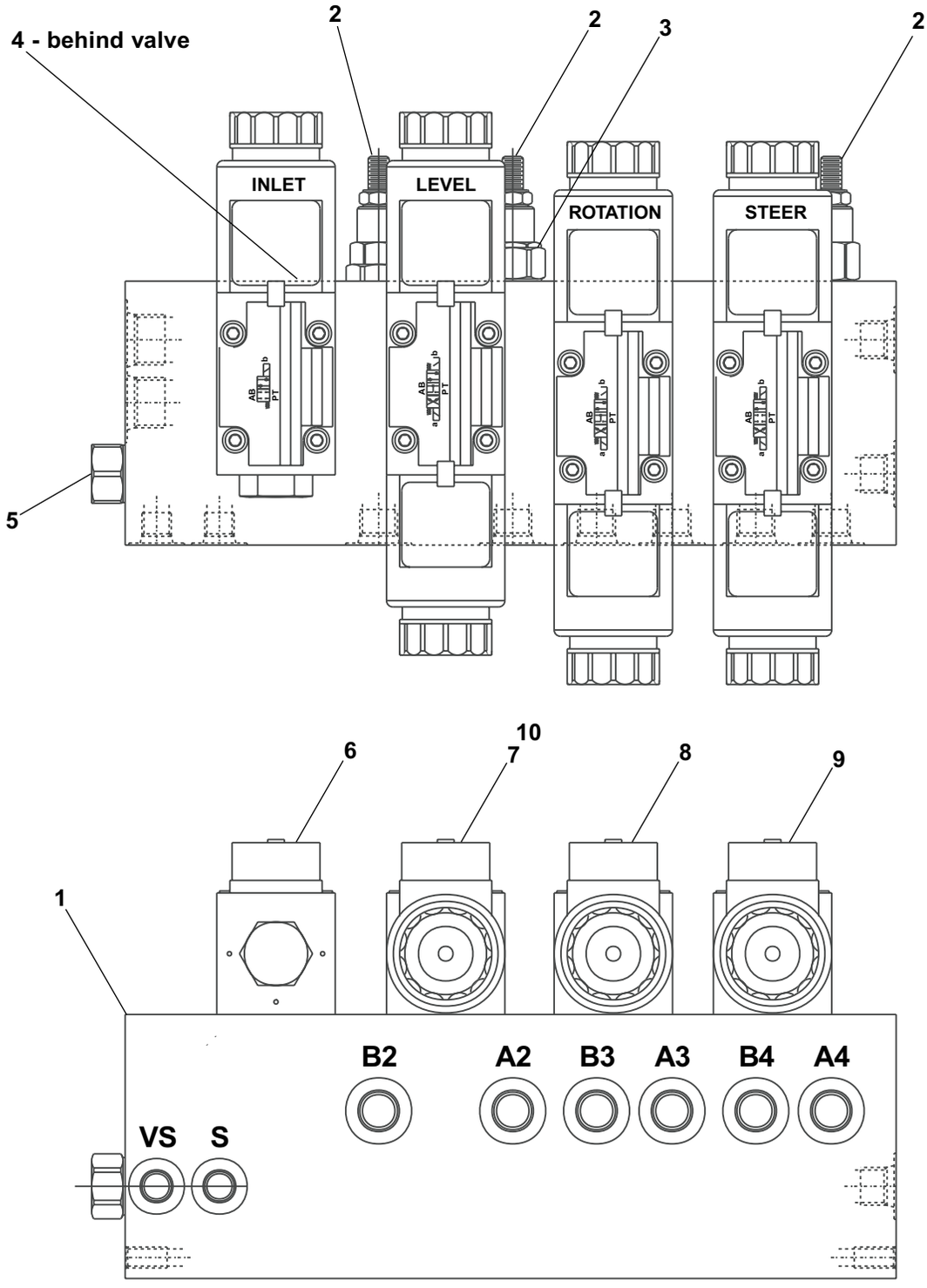

View thousands of Crane Specifications on FreeCraneSpecs.com
https://truckmanualshub.com/

Control valve and fittings, proportional

item	part no	qty	description
	0111857	1	Control valve and fittings, proportional
1	6010846	1	Control valve, proportional - (see page 2-20 for parts breakdown)
2	5065709	5	Straight thread adapter
3	5065703	1	Straight thread adapter
4	5035324	1	Straight thread 90° elbow
5	5035306	1	Straight thread 90° elbow
6	5035311	1	Straight thread 90° elbow
7	5025002	1	Swivel adapter
8	5065729	4	Straight thread adapter
9	5037006	2	Swivel nut 90° elbow
10	5075208	1	Hex head plug
11	5065806	1	Long straight thread adapter
12	0110156	1	Pressure manifold
13	5075205	2	Hex head plug
14	5075206	1	Hex head plug
15	5035705	1	Straight thread 45° elbow
16	5065705	1	Straight thread adapter
17	5036903	1	Swivel nut 45° elbow
18	5065719	1	Straight thread adapter
19	5037003	1	Swivel nut 90° elbow
20	5036906	2	Swivel nut 45° elbow
21	5035305	1	Straight thread 90° elbow

View thousands of Crane Specifications on FreeCraneSpecs.com
https://truckmanualshub.com/

Control valve and fittings, proportional

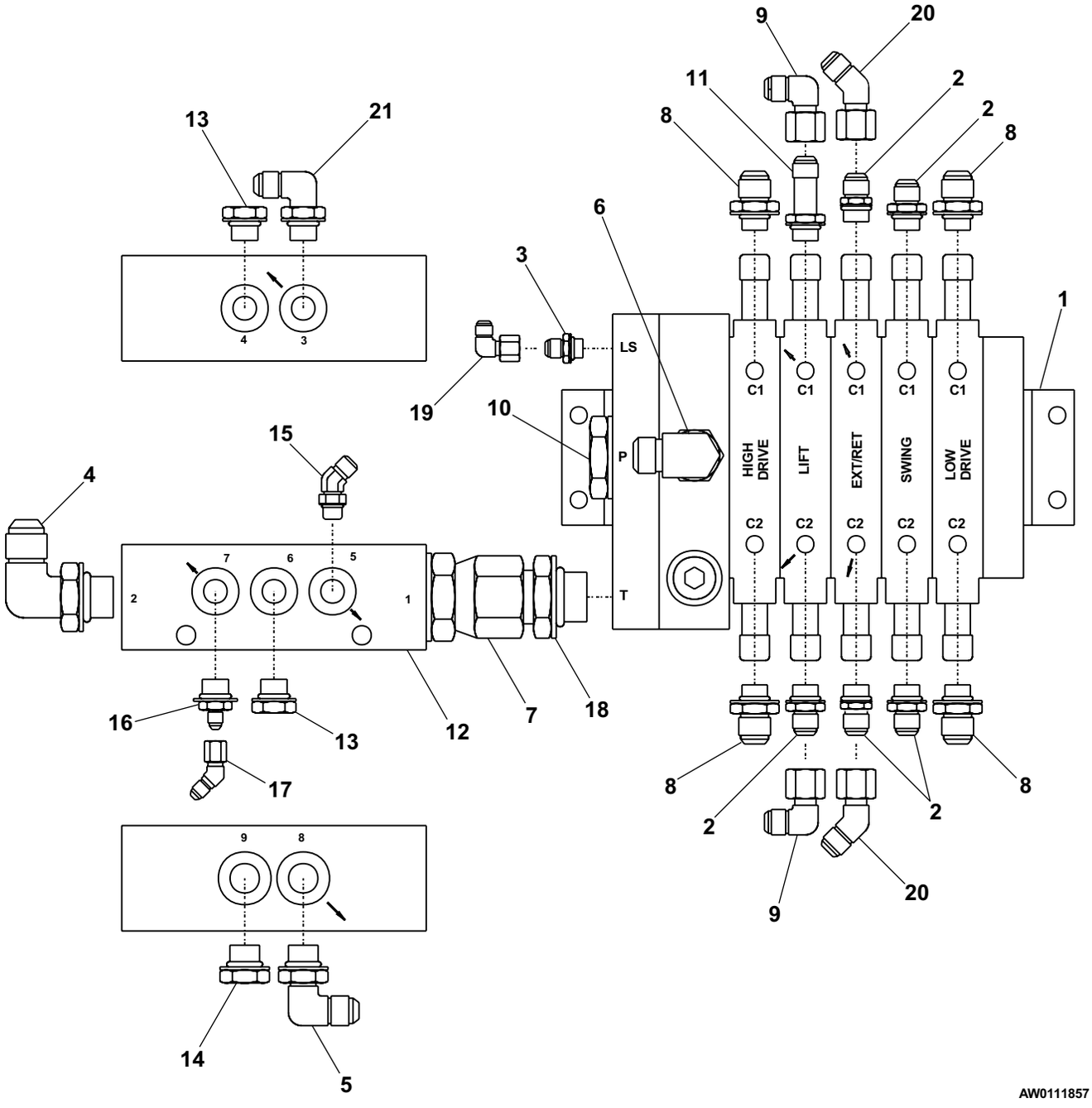

View thousands of Crane Specifications on FreeCraneSpecs.com
https://truckmanualshub.com/

Control valve, proportional

item	part no	qty	description
	6010846	1	Control valve, proportional
1	6010860	1	Inlet section
	8010245	1	O-ring seal kit for valve section
2	6010890	1	Drive control valve section #1
	8010245	1	O-ring seal kit for valve section
	6010653	2	Solenoid cartridge, 12 volt DC - (black - 33 Hz)
			(includes cartridge, o-ring and orifice disc - must be installed as complete unit)
3	6010891	1	Lift/lower control valve section
	8010245	1	O-ring seal kit for valve section
	6010653	2	Solenoid cartridge, 12 volt DC - (black - 33 Hz)
			(includes cartridge, o-ring and orifice disc - must be installed as complete unit)
4	6010892	1	Extend/retract control valve section
	8010245	1	O-ring seal kit for valve section
	6010845	2	Solenoid cartridge, 12 volt DC - (blue - 60 Hz)
			(includes cartridge, o-ring and orifice disc - must be installed as complete unit)
5	6010893	1	Swing control valve section
	8010245	1	O-ring seal kit for valve section
	6010653	2	Solenoid cartridge, 12 volt DC - (black - 33 Hz)
			(includes cartridge, o-ring and orifice disc - must be installed as complete unit)
6	6010894	1	Drive control valve section #2
	8010245	1	O-ring seal kit for valve section
	6010653	2	Solenoid cartridge, 12 volt DC - (black - 33 Hz)
			(includes cartridge, o-ring and orifice disc - must be installed as complete unit)
7	6010871	1	Outlet section
	8010245	1	O-ring seal kit for valve section
8	8010273	2	Nut/washer
9	8010274	2	Set screw

View thousands of Crane Specifications on FreeCraneSpecs.com
https://truckmanualshub.com

Control valve, proportional

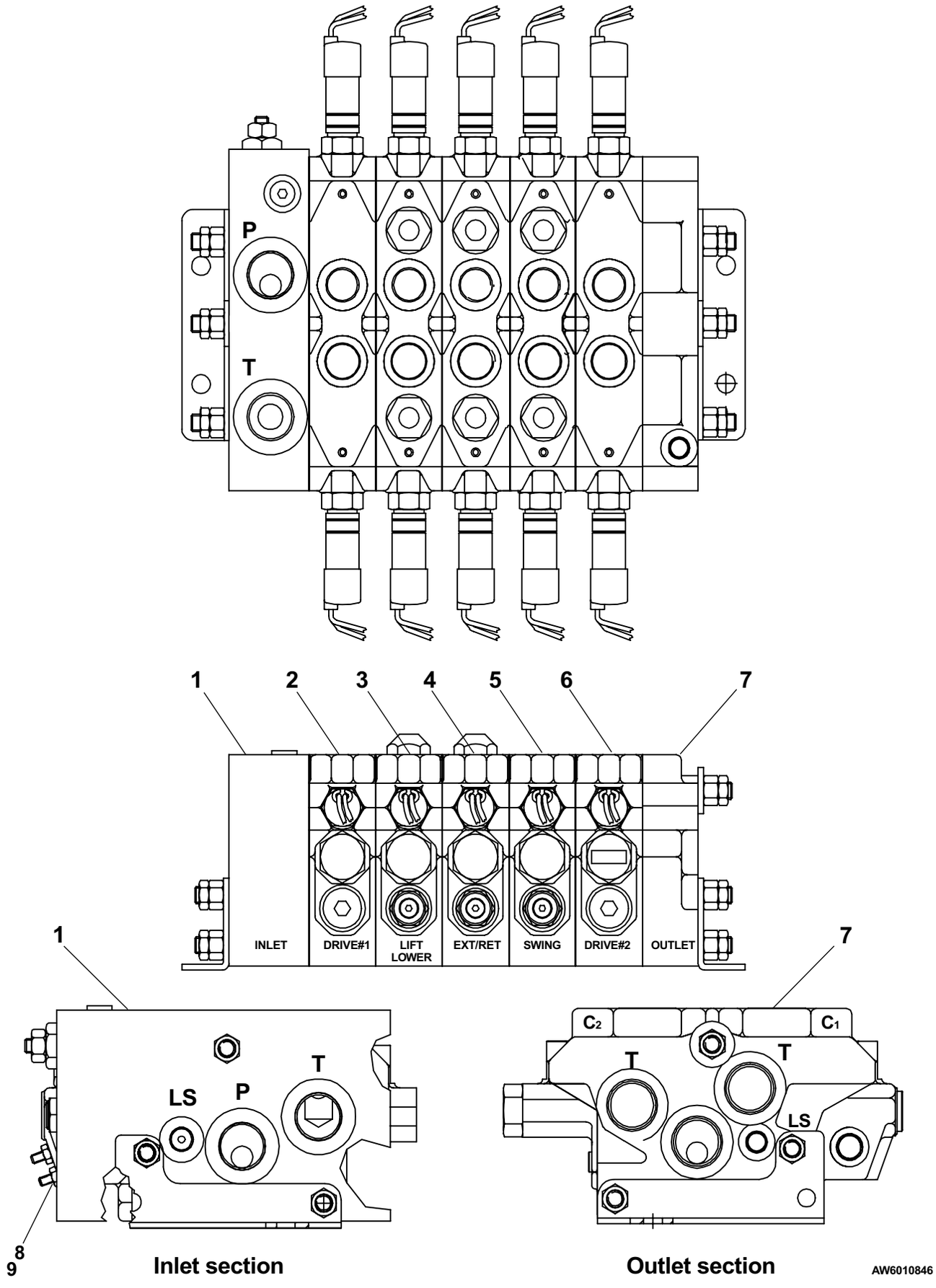

View thousands of Crane Specifications on FreeCraneSpecs.com
https://truckmanualshub.com/

Control valve, axle jacking

item	part no	qty	description
	0111291	1	Control valve, axle jacking
1	6010223	1	Valve, axle jacking
	0110713	1	Seal repair kit
	8060142	1	Replacement valve handle
2	5065707	2	Straight thread adapter
3	5035305	4	Straight thread 90° elbow
4	5033610	1	Male adapter
5	5036705	2	Swivel nut run tee
6	5038805	1	Female adapter
7	5036805	1	Swivel nut branch tee
8	5035318	1	Straight thread 90° elbow
9	5037005	3	Swivel nut 90° elbow
10	7110906	1	O-ring
11	6010159	1	Pressure relief valve - (factory preset, do not reset)

View thousands of Crane Specifications on FreeCraneSpecs.com
https://truckmanualshub.com

Control valve, axle jacking

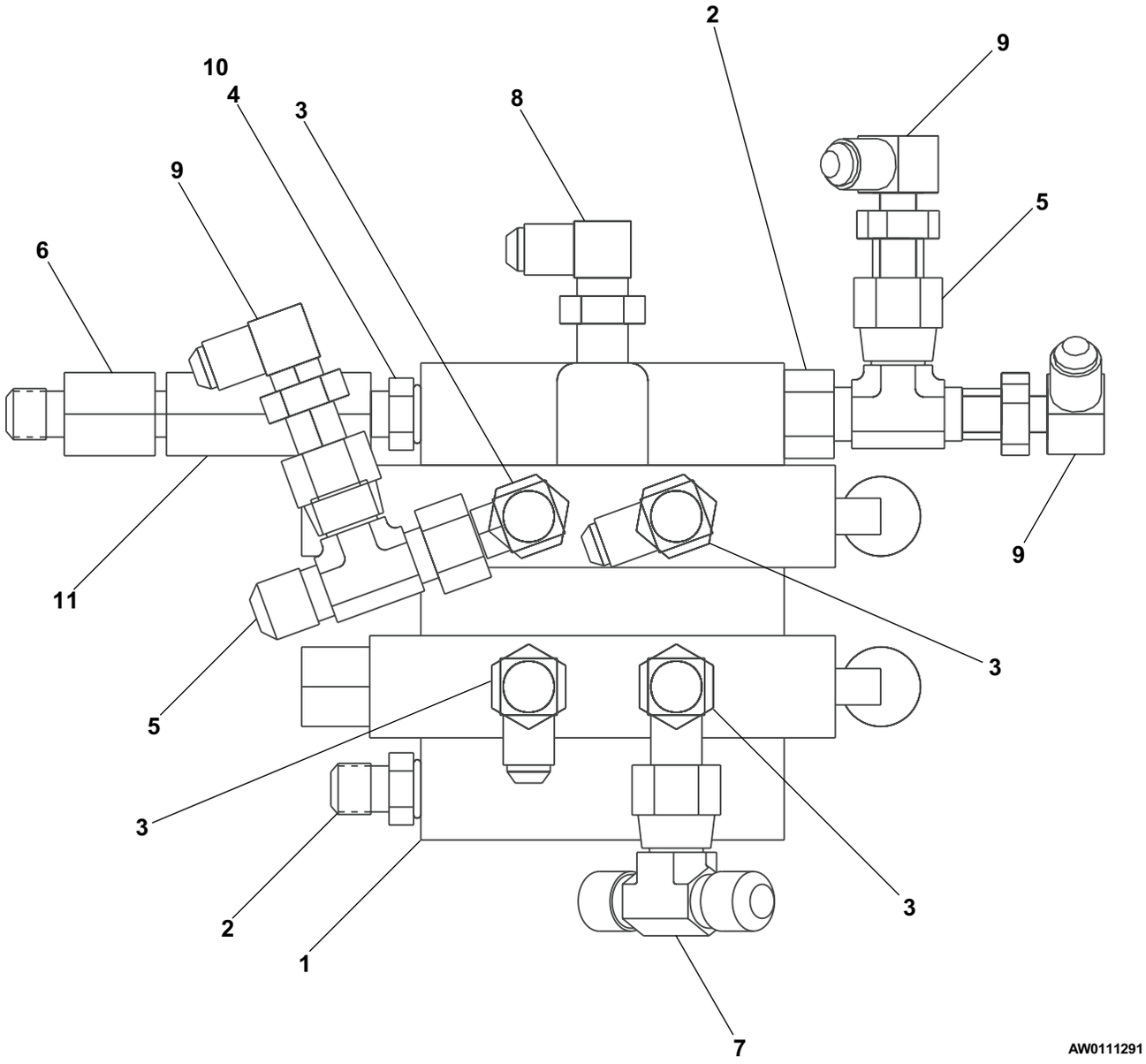

View thousands of Crane Specifications on FreeCraneSpecs.com
https://truckmanualshub.com

Drive control valve

item	part no	qty	description
	0111431	1	Drive control valve - 2 wheel drive
	0111264	1	Drive control valve - 4 wheel drive
1	0111265	1	Mount plate
2	6010633	1	Dual counterbalance valve
	8190156	1	Seal repair kit
	8190157	1	Counterbalance cartridge - (factory preset, do not reset)
3	0080529	1	Selector valve
	0081127	1	Seal repair kit
	0080528	1	Valve end cap
4	6010231	1	Flow divider/combiner valve
5	0111267	1	3/4 inch hydraulic tube
6	0111266	1	3/4 inch hydraulic tube
7	0111268	1	3/4 inch hydraulic tube
8	0111269	2	3/4 inch hydraulic tube
9	5035303	2	Straight thread 90° elbow
10	5037006	1	Swivel nut 90° elbow
11	5036708	2	Swivel nut run tee - (used on 4 wheel drive only)
12	5036708	3	Swivel nut run tee
13	5035308	3	Straight thread 90° elbow
14	5065714	4	Straight thread adapter
15	5037008	4	Swivel nut 90° elbow
16	5036108	2	Straight thread run tee
17	5037008	1	Swivel nut run tee - (used on 4 wheel drive only)
18	5036908	1	Swivel nut 45° elbow - (used on 4 wheel drive only)
19	987119	6	Washer 3/8 medium lock
20	986299	6	Washer 3/8 medium flat
21	970549	2	Capscrew 3/8-16 x 3 inch long hex head grade 5
22	984109	4	Nut 3/8-16 hex
23	970349	2	Capscrew 5/16-18 x 2-3/4 inch long hex head grade 5
24	987109	2	Washer 5/16 medium lock
25	986269	4	Washer 5/16 medium flat
26	984089	2	Nut 5/16-18 hex
27	5035319	4	Straight thread 90° elbow
28	5064008	2	Tube end reducer
29	5063908	2	Fitting nut
30	970569	2	Capscrew 3/8-16 x 3-1/2 inch long hex head grade 5

View thousands of Crane Specifications on FreeCraneSpecs.com
https://truckmanualshub.com

Drive control valve

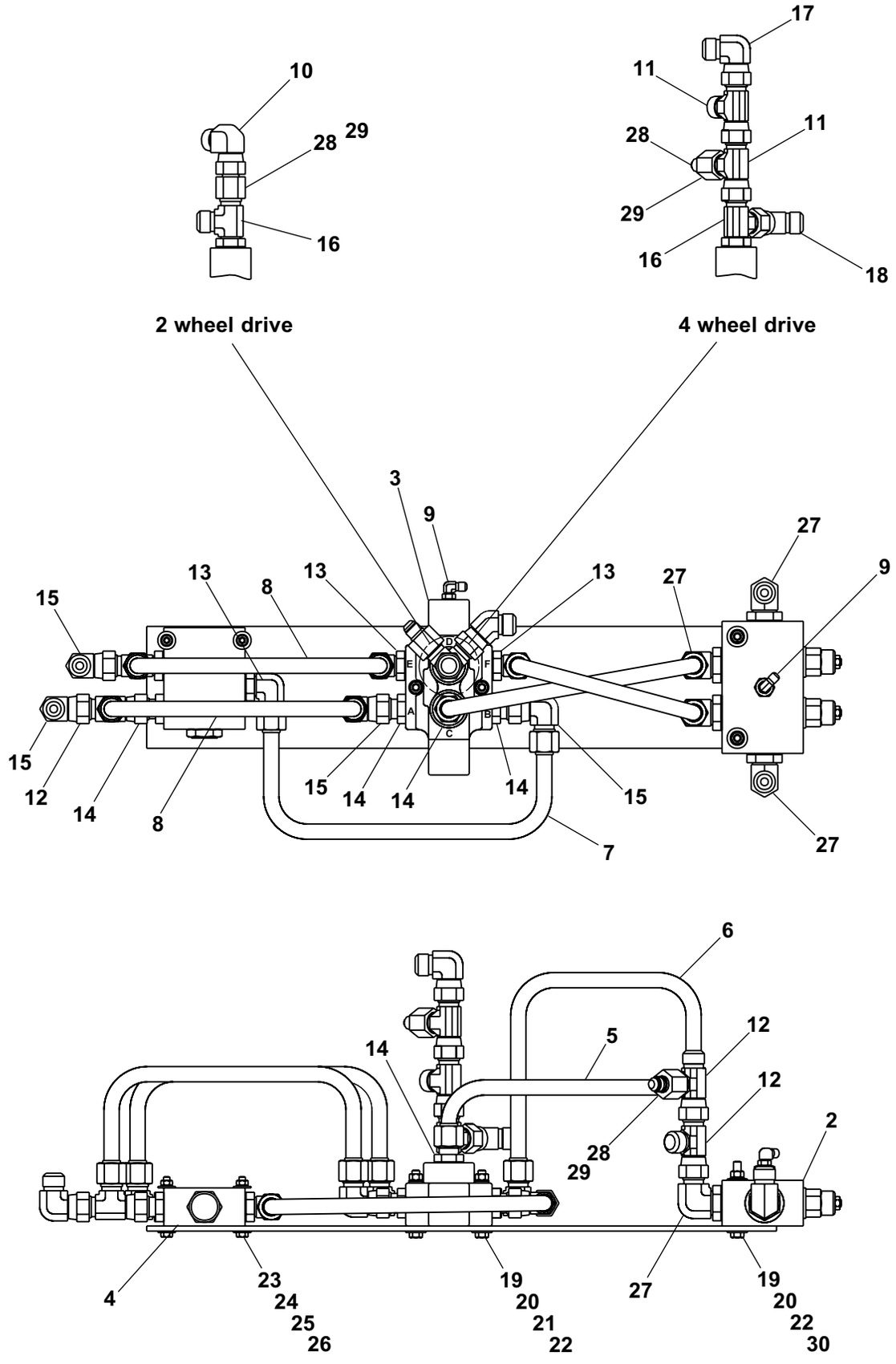

View thousands of Crane Specifications on FreeCraneSpecs.com

Series parallel package, right hand

item	part no	qty	description
	0111535	1	Series parallel package, right hand
1	0080529	1	Selector valve
	0081127	1	Seal repair kit
	0080528	1	Valve end cap
2	6010231	1	Flow divider/combiner valve
3	6010613	1	Dual sequence valve
	6010614	1	Valve body, Fluid tech
	6010624	1	Valve body, Weco
	6010615	1	Cartridge sequence valve, Fluid Tech - (preset by factory, do not reset)
	6010269	1	Cartridge sequence valve, Weco - (preset by factory, do not reset)
4	0111340	1	5/8 inch hydraulic tube
5	0111338	1	5/8 inch hydraulic tube
6	5025001	2	Swivel adapter
7	5037008	2	Swivel nut 90° elbow
8	5035322	2	Straight thread 90° elbow
9	5064011	2	Tube end reducer
10	5065731	1	Straight thread adapter
11	5035308	2	Straight thread 90° elbow
12	5033618	1	Male adapter
13	5076206	1	Straight thread 90° elbow
14	5065703	1	Straight thread adapter
15	5036803	1	Swivel nut branch tee
16	5036108	1	Straight thread run tee
17	5065711	2	Straight thread adapter
18	5036708	3	Swivel nut run tee
19	5065714	1	Straight thread adapter
20	5063906	1	Fitting nut
21	5064002	1	Tube end reducer
22	5035303	2	Straight thread 90° elbow
23	5075208	1	Hex head plug
24	5036906	1	Swivel nut 45° elbow
25	5063908	1	Fitting nut
26	5064008	1	Tube end reducer

View thousands of Crane Specifications on FreeCraneSpecs.com
https://truckmanualshub.com

Series parallel package, right hand

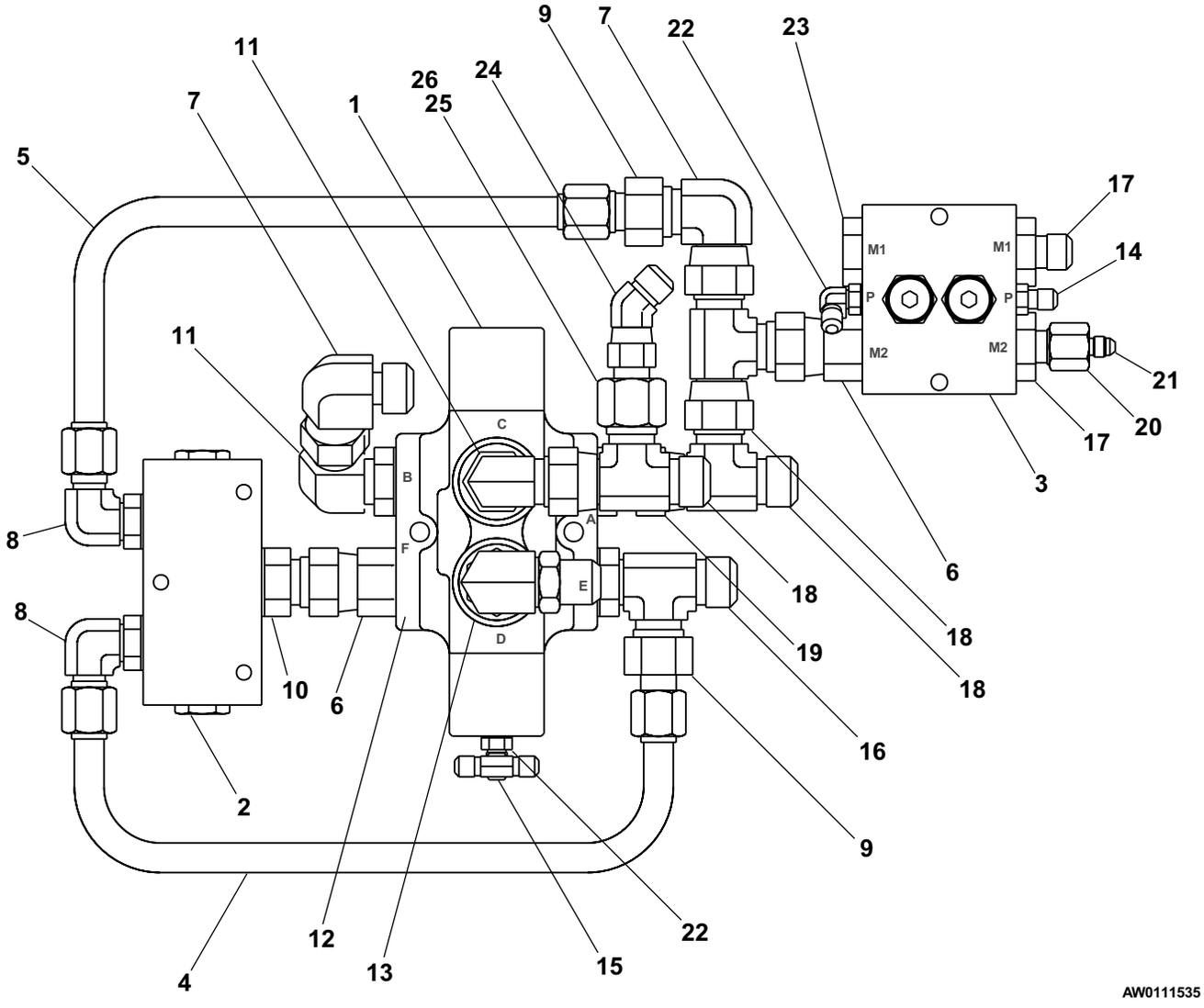

View thousands of Crane Specifications on FreeCraneSpecs.com
https://truckmanualshub.com

Series parallel package, left hand

item	part no	qty	description
	0111536	1	Series parallel package, left hand
1	0080529	1	Selector valve
	0081127	1	Seal repair kit
	0080528	1	Valve end cap
2	6010231	1	Flow divider/combiner valve
3	6010613	1	Dual sequence valve
	6010614	1	Valve body, Fluid tech
	6010624	1	Valve body, Weco
	6010615	1	Cartridge sequence valve, Fluid Tech - (preset by factory, do not reset)
	6010269	1	Cartridge sequence valve, Weco - (preset by factory, do not reset)
4	0111341	1	5/8 inch hydraulic tube
5	0111339	1	5/8 inch hydraulic tube
6	5035322	2	Straight thread 90° elbow
7	5065731	1	Straight thread adapter
8	5025001	2	Swivel adapter
9	5033618	1	Male adapter
10	5076206	1	Straight thread 90° elbow
11	5065703	1	Straight thread adapter
12	5036803	1	Swivel nut branch tee
13	5064011	2	Tube end reducer
14	5037008	1	Swivel nut 90° elbow
15	5075208	1	Hex head plug
16	5035303	2	Straight thread 90° elbow
17	5065711	2	Straight thread adapter
18	5063906	2	Fitting nut
19	5064002	2	Tube end reducer
20	5036708	3	Swivel nut run tee
21	5036108	1	Straight thread run tee
22	5065714	1	Straight thread adapter
23	5037003	1	Swivel nut 90° elbow
24	5063908	1	Fitting nut
25	5064008	1	Tube end reducer
26	5036706	1	Swivel nut run tee
27	5035303	2	Straight thread 90° elbow

View thousands of Crane Specifications on FreeCraneSpecs.com
https://truckmanualshub.com/

Series parallel package, left hand

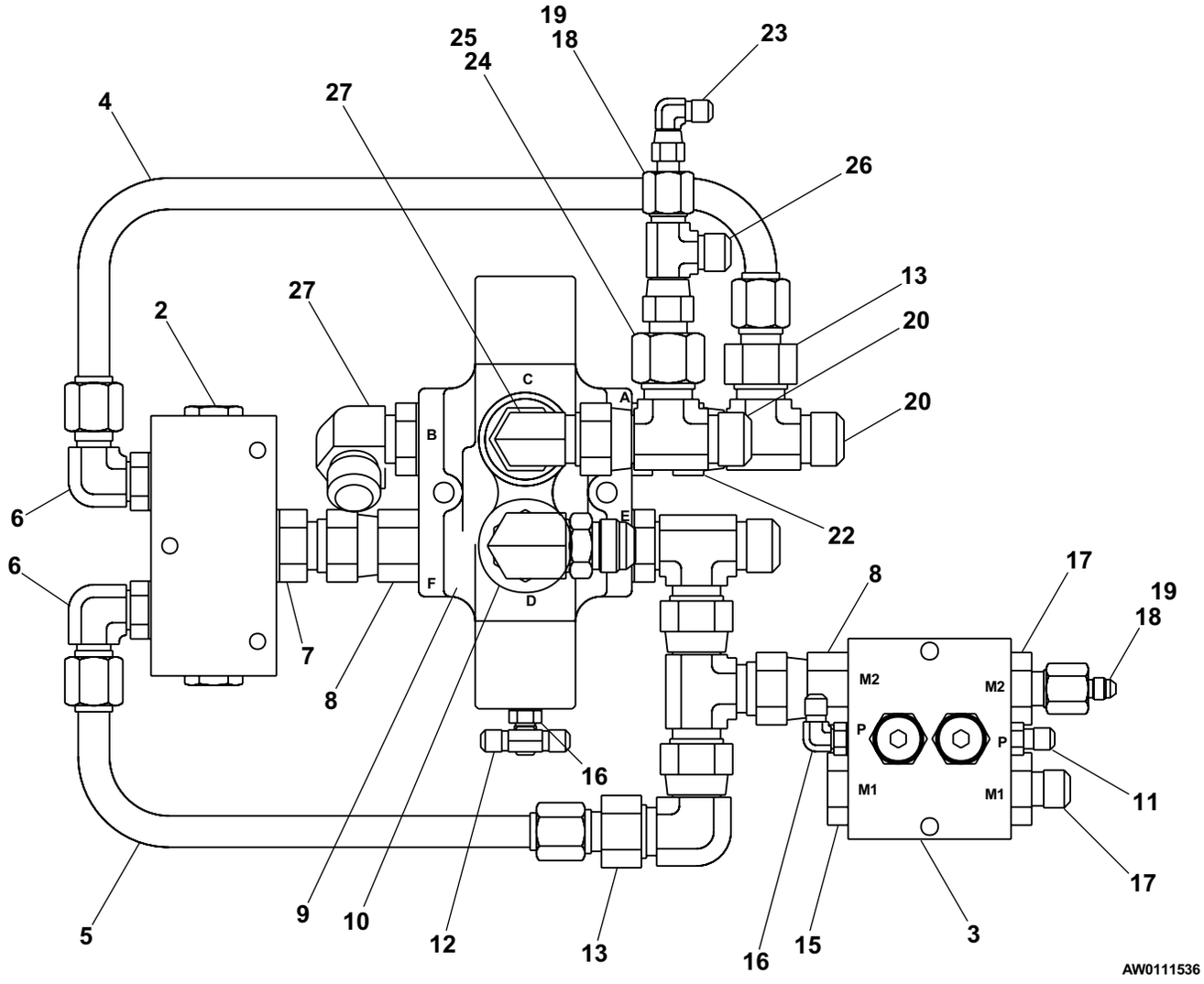

View thousands of Crane Specifications on FreeCraneSpecs.com
https://truckmanualshub.com

Drive motor with brake

item	part no	qty	description
	6030037	1	Drive motor with brake
	0111494	1	Seal repair kit - (kit includes items 10, 18, 19, 23, 30, 43, 44, 45, 46, 47 and 48)
1	8220126	3	Woodruff key
2	8220157	1	Drive pin
3	8220158	2	Retaining ring
4	8220159	1	Gear drive
5	8220160	1	Spacer washer
6	8220161	1	Retaining ring
7	8220162	2	Thrust bearing race
8	8220163	1	Thrust bearing
9	8220034	2	Needle bearing
10	Kit item	3	Oil seal - (not sold separately)
11	8220035	1	Rear end cap
12	8220165	3	Tip seal roller
13	8220167	1	Rotor
14	8220168	3	Seal plate
15	8220169	2	Abutment valve
16	8220036	4	Needle bearing
17	8220170	4	Step bearing
18	Kit item	4	O-ring - (not sold separately)
19	Kit item	4	Back-up ring - (not sold separately)
20	8220180	4	Dowel pin
21	8220173	18	Capscrew
22	8220166	18	Body seal roller
23	Kit item	1	Shaft seal - (not sold separately)
24	8220175	1	Front end cap
25	8220176	1	Displacement housing
26	8220142	4	Retaining ring
27	8220177	2	Gear pinion (standard)
28	8220178	1	S-shaft for brake
29	8220179	1	Retaining ring
30	Kit item	1	O-ring - (not sold separately)
31	8220019	1	Front sealing cap
32	8220182	1	Drive motor brake, 4 cubic inch - (includes items 33 through 48)
	8220038		Brake replacement kit - (includes items 33, 40 and 45)
33	Kit item	1	Housing - (not sold separately)
34	6030038	1	Spacer ring
35	8220014	5	Friction disc
36	8220015	4	Driver plate
37	8220010	1	O-ring
38	8230077	7	Brass washer
39	8220016	7	Capscrew
40	Kit item	1	Adapter plate - (not sold separately)
41	8220025	8	Die spring
42	8220026	1	Pressure plate
43	Kit item	1	Back-up ring - (not sold separately)
44	Kit item	1	O-ring - (not sold separately)
45	Kit item	8	Capscrew - (not sold separately)
46	Kit item	1	O-ring - (not sold separately)
47	Kit item	2	Back-up ring - (not sold separately)
48	Kit item	1	O-ring - (not sold separately)

View thousands of Crane Specifications on FreeCraneSpecs.com
https://truckmanualshub.com

Drive motor with brake

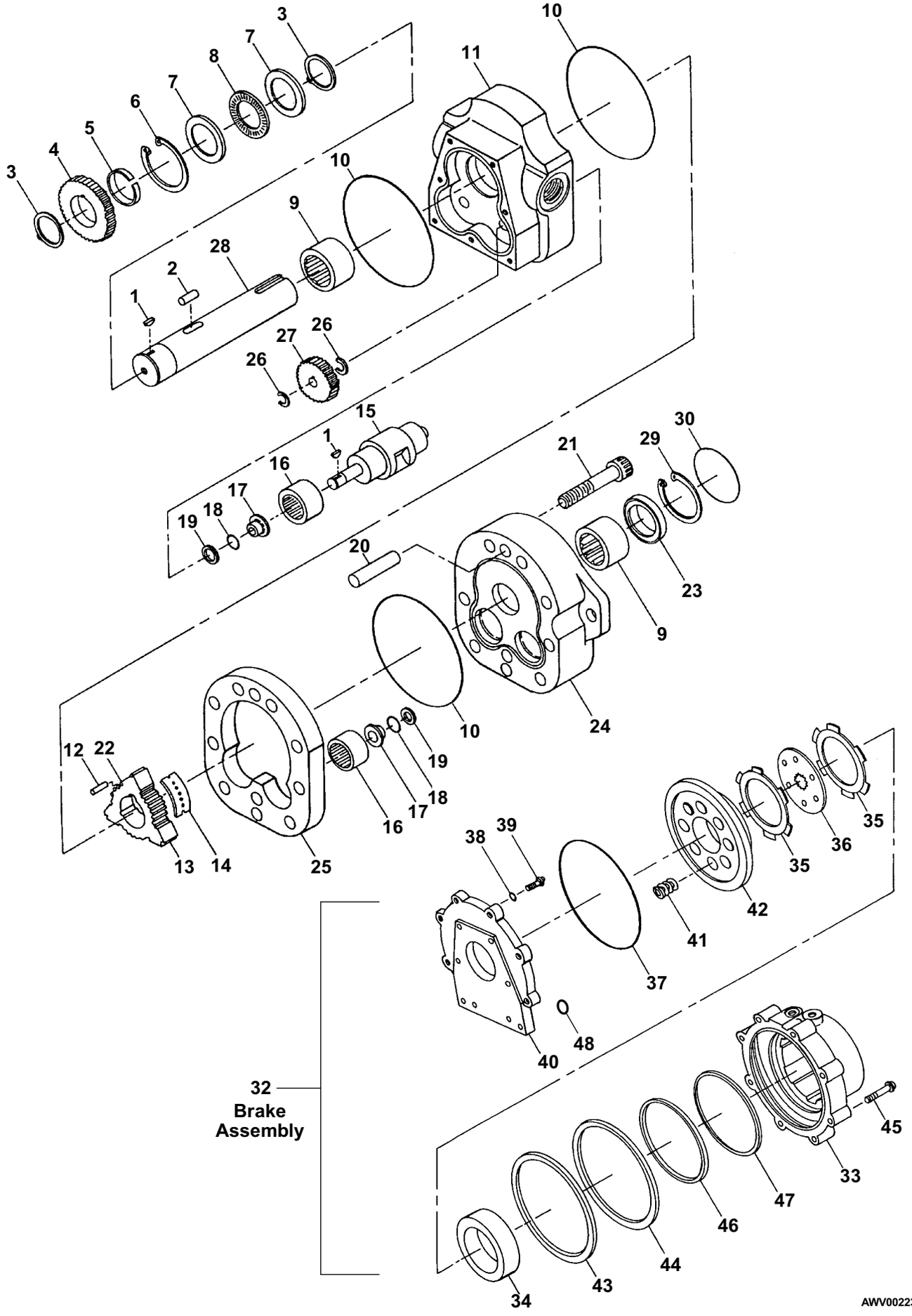

View thousands of Crane Specifications on FreeCraneSpecs.com
https://truckmanualshub.com/

Hydraulic oil reservoir

item	part no	qty	description
	0110360	1	Hydraulic oil reservoir
1	0110364	1	Hydraulic oil reservoir, 40 gallon capacity
2	5080018	1	Filter, sump strainer
3	5037305	1	Straight connector
4	7714202	1	Pipe plug 1/4 NPT square head
5	5090007	1	Liquid level gauge with thermometer
6	5090008	1	Filler/breather cap
7	0110367	1	Cover plate
8	0110368	1	Cover gasket
9	5560691	6	Machine screw #10-24 x 1/2 inch long hex head
10	987089	6	Washer #10 medium lock
11	970369	10	Capscrew 5/16-18 x 1 inch long hex head grade 5
12	987109	10	Washer 5/16 medium lock
13	5033623	1	Male adapter
14	7734204	1	Straight thread tee
15	5033713	1	Male 90° elbow
16	5033614	1	Male adapter
17	5036706	1	Swivel nut run tee
18	5063906	1	Fitting nut
19	5064002	1	Tube end reducer
20	5037011	1	Swivel nut 90° elbow
21	7721612	1	Reducer bushing

View thousands of Crane Specifications on FreeCraneSpecs.com
https://truckmanualshub.com

Hydraulic oil reservoir

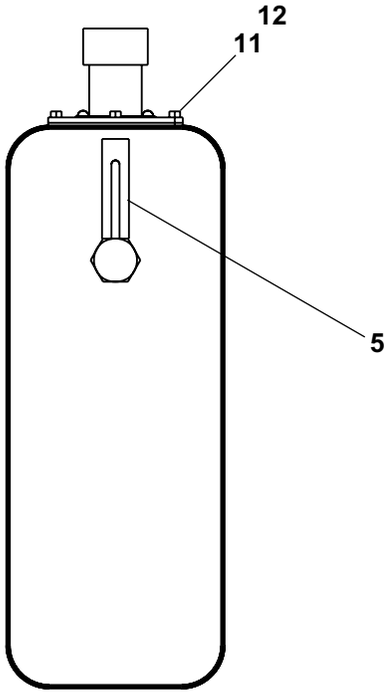

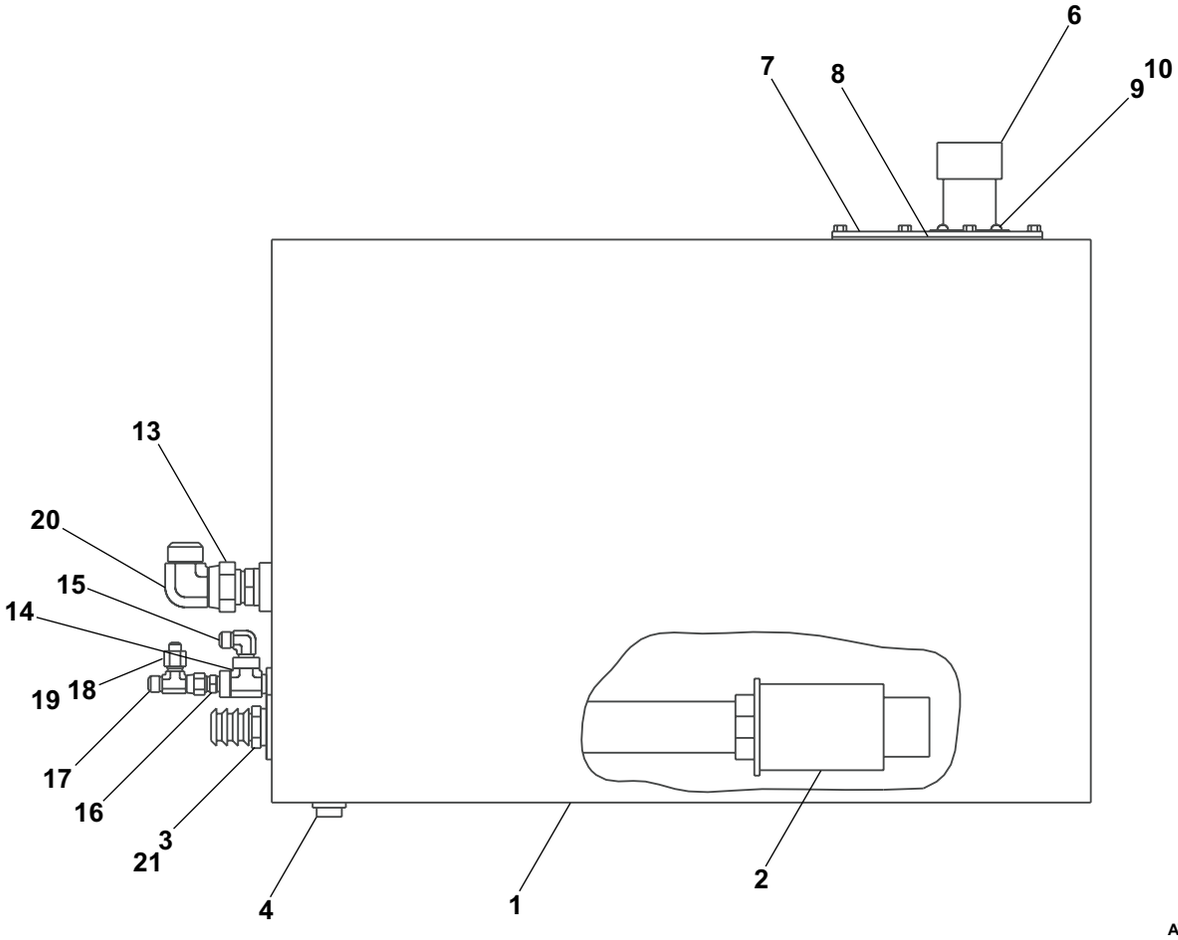

View thousands of Crane Specifications on FreeCraneSpecs.com
https://truckmanualshub.com

Accumulator

item	part no	qty	description
	0082055	1	Accumulator - (shipped charged)
1	6070005	1	Accumulator - (shipped uncharged, charge to 300 psi with dry nitrogen before use)
2	5065711	1	Straight thread adapter
3	5064002	1	Tube end reducer
4	6063905	1	Fitting nut

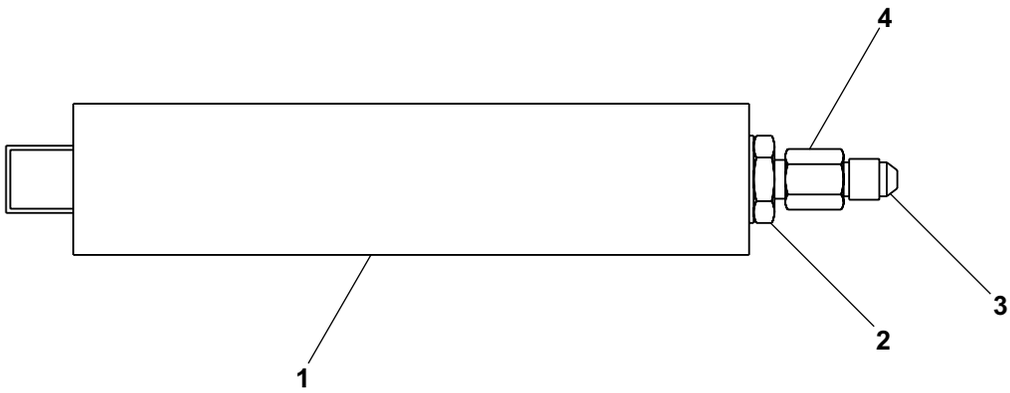

AW0082055

View thousands of Crane Specifications on FreeCraneSpecs.com
https://truckmanualshub.com

AC generator valve

item	part no	qty	description
	0152831	1	AC generator valve
1	6010489	1	Valve, AC generator - (includes items 2, 3 and 4 — valve is not preset)
2	6010508	1	Cartridge valve with coil
	6010509	1	Replacement cartridge valve
	3040457	1	Replacement coil, 12 volt DC
3	6018901	1	Flow control valve cartridge
4	6010510	1	Shuttle valve cartridge
5	5065803	2	Long straight thread adapter
6	5037003	2	Swivel nut 90° elbow
7	5035306	1	Straight thread 90° elbow
8	5035320	1	Straight thread 90° elbow

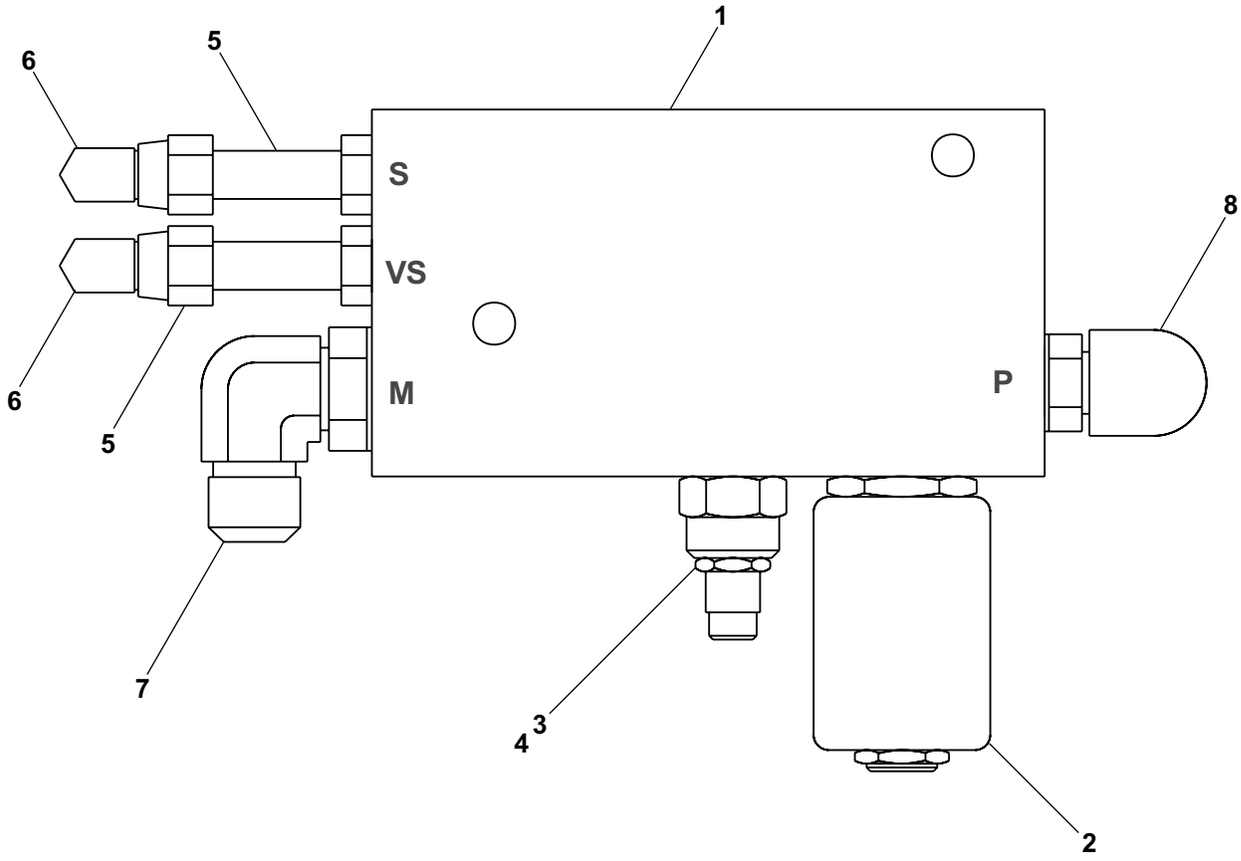

AW0152831

View thousands of Crane Specifications on FreeCraneSpecs.com
https://truckmanualshub.com/

Anti-cavitation valve

item	part no	qty	description
	0111273	1	Anti-cavitation valve
1	6010492	1	Valve, anti-cavitation - (valve includes items 2 and 3)
	0110683	1	Seal repair kit
2	8230099	1	Relief valve cartridge - (factory preset, do not reset)
3	6010563	1	Check valve cartridge
4	5035307	1	Straight thread 90° elbow
5	5065703	1	Straight thread adapter
6	5036507	1	Straight thread branch tee
7	5063907	1	Fitting nut
8	5064004	1	Tube end reducer
9	5036707	1	Swivel nut run tee
10	5064012	1	Tube end reducer
11	5036705	1	Swivel nut run tee

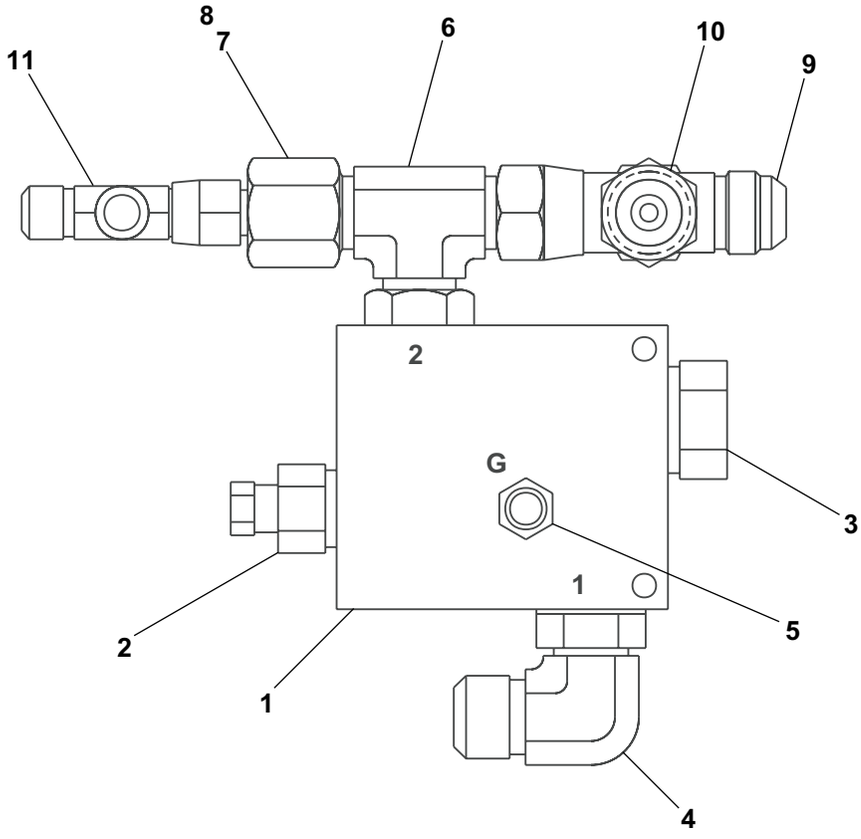

AW0111273

View thousands of Crane Specifications on FreeCraneSpecs.com
https://truckmanualshub.com

Axle interlock valve

item	part no	qty	description
	0190878	1	Axle interlock valve
1	6010723	1	Valve, axle interlock - (valve includes items 2 and 3)
2	6010735	1	Valve body, Fluid Tech
	6010913	1	Valve body, Weco
3	6010734	1	Flow control valve, Fluid Tech
	6010914	1	Flow control valve, Weco
4	3020077	1	Pressure switch
5	5065705	1	Straight thread adapter
6	5035318	2	Straight thread 90° elbow

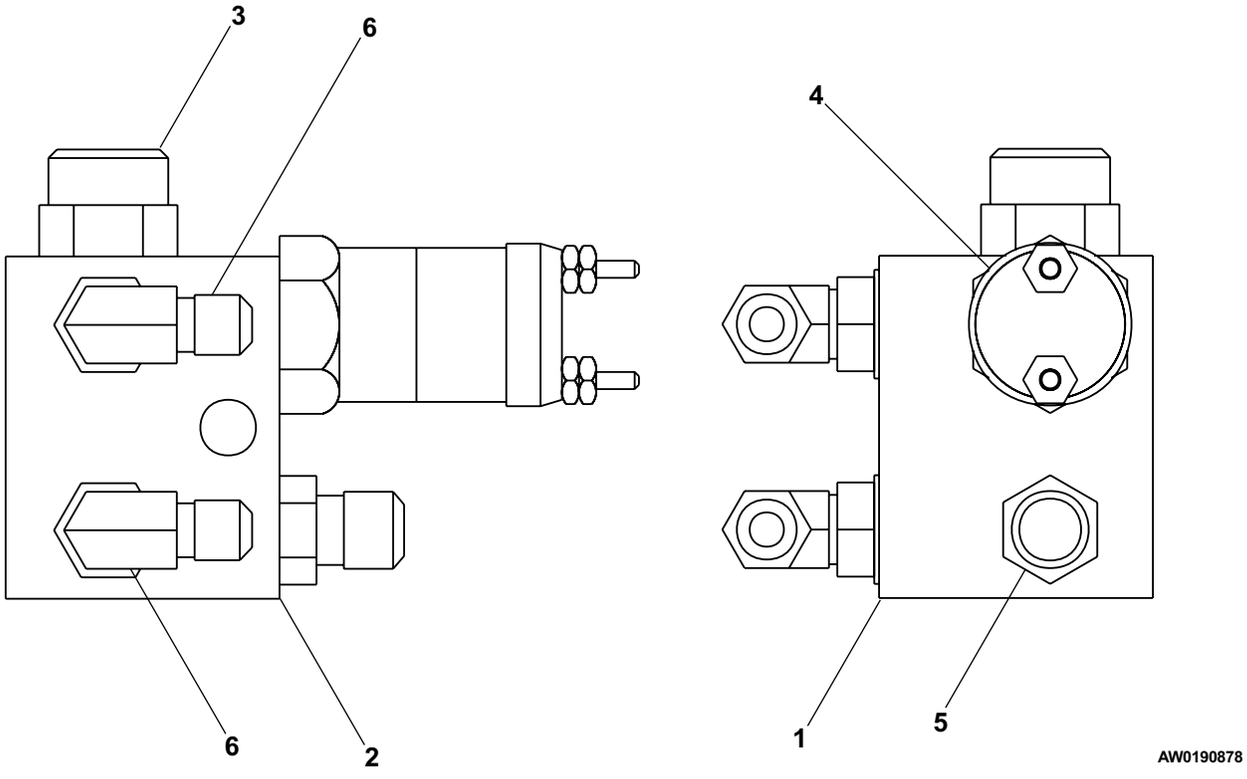

View thousands of Crane Specifications on FreeCraneSpecs.com
https://truckmanualshub.com

Blocking valve, extend

item	part no	qty	description
	0111876	1	Blocking valve, extend
1	6010855	1	Valve, extend blocking - (valve includes items 2 and 3)
2	6010727	1	2-way cartridge
	6010857	1	Seal repair kit
3	6010856	1	Cartridge solenoid coil, 12 volt DC
4	5035316	2	Straight thread 90° elbow

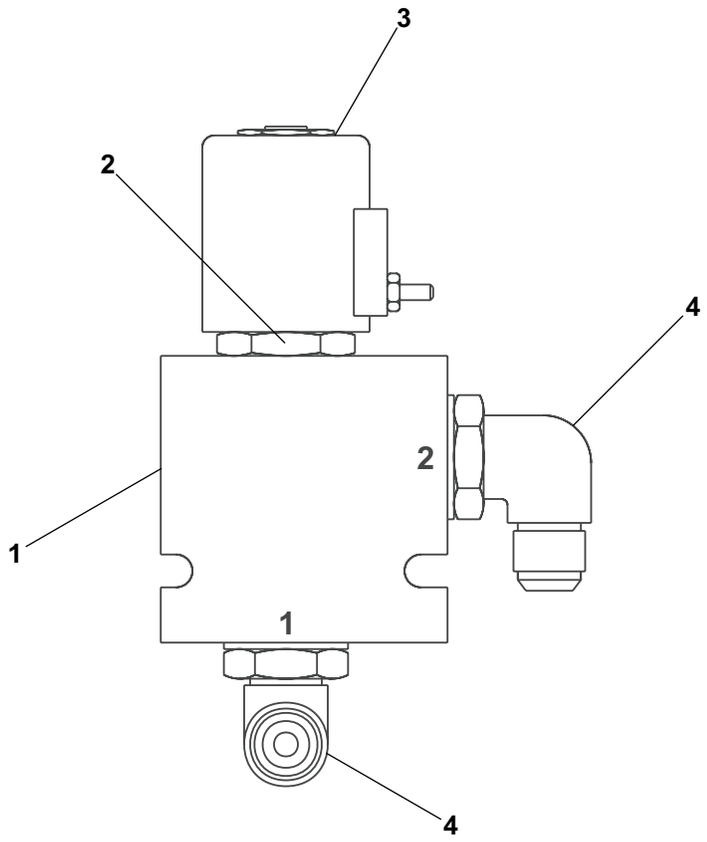

AW0111876

View thousands of Crane Specifications on FreeCraneSpecs.com
https://truckmanualshub.com

Blocking valve, lift

item	part no	qty	description
	0111877	1	Blocking valve, lift
1	6010855	1	Valve, lift blocking - (valve includes items 2 and 3)
2	6010727	1	2-way cartridge
	6010857	1	Seal repair kit
3	6010856	1	Cartridge solenoid coil, 12 volt DC
4	5035316	1	Straight thread 90° elbow
5	5065710	1	Straight thread adapter

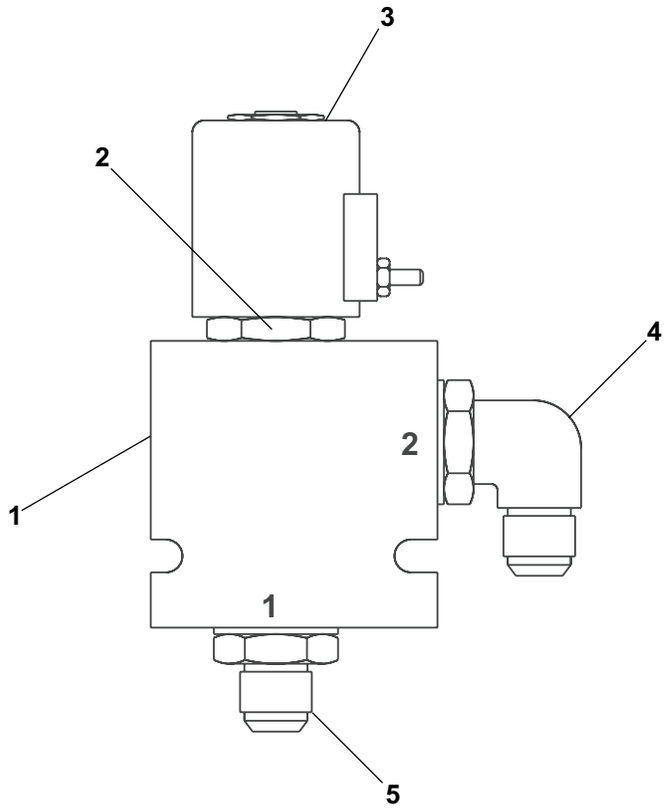

AW0111877

View thousands of Crane Specifications on FreeCraneSpecs.com
https://truckmanualshub.com

Centerpost and fittings

item	part no	qty	description
	0111299	1	Centerpost and fittings
1	0110465	1	Centerpost - (includes centerpost, centerpost manifold and seals)
	0110466	1	Centerpost
	0110467	1	Centerpost manifold
	0070991	1	Seal repair kit
2	5035305	5	Straight thread 90° elbow
3	5035308	2	Straight thread 90° elbow
4	5035703	1	Straight thread 45° elbow
5	5037007	1	Swivel nut 90° elbow
6	5036908	1	Swivel nut 45° elbow
7	5036707	3	Swivel nut run tee
8	5063907	1	Fitting nut
9	5064004	1	Tube end reducer
10	5020001	1	Elbow, special swivel
11	5037005	1	Swivel nut 90° elbow
12	5063905	1	Fitting nut
13	5064001	1	Tube end reducer
14	5065728	1	Straight thread adapter
15	0110502	1	Fitting bracket
16	970269	1	Capscrew 5/16-18 x 1-1/4 inch long hex head grade 5
17	984089	1	Nut 5/16-18 hex
18	987109	1	Washer 5/16 medium lock
19	5065705	2	Straight thread adapter
20	5065707	2	Straight thread adapter
21	5065713	2	Straight thread adapter
22	5590003	3	Retaining ring
23	Kit item	2	Parbak seal - (not sold separately)
24	Kit item	2	O- ring - (not sold separately)
25	Kit item	5	Seal ring - (not sold separately)
26	Kit item	5	O-ring - (not sold separately)

View thousands of Crane Specifications on FreeCraneSpecs.com
https://truckmanualshub.com

Centerpost and fittings

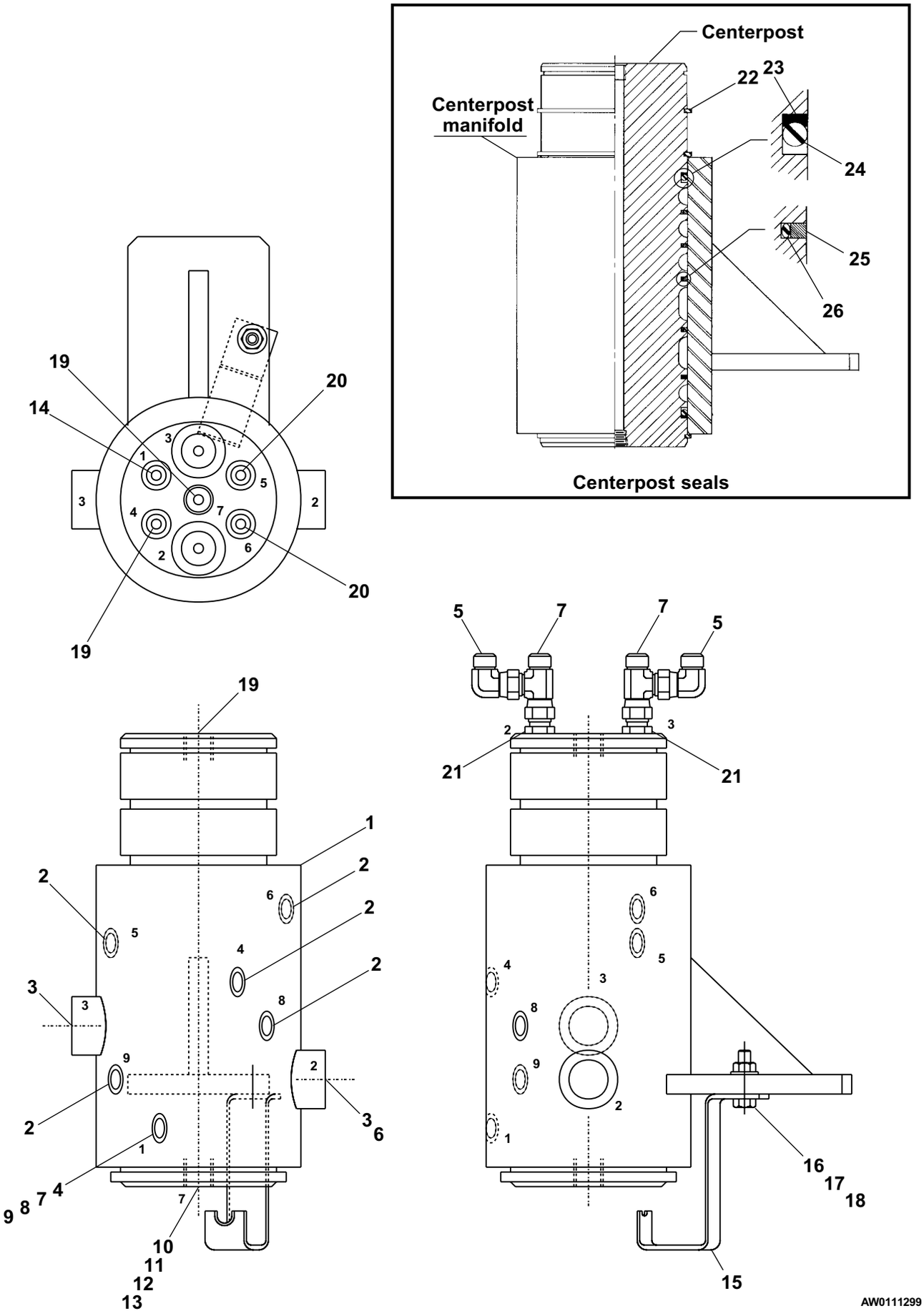

View thousands of Crane Specifications on FreeCraneSpecs.com
https://truckmanualshub.com

Cylinder, axle extend - GBI

item	part no	qty	description
	0110281	1	Cylinder, axle extend - GBI
	0190917	1	Seal repair kit - (kit includes items 10 through 18)
1		1	Case - (not sold separately)
2	8070356	1	Rod
3	8070357	1	Head gland
4	8070358	1	Piston
5	8070359	1	Spacer
6	8070360	1	Ring nut
7	8070361	1	Set screw
8	8070362	1	Lock washer
9	8070363	1	Capscrew
10	Kit item	1	Nylon plug - (not sold separately)
11	Kit item	1	Back-up - (not sold separately)
12	Kit item	1	O-ring - (not sold separately)
13	Kit item	1	O-ring - (not sold separately)
14	Kit item	1	Teflon ring - (not sold separately)
15	Kit item	1	Bronze plug - (not sold separately)
16	Kit item	1	O-ring - (not sold separately)
17	Kit item	1	U-ring - (not sold separately)
18	Kit item	1	Wiper, lip type - (not sold separately)

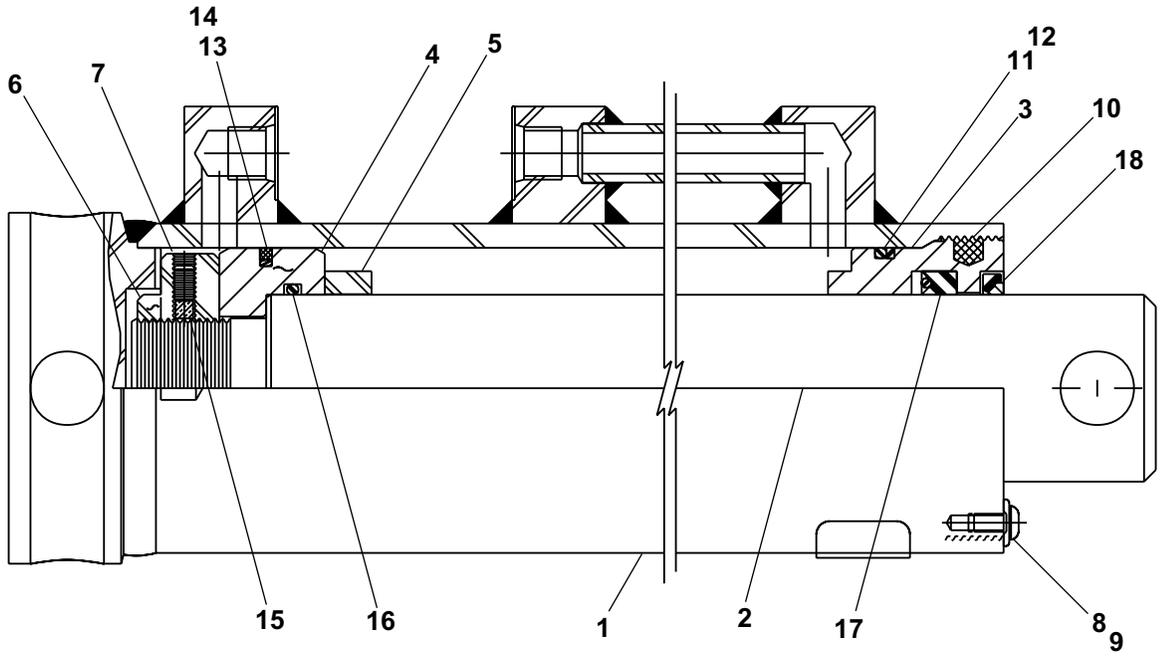

View thousands of Crane Specifications on FreeCraneSpecs.com
https://truckmanualshub.com

Cylinder, axle extend - Seabee

item	part no	qty	description
	0110281	1	Cylinder, axle extend - Seabee
	0110535	1	Seal repair kit - (kit includes items 6 through 13)
1		1	Case - (not sold separately)
2	8190135	1	Shaft
3	8190078	1	Piston
4	8190079	1	Head gland
5	8190080	1	Piston nut
6	Kit item	1	Wiper - (not sold separately)
7	Kit item	1	U-cup - (not sold separately)
8	Kit item	1	O-ring - (not sold separately)
9	Kit item	1	Back-up - (not sold separately)
10	Kit item	1	O-ring - (not sold separately)
11	Kit item	2	Back-up - (not sold separately)
12	Kit item	1	Piston seal - (not sold separately)
13	Kit item	1	O-ring - (not sold separately)
14	8190151	1	Cotter key

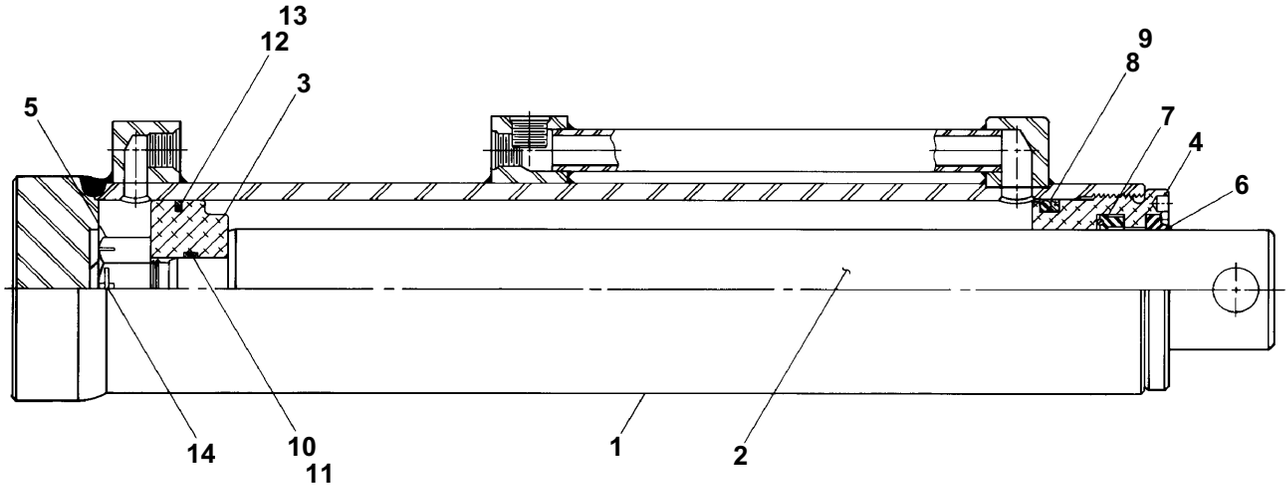

AWV00225

View thousands of Crane Specifications on FreeCraneSpecs.com
https://truckmanualshub.com

Cylinder, extension - GBI

item	part no	qty	description
	0110623	1	Cylinder, extension - GBI
	8070380	1	Seal repair kit - (kit includes items 13 through 24)
1		1	Tube - (not sold separately)
2	8070373	1	Rod
3	8070231	1	Thread ring
4	8070374	1	Head gland
5	8070375	1	Piston
6	8070376	1	Spacer
7	8070363	1	Capscrew
8	8070362	1	Lock washer
9	8070377	1	Nut
10	8070378	1	Retaining ring
11	8070379	1	Retaining ring
12	8070368	1	Port plug
13	Kit item	1	O-ring - (not sold separately)
14	Kit item	1	Nylon plug - (not sold separately)
15	Kit item	1	Back-up - (not sold separately)
16	Kit item	1	O-ring - (not sold separately)
17	Kit item	1	Teflon seal - (not sold separately)
18	Kit item	2	Wear ring - (not sold separately)
19	Kit item	1	O-ring - (not sold separately)
20	Kit item	2	Wear ring - (not sold separately)
21	Kit item	1	U-cup - (not sold separately)
22	Kit item	1	Back-up - (not sold separately)
23	Kit item	1	Wear ring - (not sold separately)
24	Kit item	1	Wiper, AN - (not sold separately)
25	6010116	1	Cartridge holding valve - (preset by factory, do not reset)
	0071918	1	Seal repair kit

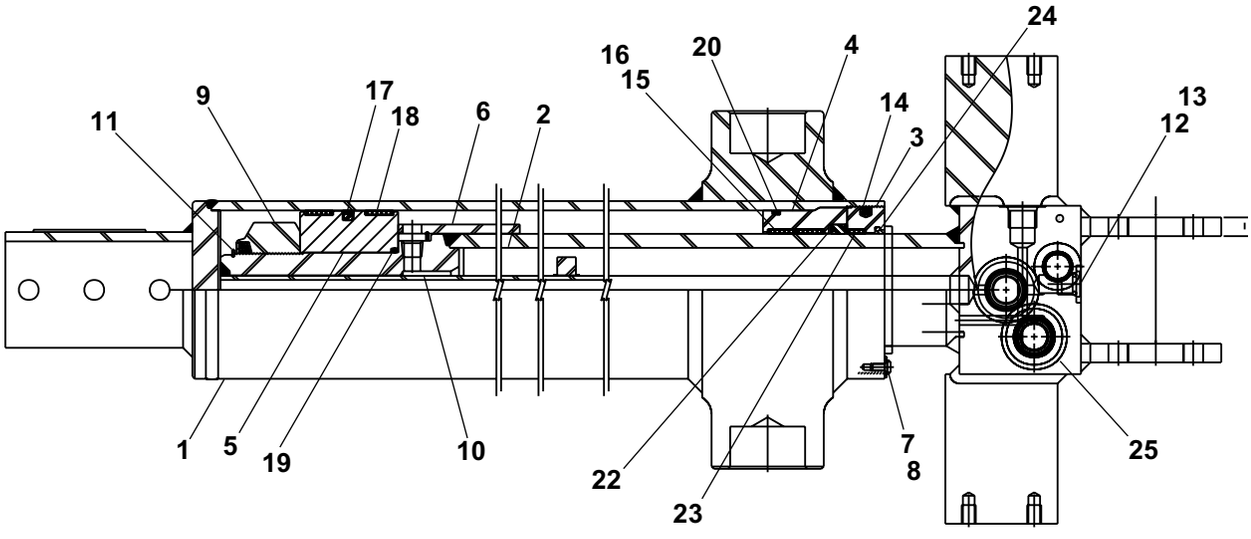

AWV00226

View thousands of Crane Specifications on FreeCraneSpecs.com
https://truckmanualshub.com

Cylinder, extension - Seabee

item	part no	qty	description
	0110623	1	Cylinder, extension - Seabee
	0110534	1	Seal repair kit - (kit includes items 7 through 15)
1		1	Case - (not sold separately)
2	8190120	1	Rod
3	8190136	1	Piston
4	8190083	1	Head gland
5	8190137	1	Buttress ring nut
6	8190138	1	Spacer
7	Kit item	1	Wiper - (not sold separately)
8	Kit item	1	U-cup - (not sold separately)
9	Kit item	1	O-ring - (not sold separately)
10	Kit item	1	Back-up - (not sold separately)
11	Kit item	1	O-ring - (not sold separately)
12	Kit item	2	Back-up - (not sold separately)
13	Kit item	2	Piston seal - (not sold separately)
14	Kit item	1	O-ring - (not sold separately)
15	Kit item	1	Piston ring - (not sold separately)
16	8190129	3	Set screw
17	6010116	1	Cartridge holding valve - (preset by factory, do not reset)
	0071918	1	Seal repair kit

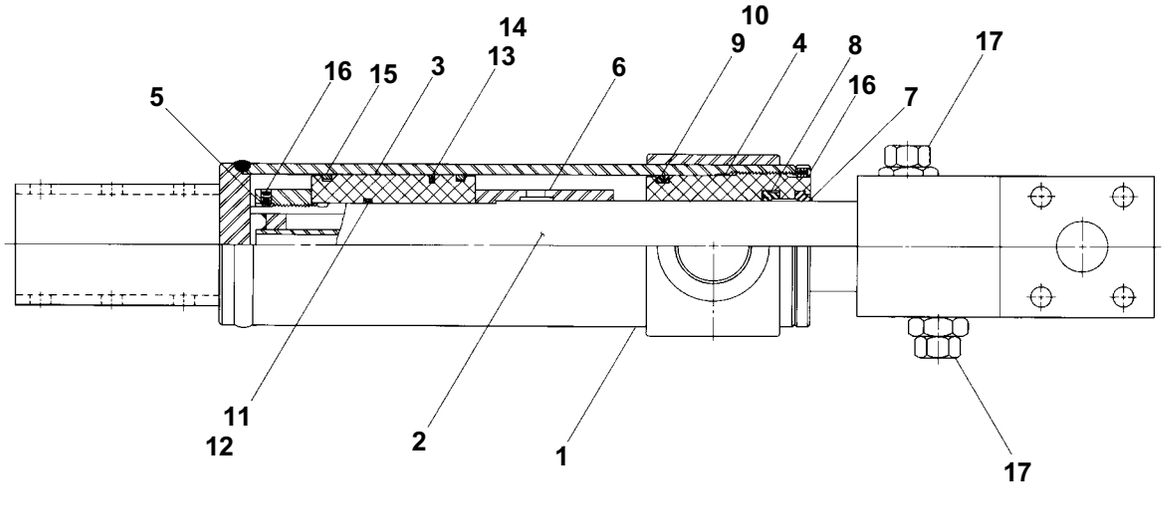

View thousands of Crane Specifications on FreeCraneSpecs.com
https://truckmanualshub.com

Lift cylinder

item	part no	qty	description
	0110168	1	Lift cylinder
1		1	Cylinder, lift
			(see page 2-47 for GBI cylinder)
			(see page 2-48 for Rosenboom cylinder)
			(see page 2-49 for Seabee cylinder)
2	5065707	1	Straight thread adapter
3	5065709	2	Straight thread adapter

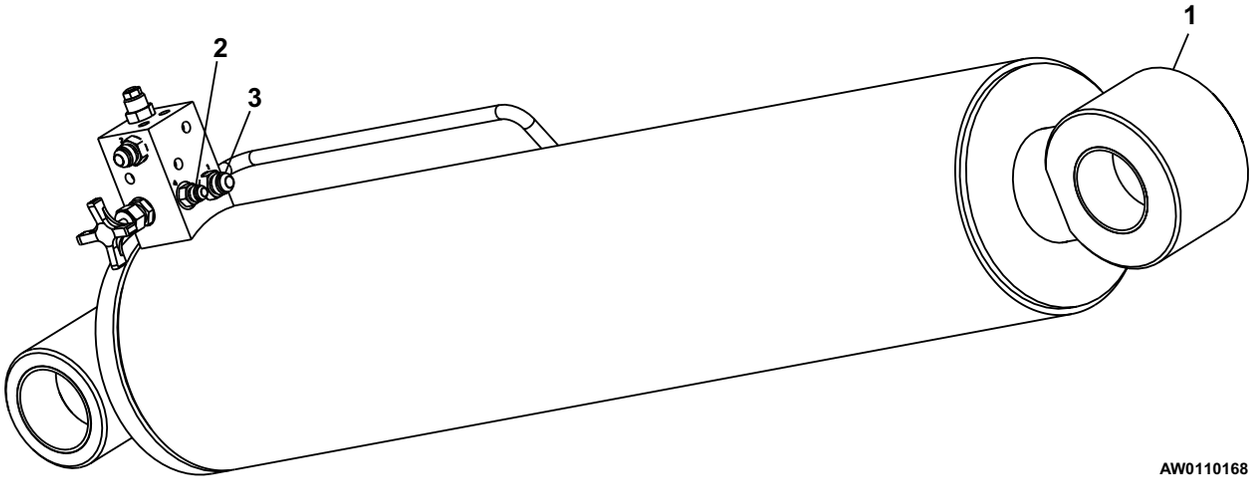

View thousands of Crane Specifications on FreeCraneSpecs.com

Cylinder, lift - GBI

item	part no	qty	description
	0110167	1	Cylinder, lift - GBI
	8073089	1	Seal repair kit - (kit includes items 14 through 26)
1		1	Case - (not sold separately)
2	8070364	1	Rod
3	8070249	1	Thread ring
4	8070251	1	Head gland
5	8070365	1	Piston
6	8070366	1	Nut
7	8070248	1	Poppet
8	8070367	1	Set screw
9	8070368	1	Port plug
10	8070369	1	Spring
11	8070370	1	Lock washer
12	8070371	1	Cap screw
13	8070372	4	Bushing
14	Kit item	1	Cotter pin - (not sold separately)
15	Kit item	1	O-ring - (not sold separately)
16	Kit item	1	Bronze plug - (not sold separately)
17	Kit item	1	Nylon plug - (not sold separately)
18	Kit item	1	Back-up - (not sold separately)
19	Kit item	1	O-ring - (not sold separately)
20	Kit item	1	Cast iron ring - (not sold separately)
21	Kit item	1	CST - (not sold separately)
22	Kit item	2	Wear ring - (not sold separately)
23	Kit item	1	O-ring - (not sold separately)
24	Kit item	2	Wear ring - (not sold separately)
25	Kit item	1	U-cup - (not sold separately)
26	Kit item	1	Wiper, AN - (not sold separately)

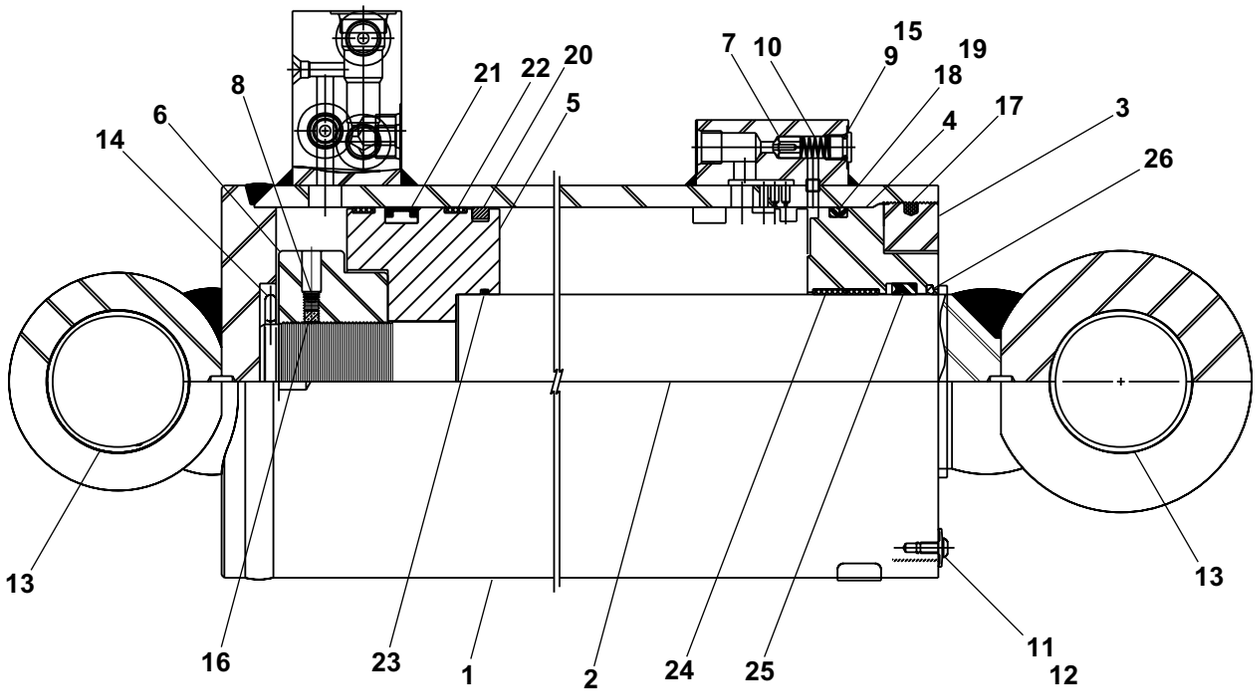

View thousands of Crane Specifications on FreeCraneSpecs.com
https://truckmanualshub.com

Cylinder, lift - Rosenboom

item	part no	qty	description
	0112380	1	Cylinder, lift - Rosenboom
	6091362	1	Seal repair kit - (kit includes items 12 through 22)
1		1	Tube - (not sold separately)
2	6091361	1	Rod
3	6091359	1	Head gland
4	6091358	1	Piston
5	6091241	1	Poppet
6	6091246	1	Spring
7	6091314	1	Counterbalance holding valve - (preset by factory, do not reset)
8	6010115	1	Cartridge needle valve
	0071845	1	Seal repair kit
9	975839	4	Set screw 3/8-16 x 3/4 inch long hex socket head
10	5075306	1	Hex plug
11	2500063	4	Bearing
12	Kit item	1	O-ring - (not sold separately)
13	Kit item	1	O-ring - (not sold separately)
14	Kit item	1	O-ring - (not sold separately)
15	Kit item	1	Back-up - (not sold separately)
16	Kit item	1	Deep Z-seal - (not sold separately)
17	Kit item	1	Cast iron ring - (not sold separately)
18	Kit item	1	Capped T-seal - (not sold separately)
19	Kit item	1	Rod wiper - (not sold separately)
20	Kit item	2	Wearband - (not sold separately)
21	Kit item	2	Wearband - (not sold separately)
22	Kit item	2	Locking insert - (not sold separately)

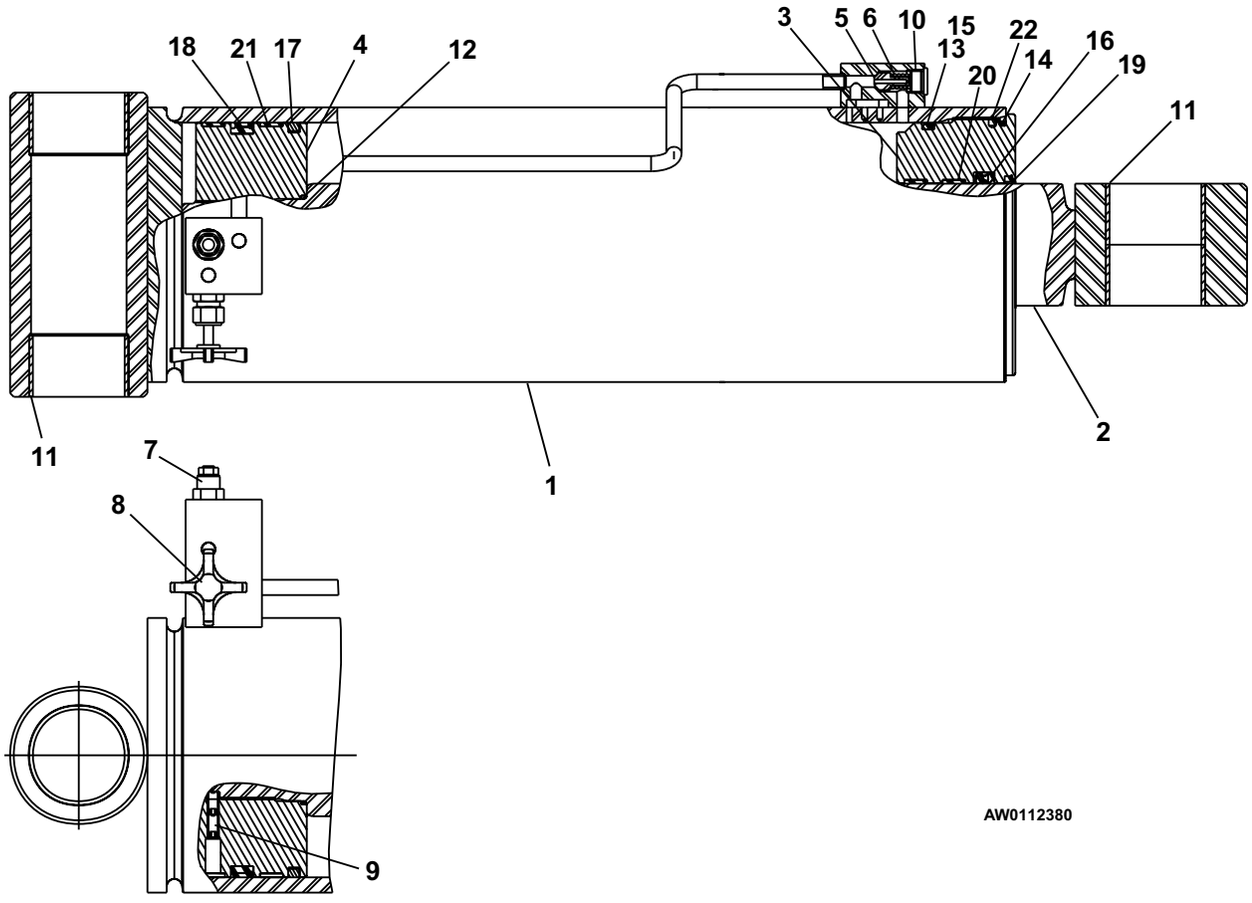

View thousands of Crane Specifications on FreeCraneSpecs.com

Cylinder, lift - Seabee

item	part no	qty	description
	0110167	1	Cylinder, lift - Seabee
	0110533	1	Seal repair kit - (kit includes items 7 through 15)
1		1	Case - (not sold separately)
2	8190139	1	Shaft
3	8190140	1	Piston
4	8190116	1	Head gland
5	8190115	1	Piston nut
6	8190141	1	Thrust plate
7	Kit item	1	Wiper - (not sold separately)
8	Kit item	1	U-cup - (not sold separately)
9	Kit item	1	O-ring - (not sold separately)
10	Kit item	1	Back-up - (not sold separately)
11	Kit item	1	O-ring - (not sold separately)
12	Kit item	1	Back-up - (not sold separately)
13	Kit item	1	Piston seal - (not sold separately)
14	Kit item	1	O-ring - (not sold separately)
15	Kit item	2	Piston ring - (not sold separately)
16	8190129	1	Set screw
17	8190142	1	Cotter pin
18	8190143	4	Bearing
19	8190150	1	Bearing spacer
20	8190088	1	Poppet
21	8190089	1	Spring
22	8190144	1	Pin
23	8190145	1	Plug
24	6010116	1	Cartridge holding valve - (preset by factory, do not reset)
	0071918	1	Seal repair kit
25	6010115	1	Cartridge needle valve
	0071845	1	Seal repair kit

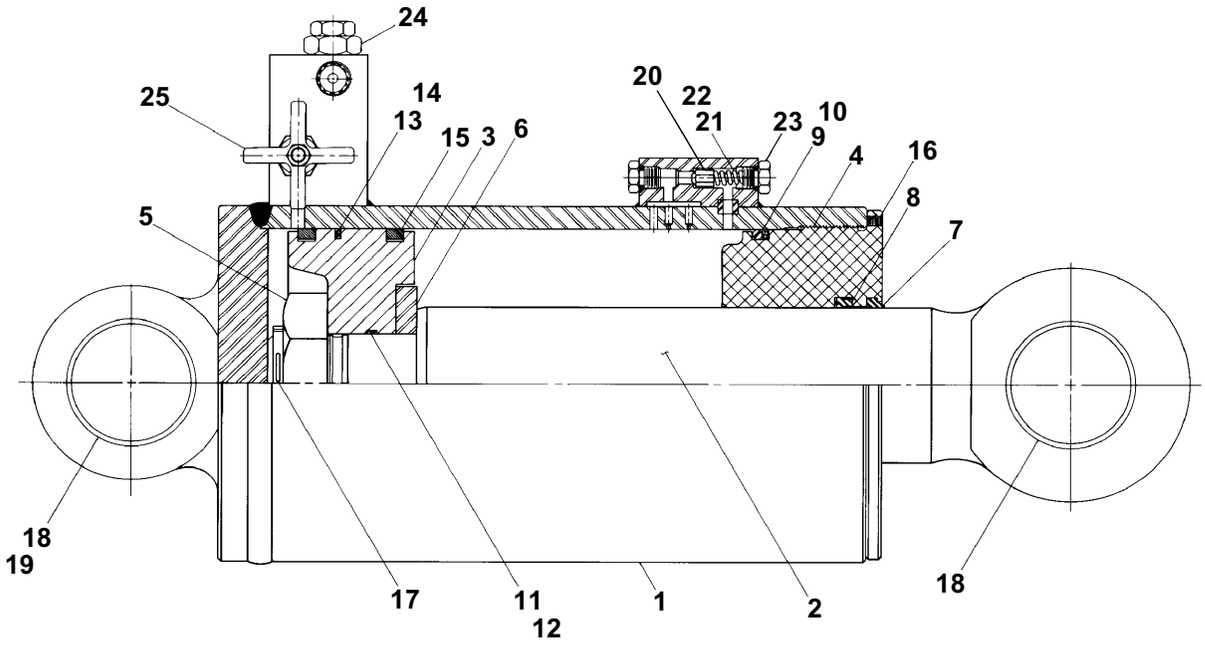

View thousands of Crane Specifications on FreeCraneSpecs.com
https://truckmanualshub.com

Jacking cylinder before 12-04-2000

item	part no	qty	description
	0111292	1	Jacking cylinder
1	0112033	1	Cylinder, jacking
			(see page 2-52 for GBI jacking cylinder)
			(see page 2-54 for Seabee jacking cylinder)
2	0110499	1	3/8 inch hydraulic tube
3	5065707	2	Straight thread adapter
4	6010221	1	Holding valve, jacking cylinder - (valve includes items 5, and 6)
	0110685	1	Seal repair kit
5	6010488	1	Counterbalance cartridge - (factory preset, do not reset)
6	6010426	1	Check valve
7	5035305	2	Straight thread 90° elbow
8	970519	2	Capscrew 3/8-16 x 2-1/4 inch long hex head grade 5
9	5037005	2	Swivel nut 90° elbow

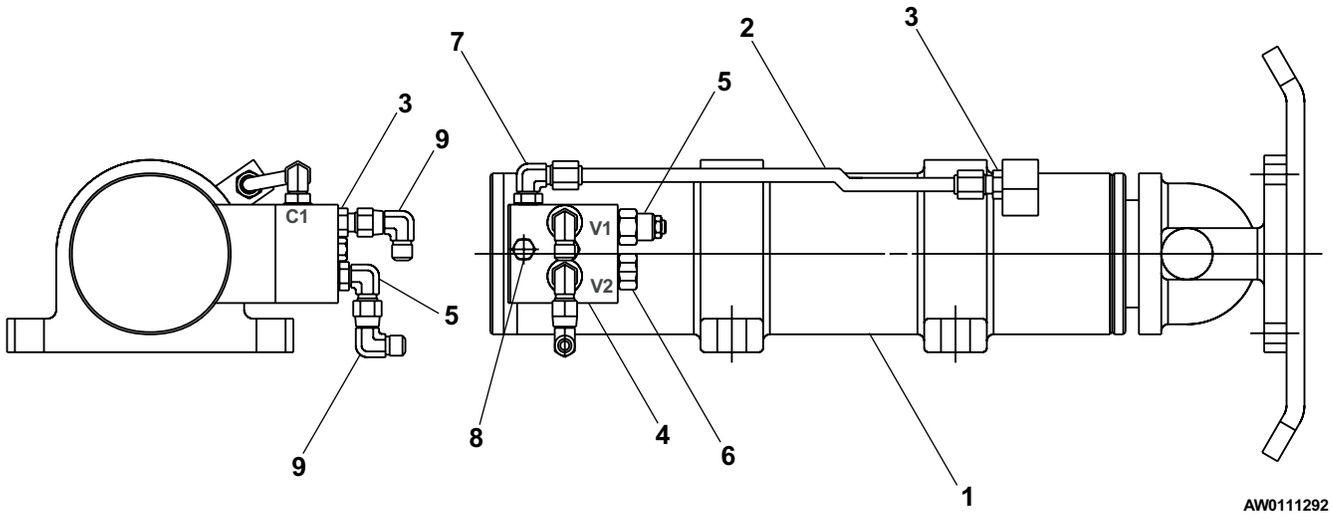

View thousands of Crane Specifications on FreeCraneSpecs.com
https://truckmanualshub.com

Jacking cylinder after 12-04-2000

item	part no	qty	description
	0111292	1	Jacking cylinder
1	0112379	1	Cylinder, jacking - (see page 2-53 for parts breakdown)
2	5035305	2	Straight thread 90° elbow

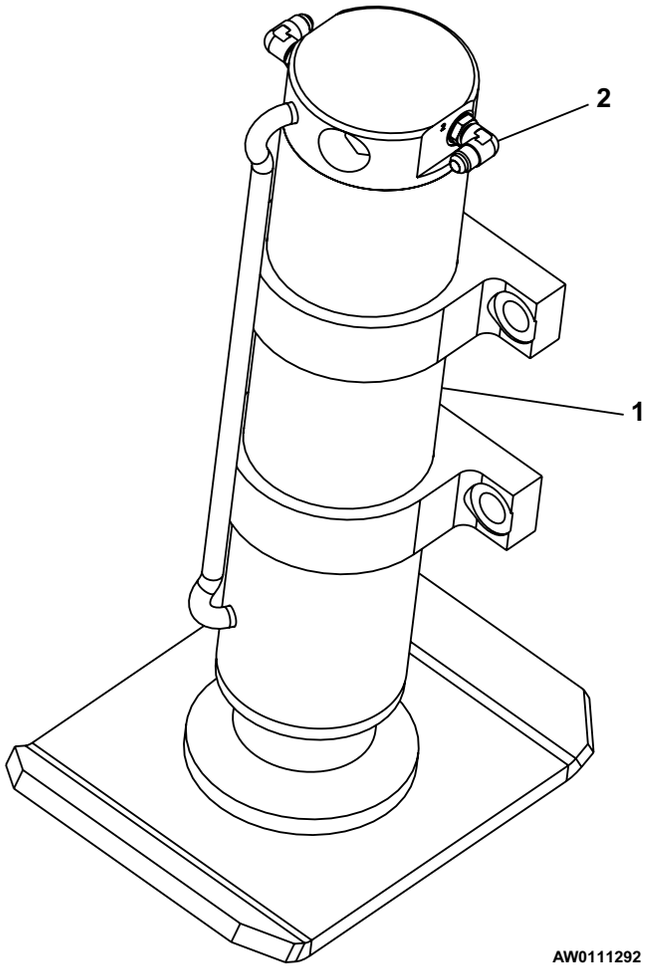

View thousands of Crane Specifications on FreeCraneSpecs.com
https://truckmanualshub.com

Cylinder, jacking - GBI

item	part no	qty	description
	0112033	1	Cylinder, jacking - GBI
	8070254	1	Seal repair kit - (kit includes items 10 through 18)
1		1	Tube - (not sold separately)
2	8070380	1	Rod
3	8070381	1	Retainer
4	8070382	1	Bearing
5	8070383	1	Piston
6	8070384	1	Nut
7	8070385	1	Set screw
8	8070300	1	Lock washer
9	8070301	1	Capscrew
10	Kit item	1	Nylon plug - (not sold separately)
11	Kit item	1	Back-up - (not sold separately)
12	Kit item	1	O-ring - (not sold separately)
13	Kit item	1	PSP seal - (not sold separately)
14	Kit item	1	Bronze plug - (not sold separately)
15	Kit item	1	O-ring - (not sold separately)
16	Kit item	1	Wear ring - (not sold separately)
17	Kit item	1	U-ring - (not sold separately)
18	Kit item	1	Wiper, AN - (not sold separately)

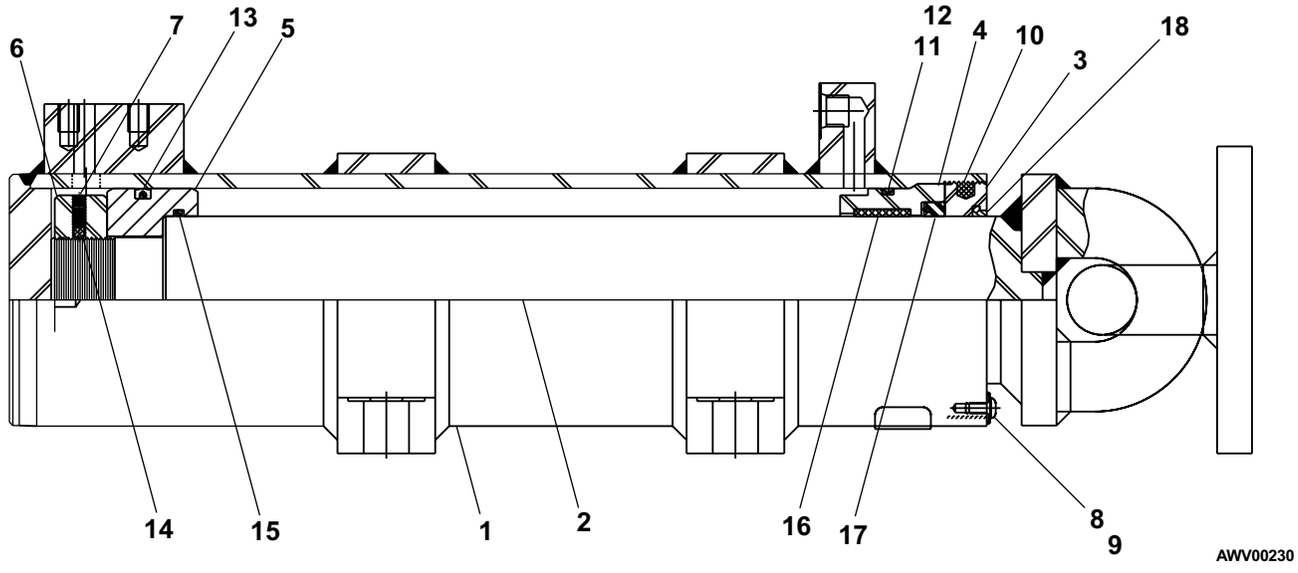

View thousands of Crane Specifications on FreeCraneSpecs.com
https://truckmanualshub.com/

Cylinder, jacking - Rosenboom

item	part no	qty	description
	0112379	1	Cylinder, jacking - Rosenboom
	6091355	1	Seal repair kit - (kit includes items 10 through 21)
1		1	Tube - (not sold separately)
2	6091354	1	Rod
3	6091351	1	Head gland
4	6091350	1	Piston
5	6091362	1	Jack shoe
6	6091272	1	Locknut
7	6010488	1	Cartridge counterbalance valve - (factory preset, do not reset)
8	6010426	1	Check valve
9	5569835	1	Set screw 5/16-18 x 1/4 inch long
10	Kit item	1	Snap ring - (not sold separately)
11	Kit item	1	O-ring - (not sold separately)
12	Kit item	1	O-ring - (not sold separately)
13	Kit item	1	O-ring - (not sold separately)
14	Kit item	1	Back-up - (not sold separately)
15	Kit item	1	Diso-pac - (not sold separately)
16	Kit item	1	Deep Z-seal - (not sold separately)
17	Kit item	1	Rod wiper - (not sold separately)
18	Kit item	1	Wearband - (not sold separately)
19	Kit item	2	Wearband - (not sold separately)
20	Kit item	2	Locking insert - (not sold separately)
21	Kit item	1	Locking insert - (not sold separately)

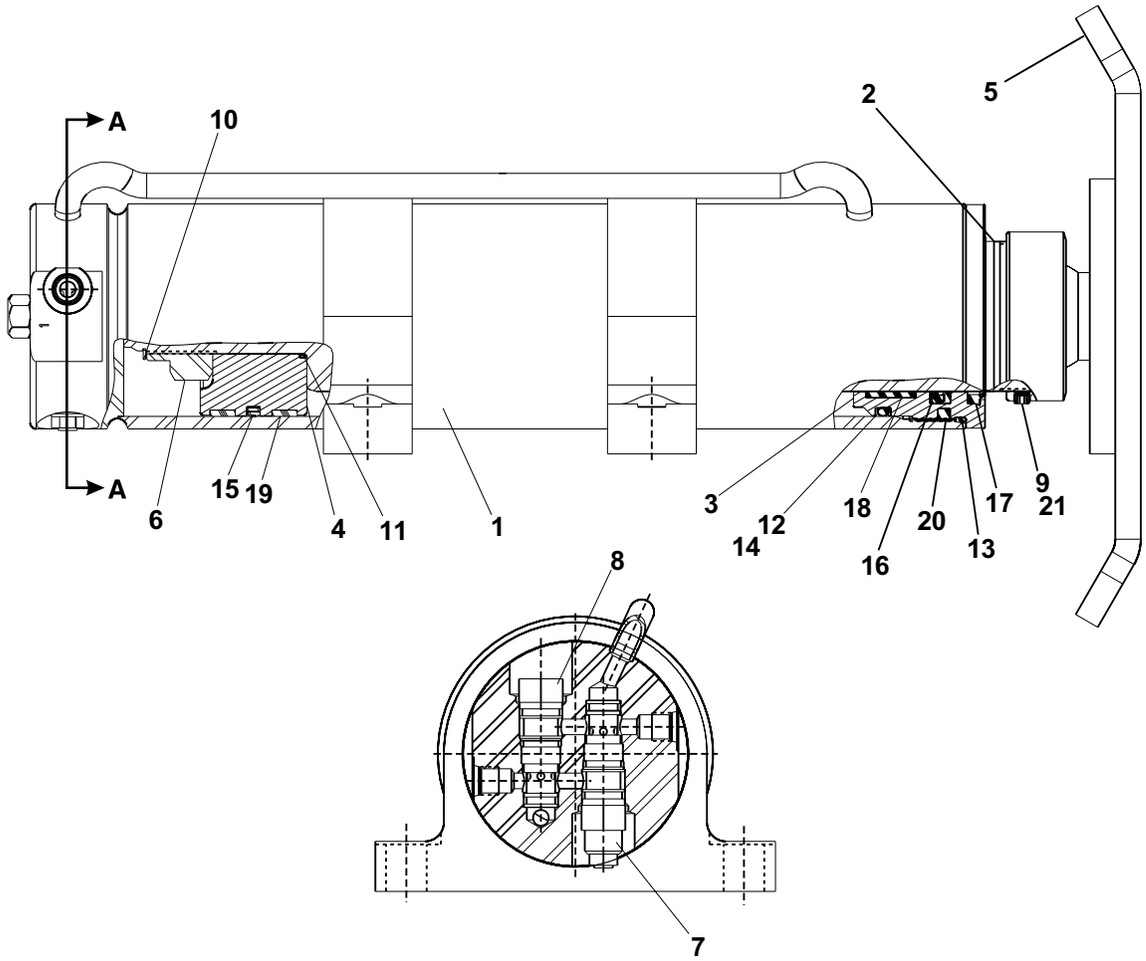

Section A-A

AWV00375

View thousands of Crane Specifications on FreeCraneSpecs.com
https://truckmanualshub.com

Cylinder, jacking - Seabee

item	part no	qty	description
	0112033	1	Cylinder, jacking - Seabee
	0110536	1	Seal repair kit - (kit includes items 6 through 14)
1		1	Case - (not sold separately)
2	8190146	1	Shaft
3	8190147	1	Piston
4	205089	1	Head gland
5	8190148	1	Piston nut
6	Kit item	1	Wiper - (not sold separately)
7	Kit item	1	U-cup - (not sold separately)
8	Kit item	1	O-ring - (not sold separately)
9	Kit item	1	Back-up - (not sold separately)
10	Kit item	1	O-ring - (not sold separately)
11	Kit item	2	Back-up - (not sold separately)
12	Kit item	1	Piston seal - (not sold separately)
13	Kit item	1	O-ring - (not sold separately)
14	Kit item	2	Cast iron piston ring - (not sold separately)
15	8190129	1	Set screw
16	8190149	1	Cotter key

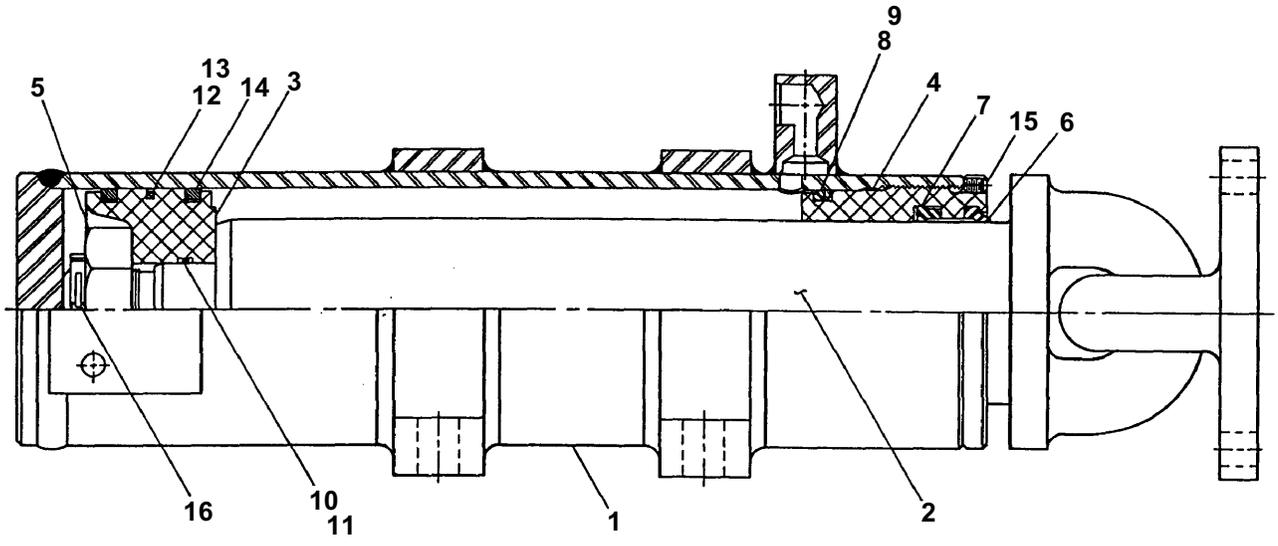

AWV00231

View thousands of Crane Specifications on FreeCraneSpecs.com
https://truckmanualshub.com

Cylinder, master level - GBI

item	part no	qty	description
	0070007	1	Cylinder, master level - GBI
	8070611	1	Seal repair kit - (kit includes items 12 through 19)
1	8070623	1	Rod
2		1	Tube - (not sold separately)
3	8070621	1	Retainer
4	8070620	1	Bearing
5	8070619	1	Piston
6	8070618	1	Spacer
7	8070184	1	Spacer
8	8070616	4	Bushing
9	8070033	1	Nut
10	8070300	1	Lock washer
11	8070301	1	Capscrew
12	Kit item	1	Cotter pin - (not sold separately)
13	Kit item	1	Nylon plug - (not sold separately)
14	Kit item	1	Back-up - (not sold separately)
15	Kit item	1	O-ring - (not sold separately)
16	Kit item	2	U-ring - (not sold separately)
17	Kit item	1	O-ring - (not sold separately)
18	Kit item	1	U-ring - (not sold separately)
19	Kit item	1	Wiper - (not sold separately)

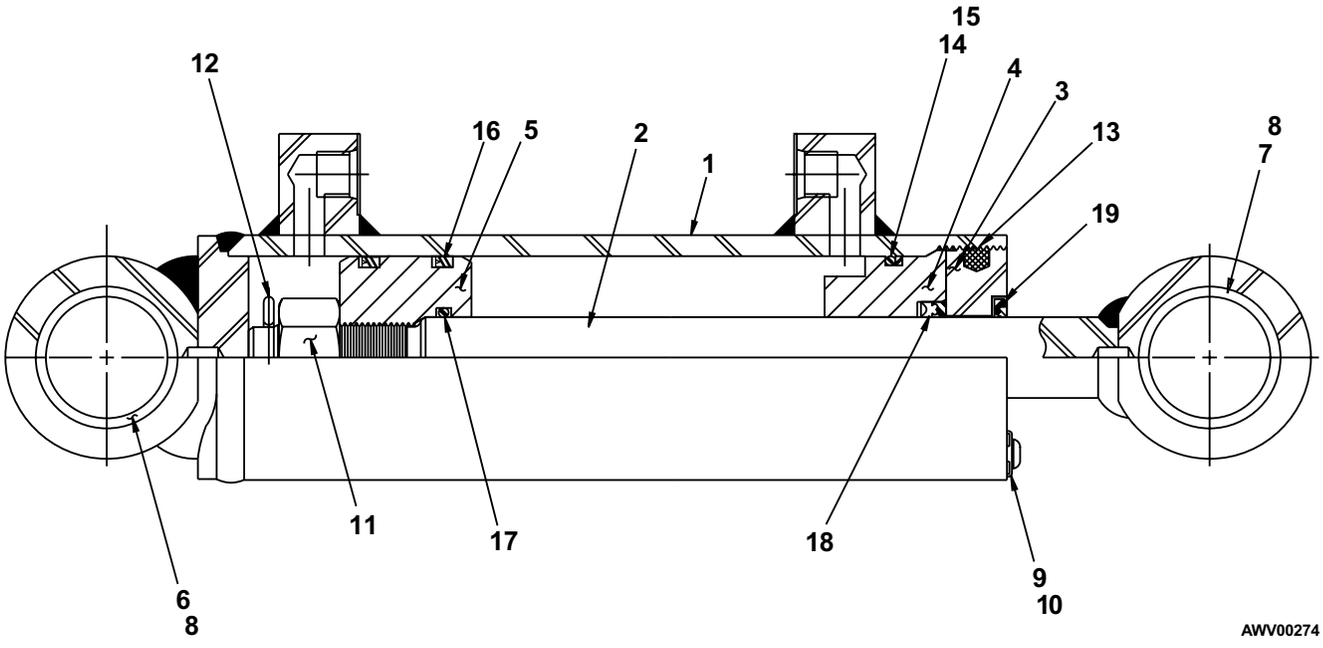

View thousands of Crane Specifications on FreeCraneSpecs.com
https://truckmanualshub.com

Cylinder, master level - Prince

item	part no	qty	description
	0070007	1	Cylinder, master level - Prince
	8160088	1	Seal repair kit - (kit includes items 12 through 18)
1	8160207	1	Piston rod
2		1	Butt and tube - (not sold separately)
3	8160209	1	Piston
4	8160210	1	Gland
5	6091082	1	Locknut
6	8160212	1	Cotter pin
7	6091083	1	Set screw
8	8160131	2	Port plug
9	8160199	4	DU bushing
10	8160213	1	Spacer
11	8160214	1	Spacer
12	Kit item	1	Wear ring - (not sold separately)
13	Kit item	1	Teflon seal - (not sold separately)
14	Kit item	1	O-ring - (not sold separately)
15	Kit item	1	O-ring - (not sold separately)
16	Kit item	1	BU-washer - (not sold separately)
17	Kit item	1	U-cup - (not sold separately)
18	Kit item	1	Wiper - (not sold separately)
19	8160219	1	Rod and wiper cover

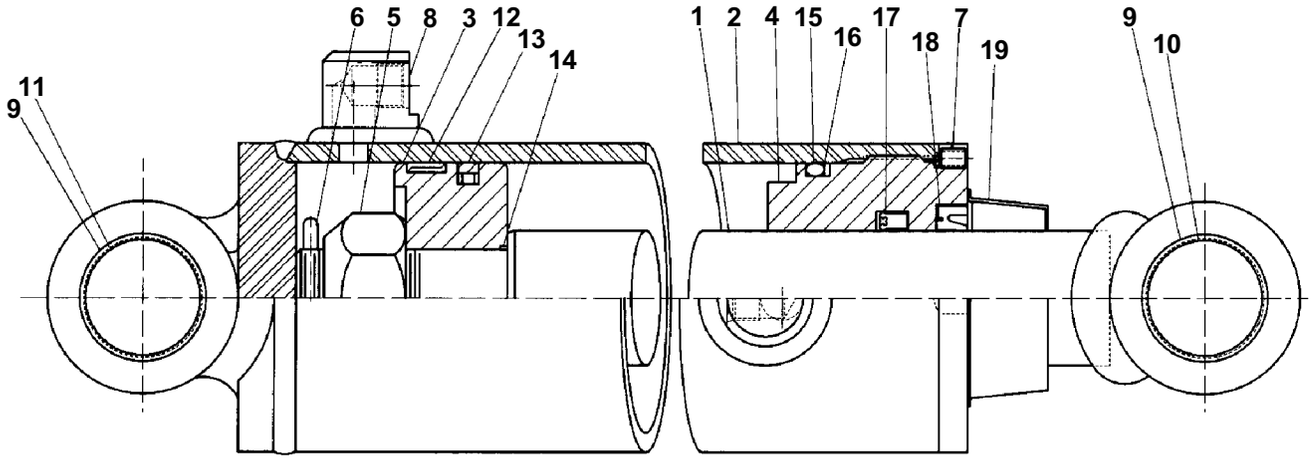

View thousands of Crane Specifications on FreeCraneSpecs.com
https://truckmanualshub.com/

Cylinder, master level - Rosenboom

item	part no	qty	description
	0070007	1	Cylinder, master level - Rosenboom
	6091260	1	Seal repair kit - (kit includes items 9 through 18)
1		1	Tube - (not sold separately)
2	6091374	1	Rod
3	6091257	1	Head gland
4	6091256	1	Piston
5	6091250	1	Head gland cap
6	6091259	1	Lock nut
7	5569835	1	Set screw
8	2502416	4	Bearing
9	Kit item	1	Snap ring - (not sold separately)
10	Kit item	1	O-ring - (not sold separately)
11	Kit item	1	O-ring - (not sold separately)
12	Kit item	1	Back-up - (not sold separately)
13	Kit item	1	Capped T-seal - (not sold separately)
14	Kit item	1	Deep Z-seal - (not sold separately)
15	Kit item	1	Rod wiper - (not sold separately)
16	Kit item	1	Wearband - (not sold separately)
17	Kit item	2	Wearband - (not sold separately)
18	Kit item	1	Locking insert - (not sold separately)

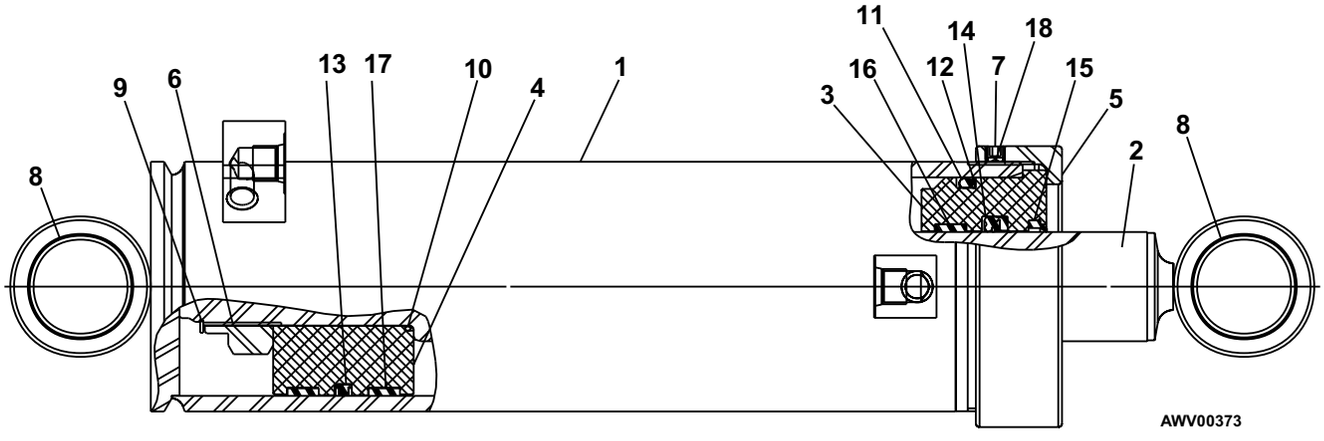

View thousands of Crane Specifications on FreeCraneSpecs.com
https://truckmanualshub.com

Cylinder, master level - Seabee

item	part no	qty	description
	0070007	1	Cylinder, master level - Seabee
	0072833	1	Seal repair kit - (kit includes items 11 through 20)
1		1	Case - (not sold separately)
2	8190060	1	Rod
3	8190038	1	Piston
4	8190074	1	Head gland
5	8190123	1	Piston nut
6	8190124	1	Thrust plate
7	2502416	4	Bearing
8	8190066	1	Bearing spacer
9	8190067	1	Bearing spacer
10	8190129	1	Set screw
11	Kit item	1	Wiper - (not sold separately)
12	Kit item	1	U-cup - (not sold separately)
13	Kit item	1	O-ring - (not sold separately)
14	Kit item	1	Back-up - (not sold separately)
15	Kit item	1	O-ring - (not sold separately)
16	Kit item	2	Back-up - (not sold separately)
17	Kit item	1	Piston seal - (not sold separately)
18	Kit item	1	O-ring - (not sold separately)
19	Kit item	2	Piston ring - (not sold separately)
20	Kit item	1	Cotter pin - (not sold separately)

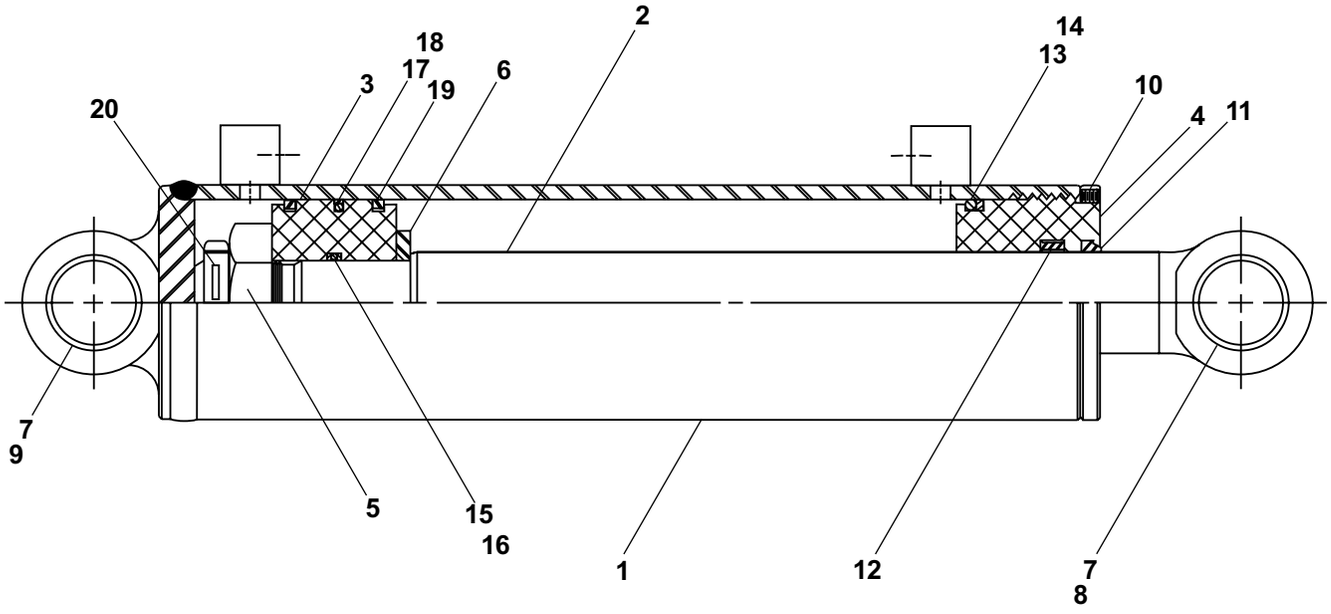

View thousands of Crane Specifications on FreeCraneSpecs.com
https://truckmanualshub.com

Cylinder, slave level - GBI

item	part no	qty	description
	0071486	1	Cylinder, Slave level - GBI
	8070624		Seal repair kit - (kit includes items 13 through 21)
1		1	Tube - (not sold separately)
2	8070625	1	Rod
3	8070621	1	Retainer
4	8070620	1	Bearing
5	8070619	1	Piston
6	8070503	1	Nut
7	8070618	1	Spacer
8	8070617	1	Spacer
9	8070564	2	Port plug
10	8070616	4	Bushing
11	8070507	1	Lock washer
12	8070506	1	Capscrew
13	Kit item	2	O-ring - (not sold separately)
14	Kit item	1	Cotter pin - (not sold separately)
15	Kit item	1	Back-up - (not sold separately)
16	Kit item	1	O-ring - (not sold separately)
17	Kit item	2	U-ring - (not sold separately)
18	Kit item	1	O-ring - (not sold separately)
19	Kit item	1	U-ring - (not sold separately)
20	Kit item	1	Wiper - (not sold separately)
21	Kit item	1	Nylon plug - (not sold separately)

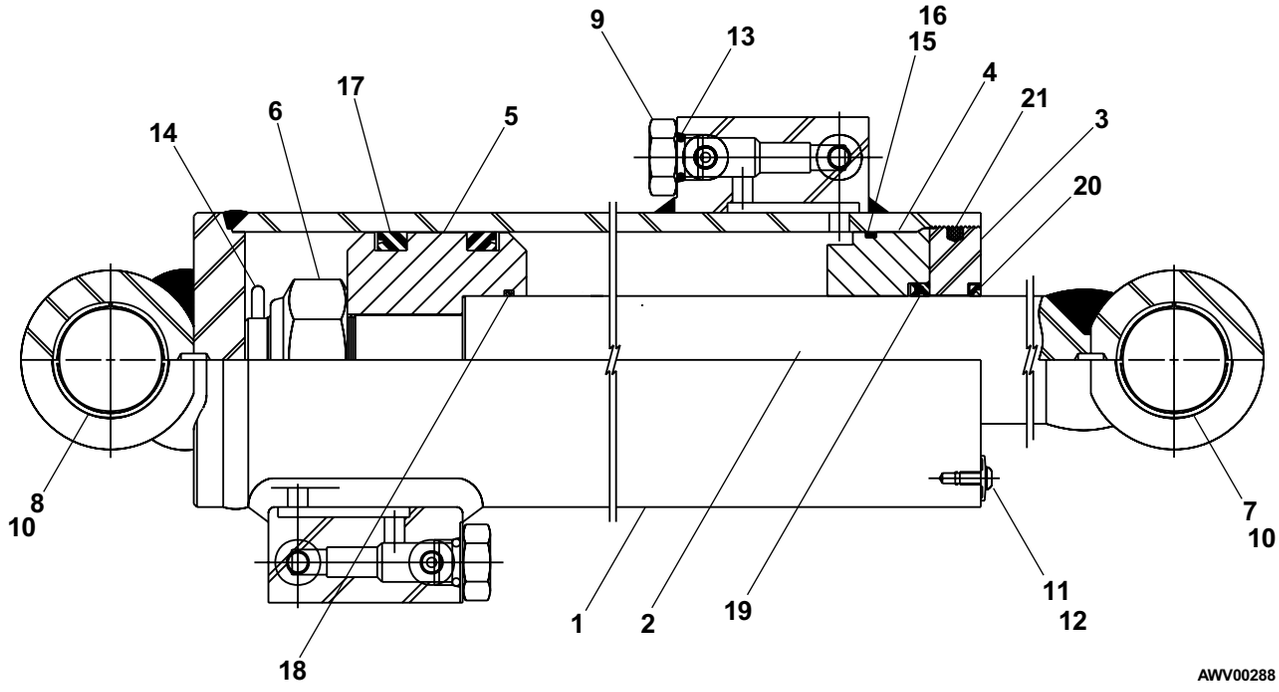

View thousands of Crane Specifications on FreeCraneSpecs.com
https://truckmanualshub.com

Cylinder, slave level - Prince

item	part no	qty	description
	0071486	1	Cylinder, slave level - Prince
	8160206	1	Seal repair kit - (kit includes items 4 and 12 through 18)
1	8160195	1	Piston rod
2	8160196	1	Piston
3	6091104	1	Locknut
4	Kit item	1	Cotter pin
5		1	Butt and tube - (not sold separately)
6	8160037	1	Gland
7	8160198	1	Gland cap
8	8160039	1	Nylon lock
9	8160038	1	Set screw
10	8160199	4	Bearing
11	8160131	6	Plug
12	Kit item	1	Piston ring - (not sold separately)
13	Kit item	1	T-seal - (not sold separately)
14	Kit item	1	O-ring - (not sold separately)
15	Kit item	1	O-ring - (not sold separately)
16	Kit item	1	BU-washer - (not sold separately)
17	Kit item	1	U-cup - (not sold separately)
18	Kit item	1	Wiper - (not sold separately)
19	28160205	2	Plug

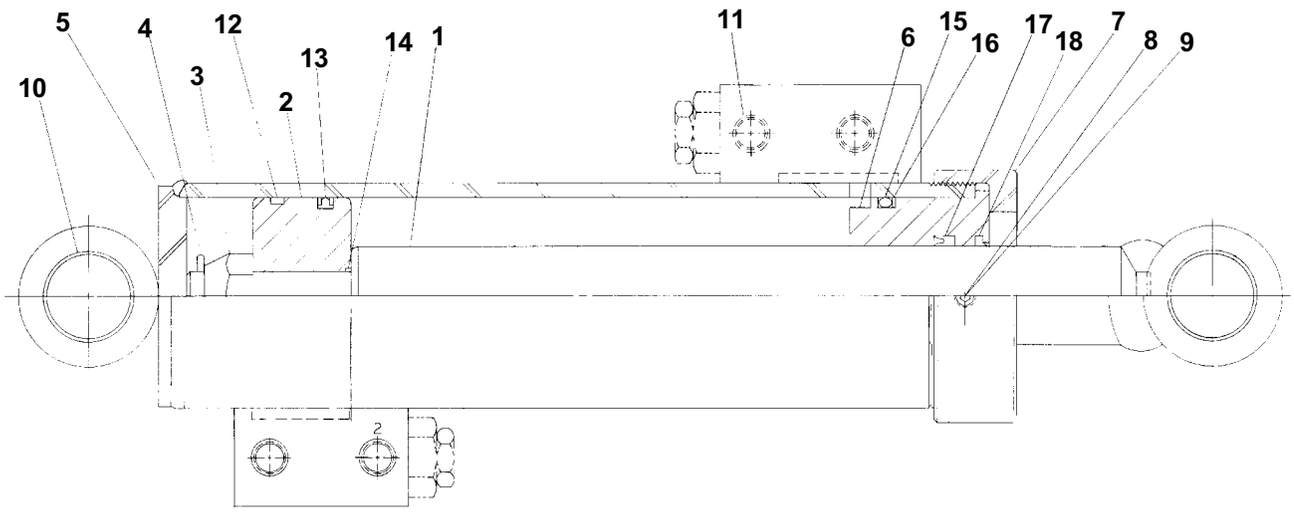

AWV00248

View thousands of Crane Specifications on FreeCraneSpecs.com
https://truckmanualshub.com/

Cylinder, slave level - Rosenboom

item	part no	qty	description
	0074713	1	Cylinder, slave level - Rosenboom
	6091260	1	Seal repair kit - (kit includes items 10 through 19)
1		1	Cylinder tube - (not sold separately)
2	6091258	1	Rod
3	6091255	1	Head gland cap
4	6091257	1	Head gland
5	6091256	1	Piston
6	6091259	1	Lock nut
7	5569835	1	Set screw
8	2502416	4	Bushing
9	6010794	2	Cartridge holding valve - (factory preset, do not reset)
10	Kit item	1	External snap ring - (not sold separately)
11	Kit item	1	O-ring - (not sold separately)
12	Kit item	1	O-ring - (not sold separately)
13	Kit item	1	Back-up ring - (not sold separately)
14	Kit item	1	T-seal - (not sold separately)
15	Kit item	1	Deep Z-seal - (not sold separately)
16	Kit item	1	Rod wiper - (not sold separately)
17	Kit item	1	Wearband - (not sold separately)
18	Kit item	2	Wearband - (not sold separately)
19	Kit item	1	Locking insert - (not sold separately)

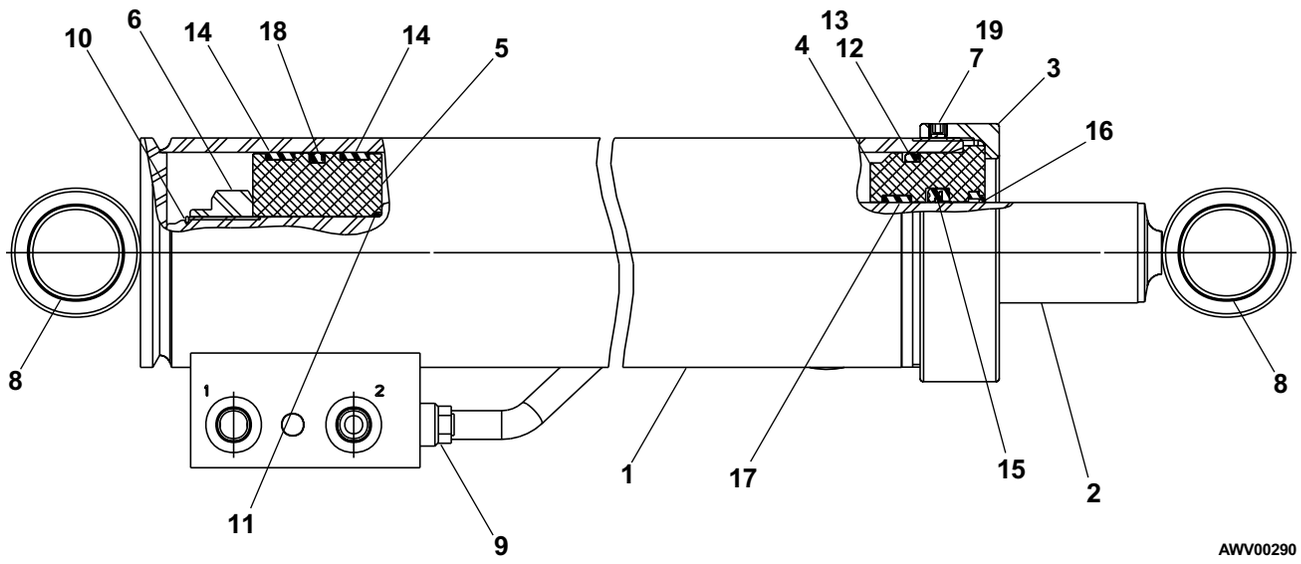

View thousands of Crane Specifications on FreeCraneSpecs.com
https://truckmanualshub.com

Cylinder, slave level - Seabee

item	part no	qty	description
	0071486	1	Cylinder, slave level - Seabee
	0072833	1	Seal repair kit - (kit includes items 11 through 20)
1		1	Case - (not sold separately)
2	8190036	1	Shaft
3	8190038	1	Piston
4	8190074	1	Head gland
5	8190123	1	Piston nut
6	8190124	1	Thrust plate
7	8190125	1	Set screw
8	2502416	4	Bearing
9	8190066	1	Bearing spacer, rod end
10	8190067	1	Bearing spacer, base end
11	Kit item	1	Wiper - (not sold separately)
12	Kit item	1	U-ring - (not sold separately)
13	Kit item	1	O-ring - (not sold separately)
14	Kit item	1	Back-up - (not sold separately)
15	Kit item	1	O-ring - (not sold separately)
16	Kit item	2	Back-up - (not sold separately)
17	Kit item	1	Piston seal - (not sold separately)
18	Kit item	2	O-ring - (not sold separately)
19	Kit item	2	Piston ring - (not sold separately)
20	Kit item	1	Cotter pin - (not sold separately)
21	6010120	1	Cartridge holding valve - (preset by factory, do not reset)

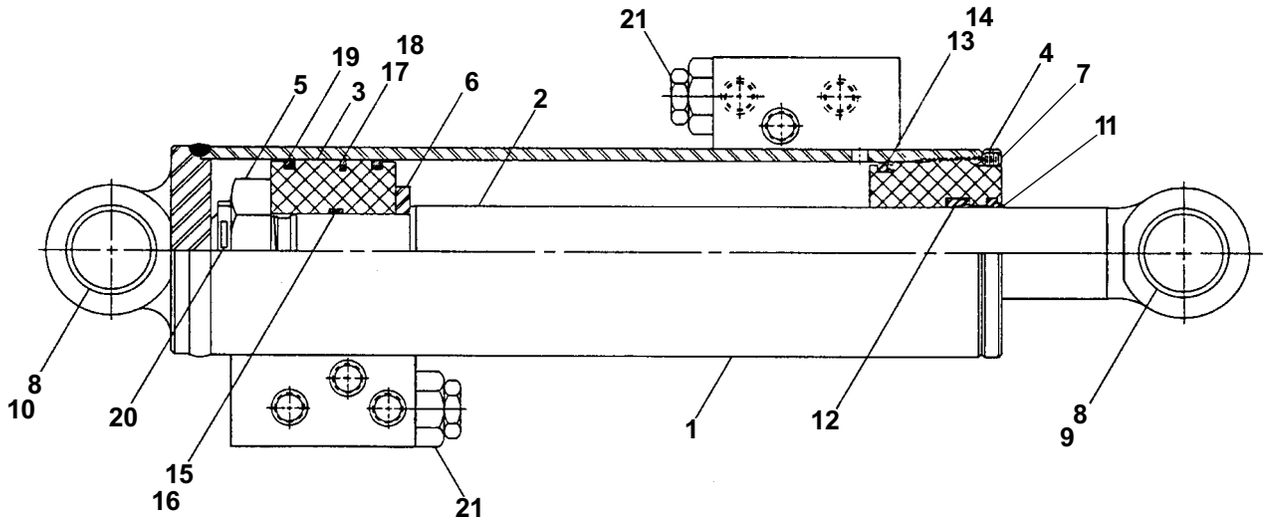

AWV00208

View thousands of Crane Specifications on FreeCraneSpecs.com
https://truckmanualshub.com

Cylinder, steering - GBI

item	part no	qty	description
	0070007	1	Cylinder, steering - GBI
	8070611	1	Seal repair kit - (kit includes items 12 through 19)
1	8070623	1	Rod
2		1	Tube - (not sold separately)
3	8070621	1	Retainer
4	8070620	1	Bearing
5	8070619	1	Piston
6	8070618	1	Spacer
7	8070184	1	Spacer
8	8070616	4	Bushing
9	8070033	1	Nut
10	8070300	1	Lock washer
11	8070301	1	Capscrew
12	Kit item	1	Cotter pin - (not sold separately)
13	Kit item	1	Nylon plug - (not sold separately)
14	Kit item	1	Back-up - (not sold separately)
15	Kit item	1	O-ring - (not sold separately)
16	Kit item	2	U-ring - (not sold separately)
17	Kit item	1	O-ring - (not sold separately)
18	Kit item	1	U-ring - (not sold separately)
19	Kit item	1	Wiper - (not sold separately)

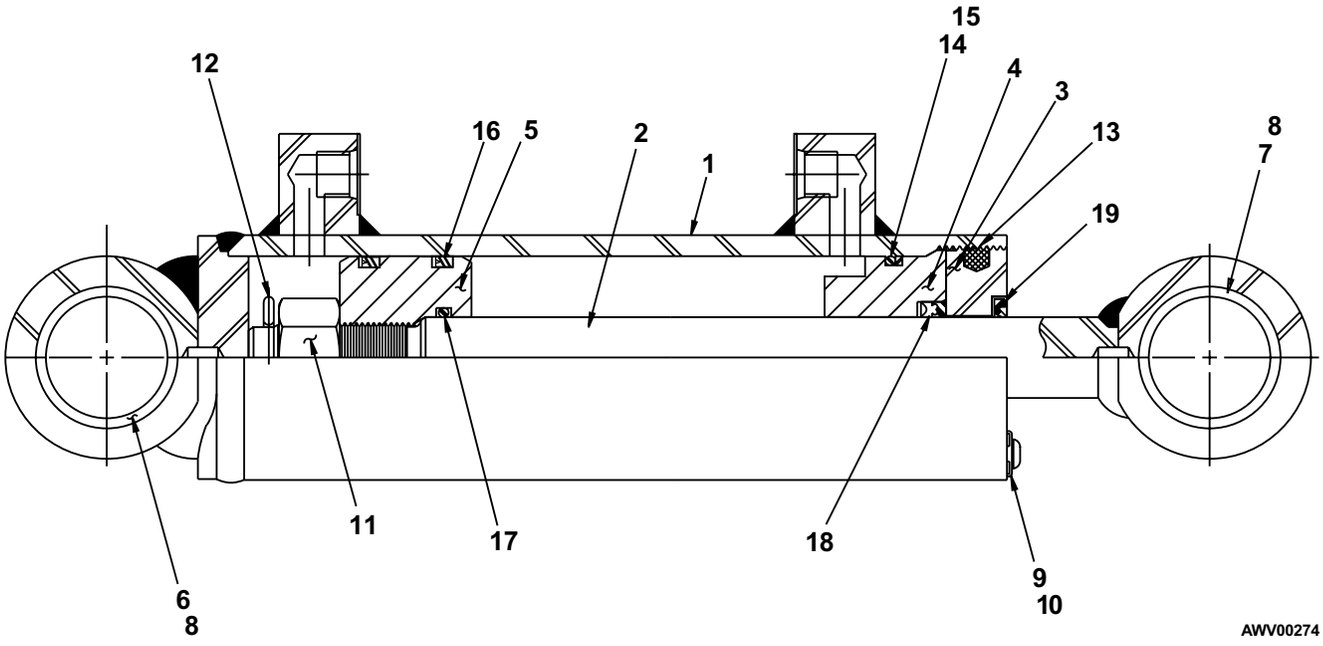

View thousands of Crane Specifications on FreeCraneSpecs.com
https://truckmanualshub.com

Cylinder, steering - Prince

item	part no	qty	description
	0070007	1	Cylinder, steering - Prince
	8160088	1	Seal repair kit - (kit includes items 12 through 18)
1	8160207	1	Piston rod
2		1	Butt and tube - (not sold separately)
3	8160209	1	Piston
4	8160210	1	Gland
5	6091082	1	Locknut
6	8160212	1	Cotter pin
7	6091083	1	Set screw
8	8160131	2	Port plug
9	8160199	4	DU bushing
10	8160213	1	Spacer
11	8160214	1	Spacer
12	Kit item	1	Wear ring - (not sold separately)
13	Kit item	1	Teflon seal - (not sold separately)
14	Kit item	1	O-ring - (not sold separately)
15	Kit item	1	O-ring - (not sold separately)
16	Kit item	1	BU-washer - (not sold separately)
17	Kit item	1	U-cup - (not sold separately)
18	Kit item	1	Wiper - (not sold separately)
19	8160219	1	Rod and wiper cover

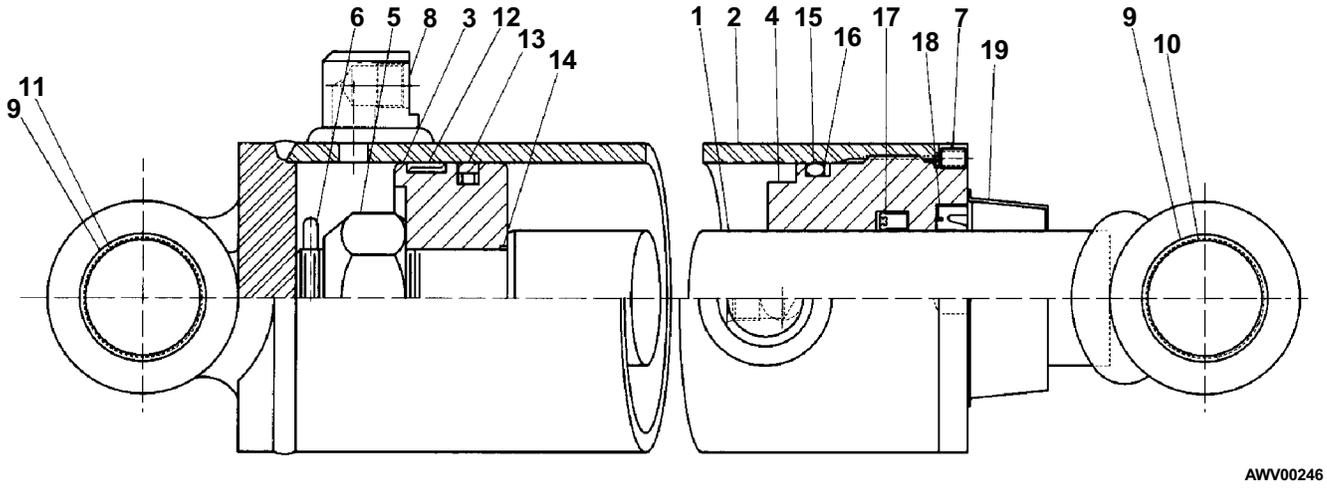

View thousands of Crane Specifications on FreeCraneSpecs.com
https://truckmanualshub.com/

Cylinder, steering - Rosenboom

item	part no	qty	description
	0070007	1	Cylinder, steering - Rosenboom
	6091260	1	Seal repair kit - (kit includes items 9 through 18)
1		1	Tube - (not sold separately)
2	6091374	1	Rod
3	6091257	1	Head gland
4	6091256	1	Piston
5	6091250	1	Head gland cap
6	6091259	1	Lock nut
7	5569835	1	Set screw
8	2502416	4	Bearing
9	Kit item	1	Snap ring - (not sold separately)
10	Kit item	1	O-ring - (not sold separately)
11	Kit item	1	O-ring - (not sold separately)
12	Kit item	1	Back-up - (not sold separately)
13	Kit item	1	Capped T-seal - (not sold separately)
14	Kit item	1	Deep Z-seal - (not sold separately)
15	Kit item	1	Rod wiper - (not sold separately)
16	Kit item	1	Wearband - (not sold separately)
17	Kit item	2	Wearband - (not sold separately)
18	Kit item	1	Locking insert - (not sold separately)

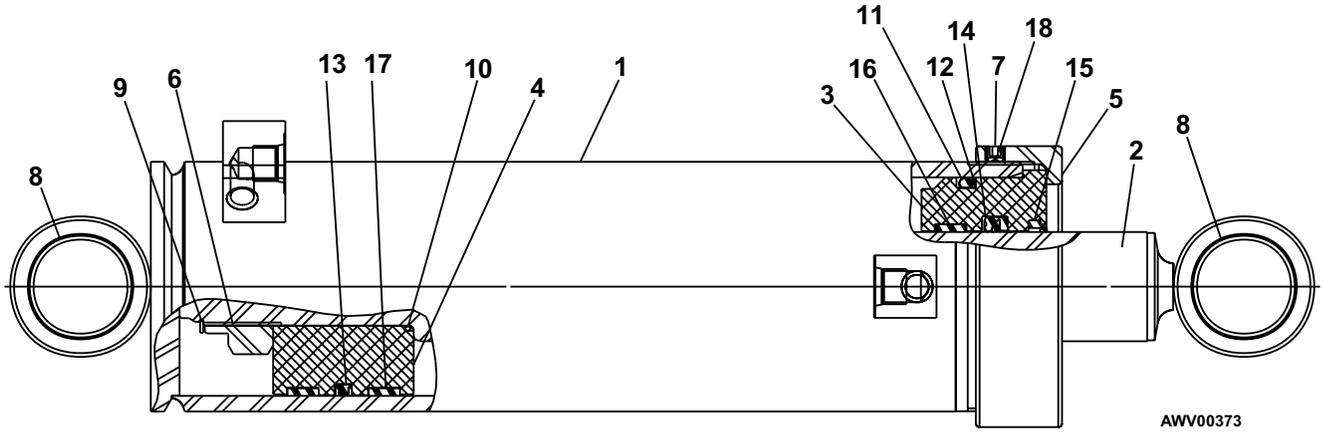

View thousands of Crane Specifications on FreeCraneSpecs.com
https://truckmanualshub.com

Cylinder, steering - Seabee

item	part no	qty	description
	0070007	1	Cylinder, steering - Seabee
	0072833	1	Seal repair kit - (kit includes items 11 through 20)
1		1	Case - (not sold separately)
2	8190060	1	Rod
3	8190038	1	Piston
4	8190074	1	Head gland
5	8190123	1	Piston nut
6	8190124	1	Thrust plate
7	2502416	4	Bearing
8	8190066	1	Bearing spacer
9	8190067	1	Bearing spacer
10	8190129	1	Set screw
11	Kit item	1	Wiper - (not sold separately)
12	Kit item	1	U-cup - (not sold separately)
13	Kit item	1	O-ring - (not sold separately)
14	Kit item	1	Back-up - (not sold separately)
15	Kit item	1	O-ring - (not sold separately)
16	Kit item	2	Back-up - (not sold separately)
17	Kit item	1	Piston seal - (not sold separately)
18	Kit item	1	O-ring - (not sold separately)
19	Kit item	2	Piston ring - (not sold separately)
20	Kit item	1	Cotter pin - (not sold separately)

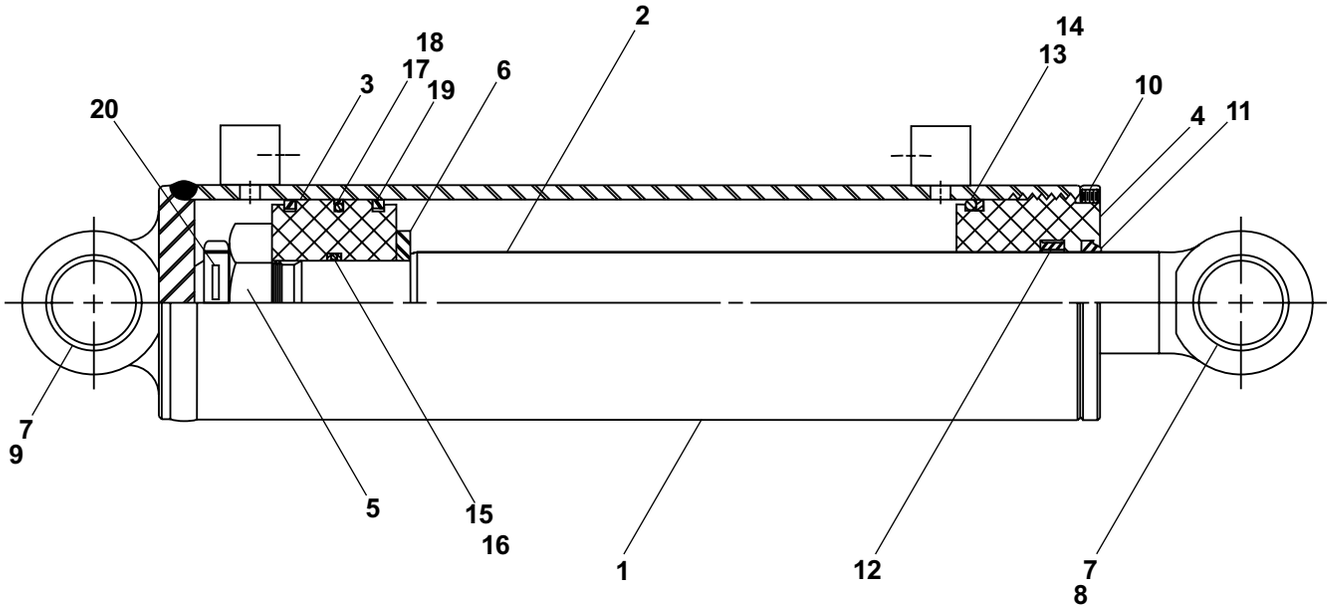

View thousands of Crane Specifications on FreeCraneSpecs.com
https://truckmanualshub.com/

Dual sequence valve, right hand

item	part no	qty	description
	0111527	1	Dual sequence valve, right hand
1	6010613	1	Dual sequence valve, Fluid Tech or Weco - (includes items 2 and 3)
2	6010614	1	Valve body, Fluid Tech
	6010624	1	Valve body, Weco
3	6010615	2	Cartridge sequence valve, Fluid Tech- (preset at factory, do not reset)
	6010269	2	Cartridge sequence valve, Weco- (preset at factory, do not reset)
4	5075208	2	Hex head plug
5	5035303	1	Straight thread 90° elbow
6	5065711	1	Straight thread adapter
7	5025001	1	Swivel adapter
8	5065703	1	Straight thread adapter

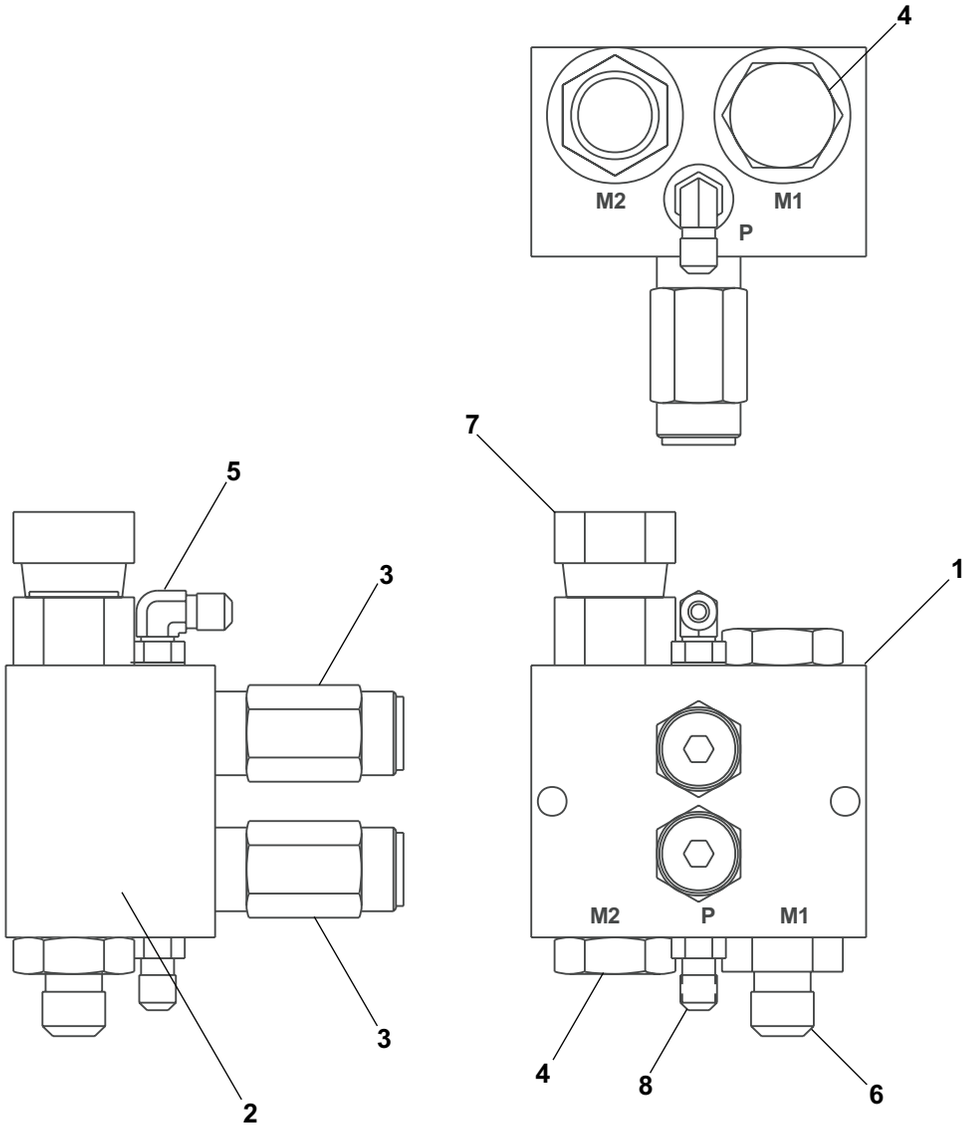

View thousands of Crane Specifications on FreeCraneSpecs.com
https://truckmanualshub.com

Dual sequence valve, left hand

item	part no	qty	description
	0111528	1	Dual sequence valve, left hand
1	6010613	1	Dual sequence valve, Fluid Tech or Weco - (includes items 2 and 3)
2	6010614	1	Valve body, Fluid Tech
	6010624	1	Valve body, Weco
3	6010615	2	Cartridge sequence valve, Fluid Tech- (preset at factory, do not reset)
	6010269	2	Cartridge sequence valve, Weco- (preset at factory, do not reset)
4	5075208	2	Hex head plug
5	5035303	1	Straight thread 90° elbow
6	5065711	1	Straight thread adapter
7	5025001	1	Swivel adapter
8	5075203	1	Hex head plug

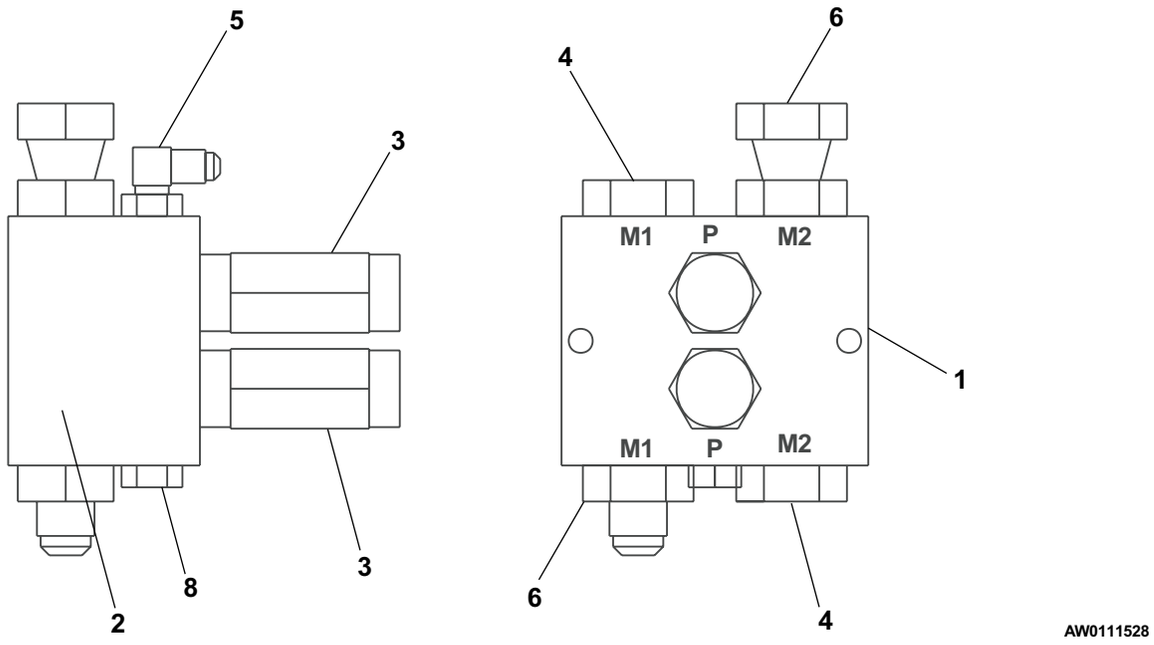

View thousands of Crane Specifications on FreeCraneSpecs.com
https://truckmanualshub.com

Dual sequence valve, 4 wheel drive

item	part no	qty	description
	0111530	1	Dual sequence valve, 4 wheel drive
1	6010613	1	Dual sequence valve, Fluid Tech or Weco - (includes items 2 and 3)
2	6010614	1	Valve body, Fluid Tech
	6010624	1	Valve body, Weco
3	6010615	2	Cartridge sequence valve, Fluid Tech- (preset at factory, do not reset)
	6010269	2	Cartridge sequence valve, Weco - (preset at factory, do not reset)
4	5065711	1	Straight thread adapter
5	5035303	1	Straight thread 90° elbow
6	5075208	2	Hex head plug
7	5065703	1	Straight thread adapter
8	5025001	1	Swivel adapter

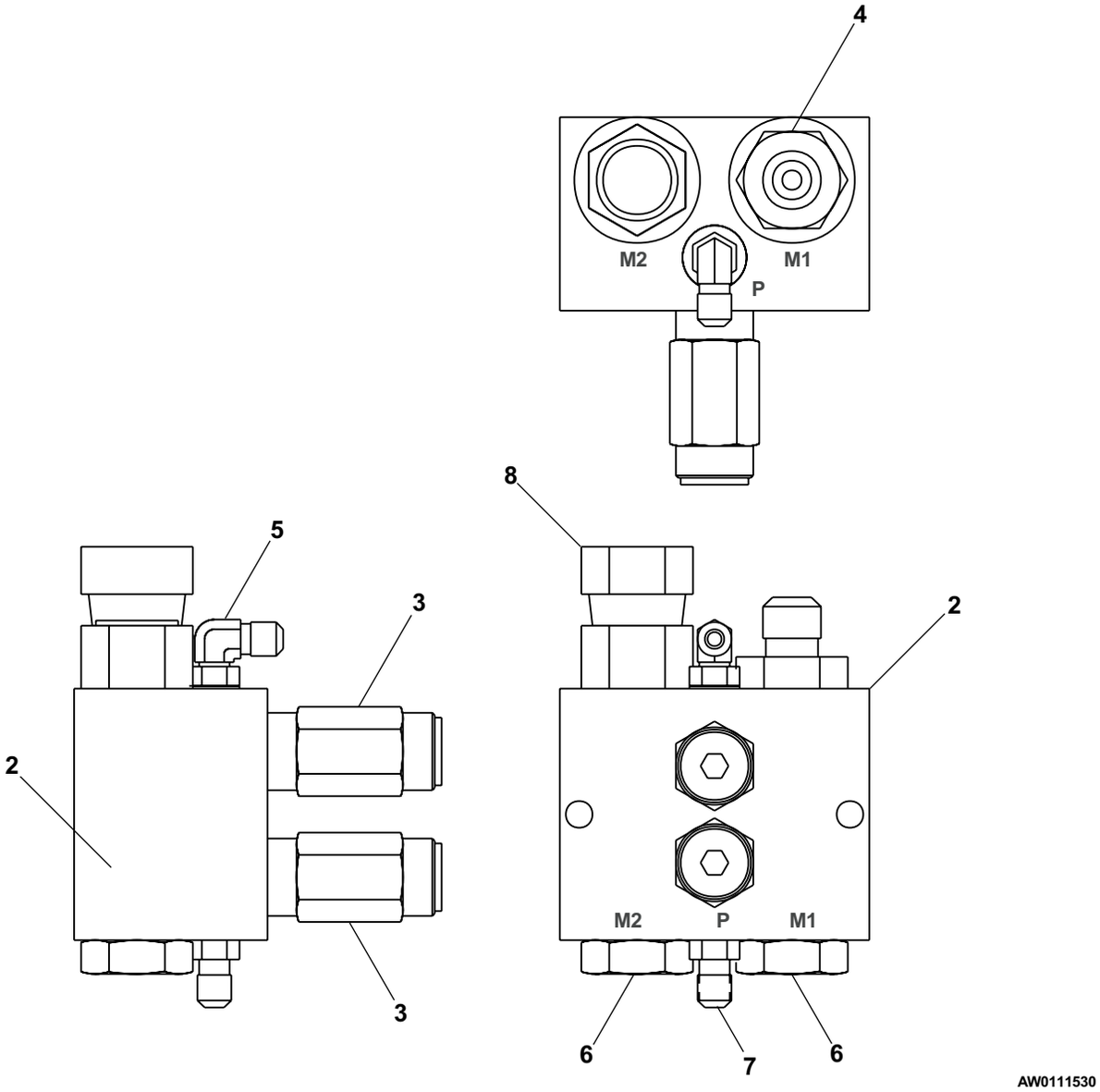

View thousands of Crane Specifications on FreeCraneSpecs.com
https://truckmanualshub.com

Dual holding valve, platform rotation

item	part no	qty	description
1	6010628	1	Dual holding valve, platform rotation
2	6010794	2	Cartridge holding valve - (preset by factory, do not reset)
	0150563	1	Seal repair kit
3	6010640	2	Flow control cartridge

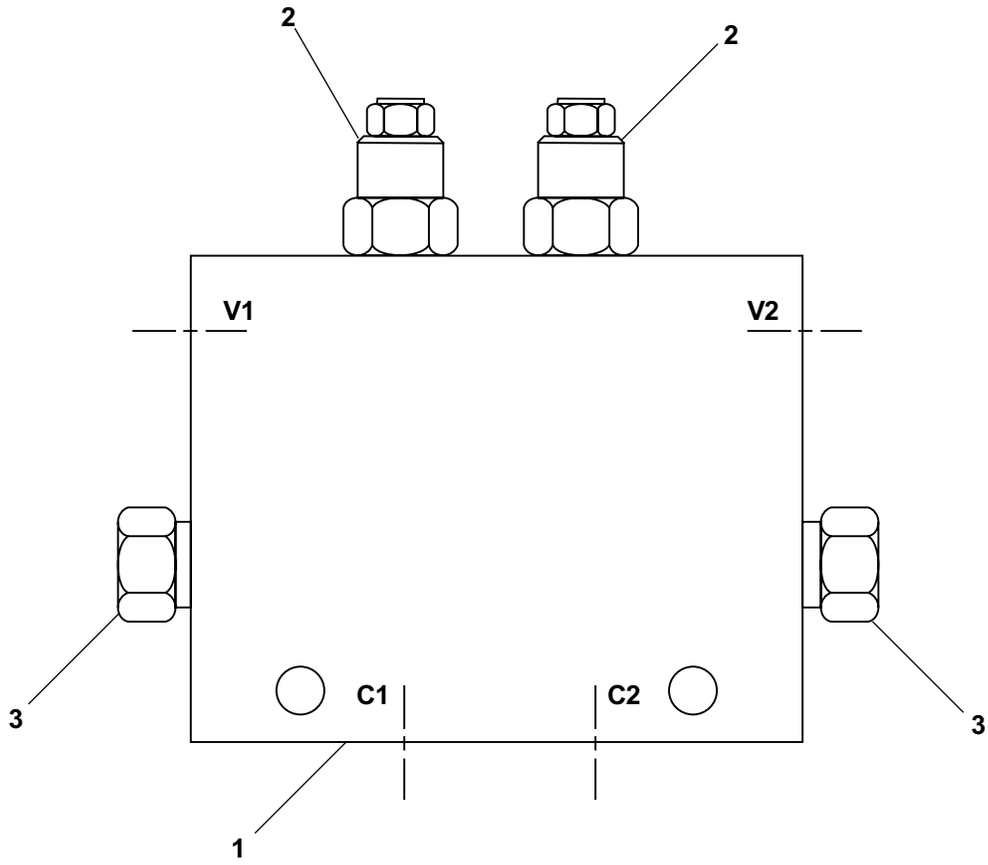

AW6010628

View thousands of Crane Specifications on FreeCraneSpecs.com
https://truckmanualshub.com

Emergency power unit

item	part no	qty	description
	0072940	1	Emergency power unit
1	6020058	1	Emergency power motor/pump
2	5037006	1	Swivel nut 90° elbow
3	5035305	1	Straight thread 90° elbow
4	5065709	1	Straight thread adapter

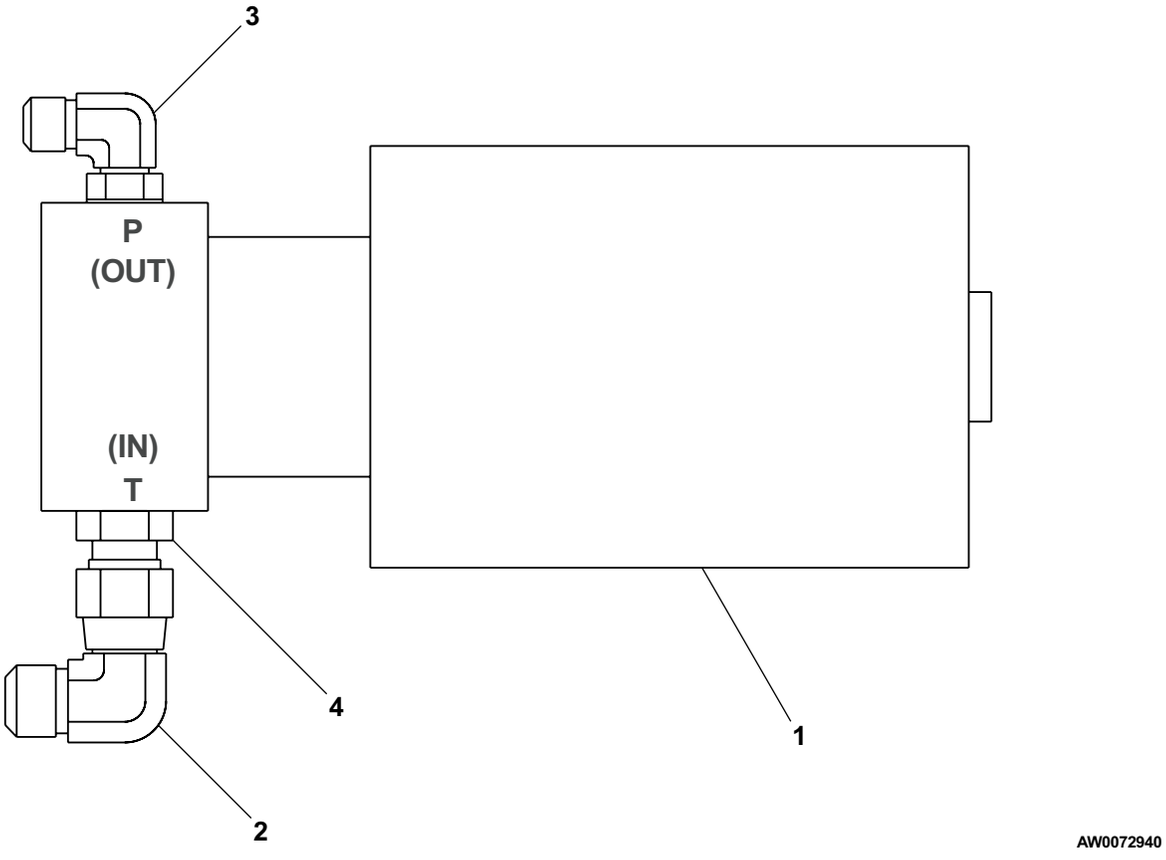

View thousands of Crane Specifications on FreeCraneSpecs.com
https://truckmanualshub.com

High range speed selector valve

item	part no	qty	description
	0111344	1	High range speed selector valve
1	6010493	1	High range speed valve - (valve includes knob)
2	8080110	1	Knob
3	5035318	2	Straight thread 90° elbow
4	5065705	1	Straight thread adapter

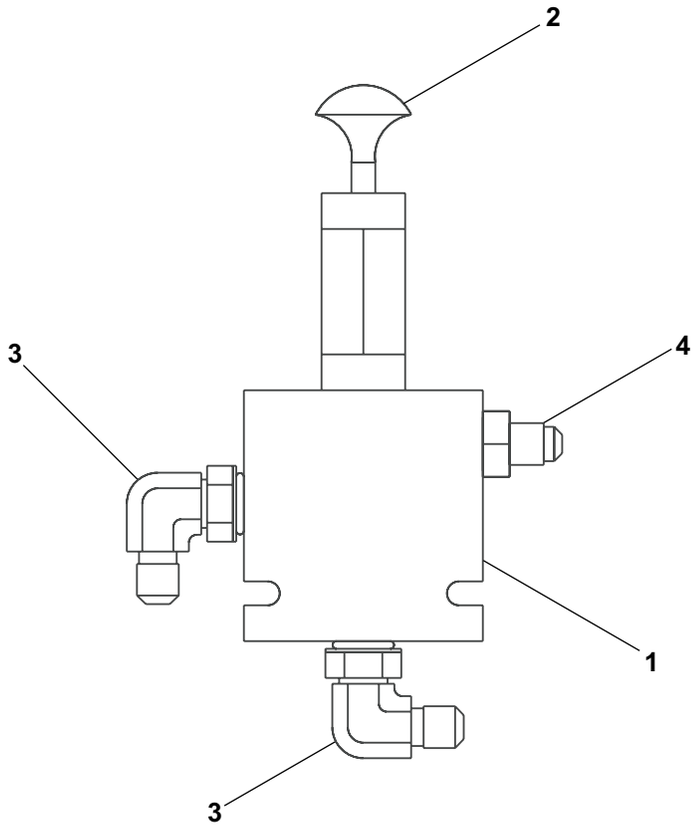

AW0111344

View thousands of Crane Specifications on FreeCraneSpecs.com
https://truckmanualshub.com

Hydraulic pump

item	part no	qty	description
	0111578	1	Hydraulic pump - (complete)
1	6020065	1	Hydraulic pump - (pump compensator is not preset)
	8220119	1	Seal repair kit - Vickers pump
	8160100	1	Seal repair kit - Parker pump
	8180021	1	Seal repair kit - Rexroth pump
	8220120	1	Replacement compensator - Vickers pump
	6090057	1	Replacement compensator - Parker pump
	8180023	1	Replacement compensator - Rexroth pump
2	5038005	1	Beaded 90° elbow
3	5065718	1	Straight thread adapter
4	5065710	1	Straight thread adapter
5	5035303	1	Straight thread 90° elbow
6	5037006	1	Swivel nut 90° elbow

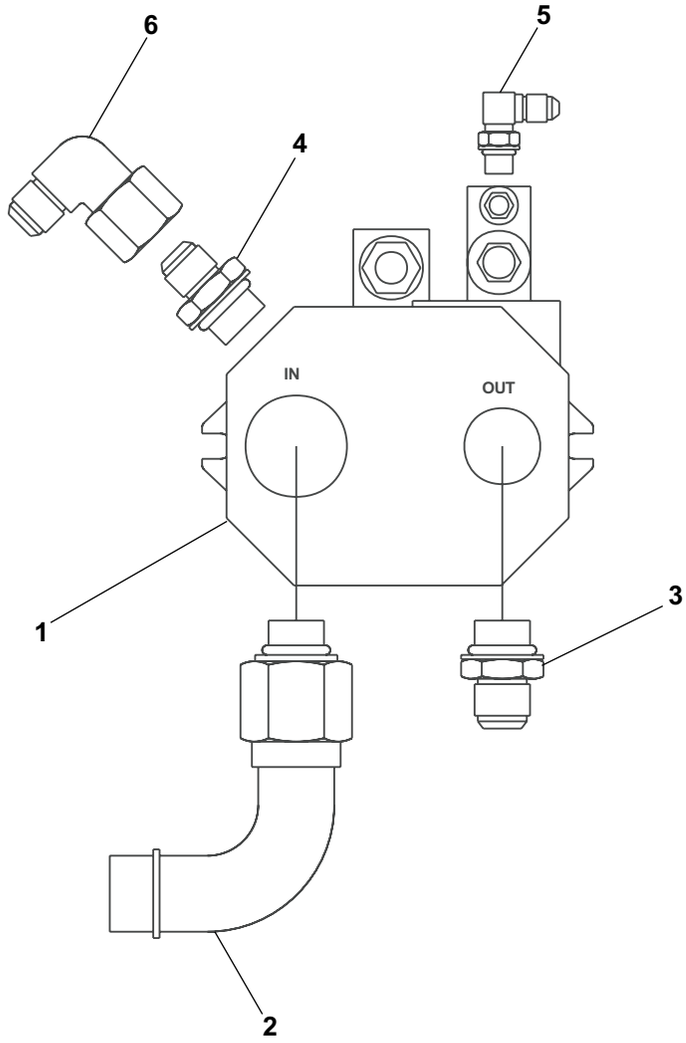

AW0111578

View thousands of Crane Specifications on FreeCraneSpecs.com
https://truckmanualshub.com/

Hydraulic warm-up valve

item	part no	qty	description
	0082053	1	Hydraulic warm-up valve
1	6010499	1	Valve, hydraulic warm-up - (includes items 2 and 3)
	0073620	1	Seal repair kit
2	6010472	1	Cartridge - (preset by factory, do not reset)
3	3040473	1	Cartridge solenoid, 10 volt DC
4	6010083	1	Shuttle valve
5	5065705	2	Straight thread adapter
6	5035318	1	Straight thread 90° elbow
7	5076301	1	Union
8	0071805	1	Mounting bracket
9	5037003	1	Swivel nut 90° elbow
10	970169	2	Capscrew 1/4-20 x 2 inch long hex head grade 5
11	986019	2	Washer 1/4 medium flat
12	5560004	2	Nut 1/4-20 self locking

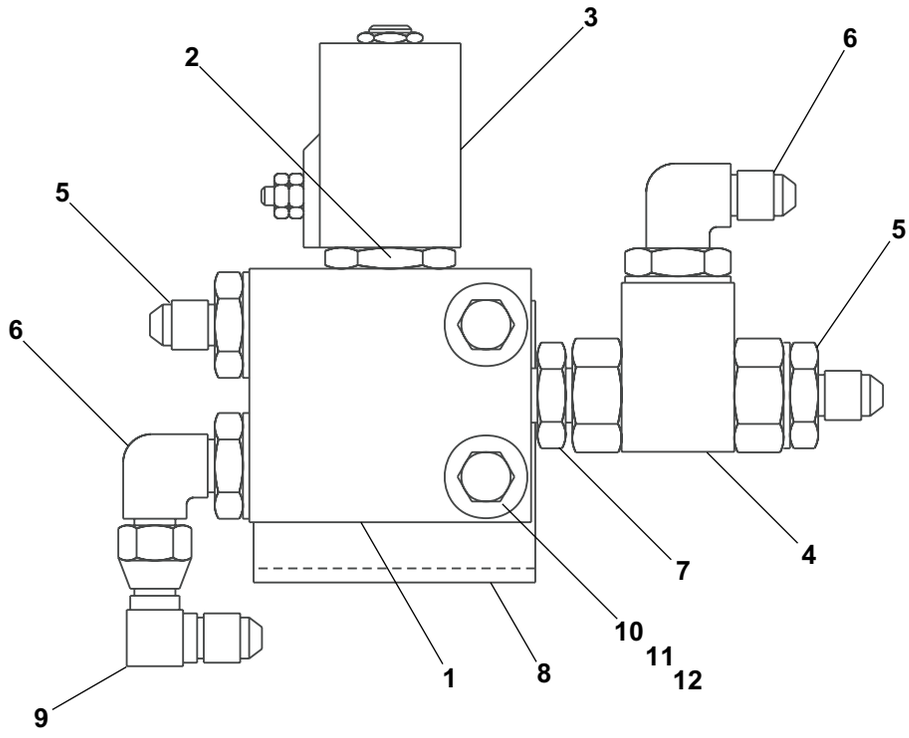

AW0082053

View thousands of Crane Specifications on FreeCraneSpecs.com
https://truckmanualshub.com

Hydraulic oil return filter

item	part no	qty	description
	0112029	1	Hydraulic oil return filter
1	5080044	1	Filter - (includes gauge)
2	5080011	1	Filter gauge
3	5037011	1	Swivel nut 90° elbow
4	5065721	1	Straight thread adapter

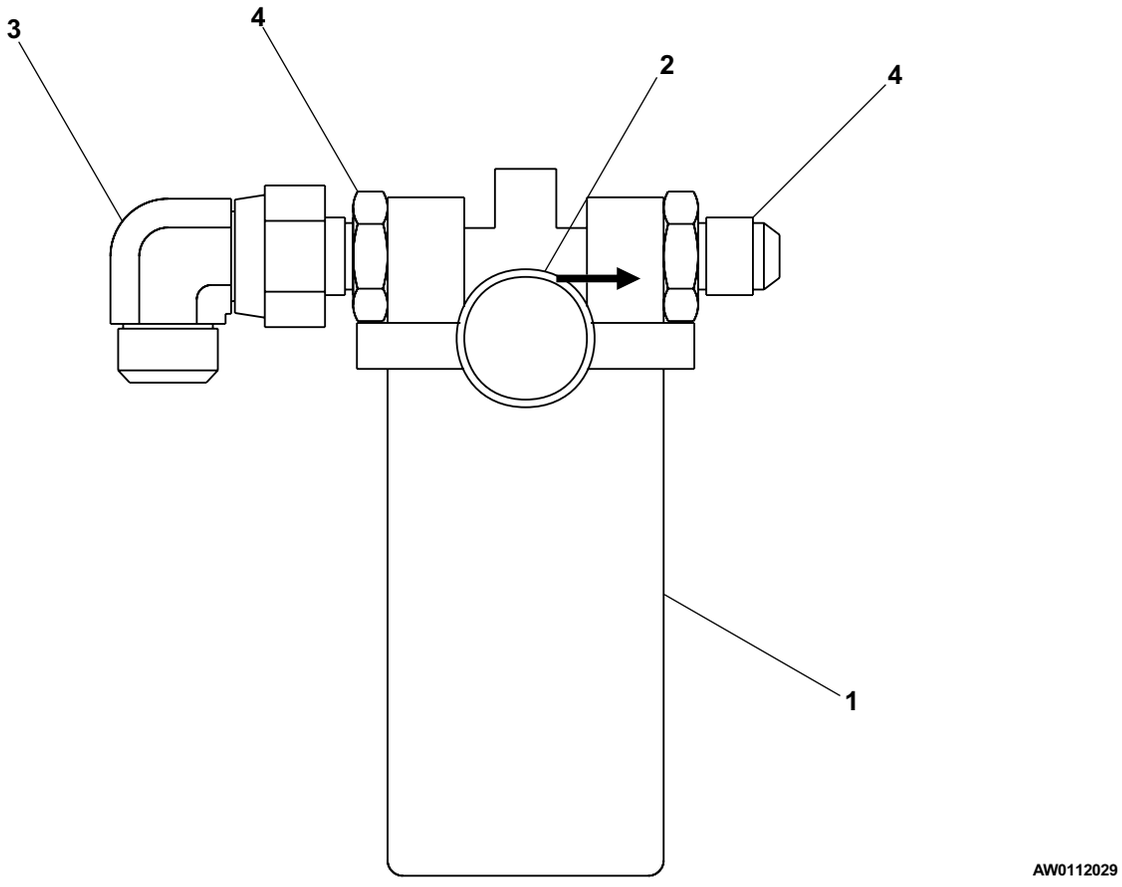

View thousands of Crane Specifications on FreeCraneSpecs.com
https://truckmanualshub.com

Motion control valve, turntable swing

item	part no	qty	description
1	6010216	1	Motion control valve, turntable swing - (valve includes items 2, 3 and 4)
	0110682	1	Seal repair kit
2	6010255	2	Sequence valve cartridge - (factory preset, do not reset)
3	6010256	2	Counterbalance cartridge - (factory preset, do not reset)
4	6010531	1	Shuttle valve
	0150562	1	Seal repair kit

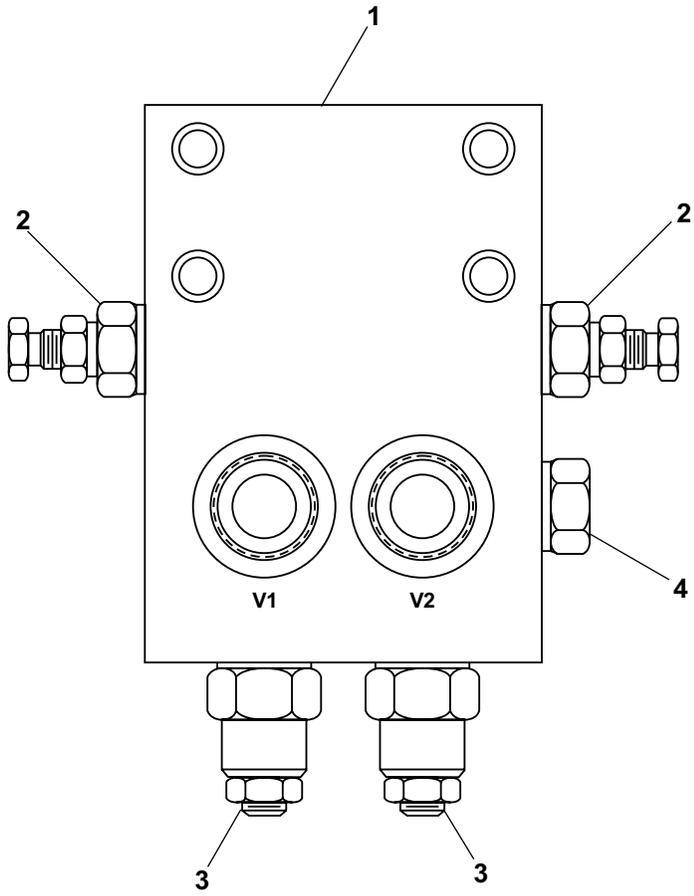

AW6010216

View thousands of Crane Specifications on FreeCraneSpecs.com
https://truckmanualshub.com

Platform rotator, Helac

item	part no	qty	description
	0070570	1	Platform rotator, Helac
	0073223	1	Seal repair kit - (kit includes items 12 through 16)
	0074709	1	Bearing kit - (wear guides only, kit includes items 7, 9 and 11)
1	8080119	2	End cap
2	8080114	1	Housing, foot mounted
3	8080115	1	Pinion
4	8080099	2	Snap ring
5	8080100	1	Relief valve
6	8080116	2	Filler plug
7	Kit item	2	Wear guides - (not sold separately)
8	8080117	2	Shaft bearing
9	Kit item	1	Wear guides - (not sold separately)
10	8080118	2	Rack
11	Kit item	2	Wear guides - (not sold separately)
12	Kit item	2	Polypak seal - (not sold separately)
13	Kit item	2	O-ring - (not sold separately)
14	Kit item	2	Back-up - (not sold separately)
15	Kit item	2	O-ring - (not sold separately)
16	Kit item	2	Polypak seal - (not sold separately)

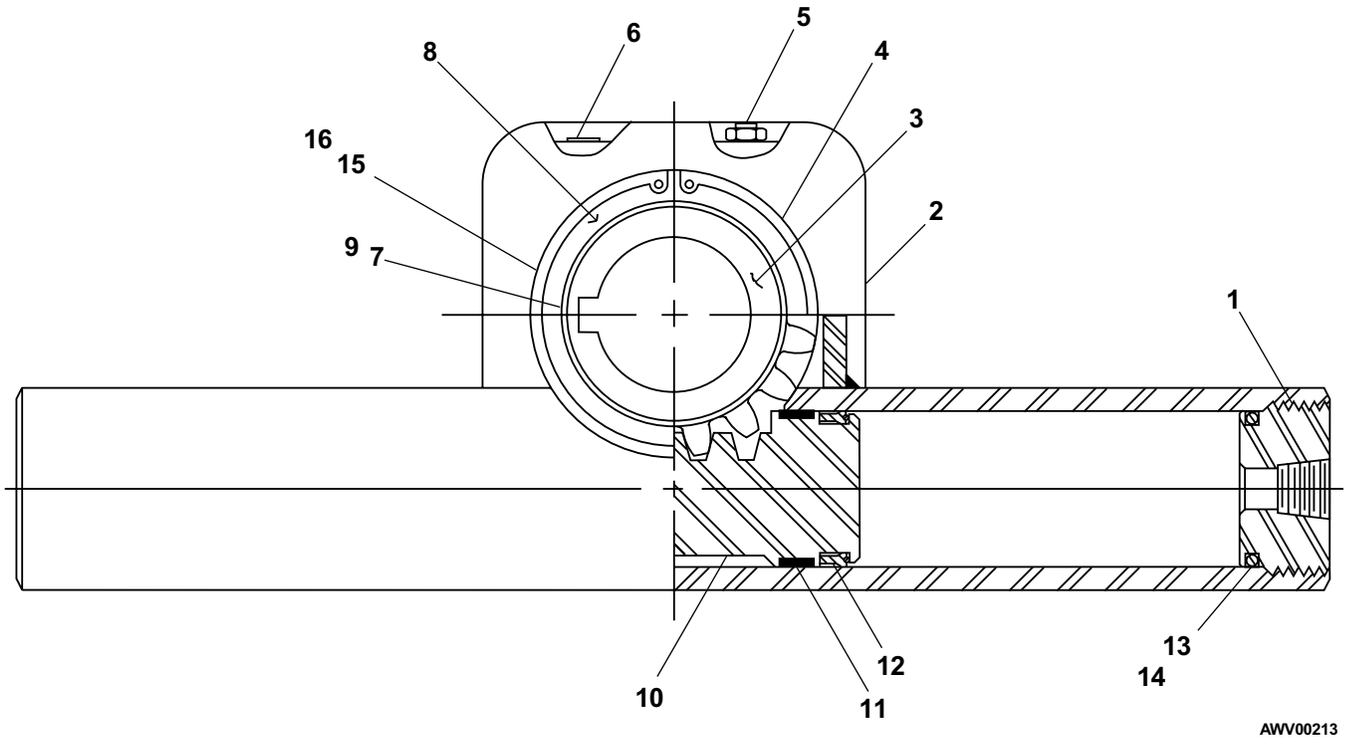

View thousands of Crane Specifications on FreeCraneSpecs.com
https://truckmanualshub.com/

Platform rotator, Parker

item	part no	qty	description
	0110771	1	Platform rotator - (includes rotator and spacer)
	0070570	1	Platform rotator, Parker
	0071275	1	Seal repair kit - (kit includes items 13 through 21)
	0140492	1	Spacer
1	8080018	2	Rack bolt
2	8080016	2	End cap
3	8080015	2	Piston
4	8080040	2	Cylinder
5	8080060	1	Rack
6	8080039	1	Housing
7	0073281	8	Tie rod
8	8080041	8	Lock nut
9	8080061	1	Pinion
10	8080038	2	Pinion bushing
11	8080062	2	Snap ring
12	8080064	1	Relief valve
13	Kit item	2	O-ring - (not sold separately)
14	Kit item	2	Parbat seal - (not sold separately)
15	Kit item	2	O-ring - (not sold separately)
16	Kit item	2	O-ring - (not sold separately)
17	Kit item	2	Parbat seal - (not sold separately)
18	Kit item	2	Polypak seal - (not sold separately)
19	Kit item	2	O-ring - (not sold separately)
20	Kit item	2	Parbat seal - (not sold separately)
21	Kit item	1	O-ring - (not sold separately)

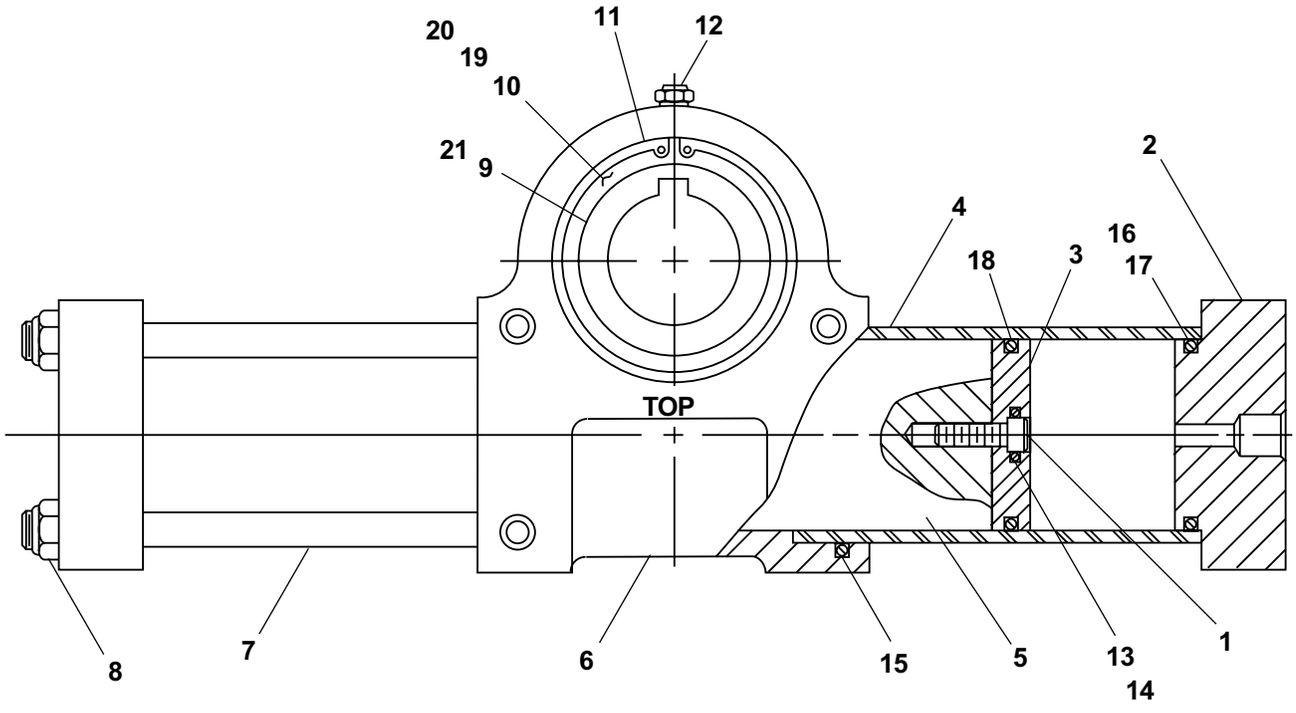

View thousands of Crane Specifications on FreeCraneSpecs.com
https://truckmanualshub.com

Pressure manifold

item	part no	qty	description
	0111879	1	Pressure manifold
1	6010579	1	Valve, pressure manifold - (includes check valve cartridge)
2	6010565	1	Check valve cartridge - (factory preset, do not reset)
	6010605	1	Seal repair kit
3	5035710	1	Straight thread 45° elbow
4	5035305	1	Straight thread 90° elbow
5	5037005	1	Swivel nut 90° elbow
6	5035303	1	Straight thread 90° elbow
7	5065708	1	Straight thread adapter
8	5036905	1	Swivel nut 45° elbow
9	5036703	1	Swivel nut run tee
10	5036505	1	Straight thread branch tee
11	5063703	1	Cap
12	5064001	1	Tube end reducer
13	5063905	1	Fitting nut
14	5035310	1	Straight thread 90° elbow

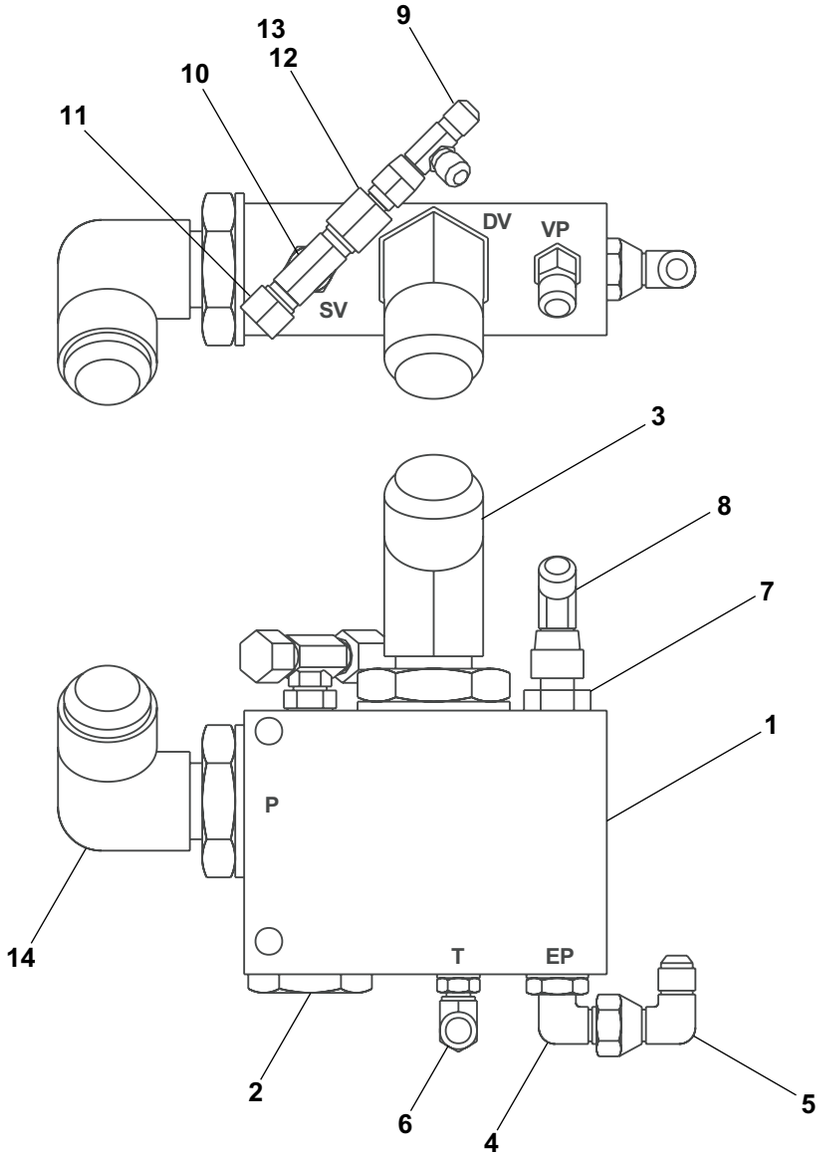

View thousands of Crane Specifications on FreeCraneSpecs.com
https://truckmanualshub.com

Pump control valve

item	part no	qty	description
	0111878	1	Pump control valve
1	6010672	1	Valve, pump control - (valve includes items 2, 3 and 4)
2	6010472	3	3-way solenoid valve
	3040473	1	Replacement solenoid coil, 10 volt DC
3	6010736	1	Flow regulator
4	6010737	1	Shuttle valve
5	5037003	2	Swivel nut 90° elbow
6	5065705	2	Straight thread adapter
7	5035318	3	Straight thread 90° elbow
8	5036703	1	Swivel nut run tee

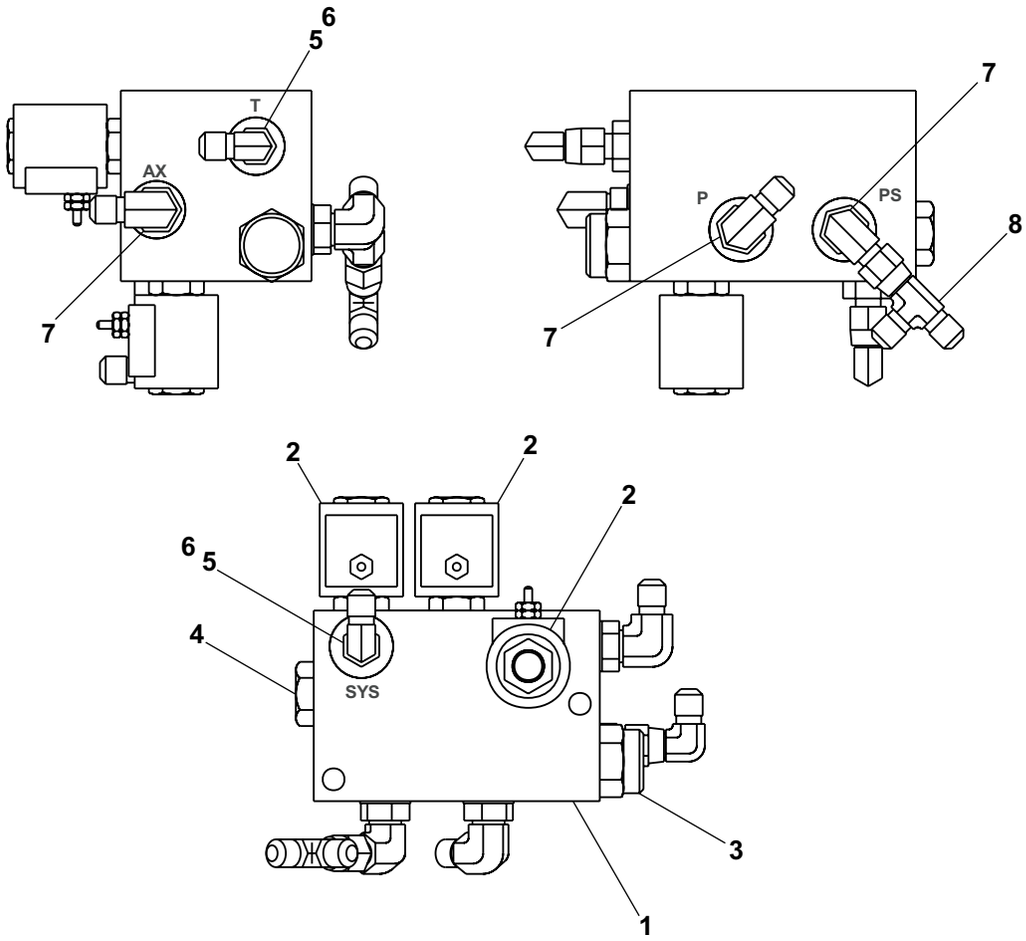

View thousands of Crane Specifications on FreeCraneSpecs.com
https://truckmanualshub.com

Steer cut-out valve, 2 wheel drive

item	part no	qty	description
	0111490	1	Steer cut-out valve, 2 wheel drive
1	6010607	1	Steer cut-out valve - (valve includes 3-way cartridge)
2	6010549	2	3-way cartridge valve
3	5035303	2	Straight thread 90° elbow
4	5065707	4	Straight thread adapter
5	5036503	1	Straight thread branch tee

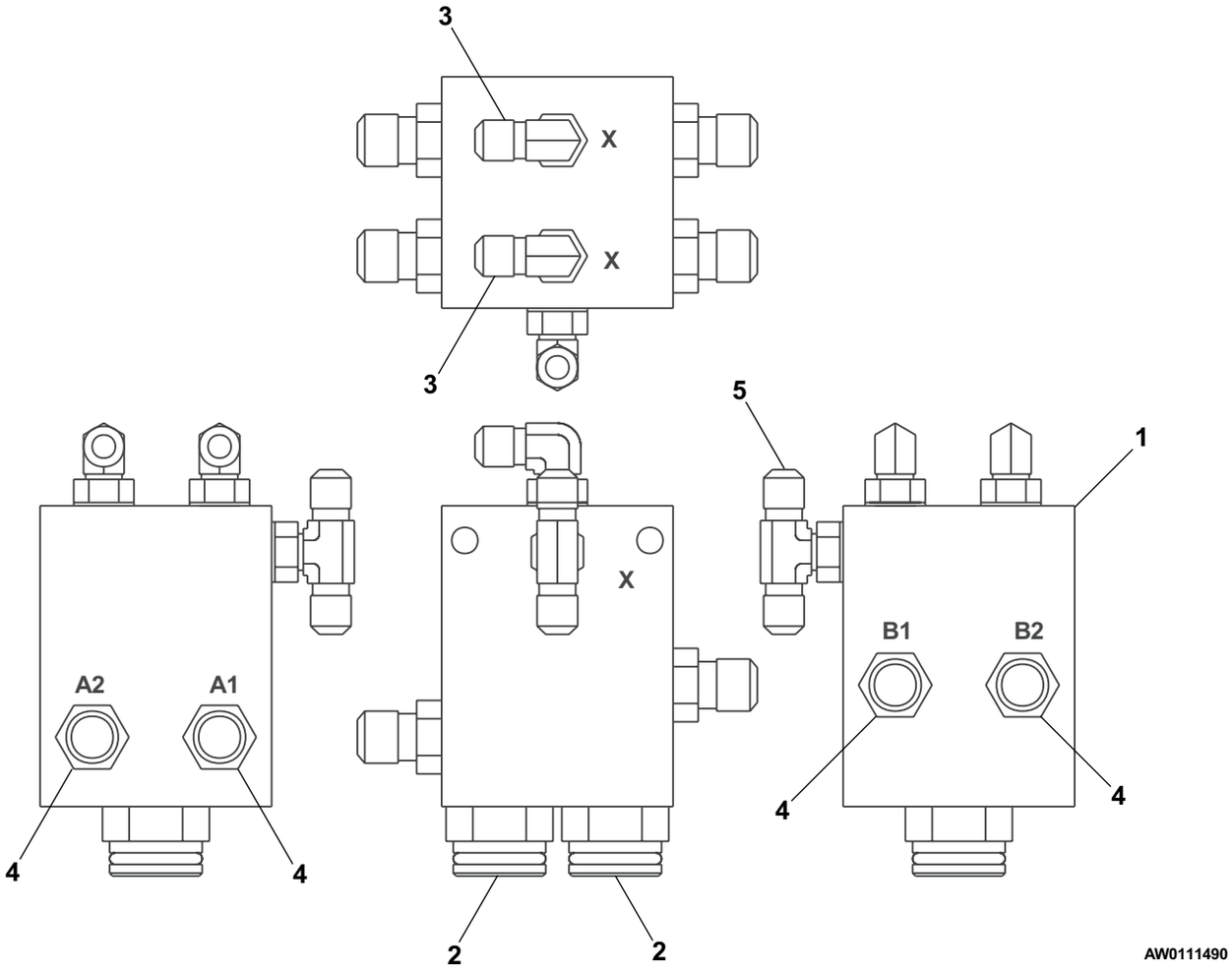

View thousands of Crane Specifications on FreeCraneSpecs.com
https://truckmanualshub.com

Steer cut-out valve, 4 wheel drive

item	part no	qty	description
	0111492	1	Steer cut-out valve, 4 wheel drive
1	6010607	1	Steer cut-out valve - (valve includes 3-way cartridge)
2	6010549	2	3-way cartridge valve
3	5065707	4	Straight thread adapter
4	5036503	3	Straight thread branch tee

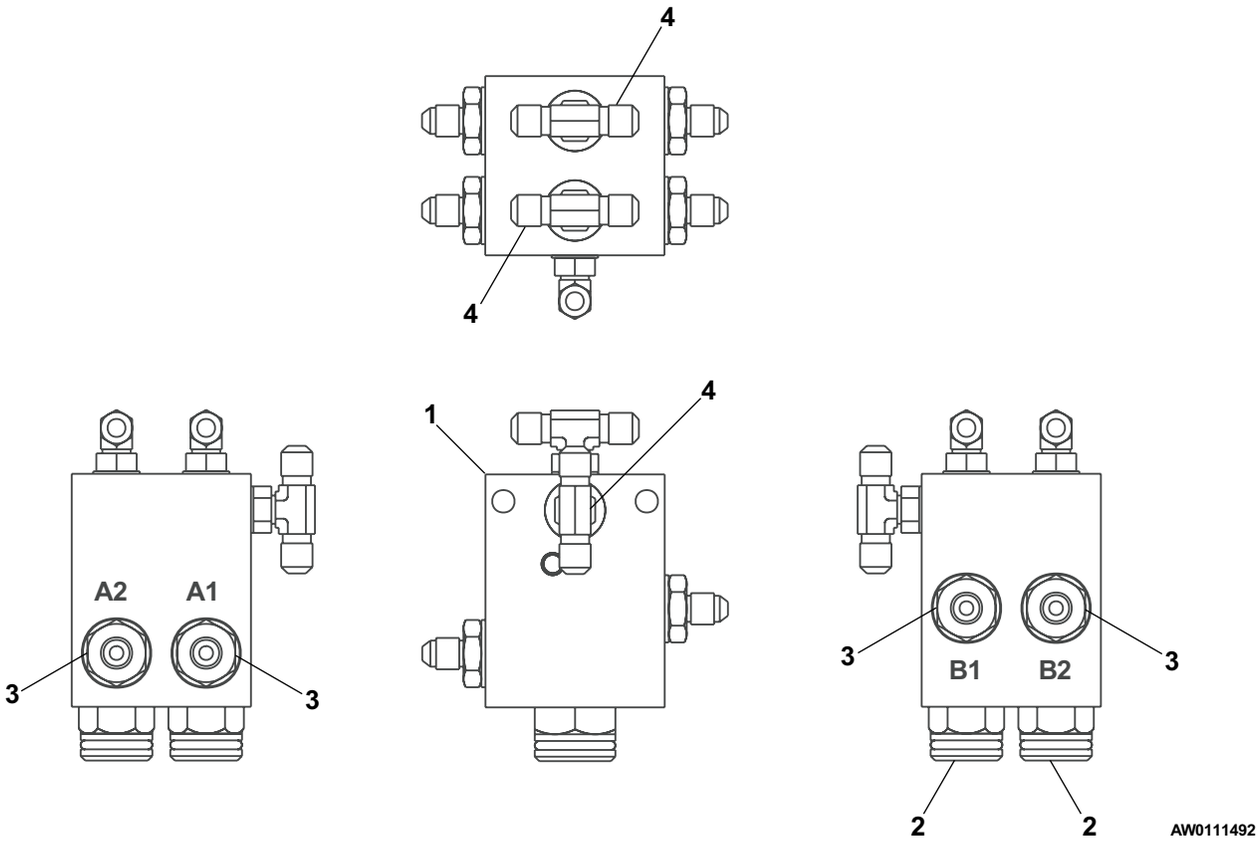

View thousands of Crane Specifications on FreeCraneSpecs.com
https://truckmanualshub.com

Shuttle valve

item	part no	qty	description
	0111290	1	Shuttle valve
1	6010083	1	Valve, shuttle
2	5065707	3	Straight thread adapter
3	7110906	1	O-ring
4	6010490	1	Check valve

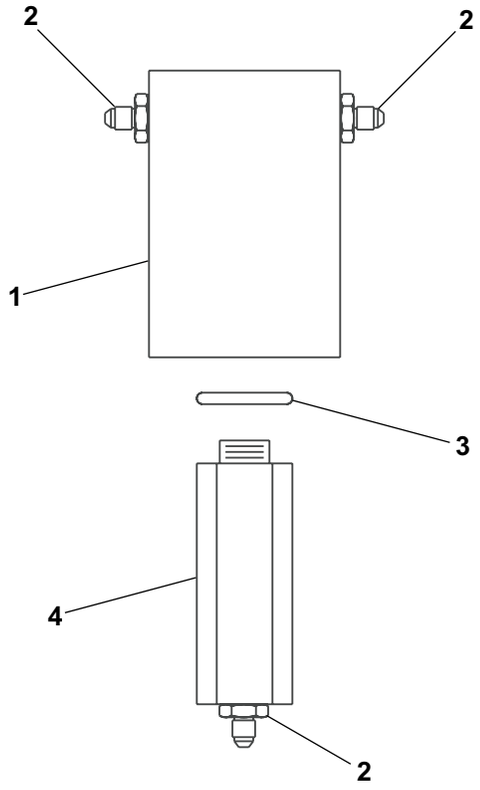

AW0111290

View thousands of Crane Specifications on FreeCraneSpecs.com
View thousands of Crane Specifications on FreeCraneSpecs.com
https://truckmanualshub.com/

View thousands of Crane Specifications on FreeCraneSpecs.com
https://truckmanualshub.com/

TB 80

OmniQuip® TEXTRON

Snorkel® INTERNATIONAL

View thousands of Crane Specifications on FreeCraneSpecs.com
https://truckmanualshub.com

Turntable electrical, Continental TM-27

item	part no	qty	description
1	0111976	1	Lower controls, Continental - (see page 3-22 for parts breakdown)
2	3050002	1	Battery, 12 volt DC - 550 CCA
3	3050008	1	Battery hold down
4	3050004	2	Battery hold down bolt
5	3020049	1	Switch, battery disconnect
6	0073089	1	Placard, battery disconnect switch
7	0073051	1	Bracket, battery disconnect switch
8	3040268	3	Insulator boot
9	3040452	2	Insulator boot
10	0110529	1	Battery wire
11	3040506	1	Solenoid, 12 volt DC
12	3040507	1	Solenoid, 12 volt DC
13	0080483	1	Jumper wire
14	0070705	1	Jumper wire
15	5093000	5	Clamp
16	0090316	1	Battery wire
17	0080484	2	Jumper wire
18	3040269	3	Insulator boot
19	0151371	1	Jumper wire
20	0071568	1	Jumper wire
21	970249	2	Capscrew 5/16-18 x 7/8 inch long hex head grade 5
22	5093010	1	Clamp
23	0111871	1	Wiring box - (see page 3-37 for parts breakdown)
24	986159	2	Washer #6 medium flat
25	970029	15	Capscrew 1/4-20 x 3/4 inch long hex head grade 5
26	986019	15	Washer 1/4 medium flat
27	987099	14	Washer 1/4 medium lock
28	970239	2	Capscrew 5/16-18 x 3/4 inch long hex head grade 5
29	986269	2	Washer 5/16 medium flat
30	987109	4	Washer 5/16 medium lock
31	0151919	1	Jumper wire
32	3040082	2	Terminal .250 tab male slip-on fully insulated 16/14 wire
33	5560004	5	Nut 1/4-20 self locking
34	3040534	1	PWM module
35	974269	2	Machine screw #6-32 x 1 inch long round head
36	987349	2	Washer #6 medium lock
37	984009	2	Nut #6-32 hex
38	5093006	3	Clamp
39	0111884	1	Wire harness, turntable
40	0071545	1	Jumper wire
41	3020040	1	Tilt alarm sensor 5°
42	3040127	1	Horn, 12 volt DC
43	970049	4	Capscrew 1/4-20 x 1 inch long hex head grade 5
44	3044162	1	Terminal 1/4 stud insulated 16/14 wire
45	3040046	5	Terminal .250 tab male slip-on fully insulated 22/18 wire
46	3044146	2	Terminal #10 stud insulated 22/18 wire
47	5093027	2	Clamp

View thousands of Crane Specifications on FreeCraneSpecs.com
https://truckmanualshub.com/

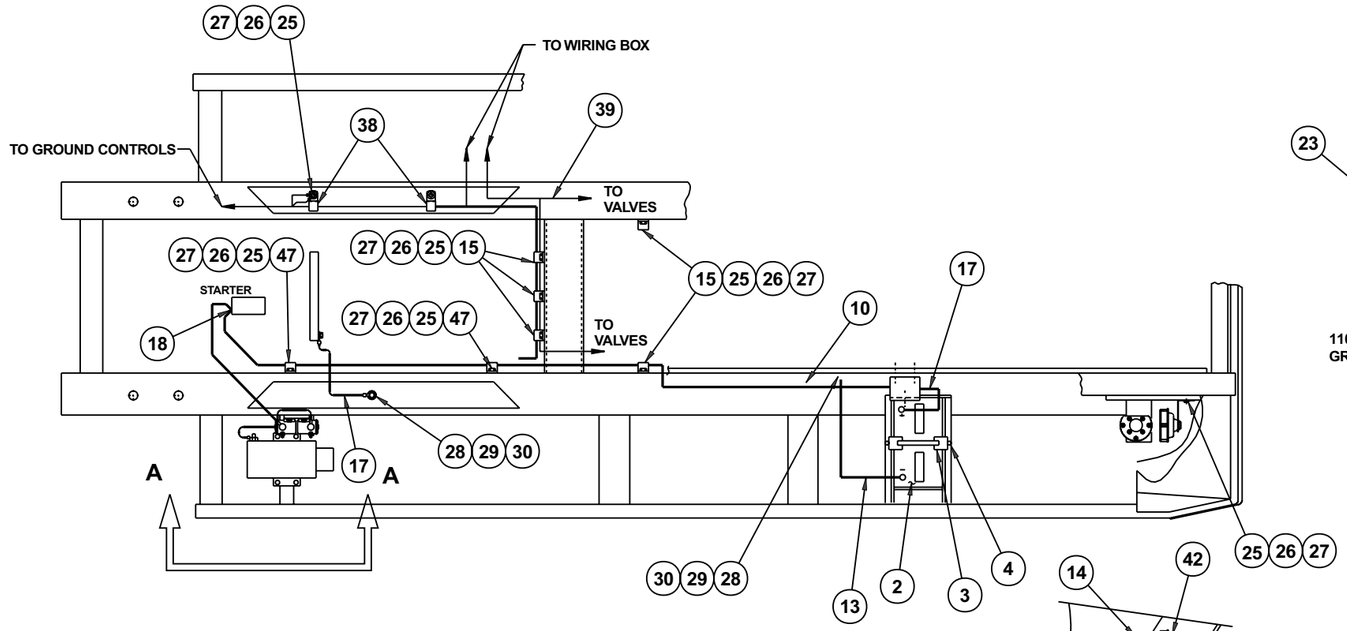

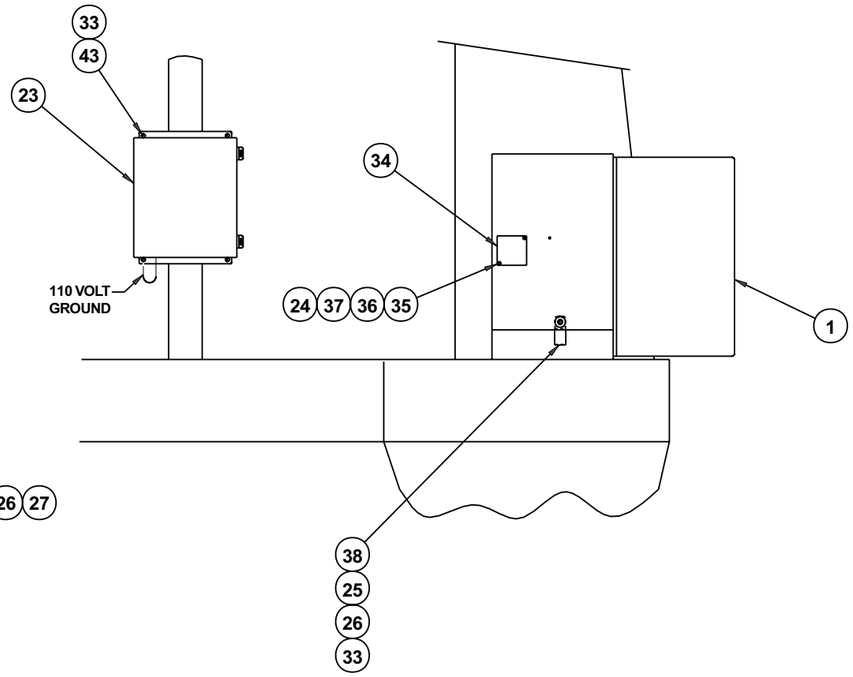

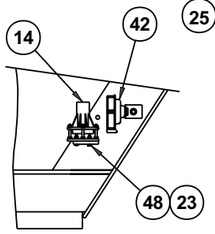

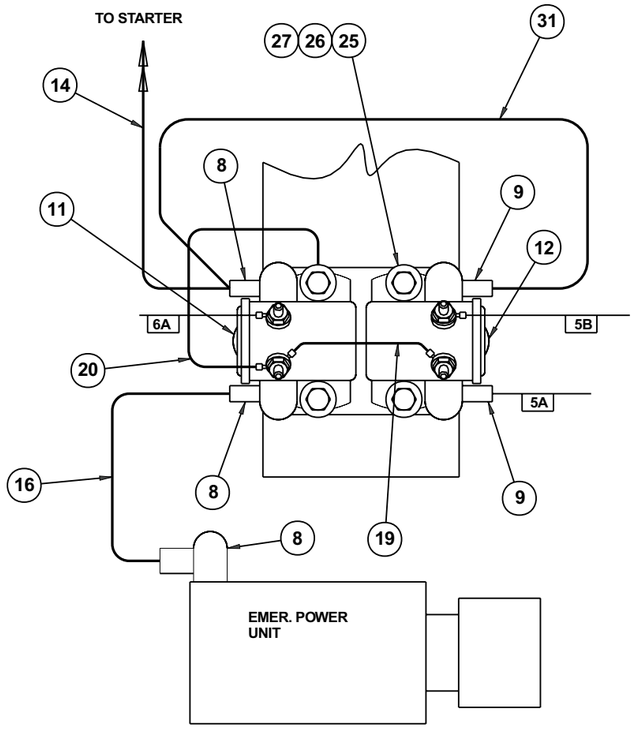

DETAIL "A"

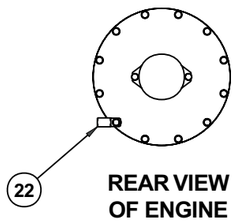

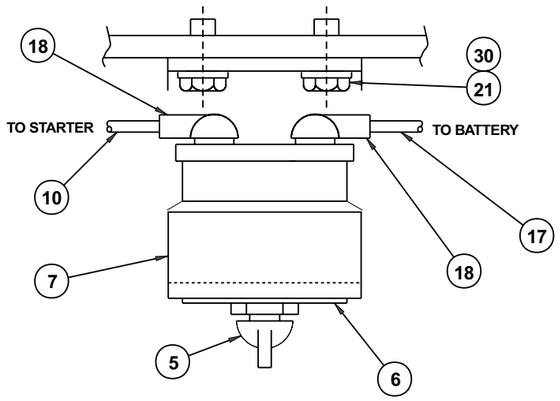

DETAIL "B"

AW0111948-1

TITLE	Turntable electrical Continental TM-27, sheet 1 Snorkel model TB 80
DWG. 0111948-1	Page 3 - 3

View thousands of Crane Specifications on FreeCraneSpecs.com
https://truckmanualshub.com/

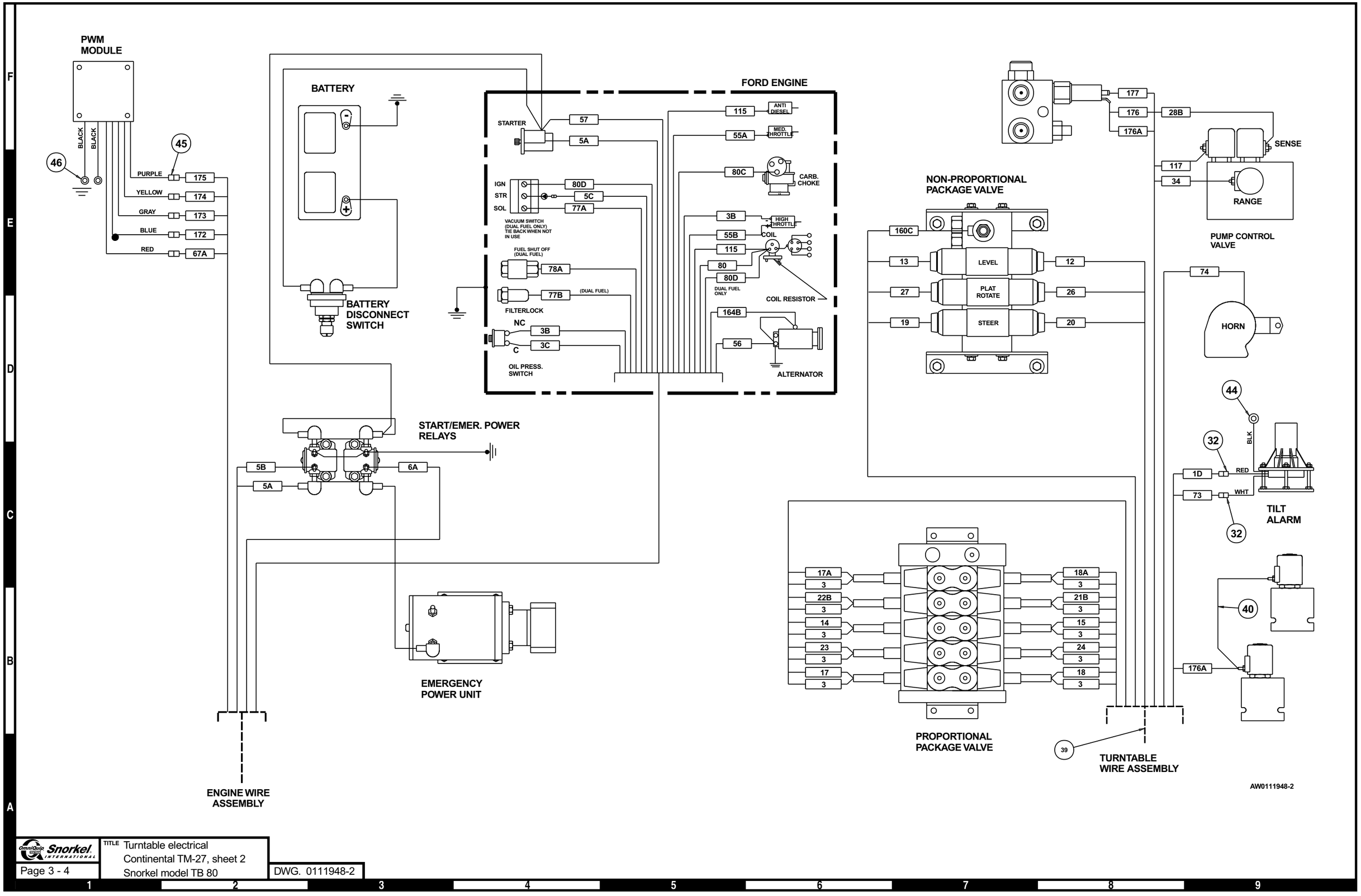

Snorkel INTERNATIONAL

TITLE Turntable electrical
Continental TM-27, sheet 2
Snorkel model TB 80

DWG. 0111948-2

View thousands of Crane Specifications on FreeCraneSpecs.com
View thousands of Crane Specifications on FreeCraneSpecs.com
https://truckmanualshub.com/

View thousands of Crane Specifications on FreeCraneSpecs.com

Turntable electrical, Cummins 4B

item	part no	qty	description
	0111955	1	Lower controls, Cummins before 8-16-99 - (see page 3-25 for parts breakdown0
1	0112169	1	Lower controls, Cummins after 8-16-99 - (see page 3-26 for parts breakdown)
2	3050002	2	Battery, 12 volt DC - 550 CCA
3	3050008	2	Battery hold down
4	3050004	4	Battery hold down bolt
5	3020049	1	Switch, battery disconnect
6	0073089	1	Placard, battery disconnect switch
7	0073051	1	Bracket, battery disconnect switch
8	3040268	5	Insulator boot
9	3072119	1	Temperature sensor - (8-16-99 to 6-19-00)
	3070037	1	Temperature sensor - (after 6-19-00)
10	0110529	1	Battery wire
11	3040506	1	Solenoid, 12 volt DC
12	0070705	1	Jumper wire
13	0080483	1	Jumper wire
14	3020040	1	Tilt alarm sensor 5°
15	5093000	2	Clamp
16	0072323	1	Jumper wire
17	0080484	2	Jumper wire
18	3040269	3	Insulator boot
19	5093027	1	Clamp
20	0071568	1	Jumper wire
21	970249	2	Capscrew 5/16-18 x 7/8 inch long hex head grade 5
22	5093008	1	Clamp
23	5560004	12	Nut 1/4-20 self locking
24	5093006	4	Clamp
25	970029	19	Capscrew 1/4-20 x 3/4 inch long hex head grade 5
26	986019	15	Washer 1/4 medium flat
27	987099	15	Washer 1/4 medium lock
28	970239	2	Capscrew 5/16-18 x 3/4 inch long hex head grade 5
29	986269	2	Washer 5/16 medium flat
30	987109	4	Washer 5/16 medium lock
31	0074578	1	Jumper wire
32	7630230	3	Sandwich mount
33	20082046	1	Actuator module - (included with engine)
34	0082029	1	Mount plate, actuator module
35	974659	2	Machine screw #10-24 x 1/2 inch long round head
36	5560034	2	Nut #10-24 self locking
37	0111871	1	Wiring box - (see page 3-37 for parts breakdown)
38	3040507	1	Solenoid, 12 volt DC
39	0111884	1	Wire harness, turntable
40	3040534	1	PWM module
41	5560700	2	Machine screw #6-32 x 1 inch long truss head
42	987349	4	Washer #6 medium lock
43	986159	4	Washer #6 medium flat
44	984009	4	Nut #6-32 hex
45	3044146	2	Terminal #10 stud insulated 22/18 wire
46	3040046	5	Terminal .250 tab male slip-on fully insulated 22/18 wire
47	3040127	1	Horn, 12 volt DC
48	970049	4	Capscrew 1/4-20 x 1 inch long hex head grade 5
49	0151919	1	Jumper wire
50	0151371	1	Jumper wire
51	0071545	1	Jumper wire
52	3040082	2	Terminal .250 tab male slip-on fully insulated 16/14 wire
53	3044162	1	Terminal 1/4 stud insulated 16/14 wire
54	5093010	1	Clamp
55	3030117	1	EPS anti-restart module - (8-16-99 to 6-19-00)
56	974239	2	Machine screw #6-32 x 1/2 inch long round head

View thousands of Crane Specifications on FreeCraneSpecs.com
https://truckmanualshub.com/

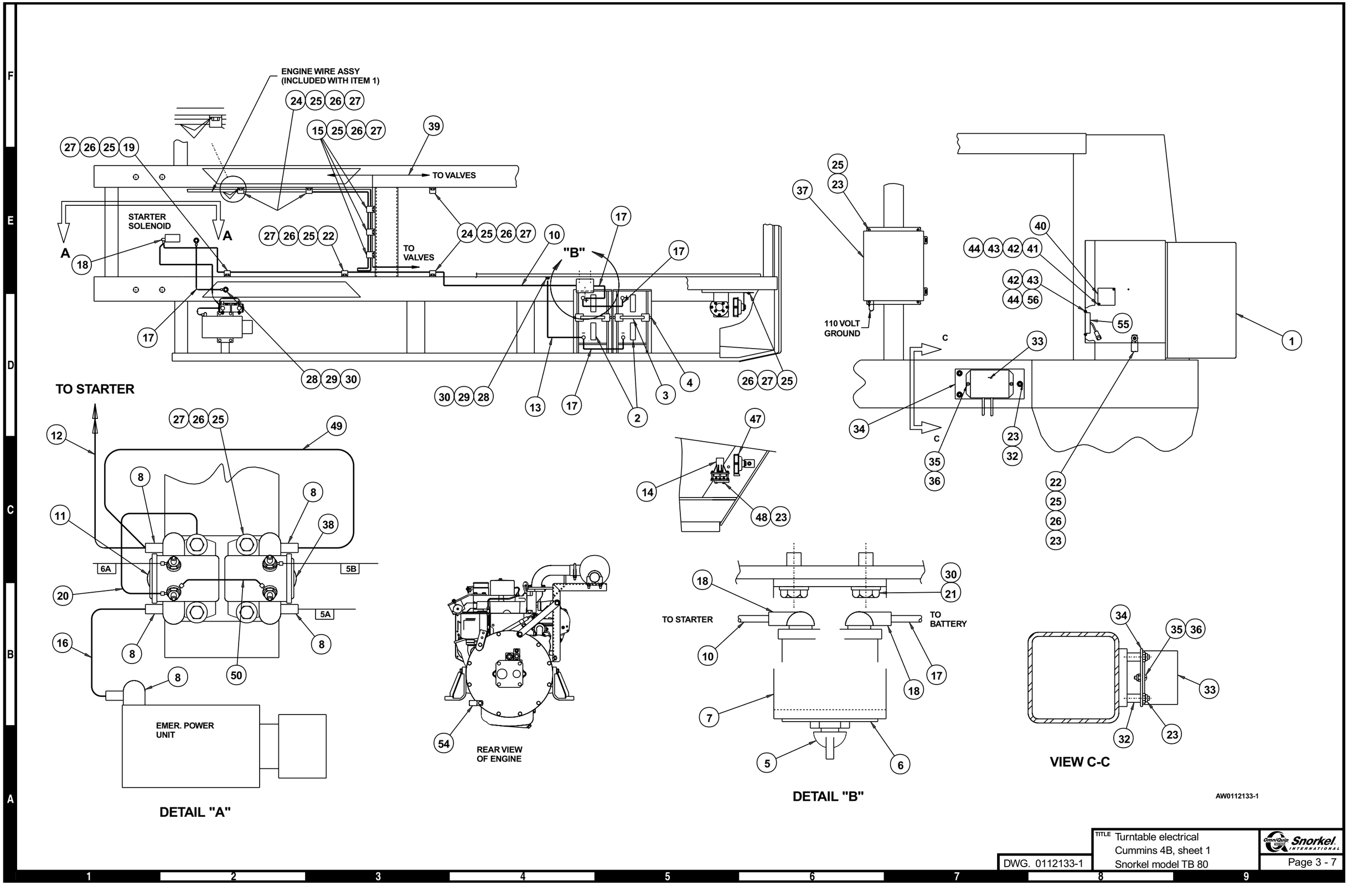

DWG. 0112133-1

TITLE Turntable electrical
Cummins 4B, sheet 1
Snorkel model TB 80

Snorkel INTERNATIONAL

View thousands of Crane Specifications on FreeCraneSpecs.com
https://truckmanualshub.com/

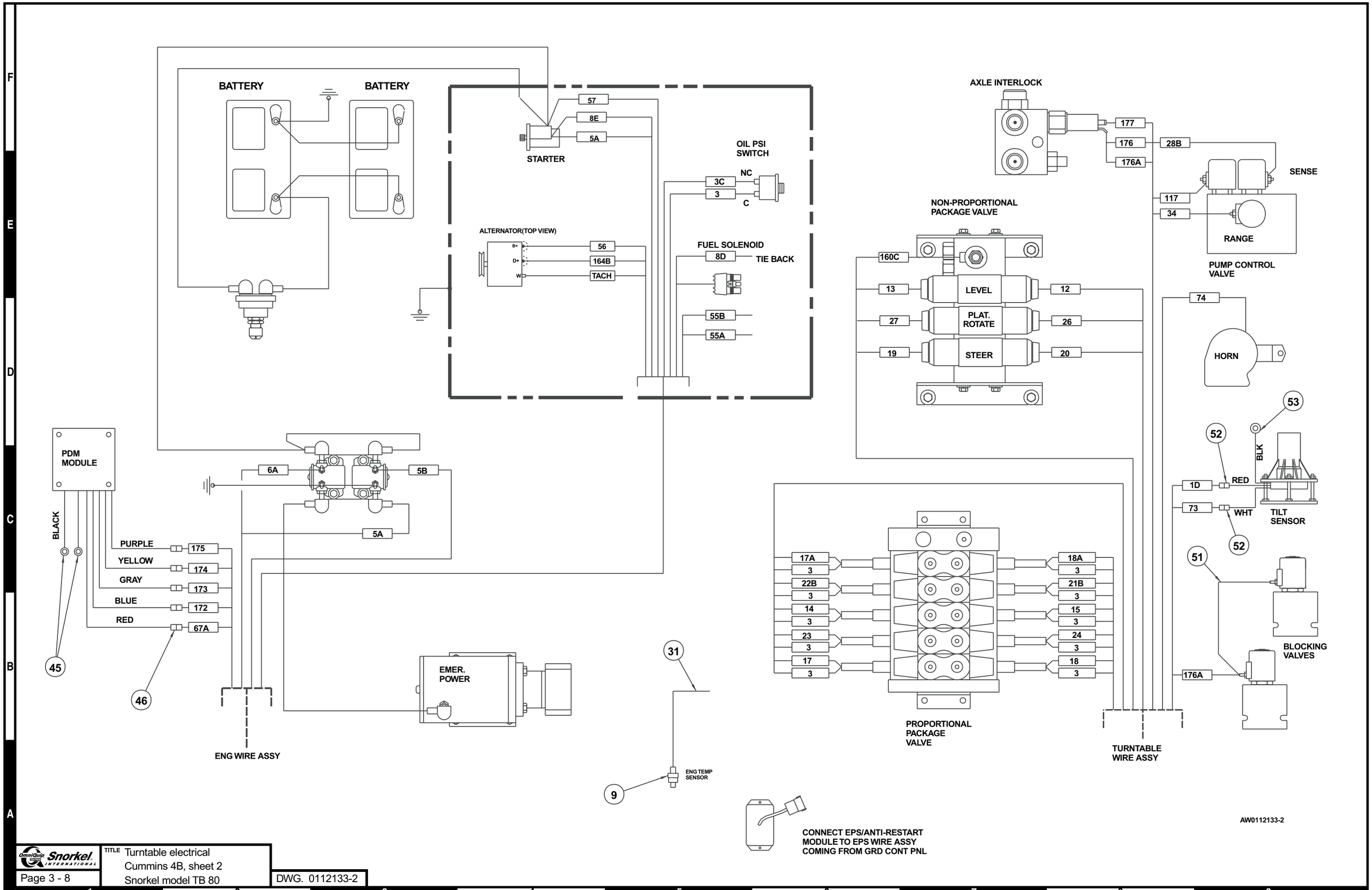

Snorkel INTERNATIONAL

TITLE Turntable electrical
Cummins 4B, sheet 2
Snorkel model TB 80

DWG. 0112133-2

View thousands of Crane Specifications on FreeCraneSpecs.com
View thousands of Crane Specifications on FreeCraneSpecs.com
https://truckmanualshub.com/

View thousands of Crane Specifications on FreeCraneSpecs.com
https://truckmanualshub.com/

Turntable electrical, Deutz F4L-1011F

item	part no	qty	description
1	0111949	1	Lower controls, Deutz before 8-16-99 - (see page 3-29 for parts breakdown)
	0112166	1	Lower controls, Deutz after 8-16-99 - (see page 3-30 for parts breakdown)
2	3050002	2	Battery, 12 volt DC - 550 CCA
3	3050008	2	Battery hold down
4	3050004	4	Battery hold down bolt
5	3020049	1	Switch, battery disconnect
6	0073089	1	Placard, battery disconnect switch
7	0073051	1	Bracket, battery disconnect switch
8	3040268	5	Insulator boot
9	3072118	1	Temperature sensor - (8-16-99 to 6-19-00)
	3070039	1	Temperature sensor - (after 6-19-00)
10	0110529	1	Battery wire
11	3040506	1	Solenoid, 12 volt DC
12	0151160	1	Jumper wire
13	0080483	1	Jumper wire
14	3020040	1	Tilt alarm sensor 5°
15	5093000	5	Clamp
16	0072323	1	Jumper wire
17	0080484	4	Jumper wire
18	3040269	3	Insulator boot
19	5093027	1	Clamp
20	0071568	1	Jumper wire
21	970249	2	Capscrew 5/16-18 x 7/8 inch long hex head grade 5
22	5093008	2	Clamp
23	5560004	9	Nut 1/4-20 self locking
24	5093006	4	Clamp
25	970029	20	Capscrew 1/4-20 x 3/4 inch long hex head grade 5
26	986019	17	Washer 1/4 medium flat
27	987099	16	Washer 1/4 medium lock
28	970239	2	Capscrew 5/16-18 x 3/4 inch long hex head grade 5
29	986269	2	Washer 5/16 medium flat
30	987109	4	Washer 5/16 medium lock
31	0074579	1	Wire harness, alternator
32	7630230	3	Sandwich mount - (before 3-20-00)
33	20082046	1	Actuator module - (included with engine)
34	0082029	1	Mount plate, actuator module - (before 3-20-00)
35	974659	2	Machine screw #10-24 x 1/2 inch long round head
36	5560034	2	Nut #10-24 self locking
37	0111871	1	Wiring box - (see page 3-37 for parts breakdown)
38	3040507	1	Solenoid, 12 volt DC
39	0111884	1	Wire harness, turntable
40	3040534	1	PWM module
41	5560700	2	Machine screw #6-32 x 1 inch long truss head
42	987349	4	Washer #6 medium lock
43	986159	4	Washer #6 medium flat
44	984009	4	Nut #6-32 hex
45	3044146	2	Terminal #10 stud insulated 22/18 wire
46	3040046	5	Terminal .250 tab male slip-on fully insulated 22/18 wire
47	3040127	1	Horn, 12 volt DC
48	970049	4	Capscrew 1/4-20 x 1 inch long hex head grade 5
49	0151919	1	Jumper wire
50	0151371	1	Jumper wire
51	0071545	1	Jumper wire
52	3040082	2	Terminal .250 tab male slip-on fully insulated 16/14 wire
53	3044162	1	Terminal 1/4 stud insulated 16/14 wire
54	5093010	1	Clamp
55	3030117	1	EPS anti-restart module - (8-16-99 to 6-19-00)
	3030122	1	EPS anti-restart module - (after 6-19-00)
56	974239	2	Machine screw #6-32 x 1/2 inch long round head

View thousands of Crane Specifications on FreeCraneSpecs.com
https://truckmanualshub.com/

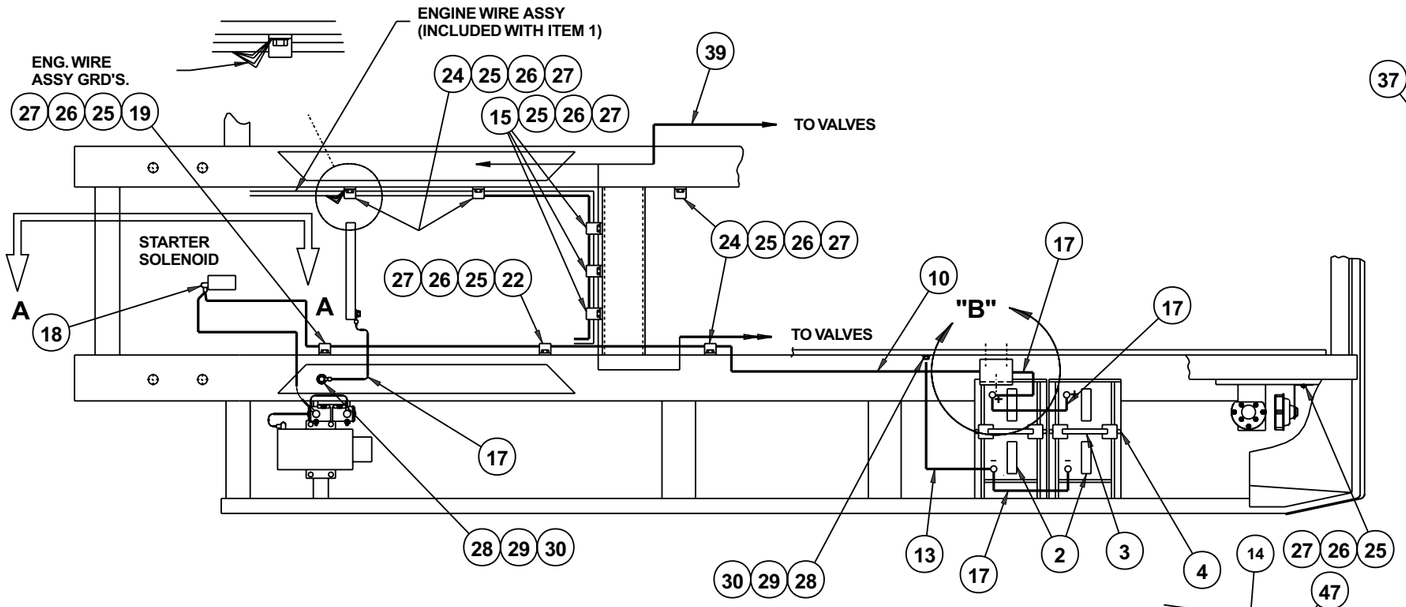

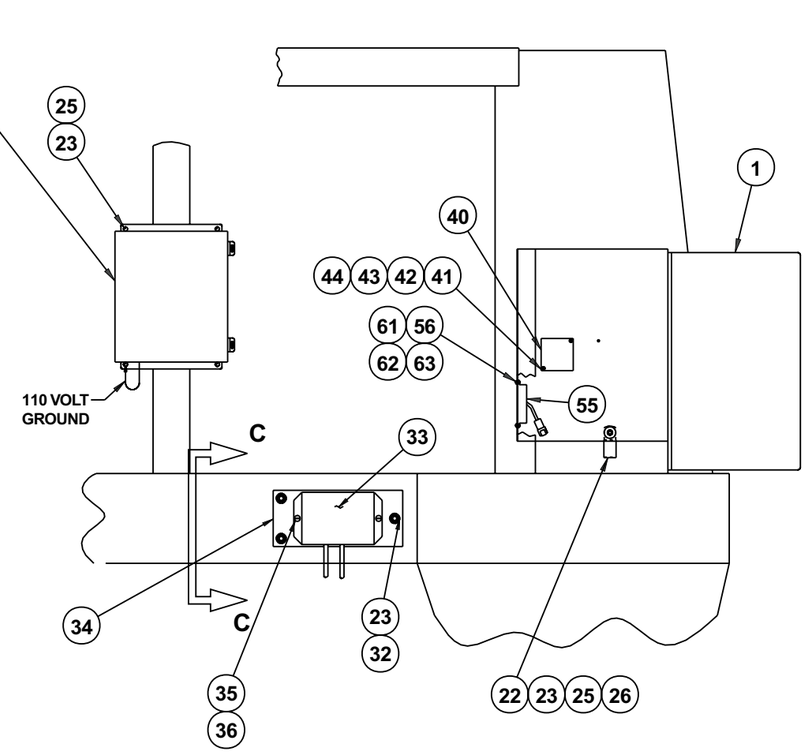

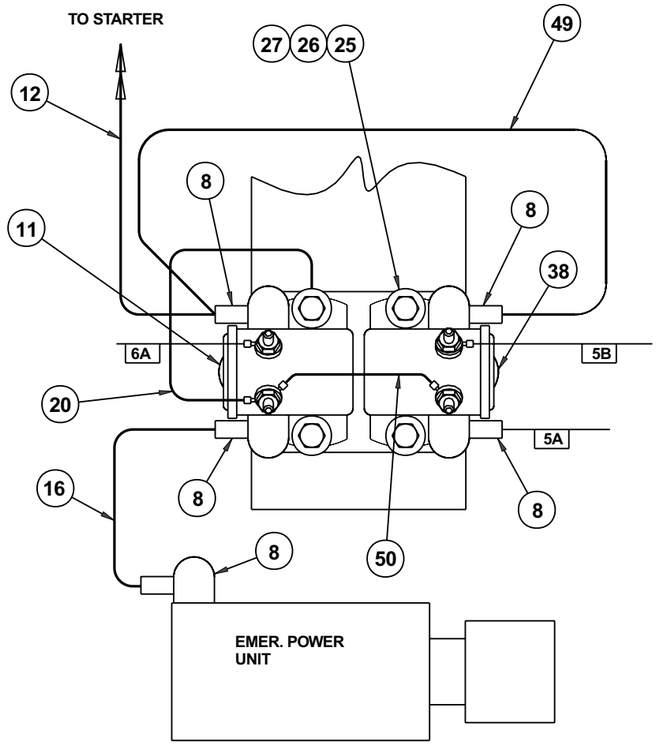

DETAIL "A"

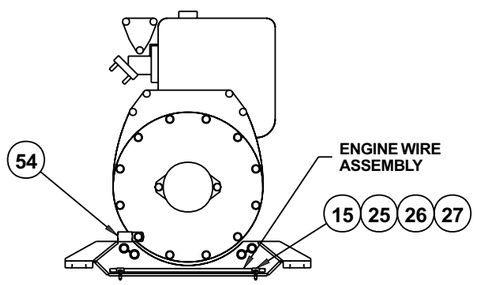

REAR VIEW OF ENGINE

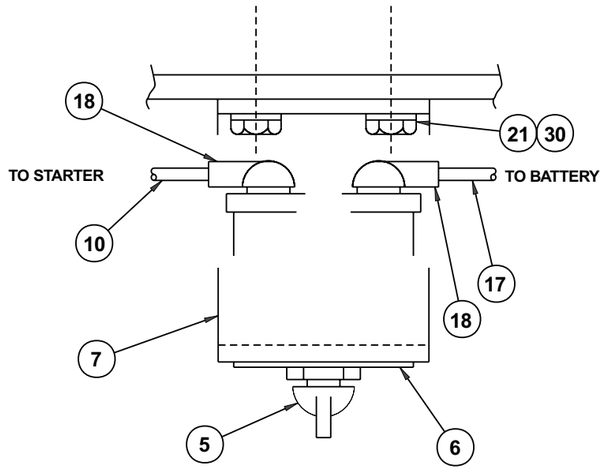

DETAIL "B"

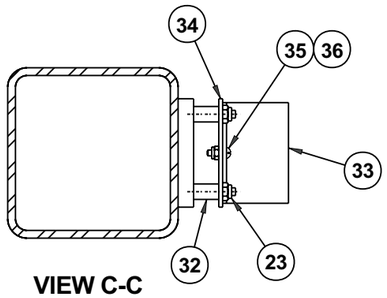

VIEW C-C

AW0111946-1

DWG. 0111946-1	TITLE Turntable electrical Deutz F4L-1011F, sheet 1 Snorkel model TB 80

OmniQuip Snorkel INTERNATIONAL

View thousands of Crane Specifications on FreeCraneSpecs.com
https://truckmanualshub.com/

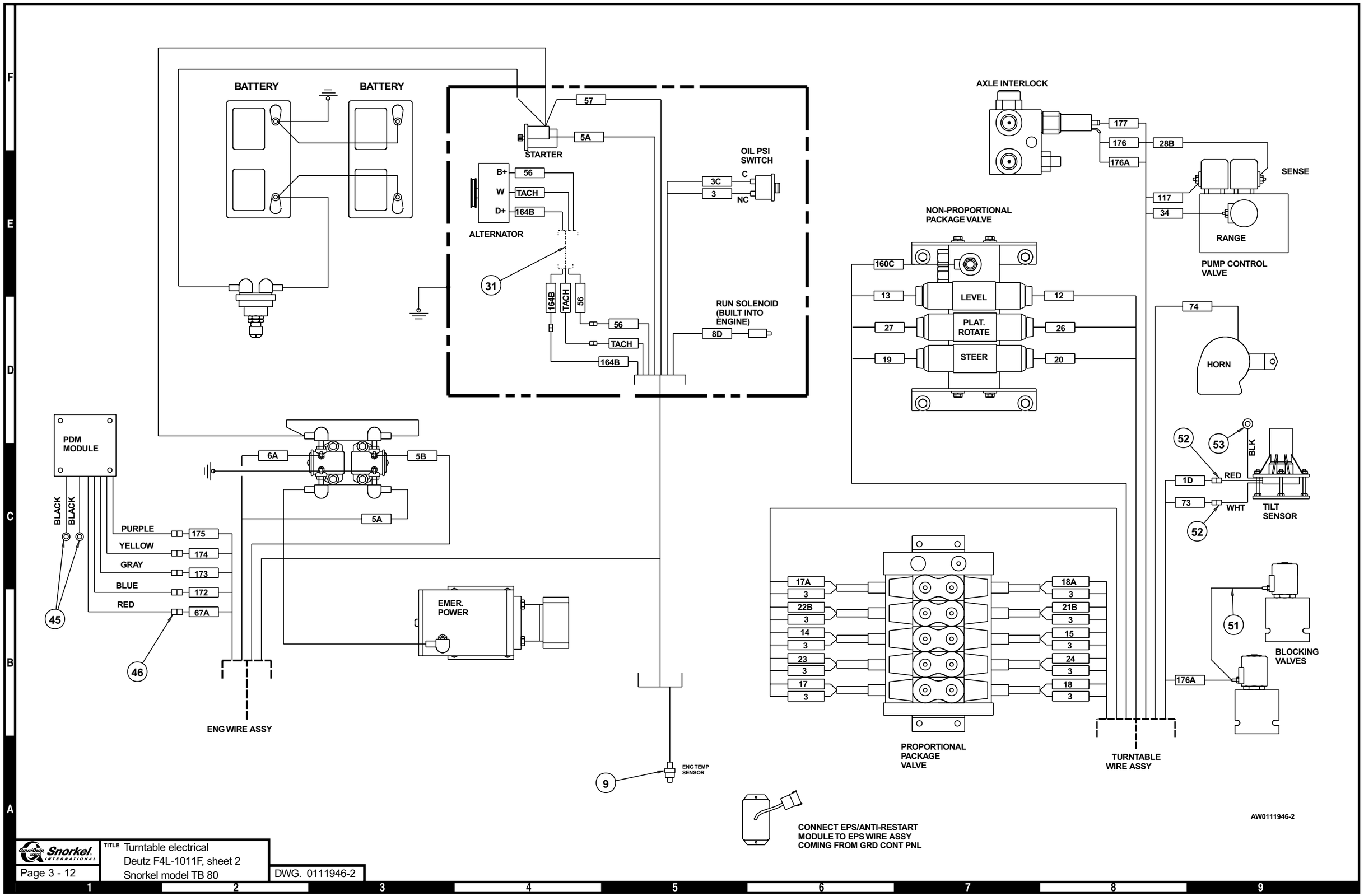

View thousands of Crane Specifications on FreeCraneSpecs.com
View thousands of Crane Specifications on FreeCraneSpecs.com
https://truckmanualshub.com/

View thousands of Crane Specifications on FreeCraneSpecs.com
https://truckmanualshub.com/

Turntable electrical, Ford LRG-423

item	part no	qty	description
1	0111885	1	Lower controls, Ford LRG-423 - (see page 3-33 for parts breakdown)
2	3050002	2	Battery, 12 volt DC - 550 CCA
3	3050008	2	Battery hold down
4	3050004	4	Battery hold down bolt
5	3020049	1	Switch, battery disconnect
6	0073089	1	Placard, battery disconnect switch
7	0073051	1	Bracket, battery disconnect switch
8	3040268	4	Insulator boot
9	3040452	2	Insulator boot
10	0110529	1	Battery wire
11	3040506	1	Solenoid, 12 volt DC
12	3040507	1	Solenoid, 12 volt DC
13	0080483	1	Jumper wire
14	0070705	1	Jumper wire
15	5093004	5	Clamp
16	0090316	1	Battery wire
17	0080484	2	Jumper wire
18	3040270	1	Insulator boot
19	0151371	1	Jumper wire
20	0071568	1	Jumper wire
21	970469	3	Capscrew 3/8-16 x 1 inch long hex head grade 5
22	986299	1	Washer 3/8 medium flat
23	987119	1	Washer 3/8 medium lock
24	5560033	2	Nut 3/8-16 self locking
25	970029	9	Capscrew 1/4-20 x 3/4 inch long hex head grade 5
26	986019	12	Washer 1/4 medium flat
27	987099	5	Washer 1/4 medium lock
28	970449	1	Capscrew 3/8-16 x 3/4 inch long hex head grade 5
29	986269	1	Washer 5/16 medium flat
30	987109	1	Washer 5/16 medium lock
31	0151919	1	Jumper wire
32	3040082	2	Terminal .250 tab male slip-on fully insulated 16/14 wire
33	5560004	14	Nut 1/4-20 self locking
34	3040534	1	PWM module
35	5560700	2	Machine screw #6-32 x 1 inch long truss head
36	987349	2	Washer #6 medium lock
37	984009	2	Nut #6-32 hex
38	5093008	1	Clamp
39	0111884	1	Wire harness, turntable
40	0071545	1	Jumper wire
41	3020040	1	Tilt alarm sensor 5°
42	3040127	1	Horn, 12 volt DC
43	970049	10	Capscrew 1/4-20 x 1 inch long hex head grade 5
44	3044162	1	Terminal 1/4 stud insulated 16/14 wire
45	3040046	6	Terminal .250 tab male slip-on fully insulated 22/18 wire
46	3044146	1	Terminal #10 stud insulated 22/18 wire
47	0111894	1	Mount plate, Barber-Coleman governor
48	7630319	1	Barber-Coleman governor
49	5560649	2	Machine screw #10-24 x 1 inch long truss head
50	5560034	2	Nut #10-24 self locking
51	986159	2	Washer #6 medium flat
52	0111871	1	Wiring box - (see page 3-37 for parts breakdown)
53	5093006	1	Clamp
54	0081558	1	Jumper wire

View thousands of Crane Specifications on FreeCraneSpecs.com
https://truckmanualshub.com/

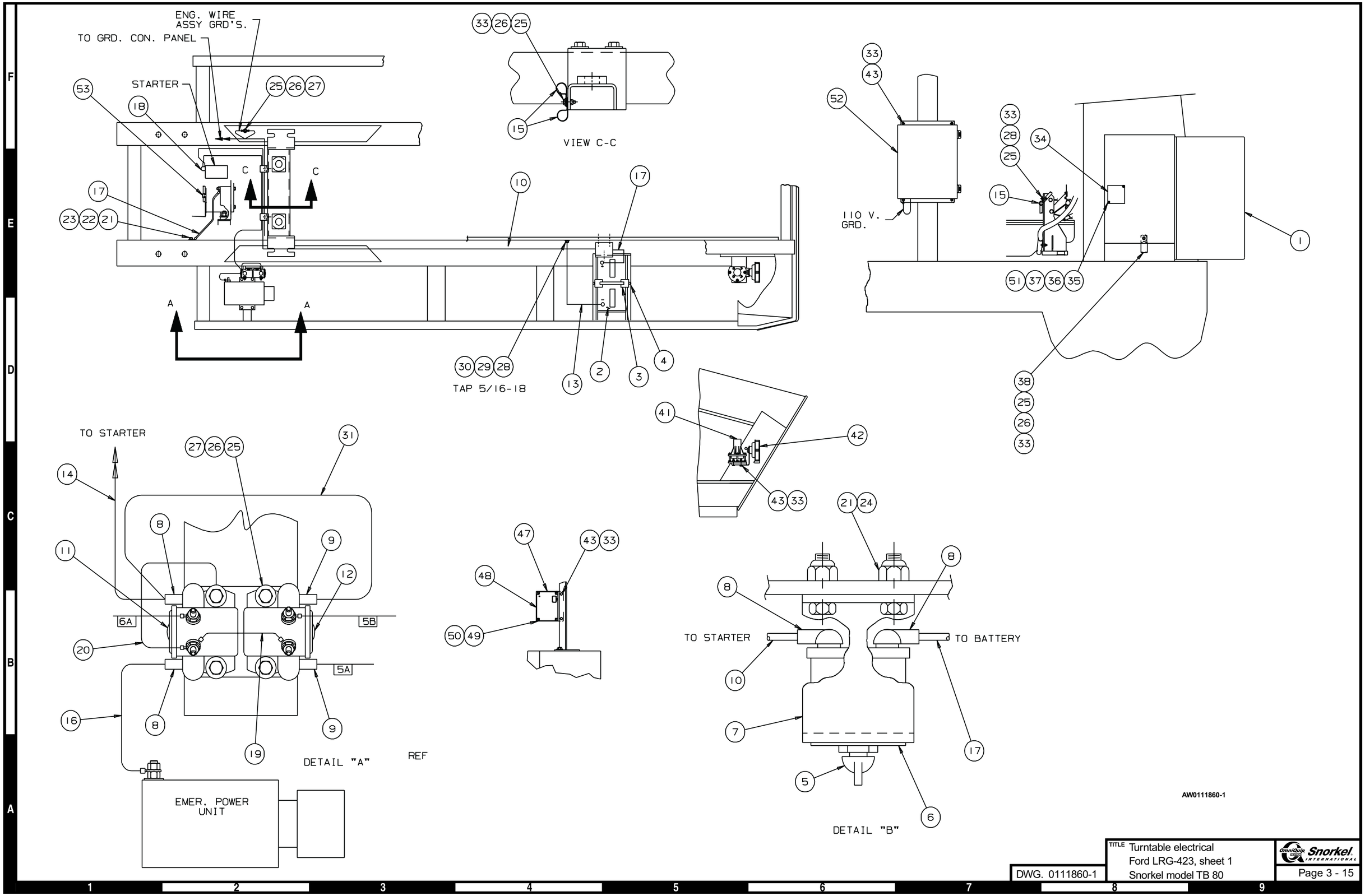

DWG. 0111860-1

TITLE Turntable electrical
Ford LRG-423, sheet 1
Snorkel model TB 80

View thousands of Crane Specifications on FreeCraneSpecs.com
https://truckmanualshub.com/

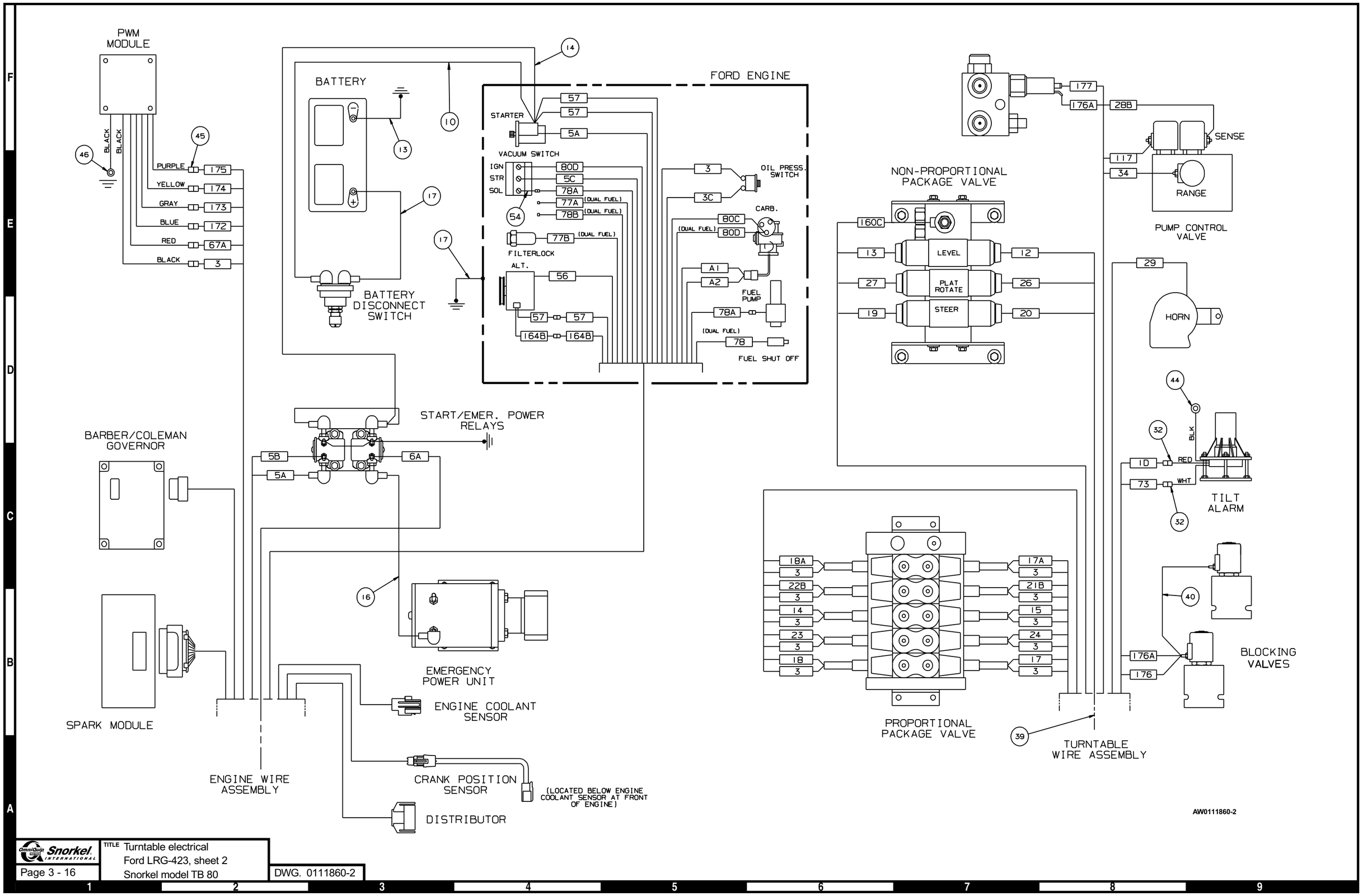

Snorkel INTERNATIONAL

TITLE Turntable electrical
Ford LRG-423, sheet 2
Snorkel model TB 80

DWG. 0111860-2

View thousands of Crane Specifications on FreeCraneSpecs.com
View thousands of Crane Specifications on FreeCraneSpecs.com
https://truckmanualshub.com/

View thousands of Crane Specifications on FreeCraneSpecs.com

Turntable electrical, Ford LRG-425

item	part no	qty	description
1	0112099	1	Lower controls, Ford LRG-425 - (see page 3-34 for parts breakdown)
2	3050002	2	Battery, 12 volt DC - 550 CCA
3	3050008	2	Battery hold down
4	3050004	4	Battery hold down bolt
5	3020049	1	Switch, battery disconnect
6	0073089	1	Placard, battery disconnect switch
7	0073051	1	Bracket, battery disconnect switch
8	3040268	3	Insulator boot
9	3040047	1	Terminal .250 tab female slip-on fully insulated 22/18 wire
10	0110529	1	Battery wire
11	3040506	1	Solenoid, 12 volt DC
12	0071563	1	Jumper wire
13	0080483	1	Jumper wire
14	0070705	1	Jumper wire
15	5093004	15	Clamp
16	0072323	1	Jumper wire
17	0080484	2	Jumper wire
18	3040269	2	Insulator boot
19	0151371	1	Jumper wire
20	0071568	1	Jumper wire
21	970469	1	Capscrew 3/8-16 x 1 inch long hex head grade 5
22	986299	1	Washer 3/8 medium flat
23	987119	1	Washer 3/8 medium lock
24	970249	2	Capscrew 5/16-18 x 7/8 inch long hex head grade 5
25	970029	8	Capscrew 1/4-20 x 3/4 inch long hex head grade 5
26	986019	9	Washer 1/4 medium flat
27	987099	6	Washer 1/4 medium lock
28	970449	2	Capscrew 3/8-16 x 3/4 inch long hex head grade 5
29	986269	1	Washer 5/16 medium flat
30	987109	3	Washer 5/16 medium lock
31	0151919	1	Jumper wire
32	3040082	2	Terminal .250 tab male slip-on fully insulated 16/14 wire
33	5560004	10	Nut 1/4-20 self locking
34	3040534	1	PWM module
35	5560700	2	Machine screw #6-32 x 1 inch long truss head
36	987349	2	Washer #6 medium lock
37	984009	2	Nut #6-32 hex
38	5093008	1	Clamp
39	0111884	1	Wire harness, turntable
40	0071545	1	Jumper wire
41	3020040	1	Tilt alarm sensor 5°
42	3040127	1	Horn, 12 volt DC
43	970049	10	Capscrew 1/4-20 x 1 inch long hex head grade 5
44	3044162	1	Terminal 1/4 stud insulated 16/14 wire
45	3040046	6	Terminal .250 tab male slip-on fully insulated 22/18 wire
46	3044146	1	Terminal #10 stud insulated 22/18 wire
47	0111894	1	Mount plate, Barber-Coleman governor - (before 1-11-99)
48		1	Governor controller - (included with engine, not sold separately)
49	5560649	2	Machine screw #10-24 x 1 inch long truss head
50	5560034	2	Nut #10-24 self locking
51	986159	2	Washer #6 medium flat
52	0112094	1	Wiring box, Ford LRG-425 - (see page 3-41 for parts breakdown)
53	5093006	1	Clamp
54	0081558	1	Jumper wire
55	5093010	1	Clamp

View thousands of Crane Specifications on FreeCraneSpecs.com
https://truckmanualshub.com/

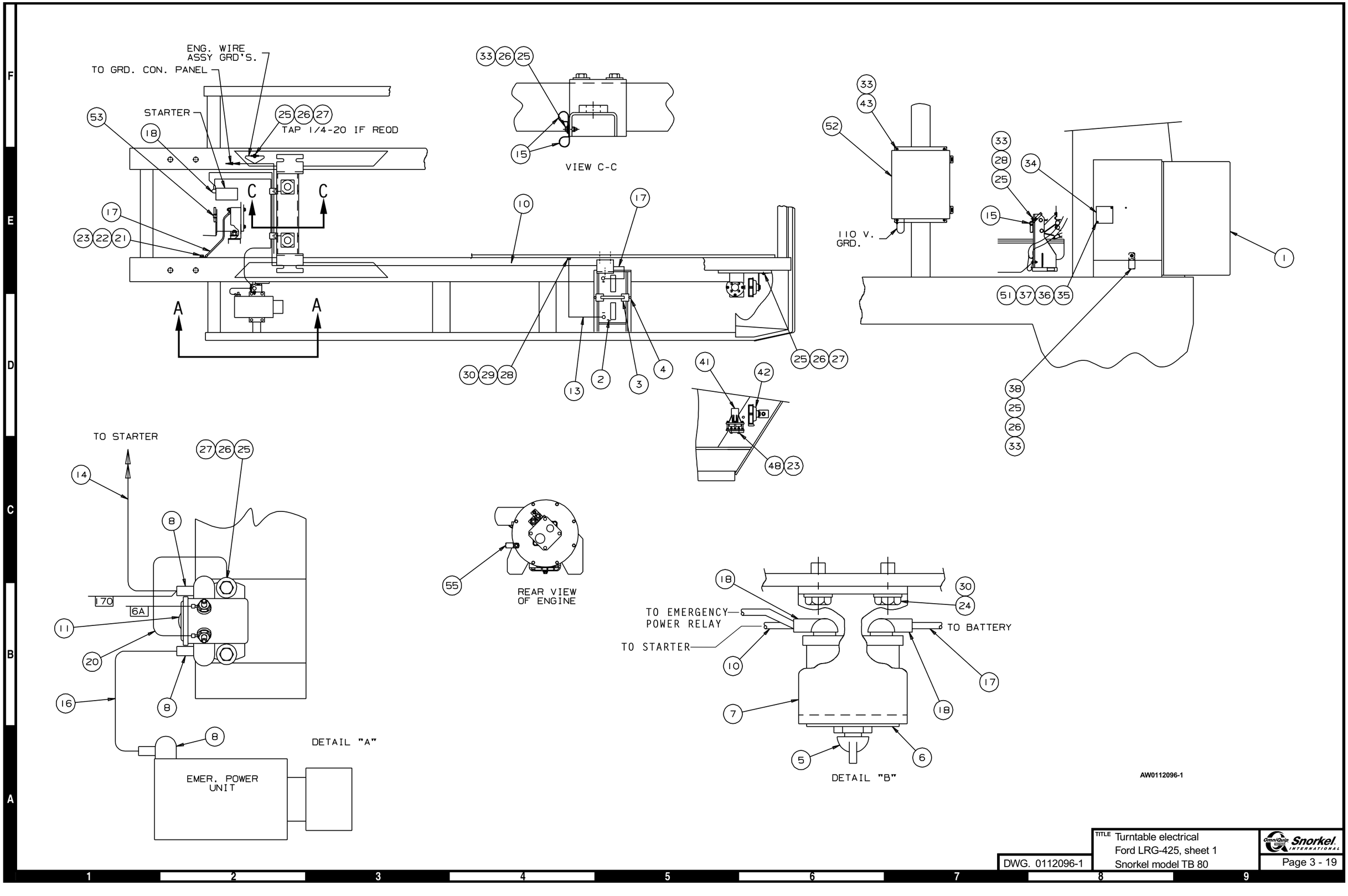

View thousands of Crane Specifications on FreeCraneSpecs.com
https://truckmanualshub.com/

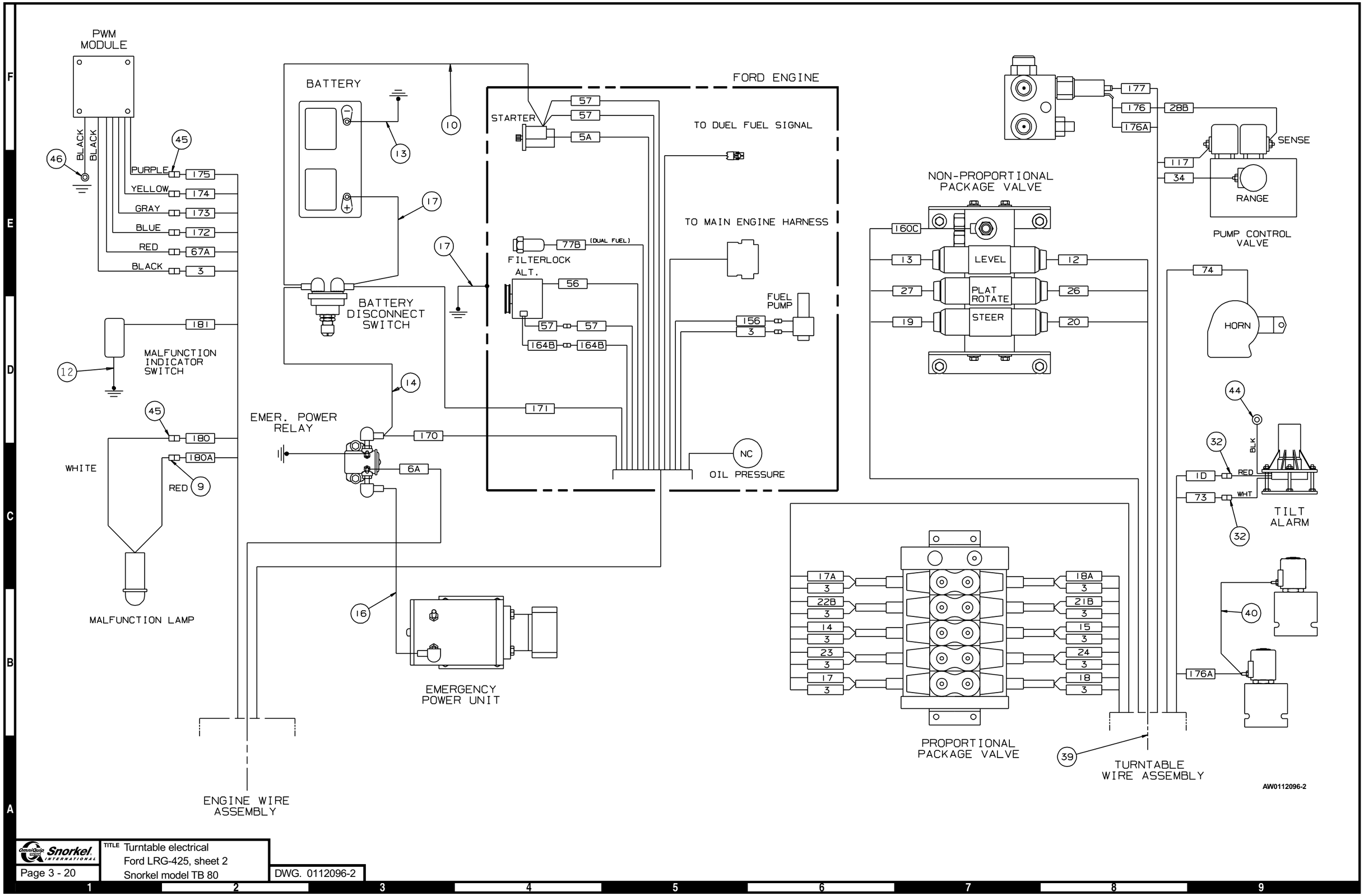

Snorkel INTERNATIONAL

TITLE Turntable electrical
Ford LRG-425, sheet 2
Snorkel model TB 80

DWG. 0112096-2

View thousands of Crane Specifications on FreeCraneSpecs.com
View thousands of Crane Specifications on FreeCraneSpecs.com
https://truckmanualshub.com/

View thousands of Crane Specifications on FreeCraneSpecs.com
https://truckmanualshub.com/

Lower controls, Continental

item	part no	qty	description
	0111976	1	Lower controls, Continental
1	0060373	3	Jumper strap
2	0070730	2	Jumper wire
3	0071588	2	Jumper wire
4	0070746	2	Jumper wire
5	0070747	5	Jumper wire
6	0070753	3	Jumper wire
7	0071541	1	Jumper wire
8	0070735	1	Jumper wire
9	0081819	1	Lower control panel and hinge
10	0082002	1	Rheostat switch
	3040619	1	Replacement switch
	0150647	1	Replacement jumper wire
11	0082003	1	Placard, lower controls
12	0111512	1	Jumper bar
13	562236	1	Guard, emergency stop switch
14	3070016	1	Temperature gauge
15	0151813	2	Diode wire
16	0073254	1	Diode jumper wire
17	0110957	1	Placard, axle/boom
18	0181104	1	Jumper wire
19	0240483	1	Jumper wire
20	3011801	1	Wire 18 gauge single conductor x 6 inch long
21	3020013	2	Switch, toggle
22	3020016	3	Switch, toggle
23	3020018	2	Switch, toggle
24	3020087	1	Switch, keyed start
	8030044	1	Replacement key
25	3020048	2	Switch, toggle
26	3020081	2	Switch, toggle
27	3020076	1	Switch, magnetic
28	3040046	1	Terminal .250 tab male slip-on fully insulated 22/18 wire
29	3040083	1	Terminal .250 tab female slip-on fully insulated 16/14 wire
30	3040348	1	Switch knob
31	3040535	1	Circuit breaker, 3 amp capacity
32	3070003	1	Ammeter
33	5560004	1	Nut 1/4-20 self locking
34	3044145	2	Terminal #8 stud insulated 22/18 wire
35	0110727	1	Jumper wire
36	0111975	1	Wire harness, engine/lower controls
37	5093003	1	Clamp
38	970029	1	Capscrew 1/4-20 x 3/4 inch long hex head grade 5
39	986019	1	Washer 1/4 medium flat

View thousands of Crane Specifications on FreeCraneSpecs.com
https://truckmanualshub.com/

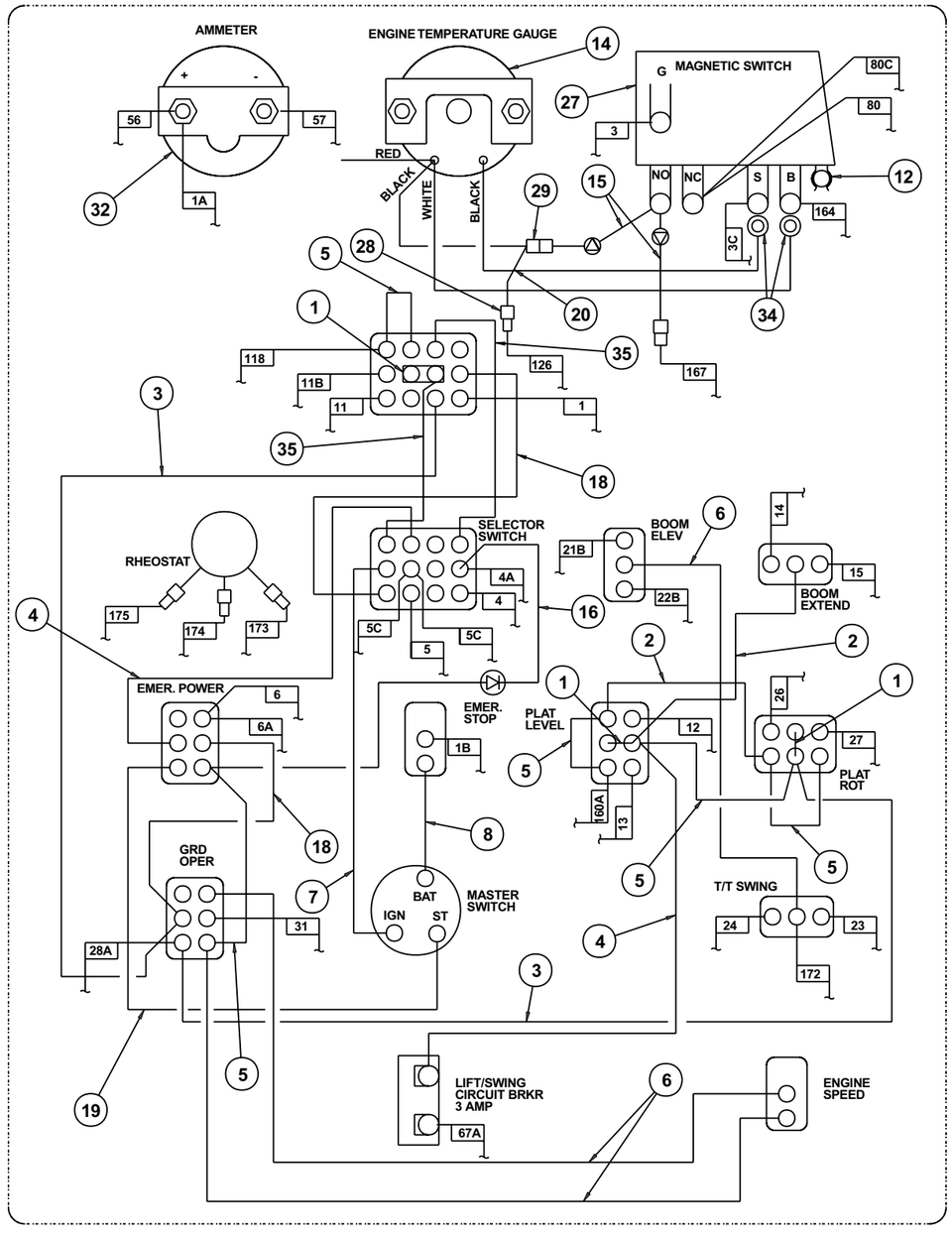

REAR VIEW

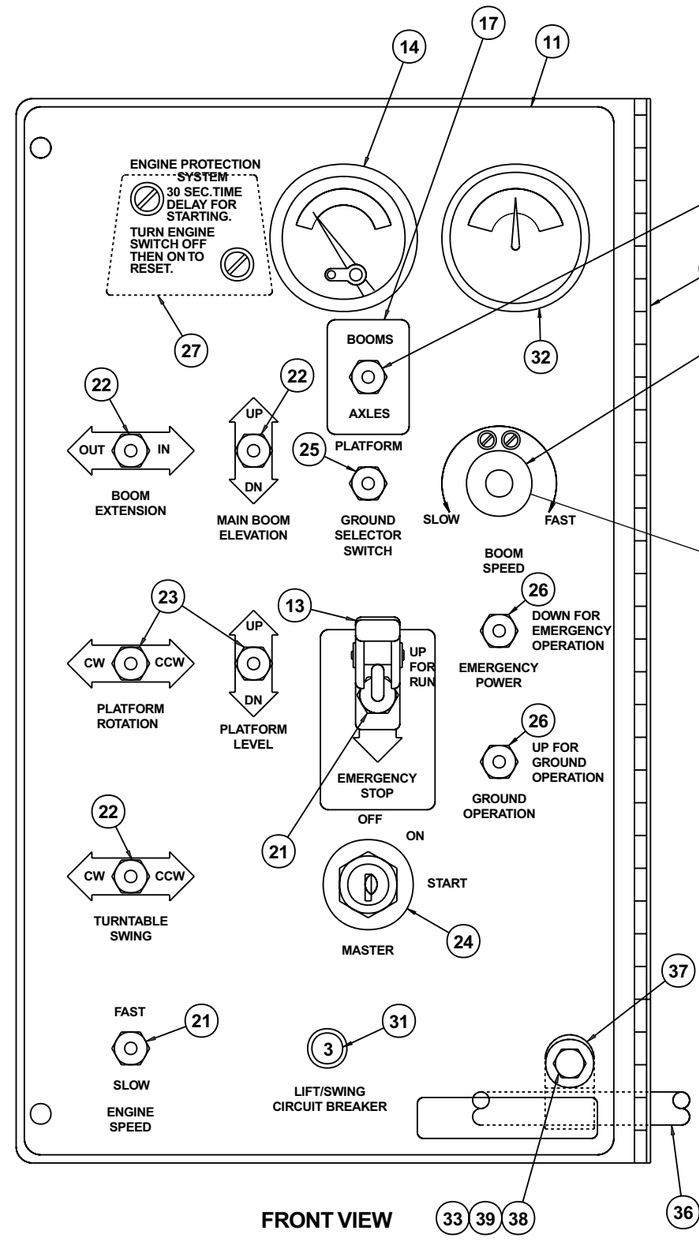

FRONT VIEW

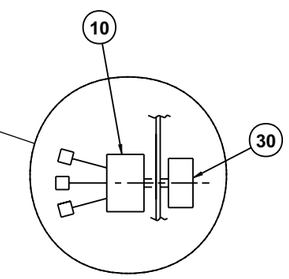

SIDE VIEW

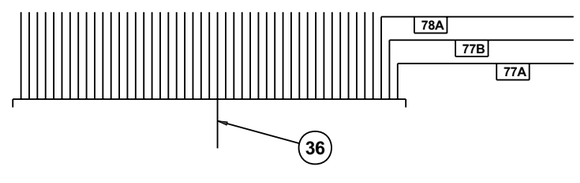

AW0111976

DWG. 0111976	TITLE Lower controls Continental Snorkel model TB 80

Snorkel INTERNATIONAL

View thousands of Crane Specifications on FreeCraneSpecs.com
https://truckmanualshub.com/

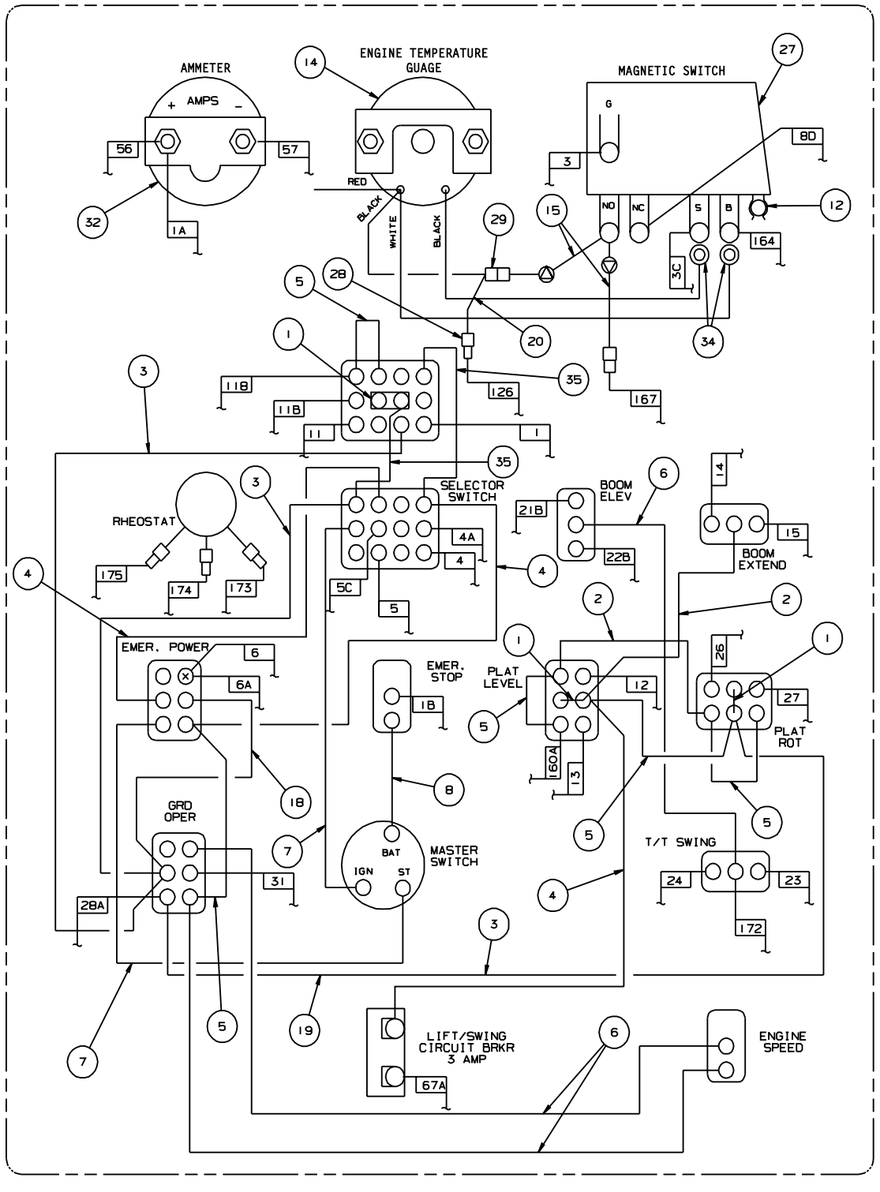

REAR VIEW

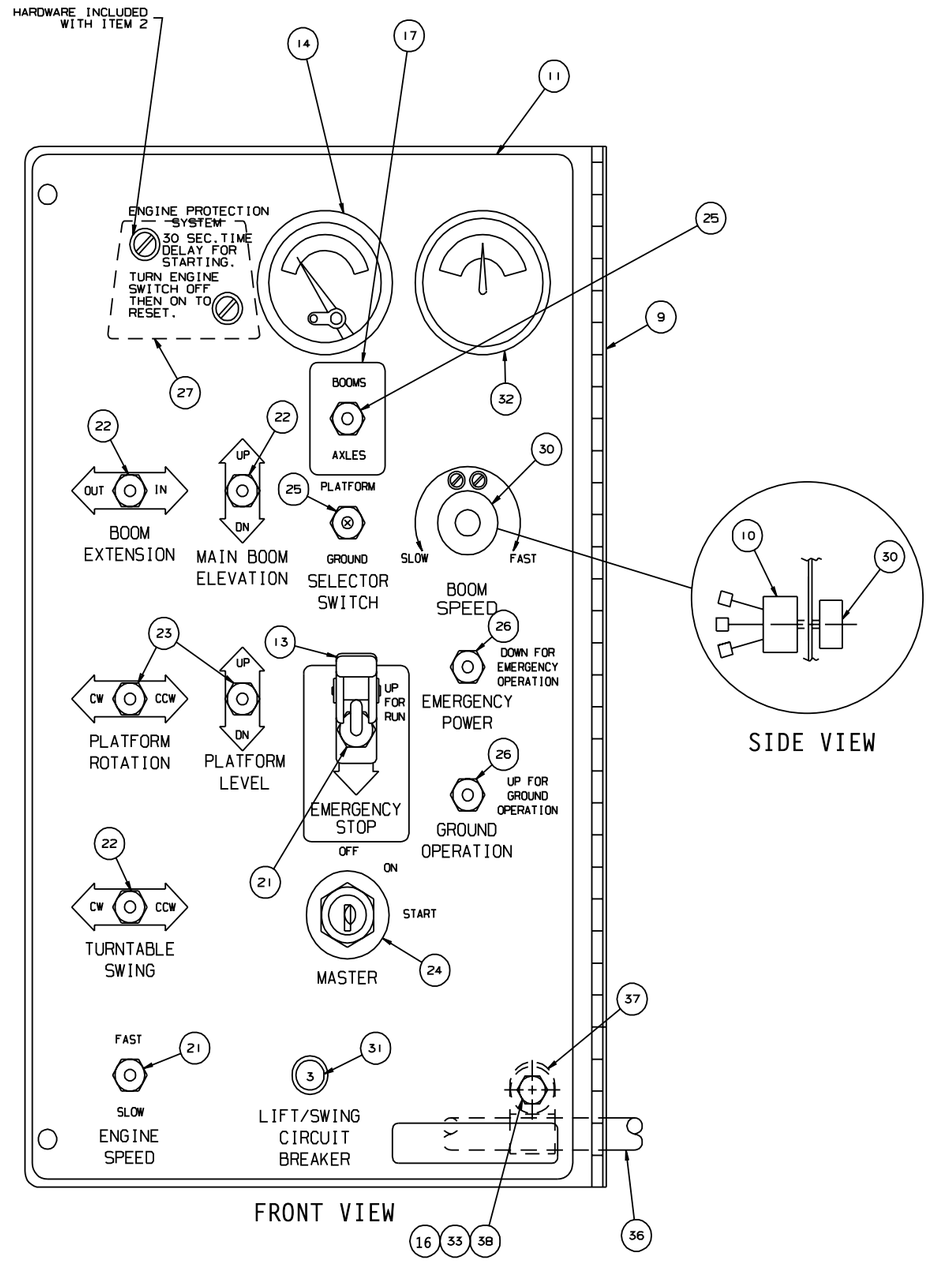

FRONT VIEW

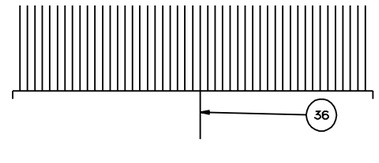

AW0111955

Snorkel INTERNATIONAL	TITLE Lower controls Cummins before 8-16-99 Snorkel model TB 80	
Page 3 - 24		DWG. 0111955

View thousands of Crane Specifications on FreeCraneSpecs.com
https://truckmanualshub.com/

Lower controls, Cummins before 8-16-99

item	part no	qty	description
	0111955	1	Lower controls, Cummins before 8-16-99
1	0060373	3	Jumper strap
2	0070730	2	Jumper wire
3	0070742	3	Jumper wire
4	0070746	3	Jumper wire
5	0070747	5	Jumper wire
6	0070753	3	Jumper wire
7	0071541	2	Jumper wire
8	0070735	1	Jumper wire
9	0081819	1	Lower control panel and hinge
10	0082002	1	Rheostat switch
	3040619	1	Replacement switch
	0150647	1	Replacement jumper wire
11	0082003	1	Placard, lower controls
12	0111512	1	Jumper bar
13	562236	1	Guard, emergency stop switch
14	3070018	1	Temperature gauge
16	986019	1	Washer 1/4 medium flat
15	0151813	2	Diode wire
17	0110957	1	Placard, axle/boom
18	0181104	1	Jumper wire
19	0240483	1	Jumper wire
20	3011801	1	Wire 18 gauge single conductor x 6 inch long
21	3020013	2	Switch, toggle
22	3020016	3	Switch, toggle
23	3020018	2	Switch, toggle
24	3020087	1	Switch, keyed start
	8030044	1	Replacement key
25	3020048	2	Switch, toggle
26	3020081	1	Switch, toggle
27	3020093	1	Switch, magnetic
28	3040047	1	Terminal .250 tab female slip-on fully insulated 22/18 wire
29	3040083	1	Terminal .250 tab female slip-on fully insulated 16/14 wire
30	3040348	1	Switch knob
31	3040535	1	Circuit breaker, 3 amp capacity
32	3070003	1	Ammeter
33	5560004	1	Nut 1/4-20 self locking
34	3044145	2	Terminal #8 stud insulated 22/18 wire
35	0110727	2	Jumper wire
36	0111956	1	Wire harness, engine/lower controls
37	5093003	1	Clamp
38	970029	1	Capscrew 1/4-20 x 3/4 inch long hex head grade 5

View thousands of Crane Specifications on FreeCraneSpecs.com
https://truckmanualshub.com

Lower controls, Cummins after 8-16-99

item	part no	qty	description
	0112169	1	Lower controls, Cummins after 8-16-99
1	0060373	3	Jumper strap
2	0070730	2	Jumper wire
3	0071588	2	Jumper wire
4	0070746	2	Jumper wire
5	0070747	5	Jumper wire
6	0070753	3	Jumper wire
7	0071541	2	Jumper wire
8	0070735	1	Jumper wire
9	0074585	1	Lower control panel and hinge
10	0082002	1	Rheostat switch
	3040619	1	Replacement switch
	0150647	1	Replacement jumper wire
11	0082003	1	Placard, lower controls
12	562236	1	Guard, emergency stop switch
13	560394	1	Temperature gauge - (before 6-19-00)
	3070040	1	Temperature gauge - (after 6-19-00)
14	0073254	1	Diode jumper wire
15	0110957	1	Placard, axle/boom
16	0181104	1	Jumper wire
17	0240483	1	Jumper wire
18	3020013	2	Switch, toggle
19	3020016	3	Switch, toggle
20	3020018	2	Switch, toggle
21	3020087	1	Switch, keyed start
	8030044	1	Replacement key
22	3020048	2	Switch, toggle
23	3020081	2	Switch, toggle
24	3040348	1	Switch knob
25	3040535	1	Circuit breaker, 3 amp capacity
26	3070003	1	Ammeter
27	5560004	1	Nut 1/4-20 self locking
28	0110727	2	Jumper wire
29	0112170	1	Wire harness, engine/lower controls
30	5093006	1	Clamp
31	970029	1	Capscrew 1/4-20 x 3/4 inch long hex head grade 5
32	986019	1	Washer 1/4 medium flat
33	0074578	1	Jumper wire
34	300489	1	Terminal strip, 6 circuit #10 stud
35	5560649	2	Machine screw #10-24 x 1 inch long truss head
36	5560034	2	Nut #10-24 self locking
37	0083300	1	Wire harness, EPS

View thousands of Crane Specifications on FreeCraneSpecs.com
https://truckmanualshub.com/

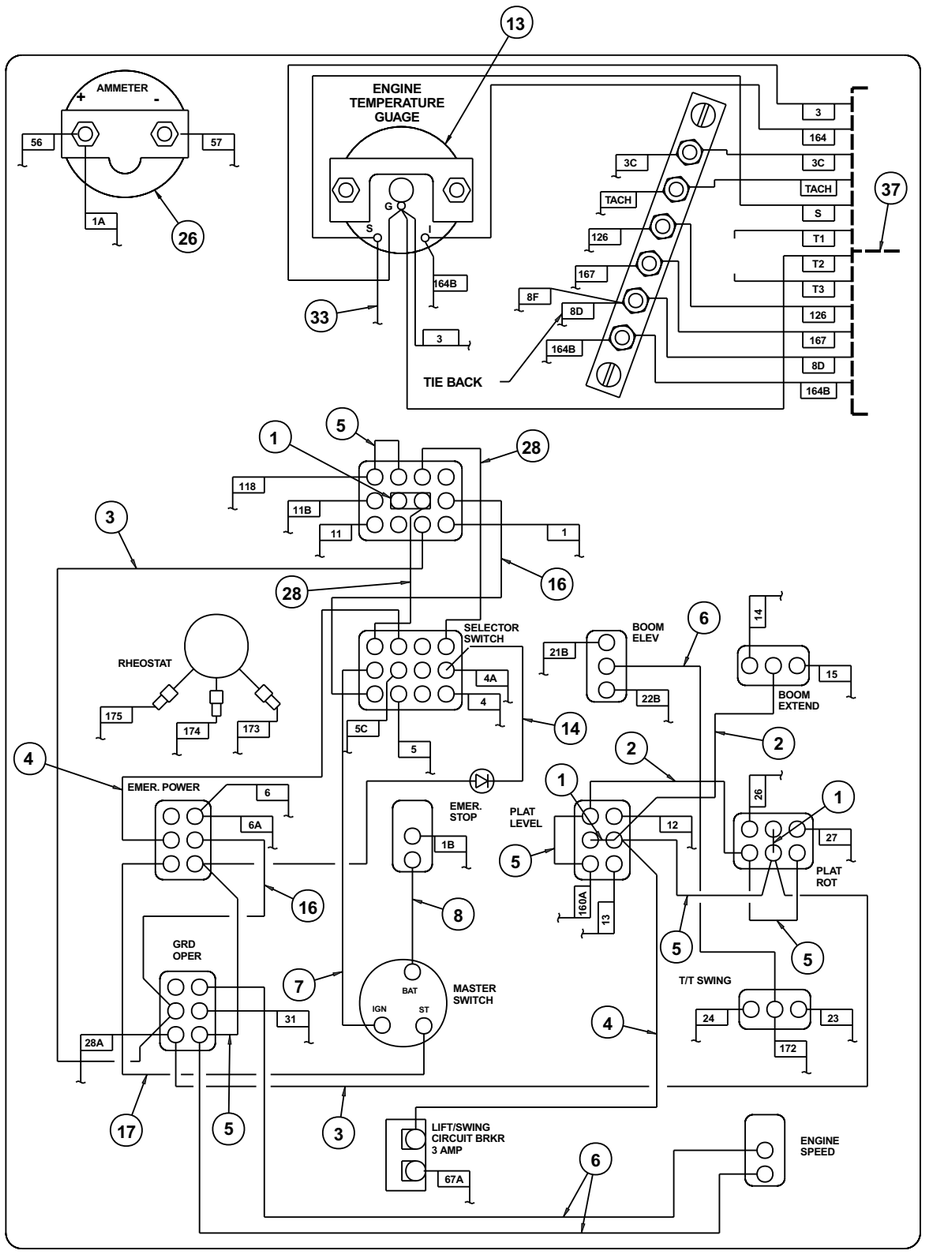

REAR VIEW

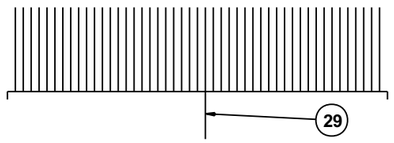

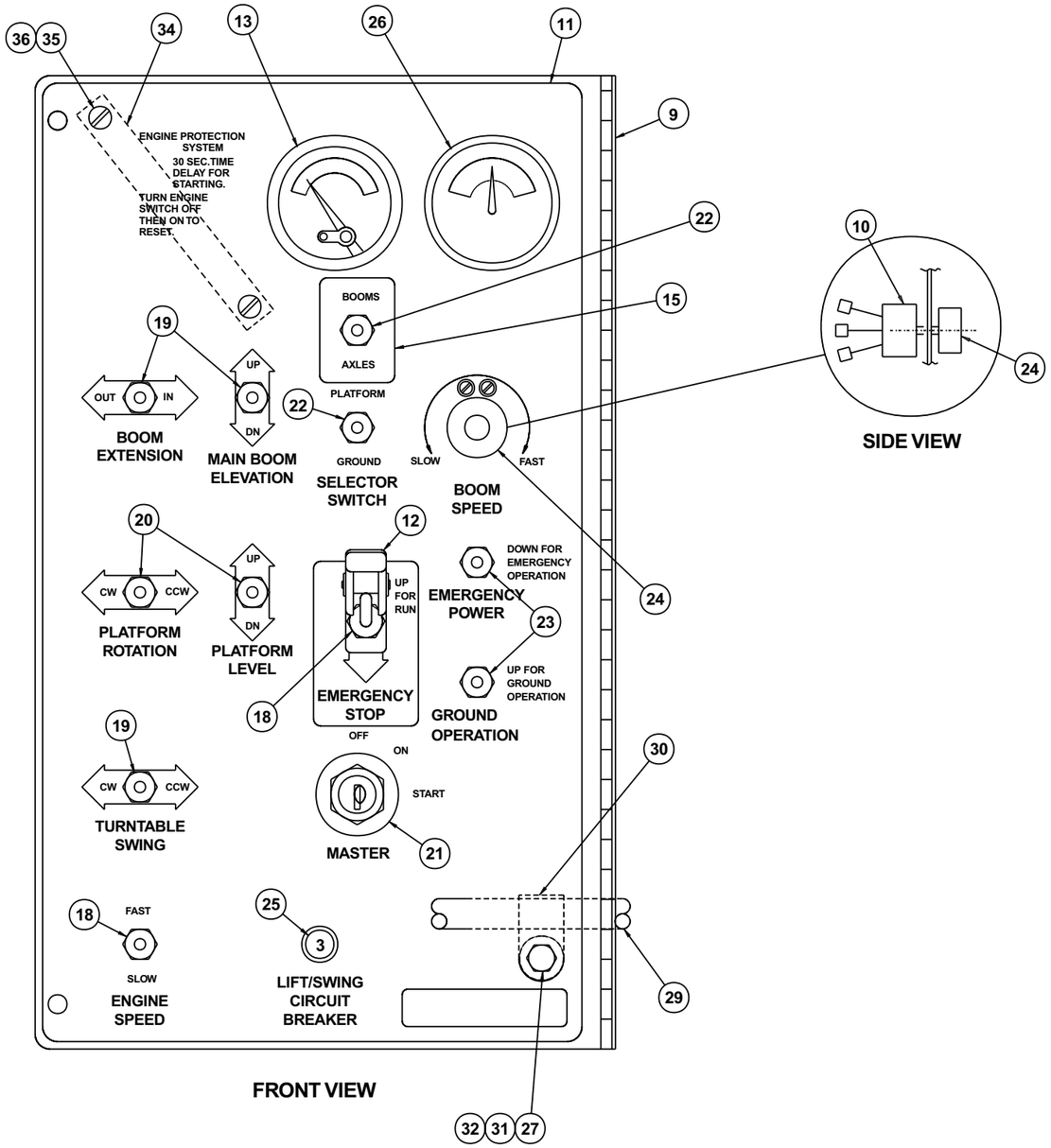

FRONT VIEW

SIDE VIEW

AW0112169

TITLE	Lower controls Cummins after 8-16-99 Snorkel model TB 80
DWG. 0112169	

Snorkel INTERNATIONAL

View thousands of Crane Specifications on FreeCraneSpecs.com
https://truckmanualshub.com/

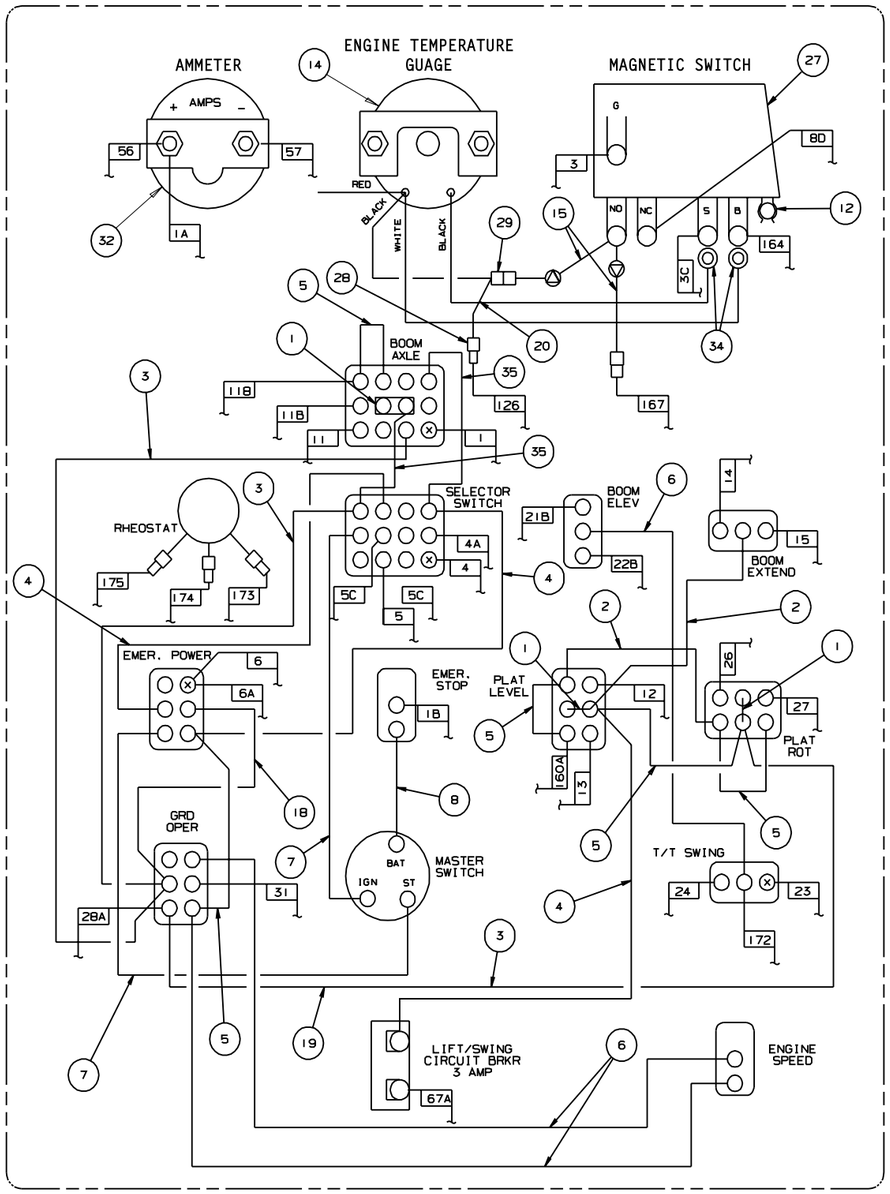

REAR VIEW

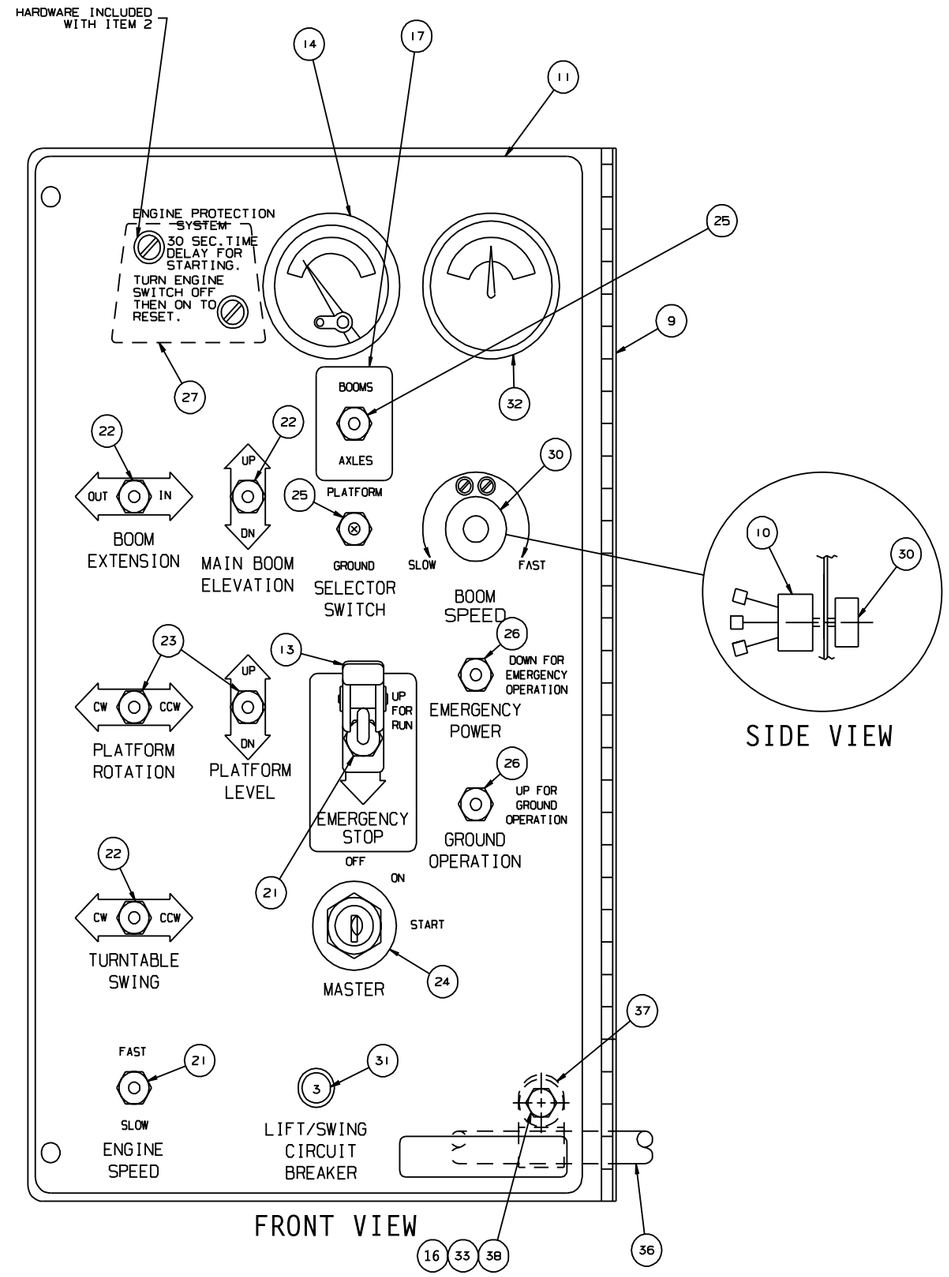

FRONT VIEW

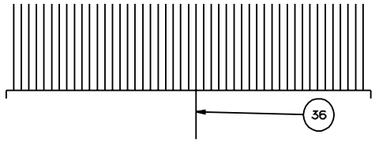

AW0111949

Snorkel INTERNATIONAL	TITLE Lower controls Deutz before 8-16-99 Snorkel model TB 80	
Page 3 - 28		DWG. 0111949

View thousands of Crane Specifications on FreeCraneSpecs.com

Lower controls, Deutz before 8-16-99

item	part no	qty	description
	0111949	1	Lower controls, Deutz before 8-16-99
1	0060373	3	Jumper strap
2	0070730	2	Jumper wire
3	0070742	3	Jumper wire
4	0070746	3	Jumper wire
5	0070747	5	Jumper wire
6	0070753	3	Jumper wire
7	0071541	2	Jumper wire
8	0070735	1	Jumper wire
9	0081819	1	Lower control panel and hinge
10	0082002	1	Rheostat switch
	3040619	1	Replacement switch
	0150647	1	Replacement jumper wire
11	0082003	1	Placard, lower controls
12	0111512	1	Jumper bar
13	562236	1	Guard, emergency stop switch
14	3070023	1	Temperature gauge
15	0151813	2	Diode wire
16	986019	1	Washer 1/4 medium flat
17	0110957	1	Placard, axle/boom
18	0181104	1	Jumper wire
19	0240483	1	Jumper wire
20	3011801	1	Wire 18 gauge single conductor x 6 inch long
21	3020013	2	Switch, toggle
22	3020016	3	Switch, toggle
23	3020018	2	Switch, toggle
24	3020087	1	Switch, keyed start
	8030044	1	Replacement key
25	3020048	2	Switch, toggle
26	3020081	2	Switch, toggle
27	3020093	1	Switch, magnetic
28	3040047	1	Terminal .250 tab female slip-on fully insulated 22/18 wire
29	3040083	1	Terminal .250 tab female slip-on fully insulated 16/14 wire
30	3040348	1	Switch knob
31	3040535	1	Circuit breaker, 3 amp capacity
32	3070003	1	Ammeter
33	5560004	1	Nut 1/4-20 self locking
34	3044145	2	Terminal #8 stud insulated 22/18 wire
35	0110727	2	Jumper wire
36	0111954	1	Wire harness, engine/lower controls
37	5093003	1	Clamp
38	970029	1	Capscrew 1/4-20 x 3/4 inch long hex head grade 5

View thousands of Crane Specifications on FreeCraneSpecs.com
https://truckmanualshub.com/

Lower controls, Deutz after 8-16-99

item	part no	qty	description
	0112166	1	Lower controls, Deutz after 8-16-99
1	0060373	3	Jumper strap
2	0070730	2	Jumper wire
3	0071588	2	Jumper wire
4	0070746	2	Jumper wire
5	0070747	5	Jumper wire
6	0070753	3	Jumper wire
7	0071541	1	Jumper wire
8	0070735	1	Jumper wire
9	0074585	1	Lower control panel and hinge
10	0082002	1	Rheostat switch
	3040619	1	Replacement switch
	0150647	1	Replacement jumper wire
11	0082003	1	Placard, lower controls
12	0083300	1	Wire harness, EPS
13	562236	1	Guard, emergency stop switch
14	3072120	1	Temperature gauge - (before 6-19-00)
	3070041	1	Temperature gauge - (after 6-19-00)
15	0151813	2	Diode wire
16	0073254	1	Diode jumper wire
17	0110957	1	Placard, axle/boom
18	0181104	2	Jumper wire
19	0240483	1	Jumper wire
20	970029	1	Capscrew 1/4-20 x 3/4 inch long hex head grade 5
21	3020013	2	Switch, toggle
22	3020016	3	Switch, toggle
23	3020018	2	Switch, toggle
24	3020087	1	Switch, keyed start
	8030044	1	Replacement key
25	3020048	2	Switch, toggle
26	3020081	2	Switch, toggle
27	300489	1	Terminal strip, 6 circuit #10 stud
28	5560649	2	Machine screw #10-24 x 1 inch long truss head
29	5560034	2	Nut #10-24 self locking
30	3040348	1	Switch knob
31	3040535	1	Circuit breaker, 3 amp capacity
32	3070003	1	Ammeter
33	5560004	1	Nut 1/4-20 self locking
34	5093006	1	Clamp
35	0110727	2	Jumper wire
36	0112167	1	Wire harness, engine/lower controls

View thousands of Crane Specifications on FreeCraneSpecs.com
https://truckmanualshub.com/

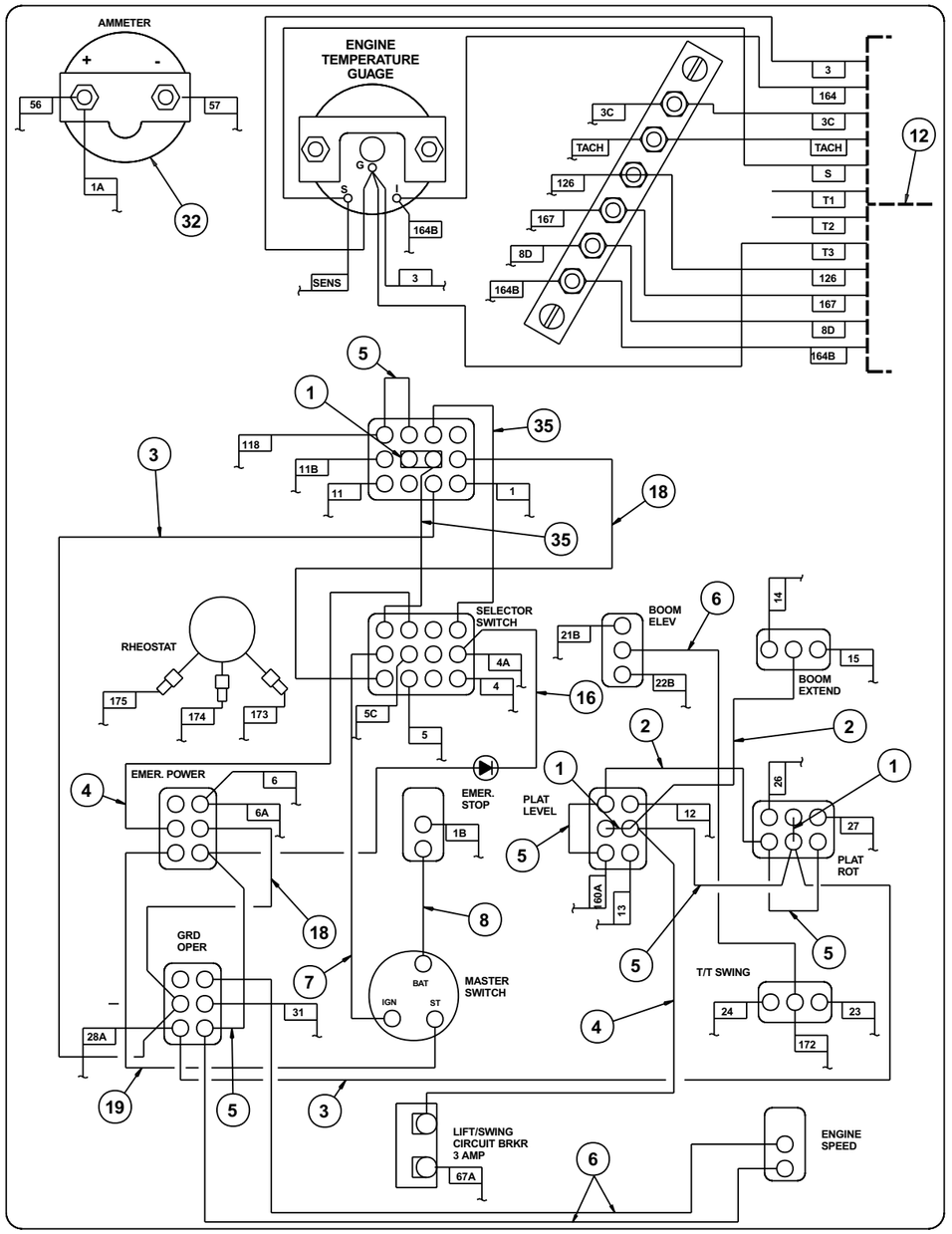

REAR VIEW

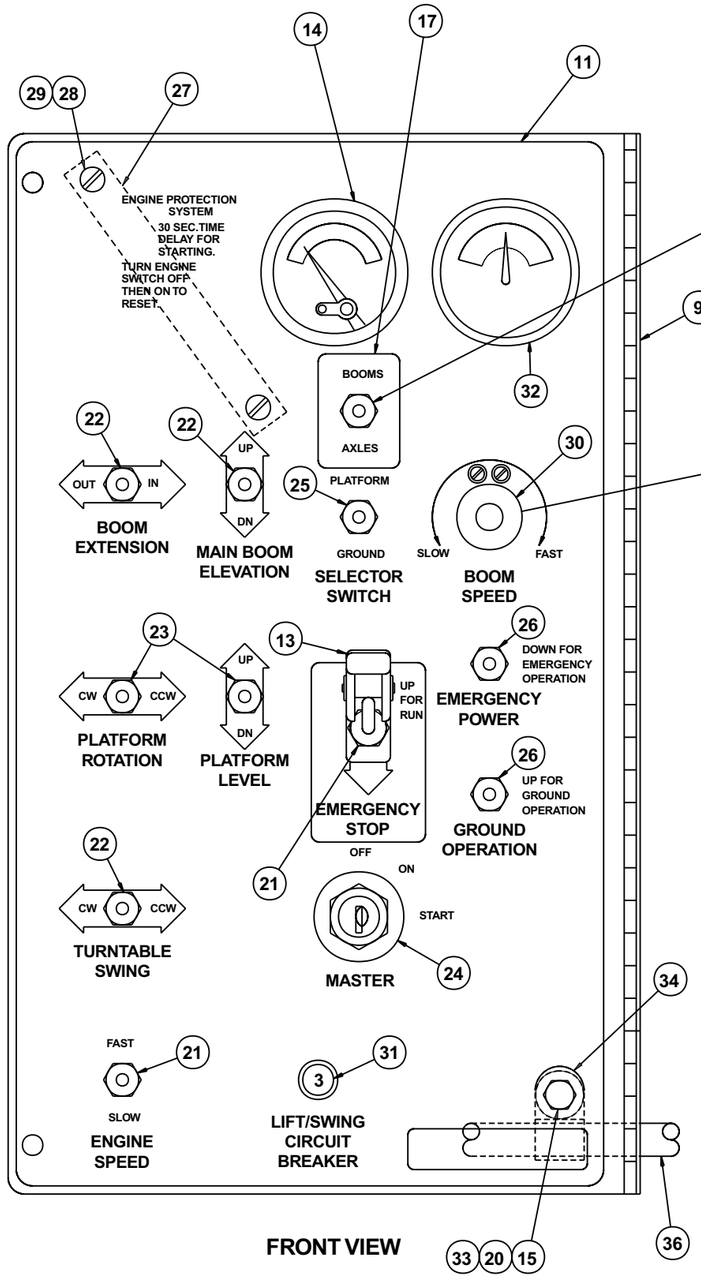

FRONT VIEW

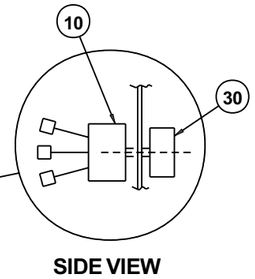

SIDE VIEW

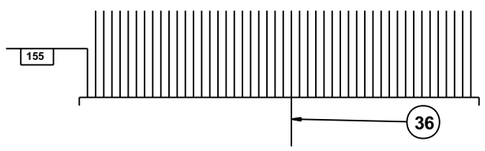

AW0112166

TITLE Lower controls
Deutz after 8-16-99
Snorkel model TB 80

Snorkel INTERNATIONAL

View thousands of Crane Specifications on FreeCraneSpecs.com
https://truckmanualshub.com/

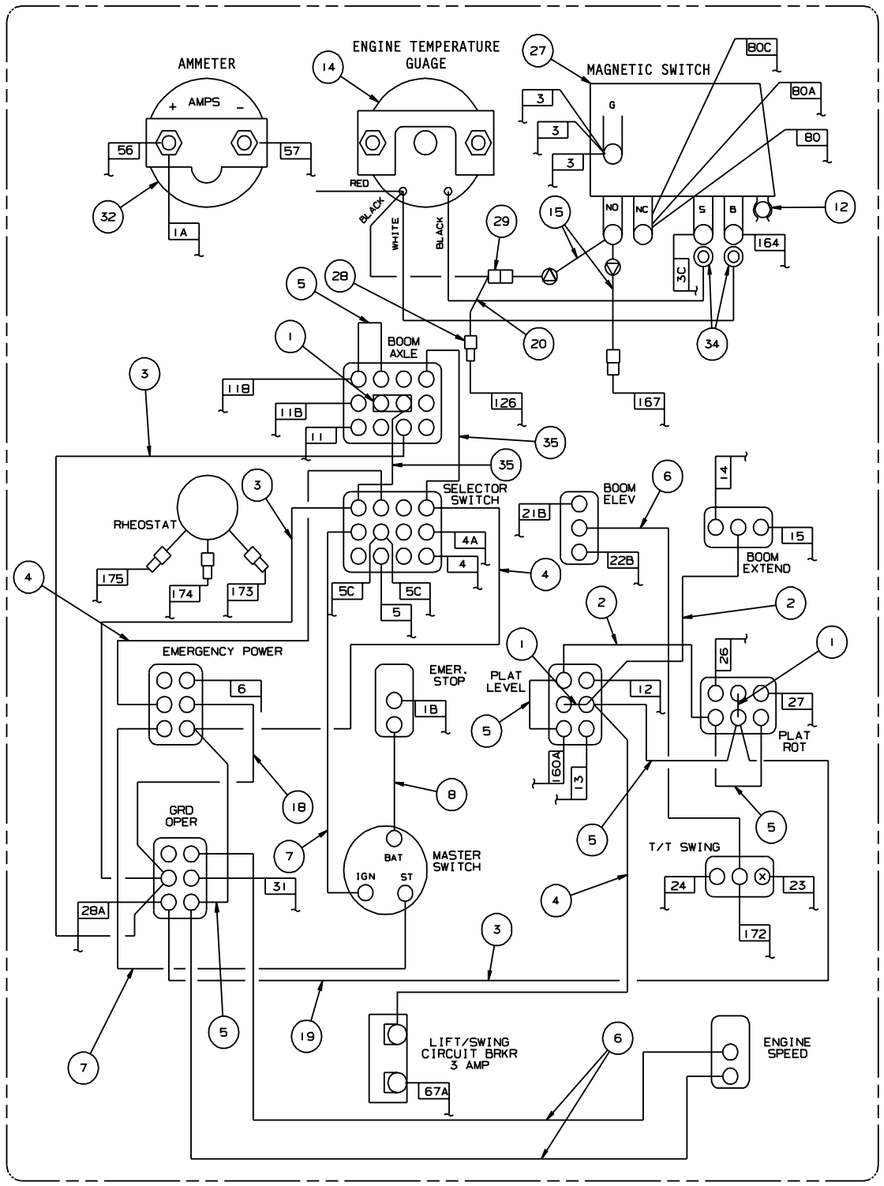

REAR VIEW

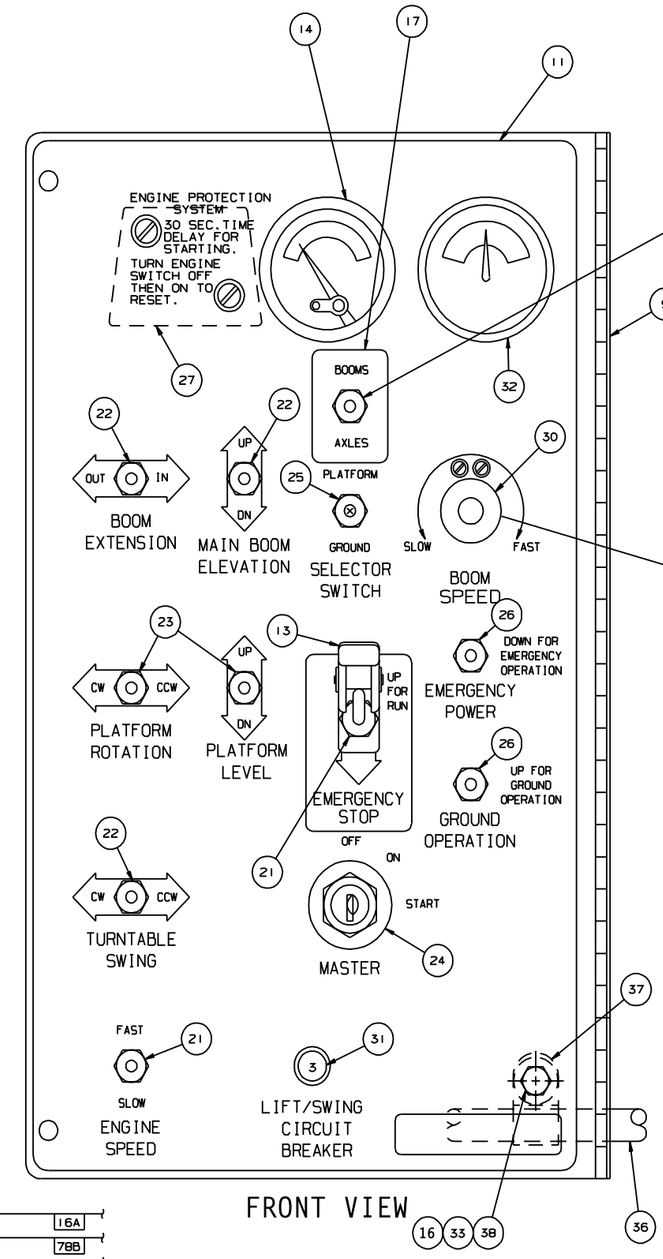

FRONT VIEW

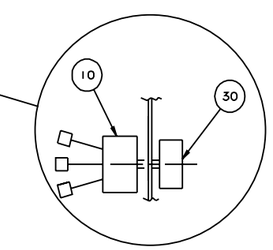

SIDE VIEW

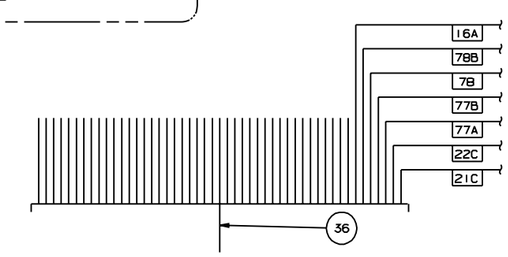

AW0111885

Snorkel INTERNATIONAL	TITLE Lower controls Ford LRG-423 Snorkel model TB 80	DWG. 0111885
Page 3 - 32		

View thousands of Crane Specifications on FreeCraneSpecs.com
https://truckmanualshub.com

Lower controls, Ford LRG-423

item	part no	qty	description
	0111885	1	Lower controls, Ford LRG-423
1	0060373	3	Jumper strap
2	0070730	2	Jumper wire
3	0070742	3	Jumper wire
4	0070746	3	Jumper wire
5	0070747	5	Jumper wire
6	0070753	3	Jumper wire
7	0071541	2	Jumper wire
8	0070735	1	Jumper wire
9	0081819	1	Lower control panel and hinge
10	0082002	1	Rheostat switch
	3040619	1	Replacement switch
	0150647	1	Replacement jumper wire
11	0082003	1	Placard, lower controls
12	0111512	1	Jumper bar
13	562236	1	Guard, emergency stop switch
14	3070018	1	Temperature gauge
15	0151813	2	Diode wire
16	986019	1	Washer 1/4 medium flat
17	0110957	1	Placard, axle/boom
18	0181104	1	Jumper wire
19	0240483	1	Jumper wire
20	3011801	1	Wire 18 gauge single conductor x 6 inch long
21	3020013	2	Switch, toggle
22	3020016	3	Switch, toggle
23	3020018	2	Switch, toggle
24	3020087	1	Switch, keyed start
	8030044	1	Replacement key
25	3020048	2	Switch, toggle
26	3020081	2	Switch, toggle
27	3020093	1	Switch, magnetic
28	3040047	1	Terminal .250 tab female slip-on fully insulated 22/18 wire
29	3040083	1	Terminal .250 tab female slip-on fully insulated 16/14 wire
30	3040348	1	Switch knob
31	3040535	1	Circuit breaker, 3 amp capacity
32	3070003	1	Ammeter
33	5560004	1	Nut 1/4-20 self locking
34	3044145	2	Terminal #8 stud insulated 22/18 wire
35	0110727	2	Jumper wire
36	0111865	1	Wire harness, engine/lower controls
37	5093003	1	Clamp
38	970029	1	Capscrew 1/4-20 x 3/4 inch long hex head grade 5

View thousands of Crane Specifications on FreeCraneSpecs.com
https://truckmanualshub.com/

Lower controls, Ford LRG-425

item	part no	qty	description
	0112099	1	Lower controls, Ford LRG-425
1	0060373	3	Jumper strap
2	0070730	2	Jumper wire
3	0071588	2	Jumper wire
4	0070746	2	Jumper wire
5	0070747	5	Jumper wire
6	0070753	3	Jumper wire
7	0071541	1	Jumper wire
8	0070735	1	Jumper wire
9	0081819	1	Lower control panel and hinge
10	0082002	1	Rheostat switch
	3040619	1	Replacement switch
	0150647	1	Replacement jumper wire
11	0082003	1	Placard, lower controls
12	0082727	1	Placard, blank
13	562236	1	Guard, emergency stop switch
14	3070021	1	Temperature gauge
15	986019	1	Washer 1/4 medium flat
16	0073254	1	Diode jumper wire
17	0110957	1	Placard, axle/boom
18	0181104	2	Jumper wire
19	0240483	1	Jumper wire
20	970029	1	Capscrew 1/4-20 x 3/4 inch long hex head grade 5
21	3020013	2	Switch, toggle
22	3020016	3	Switch, toggle
23	3020018	2	Switch, toggle
24	3020087	1	Switch, keyed start
	8030044	1	Replacement key
25	3020048	2	Switch, toggle
26	3020081	2	Switch, toggle
27	0110727	2	Jumper wire
28	0112097	1	Wire harness, engine/lower controls
29	5093006	1	Clamp
30	3040348	1	Switch knob
31	3040535	1	Circuit breaker, 3 amp capacity
32	3070003	1	Ammeter
33	5560004	1	Nut 1/4-20 self locking

View thousands of Crane Specifications on FreeCraneSpecs.com
https://truckmanualshub.com/

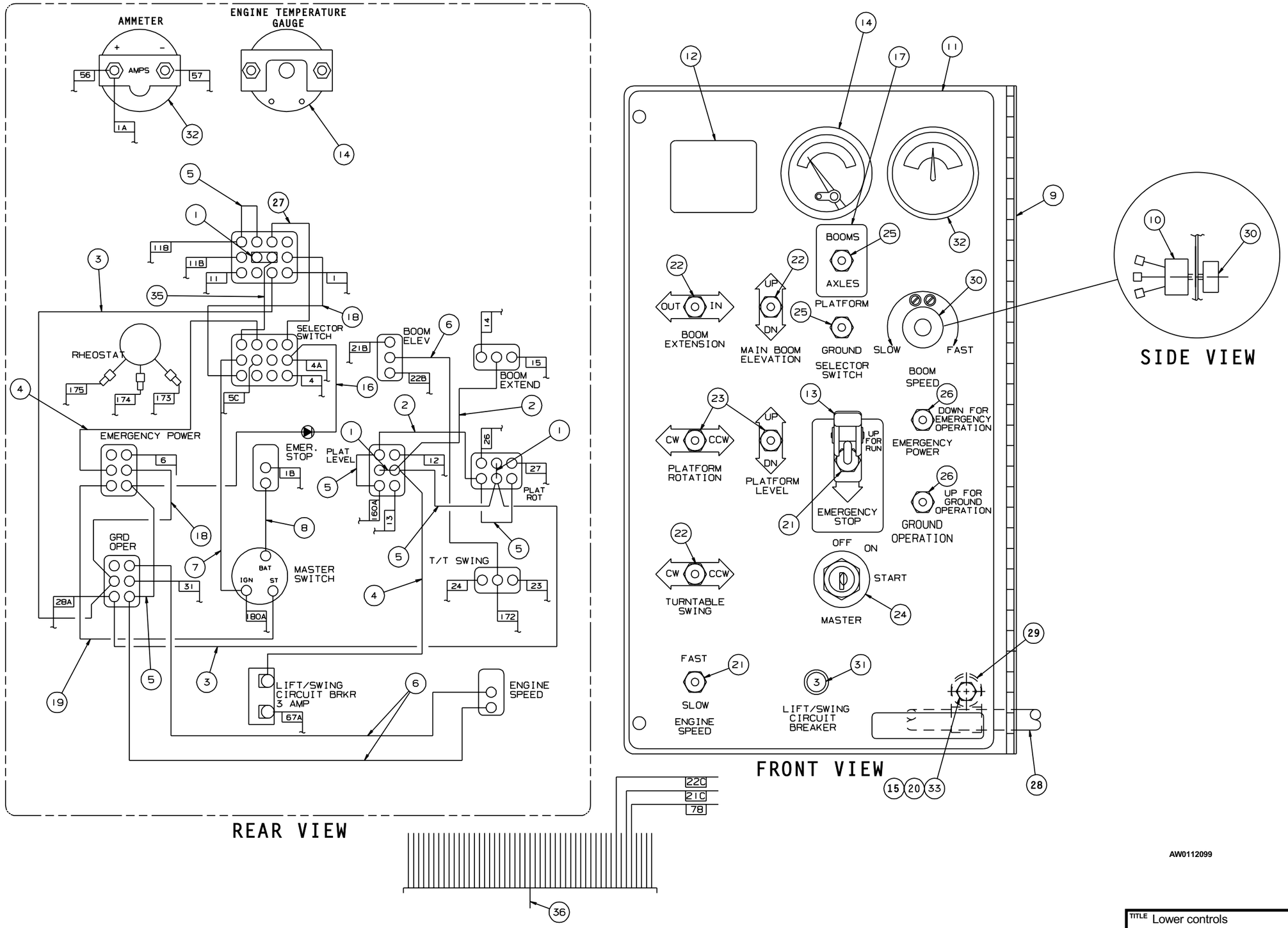

DWG. 0112099	TITLE Lower controls Ford LRG-425 Snorkel model TB 80

View thousands of Crane Specifications on FreeCraneSpecs.com
View thousands of Crane Specifications on FreeCraneSpecs.com
https://truckmanualshub.com/

View thousands of Crane Specifications on FreeCraneSpecs.com
https://truckmanualshub.com

Wiring box

item	part no	qty	description
	0111871	1	Wiring box
1	0111872	1	Wiring box, drilled
2	3040411	1	Mini siren, engine alarm
3	3040469	4	Relay, 12 volt DC
4	3040252	2	Circuit breaker, 15 amp capacity
5	3040069	2	Circuit breaker, 25 amp capacity
6	3070001	1	Hour meter
7	0111886	1	Wire harness, internal
8	5093003	1	Clamp
9	3040118	1	Extension with gasket
10	3040121	2	Close-up plug
11	0112165	1	Wiring box panel - (see page 3-46 for parts breakdown)
12	0070967	1	Corrosion inhibitor
13	3045278	1	Flanged electrical outlet with cover
14	0111735	1	Placard, circuit breaker
15	3040386	1	Connector
16	3040387	1	Connector locknut
17	3040295	2	Connector
18	3040110	4	Connector locknut
19	3040298	1	Connector
20	3040285	1	Connector
21	3040187	3	Connector
22	3040070	3	Connector locknut
23	0070921	1	Placard, 125 volts 15 amps
24	5560655	2	Pop rivet #AD32-ABS
25	974239	6	Machine screw #6-32 x 1/2 inch long round head
26	984009	6	Nut #6-32 hex
27	5560609	6	Machine screw #10-24 x 1/2 inch long truss head
28	5560703	3	Washer #10 star tooth lock
29	987089	2	Washer #10 medium lock
30	984049	2	Nut #10-24 hex
31	5560034	7	Nut #10-24 self locking
32	986159	6	Washer #6 medium flat
33	987349	6	Washer #6 medium lock
34	986019	1	Washer 1/4 medium flat
35	970029	1	Capscrew 1/4-20 x 3/4 inch long hex head grade 5
36	5560004	1	Nut 1/4-20 self locking
37	0070735	1	Jumper wire
38	0181028	1	Jumper wire
39	0240483	1	Jumper wire
40	5560701	4	Machine screw #10-32 x 3/8 inch long round head
41	0071528	1	Jumper wire
42	0073057	1	Jumper wire
43	3040214	1	Relay, 12 volt DC
44	3044708	1	Terminal strip, 10 circuit #8 stud
45	0111873	1	Decal, terminal strip
46	0071561	1	Jumper wire
47	974689	2	Machine screw #10-24 x 3/4 inch long round head
48	974709	1	Machine screw #10-24 x 1 inch long round head
49	5560034	8	Nut #10-24 self locking
50	5569003	1	Grommet

Parts list continued on next page

View thousands of Crane Specifications on FreeCraneSpecs.com
https://truckmanualshub.com/

Wiring box

item	part no	qty	description
51	0100522	2	Jumper wire
52	0140323	1	Jumper wire
53	0081559	1	Jumper wire
54	3040508	1	Time delay module
55	0111476	1	Jumper wire
56	5560701	4	Machine screw #10-32 x 3/8 inch long round head
57	0151815	1	Jumper wire
58	0070713	1	Jumper wire

View thousands of Crane Specifications on FreeCraneSpecs.com
https://truckmanualshub.com/

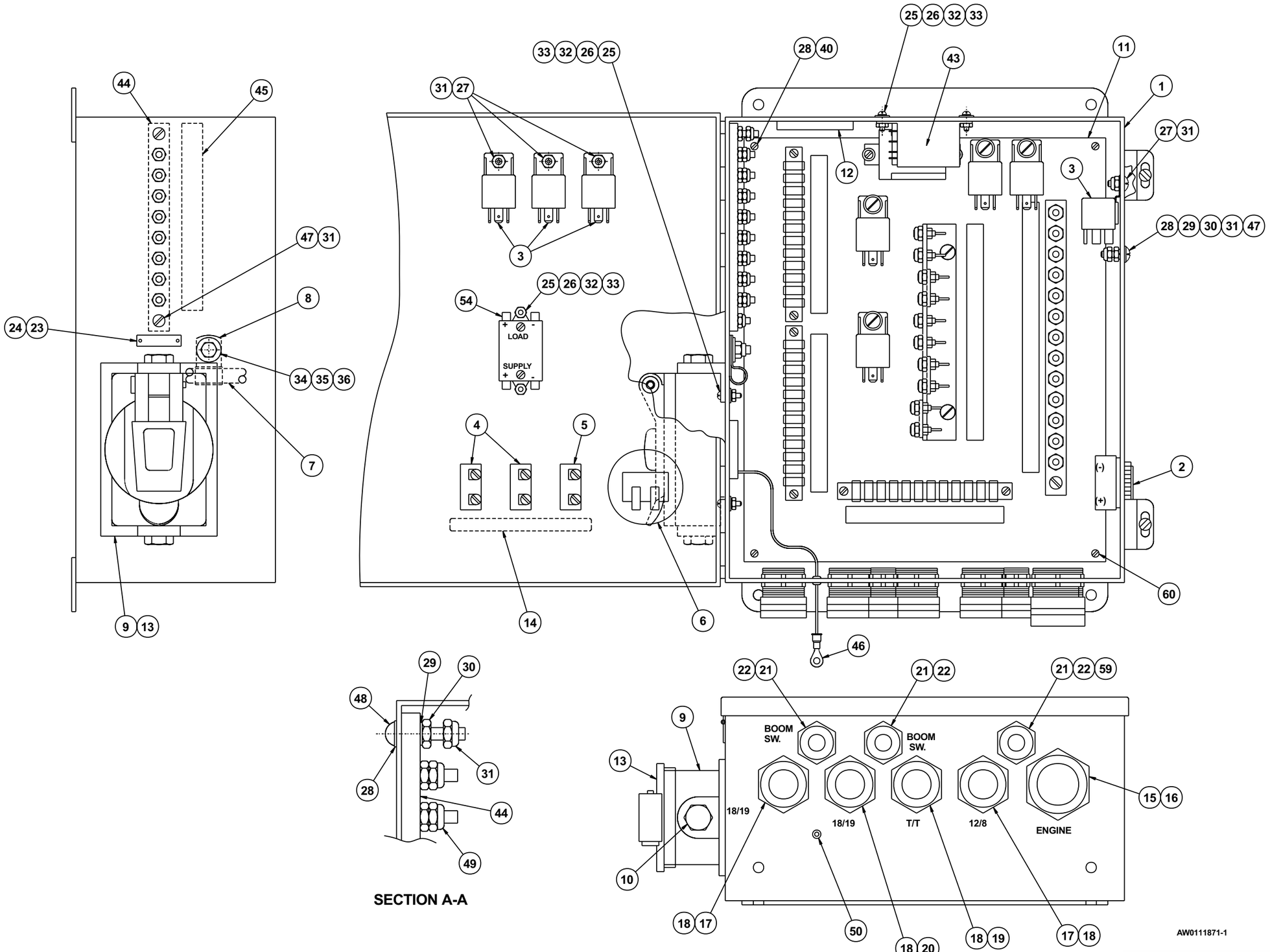

DWG. 0111871-1

TITLE Wiring box
sheet 1
Snorkel model TB 80

View thousands of Crane Specifications on FreeCraneSpecs.com
https://truckmanualshub.com/

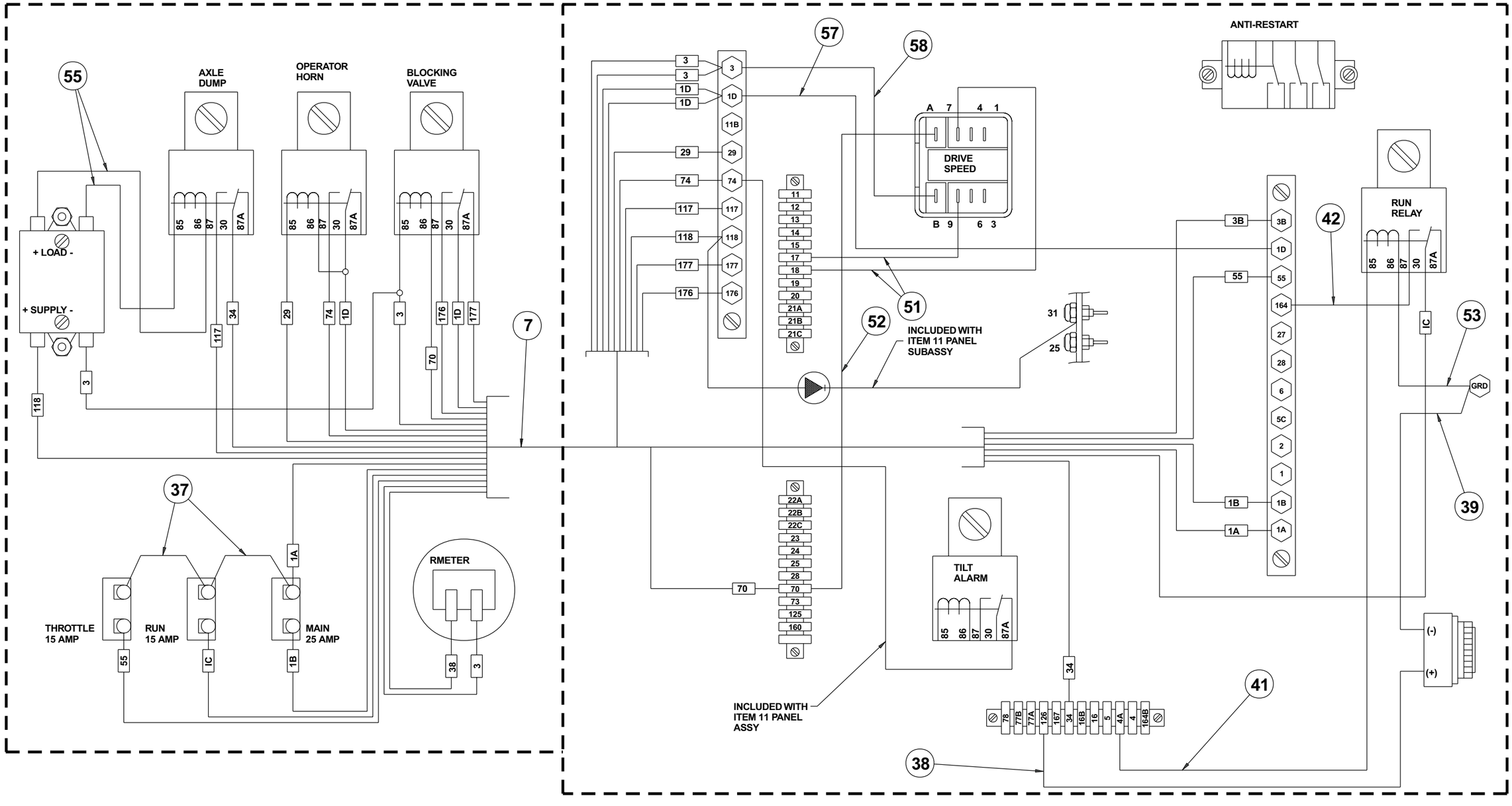

Snorkel INTERNATIONAL

TITLE wiring box
sheet 2
Snorkel model TB 80

DWG. 0111871-2

View thousands of Crane Specifications on FreeCraneSpecs.com
https://truckmanualshub.com/

Wiring box, Ford LRG-425

item	part no	qty	description
	0112094	1	Wiring box, Ford LRG-425
1	0111872	1	Wiring box, drilled
2	3040411	1	Mini siren, engine alarm
3	3040469	7	Relay, 12 volt DC
4	3040252	1	Circuit breaker, 15 amp capacity
5	3040069	1	Circuit breaker, 25 amp capacity
6	3070001	1	Hour meter
7	0111886	1	Wire harness, internal
8	5093003	1	Clamp
9	3040118	1	Extension with gasket
10	3040121	2	Close-up plug
11	0112095	1	Wiring box panel - (see page 3-49 for parts breakdown)
12	0070967	1	Corrosion inhibitor
13	3045278	1	Flanged electrical outlet with cover
14	0071778	1	Decal, main circuit breaker
15	3040386	1	Connector
16	3040387	1	Connector locknut
17	3040116	2	Connector
18	3040110	4	Connector locknut
19	3040298	1	Connector
20	3040285	1	Connector
21	3040187	3	Connector
22	3040070	3	Connector locknut
23	0070921	1	Placard, 125 volts 15 amps
24	5560655	2	Pop rivet #AD32-ABS
25	974239	4	Machine screw #6-32 x 1/2 inch long round head
26	984009	4	Nut #6-32 hex
27	5560609	7	Machine screw #10-24 x 1/2 inch long truss head
28	5560703	3	Washer #10 star tooth lock
29	987089	2	Washer #10 medium lock
30	984049	2	Nut #10-24 hex
31	5560034	9	Nut #10-24 self locking
32	986159	4	Washer #6 medium flat
33	987349	4	Washer #6 medium lock
34	986019	1	Washer 1/4 medium flat
35	970029	1	Capscrew 1/4-20 x 3/4 inch long hex head grade 5
36	5560004	1	Nut 1/4-20 self locking
37	0070735	1	Jumper wire
38	0181028	1	Jumper wire
39	0240483	1	Jumper wire
40	0181031	1	Jumper wire
41	3040015	1	Hole plug, 1/2 inch diameter
42	0170623	1	Decal, throttle
43	0071528	5	Jumper wire
44	3044708	1	Jumper wire
45	0111873	1	Decal, terminal strip
46	0071561	1	Jumper wire
47	974689	2	Machine screw #10-24 x 3/4 inch long round head
48	974709	1	Machine screw #10-24 x 1 inch long round head
49	5560038	8	Nut #10-32 self locking
50	5569003	1	Grommet

Parts list continued on next page

View thousands of Crane Specifications on FreeCraneSpecs.com
https://truckmanualshub.com/

Wiring box, Ford LRG-425

item	part no	qty	description
51	0181113	3	Jumper wire
52	0181111	1	Jumper wire
53	0081559	2	Jumper wire
54	3040508	1	Time delay module
55	0111476	2	Jumper wire
56	0151815	1	Jumper wire
57	970469	1	Capscrew 3/8-16 x 1 inch long hex head grade 5
58	5560701	4	Machine screw #10-32 x 3/8 inch long round head
59			
60			

View thousands of Crane Specifications on FreeCraneSpecs.com
https://truckmanualshub.com/

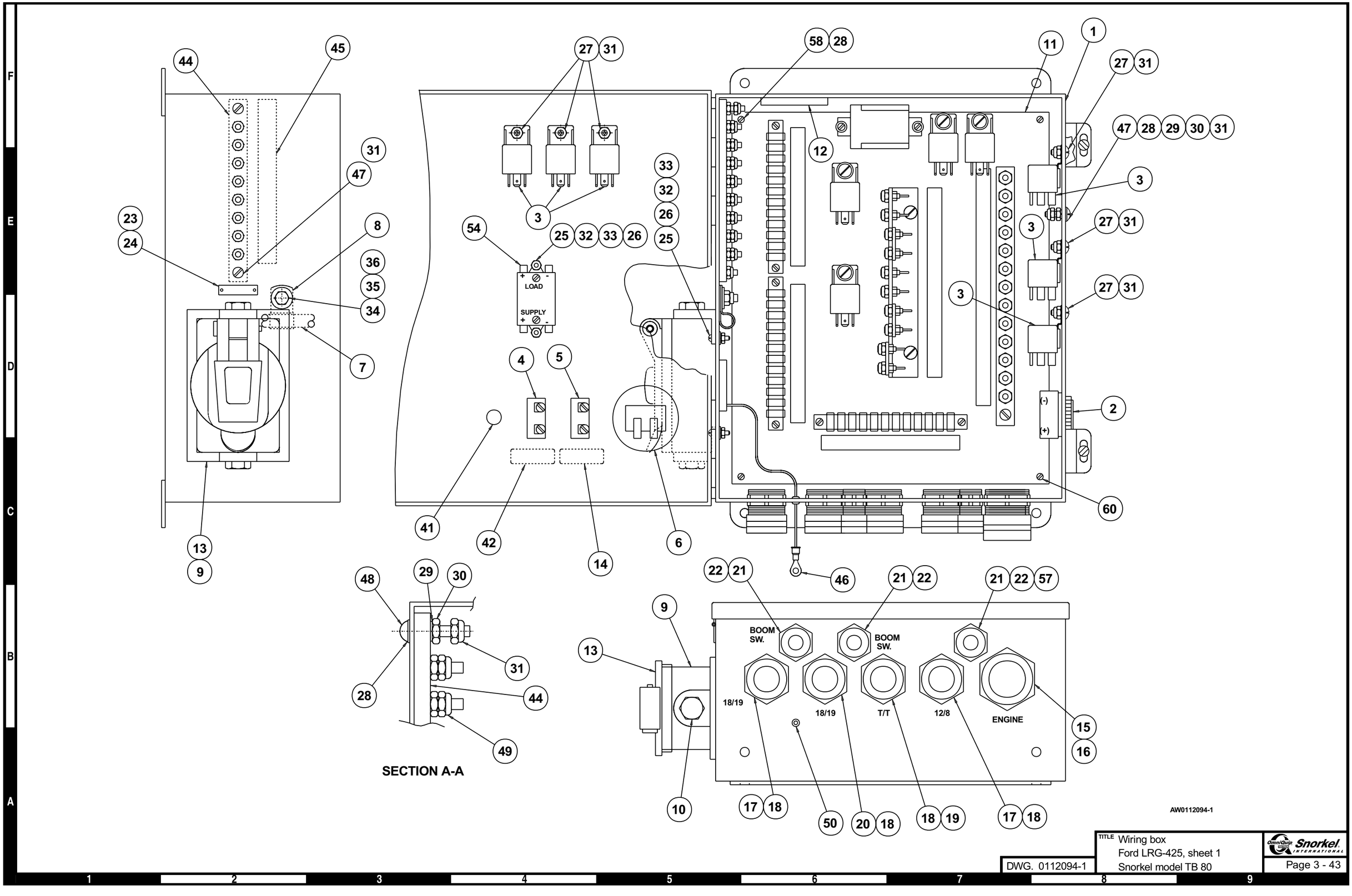

TITLE Wiring box
Ford LRG-425, sheet 1
Snorkel model TB 80

DWG. 0112094-1

View thousands of Crane Specifications on FreeCraneSpecs.com
https://truckmanualshub.com/

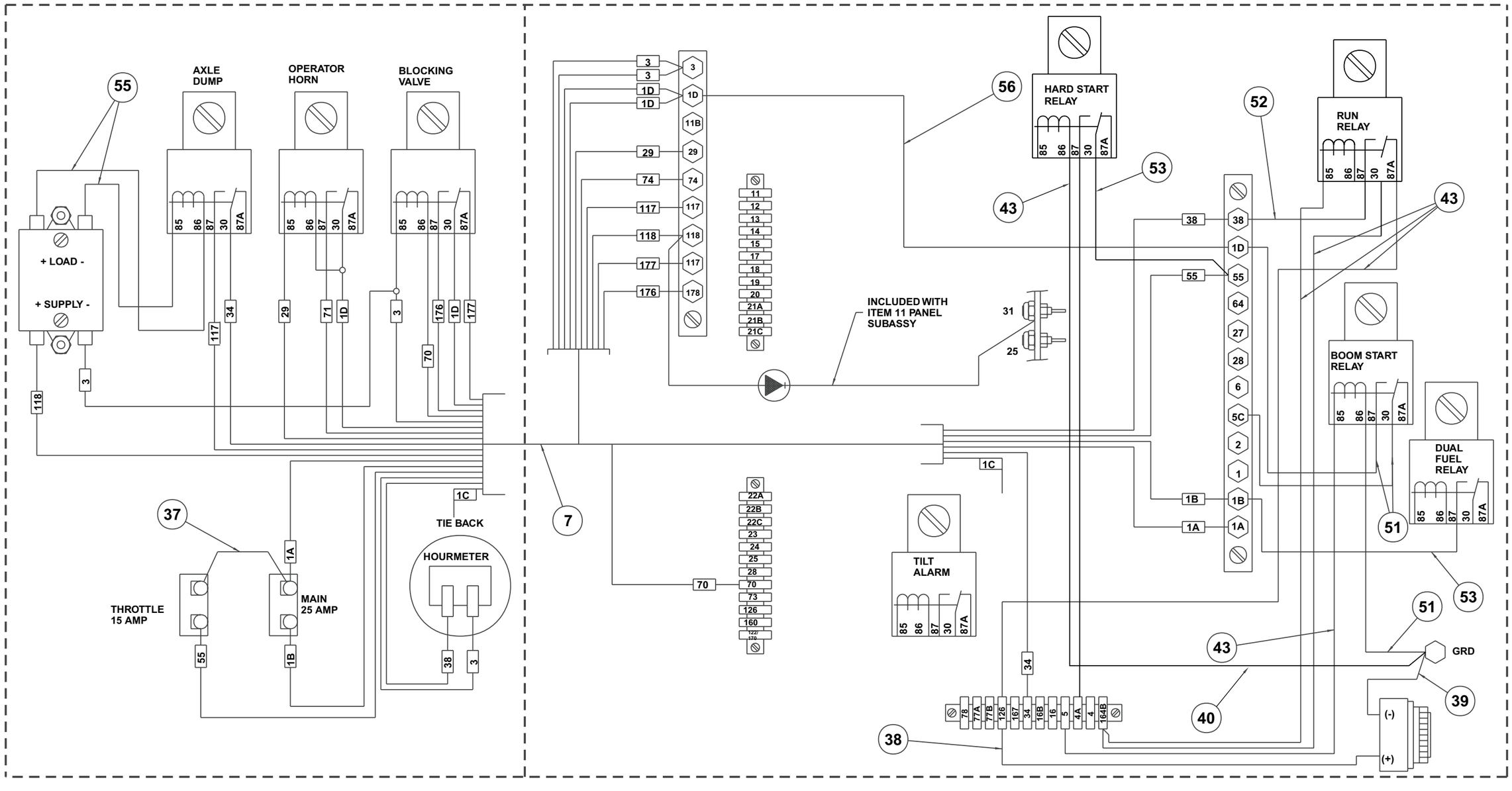

View thousands of Crane Specifications on FreeCraneSpecs.com
View thousands of Crane Specifications on FreeCraneSpecs.com
https://truckmanualshub.com/

View thousands of Crane Specifications on FreeCraneSpecs.com
https://truckmanualshub.com/

Wiring box panel

item	part no	qty	description
	0112165	1	Wiring box panel
1	0180796	1	Panel, drilled
2	3044712	1	Terminal strip, 12 circuit #10 stud
3	3040433	3	Terminal strip, 12 circuit .188 tab slip-on
4	0181552	1	Decal, power wire
5	0181553	1	Decal, terminal strip
6	0181107	1	Decal, control wire #2
7	0181106	1	Decal, control wire #1
8	3040469	4	Relay, 12 volt DC
9	3040287	1	Relay, 12 volt DC
10	0150488	1	Diode holder
	3040108	1	Replacement diode
11	5560038	22	Nut #10-32 self locking
12	974239	4	Machine screw #6-32 x 1/2 inch long round head
13	986159	4	Washer #6 medium flat
14	974689	1	Machine screw #10-24 x 3/4 inch long round head
15	974729	1	Machine screw #10-24 x 1-1/4 inch long round head
16	5560034	7	Nut #10-24 self locking
17	5560609	10	Machine screw #10-24 x 1/2 inch long truss head
18	987089	4	Washer #10 medium lock
19	987349	10	Washer #6 medium lock
20	0181554	1	Decal, diode
21	0073631	1	Diode stand off
22	0070681	1	Jumper wire
23	0070711	1	Jumper wire
24	0071812	2	Jumper wire
25	5560703	1	Washer #10 star tooth lock
26	0070682	1	Diode wire
27	0181073	1	Resister wire - (5 ohm)
28	0140317	3	Diode wire
29	0151205	1	Jumper wire
30	0081560	1	Jumper wire
31	0070724	2	Jumper wire
32	0181110	4	Diode wire
	3040108	1	Replacement diode
33	0181031	2	Jumper wire
34	0081559	1	Jumper wire
35	0081515	1	Jumper wire
36	0181030	1	Diode wire
37	0181136	2	Jumper wire
38	0181111	2	Jumper wire
39	0112164	1	Diode wire
40	0070713	2	Jumper wire
41	0140323	2	Jumper wire
42	0140332	2	Jumper wire
43	0073252	1	Jumper wire
44	974279	6	Machine screw #6-32 x 3/4 inch long round head
45	0090621	1	Jumper wire
46	0110471	1	Diode wire
47	0170335	1	Diode wire
48	0181113	1	Jumper wire
49	0073253	2	Jumper wire
50	984049	1	Nut #10-24 hex

View thousands of Crane Specifications on FreeCraneSpecs.com
https://truckmanualshub.com/

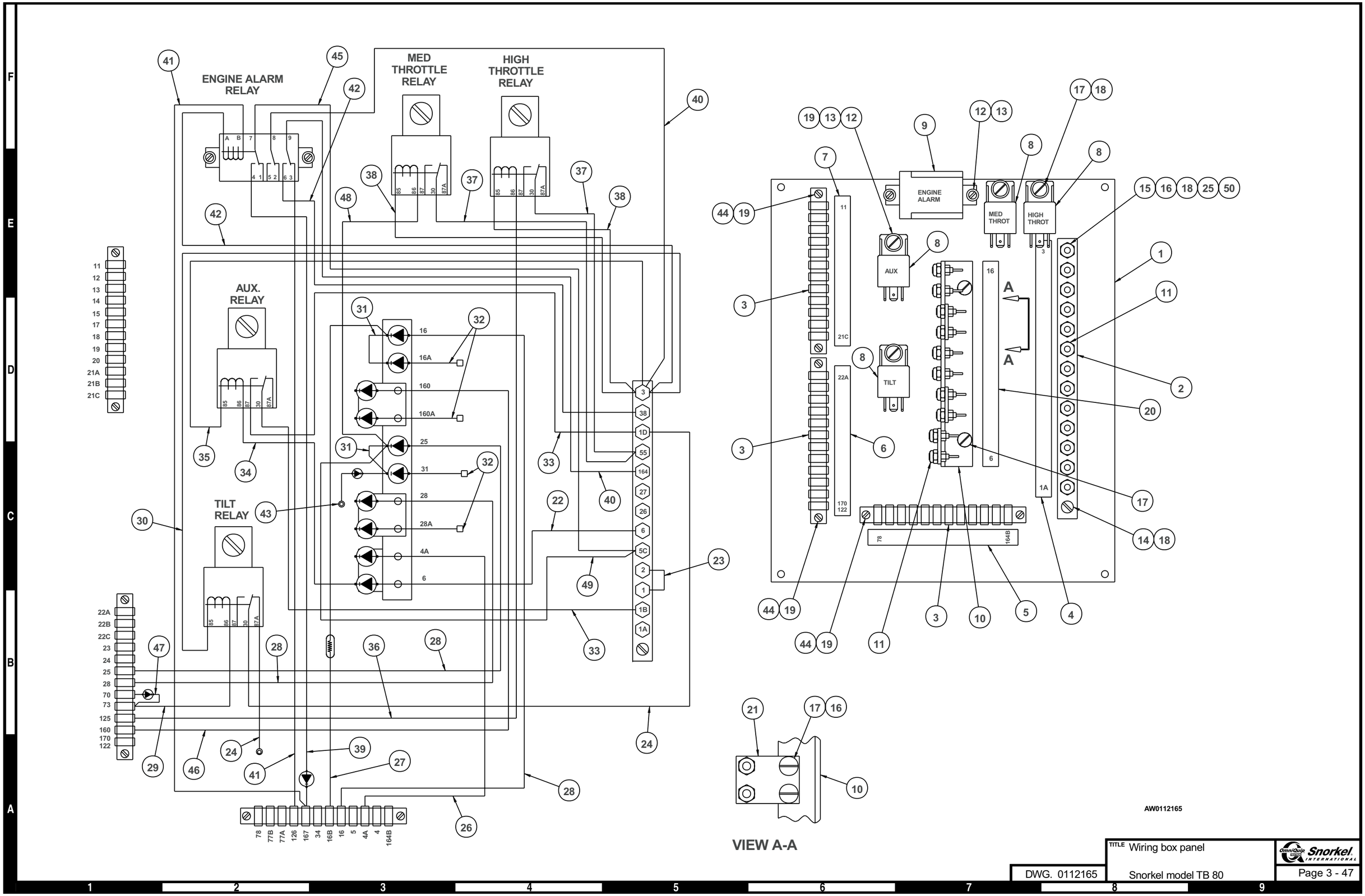

TITLE Wiring box panel

Snorkel model TB 80

DWG. 0112165

View thousands of Crane Specifications on FreeCraneSpecs.com
https://truckmanualshub.com/

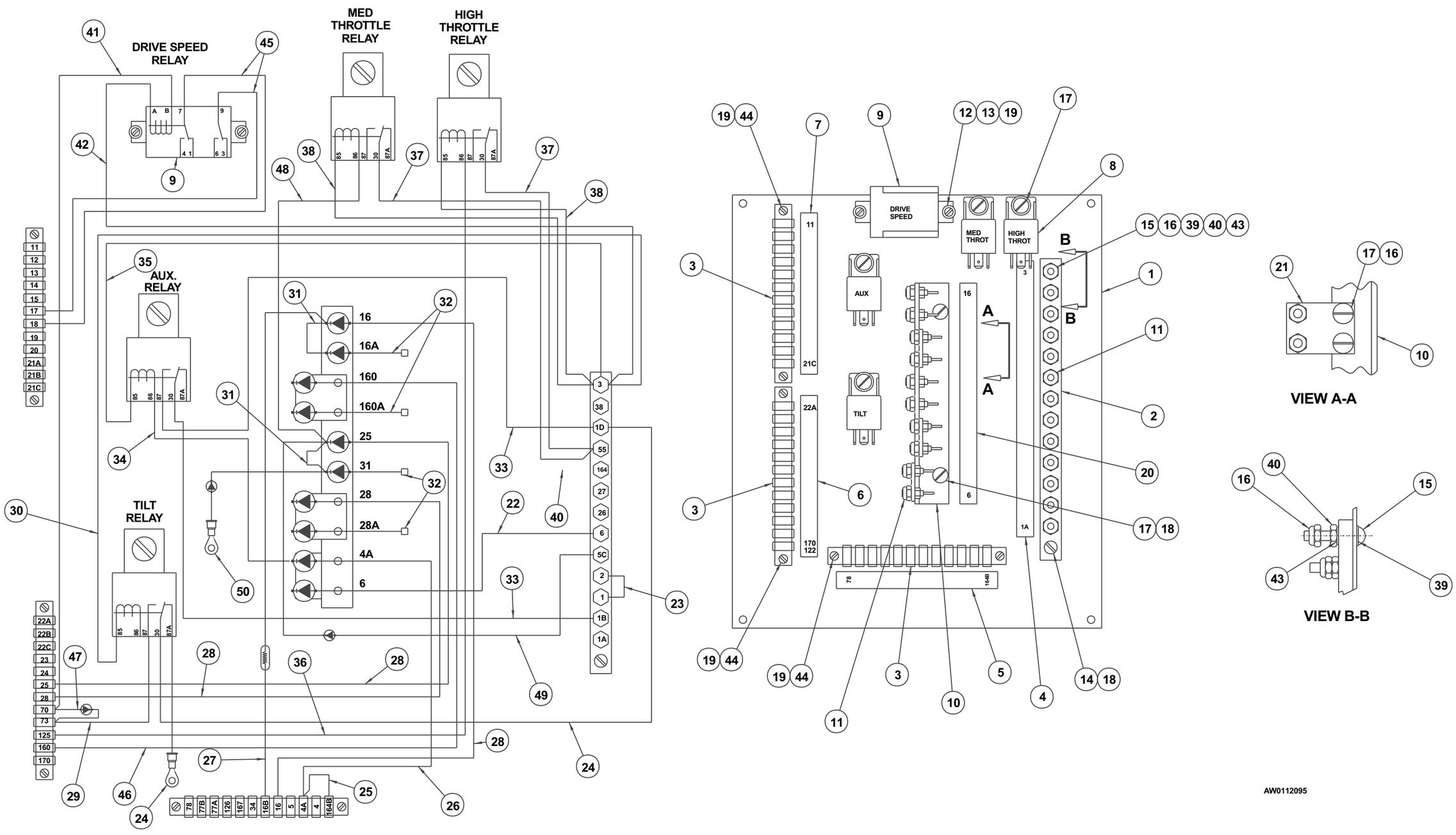

Snorkel INTERNATIONAL

TITLE Wiring box panel
Ford LRG-425 wiring box
Snorkel model TB 80

DWG. 0112095

View thousands of Crane Specifications on FreeCraneSpecs.com

Wiring box panel, Ford LRG-425

item	part no	qty	description
	0112095	1	Wiring box panel, Ford LRG-425
1	0180796	1	Panel, drilled
2	3044712	1	Terminal strip, 12 circuit #10 stud
3	3040433	3	Terminal strip, 12 circuit .188 tab slip-on
4	0181552	1	Decal, power wire
5	0181553	1	Decal, terminal strip
6	0181107	1	Decal, control wire #2
7	0181106	1	Decal, control wire #1
8	3040469	4	Relay, 12 volt DC
9	3040214	1	Relay, 12 volt DC
10	0150488	1	Diode holder
	3040108	1	Replacement diode
11	5560038	22	Nut #10-32 self locking
12	974239	4	Machine screw #6-32 x 1/2 inch long round head
13	986159	4	Washer #6 medium flat
14	974689	1	Machine screw #10-24 x 3/4 inch long round head
15	974729	1	Machine screw #10-24 x 1-1/4 inch long round head
16	5560034	7	Nut #10-24 self locking
17	5560609	12	Machine screw #10-24 x 1/2 inch long truss head
18	987089	3	Washer #10 medium lock
19	987349	10	Washer #6 medium lock
20	0181554	1	Decal, diode
21	0073631	3	Diode stand off
22	0070681	1	Jumper wire
23	0070711	1	Jumper wire
24	0071812	7	Jumper wire
25	0110468	1	Jumper wire
26	0070682	1	Diode wire
27	0181073	1	Resister wire - (5 ohm)
28	0140317	3	Diode wire
29	0151205	1	Jumper wire
30	0081560	1	Jumper wire
31	0070724	2	Jumper wire
32	0181110	4	Diode wire
	3040108	1	Replacement diode
33	0181031	2	Jumper wire
34	0081559	1	Jumper wire
35	0081515	1	Jumper wire
36	0181030	1	Diode wire
37	0181136	2	Jumper wire
38	0181111	2	Jumper wire
39	5560703	1	Washer #10 star tooth lock
40	984049	1	Nut #10-24 hex
41	0140323	1	Jumper wire
42	0140332	1	Jumper wire
43	987089	1	Washer #10 medium lock
44	974279	6	Machine screw #6-32 x 3/4 inch long round head
45	0100522	2	Jumper wire
46	0110471	1	Diode wire
47	0170335	1	Diode wire
48	0181113	1	Jumper wire
49	0073253	1	Jumper wire
50	0073252	1	Jumper wire

View thousands of Crane Specifications on FreeCraneSpecs.com
https://truckmanualshub.com

Platform foot switch

item	part no	qty	description
	0071800	1	Platform foot switch
1	3020021	1	Foot switch
	3020037	1	Replacement switch, Square D switch
	3020038	1	Replacement switch, Linemaster switch
2	0070596	1	Wire harness, platform foot switch
3	3040116	1	Connector
4	3040110	1	Locknut
5	0070967	1	Corrosion inhibitor
6	0060373	1	Jumper strap - (used on Square D switch only)

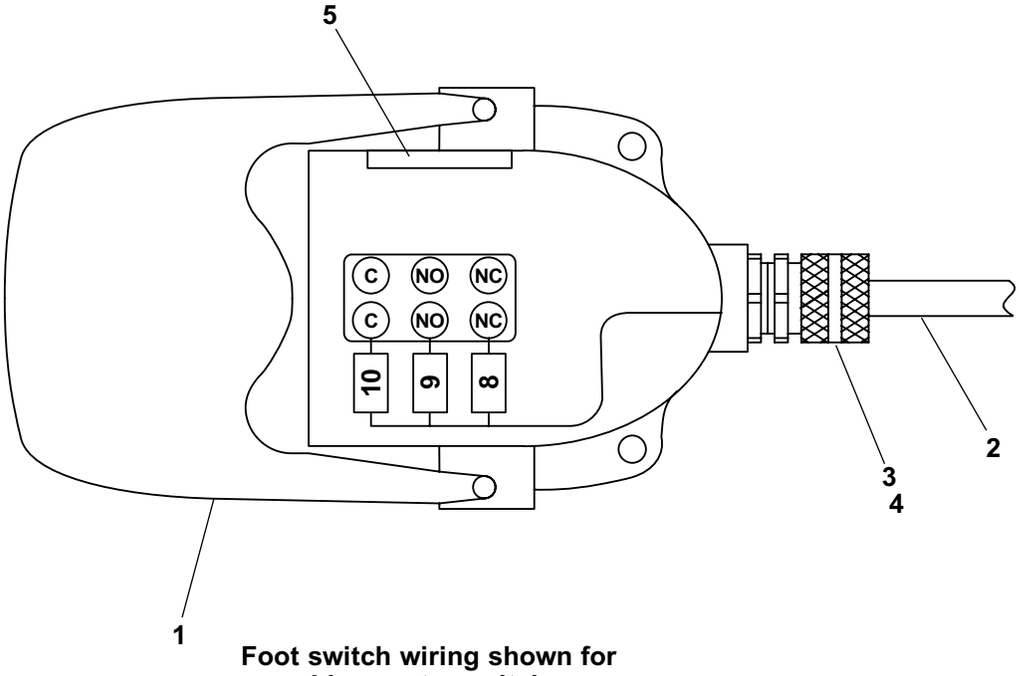

Foot switch wiring shown for Linemaster switch

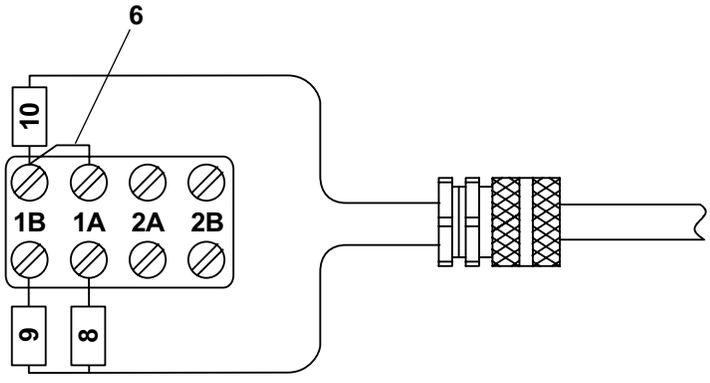

Foot switch wiring shown for Square D switch

AW0071800

View thousands of Crane Specifications on FreeCraneSpecs.com
https://truckmanualshub.com/

Upper control box

item	part no	qty	description
1	0111928	1	Control box
2	0180846	1	Placard, upper control box front
3	5560663	1	Washer #6 star tooth locking
4	3040068	1	Circuit breaker, 20 amp capacity
5	3020090	1	Switch, anti-restart
6	3040116	3	Connector
7	3040110	5	Connector locknut
8	3040493	1	Controller, lift/swing - (see page 3-64 for parts breakdown)
9	3040492	1	Controller, drive/steer - (see page 3-60 for parts breakdown)
10	3040285	1	Connector
11	3020018	2	Switch, toggle
12	0101878	1	Jumper wire
13	3020013	2	Switch, toggle
14	5560648	1	Machine screw #10-24 x 3/4 inch long truss head
15	5560034	4	Nut #10-24 self locking
16	0180886	1	Decal, power wire
17	5560038	10	Nut #10-32 self locking
18	3044710	1	Terminal strip, 10 circuit #10 stud
19	3040057	1	Terminal strip, 18 circuit .188 tab slip-on
20	0180887	1	Decal, control wire #1
21	974279	3	Machine screw #6-32 x 3/4 inch
22	986159	4	Washer #6 medium flat
23	987349	4	Washer #6 medium lock
24	984009	4	Nut #6-32 hex
25	3020080	1	Switch, toggle
26	3040469	2	Relay, 12 volt DC
27	3040535	3	Circuit breaker, 3 amp capacity
28	480652	1	Siren, tilt alarm
29	0070967	1	Corrosion inhibitor
30	0072530	1	Decal, danger electrical hazard
31	0151910	1	Jumper wire
32	0180850	1	Wire harness, upper control box power
33	0082007	1	Wire harness, upper control box control
34	3040295	1	Connector
35	3040433	1	Terminal strip, 12 circuit .188 tab slip-on
36	987089	1	Washer #10 medium lock
37	7190001	1	Gasket, weatherproof x 72 inch long
38	0180888	1	Decal, control wire #2
39	0070713	1	Jumper wire
40	974269	1	Machine screw #6-32 x 1 inch long round head
41	0072388	1	Jumper wire
42	986019	2	Washer 1/4 medium flat
43	0070746	2	Jumper wire
44	0070753	1	Jumper wire
45	0060373	2	Jumper strap
46	0070712	3	Jumper wire
47	0181029	1	Jumper wire
48	986009	1	Washer #10 medium flat
49	984069	2	Nut 1/4-20 hex
50	0070711	1	Jumper wire
			Parts list continued on next page

View thousands of Crane Specifications on FreeCraneSpecs.com
https://truckmanualshub.com/

Upper control box

item	part no	qty	description
51	5560703	1	Washer #10 star tooth lock
52	984049	1	Nut #10-24 hex
53	0110468	1	Jumper wire
54	0090622	2	Jumper wire
55	0181103	1	Jumper wire
56	0071557	1	Jumper wire
57	0071812	1	Jumper wire
58	0151816	1	Jumper wire
59	3040411	1	Mini siren, engine alarm
60	5560609	2	Machine screw #10-24 x 1/2 inch long truss head
61	970029	2	Capscrew 1/4-20 x 3/4 inch long hex head grade 5
62	5560004	2	Nut 1/4-20 self locking
63	5569711	1	Grommet
64	0073295	2	Jumper wire
65	5560649	2	Machine screw #10-24 x 1 inch long truss head
66	0110598	1	Jumper wire
67	3026027	1	Switch, push button
68	7140092	1	Switch seal
69	0071269	1	Placard, horn
70	0070733	1	Jumper wire
71	3040525	1	Controller, extend/retract - (see page 3-62 for parts breakdown)
72	0110959	1	Placard, upper control box top
73	3020020	1	Switch, emergency stop push/pull
	3040194	1	Replacement switch knob
74	0070922	1	Placard, platform rotation
75	0070747	4	Jumper wire
76	0181028	1	Jumper wire
77	0240483	1	Jumper wire
78	0070758	2	Jumper wire
79	0151556	1	Jumper wire

View thousands of Crane Specifications on FreeCraneSpecs.com
https://truckmanualshub.com/

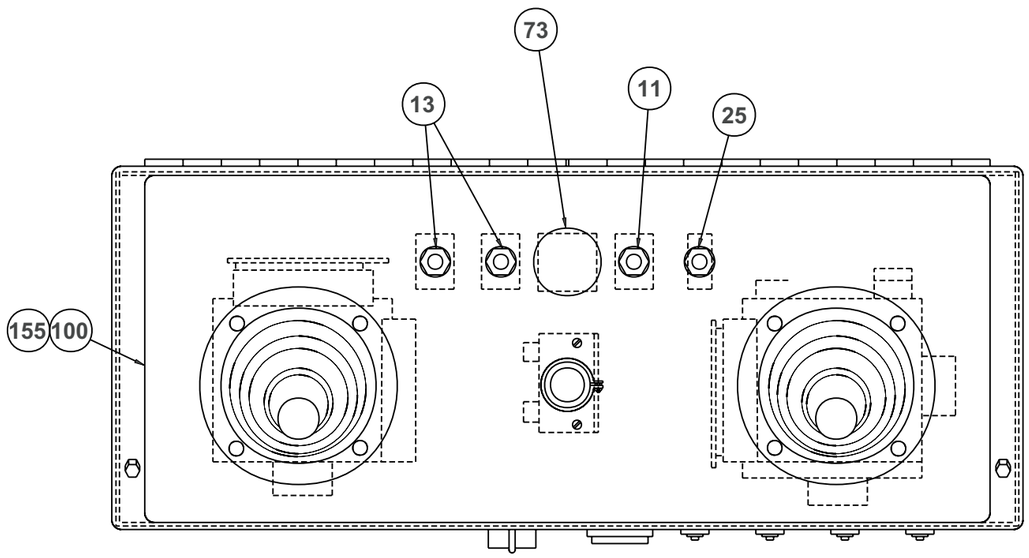

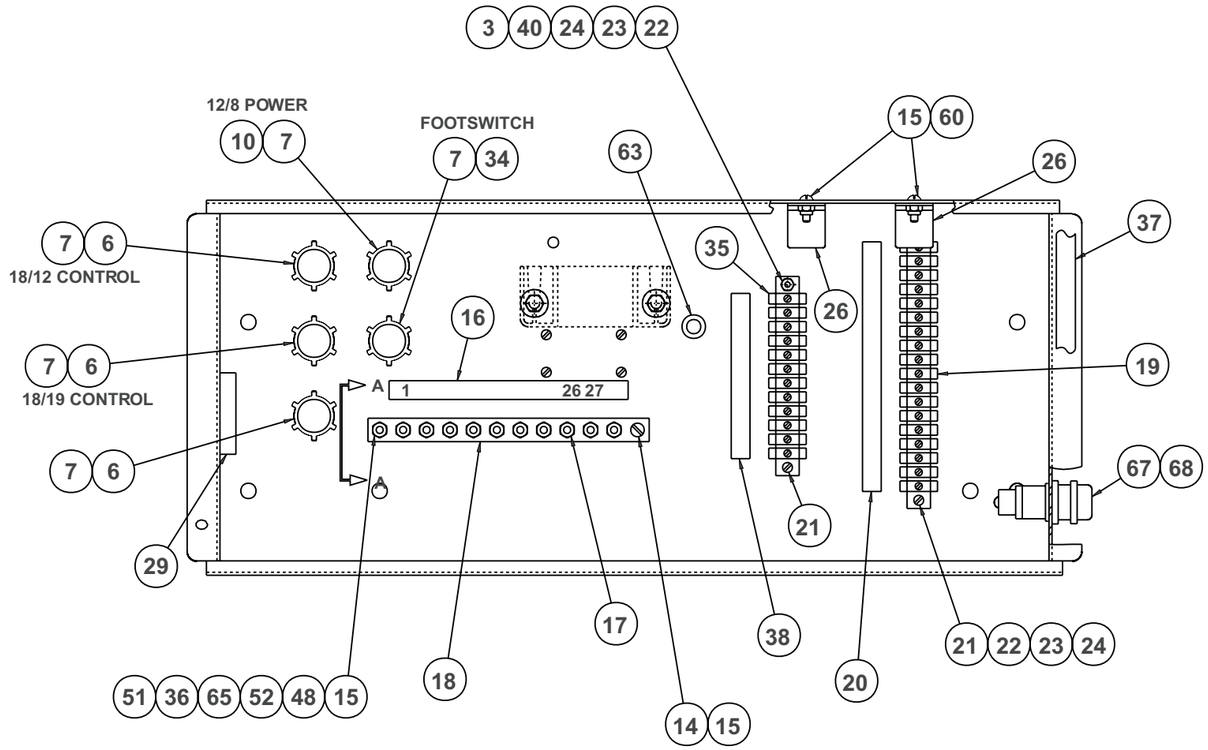

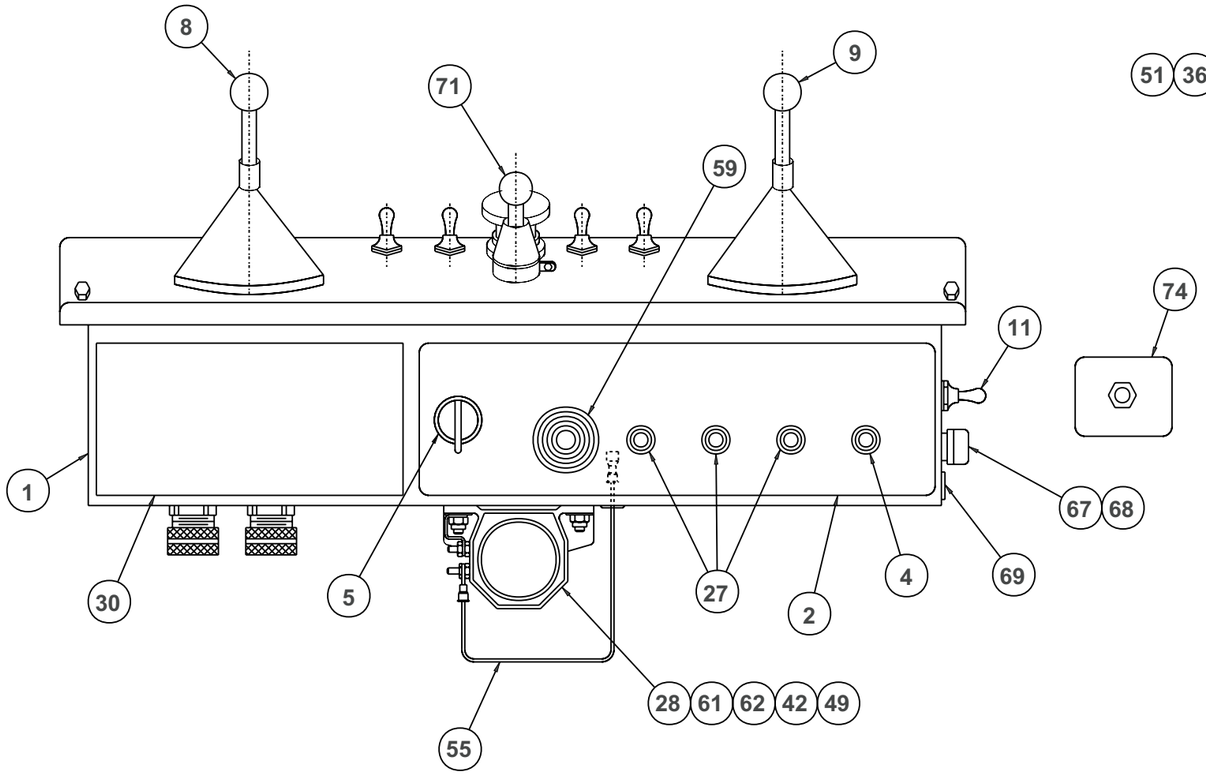

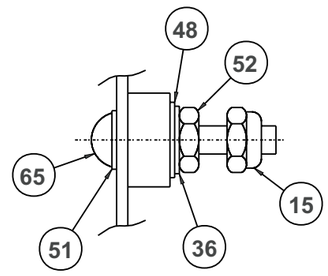

VIEW A-A

AW01116B-1

TITLE Upper control box
sheet 1
Snorkel model TB 80

Snorkel INTERNATIONAL

View thousands of Crane Specifications on FreeCraneSpecs.com
https://truckmanualshub.com/

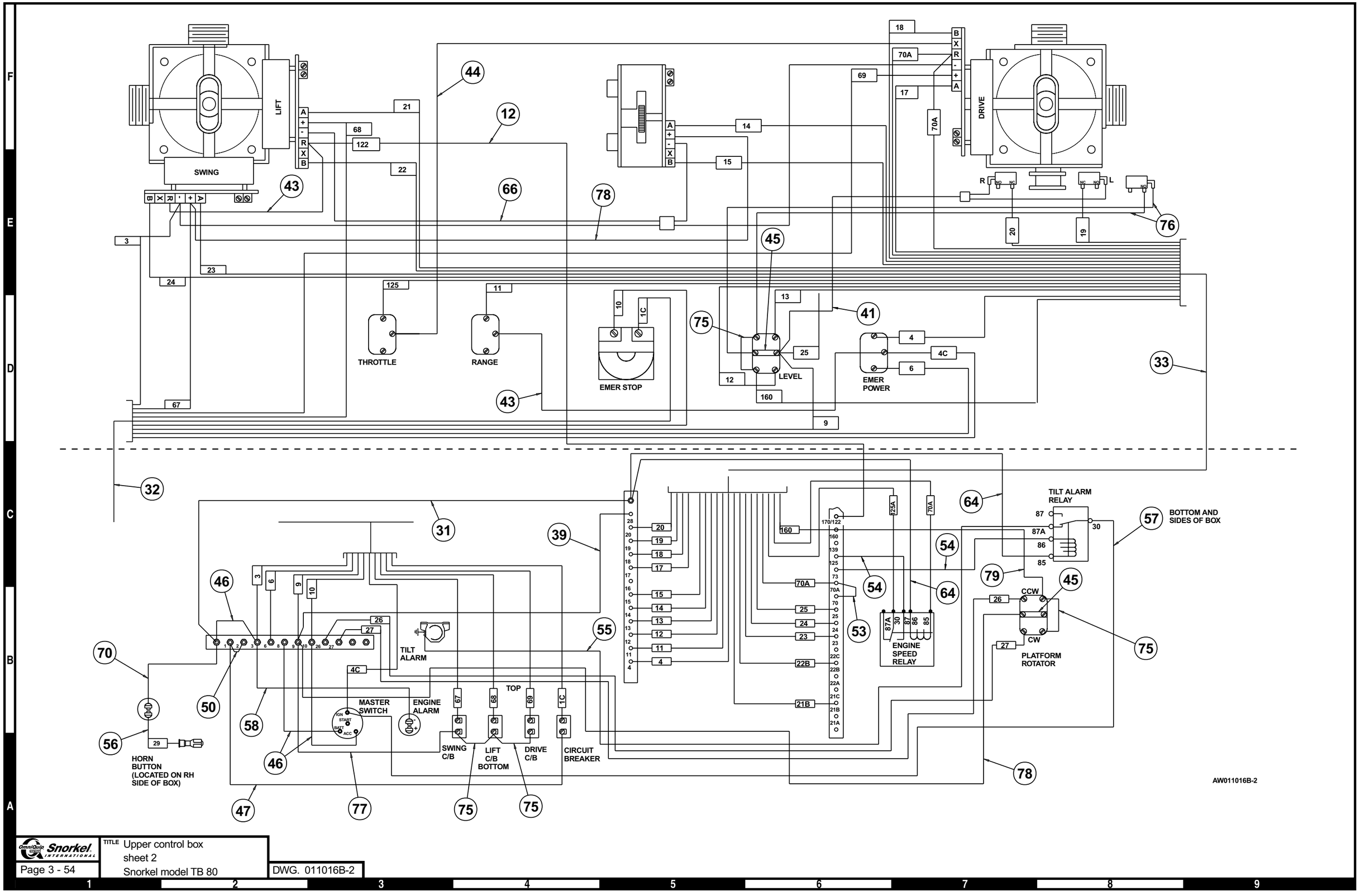

Snorkel INTERNATIONAL

TITLE Upper control box
sheet 2
Snorkel model TB 80

DWG. 011016B-2

View thousands of Crane Specifications on FreeCraneSpecs.com
https://truckmanualshub.com

Boom switch, drive speed

item	part no	qty	description
	0111888	1	Boom switch, drive speed
1	3020019	1	Switch
2	0111890	1	Wire harness, drive speed boom switch
3	3040187	1	Connector
4	3040070	1	Locknut

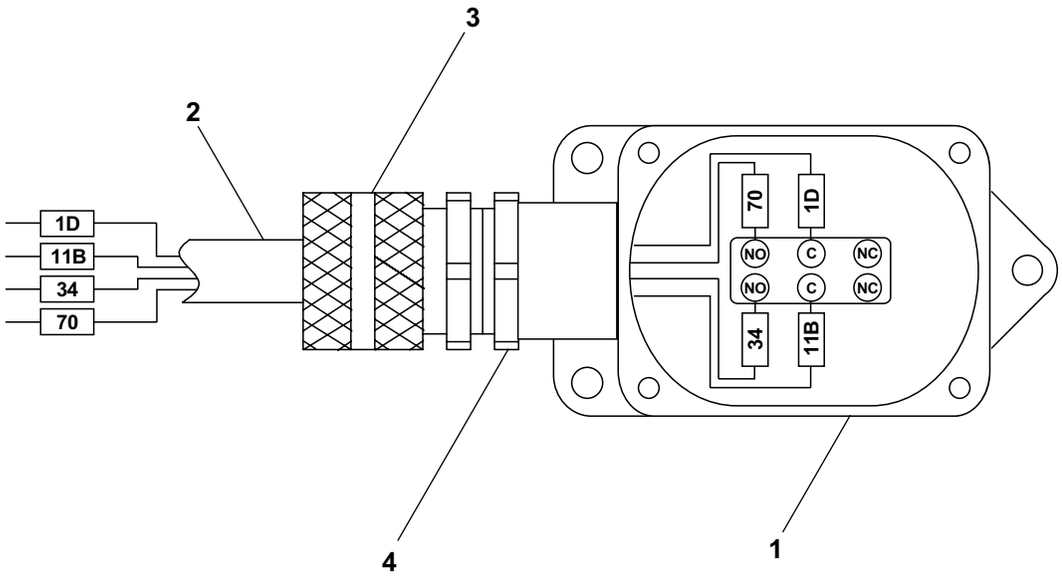

View thousands of Crane Specifications on FreeCraneSpecs.com
https://truckmanualshub.com/

Boom switch, lift/swing speed

item	part no	qty	description
	0111889	1	Boom switch, lift/swing speed
1	3020019	1	Switch
2	0111891	1	Wire harness, lift/swing speed boom switch
3	3040187	1	Connector
4	3040070	1	Locknut

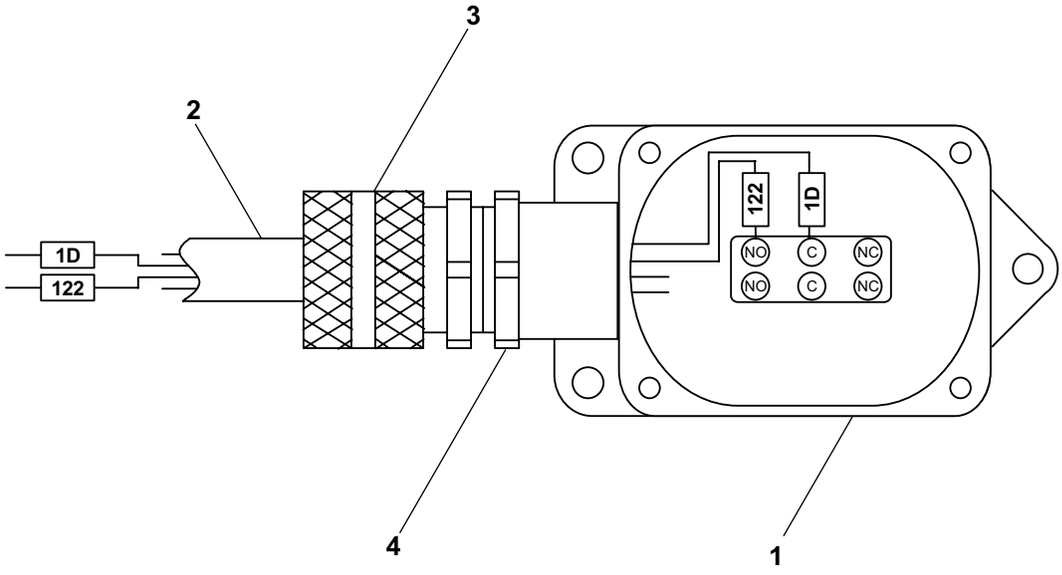

View thousands of Crane Specifications on FreeCraneSpecs.com
https://truckmanualshub.com

Electric fuel pump

item	part no	qty	description
	0111868	1	Electric fuel pump and filter
1	7630085	1	Electric fuel pump
2	5090006	1	Street 90° elbow, brass
3	7630153	1	Fuel filter
4	5090035	1	Vacuum fitting
5	3040082	1	Terminal .250 tab male slip-on fully insulated 16/14 wire

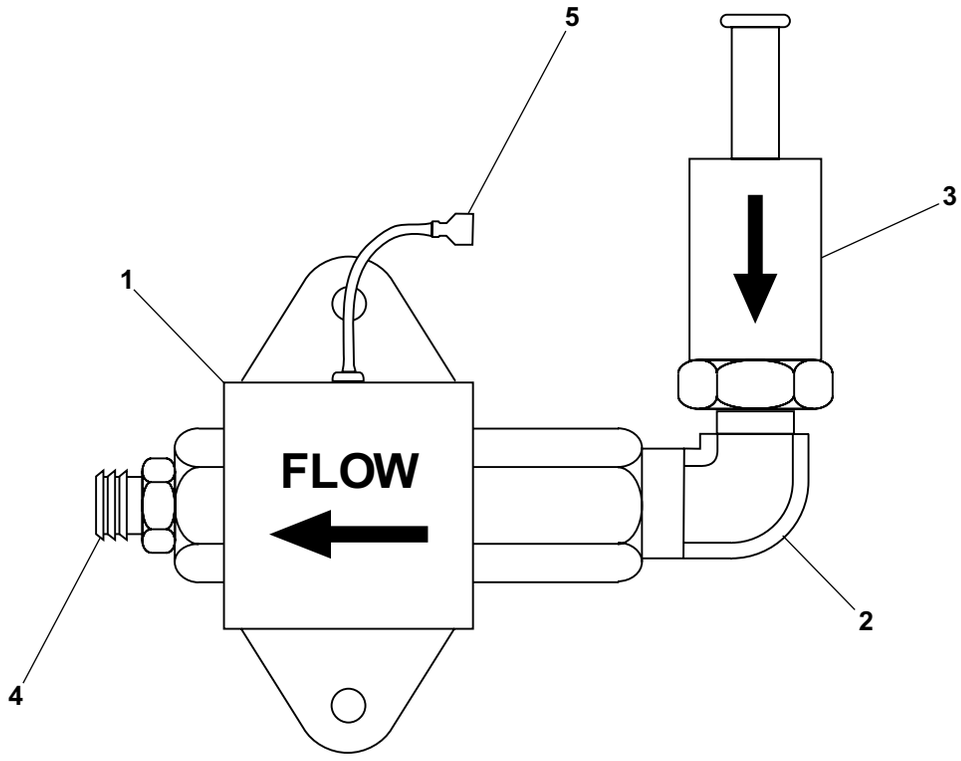

AW0111868

View thousands of Crane Specifications on FreeCraneSpecs.com
https://truckmanualshub.com

GFCI 110 volt power

item	part no	qty	description
1	3040252	1	Circuit breaker, 15 amp capacity
2	3044854	1	Terminal ring tongue insulated 12/10 wire
3	0071582	1	Jumper wire
4	3040624	1	Receptacle, GFCI outlet - 20 amp
5	3040397	2	Terminal #8 spade 12/10 wire
6	3040691	1	Connector
7	0074368	1	Cable, 110 volt power to platform - (used on aluminum platforms only)
8	3040116	1	Connector
9	3040110	1	Locknut
10	3044072	2	Terminal butt connector insulated 12/10 wire
11	3044836	1	Terminal ring tongue insulated 12/10 wire
12	0074379	1	Electrical box, drilled
13	3040625	1	Cover, GFCI outlet
14	0074369	1	Cable, 110 volt power to platform - (used on steel platforms only)
15	978629	2	Capscrew 1/4-20 x 1/2 inch long hex head self tapping

View thousands of Crane Specifications on FreeCraneSpecs.com
https://truckmanualshub.com/

GFCI 110 volt power

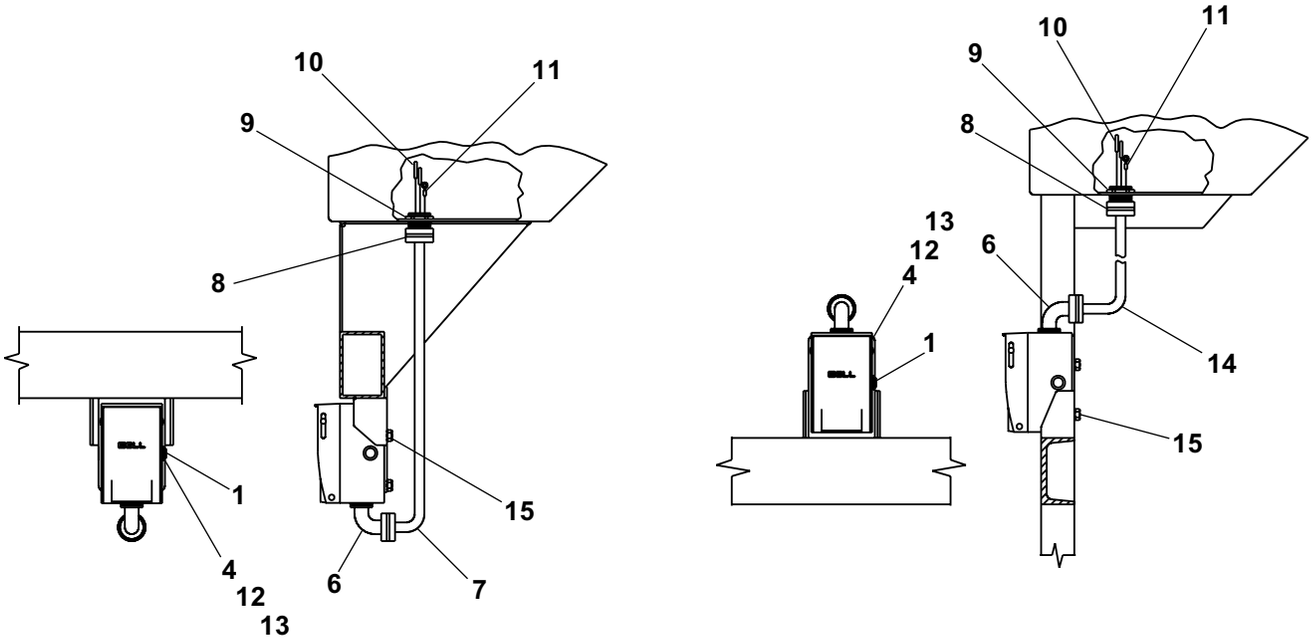

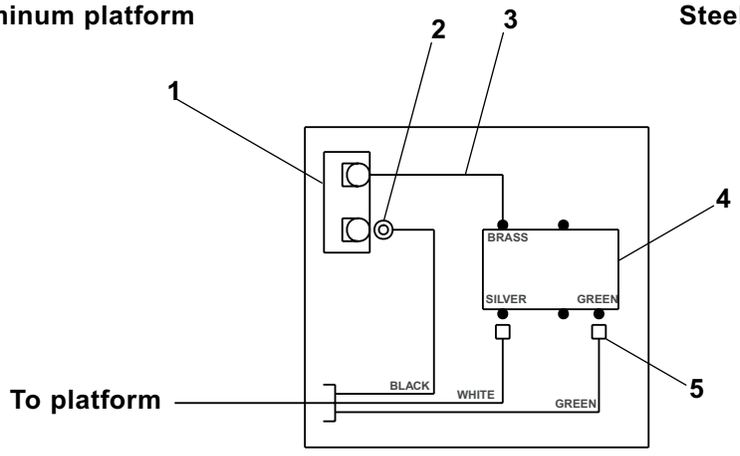

110 volt outlet on platform

AWA07034

View thousands of Crane Specifications on FreeCraneSpecs.com
https://truckmanualshub.com/

Controller, drive/steer

item	part no	qty	description
	3040492	1	Controller, drive/steer
1	2660002	1	Knob
2	3040086	1	Shaft
3	3040146	1	Boot
4	8150145	1	Ring
5	8150146	1	Tension clip
6	040169	1	Boot clamp ring
7	8150147	2	Cam
8	8150009	1	Fixed cam
9	8150135	4	“E” clip
10	8150148	1	Modified bracket
11	8150138	4	Insulator
12	8150139	2	Insulator
13	3020033	6	Microswitch
14	8150136	2	Cam spacer
15	8150149	1	Brass washer
16	8150005	2	Spring return with housing
17	8150004	2	Spring return bolt
18	8150150	2	Washer
19	8150144	2	Washer split 5M black
20	8150143	2	Nut 5M hex
21	8150003	1	Casting, modified
22	3040271	4	Bushing
23	8150094	1	Second axis
24	8150151	1	Bracket, right side
25	8150152	1	Bracket, left side
26	3040073	1	Drive gear
27	3040072	1	Slave gear
28	8150082	2	Blank cam shaft
29	8150013	4	Tension pin
30	8150153	1	Heat sink
31	8150140	4	Screw #4-40 x 1-1/4 inch long
32	8150137	4	Screw #4-40 x 3/4 inch long
33	3040392	1	Pot with bracket and connector
34	8150084	2	Fixed cam
35	8150154	2	Screw metric M4 x 6mm long din 85
36	8150155	2	Washer metric M4
37	8150141	2	Washer metric M3.5 x 16mm long din 85
38	8150156	4	Washer
39	8150142	1	Gate for drive/steer controller
40	3040518	1	Circuit board, 33 Hertz - (trim pots not preset, controller adjustment required)

View thousands of Crane Specifications on FreeCraneSpecs.com
https://truckmanualshub.com/

Controller, drive/steer

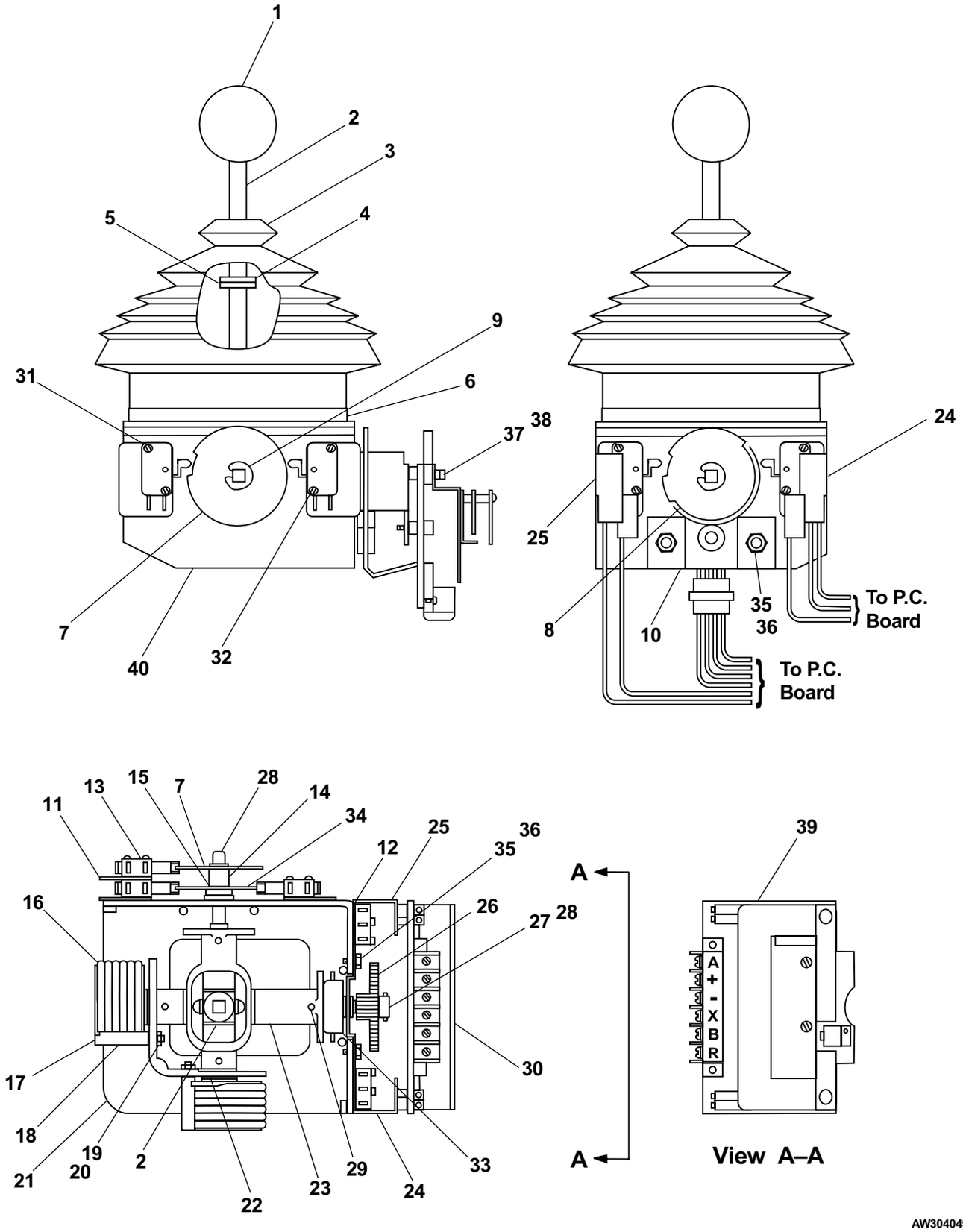

View thousands of Crane Specifications on FreeCraneSpecs.com
https://truckmanualshub.com/

Controller, extend/retract

item	part no	qty	description
	3040525	1	Controller, extend/retract
1	8150087	1	Knob
2	8150008	1	Tension clip
3	8150090	1	Ring
4	8150210	1	Circuit board
5	8150102	1	Slave gear
6	8150200	1	Coupling
7	8150204	2	Stand-off
8	8150201	1	Boot
9	8150209	2	Screw #4-40 x 7/8 inch long
10	8150202	2	Switch, micro
11	8150072	1	Insulator
12	8150129	1	Insulator
13	8150206	2	Mounting screw metric M3.5 x 12mm long
14	8150208	1	Cam, dual on/off

View thousands of Crane Specifications on FreeCraneSpecs.com
https://truckmanualshub.com

Controller, extend/retract

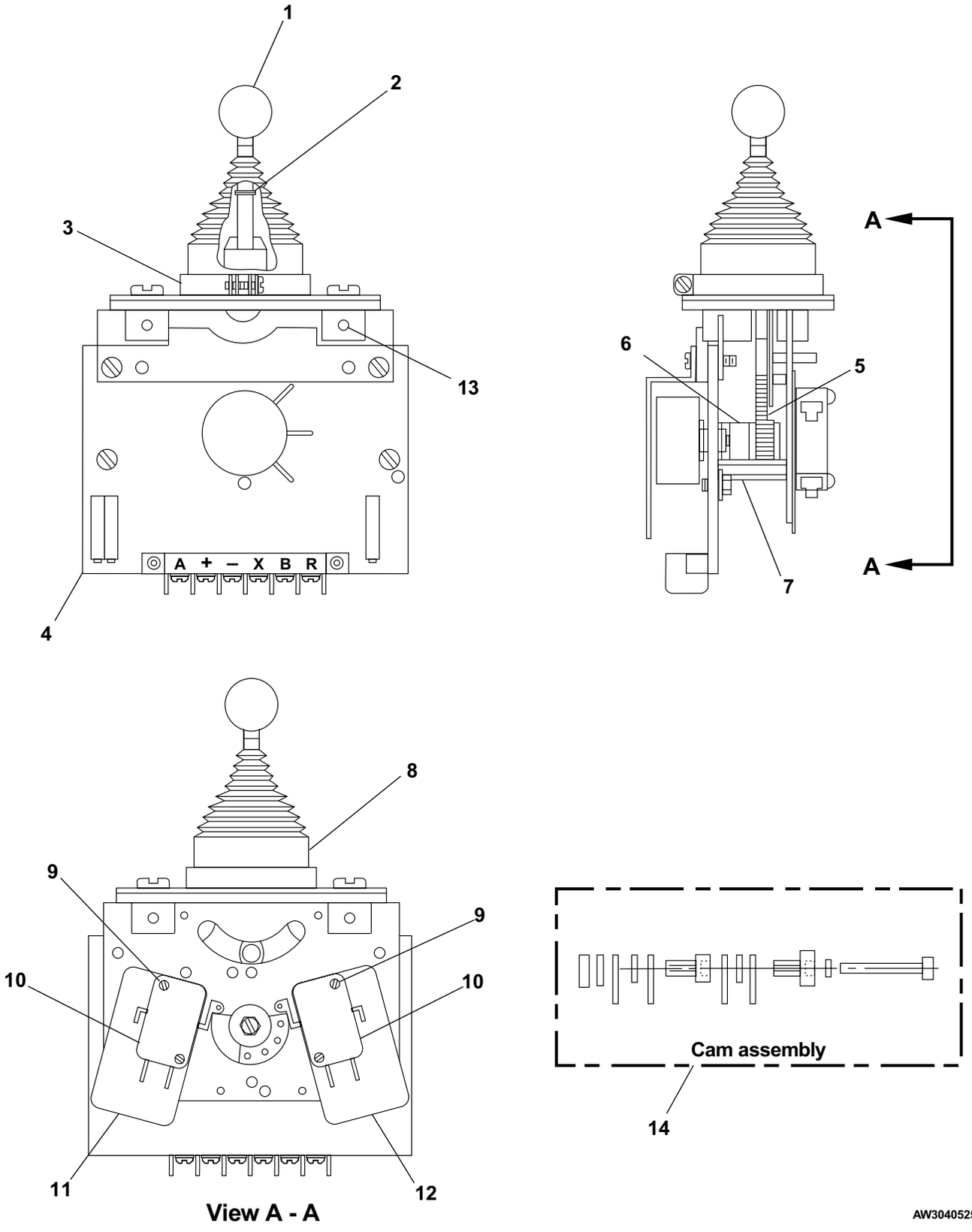

View thousands of Crane Specifications on FreeCraneSpecs.com
https://truckmanualshub.com/

Controller, lift/swing

item	part no	qty	description
	3040493	1	Controller, lift/swing
1	2660002	1	Knob
2	3040086	1	Shaft
3	3040146	1	Boot
4	8150145	1	Ring
5	8150146	1	Tension clip
6	3040169	1	Boot clamp ring
7	8150009	1	Fixed cam
8	8150135	4	“E” clip
9	8150148	2	Modified bracket
10	8150138	4	Insulator
11	3020033	4	Microswitch
12	8150005	2	Spring return with housing
13	8150004	2	Spring return bolt
14	8150150	2	Washer
15	8150144	2	Washer split 5M black
16	8150143	2	Nut 5M hex
17	8150003	1	Casting, modified
18	3040271	4	Bushing
19	8150094	1	Second axis
20	8150151	2	Bracket, right side
21	8150152	2	Bracket, left side
22	3040073	2	Drive gear
23	3040072	2	Slave gear
24	8150082	4	Blank cam shaft
25	8150013	4	Tension pin
26	8150153	2	Heat sink
27	8150140	8	Screw #4-40 x 1-1/4 inch long
28	3040392	2	Pot with bracket and connector
29	8150154	4	Screw metric M4 x 6mm long din 85
30	8150155	4	Washer metric M4
31	8150141	4	Screw metric M3.5 x 16mm long din 85
32	8150156	8	Washer
33	3040518	1	Circuit board, 33 Hertz - (trim pots not preset, controller adjustment required)

View thousands of Crane Specifications on FreeCraneSpecs.com
https://truckmanualshub.com/

Controller, lift/swing

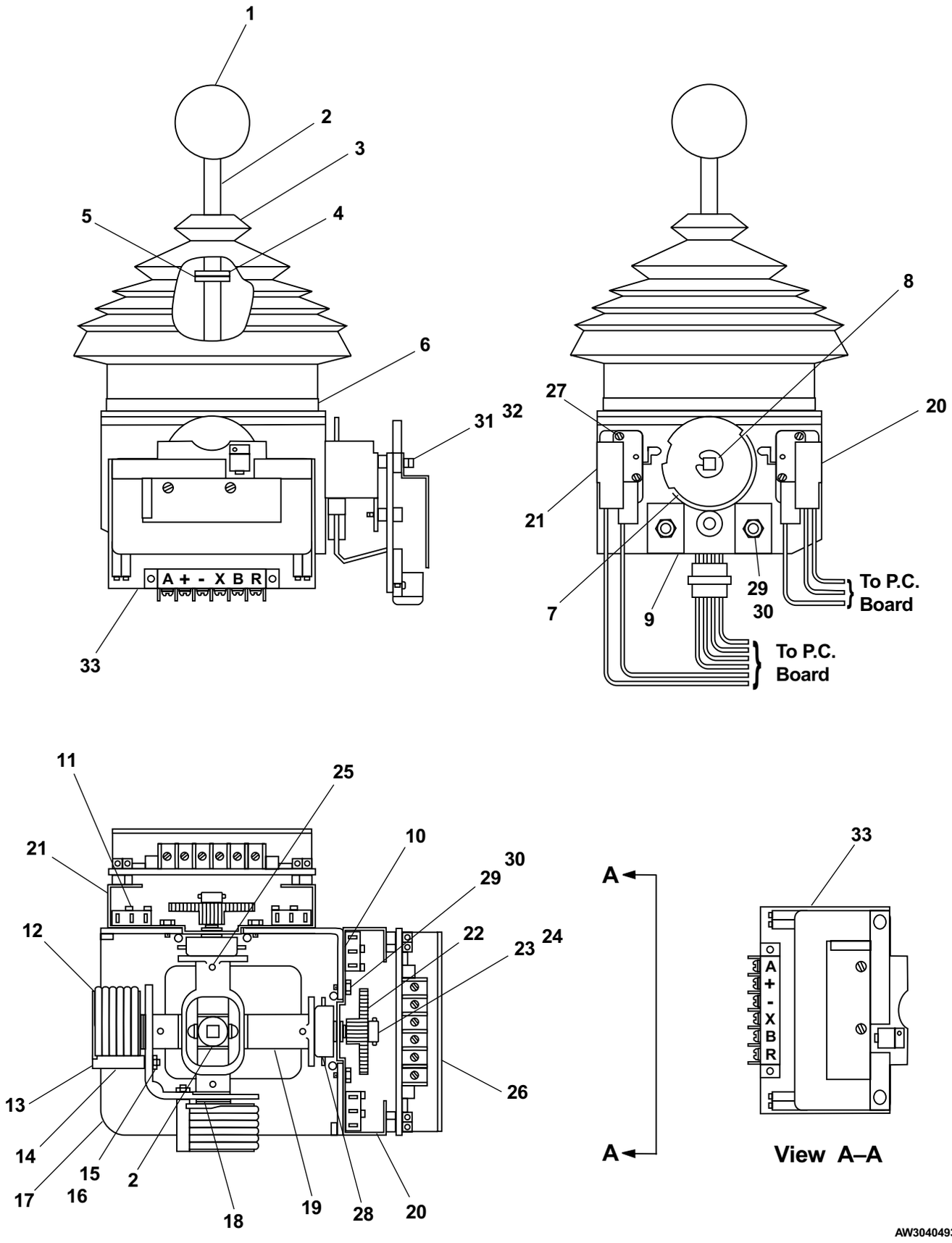

View thousands of Crane Specifications on FreeCraneSpecs.com
View thousands of Crane Specifications on FreeCraneSpecs.com
https://truckmanualshub.com/

View thousands of Crane Specifications on FreeCraneSpecs.com
https://truckmanualshub.com/

TB 80

OmniQuip® TEXTRON

Snorkel® INTERNATIONAL

View thousands of Crane Specifications on FreeCraneSpecs.com
https://truckmanualshub.com

AC generator mounting

item	part no	qty	description
1	0151471	1	AC generator - (see page 4-5 for parts breakdown
2	0073163	1	Guard, cable retention
3	0112047	1	Cable, 110 volt power AC generator
4	0151583	1	Start-up and test procedure
5	0151459	1	Placard, AC generator
6	3020048	1	Switch, toggle
7	3040046	3	Terminal .250 tab male slip-on fully insulated 22/18 wire
8	3040064	1	Terminal .250 tab male slip-on fully insulated 12/10 wire
9	0090757	2	Jumper wire
10	0070747	3	Jumper wire
11	0071517	3	Jumper wire
12	0071541	1	Jumper wire
13	0181187	1	Jumper wire
14	3044145	1	Terminal #8 stud insulated 22/18 wire
15	3044146	1	Terminal #10 stud insulated 22/18 wire
16	3040452	1	Insulator boot
17	0073543	1	Shield
18	5093012	2	Hose clamp
19	0100271	2	1/4 inch hydraulic hose
20	0080362	2	3/8 inch hydraulic hose
21	5065708	1	Straight thread adapter
22	5037005	2	Swivel nut 90° elbow
23	5037003	1	Swivel nut 90° elbow
24	970479	1	Capscrew 3/8-16 x 1-1/4 inch long hex head grade 5
25	987109	1	Washer 5/16 medium lock
26	986299	1	Washer 3/8 medium flat
27	5560033	1	Nut 3/8-16 self locking
28	970269	1	Capscrew 5/16-18 x 1-1/4 inch long hex head grade 5
29	3040047	1	Terminal .250 tab female slip-on fully insulated 22/18 wire
30	986269	1	Washer 5/16 medium flat

View thousands of Crane Specifications on FreeCraneSpecs.com
https://truckmanualshub.com/

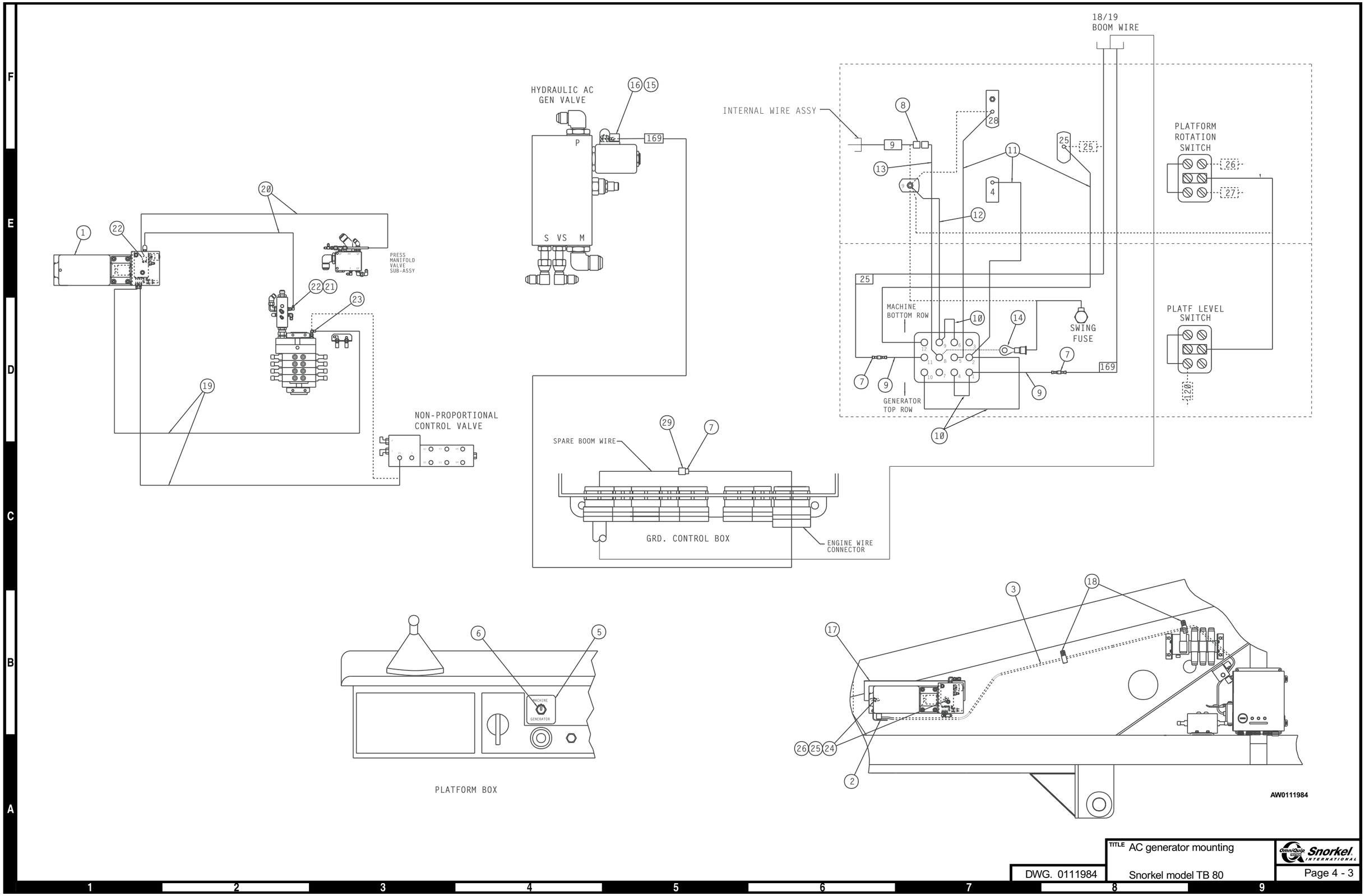

TITLE AC generator mounting

Snorkel model TB 80

DWG. 0111984

View thousands of Crane Specifications on FreeCraneSpecs.com
https://truckmanualshub.com/

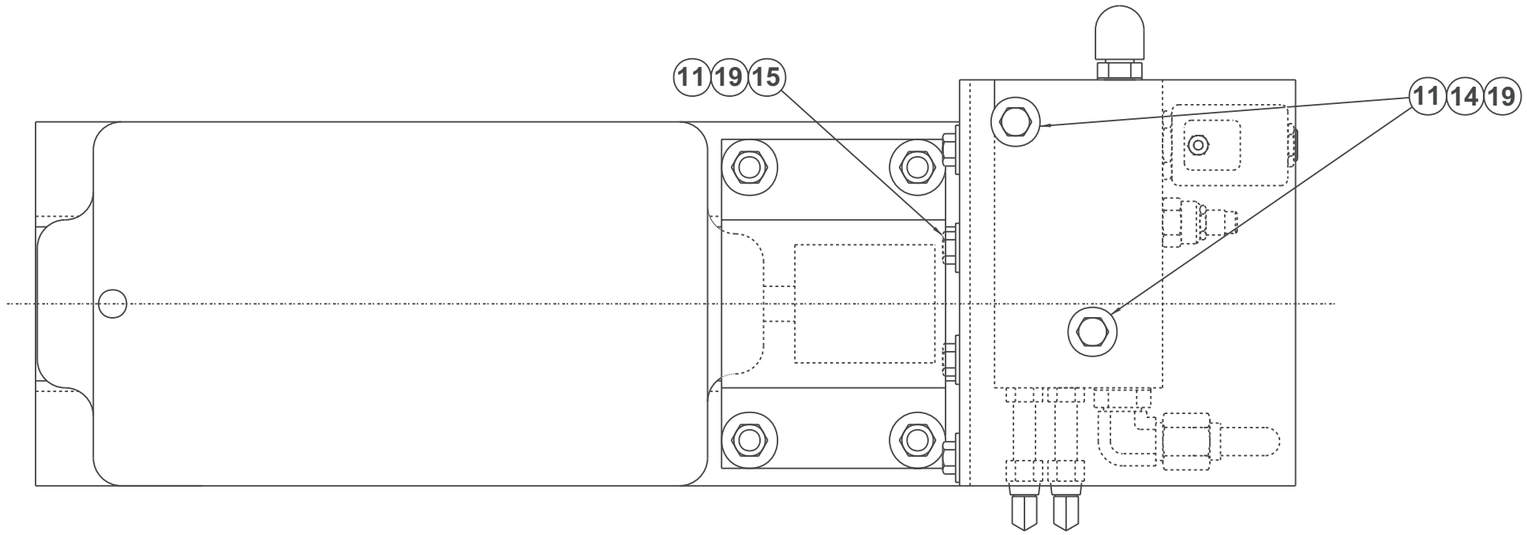

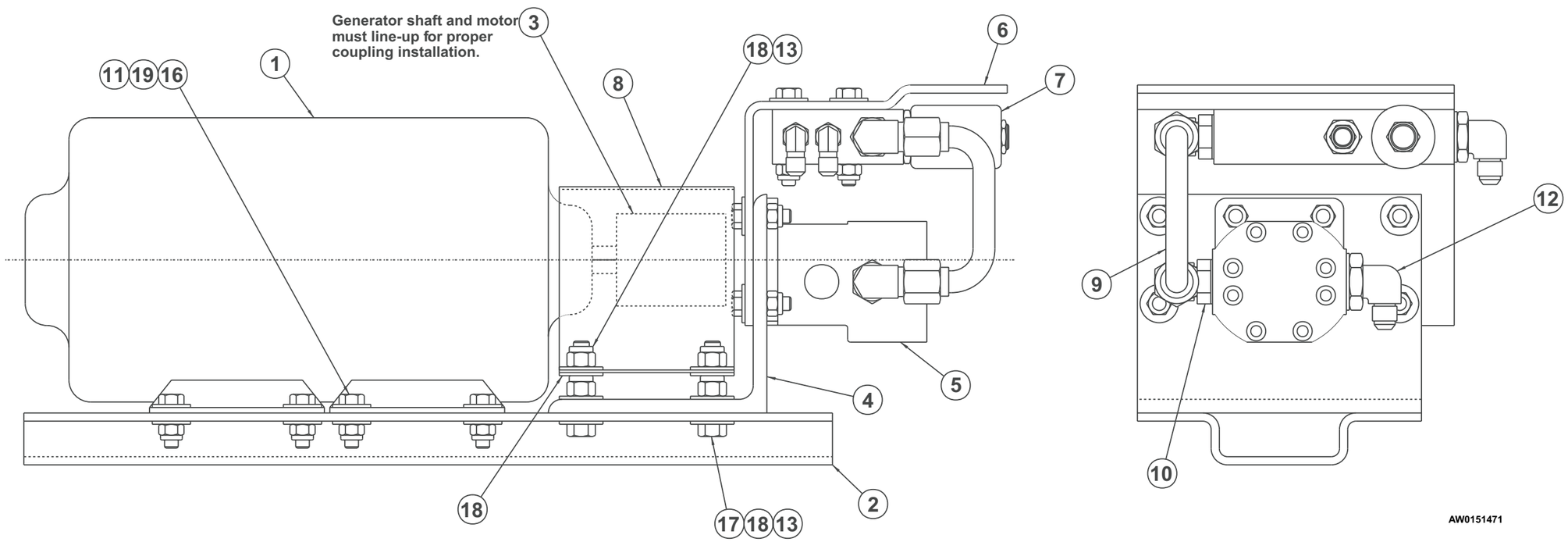

Snorkel INTERNATIONAL	TITLE AC generator Snorkel model TB 60	DWG. 0151471
Page 4 - 4		

View thousands of Crane Specifications on FreeCraneSpecs.com
https://truckmanualshub.com

AC generator

item	part no	qty	description
	0151471	1	AC generator
1	3080001	1	Generator, AC hydraulic powered
2	0151457	1	Mount plate
3	7240012	1	Coupling
4	0151458	1	Motor mounting angle
5	6030029	1	Hydraulic motor, AC generator
	8020018	1	Seal repair kit
6	0151469	1	Bracket, valve mounting
7	0152831	1	AC generator valve - (see page 2-35 for parts breakdown)
8	0151484	1	Coupling cover
9	0151470	1	1/2 inch hydraulic tube
10	5035306	1	Straight thread 90° elbow
11	5560031	18	Nut 5/16-18 self locking
12	5035320	1	Straight thread 90° elbow
13	5560033	8	Nut 3/8-16 self locking
14	970299	2	Capscrew 5/16-18 x 2 inch long hex head grade 5
15	970269	8	Capscrew 5/16-18 x 1-1/4 inch long hex head grade 5
16	970369	8	Capscrew 5/16-18 x 1 inch long hex head grade 5
17	970499	4	Capscrew 3/8-16 x 1-3/4 inch long hex head grade 5
18	986299	12	Washer 3/8 medium flat
19	986269	30	Washer 5/16 medium flat

View thousands of Crane Specifications on FreeCraneSpecs.com
https://truckmanualshub.com

Air line to platform

item	part no	qty	description
1	5240002	1	Hose reel
2	0111094	1	Air hose, 70 feet long
3	5550021	4	Cable guide, 4 roller
4	0080749	2	Cable guide bracket, base boom
5	0111112	1	Cable guide bracket, intermediate boom
6	5093004	2	Hose clamp
7	5560082	1	Trim lock, 1/4 inch x 4 inch long
8	0111091	2	Hose bracket, tip boom
9	0080759	1	Angle
10	970849	2	Capscrew 1/2-13 x 1-1/4 inch long hex head grade 5
11	970426	10	Capscrew 3/8-16 x 7/8 inch long hex head grade 5
12	986359	4	Washer 1/2 medium flat
13	987119	14	Washer 3/8 medium lock
14	5093012	1	Hose clamp
15	5560039	4	Nut 1/2-13 self locking
16	970909	2	Capscrew 1/2-13 x 1-1/2 inch long hex head grade 5
17	970049	8	Capscrew 1/4-20 x 1 inch long hex head grade 5
18	972489	4	Capscrew 3/8-16 x 1-1/2 inch long hex head grade 5
19	986019	3	Washer 1/4 medium flat
20	5560004	6	Nut 1/4-20 self locking

View thousands of Crane Specifications on FreeCraneSpecs.com
https://truckmanualshub.com/

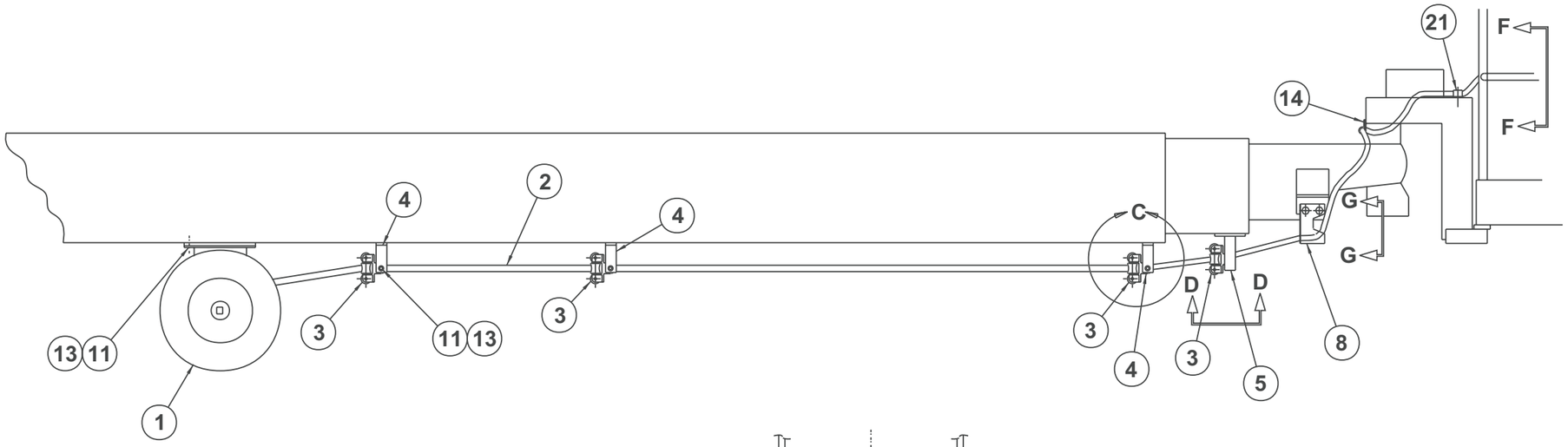

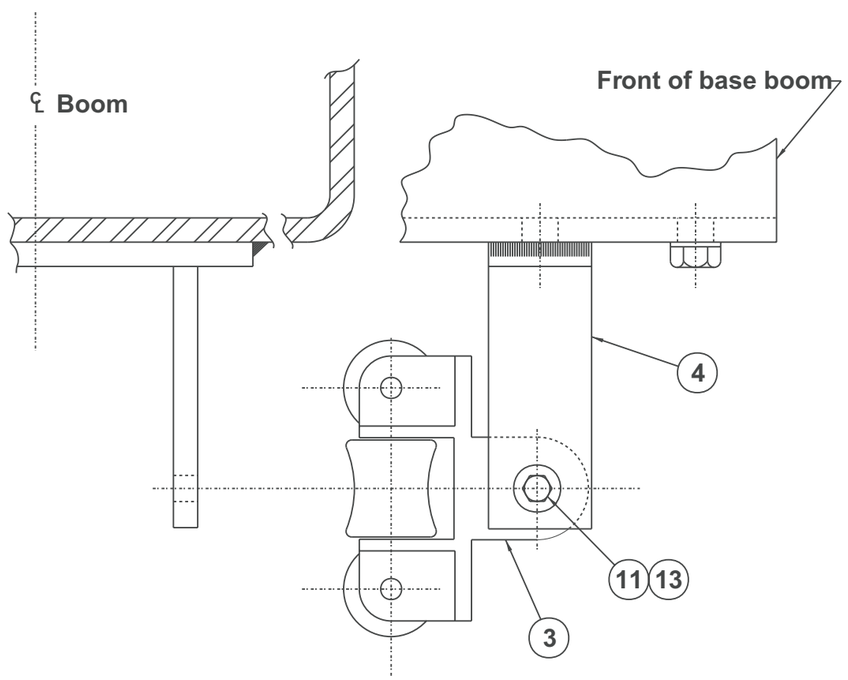

Detail C

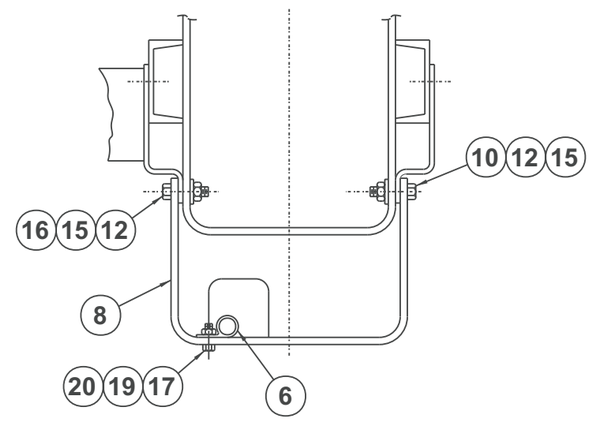

View G-G

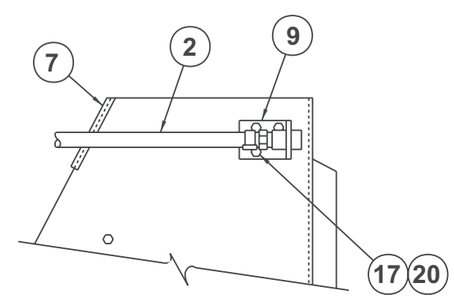

Hydraulic rotator

View F-F

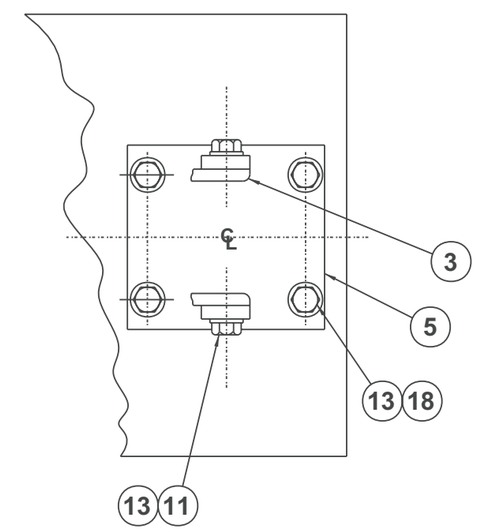

View D-D

AW0111090

TITLE Air line to platform Snorkel model TB 80	OmniQuip Snorkel INTERNATIONAL Page 4 - 7

View thousands of Crane Specifications on FreeCraneSpecs.com
https://truckmanualshub.com/

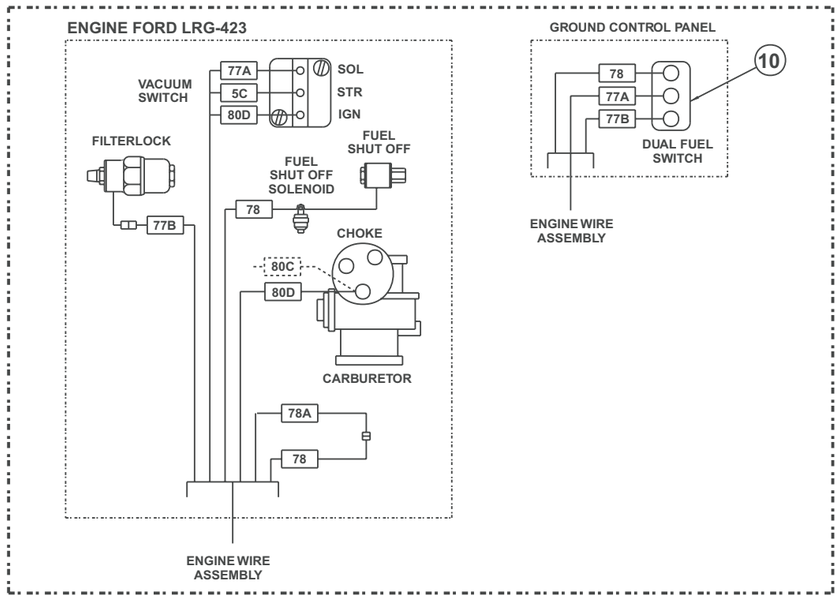

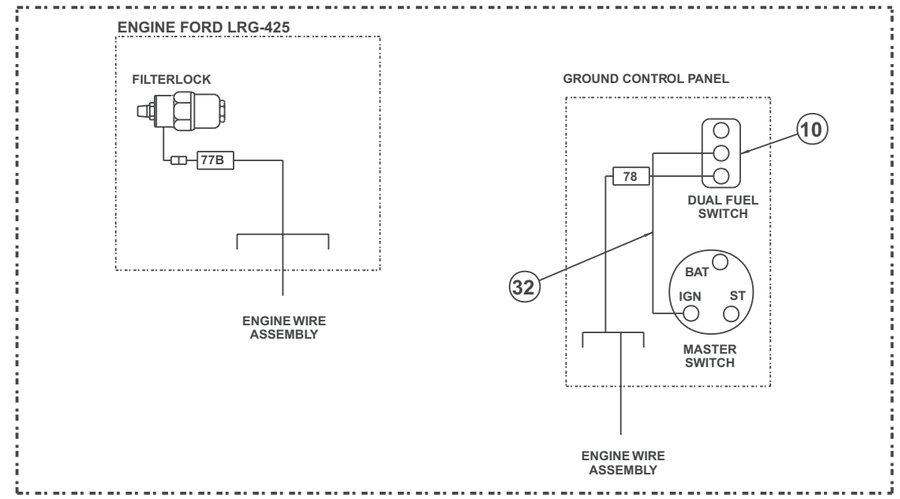

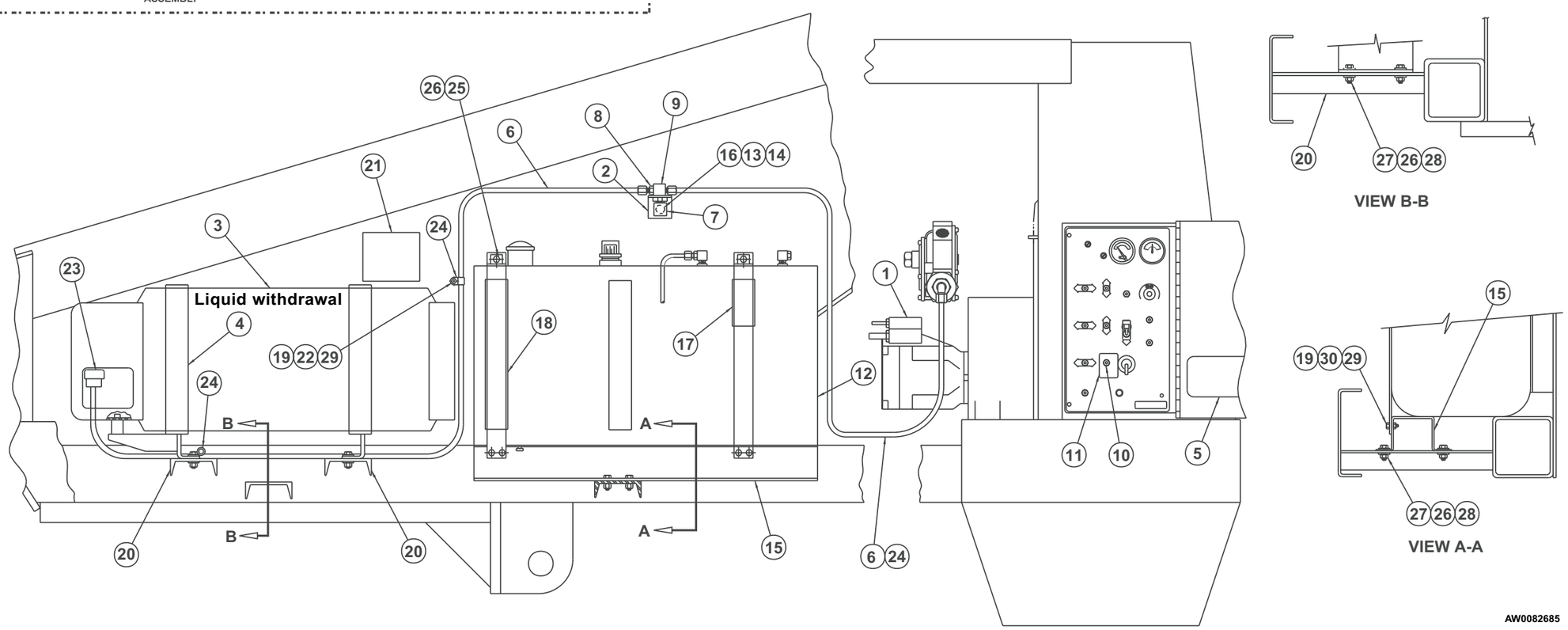

Snorkel INTERNATIONAL

TITLE Dual fuel
Ford engine
Snorkel model TB 80

View thousands of Crane Specifications on FreeCraneSpecs.com

Dual fuel, Ford engine

item	part no	qty	description
1	0111927	1	Dual fuel engine, Ford LRG-423 - (see page 4-14 for parts breakdown)
	0112100	1	Dual fuel engine, Ford LRG-425 - (see page 4-18 for parts breakdown)
2	0080668	1	Relief valve mount bracket
3	9940005	1	LP gas cylinder, liquid withdrawal 43.5 lb capacity
4	0070969	1	Bracket, LP gas cylinder - (includes left and right hand brackets)
5	0090493	1	Decal, dual fuel instructions
6	0090483	2	LP gas fuel hose
7	Kit item	1	Hydrostatic relief valve - (included in dual fuel kit 0073444)
8	Kit item	1	Straight thread adapter 1/4 NPT brass - (included in dual fuel kit 0073444)
9	Kit item	1	Bulkhead tee - (included in dual fuel kit 0073444)
10	3020017	1	Switch, toggle - (used on Ford LRG-423)
	3020013	1	Switch, toggle - (used on Ford LRG-425)
11	0090492	1	Placard, dual fuel switch
12	0070331	1	Fuel tank, gasoline 20 gallon capacity
	9940001	1	Replacement fuel tank cap
13	986269	1	Washer 5/16 medium flat
14	5560031	1	Nut 5/16-18 self locking
15	0080767	1	Fuel tank support
16	970369	1	Capscrew 5/16-18 x 1 inch long hex head grade 5
17	0080766	1	Spacer tube
18	0080326	1	Spacer tube
19	987099	5	Washer 1/4 medium lock
20	0072135	3	Channel support - (before 3-20-00)
	0083507	3	Channel support, LP gas cylinder - (after 3-20-00)
21	0081441	1	Decal, caution liquid withdrawal
22	984069	5	Nut 1/4-20 hex
23	0070974	1	Coupler, female LPG
24	5093002	4	Hose clamp
25	970569	2	Capscrew 3/8-16 x 3-1/2 inch long hex head grade 5
26	984109	10	Nut 3/8-16 hex
27	972489	8	Capscrew 3/8-16 x 1-1/2 inch long hex head grade 5
28	986299	8	Washer 3/8 medium flat
29	970029	5	Capscrew 1/4-20 x 3/4 inch long hex head grade 5
30	0151815	1	Jumper wire - (used on Ford LRG-425 engine only)

View thousands of Crane Specifications on FreeCraneSpecs.com
https://truckmanualshub.com/

Dual fuel, Ford with 40 gallon gasoline tank

item	part no	qty	description
1	0111927	1	Dual fuel engine, Ford LRG-423 - (see page 4-14 for parts breakdown)
2	0080668	1	Relief valve mount bracket
3	9940005	1	LP gas cylinder, liquid withdrawal 43.5 lb capacity
4	0070969	1	Bracket, LP gas cylinder - (includes left and right hand brackets)
5	0081553	2	Mounting bracket
6	0090483	1	LP gas fuel hose
7	Kit item	1	Hydrostatic relief valve - (included in dual fuel kit 0073444)
8	Kit item	1	Straight thread adapter 1/4 NPT brass - (included in dual fuel kit 0073444)
9	Kit item	1	Bulkhead tee - (included in dual fuel kit 0073444)
10	3020017	1	Switch, toggle
11	0090492	1	Placard, dual fuel switch
12	970369	1	Capscrew 5/16-18 x 1 inch long hex head grade 5
13	986269	1	Washer 5/16 medium flat
14	5560031	1	Nut 5/16-18 self locking
15	5093002	2	Clamp
16	0081441	1	Decal, caution liquid withdrawal
17	0090493	1	Decal, dual fuel instructions
18	0152108	1	LP gas fuel hose
19	970569	4	Capscrew 3/8-16 x 3-1/2 inch long hex head grade 5
20	986299	4	Washer 3/8 medium flat
21	5560033	4	Nut 3/8-16 self locking
22	987119	4	Washer 3/8 medium lock
23	0070974	1	Coupler, female LPG

View thousands of Crane Specifications on FreeCraneSpecs.com
https://truckmanualshub.com/

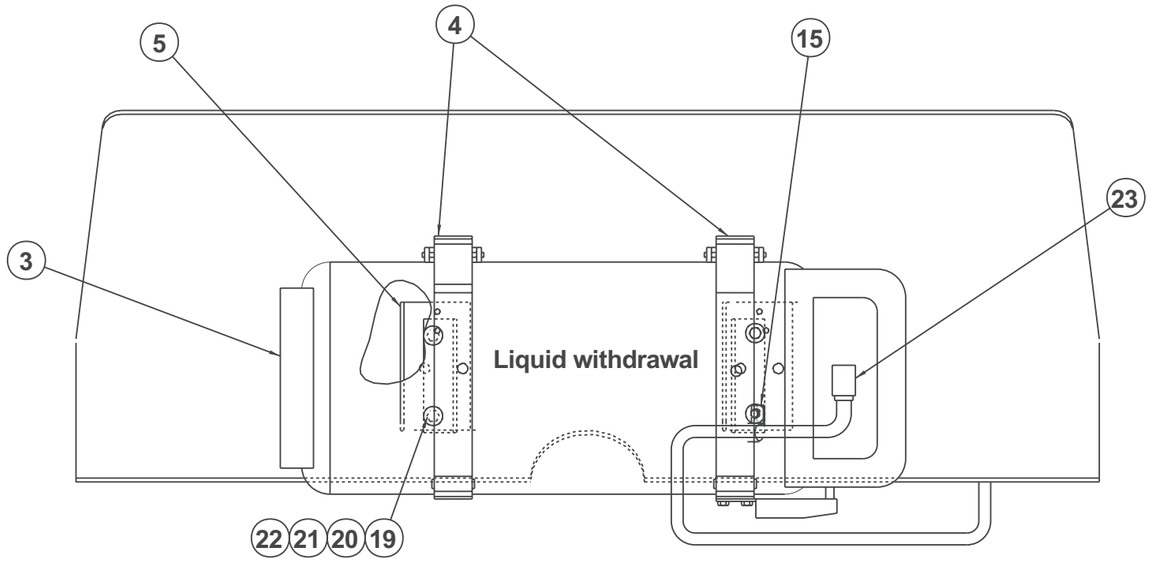

VIEW A-A

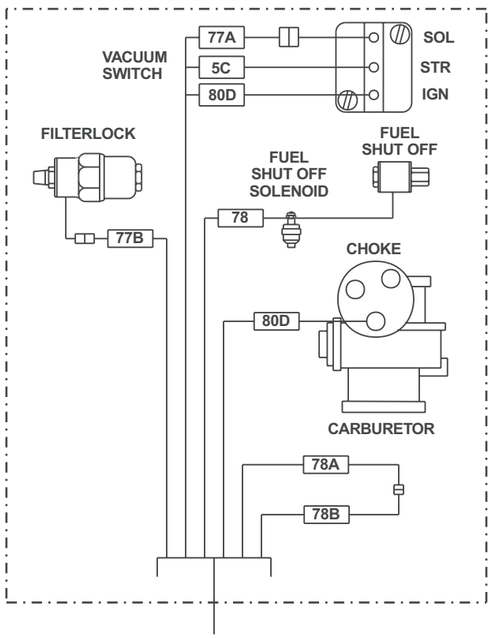

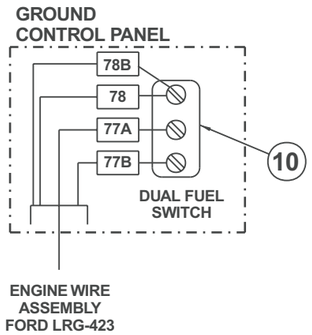

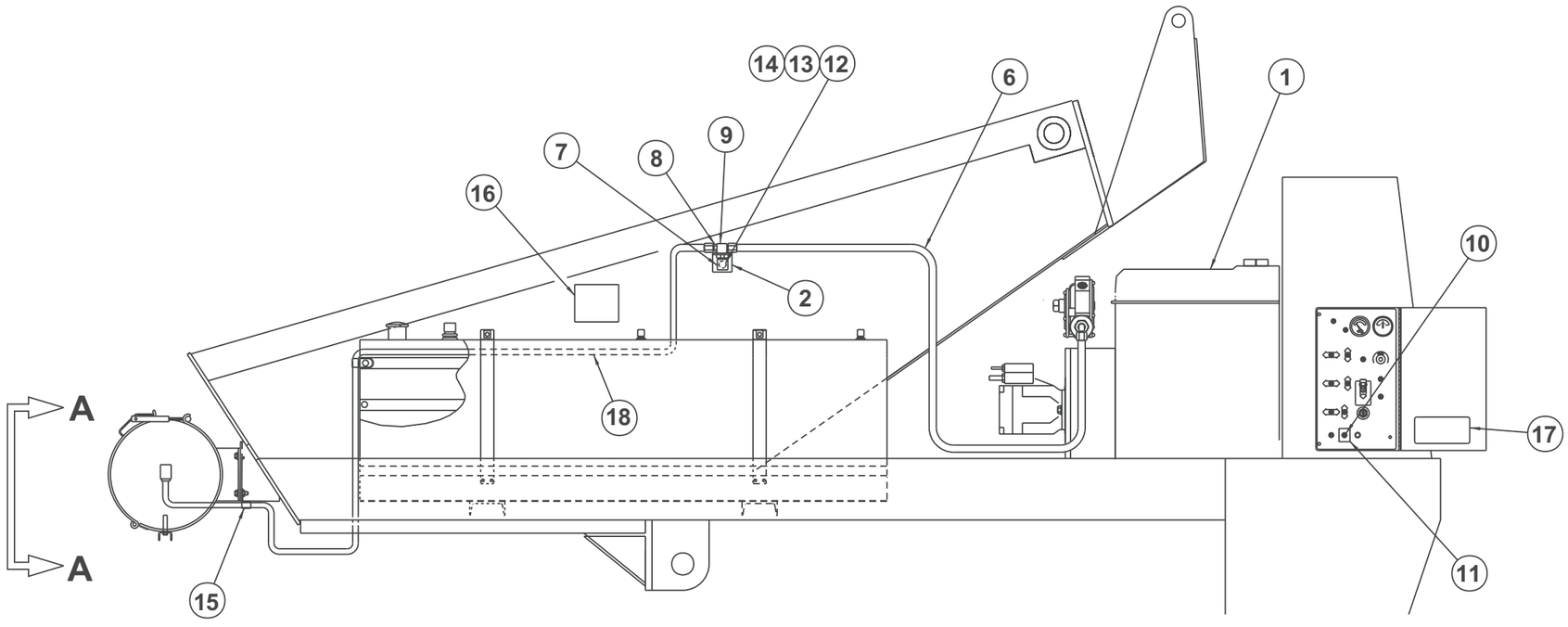

AW0082117

DWG. 0082117	TITLE Dual fuel Ford with 40 gallon gas tank Snorkel model TB 80

Snorkel INTERNATIONAL

View thousands of Crane Specifications on FreeCraneSpecs.com
https://truckmanualshub.com/

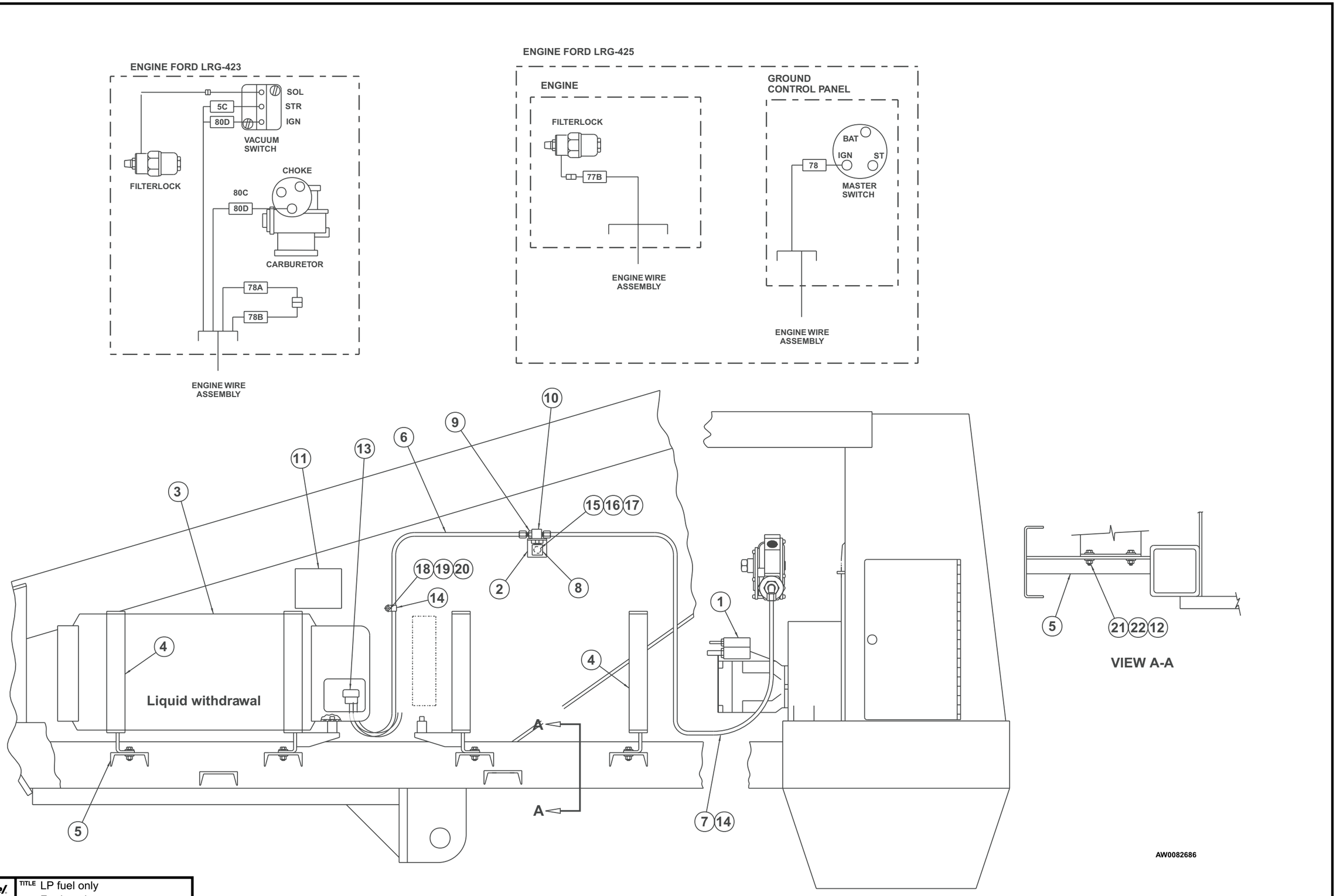

Snorkel INTERNATIONAL

TITLE LP fuel only
Ford engine
Snorkel model TB 80

View thousands of Crane Specifications on FreeCraneSpecs.com
https://truckmanualshub.com

LP fuel only, Ford engine

item	part no	qty	description
1	0111937	1	LP fuel engine, Ford LRG-423 - (see page 4-16 for parts breakdown)
	0112100	1	Dual fuel engine, Ford LRG-425 - (see page 4-18 for parts breakdown)
2	0080668	1	Relief valve mount bracket
3	9940005	1	LP gas cylinder, liquid withdrawal 43.5 lb capacity
4	0070969	1	Bracket, LP gas cylinder - (includes left and right hand brackets)
5	0072135	4	Channel support, LP gas cylinder - (before 3-20-00)
	0083507	4	Channel support, LP gas cylinder - (after 3-20-00)
6	0080676	1	LP gas fuel hose
7	0072117	1	LP gas fuel hose - (before 11-11-99)
	0090483	1	LP gas fuel hose - (after 11-11-99)
8	Kit item	1	Hydrostatic relief valve - (included in dual fuel kit 0073444)
9	Kit item	1	Straight thread adapter 1/4 NPT brass - (included in dual fuel kit 0073444)
10	Kit item	1	Bulkhead tee - (included in dual fuel kit 0073444)
11	0081441	1	Decal, caution liquid withdrawal
12	986299	8	Washer 3/8 medium flat
13	0070974	1	Coupler, female LPG
14	5093004	4	Hose clamp
15	970369	1	Capscrew 5/16-18 x 1 inch long hex head grade 5
16	5560031	1	Nut 5/16-18 self locking
17	986269	1	Washer 5/16 medium flat
18	970029	1	Capscrew 1/4-20 x 3/4 inch long hex head grade 5
19	984069	1	Nut 1/4-20 hex
20	987099	1	Washer 1/4 medium lock
21	972489	8	Capscrew 3/8-16 x 1-1/2 inch long hex head grade 5
22	5560033	8	Nut 3/8-16 self locking
23	986299	8	Washer 3/8 medium flat

View thousands of Crane Specifications on FreeCraneSpecs.com
https://truckmanualshub.com/

Dual fuel engine, Ford LRG-423

item	part no	qty	description
	0111927	1	Dual fuel engine, Ford LRG-423
1	0111845	1	Engine, Ford LRG-423
2	0073444	1	Dual fuel kit, liquid cooled - (kit includes items 3 through 14)
3	8020009	1	Regulator
4	8020036	1	Filter lock
5	Kit item	1	Hose adapter - (not sold separately)
6	Kit item	1	LP hose, 5/8 inch diameter x 24 inch long - (not sold separately)
7	Kit item	2	Street 3/8 NPT 90° elbow, brass - (not sold separately)
8	Kit item	2	Street 1/4 NPT 90° elbow, brass - (not sold separately)
9	Kit item	2	Connector 3/8 NPT to 5/8 inch hose, brass - (not sold separately)
10	Kit item	1	Male 1/4 NPT to -6 SAE 90° elbow, brass - (not sold separately)
11	Kit item	1	Street tee 1/8 NPT brass - (not sold separately)
12	Kit item	1	Hydrostatic relief valve - (not sold separately)
13	Kit item	2	Straight thread adapter 1/4 NPT brass - (not sold separately)
14	Kit item	1	Bulkhead tee - (not sold separately)
15	5090024	1	Vacuum fitting
16	7630335	1	Shut-off solenoid
17	5560038	1	Nut #10-32 self locking
18	970029	2	Capscrew 1/4-20 x 3/4 inch long hex head grade 5
19	987099	2	Washer 1/4 medium lock
20	3044146	1	Terminal #10 stud insulated 22/18 wire
21	3040083	1	Terminal .250 tab male fully insulated 16/14 wire
22	5090026	2	Hose clamp
23	5090011	1	Nipple 1/8 NPT brass
24	5090027	1	Street 90° elbow1/8 NPT brass
25	5090035	1	Straight fitting 5/16 barb to 1/8 NPT
26	3044145	1	Terminal #8 stud insulated 22/18 wire
27	5010020	1	Fuel hose, 5/8 inch diameter x 18 inch long
28	5010007	1	Vacuum hose, 3/16 inch diameter x 6 inch long
29	5550010	5	Clamp
30	5039501	2	Beaded 90° elbow
31	5230005	1	Gasoline fuel shut-off valve
32	3020054	1	Vacuum switch - (included with engine)
	8130005	1	Replacement switch

View thousands of Crane Specifications on FreeCraneSpecs.com
https://truckmanualshub.com

Dual fuel engine, Ford LRG-423

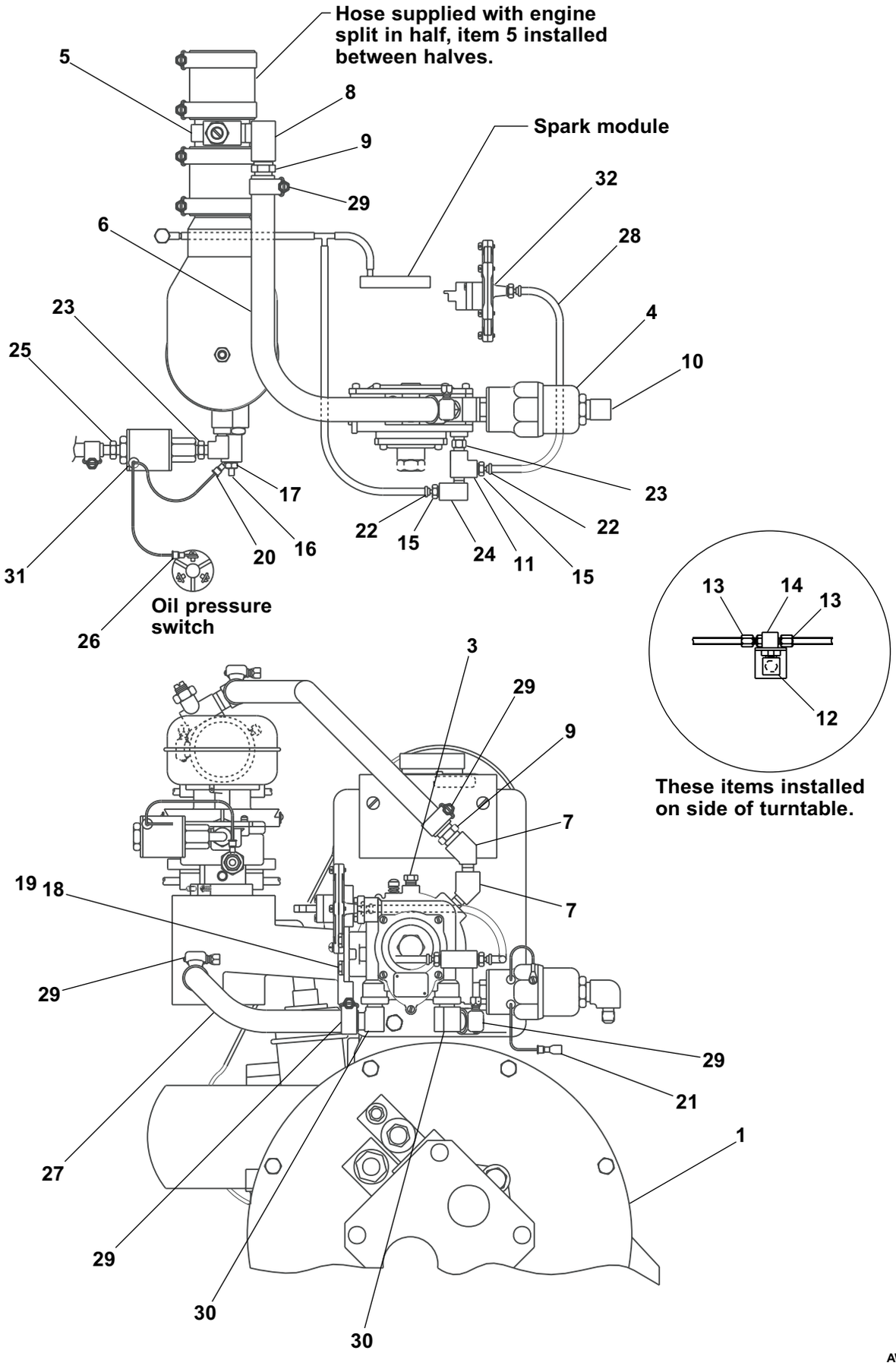

View thousands of Crane Specifications on FreeCraneSpecs.com
https://truckmanualshub.com/

LP fuel only engine, Ford LRG-423

item	part no	qty	description
	0111937	1	Engine - LP fuel only, Ford LRG-423
1	0111845	1	Engine, Ford LRG-423
2	0073444	1	Dual fuel kit, liquid cooled - (kit includes items 3 through 14)
3	8090002	1	Regulator
4	8020036	1	Filter lock
5	Kit item	1	Hose adapter - (not sold separately)
6	Kit item	1	LP hose, 5/8 inch diameter x 24 inch long - (not sold separately)
7	Kit item	2	Street 3/8 NPT 90° elbow, brass - (not sold separately)
8	Kit item	2	Street 1/4 NPT 90° elbow, brass - (not sold separately)
9	Kit item	2	Connector 3/8 NPT to 5/8 inch hose, brass - (not sold separately)
10	Kit item	1	Male 1/4 NPT to -6 SAE 90° elbow, brass - (not sold separately)
11	Kit item	1	Street tee 1/8 NPT brass - (not sold separately)
12	Kit item	1	Hydrostatic relief valve - (not sold separately)
13	Kit item	2	Straight thread adapter 1/4 NPT brass - (not sold separately)
14	Kit item	1	Bulkhead tee - (not sold separately)
15	5090024	1	Vacuum fitting
16	970029	2	Capscrew 1/4-20 x 3/4 inch long hex head grade 5
17	987099	2	Washer 1/4 medium lock
18	3040083	1	Terminal .250 tab male fully insulated 16/14 wire
19	5090026	2	Hose clamp
20	5090011	1	Nipple 1/8 NPT brass
21	5090027	1	Street 90° elbow1/8 NPT brass
22	5010007	1	Vacuum hose, 3/16 inch diameter x 6 inch long
23	5550010	5	Clamp
24	5039501	2	Beaded 90° elbow
25	5010020	1	Fuel hose 5/8 inch diameter x 18 inch long
26	3020054	1	Vacuum switch - (included with engine)
	8130005	1	Replacement switch

View thousands of Crane Specifications on FreeCraneSpecs.com
https://truckmanualshub.com

LP fuel only engine, Ford LRG-423

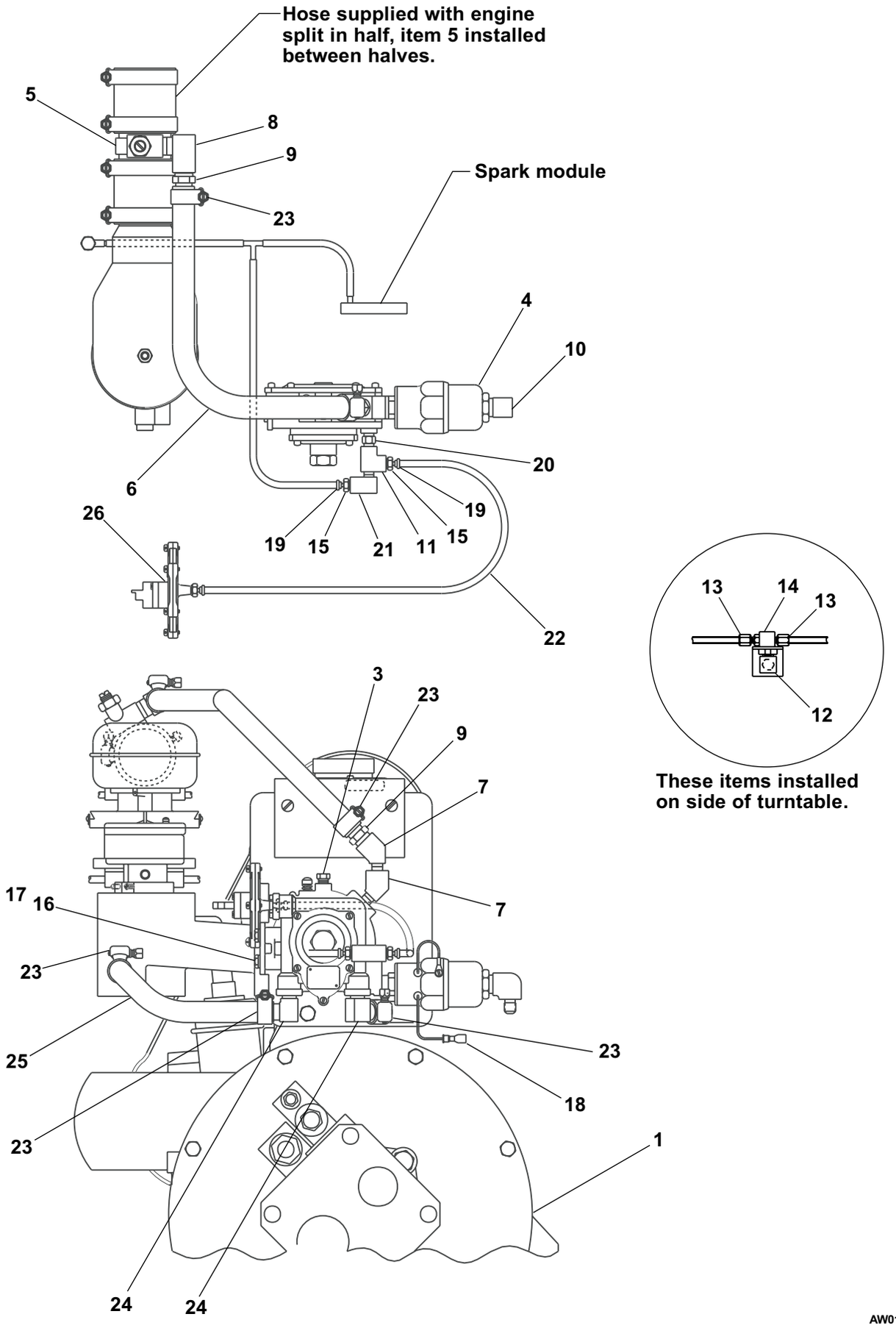

View thousands of Crane Specifications on FreeCraneSpecs.com
https://truckmanualshub.com/

Dual fuel engine, Ford LRG-425

item	part no	qty	description
	0112100	1	Dual fuel engine, Ford LRG-425
1	0112083	1	Engine, Ford LRG-425
2	0073444	1	Dual fuel kit, liquid cooled - (kit includes items 3 through 14)
3	8020009	1	Regulator
4	8020036	1	Filter lock
5	Kit item	1	Hose adapter - (not sold separately)
6	Kit item	1	LP hose, 5/8 inch diameter x 24 inch long - (not sold separately)
7	Kit item	2	Street 3/8 NPT 90° elbow, brass - (not sold separately)
8	Kit item	2	Street 1/4 NPT 90° elbow, brass - (not sold separately)
9	Kit item	2	Connector 3/8 NPT to 5/8 inch hose, brass - (not sold separately)
10	Kit item	1	Male 1/4 NPT to -6 SAE 90° elbow, brass - (not sold separately)
11	Kit item	1	Street tee 1/8 NPT brass - (not sold separately)
12	Kit item	1	Hydrostatic relief valve - (not sold separately)
13	Kit item	2	Straight thread adapter 1/4 NPT brass - (not sold separately)
14	Kit item	1	Bulkhead tee - (not sold separately)
15	5090024	1	Vacuum fitting
16	0111862	1	Mount plate
17	970029	2	Capscrew 1/4-20 x 3/4 inch long hex head grade 5
18	987099	2	Washer 1/4 medium lock
19	3040083	1	Terminal .250 tab male fully insulated 16/14 wire
20	5550030	2	Clamp
21	7630327	1	Hose 2 inch flame resistant x 2 inch long
22	5010020	1	Fuel hose, 5/8 inch diameter x 48 inch long
23	5010007	1	Vacuum hose, 3/16 inch diameter x 12 inch long
24	5090044	1	Vacuum tee
25	5090026	1	Hose clamp
26	5550010	6	Clamp
27	5039501	2	Beaded 90° elbow
28	5039601	1	Splice
29	3020054	1	Vacuum switch - (included with engine)
	8130005	1	Replacement switch

View thousands of Crane Specifications on FreeCraneSpecs.com
https://truckmanualshub.com/

Dual fuel engine, Ford LRG-425

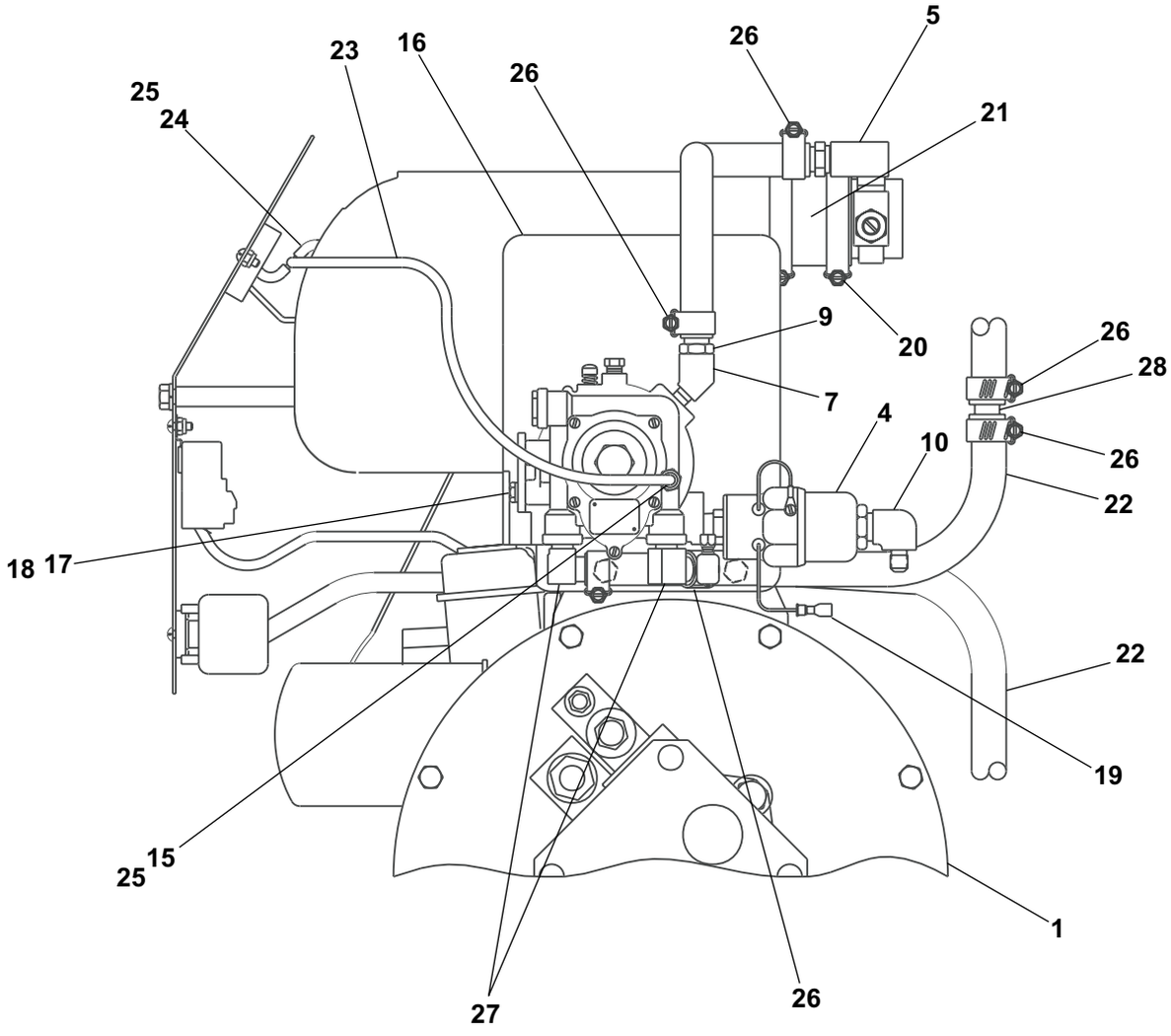

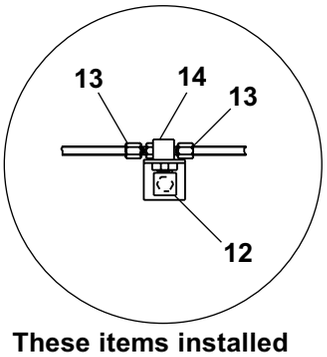

These items installed on side of turntable.

AW0112100

View thousands of Crane Specifications on FreeCraneSpecs.com
https://truckmanualshub.com/

Head lights

item	part no	qty	description
1	3064414	2	Light, flood with round base
2	3020013	1	Switch, toggle
3	3040068	1	Circuit breaker, 20 amp capacity
4	0181376	1	Placard, light switch
5	3040469	1	Relay, 12 volt DC
6	5569003	2	Grommet
7	5093019	4	Clamp
8	3011601	1	Wire, 16 gauge single conductor x 120 inch long
9	3040083	2	Terminal .250 tab female slip-on fully insulated 16/14 wire
10	3040082	3	Terminal .250 tab male slip-on fully insulated 16/14 wire
11	3044599	2	Terminal .250 tab female slip-on insulated 22/18 wire
12	3044142	1	Terminal #6 stud insulated 22/18 wire
13	3044161	2	Terminal #10 stud insulated 16/14 wire
14	0073250	2	Jumper wire
15	0073781	1	Jumper wire
16	0181187	2	Jumper wire
17	0072293	2	Jumper wire
18	3044852	1	Terminal ring tongue insulated 12/10 wire
19	3040065	1	Terminal .250 tab female slip-on fully insulated 12/10 wire
20	5560692	8	Machine screw #10-24 x 1 inch long pan head
21	5560609	1	Machine screw #10-24 x 1/2 inch long truss head
22	5560034	8	Nut #10-24 self locking
23	3090019	1	Flexgard tube, 120 inch long
24	970029	4	Capscrew 1/4-20 x 3/4 inch long hex head grade 5
25	986019	4	Washer 1/4 medium flat
26	5560004	4	Nut 1/4-20 self locking

View thousands of Crane Specifications on FreeCraneSpecs.com
https://truckmanualshub.com/

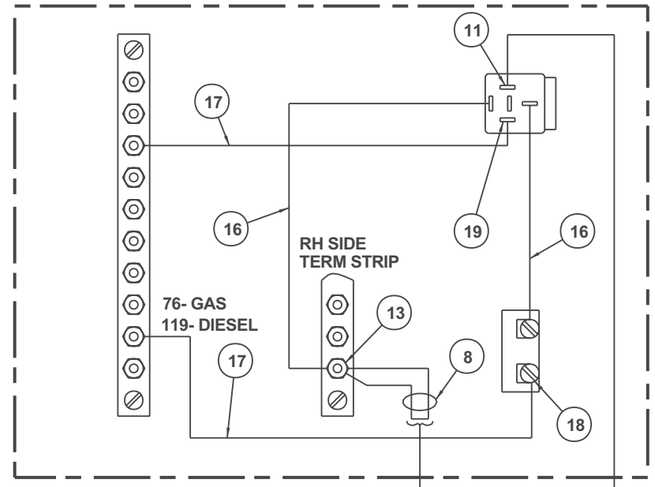

ROUTE THRU ENGINE WIRE CONNECTOR.
USE ITEM 7 AS REQD TO SECURE WIRES.
USE ITEM 23 TO GUARD WIRE FROM BEING DAMAGED.

SPARE BOOM WIRE

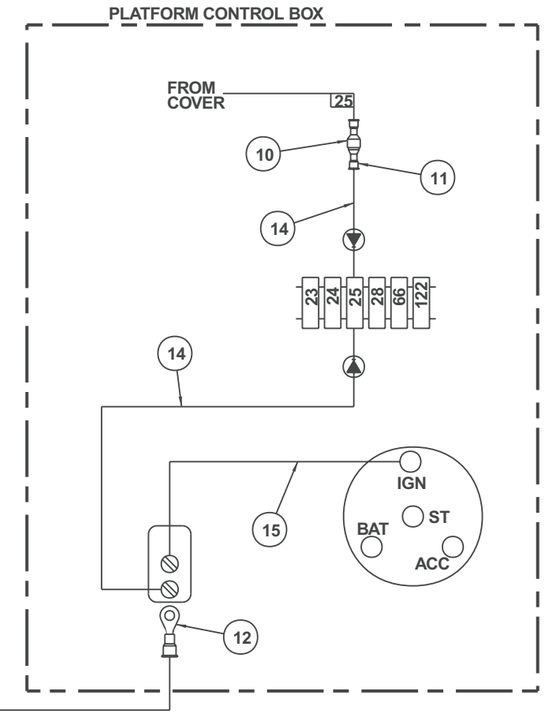

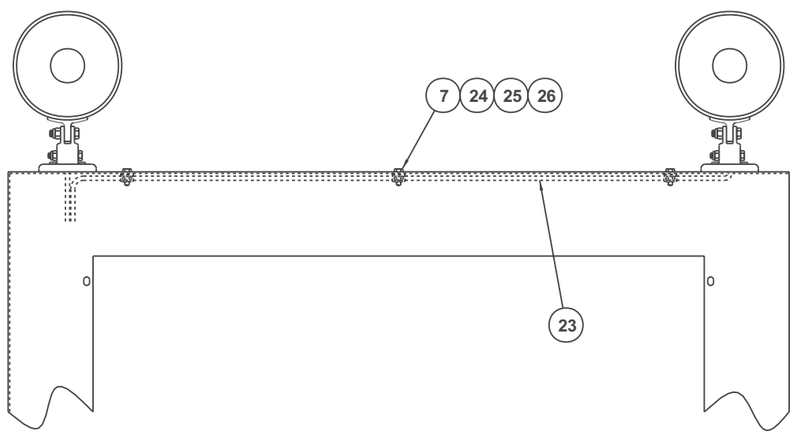

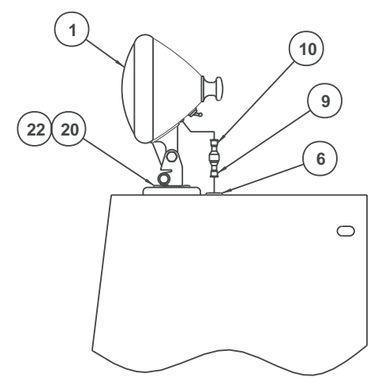

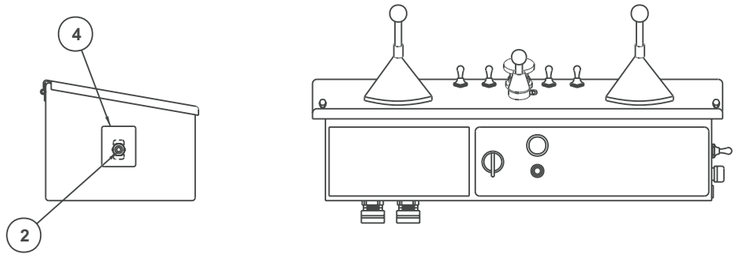

PLATFORM CONTROL BOX
FRONT VIEW

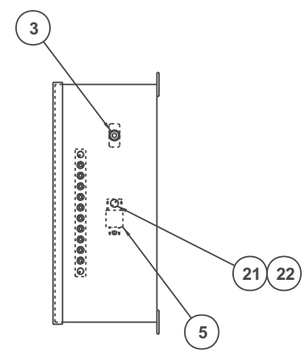

WIRING BOX
SIDE VIEW

AW0111666

TITLE Head lights Snorkel model TB 80	Snorkel INTERNATIONAL
DWG. 0111666	Page 4 - 21

View thousands of Crane Specifications on FreeCraneSpecs.com
https://truckmanualshub.com/

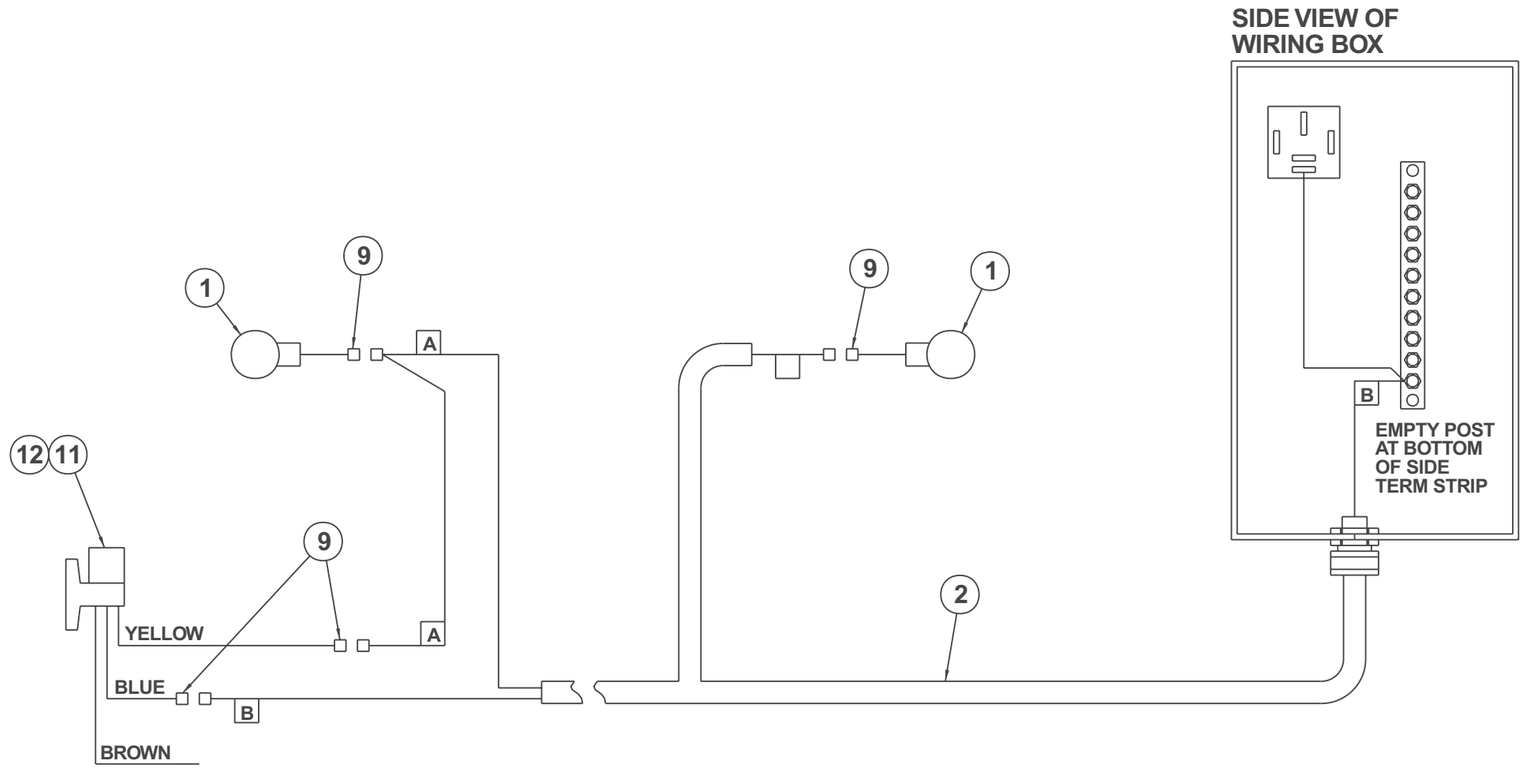

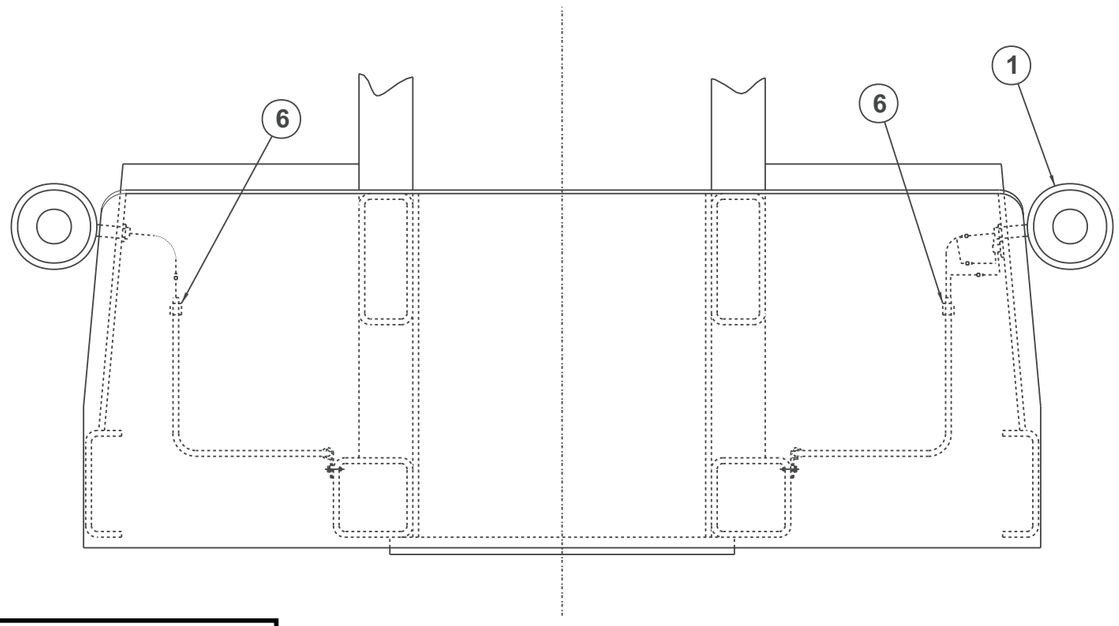

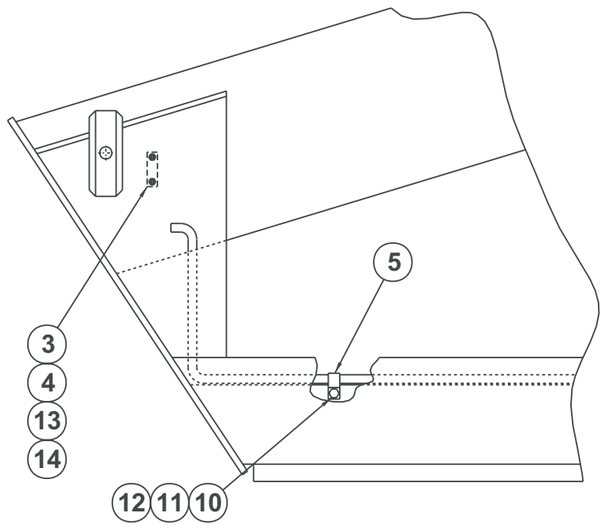

AW0111667

Snorkel INTERNATIONAL

TITLE Tail lights

Snorkel model TB 80

DWG. 0111667

View thousands of Crane Specifications on FreeCraneSpecs.com
https://truckmanualshub.com/

Tail lights

item	part no	qty	description
1	3060017	2	Light, turn signal
2	0111669	1	Wire harness, tail lights
3	3060019	1	Flasher
4	3060018	1	Flasher base
5	5093002	2	Clamp
6	3040113	2	Mounting base
7	3040300	1	Connector
8	3040070	1	Locknut
9	3040083	4	Terminal .250 tab female slip-on fully insulated 16/14 wire
10	970099	2	Capscrew 1/4-20 x 5/8 inch long hex head grade 5
11	987099	2	Washer 1/4 medium lock
12	986019	2	Washer 1/4 medium flat
13	974679	2	Machine screw #10-24 x 5/8 inch long round head
14	5560034	2	Nut #10-24 self locking

View thousands of Crane Specifications on FreeCraneSpecs.com
https://truckmanualshub.com

Isolation valve

item	part no	qty	description
1	6010495	1	Ball valve
2	6010498	1	Ball valve
3	7740014	1	Close nipple 1/2 NPT
4	7740110	1	Close nipple 1-1/4 NPT
5	7720604	2	Reducer bushing 3/4 x 1/2
6	7721210	1	Reducer bushing 1-1/2 x 1-1/4
7	5031008	1	Street elbow 90° 1-1/2 NPT

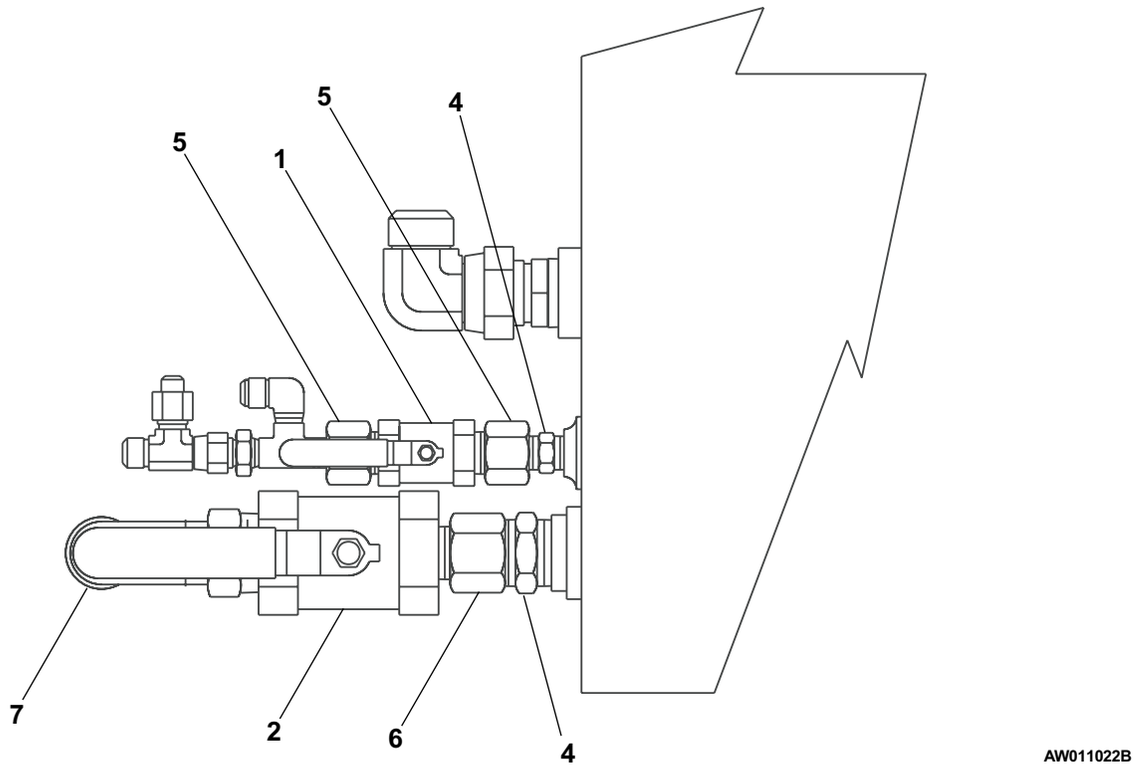

View thousands of Crane Specifications on FreeCraneSpecs.com
https://truckmanualshub.com

Engine block heater

item	part no	qty	description
1	7630343	1	Engine block heater with cord, Ford LRG-423 engine
	7630289	1	Engine block heater with cord, Cummins 4B engine
2	5093000	2	Clamp
3	0181634	1	Decal, engine block heater
4	970049	1	Capscrew 1/4-20 x 1 inch long hex head grade 5
5	986019	1	Washer 1/4 medium flat
6	5560004	1	Nut 1/4-20 self locking

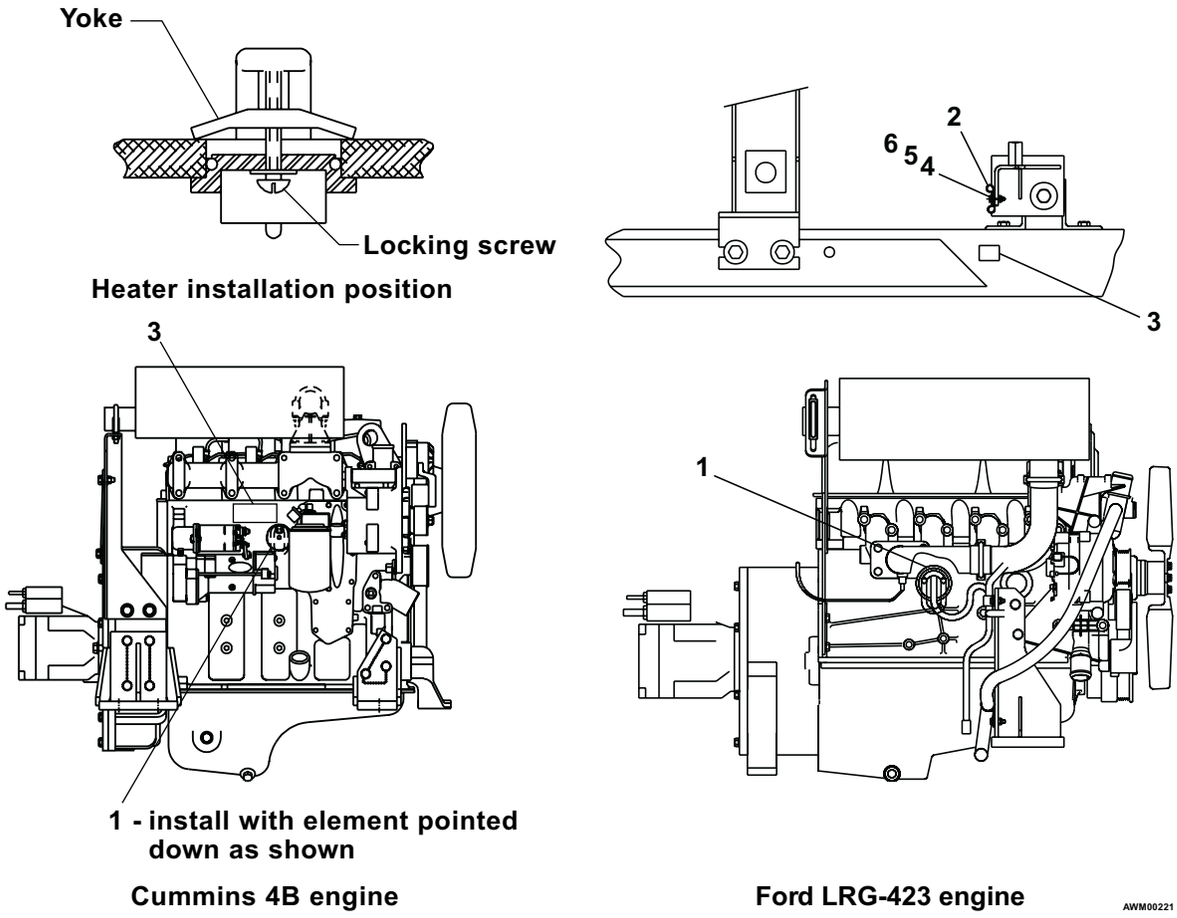

View thousands of Crane Specifications on FreeCraneSpecs.com
https://truckmanualshub.com

Motion alarm, drive

item	part no	qty	description
1	3040129	1	Motion warning alarm, standard
	3040462	1	Motion warning alarm, UL approved
2	0081422	1	Mount angle - (used with UL approved warning alarm only)
3	0073642	1	Jumper wire
4	0073071	1	Jumper wire
5	3040046	2	Terminal .250 tab male slip-on fully insulated 22/18 wire
6	3040082	1	Terminal .250 tab male slip-on fully insulated 16/14 wire
7	970029	4	Capscrew 1/4-20 x 3/4 inch long hex head grade 5
8	987099	4	Washer 1/4 medium lock
9	986019	4	Washer 1/4 medium flat
10	3044162	1	Terminal 1/4 stud insulated 16/14 wire

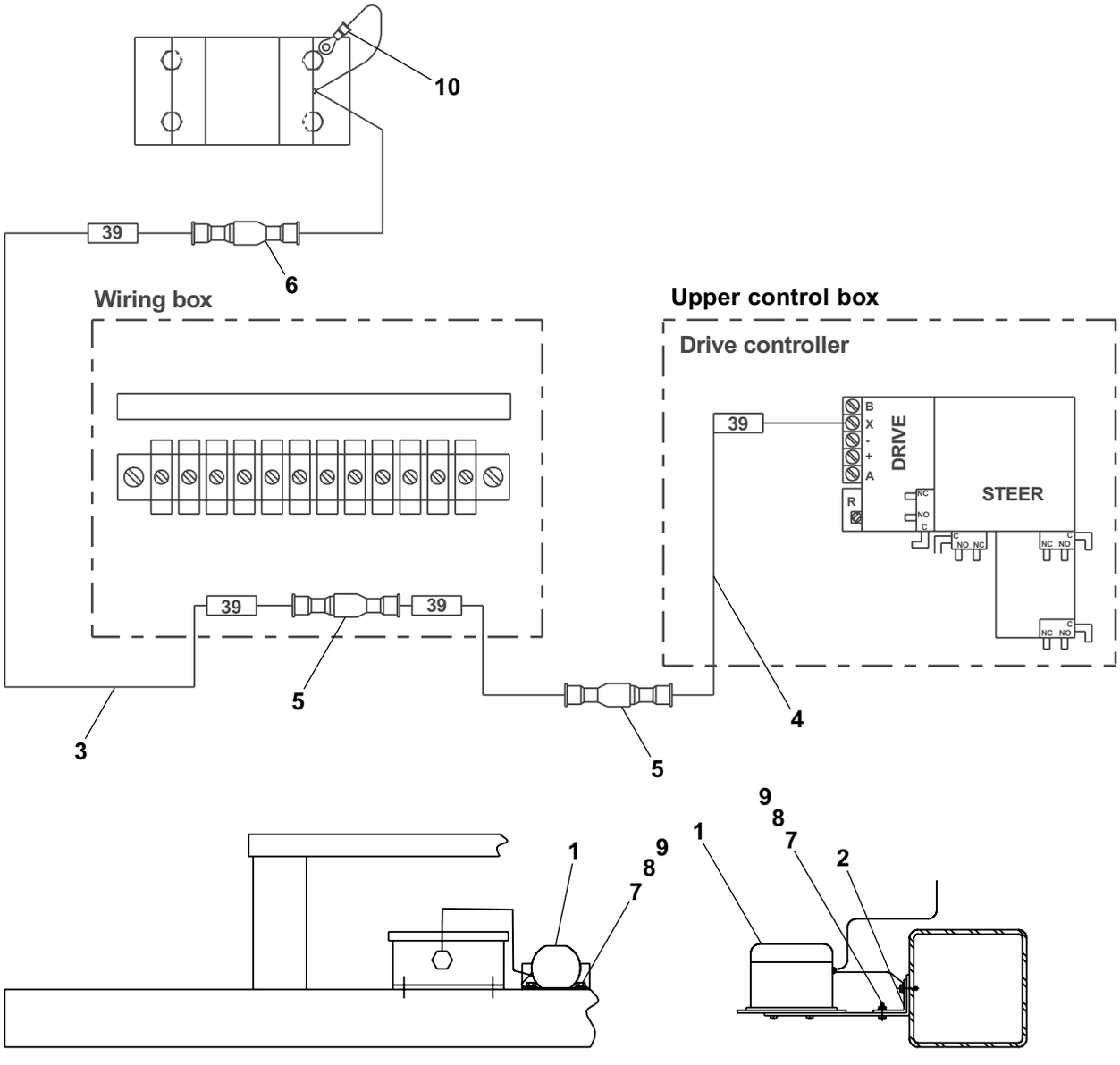

View thousands of Crane Specifications on FreeCraneSpecs.com
https://truckmanualshub.com

Upper control box cover

item	part no	qty	description
1	0073076	1	Upper control box cover, standard
	0074782	1	Upper control box cover, fire resistant
2	5560657	3	Pop rivet 1/8 inch aluminum #RVT-AD48 ABS
3	5560656	3	Pop rivet 1/8 inch aluminum #RVT-AD46 ABS

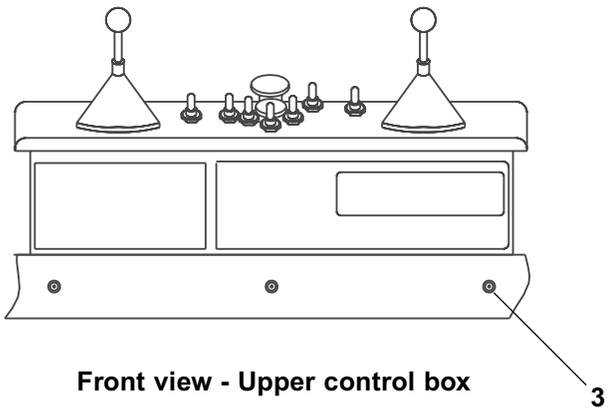

Front view - Upper control box

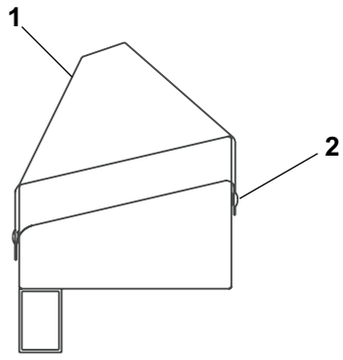

Side view - cover installed

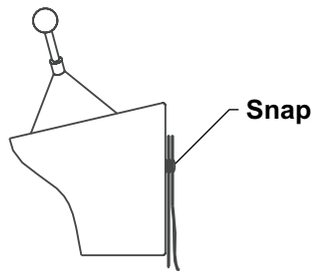

Side view
cover shown
in stowed position

AW0071654

View thousands of Crane Specifications on FreeCraneSpecs.com
https://truckmanualshub.com

Hydraulic warm-up

item	part no	qty	description
1	0082053	1	Hydraulic warm-up valve - (see page 2-74 for parts breakdown)
2	3020013	2	Switch, toggle
3	3020078	1	Temperature switch
4	0071792	1	Placard, warm-up switch
5	0071793	1	Decal, hydraulic warm-up instructions
6	9971844	2	Jumper wire
7	5065705	1	Straight thread adapter
8	0181398	1	Diode jumper wire
9	0181285	1	Diode jumper wire
10	3040047	1	Terminal .250 tab female slip-on fully insulated 22/18 wire
11	0020290	4	1/4 inch hydraulic hose
12	5036703	1	Swivel nut run tee
13	5037003	1	Swivel nut 90° elbow
14	970029	2	Capscrew 1/4-20 x 3/4 inch long hex head grade 5
15	986019	2	Washer 1/4 medium flat
16	987099	2	Washer 1/4 medium lock
17	3044142	1	Terminal #6 stud insulated 22/18 wire

View thousands of Crane Specifications on FreeCraneSpecs.com
https://truckmanualshub.com/

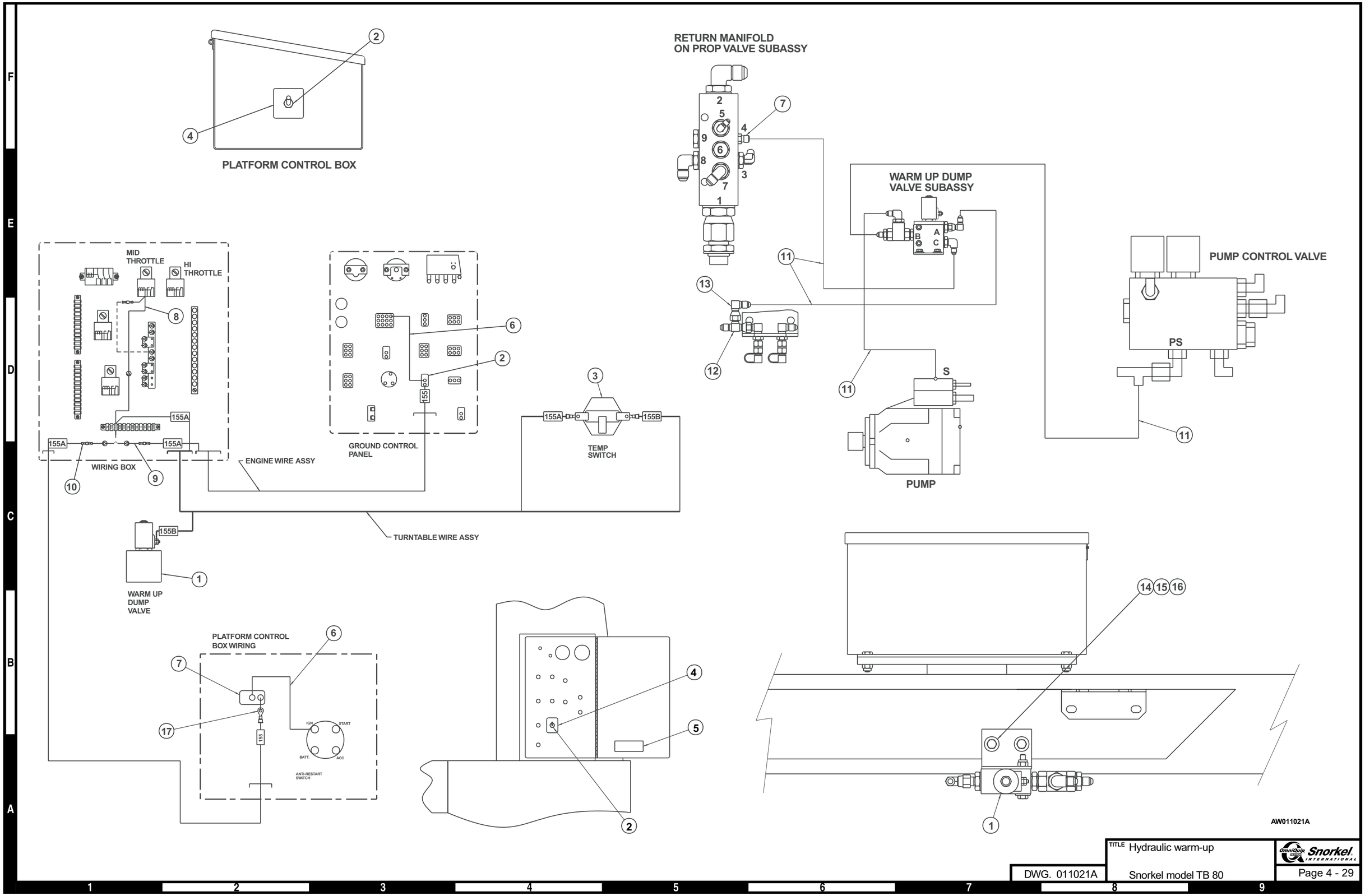

TITLE Hydraulic warm-up	Snorkel INTERNATIONAL
DWG. 011021A	Snorkel model TB 80
	Page 4 - 29

View thousands of Crane Specifications on FreeCraneSpecs.com
https://truckmanualshub.com/

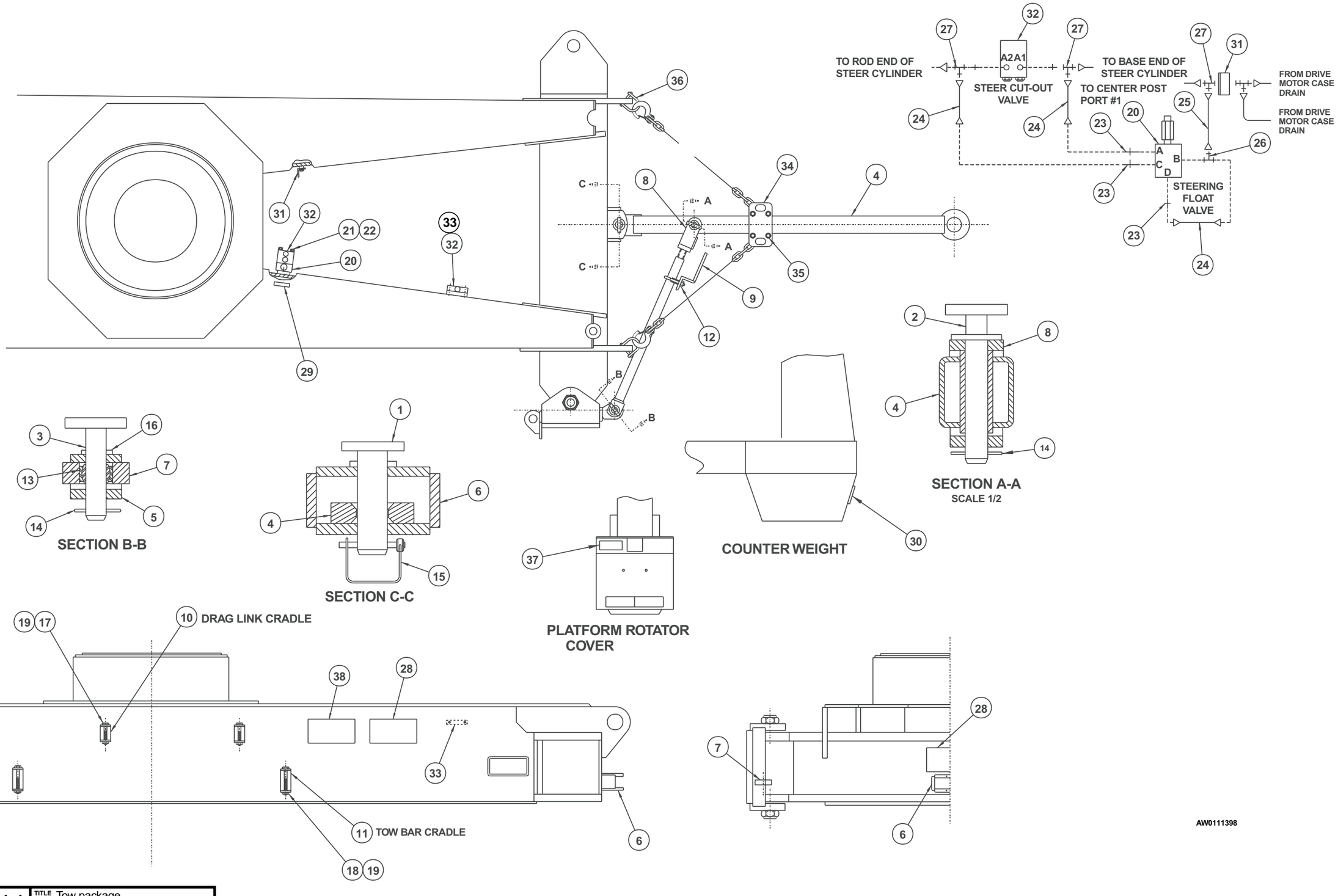

Snorkel INTERNATIONAL	TITLE Tow package	
Page 4 - 30	Snorkel model TB 80	DWG. 0111398

View thousands of Crane Specifications on FreeCraneSpecs.com
https://truckmanualshub.com/

Tow package

item	part no	qty	description
1	0110831	1	Pin, tow bar
2	0110833	1	Pin, drag link
3	0110493	1	Pin, drag link - outer
4	0110463	1	Tow bar
5	0111130	1	Tie rod
6	0111464	1	Bracket, chassis
7	0080884	1	Steering lug
8	0111465	1	Tie rod
9	0111520	1	Rotator stop
10	0110836	2	Drag link storage cradle
11	0112032	2	Tow bar storage cradle
12	5550005	1	Clamp
13	2690001	1	Bearing, self aligning
14	5561550	2	Cotter pin
15	5580002	1	Snapper pin
16	5560189	2	Roll pin 3/16 inch diameter x 1-1/4 inch long
17	971009	2	Capscrew 1/2-13 x 4 inch long hex head grade 5
18	5560647	2	Capscrew 1/2-13 x 5 inch long hex head grade 5
19	5560039	2	Nut 1/2-13 self locking
20	6010616	1	Steering float valve
21	5560369	2	Capscrew 1/4-20 x 4 inch long hex head grade 5
22	986019	2	Washer 1/4 medium flat
23	5065707	3	Straight thread adapter
24	0060297	3	1/4 inch hydraulic hose
25	0070780	1	1/4 inch hydraulic hose
26	5036105	1	Straight thread run tee
27	5036705	3	Swivel nut run tee
28	0082171	2	Decal, towing instructions
29	0090760	1	Decal, float valve
30	0082203	1	Decal, danger crushing hazard
31	0111426	1	Mount angle
32	0111490	1	Steer cut out valve - (see page 2-81 for parts breakdown)
33	0181921	1	Mounting bar
34	0181676	1	Chain/plate
35	0181675	2	Carriage bolt, special 3/4-16 x 5-1/2 inch long
36	5560287	2	Pin
37	0082164	1	Decal, danger do not ride
38	0082160	1	Decal, danger tow package

View thousands of Crane Specifications on FreeCraneSpecs.com
https://truckmanualshub.com

Air inlet heater, Deutz

item	part no	qty	description
1	7630215	1	Air inlet heater kit
	8040135	1	Replacement glow plug
2	3040506	1	Solenoid, 12 volt DC
3	3011001	1	Wire, 10 gauge single conductor x 144 inch long
4	3011601	1	Wire, 16 gauge single conductor x 72 inch long
5	0071568	1	Jumper wire
6	3040268	3	Insulator boot
7	3040161	3	Terminal 5/16 stud insulated 8 gauge wire
8	0082064	1	Placard, heater instructions
9	3090006	1	Flexgard tube, 84 inch long
10	3042263	1	Terminal #10 stud insulated 8 gauge wire
11	3044142	1	Terminal #6 stud insulated 22/18 wire
12	3020080	1	Switch, toggle
13	0073781	1	Jumper wire

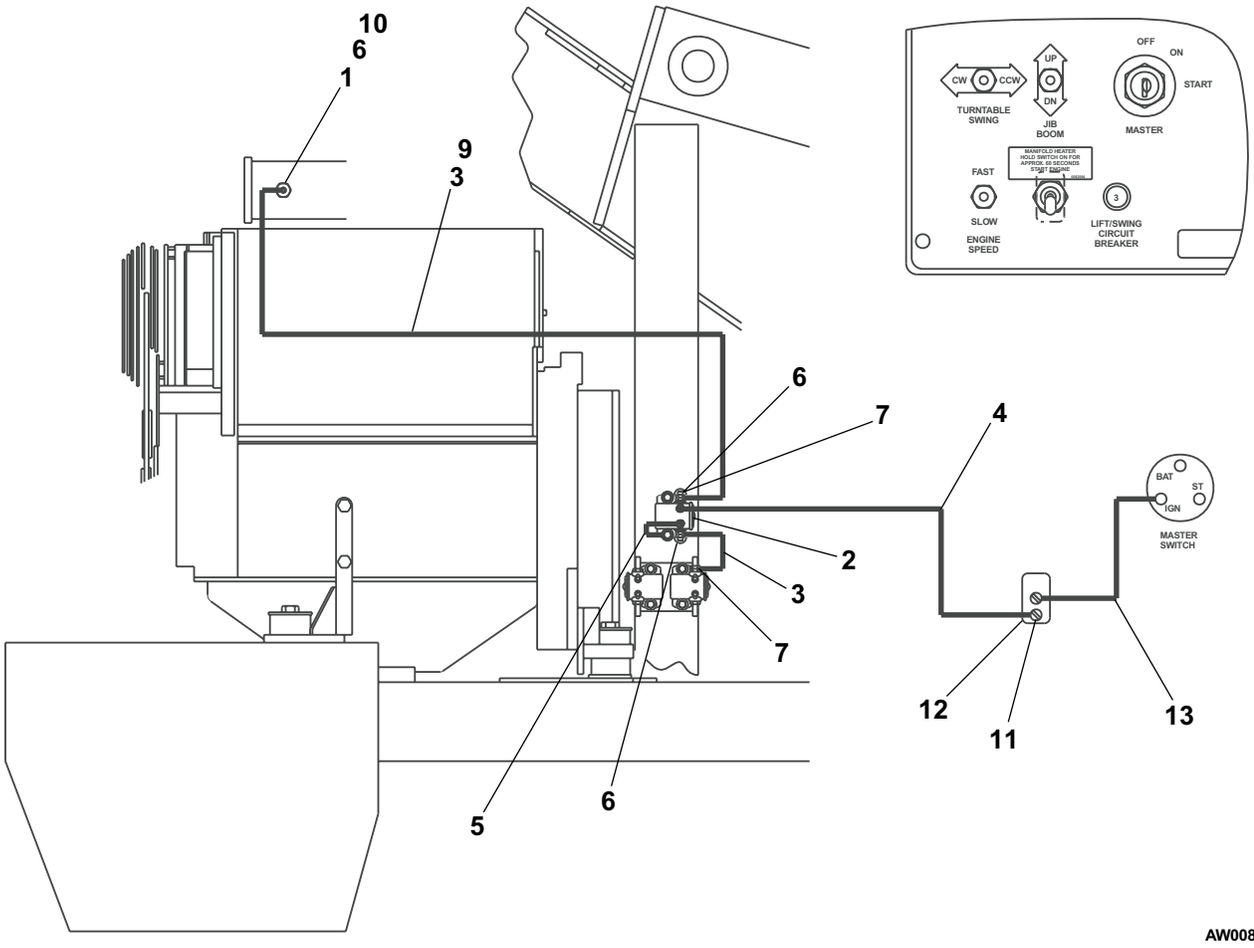

View thousands of Crane Specifications on FreeCraneSpecs.com
https://truckmanualshub.com

Cold start kit, ether

item	part no	qty	description
1	7630014	1	Cold start kit (kit includes all fittings, nylon tubing and atomizer nozzle - these parts not sold separately)
2	3020080	1	Switch, toggle
3	3044162	1	Terminal 1/4 stud insulated 16/14 wire
4	3040082	1	Terminal .250 tab male slip-on fully insulated 16/14 wire
5	0073080	1	Decal, cold start
6	0073056	1	Jumper wire
7	0071699	1	Mounting bracket, cold start
8	0071545	1	Jumper wire
9	9940020	1	Ether cannister

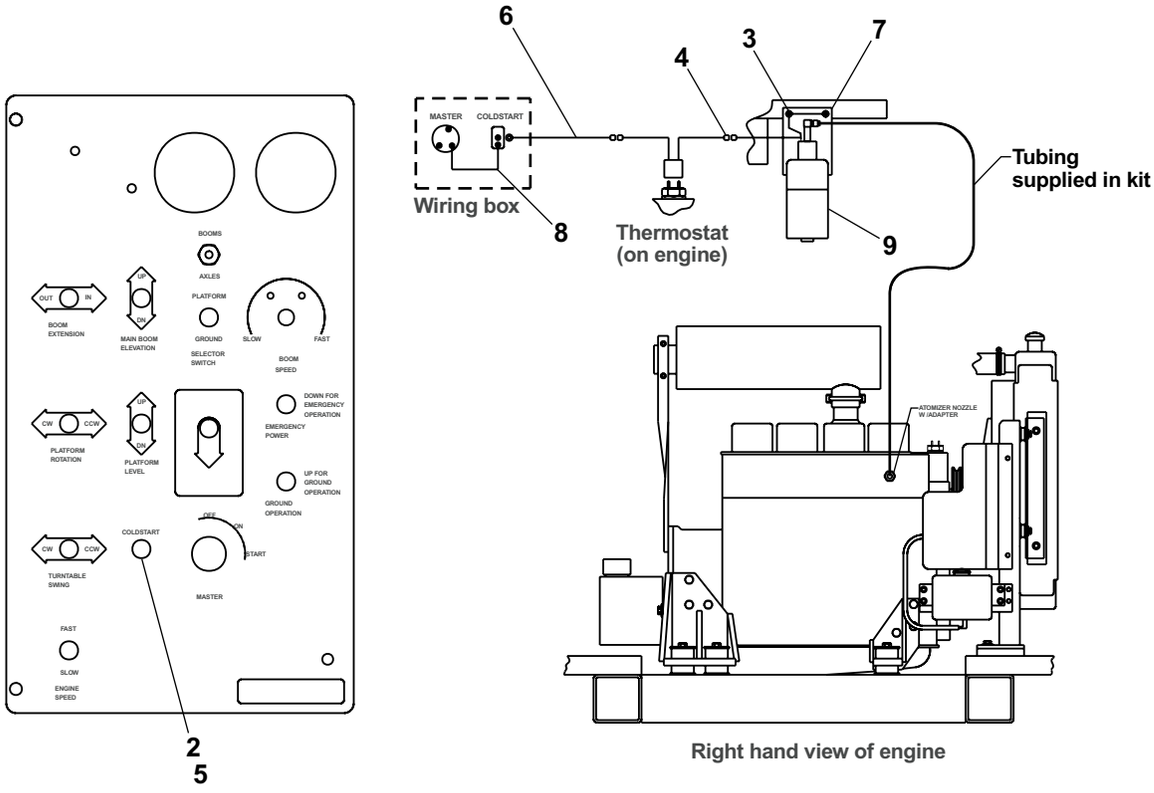

View thousands of Crane Specifications on FreeCraneSpecs.com
https://truckmanualshub.com/

Warning light, dual beacon

item	part no	qty	description
1	3060083	2	Warning light, amber lens
	3060084	2	Warning light, red lens
	8160047	1	Replacement bulb
2	3011601	1	Wire, 16 gauge single conductor x 240 inch long
3	3090019	1	Flexgard tube, 240 inch long
4	5093019	6	Clamp
5	3040046	2	Terminal .250 tab male slip-on fully insulated 22/18 wire
6	3040083	2	Terminal .250 tab male fully insulated 16/14 wire
7	3044146	2	Terminal #10 stud insulated 22/18 wire
8	3044161	2	Terminal #10 stud insulated 16/14 wire
9	970029	6	Capscrew 1/4-20 x 3/4 inch long hex head grade 5
10	986019	6	Washer 1/4 medium flat
11	987099	6	Washer 1/4 medium lock

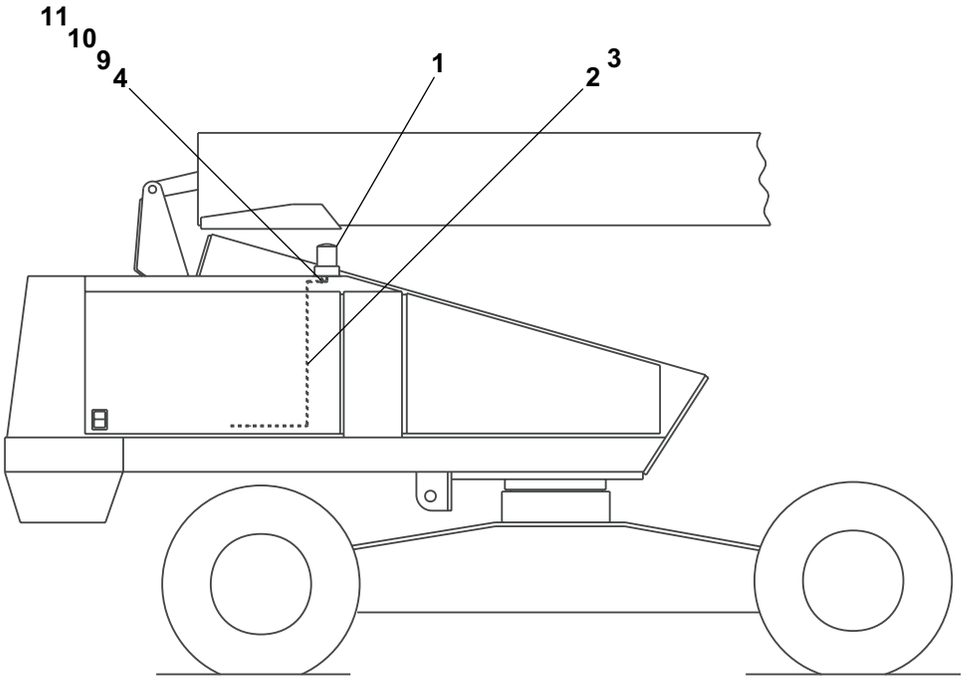

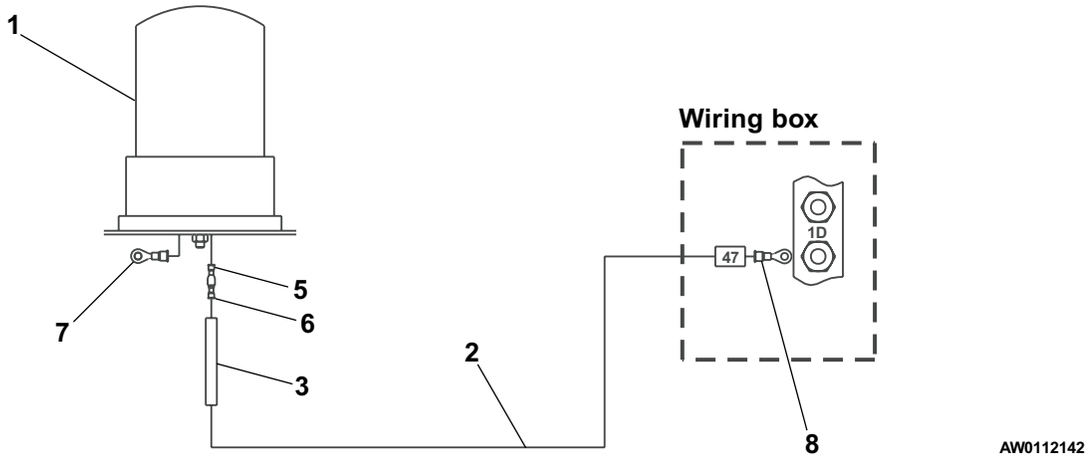

View thousands of Crane Specifications on FreeCraneSpecs.com
https://truckmanualshub.com/

Warning light, single beacon

item	part no	qty	description
1	0074877	1	Mounting bracket
2	3040046	2	Terminal .250 tab male slip-on fully insulated 22/18 wire
3	986019	1	Washer 1/4 medium flat
4	987099	1	Washer 1/4 medium lock
5	970029	1	Capscrew 1/4-20 x 3/4 inch long hex head grade 5
6	5093019	1	Clamp
7	3060083	1	Warning light, amber lens
	3060084	1	Warning light, red lens
	8160047	1	Replacement bulb
8	3014708	1	Wire harness, warning light

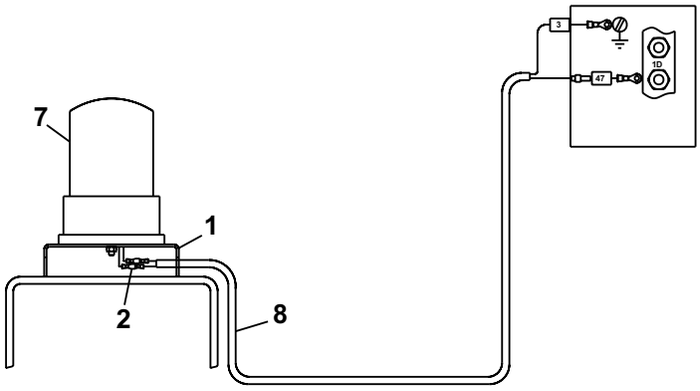

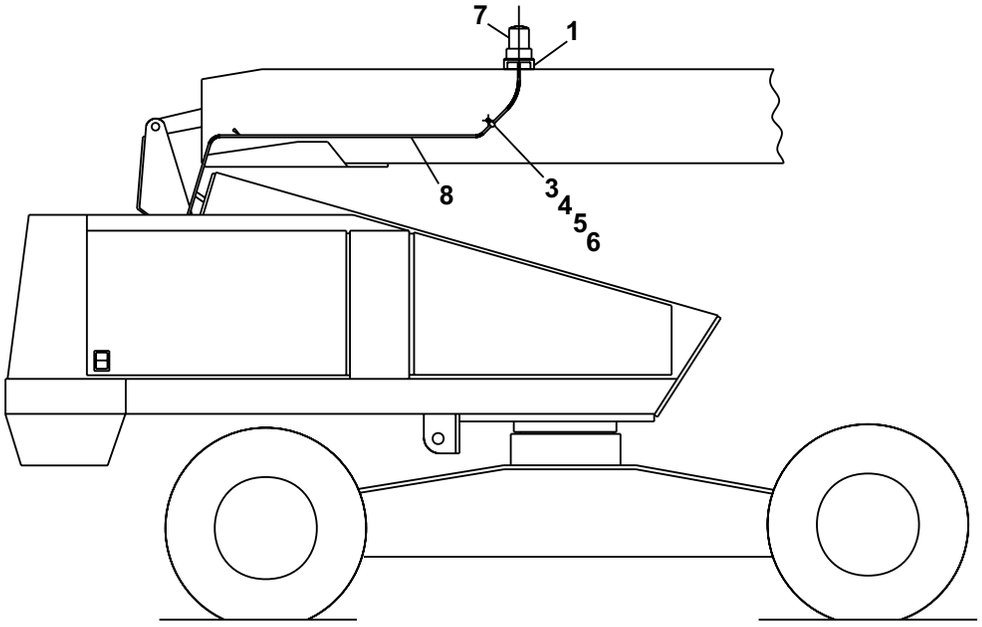

AWA08112B-3

View thousands of Crane Specifications on FreeCraneSpecs.com
https://truckmanualshub.com

Work lights

item	part no	qty	description
1	3064413	2	Light, incandescent with clamp bracket
	3067620	2	Light, halogen with clamp bracket
2	093019	7	Hose clamp
3	3090019	1	Flexgard tube, 80 inch long
4	5569003	1	Grommet
5	970029	7	Capscrew 1/4-20 x 3/4 inch long hex head grade 5
6	986019	7	Washer 1/4 medium flat
7	987099	7	Washer 1/4 medium lock
8	3040082	3	Terminal .250 tab male slip-on fully insulated 16/14 wire
9	3011601	1	Wire, 16 gauge single conductor x 80 inch long
10	3040114	1	Connector, in-line 16/14 wire
11	3044161	1	Terminal #10 stud insulated 16/14 wire
12	3040038	1	Fuse holder, in-line
13	3040039	1	Fuse, 10 amp capacity
14	3040083	3	Terminal .250 tab female slip-on fully insulated 16/14 wire

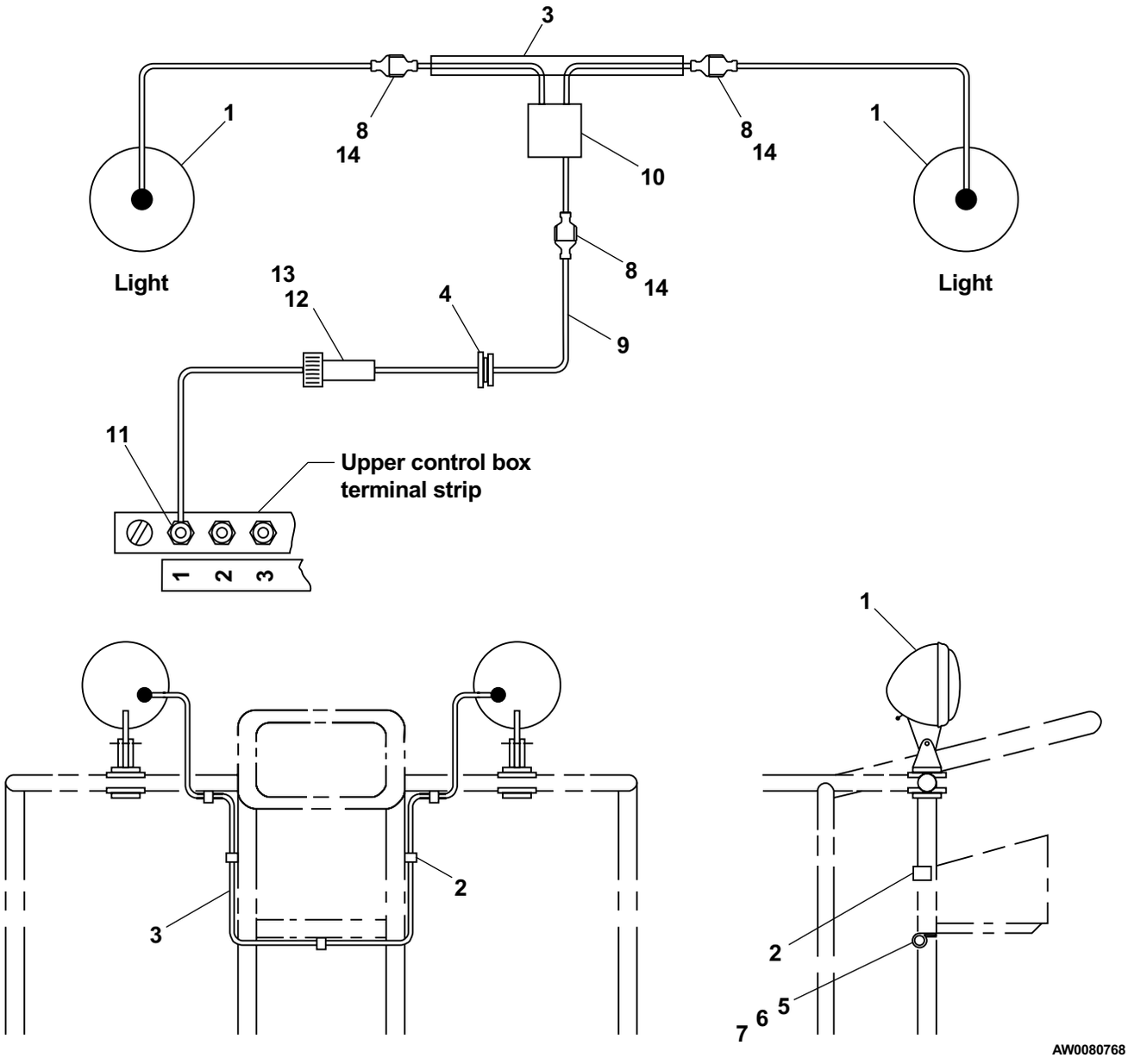

View thousands of Crane Specifications on FreeCraneSpecs.com
https://truckmanualshub.com

Sandblast kit

item	part no	qty	description
1	0110786	1	Turntable cover
2	0110762	1	Bellows, lift cylinder
3	0071998	1	Bellows, level cylinder - (Texas or Prince cylinder)
	0071982	1	Bellows, slave level cylinder - (GBI or Seabee cylinder)
4	550152	1	Clamp
5	5550060	2	Clamp
6	5550030	3	Clamp
7	0081106	1	Cover - (diesel machines only)
8	970469	4	Capscrew 3/8-16 x 1 inch long hex head grade 5
9	987119	4	Washer 3/8 medium lock
10	984109	4	Nut 3/8-16 hex

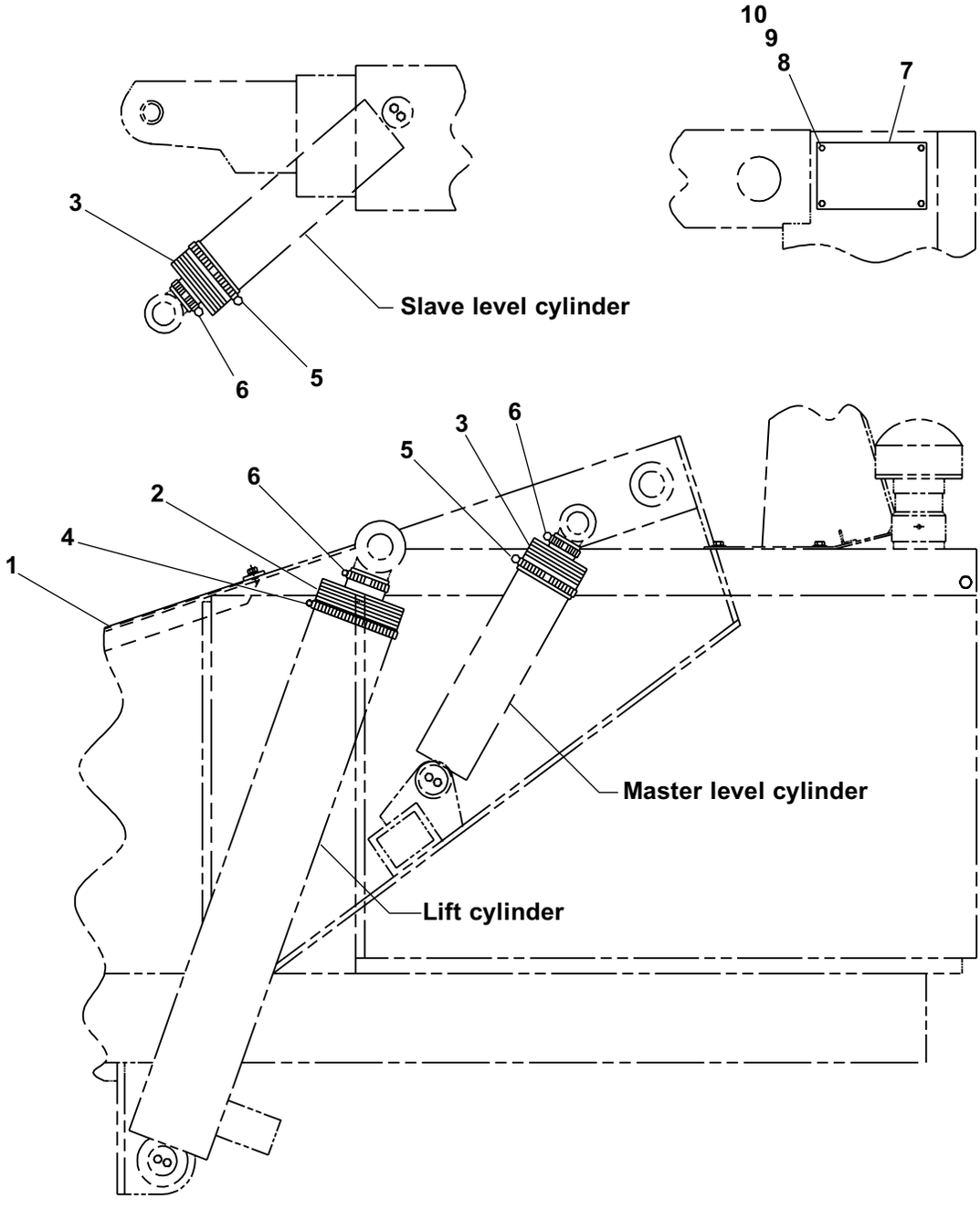

View thousands of Crane Specifications on FreeCraneSpecs.com
View thousands of Crane Specifications on FreeCraneSpecs.com
https://truckmanualshub.com/

View thousands of Crane Specifications on FreeCraneSpecs.com

A

AC generator, 4-5
  Generator, AC hydraulic powered, 4-5
  Hydraulic motor, AC generator, 4-5
AC generator valve, 2-35, 4-5
Access cover, chassis ends, 1-2
Access cover, drive, 1-2
Access cover, steer, 1-2
Accumulator, 2-10, 2-34
Actuator, 1-51
Actuator kit, 1-55
Actuator module, 3-6
Actuator mount bracket, 1-51
Adapter plate, centerpost, 1-18
Adjustment bolt, 1-18
Adjustment ring, swing drive, 1-18
Air cleaner, 1-64, 1-70
Air cleaner elbow, 1-70
Air cleaner mounting band, 1-65, 1-66, 1-68, 1-70
Air inlet heater kit, 4-32
Air inlet hood, 1-65, 1-66, 1-68, 1-70
Air inlet tube, 1-65, 1-66, 1-68, 1-70
Air intake hose, 1-47, 1-65, 1-66
Air intake tube, 1-65, 1-66
Ammeter, 3-22, 3-25, 3-26, 3-29, 3-30, 3-33, 3-34
Anchor bolt, 1-30, 1-34
Anchor plate, bottom, 1-37
Angle, radiator, 1-44, 1-56, 1-60
Angle, radiator mounting, 1-48
Anti-cavitation valve, 2-6, 2-36
Axle interlock valve, 2-10, 2-37
Axle, rear left hand, 1-4
Axle, rear right hand, 1-4, 1-6

B

Barber-Coleman governor, 3-14
Base boom, 1-29
Battery hold down, 3-2, 3-6, 3-10, 3-14, 3-18
Battery hold down bolt, 3-2, 3-6, 3-10, 3-14, 3-18
Battery wire, 3-2, 3-6, 3-10, 3-14, 3-18
Battery, 12 volt DC - 550 CCA, 3-2, 3-6, 3-10, 3-14, 3-18
Bearing spacer, 1-38
Bellows, lift cylinder, 4-37
Bellows, master level cylinder, 4-37
Blocking valve, extend, 2-10, 2-38
Blocking valve, lift, 2-10, 2-39
Boom switch, drive speed, 1-29, 3-55
Boom switch, lift/swing speed, 1-29, 3-56
Brace, air intake tube, 1-66
Bracket, battery disconnect switch, 3-2, 3-6, 3-10, 3-14, 3-18
Bracket, LP gas cylinder, 4-9, 4-10
Bracket, radiator support, 1-48, 1-56, 1-60
Bracket, spark module mount, 1-59

C

Cable guide bracket, 4-6
Cable guide, 4 roller, 4-6
Cable retainer, 1-30
Cable sheave, 1-29
Cable support, left hand, 1-29
Cable, 110 volt power AC generator, 4-2
Cable, 110 volt power to platform, 3-58
Cap, wheel service, 1-10
Carrier tube, 1-37
Cartridge holding valve, 2-61
Centerpost and fittings, 2-40
Channel support, LP gas cylinder, 4-9, 4-13
Chassis, 1-2
Check valve, 2-53
Circuit breaker, 15 amp capacity, 3-37, 3-41, 3-58
Circuit breaker, 20 amp capacity, 3-51, 4-20
Circuit breaker, 25 amp capacity, 3-37, 3-41
Circuit breaker, 3 amp capacity, 3-22, 3-25, 3-26, 3-29, 3-30, 3-33, 3-34, 3-51
Clevis pin, 1-27
Cold start kit , 4-33
Collar, 1-42
Control valve and fittings, non-proportional, 2-10, 2-14
Control valve and fittings, proportional, 2-10, 2-18
Control valve, axle jacking, 2-2, 2-6, 2-22
Control valve, non-proportional, 2-16
Control valve, proportional, 2-20
Controller, drive/steer, 3-51, 3-60
Controller, extend/retract, 3-52, 3-62
Controller, lift/swing, 3-51, 3-64
Corrosion inhibitor, 3-37, 3-41, 3-51
Counterweight, 1-2
Cover, GFCI outlet, 3-58
Cover, platform rotator, 1-38
Cowling door, 1-73
Cowling side, 1-73
Cylinder anchor, 1-29
Cylinder, axle extend, 1-4, 1-6, 2-42, 2-43
Cylinder, extension, 1-34, 2-44, 2-45
Cylinder, jacking, 2-52, 2-53, 2-54
Cylinder, lift, 2-47, 2-48, 2-49
Cylinder, master level, 1-18, 2-55, 2-56, 2-57, 2-58
Cylinder, slave level, 2-62
Cylinder, Slave level, 2-59
Cylinder, steering, 1-10, 2-63, 2-64, 2-65, 2-66

D

Decal, 4 x 4 logo, 1-74
Decal, attach fall restraint, 1-74
Decal, blue arrow, 1-74
Decal, caution do not use boom, 1-74
Decal, caution governor damage, 1-74
Decal, caution liquid withdrawal, 4-9, 4-10, 4-13
Decal, CE logo, 1-74
Decal, cold start, 4-33
Decal, control wire #1, 3-46, 3-49, 3-51
Decal, control wire #2, 3-46, 3-49, 3-51
Decal, danger crushing hazard, 4-31
Decal, danger cylinder failure, 1-74
Decal, danger do not reach, 1-74
Decal, danger do not ride, 4-31
Decal, danger electrical hazard, 1-74, 3-51
Decal, danger rotating engine parts, 1-74
Decal, danger tow package, 4-31
Decal, danger you must not operate, 1-74
Decal, diesel fuel, 1-74
Decal, diode, 3-46, 3-49
Decal, dual fuel instructions, 4-9, 4-10
Decal, engine block heater, 4-25
Decal, engine control module, 1-60
Decal, float valve, 4-31
Decal, gasoline fuel, 1-74
Decal, high range selector location, 1-74
Decal, high range selector valve, 1-74
Decal, hydraulic oil, 1-74
Decal, hydraulic warm-up instructions, 4-28
Decal, inspect wire ropes, 1-74
Decal, lower control instructions, 1-74
Decal, lube recommendations, 1-74
Decal, made in USA, 1-74
Decal, main circuit breaker, 3-41
Decal, notice manual reorder, 1-74

View thousands of Crane Specifications on FreeCraneSpecs.com
https://truckmanualshub.com/

Index

Decal, OmniQuip logo, 1-74
Decal, operating manual enclosed, 1-74
Decal, power wire, 3-46, 3-49, 3-51
Decal, rotate while greasing, 1-74
Decal, safe operation information, 1-74
Decal, Snorkel brand logo, 1-74
Decal, TB 80 logo, 1-74
Decal, terminal strip, 3-46, 3-49
Decal, towing instructions, 4-31
Decal, yellow arrow, 1-74
Diode stand off, 3-46, 3-49
Door latch, 1-40, 1-73
Door post, 1-73
Drag link storage cradle, 4-31
Drain cock, 1-44
Drive motor with brake, 1-12, 1-14, 2-30
Drive valve, 2 wheel drive, 2-24
Drive valve, 4 wheel drive, 2-6, 2-24
Dual fuel engine, Ford LRG-423, 4-10, 4-14
Dual fuel engine, Ford LRG-425, 4-13, 4-18
Dual fuel kit, liquid cooled, 4-14, 4-16, 4-18
Dual holding valve, platform rotation, 1-42, 2-70
Dual sequence valve, 2-26, 2-28
Dual sequence valve, 4 wheel drive, 2-69
Dual sequence valve, left hand, 2-2, 2-68
Dual sequence valve, right hand, 2-2, 2-67

E

Elbow, 3 inch 90° rubber, 1-65, 1-66, 1-68, 1-70
Electric fuel pump, 1-56, 3-57
Electrical box, drilled, 3-58
Electrical hazard
  See inside front cover
Emergency power unit, 2-10, 2-71
Emission control hose, 1-70
Engine - LP fuel only, Ford LRG-423, 4-16
Engine adapter, 1-47
Engine adapter, Ford engine, 1-59, 1-63
Engine cover, 1-73
Engine harness cover plate, 1-63
Engine mount, 1-44, 1-48, 1-52, 1-56, 1-60
Engine mount washer, 1-44, 1-48, 1-52, 1-56, 1-60
Engine, Continental TM-27, 1-47
Engine, Cummins 4B, 1-48, 1-51
Engine, Ford LRG-423, 1-56, 1-59, 4-14, 4-16
Engine, Ford LRG-425, 1-60, 1-63, 4-18
EPS anti-restart module, 3-6, 3-10
Ether cannister, 4-33
Exhaust bracket, 1-59, 1-63
Exhaust clamp, 1-66
Exhaust flange, LRG Ford, 1-59, 1-63
Exhaust gasket, 1-59, 1-63, 1-66
Exhaust pipe, 1-59, 1-65, 1-68
Exhaust support, 1-51
Exhaust support strap, 1-51
Exhaust tube, 1-51
Extension cylinder, 1-29, 1-34
Extension with gasket, 3-37, 3-41

F

Filter condition indicator, 1-65, 1-66, 1-68, 1-70
Filter, sump strainer, 2-32
Flange, left hand, 1-4, 1-6
Flange, right hand, 1-4, 1-6
Flanged electrical outlet with cover, 3-37, 3-41
Flasher, 4-23
Flasher base, 4-23
Flexible coupling, 1-47, 1-51, 1-55, 1-59, 1-63
Flow divider/combiner valve, 2-26, 2-28
Foot switch, 3-50
Front cowling, 1-73
Fuel filter, 1-44, 1-52, 1-60, 3-57
Fuel filter bracket, 1-51
Fuel hose, 1-52, 1-56, 1-60, 4-14, 4-18
Fuel pump, 1-60
Fuel tank spacer, 1-22
Fuel tank strap, 1-22
Fuel tank support, 1-22, 4-9
Fuel tank, 40 gallon capacity, 1-22
  Fuel gauge, 1-22
  Replacement cap, 1-22
Fuel tank, gasoline 20 gallon capacity, 4-9
Full height swinging gate, steel platform, 1-40
Fuse holder, in-line, 4-36
Fuse, 10 amp capacity, 4-36

G

Gasket, hub cap, 1-16
Gasoline fuel shut-off valve, 4-14
Gear hub, 1-12, 1-14, 1-76, 1-78
Gravity gate, platform, 1-40
Guard, cable retention, 4-2
Guard, emergency stop switch, 3-22, 3-25, 3-26, 3-29, 3-30, 3-33, 3-34
Guide bar, 1-27

H

Hairpin clip pin, 1-27
Header pipe, 1-66
High range speed selector valve, 2-6, 2-72
Horn, 12 volt DC, 3-6, 3-10, 3-14, 3-18
Hose bracket, tip boom, 4-6
Hose carrier, 1-37
Hose carrier tube, 1-4, 1-6
Hose reel, 4-6
Hour meter, 3-37, 3-41
Hub, 1-16
Hub cap, 1-16
Hydraulic , 2-10
Hydraulic oil reservoir, 1-23
Hydraulic oil return filter, 2-75
Hydraulic pump, 1-47, 1-51, 1-55, 1-59, 1-63
Hydraulic warm-up valve, 2-74, 4-28

I

Insulator boot, 3-2, 3-6, 3-10, 3-14, 3-18, 4-32
Intermediate boom, 1-29

J

Jacking cylinder, 2-2, 2-6, 2-50, 2-51

K

King pin, 1-10
Knob, gate hinge pin, 1-40

L

Latch stop, 1-40
Lift cylinder, 1-18, 2-46
Light, flood with round base, 4-20
Light, halogen with clamp bracket, 4-36
Light, incandescent with clamp bracket, 4-36
Light, turn signal, 4-23
Link pin, 1-34
Liquid level gauge with thermometer, 1-23, 2-32
Lock pin, 1-4, 1-6

View thousands of Crane Specifications on FreeCraneSpecs.com

Index

Lower control panel and hinge, 3-22, 3-25, 3-26, 3-29, 3-30, 3-33, 3-34
Lower control panel cover, 1-73
Lower controls door, 1-73
Lower controls, Continental, 3-22
Lower controls, Cummins after 8-16-99, 3-26
Lower controls, Cummins before 8-16-99, 3-25
Lower controls, Deutz after 8-16-99, 3-30
Lower controls, Deutz before 8-16-99, 3-29
Lower controls, Ford LRG-423, 3-33
Lower controls, Ford LRG-425, 3-34
LP fuel engine, Ford LRG-423, 4-13
LP gas cylinder, liquid withdrawal, 4-9, 4-10, 4-13
LP gas fuel hose, 4-9, 4-10, 4-13
Lubrication hose, 1-2

M

Mini siren, engine alarm, 3-37, 3-41, 3-52
Motion warning alarm, standard, 4-26
Motion warning alarm, UL approved, 4-26
Motor mount, 1-47, 1-55
Motor mount, front, 1-44, 1-56, 1-60
Motor mount, left hand, 1-59, 1-63
Motor mount, rear, 1-60
Motor mount, right hand, 1-59, 1-63
Motor, swing drive, 1-20
Mount kit, Addco actuator, 1-55
Mount plate, actuator module, 3-6, 3-10
Mount plate, Barber-Coleman governor, 3-14, 3-18
Mount plate, overflow reservoir, 1-44, 1-48, 1-56, 1-60
Mount plate, swing drive, 1-18
Mount strap, hydraulic oil reservoir, 1-23
Mounting frame, platform rotator, 1-42
Muffler, 1-51, 1-59, 1-63, 1-66

O

Overflow reservoir, 1-44, 1-48, 1-56, 1-60

P

Panel, drilled, 3-46, 3-49
Pin joint plate, 1-27
Pin lock, 1-10, 1-18, 1-24, 1-27, 1-29, 1-34, 1-38
Pin lock retainer, 1-4, 1-6
Pin, axle extend cylinder base end, 1-4, 1-6
Pin, axle extend cylinder rod end, 1-4, 1-6
Pin, base boom to lift cylinder rod end, 1-18
Pin, base boom to turntable, 1-24
Pin, cable retainer, 1-29
Pin, cylinder anchor, 1-29
Pin, drag link, 4-31
Pin, extend sheave, 1-34
Pin, gate hinge, 1-40
Pin, lift cylinder base end to turntable, 1-18
Pin, link to turntable, 1-24
Pin, master level cylinder base end to turntable, 1-18
Pin, master level cylinder rod end, 1-18
Pin, platform to tip boom, 1-38
Pin, retract sheave, 1-29
Pin, slave level cylinder to platform, 1-38
Pin, slave level cylinder to tip boom, 1-29
Pin, steering arm, 1-10
Pin, steering cylinder, 1-10
Pin, tow bar, 4-31
Pinion guard, 1-86
Placard, 125 volts 15 amps, 1-74, 3-37
Placard, AC generator, 4-2
Placard, ANSI A92.5-1992, 1-74
Placard, axle/boom, 3-22, 3-25, 3-26, 3-29, 3-30, 3-33, 3-34
Placard, battery disconnect switch, 3-2, 3-6, 3-10, 3-14, 3-18
Placard, caution serial number, 1-74
Placard, circuit breaker, 3-37
Placard, danger axle/jack, 1-74
Placard, danger do not alter switch, 1-74
Placard, danger do not operate, 1-74
Placard, danger foam filled tires, 1-74
Placard, dual fuel switch, 4-9, 4-10
Placard, emergency bleed down valve, 1-74
Placard, engine rpm, 1-74
Placard, heater instructions, 4-32
Placard, horn, 3-52
Placard, light switch, 4-20
Placard, lower controls, 1-74, 3-22, 3-25, 3-26, 3-29, 3-30, 3-33, 3-34
Placard, lug nut torque, 1-74
Placard, platform capacity, 1-74
Placard, platform identification, 1-74
Placard, platform rotation, 3-52
Placard, upper control box front, 1-74, 3-51
Placard, upper control box top, 1-74, 3-52
Placard, warm-up switch, 4-28
Plastic track link, 1-37
Plate, engine coupling, 1-55
Plate, slide pad mounting, 1-34
Platform, 1-38
Platform foot switch, 3-50
Platform rotator, 1-38, 1-42, 2-77, 2-78
Pressure manifold, 2-10, 2-79
Pressure relief valve , 2-22
Pump control valve, 2-80
PWM module, 3-2, 3-6, 3-10, 3-14, 3-18
Pylon, platform rotator, 1-42

R

Radiator, 1-44, 1-56, 1-60
Radiator cap, 1-48, 1-56, 1-60
Radiator cushion, 1-44, 1-56, 1-60
Radiator hose, 1-44, 1-48, 1-56, 1-60
Radiator overflow hose, 1-44, 1-56, 1-60
Radiator support bracket, 1-44
Receptacle, GFCI outlet - 20 amp, 3-58
Relay, 12 volt DC, 3-37, 3-41, 3-46, 3-49, 3-51
Roller spacer, aluminum gravity gate, 1-40
Roller spacer, steel gravity gate, 1-40
Roller, aluminum gravity gate, 1-40
Roller, steel gravity gate, 1-40
Rotation bearing gear, 1-2

S

Sandwich mount, 3-6, 3-10
Scraper pad, left hand axle, 1-4, 1-6
Scraper pad, right hand axle, 1-4, 1-6
Selector valve, 2-26, 2-28
Series parallel package, left hand, 2-6, 2-28
Series parallel package, right hand, 2-6, 2-26
Sheave cage, 1-29
Sheave, extend cable, 1-34
Shut-off solenoid, 4-14
Shuttle valve, 2-2, 2-6, 2-83
Siren, tilt alarm, 3-51
Slide pad, 1-4, 1-6, 1-27, 1-29, 1-30, 1-34, 1-37
Slide pad shim, 1-4, 1-6, 1-29, 1-34
Slide pad spacer, 1-29
Snapper pin, 1-4, 1-6
Solenoid, 1-47
Solenoid, 12 volt DC, 3-2, 3-6, 3-10, 3-14, 3-18
Spacer, air cleaner, 1-65, 1-66, 1-68, 1-70
Spacer, hydraulic oil reservoir, 1-23
Spark module, Ford LRG-423 engine, 1-59

View thousands of Crane Specifications on FreeCraneSpecs.com
https://truckmanualshub.com

Index

Spindle nut, 1-10, 1-16
Spring, torsion, 1-40
Steer cut-out valve, 2 wheel drive, 2-2, 2-81
Steer cut-out valve, 4 wheel drive, 2-6
Steering arm, 1-10
Steering float valve, 4-31
Steering yoke, 1-10
Support bracket, base end, 1-34
Support bracket, rod end, 1-34
Support tube, 1-27
Support, hydraulic oil reservoir, 1-23
Swing drive, 1-20, 1-80, 1-82
Swing drive brake, 1-84
Swinging gate, platform, 1-40
Switch knob, 3-22, 3-25, 3-26, 3-29, 3-30, 3-33, 3-34
Switch seal, 3-52
Switch, anti-restart, 3-51
Switch, battery disconnect, 3-2, 3-6, 3-10, 3-14, 3-18
Switch, emergency stop push/pull, 3-52
Switch, keyed start, 3-22, 3-25, 3-26, 3-29, 3-30, 3-33, 3-34
Switch, magnetic, 3-22, 3-25, 3-29, 3-33
Switch, oil pressure, 1-47, 1-51, 1-59, 1-63
Switch, push button, 3-52
Switch, toggle, 1-60, 3-22, 3-25, 3-26, 3-29, 3-30, 3-33, 3-34, 3-51, 4-2, 4-9, 4-10, 4-20, 4-28, 4-32, 4-33

T

Tail pipe, 1-70
Tail pipe brace, 1-66
Temperature gauge, 3-22, 3-25, 3-26, 3-29, 3-30, 3-33, 3-34
Temperature gauge , 3-30
Temperature sensor, 3-6, 3-10
Temperature switch, 4-28
Terminal strip, 10 circuit #10 stud, 3-51
Terminal strip, 12 circuit #10 stud, 3-46, 3-49
Terminal strip, 12 circuit .188 tab slip-on, 3-46, 3-49, 3-51
Terminal strip, 18 circuit .188 tab slip-on, 3-51
Throttle arm, 1-47
Throttle lever, 1-51
Throttle rod, 1-47
Tie rod, 1-10
Tilt alarm sensor 5°, 3-2, 3-6, 3-10, 3-14, 3-18
Tip boom, 1-29
Tire and wheel, 1-12, 1-14, 1-16
Torque plate, platform rotator, 1-42
Tow bar, 4-31
Tow bar storage cradle, 4-31
Tube bracket, 1-27
Tube clamp, upper, 1-27
Turntable, 1-2
Turntable cover, 4-37

U

Upper control box cover, 4-27
Upper door post bracket, 1-73

V

Vacuum fitting, 4-14, 4-16, 4-18
Vacuum switch, 1-59, 4-14, 4-16, 4-18
Valve spacer, 1-42
Valve, axle jacking, 2-22

W

Warning light, amber or red lens, 4-34
Warranty
  See inside back cover
Wheel nut, 1-12, 1-14, 1-16
Wheel stud, 1-12
Wheel stud wedge, 1-12
Wire harness, alternator, 1-59, 1-63, 3-10
Wire harness, control wire #1, 1-37
Wire harness, control wire #2, 1-37
Wire harness, crank sensor, 1-59
Wire harness, drive speed boom switch, 3-55
Wire harness, engine/lower controls, 3-22, 3-25, 3-26, 3-29, 3-30, 3-33, 3-34
Wire harness, EPS, 3-26, 3-30
Wire harness, internal, 3-37, 3-41
Wire harness, lift/swing speed boom switch, 3-56
Wire harness, platform foot switch, 3-50
Wire harness, power wire, 1-37
Wire harness, tail lights, 4-23
Wire harness, turntable, 3-2, 3-6, 3-10, 3-14, 3-18
Wire harness, upper control box control, 3-51
Wire harness, upper control box power, 3-51
Wire harness, warning light, 4-35
Wire rope anchor, 1-29
Wire rope, extend, 1-34
Wire rope, retract, 1-29
Wiring box, 3-2, 3-10, 3-14, 3-37
Wiring box panel, 3-37, 3-41, 3-46
Wiring box panel, Ford LRG-425, 3-49
Wiring box, Ford LRG-425, 3-18, 3-41

View thousands of Crane Specifications on FreeCraneSpecs.com
https://truckmanualshub.com

LIMITED WARRANTY

Snorkel warrants each new machine manufactured and sold by it to be free from defects in material and workmanship for a period of one (1) year from date of delivery to a Customer or for one year after the machine has been placed in first service in a Dealer rental fleet, whichever comes first. Any part or parts which, upon examination by the Snorkel Service Department, are found to be defective, will be replaced or repaired, at the sole discretion of Snorkel, through its local Authorized Dealer at no charge.

Snorkel further warrants the structural components; specifically, the mainframe chassis, turntable, booms and scissor arms, of each new machine manufactured by it to be free from defects in material and workmanship for an additional period of four (4) years. Any such part or parts which, upon examination by the Snorkel Service Department, are found to be defective will be replaced or repaired by Snorkel through its local Authorized Dealer at no charge; however, any labor charges incurred as a result of such replacement or repair will be the responsibility of the Customer or Dealer.

The Snorkel Service Department must be notified within forty-eight (48) hours of any possible warranty situation during the applicable warranty period. Personnel performing warranty repair or replacement must obtain specific approval by Snorkel Service Department prior to performing any warranty repair or replacement.

Customer and Dealer shall not be entitled to the benefits of this warranty and Snorkel shall have no obligations hereunder unless the “Pre-Delivery and Inspection Report” has been properly completed and returned to the Snorkel Service Department within ten (10) days after delivery of the Snorkel product to Customer or Dealer’s rental fleet. Snorkel must be notified, in writing, within ten (10) days, of any machine sold to a Customer from a Dealer’s rental fleet during the warranty period.

At the direction of the Snorkel Service Department, any component part(s) of Snorkel products to be replaced or repaired under this warranty program must be returned freight prepaid to the Snorkel Service Department for inspection. All warranty replacement parts will be shipped freight prepaid (standard ground) from the Snorkel Service Department or from Snorkel’s Vendor to Dealer or Customer.

REPLACEMENT PARTS WARRANTY

Any replacement or service part made or sold by Snorkel is not subject to the preceding **Limited Warranty** beyond the normal warranty period of the machine upon which the part was installed.

THIS WARRANTY EXCLUDES AND SNORKEL DOES NOT WARRANT:

1. Engines, motors, tires and batteries which are manufactured by suppliers to Snorkel, who furnish their own warranty. Snorkel will, however, to the extent permitted, pass through any such warranty protection to the Customer or Dealer
2. Any Snorkel product which has been modified or altered outside Snorkel’s factory without Snorkel’s written approval, if such modification or alteration, in the sole judgment of Snorkel’s Engineering and/or Service Departments, adversely affects the stability, reliability or service life of the Snorkel product or any component thereof.
3. Any Snorkel product which has been subject to misuse, improper maintenance or accident. “Misuse” includes but is not limited to operation beyond the factory-rated load capacity and speeds. “Improper maintenance” includes but is not limited to failure to follow the recommendations contained in the Snorkel Operation, Maintenance, Repair Parts Manuals. Snorkel is not responsible for normal maintenance, service adjustments and replacements, including but not limited to hydraulic fluid, filters and lubrication.
4. Normal wear of any Snorkel component part(s). Normal wear of component parts may vary with the type application or type of environment in which the machine may be used; such as, but not limited to sandblasting applications.
5. Any Snorkel product that has come in direct contact with any chemical or abrasive material.
6. Incidental or consequential expenses, losses, or damages related to any part or equipment failure, including but not limited to freight cost to transport the machine to a repair facility, downtime of the machine, lost time for workers, lost orders, lost rental revenue, lost profits or increased cost.

This warranty is expressly in lieu of all other warranties, representations or liabilities of Snorkel, either expressed or implied, unless otherwise amended in writing by Snorkel’s President, Vice President-Engineering, Vice President-Sales or Vice President-Marketing.

SNORKEL MAKES NO WARRANTIES WHICH EXTEND BEYOND THE DESCRIPTION OF THIS LIMITED WARRANTY. SNORKEL MAKES NO IMPLIED WARRANTY OF MERCHANTABILITY OR FITNESS FOR A PARTICULAR PURPOSE AND DISCLAIMS ALL LIABILITY FOR INCIDENTAL OR CONSEQUENTIAL DAMAGES, INCLUDING BUT NOT LIMITED TO INJURY TO PERSONS OR PROPERTY.

The Customer shall make all warranty claims through its local Authorized Dealer and should contact the Dealer from whom the Snorkel product was purchased for warranty service. Or, if unable to contact the Dealer, contact the Snorkel Service Department for further assistance.

Effective July 1995

View thousands of Crane Specifications on FreeCraneSpecs.com
View thousands of Crane Specifications on FreeCraneSpecs.com
https://truckmanualshub.com/

View thousands of Crane Specifications on FreeCraneSpecs.com
https://truckmanualshub.com/

Maintenance information

The parts drawings located in the repair parts sections, are designed for use as a guide for proper disassembly of the machine and components as well as for parts replacement. Always refer to the hydraulic system installation drawings and the electrical wiring diagram before removing or disassembling associated parts.

⚠CAUTION

Do not attempt to disconnect or remove any hydraulic line before reading and understanding all text concerning the system hydraulics. In most cases, disassembly of the machine will be obvious from the illustration.

When disassembling or reassembling components, complete the procedural steps in sequence. Do not partially disassemble or assemble one part, then start on another. Always check your work to assure that nothing has been overlooked.

The following list is a gentle reminder when disassembling or assembling the machine.

- ✓ Always be conscious of weight.
- ✓ Never attempt to lift heavy objects without the aid of a mechanical device.
- ✓ Do not allow heavy objects to rest in an unstable condition.
- ✓ Always make sure work platform is in stowed position - blocked or the weight removed by a suitable lifting device before disconnecting the hydraulic hose from the motor/pump unit to the lift cylinder.
- ✓ When raising a portion of the machine, be sure that adequate blocking is properly positioned - Do not depend on lifting device to hold and secure weight.
- ✓ If a part resists removal, check to see if all fasteners, electrical wiring, hydraulic lines, etc., have been removed or that other parts are not interfering.

Parts should be thoroughly inspected before restoring to service at the time of reassembly. Burrs, nicks or scratches may be removed from machined surfaces by honing or polishing with #600 crocus cloth, followed by a thorough cleaning in an approved cleaning solvent, and blown dry with compressed air. Do not alter the contour of any part. If this operation does not restore the part to a serviceable condition, replace the part. Replace all O-rings, seals, and gaskets at reassembly. Use new roll pins or cotter pins. Dip all packing rings and seals in hydraulic oil before reassembling in cylinder and manifold installations. Replace any part having imperfect threads. In general, units that have been disassembled can be reassembled by reversing the order of disassembly.

Remember that the service life of a machine can be increased by keeping dirt and foreign materials out of the vital components. Precautions have been taken to safeguard against this; shields, covers, seals and filters are provided to keep air and oil supplies clean; however, these items must be maintained on a scheduled basis in order to function properly.

At any time air or oil lines are disconnected, clean surrounding areas as well as the opening and fittings themselves. As soon as a line or component is disconnected, cap or cover all openings to prevent the entry of dirt or foreign materials.

New parts should remain in their container until they are ready to be used.

Clearly mark or tag hydraulic lines and electrical wiring connections when disconnecting or removing them from unit. This will assure that they are correctly reinstalled.

Proper assembly is critical to the successful rebuilding of any unit. Carefully inspect any parts which are to be reused. If in doubt, replace.

"SAFETY FIRST" is a good slogan.

Replace any guards and protective devices that have been removed to carry out maintenance and repair work.

View thousands of Crane Specifications on FreeCraneSpecs.com
https://truckmanualshub.com

Maintenance schedules

Snorkel has established a Preventive Maintenance Schedule that includes Daily Maintenance (Operator's Inspection), 90 Day or 150 Hour (frequent) Maintenance and Yearly or 500 Hour (annual) Maintenance, to detect any defective, damaged or improperly secured parts and provide information regarding lubrication and other minor maintenance items.

The Maintenance Schedule following, outlines the requirements of these maintenance checks for each time interval. The Operator's Daily Maintenance and inspection must be performed by a trained operator. All other maintenance and inspections must be performed by a trained service technician only.

Note that the 90 Day or 150 hour (frequent) and yearly or 500 hour (annual) Maintenance, require use of the Preventive Inspection Maintenance Checklist to pinpoint all inspection items. Retain a copy of these forms for your records.

They also require that all placards and decals on the unit are to be inspected.

All placards and decals must be in place and legible. Use the placards installation drawing and parts listing in the repair parts section 1 of this manual to check these placards and decals.

Snorkel recommends that you make additional copies of the Preventive Inspection Maintenance Checklist forms for your use in performing these inspections.

⚠ DANGER

Failure to perform the Preventive Maintenance at the intervals outlined in the Maintenance Schedule may result in a unit being operated with a defect that could result in INJURY or DEATH of the unit operator. Do not allow a unit to be operated that has been found to be defective.

Repair all defects before returning the unit to service.

Daily maintenance (operator's inspection)

Components	Service Required
Axle/boom interlock	Check operation
Emergency power motor/pump	Check operation
Air filter	Check condition
Engine oil	Check oil level
Fuel leaks	Visually inspect (hoses, connections, etc.)
Fuel tank cap	Visually inspect (installation)
Engine coolant	Check fluid level
Engine fuel level	Check fuel gauge
Bolts and fasteners	Visually inspect (looseness)
Platform gate	Visually inspect (operation)
Slide pads	Visually inspect (boom wear marks)
Structural damage and welds	Visually inspect (weld cracks, dents)
Tires and wheels	Visually inspect (condition)
Battery fluid level	Check fluid level
Battery terminals	Visually inspect (corrosion)
Charging system	Visually inspect (belt, gauge)
Control switches	Visually inspect (operation)
Wiring harnesses	Visually inspect (installation, condition)
Hydraulic leaks	Visually inspect (hoses, tubes, fittings)
Hydraulic oil	Check fluid level
Placards and decals	Visually inspect (installation, condition)

View thousands of Crane Specifications on FreeCraneSpecs.com
https://truckmanualshub.com/

Maintenance schedules

90 day or 150 hour maintenance (trained service technician)

Components	Service Required	Recommended Lubricant or Further Instructions
Daily maintenance	Perform maintenance as per schedule	
Preventive inspection maintenance checklist	Perform inspection, complete form	Retain copy of checklist
Placards and decals inspection	Inspect using drawing and parts listing in section 1 (repair parts)	Replace any missing or unreadable decals/placards
Door hinges and latches	Lubricate	SAE 10W oil or spray lubricant
Rotation bearing	Lubricate	Conoco Super Sta #2 Above 32° Mobilgrease CM-P Below 32° Mobilgrease CM-L
Rotation bearing teeth & pinion	Lubricate	Mobil Mobiltac 375NC
Tie rods	Lubricate	Conoco Super Sta #2 Above 32° Mobilgrease CM-P Below 32° Mobilgrease CM-L
Gear hubs	Check fluid level, fill if low	Mobil Mobilube HD 80W-90
Swing drive	Check fluid level, fill if low	Mobil Mobilube HD 80W-90
Platform rotator	Refill if disassembled for repairs	Consult factory
Platform controller	Check smooth operation & speeds	
Batteries	Check specific gravity	1.260/1.275 at 80° F.
Hydraulic return filter	Check condition	Replace if dirty
Engine RPM	Check for proper engine RPM	See engine manufactures owner's manual
Engine oil and filter	Replace per engine owners manual	
Engine fuel filter	Check condition	Replace every 6 months or if dirty

Yearly or 500 hour maintenance (trained service technician

Components	Service Required	Recommended Lubricant or Further Instructions
90 day or 150 hour maintenance	Perform maintenance per schedule	
Hydraulic oil reservoir	Clean and replace fluid	Above 10° Mobil DTE-13M Below 10° Mobil DTE-11M
Hydraulic return filter	Replace	After 1st. 50 hours, thereafter at recommended interval
Hydraulic reservoir suction filter	Clean and reinstall	
Hydraulic pressures	Check pressures	
Gear hubs	Replace fluid	Mobil Mobilube HD 80W-90
Swing drive	Replace fluid	Mobil Mobilube HD 80W-90
Engine coolant	Check Condition	See engine manufacturer's owner's manual
Front wheel bearings	Clean and repack	Conoco Super Sta #2 Above 32° Mobilgrease CM-P Below 32° Mobilgrease CM-L

View thousands of Crane Specifications on FreeCraneSpecs.com
https://truckmanualshub.com/

Lubrication illustration

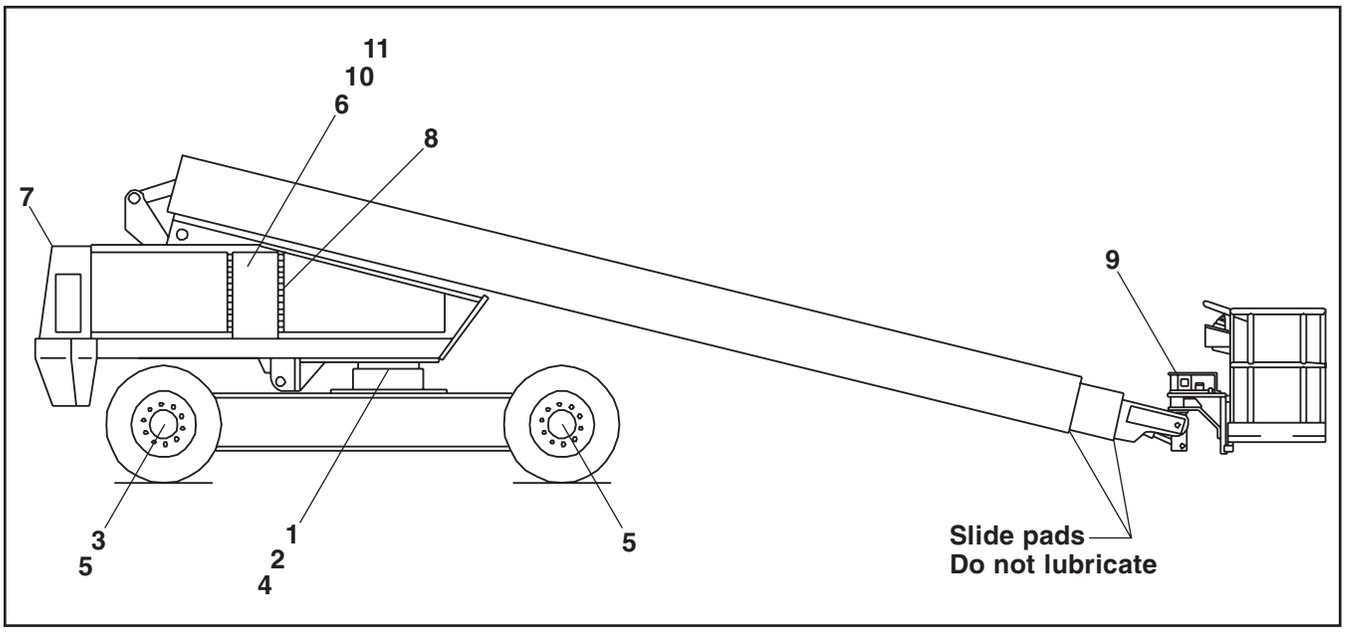

The illustration locates the lubrication points of the TB 80.

Lubricants

Specific lubricants as recommended by Snorkel, should be used in maintaining your unit. If in doubt regarding the use of lubricants other than those listed, contact Snorkel Customer Service Department, St. Joseph Missouri, for evaluation and recommendation.

Refer to the above lubrication illustration for location of item numbers.

Pressure gun application

Service all fittings as indicated in the Maintenance Schedule and lubrication illustration. Wipe away all excess lubricant from exposed surfaces. Over lubrication can collect dirt and foreign matter which acts as an abrasive. Lubrication of accessory equipment should be in accordance with the manufacturer's recommendations.

Rotation bearing

Rotation bearing (item 1.): Pressure gun lubricate bearing at recommended interval using lubricant as outlined in the maintenance schedule. Rotate while lubricating. Lubrication fitting is located on the font plate of the turntable.

Rotation gear teeth and pinion

Rotation gear teeth and pinion (item 2.): Gear teeth and gear box pinion should be lubricated with a spray-on type open gear lubricant.

Tie rods

Tie rods (item 3.): Lubricate at recommended interval using lubricant as outlined in the maintenance schedule.

Swing drive

To check oil level, remove check plug located on the side of the gear box. Unit is full if oil is level with bottom of fill hole or just starts to run out.

Gear hubs

Gear hubs (item 5.): To check and fill Gear hubs:

1. Rotate wheel until bottom of filler/drain plug is about 1 inch above horizontal centerline.
2. Remove plug with drive ratchet and extension.
3. Fill until lubricant is level with bottom of fill hole.

Note:

Do not overfill gear hubs as they are not vented and need air space for expansion of oil to prevent damage to hubs.

Hydraulic oil reservoir

Hydraulic oil reservoir (item 6.): The fluid level should be kept between the low and full marks on the sight gauge indicator and should be checked with all cylinders fully retracted and the platform in stowed position.

The interior of the reservoir should be wiped out and cleaned each time the hydraulic oil is changed.

The reservoir filler/breather cap should be removed and the cap strainer cleaned with Kerosene, Fuel Oil, or other solvent at this time.

It is absolutely necessary that only new, clean hydraulic oil is added.

View thousands of Crane Specifications on FreeCraneSpecs.com

Note:

If it becomes necessary to add or use an oil other than the recommended fluid, it is important that it be compatible and equivalent to the factory fill. Local oil suppliers can generally furnish this information.

If questions still remain, contact Snorkel Customer Service Department, St. Joseph, Missouri, for further information.

Engines

Engine (item 7.): Refer to the engine manufacturer's instruction manual or consult your local engine service representative if engine adjustments or repairs are needed. The engine MUST be operated in accordance with manufacturer's instructions and serviced at recommended intervals.

Door hinges and latches

Door hinges and latches (item 8.): After lubricating, remove any excess oil or over spray so it will not collect dirt or debris.

Platform rotator

Platform rotator (item 9.): Platform rotators will require lubrication only if disassembled for repairs.

Consult factory for proper lubricant if replacement of platform rotator is required.

Hydraulic oil return filter

Return filter (item 10.): On TB 80 models, the hydraulic oil return filter is located in the cowling near the hydraulic oil reservoir.

The filter element is a throw-away type filter and should be changed after the initial break-in period (approximately 50 hours operation time).

The filter is equipped with a hydraulic pressure gauge to indicate the filter element condition. A by-pass relief within the filter base is provided and is set to by-pass at 15 PSI. If pressure readings are above 15 PSI, the filter should be changed.

The filter condition should be checked at the 90 day or 150 hour Preventive Inspection Maintenance interval or more frequently under extreme working conditions.

The filter condition indicator is accurate only when the engine is running at maximum RPM and pump is discharging maximum flow, which occurs only during full speed driving. This requires that the indicator be observed while the unit is in motion, booms fully retracted and in stowed position, drive range switch in "LO" position, and drive controller fully forward. Oil temperature should be at least 70 degrees.

Note:

Use extreme caution while observing the condition indicator because of the motion of the drive wheels. The condition indicator is best observed from outside of the tract of the vehicle wheels to avoid possible personal injury or machine damage.

When changing the filter element, the oil inside of the filter element, should be examined for deposits of metal cuttings, which is present, could indicate excessive wear in some of the system components.

Suction strainer

Suction strainer (item 11.): A 100 mesh strainer is located within the hydraulic oil reservoir and filters the pump suction flow.

The strainer is cleanable and should be cleaned at the time interval shown in the maintenance schedule chart, using Kerosene, Fuel oil or other solvent and a soft bristled brush.

Inspect filter for damage to wire cloth. Holes in the filter cloth leak dirt into the pump and other vital hydraulic components. If element is damaged, replace.

When filter has been thoroughly cleaned, reinstall filter on suction line and tighten securely.

Batteries

Batteries (not shown): Batteries will have longer life if the water level is maintained and they are kept charged. The unit will have better starting characteristics with a fully charged battery.

n cold weather the battery should be maintained at full charge to keep from freezing. An extremely low or dead battery can freeze in cold weather. Make sure connections are clean and tight.

Make sure charging equipment is operating properly.

⚠DANGER

Lead-acid batteries produce flammable and explosive gases. Never allow smoking, flames or sparks around batteries.

Lead-acid batteries contain sulfuric acid which will damage eyes or skin on contact. When working around batteries, always wear a face shield to avoid acid in eyes.

If acid contacts eyes, flush immediately with clear water and get medical attention.

Wear rubber gloves and protective clothing to keep acid off skin, if acid contacts skin, wash off immediately with clear water.

View thousands of Crane Specifications on FreeCraneSpecs.com
https://truckmanualshub.com/

90 day or 150 hour checklist

OK	OK - No service required
✔	Corrective action required
X	Corrected, (record description of corrective action).

INSPECTION PROCEDURES CODES

(1) Weld cracks, dents and/or rust
(2) Installation
(3) Leaks
(4) Operation
(5) Condition
(6) Tightness
(7) Residue buildup
(8) See placards and decals inspection chart

	Check	OK	✔	X
A	**CHASSIS**			
1	Structural (1)			
2	Steering cylinder pin caps (2,6)			
3	Steering linkage (4)			
4	Tires (5)			
5	Hydraulic tubes and hoses (3,5)			
6	Decals and placards (2,8)			
7	Axle lock pin (2)			
8	Axle interlock cam valve (4)			
9	Jacking and axle extend cylinder (3,4,6)			
10	Jacking cylinder holding valve (4)			
11	Drive motor brake (4)			
12	Torque all wheel lug nuts per placard on wheel (6)			
13	Right drive motors (3)			
14	Left drive motors (3)			
15	Lubrication points			
B	**TURNTABLE**			
1	Structural (1)			
2	Torque turntable top bolts @475 ft. lbs. (6)			
3	Torque turntable bottom bolts @350 ft. lbs. (6)			
4	Hydraulic tubes and hoses (3,5)			
5	Centerpost (3)			
6	Centerpost securing bolts (6)			
7	Lift cylinder pin caps and tie wire (2,6)			
8	Emergency bleed down valve (4)			
9	Cowling (5,6)			
10	Wire harness (2,5)			
11	Lift cylinder and holding valves (3,4)			
12	Decals and placards (2,8)			
13	Master level cylinder pin caps and tie wire (2,6)			
14	Master level cylinder and holding valves (3,4)			
15	Rotation brake (4)			
16	Rotation backlash (5)			
17	Correct operators manual in document holder			
18	System pressure (4)			
19	Lubrication points			

	Check	OK	✔	X
C	**GROUND CONTROL STATION**			
1	Station selector switch - ground controls platform controls DO NOT work (4)			
2	Station selector switch - platform controls ground controls DO NOT work (4)			
3	Ground controls switches (4)			
4	Turntable rotation (4)			
5	Boom UP - DOWN (4)			
6	Boom extension IN - OUT (4)			
7	Platform leveling (4)			
8	Emergency power, all functions (4)			
9	Platform rotation (4)			
10	Boom/axle selector switch - ground and platform controls DO NOT work when in axle position (4)			
D	**BOOMS**			
1	Structural (1)			
2	Lift cylinder pin caps and tie wire (2,6)			
3	Hydraulic tubes and hoses (3,5)			
4	Extension cylinder and holding valve (3,4)			
5	Hose carrier tube (7)			
6	Hose carrier support (7)			
7	Plastic hose track (5)			
8	Electrical wires (5)			
9	Extend/retract wire ropes and sheaves (2,5,6)			
E	**PLATFORM**			
1	Structural (1)			
2	Decals and placards (2,8)			
3	Gravity gate (4)			
4	Hydraulic tubes and hoses (3,5)			
5	Slave level cylinder pin caps and tie wire (2,6)			
6	Slave level cylinder and holding valve (3,4)			
F	**PLATFORM CONTROL STATION**			
1	Foot switch, unit will not start when engaged (4)			
2	Foot switch, functions operate when engaged (4)			
3	Engine START - STOP (4)			
4	Electric throttle (4)			
5	Turntable rotation (4)			
6	Boom UP - DOWN (4)			
7	Boom extension IN - OUT (4)			
8	Platform leveling and rotation (4)			
9	Drive range HIGH - LOW (4)			
10	Engine choke, gasoline unit only (4)			
11	Emergency power, all functions (4)			
12	Emergency shutdown control (4)			
13	Gradual start to stop lift/swing/drive controls (4)			
14	Speed limit switch, 2 speed lift and swing (4)			
15	Speed limit switch, drive (4)			
16	Auto retract of jacking cylinder when driving (4)			
17	Boom/axle interlock system (4)			
18	5° tilt alarm (4)			

View thousands of Crane Specifications on FreeCraneSpecs.com
https://truckmanualshub.com/

Preventive inspection maintenance

	Check	OK	✔	X
G	**HYDRAULIC RESERVOIR**			
1	Filler/breather cap and tank (6)			
2	Hydraulic fluid level (5)			
H	**ENGINE**			
1	Charging system (4)			
2	Air filter (5)			
3	Hour meter (4)			
4	Belts and hoses (5)			
5	Hydraulic pump (4)			
6	Engine oil (2,5)			
7	Battery terminals (6)			
8	Indicator gauges (4,5)			
9	Engine START-STOP (4)			
10	Electric throttle (4)			
11	Electric choke, if equipped (4)			
I	**PLATFORM ROTATOR**			
1	Structural (1)			
2	Hydraulic rotator actuator (3)			
3	Platform rotation holding valve (4)			
4	Mounting bolts and pin caps (2,6)			

	Check	OK	✔	X
J	**OPTIONAL EQUIPMENT**			
1	110 volt onboard AC generator (2,4)			
2	Dual fuel system (2,4)			
3	LP gas system and control (2,4)			
4	Horn (2,4)			
5	Motion warning alarm (2,4)			
6	Operation warning light (2,4)			
7	Key type master switch (2,4)			
8	Cold weather start kit – diesel only (2,4)			
9	Hydraulic system, cold weather warm up kit (2,4)			
10	Extension cylinder bleed down (2,4)			
11	Driving lights (2,4)			
12	Platform work lights (2,4)			
13	Sandblast protection kit (2,4)			
14	Airline to platform (2,4)			
15	Tow package (2,4)			
16	Optional platform (2,4,6)			

CORRECTIVE ACTION REQUIRED

Note: Attach additional sheets if required:

All items have been properly checked and tested and found to be operating satisfactorily or necessary corrective action has been completed.

Inspected By: _____ Date: _____

View thousands of Crane Specifications on FreeCraneSpecs.com
https://truckmanualshub.com/

Capscrew torque chart

GRADE BOLT	SAE GRADE 1 OR 2	SAE GRADE 5	SAE GRADE 6	SAE GRADE 8
MARKING				
DEFINITION	INDETERMINATE QUALITY	MINIMUM COMMERCIAL QUALITY	MEDIUM COMMERCIAL QUALITY	BEST COMMERCIAL QUALITY
MATERIAL	LOW CARBON STEEL	MEDIUM CARBON STEEL TEMPERED	MEDIUM CARBON STEEL Q & T	MED. CARBON ALLOY STEEL Q & T
MIN. TENSILE STRENGTH	64,000 P.S.I.	105,000 P.S.I.	133,000 P.S.I.	150,000 P.S.I.
BOLT SIZE	RECOMMENDED TORQUE VALUES (FT - LBS)			
1/4	5	7	10	10.5
5/16	9	14	19	22
3/8	15	25	34	37
7/16	24	40	55	60
1/2	37	60	85	92
9/16	53	88	120	132
5/8	74	120	167	180
3/4	120	200	280	296
7/8	190	302	440	473
1	282	466	660	714

The following rules apply to the chart

1. Consult manufacturers' specific recommendations when available.
2. The chart may be used with both course and fine thread fasteners lightly lubricated.
3. Increase torque by 20% when multiple tapered tooth (shake proof) lock washers are used.
4. The torque values are given in foot-pounds.
5. Inch pound equivalent may be obtained by multiplying by 12.

View thousands of Crane Specifications on FreeCraneSpecs.com

Wire code and function

Wire	Color	Circuit function
1	red	power to platform controls 12 volt DC
1A	red	Power to ground controls12 volt DC
1B	red	power to auxiliary circuit
1C	red	power from circuit breaker to emergency stop switch
1D	red	power from auxiliary relay
2	red	power to platform controls 12 volt DC
3	black	ground circuit
3C	black	ground circuit, magnetic switch to oil pressure switch
4	red	run from platform
4A	red	ignition signal to run relay
4C	red	power to platform range switch
5	blue	start from platform
5A	white	start signal to engine starter
5B	yellow	start solenoid signal
5C	gray	start signal to start solenoid switch
6	brown	emergency power from platform
6A	green	emergency power solenoid signal
8	red	platform foot switch start
8D	red	run solenoid, Deutz diesel machine
9	white	platform foot switch to controls
10	black	power to platform foot switch
11	pink	range from platform
11B	pink	range/axles to drive speed boom switch
12	blue	level function - down
13	gray	level function - up
14	yellow	boom extend/retract function - extend
15	green	boom extend/retract function - retract
17	orange	low drive speed function - forward
17A	orange	high drive speed function - forward
18	purple	low drive speed function - reverse
18A	purple	high drive speed function - reverse
19	brown	steer function - left
20	blue	steer function - right
21	yellow/black	boom raise/lower function - down
22	yellow/orange	boom raise/lower function - up
23	pink	turntable swing function - counter clockwise rotation
24	purple	turntable swing function - clockwise rotation
25	red	medium throttle signal
26	orange	platform rotation function - clockwise rotation
27	blue	platform rotation function - counter clockwise rotation
28	green	sense line dump
28A	white	ground controls switch to controls
28B	white	sense line dump valve
29	white	platform horn switch to horn relay
31	red	throttle from ground controls
34	pink	range from boom switch
55	red	throttle power to relays
55A	red	medium throttle power to solenoid

View thousands of Crane Specifications on FreeCraneSpecs.com
https://truckmanualshub.com/

Wire code and function

Wire	Color	Circuit function
55B	red	high throttle power (to solenoid - Continental) (to governor - Ford)
56	red	alternator power to ammeter
57	red	starter to ammeter
67	red	swing joystick controller power
67A	red	power to PWM module
68	red	lift joystick controller power
69	red	drive joystick controller power
70	pink	boom speed signal
73	orange	level sensor signal
74	red	tilt alarm signal from tilt relay
77A	yellow	fuel valve signal from vacuum switch solenoid
77B	gray	dual fuel switch to filter lock
78	red	dual fuel select, gasoline fuel
78A	red	vacuum switch to fuel pump - Ford
78B	red	dual fuel
80A	white	power to governor
80C	white	magnetic switch to choke - (Ford engine machines only)
110	blue	110 volt power to platform
115	white	anti-diesel solenoid - (Continental engine machines only)
117	white	axle dump relay to axle dump solenoid
118	white	boom/axle switch to time delay module
122	white	signal from lift/swing boom switch
125	green	high throttle
126	yellow	engine kill signal
160	green	blocking valve power from platform
160A	pink	blocking valve power from ground
160C	yellow	power to blocking valve
164	red	run power from run relay
164B	red	run power to alternator field
167	white	anti-restart to magnetic switch
172	white	PWM module to controls
173	white	resister bridge module to PWM module
174	white	resister bridge module to PWM module
175	white	resister bridge module to PWM module
176	white	power to blocking valve
176A	white	blocking valve relay to pressure switch
177	white	power to pressure switch
A1	white	throttle actuator
A2	white	throttle actuator

View thousands of Crane Specifications on FreeCraneSpecs.com
https://truckmanualshub.com/

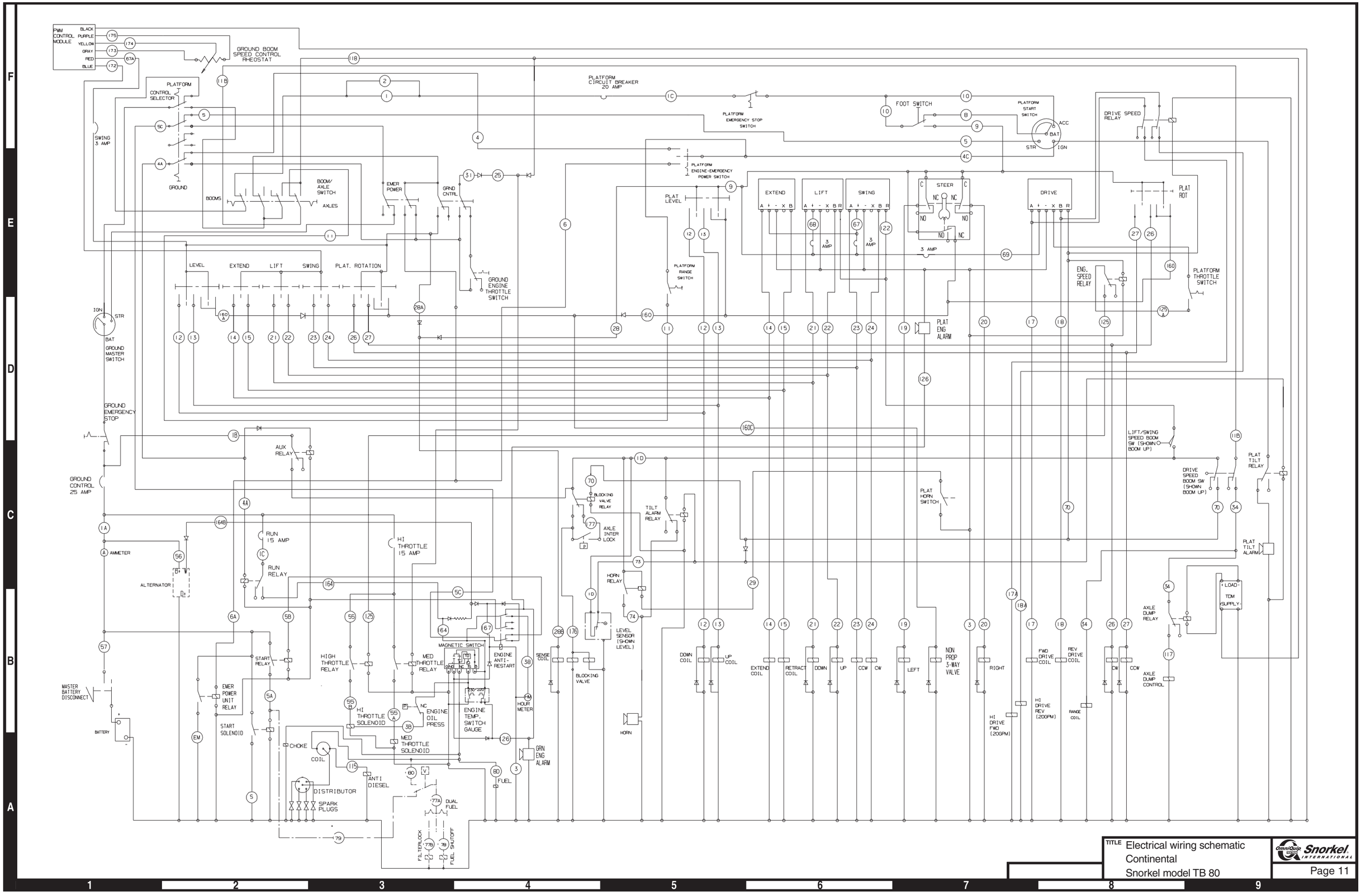

View thousands of Crane Specifications on FreeCraneSpecs.com
https://truckmanualshub.com/

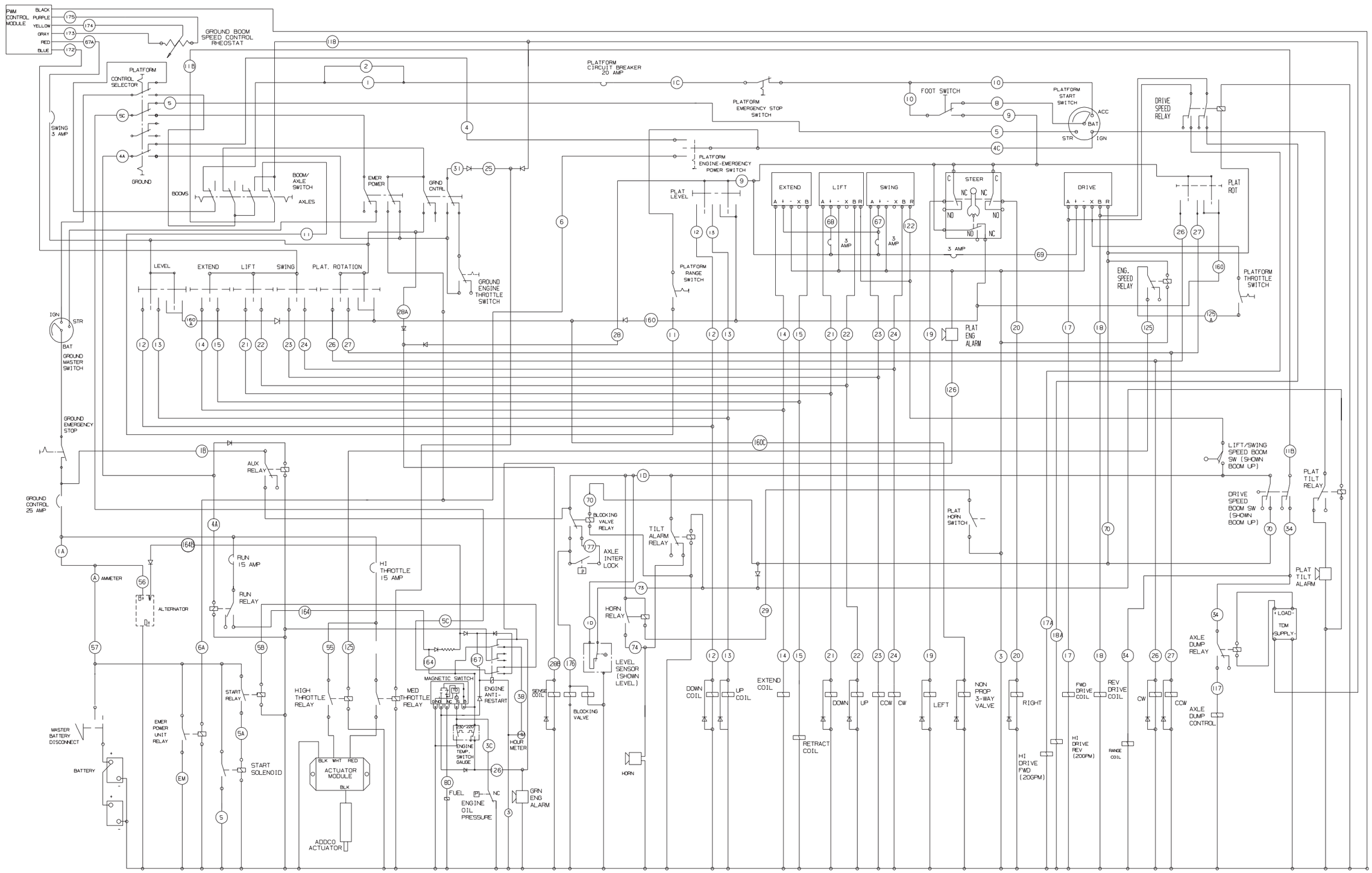

Snorkel INTERNATIONAL

TITLE Electrical wiring schematic
Cummins
Snorkel model TB 80

View thousands of Crane Specifications on FreeCraneSpecs.com
https://truckmanualshub.com/

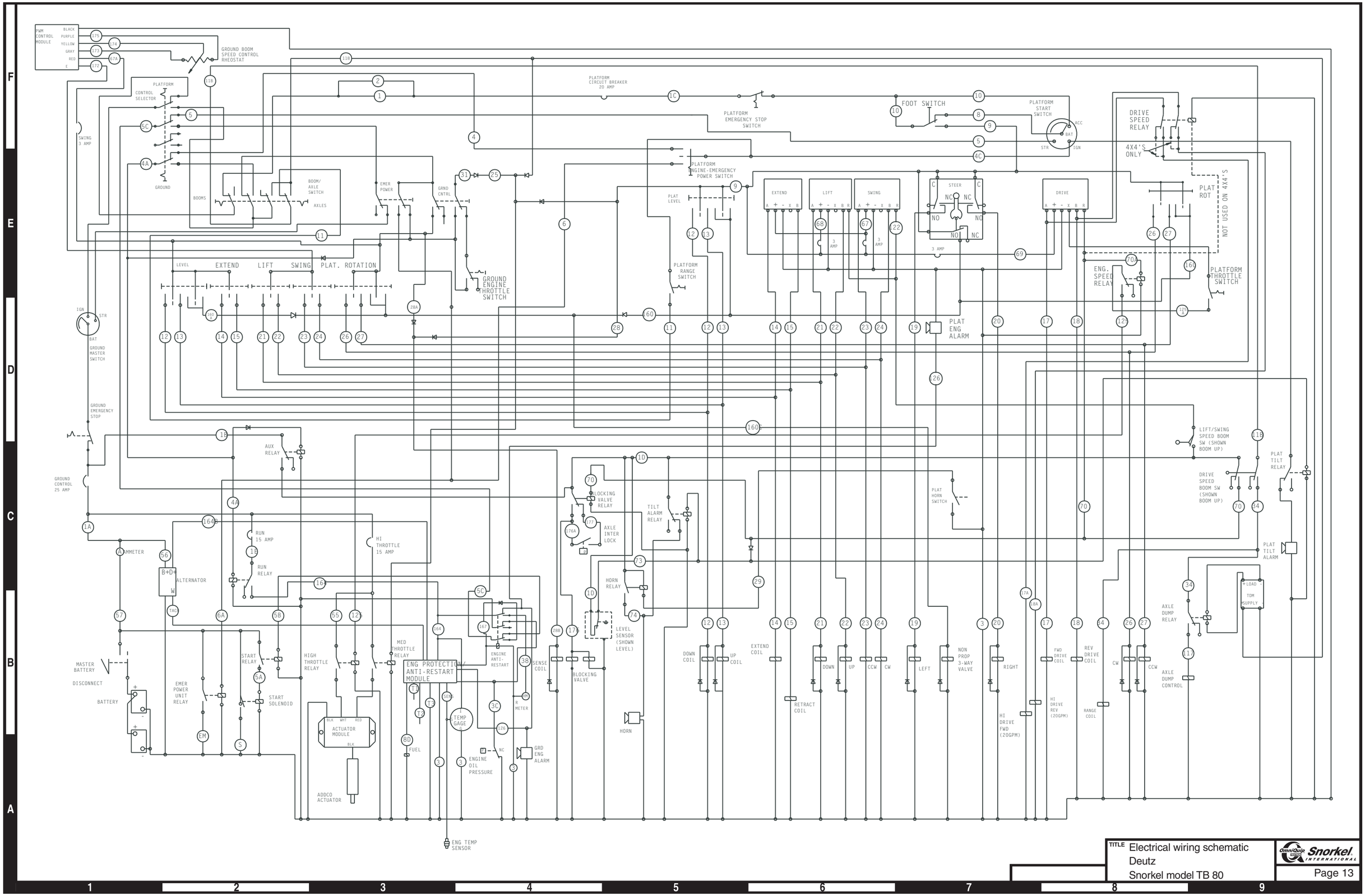

View thousands of Crane Specifications on FreeCraneSpecs.com
https://truckmanualshub.com/

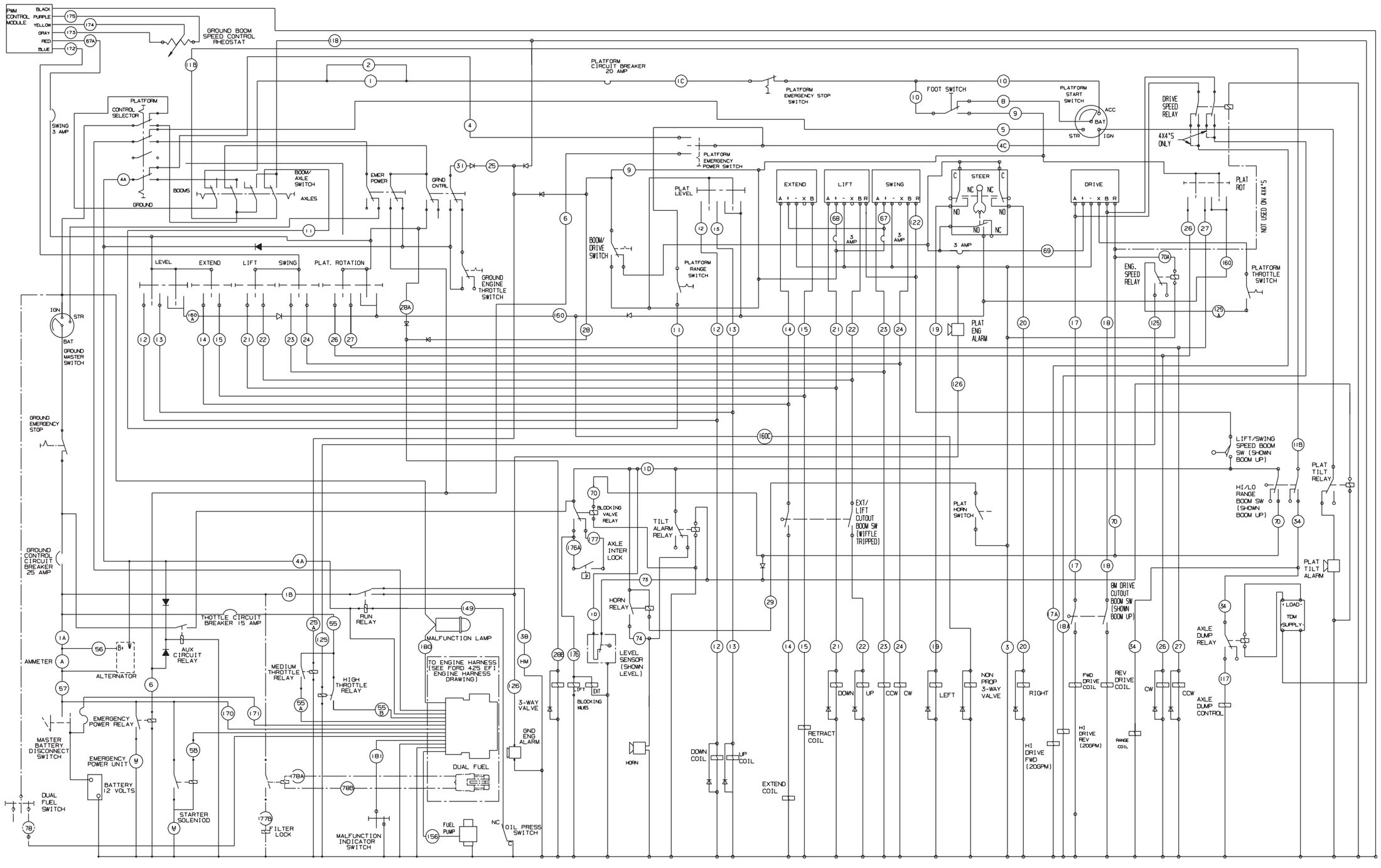

Snorkel INTERNATIONAL

TITLE Electrical wiring schematic
Ford
Snorkel model TB 80

View thousands of Crane Specifications on FreeCraneSpecs.com
https://truckmanualshub.com/

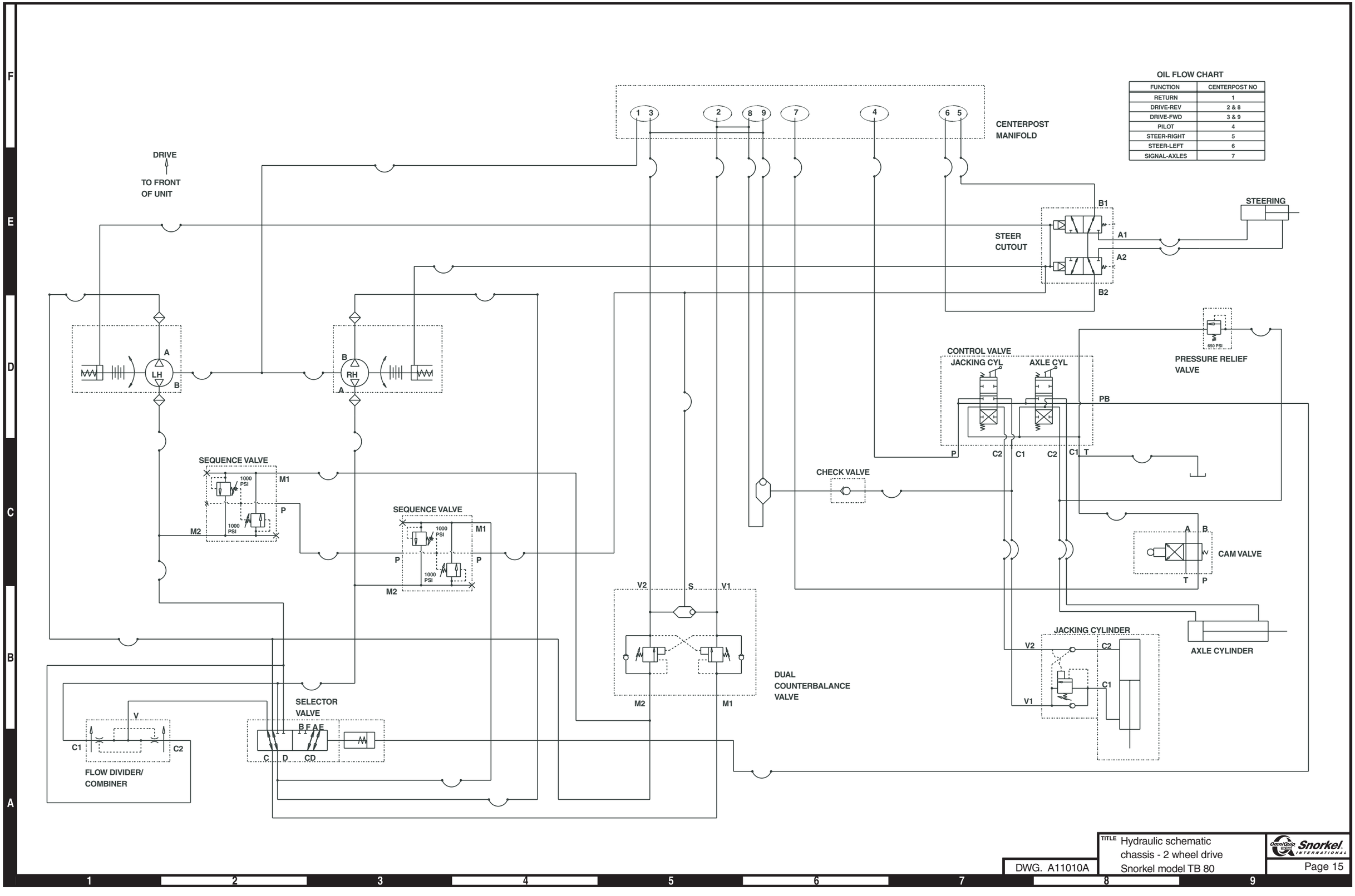

TITLE Hydraulic schematic chassis - 2 wheel drive Snorkel model TB 80

DWG. A11010A

Snorkel INTERNATIONAL

View thousands of Crane Specifications on FreeCraneSpecs.com
https://truckmanualshub.com/

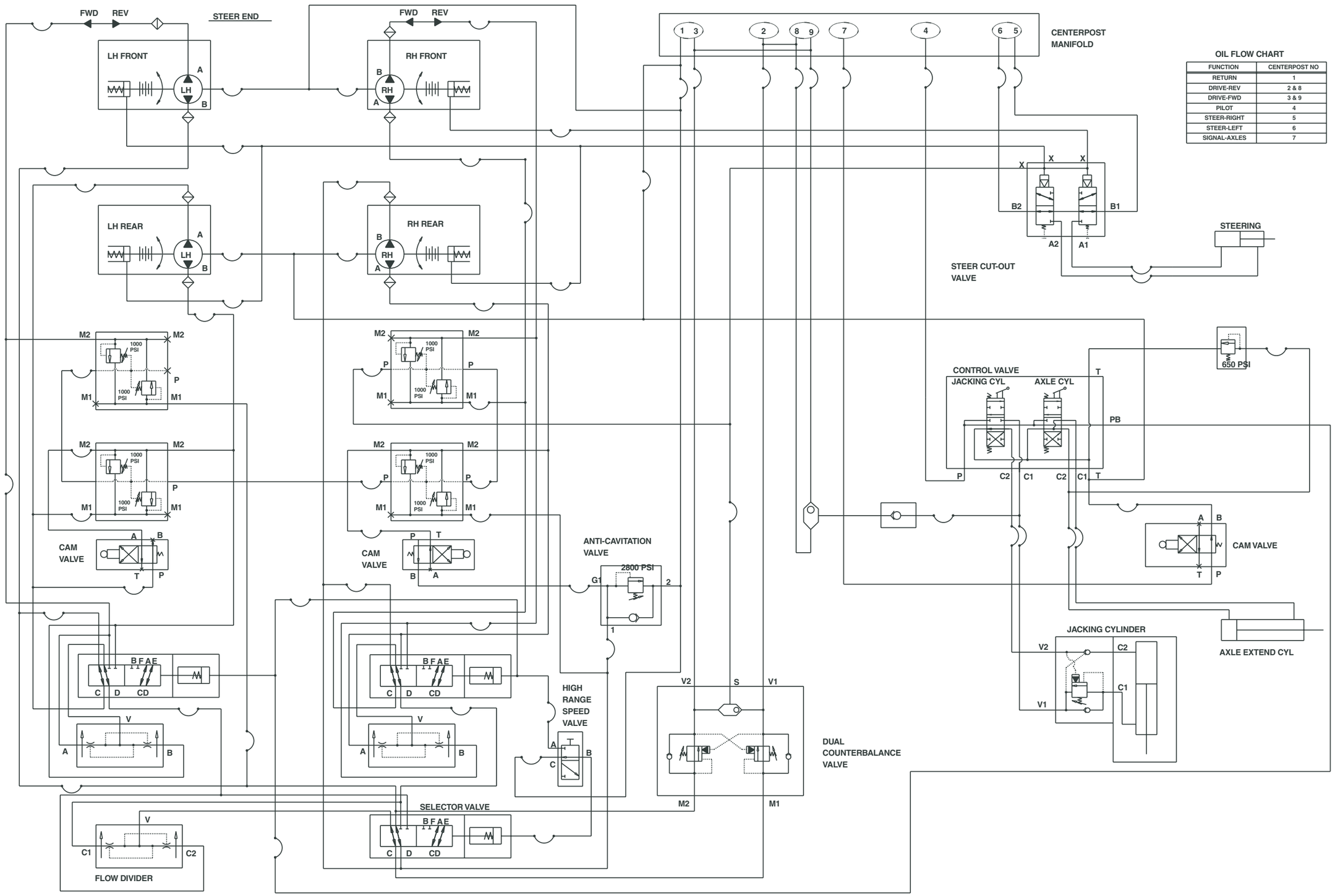

OIL FLOW CHART

FUNCTION	CENTERPOST NO
RETURN	1
DRIVE-REV	2 & 8
DRIVE-FWD	3 & 9
PILOT	4
STEER-RIGHT	5
STEER-LEFT	6
SIGNAL-AXLES	7

Snorkel INTERNATIONAL

TITLE Hydraulic schematic chassis - 4 wheel drive Snorkel model TB 80

DWG. 0111859

View thousands of Crane Specifications on FreeCraneSpecs.com
https://truckmanualshub.com/

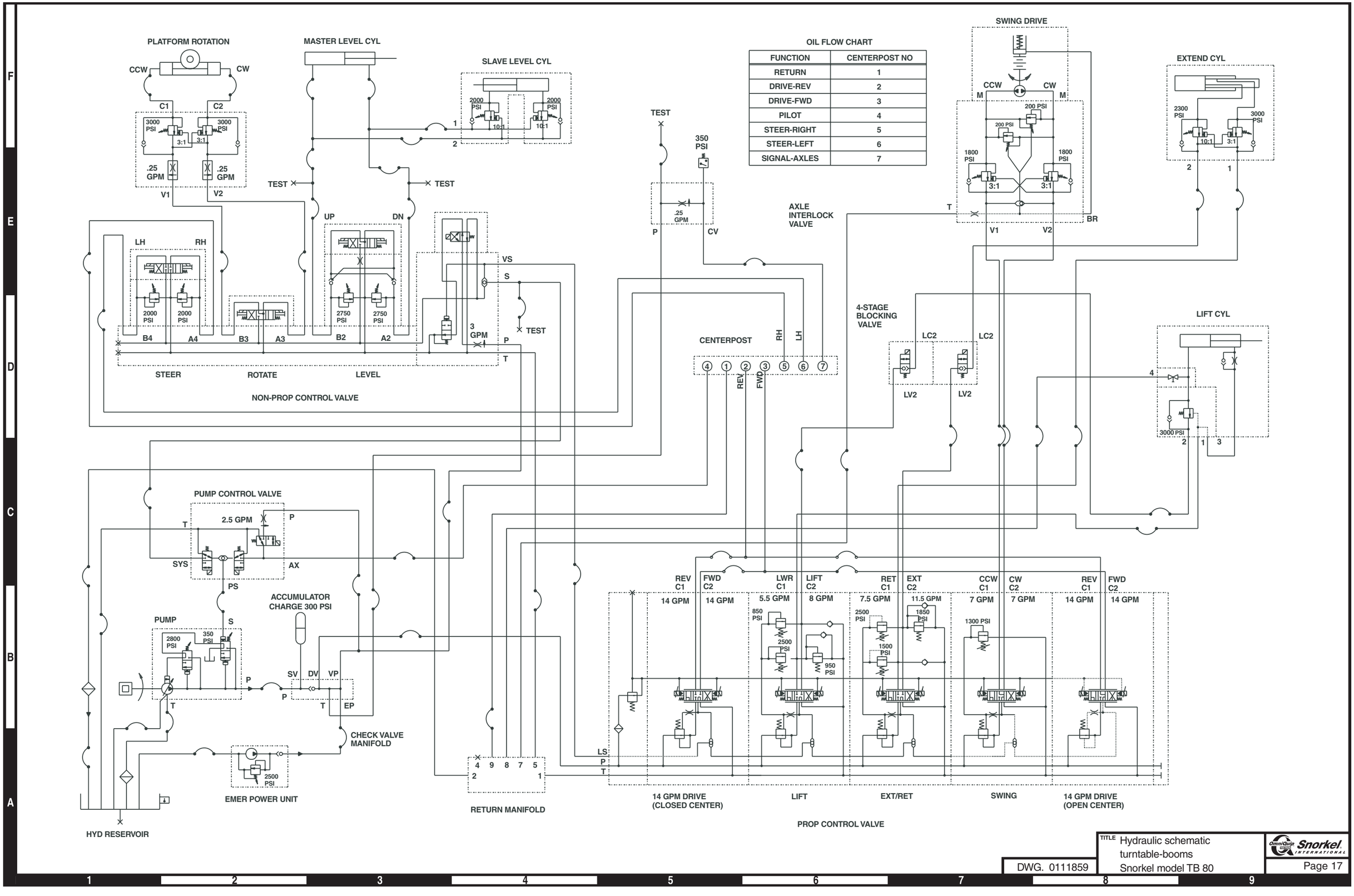

OIL FLOW CHART

FUNCTION	CENTERPOST NO
RETURN	1
DRIVE-REV	2
DRIVE-FWD	3
PILOT	4
STEER-RIGHT	5
STEER-LEFT	6
SIGNAL-AXLES	7

TITLE Hydraulic schematic turntable-booms Snorkel model TB 80

DWG. 0111859

Snorkel INTERNATIONAL

View thousands of Crane Specifications on FreeCraneSpecs.com
https://truckmanualshub.com/